WKE

PROJECT ID: 4868-05-70

WITH: N/A

COUNTY: WASHINGTON

NOVEMBER 2024

ORDER OF SHEETS

TOTAL SHEETS = 160

STATE OF WISCONSIN
DEPARTMENT OF TRANSPORTATION

PLAN OF PROPOSED IMPROVEMENT

T FARMINGTON, CTH A

MILWAUKEE RIVER BRIDGE B66-944

CTH A

WASHINGTON COUNTY

STATE PROJECT	FEDERAL PROJECT	
	PROJECT	CONTRACT
4868-05-70	WISC 2025039	1

STATE PROJECT NUMBER

4868-05-70

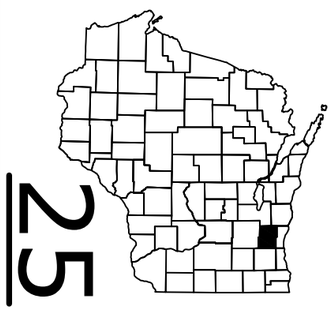

N

DESIGN DESIGNATION

A.A.D.T.	2025	=	2420
A.A.D.T.	2045	=	3130
D.H.V.		=	345
D.D.		=	50/50
T.		=	18.0%
DESIGN SPEED		=	60
ESALS		=	760,000

BEGIN PROJECT
STA 112+90.00
Y = 200,870.87
X = 396,094.37

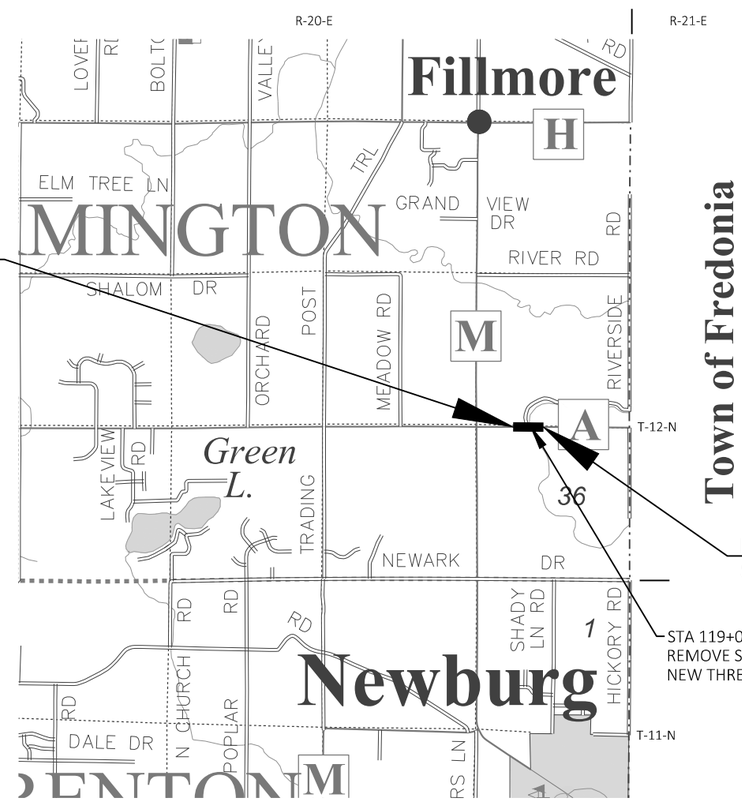

END PROJECT
STA 125+25.00

STA 119+00
REMOVE STRUCTURE B-66-944
NEW THREE SPAN STRUCTURE B-66-147

CONVENTIONAL SYMBOLS

PLAN

CORPORATE LIMITS
PROPERTY LINE
LOT LINE
LIMITED HIGHWAY EASEMENT
EXISTING RIGHT OF WAY
PROPOSED OR NEW R/W LINE
SLOPE INTERCEPT
REFERENCE LINE (300'EB')
EXISTING CULVERT
PROPOSED CULVERT (Box or Pipe)
COMBUSTIBLE FLUIDS (CAUTION)
MARSH AREA
WOODED OR SHRUB AREA

PROFILE

GRADE LINE
ORIGINAL GROUND
MARSH OR ROCK PROFILE (To be noted as such) (ROCK)
SPECIAL DITCH (LABEL)
GRADE ELEVATION (95.36)
CULVERT (Profile View)

UTILITIES

ELECTRIC (E)
FIBER OPTIC (FO)
GAS (G)
SANITARY SEWER (SAN)
STORM SEWER (SS)
TELEPHONE (T)
WATER (W)
UTILITY PEDESTAL
POWER POLE
TELEPHONE POLE

LAYOUT

SCALE 0 — 1.0 MI

TOTAL NET LENGTH OF CENTERLINE = 0.234 MI

HORIZONTAL POSITIONS SHOWN ON THIS PLAN ARE WISCONSIN COORDINATE REFERENCE SYSTEM (WISCRS), WASHINGTON COUNTY, NAD83 (2011), IN U.S. SURVEY FEET. POSITIONS SHOWN ARE GRID COORDINATES, GRID BEARINGS, AND GRID DISTANCES. GRID DISTANCES ARE THE SAME AS GROUND DISTANCES.

ELEVATIONS ARE REFERENCED TO NAVD 88 (2012). GPS DERIVED ELEVATIONS ARE BASED ON GEOID G18-WI WISCRS, WASHINGTON COUNTY.

ACCEPTED FOR

COUNTY of WASHINGTON

7/15/24 (Date)

CHIEF PUBLIC WORKS (Signature & Title of Official)

ORIGINAL PLANS PREPARED BY

GRAEF 275 W. Wisconsin Avenue, Suite 300 Milwaukee, WI 53203

WISCONSIN ROBERT J. STEUCK 41177 NEW BERLIN WI PROFESSIONAL ENGINEER

7/15/2024

STATE OF WISCONSIN
DEPARTMENT OF TRANSPORTATION

PREPARED BY

Surveyor	GRAEF
Designer	GRAEF
Project Manager	JOSEPH JELACIC
Regional Examiner	SE REGION LOCAL PROGRAM
Regional Supervisor	BRIAN BOOTHBY

APPROVED FOR THE DEPARTMENT

Joseph Jelacic — Digitally signed by Joseph Jelacic DN: C=US, E=joseph.jelacic@dot.wi.gov, CN=Joseph Jelacic Date: 2024.07.16 07:28:21-05'00'

DATE: 7/16/24 (Signature)

E

2

GENERAL NOTES

THE LOCATIONS OF EXISTING AND PROPOSED UTILITY INSTALLATIONS AS SHOWN ON THE PLANS ARE APPROXIMATE. THERE MAY BE OTHER UTILITY INSTALLATIONS WITHIN THE PROJECT AREA THAT ARE NOT SHOWN.

THE CONTRACTOR SHALL NOTIFY DIGGERS HOTLINE AND AFFECTED UTILITIES PRIOR TO THE START OF THE WORK. ANY UTILITY WHICH IS NOT A MEMBER OF DIGGERS HOTLINE MUST BE CONTACTED SEPARATELY.

CONTRACTOR WILL BE RESPONSIBLE FOR RESHAPING AND SEEDING ANY PREVIOUSLY GRASSED AREAS WHICH ARE DISTURBED BY OPERATIONS, OUTSIDE OF THE NORMAL CONSTRUCTION LIMITS.

HMA PAVEMENT WHERE INDICATED ON THE PLANS SHALL CONSIST OF LAYERS AS FOLLOWS, UNLESS OTHERWISE NOTED ON THE PLANS OR DIRECTED BY THE ENGINEER:

6" DEPTH 2 1/4" OF HMA PAVEMENT 4 LT 58-28 S AS THE UPPER LAYER
3 3/4" OF HMA PAVEMENT 3 LT 58-28 S AS THE LOWER LAYER

STATIONING, DISTANCES, AND OFFSETS FOR SIGNS AND TRAFFIC CONTROL DEVICES SHOWN IN THE PLANS ARE APPROXIMATE. TRAFFIC CONTROL DEVICES SHALL BE ADJUSTED TO FIELD CONDITIONS AS DIRECTED BY THE ENGINEER. NO WORK MAY BEGIN UNTIL PROPER TRAFFIC CONTROL DEVICES ARE PLACED AND APPROVED BY THE ENGINEER.

SAWCUT LOCATIONS SHOWN ON THE PLAN ARE SUBJECT TO ADJUSTMENT BY THE ENGINEER IN THE FIELD. THE LINE OF SUCH SAWCUTS SHALL BE NEATLY DELINEATED THROUGH THE ASPHALT WITHOUT ANY DAMAGE TO THE REMAINING PORTION OF THE EXISTING PAVEMENT.

NO TREES OR SHRUBS ARE TO BE REMOVED WITHOUT APPROVAL OF THE ENGINEER.

EXCAVATION BELOW SUBGRADE (EBS) SHALL BE MEASURED AND PAID FOR AS EXCAVATION COMMON. THE EXACT LOCATION OF EBS WILL BE DETERMINED IN THE FIELD BY THE ENGINEER.

PROPERTY LINES SHOWN ARE APPROXIMATE.

EROSION CONTROL ITEMS SHOWN ON THE PLAN ARE AT SUGGESTED LOCATIONS. EXACT LOCATIONS AND DIMENSIONS WILL BE DETERMINED IN THE FIELD BY THE ENGINEER.

DO NOT USE FERTILIZER WITHIN 20 FEET OF WATERWAYS OR WETLAND AREAS

STANDARD ABBREVIATIONS

AEW	APRON END WALL
AGG	AGGREGATE
BAD	BASE AGGREGATE DENSE
BM	BENCH MARK
C&G	CURB AND GUTTER
C/L	CENTER OR CONSTRUCTION LINE
CONC	CONCRETE
CP	CULVERT PIPE
CPCM	CULVERT PIPE CORRUGATED METAL
CPRC	CULVERT PIPE REINFORCED CONCRETE
CPRCHE	CULVERT PIPE REINFORCED CONCRETE HORIZONTAL ELLIPTICAL
CSCP	CORRUGATED STEEL CULVERT PIPE
CSPA	CORRUGATED STEEL PIPE ARCH
CSD	CONCRETE SURFACE DRAIN
CY	CUBIC-YARD
D	DEGREE OF CURVE
	DELTA
DISCH	DISCHARGE
FE	FIELD ENTRANCE
HERCP	HORIZONTAL ELLIPTICAL REINFORCED CONCRETE PIPE
HMA	HOT MIX ASPHALT
INV	INVERT
L	LENGTH OF CURVE
LHF	LEFT HAND FORWARD
LT	LEFT
MIN	MINIMUM
M/L	MATCHLINE
NB	NORTHBOUND
NC	NORMAL CROWN
NTS	NOT TO SCALE
PAVT	PAVEMENT
PB	PULL BOX
PC	POINT-OF-CURVE
PCC	POINT OF COMPOUND CURVE
PE	PRIVATE ENTRANCE
PI	POINT OF INTERSECTION
PLE	PERMANENT LIMITED EASEMENT
PT	POINT OF TANGENT
PVC	POINT OF VERTICAL CURVE
PVI	POINT OF VERTICAL INTERSECTION
PVT	POINT OF VERTICAL TANGENT
R	RADIUS OF CURVE
R/L	REFERENCE LINE
R/W	RIGHT OF WAY
RAD	RADIUS
RC	REVERSE CROWN
RCAEW	APRON ENDWALL FOR CULVERT PIPE REINFORCED CONCRETE
RCHESS	REINFORCED CONCRETE HORIZONTAL ELLIPTICAL STORM SEWER
RCPSS	REINFORCED CONCRETE PIPE - STORM SEWER
REQD	REQUIRED
RHF	RIGHT HAND FORWARD
RO	RUN OFF LENGTH
RT	RIGHT
SALV	SALVAGED
SB	SIGNAL BASE
SDD	STANDARD DETAIL DRAWING
SE	SUPER ELEVATION
SF	SQUARE FOOT
STA	STATION
SY	SQUARE YARD
T	TANGENT LENGTH
TC	TOP OF CURB
TLE	TEMPORARY LIMITED EASEMENT

DESIGN PROJECT MANAGER

JOE JELACIC
SE REGION LPPM
141 NW BARSTOW STREET
WAUKESHA, WI 53188
PHONE: 414-750-7955
EMAIL: JOSEPH.JELACIC@DOT.WI.GOV

DESIGN PROJECT LEADER

BOB STEUCK
GRAEF
275 W. WISCONSIN AVENUE, SUITE 300
MILWAUKEE, WI 53203
PHONE: 414-266-9293
EMAIL: BOB.STEUCK@GRAEF-USA.COM

WASHINGTON COUNTY

TED DUMKE
WASHINGTON COUNTY PROJECT MANAGER
900 LANG STREET
WEST BEND, WI 53090
PHONE: 262-335-4436
EMAIL: TED.DUMKE@WASHCOWISCO.GOV

TOWN OF FARMINGTON

PATTY HOERIG
TOWN CLERK
1807 COUNTY ROAD A
WEST BEND, WI 53090
PHONE: 262-429-1087
EMAIL: CLKPATTY.HOERIG@CHARTER.NET

WISCONSIN DNR LIAISON

BENTON STELZEL
DNR SERVICE CENTER
141 NW BARSTOW STREET, ROOM 180
WAUKESHA, WI 53188
PHONE: 262-623-0194
EMAIL: BENTON.STELZEL@WISCONSIN.GOV

UTILITIES CONTACTS

FRONTIER COMMUNICATIONS
COMMUNICATION
CHRIS BLUMER
451 BROADWAY DRIVE
SUN PRAIRIE, WI 53590
PHONE: 608-622-3807
EMAIL: CHRIS.BLUMER@FTR.COM

SPECTRUM
COMMUNICATION
ADAM OLSON
N 3760 COUNTY RD OJ
JUNEAU, WI 53039
PHONE: 920-349-5055
EMAIL: ADAM.OLSON@CHARTER.COM

WE ENERGIES ELECTRIC
ELECTRICITY
JOE FELLENZ
W140 N9100 LILLY ROAD
MENOMONEE FALLS, WI 53051
PHONE: 262-502-6831 (OFFICE) 414-322-8928 (CELL)
EMAIL: JOSEPH.FELLENZ@WE-ENERGIES.COM

2

ORDER OF SECTION 2 DETAIL SHEETS

DIGGERS HOTLINE
Dial 811 or (800)242-8511
www.DiggersHotline.com

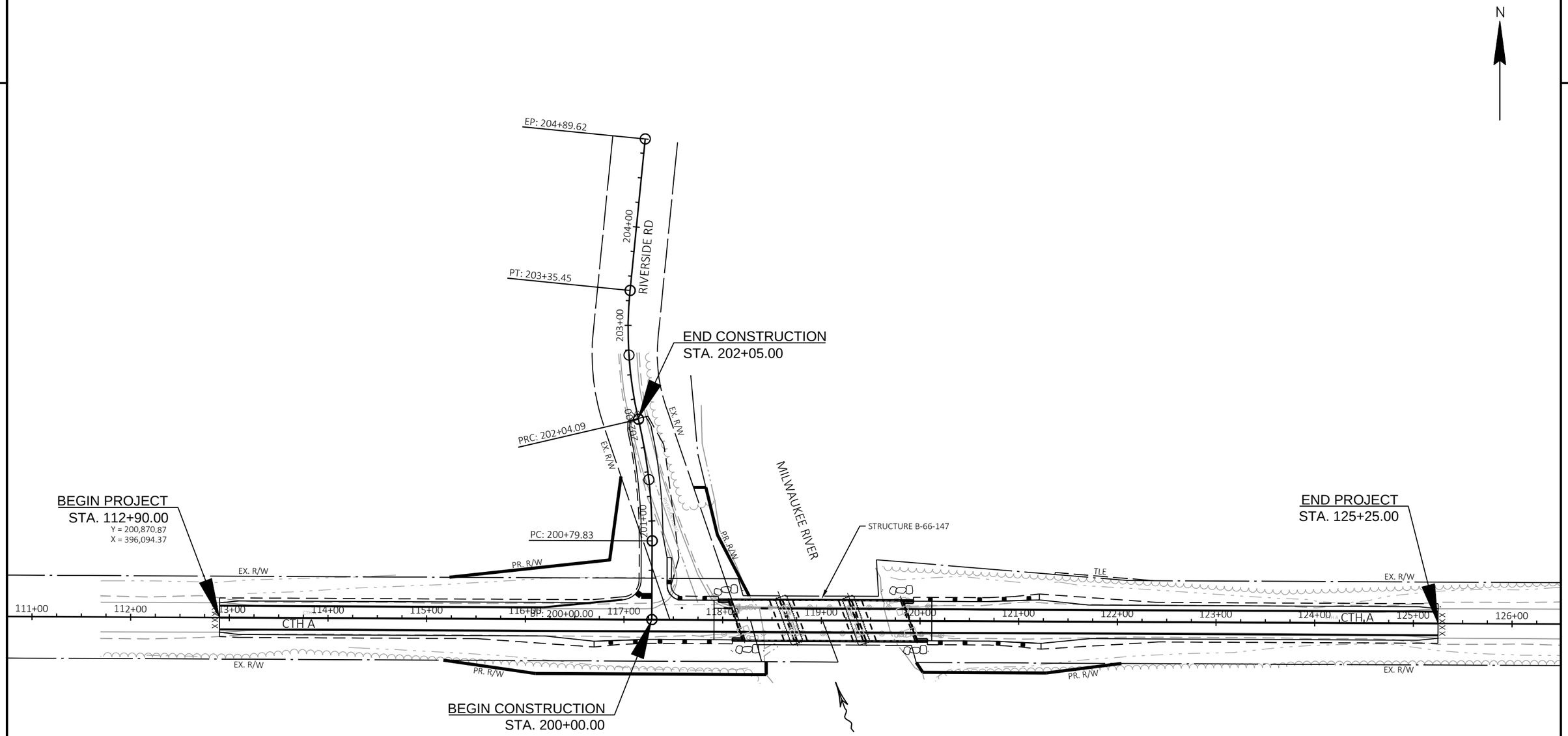

PROJECT NO: 4868-05-70	HWY: CTH A	COUNTY: WASHINGTON	PROJECT OVERVIEW	SHEET 3	E

FILE NAME : X:\ML\2023\20230044\DESIGN\TRANSPORTATION\SHEETSPLAN\020201-PO.DWG
LAYOUT NAME - 020201_po
PLOT DATE : 9/12/2024 11:09 AM
PLOT BY : DABROWSKI, MATTHEW
PLOT NAME :
PLOT SCALE : 1 IN:100 FT
WISDOT/CADDS SHEET 42

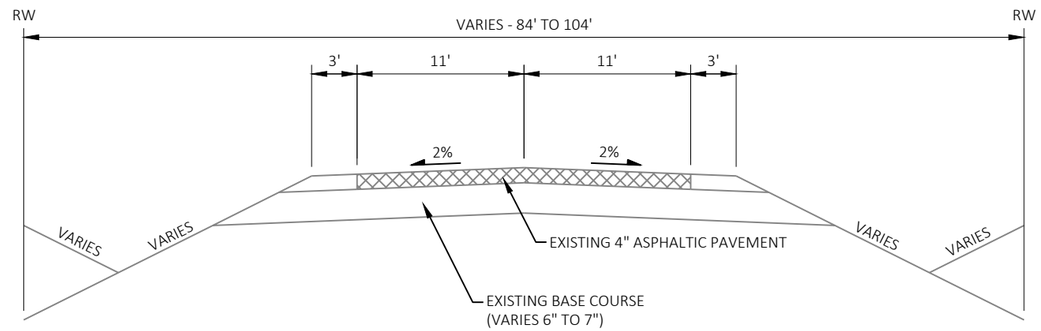

EXISTING TYPICAL SECTION

CTH A

STA 112+90 - STA 125+25

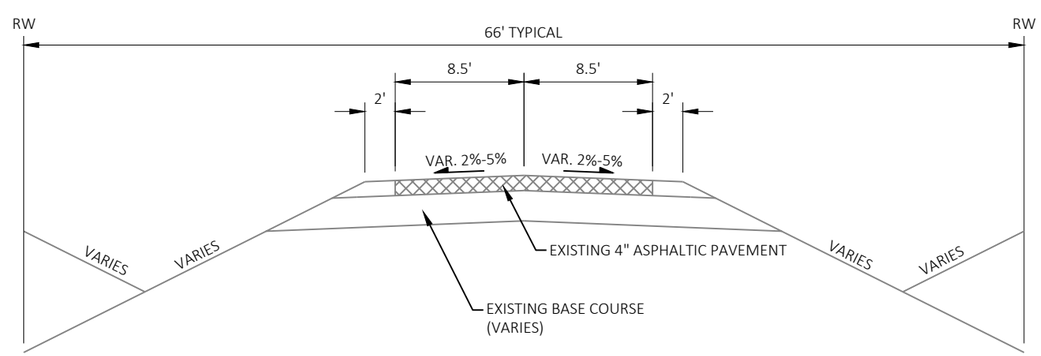

EXISTING TYPICAL SECTION

RIVERSIDE DRIVE

STA 200+00 - STA 202+05

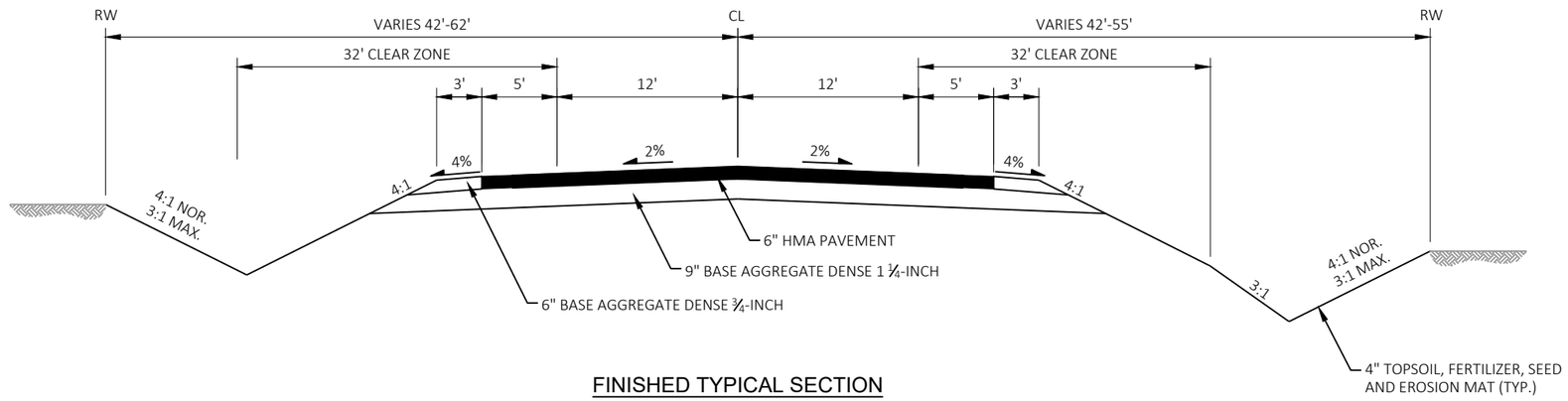

FINISHED TYPICAL SECTION

CTH A
STA 112+90 - STA 117+91
STA 120+12 - 125+25

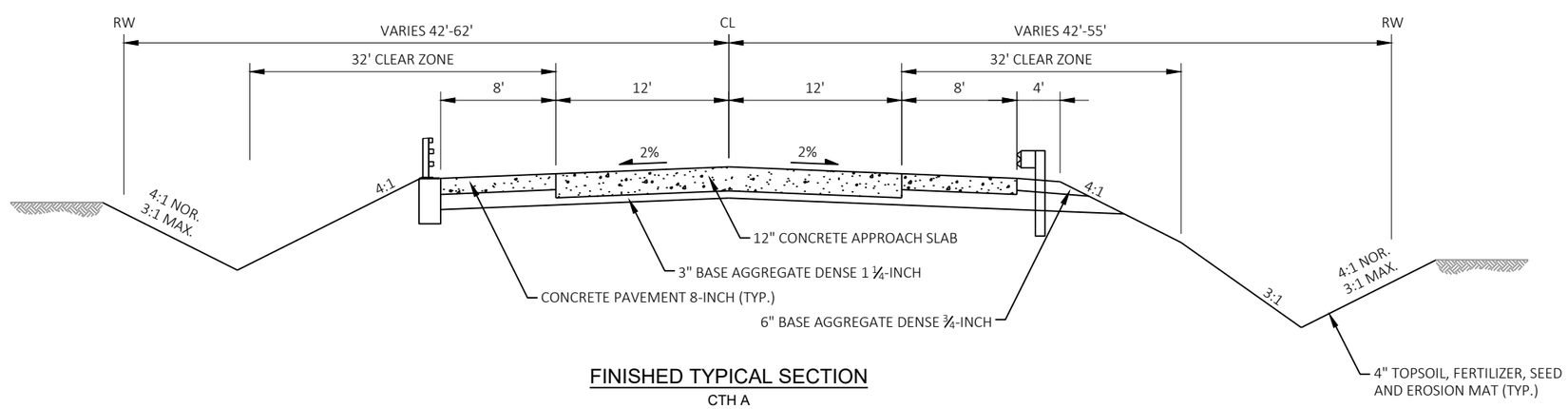

FINISHED TYPICAL SECTION

CTH A
STA 117+91 - STA 118+13
STA 119+90 - 120+12

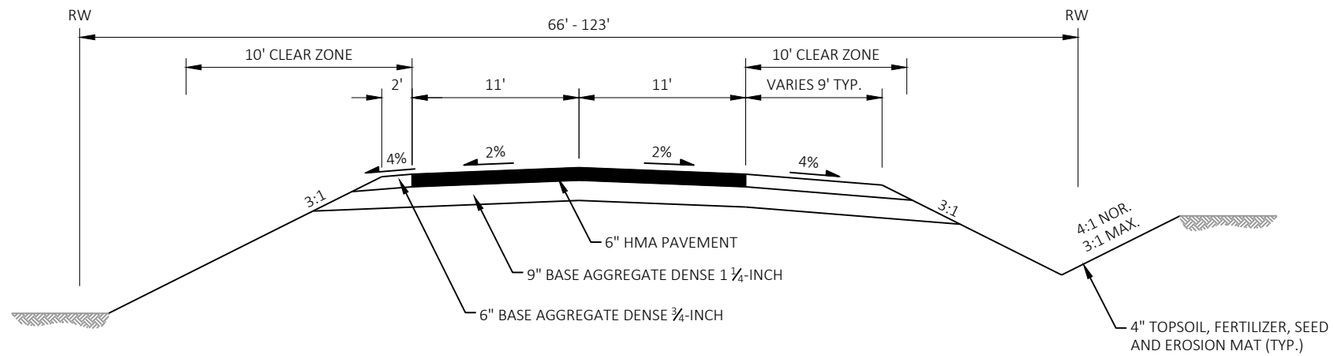

FINISHED TYPICAL SECTION

RIVERSIDE DRIVE

STA 200+00 - STA 202+05

2

NOTES

1. CONTRACTOR SHALL PUMP TURBID WATER FROM EXCAVATION TO SEDIMENT BAG PLACED INSIDE FABRIC LINED STAKED BALE ENCLOSURE PRIOR TO DISCHARGING TO DITCHES/INLETS/WETLANDS OR WATERWAYS.
2. SEDIMENT BAG TO BE PLACED IN AN UPLAND VEGETATED AREA OR EQUIVALENT LOCATION APPROVED BY THE ENGINEER.
3. BASIN TO BE KEPT LESS THAN 10% FULL OF SEDIMENT. GEOTEXTILE FABRIC AND SEDIMENTS TO BE DISPOSED BY THE CONTRACTOR OFF OF THE PROJECT SITE.
4. SEDIMENT BAG TO BE INCIDENTAL TO CONTRACT.
5. EROSION BALES AND GEOTEXTILE TYPE HR QUANTIFIED UNDER RESPECTED BID ITEMS.
6. SIZE TO BE DETERMINED BY THE CONTRACTOR AS PART OF THE ECIP SUBMITTAL.

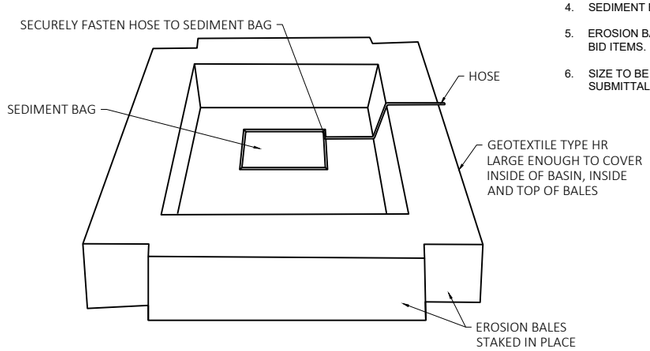

TEMPORARY SETTLING BASIN DETAIL

2

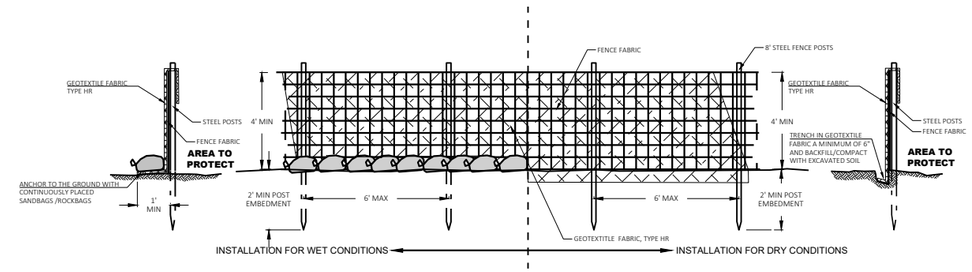

SILT FENCE HEAVY DUTY

GENERAL NOTES:

1. ATTACH FENCE FABRIC TO POSTS WITH A MINIMUM OF 3 TIES PER POST (TOP, MIDDLE, BOTTOM)
2. ATTACH GEOTEXTILE FABRIC TO FENCE FABRIC AND/OR POSTS AT A MAXIMUM SPACING OF EVERY 2 FEET ALONG THE TOP AND ADDITIONALLY AS NECESSARY TO PREVENT DISPLACEMENT BY WIND AND WAVE ACTIONS.

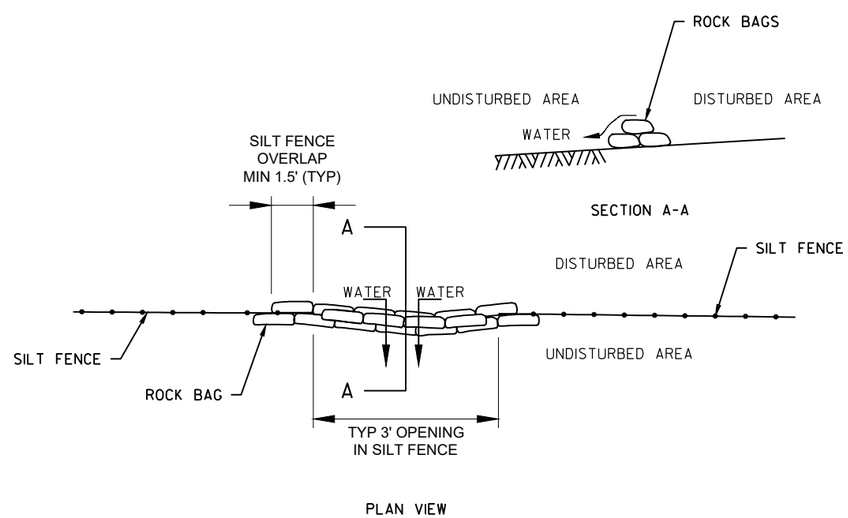

ROCK BAGS USED FOR SILT FENCE RELIEF POINT

2

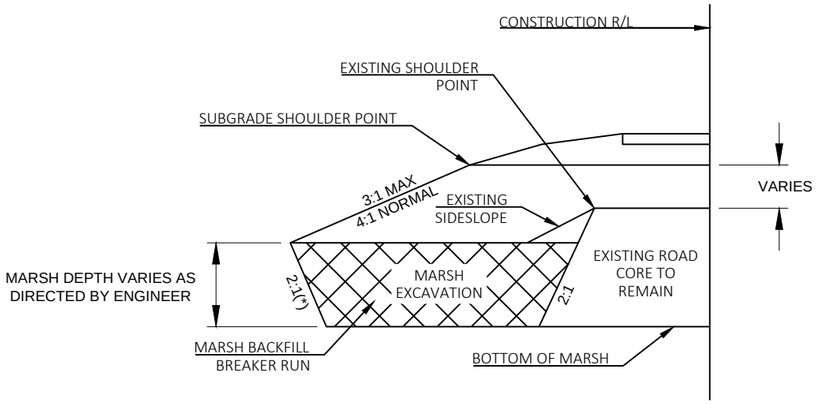

(*) A FLATTER SLOPE MAY BE NECESSARY FOR STABILITY IN WET MARSHES AS DIRECTED BY THE ENGINEER.

TYPICAL SECTION-MARSH EXCAVATION

LOCATIONS TO BE DETERMINED IN FIELD BY ENGINEER

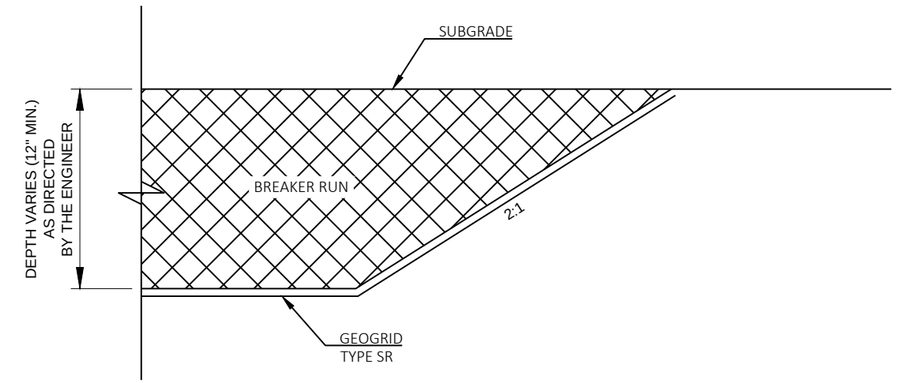

DETAIL FOR BACKFILL IN EBS AREAS

LOCATIONS TO BE DETERMINED IN FIELD BY ENGINEER

2

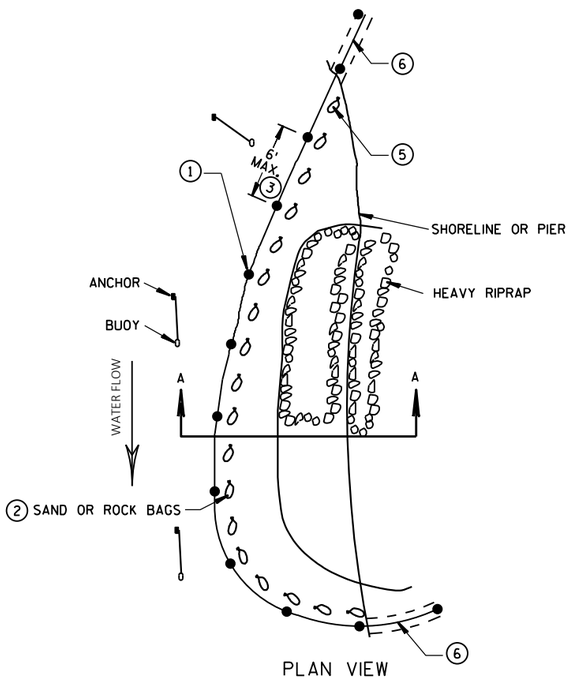

PLAN VIEW

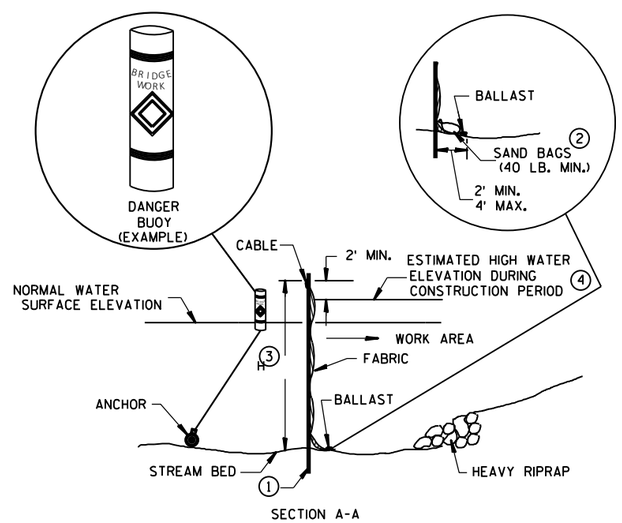

SECTION A-A

TURBIDITY BARRIER DETAIL

NOTES:

1. DRIVEN STEEL POSTS, PIPES, OR CHANNELS. LENGTH SHALL BE SUFFICIENT TO SECURELY SUPPORT BARRIER AT HIGH WATER ELEVATIONS.
2. SAND BAGS OR ROCK BAGS (40 LB MIN) TO BE PLACED TOE TO TOE WITH NO GAPS ALONG TURBIDITY BARRIER INSTALLED IN WATER. INCIDENTAL TO BID ITEM TURBIDITY BARRIER.
3. WHEN BARRIER HEIGHT, H, EXCEEDS 8-FT, POST SPACING MAY NEED TO BE DECREASED.
4. ELEVATION VALUE TO BE ESTABLISHED BY THE CONTRACTOR BASED ON THE TIME OF YEAR AND DURATION OF THE ACTIVITY.
5. CONCRETE BARRIER TEMPORARY PRECAST (CBTP) TO BE USED IN PLACE OF SAND OR ROCK BAGS IN ADVERSE FIELD CONDITIONS. CBTP WILL BE PAID FOR SEPARATELY.
6. EXTEND BARRIER 5-FT MINIMUM BEYOND SHORELINE. TRENCH OR CUT BARRIER INTO SHORELINE TO SECURELY ANCHOR. EXTENDING BARRIER AND TRENCHING/CUTTING IS INCIDENTAL TO THE TURBIDITY BARRIER ITEM.

2

LEGEND

- PAV1 — 6-INCH HMA PAVEMENT OVER 9-INCHES BASE AGGREGATE DENSE $1\frac{1}{4}$-INCH
- PAV2 — CONCRETE PAVEMENT APPROACH SLAB 12-INCH
- PAV3 — CONCRETE PAVEMENT 8-INCH
- AGG — AGGREGATE SHOULDER, 6-INCHES BASE AGGREGATE DENSE $\frac{3}{4}$-INCH
- XXX — SAWING ASPHALT
- GRUBBING (CLEARING BY OTHERS)

NOTE:

DRAIN TILE EXPLORATION REQUIRED PRIOR TO EXCAVATION OR GRADING OUTSIDE OF EXISTING RIGHT-OF-WAY.

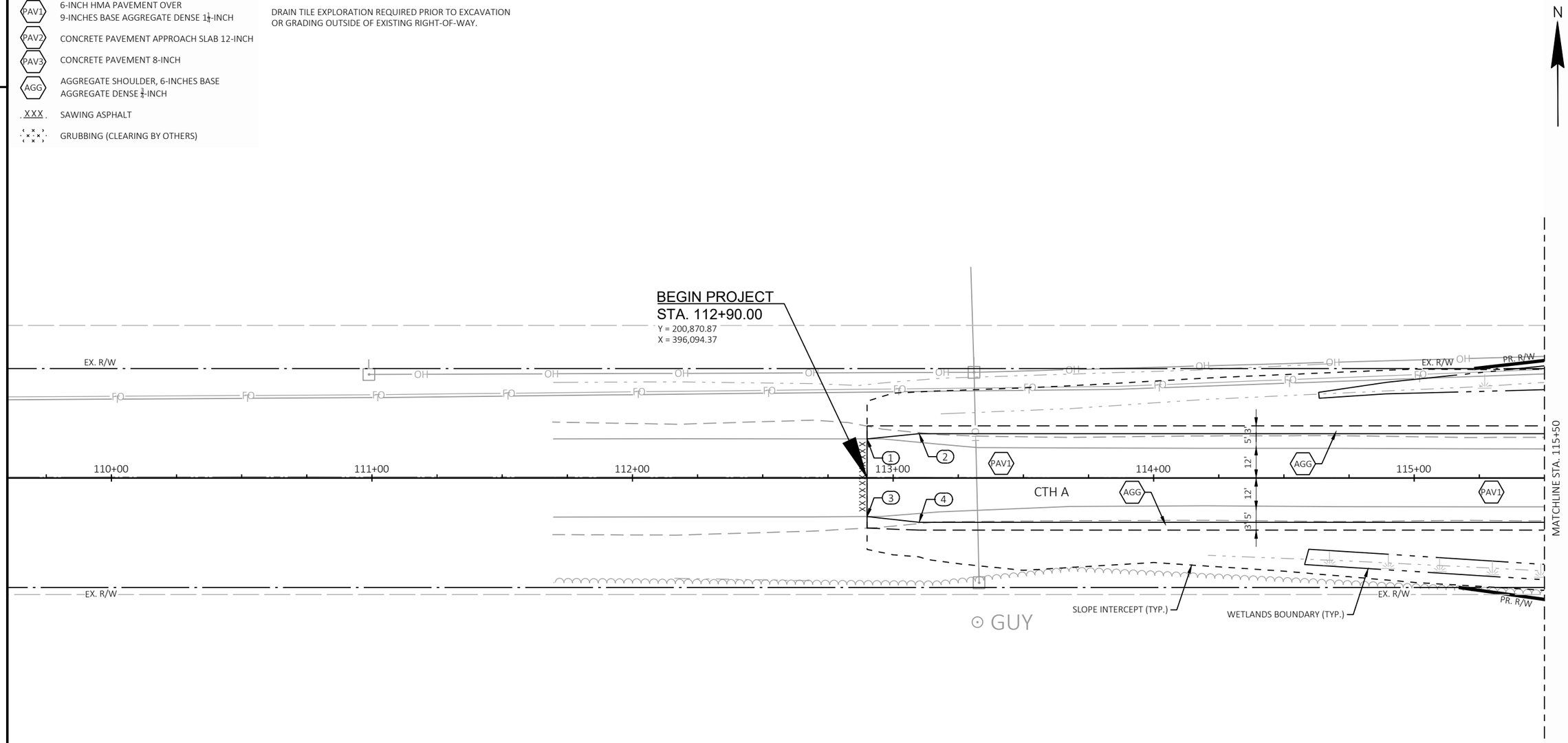

POINT NUMBER	STATION	OFFSET	DESCRIPTION
1	112+90.00	15.03' LT	SAWCUT, MATCH EXISTING, BEGIN PAV1
2	113+10.00	17.00' LT	PAV1 PI
3	112+90.00	14.79' RT	SAWCUT, MATCH EXISTING, BEGIN PAV1
4	113+10.00	17.00' RT	PAV1 PI

2

LEGEND

- PAV1 — 6-INCH HMA PAVEMENT OVER 9-INCHES BASE AGGREGATE DENSE 1¼-INCH
- PAV2 — CONCRETE PAVEMENT APPROACH SLAB 12-INCH
- PAV3 — CONCRETE PAVEMENT 8-INCH
- AGG — AGGREGATE SHOULDER, 6-INCHES BASE AGGREGATE DENSE ¾-INCH
- XXX — SAWING ASPHALT
- GRUBBING (CLEARING BY OTHERS)

NOTE:

DRAIN TILE EXPLORATION REQUIRED PRIOR TO EXCAVATION OR GRADING OUTSIDE OF EXISTING RIGHT-OF-WAY.

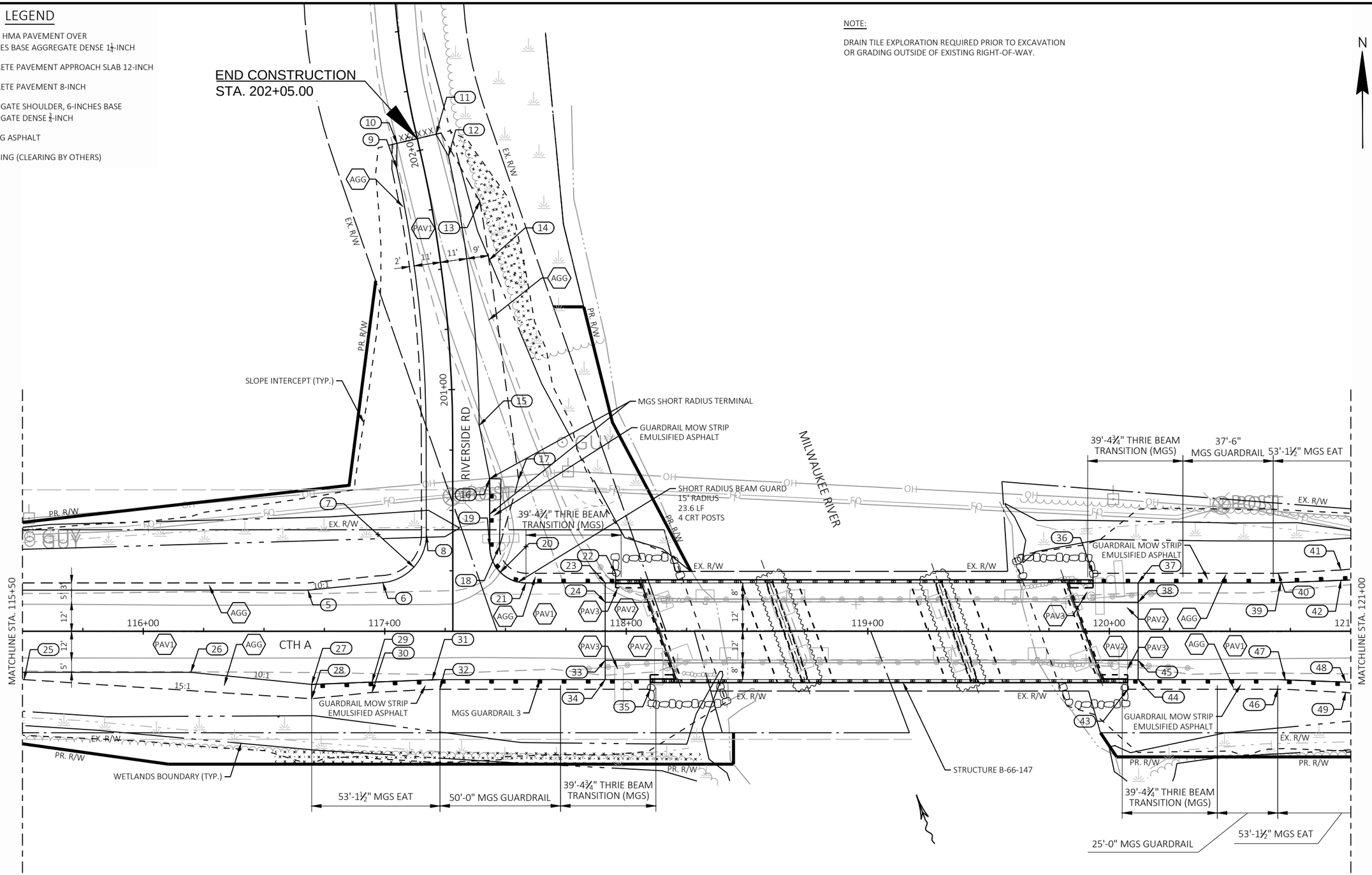

2

PROJECT NO: 4868-05-70	HWY: CTH A	COUNTY: WASHINGTON	PLAN DETAILS	SHEET 10	E

FILE NAME : X:\ML\2023\20230044\DESIGN\TRANSPORTATION\SHEETSPLAN\021201-PD.DWG
LAYOUT NAME - 021202_pd
PLOT DATE : 9/13/2024 4:48 PM PLOT BY : DABROWSKI, MATTHEW PLOT NAME : PLOT SCALE : 1 IN:40 FT
WISDOT/CADDS SHEET 42

POINT NUMBER	STATION	OFFSET	DESCRIPTION
5	116+68.17	17.00' LT	PAV1 PI
6	116+99.16	20.10' LT	BEGIN 20' RADIUS
7	116+97.17	40.00' LT	20' RADIUS
8	117+17.17	40.02' LT	END 20' RADIUS
9	201+94.85	11.00' LT	PAV1 PI
10	202+05.00	8.57' LT	SAWCUT, MATCH EXISTING, END PAV1
11	202+05.00	8.01' RT	SAWCUT, MATCH EXISTING, END PAV1
12	201+95.14	11.00' RT	PAV1 PI
13	201+74.84	20.00' RT	AGGREGATE SHOULDER PI
14	201+51.07	20.00' RT	AGGREGATE SHOULDER PI
15	200+85.01	11.00' RT	PAV1 PI
16	117+43.42	63.12' LT	PAV1 PI, BEGIN MOW STRIP
17	200+62.82	27.26' RT	AGGREGATE SHOULDER PI
18	200+34.99	19.27' RT	AGGREGATE SHOULDER PI
19	117+43.44	35.00' LT	BEGIN 15' RADIUS
20	117+58.44	35.00' LT	15' RADIUS
21	117+58.44	20.00' LT	END 15' RADIUS
22	117+95.57	24.00' LT	AGGREGATE SHOULDER PI, END MOW STRIP
23	117+91.28	20.00' LT	TRANSITION OF PAV1 TO PAV3
24	117+91.28	12.00' LT	TRANSITION OF PAV1 TO PAV2
25	115+50.66	20.00' RT	AGGREGATE SHOULDER PI
26	116+19.73	17.00' RT	PAV1 PI
27	116+69.73	22.00' RT	PAV1 PI, TERMINAL EAT POST 1, BEGIN MOW STRIP

POINT NUMBER	STATION	OFFSET	DESCRIPTION
28	116+69.73	27.94' RT	AGGREGATE SHOULDER PI
29	116+94.71	21.06' RT	TERMINAL EAT POST 5
30	116+94.71	25.33' RT	AGGREGATE SHOULDER PI
31	117+19.70	20.12' RT	TERMINAL EAT POST 9
32	117+22.82	24.00' RT	AGGREGATE SHOULDER PI
33	117+91.28	12.00' RT	TRANSITION OF PAV1 TO PAV2
34	117+91.28	20.00' RT	TRANSITION OF PAV1 TO PAV3
35	118+09.94	24.00' RT	AGGREGATE SHOULDER PI, END MOW STRIP
36	119+93.23	24.00' LT	AGGREGATE SHOULDER PI, BEGIN MOW STRIP
37	120+11.90	20.00' LT	TRANSITION OF PAV3 TO PAV1
38	120+11.90	12.00' LT	TRANSITION OF PAV2 TO PAV1
39	120+70.98	20.12' LT	TERMINAL EAT POST 9
40	120+69.90	24.00' LT	AGGREGATE SHOULDER PI
41	120+95.96	25.33' LT	AGGREGATE SHOULDER PI
42	120+95.96	21.06' LT	TERMINAL EAT POST 5
43	120+07.60	24.00' RT	AGGREGATE SHOULDER PI, BEGIN MOW STRIP
44	120+11.90	20.00' RT	TRANSITION OF PAV3 TO PAV1
45	120+11.90	12.00' RT	TRANSITION OF PAV2 TO PAV1
46	120+69.73	24.00' RT	AGGREGATE SHOULDER PI
47	120+72.85	20.12' RT	TERMINAL EAT POST 9
48	120+97.84	21.06' RT	TERMINAL EAT POST 5
49	120+97.84	25.33' RT	AGGREGATE SHOULDER PI

LEGEND

- PAV1 — 6-INCH HMA PAVEMENT OVER 9-INCHES BASE AGGREGATE DENSE 1¼-INCH
- PAV2 — CONCRETE PAVEMENT APPROACH SLAB 12-INCH
- PAV3 — CONCRETE PAVEMENT 8-INCH
- AGG — AGGREGATE SHOULDER, 6-INCHES BASE AGGREGATE DENSE ¾-INCH
- XXX — SAWING ASPHALT
- GRUBBING (CLEARING BY OTHERS)

NOTE:

DRAIN TILE EXPLORATION REQUIRED PRIOR TO EXCAVATION OR GRADING OUTSIDE OF EXISTING RIGHT-OF-WAY.

N

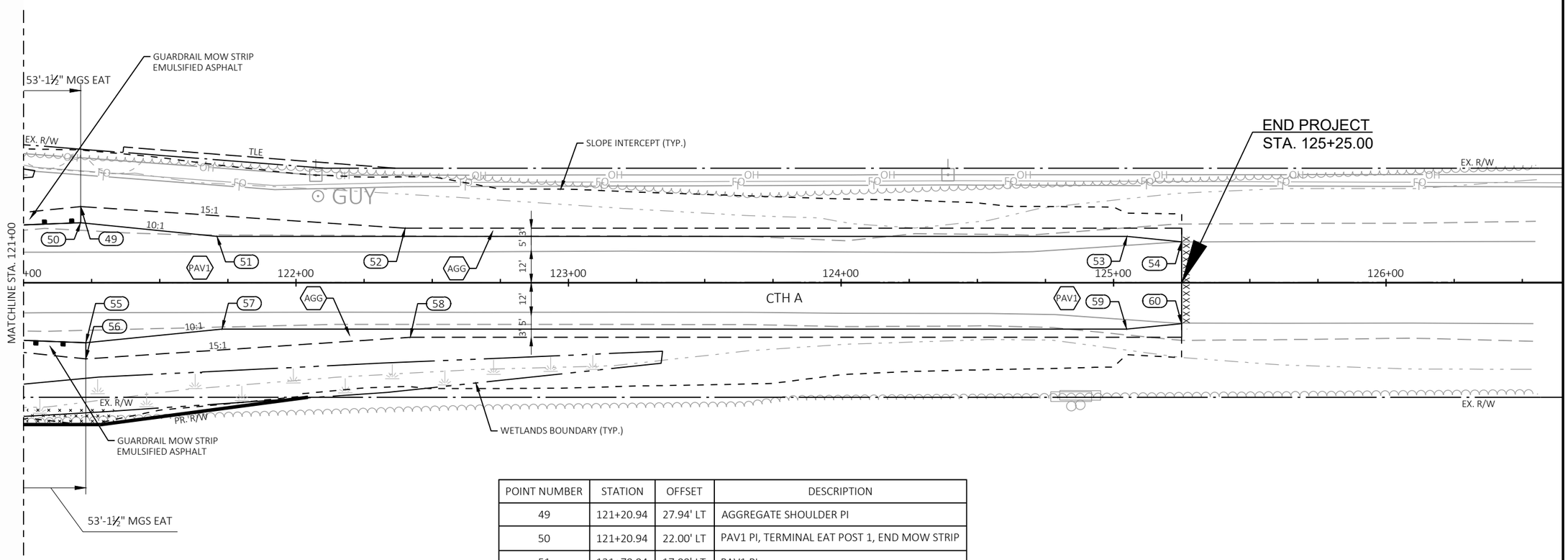

POINT NUMBER	STATION	OFFSET	DESCRIPTION
49	121+20.94	27.94' LT	AGGREGATE SHOULDER PI
50	121+20.94	22.00' LT	PAV1 PI, TERMINAL EAT POST 1, END MOW STRIP
51	121+70.94	17.00' LT	PAV1 PI
52	122+40.01	20.00' LT	AGGREGATE SHOULDER PI
53	125+05.00	17.00' LT	PAV1 PI
54	125+25.00	15.00' LT	SAWCUT, MATCH EXISTING, END PAV1
55	121+22.82	22.00' RT	PAV1 PI, TERMINAL EAT POST 1, END MOW STRIP
56	121+22.82	27.94' RT	AGGREGATE SHOULDER PI
57	121+72.82	17.00' RT	PAV1 PI
58	122+41.89	20.00' RT	AGGREGATE SHOULDER PI
59	125+04.86	17.00' RT	PAV1 PI
60	125+25.00	15.00' RT	SAWCUT, MATCH EXISTING, END PAV1

2

LEGEND

- TOPSOIL, SEEDING MIXTURE NO. 30, FERTILIZER TYPE B, SEED WATER AND EROSION MAT URBAN CLASS I TYPE B
- SILT FENCE HEAVY DUTY
- TURBIDITY BARRIER
- CONCRETE BARRIER TEMPORARY PRECAST, FOR FLOW DEFLECTION
- RIP RAP
- TEMPORARY DITCH CHECK
- CULVERT PIPE DITCH CHECK
- SURFACE WATER FLOW

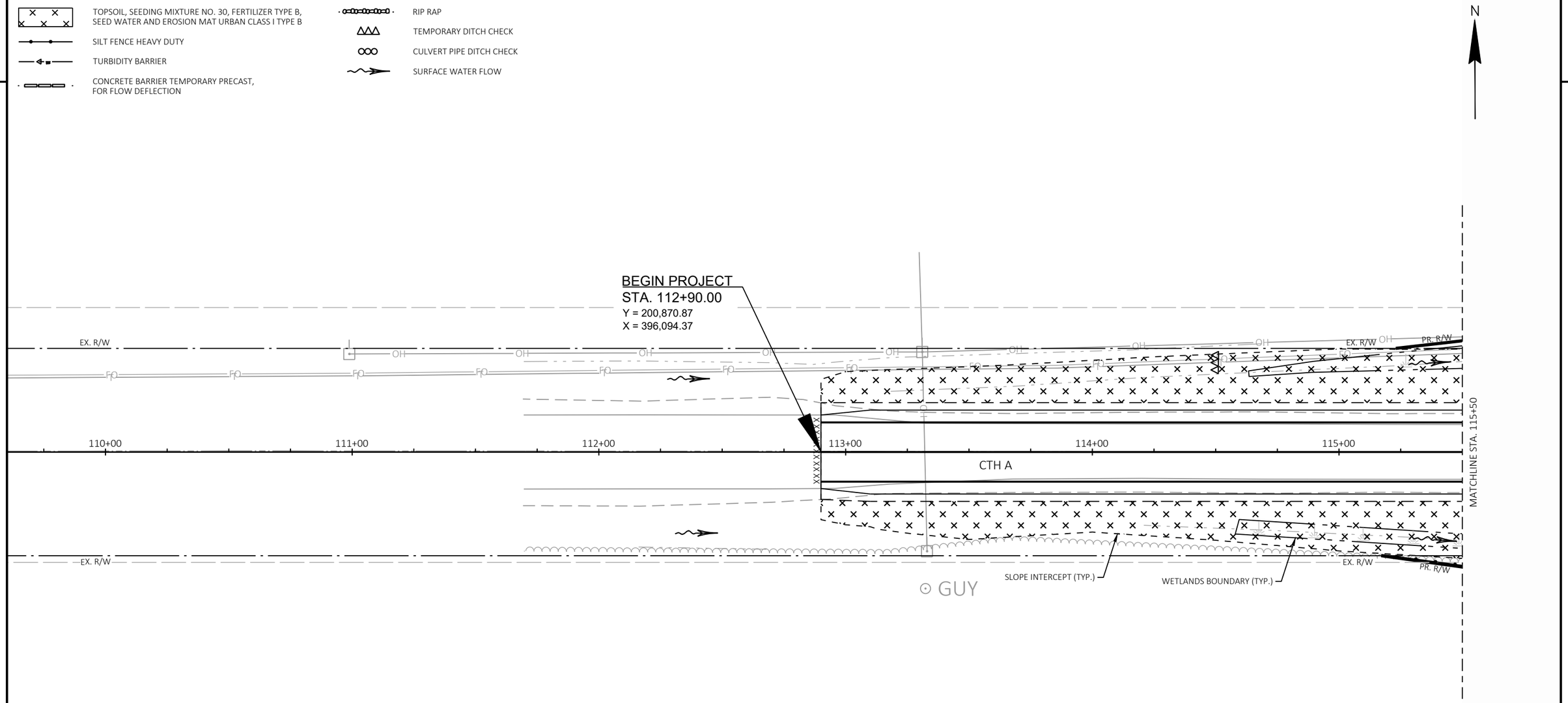

2

PROJECT NO: 4868-05-70	HWY: CTH A	COUNTY: WASHINGTON	EROSION CONTROL	SHEET 13	E

FILE NAME : X:\ML\2023\20230044\DESIGN\TRANSPORTATION\SHEETSPLAN\022001-EC.DWG
LAYOUT NAME - 022001_ec
PLOT DATE : 9/13/2024 11:35 AM PLOT BY : DABROWSKI, MATTHEW PLOT NAME : PLOT SCALE : 1 IN:40 FT

WISDOT/CADDS SHEET 42

2

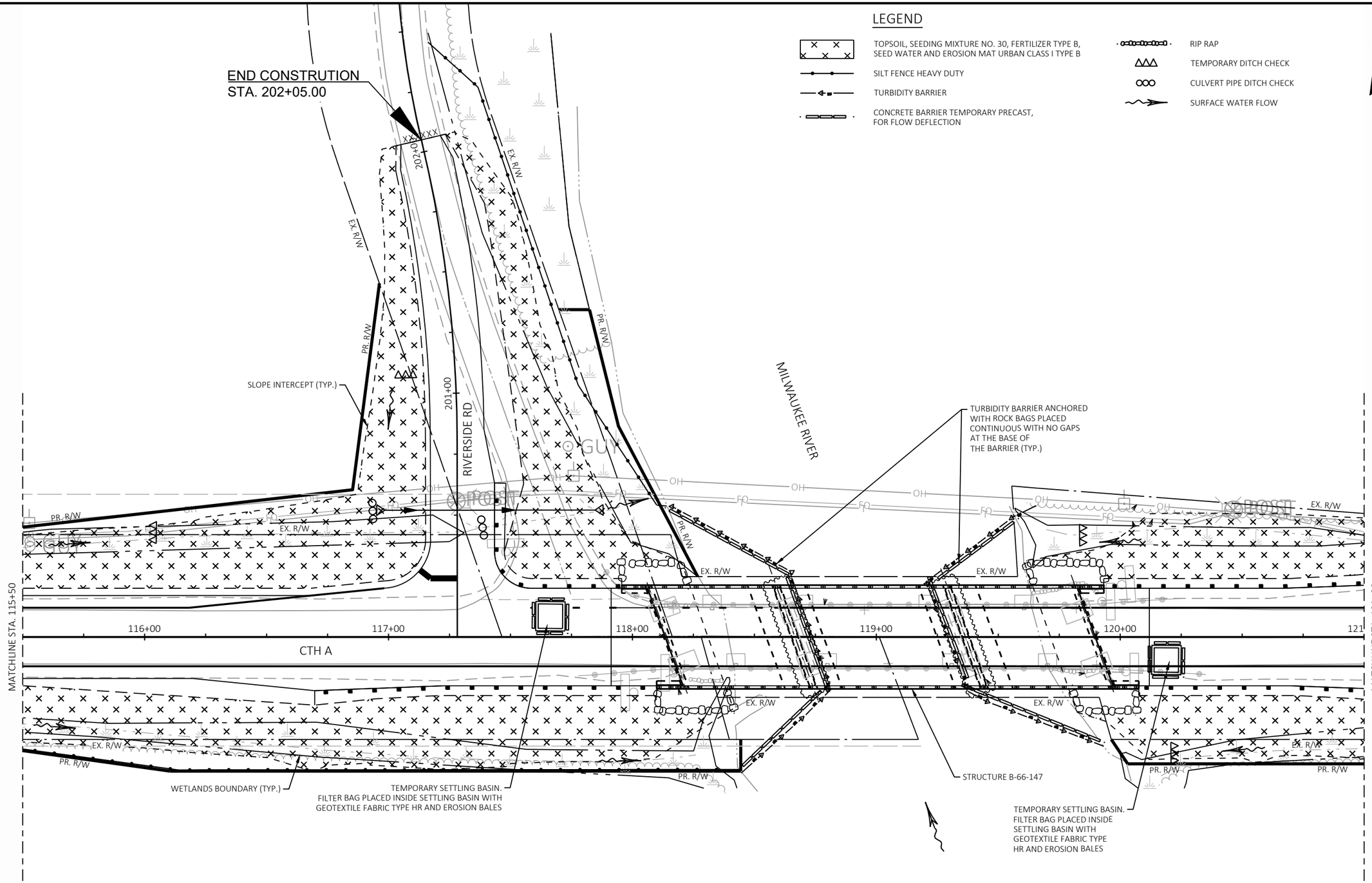

2

PROJECT NO: 4868-05-70	HWY: CTH A	COUNTY: WASHINGTON	EROSION CONTROL	SHEET 14	E

FILE NAME : X:\ML\2023\20230044\DESIGN\TRANSPORTATION\SHEETSPLAN\022001-EC.DWG
LAYOUT NAME - 022002_ec
PLOT DATE : 9/13/2024 11:35 AM PLOT BY : DABROWSKI, MATTHEW PLOT NAME : PLOT SCALE : 1 IN:40 FT
WISDOT/CADDS SHEET 42

2

LEGEND

- TOPSOIL, SEEDING MIXTURE NO. 30, FERTILIZER TYPE B, SEED WATER AND EROSION MAT URBAN CLASS I TYPE B
- SILT FENCE HEAVY DUTY
- TURBIDITY BARRIER
- CONCRETE BARRIER TEMPORARY PRECAST, FOR FLOW DEFLECTION
- RIP RAP
- TEMPORARY DITCH CHECK
- CULVERT PIPE DITCH CHECK
- SURFACE WATER FLOW

N

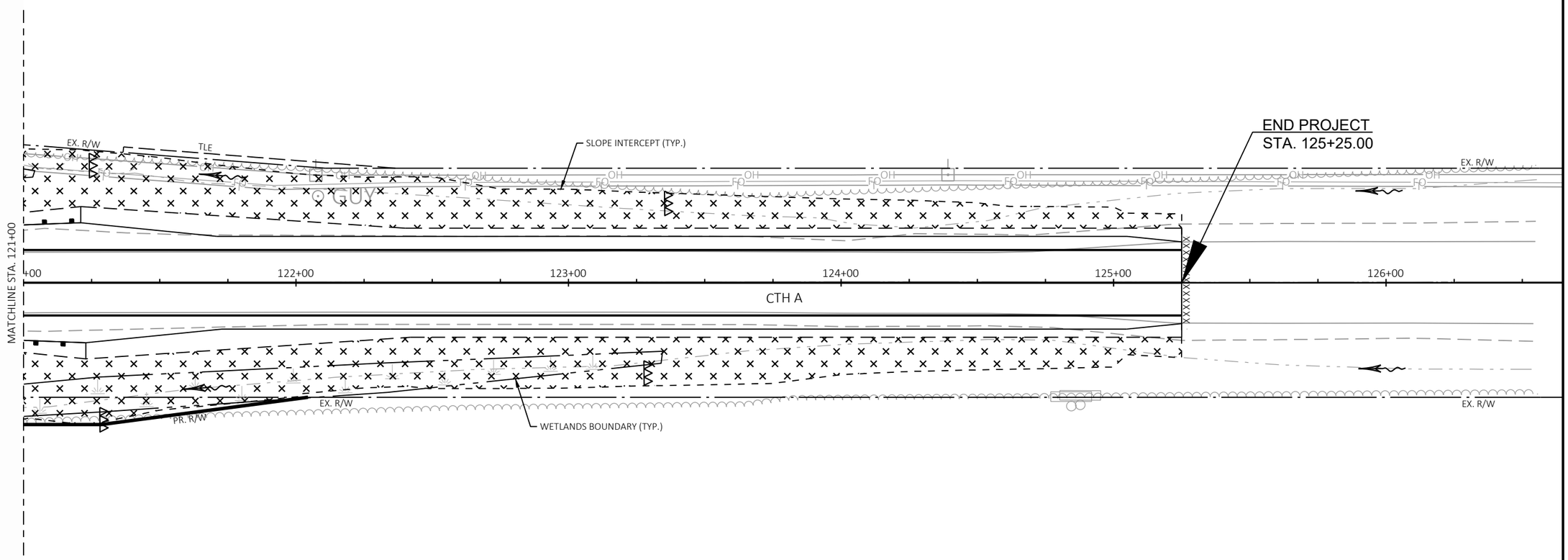

2

PROJECT NO: 4868-05-70	HWY: CTH A	COUNTY: WASHINGTON	EROSION CONTROL	SHEET 15	E

2

PAVEMENT MARKING LEGEND

1. MARKING LINE EPOXY 4-INCH, WHITE
2. MARKING LINE EPOXY 4-INCH, YELLOW
3. MARKING LINE EPOXY 4-INCH, WHITE (3' LINE, 9' SKIP)
4. MARKING STOP LINE EPOXY 18-INCH

SIGNING LEGEND

- EXISTING SIGN MOUNTED ON POST
- EXISTING SIGN MOUNTED ON UTILITY/LIGHT POLE
- PROPOSED SIGN MOUNTED ON POST
- PROPOSED SING MOUNTED ON UTILITY/LIGHT POLE
- ESTR EXISTING SIGN TO REMAIN
- X-XX SIGN NUMBER

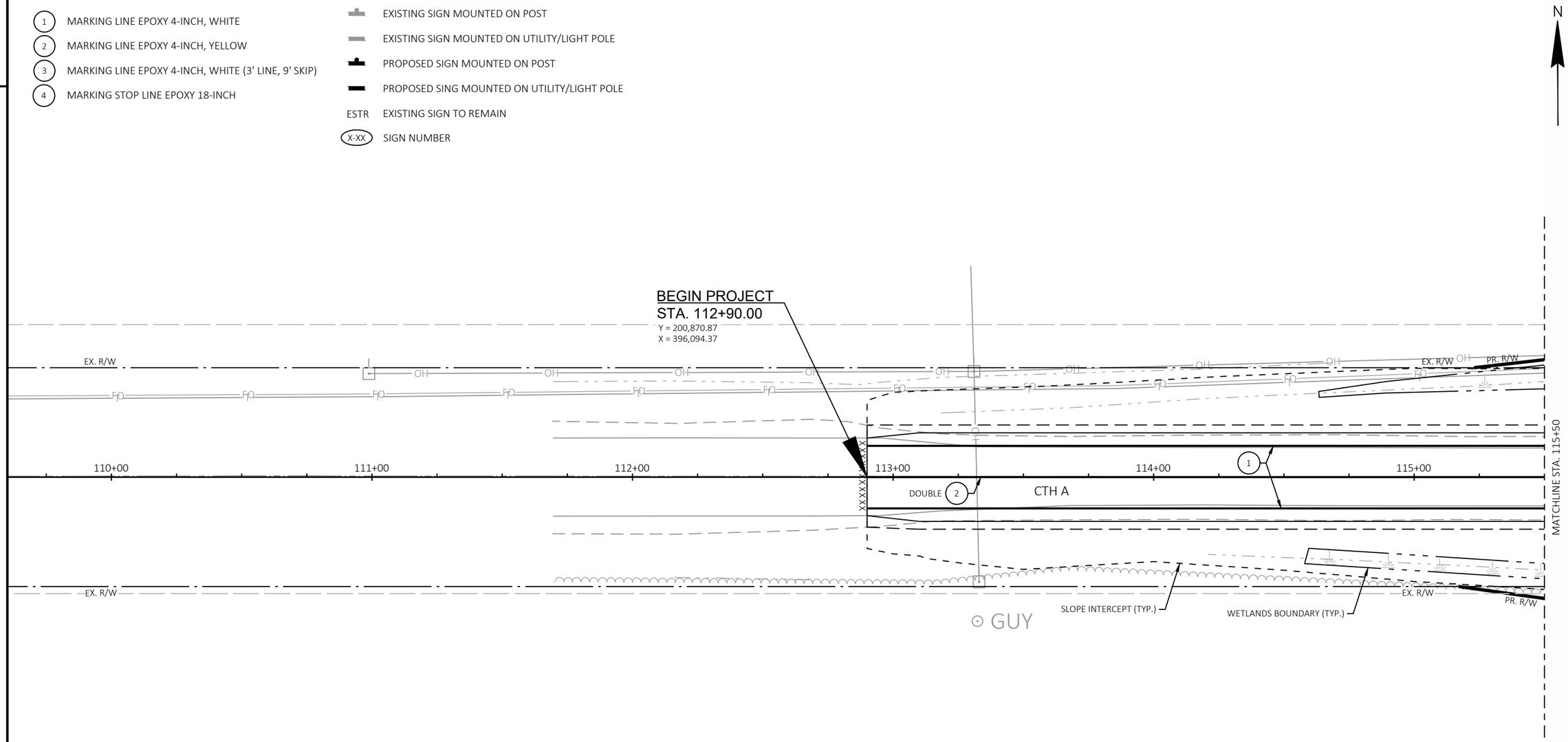

2

PROJECT NO: 4868-05-70	HWY: CTH A	COUNTY: WASHINGTON	PAVEMENT MARKING & PERMANENT SIGNING PLAN	SHEET 16	E

FILE NAME : X:\ML\2023\20230044\DESIGN\TRANSPORTATION\SHEETSPLAN\024501-PM.DWG
LAYOUT NAME - 024501_pm
PLOT DATE : 8/1/2024 9:35 AM
PLOT BY : DABROWSKI, MATTHEW
PLOT NAME :
PLOT SCALE : 1 IN:40 FT
WISDOT/CADDS SHEET 42

PAVEMENT MARKING LEGEND

1. MARKING LINE EPOXY 4-INCH, WHITE
2. MARKING LINE EPOXY 4-INCH, YELLOW
3. MARKING LINE EPOXY 4-INCH, WHITE (3' LINE, 9' SKIP)
4. MARKING STOP LINE EPOXY 18-INCH

SIGNING LEGEND

- EXISTING SIGN MOUNTED ON POST
- EXISTING SIGN MOUNTED ON UTILITY/LIGHT POLE
- PROPOSED SIGN MOUNTED ON POST
- PROPOSED SING MOUNTED ON UTILITY/LIGHT POLE
- ESTR — EXISTING SIGN TO REMAIN
- X-XX — SIGN NUMBER

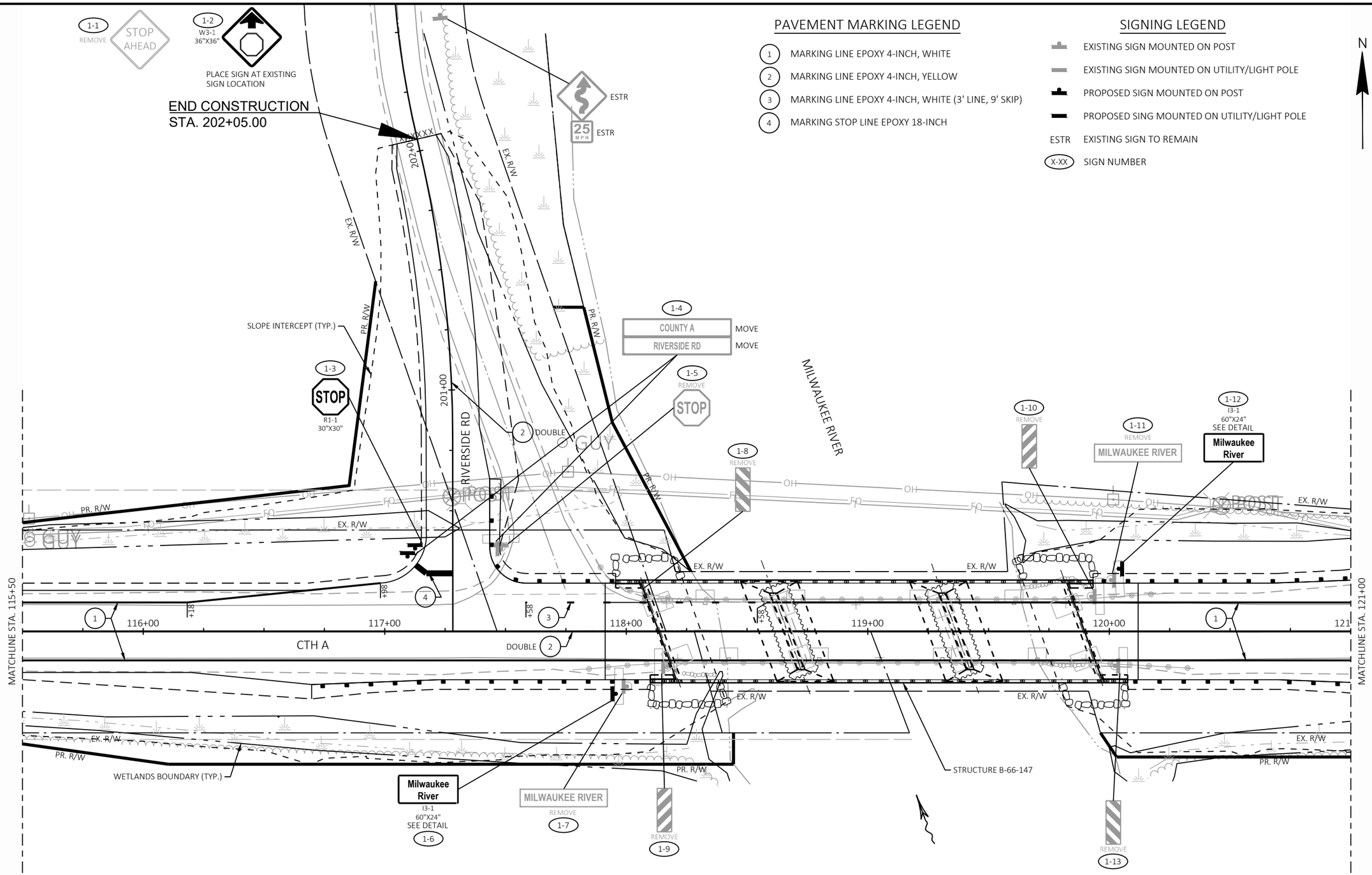

2

PAVEMENT MARKING LEGEND

1. MARKING LINE EPOXY 4-INCH, WHITE
2. MARKING LINE EPOXY 4-INCH, YELLOW
3. MARKING LINE EPOXY 4-INCH, WHITE (3' LINE, 9' SKIP)
4. MARKING STOP LINE EPOXY 18-INCH

SIGNING LEGEND

- EXISTING SIGN MOUNTED ON POST
- EXISTING SIGN MOUNTED ON UTILITY/LIGHT POLE
- PROPOSED SIGN MOUNTED ON POST
- PROPOSED SING MOUNTED ON UTILITY/LIGHT POLE
- ESTR EXISTING SIGN TO REMAIN
- X-XX SIGN NUMBER

N

2

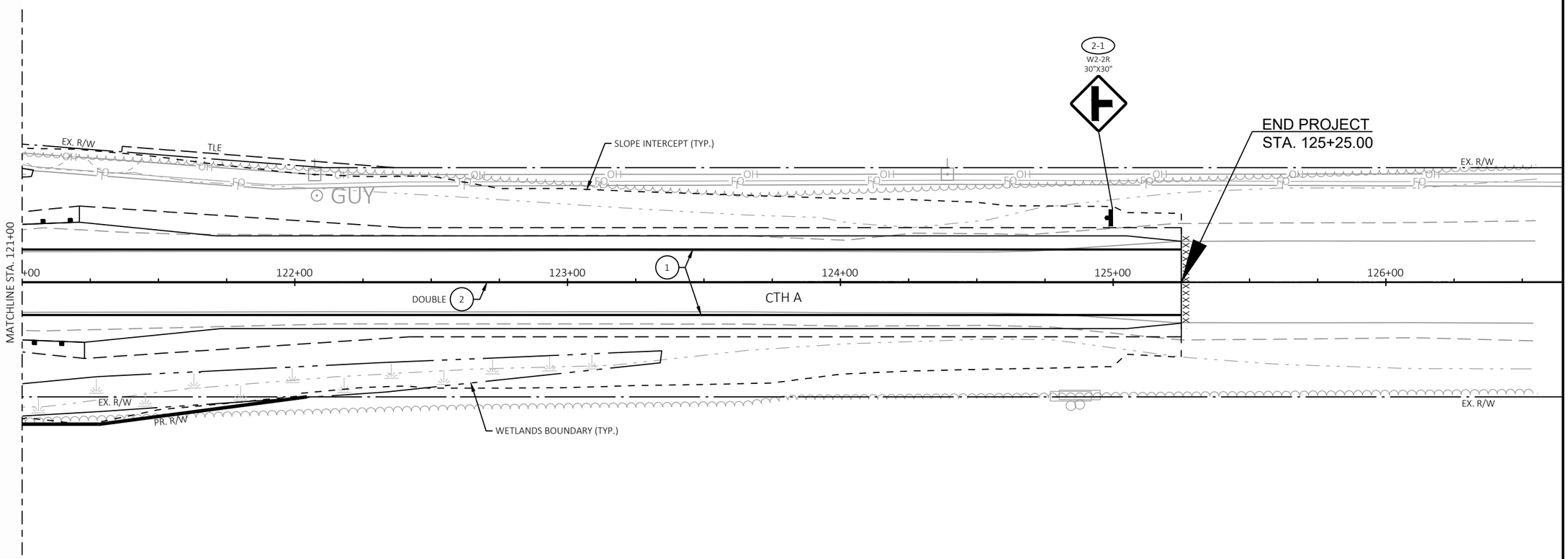

PROJECT NO: 4868-05-70	HWY: CTH A	COUNTY: WASHINGTON	PAVEMENT MARKING & PERMANENT SIGNING PLAN	SHEET 18	E

FILE NAME : X:\ML\2023\20230044\DESIGN\TRANSPORTATION\SHEETSPLAN\024501-PM.DWG
LAYOUT NAME - 024503_pm
PLOT DATE : 8/1/2024 9:35 AM
PLOT BY : DABROWSKI, MATTHEW
PLOT NAME :
PLOT SCALE : 1 IN:40 FT
WISDOT/CADDS SHEET 42

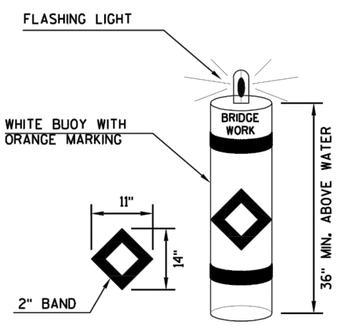

TYPICAL HAZARD WARNING BUOY DETAIL

ALL BUOYS SHALL BE 7" DIAMETER WITH RED FLASHING LIGHTS AT 30 FLASHES/MIN. IF NECESSARY

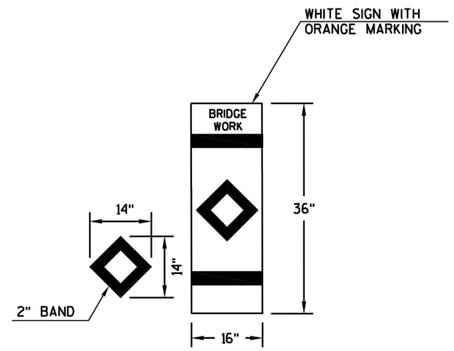

TYPICAL HAZARD WARNING SIGN DETAIL

ALL SIGNS SHALL BE MOUNTED ON A STEEL POSTS

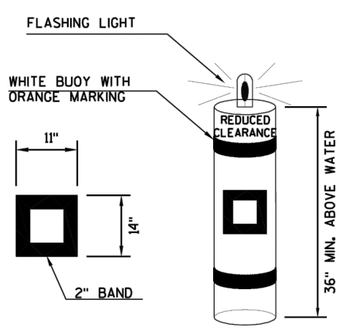

TYPICAL INFORMATIONAL BUOY DETAIL

ALL BUOYS SHALL BE 7" DIAMETER WITH RED FLASHING LIGHTS AT 30 FLASHES/MIN.

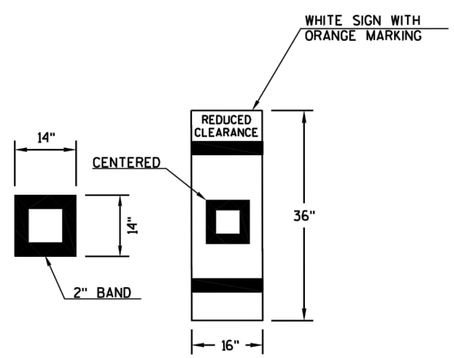

TYPICAL INFORMATIONAL SIGN DETAIL

ALL SIGNS SHALL BE MOUNTED ON A STEEL POSTS

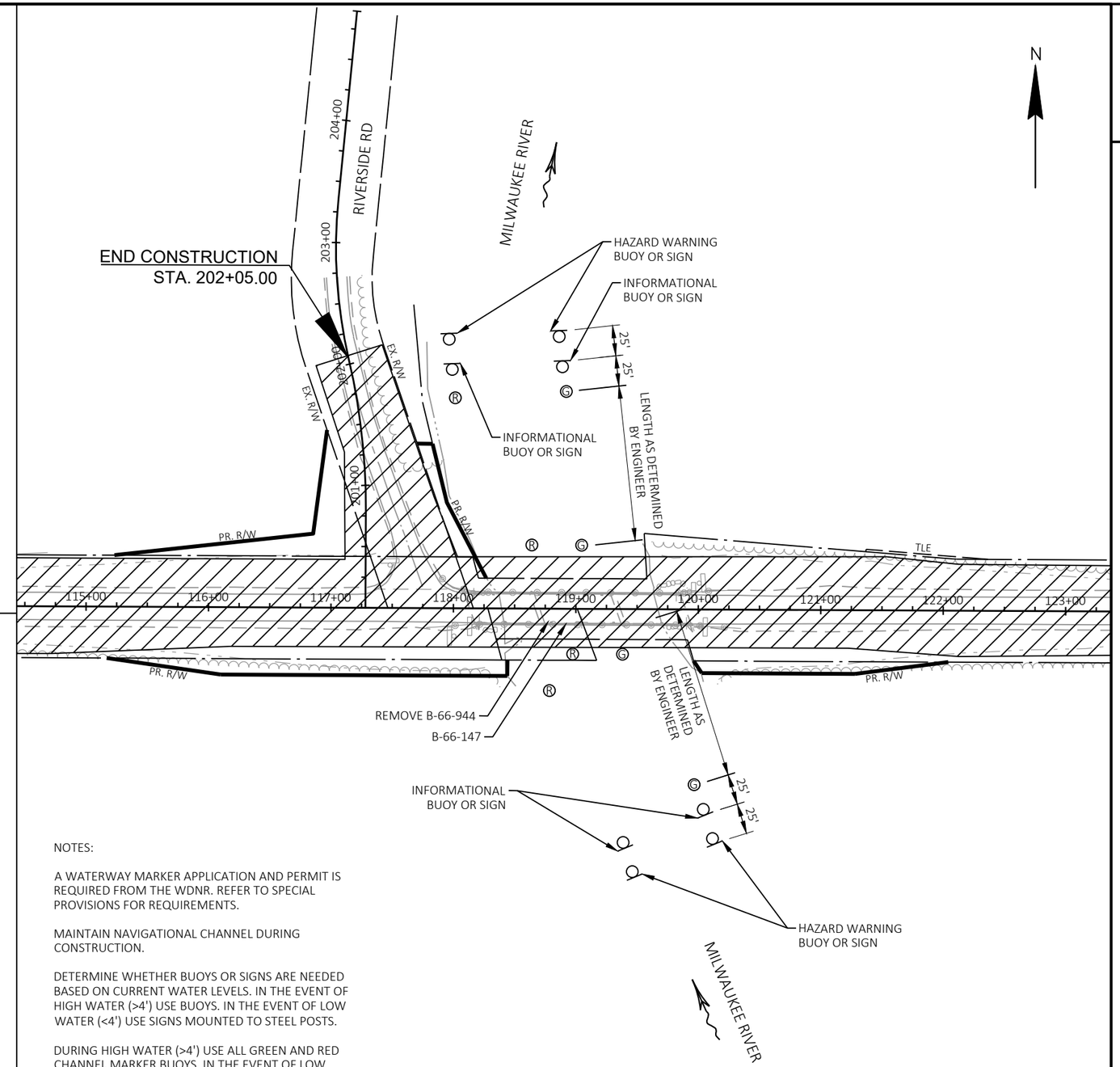

NOTES:

A WATERWAY MARKER APPLICATION AND PERMIT IS REQUIRED FROM THE WDNR. REFER TO SPECIAL PROVISIONS FOR REQUIREMENTS.

MAINTAIN NAVIGATIONAL CHANNEL DURING CONSTRUCTION.

DETERMINE WHETHER BUOYS OR SIGNS ARE NEEDED BASED ON CURRENT WATER LEVELS. IN THE EVENT OF HIGH WATER (>4') USE BUOYS. IN THE EVENT OF LOW WATER (<4') USE SIGNS MOUNTED TO STEEL POSTS.

DURING HIGH WATER (>4') USE ALL GREEN AND RED CHANNEL MARKER BUOYS. IN THE EVENT OF LOW WATER USE ALL GREEN OR ALL RED CHANNEL MARKER SIGNS. SIGNS SHALL BE 16" WIDE BY 36" TALL AND MOUNTED ON STEEL POSTS.

REFER TO SPECIAL PROVISIONS FOR LIGHTING REQUIREMENTS.

LEGEND

- WORK AREA
- BUOY OR SIGN
- Ⓡ Ⓖ COLOR OF CHANNELIZED MARKER BUOY OR SIGN

2

LEGEND

- TRAFFIC FLOW ARROWS
- MB — PCMS SIGN
- TEMPORARY SIGN ON POST
- TEMPORARY SIGN ON TEMPORARY SUPPORT
- TRAFFIC CONTROL DELINEATOR
- TRAFFIC CONTROL TYPE III BARRICADE
- WORK ZONE

NOTES:

ALL SIGNS ARE 48"X48" UNLESS OTHERWISE NOTED.

N

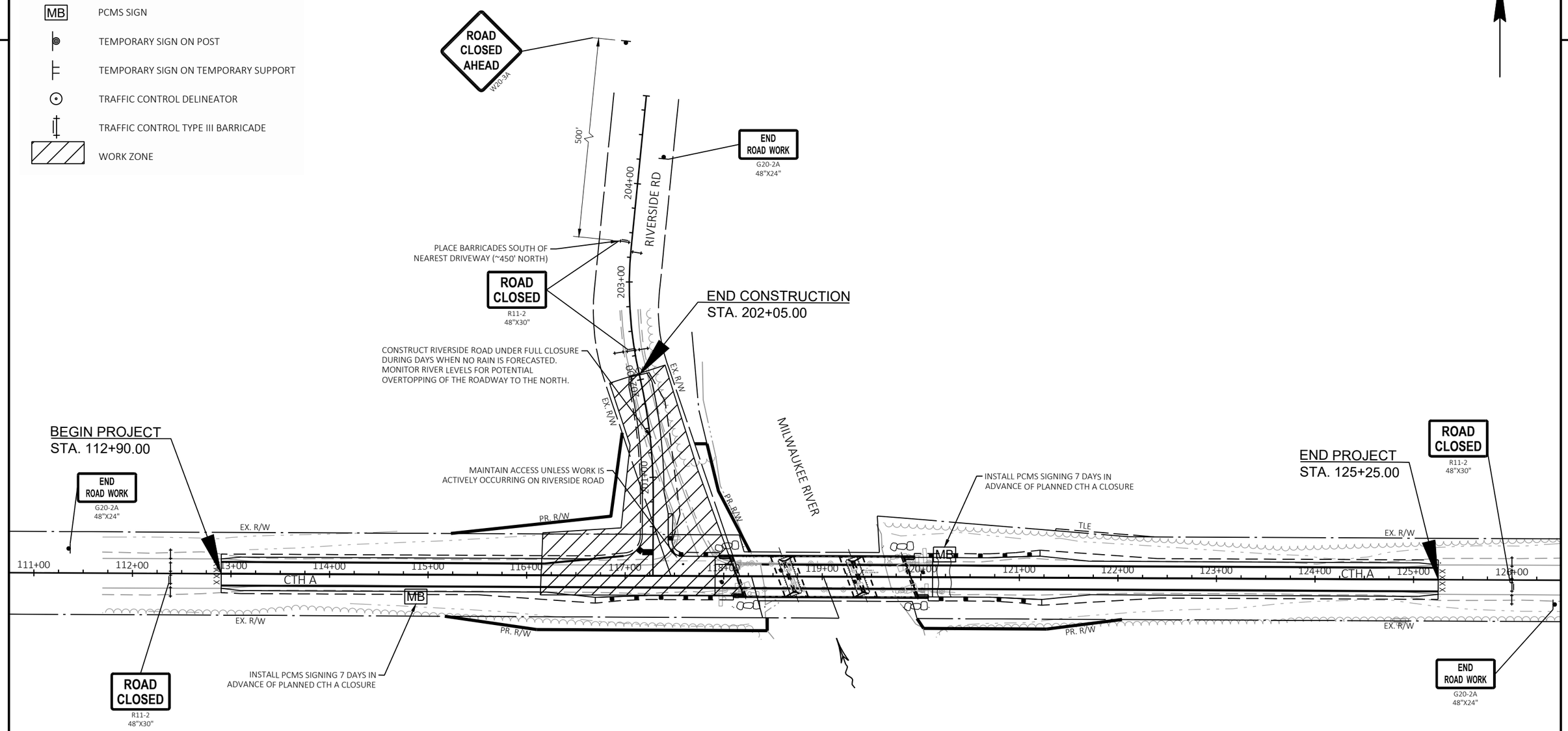

TRAFFIC CONTROL PCMS MESSAGE MB	
PLACE 7 DAYS PRIOR TO CLOSURE	
FRAME	MESSAGE
1	HWY A TO CLOSE
2	"DAY" "DATE"

PROJECT NO: 4868-05-70	HWY: CTH A	COUNTY: WASHINGTON	TRAFFIC CONTROL - STAGE 1	SHEET 20	E

2

LEGEND

- TRAFFIC FLOW ARROWS
- MB — PCMS SIGN
- TEMPORARY SIGN ON POST
- TEMPORARY SIGN ON TEMPORARY SUPPORT
- TRAFFIC CONTROL DELINEATOR
- TRAFFIC CONTROL TYPE III BARRICADE
- WORK ZONE

NOTES:

ALL SIGNS ARE 48"X48" UNLESS OTHERWISE NOTED.

N

2

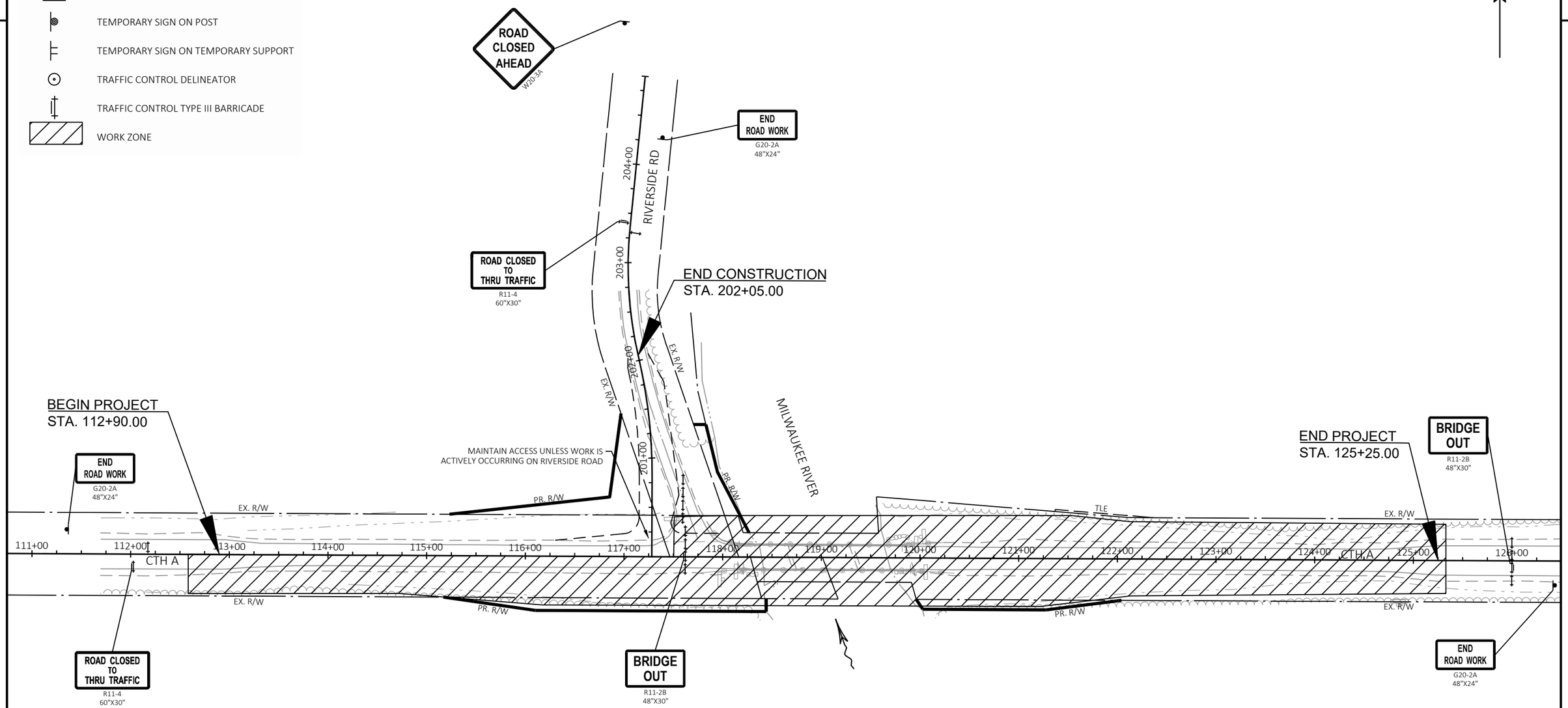

PROJECT NO: 4868-05-70	HWY: CTH A	COUNTY: WASHINGTON	TRAFFIC CONTROL - STAGE 2	SHEET 21	E

FILE NAME : X:\ML\2023\20230044\DESIGN\TRANSPORTATION\SHEETSPLAN\026102-S2.DWG
LAYOUT NAME - 026101_s1
PLOT DATE : 8/1/2024 9:36 AM
PLOT BY : DABROWSKI, MATTHEW
PLOT NAME :
PLOT SCALE : 1 IN:100 FT
WISDOT/CADDS SHEET 42

2

LEGEND

- TRAFFIC FLOW ARROWS
- MB PCMS SIGN
- TEMPORARY SIGN ON POST
- TEMPORARY SIGN ON TEMPORARY SUPPORT
- TRAFFIC CONTROL DELINEATOR
- TRAFFIC CONTROL TYPE III BARRICADE
- WORK ZONE

NOTES:

ALL SIGNS ARE 48"X48" UNLESS OTHERWISE NOTED.

N

2

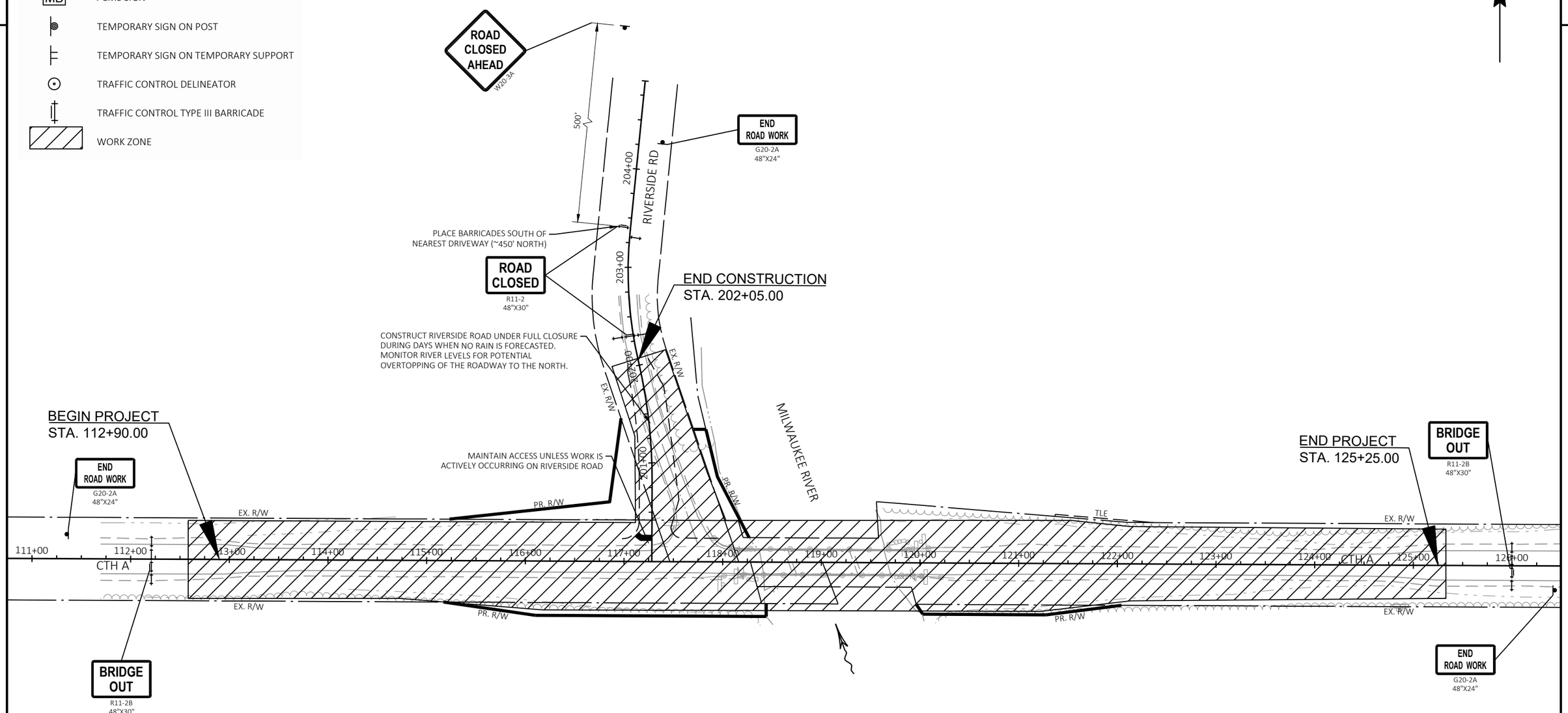

PROJECT NO: 4868-05-70	HWY: CTH A	COUNTY: WASHINGTON	TRAFFIC CONTROL - STAGE 3	SHEET 22	E

FILE NAME : X:\ML\2023\20230044\DESIGN\TRANSPORTATION\SHEETSPLAN\026103-S3.DWG
LAYOUT NAME - 026101_s1
PLOT DATE : 8/1/2024 9:36 AM
PLOT BY : DABROWSKI, MATTHEW
PLOT NAME :
PLOT SCALE : 1 IN:100 FT

WISDOT/CADDS SHEET 42

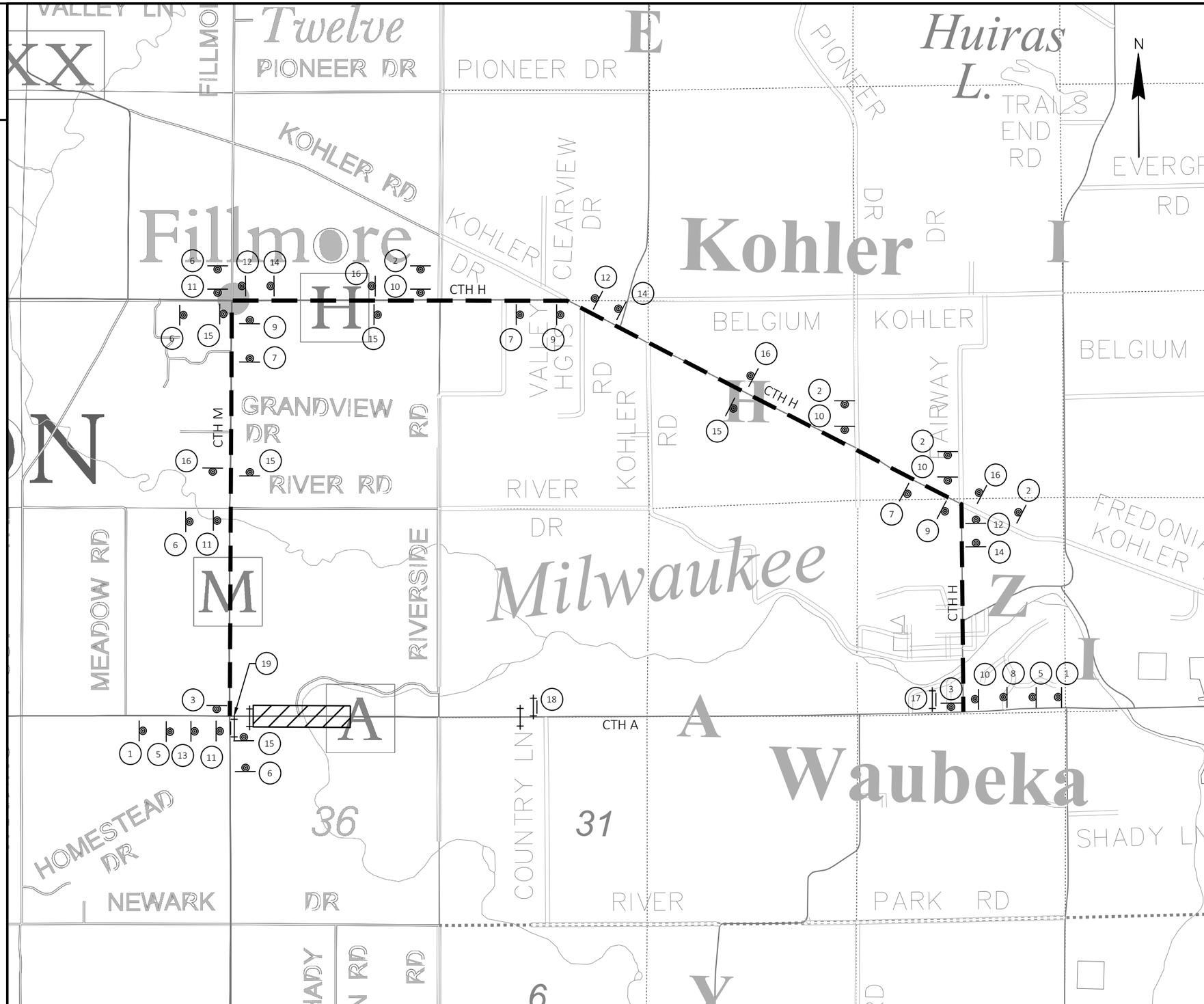

LEGEND

- DETOUR ROUTE
- WORK ZONE
- SIGN ON PERMANENT SUPPORT
- TYPE III BARRICADE WITH ATTACHED SIGN AND TWO TYPE A LIGHTS

NOTES:

ALL SIGNS ARE 48"X48" UNLESS OTHERWISE NOTED.

"MO" SIGNS ARE THE SAME AS "M" SIGNS EXCEPT THE BACKGROUND IS ORANGE.

1 ROAD CLOSED AHEAD W20-3A

2 WEST M3-4 24"X12" / COUNTY A M1-5A 24"X24" / DETOUR AHEAD W20-2A

3 END DETOUR M4-8A 24"X18"

5 DETOUR AHEAD W20-2A

6 EAST M3-2 24"X12" / COUNTY A M1-5A 24"X24" / DETOUR AHEAD W20-2A

7 EAST M3-2 24"X12" / COUNTY A M1-5A 24"X24" / MO5-1R 21"X21"

8 WEST M3-4 24"X12" / COUNTY A M1-5A 24"X24" / MO5-1R 21"X21"

9 EAST M3-2 24"X12" / COUNTY A M1-5A 24"X24" / MO6-1 21"X21"

10 WEST M3-4 24"X12" / COUNTY A M1-5A 24"X24" / MO6-1 21"X21"

11 EAST M3-2 24"X12" / COUNTY A M1-5A 24"X24" / MO6-1 21"X21"

12 WEST M3-4 24"X12" / COUNTY A M1-5A 24"X24" / MO6-1 21"X21"

13 EAST M3-2 24"X12" / COUNTY A M1-5A 24"X24" / MO5-1L 21"X21"

14 WEST M3-4 24"X12" / COUNTY A M1-5A 24"X24" / MO5-1L 21"X21"

15 EAST M3-2 24"X12" / COUNTY A M1-5A 24"X24" / MO6-1 21"X21"

16 WEST M3-4 24"X12" / COUNTY A M1-5A 24"X24" / MO6-1 21"X21"

17 BRIDGE OUT 3 MILES AHEAD R11-3C 60"X24"

18 BRIDGE OUT 1 MILES AHEAD R11-3C 60"X24"

19 BRIDGE OUT 1/3 MILES AHEAD R11-3C 60"X24"

PROJECT NO: 4868-05-70	HWY: CTH A	COUNTY: WASHINGTON	DETOUR PLAN	SHEET 23	E

FILE NAME : X:\ML\2023\20230044\DESIGN\TRANSPORTATION\SHEETSPLAN\027001-DT.DWG
LAYOUT NAME - 027001-dt
PLOT DATE : 8/1/2024 9:36 AM PLOT BY : DABROWSKI, MATTHEW PLOT NAME : PLOT SCALE : 1 IN:0.5 MI

WISDOT/CADDS SHEET 42

CURVE 1
PI STA = 201+42.24
Y = 201010.977
X = 396533.151
DELTA = 13°21'29" LT
D = 10°44'59"
T = 62.41'
L = 124.26'
R = 533.00'
PC STA = 200+79.83
PT STA = 202+04.09

CURVE 2
PI STA = 202+70.37
Y = 201136.306
X = 396503.931
DELTA = 18°48'56" RT
D = 14°19'26"
T = 66.28'
L = 131.36'
R = 400.00'
PC STA = 202+04.09
PT STA = 203+35.45

CONTROL POINTS

NUMBER	DESCRIPTION	STATION	OFFSET	NORTHING	EASTING
CP6	FENO MONUMENT	110+14.14	33.04' RT	200,839.179	395,818.360
CP7	FENO MONUMENT	127+07.49	28.25' LT	200,892.156	397,512.018

N

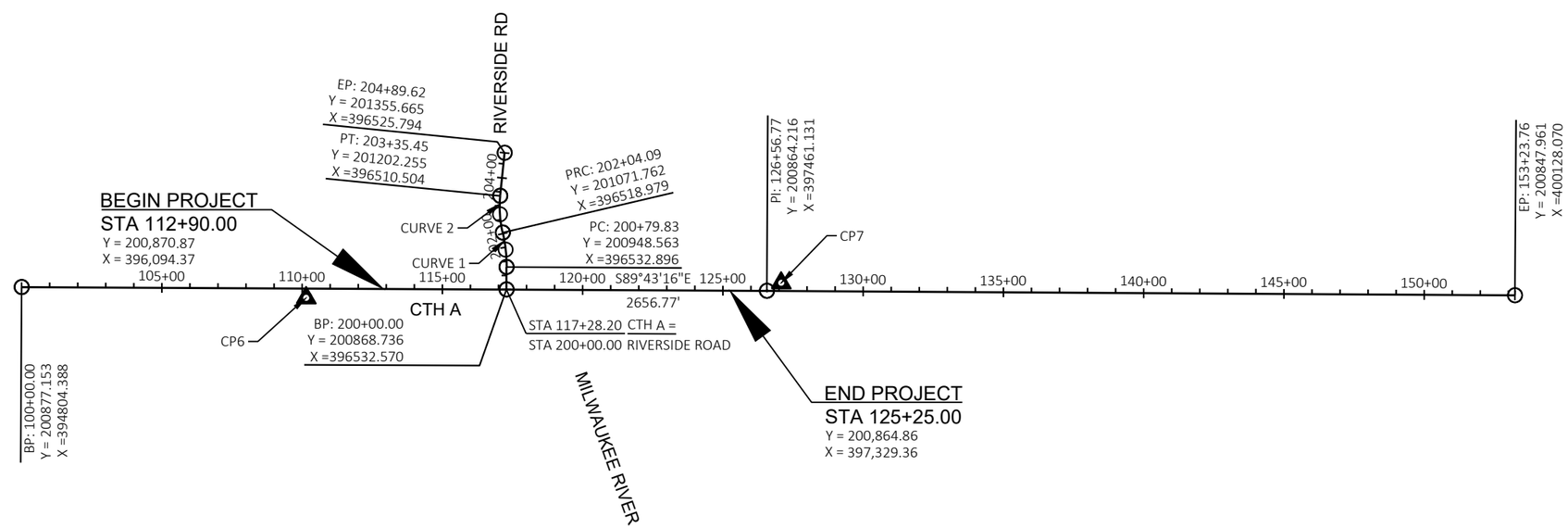

Estimate Of Quantities

4868-05-70

Line	Item	Item Description	Unit	Total	Qty
0002	201.0210	Grubbing	SY	193.000	193.000
0004	203.0100	Removing Small Pipe Culverts	EACH	1.000	1.000
0006	203.0260	Removing Structure Over Waterway Minimal Debris (structure) 01. B-66-944	EACH	1.000	1.000
0008	204.0165	Removing Guardrail	LF	502.000	502.000
0010	205.0100	Excavation Common	CY	1,578.000	1,578.000
0012	205.0400	Excavation Marsh	CY	502.000	502.000
0014	206.1001	Excavation for Structures Bridges (structure) 01. B-66-147	EACH	1.000	1.000
0016	206.5001	Cofferdams (structure) 01. B-66-147	EACH	1.000	1.000
0018	208.0100	Borrow	CY	2,231.000	2,231.000
0020	210.1500	Backfill Structure Type A	TON	392.000	392.000
0022	213.0100	Finishing Roadway (project) 01. 4868-05-70	EACH	1.000	1.000
0024	305.0110	Base Aggregate Dense 3/4-Inch	TON	469.000	469.000
0026	305.0120	Base Aggregate Dense 1 1/4-Inch	TON	3,285.000	3,285.000
0028	311.0110	Breaker Run	TON	1,549.000	1,549.000
0030	415.0080	Concrete Pavement 8-Inch	SY	78.000	78.000
0032	415.0410	Concrete Pavement Approach Slab	SY	118.000	118.000
0034	455.0605	Tack Coat	GAL	542.000	542.000
0036	460.2000	Incentive Density HMA Pavement	DOL	951.000	951.000
0038	460.5223	HMA Pavement 3 LT 58-28 S	TON	975.000	975.000
0040	460.5224	HMA Pavement 4 LT 58-28 S	TON	585.000	585.000
0042	502.0100	Concrete Masonry Bridges	CY	842.000	842.000
0044	502.3200	Protective Surface Treatment	SY	1,011.000	1,011.000
0046	505.0400	Bar Steel Reinforcement HS Structures	LB	9,810.000	9,810.000
0048	505.0600	Bar Steel Reinforcement HS Coated Structures	LB	119,090.000	119,090.000
0050	513.4061	Railing Tubular Type M	LF	402.000	402.000
0052	516.0500	Rubberized Membrane Waterproofing	SY	24.000	24.000
0054	521.1024	Apron Endwalls for Culvert Pipe Steel 24-Inch	EACH	2.000	2.000
0056	521.3124	Culvert Pipe Corrugated Steel 24-Inch	LF	86.000	86.000
0058	550.0600	Pile Redriving	EACH	6.000	6.000
0060	550.1120	Piling Steel HP 12-Inch X 53 Lb	LF	1,460.000	1,460.000
0062	603.8000	Concrete Barrier Temporary Precast Delivered	LF	305.000	305.000
0064	603.8125	Concrete Barrier Temporary Precast Installed	LF	305.000	305.000
0066	606.0300	Riprap Heavy	CY	244.000	244.000
0068	612.0406	Pipe Underdrain Wrapped 6-Inch	LF	186.000	186.000
0070	612.0700	Drain Tile Exploration	LF	248.000	248.000
0072	614.0397	Guardrail Mow Strip Emulsified Asphalt	SY	221.000	221.000
0074	614.2300	MGS Guardrail 3	LF	112.000	112.000
0076	614.2350	MGS Guardrail Short Radius	LF	52.000	52.000
0078	614.2500	MGS Thrie Beam Transition	LF	158.000	158.000
0080	614.2610	MGS Guardrail Terminal EAT	EACH	3.000	3.000
0082	614.2630	MGS Guardrail Short Radius Terminal	EACH	1.000	1.000
0084	618.0100	Maintenance and Repair of Haul Roads (project) 01. 4868-05-70	EACH	1.000	1.000
0086	619.1000	Mobilization	EACH	1.000	1.000
0088	624.0100	Water	MGAL	38.000	38.000
0090	625.0100	Topsoil	SY	5,028.000	5,028.000
0092	627.0200	Mulching	SY	2,516.000	2,516.000
0094	628.1104	Erosion Bales	EACH	46.000	46.000
0096	628.1530.S	Silt Fence Heavy Duty	LF	550.000	550.000
0098	628.1535.S	Silt Fence Heavy Duty Maintenance	LF	550.000	550.000

Estimate Of Quantities

4868-05-70

Line	Item	Item Description	Unit	Total	Qty
0100	628.1905	Mobilizations Erosion Control	EACH	5.000	5.000
0102	628.1910	Mobilizations Emergency Erosion Control	EACH	3.000	3.000
0104	628.2008	Erosion Mat Urban Class I Type B	SY	5,028.000	5,028.000
0106	628.6005	Turbidity Barriers	SY	286.000	286.000
0108	628.7504	Temporary Ditch Checks	LF	90.000	90.000
0110	628.7555	Culvert Pipe Checks	EACH	3.000	3.000
0112	628.7570	Rock Bags	EACH	50.000	50.000
0114	629.0210	Fertilizer Type B	CWT	1.100	1.100
0116	630.0130	Seeding Mixture No. 30	LB	90.000	90.000
0118	630.0200	Seeding Temporary	LB	137.000	137.000
0120	630.0500	Seed Water	MGAL	113.000	113.000
0122	633.5200	Markers Culvert End	EACH	2.000	2.000
0124	634.0618	Posts Wood 4x6-Inch X 18-FT	EACH	5.000	5.000
0126	637.2210	Signs Type II Reflective H	SF	25.180	25.180
0128	637.2230	Signs Type II Reflective F	SF	15.250	15.250
0130	638.2102	Moving Signs Type II	EACH	2.000	2.000
0132	638.2602	Removing Signs Type II	EACH	8.000	8.000
0134	638.3000	Removing Small Sign Supports	EACH	7.000	7.000
0136	638.4000	Moving Small Sign Supports	EACH	1.000	1.000
0138	642.5001	Field Office Type B	EACH	1.000	1.000
0140	643.0420	Traffic Control Barricades Type III	DAY	2,434.000	2,434.000
0142	643.0705	Traffic Control Warning Lights Type A	DAY	4,868.000	4,868.000
0144	643.0900	Traffic Control Signs	DAY	15,327.000	15,327.000
0146	643.1050	Traffic Control Signs PCMS	DAY	14.000	14.000
0148	643.5000	Traffic Control	EACH	1.000	1.000
0150	645.0111	Geotextile Type DF Schedule A	SY	88.000	88.000
0152	645.0120	Geotextile Type HR	SY	508.000	508.000
0154	645.0220	Geogrid Type SR	SY	215.000	215.000
0156	646.1020	Marking Line Epoxy 4-Inch	LF	5,217.000	5,217.000
0158	646.6120	Marking Stop Line Epoxy 18-Inch	LF	17.000	17.000
0160	650.4500	Construction Staking Subgrade	LF	1,239.000	1,239.000
0162	650.5000	Construction Staking Base	LF	1,195.000	1,195.000
0164	650.6000	Construction Staking Pipe Culverts	EACH	2.000	2.000
0166	650.6501	Construction Staking Structure Layout (structure) 01. B-66-147	EACH	1.000	1.000
0168	650.7000	Construction Staking Concrete Pavement	LF	44.000	44.000
0170	650.9911	Construction Staking Supplemental Control (project) 01. 4868-05-70	EACH	1.000	1.000
0172	650.9920	Construction Staking Slope Stakes	LF	1,239.000	1,239.000
0174	690.0150	Sawing Asphalt	LF	77.000	77.000
0176	715.0502	Incentive Strength Concrete Structures	DOL	5,052.000	5,052.000
0178	715.0720	Incentive Compressive Strength Concrete Pavement	DOL	100.000	100.000
0180	999.2000.S	Installing and Maintaining Bird Deterrent System (station) 01. 119+00	EACH	1.000	1.000
0182	ASP.1T0A	On-the-Job Training Apprentice at $5.00/HR	HRS	800.000	800.000
0184	ASP.1T0G	On-the-Job Training Graduate at $5.00/HR	HRS	2,280.000	2,280.000
0186	SPV.0090	Special 01. Flashing Stainless Steel	LF	356.000	356.000
0188	SPV.0195	Special 01. Select Crushed Material for Travel Corridor	TON	36.000	36.000

3

CLEARING & GRUBBING

STATION TO STATION	201.0210 GRUBBING SY
CTH A	
112+90 - 113+13	-
113+13 - MILWAUKEE RIVER	98
MILWAUKEE RIVER - 124+93	8
124+93 - 125+25	-
RIVERSIDE ROAD	
200+63 - 202+05	87
TOTALS	193

CLEARING TO BE DONE BY WASHINGTON COUNTY

REMOVING SMALL PIPE CULVERTS

STATION TO STATION	203.0100 REMOVING SMALL PIPE CULVERTS EACH
CTH A	
112+90 - 113+13	-
113+13 - MILWAUKEE RIVER	1
MILWAUKEE RIVER - 124+93	-
124+93 - 125+25	-
RIVERSIDE ROAD	
200+63 - 202+05	-
TOTALS	1

REMOVING GUARDRAIL

STATION TO STATION	204.0165 REMOVING GUARDRAIL LF
CTH A	
112+90 - 113+13	-
113+13 - MILWAUKEE RIVER	251
MILWAUKEE RIVER - 124+93	251
124+93 - 125+25	-
RIVERSIDE ROAD	
200+63 - 202+05	-
TOTALS	502

3

DIVISION	FROM/TO STATION	205.0100 COMMON EXCAVATION (1) CUT CAT 0010 (2)	CUT CAT 0030 (2)	EBS EXCAVATION (3)	SALVAGED/UNUSABLE PAVEMENT MATERIAL (4)	AVAILABLE MATERIAL (5)	205.0400 MARSH EXCAVATION CAT 0010 (6)	EXPANDED MARSH BACKFILL (7) FACTOR 1.50	UNEXPANDED FILL	EXPANDED FILL (8) FACTOR 1.25	MASS ORDINATE +/- (9)	WASTE (10)	208.0100 BORROW CAT 0010	311.0110 BREAKER RUN CAT 0010	645.0220 GEOGRID TYPE SR CAT 0010	COMMENT
DIVISION 1														TON	SY	
CTH A	112+90/113+13	0	38	0	7	31	0	0	13	16	15	15	0	0	0	
CTH A	113+13/124+93	1,287	0	0	335	952	0	0	2,232	2,790	-1,838	0	1,838	0	0	
CTH A	124+93/125+25	0	62	0	11	51	0	0	2	3	49	49	0	0	0	
RIVERSIDE RD	200+23.925/202+05	191	0	0	36	155	2	3	438	548	-393	0	393	0	0	
UNDISTRIBUTED		0	0	70	0	0	500	750	0	0	0	570	0	1,350	215	
DIVISION 1 SUBTOTAL		1,478	100	70	389	1,189	502	753	2,685	3,356	-2,167	633	2,231	1,350	215	
GRAND TOTAL		1,478	100	70	389	1,189	502	753	2,685	3,356	-2,167	633	2,231	1,350	215	
	TOTAL COMMON EXC		1,648													

NOTES:
(1) COMMON EXCAVATION IS THE SUM OF THE CUT AND EBS EXCAVATION COLUMNS. ITEM NUMBER 205.0100
(2) SALVAGED/UNSUABLE PAVEMENT MATERIAL IS INCLUDED IN CUT.
(3) EBS EXCAVATION TO BE BACKFILLED WITH BREAKER RUN AT 1.8 TONS/CY.
(4) SALVAGED/UNUSABLE PAVEMENT MATERIAL
(5) AVAILABLE MATERIAL = CUT - SALVAGED/UNUSUABLE PAVEMENT MATERIAL
(6) MARSH EXCAVATION - TO BE BACKFILLED WITH BREAKER RUN
(7) MARSH BACKFILL FACTOR = 1.50. EXPANDED MARSH BACKFILL TO BE BACKFILLED WITH BREAKER RUN AT 1.8 TONS/CY.
(8) EXPANDED FILL FACTOR = 1.25. EXPANDED FILL = UNEXPANDED FILL * FILL FACTOR
(9) THE MASS ORDINATE + OR - QTY CALCULATED FOR THE DIVISION. PLUS QUANTITY INDICATES AN EXCESS OF MATERIAL WITHIN THE DIVISION. MINUS INDICATES A SHORTAGE OF MATERIAL WITHIN THE DIVISION.
(10) FACTORS USED TO COMPUTE ANTICIPATED WASTE AND THE COMPUTED WASTE VOLUME IDENTIFIED ARE FOR GENERAL INFORMATION ONLY.

ALL ITEMS ARE CATEGORY 0010
UNLESS OTHERWISE NOTED

3

FINISHING ROADWAY

STATION TO STATION	213.0100 FINISHING ROADWAY EACH
CTH A	
4868-05-70	1
TOTALS	1

BASE AGGREGATE DENSE 3/4-INCH

STATION TO STATION	305.0110 BASE AGGREGATE DENSE 3/4-INCH TON	
CTH A	CATEGORY 0010	CATEGORY 0030
112+90 - 113+13	-	9
113+13 - MILWAUKEE RIVER	184	-
MILWAUKEE RIVER - 124+93	192	-
124+93 - 125+25	-	13
RIVERSIDE ROAD		
200+63 - 202+05	71	-
SUBTOTALS	447	22
TOTALS	469	

BASE AGGREGATE DENSE 1 1/4-INCH

STATION TO STATION	305.0120 BASE AGGREGATE DENSE 1 1/4-INCH TON	
CTH A	CATEGORY 0010	CATEGORY 0030
112+90 - 113+13	-	69
113+13 - MILWAUKEE RIVER	1,423	-
MILWAUKEE RIVER - 124+93	1,363	-
124+93 - 125+25	-	104
RIVERSIDE ROAD		
200+63 - 202+05	326	-
SUBTOTALS	3,112	173
TOTALS	3,285	

3

CONCRETE PAVEMENT

STATION TO STATION	415.0080 8-INCH SY
CTH A	
112+90 - 113+13	-
113+13 - MILWAUKEE RIVER	39
MILWAUKEE RIVER - 124+93	39
124+93 - 125+25	-
RIVERSIDE ROAD	
200+63 - 202+05	-
TOTALS	78

CONCRETE PAVEMENT APPROACH SLAB

STATION TO STATION	415.0410 CONCRETE PAVEMENT APPROACH SLAB SY
CTH A	
112+90 - 113+13	-
113+13 - MILWAUKEE RIVER	59
MILWAUKEE RIVER - 124+93	59
124+93 - 125+25	-
RIVERSIDE ROAD	
200+63 - 202+05	-
TOTALS	118

HMA PAVEMENT

STATION TO STATION	460.5223 3 LT 58-28 S TON		460.5224 4 LT 58-28 S TON		455.0605 TACK COAT GAL	
CTH A	CATEGORY 0010	CATEGORY 0030	CATEGORY 0010	CATEGORY 0030	CATEGORY 0010	CATEGORY 0030
112+90 - 113+13	-	18	-	11	-	10
113+13 - MILWAUKEE RIVER	440	-	264	-	245	-
MILWAUKEE RIVER - 124+93	414	-	248	-	230	-
124+93 - 125+25	-	28	-	17	-	15
RIVERSIDE ROAD						
200+63 - 202+05	75	-	45	-	42	-
SUBTOTALS	929	46	557	28	517	25
TOTALS	975		585		542	

ALL ITEMS ARE CATEGORY 0010 UNLESS OTHERWISE NOTED

3

STORM SEWER

STATION TO STATION	521.1024 APRON ENDWALLS FOR CULVERT PIPE STEEL 24-INCH EACH	521.3124 CULVERT PIPE CORRUGATED STEEL 24-INCH THICKNESS = 0.064" LF
CTH A		
112+90 - 113+13	-	-
113+13 - MILWAUKEE RIVER	2	86
MILWAUKEE RIVER - 124+93	-	-
124+93 - 125+25	-	-
RIVERSIDE ROAD		
200+63 - 202+05	-	-
TOTALS	2	86

CONCRETE BARRIER TEMPORARY PRECAST

STATION TO STATION	603.8000 DELIVERED LF	603.8125 INSTALLED LF
CTH A		
UNDISTRIBUTED	305	305
TOTALS	305	305

DRAIN TILE EXPLORATION

STATION TO STATION	612.0700 DRAIN TILE EXPLORATION LF
CTH A	
112+90 - 113+13	-
113+13 - MILWAUKEE RIVER	163
MILWAUKEE RIVER - 124+93	-
124+93 - 125+25	-
RIVERSIDE ROAD	
200+63 - 202+05	85
TOTALS	248

3

GUARDRAIL

STATION TO STATION	614.0397 GUARDRAIL MOW STRIP EMULSIFIED ASPHALT SY	614.2300 MGS GUARDRAIL 3 LF	614.2350 MGS GUARDRAIL SHORT RADIUS LF	614.2500 MGS THRIE BEAM TRANSITION LF	614.2610 MGS GUARDRAIL TERMINAL EAT EACH	614.2630 MGS GUARDRAIL SHORT RADIUS EACH
CTH A						
112+90 - 113+13	-	-	-	-	-	-
113+13 - MILWAUKEE RIVER	105	50	52	79	1	1
MILWAUKEE RIVER - 124+93	116	62	-	79	2	-
124+93 - 125+25	-	-	-	-	-	-
RIVERSIDE ROAD						
200+63 - 202+05	-	-	-	-	-	-
TOTALS	221	112	52	158	3	1

MAINTENANCE AND REPAIR OF HAUL ROADS

STATION TO STATION	618.0100 MAINTENANCE AND REPAIR OF HAUL ROADS EACH
CTH A	CATEGORY 0030
4868-05-70	1
TOTALS	1

MOBILIZATION

STATION TO STATION	619.1000 MOBILIZATION EACH
CTH A	
4868-05-70	1
TOTALS	1

WATER

STATION TO STATION	624.0100 WATER MGAL	
CTH A	CATEGORY 0010	CATEGORY 0030
112+90 - 113+13	-	1
113+13 - MILWAUKEE RIVER	16	-
MILWAUKEE RIVER - 124+93	16	-
124+93 - 125+25	-	1
RIVERSIDE ROAD		
200+63 - 202+05	4	-
SUBTOTALS	36	2
TOTALS	38	

TOPSOIL

STATION TO STATION	625.0100 TOPSOIL SY	
CTH A	CATEGORY 0010	CATEGORY 0030
112+90 - 113+13	-	57
113+13 - MILWAUKEE RIVER	2,433	-
MILWAUKEE RIVER - 124+93	1,969	-
124+93 - 125+25	-	57
RIVERSIDE ROAD		
200+63 - 202+05	512	-
SUBTOTALS	4,914	114
TOTALS	5,028	

ALL ITEMS ARE CATEGORY 0010 UNLESS OTHERWISE NOTED

3

MULCHING & SEEDING

STATION TO STATION	627.0200 MULCHING SY		630.0130 SEEDING MIXTURE NO. 30 LB		630.0200 SEEDING TEMPORARY LB		630.0500 SEED WATER MGAL	
CTH A	CATEGORY 0010	CATEGORY 0030	CATEGORY 0010	CATEGORY 0030	CATEGORY 0010	CATEGORY 0030	CATEGORY 0010	CATEGORY 0030
112+90 - 113+13	-	29	-	1	-	2	-	1
113+13 - MILWAUKEE RIVER	1,217	-	44	-	66	-	55	-
MILWAUKEE RIVER - 124+93	985	-	35	-	53	-	44	-
124+93 - 125+25	-	29	-	1	-	2	-	1
RIVERSIDE ROAD								
200+63 - 202+05	256	-	9	-	14	-	12	-
SUBTOTALS	2,458	58	88	2	133	4	111	2
TOTALS	2,516		90		137		113	

TEMPORARY SETTLING BASINS

STATION TO STATION	628.1104 EROSION BALES EACH	645.0120 GEOTEXTILE TYPE HR SY
CTH A		
112+90 - 113+13	-	-
113+13 - MILWAUKEE RIVER	23	38
MILWAUKEE RIVER - 124+93	23	38
124+93 - 125+25	-	-
RIVERSIDE ROAD		
200+63 - 202+05	-	-
TOTALS	46	76

SILT FENCE

STATION TO STATION	628.1530.S SILT FENCE HEAVY DUTY LF	628.1535.S SILT FENCE HEAVY DUTY MAINTENANCE LF
CTH A		
112+90 - 113+13	-	-
113+13 - MILWAUKEE RIVER	345	345
MILWAUKEE RIVER - 124+93	205	205
124+93 - 125+25	-	-
RIVERSIDE ROAD		
200+63 - 202+05	-	-
TOTALS	550	550

EROSION CONTROL MOBILIZATIONS

STATION TO STATION	628.1905 MOBILIZATIONS EROSION CONTROL EACH	628.1910 MOBILIZATIONS EMERGENCY EROSION CONTROL EACH
CTH A		
4868-05-70	5	3
TOTALS	5	3

EROSION MATTING

STATION TO STATION	628.2008 EROSION MAT URBAN CLASS I TYPE B SY	
CTH A	CATEGORY 0010	CATEGORY 0030
112+90 - 113+13	-	57
113+13 - MILWAUKEE RIVER	2,433	-
MILWAUKEE RIVER - 124+93	1,969	-
124+93 - 125+25	-	57
RIVERSIDE ROAD		
200+63 - 202+05	512	-
SUBTOTALS	4,914	114
TOTALS	5,028	

TURBIDITY BARRIERS

STATION TO STATION	628.6005 TURBIDITY BARRIERS SY
CTH A	
112+90 - 113+13	-
113+13 - MILWAUKEE RIVER	140
MILWAUKEE RIVER - 124+93	146
124+93 - 125+25	-
RIVERSIDE ROAD	
200+63 - 202+05	-
TOTALS	286

DITCH CHECKS

STATION TO STATION	628.7504 TEMPORARY DITCH CHECKS LF	628.7555 CULVERT PIPE CHECKS EACH
CTH A		
112+90 - 113+13	-	-
113+13 - MILWAUKEE RIVER	20	3
MILWAUKEE RIVER - 124+93	60	-
124+93 - 125+25	-	-
RIVERSIDE ROAD		
200+63 - 202+05	10	-
TOTALS	90	3

ALL ITEMS ARE CATEGORY 0010 UNLESS OTHERWISE NOTED

3

ROCK BAGS

STATION TO STATION	628.7570 ROCK BAGS EACH
CTH A	
UNDISTRIBUTED	50
TOTALS	50

FERTILIZER

STATION TO STATION	629.0210 FERTILIZER TYPE B CWT CATEGORY 0010	CATEGORY 0030
CTH A		
112+90 - 113+13	-	0.1
113+13 - MILWAUKEE RIVER	0.3	-
MILWAUKEE RIVER - 124+93	0.5	-
124+93 - 125+25	-	0.1
RIVERSIDE ROAD		
200+63 - 202+05	0.1	-
SUBTOTALS	0.9	0.2
TOTALS	1.1	

MARKERS CULVERT END

STATION	633.5200 MARKERS CULVERT END EACH
RIVERSIDE RD	
200+52	2
TOTALS	2

3

TYPE II PERMANENT SIGNING

4868-05-70 CTH A

SIGN NO.	SIGN CODE & SIZE	SIGN TYPE	SIGN MESSAGE	TYPE II SIGN SIZE W [IN.] x H [IN.]	637.2210 SIGNS TYPE II REFLCH [SF]	637.2230 SIGNS TYPE II REFLCF [SF]	638.2602 REMOVING SIGNS TYPE II [EA]	638.3000 REMOVING SMALL SIGN SUPPORTS [EA]	634.0618 POSTS WOOD 4"X6"X18' [EA]	638.2102 MOVING SIGNS TYPE II [EA]	638.4000 MOVING SMALL SIGN SUPPORTS [EA]	REMARKS / NEW SIGN LOCATION
1-1	-- --	--	--	-- x --	--	--	1	1	--	--	--	--
1-2	W3-1 (2S)	II	--	36 x 36	--	9.00	--	--	1	--	--	PLACE SIGN AT EXISTING SIGN LOCATION
1-3	R1-1 (2S)	II	--	30 x 30	5.18	--	--	--	1	--	--	--
1-4	-- --	--	--	-- x --	--	--	--	--	--	2	1	--
1-5	-- --	--	--	-- x --	--	--	1	--	--	--	--	--
1-6	I3-1 SEE DETAIL	II	Milwaukee River	60 x 24	10.00	--	--	--	1	--	--	--
1-7	-- --	--	--	-- x --	--	--	1	1	--	--	--	--
1-8	-- --	--	--	-- x --	--	--	1	1	--	--	--	--
1-9	-- --	--	--	-- x --	--	--	1	1	--	--	--	--
1-10	-- --	--	--	-- x --	--	--	1	1	--	--	--	--
1-11	-- --	--	--	-- x --	--	--	1	1	--	--	--	--
1-12	I3-1 SEE DETAIL	II	Milwaukee River	60 x 24	10.00	--	--	--	1	--	--	--
1-13	-- --	--	--	-- x --	--	--	1	1	--	--	--	--
2-1	W2-2R (2S)	II	--	30 x 30	--	6.25	--	--	1	--	--	--
TOTALS					25.18	15.25	8	7	5	2	1	

ALL ITEMS ARE CATEGORY 0010
UNLESS OTHERWISE NOTED

3

FIELD OFFICE TYPE B

STATION TO STATION	642.5001 FIELD OFFICE TYPE B EACH
CTH A	
4868-05-70	1
TOTALS	1

TRAFFIC CONTROL

STAGE	DURATION DAYS	643.0420 TRAFFIC CONTROL BARRICADES TYPE III EACH	DAY	643.0705 TRAFFIC CONTROL WARNING LIGHTS TYPE A EACH	DAY	643.0900 TRAFFIC CONTROL SIGNS EACH	DAY	643.1050 TRAFFIC CONTROL SIGNS PCMS EACH	DAY
CTH A									
STAGE 1	10	13	130	26	260	8	80	2	14
STAGE 2	82	17	1,394	34	2,788	8	656	-	-
STAGE 3	25	13	325	26	650	8	200	-	-
DETOUR	117	5	585	10	1,170	123	14,391	-	-
TOTALS		48	2,434	96	4,868	147	15,327	2	14

3

MARKING LINE

STATION TO STATION	646.1020 EPOXY 4-INCH (WHITE) LF	(YELLOW) LF	(WHITE) LF	(YELLOW) LF	646.6120 STOP LINE EPOXY 18-INCH LF
CTH A	CATEGORY 0010		CATEGORY 0030		
112+90 - 113+13	-	-	47	47	-
113+13 - MILWAUKEE RIVER	1,041	1,302	-	-	17
MILWAUKEE RIVER - 124+93	1,176	1,178	-	-	-
124+93 - 125+25	-	-	71	71	-
RIVERSIDE ROAD					
200+63 - 202+05	-	284	-	-	-
SUBTOTALS	2,217	2,764	118	118	17
TOTALS		5,217			17

CONSTRUCTION STAKING

ITEM	QUANTITY CATEGORY 0010	CATEGORY 0030	UNIT	DESCRIPTION
650.4500	1,180	59	LF	CONSTRUCTION STAKING SUBGRADE
650.5000	1,136	59	LF	CONSTRUCTION STAKING BASE
650.6000	2	-	EACH	CONSTRUCTION STAKING PIPE CULVERTS
650.6501	1	-	EACH	CONSTRUCTION STAKING STRUCTURE LAYOUT (B-66-147)
650.7000	44	-	LF	CONSTRUCTION STAKING CONCRETE PAVEMENT
650.9911	1	-	EACH	CONSTRUCTION STAKING SUPPLEMENTAL CONTROL (4868-05-70)
650.9920	1,180	59	LF	CONSTRUCTION STAKING SLOPE STAKES

ALL ITEMS ARE CATEGORY 0010
UNLESS OTHERWISE NOTED

3

SAWING

STATION TO STATION	690.0150 ASPHALT LF CATEGORY 0010	CATEGORY 0030
CTH A		
112+65 - 113+13	-	30
113+13 - MILWAUKEE RIVER	-	-
MILWAUKEE RIVER - 124+93	-	-
124+93 - 125+27	-	30
RIVERSIDE ROAD		
200+63 - 202+05	17	-
SUBTOTALS	17	60
TOTALS	77	

INSTALLING AND MAINTAINING BIRD DETERRENT SYSTEM

LOCATION	999.2000.S INSTALLING AND MAINTAINING BIRD DETERRENT SYSTEM EACH
CTH A	
119+00	1
TOTALS	1

3

ALL ITEMS ARE CATEGORY 0010
UNLESS OTHERWISE NOTED

PARCEL 1 COURSE TABLE

LINE	BEARING	DISTANCE
201-100	N00°16'44"E	42.00'
100-101	N83°48'57"E	163.26'
101-102	N07°40'37"E	85.34'
102-103	S81°21'42"E	74.40'
103-104	S89°45'57"E	12.57'
104-105	S13°36'39"E	49.23'
105-106	S27°31'04"E	69.70'
106-107	N89°43'16"W	6.24'
107-108	N15°25'29"W	17.92'
108-109	N89°43'16"W	13.83'
109-110	S18°50'41"E	44.45'
110-111	N89°43'16"W	69.86'
111-112	N18°50'41"W	44.45'
112-100	N89°43'16"W	208.93'

STATION AND OFFSET TABLE

POINT	STATION	OFFSET	POINT	STATION	OFFSET
100	115+23.01	-42.00'	113	115+17.11	42.00'
101	116+85.23	-60.38'	114	118+44.35	42.00'
	200+60.41	-42.92'	115	118+44.35	55.00'
102	116+96.22	-145.01'	116	116+10.39	55.00'
	201+48.80	-27.64'	117	122+04.36	42.00'
103	117+69.83	-134.20'	118	121+28.01	52.00'
	201+30.07	44.30'	119	120+03.05	52.00'
104	117+82.40	-134.21'	120	119+96.34	42.00'
	201+29.00	56.81			
105	117+94.22	-86.41'			
	200+85.64	66.12'			
106	118+26.72	-24.75'			
107	118+20.48	-24.75'			
108	118+15.63	-42.00'			
109	118+01.80	-42.00'			
110	118+16.36	0.00'			
111	117+46.50	0.00'			
112	117+31.94	-42.00'			

SECTION LINE TIES COURSE TABLE

LINE	BEARING	DISTANCE
12201330-200	S89°43'16"E	1517.11'
200-201	S89°43'16"E	5.90'
201-202	S89°43'16"E	681.35'
202-12201320	S89°43'16"E	452.41'

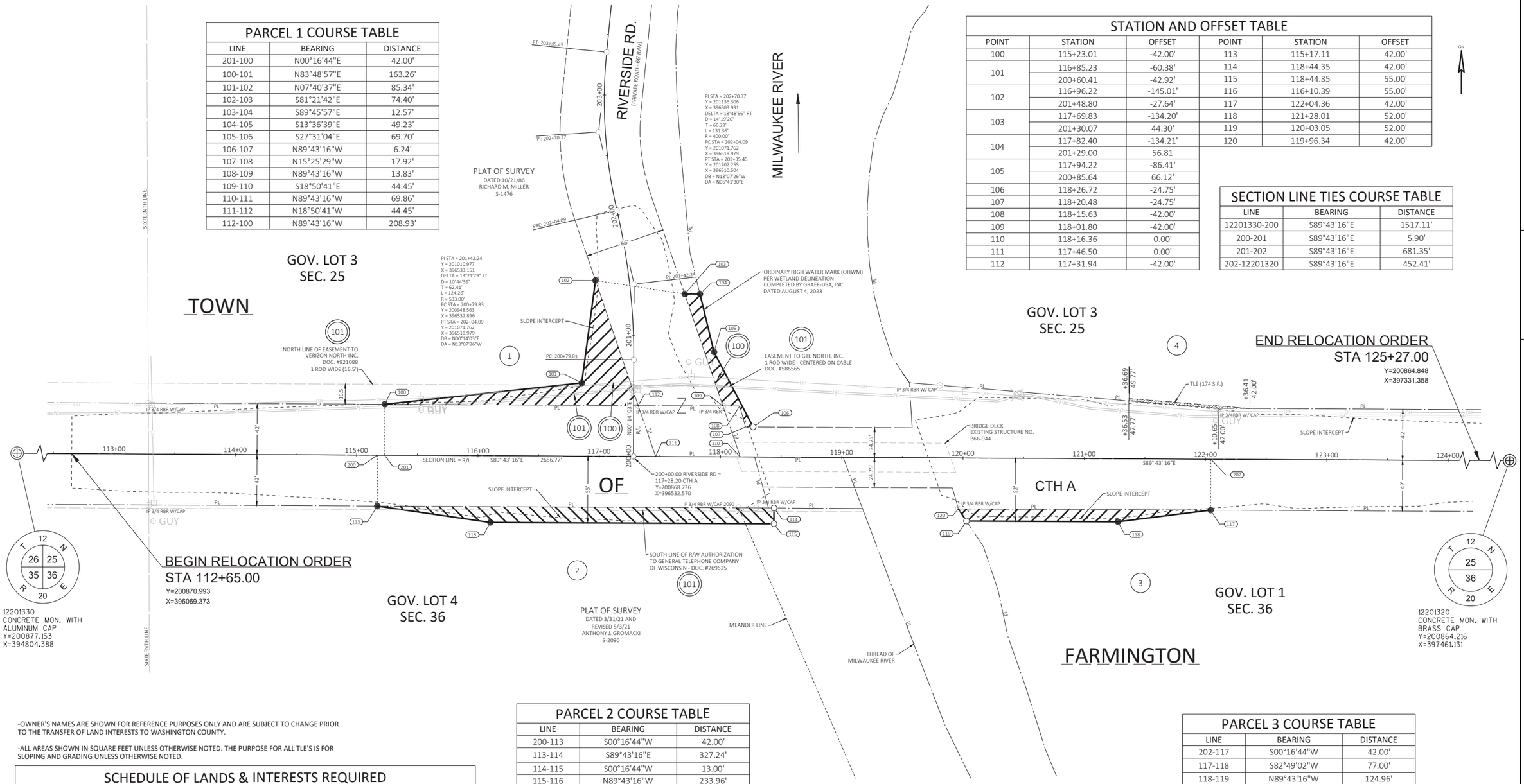

-OWNER'S NAMES ARE SHOWN FOR REFERENCE PURPOSES ONLY AND ARE SUBJECT TO CHANGE PRIOR TO THE TRANSFER OF LAND INTERESTS TO WASHINGTON COUNTY.

-ALL AREAS SHOWN IN SQUARE FEET UNLESS OTHERWISE NOTED. THE PURPOSE FOR ALL TLE'S IS FOR SLOPING AND GRADING UNLESS OTHERWISE NOTED.

SCHEDULE OF LANDS & INTERESTS REQUIRED

PARCEL NUMBER	OWNER(S)	INTEREST(S) REQUIRED	FEE R/W REQUIRED S.F.			TLE S.F.
			NEW	EXISTING	TOTAL	
1	ELAINE K. KRAUSE REVOCABLE LIVING TRUST, DATED JUNE 29, 2000	FEE	5081	9753	14834	-
2	MILWAUKEE METROPOLITAN SEWERAGE DISTRICT	FEE	3648	-	3648	-
3	CUTHBERT-BEDE NORTHUMBRIA LLC	FEE	1665	-	1665	-
4	MICHAEL A. CSASZAR & BETH E. PELTIN	TLE	-	-	-	174

PARCEL 2 COURSE TABLE

LINE	BEARING	DISTANCE
200-113	S00°16'44"W	42.00'
113-114	S89°43'16"E	327.24'
114-115	S00°16'44"W	13.00'
115-116	N89°43'16"W	233.96'
116-113	N81°47'14"W	94.18'

BASIS OF EXISTING RIGHT-OF-WAY

ROUTE	BASIS
CTH A	STATE R/W PROJECT NO. 4868-00-20
RIVERSIDE RD.	STATE R/W PROJECT NO. 4868-00-20 AND PLAT OF SURVEY DATED 10/21/1986

PARCEL 3 COURSE TABLE

LINE	BEARING	DISTANCE
202-117	S00°16'44"W	42.00'
117-118	S82°49'02"W	77.00'
118-119	N89°43'16"W	124.96'
119-120	N33°35'37"W	12.04'
120-117	S89°43'16"E	208.02'

UTILITY TABLE

UTILITY NO.	OWNER	INTEREST REQUIRED	DOCUMENT NO.	PARCEL
100	ALLIANT ENERGY - ELECTRIC	RELEASE OF RIGHTS	NO EASEMENT OF RECORD	1
101	VERIZON COMMUNICATIONS INC	RELEASE OF RIGHTS	921088, 586565, 269625	1, 2

BENCH MARKS				
NUMBER	DESCRIPTION	STATION	OFFSET	ELEVATION
CP6	FENO MONUMENT	110+14.14	33.04' RT	797.713
CP7	FENO MONUMENT	127+07.49	28.25' LT	799.850

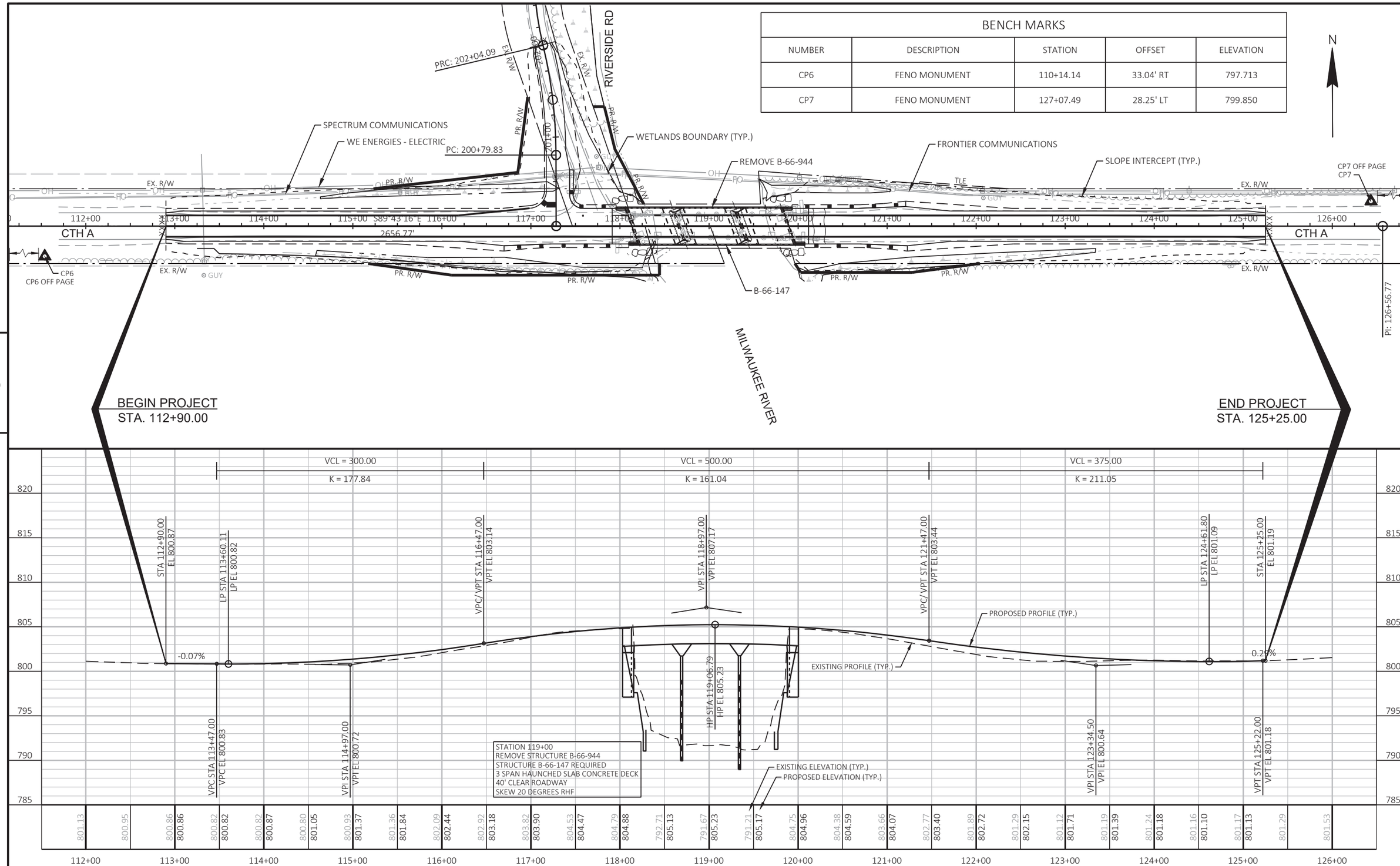

PROJECT NO: 4868-05-70	HWY: CTH A	COUNTY: WASHINGTON	PLAN AND PROFILE: CTH A	SHEET 35	E

BENCH MARKS				
NUMBER	DESCRIPTION	STATION	OFFSET	ELEVATION
CP6	FENO MONUMENT	110+14.14	33.04' RT	797.713
CP7	FENO MONUMENT	127+07.49	28.25' LT	799.850

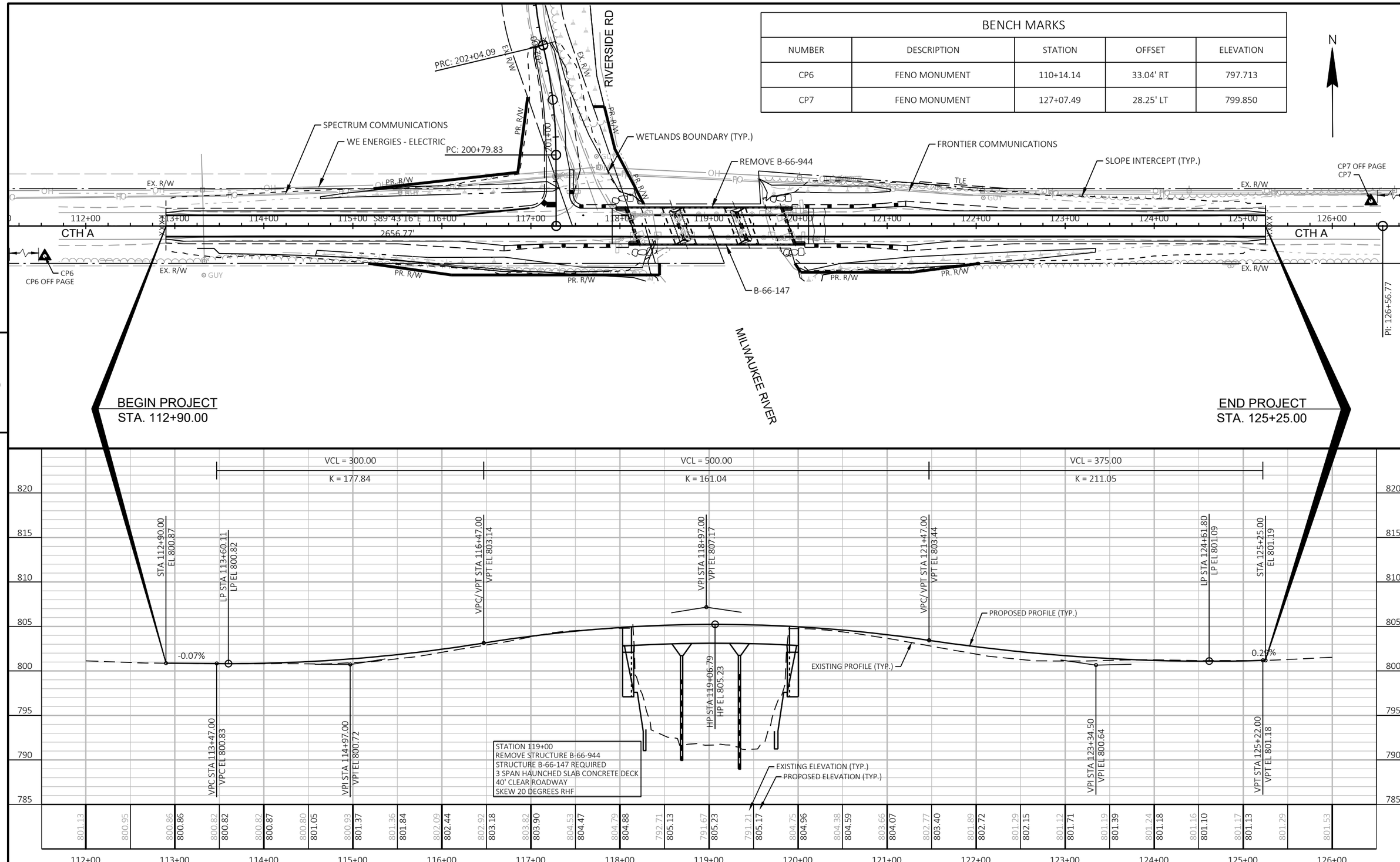

PROJECT NO: 4868-05-70	HWY: CTH A	COUNTY: WASHINGTON	PLAN AND PROFILE: CTH A	SHEET 36	E

FILE NAME : X:\ML\2023\20230044\DESIGN\TRANSPORTATION\SHEETSPLAN\050101-PP.DWG
LAYOUT NAME - 050101_pp
PLOT DATE : 8/1/2024 9:37 AM
PLOT BY : DABROWSKI, MATTHEW
PLOT NAME :
PLOT SCALE : 1 IN:100 FT

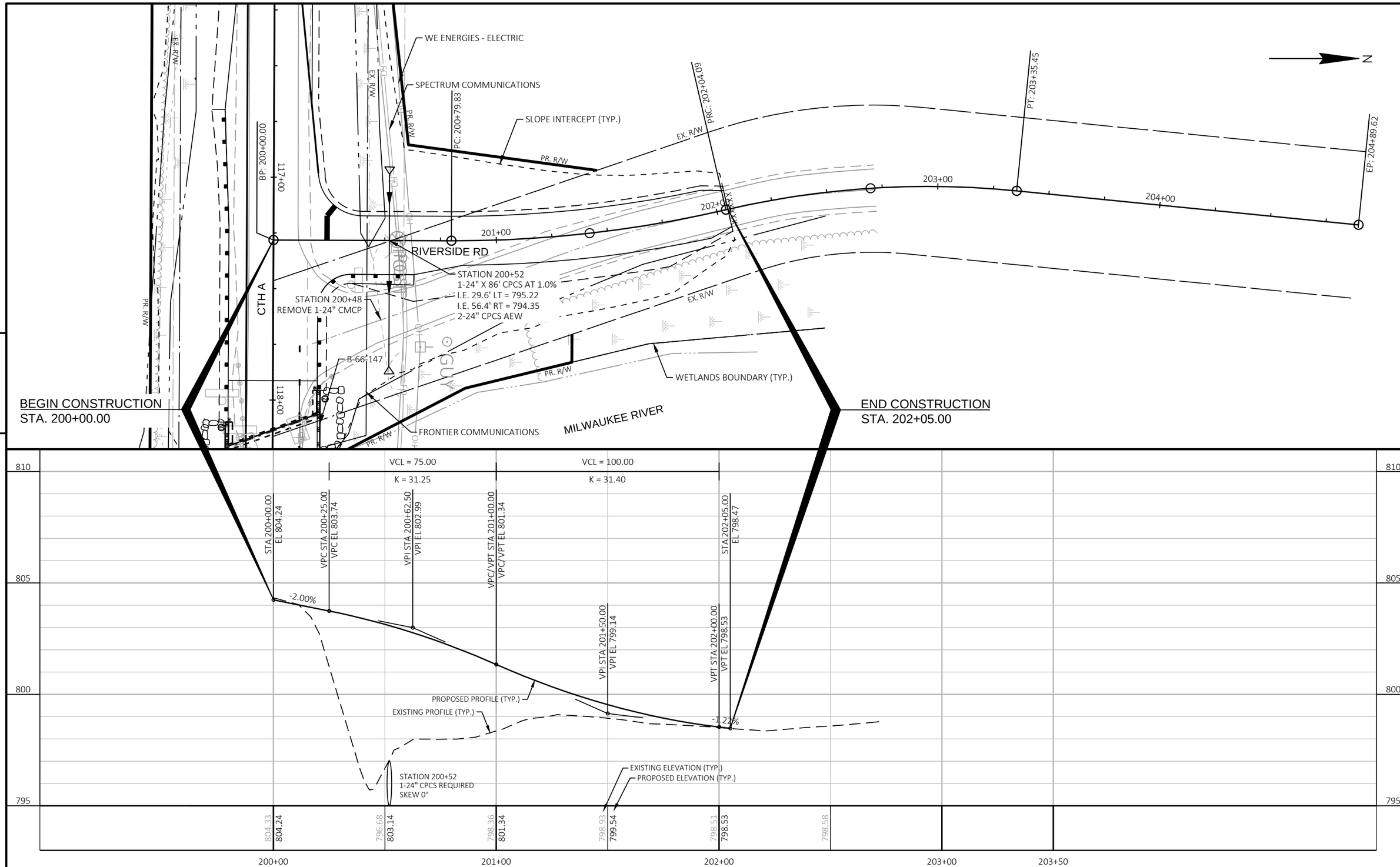

PROJECT NO: 4868-05-70	HWY: CTH A	COUNTY: WASHINGTON	PLAN AND PROFILE: RIVERSIDE ROAD	SHEET 37	E

FILE NAME : X:\ML\2023\20230044\DESIGN\TRANSPORTATION\SHEETSPLAN\050102-PP.DWG
LAYOUT NAME - 050102_pp
PLOT DATE : 9/12/2024 12:45 PM
PLOT BY : DABROWSKI, MATTHEW
PLOT NAME :
PLOT SCALE : 1 IN:40 FT
WISDOT/CADDS SHEET 44

Standard Detail Drawing List

08E08-03	TYPICAL INSTALLATIONS OF EROSION BALES / TEMPORARY DITCH CHECKS
08E09-06	SILT FENCE
08E11-02	TURBIDITY BARRIER
08E15-01	CULVERT PIPE CHECK
08F01-11	APRON ENDWALLS FOR CULVERT PIPE
12A03-10	NAME PLATE (STRUCTURES)
13A03-07	CONCRETE PAVEMENT SHOULDERS
13B02-09A	CONCRETE PAVEMENT APPROACH SLAB
13B02-09B	STRUCTURAL APPROACH SLAB AND CONCRETE PAVEMENT APPROACH SLAB
13C19-03	HMA LONGITUDINAL JOINTS
14B07-16A	CONCRETE BARRIER TEMPORARY PRECAST, 12'-6"
14B07-16B	CONCRETE BARRIER TEMPORARY PRECAST, 12'-6"
14B07-16C	CONCRETE BARRIER TEMPORARY PRECAST, 12'-6"
14B07-16D	CONCRETE BARRIER TEMPORARY PRECAST, 12'-6"
14B07-16E	CONCRETE BARRIER TEMPORARY PRECAST, 12'-6"
14B07-16F	CONCRETE BARRIER TEMPORARY PRECAST, 12'-6"
14B07-16G	CONCRETE BARRIER TEMPORARY PRECAST, 12'-6"
14B07-16H	CONCRETE BARRIER TEMPORARY PRECAST, 12'-6"
14B07-16I	CONCRETE BARRIER TEMPORARY PRECAST, 12'-6"
14B07-16J	CONCRETE BARRIER TEMPORARY PRECAST, 12'-6"
14B07-16K	CONCRETE BARRIER TEMPORARY PRECAST, 12'-6"
14B07-16L	CONCRETE BARRIER TEMPORARY PRECAST, 12'-6"
14B07-16M	CONCRETE BARRIER TEMPORARY PRECAST, 12'-6"
14B07-16N	CONCRETE BARRIER TEMPORARY PRECAST, 12'-6"
14B28-04A	GUARDRAIL MOW STRIP
14B28-04B	GUARDRAIL MOW STRIP
14B42-07A	MIDWEST GUARDRAIL SYSTEM (MGS) GUARDRAIL
14B42-07B	MIDWEST GUARDRAIL SYSTEM (MGS) GUARDRAIL
14B42-07C	MIDWEST GUARDRAIL SYSTEM (MGS) GUARDRAIL
14B42-07D	MIDWEST GUARDRAIL SYSTEM (MGS) GUARDRAIL
14B44-04A	MIDWEST GUARDRAIL SYSTEM ENERGY ABSORBING TERMINAL (MGS)
14B44-04B	MIDWEST GUARDRAIL SYSTEM ENERGY ABSORBING TERMINAL (MGS)
14B44-04C	MIDWEST GUARDRAIL SYSTEM ENERGY ABSORBING TERMINAL (MGS)
14B45-05A	MIDWEST GUARDRAIL SYSTEM THRIE BEAM TRANSITION (MGS)
14B45-05B	MIDWEST GUARDRAIL SYSTEM THRIE BEAM TRANSITION (MGS)
14B45-05C	MIDWEST GUARDRAIL SYSTEM THRIE BEAM TRANSITION (MGS)
14B45-05D	MIDWEST GUARDRAIL SYSTEM THRIE BEAM TRANSITION (MGS)
14B45-05E	MIDWEST GUARDRAIL SYSTEM THRIE BEAM TRANSITION (MGS)
14B45-05F	MIDWEST GUARDRAIL SYSTEM THRIE BEAM TRANSITION (MGS)
14B45-05G	MIDWEST GUARDRAIL SYSTEM THRIE BEAM TRANSITION (MGS)
14B45-05H	MIDWEST GUARDRAIL SYSTEM THRIE BEAM TRANSITION (MGS)
14B45-05I	MIDWEST GUARDRAIL SYSTEM THRIE BEAM TRANSITION (MGS)
14B45-05J	MIDWEST GUARDRAIL SYSTEM THRIE BEAM TRANSITION (MGS)
14B45-05K	MIDWEST GUARDRAIL SYSTEM THRIE BEAM TRANSITION (MGS)
14B45-05L	MIDWEST GUARDRAIL SYSTEM THRIE BEAM TRANSITION (MGS)
14B53-02A	SHORT RADIUS BEAM GUARD (MGS) SHORT RADIUS TERMINAL (MGS)
14B53-02B	SHORT RADIUS BEAM GUARD (MGS) SHORT RADIUS TERMINAL (MGS)
14B53-02C	SHORT RADIUS BEAM GUARD (MGS) SHORT RADIUS TERMINAL (MGS)
14B53-02D	SHORT RADIUS BEAM GUARD (MGS) SHORT RADIUS TERMINAL (MGS)
14B53-02E	SHORT RADIUS BEAM GUARD (MGS) SHORT RADIUS TERMINAL (MGS)
14B53-02F	SHORT RADIUS BEAM GUARD (MGS) SHORT RADIUS TERMINAL (MGS)
14B53-02G	SHORT RADIUS BEAM GUARD (MGS) SHORT RADIUS TERMINAL (MGS)
14B53-02H	SHORT RADIUS BEAM GUARD (MGS) SHORT RADIUS TERMINAL (MGS)
14B53-02I	SHORT RADIUS BEAM GUARD (MGS) SHORT RADIUS TERMINAL (MGS)
15A03-02A	FLEXIBLE MARKER POST FOR CULVERT END
15A03-02B	FLEXIBLE MARKER POST FOR CULVERT END
15C02-09A	BARRICADES AND SIGNS FOR MAINLINE CLOSURES
15C02-09B	BARRICADES AND SIGNS FOR VARIOUS CLOSURES
15C02-09C	DETOUR SIGNING FOR MAINLINE CLOSURES
15C02-09H	MODIFIED ROUTE ASSEMBLY FOR DETOUR SIGNING
15C08-23A	PERMANENT LONGITUDINAL PAVEMENT MARKINGS
15C11-10B	CHANNELIZING DEVICES DRUMS, CONES, BARRICADES AND VERTICAL PANELS
15C33-05	STOP LINE AND CROSSWALK PAVEMENT MARKING
15C35-06A	PAVEMENT MARKING (INTERSECTIONS)
15D45-03	TRAFFIC CONTROL, SIGNING ON ROADWAYS WITH LOOSE GRAVEL

6

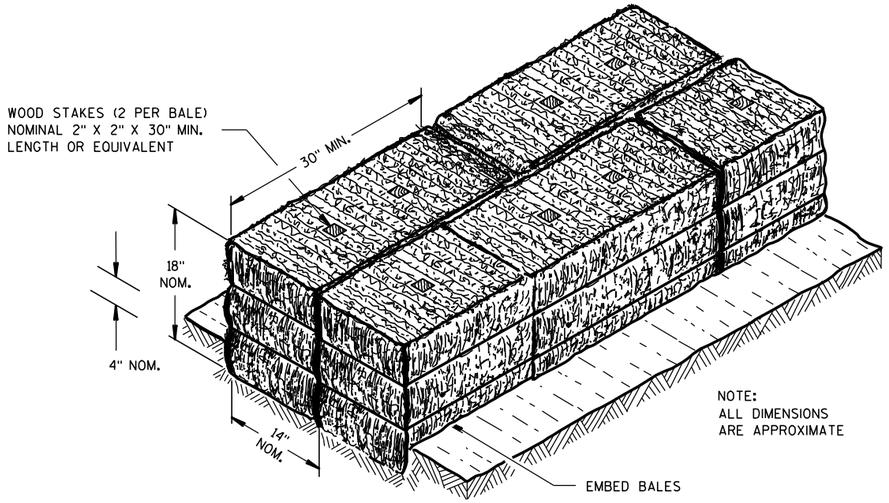

SECTION A-A

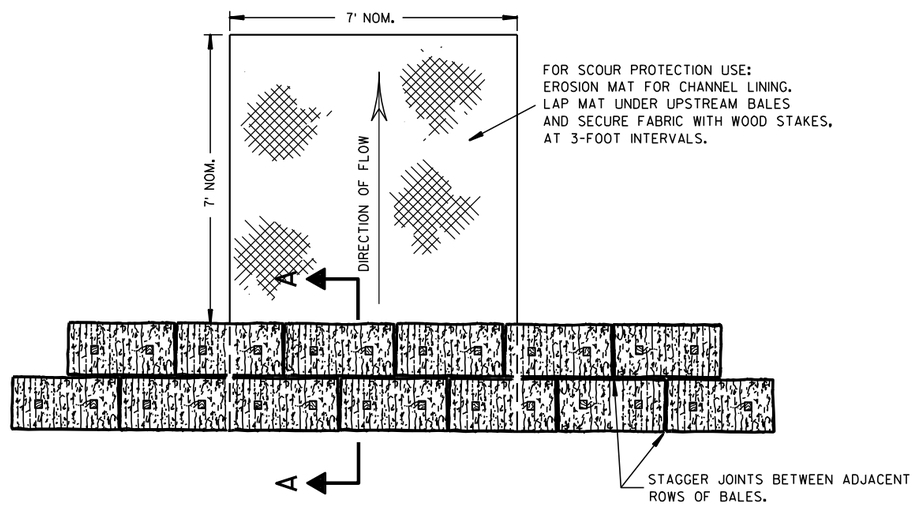

PLAN VIEW

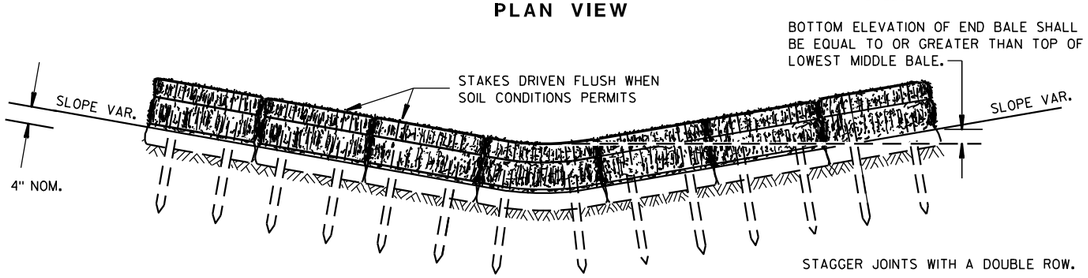

FRONT ELEVATION

TEMPORARY DITCH CHECK USING EROSION BALES ①

GENERAL NOTES

DETAILS OF CONSTRUCTION, MATERIALS AND WORKMANSHIP NOT SHOWN ON THIS DRAWING SHALL CONFORM TO THE PERTINENT REQUIREMENTS OF THE STANDARD SPECIFICATIONS AND THE APPLICABLE SPECIAL PROVISIONS.

① TEMPORARY DITCH CHECKS EITHER EROSION BALES OR MANUFACTURED SHALL BE PAID FOR UNDER THE BID ITEM OF TEMPORARY DITCH CHECK. THE DEPARTMENT WILL NOT PAY FOR TEMPORARY DITCH CHECKS CONSTRUCTED OF A SINGLE ROW OF EROSION BALES.

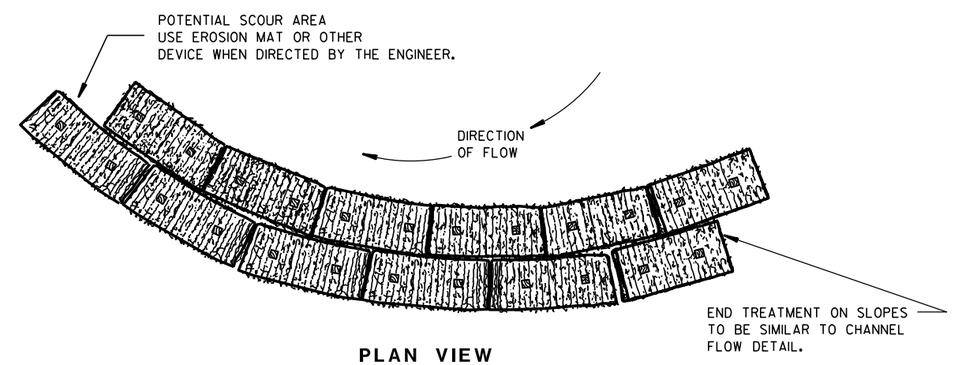

PLAN VIEW

WHEN ALTERING THE DIRECTION OF FLOW

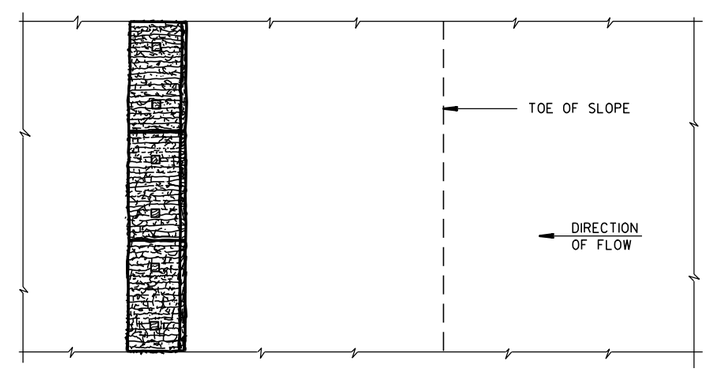

PLAN VIEW

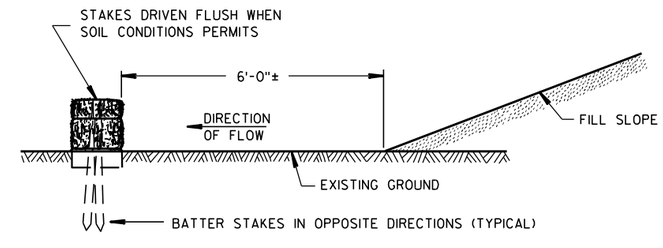

FRONT ELEVATION

WHEN EXISTING GROUND SLOPES AWAY FROM FILL SLOPE

EROSION BALES FOR SHEET FLOW

TYPICAL INSTALLATIONS OF EROSION BALES / TEMPORARY DITCH CHECKS

STATE OF WISCONSIN
DEPARTMENT OF TRANSPORTATION

APPROVED
6/04/02 — DATE
/S/ Beth Cann — CHIEF ROADWAY DEVELOPMENT ENGINEER
FHWA

6

6

S.D.D. 8 E 8-3

S.D.D. 8 E 8-3

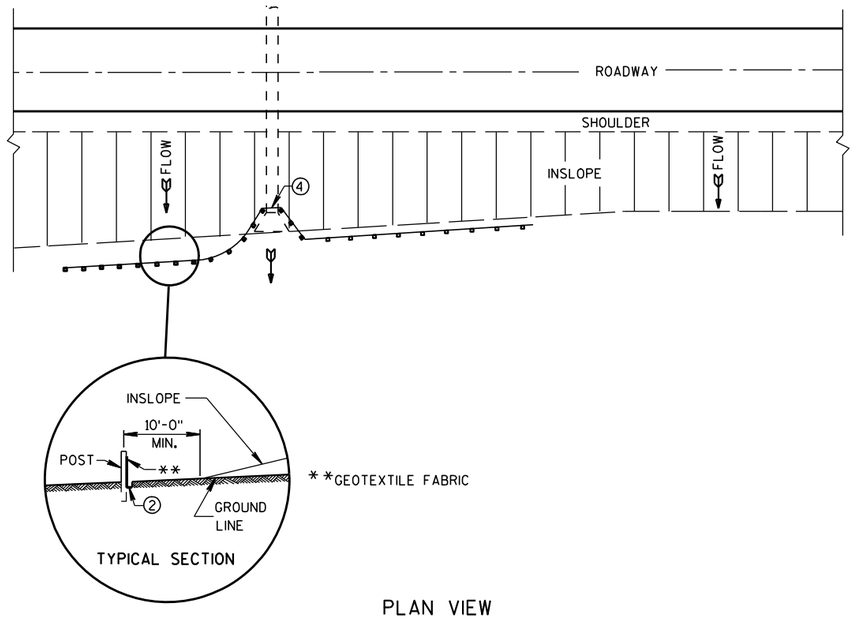

PLAN VIEW

TYPICAL APPLICATION OF SILT FENCE

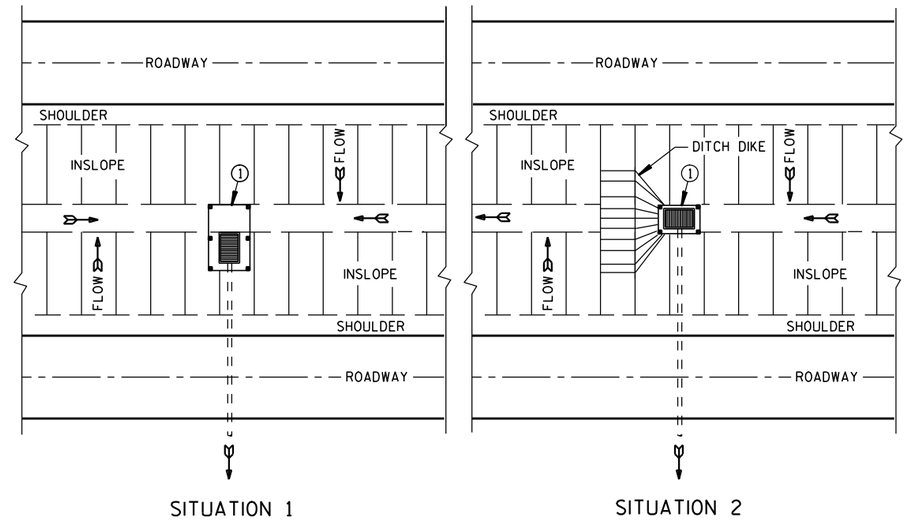

PLAN VIEW

SILT FENCE AT MEDIAN SURFACE DRAINS

GENERAL NOTES

DETAILS OF CONSTRUCTION NOT SHOWN ON THIS DRAWING SHALL CONFORM TO THE PERTINENT REQUIREMENTS OF THE STANDARD SPECIFICATIONS AND APPLICABLE SPECIAL PROVISIONS.

① HORIZONTAL BRACE REQUIRED WITH 2" X 4" WOODEN FRAME OR EQUIVALENT AT TOP OF POSTS.

② FOR MANUAL INSTALLATIONS THE TRENCH SHALL BE A MINIMUM OF 4" WIDE & 6" DEEP TO BURY AND ANCHOR THE GEOTEXTILE FABRIC. FOLD MATERIAL TO FIT TRENCH AND BACKFILL & COMPACT TRENCH WITH EXCAVATED SOIL.

③ WOOD POSTS SHALL BE A MINIMUM SIZE OF 1⅛" X 1⅛" OF OAK OR HICKORY.

④ SILT FENCE TO EXTEND ACROSS THE TOP OF THE PIPE.

⑤ CONSTRUCT SILT FENCE FROM A CONTINUOUS ROLL IF POSSIBLE BY CUTTING LENGTHS TO AVOID JOINTS. IF A JOINT IS NECESSARY USE ONE OF THE FOLLOWING TWO METHODS; A) OVERLAP THE END POSTS AND TWIST, OR ROTATE, AT LEAST 180 DEGREES. B) HOOK THE END OF EACH SILT FENCE LENGTH.

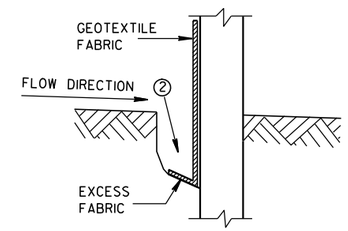

TRENCH DETAIL

NOTE: ADDITIONAL POST DEPTH OR TIE BACKS MAY BE REQUIRED IN UNSTABLE SOILS

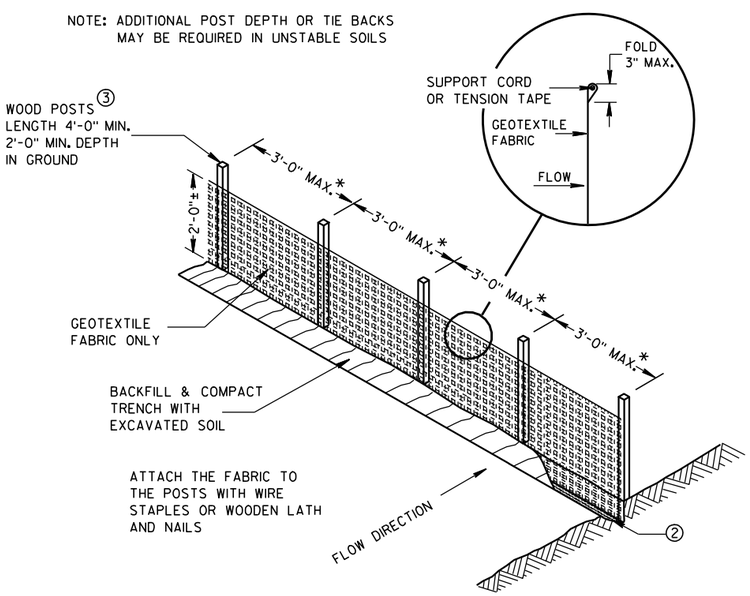

*NOTE: 8'-0" POST SPACING ALLOWED IF A WOVEN GEOTEXTILE FABRIC IS USED.

SILT FENCE

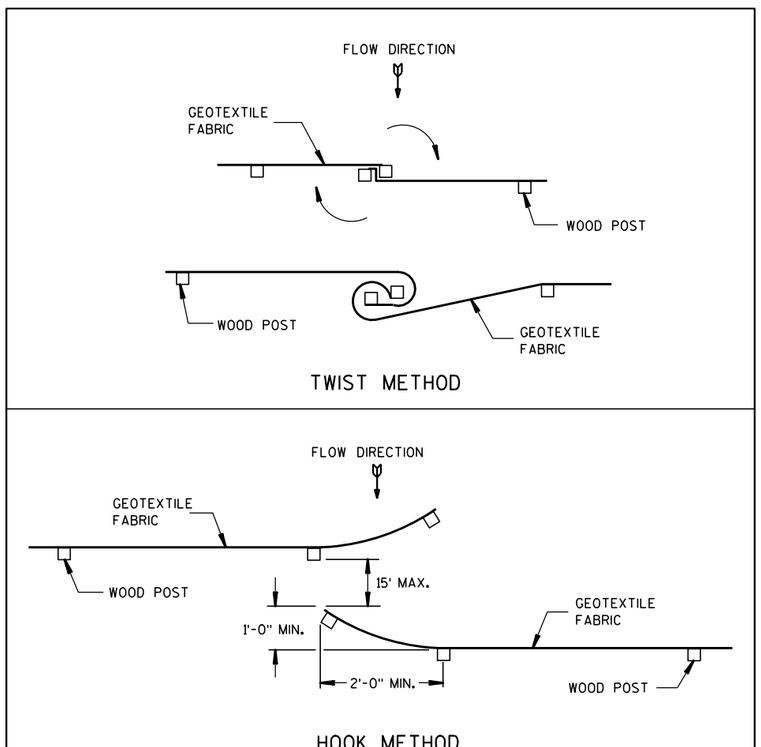

JOINING TWO LENGTHS OF SILT FENCE ⑤

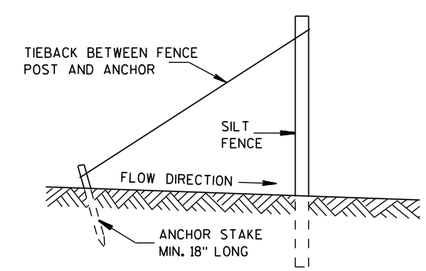

SILT FENCE TIE BACK

(WHEN REQUIRED BY THE ENGINEER)

SILT FENCE
STATE OF WISCONSIN DEPARTMENT OF TRANSPORTATION
APPROVED 4-29-05 /S/ Beth Cann----- DATE CHIEF ROADWAY DEVELOP ENGINEER FHWA

6

6

S.D.D. 8 E 9-6

S.D.D. 8 E 9-6

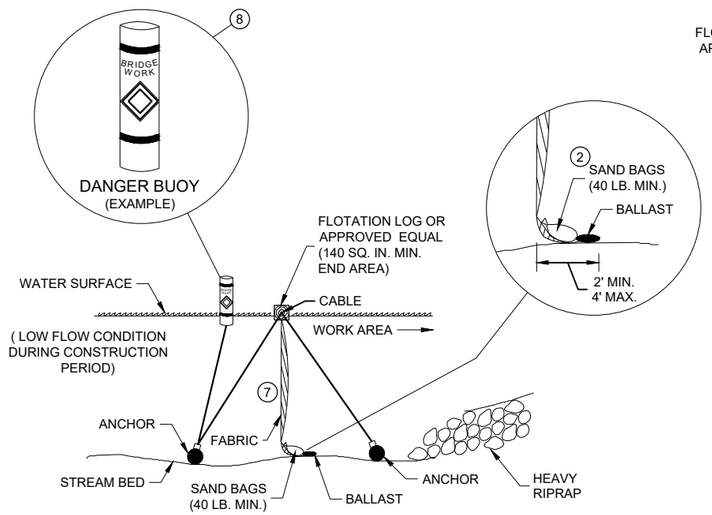

SECTION B - B

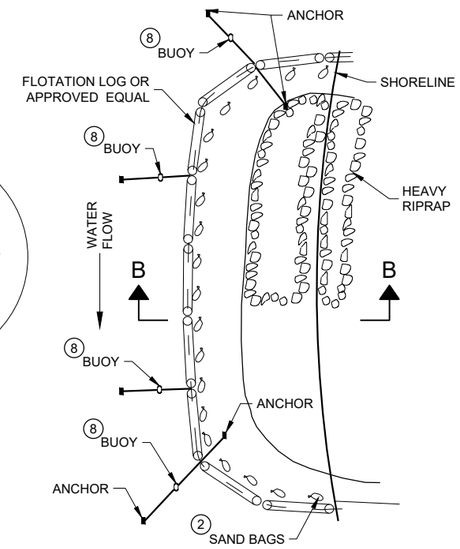

PLAN VIEW

TURBIDITY BARRIER - FLOAT ALTERNATIVE
CAUTION - SEE NOTE 6

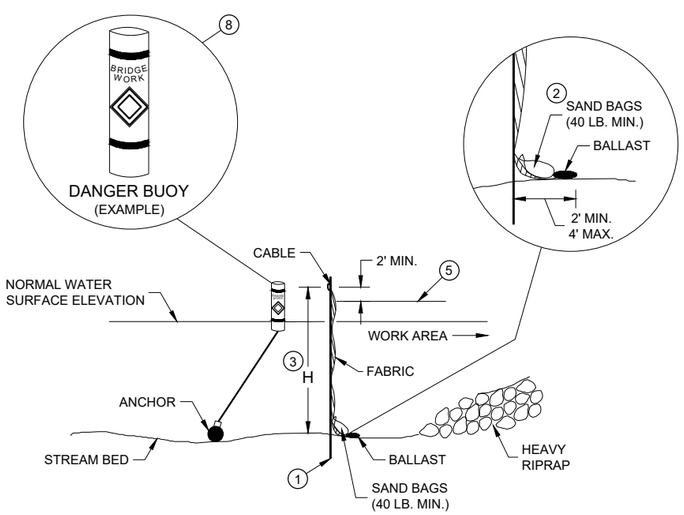

SECTION A - A

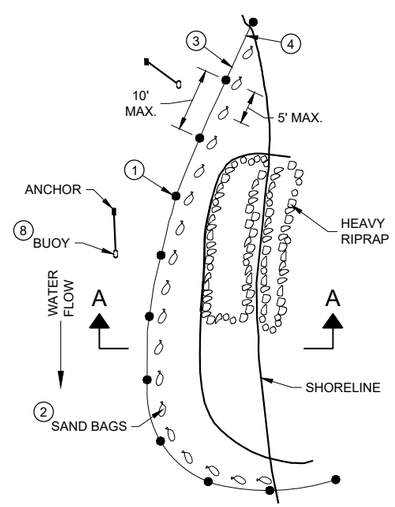

PLAN VIEW

TURBIDITY BARRIER - STANDARD POST INSTALLATION

TURBIDITY BARRIER PLACEMENT DETAILS

GENERAL NOTES

DETAILS OF CONSTRUCTION, MATERIALS AND WORKMANSHIP NOT SHOWN ON THIS DRAWING SHALL CONFORM TO THE PERTINENT REQUIREMENTS OF THE STANDARD SPECIFICATIONS AND THE APPLICABLE SPECIAL PROVISIONS.

TURBIDITY BARRIER MAY BE REMOVED AT THE ENGINEERS DISCRETION, WHEN PERMANENT EROSION CONTROL MEASURES HAVE BEEN ESTABLISHED.

1. DRIVEN STEEL POSTS, PIPES, OR CHANNELS. LENGTH SHALL BE SUFFICIENT TO SECURELY SUPPORT BARRIER AT HIGH WATER ELEVATIONS.
2. SAND BAGS TO BE USED AS ADDITIONAL BALLAST WHEN ORDERED BY THE ENGINEER TO MEET ADVERSE FIELD CONDITIONS. SPACE AS APPROPRIATE FOR SITE CONDITIONS.
3. WHEN BARRIER HEIGHT "H" EXCEEDS 8 FEET, POST SPACING MAY NEED TO BE DECREASED.
4. IN WATERWAYS SUBJECT TO FLUCTUATING WATER ELEVATIONS, PROVISIONS SHOULD BE MADE TO ALLOW THE WATER TO EQUALIZE ON EACH SIDE OF THE BARRIER. THIS MAY BE ACCOMPLISHED BY LEAVING A PORTION OF THE BARRIER OPEN ON THE UPSTREAM END.
5. ESTIMATED HIGH WATER ELEVATION DURING CONSTRUCTION PERIOD. MINIMUM BARRIER HEIGHT SHALL BE 2' GREATER THAN EITHER THE Q2 ELEVATION OR THE ESTIMATED HIGH WATER ELEVATION DURING CONSTRUCTION, WHICHEVER IS GREATER.
6. FLOAT ALTERNATIVE WILL ONLY BE ALLOWED WITH WRITTEN APPROVAL OF THE ENGINEER, AND IS MEANT FOR LOCATIONS WHERE BEDROCK PREVENTS THE INSTALLATION OF POSTS.
7. ALLOW SUFFICIENT SLACK VERTICALLY AND HORIZONTALLY SO THAT SEDIMENT BUILD UP WILL NOT SEPARATE OR LOWER THE TURBIDITY BARRIER.
8. USE AS DIRECTED BY COAST GUARD OR DNR PERMIT WHEN WORKING IN NAVIGABLE WATERWAYS.

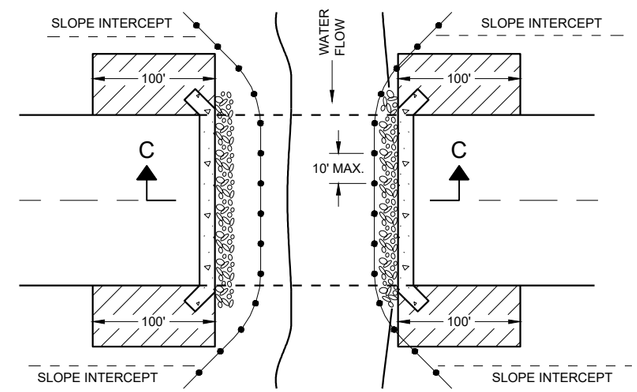

PLAN VIEW

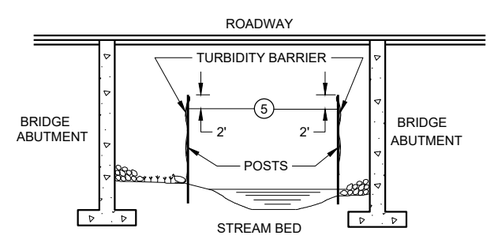

SECTION C - C

TURBIDITY BARRIER DETAIL SHOWING TYPICAL PLACEMENT AT STRUCTURES

TURBIDITY BARRIER

STATE OF WISCONSIN
DEPARTMENT OF TRANSPORTATION

APPROVED
6/4/02 — DATE
/S/ Beth Cannestra — CHIEF ROADWAY DEVELOPMENT ENGINEER
FHWA

6

SDD 08E11 - 02

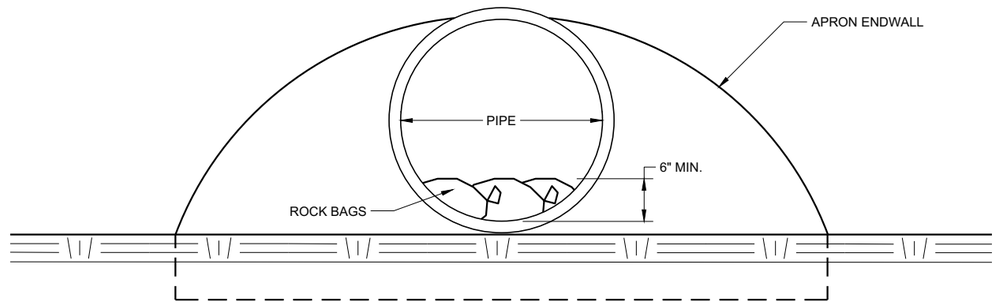

END VIEW

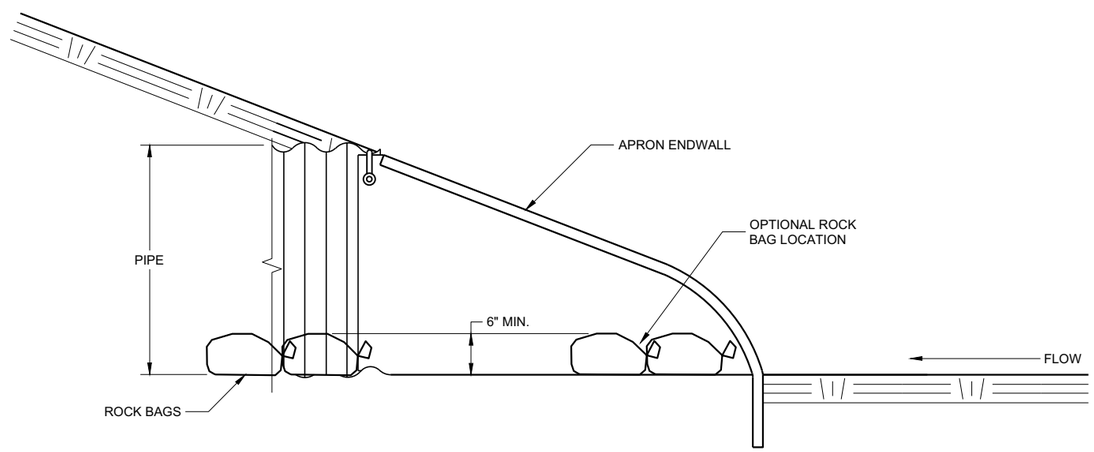

SIDE VIEW

CULVERT PIPE CHECK

(INSTALL ON INLET END ONLY)

CULVERT PIPE CHECK

STATE OF WISCONSIN
DEPARTMENT OF TRANSPORTATION

APPROVED
May 2019 — DATE
/S/ Daniel Schave — EROSION CONTROL ENGI
FHWA

6

6

SDD 08E15 - 01

SDD 08E15 - 01

METAL APRON ENDWALLS

PIPE DIA. (IN.)	MIN. THICK. (Inches) STEEL	MIN. THICK. (Inches) ALUM.	DIMENSIONS (Inches) A (±1")	B (MAX.)	H (±1")	L (±1 1/2")	L1 ①	L2 ①	W (±2")	APPROX. SLOPE	BODY
12	.064	.060	6	6	6	21	12	17 1/2	24	2 1/2 to 1	1 Pc.
15	.064	.060	7	8	6	26	14	21 3/4	30	2 1/2 to 1	1 Pc.
18	.064	.060	8	10	6	31	15	28 1/4	36	2 1/2 to 1	1 Pc.
21	.064	.060	9	12	6	36	18	29 5/8	42	2 1/2 to 1	1 Pc.
24	.064	.075	10	13	6	41	18	37 1/4	48	2 1/2 to 1	1 Pc.
30	.079	.075	12	16	8	51	18	52 1/4	60	2 1/2 to 1	1 Pc.
36	.079	.105	14	19	9	60	24	59 3/4	72	2 1/2 to 1	2 Pc.
42	.109	.105	16	22	11	69	24	75 5/8	84	2 1/2 to 1	2 Pc.
48	.109	.105	18	27	12	78	24	81	90	2 1/4 to 1	3 Pc.
54	.109	.105	18	30	12	84	30	85 1/2	102	2 1/4 to 1	3 Pc.
60	.109×	.105×	18	33	12	87	—	—	114	2 to 1	3 Pc.
66	.109×	.105×	18	36	12	87	—	—	120	2 to 1	3 Pc.
72	.109×	.105×	18	39	12	87	—	—	126	2 to 1	3 Pc.
78	.109×	.105×	18	42	12	87	—	—	132	1 1/2 to 1	3 Pc.
84	.109×	.105×	18	45	12	87	—	—	138	1 1/2 to 1	3 Pc.
90	.109×	.105×	18	37	12	87	—	—	144	1 1/2 to 1	3 Pc.
96	.109×	.105×	18	35	12	87	—	—	150	1 1/2 to 1	3 Pc.

× EXCEPT CENTER PANEL
SEE GENERAL NOTES

REINFORCED CONCRETE APRON ENDWALLS

PIPE DIA. (IN.)	DIMENSIONS (Inches) T	A	B	C	D	E	G	APPROX. SLOPE
12	2	4	24	48 7/8	72 7/8	24	2	3 to 1
15	2 1/4	6	27	46	73	30	2 1/4	3 to 1
18	2 1/2	9	27	46	73	36	2 1/2	3 to 1
21	2 3/4	9	36	37 1/2	73 1/2	42	2 3/4	3 to 1
24	3	9 1/2	43 1/2	30	73 1/2	48	3	3 to 1
27	3 1/4	10 1/2	49 1/2	24	73 1/2	54	3 1/4	3 to 1
30	3 1/2	12	54	19 3/4	73 1/2	60	3 1/2	3 to 1
36	4	15	63	34 3/4	97 3/4	72	4	3 to 1
42	4 1/2	21	63	35	98	78	4 1/2	3 to 1
48	5	24	72	26	98	84	5	3 to 1
54	5 1/2	27	65	*33 1/4-**35	*98 1/4-**100	90	5 1/2	2 2/5 to 1
60	6	*30-**35	60	39	99	96	5	2 to 1
66	6 1/2	*24-**30	*72-**78	*21-**27	99	102	5 1/2	2 to 1
72	7	*24-**36	78	21	99	108	6	2 to 1
78	7 1/2	*24-**36	78	21	99	114	6 1/2	2 to 1
84	8	36	90 1/2	21	111 1/2	120	6 1/2	1 1/2 to 1
90	8 1/2	41	87 1/2	24	111 1/2	132	6 1/2	1 1/2 to 1

*MINIMUM
**MAXIMUM

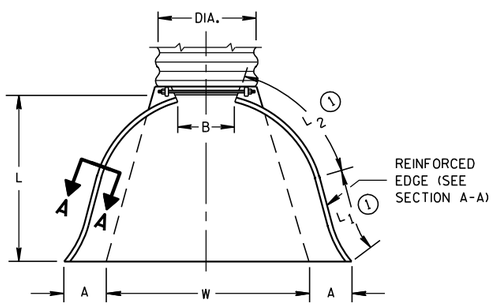

PLAN VIEW

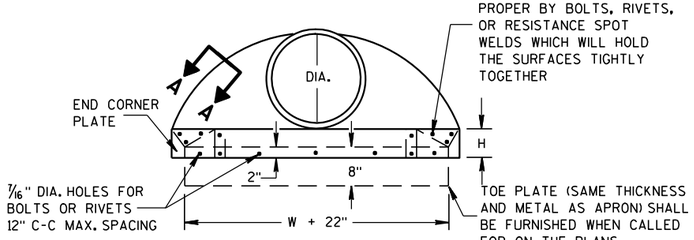

END VIEW

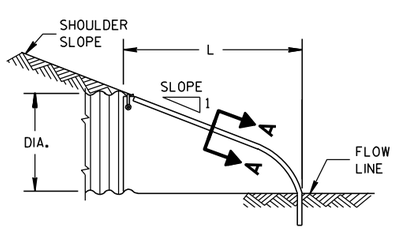

SIDE ELEVATION

METAL ENDWALLS

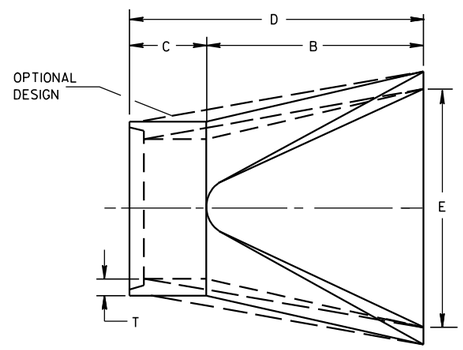

PLAN

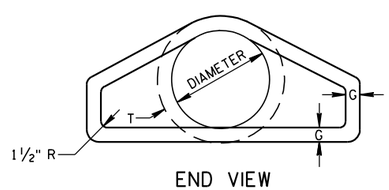

END VIEW

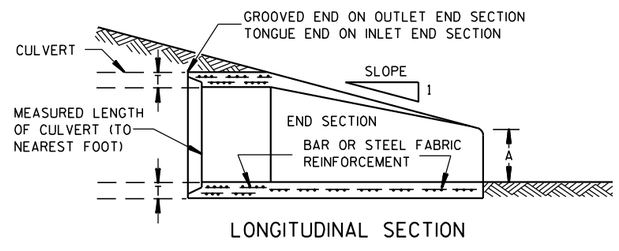

LONGITUDINAL SECTION

CONCRETE ENDWALLS

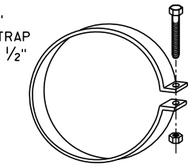

ALTERNATE FOR TYPE 1 CONNECTION

END SECTION CONNECTOR STRAP

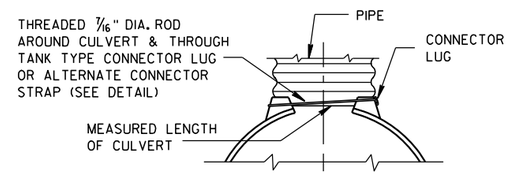

TYPE 1
FOR 12" THRU 24" CORR. PIPE

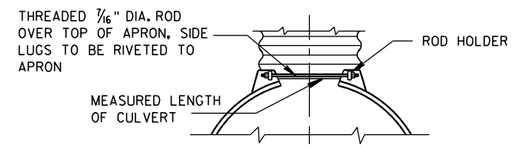

TYPE 2
FOR 30" THRU 96" CORR. PIPE

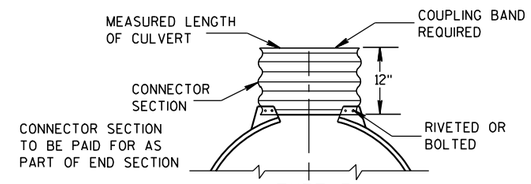

TYPE 3
FOR 42" THRU 96" CORR. PIPE

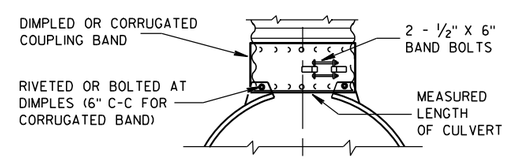

TYPE 5
ALTERNATE FOR:
ALL SIZES CORRUGATED CIRCULAR PIPE

NOTE: DIMPLED BAND FITS OVER OUTSIDE OF ENDWALL, AND CORRUGATED BAND FITS INSIDE ENDWALL. DIMPLED BAND MAY BE USED WITH HELICALLY CORRUGATED PIPE.

FOR CIRCUMFERENTIALLY CORRUGATED PIPE USE ENDWALL CONNECTION DETAILS 1, 2, 3 OR 5 AS APPLICABLE.

FOR HELICALLY CORRUGATED PIPE USE ENDWALL CONNECTION DETAILS 1, 2 OR 5.

FOR HELICALLY CORRUGATED PIPES WITH TWO CIRCUMFERENTIAL CORRUGATIONS AT EACH END USE ENDWALL CONNECTION DETAILS 1, 2 OR 3.

CONNECTION DETAILS

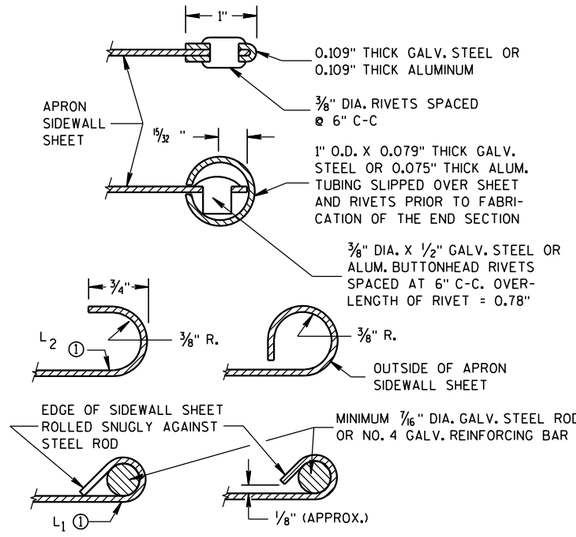

SECTION A-A

GENERAL NOTES

DETAILS OF CONSTRUCTION, MATERIALS AND WORKMANSHIP NOT SHOWN ON THIS DRAWING SHALL CONFORM TO THE PERTINENT REQUIREMENTS OF THE STANDARD SPECIFICATIONS AND THE APPLICABLE SPECIAL PROVISIONS.

CONCRETE CULVERT ENDWALLS MAY NOT BE USED WITH GALVANIZED STEEL OR ALUMINUM CULVERT PIPE OR VISE VERSA. GALVANIZED STEEL OR ALUMINUM ENDWALLS SHALL NORMALLY BE INSTALLED ON CULVERT PIPE OF THE SAME METAL.

ALL THREE PIECE STEEL APRON ENDWALLS FOR 60" DIAMETER PIPE AND LARGER SHALL HAVE 0.109" SIDES AND 0.138" CENTER PANELS. ALL THREE PIECE ALUMINUM APRON ENDWALLS FOR 60" DIAMETER PIPE AND LARGER SHALL HAVE 0.105" SIDES AND 0.134" CENTER PANELS. THE WIDTH OF CENTER PANELS SHALL BE GREATER THAN 20 PERCENT OF THE PIPE PERIMETER.

LAP SEAMS SHALL BE TIGHTLY JOINED BY GALVANIZED RIVETS OR BOLTS FOR STEEL UNITS AND ALUMINUM RIVETS AND BOLTS FOR ALUMINUM UNITS. FOR THE 60" THROUGH 96" DIAMETER APRON ENDWALL SIZES, THE REINFORCED EDGES AND CENTER PANEL SEAMS SHALL BE FURTHER REINFORCED WITH GALVANIZED STEEL OR ALUMINUM STIFFENER ANGLES. THE ANGLES SHALL BE ATTACHED BY GALVANIZED NUTS AND BOLTS FOR STEEL UNITS AND ALUMINUM NUTS AND BOLTS FOR ALUMINUM UNITS.

WHERE TWO OR MORE PIPES WITH APRON ENDWALLS ARE LAID ADJACENT TO EACH OTHER, THEY SHALL BE SEPARATED BY A DISTANCE SUFFICIENT TO PROVIDE A MINIMUM CLEARANCE OF 6 INCHES BETWEEN APRON ENDWALLS.

① FOR PIPE SIZES UP TO 60" DIAMETER, A 180° ROLLED EDGE MAY BE USED INSTEAD OF STEEL ROD REINFORCEMENT. SEE SECTION A-A.

APRON ENDWALLS FOR CULVERT PIPE

STATE OF WISCONSIN
DEPARTMENT OF TRANSPORTATION

APPROVED
11/30/94 — DATE
/S/ Rory L. Rhinesmith — CHIEF ROADWAY DEVELOPMENT ENGINEER
FHWA

GENERAL NOTES

NAME PLATES TO BE INSTALLED ON BRIDGES, CULVERTS, AND RETAINING WALLS SHALL CONFORM TO THE REQUIREMENTS OF SECTION 502.3.11 OF THE STANDARD SPECIFICATIONS.

THE BRIDGE NUMBER AND YEAR BUILT SHOWN ON THIS DRAWING ARE EXAMPLES ONLY. SEE CONSTRUCTION PLANS FOR INDIVIDUAL NUMBERING AND YEAR BUILT.

(1) EPOXY RESIN SHALL BE FROM AN APPROVED MANUFACTURER AND USED IN ACCORDANCE WITH MANUFACTURER'S RECOMMENDATIONS.

(2) REHABILITATION OF AN EXISTING STRUCTURE SHOULD USE THE DATE OF ORIGINAL STRUCTURE CONSTRUCTION.

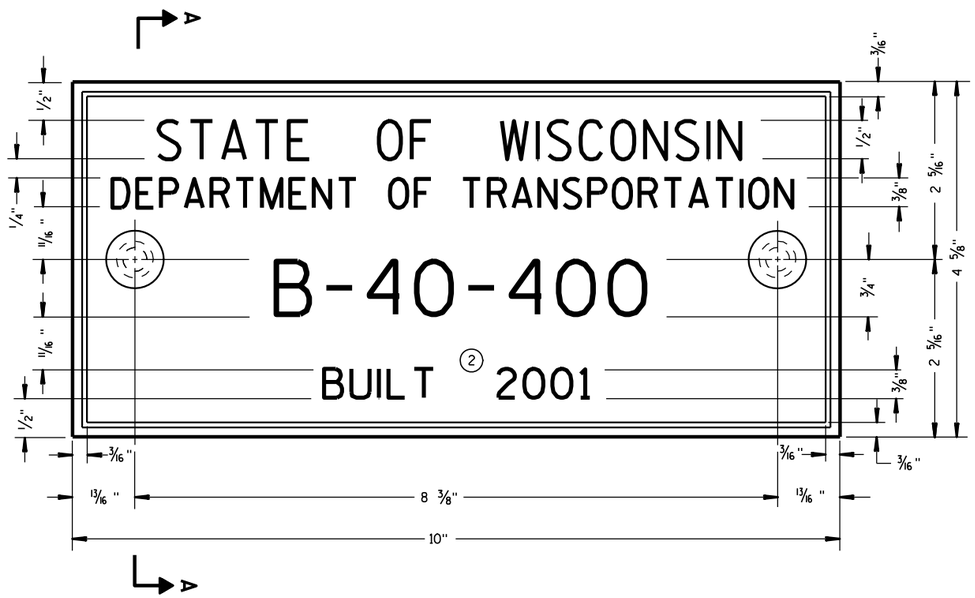

TYPICAL NAME PLATE
(BRIDGES, CULVERTS, AND RETAINING WALLS)

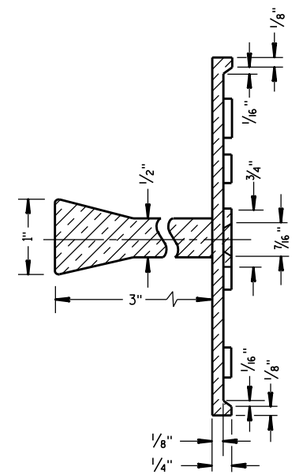

SECTION A-A

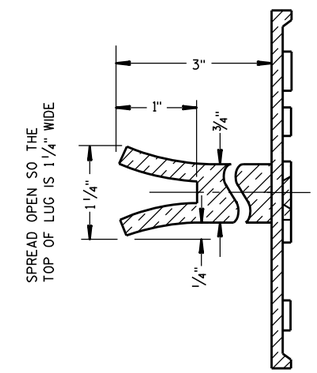

ALTERNATE LUG

FOR MULTI-UNIT STRUCTURES
LINE 3 ABOVE SHALL READ

B = BRIDGE
C = CULVERT
R = RETAINING WALL

COUNTY NO.

BRIDGE NO.

UNIT NO. FOR MULTIPLE
UNIT BRIDGE

B-40-400-1A

NUMBERING DESIGNATION
MULTI-UNIT STRUCTURES

(1) ADHERE ANCHOR LUG TO PRECAST RETAINING WALL WITH EPOXY RESIN.

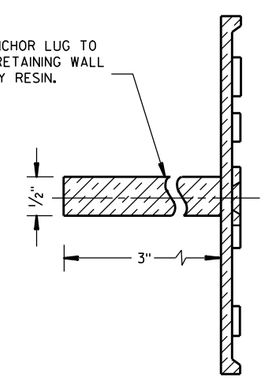

ALTERNATE LUG
(FOR ATTACHMENT TO PRECAST STRUCTURES)

NAME PLATE (STRUCTURES)		
STATE OF WISCONSIN DEPARTMENT OF TRANSPORTATION		
APPROVED		
3/26/10 DATE	/S/ Scot Beck CHIEF STRUCTURAL DEVELOPER	
FHWA		

GENERAL NOTES

DETAILS OF CONSTRUCTION, MATERIALS AND WORKMANSHIP NOT SHOWN ON THIS DRAWING SHALL CONFORM TO THE PERTINENT REQUIREMENTS OF THE STANDARD SPECIFICATIONS AND SPECIAL PROVISIONS.

TRANSVERSE JOINT DETAILS ARE SHOWN ELSEWHERE IN THE PLAN.

FINISH THE SHOULDER PAVEMENT CONFORMING TO SUBSECTION 415.3.8 OF THE STANDARD SPECIFICATIONS.

TIE BARS SHALL CONFORM TO SUBSECTION 505.2.4 OF THE STANDARD SPECIFICATIONS.

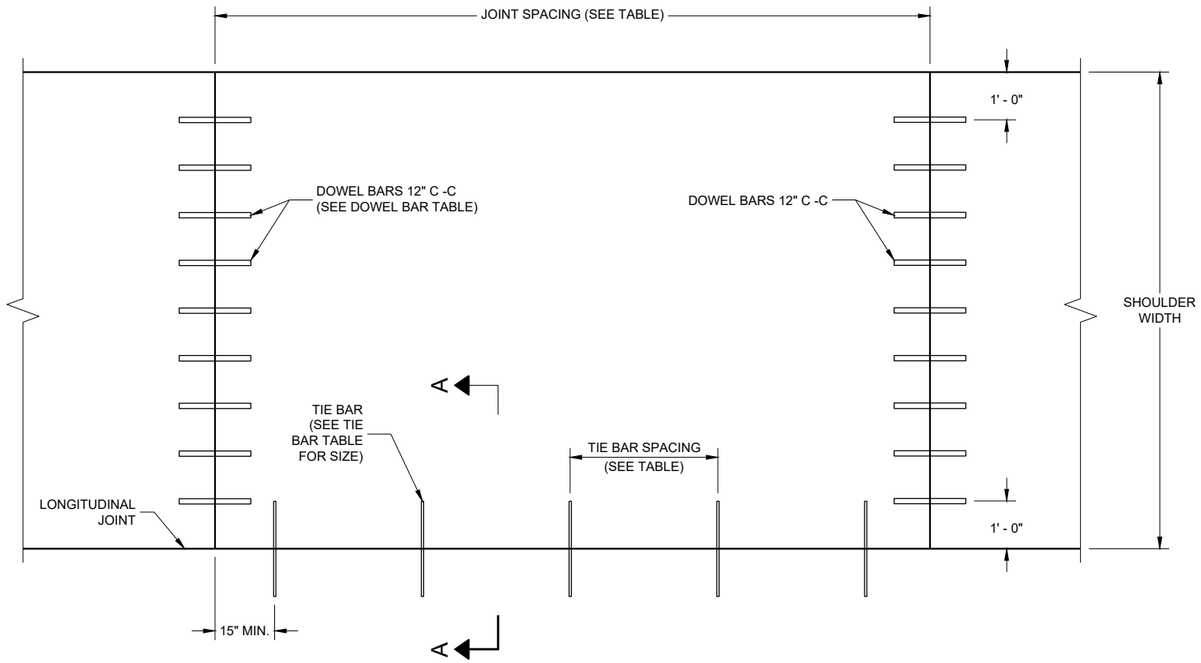

PLAN VIEW

CONCRETE PAVEMENT SHOULDER

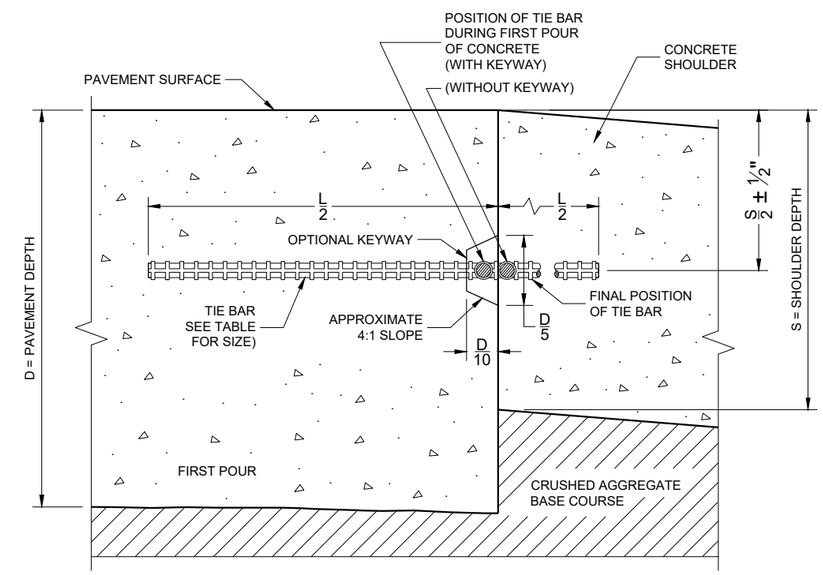

SECTION A - A

LONGITUDINAL CONSTRUCTION JOINT

TIE BAR TABLE

PAVEMENT DEPTH (D)	TIE BAR SIZE	TIE BAR LENGTH (L)	MAX. TIE BAR SPACING
<10 ½"	NO. 4	30"	36"
>10 ½"	NO. 5	36"	36"
	NO. 4 *	30"	24" **

* SUBSTITUTE BENT BATS AT LONGITUDINAL JOINTS WHEN EQUIPMENT LIMITATIONS DURING CONSTRUCTION WARRANT (e.g. AUXILIARY LANES OR TURN LANES.

** CONFORM TO 15" MINIMUM SPACING FROM TRANSVERSE JOINTS; SPACING BETWEEN TIE BARS WILL BE 30" AT TRANSVERSE JOINTS.

PAVEMENT DEPTH, DOWEL BAR SIZE AND JOINT SPACING TABLE

PAVEMENT DEPTH (D)	DOWEL BAR DIAMETER ***	CONTRACTION JOINT SPACING
6", 6 ½"	NONE	12"
7", 7 ½"	1"	14"
8" & ABOVE	1 ¼"	15"

*** FOR DOWELED CONCRETE SHOULDERS WITH TRAPEZOIDAL CROSS SECTIONS, CHOSE THE APPROPRIATE DOWEL BAR DIAMETER BASED ON THE SMALLER PAVEMENT DEPTH (LIKELY THE OUTSIDE EDGE OF THE SHOULDER). IF USING BASKETS, USE BASKETS FRO THE AVERAGE THICKNESS OF THE CROSS SECTION.

CONCRETE PAVEMENT SHOULDERS

STATE OF WISCONSIN
DEPARTMENT OF TRANSPORTATION

APPROVED
November 2022 — DATE
/S/ Peter Kemp — PAVEMENT SUPERVISOR

FHWA

6
SDD 13A03 - 07

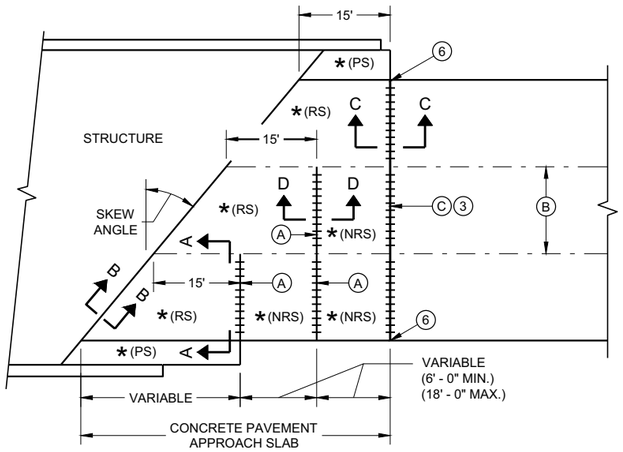

SKEWED APPROACH
(PAVEMENT MORE THAN TWO LANES)

* (RS) = REINFORCED CONCRETE SLAB

* (PS) = PAVED CONCRETE SHOULDER OR CONCRETE DRAINAGE SLAB

* (NRS) - NON - REINFORCED CONCRETE SLAB

*** STANDARD DOWEL BAR DIAMETER (SEE SDD 13C11 AND SDD 13C13)

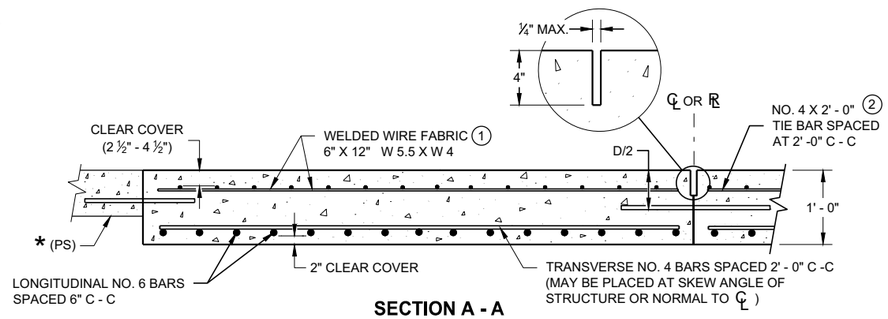

SECTION A - A
REINFORCEMENT POSITIONING DETAIL

GENERAL NOTES

THE CONTRACTOR MAY SPLICE NO. 6 BARS IN THE APPROACH SLAB FOR SKEWED STRUCTURES ONLY. STAGGER SPLICES WITH A MAXIMUM OF ONE SPLICE PER BAR. THE LENGTH OF LAP IS 20 INCHES.

TACK WELD DOWEL BARS TO THE BASKETS ON ALTERNATE ENDS.

1. THE CONTRACTOR MAY USE NO. 4 BARS SPACED AT 2' - 0 " C - C IN BOTH THE LONGITUDINAL AND TRANSVERSE DIRECTIONS FOR TOP REINFORCEMENT AS AN ALTERNATIVE TO THE WELDED WIRE FABRIC.
2. THE CONTRACTOR MAY OMIT THE BARS BETWEEN REINFORCED SLABS WHERE SLAB REINFORCEMENT BARS EXTEND ACROSS THE CENTERLINE OR REFERENCE LINE.
3. DO NOT CONSTRUCT AN EXPANSION JOINT OR INSTALL DOWEL BARS WHEN ABUTTING AN HMA PAVEMENT.
4. USE A JOINT SEALANT CONFORMING TO STANDARD SPECIFICATION 415.2.6.
5. PLACE EXPANSION CAP ON THE END OF THE DOWEL THAT IS NOT TACK WELDED TO THE BASKET. DO NOT FORCE DOWEL BAR PAST THE DOWEL STOP.
6. EXTEND EXPANSION JOINT THROUGH ANY ADJACENT TIED CONCRETE.

A. STANDARD CONTRACTION JOINT NORMAL TO ℄ OR ℞.

B. STANDARD LONGITUDINAL JOINT WITH TIE BARS.

C. 1 ½" EXPANSION JOINT WITH DOWEL BARS NORMAL TO ℄ OR ℞ .

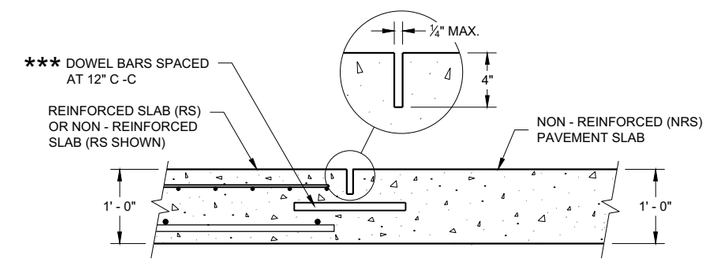

SECTION D - D
CONTRACTION JOINT

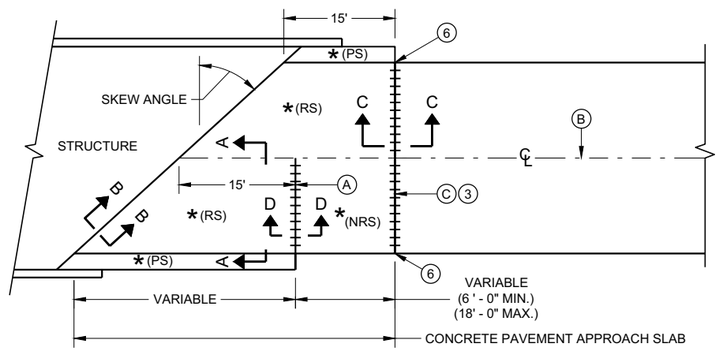

SKEWS > 20°
(PAVEMENT WIDTH ≤ 30')

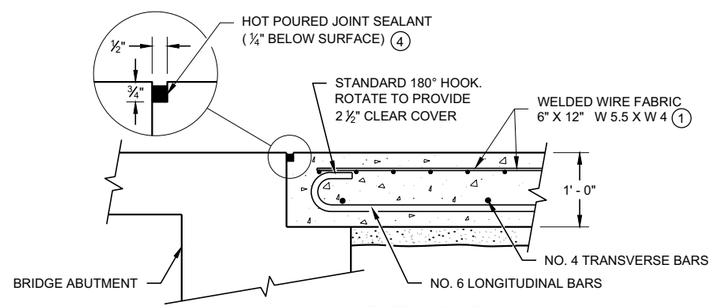

SECTION B - B
BEND DETAIL
BOTTOM REINFORCEMENT

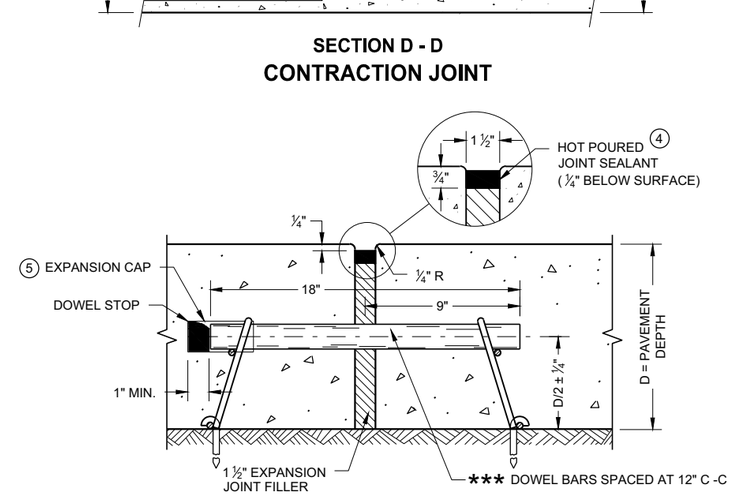

EXPANSION JOINT DETAIL

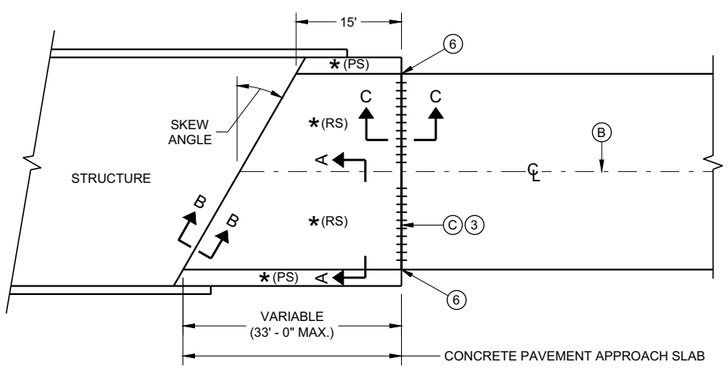

SKEWS ≤ 20°
(PAVEMENT WIDTH ≤ 30')

APPROACH SLAB AND ADJACENT PAVEMENT

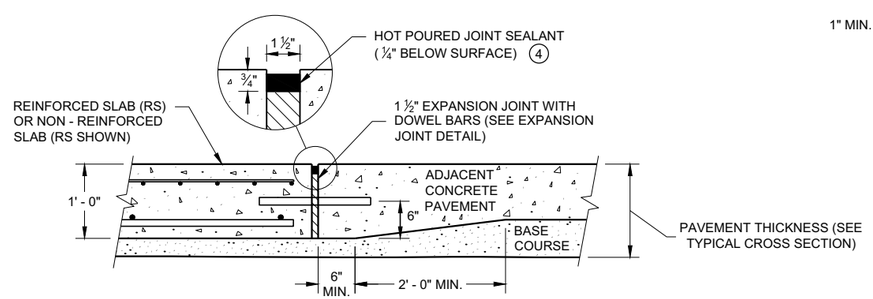

SECTION C - C
TRANSITION DETAIL
APPROACH SLAB TO ADJACENT PAVEMENT

CONCRETE PAVEMENT APPROACH SLAB

STATE OF WISCONSIN
DEPARTMENT OF TRANSPORTATION

APPROVED
November 2018 /S/ Peter Kemp, P.E.
DATE PAVEMENT SUPERVISOR
FHWA

6

SDD 13B02 - 09a

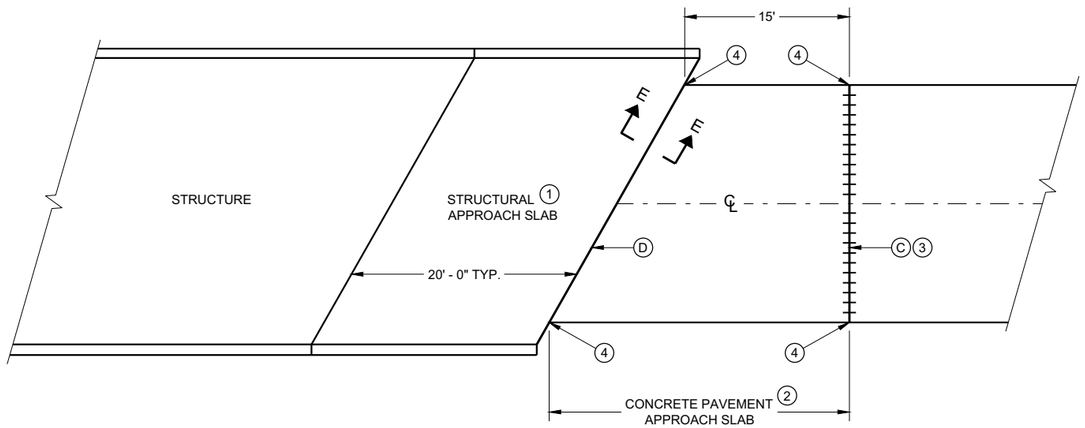

BRIDGE APPROACHES

GENERAL NOTES

ALL PROJECTS THAT INVOLVE A STRUCTURAL APPROACH SLAB WILL ALSO HAVE A CONCRETE PAVEMENT APPROACH SLAB.

1. SEE BRIDGE PLAN.
2. CONFORM TO SDD 13B02 SHEET A FOR CONCRETE PAVEMENT APPROACH SLAB DETAILS
3. DO NOT CONSTRUCT AN EXPANSION JOINT OR INSTALL DOWEL BARS WHEN ABUTTING AN HMA PAVEMENT.
4. EXTEND EXPANSION JOINT THROUGH ANY ADJACENT TIED CONCRETE.

C. 1 ½" EXPANSION JOINT WITH DOWEL BARS NORMAL TO ℄ OR ℞.

D. 1 ½" EXPANSION JOINT (NO DOWELS)

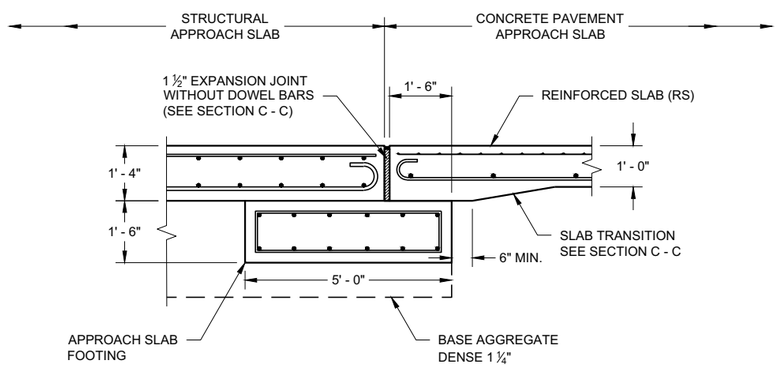

SECTION E - E
FOOTING DETAIL
STRUCTURAL APPROACH SLAB TO CONCRETE BRIDGE APPROACH

6

6

SDD 13B02 - 09b

SDD 13B02 - 09b

STRUCTURAL APPROACH SLAB AND CONCRETE PAVEMENT APPROACH SLAB

STATE OF WISCONSIN
DEPARTMENT OF TRANSPORTATION

APPROVED
November 2018 /S/ Peter Kemp P.E.
DATE PAVEMENT SUPERVISO
FHWA

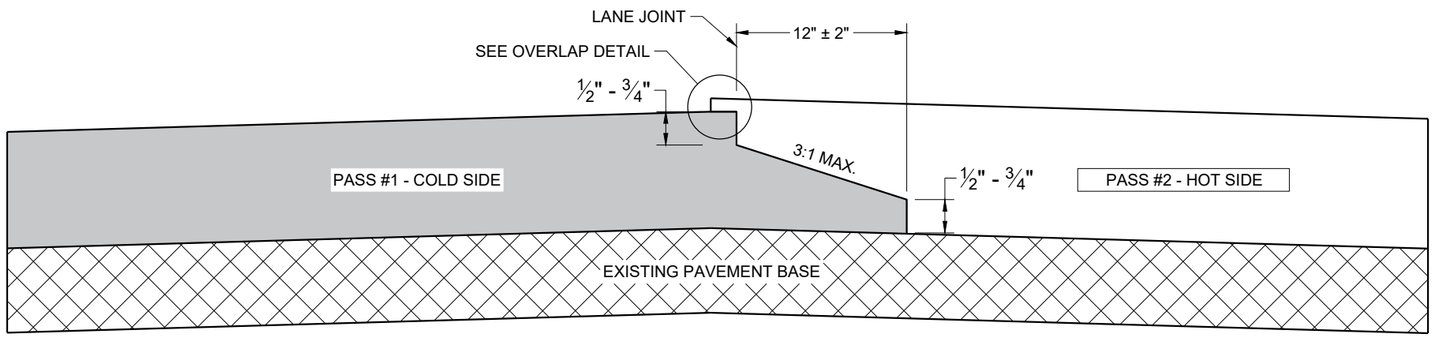

TYPICAL PAVEMENT CROSS SECTION
NOTCHED WEDGE JOINT

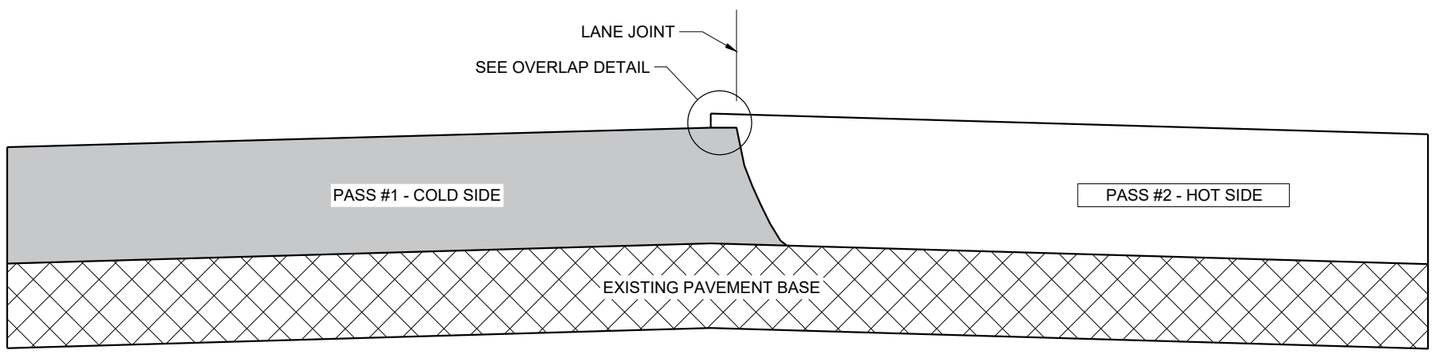

TYPICAL PAVEMENT CROSS SECTION
VERTICAL JOINT

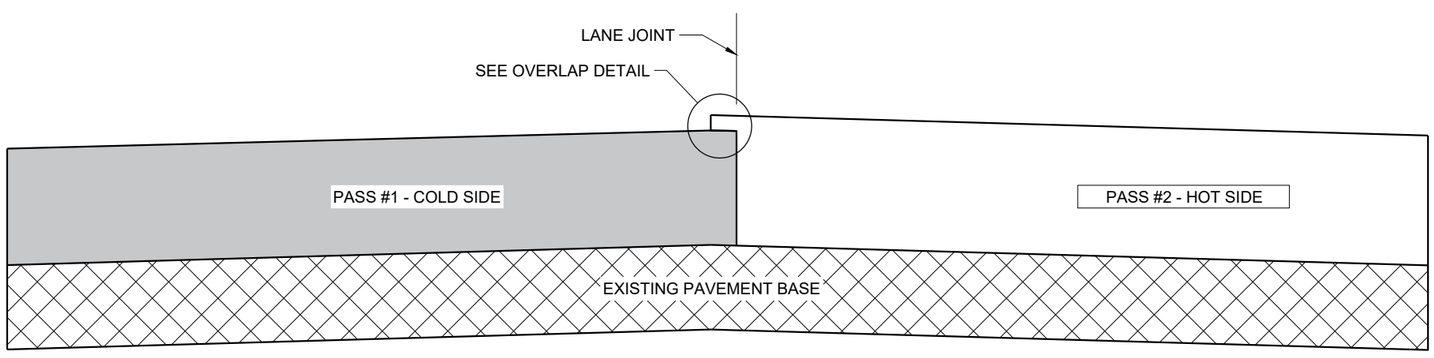

TYPICAL PAVEMENT CROSS SECTION
VERTICAL JOINT (MILLED)

GENERAL NOTES

IN ADDITION TO THE DETAILS PROVIDED IN THIS DRAWING, CONFORM TO STANDARD SPECIFICATION 450.3.2.8 FOR WHEN A NOTCHED WEDGE JOINT IS REQUIRED AND FOR GENERAL JOINT CONSTRUCTION REQUIREMENTS.

FOR ALL LONGITUDINAL JOINTS, ENSURE THE PAVER SCREED OVERLAPS THE PREVIOUSLY PLACED PAVEMENT BY 1" ± 0.5" AND THE HOT SIDE OF THE JOINT REMAINS HIGHER THAN THE COLD SIDE BY APPROXIMATELY 0.1" AFTER FINAL COMPACTION. (IT WILL BE FLUSH WHEN PAVING IN ECHELON.)

ONLY REMOVE THE LONGITUDINAL NOTCHED WEDGE JOINT FOR SMA PAVEMENT OR AS DIRECTED BY THE ENGINEER TO ADDRESS SPECIFIC LENGTHS OF JOINT DAMAGED BY TRAFFIC.

WHEN MILLING BACK OR REMOVING ANY LONGITUDINAL JOINT, LIMIT THE MATERIAL REMOVED TO 2" FROM THE TOP NOTCH OR FROM THE VERTICAL JOINT EDGE ON THE COLD SIDE OF THE JOINT.

USE LONGITUDINAL MILLED JOINT AS PLANS SHOW OR THE AS THE ENGINEER DIRECTS.

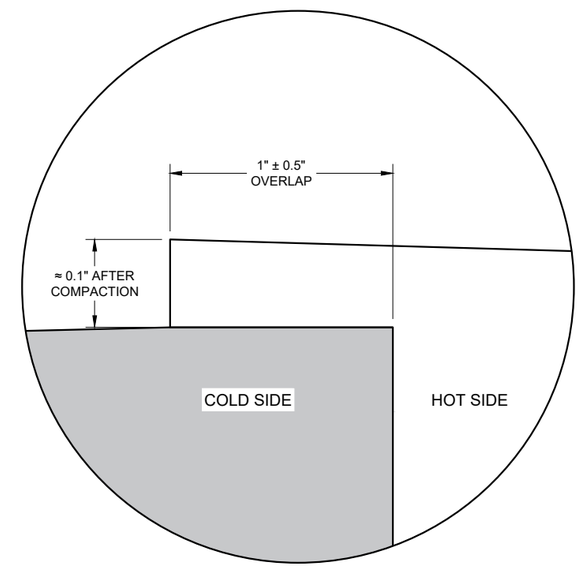

OVERLAP DETAIL (TYPICAL)

6

6

SDD 13C19 - 03

SDD 13C19 - 03

HMA LONGITUDINAL JOINTS

STATE OF WISCONSIN
DEPARTMENT OF TRANSPORTATION

APPROVED
November 2020 /S/ Steven Hefel
DATE HMA PAVEMENT ENGIN

FHWA

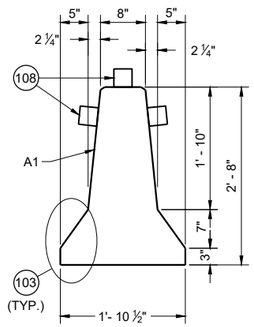

CROSS SECTION

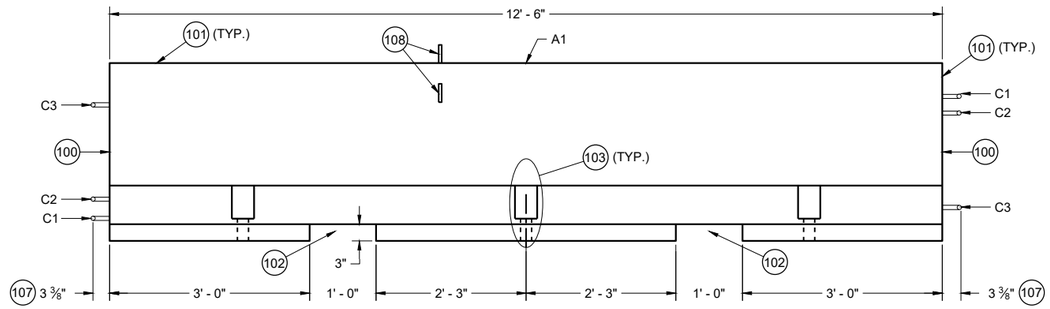

PROFILE VIEW

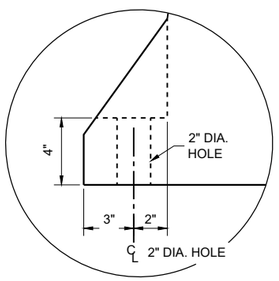

ANCHOR BLOCK DETAIL

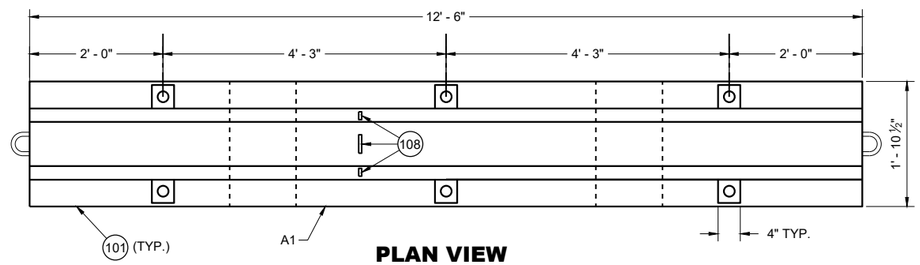

PLAN VIEW

TEMPORARY BARRIER

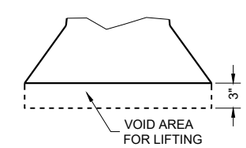

LIFTING SLOT DETAIL (TYP.)

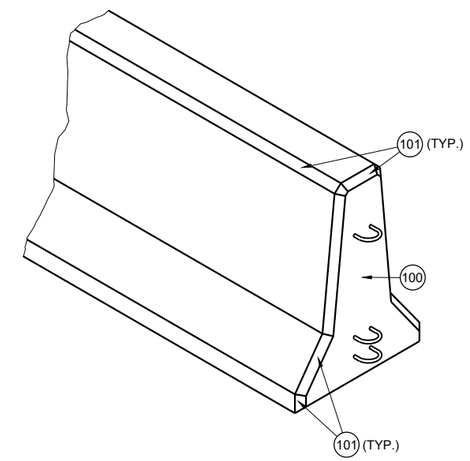

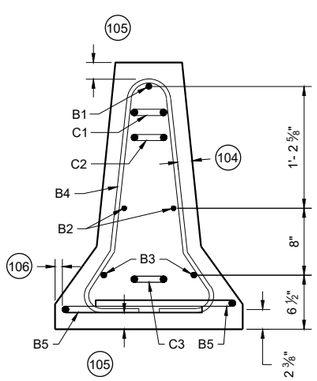

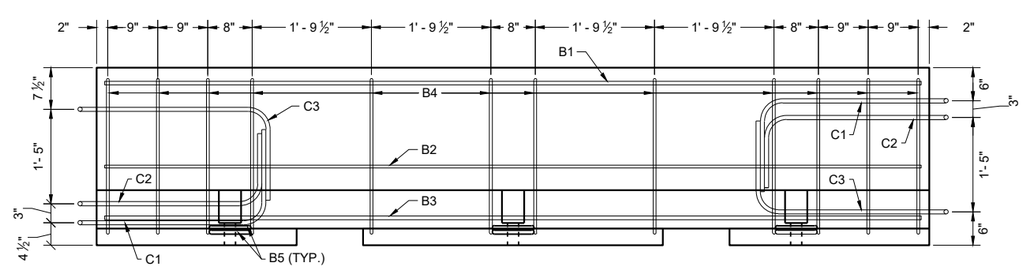

PROFILE VIEW

TEMPORARY BARRIER REINFORCEMENT

GENERAL NOTES

PLACE BARRIER ON PAVED SURFACE. BEFORE PLACEMENT OF TEMPORARY BARRIER, REMOVE ALL LOOSE MATERIAL FROM PAVED SURFACE.

LOOP BARS C1, C2 AND C3 ARE NOT FOR PLACEMENT OR MOVEMENT OF BARRIER.

100 PERMANENTLY FORM INTO ONE END OF BARRIER THE FOLLOWING INFORMATION:
- A. TYPE OF BARRIER: WI-CBTP
- B. MANUFACTURER
- C. DATE OF MANUFACTURE (MONTH AND YEAR)

101 1" OPTIONAL CHAMFER

102 SEE LIFTING SLOT DETAIL

103 SEE ANCHOR BLOCK DETAIL

104 1 ¾" MIN. CLEAR COVER

105 2" MIN. CLEAR COVER

106 1" MIN. CLEAR COVER

107 ± ⅛" MEASURED FROM FACE OF CONCRETE BARRIER TO OUTSIDE OF LOOP BAR (TYP.)

108 USE DELINEATORS CONFORMING TO SECTION 633 OF THE STANDARD SPECIFICATIONS. CONTRACTOR MY USE ALTERNATE SHAPES AND HOUSING. INSTALL DELINEATORS ACCORDING TO MANUFACTURERS INSTRUCTION. INSTALL YELLOW REFLECTORS WHEN BARRIER IS LOCATED LEFT OF TRAFFIC AND WHITE WHEN BARRIER IS LOCATED RIGHT OF TRAFFIC. SPACE DELINEATORS A MAXIMUM OF 25 FEET APART, PROVIDE TOP MOUNTED DELINEATORS IN ADDITION TO SIDE MOUNTED DELINEATORS ON BARRIER INSTALLATIONS LOCATED ON A CURVED ALIGNMENT LONGER THAT 200 FEET AND ON BARRIERS USED TO SEPARATE OPPOSING TRAFFIC.

CONCRETE BARRIER TEMPORARY PRECAST, 12' - 6"

STATE OF WISCONSIN
DEPARTMENT OF TRANSPORTATION

6
SDD 14B07-16a

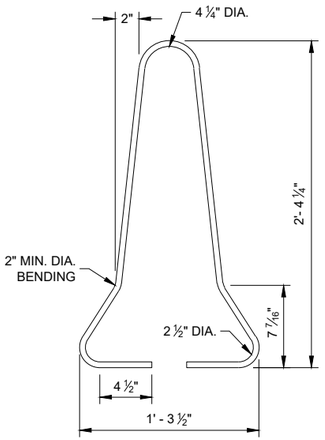

B4 BAR DETAIL

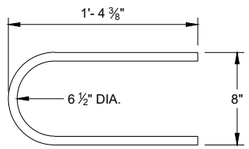

B5 BAR DETAIL

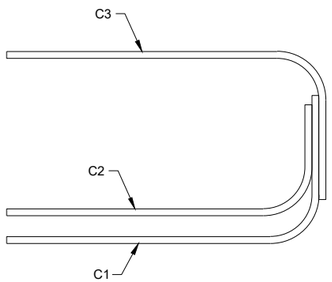

PROFILE VIEW

LOOP BAR ASSEMBLY

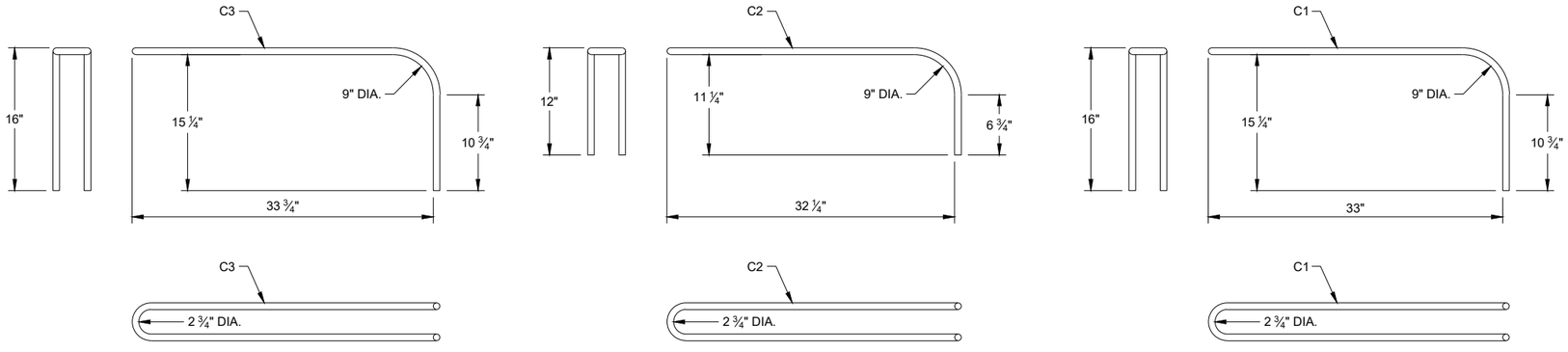

C BAR DETAILS

CONCRETE BARRIER TEMPORARY PRECAST, 12' - 6"

STATE OF WISCONSIN
DEPARTMENT OF TRANSPORTAT

6

SDD 14B07-16b

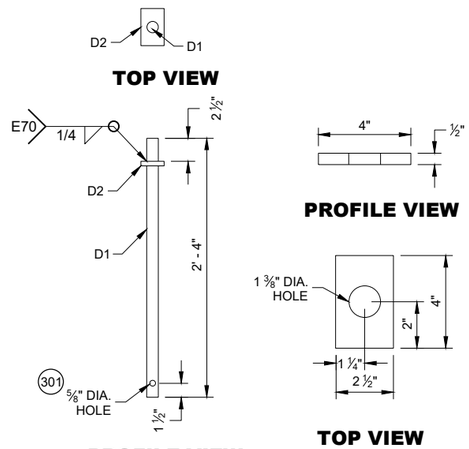

CONNECTOR PIN ASSEMBLY

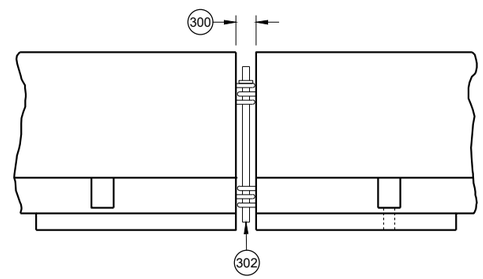

CONNECTING TEMPORARY BARRIER SECTIONS

GENERAL NOTES

300 SET WITH 3 ⅝" WOOD BLOCK.

301 HOLE IS OPTIONAL.

302 CONNECTOR PIN ASSEMBLY.

303 CONCRETE PAVEMENT, APPROACH SLAB, OR DECK.

304 CONCRETE DECK.

305 DO NOT USE ON CONCRETE BRIDGE DECK WITH ASPHALT OVERLAY OR CONCRETE PAVEMENT WITH ASPHALT OVERLAY.

306 MINIMUM OF 2" OF ASPHALT.

307 ASPHALT ANCHOR PIN ASSEMBLY

308 IF DRILLING A PILOT HOLE, THE MAX, DIA. OF THE HOLE IS 3/4"

309 WHEN THERE IS ASPHALT OVERLAYING CONCRETE PAVEMENT, A 1 5/8" DIA. PILOT HOLE CAN BE DRILLED INTO THE OVERLAY AND CONCRETE. IF NEEDED DRILL A 3/4" PILOT HOLE IN BASE COURSE.

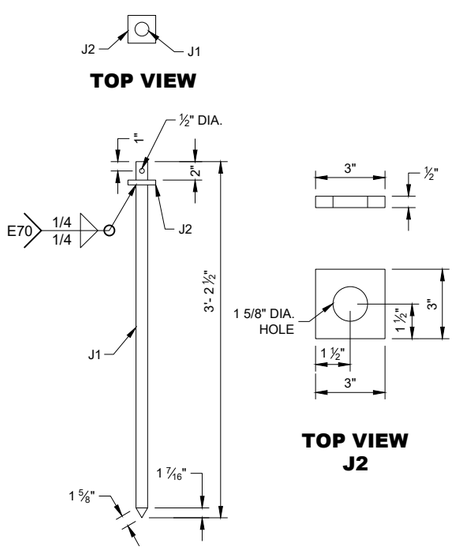

PROFILE VIEW

ASPHALT ANCHOR PIN ASSEMBLY

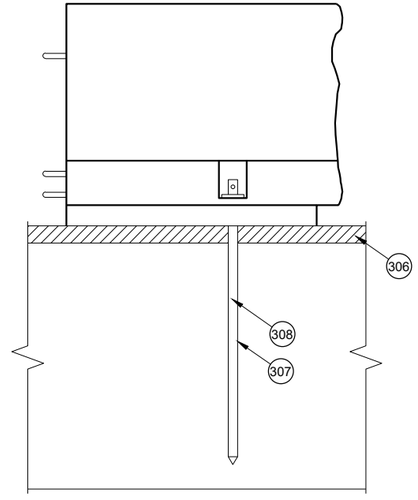

SIDE VIEW

ASPHALT ANCHOR INSTALLATION THROUGH ASPHALT PAVEMENT

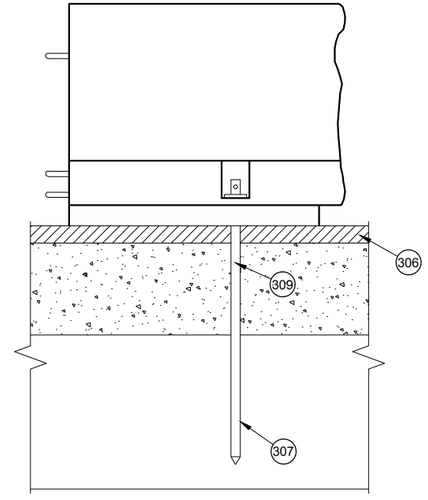

SIDE VIEW

ASPHALT ANCHOR INSTALLATION THROUGH ASPHALT OVERLAY ON TOP OF CONCRETE PAVEMENT

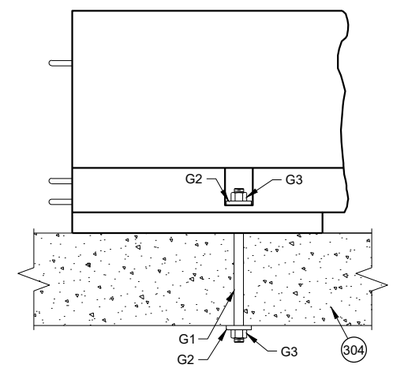

SIDE VIEW

THROUGH BOLT ANCHOR INSTALLATION 305

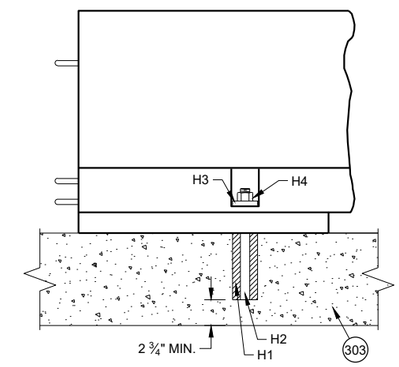

SIDE VIEW

ADHESIVE ANCHOR INSTALLATION 305

6

6

SDD 14B07-16c

SDD 14B07-16c

CONCRETE BARRIER TEMPORARY PRECAST, 12' - 6"

STATE OF WISCONSIN
DEPARTMENT OF TRANSPORTAT

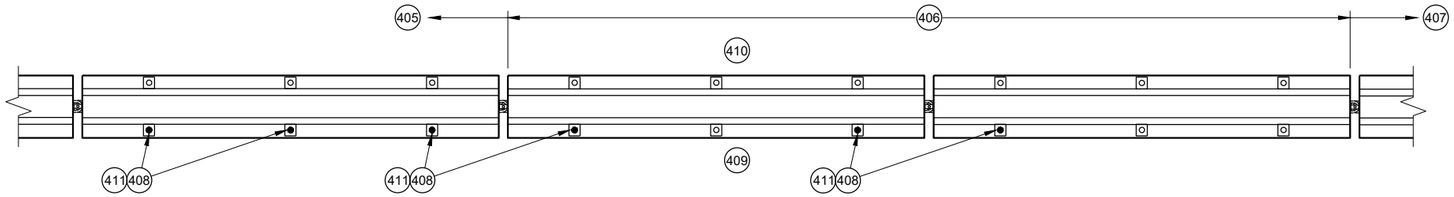

PLAN VIEW

TRANSITION FROM FREE STANDING TO ANCHORED BARRIER

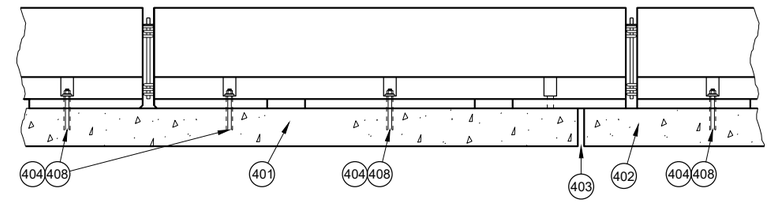

PROFILE VIEW

ANCHORED BARRIER NEAR EXPANSION JOINT (400)

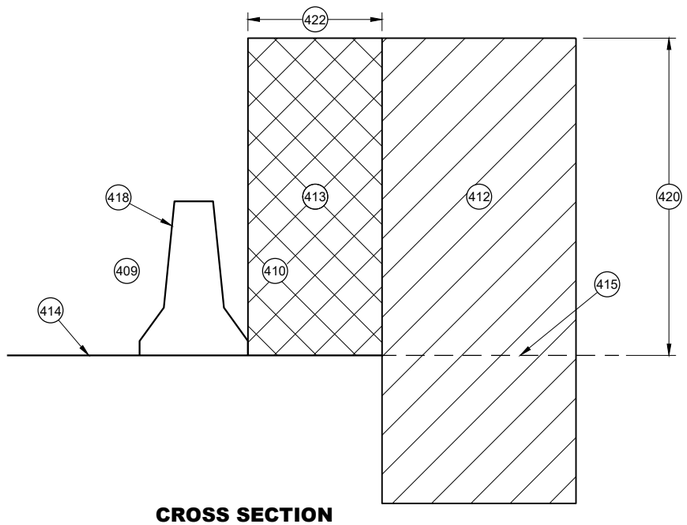

CROSS SECTION

FREE STANDING BARRIER

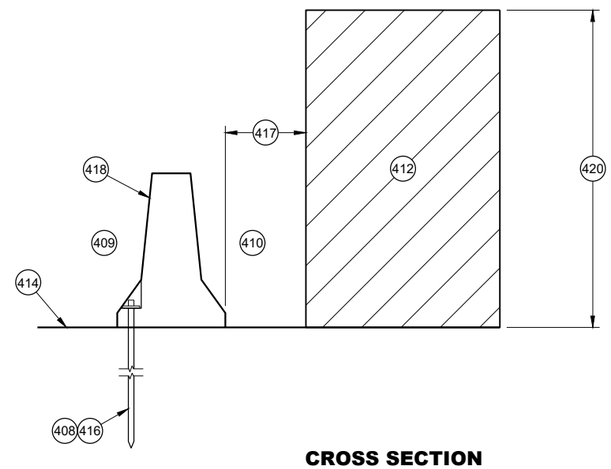

CROSS SECTION

ANCHORED BARRIER FOR OBJECTS ABOVE THE GRADE LINE AND NEAR THE BARRIER

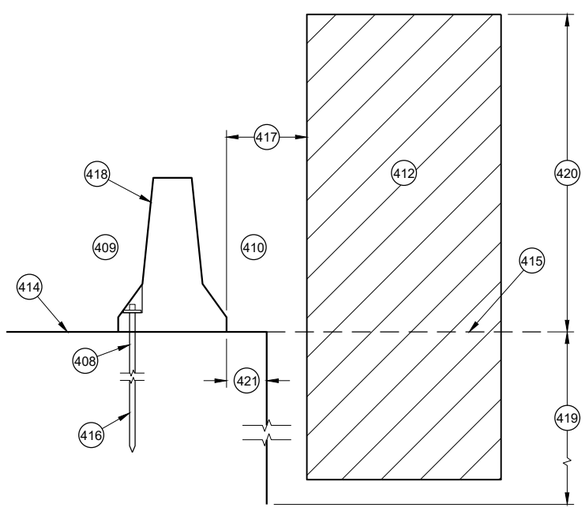

CROSS SECTION

ANCHORED BARRIER NEAR VERTICAL DROP OFF

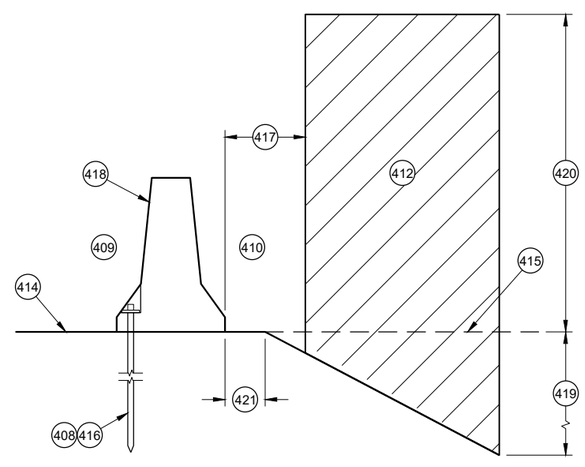

CROSS SECTION

ANCHORED BARRIER NEAR A SLOPE

GENERAL NOTES

(400) NO SINGLE CONCRETE BARRIER SECTION SHALL BE ANCHORED TO BOTH THE BRIDGE DECK AND THE APPROACH SLAB. ALL ANCHOR BOLT LOCATIONS SHALL BE ANCHORED TO THE DECK IN ACCORDANCE WITH THE DETAIL. NO MORE THAN ONE ANCHOR BOLT SHALL BE ELIMINATED FROM A BARRIER SECTION WHEN SPANNING AN EXPANSION JOINT.

(401) CONCRETE DECK

(402) CONCRETE DECK OR APPROACH SLAB.

(403) EXPANSION JOINT

(404) ADHESIVE ANCHOR SHOWN. SEE ANCHOR DETAILS.

(405) ANCHORED TEMPORARY BARRIER

(406) TRANSITION FROM ANCHORED TEMPORARY BARRIER TO FREE STANDING

(407) FREE STANDING BARRIER

(408) REMOVE ALL ANCHORS WHEN NO LONGER NEEDED. FILL CONCRETE PAVEMENTS, DECKS AND APPROACH SLABS WITH NON-SHRINK COMMERCIAL GROUT FROM THE APPROVED PRODUCT LIST. FILL ASPHALT PAVEMENTS WITH ASTM D6690 TYPE II RUBBERIZED CRACK FILLER.

(409) TRAFFIC SIDE

(410) NON-TRAFFIC SIDE

(411) ANCHOR LOCATION. SEE ANCHORING DETAILS.

(412) WORK AREA

(413) AREA FREE OF OBJECTS AND WORKERS

(414) GRADE LINE

(415) EXTENDED GRADE LINE

(416) ANCHORED TEMPORARY BARRIER. SEE BOLT THROUGH DECK, REMOVABLE ADHESIVE ANCHOR, OR AN ASPHALT ANCHOR ROD DETAILS FOR MORE INFORMATION. ASPHALT ANCHOR ROD SHOWN.

(417) WHEN OBJECTS EXTEND ABOVE THE GRADE. A MINIMUM OF 1 FOOT IS REQUIRED FROM BACK OF BARRIER TO OBJECT.

(418) OBJECTS ARE NOT TO BE PLACED ON, MOUNTED TO, OR ALLOWED TO LEAN AGAINST THE BARRIER WITHOUT WRITTEN PERMISSION OF THE PROJECT ENGINEER.

(419) DEPTHS OF 3 FEET OR MORE.

(420) Y = 6.5'

(421) OFFSET FROM BACK OF BARRIER EDGE:

CONCRETE PAVEMENT	0.5'
ASPHALT	0.5'

(422) POSTED SPEED (MPH):

45 OR GREATER	4.0'
40 OR LOWER	2.0'

CONCRETE BARRIER TEMPORARY PRECAST, 12' - 6"

STATE OF WISCONSIN
DEPARTMENT OF TRANSPORTA

GENERAL NOTES

500 EXISTING RIGID BARRIERS (VARIES)

501 TEMPORARY BARRIER

502 SEE OTHER DETAIL ON HOW TO ANCHOR TEMPORARY BARRIER (BARRIER ASPHALT ANCHOR SHOWN).

503 ANCHORS ARE REQUIRED ON BOTH SIDE OF THE TEMPORARY BARRIER.

504 NESTED RAILS ARE REQUIRED ON BOTH SIDES OF THE TEMPORARY BARRIER FOR ALL INSTALLATIONS.

505 TRAFFIC TRAVELS FROM PERMANENT BARRIER TO TEMPORARY BARRIER.

506 TRAFFIC TRAVELS FROM TEMPORARY BARRIER TO PERMANENT BARRIER.

507 VERTICAL BARRIER

508 SAFETY SHAPE BARRIER

509 SINGLE SLOPE BARRIER

510 CAP END PLATE PLACED FLUSH WITH UPSTREAM END OF RIGID BARRIER.

511 BENT THRIE BEAM TO FIT.

512 THRIE BEAM PIECES ARE OFFSET 15 ¼" TO PREVENT INTERFERENCE FROM THE ANCHORS ON OPPOSING SIDES.

513 TWO (2) P1, P2 AND P3 ARE REQUIRED

514 FIVE (5) N1, N2 AND N3 ARE REQUIRED

515 TWO (2) R1, R2 AND R3 ARE REQUIRED

516 CUT WOOD BLOCK TO FIT.

517 SEE THRIE BEAM RAIL TERMINAL CONNECTOR DETAIL ASSEMBLY.

518 CAP ASSEMBLY

519 4" MAX. GAP BETWEEN TEMPORARY BARRIER AND RIGID BARRIER.

520 ALL TWELVE SPLICE HOLES REQUIRE M1 AND M2

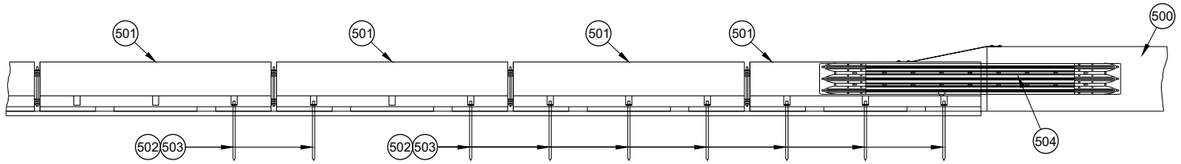

PROFILE VIEW

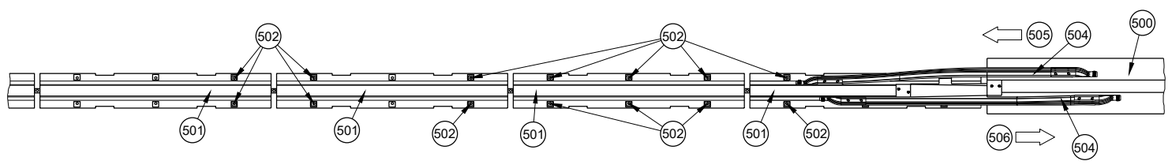

PLAN VIEW
TRANSITION TO RIGID BARRIER

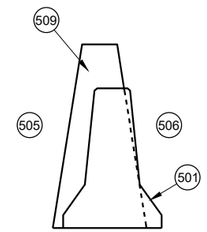

CROSS SECTION TEMPORARY BARRIER PLACEMENT SINGLE SLOPE

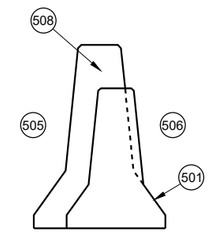

CROSS SECTION TEMPORARY BARRIER PLACEMENT SAFETY SHAPE

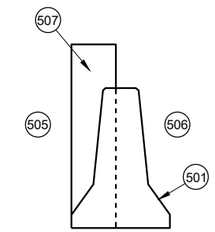

CROSS SECTION TEMPORARY BARRIER PLACEMENT VERTICAL

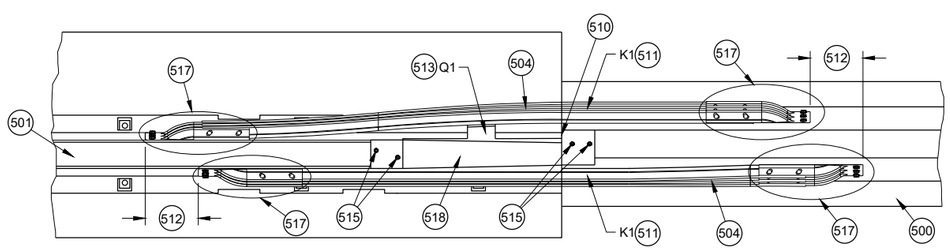

PLAN DETAIL VIEW
TRANSITION TO RIGID BARRIER

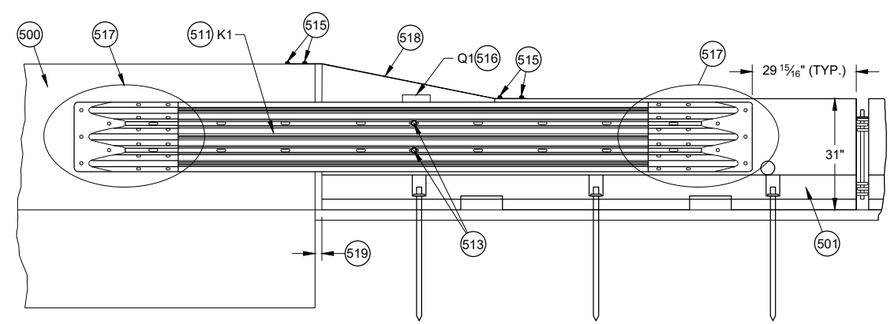

BACK DETAIL VIEW
TRANSITION TO RIGID BARRIER

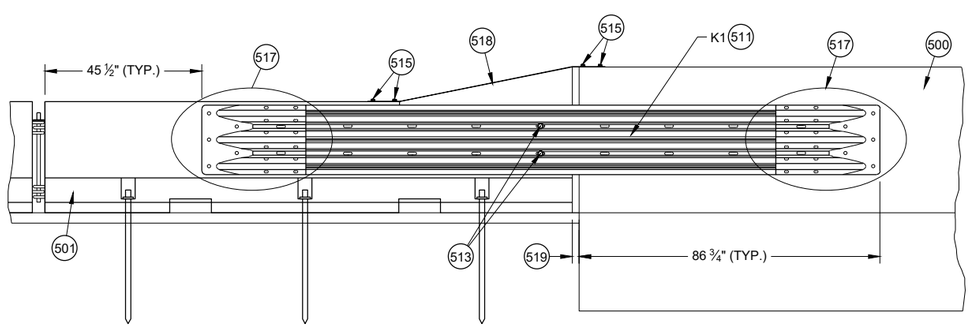

FRONT DETAIL VIEW
TRANSITION TO RIGID BARRIER

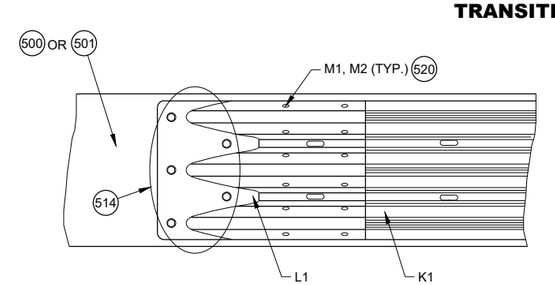

517 DETAIL PLAN VIEW
THRIE BEAM RAIL TERMINAL CONNECTOR ASSEMBLY

CONCRETE BARRIER TEMPORARY PRECAST, 12' - 6"

STATE OF WISCONSIN
DEPARTMENT OF TRANSPORTAT

6
SDD 14B07-16e

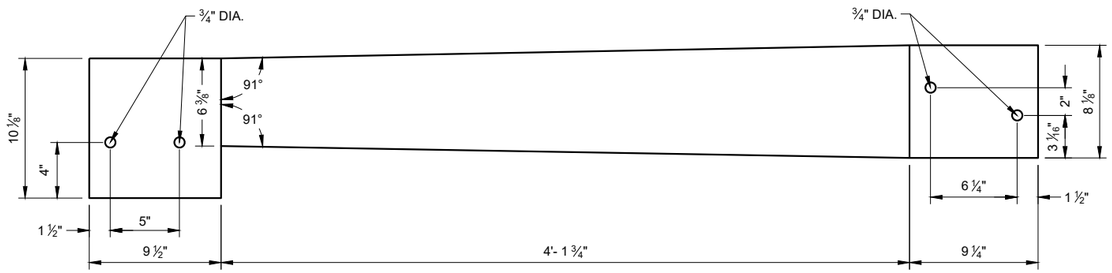

TOP VIEW
S1

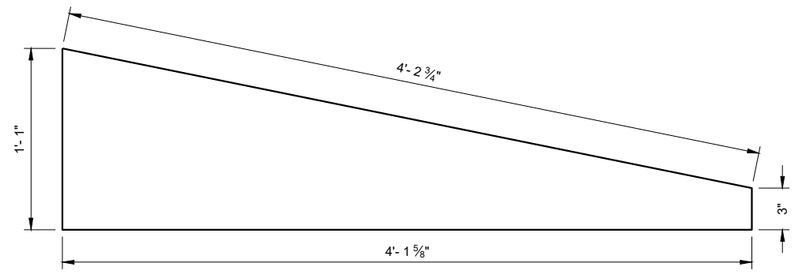

SIDE VIEW
S3

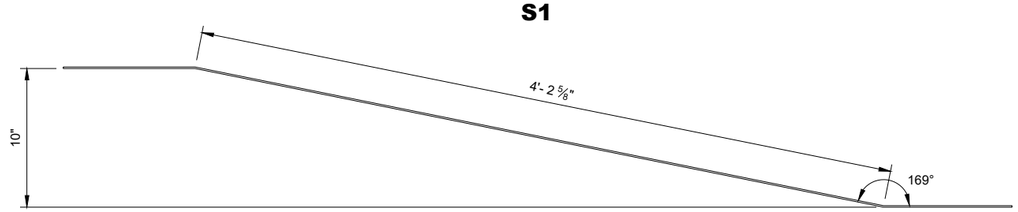

ELEVATION VIEW
S1

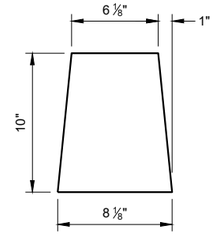

S2

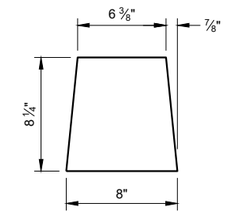

S4

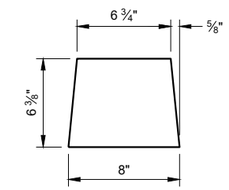

S5

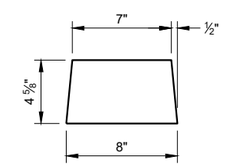

S6

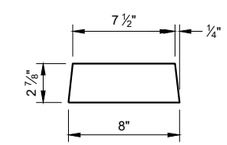

S7

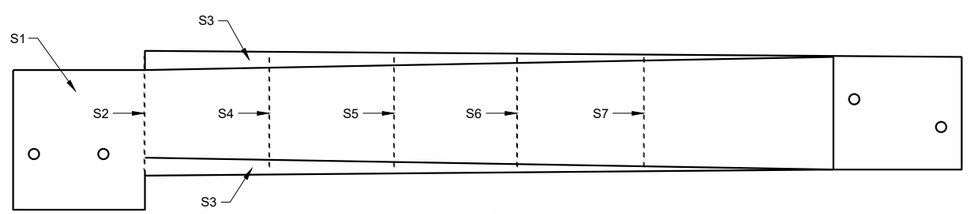

PLAN VIEW

GENERAL NOTES

STITCH WELD GUSSET PLATES AND END PLATES ON THREE SIDES

STITCH WELD TWO SIDE PLATES TO TOP PLATE, END PLATE AND GUSSETS.

600 SIDE PLATES (S3) NOT SHOWN FOR CLARITY.

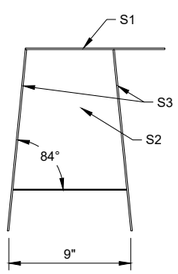

BACK VIEW

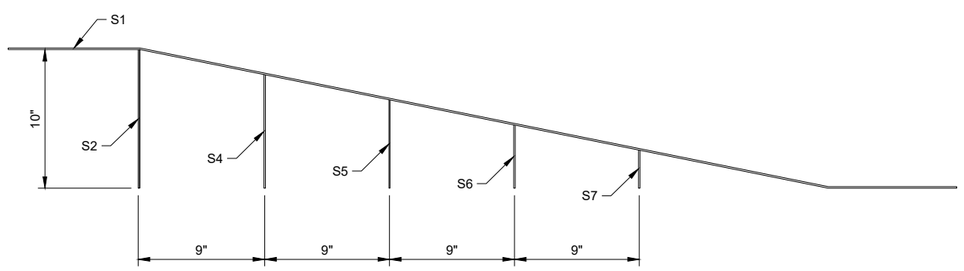

SIDE VIEW 600

42" TOP CAP ASSEMBLY

CONCRETE BARRIER TEMPORARY PRECAST, 12' - 6"

STATE OF WISCONSIN
DEPARTMENT OF TRANSPORTATION

6

SDD 14B07-16f

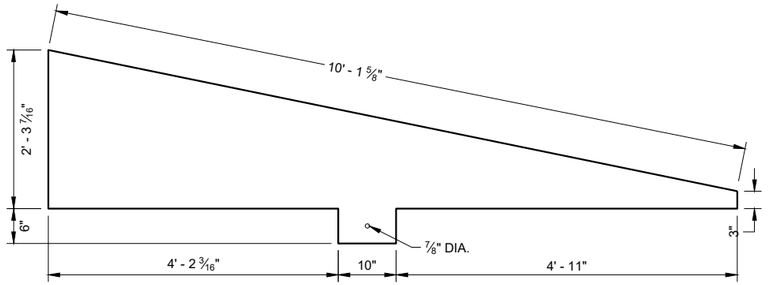

SIDE VIEW
T4

END VIEW

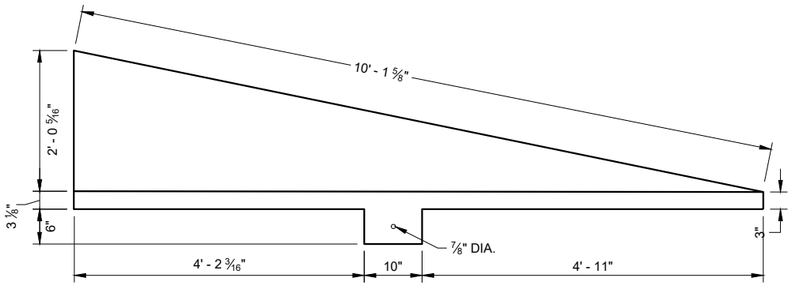

SIDE VIEW
T3

END VIEW

GENERAL NOTES

STITCH WELD GUSSET PLATES AND END PLATES ON THRIE SIDES

STITCH WELD TWO SIDE PLATES TO TOP PLATE, END PLATE AND GUSSETS.

SIDE PLATES, TOP PLATE, END PLATE AND GUSSETS ARE 12 GAUGE ASTM A36 GALVANIZED STEEL.

700 SIDE PLATES (T3 AND T4) NOT SHOWN FOR CLARITY.

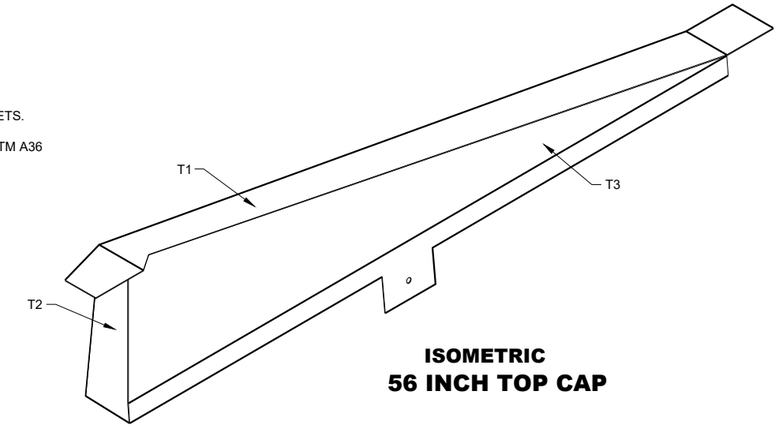

ISOMETRIC
56 INCH TOP CAP

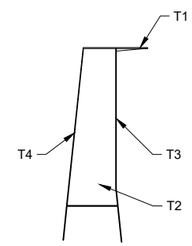

END VIEW
56 INCH TOP CAP

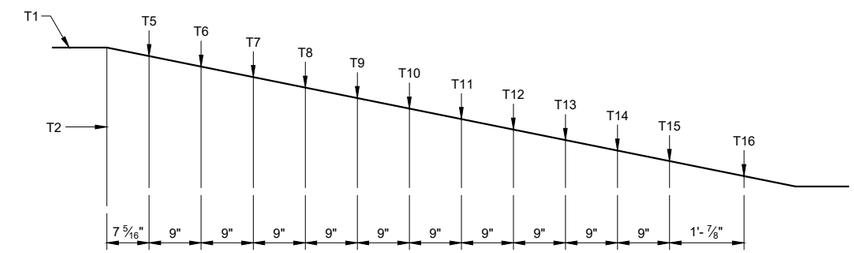

SIDE VIEW
56 INCH TOP CAP 700

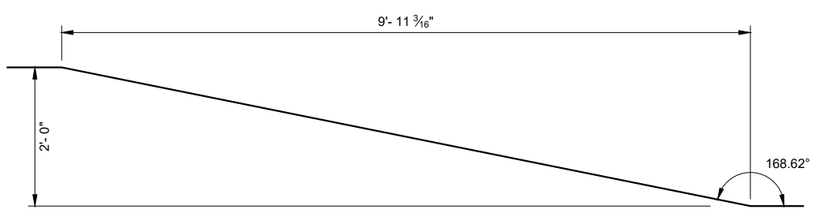

SIDE VIEW
TOP PLATE T1

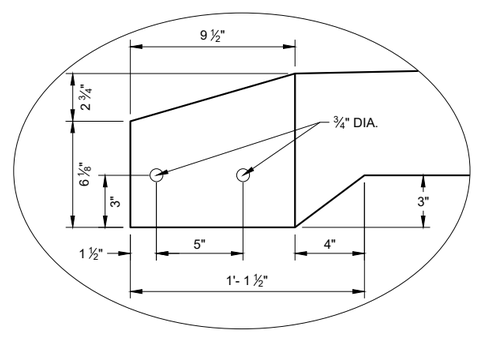

DETAIL "A"

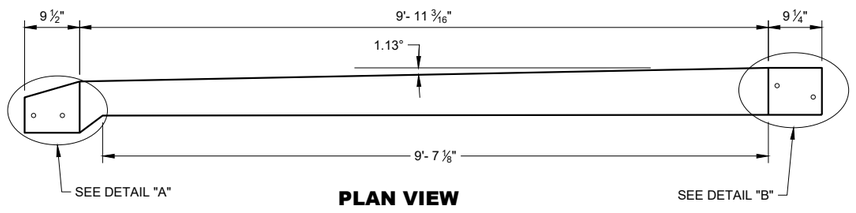

PLAN VIEW
TOP PLATE T1

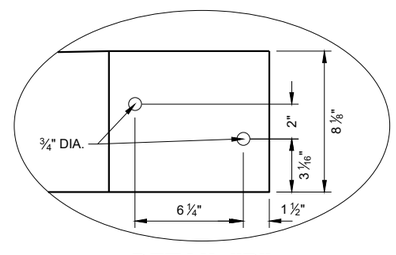

DETAIL "B"

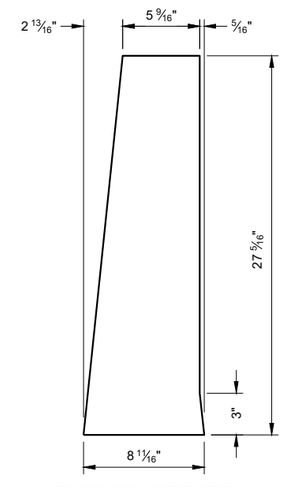

END PLATE T2

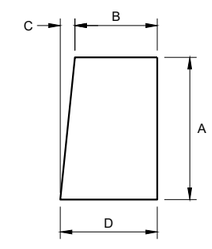

GUSSET PLATES
T5 - T16

GUSSET DIMENSIONS				
GUSSET NO.	A	B	C	D
T5	22 13/16"	5 11/16"	2 5/16"	8 1/16"
T6	21"	5 7/8"	2 3/16"	8 1/16"
T7	19 3/16"	6 1/16"	1 15/16"	8 1/16"
T8	17 3/8"	6 1/4"	1 13/16"	8 1/16"
T9	15 5/16"	6 7/16"	1 9/16"	8 1/16"
T10	13 3/4"	6 5/8"	1 7/16"	8 1/16"
T11	11 15/16"	6 13/16"	1 1/4"	8 1/16"
T12	10 1/8"	7"	1 1/16"	8 1/16"
T13	8 5/16"	7 3/16"	7/8"	8 1/16"
T14	6 1/2"	7 3/8"	11/16"	8 1/16"
T15	4 11/16"	7 9/16"	1/2"	8"
T16	2 7/8"	7 3/4"	1/4"	8"

CONCRETE BARRIER TEMPORARY PRECAST, 12' - 6"

STATE OF WISCONSIN
DEPARTMENT OF TRANSPORTATION

6

SDD 14B07-16g

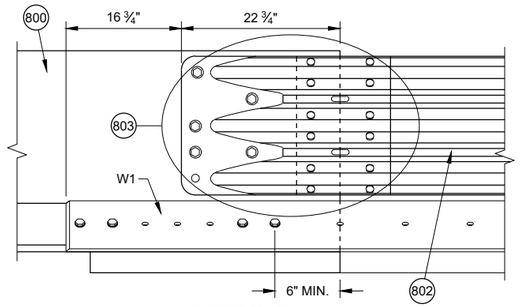

DETAIL D

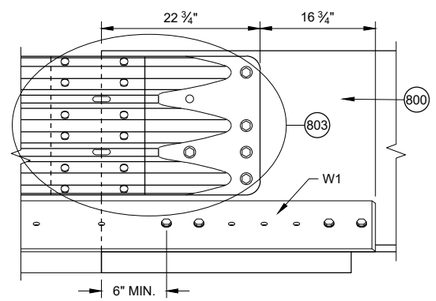

DETAIL E

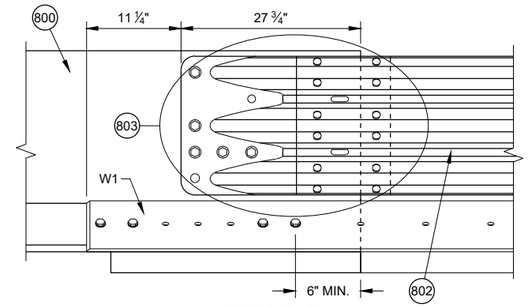

DETAIL F

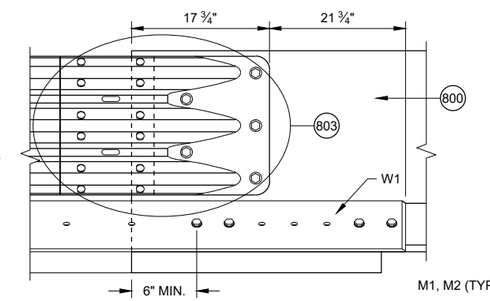

DETAIL G

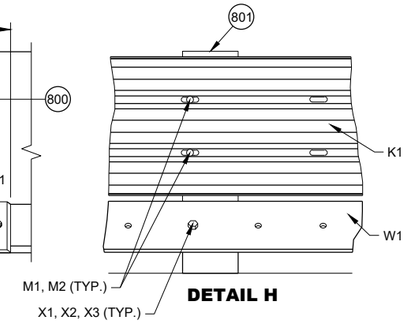

DETAIL H

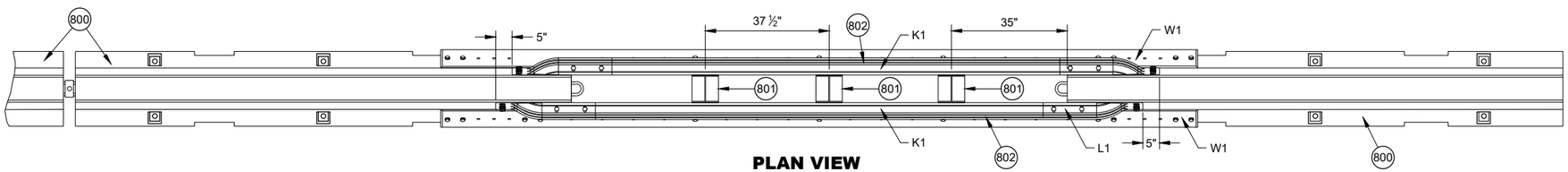

PLAN VIEW

GENERAL NOTES

800 FREE STANDING TEMPORARY BARRIER

801 GAP STIFFENER ASSEMBLY

802 THRIE BEAMS ARE NESTED ON BOTH SIDES OF THE TEMPORARY BARRIER.

803 SEE THRIE BEAM RAIL TERMINAL CONNECTOR DETAIL

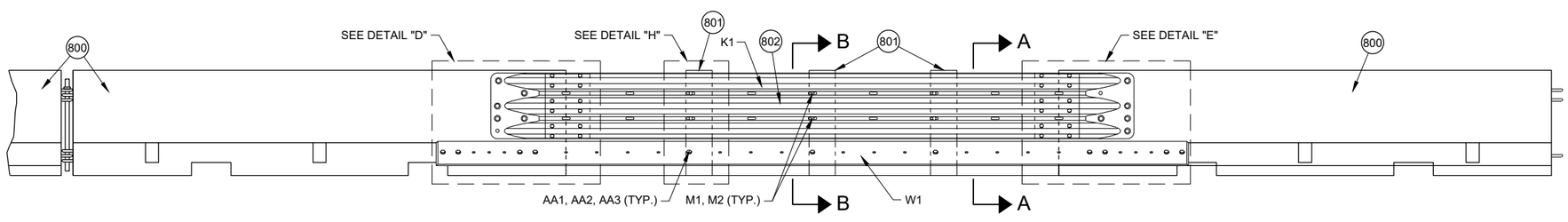

FRONT ELEVATION VIEW

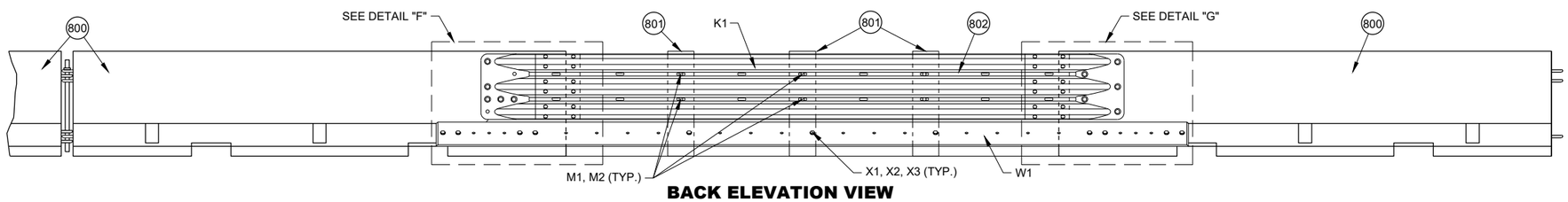

BACK ELEVATION VIEW

PORTABLE CONCRETE BARRIER GAP THRIE BEAM COVER

CONCRETE BARRIER TEMPORARY PRECAST, 12' - 6"

STATE OF WISCONSIN
DEPARTMENT OF TRANSPORTA

6

SDD 14B07-16h

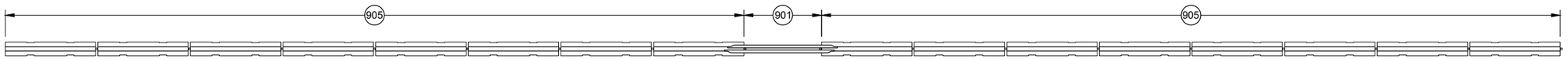

PLAN VIEW
GAP WITHIN SPACING

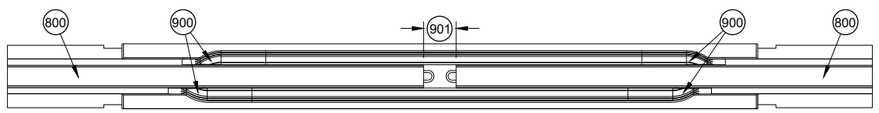

PLAN VIEW
TEMPORARY BARRIER GAP OVER 4" TO 1' MAX. (904)

GENERAL NOTES

(900) SEE OTHER DETAILS FOR TEMPORARY GAP HARDWARE (TYP.)

(901) TEMPORARY BARRIER GAP

(902) GAP STIFFENER ASSEMBLY CENTERED IN THE GAP.

(903) GAP STIFFENER ASSEMBLY IS OFFSET 18 ¾" FROM CENTER

(904) MINIMUM NUMBER OF GAP STIFFENERS SHOWN FOR THE GAP RANGE SHOWN.

(905) MINIMUM OF 8 CONTINUOUS FREE STANDING TEMPORARY BARRIERS

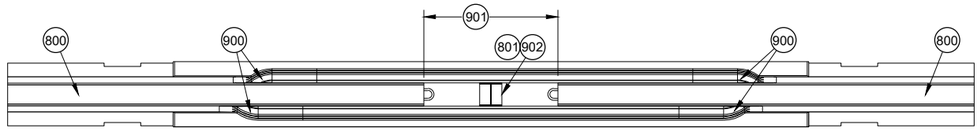

PLAN VIEW
TEMPORARY BARRIER GAP OVER 1' TO 4' MAX. (904)

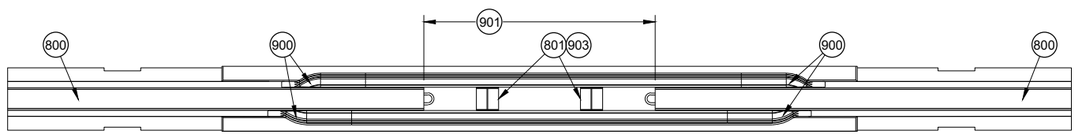

PLAN VIEW
TEMPORARY BARRIER GAP OVER 4' TO 7' MAX. (904)

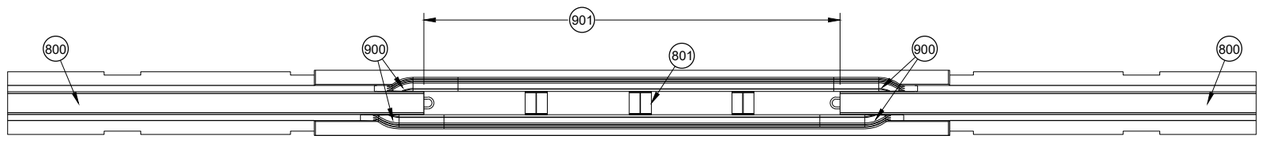

PLAN VIEW
TEMPORARY BARRIER GAP OVER 7' TO 12.5' MAX. (904)

CONCRETE BARRIER TEMPORARY PRECAST, 12' - 6"

STATE OF WISCONSIN
DEPARTMENT OF TRANSPORTA

6

SDD 14B07-16i

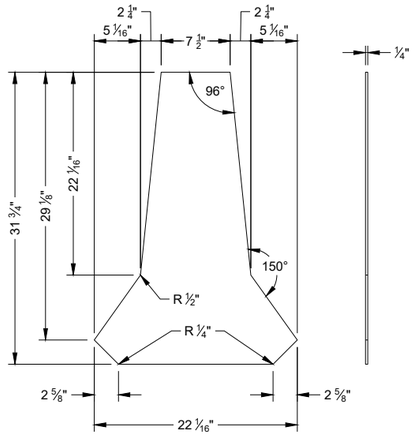

PROFILE VIEW

SIDE VIEW

STIFFENER ASSEMBLY CENTER PANEL U1

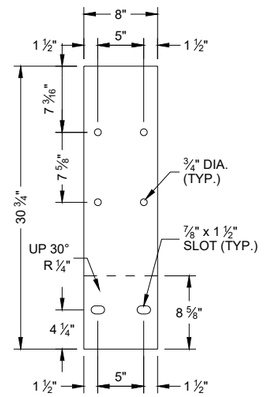

FLAT PATTERN

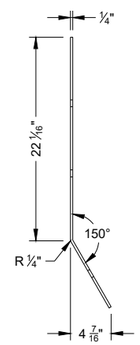

SIDE VIEW

STIFFENER ASSEMBLY SIDE PANEL U2

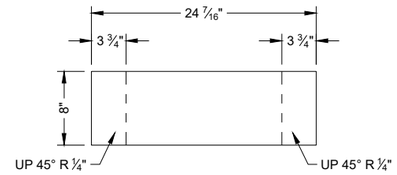

FLAT PATTERN

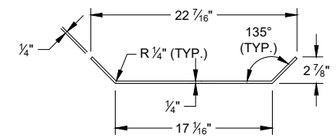

PROFILE VIEW

STIFFENER ASSEMBLY BOTTOM PANEL U3

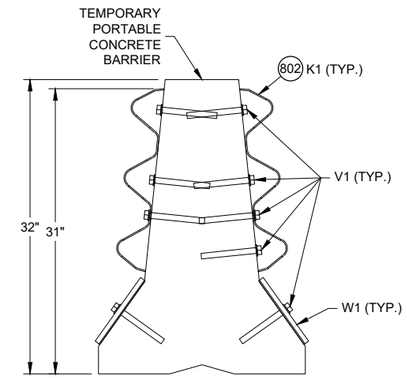

SECTION A - A

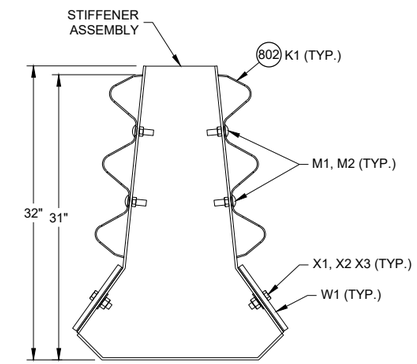

SECTION B - B

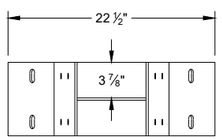

PLAN VIEW

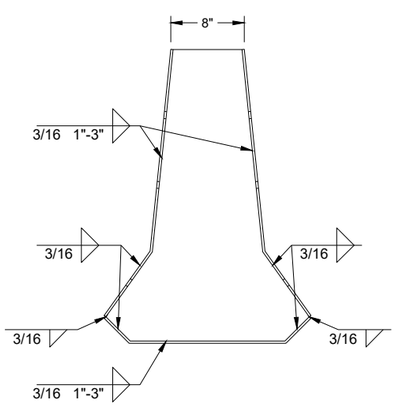

PROFILE VIEW

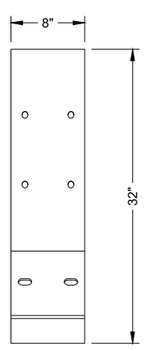

SIDE VIEW

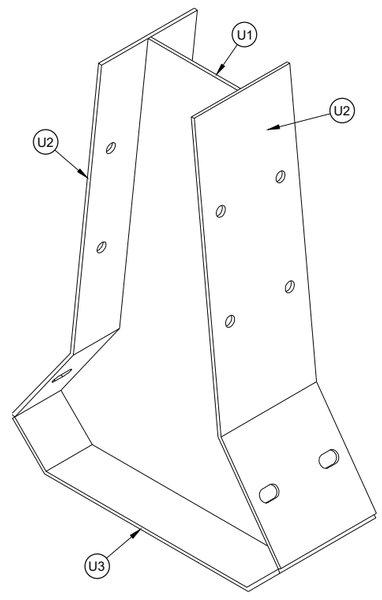

ISOMETRIC

GAP STIFFENER ASSEMBLY

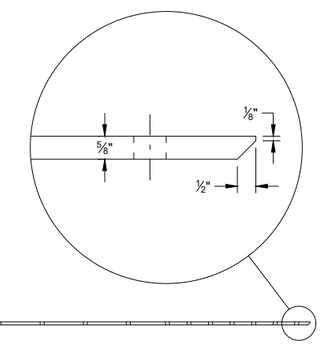

PLAN VIEW

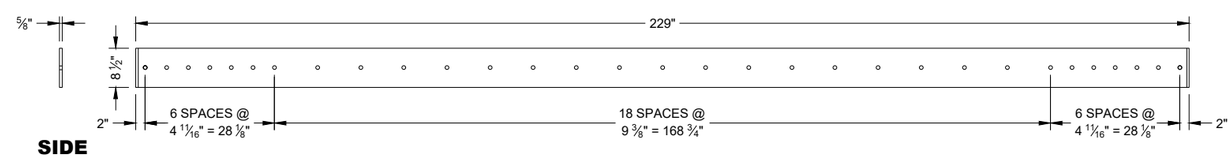

SIDE VIEW

ELEVATION VIEW

W1 TOE PLATE

6

6

SDD 14B07-16j

SDD 14B07-16j

CONCRETE BARRIER TEMPORARY PRECAST, 12' - 6"

STATE OF WISCONSIN
DEPARTMENT OF TRANSPORTAT

GENERAL NOTES

1100 1" DIA. HOLE

1101 ¾" DIA. HOLE

1102 PROVIDE HOLES IN THRIE BEAM TERMINAL CONNECTOR TO LIMIT STEEL REINFORCEMENT OR LOOP BAR CONFLICT. CONTRACTOR MAY FIELD DRILL ADDITIONAL HOLE OR PROVIDE THRIE BEAM TERMINAL CONNECTOR WITH ADDITIONAL HOLES FROM SUPPLIER.

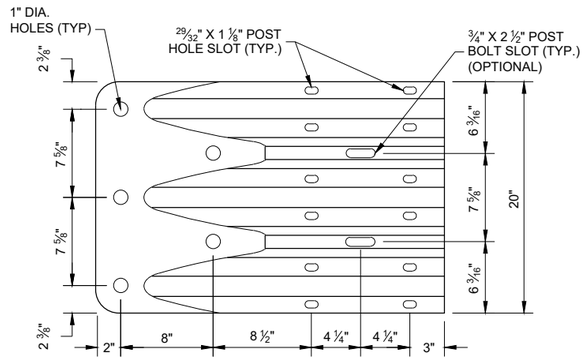

ELEVATION VIEW

THRIE BEAM TERMINAL CONNECTOR

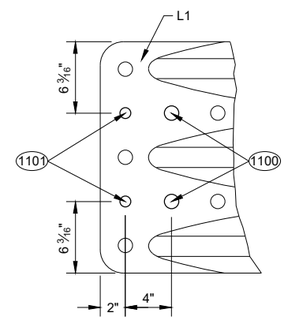

ELEVATION VIEW

ADDITIONAL THRIE BEAM 1102 TERMINAL CONNECTOR HOLE DETAIL

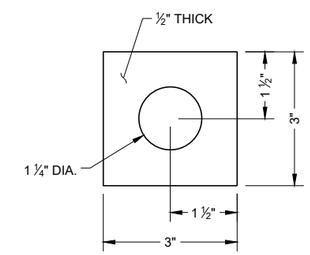

PLATE WASHER DETAIL G2, H3

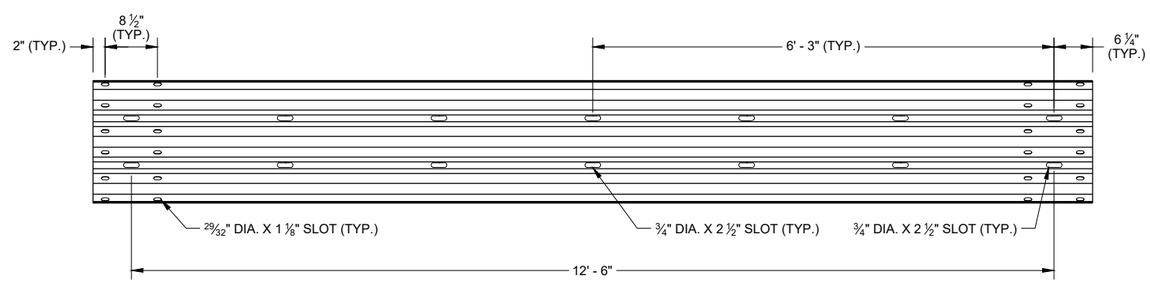

SLOTTED THRIE BEAM RAIL K1

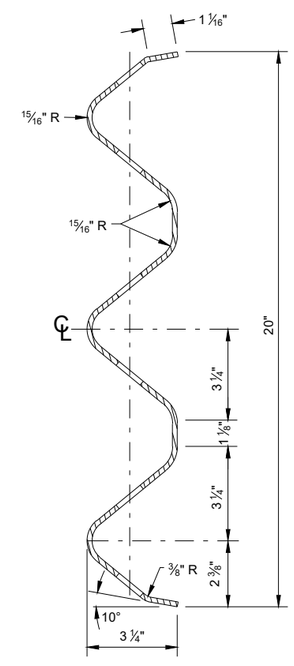

SECTION THROUGH BEAM K1

CONCRETE BARRIER TEMPORARY PRECAST, 12' - 6"

STATE OF WISCONSIN
DEPARTMENT OF TRANSPORTAT

6

SDD 14B07-16k

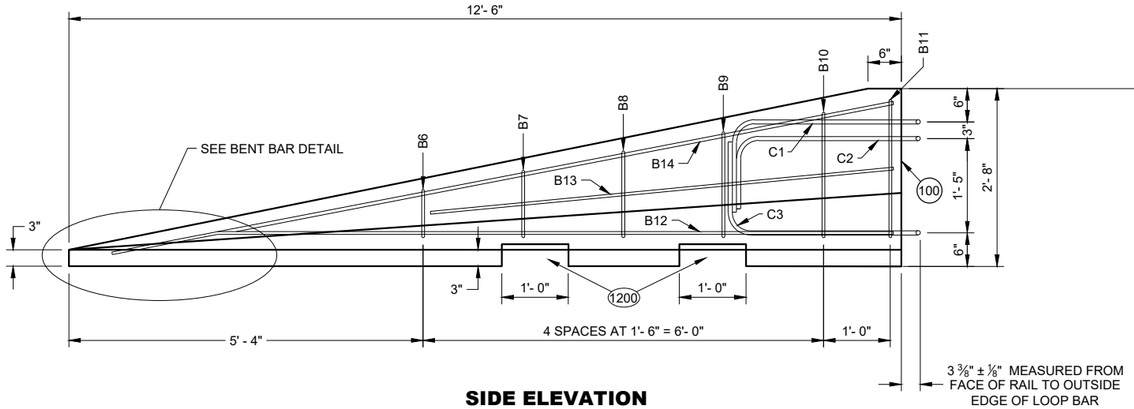

SIDE ELEVATION
(FOR CONNECTION TO LEFT END OF BARRIER)

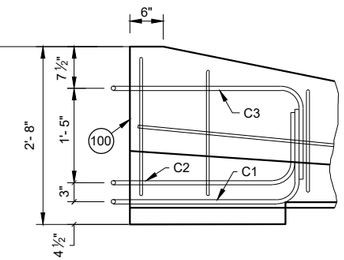

SIDE ELEVATION
LOOP BAR ASSEMBLY INVERTED FOR OPPOSITE END
(FOR CONNECTION TO RIGHT END OF BARRIER)

GENERAL NOTES

1200 SEE LIFTING SLOT DETAIL. LOCATION OF LIFTING SLOTS DETERMINED BY CONTRACTOR.

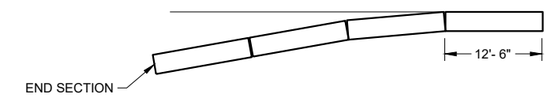

FLARE AT BARRIER END

POSTED SPEED, (MPH)	FLARE RATE
40 OR LESS	6:1
45 OR GREATER	8:1

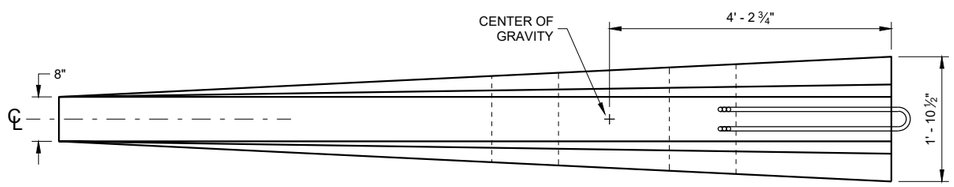

PLAN VIEW

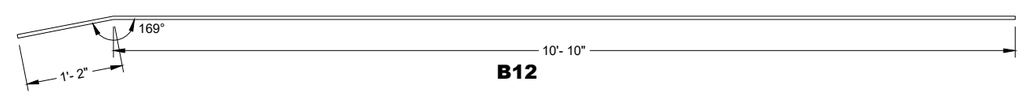

B12

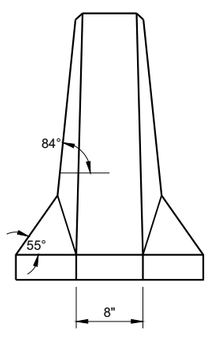

FRONT ELEVATION

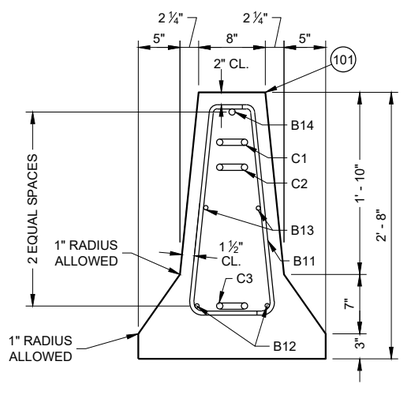

END SECTION

DETAILS OF BARRIER TAPER SECTION

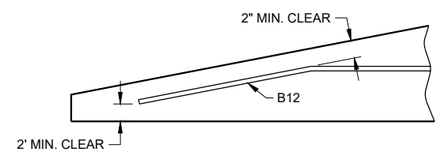

BENT BAR DETAIL

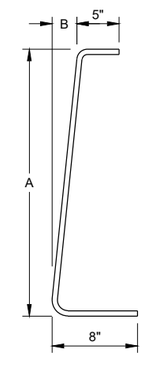

BAR	A	B
B6	10"	1"
B7	1'- 1"	1 ¼"
B8	1'- 5"	1 ⅝"
B9	1'- 8"	1 ⅞"
B10	2'- 0 ½"	2 ⅜"
B11	2'- 3"	2 ¾"

B BARS
2 OF EACH SIZE REQUIRED FOR STIRRUP ASSEMBLY

CONCRETE BARRIER TEMPORARY PRECAST, 12' - 6"

STATE OF WISCONSIN
DEPARTMENT OF TRANSPORTATION

6

SDD 14B07-16I

BILL OF MATERIALS - CONCRETE BARRIER PRECAST

PART	DESCRIPTION	MATERIALS SPECIFICATIONS	NOTES
A1	PRECAST TEMPORARY BARRIER - CONCRETE	MIN. = f'c 5000 PSI	
B1	REBAR	STANDARD SPEC. 505.2 GRADE 60 UNCOATED REBAR	#5 REBAR, LENGTH 12'-2"
B2	REBAR	STANDARD SPEC. 505.2 GRADE 60 UNCOATED REBAR	#4 REBAR, LENGTH 12'-2"
B3	REBAR	STANDARD SPEC. 505.2 GRADE 60 UNCOATED REBAR	#5 REBAR, LENGTH 12'-2"
B4	REBAR	STANDARD SPEC. 505.2 GRADE 60 UNCOATED REBAR	#4 REBAR, LENGTH 6'-0"
B5	REBAR	STANDARD SPEC. 505.2 GRADE 60 UNCOATED REBAR	#6 REBAR, LENGTH 2'-11"
B6	REBAR	STANDARD SPEC. 505.2 GRADE 60 UNCOATED REBAR	#4 REBAR, LENGTH 1'-11"
B7	REBAR	STANDARD SPEC. 505.2 GRADE 60 UNCOATED REBAR	#4 REBAR, LENGTH 2'-2"
B8	REBAR	STANDARD SPEC. 505.2 GRADE 60 UNCOATED REBAR	#4 REBAR, LENGTH 2'-6"
B9	REBAR	STANDARD SPEC. 505.2 GRADE 60 UNCOATED REBAR	#4 REBAR, LENGTH 2'-9"
B10	REBAR	STANDARD SPEC. 505.2 GRADE 60 UNCOATED REBAR	#4 REBAR, LENGTH 3'-2"
B11	REBAR	STANDARD SPEC. 505.2 GRADE 60 UNCOATED REBAR	#4 REBAR, LENGTH 3'-4"
B12	REBAR	STANDARD SPEC. 505.2 GRADE 60 UNCOATED REBAR	#4 REBAR, LENGTH 12'-0"
B13	REBAR	STANDARD SPEC. 505.2 GRADE 60 UNCOATED REBAR	#4 REBAR, LENGTH 7'-9"
B14	REBAR	STANDARD SPEC. 505.2 GRADE 60 UNCOATED REBAR	#5 REBAR, LENGTH 11'-9"
C1	LOOP BAR	ASTM A709 GRADE 70 SMOOTH BAR OR ASTM A706 GRADE 60 REBAR UNCOATED	¾" DIA.
C2	LOOP BAR	ASTM A709 GRADE 70 SMOOTH BAR OR ASTM A706 GRADE 60 REBAR UNCOATED	¾" DIA.
C3	LOOP BAR	ASTM A709 GRADE 70 SMOOTH BAR OR ASTM A706 GRADE 60 REBAR UNCOATED	¾" DIA.
D1	CONNECTION PIN - ROD	ASTM A36 MIN. STRENGTH 36 KSI / ASTM A529 MAX. STRENGTH 50 KSI / ASTM A572 MAX STRENGTH 50 KSI / ASTM A709 MAX STRENGTH 50 KSI / ASTM A992 MAX STRENGTH 50 KSI	1 ¼" DIA.
D2	CONNECTION PIN - TOP PLATE	ASTM A36 MIN. STRENGTH 36 KSI / ASTM A529 MAX. STRENGTH 50 KSI / ASTM A572 MAX STRENGTH 50 KSI / ASTM A709 MAX STRENGTH 50 KSI / ASTM A992 MAX STRENGTH 50 KSI	
G1	BOLT THROUGH ANCHOR - THREADED ROD	HOT DIP AASHTO M232 CLASS / ASTM A153 CLASS C / ASTM F2329 C OR MECHANICAL GALVANIZE TO AASHTO M298 CLASS 55 TYPE 2 / ASTM B695 CLASS 55 TYPE 2 A307 GRADE A OR SAE J429 GRADE 2 UNC	1 ⅛" DIA.
G2	BOLT THROUGH ANCHOR - WASHER, SQUARE	ASTM A36 MIN. STRENGTH 36 KSI / ASTM A529 MAX. STRENGTH 50 KSI / ASTM A572 MAX STRENGTH 50 KSI / ASTM A709 MAX STRENGTH 50 KSI / ASTM A992 MAX STRENGTH 50 KSI	
G3	BOLT THROUGH ANCHOR - NUT	HOT DIP AASHTO M232 CLASS / ASTM A153 CLASS C / ASTM F2329 C OR MECHANICAL GALVANIZE TO AASHTO M298 CLASS 55 TYPE 2 / ASTM B695 CLASS 55 UNC OVER TAP NUTS AS SPECIFIED IN AASHTO 291 / ASTM A 563 HEAVY HEX HEAD ASTM A563DH OR SAE J995 GRADE 5	
H1	ADHESIVE ANCHOR - ADHESIVE	ICC-ES-AC308 5 ¼" EMBEDMENT WITH A MIN. BOND STRENGTH OF 1,650 PSI. SEE 603.2 AND 603.3.1.2 OF THE WISCONSIN STANDARD SPECIFICATIONS FOR MORE INFORMATION ON ADHESIVE ANCHORS.	
H2	ADHESIVE ANCHOR - THREADED ROD	HOT DIP AASHTO M232 CLASS / ASTM A153 CLASS C / ASTM F2329 C OR MECHANICAL GALVANIZE TO AASHTO M298 CLASS 55 TYPE 2 / ASTM B695 CLASS 55 TYPE 2 A307 GRADE A / SAE J429 GRADE 2 UNC	1 ⅛" DIA.
H3	ADHESIVE ANCHOR - WASHER, SQUARE	ASTM A36 MIN. STRENGTH 36 KSI / ASTM A529 MAX. STRENGTH 50 KSI / ASTM A572 MAX STRENGTH 50 KSI / ASTM A709 MAX STRENGTH 50 KSI / ASTM A992 MAX STRENGTH 50 KSI	
H4	ADHESIVE ANCHOR - NUT	HOT DIP AASHTO M232 CLASS / ASTM A153 CLASS C / ASTM F2329 C OR MECHANICAL GALVANIZE TO AASHTO M298 CLASS 55 TYPE 2 / ASTM B695 CLASS 55 UNC OVER TAP NUTS AS SPECIFIED IN AASHTO 291 / ASTM A 563 HEAVY HEX HEAD ASTM A563DH OR SAE J995 GRADE 5	
J1	ASPHALT ANCHOR PIN - ROD	ASTM A36 MIN. STRENGTH 36 KSI / ASTM A529 MAX. STRENGTH 50 KSI / ASTM A572 MAX STRENGTH 50 KSI / ASTM A709 MAX STRENGTH 50 KSI / ASTM A992 MAX STRENGTH 50 KSI	1 ½" DIA.
J2	ASPHALT ANCHOR PIN - STOP PLATE	ASTM A36 MIN. STRENGTH 36 KSI / ASTM A529 MAX. STRENGTH 50 KSI / ASTM A572 MAX STRENGTH 50 KSI / ASTM A709 MAX STRENGTH 50 KSI / ASTM A992 MAX STRENGTH 50 KSI	
K1	THRIE BEAM RAIL	AASHTO M180 CLASS A TYPE 2 APPROVED PRODUCER	12 GAUGE
L1	THRIE BEAM RAIL - TERMINAL	AASHTO M180 CLASS A TYPE 2 APPROVED PRODUCER	12 GAUGE

PART	DESCRIPTION	MATERIALS SPECIFICATIONS	NOTES
M1	SPLICE BOLT	HOT DIP AASHTO M232 CLASS / ASTM A153 CLASS C / ASTM F2329 C OR MECHANICAL GAL. TO AASHTO M298 CLASS 55 TYPE 2 / ASTM B695 CLASS 55 TYPE 2 UNC AASHTO M180 HEAD ASTM A307 GRADE B OR SAE J429 GRADE 2 OR ASTM F1554 GRADE 36	⅝" DIA.
M2	SPLICE BOLT - NUT	HOT DIP AASHTO M232 CLASS / ASTM A153 CLASS C / ASTM F2329 C OR MECHANICAL GALVANIZE TO AASHTO M298 CLASS 55 TYPE 2 / ASTM B695 CLASS 55 UNC OVER TAP NUTS AS SPECIFIED IN AASHTO 291 / ASTM A 563 AASHTO M180 RECESSED HEAVY HEX HEAD ASTM A563DH OR SAE J995 GRADE 5	
N1	THRIE BEAM RAIL TERMINAL - MECHANICAL ANCHOR	HOT DIP AASHTO M232 CLASS / ASTM A153 CLASS C / ASTM F2329 C OR MECHANICAL GALVANIZE TO AASHTO M298 CLASS 55 TYPE 2 / ASTM B695 CLASS 55 UNC OVER TAP NUTS AS SPECIFIED IN AASHTO 291 / ASTM A 563 AASHTO M180 RECESSED HEAVY HEX HEAD ASTM A563DH OR SAE J995 GRADE 5	¾" DIA. LENGTH 6"
N2	THRIE BEAM RAIL TERMINAL - WASHER	HOT DIP AASHTO M232 CLASS / ASTM A153 CLASS C / ASTM F2329 C OR MECHANICAL GALVANIZE TO AASHTO M298 CLASS 55 TYPE 2 / ASTM B695 CLASS 55 TYPE 2 F436 TYPE 1	
N3	THRIE BEAM RAIL TERMINAL MECHANICAL OR ADHESIVE ANCHOR	MINIMUM MECHANICAL OR ADHESIVE ANCHOR STRENGTH REQUIREMENTS: ULTIMATE TENSILE LOAD 17.9 KIPS AND ULTIMATE SHEAR LOAD 21.96 KIPS. SEE 603.2 AND 603.3.1.2 OF THE WISCONSIN STANDARD SPECIFICATIONS FOR MORE INFORMATION ON ADHESIVE ANCHORS.	
P1	THRIE BEAM RAIL CONNECTION 1-BOLT	HOT DIP AASHTO M232 CLASS / ASTM A153 CLASS C / ASTM F2329 C OR MECHANICAL GALVANIZE TO AASHTO M298 CLASS 55 TYPE 2 / ASTM B695 CLASS 55 UNC OVER TAP NUTS AS SPECIFIED IN AASHTO 291 / ASTM A 563 AASHTO M180 RECESSED HEAVY HEX HEAD ASTM A563DH OR SAE J995 GRADE 5	¾" DIA.
P2	THRIE BEAM RAIL CONNECTION 1-WASHER	HOT DIP AASHTO M232 CLASS / ASTM A153 CLASS C / ASTM F2329 C OR MECHANICAL GAL. TO AASHTO M298 CLASS 55 TYPE 2 / ASTM B695 CLASS 55 TYPE 2 F436 TYPE 1	
P3	THRIE BEAM RAIL CONNETION 1- MECHANICAL OR ADHESIVE ANCHOR	MINIMUM MECHANICAL OR ADHESIVE ANCHOR STRENGTH REQUIREMENTS: ULTIMATE TENSILE LOAD 9.48 KIPS AND ULTIMATE SHEAR LOAD 10.48 KIPS. SEE 603.2 AND 603.3.1.2 OF THE WISCONSIN STANDARD SPECIFICATIONS FOR MORE INFORMATION ON ADHESIVE ANCHORS.	
Q1	BLOCK WOOD	SEE STANDARD SPEC. 614	
R1	CAP - BOLT	HOT DIP AASHTO M232 CLASS / ASTM A153 CLASS C / ASTM F2329 C OR MECHANICAL GALVANIZE TO AASHTO M298 CLASS 55 TYPE 2 / ASTM B695 CLASS 55 UNC OVER TAP NUTS AS SPECIFIED IN AASHTO 291 / ASTM A 563 AASHTO M180 RECESSED HEAVY HEX HEAD ASTM A563DH OR SAE J995 GRADE 5	⅝" DIA.
R2	CAP- BOLT - WASHER	HOT DIP AASHTO M232 CLASS / ASTM A153 CLASS C / ASTM F2329 C OR MECHANICAL GAL. TO AASHTO M298 CLASS 55 TYPE 2 / ASTM B695 CLASS 55 TYPE 2 F436 TYPE 1	
R3	CAP - BOLT - MECHANICAL ANCHOR	MINIMUM MECHANICAL OR ADHESIVE ANCHOR STRENGTH REQUIREMENTS ULTIMATE TENSILE LOAD 12.14 KIPS AND ULTIMATE SHEAR LOAD 17.5 KIPS.SEE 603.2 AND 603.3.1.2 OF THE WISCONSIN STANDARD SPECIFICATIONS FOR MORE INFORMATION ON ADHESIVE ANCHORS.	12 GAUGE
S1	CAP 42-INCH TOP PLATE	AASHTO M111 / ASTM A123 ASTM A36 MIN. STRENGTH 36 KSI, OR ASTM A529 MAX. STRENGTH 50 KSI, OR ASTM A572 MAX. STRENGTH 50 KSI, OR ASTM A709 MAX. STRENGTH 50 KSI, OR ASTM A992 MAX. STRENGTH 50 KSI	12 GAUGE
S2	CAP 42-INCH END PLATE	AASHTO M111 / ASTM A123 ASTM A36 MIN. STRENGTH 36 KSI, OR ASTM A529 MAX. STRENGTH 50 KSI, OR ASTM A572 MAX. STRENGTH 50 KSI, OR ASTM A709 MAX. STRENGTH 50 KSI, OR ASTM A992 MAX. STRENGTH 50 KSI	12 GAUGE
S3	CAP 42-INCH SIDE PLATE	AASHTO M111 / ASTM A123 ASTM A36 MIN. STRENGTH 36 KSI, OR ASTM A529 MAX. STRENGTH 50 KSI, OR ASTM A572 MAX. STRENGTH 50 KSI, OR ASTM A709 MAX. STRENGTH 50 KSI, OR ASTM A992 MAX. STRENGTH 50 KSI	12 GAUGE
S4	CAP 42-INCH GUSSET 1	AASHTO M111 / ASTM A123 ASTM A36 MIN. STRENGTH 36 KSI, OR ASTM A529 MAX. STRENGTH 50 KSI, OR ASTM A572 MAX. STRENGTH 50 KSI, OR ASTM A709 MAX. STRENGTH 50 KSI, OR ASTM A992 MAX. STRENGTH 50 KSI	12 GAUGE
S5	CAP 42-INCH GUSSET 2	AASHTO M111 / ASTM A123 ASTM A36 MIN. STRENGTH 36 KSI, OR ASTM A529 MAX. STRENGTH 50 KSI, OR ASTM A572 MAX. STRENGTH 50 KSI, OR ASTM A709 MAX. STRENGTH 50 KSI, OR ASTM A992 MAX. STRENGTH 50 KSI	12 GAUGE
S6	CAP 42-INCH GUSSET 3	AASHTO M111 / ASTM A123 ASTM A36 MIN. STRENGTH 36 KSI, OR ASTM A529 MAX. STRENGTH 50 KSI, OR ASTM A572 MAX. STRENGTH 50 KSI, OR ASTM A709 MAX. STRENGTH 50 KSI, OR ASTM A992 MAX. STRENGTH 50 KSI	12 GAUGE
S7	CAP 42-INCH GUSSET 4	AASHTO M111 / ASTM A123 ASTM A36 MIN. STRENGTH 36 KSI, OR ASTM A529 MAX. STRENGTH 50 KSI, OR ASTM A572 MAX. STRENGTH 50 KSI, OR ASTM A709 MAX. STRENGTH 50 KSI, OR ASTM A992 MAX. STRENGTH 50 KSI	12 GAUGE

CONCRETE BARRIER TEMPORARY PRECAST, 12' - 6"

STATE OF WISCONSIN
DEPARTMENT OF TRANSPORTAT

6
SDD 14B07-16m

BILL OF MATERIALS - CONCRETE BARRIER PRECAST

PART	DESCRIPTION	MATERIALS SPECIFICATIONS	NOTES
T1	CAP 56-INCH TOP PLATE	AASHTO M111 / ASTM A123 ASTM A36 MIN. STRENGTH 36 KSI, OR ASTM A529 MAX. STRENGTH 50 KSI, OR ASTM A572 MAX. STRENGTH 50 KSI, OR ASTM A709 MAX. STRENGTH 50 KSI, OR ASTM A992 MAX. STRENGTH 50 KSI	12 GAUGE
T2	CAP 56-INCH END PLATE	AASHTO M111 / ASTM A123 ASTM A36 MIN. STRENGTH 36 KSI, OR ASTM A529 MAX. STRENGTH 50 KSI, OR ASTM A572 MAX. STRENGTH 50 KSI, OR ASTM A709 MAX. STRENGTH 50 KSI, OR ASTM A992 MAX. STRENGTH 50 KSI	12 GAUGE
T3	CAP 56-INCH SIDE PLATE 1	AASHTO M111 / ASTM A123 ASTM A36 MIN. STRENGTH 36 KSI, OR ASTM A529 MAX. STRENGTH 50 KSI, OR ASTM A572 MAX. STRENGTH 50 KSI, OR ASTM A709 MAX. STRENGTH 50 KSI, OR ASTM A992 MAX. STRENGTH 50 KSI	12 GAUGE
T4	CAP 56-INCH SIDE PLATE 2	AASHTO M111 / ASTM A123 ASTM A36 MIN. STRENGTH 36 KSI, OR ASTM A529 MAX. STRENGTH 50 KSI, OR ASTM A572 MAX. STRENGTH 50 KSI, OR ASTM A709 MAX. STRENGTH 50 KSI, OR ASTM A992 MAX. STRENGTH 50 KSI	12 GAUGE
T5	CAP 56-INCH GUSSET 1	AASHTO M111 / ASTM A123 ASTM A36 MIN. STRENGTH 36 KSI, OR ASTM A529 MAX. STRENGTH 50 KSI, OR ASTM A572 MAX. STRENGTH 50 KSI, OR ASTM A709 MAX. STRENGTH 50 KSI, OR ASTM A992 MAX. STRENGTH 50 KSI	12 GAUGE
T6	CAP 56-INCH GUSSET 2	AASHTO M111 / ASTM A123 ASTM A36 MIN. STRENGTH 36 KSI, OR ASTM A529 MAX. STRENGTH 50 KSI, OR ASTM A572 MAX. STRENGTH 50 KSI, OR ASTM A709 MAX. STRENGTH 50 KSI, OR ASTM A992 MAX. STRENGTH 50 KSI	12 GAUGE
T7	CAP 56-INCH GUSSET 3	AASHTO M111 / ASTM A123 ASTM A36 MIN. STRENGTH 36 KSI, OR ASTM A529 MAX. STRENGTH 50 KSI, OR ASTM A572 MAX. STRENGTH 50 KSI, OR ASTM A709 MAX. STRENGTH 50 KSI, OR ASTM A992 MAX. STRENGTH 50 KSI	12 GAUGE
T8	CAP 42-INCH GUSSET 4	AASHTO M111 / ASTM A123 ASTM A36 MIN. STRENGTH 36 KSI, OR ASTM A529 MAX. STRENGTH 50 KSI, OR ASTM A572 MAX. STRENGTH 50 KSI, OR ASTM A709 MAX. STRENGTH 50 KSI, OR ASTM A992 MAX. STRENGTH 50 KSI	12 GAUGE
T9	CAP 42-INCH GUSSET 5	AASHTO M111 / ASTM A123 ASTM A36 MIN. STRENGTH 36 KSI, OR ASTM A529 MAX. STRENGTH 50 KSI, OR ASTM A572 MAX. STRENGTH 50 KSI, OR ASTM A709 MAX. STRENGTH 50 KSI, OR ASTM A992 MAX. STRENGTH 50 KSI	12 GAUGE
T10	CAP 42-INCH GUSSET 6	AASHTO M111 / ASTM A123 ASTM A36 MIN. STRENGTH 36 KSI, OR ASTM A529 MAX. STRENGTH 50 KSI, OR ASTM A572 MAX. STRENGTH 50 KSI, OR ASTM A709 MAX. STRENGTH 50 KSI, OR ASTM A992 MAX. STRENGTH 50 KSI	12 GAUGE
T11	CAP 42-INCH GUSSET 7	AASHTO M111 / ASTM A123 ASTM A36 MIN. STRENGTH 36 KSI, OR ASTM A529 MAX. STRENGTH 50 KSI, OR ASTM A572 MAX. STRENGTH 50 KSI, OR ASTM A709 MAX. STRENGTH 50 KSI, OR ASTM A992 MAX. STRENGTH 50 KSI	12 GAUGE
T12	CAP 42-INCH GUSSET 8	AASHTO M111 / ASTM A123 ASTM A36 MIN. STRENGTH 36 KSI, OR ASTM A529 MAX. STRENGTH 50 KSI, OR ASTM A572 MAX. STRENGTH 50 KSI, OR ASTM A709 MAX. STRENGTH 50 KSI, OR ASTM A992 MAX. STRENGTH 50 KSI	12 GAUGE
T13	CAP 42-INCH GUSSET 9	AASHTO M111 / ASTM A123 ASTM A36 MIN. STRENGTH 36 KSI, OR ASTM A529 MAX. STRENGTH 50 KSI, OR ASTM A572 MAX. STRENGTH 50 KSI, OR ASTM A709 MAX. STRENGTH 50 KSI, OR ASTM A992 MAX. STRENGTH 50 KSI	12 GAUGE
T14	CAP 42-INCH GUSSET 10	AASHTO M111 / ASTM A123 ASTM A36 MIN. STRENGTH 36 KSI, OR ASTM A529 MAX. STRENGTH 50 KSI, OR ASTM A572 MAX. STRENGTH 50 KSI, OR ASTM A709 MAX. STRENGTH 50 KSI, OR ASTM A992 MAX. STRENGTH 50 KSI	12 GAUGE
T15	CAP 42-INCH GUSSET 11	AASHTO M111 / ASTM A123 ASTM A36 MIN. STRENGTH 36 KSI, OR ASTM A529 MAX. STRENGTH 50 KSI, OR ASTM A572 MAX. STRENGTH 50 KSI, OR ASTM A709 MAX. STRENGTH 50 KSI, OR ASTM A992 MAX. STRENGTH 50 KSI	12 GAUGE
T16	CAP 42-INCH GUSSET 12	AASHTO M111 / ASTM A123 ASTM A36 MIN. STRENGTH 36 KSI, OR ASTM A529 MAX. STRENGTH 50 KSI, OR ASTM A572 MAX. STRENGTH 50 KSI, OR ASTM A709 MAX. STRENGTH 50 KSI, OR ASTM A992 MAX. STRENGTH 50 KSI	12 GAUGE
U1	GAP STIFFENER	AASHTO M111 / ASTM A123 ASTM A36 MIN. STRENGTH 36 KSI, OR ASTM A529 MAX. STRENGTH 50 KSI, OR ASTM A572 MAX. STRENGTH 50 KSI, OR ASTM A709 MAX. STRENGTH 50 KSI, OR ASTM A992 MAX. STRENGTH 50 KSI	
U2	GAP STIFFENER - CONNECTOR PLATE 1	AASHTO M111 / ASTM A123 ASTM A36 MIN. STRENGTH 36 KSI, OR ASTM A529 MAX. STRENGTH 50 KSI, OR ASTM A572 MAX. STRENGTH 50 KSI, OR ASTM A709 MAX. STRENGTH 50 KSI, OR ASTM A992 MAX. STRENGTH 50 KSI	
U3	GAP STIFFENER - CONNECTOR PLATE 2	AASHTO M111 / ASTM A123 ASTM A36 MIN. STRENGTH 36 KSI, OR ASTM A529 MAX. STRENGTH 50 KSI, OR ASTM A572 MAX. STRENGTH 50 KSI, OR ASTM A709 MAX. STRENGTH 50 KSI, OR ASTM A992 MAX. STRENGTH 50 KSI	

PART	DESCRIPTION	MATERIALS SPECIFICATIONS	NOTES
V1	THRIE BEAM RAIL TERMINAL MECHANICAL OR ADHESIVE ANCHOR	MINIMUM MECHANICAL OR ADHESIVE ANCHOR STRENGTH REQUIREMENTS ULTIMATE TENSILE LOAD 24.0 KIPS AND ULTIMATE SHEAR LOAD 21.5 KIPS. SEE 603.2 AND 603.3.1.2 OF THE WISCONSIN STANDARD SPECIFICATIONS FOR MORE INFORMATION ON ADHESIVE ANCHORS.	¾" DIA.
V2	GAP STIFFENER - BOLT - NUT	HOT DIP AASHTO M232 CLASS / ASTM A153 CLASS C / ASTM F2329 C O R MECHANICAL GALVANIZE TO AASHTO M298 CLASS 50 TYPE 1 / ASTM B695 CLASS 50 TYPE 1 UNC OVER TAP NUTS AS SPECIFIED IN AASHTO 291/ASTM A 563 HEAVY HEX HEAD ASTM A563DH OR SAE J995 GRADE 5	
W1	TOE PLATE	AASHTO M111/ASTM A123 ASTM A36 MIN STRENGTH 36 KSI, OR ASTM A529 MAX. STRENGTH 50 KSI, OR ASTM A572 MAX. STRENGTH 50 KSI, OR ASTM A709 MAX. STRENGTH 50 KSI, OR ASTM A992 MAX. STRENGTH 50 KSI	
X1	TOE PLATE - CONNECTION BOLT	HOT DIP AASHTO M232 CLASS / ASTM A153 CLASS C / ASTM F2329 C OR MECHANICAL GALVANIZE TO AASHTO M298 CLASS 55 TYPE 2 / ASTM B695 CLASS 55 TYPE 2 UNC HEAVY HEX HEAD OR AASTHO M180 HEAD, ASTM F3125 GRADE A325 TYPE 1 HEAVY HEX HEAD OR SAE J429 GRADE 5 HEAVY HEX HEAD / ASTM A449 TYPE 1 HEAVY HEX HEAD. BOLTS MAY BE FULLY THREADED. PROVIDE ENOUGH THREADING FOR PROPER TIGHTENING OF BOLT.	¾" DIA.
X2	TOE PLATE - CONNECTION BOLT - WASHER	HOT DIP AASHTO M232 CLASS / ASTM A153 CLASS C / ASTM F2329 C OR MECHANICAL GALVANIZE TO AASHTO M298 CLASS 55 TYPE 2 / ASTM B695 CLASS 55 TYPE 2 F436 TYPE 1 (HARDEN WASHER ONLY)	
X3	TOE PLATE - CONNECTION BOLT - NUT	HOT DIP AASHTO M232 CLASS / ASTM A153 CLASS C / ASTM F2329 C OR MECHANICAL GALVANIZE TO AASHTO M298 CLASS 55 TYPE 2 / ASTM B695 CLASS 55 UNC OVER TAP NUTS AS SPECIFIED IN AASHTO 291 / ASTM A 563 HEAVY HEX HEAD ASTM A563DH OR SAE J995 GRADE 5	

CONCRETE BARRIER TEMPORARY PRECAST, 12' - 6"

STATE OF WISCONSIN
DEPARTMENT OF TRANSPORTATION

APPROVED
February 2023 — DATE
/S/ Rodney Taylor — ROADWAY STANDARDS DEVE ENGINEER
FHWA

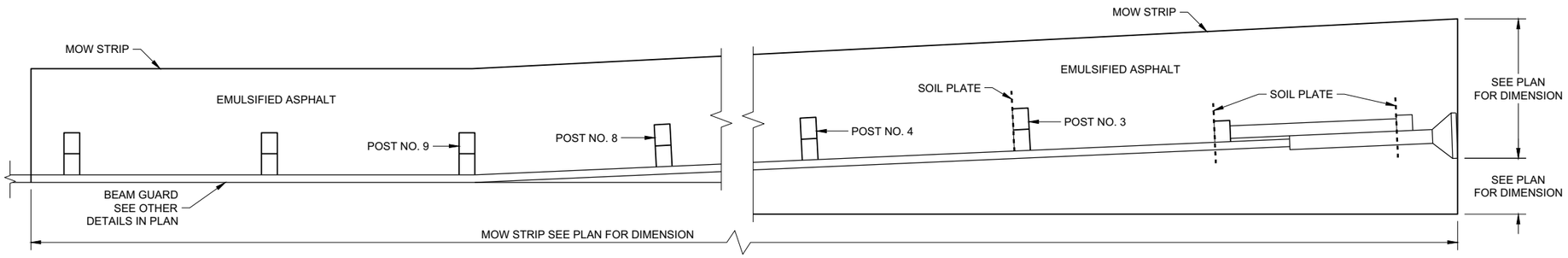

PLAN VIEW

MOW STRIP LAYOUT FOR ENERGY ABSORBING TERMINAL

GENERAL NOTES

ONLY USE STEEL POSTS IN CONCRETE AND ASPHALT MOW STRIPS.

1. CONTROLLED LOW-STRENGTH BACKFILL OR EMULSIFIED ASPHALT.
2. DEPTH OF MOW STRIP:
   ASPHALT - 4"
   CONCRETE - 4"
   EMULSIFIED ASPHALT - 1" OR LESS
3. FOR EMULSIFIED ASPHALT, MOW STRIP STRIP LEAVE OUTS NOT REQUIRED. (TYPICAL FOR ALL POSTS)

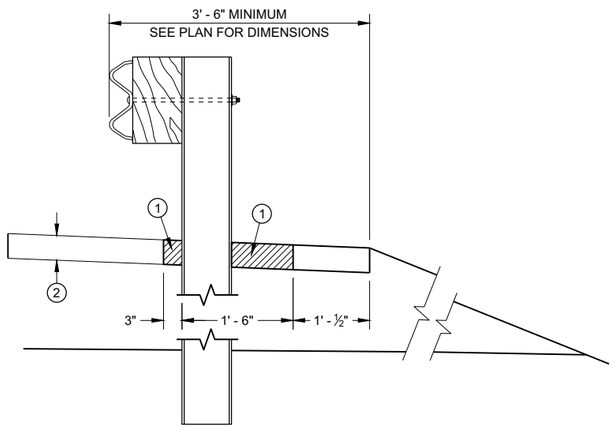

SECTION A - A

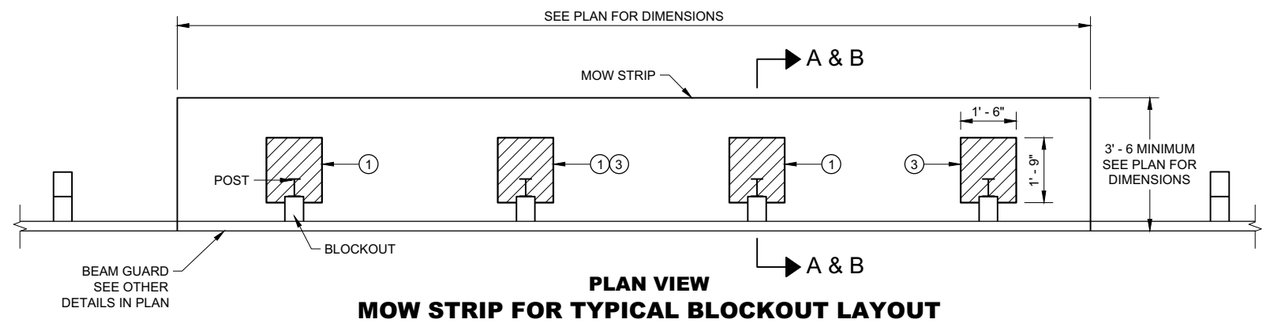

PLAN VIEW

MOW STRIP FOR TYPICAL BLOCKOUT LAYOUT

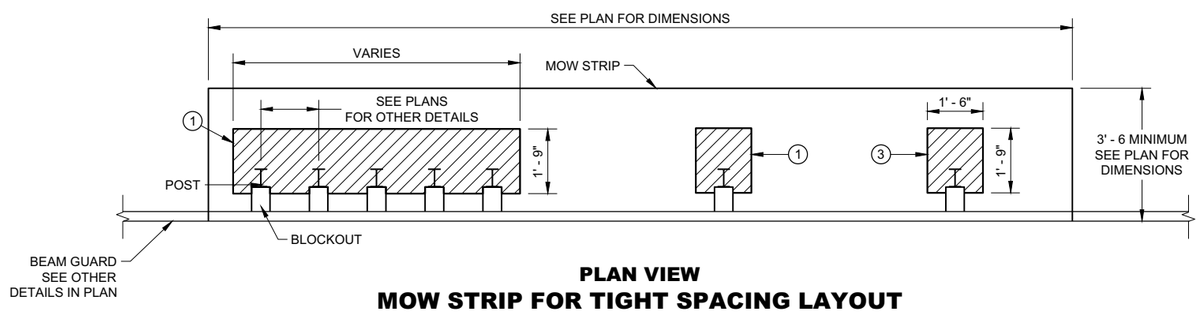

PLAN VIEW

MOW STRIP FOR TIGHT SPACING LAYOUT

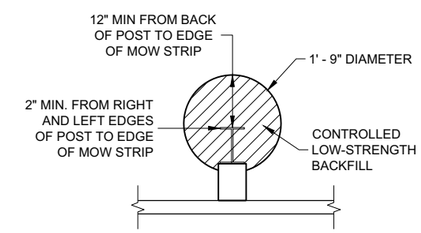

ALTERNATIVE HMA MOW STRIP DESIGN

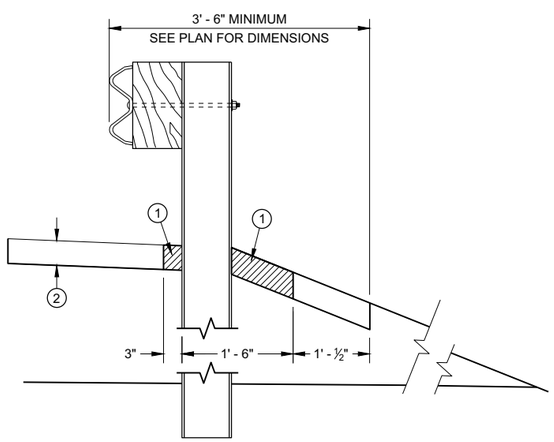

SECTION B - B

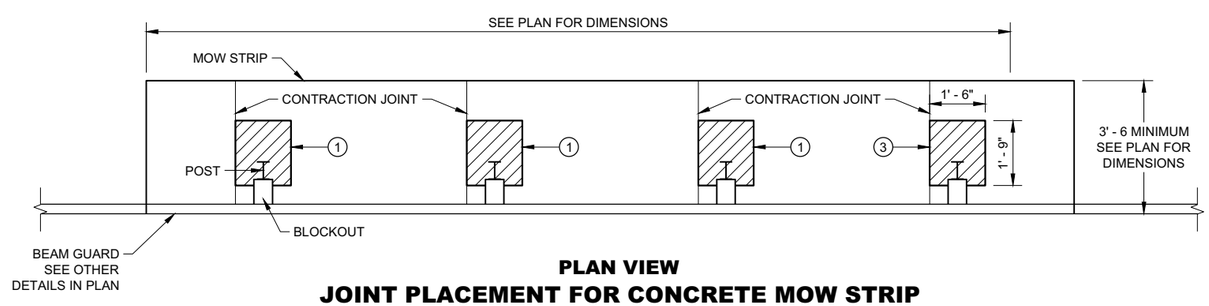

PLAN VIEW

JOINT PLACEMENT FOR CONCRETE MOW STRIP

GUARDRAIL MOW STRIP

STATE OF WISCONSIN
DEPARTMENT OF TRANSPORTA

6

SDD 14B28 - 04a

LEGEND

CONCRETE, ASPHALT, OR EMULSIFIED ASPHALT MOW STRIP (SEE OTHER DETAILS)

EMULSIFIED ASPHALT MOW STRIP (SEE OTHER DETAILS)

GENERAL NOTES

EXISTING THRIE BEAM BULLNOSES MAY HAVE WOOD POSTS. NEW THRIE BEAM BULLNOSE WILL HAVE STEEL POSTS.

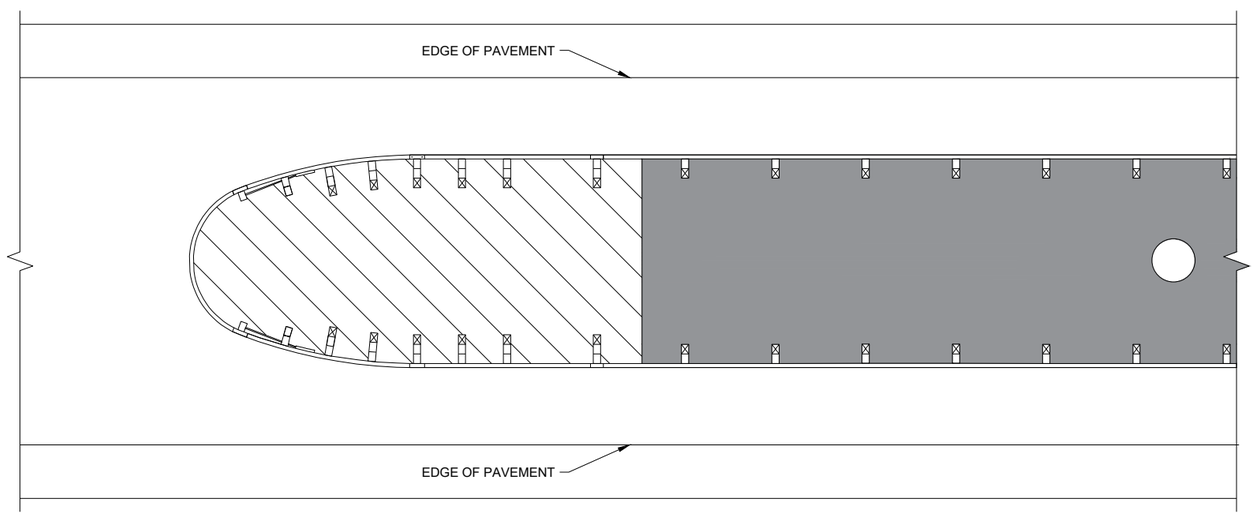

THRIE BEAM BULLNOSE

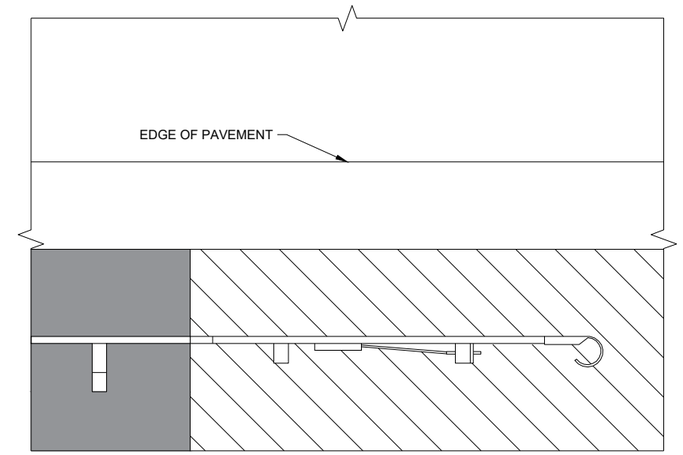

TYPE 2 TERMINAL

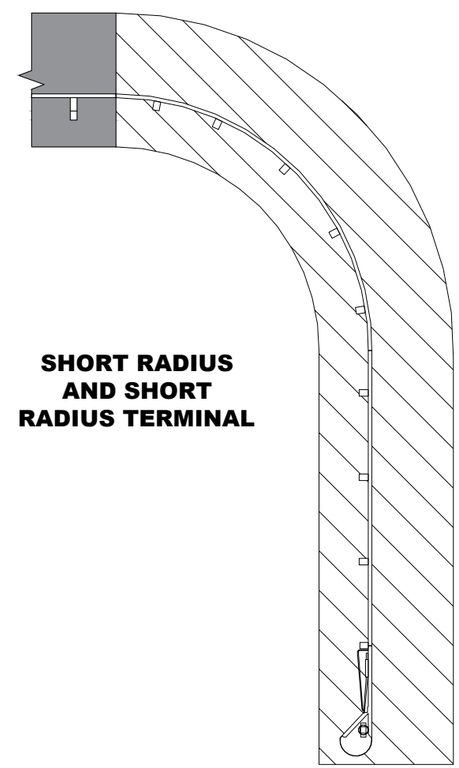

SHORT RADIUS AND SHORT RADIUS TERMINAL

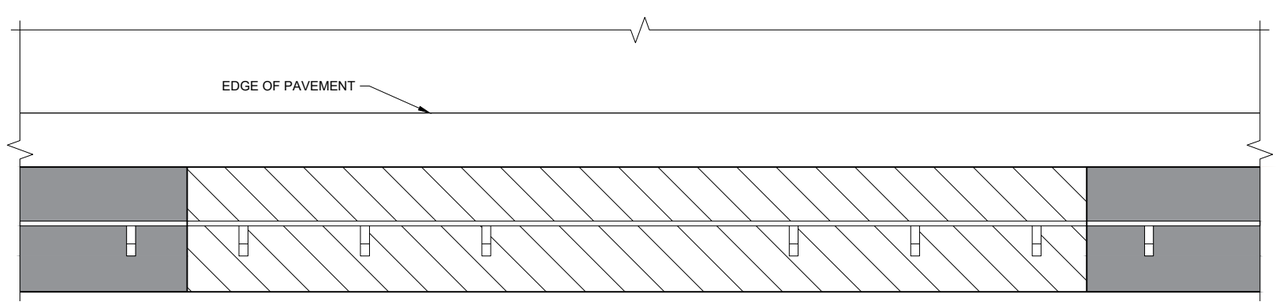

LONG - SPAN

6

6

SDD 14B28 - 04b

SDD 14B28 - 04b

GUARDRAIL MOW STRIP

STATE OF WISCONSIN
DEPARTMENT OF TRANSPORTATION

APPROVED
August 2020 — DATE
/S/ Rodney Taylor — ROADWAY STANDARDS DEVE ENGINEER
FHWA

1. WOOD OR STEEL POSTS (w6X9 OR w6X8.5) MAY BE USED. DO NOT INTERMIX WOOD AND STEEL POSTS. INSTALL STEEL POSTS WITH HOLES ON APPROACHING TRAFFIC SIDE.
2. USE WOOD OR APPROVED PLASTIC BLOCKOUTS. WOOD BLOCKOUTS MAY BE CONSTRUCTED OUT OF TWO OR MORE WOOD BLOCKOUTS. SEE ALTERNATE WOOD BLOCKOUT DETAIL. DIMENSIONS OF APPROVED PLASTIC BLOCKOUTS MAY VARY.
3. IF ROCK IS ENCOUNTERED DURING EXCAVATION, PROVIDE A HOLE 12 INCHES IN DIAMETER EXTENDING 20 INCHES DEEP INTO THE ROCK. PLACE APPROXIMATELY 2 1/2" INCHES OF GRANULAR MATERIAL IN THE BOTTOM OF THE HOLE. CUT THE POSTS THE TO LENGTH AMD INSTALL. BACKFILL WITH EXCAVATED MATERIAL AND COMPACT. BACKFILL IS TO BE FREE OF LARGE ROCKS.
4. WHEN THE DISTANCE FROM BACK OF POST TO SHOULDER HINGE POINT IS LESS THAN 2 FEET INSTALL LONGER POST AT HALF POST SPACING (K).
5. FOR NEW MGS INSTALLATION TOP OF W-BEAM RAIL TOLERANCE IS ±1". FOR EXISTING MGS INSTALLATION TOP OF W-BEAM IS BETWEEN 27 ¾" TO 32".
6. WHEN USING STEEL POST AND WOOD BLOCKOUTS INSTALL FOUR 16D GALVANIZED NAILS. INSTALL NAILS AT THE BACK CORNERS OF THE BLOCK AND BEND THE NAILS OVER THE FLANGE OF THE STEEL POST.
7. TOTAL POST LENGTH FOR TYPE K IS 7' - 0". TOTAL POST LENGTH FOR OTHER MGS TYPES IS 6' - 0".

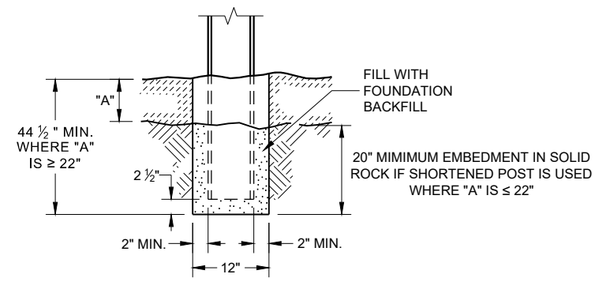

END VIEW
SETTING STEEL OR WOOD POST IN ROCK (3)

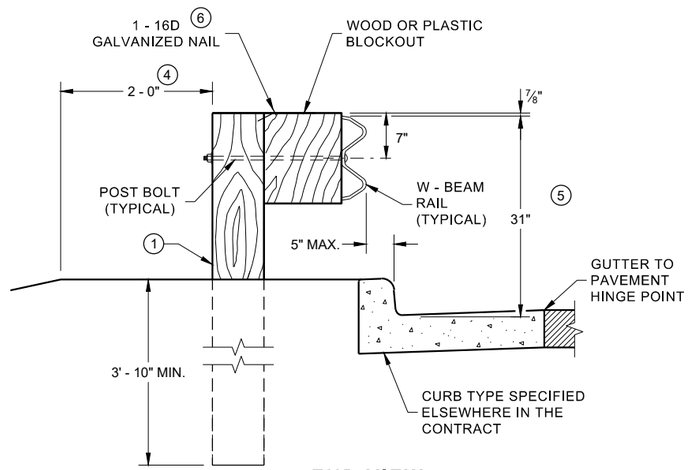

END VIEW
LOCATED ALONG A CURBED ROADWAY

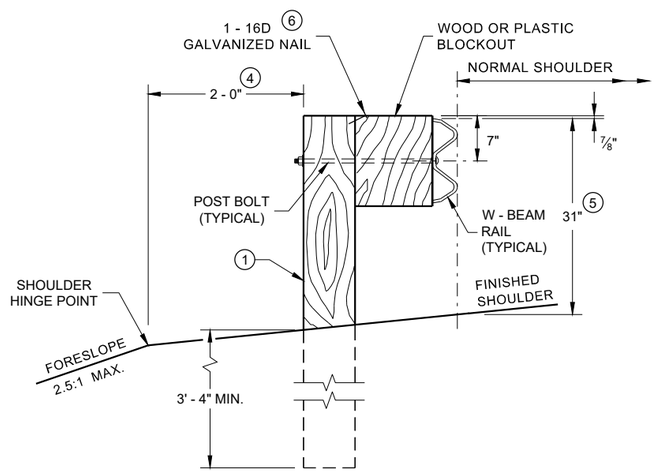

END VIEW
LOCATED ALONG A ROADWAY SHOULDER STANDARD INSTALLATION

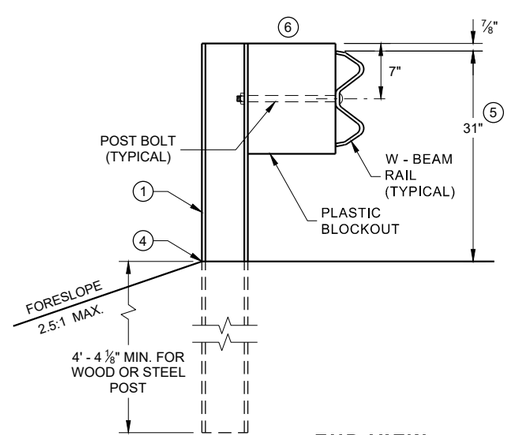

END VIEW
MGS LONGER POST AT HALFPOST SPACING W BEAM (K)

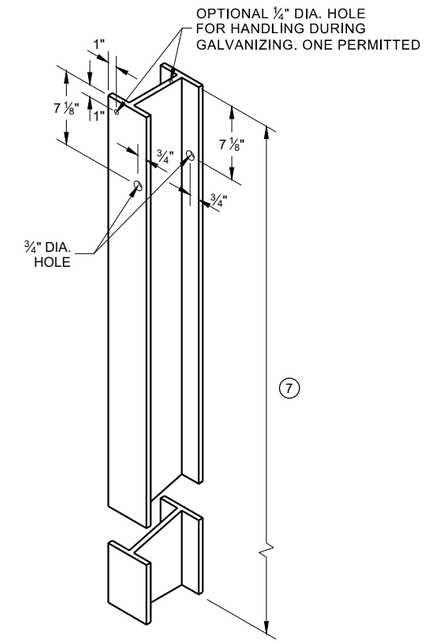

STEEL POST & HOLE PUNCHING DETAIL (W 6 X 9) (1)

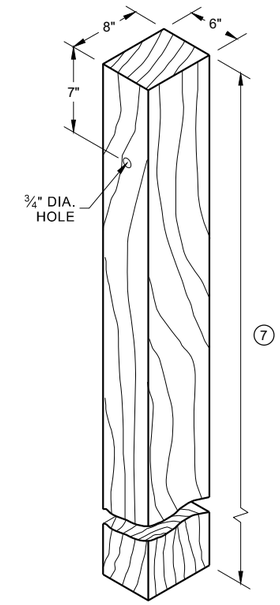

WOOD POST (6" X 8") NOMINAL (1)

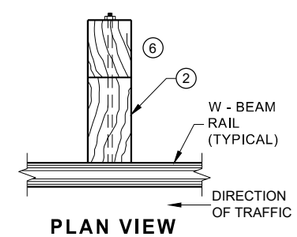

PLAN VIEW WOOD POST, BLOCKOUT & BEAM

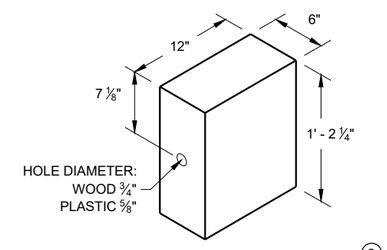

WOOD OR PLASTIC BLOCKOUT (2)

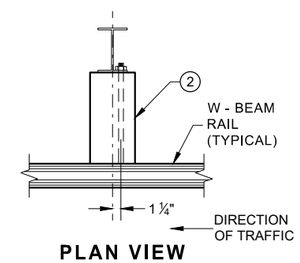

PLAN VIEW STEEL POST, PLASTIC BLOCKOUT & BEAM

MIDWEST GUARDRAIL SYSTEM (MGS) GUARDRAIL

STATE OF WISCONSIN
DEPARTMENT OF TRANSPORTA

6

SDD 14B42 - 07a

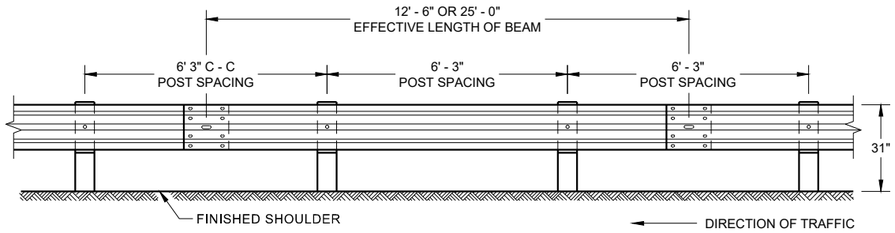

FRONT VIEW
POST SPACING STANDARD INSTALLATION

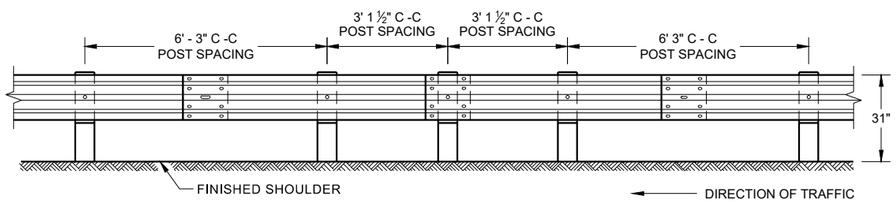

FRONT VIEW
HALF POST SPACING (HS) AND HALF POST SPACING WITH LONGER POSTS (K)

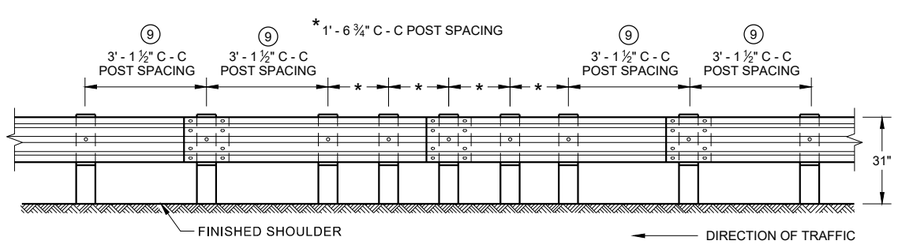

FRONT VIEW
QUARTER POST SPACING (QS)

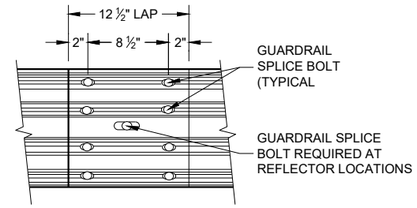

FRONT VIEW
MID-SPAN BEAM SPLICE

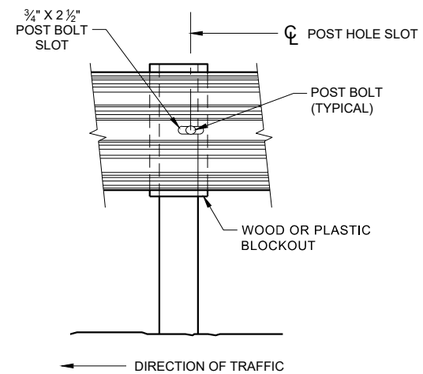

FRONT VIEW AT STEEL POST

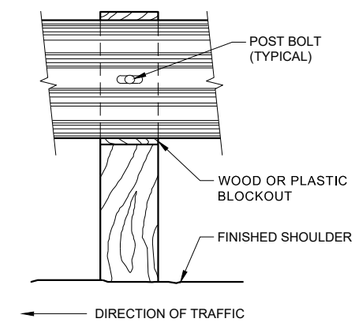

FRONT VIEW AT WOOD POST

GENERAL NOTES

8. DO NOT INSTALL REFLECTORS ON THE FIRST 50 FEET OF THE APPROACH END OF THE ENERGY ABSORBING TERMINAL.

9. 25 FEET OF HALF POST SPACING IS REQUIRED ON APPROACH AND DEPARTURE ENDS OF QUARTER POST SPACING.

POST BOLTS ARE A ⅝" DIAMETER ASTM A307 GUARDRAIL BOLT. A POST BOLT REQUIRES ⅝" DIAMETER A563A DOUBLE RECESSED (DR) HEAVY HEX NUT AND ⅝" DIAMETER F844 FLAT WASHER. POST BOLTS MAY BE LONGER IF MULTIPLE BLOCKOUTS ARE BEING USED.

GUARD RAIL SPLICE BOLTS ARE A ⅝" DIAMETER ASTM A307 GUARDRAIL HEAD BOLT. A GUARDRAIL SPLICE BOLT REQUIRES ⅝" DIAMETER A563A DOUBLE RECESSED (DR) HEAVY HEX NUT.

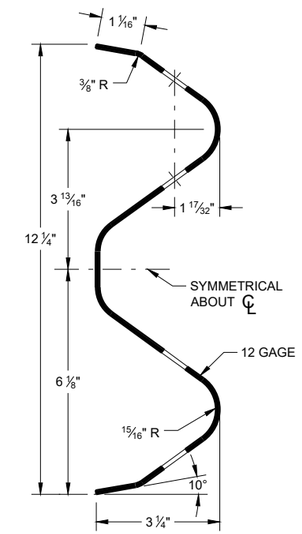

SECTION THRU W-BEAM RAIL

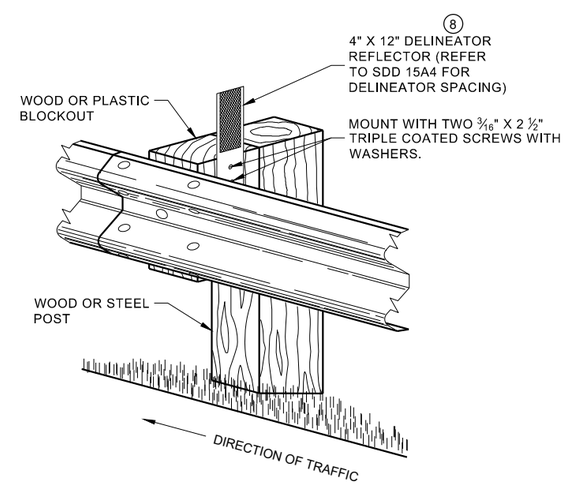

ONE SIDED REFLECTOR DETAIL AND TYPICAL INSTALLATION

MIDWEST GUARDRAIL SYSTEM (MGS) GUARDRAIL

STATE OF WISCONSIN
DEPARTMENT OF TRANSPORTAT

6

SDD 14B42 - 07b

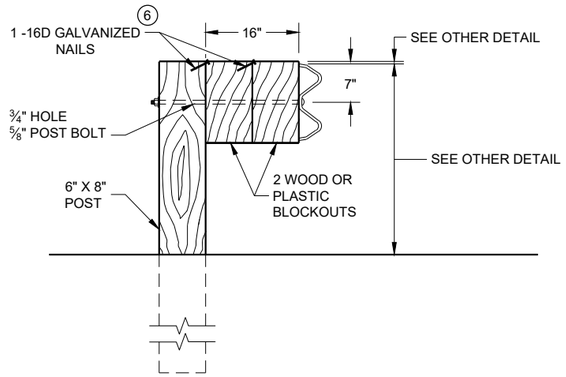

DETAIL FOR 16" BLOCKOUT DEPTH

IT IS ACCEPTABLE TO USE BLOCKOUTS UP TO 16" DEEP TO INCREASE THE POST OFFSET TO AVOID UNDERGROUND OBSTACLES. THERE IS NO LIMIT TO THE NUMBER OF POSTS THAT CAN HAVE ADDITIONAL BLOCKOUTS UP TO 16" DEEP.

NOTE:

1. ALL FILLETS SHALL HAVE A MINIMUM RADIUS OF 3/16".
2. IF THE BOLT EXTENDS MORE THAN ¼" FROM THE NUT THE BOLT SHOULD BE TRIMMED BACK.

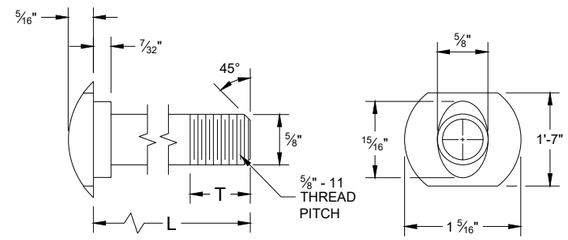

POST BOLT TABLE

L	T (MIN.)
1 ¼"	1 ⅛"
2"	1 ¾"
10"	4"
14"	4 1/16"
18"	4"
21"	4 1/16"
25"	4"

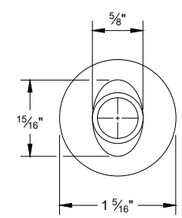

ALTERNATE BOLT HEAD

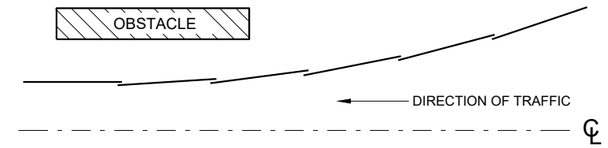

PLAN VIEW
BEAM LAPPING DETAIL

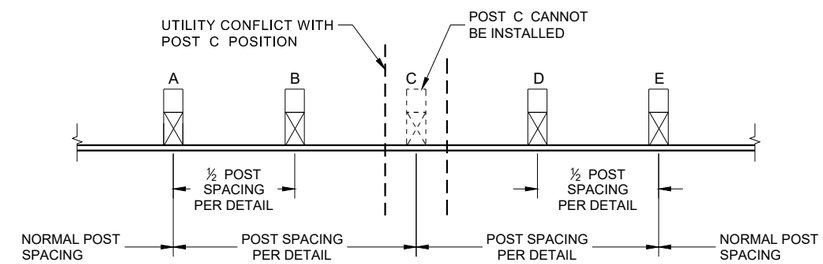

POST DRIVING FOR CONTINUOUS UNDERGROUND OBSTRUCTION

6

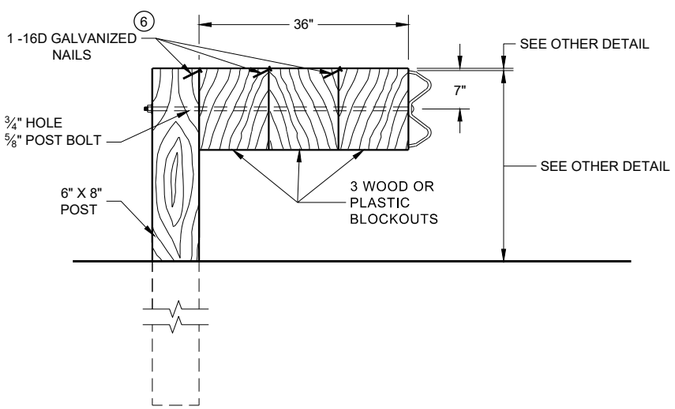

DETAIL FOR 36" BLOCKOUT DEPTH

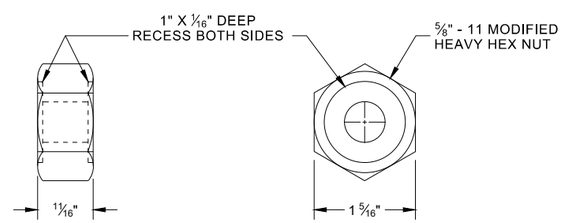

POST BOLT, SPLICE BOLT AND RECESS NUT

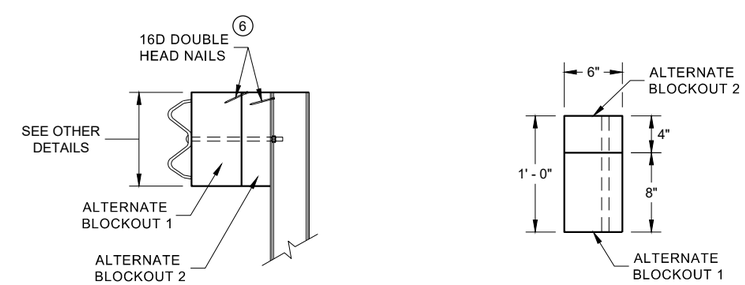

SIDE VIEW

PLAN VIEW

ALTERNATE WOOD BLOCKOUT DETAIL

NOTES: UNDER SPECIAL CIRCUMSTANCES, SUCH AS AVOIDING OBSTACLES THAT ARE NOT RELOCATED, IT IS ACCEPTABLE TO INSTALL ADDITIONAL BLOCKOUTS TO OBTAIN UP TO 36" DEPTH FOR ONE OR TWO POSTS IN A SECTION OF GUARDRAIL.

DO NOT USE 16" OR 36" BLOCKOUTS IF IT CAUSES THE POST TO BE DRIVEN BEYOND SHOULDER HINGE POINT OR CAUSES A FIXED OBJECT TO BE WITHIN THE DEFLECTION DISTANCE OF THE BARRIER.

(6) WHEN USING STEEL POST AD WOOD BLOCKOUTS, INSTALL FOUR 16D GALVANIZED NAILS. INSTALL NAILS AT THE BACK CORNERS OF THE BLOCK AND BEND THE NAILS OVER THE FLANGE OF THE STEEL POST.

MIDWEST GUARDRAIL SYSTEM (MGS) GUARDRAIL

STATE OF WISCONSIN
DEPARTMENT OF TRANSPORTA

SDD 14B42 - 07c

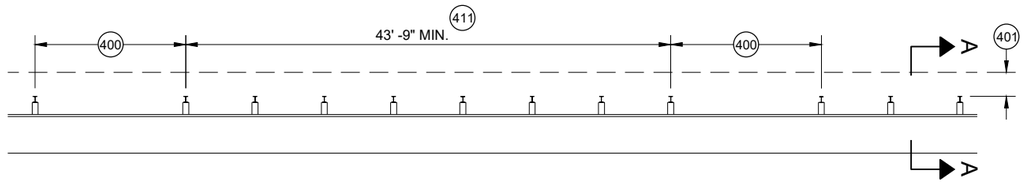

MISSING POST IN MGS GUARDRAIL

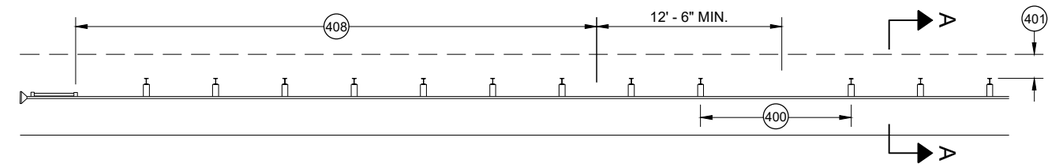

MISSING POST IN MGS GUARDRAIL NEAR EAT

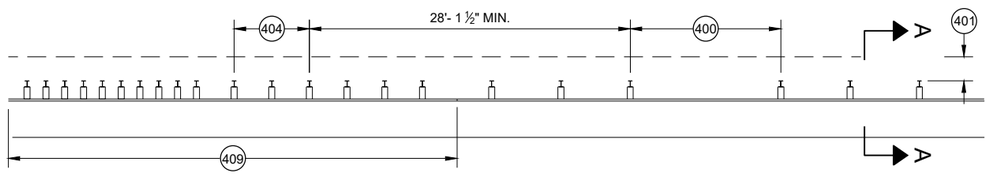

MISSING POST IN MGS GUARDRAIL NEAR AN APPROACH TRANSITION

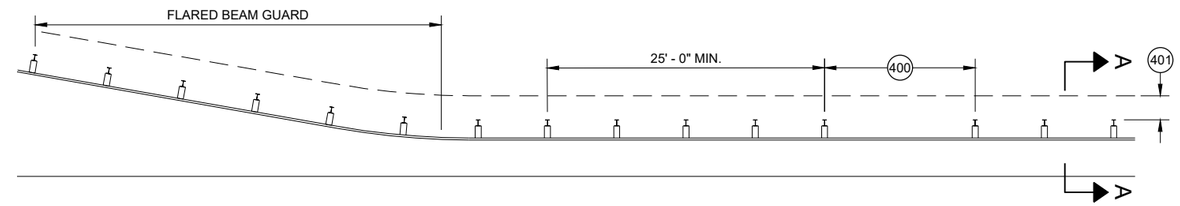

MISSING POST IN MGS GUARDRAIL NEAR FLARED BEAM GUARD

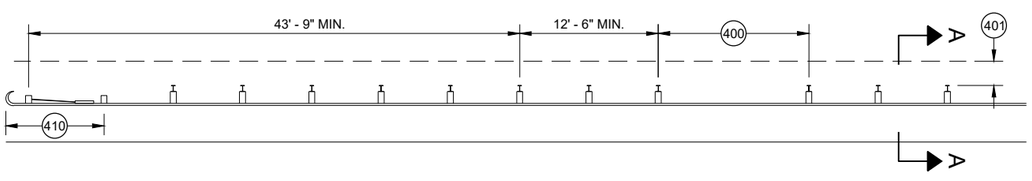

MISSING POST IN MGS GUARDRAIL NEAR A TYPE 2 END TERMINAL

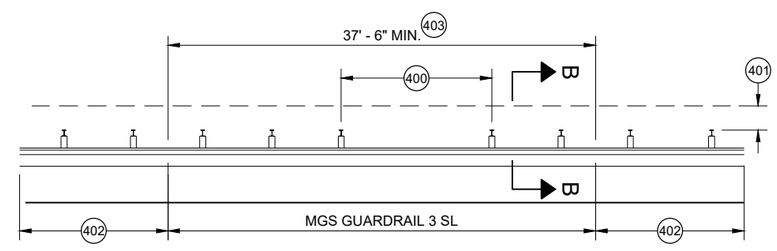

MISSING POST IN SHORT SPAN MGS GUARDRAIL NEAR CURB (SL) 407

400 MAX SPAN 12' - 6"
401 2' MIN.
402 MGS GUARDRAIL 3
403 NESTING BEAM GUARD
404 ASYMMETRIC TRANSITION
405 SOIL WELL DRAINED AND COMPACTED
406 SEE OTHER DRAWINGS IN THIS SDD
407 SEE OTHER DRAWINGS FOR MIN. SPACING BETWEEN SPANS
408 SEE SDD 14B44
409 SEE SDD 14B45
410 SEE SDD 14B47
411 MINIMUM DISTANCE BETWEEN MISSING POST SPANS.

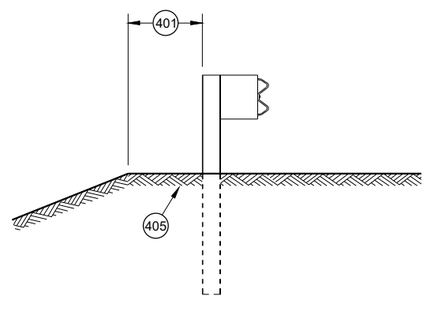

SECTION A - A 406

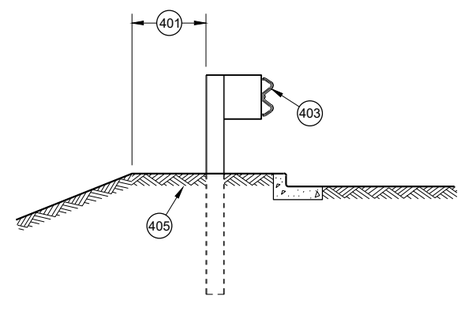

SECTION B - B 406

MIDWEST GUARDRAIL SYSTEM (MGS) GUARDRAIL

STATE OF WISCONSIN
DEPARTMENT OF TRANSPORTATION

APPROVED
May 2021 — DATE
/S/ Rodney Taylor — ROADWAY STANDARDS DEVE UNIT SUPERVISOR
FHWA

6

SDD 14B42 - 07d

GENERAL NOTES

(A) THE SLOPE IN THE AREA BOUNDED BY THE GRADELINE, THE HINGE POINT LINE (HPL) AND THE CLEAR ZONE LIMITS (CZL) SHALL BE 4:1 OR FLATTER.

(B) AFTER FINAL ASSEMBLY, RECHECK CABLE TO BE SURE IT IS TAUT AND HAS NOT RELAXED

(C) DIFFERENT MANUFACTURERS REQUIRE DIFFERENT PERFORATED W - BEAM RAIL END PANELS. SEE MANUFACTURER'S INFORMATION.

(D) ATTACH ALUMINUM SHEET TO E.A.T. HEAD USING 4 STAINLESS STEEL SELF - TAPPING SCREWS. ONE SCREW PER CORNER.

(E) HARDWARE MAY VARY BETWEEN MANUFACTURER. SEE MANUFACTURER'S DRAWING FOR INFORMATION.

DIMENSIONS MAY VARY, MANUFACTURER'S INFORMATION.

SEE SDD 14B42 FOR MORE INFORMATION.

* DO NOT ATTACH BLOCKOUTS TO POST 1 AND 2.

DO NOT INSTALL REFLECTORS ON THE FIRST 50 FEET OF THE APPROACH END OF THE ENERGY ABSORBING TERMINAL.

SEE MANUFACTURER'S DRAWING FOR SPLICE LOCATION, HARDWARE DIMENSIONS AND INSTALLATION INSTRUCTIONS.

THE CENTER OF THE UPPER 3 ½" DIAMETER HOLE ON POST NUMBER 3 THROUGH POST 9 IS TO BE FLUSH WITH THE GROUND LINE UP TO A MAXIMUM OF 2" ABOVE GROUND LINE. WOOD BLOCKS ON POSTS NUMBERED 3 THROUGH 9 MAY BE ADJUSTED UP TO 3" ABOVE THE TOP OF POST.

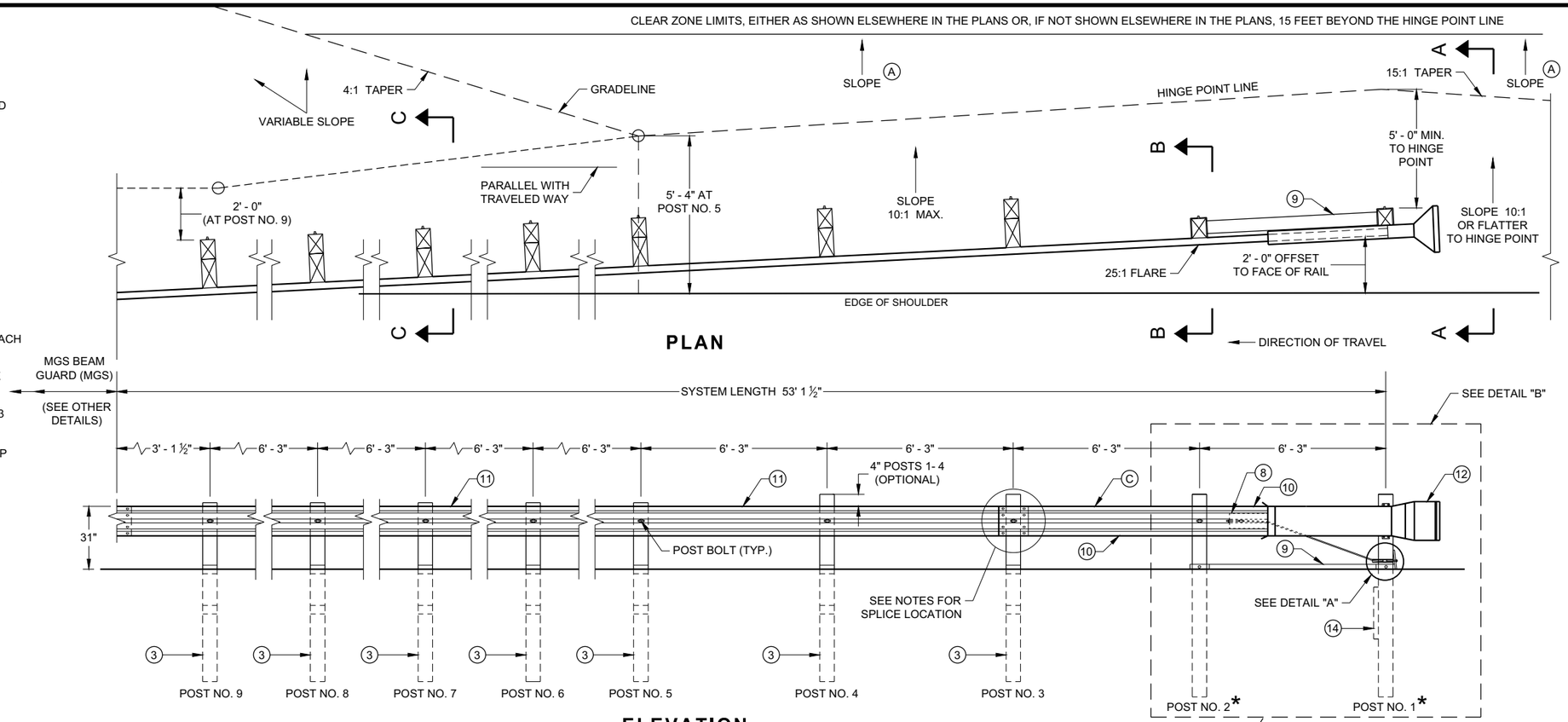

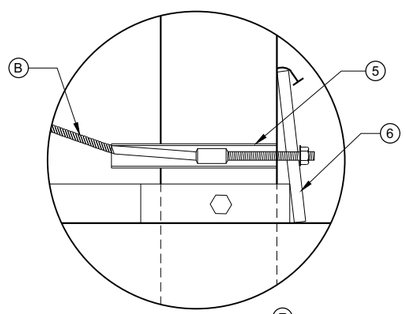

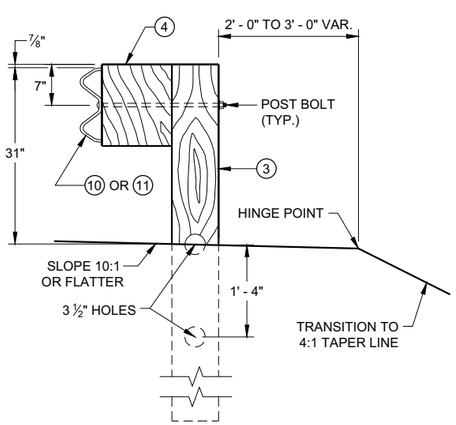

SECTION C - C
TYPICAL AT POST NOS. 3 - 9

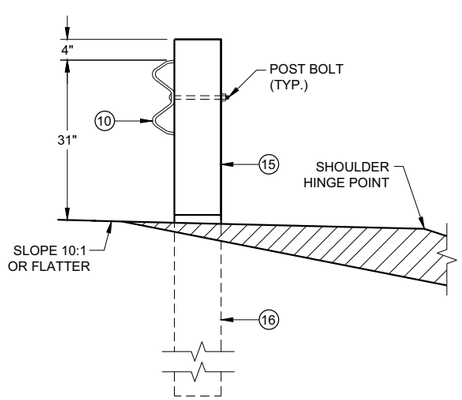

SECTION B - B
TYPICAL AT POST NO. 2*

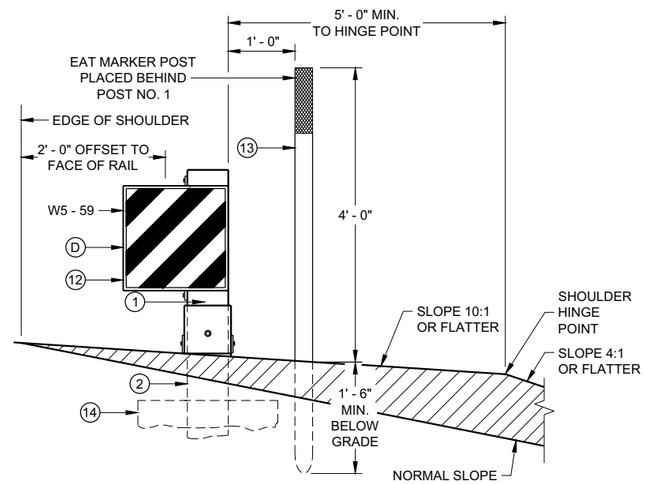

SECTION A - A
TYPICAL AT POST NO. 1*

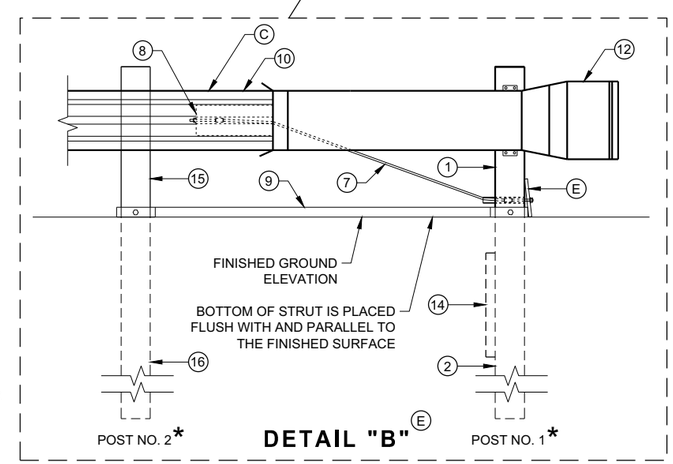

MIDWEST GUARDRAIL SYSTEM ENERGY ABSORBING TERMINAL (MGS)

STATE OF WISCONSIN
DEPARTMENT OF TRANSPORTATION

6

6

SDD 14B44 - 04a

SDD 14B44 - 04a

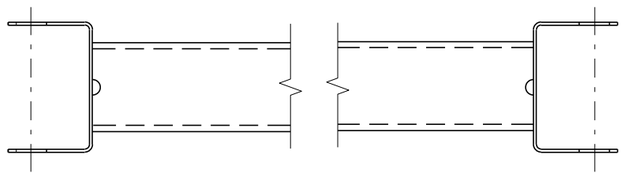

GENERIC GROUND STRUT (9)(E)

BILL OF MATERIALS

PART NO.	DESCRIPTION MATERIALS PROVIDED BY MGS EAT MANUFACTURER. SEE MANUGACTURER'S DETAILS FOR MORE INFORMATION.
1	UPPER POST NO. 1 6" X 6" TUBE
2	LOWER POST NO. 1
3	WOOD CRT
4	WOOD BLOCKOUT
5	PIPE SLEEVE
6	BEARING PLATE
7	BCT CABLE ASSEMBLY
8	ANCHOR CABLE BOX
9	GROUND STRUT
10	PERFORATED W-BEAM RAIL END PANEL, 12'-6" LONG.
11	STANDARD W-BEAM RAIL. MULTIPLE SECTIONS REQUIRED. SECTIONS VARY IN LENGTH.
12	IMPACT HEAD
13	EAT MARKER POST - YELLOW (SEE APPROVED PRODUCTS LIST)
14	SOIL PLATE
15	UPPER POST NO. 2
16	LOWER POST NO. 2

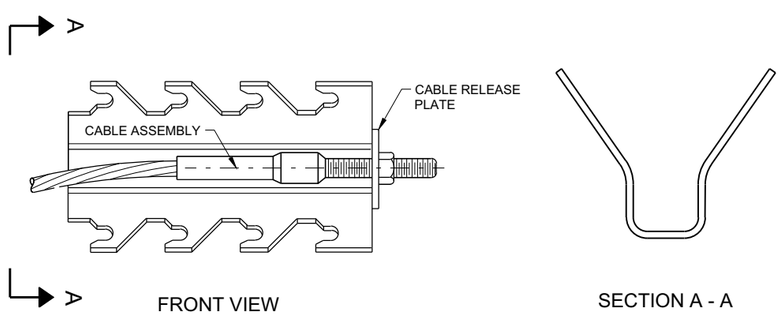

GENERIC ANCHOR CABLE BOX (9)(E)

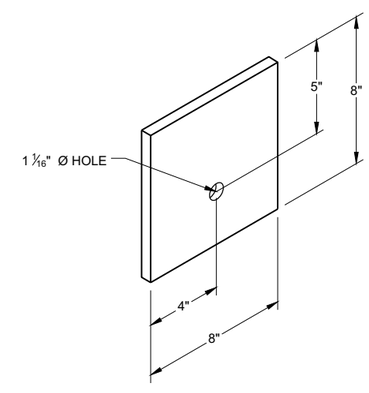

BEARING PLATE (6)(E)

6

6

SDD 14B44 - 04b

SDD 14B44 - 04b

MIDWEST GUARDRAIL SYSTEM ENERGY ABSORBING TERMINAL (MGS)

STATE OF WISCONSIN
DEPARTMENT OF TRANSPORTAT

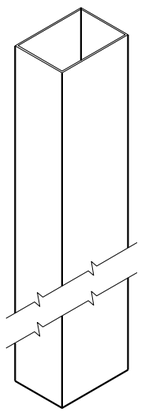

UPPER POST NO. 1 (1) (E)

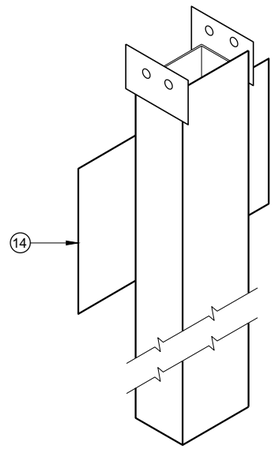

LOWER POST NO. 1 (2) (E)

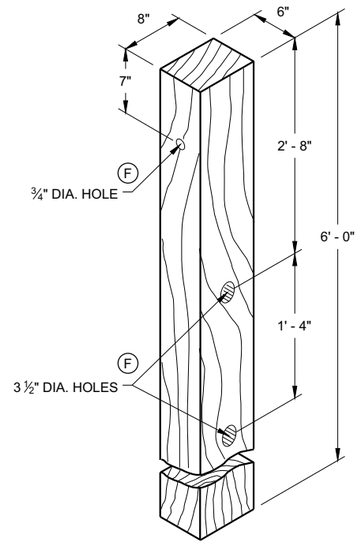

WOOD CRT POST (3) (E)
POSTS NUMBER 3-9

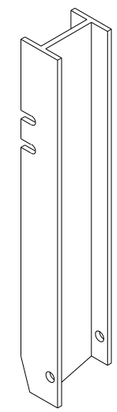

UPPER POST NO. 2 (15) (E)

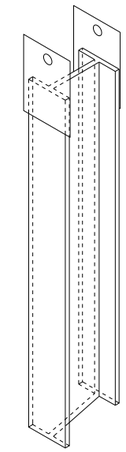

LOWER POST NO. 2 (16) (E)

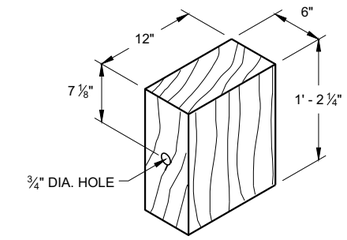

WOOD BLOCKOUT (4)
REQ'D. AT ALL POSTS EXCEPT POST NO'S 1 & 2

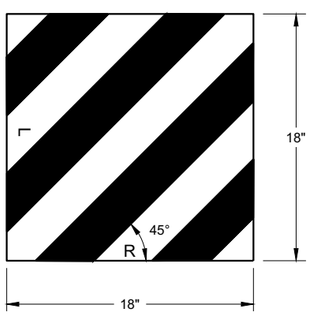

W5 - 59

REFLECTIVE SHEETING DETAIL (E)

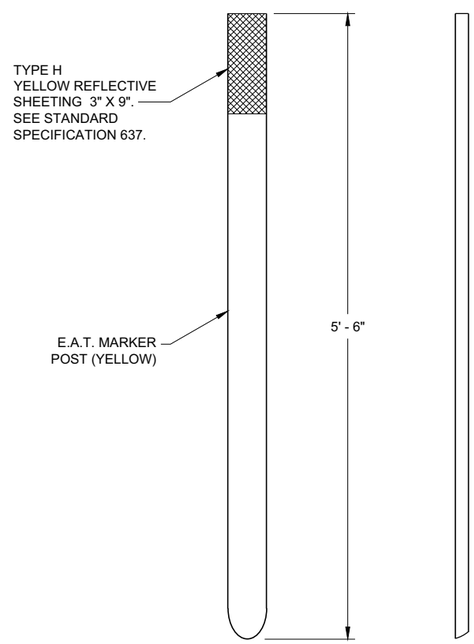

FRONT VIEW SIDE VIEW

E.A.T. MARKER POST (13)

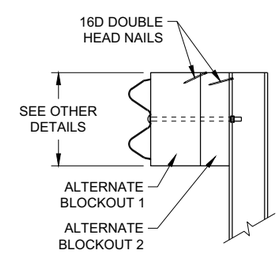

SIDE VIEW

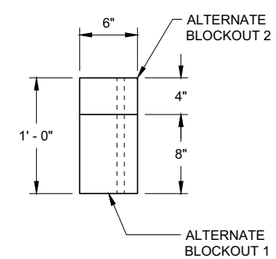

TOP VIEW

ALTERNATE WOOD BLOCKOUT DETAIL

MIDWEST GUARDRAIL SYSTEM ENERGY ABSORBING TERMINAL (MGS)

STATE OF WISCONSIN
DEPARTMENT OF TRANSPORTATION

APPROVED
7/2018 — DATE
/S/ Rodney Taylor — ROADWAY STANDARDS DEVE UNIT SUPERVISOR
FHWA

6
SDD 14B44 - 04c

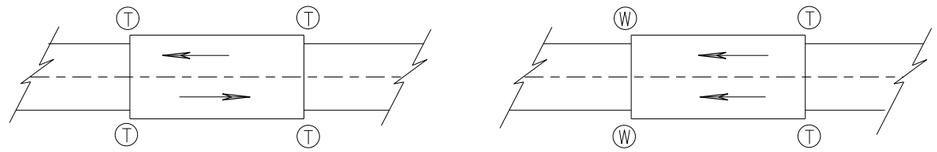

TWO WAY TRAFFIC **ONE WAY TRAFFIC**

(T) THRIE BEAM CONNECTION

(W) W-BEAM CONNECTION WHEN REQUIRED

TYPICAL LOCATIONS OF THRIE BEAM AND W-BEAM CONNECTIONS TO BRIDGE

GENERAL NOTES

IF ROCK IS ENCOUNTERED, REMOVE ROCK TO FULL DEPTH OF POST PLUS 2½", AND 12" DIAMETER AROUND POST. SEE 14B42 FOR MORE DETAILS.

TRANSITION USES STEEL POSTS ONLY.

SEE STANDARD DETAIL DRAWING 14 B 42 FOR MORE INFORMATION.

POST 2 THROUGH 17 USES STEEL POST ONLY

(1) BRIDGE RAILING TYPE "W" DOES NOT REQUIRE A TERMINAL CONNECTOR.

(2) OPTIONAL CURB AND GUTTER OR DRAINAGE FEATURE SEE PLAN FOR INFORMATION.

(13) STEEL OR WOOD POST IS ACCEPTABLE AT POST 1. SEE SDD14B42

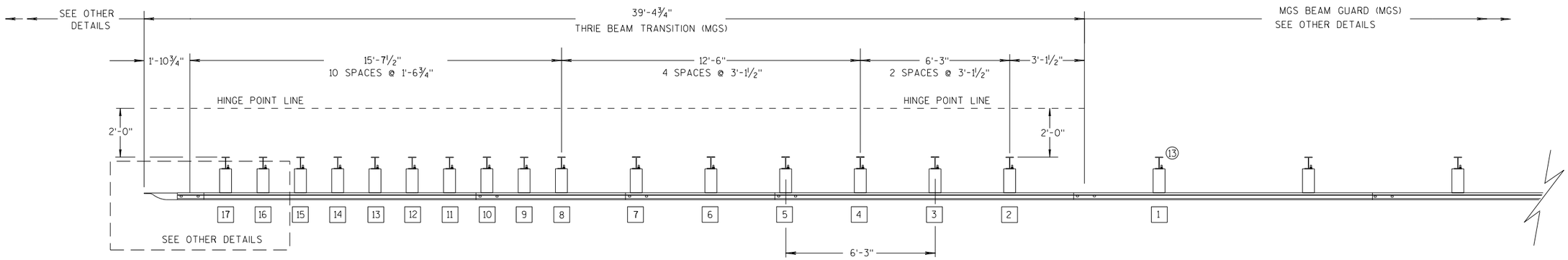

PLAN VIEW

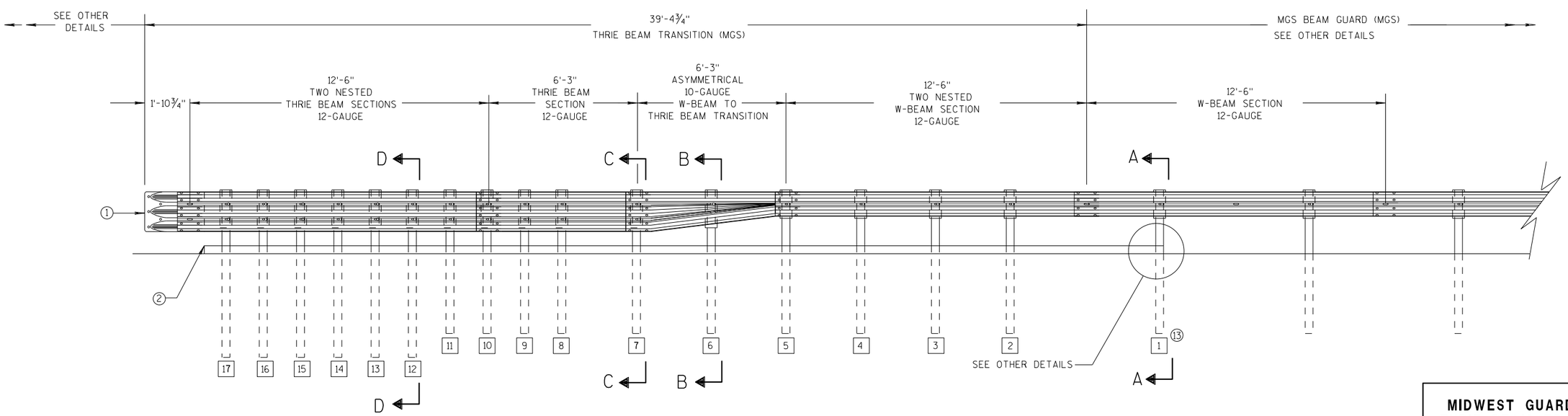

ELEVATION VIEW

MIDWEST GUARDRAIL SYSTEM THRIE BEAM TRANSITION

MIDWEST GUARDRAIL SYSTEM THRIE BEAM TRANSITION (MGS)

STATE OF WISCONSIN
DEPARTMENT OF TRANSPOR

6

S.D.D. 14 B 45-5a

GENERAL NOTES

(2) OPTIONAL CURB AND GUTTER OR DRAINAGE FEATURE SEE PLAN FOR INFORMATION.

(3) WHEN USING STEEL POSTS AND WOOD BLOCKOUTS INSTALL FOUR 10D GALVANIZED NAILS. INSTALL NAILS AT THE BACK CORNERS OF THE BLOCK AND BEND THE NAILS OVER THE FLANGE OF THE STEEL POST.

(4) TOLERANCE FOR TOP OF W-BEAM RAIL IS ± 1".

(13) STEEL OR WOOD POST IS ACCEPTABLE AT POST 1. SEE SDD 14B42

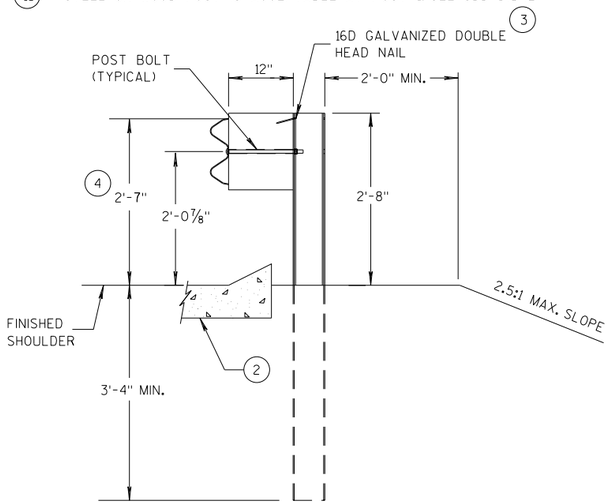

SECTION A-A (13)

POSTS 1-5

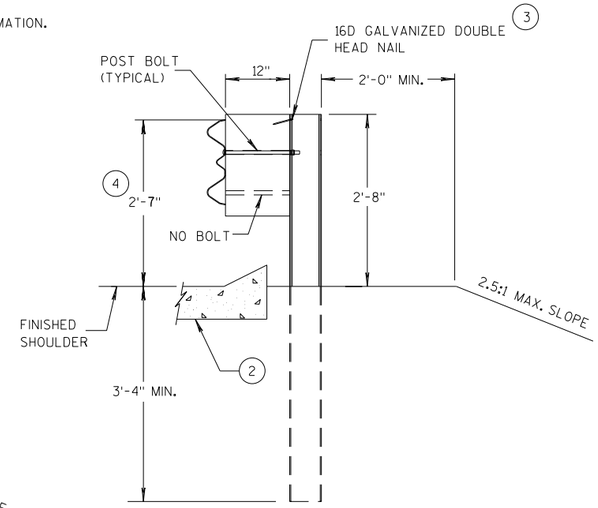

SECTION B-B

POST 6

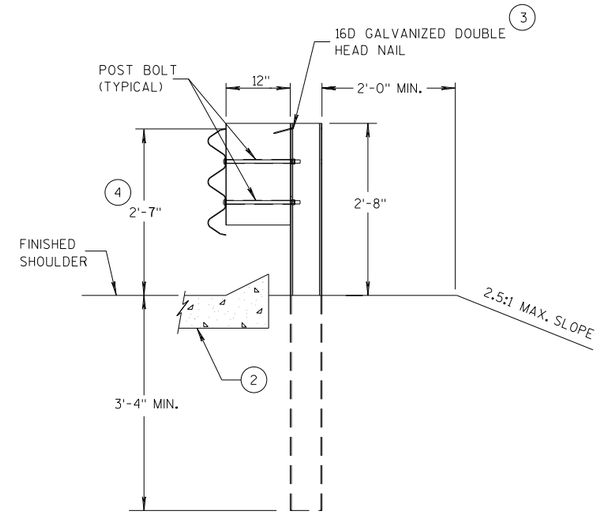

SECTION C-C

POSTS 7-11

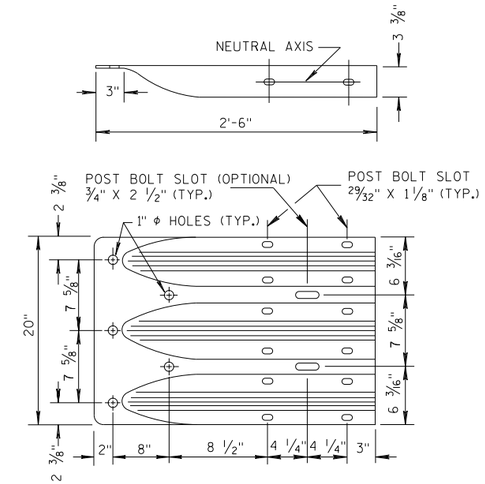

THRIE BEAM TERMINAL CONNECTOR

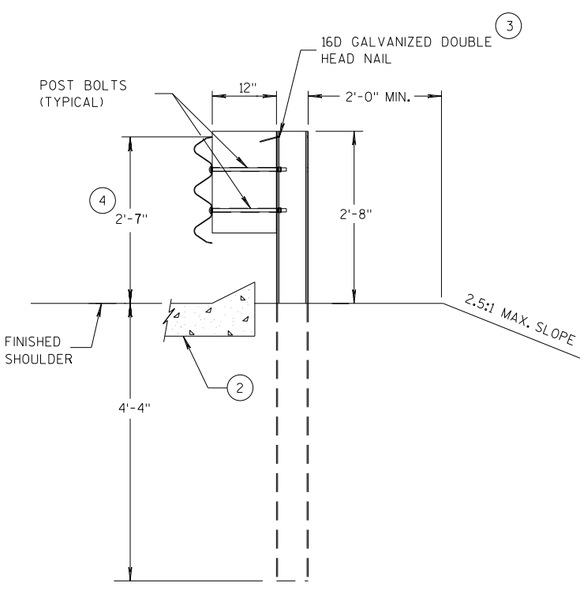

SECTION D-D

POSTS 12-17

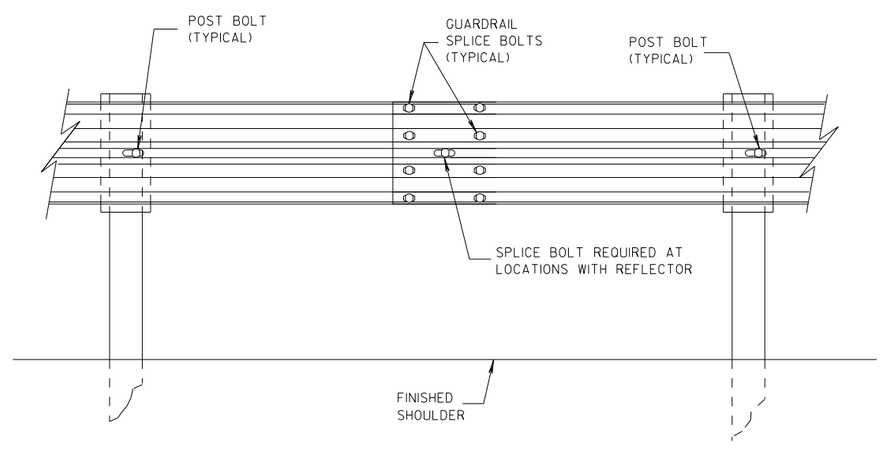

SPLICE DETAIL

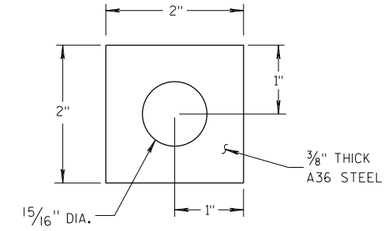

PLATE WASHER DETAIL

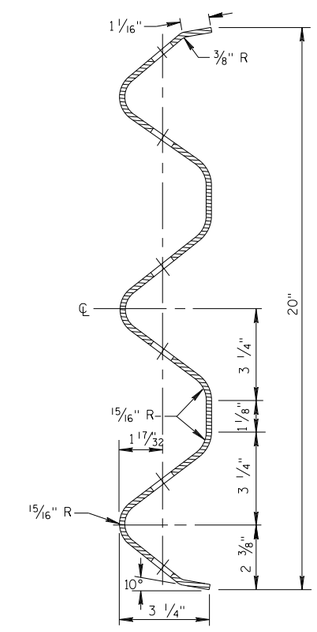

SECTION THRU THRIE BEAM RAIL ELEMENT

MIDWEST GUARDRAIL SYSTEM
THRIE BEAM TRANSITION (MGS)

STATE OF WISCONSIN
DEPARTMENT OF TRANSPOR

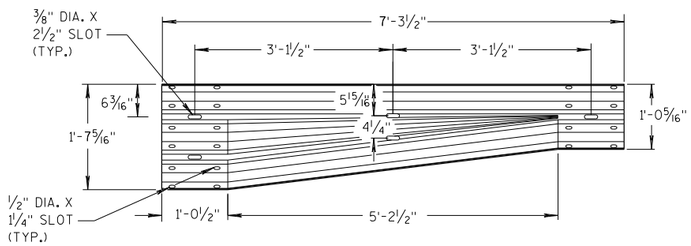

W-BEAM TO THRIE BEAM TRANSITION SECTION

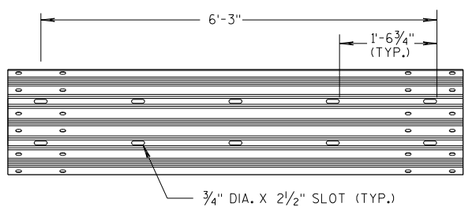

6'-3" THRIE BEAM SECTION

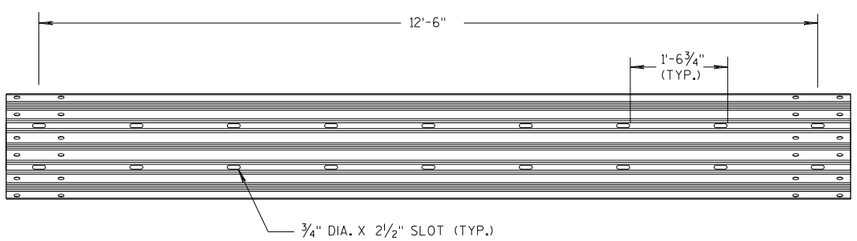

12'-6" THRIE BEAM SECTION

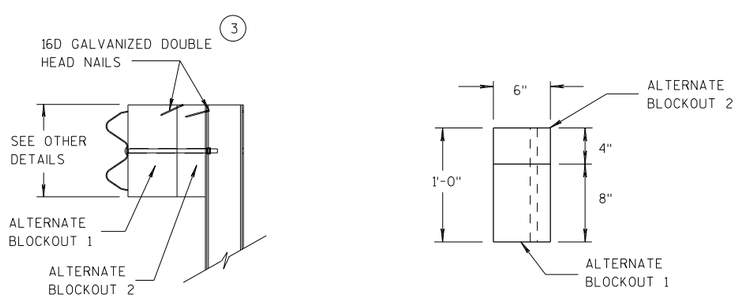

SIDE VIEW TOP VIEW

ALTERNATE WOOD BLOCKOUT DETAIL

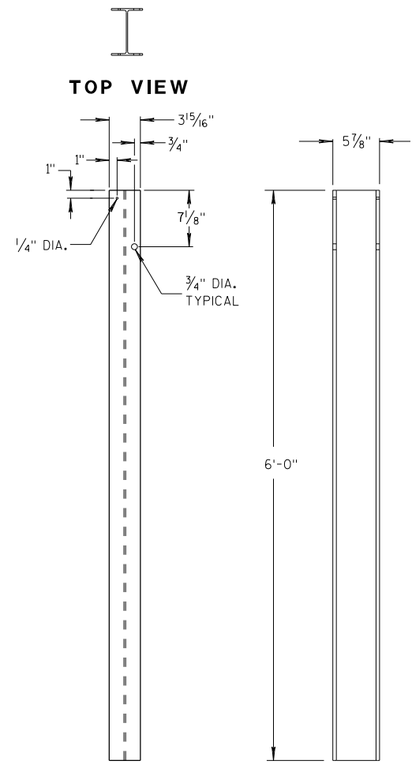

STEEL POSTS 1-5 (13)

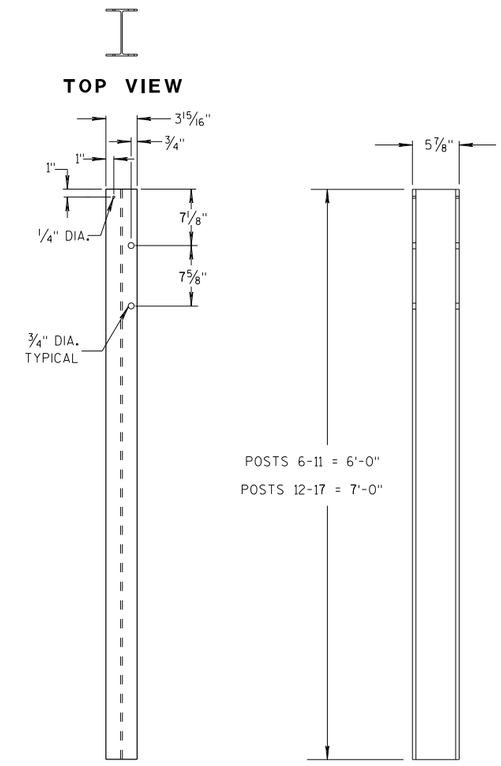

STEEL POSTS 6-17

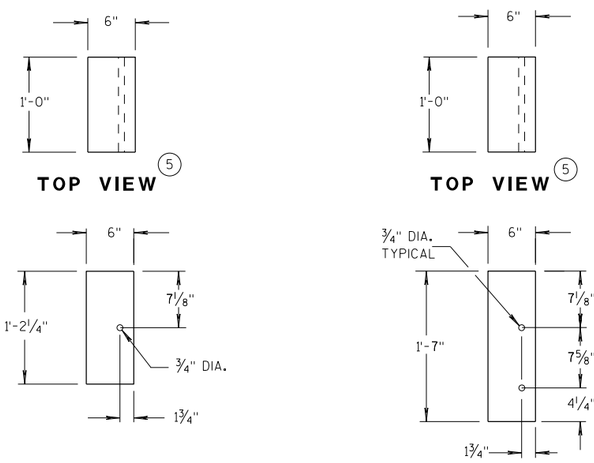

BLOCKOUT POSTS 1-5

BLOCKOUT POSTS 6-17

GENERAL NOTES

STEEL POSTS ARE W6X9 OR W6X8.5.

BOLT HOLES FOR POST ARE ON FRONT AND OF SIDE OF POST.

(3) WHEN USING STEEL POSTS AND WOOD BLOCKOUTS INSTALL FOUR 16D GALVANIZED NAILS. INSTALL NAILS AT THE BACK CORNERS OF THE BLOCK AND BEND THE NAILS OVER THE FLANGE OF THE STEEL POST.

(5) WOOD BLOCKS MAY BE CONSTRUCTED OUT OF 2 WOOD BLOCKS. SEE ALTERNATE WOOD BLOCK DETAIL.

(13) STEEL OR WOOD POST IS ACCEPTABLE AT POST 1. SEE SDD 14B42.

MIDWEST GUARDRAIL SYSTEM THRIE BEAM TRANSITION (MGS)

STATE OF WISCONSIN
DEPARTMENT OF TRANSPOR

6

S.D.D. 14 B 45-5c

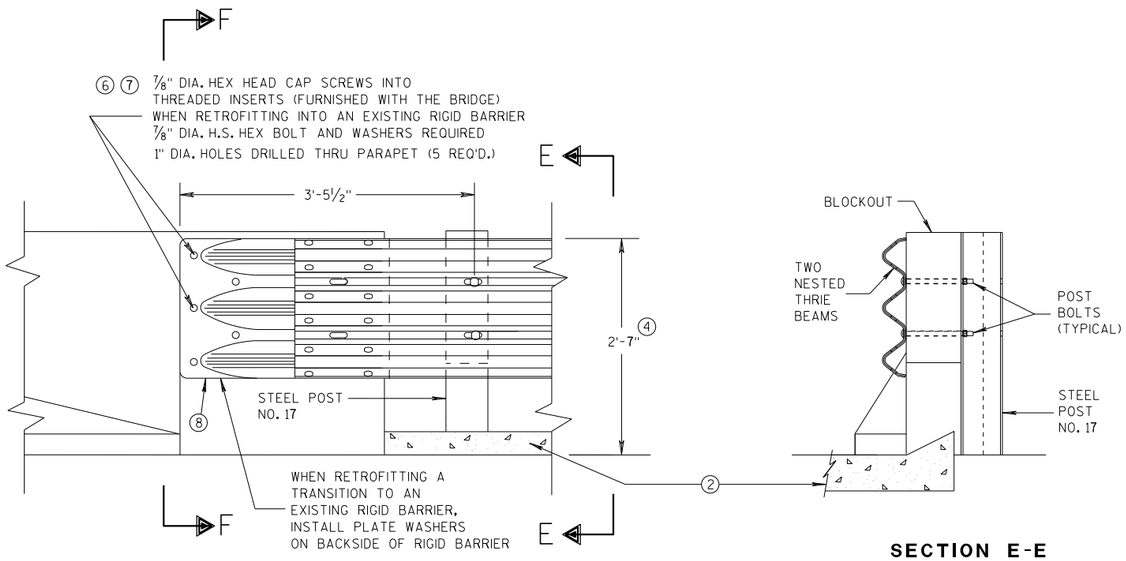

FRONT VIEW

SECTION E-E

THRIE BEAM CONNECTION TO BRIDGE PARAPET WITH SQUARE ENDS

GENERAL NOTES

THESE ARE TYPICAL CONNECTION DETAILS. ADJUST THE POSTION OF CONNECTIONS TO EXISTING BRIDGES TO FIT THE ACTUAL BRIDGE AND SITE DIMENSIONS.

② OPTIONAL CURB AND GUTTER OR DRAINAGE FEATURE SEE PLAN FOR INFORMATION.

④ TOLERANCE FOR TOP OF BEAM IS ± 1".

⑥ DRILLING BOLT HOLES THROUGH THE PARAPET, BOLTS, NUTS, WASHERS AND REPAIRING DAMAGED CONCRETE ARE INCIDENTAL TO THE CONTRACT.

⑦ BOLTS MAY BE A325 BOLTS OR A449 BOLTS. BOLT LENGTH AND THREADING LENGTH ARE TO ALLOW FOR A TIGHT CONNECTION BETWEEN RIGID BARRIER AND THRIE BEAM CONNECTION PLATE. CONTRACTOR IS TO FIELD VERIFY BOLT LENGTH AND THREAD LENGTH. ONE ROUND WASHER REQUIRED BETWEEN BOLT HEAD AND THRIE BEAM CONNECTOR PLATE. BOLTS THAT EXTEND THROUGH THE PARAPET AND OUT THE BACK FACE REQUIRE A HARDENED ROUND STEEL WASHER THAT IS 2" O.D. X 5/32" THICK AND ONE PLATE WASHER. REPAIR ANY DAMAGED CONCRETE FROM BOLT INSTALLATION.

⑧ THE RECESS FOR A W-BEAM CONNECTION, WHICH EXISTS ON SOME PARAPETS OF THIS TYPE, SHALL BE FILLED WITH A TREATED TIMBER BLOCKOUT. BLOCKOUT SIZE IS 1'-6" X 2'-0" X 3 1/2".

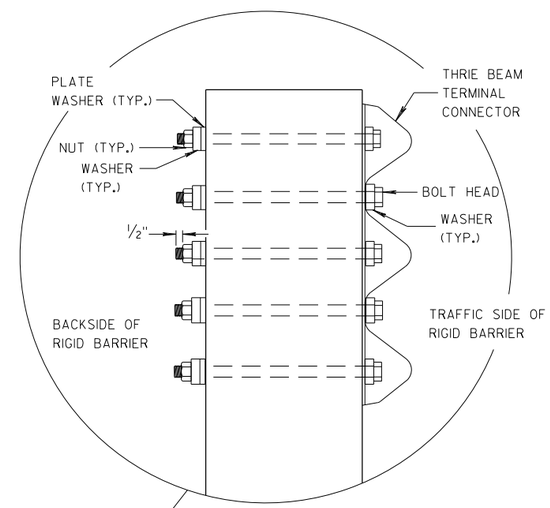

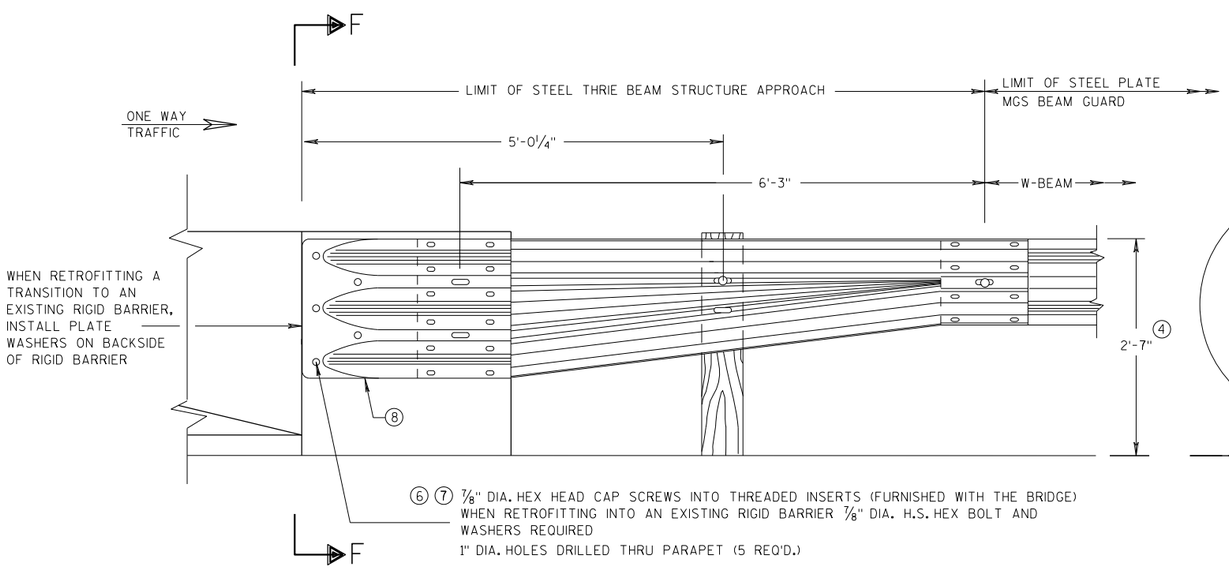

FRONT VIEW

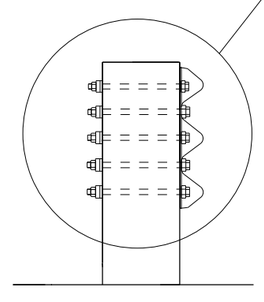

SECTION F-F

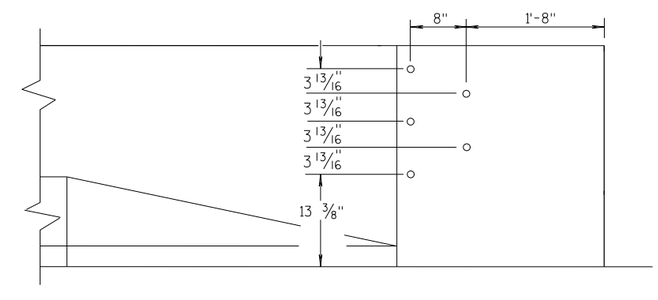

DRILL HOLE LOCATION

W BEAM TRANSITION AND CONNECTION TO BRIDGE PARAPETS WITH SQUARE ENDS

(USE ONLY ON THE TRAFFIC EXIT END OF ONE WAY BRIDGES)

MIDWEST GUARDRAIL SYSTEM THRIE BEAM TRANSITION (MGS)

STATE OF WISCONSIN
DEPARTMENT OF TRANSPORTATION

APPROVED
07/2018 — DATE
/S/ Rodney Taylor — ROADWAY STANDARDS D[illegible] UNIT SUPERVI[illegible]
FHWA

GENERAL NOTES

THESE ARE TYPICAL CONNECTION DETAILS. ADJUST THE POSTION OF CONNECTIONS TO EXISTING BRIDGES TO FIT THE ACTUAL BRIDGE AND SITE DIMENSIONS.

(2) OPTIONAL CURB AND GUTTER OR DRAINAGE FEATURE SEE PLAN FOR INFORMATION.

(4) TOLERANCE FOR TOP OF BEAM IS ± 1".

(6) DRILLING BOLT HOLES THROUGH THE PARAPET, BOLTS, NUTS, WASHERS AND REPAIRING DAMAGED CONCRETE ARE INCIDENTAL TO THE CONTRACT.

(7) BOLTS MAY BE A325 BOLTS OR A449 BOLTS. BOLT LENGTH AND THREADING LENGTH ARE TO ALLOW FOR A TIGHT CONNECTION BETWEEN RIGID BARRIER AND THRIE BEAM CONNECTION PLATE. CONTRACTOR IS TO FIELD VERIFY BOLT LENGTH AND THREAD LENGTH. ONE ROUND WASHER REQUIRED BETWEEN BOLT HEAD AND THRIE BEAM CONNECTOR PLATE. BOLTS THAT EXTEND THROUGH THE PARAPET AND OUT THE BACK FACE REQUIRE A HARDENED ROUND STEEL WASHER THAT IS 2" O.D. X 5/32" THICK AND ONE PLATE WASHER. REPAIR ANY DAMAGED CONCRETE FROM BOLT INSTALLATION.

(8) THE RECESS FOR A W-BEAM CONNECTION, WHICH EXISTS ON SOME PARAPETS OF THIS TYPE, SHALL BE FILLED WITH A TREATED TIMBER BLOCKOUT. BLOCKOUT SIZE IS 1'-6" X 2'-0" X 3 1/2".

(9) BOLT, NUT AND WASHERS NOT REQUIRED FOR THIS LOCATION WHEN RETROFITTING AN EXISTING PAPAPET AND THE HOLE IS EITHER ABOVE PARAPET OR WITHIN 4 INCHES OF THE EDGE OF PARAPET.

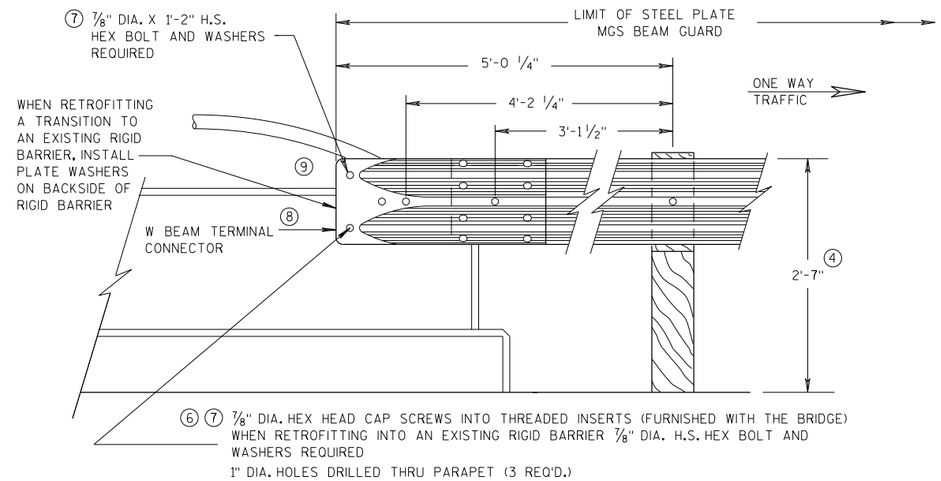

FRONT VIEW

W BEAM CONNECTION TO VERTICAL FACE PARAPET

(USE ONLY ON THE TRAFFIC EXIT END OF ONE WAY BRIDGES)

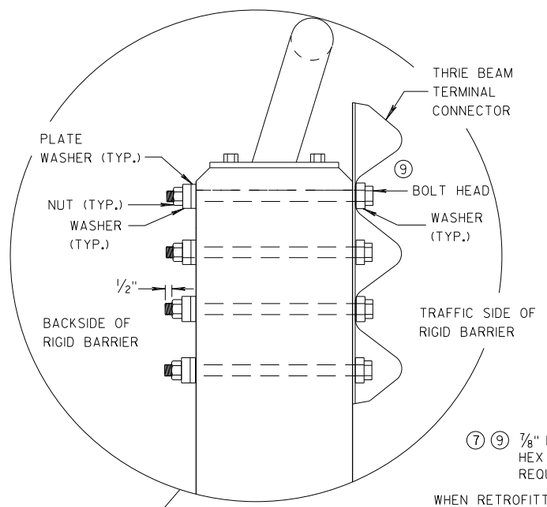

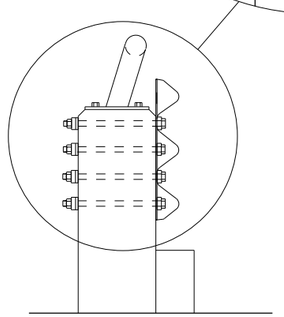

SECTION G-G

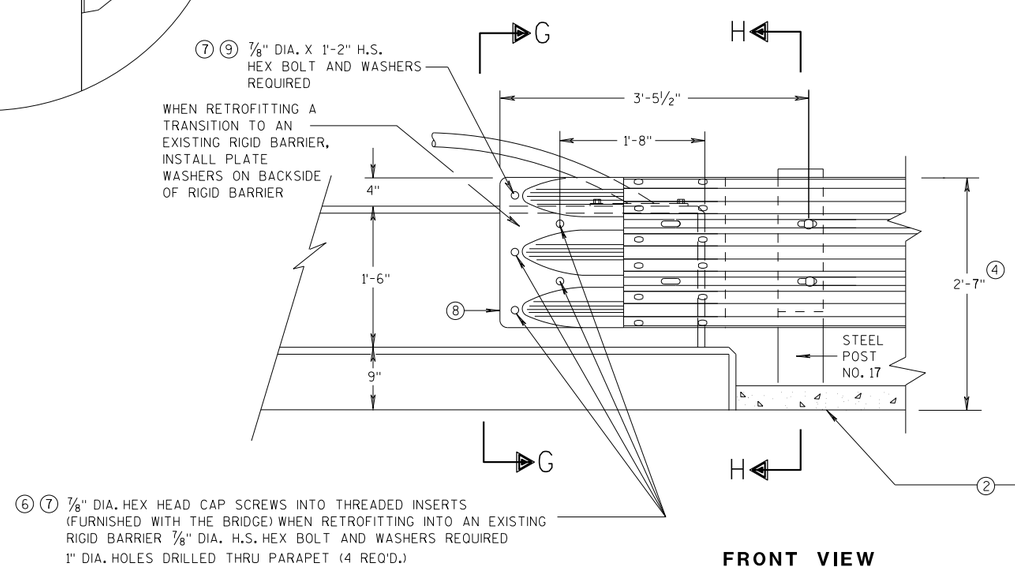

FRONT VIEW

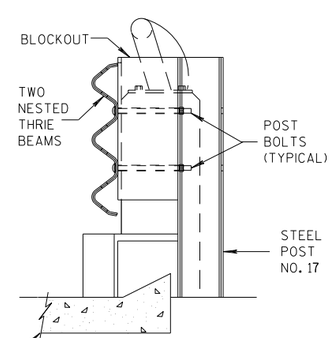

SECTION H-H

THRIE BEAM CONNECTION TO VERTICAL FACED PARAPETS

MIDWEST GUARDRAIL SYSTEM
THRIE BEAM TRANSITION (MGS)

STATE OF WISCONSIN
DEPARTMENT OF TRANSPORTATION

APPROVED
07/2018 — DATE
/S/ Rodney Taylor
ROADWAY STANDARDS D UNIT SUPERVI
FHWA

6

S.D.D. 14 B 45-5e

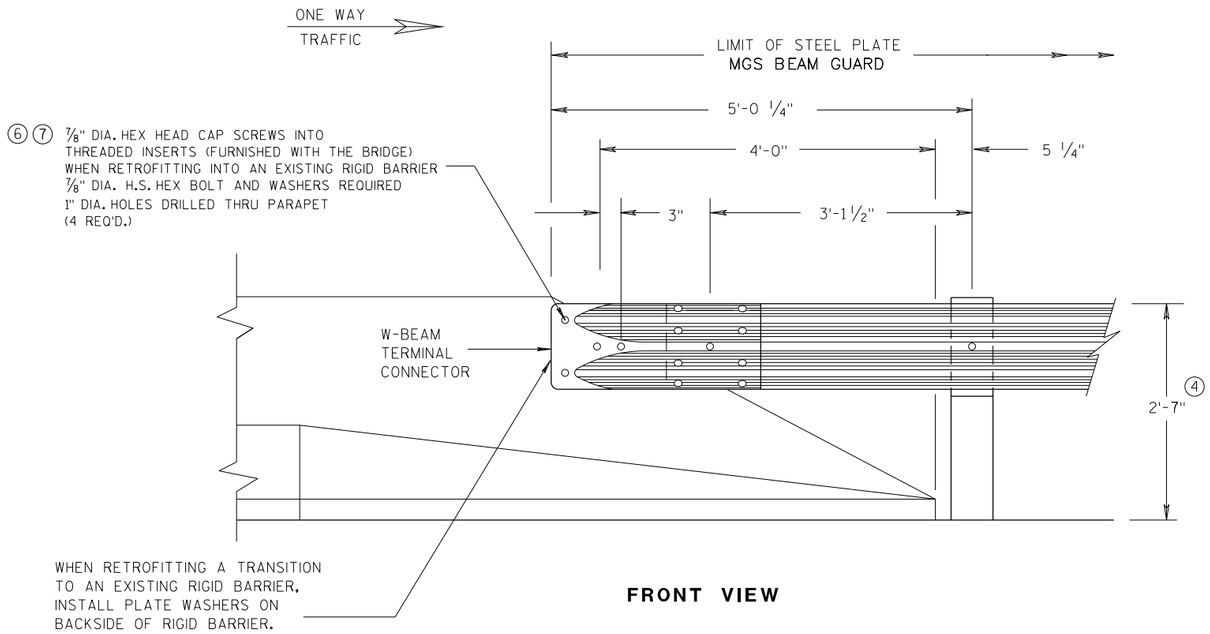

FRONT VIEW

W BEAM CONNECTION TO PARAPETS WITH SLOPED ENDS

(USE ONLY AT TRAFFIC EXIT END OF ONE WAY BRIDGE)

GENERAL NOTES

② OPTIONAL CURB AND GUTTER OR DRAINAGE FEATURE SEE PLAN FOR INFORMATION.

④ TOLERANCE FOR TOP OF BEAM IS ± 1".

⑥ DRILLING BOLT HOLES THROUGH THE PARAPET, BOLTS, NUTS, WASHERS AND REPAIRING DAMAGED CONCRETE ARE INCIDENTAL TO THE CONTRACT.

⑦ BOLTS MAY BE A325 BOLTS OR A449 BOLTS. BOLT LENGTH AND THREADING LENGTH ARE TO ALLOW FOR A TIGHT CONNECTION BETWEEN RIGID BARRIER AND THRIE BEAM CONNECTION PLATE. CONTRACTOR IS TO FIELD VERIFY BOLT LENGTH AND THREAD LENGTH. ONE ROUND WASHER REQUIRED BETWEEN BOLT HEAD AND THRIE BEAM CONNECTOR PLATE. BOLTS THAT EXTEND THROUGH THE PARAPET AND OUT THE BACK FACE REQUIRE A HARDENED ROUND STEEL WASHER THAT IS 2" O.D. X 5/32" THICK AND ONE PLATE WASHER. REPAIR ANY DAMAGED CONCRETE FROM BOLT INSTALLATION.

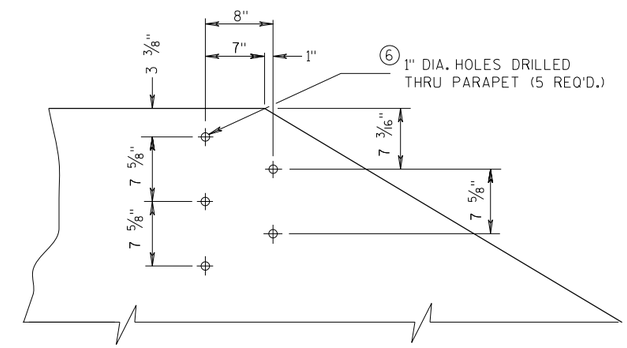

DRILL HOLE LOCATION AND PATTERN FOR THRIE BEAM CONNECTION

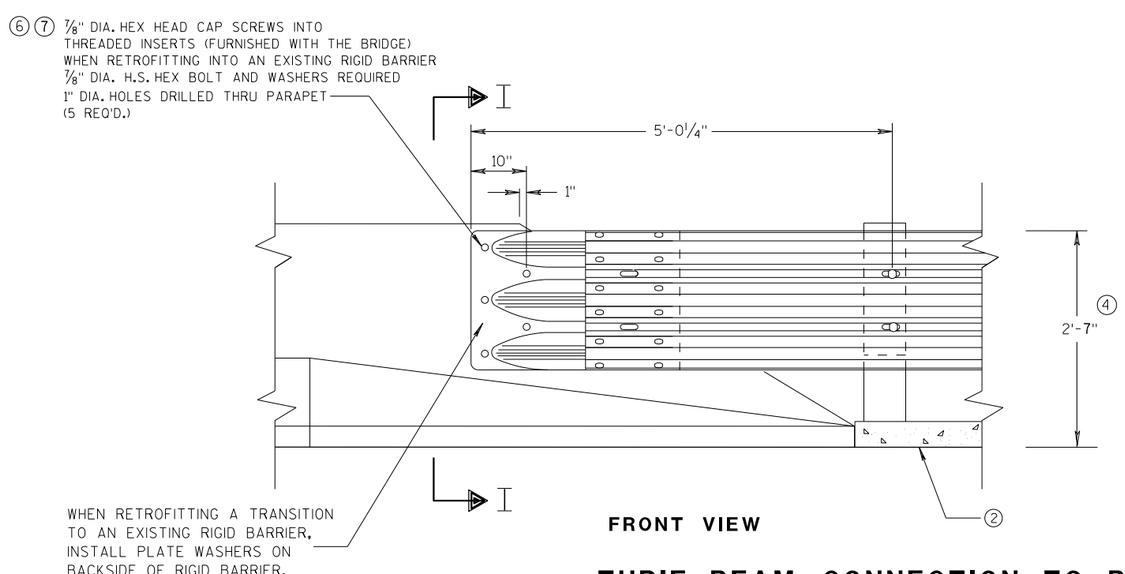

FRONT VIEW

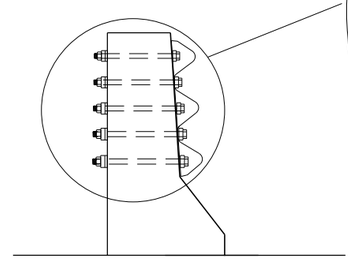

SECTION I-I

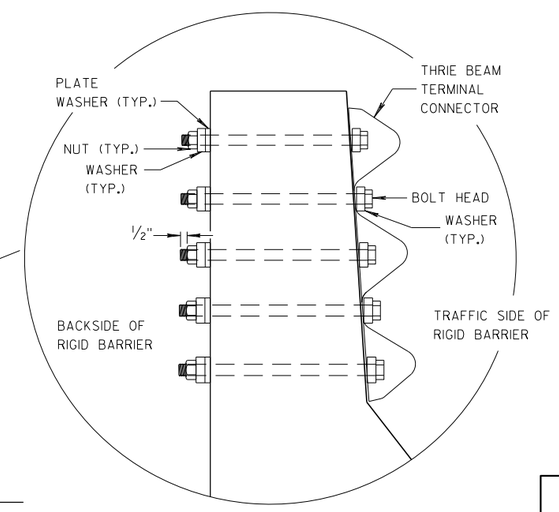

THRIE BEAM CONNECTION TO BRIDGE PARAPETS WITH SLOPED ENDS

MIDWEST GUARDRAIL SYSTEM THRIE BEAM TRANSITION (MGS)

STATE OF WISCONSIN
DEPARTMENT OF TRANSPORTATION

APPROVED
07/2018 — DATE
/S/ Rodney Taylor — ROADWAY STANDARDS DEVELOPMENT UNIT SUPERVISOR
FHWA

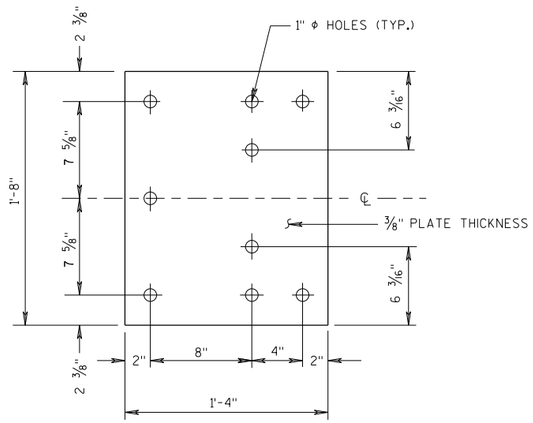

BACK-UP PLATE DETAIL

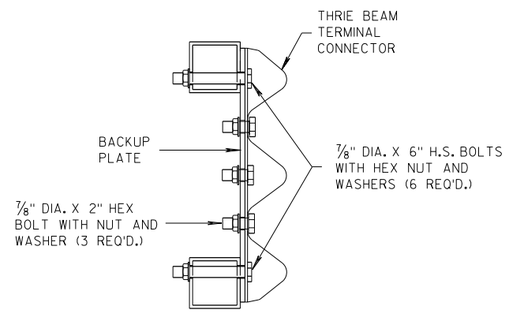

SECTION J-J

GENERAL NOTES

(4) TOLERANCE FOR TOP OF BEAM IS ± 1".

(6) DRILLING HOLES THROUGH THE PAPRPET, BOLTS, NUTS, WASHERS AND REPAIRING DAMAGED CONCRETE ARE INCIDENTAL TO THE CONTRACT.

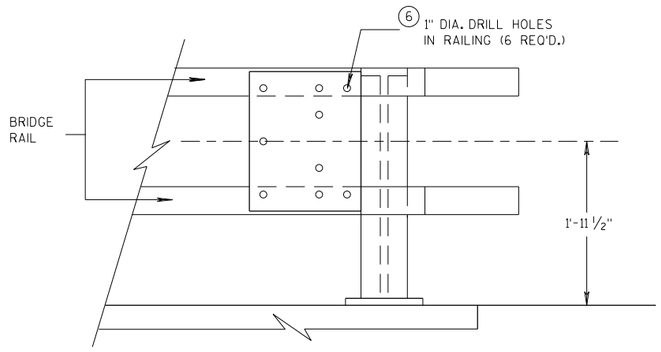

BACK-UP PLATE MOUNTING ONTO BRIDGE RAILING

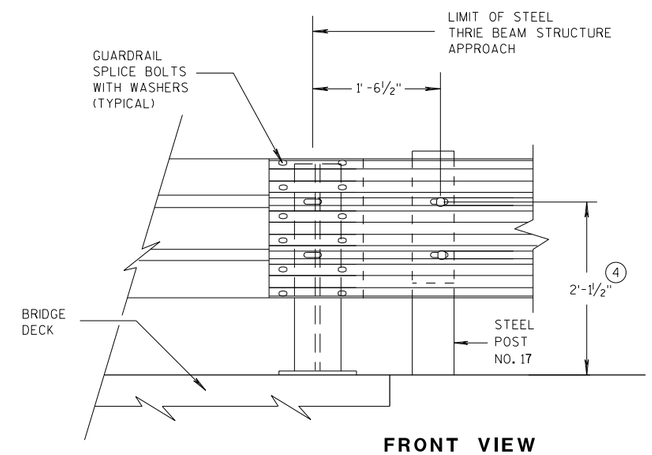

FRONT VIEW

THRIE BEAM CONNECTION TO STEEL RAILING TYPE "W"

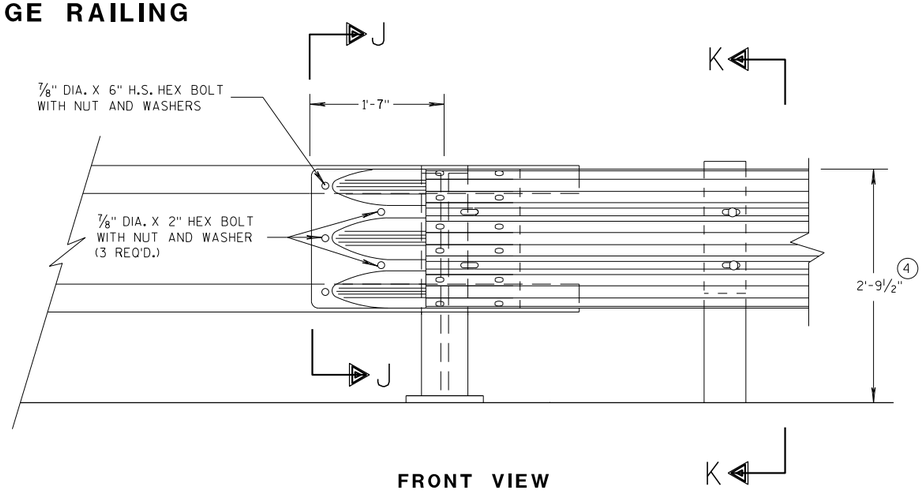

FRONT VIEW

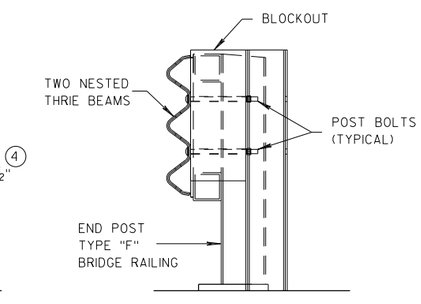

SECTION K-K

THRIE BEAM CONNECTION TO TUBULAR RAILING TYPE "F"

MIDWEST GUARDRAIL SYSTEM THRIE BEAM TRANSITION (MGS)

STATE OF WISCONSIN
DEPARTMENT OF TRANSPORTATION

APPROVED 07/2018 — DATE — FHWA

/S/ Rodney Taylor — ROADWAY STANDARDS DEVELOPMENT UNIT SUPERVISOR

S.D.D. 14 B 45-5g

GENERAL NOTES

(4) TOLERANCE FOR TOP OF W-BEAM RAIL IS ± 1".

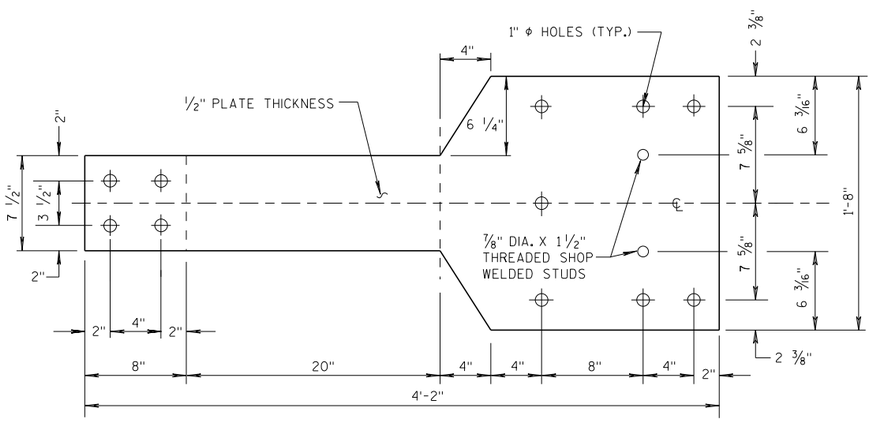

FRONT VIEW

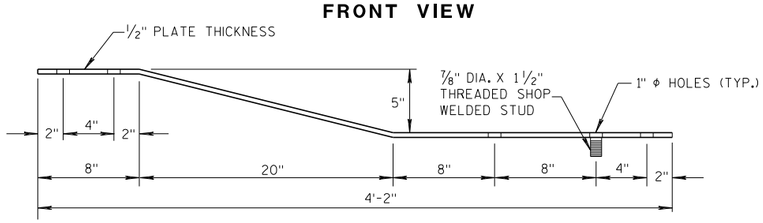

PLAN VIEW

BACK-UP PLATE DETAIL, TYPE "M"

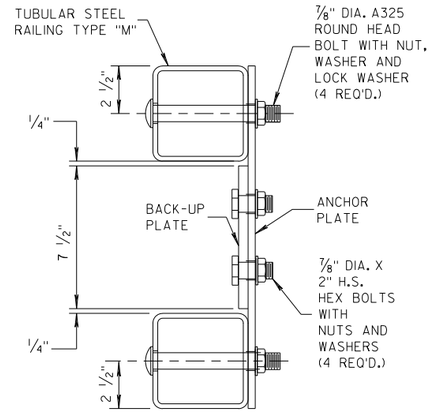

SECTION L-L

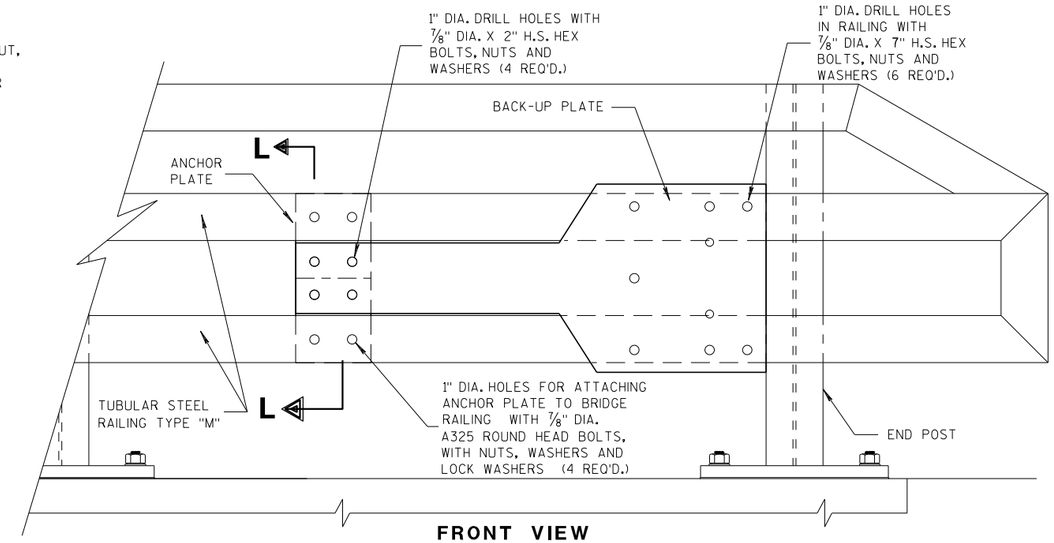

FRONT VIEW

ANCHOR AND BACK-UP PLATE MOUNTING TO BRIDGE RAILING, TYPE "M"

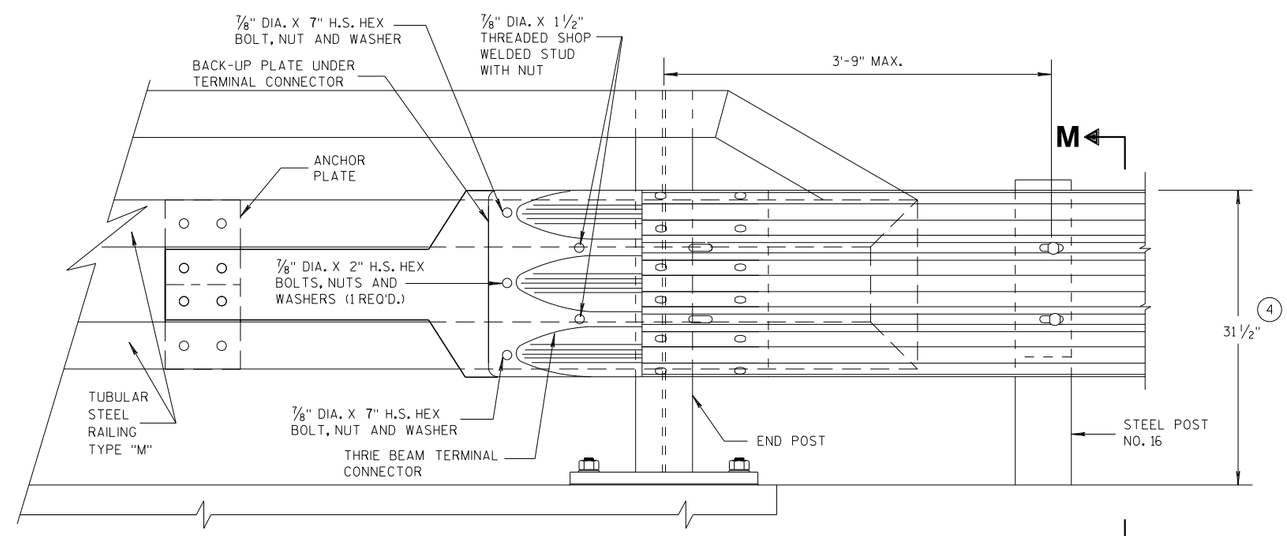

FRONT VIEW

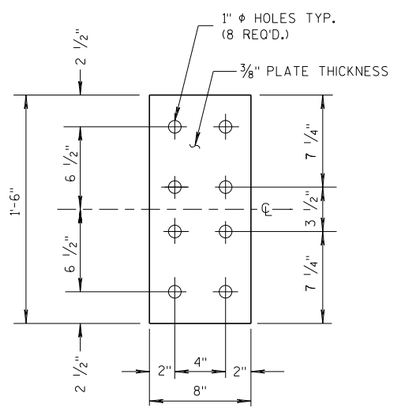

FRONT VIEW

ANCHOR PLATE DETAIL, TYPE "M"

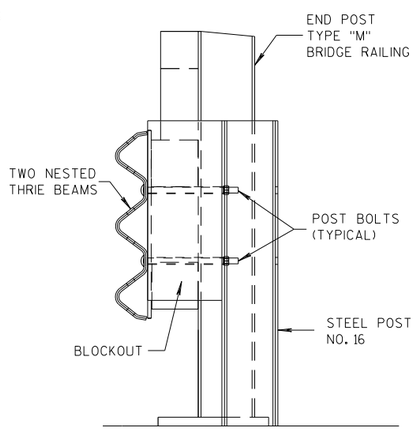

SECTION M-M

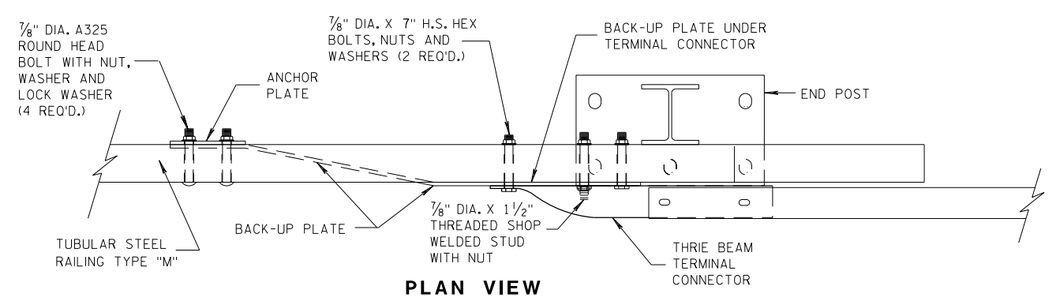

PLAN VIEW

THRIE BEAM CONNECTION TO TUBULAR RAILING, TYPE "M"

MIDWEST GUARDRAIL SYSTEM THRIE BEAM TRANSITION (MGS)

STATE OF WISCONSIN
DEPARTMENT OF TRANSPORTATION

APPROVED
07/2018 — DATE
/S/ Rodney Taylor — ROADWAY STANDARDS DEVELOPMENT UNIT SUPERVISOR
FHWA

GENERAL NOTES

COVER PLATE PANELS ARE 3/16" THICK.

ALL STIFFENERS ARE 1/4" THICK.

CONNECTOR PLATE SHALL BE FABRICATED FROM ASTM GRADE A36 STEEL AND GALVANIZED.

FOR GALVANIZED REQUIREMENTS, SEE SECTION 614 OF THE STANDARD SPECIFICATIONS.

ALL HOLE DIAMETERS SHALL BE 1".

FOR OPPOSITE SIDE INSTALLATION MIRROR DRAWINGS.

(10) STIFFENERS LOCATED AT THE OUTSIDE EDGES OF THE COVER PLATES SHALL BE WELDED AS FOLLOWS:
SINGLE BEVEL GROOVE WELD ON EXTERNAL SIDES AND 3/16" FILLET WELD BY 1" LONG SPACED AT 2" ON INTERNAL SIDES.

(11) STIFFENERS LOCATED ON THE INSIDE OF THE COVER PLATE SHALL BE WELDED AS FOLLOWS:
3/16" FILLET WELD BY 1" LONG SPACED AT 2".

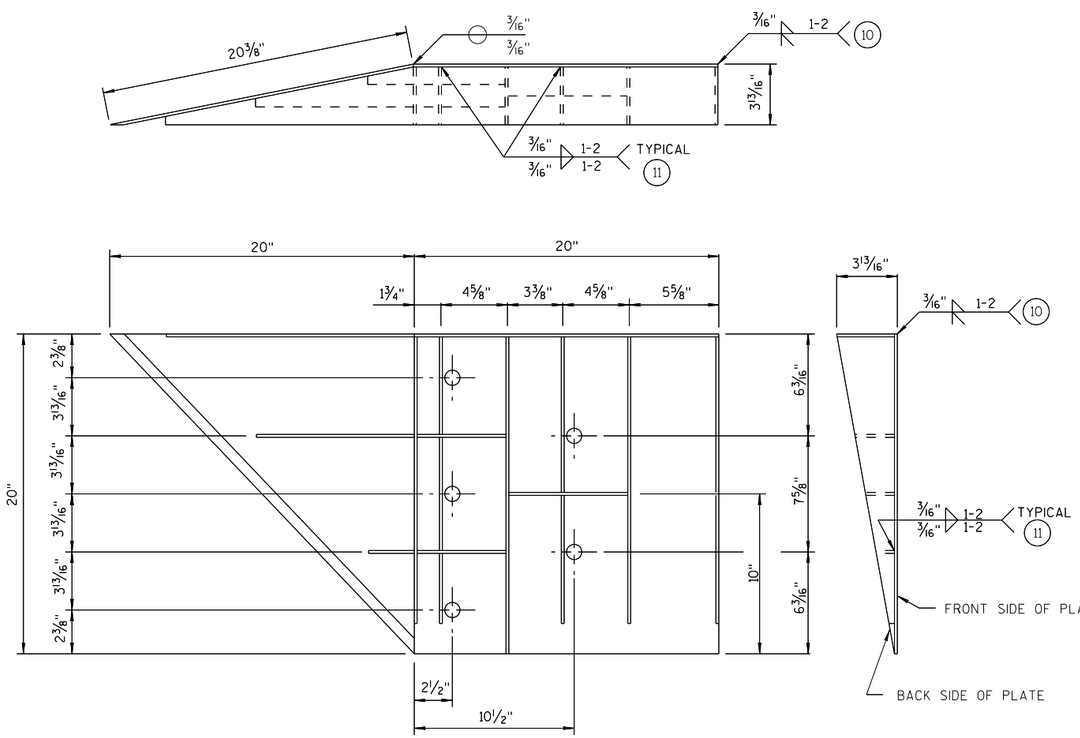

WELDING INSTRUCTION

(VIEWED FROM BACK SIDE OF PLATE)

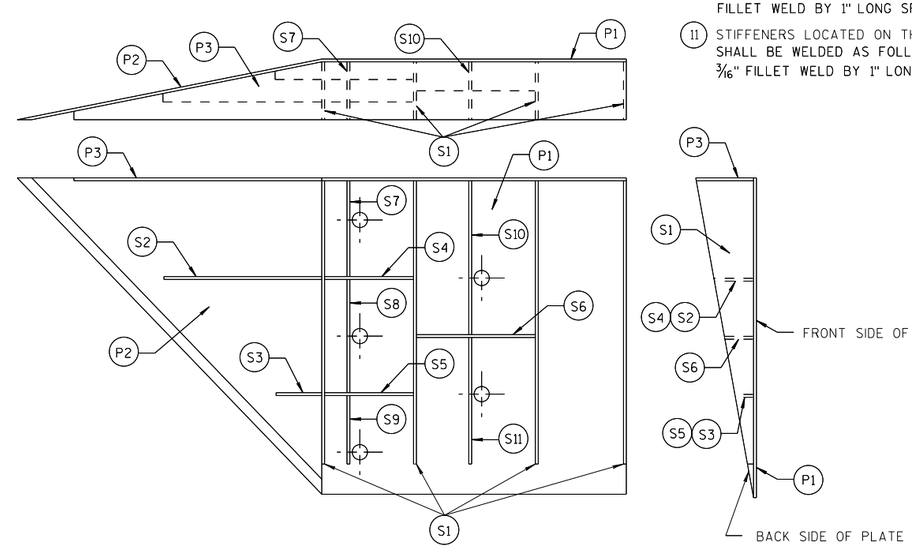

PLATE AND STIFFENER IDENTIFICATION

(VIEWED FROM BACK SIDE OF PLATE)

CONNECTOR PLATE DIMENSION (PER ASSEMBLY)				
PLATE	QUANTITY	SHAPE	SIZE (A x B x C x D)	THICKNESS
P1	1		20" x 20"	3/16"
P2	1		20" x 20" x 28 9/16"	3/16"
P3	1		39" x 3 5/8" x 20" x 19 5/16"	3/16"
S1	4		18 7/16" x 3 5/8" x 18 3/4"	1/4"
S2	1		10 1/4" x 2 7/16" x 10 3/8" x 1/2"	1/4"
S3	1		3" x 1 1/16" x 3 1/8" x 1/2"	1/4"
S4	1		6 1/8" x 2 7/16"	1/4"
S5	1		6 1/8" x 1 1/16"	1/4"
S6	1		7 3/4" x 1 3/4"	1/4"
S7	1		2 9/16" x 6" x 3 5/8" x 5 7/8"	1/4"
S8	1		1 5/32" x 7 1/2" x 2 1/2" x 7 3/8"	1/4"
S9	1		6 1/16" x 6 3/16" x 1 3/32"	1/4"
S10	1		1 7/8" x 9 7/8" x 3 5/8" x 9 11/16"	1/4"
S11	1		8 1/2" x 8 3/4" x 1 13/16"	1/4"

SINGLE SLOPE CONNECTION PLATE

MIDWEST GUARDRAIL SYSTEM THRIE BEAM TRANSITION (MGS)

STATE OF WISCONSIN
DEPARTMENT OF TRANSPORTATION

APPROVED
7/2018 /S/ Rodney Taylor
DATE ROADWAY STANDARDS DEVELOPMENT UNIT SUPERVISOR
FHWA

6

S.D.D. 14 B 45-5i

GENERAL NOTES

CONNECTOR PLATE, DRILLING BOLT HOLES THROUGH THE PARAPET, BOLTS, NUTS, WASHERS AND REPAIRING DAMAGED CONCRETE ARE INCIDENTAL TO THE CONTRACT.

(2) OPTIONAL CURB AND GUTTER OR DRAINAGE FEATURE SEE PLAN FOR INFORMATION.

(7) BOLTS MAY BE A325 BOLTS OR A449 BOLTS. BOLT LENGTH AND THREADING LENGTH ARE TO ALLOW FOR A TIGHT CONNECTION BETWEEN RIGID BARRIER AND THRIE BEAM CONNECTION PLATE. CONTRACTOR IS TO FIELD VERIFY BOLT LENGTH AND THREAD LENGTH. ONE ROUND WASHER REQUIRED BETWEEN BOLT HEAD AND THRIE BEAM CONNECTOR PLATE. BOLTS THAT EXTEND THROUGH THE PARAPET AND OUT THE BACK FACE REQUIRE A HARDENED ROUND STEEL WASHER THAT IS 2" O.D. X 5/32" THICK AND ONE PLATE WASHER. REPAIR ANY DAMAGED CONCRETE FROM BOLT INSTALLATION.

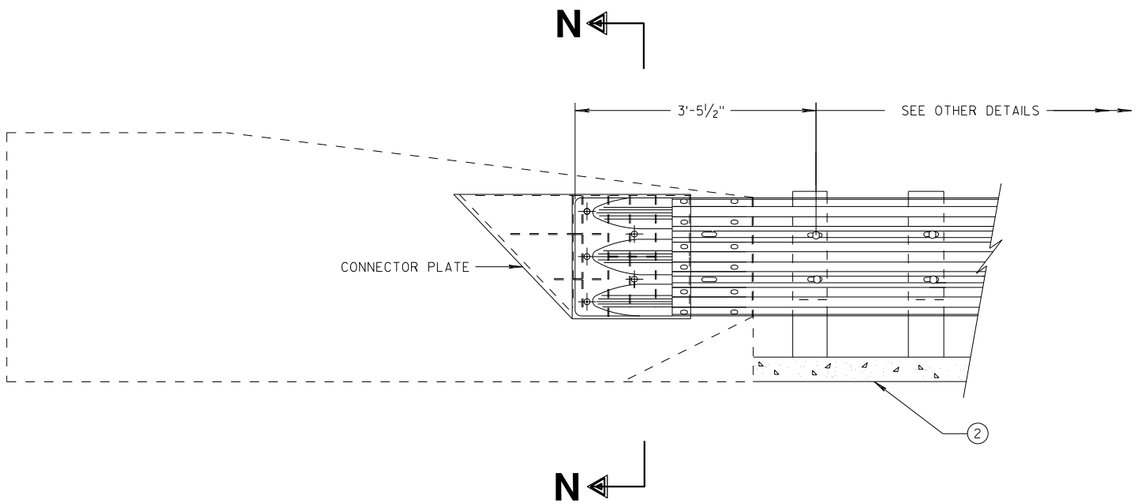

THRIE BEAM CONNECTION TO SINGLE SLOPE BARRIER

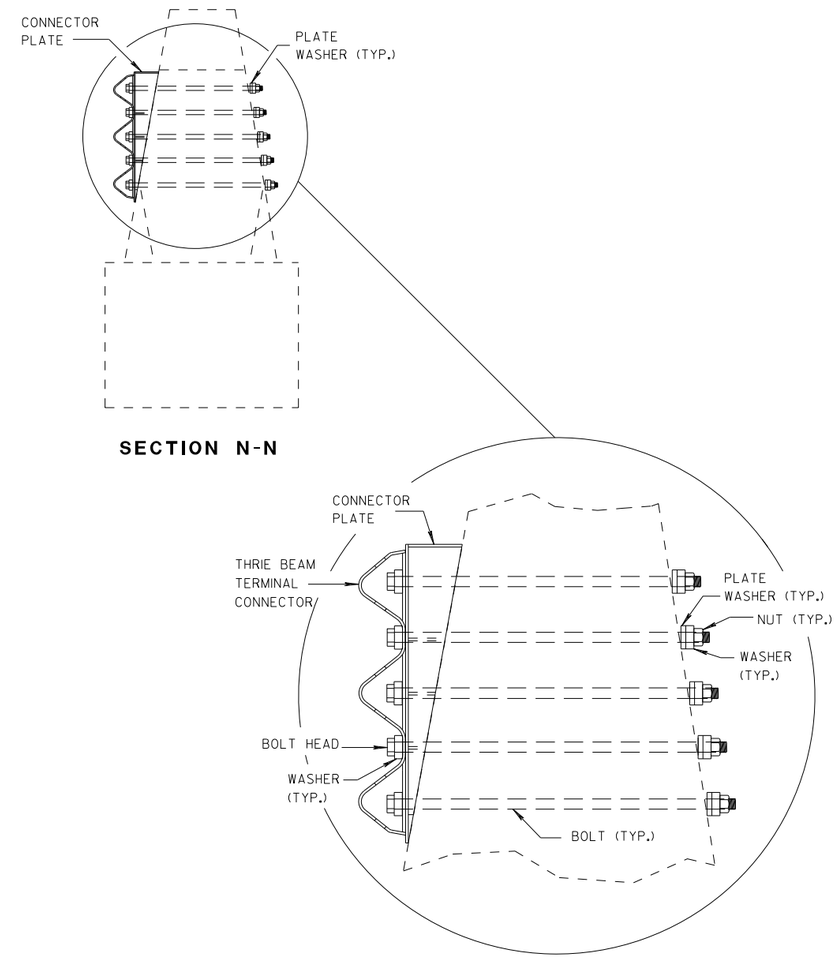

SECTION N-N

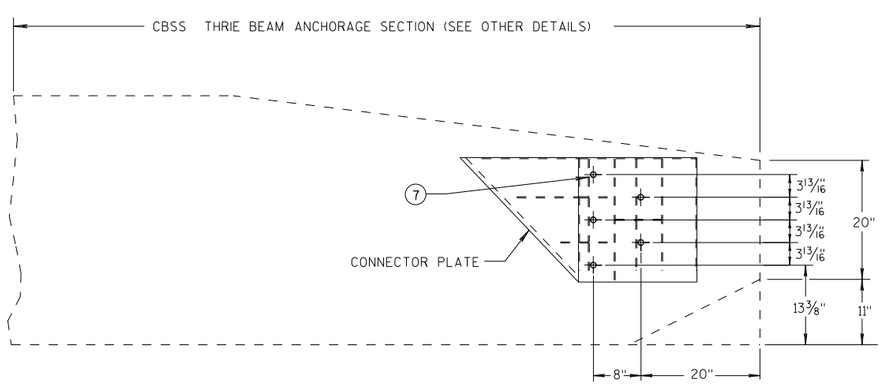

SINGLE SLOPE CONNECTION PLATE PLACEMENT

MIDWEST GUARDRAIL SYSTEM THRIE BEAM TRANSITION (MGS)

STATE OF WISCONSIN
DEPARTMENT OF TRANSPORTATION

APPROVED
7/2018 — DATE
/S/ Rodney Taylor — ROADWAY STANDARDS DEVELOPMENT UNIT SUPERVISOR
FHWA

6

S.D.D. 14 B 45-5j

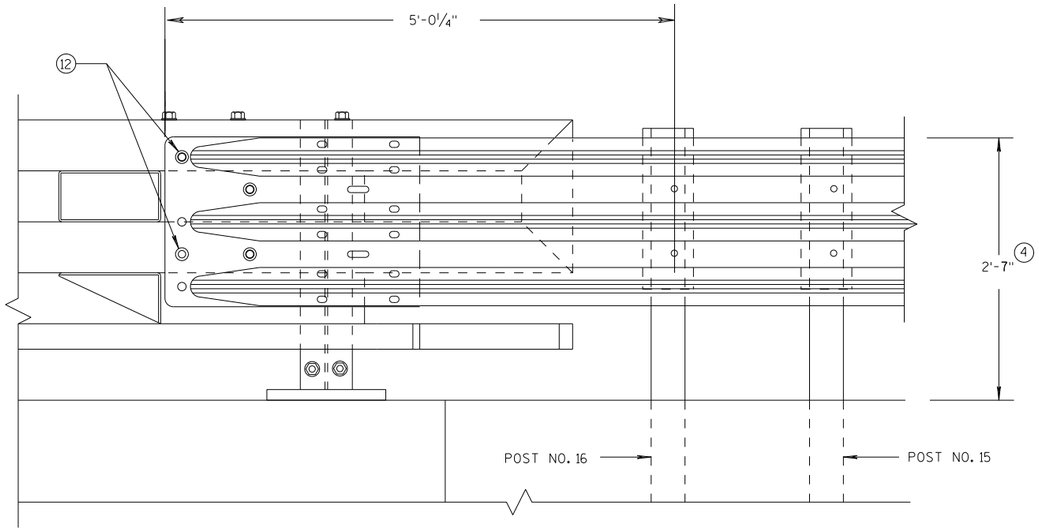

ELEVATION OF DETAIL AT NY3 END POST

THRIE BEAM RAIL ATTACHMENT

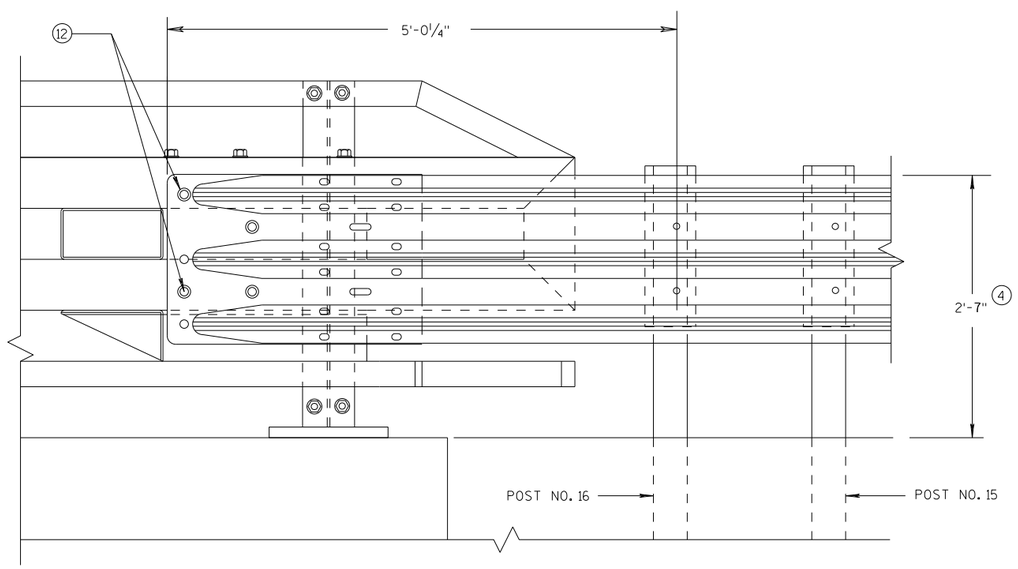

ELEVATION OF DETAIL AT NY4 END POST

THRIE BEAM RAIL ATTACHMENT

GENERAL NOTES

(4) TOLERANCE FOR TOP OF BEAM IS ± 1".

(12) BOLTS MAY BE A325 BOLTS OR A449 BOLTS. BOLT LENGTH AND THREADING LENGTH ARE TO ALLOW FOR A TIGHT CONNECTION BETWEEN RIGID BARRIER AND THRIE BEAM CONNECTION PLATE. CONTRACTOR IS TO FIELD VERIFY BOLT LENGTH AND THREAD LENGTH. ONE ROUND WASHER REQUIRED BETWEEN BOLT HEAD AND THRIE BEAM CONNECTOR PLATE. ON BACKSIDE OF PARAPET ONE ROUND WASHER, AND NUT REQUIRED. BOLT THREAD IS TO EXTEND ½-INCH BEYOND NUT.

MIDWEST GUARDRAIL SYSTEM
THRIE BEAM TRANSITION (MGS)

STATE OF WISCONSIN
DEPARTMENT OF TRANSPORTATION

APPROVED
7/2018 — DATE
/S/ Rodney Taylor — ROADWAY STANDARDS DEVELOPMENT UNIT SUPERVISOR
FHWA

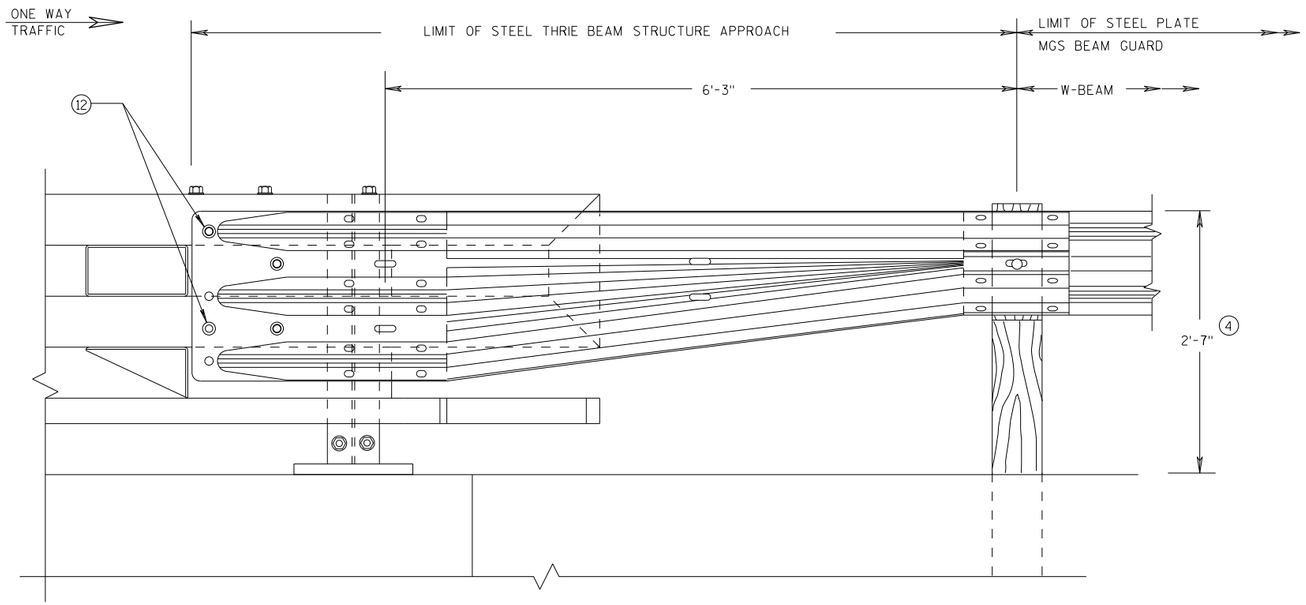

FRONT VIEW

W BEAM TRANSITION AND CONNECTION TO BRIDGE RAILING TYPE "NY3"

(USE ONLY ON THE TRAFFIC EXIT END OF ONE WAY BRIDGES)

GENERAL NOTES

(4) TOLERANCE FOR TOP OF BEAM IS ± 1".

(12) BOLTS MAY BE A325 BOLTS OR A449 BOLTS. BOLT LENGTH AND THREADING LENGTH ARE TO ALLOW FOR A TIGHT CONNECTION BETWEEN RIGID BARRIER AND THRIE BEAM CONNECTION PLATE. CONTRACTOR IS TO FIELD VERIFY BOLT LENGTH AND THREAD LENGTH. ONE ROUND WASHER REQUIRED BETWEEN BOLT HEAD AND THRIE BEAM CONNECTOR PLATE. ON BACKSIDE OF PARAPET ONE ROUND WASHER, AND NUT REQUIRED. BOLT THREAD IS TO EXTEND ½-INCH BEYOND NUT.

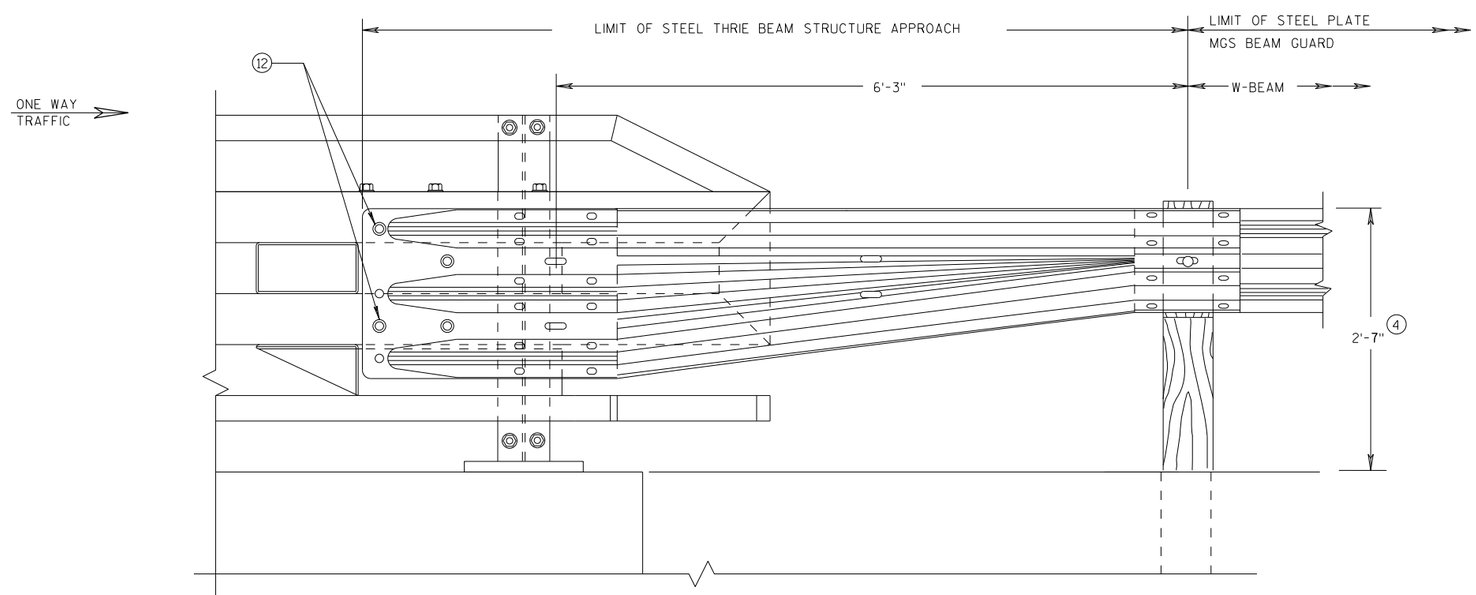

FRONT VIEW

W BEAM TRANSITION AND CONNECTION TO BRIDGE RAILING TYPE "NY4"

(USE ONLY ON THE TRAFFIC EXIT END OF ONE WAY BRIDGES)

MIDWEST GUARDRAIL SYSTEM THRIE BEAM TRANSITION (MGS)

STATE OF WISCONSIN
DEPARTMENT OF TRANSPORTATION

APPROVED
7/2018 — DATE
/S/ Rodney Taylor — ROADWAY STANDARDS DEVELOPMENT UNIT SUPERVISOR
NT
FHWA

6

S.D.D. 14 B 45-5L

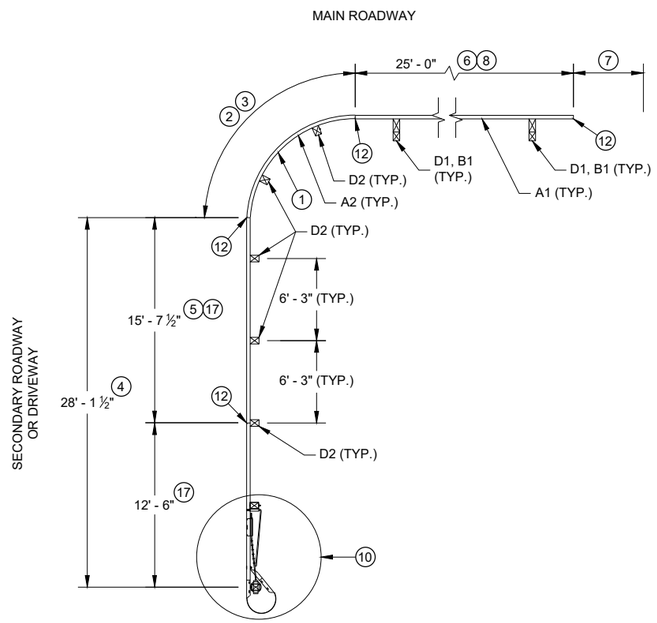

PLAN VIEW

SHORT RADIUS BEAM GUARD WITH SHORT RADIUS TERMINAL ON SECONDARY ROAD OR DRIVEWAY

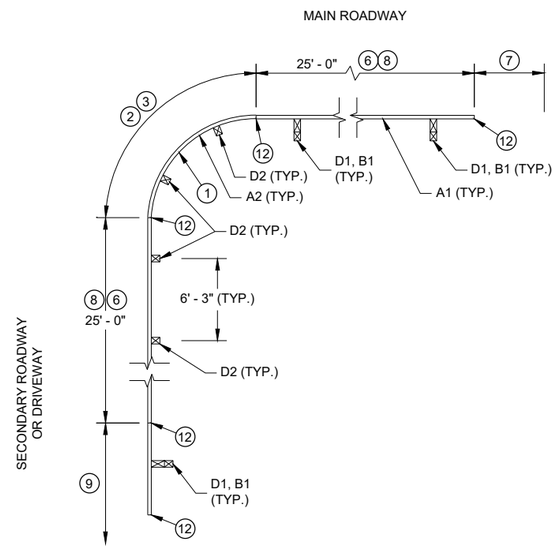

PLAN VIEW

SHORT RADIUS BEAM GUARD WITH EAT, ADDITIONAL BEAM GUARD OR TRANSITION TO RIGID BARRIER ON SECONDARY ROAD OR DRIVEWAY

TABLE FOR RADIUS OF 32' AND LESS

RADIUS (FT)	LENGTH (FT)	WIDTH (FT)
8	25	15
16	30	15
24	40	20
32	50	30

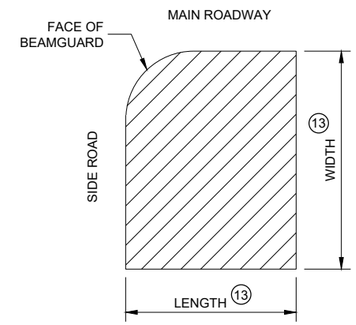

AREA FREE OF FIXED OBJECTS FOR RADIUS 32' AND LESS 16

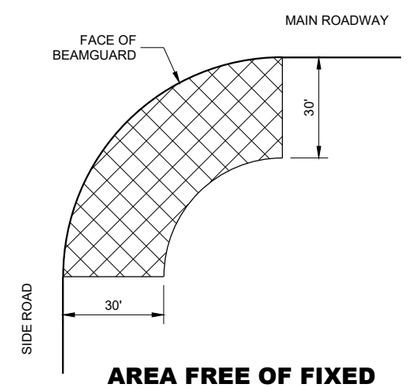

AREA FREE OF FIXED OBJECTS FOR RADIUS GREATER THAN 32'

GENERAL NOTES

SEE PLANS FOR OTHER BARRIER SYSTEM AND LOCATION SPECIFICS.

SEE SDD 14B42 FOR MORE INFORMATION ON BEAM GUARD INSTALLATION, PARTS, MATERIALS, AND INSTALLATION INFORMATION.

GALVANIZE PARTS AFTER FABRICATION.

WELDING TO FOLLOW CURRENT REQUIREMENTS OF THE AMERICAN WELDING SOCIETY STRUCTURAL WELDING CODE ANSI / AWS D1.1.

UNLESS NOTED OTHERWISE, ALL PLATES ARE FLAT AND FREE OF WARP.

UNLESS NOTED OTHERWISE, ALL EDGES ARE SMOOTH, STRAIGHT AND VERTICAL.

ALL CUTS AND HOLES, EXCEPT IN BEAM GUARD RAIL ARE TO BE MACHINED OR MACHINE FLAME CUT.

UNLESS NOTED OTHERWISE, CUT OR PROVIDE BOLTS THAT ARE ¼" TO ½" BEYOND THE NUT.

DRAWINGS ARE NOT TO SCALE.

1. RADIUS MEASURE FROM INSIDE OF RAIL. LENGTH OF BEAM GUARD SHORT RADIUS GUARD MEASURED ALONG TRAFFIC SIDE OF RAIL. RADIUS BETWEEN 8 FEET TO 150 FEET. SEE PLAN FOR REQUIRED RADIUS. BEAM GUARD RAIL IN RADIUS IS SHOP BENT. ODD RAIL LENGTH OR FIELD CUTS MAY BE REQUIRED.
2. CONTROLLED RELEASE TERMINAL (CRT) POSTS ARE USED IN THE RADIUS. CONTROLLED RELEASE TERMINAL (CRT) POSTS ARE SPACED 6' - 3". SEE PLAN FOR NUMBER OF CONTROLLED RELEASE (CRT) POSTS.
3. WITHIN RADIUS BEAM GUARD RAILS ARE NOT BOLTED TO POSTS. BEAM GUARD RAIL IS RESTED ON TOP OF LAG SCREW.
4. MINIMUM LENGTH OF BEAM GUARD ALONG SIDE ROAD OR DRIVEWAY TO INSTALL SHORT RADIUS TERMINAL. BEAM GUARD IS PAID WITH BEAM GUARD ITEM.
5. ODD LENGTH OF BEAM GUARD REQUIRED TO INSTALL SHORT RADIUS TERMINAL.
6. MINIMUM AMOUNT OF BEAM GUARD TO BE INSTALLED PRIOR TO TRANSITION TO RIGID BARRIER. ADDITIONAL BEAM GUARD, OR EAT. BEAM GUARD PAID FOR WITH BEAM GUARD ITEM. SEE PLANS FOR MORE DETAIL.
7. BEAM GUARD, EAT, OR TRANSITION TO RIGID BARRIER. SEE PLAN.
8. TOP OF BEAM GUARD BY THE RADIUS IS 27". HEIGHT OF BEAM GUARD IS 31" BY TRANSITION TO RIGID BARRIER, ADDITIONAL BEAM GUARD OR EAT.
9. ADDITIONAL BEAM GUARD, EAT OR TRANSITION TO RIGID BARRIER. BEAM GUARD SHOWN. SEE PLAN FOR DETAILS.
10. SHORT RADIUS TERMINAL (SEE OTHER DETAILS).
11. HEIGHT VARIES. SEE NOTE 8 AND 8.
12. BEAM GUARD RAIL SPLICE LOCATION. SPLICE LOCATION REQUIRES PART F1 AND F2. SEE SDD 14B42 FOR DETAILS.
13. SEE TABLE FOR VALUES.
14. MAXIMUM HEIGHT FOR CENTER OF HOLE IS ¾" ABOVE FINISHED GROUND ±1".
15. DRILL POST $^{15}/_{64}$" DIA. PILOT HOLE. DO NOT HAMMER LAG SCREW INTO POST.
16. SMALL SIGNS ON BREAKAWAY HARDWARE ARE ACCEPTABLE.
17. TOP OF RAIL HEIGHT IS 27" WHEN USING A SHORT RADIUS TERMINAL (CRT).

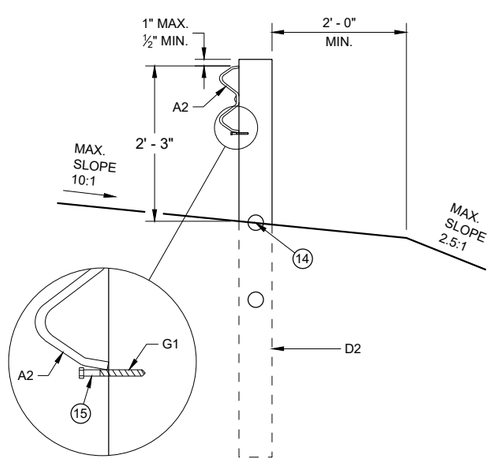

CONTROLLED RELEASE TERMINAL POST (CRT) IN RADIUS

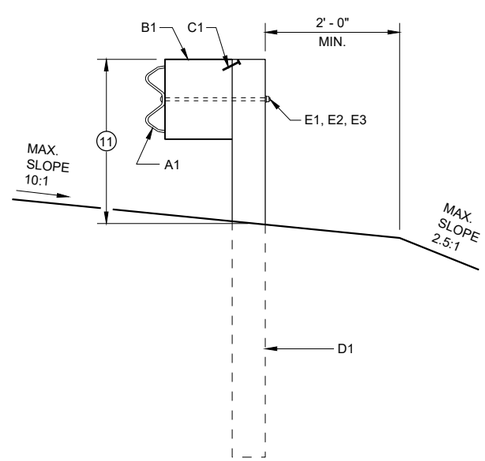

BEAM GUARD POSTS IN HEIGHT TRANSITION

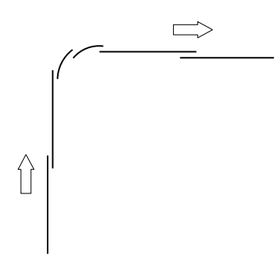

LAP SPLICE DETAIL

SHORT RADIUS BEAM GUARD (MGS) SHORT RADIUS TERMINAL (MGS)

STATE OF WISCONSIN
DEPARTMENT OF TRANSPORTATION

6

SDD 14B53 - 02a

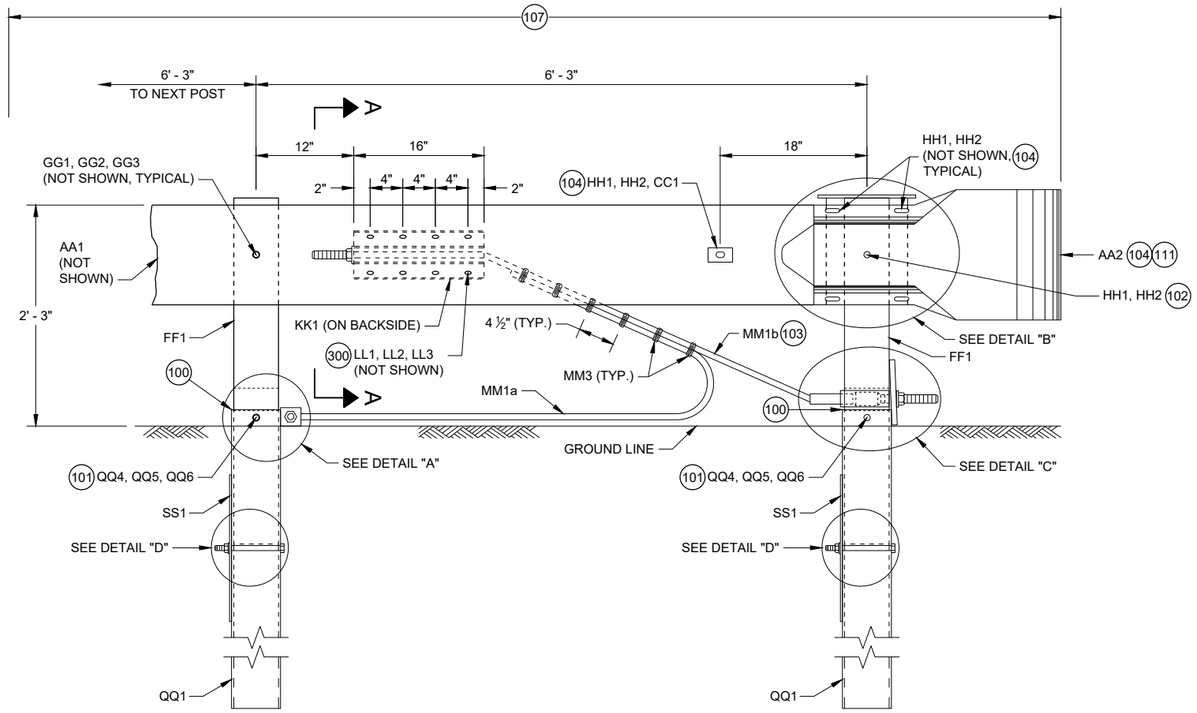

PROFILE VIEW

SHORT RADIUS TERMINAL

GENERAL NOTES

100 TOP OF FOUNDATION TUBE 2 INCHES MAXIMUM ABOVE FINISHED GROUND.

101 WASHERS REQUIRED BETWEEN BOLT HEAD AND FOUNDATION TUBE AND BETWEEN NUT AND FOUNDATION TUBE.

102 SPLICE BOLT AND NUT CONNECTS BEAM GUARD RAIL, W-BEAM SECTION BUFFER, AND STEEL PIPE ASSEMBLY. NO WASHER REQUIRED. SEE DETAIL "B".

103 CABLE IS TAUT.

104 ADJUST AA2 AND BB1 TO FIT.

105 BREAK POINT OF SHOULDER.

106 TACK WELD CABLE CONNECTOR TUBE PLATE TO CABLE CONNECTION TUBE. SEE DETAIL "A" PROFILE VIEW.

107 PAY LIMIT FOR BEAM GUARD.

108 SQUARE WASHER BETWEEN HEAD OF BOLT AND TRAFFIC FACE OF BEAM GUARD. ROUND WASHER REQUIRED BETWEEN NUT AND BB1.

109 CUT OR PROVIDE THREADED STUD THAT IS FLUSH WITH FACE OF BEAM GUARD RAIL KK1 (PLUS OR MINUS ½" TOLERANCE). DEBURR AFTER CUTTING.

110 SEE STEEL PIPE ASSEMBLY DETAILS.

111 ATTACH UU2 WITH UU3. SHOP APPLY UU1 TO UU2.

112 FOUR (4) HH1 AND HH2 REQUIRED TO ATTACH AA1 TO AA2.

113 FOUR (4) HH1 AND HH2 REQUIRED TO ATTACH AA2 TO BB1.

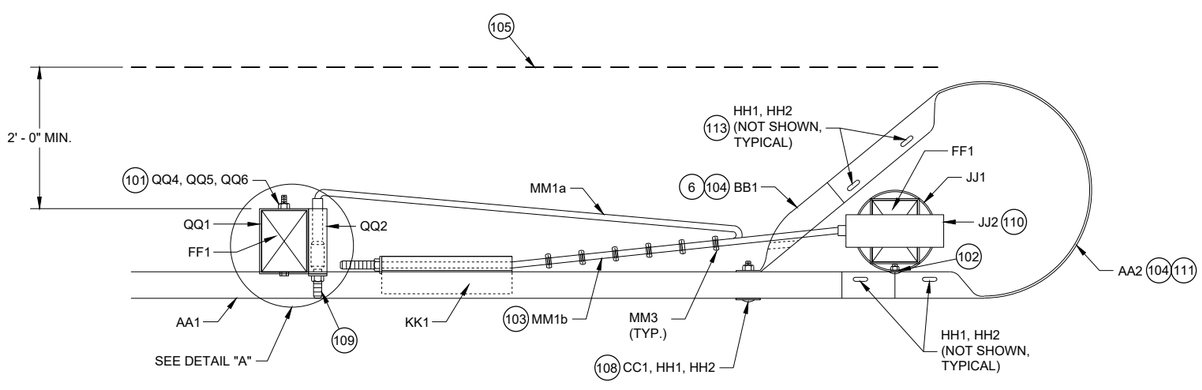

TOP VIEW

SHORT RADIUS TERMINAL

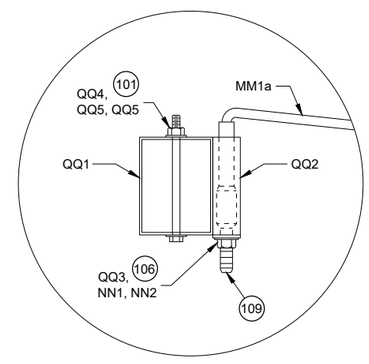

TOP VIEW

DETAIL "A"

(WOOD BREAKAWAY AND BEAM GUARD RAIL POSTS NOT SHOWN)

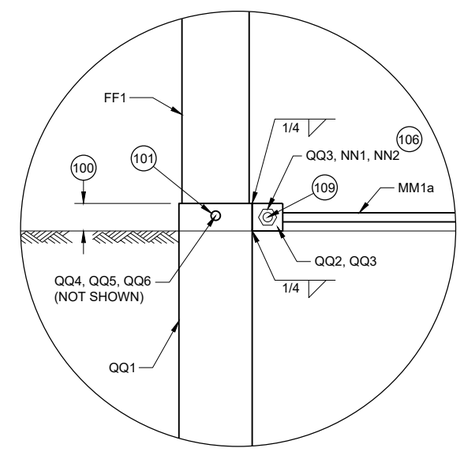

PROFILE VIEW

DETAIL "A"

6

6

SDD 14B53 - 02b

SDD 14B53 - 02b

SHORT RADIUS BEAM GUARD (MGS) SHORT RADIUS TERMINAL (MGS)

STATE OF WISCONSIN
DEPARTMENT OF TRANSPORTAT

GENERAL NOTES

(200) TWO (2) NAILS SPACED 4 INCHES CENTER TO CENTER.

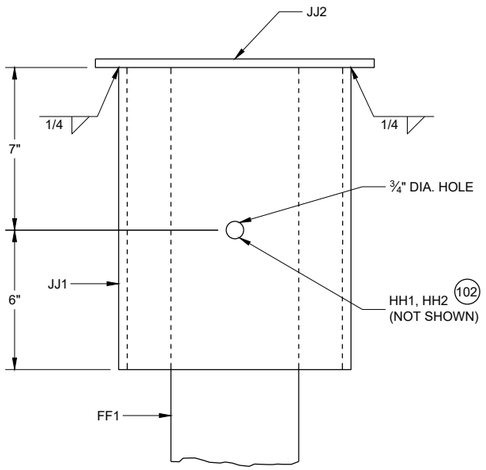

PROFILE VIEW

DETAIL "B"
STEEL PIPE ASSEMBLY
(BEAM GUARD AND W BEAM END SECTION NOT SHOWN)

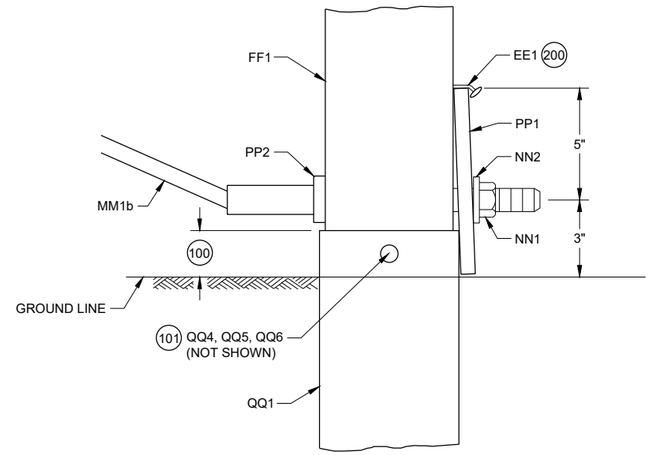

PROFILE VIEW

DETAIL "C"

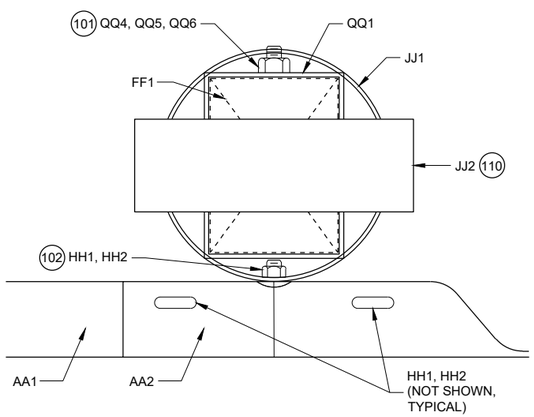

PLAN VIEW

DETAIL "B"
STEEL PIPE ASSEMBLY

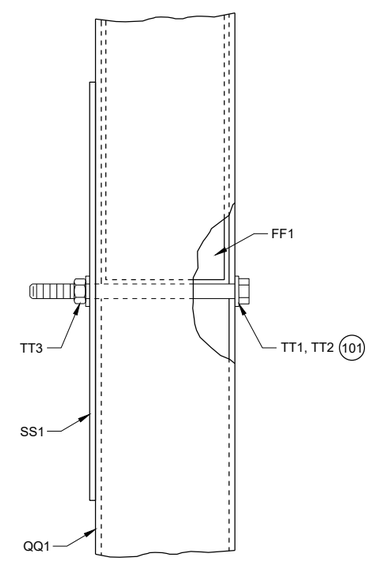

PROFILE VIEW

DETAIL "D"

SHORT RADIUS BEAM GUARD (MGS) SHORT RADIUS TERMINAL (MGS)

STATE OF WISCONSIN
DEPARTMENT OF TRANSPORTAT

6

SDD 14B53 - 02c

GENERAL NOTES

300 WASHERS REQUIRED BETWEEN BOLT HEAD AND BEAM GUARD RAIL AND BETWEEN NUT AND ANCHOR BRACKET. EIGHT (8) LL1 AND LL3 REQUIRED. SIXTEEN (16) LL2 REQUIRED.

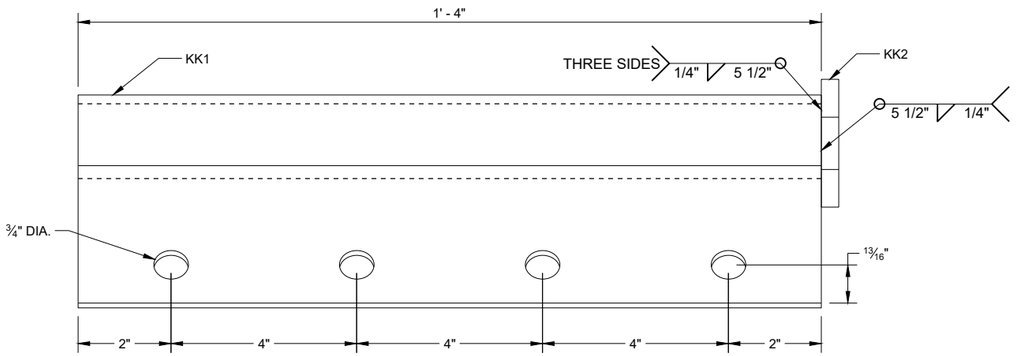

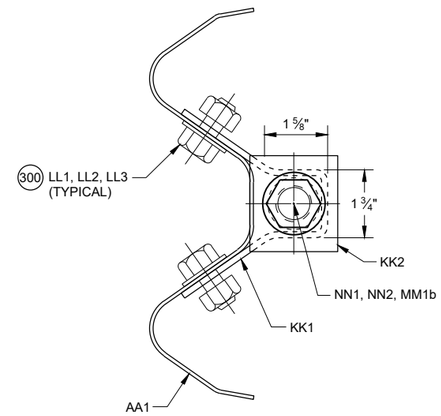

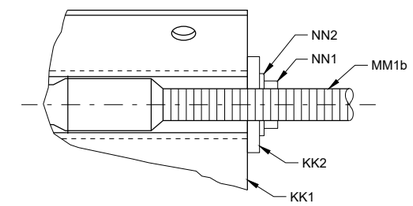

SECTION A - A

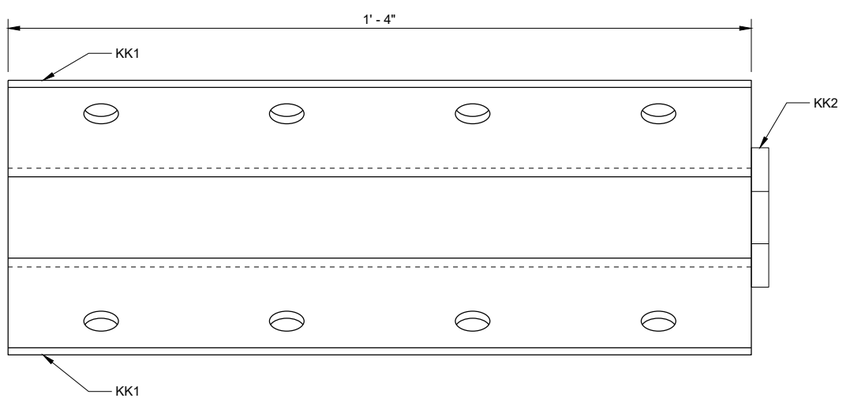

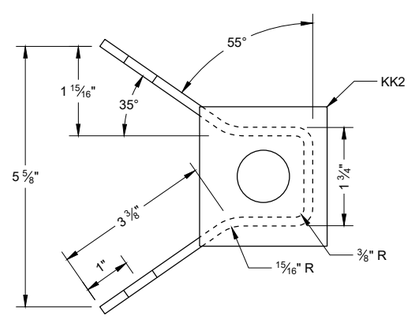

ANCHOR BRACKET (KK1, KK2)

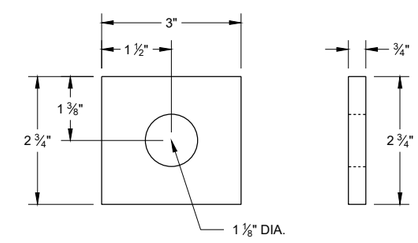

ANCHOR BRACKET BEARING PLATE (KK2)

6

6

SDD 14B53 - 02d

SDD 14B53 - 02d

SHORT RADIUS BEAM GUARD (MGS) SHORT RADIUS TERMINAL (MGS)

STATE OF WISCONSIN
DEPARTMENT OF TRANSPORTAT

GENERAL NOTES

400 CROSS SECTION OF PART IS TO FIT OVER AA1 .

401 CROSS SECTION OF PART IS TO FIT OVER OR UNDER AA1 .

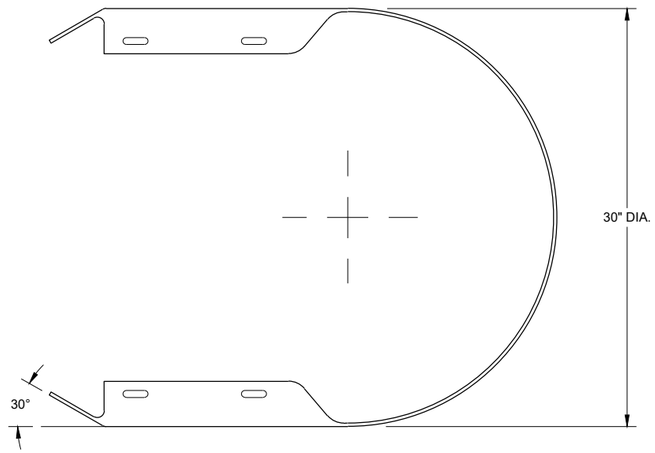

TOP VIEW

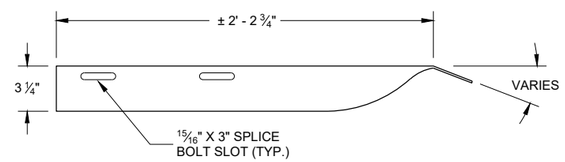

TOP VIEW

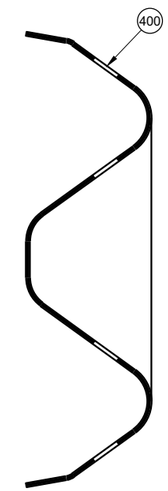

SECTION B -B

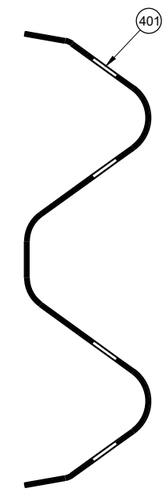

SECTION C -C

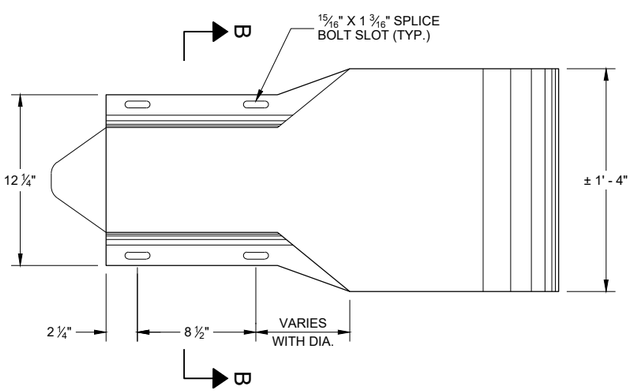

PROFILE VIEW

W BEAM
END SECTION BUFFER (AA2)

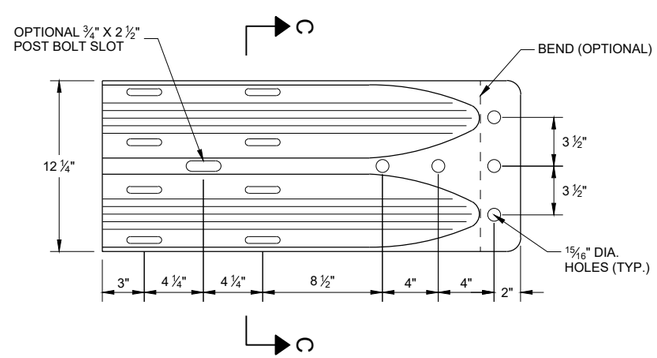

PROFILE VIEW

W BEAM
TERMINAL CONNECTOR (BB1)

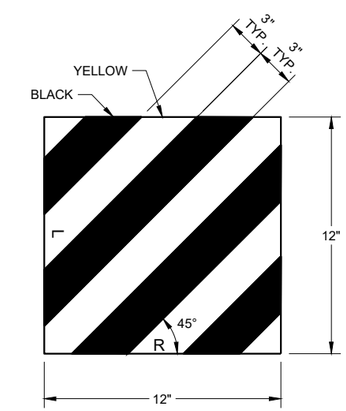

REFLECTIVE SHEETING (UU1, UU2)

SHORT RADIUS BEAM GUARD (MGS) SHORT RADIUS TERMINAL (MGS)

STATE OF WISCONSIN
DEPARTMENT OF TRANSPORTAT

6

6

SDD 14B53 - 02e

SDD 14B53 - 02e

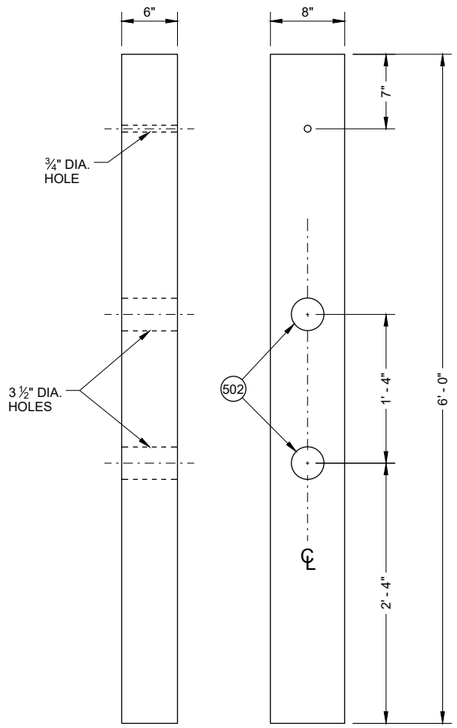

FRONT VIEW SIDE VIEW

CONTROLLED RELEASE POST (CRT) (DD2)

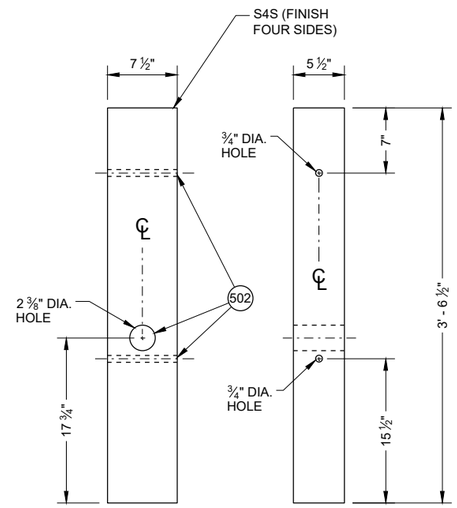

FRONT VIEW SIDE VIEW

WOOD BREAKAWAY POST (FF1)

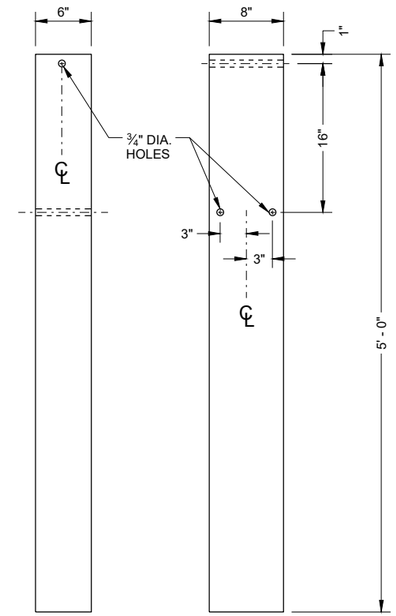

FRONT VIEW SIDE VIEW

FOUNDATION TUBE (QQ1) 500

GENERAL NOTES

500 SEE DETAIL "D" FOR LOCATION AND ATTACHMENT OF SS1.

501 FOR MM1a THREADED STUD ONLY REQUIRED ON ONE END. SWAGED FITTING REQUIRED.

502 LOCATE HOLES ON THE CENTERLINE OF THE SIDE OF THE POST.

503 MM1a MAY HAVE ONE THREADED STUD 4 INCHES LONG. SEE NOTE 109.

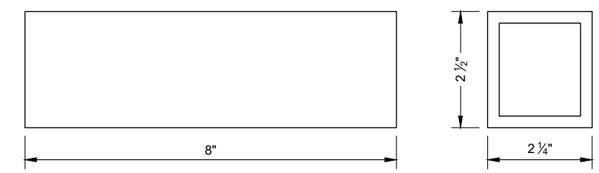

FOUNDATION TUBE - ANCHOR CABLE TUBE (QQ2)

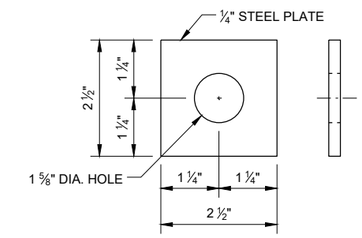

ANCHOR CABLE TUBE END PLATE (QQ3)

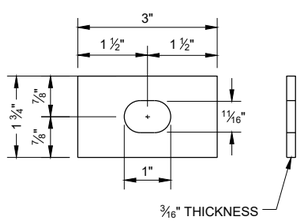

RECTANGULAR PLATE WASHER (CC1)

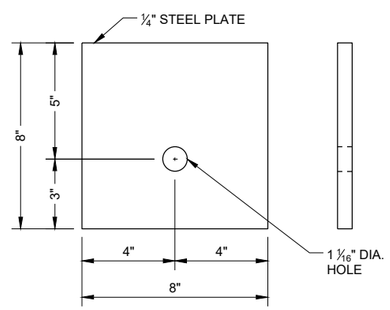

BEARING PLATE (PP1)

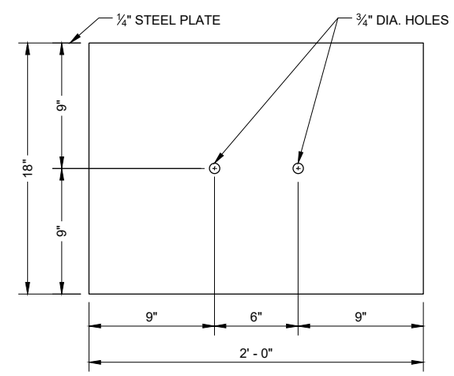

SOIL PLATE (SS1)

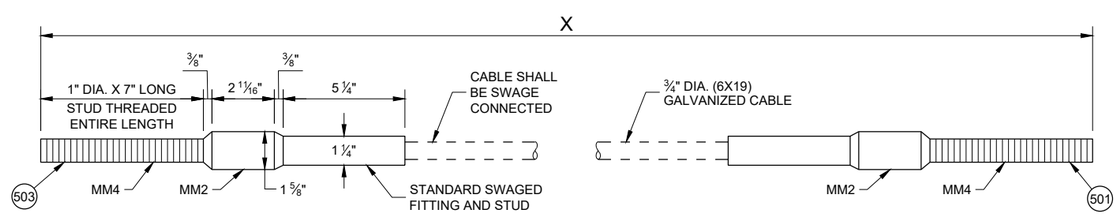

CABLE ASSEMBLY (MM1a, MM1b)

"X" LENGTH

MM1b	9' - 0"
MM1b	6' - 8"

SHORT RADIUS BEAM GUARD (MGS) SHORT RADIUS TERMINAL (MGS)

STATE OF WISCONSIN
DEPARTMENT OF TRANSPORTAT

6

SDD 14B53 - 02f

BILL OF MATERIALS - SHORT RADIUS BEAM GUARD (MGS)

PART	DESCRIPTION	MATERIALS SPECIFICATIONS	NOTES
A1	BEAM GUARD RAIL	AASHTO M180, CLASS A, TYPE 2	
		APPROVED PRODUCER	
A2	BEAM GUARD RAIL - SHOP BENT	INDICATE ON BACK OF RAIL THE RADIUS THAT RAIL WAS BENT TO. SHOP BEND RADIUS IS TO THE NEAREST FOOT. FOLLOW AASHTO M180 ON HOW TO MARK RADIUS INFORMATION.	
		AASHTO M180, CLASS A, TYPE 2	
		APPROVED PRODUCER	
B1	BLOCK - WOOD	WISDOT SPEC. 614	SEE SDD 14B42
C1	NAIL	ASTM A153 HOT DIP CLASS D	
		ASTM F1667 TYPE 1 STYLE 12 (16 DOUBLE HEAD)	
D1	POST-STRONG POST-WOOD	WISDOT SPEC. 614	SEE SDD 14B42
D2	POST-CRT-WOOD	WISDOT SPEC. 614	
E1	POST BOLT	ASTM A307 GRADE A OR SAE J429 GRADE 2	⅝" DIA. SEE SDD 14B42 FOR BOLT GEOMETRY
		AASHTO M180	
		GALV. HOT DIP TO AASHTO M232 CLASS C / ASTM A153 CLASS C / ASTM F2329 OR GALV. MECHANICALLY TO AASHTO M298 CLASS 50, TYPE 1 / ASTM B695 CLASS 50, TYPE 1	
		UNC	
E2	POST BOLT - WASHER	ASTM F436 TYPE 1 (HARDEN TYPICALLY USED WITH STEEL) OR ASTM F844 (UNHARDENED TYPICALLY WITH WOOD)	⅝" DIA.
		GALV. AASHTO M111 / ASTM A 123 OR GALV. HOT DIP. TO AASHTO M232 CLASS C / ASTM A153 CLASS C / ASTM F2329	
E3	POST BOLT - NUT	AASHTO M180 DOUBLE RECESSED HEAVY HEX HEAD	⅝" DIA. SEE SDD 14B42 FOR BOLT GEOMETRY
		GALV. HOT DIP TO AASHTO M232 CLASS C / ASTM A153 CLASS C / ASTM F2329 OR GALV. MECHANICALLY TO AASHTO M298 CLASS 50, TYPE 1 / ASTM B695 CLASS 50, TYPE 1	
		UNC	
		OVER TAPPED NUTS OVER-SIZE AS SPECIFIED IN AASHTO 291 / ASTM A 563	
		ASTM A563 GRADE A HEAVY HEX HEAD	
F1	SPLICE BOLT	GALV. HOT DIP TO AASHTO M232 CLASS C / ASTM A153 CLASS C / ASTM F2329 OR GALV. MECHANICALLY TO AASHTO M298 CLASS 50, TYPE 1 / ASTM B695 CLASS 50, TYPE 1	⅝" DIA. SEE SDD 14B42 FOR BOLT GEOMETRY
		ASTM A307 GRADE A OR SAE J429 GRADE 2	
		UNC	
		AASHTO M180	

PART	DESCRIPTION	MATERIALS SPECIFICATIONS	NOTES
F2	SPLICE BOLT - NUT	ASTM A563 GRADE A	⅝" DIA. SEE SDD 14B42 FOR BOLT GEOMETRY
		AASHTO M180 DOUBLE RECESSED HEAVY HEX HEAD	
		GALV. HOT DIP TO AASHTO M232 CLASS C/ASTM A153 CLASS C/ASTM F2329 OR GALV. MECHANICALLY TO AASHTO M298 CLASS 50, TYPE 1/ASTM B695 CLASS 50, TYPE 1	
		OVER TAPPED NUTS OVER-SIZE AS SPECIFIED IN AASHTO 291 / ASTM A 563	
		UNC	
G1	LAG SCREW	ASTM A308 GRADE A ASTM A153 CLASS D	½" DIA. 6" LONG
H1	DELINEATOR - BEAM GUARD		SEE SDD 14B42 FOR MORE INFORMATION
H2	DELINEATION - SHEETING	YELLOW OR WHITE	
		WISDOT SPEC 637 TYPE SH	
		APPROVED PRODUCT LIST	
J1	FOUNDATION BACKFILL	STANDARD SPEC. 614	
AA1	BEAM GUARD RAIL - PUNCHED	AASHTO M180, CLASS A, TYPE 2	
		APPROVED PRODUCER	
AA2	BEAM GUARD RAIL - END SECTION BUFFER	AASHTO M180, CLASS A, TYPE 2	
		APPROVED PRODUCER	
BB1	BEAM GUARD RAIL - TERMINAL CONNECTOR MODIFIED	AASHTO M180, CLASS A, TYPE 2	
		APPROVED PRODUCER	
CC1	SHORT RADIUS - SQUARE WASHER	AASHTO M180	
		GALV. AASHTO M111 / ASTM A123	
EE1	NAIL	ASTM A153 HOT DIP CLASS D	
		ASTM F1667 TYPE 1 STYLE 12 (16 DOUBLE HEADED)	
FF1	POST - BCT - WOOD	S4S FINISH ON 4 SIDES	
		WISDOT SPEC. 614	
GG1	POST BOLT	ASTM A307 GRADE A OR SAE J429 GRADE 2	⅜" DIA. SEE SDD 14B42 FOR BOLT GEOMETRY
		AASHTO M180	
		GALV. HOT DIP TO AASHTO M232 CLASS C/ASTM A153 CLASS C/ASTM F2329 OR GALV. MECHANICALLY TO AASHTO M298 CLASS 50, TYPE 1/ASTM B695 CLASS 50, TYPE 1	
		UNC	
GG2	POST BOLT - WASHER	ASTM F436 TYPE 1 (HARDEN TYPICALLY USED WITH STEEL) OR ASTM F844 (UNHARDENED TYPICALLY WITH WOOD)	⅜" DIA.
		GALV. AASHTO M111 / ASTM A 123 OR GALV. HOT DIP. TO AASHTO M232 CLASS C/ASTM A153 CLASS C / ASTM F2329	

SHORT RADIUS BEAM GUARD (MGS) SHORT RADIUS TERMINAL (MGS)

STATE OF WISCONSIN
DEPARTMENT OF TRANSPORTA

6
SDD 14B53 - 02g

BILL OF MATERIALS - SHORT RADIUS BEAM GUARD (MGS)

PART	DESCRIPTION	MATERIALS SPECIFICATIONS	NOTES
GG3	POST BOLT - NUT	ASTM A563 GRADE A	⅜" DIA. SEE 14B42 FOR GEOMETRY
		AASHTO M180 DOUBLE RECESSED HEAVY HEX HEAD	
		GALV. HOT DIP TO AASHTO M232 CLASS C / ASTM A153 CLASS C / ASTM F2329 OR GALV. MECHANICALLY TO AASHTO M298 CLASS 50, TYPE 1 / ASTM B695 CLASS 50, TYPE 1	
		UNC	
		OVER TAPPED NUTS OVER-SIZE AS SPECIFIED IN AASHTO 291 / ASTM A 563	
		ASTM A563 GRADE A HEAVY HEX HEAD	
HH1	SPLICE BOLT	GALV. HOT DIP TO AASHTO M232 CLASS C / ASTM A153 CLASS C / ASTM F2329 OR GALV. MECHANICALLY TO AASHTO M298 CLASS 50, TYPE 1 / ASTM B695 CLASS 50, TYPE 1	⅜" DIA. SEE SDD 14B42 FOR BOLT GEOMETRY
		ASTM A307 GRADE A OR SAE J429 GRADE 2	
		UNC	
		AASHTO M180 HEAD GEOMETRY	
HH2	SPLICE BOLT - NUT	ASTM A563 GRADE A	⅜" DIA. SEE SDD 14B42 FOR BOLT GEOMETRY
		AASHTO M180 DOUBLE RECESSED HEAVY HEX HEAD	
		GALV. HOT DIP TO AASHTO M232 CLASS C / ASTM A153 CLASS C / ASTM F2329 OR GALV. MECHANICALLY TO AASHTO M298 CLASS 50, TYPE 1 / ASTM B695 CLASS 50, TYPE 1	
		OVER TAPPED NUTS OVER-SIZE AS SPECIFIED IN AASHTO 291 / ASTM A 563	
		UNC	
JJ1	PIPE - STEEL	ASTM A53 GALVANIZED GRADE B SCHEDULE 40	10" O.D.
JJ2	TOP PLATE	ASTM A36 MIN. STRENGTH 36 KSI, OR ASTM A529 MAX. STRENGTH 50 KSI, OR ASTM A572 MAX STRENGTH 50 KSI OR ASTM A709 MAX STRENGTH 50 KSI OR ASTM A992 MAX STRENGTH 50 KSI	DIMENSIONS ⅜" X 4" X 1' - 0"
		GALV. AASHTO M111 / ASTM A123	
KK1	ANCHOR BRACKET	ASTM A36 MIN. STRENGTH 36 KSI, OR ASTM A529 MAX. STRENGTH 50 KSI, OR ASTM A572 MAX STRENGTH 50 KSI OR ASTM A709 MAX STRENGTH 50 KSI OR ASTM A992 MAX STRENGTH 50 KSI	
		GALV. AASHTO M111 / ASTM A123	
KK2	ANCHOR BRACKET - BEARING PLATE	ASTM A36 MIN. STRENGTH 36 KSI, OR ASTM A529 MAX. STRENGTH 50 KSI, OR ASTM A572 MAX STRENGTH 50 KSI OR ASTM A709 MAX STRENGTH 50 KSI OR ASTM A992 MAX STRENGTH 50 KSI	
		GALV. AASHTO M111 / ASTM A123	
LL1	ANCHOR BRACKET - BOLT	ASTM A307 GRADE B HEAVY HEX HEAD OR SAE J429 GRADE 2 HEAVY HEX HEAD	⅝" DIA.
		GALV. HOT DIP TO AASHTO M232 CLASS C / ASTM A153 CLASS C / ASTM F2329 OR GALV. MECHANICALLY TO AASHTO M298 CLASS 50, TYPE 1 / ASTM B695 CLASS 50, TYPE 1	
		UNC	

PART	DESCRIPTION	MATERIALS SPECIFICATIONS	NOTES
LL2	ANCHOR BRACKET - WASHER	ASTM F436 TYPE 1 (HARDEN WASHER ONLY)	⅝" DIA.
		GALV. AASHTO M111 / ASTM A123 OR GALV. HOT DIP TO AASHTO M232 CLASS C / ASTM A153 CLASS C / ASTM F2329	
LL3	ANCHOR BRACKET - NUT	ASTM A563 GRADE A	⅝" DIA.
		GALV. HOT DIP TO AASHTO M232 CLASS C / ASTM A153 CLASS C / ASTM F2329 OR GALV. MECHANICALLY TO AASHTO M298 CLASS 50, TYPE 1 / ASTM B695 CLASS 50, TYPE 1	
		OVER TAPPED NUTS OVER-SIZE AS SPECIFIED IN AASHTO 291 / ASTM A 563	
		UNC	
MM1a	ANCHOR CABLE	AASHTO M30 / ASTM A741 INDEPENDENT WIRE CORE (IWRC) OR WIRE STRAND CORE (WCS), IMPROVED PLOW STEEL (IPS), 6X19, TYPE II OR IIc CLASS C ZINC COATED	
MM1b	ANCHOR CABLE	AASHTO M30 / ASTM A741 INDEPENDENT WIRE CORE (IWRC) OR WIRE STRAND CORE (WCS), IMPROVED PLOW STEEL (IPS), 6X19, TYPE II OR IIc CLASS C ZINC COATED	
MM2	ANCHOR CABLE - SWAGE FITTING	ASTM A576 GRADE 1035	
		SWAGE FITTINGS ARE TO BE FACTORY SWEDGED. WITH A BREAKING STRENGTH 40,000 LBS.	
		GALV. AASHTO M111 / ASTM A123	
		ASME B30.26 FORGED, CAST, OR DIE STAMPED WITH THE FOLLOWING INTO CONNECTION: NAME OF MANUFACTURER OR TRADEMARK OF CONNECTION'S MANUFACTURER, SIZE OR RATED LOAD, GRADE.	
MM3	WIRE ROPE CABLE CLAMPS	FF-C-450D TYPE 1 CLASS 1	¾"
		ASTM A153 HOT DIP CLASS D	
MM4	ANCHOR CABLE - SWAGE FITTING - STUD	ASTM F3125 GRADE A325 TYPE 1 OR SAE GRADE 5 OR ASTM A449 TYPE 1 HEAVY HEX HEAD	
		GALV. HOT DIP TO AASHTO M232 CLASS C / ASTM A153 CLASS C / ASTM F2329 OR GALV. MECHANICALLY TO AASHTO M298 CLASS 50, TYPE 1 / ASTM B695 CLASS 50, TYPE 1	
		UNC	
NN1	ANCHOR CABLE - NUT	ASTM A563 GRADE A	1" DIA.
		AASHTO M180 DOUBLE RECESSED HEAVY HEX HEAD	
		GALV. HOT DIP TO AASHTO M232 CLASS C / ASTM A153 CLASS C / ASTM F2329 OR GALV. MECHANICALLY TO AASHTO M298 CLASS 50, TYPE 1 / ASTM B695 CLASS 50, TYPE 1	
		OVER TAPPED NUTS OVER-SIZE AS SPECIFIED IN AASHTO 291 / ASTM A 563	
		UNC	
NN2	ANCHOR CABLE - NUT - WASHER	ASTM F436 TYPE 1 (HARDEN WASHER ONLY)	1" DIA.
		GALV. AASHTO M111 / ASTM A123 OR GALV. HOT DIP TO AASHTO M232 CLASS C / ASTM A153 CLASS C / ASTM F2329	

6

SDD 14B53 - 02h

SHORT RADIUS BEAM GUARD (MGS) SHORT RADIUS TERMINAL (MGS)

STATE OF WISCONSIN
DEPARTMENT OF TRANSPORTAT

6

SDD 14B53 - 02h

BILL OF MATERIALS - SHORT RADIUS BEAM GUARD (MGS)

PART	DESCRIPTION	MATERIALS SPECIFICATIONS	NOTES
PP1	BEARING PLATE AT POST	ASTM A36 MIN. STRENGTH 36 KSI, OR ASTM A529 MAX. STRENGTH 50 KSI, OR ASTM A572 MAX STRENGTH 50 KSI OR ASTM A709 MAX STRENGTH 50 KSI OR ASTM A992 MAX STRENGTH 50 KSI	
		GALV. AASHTO M111 / ASTM A123	
PP2	PIPE - STEEL	ASTM A53 GALVANIZED GRADE B SCHEDULE 40	2" DIA. x 6" LONG
QQ1	FOUNDATION TUBE	ASTM A500 GRADE B	8" X 6" X 3/16"
		GALV. AASHTO M111 / ASTM A123	
QQ2	SHORT RADIUS - FOUNDATION TUBE - ANCHOR CABLE - TUBE	ASTM A500 GRADE B	DIMENSIONS 2 1/2" X 2 1/4" X 1/4" X 8"
		GALV. AASHTO M111 / ASTM A123	
QQ3	SHORT RADIUS - SOIL TUBE - ANCHOR CABLE - TUBE - END PLATE	ASTM A36 MIN. STRENGTH 36 KSI, OR ASTM A529 MAX. STRENGTH 50 KSI, OR ASTM A572 MAX STRENGTH 50 KSI OR ASTM A709 MAX STRENGTH 50 KSI OR ASTM A992 MAX STRENGTH 50 KSI	DIMENSIONS 2 1/2" X 2 1/2" X 1/4"
		GALV. AASHTO M111 / ASTM A123	
QQ4	GROUND STRUT AND YOKE - BOLT	GALV. HOT DIP TO AASHTO M232 CLASS C / ASTM A153 CLASS C / ASTM F2329 OR GALV. MECHANICALLY TO AASHTO M298 CLASS 50, TYPE 1 / ASTM B695 CLASS 50, TYPE 1	5/8 DIA.
		ASTM A307 GRADE B HEAVY HEX HEAD OR SAE J429 GRADE 2 HEAVY HEX HEAD	
		UNC	
QQ5	GROUND PLATE AND YOKE - WASHER	ASTM F436 TYPE 1 (HARDEN WASHER ONLY)	5/8 DIA.
		GALV. AASHTO M111 / ASTM A123 OR GALV. HOT DIP TO AASHTO M232 CLASS C / ASTM A153 CLASS C / ASTM F2329	
QQ6	GROUND STRUT AND YOKE - NUT	HEAVY HEX	5/8 DIA.
		UNC	
		ASTM A563 GRADE A	
		OVER TAPPED NUTS AS SPECIFIED IN AASHTO 291 / ASTM A 563	
		GALV. HOT DIP TO AASHTO M232 CLASS C / ASTM A153 CLASS C / ASTM F2329 OR GALV. MECHANICALLY TO AASHTO M298 CLASS 50, TYPE 1 / ASTM B695 CLASS 50, TYPE 1	

PART	DESCRIPTION	MATERIALS SPECIFICATIONS	NOTES
SS1	SOIL PLATE	ASTM A36 MIN. STRENGTH 36 KSI, OR ASTM A529 MAX. STRENGTH 50 KSI, OR ASTM A572 MAX STRENGTH 50 KSI OR ASTM A709 MAX STRENGTH 50 KSI OR ASTM A992 MAX STRENGTH 50 KSI	
		GALV. AASHTO M111 / A123	
TT1	SOIL PLATE - BOLT	ASTM A307 GRADE B HEAVY HEX HEAD OR SAE J429 GRADE 2 HEAVY HEX HEAD	5/8 DIA.
		GALV. HOT DIP TO AASHTO M232 CLASS C / ASTM A153 CLASS C / ASTM F2329 OR GALV. MECHANICALLY TO AASHTO M298 CLASS 50, TYPE 1 / ASTM B695 CLASS 50, TYPE 1	
		UNC	
TT2	SOIL PLATE - WASHER	ASTM F436 TYPE 1 (HARDEN WASHER ONLY)	5/8 DIA.
		GALV. AASHTO M111 / ASTM A123 OR GALV. HOT DIP TO AASHTO M232 CLASS C / ASTM A153 CLASS C / ASTM F2329	
TT3	SOIL PLATE - NUT	GALV. HOT DIP TO AASHTO M232 CLASS C / ASTM A153 CLASS C / ASTM F2329 OR GALV. MECHANICALLY TO AASHTO M298 CLASS 50, TYPE 1 / ASTM B695 CLASS 50, TYPE 1	5/8 DIA.
UU1	OBJECT MARKER - SHEETING	MUTCD / WISDOT OBJECT MARKER TYPE 3	PATTERN AND COLOR FOR SHEETING. SHEETING TYPE FOR MARKER.
		WISDOT SPEC 637 TYPE F	
		APPROVED PRODUCT LIST	
UU2	OBJECT MARKER - ALUMINUM PLATE	WISDOT SPEC 637 ALUMINUM PLATE	MATERIAL AND THICKNESS OF MATERIALS
UU3	OBJECT MARKER - SCREWS	STAINLESS SELF-TAPPING SCREWS	
VV1	FOUNDATION BACKFILL	WISDOT SPEC 614	

6

6

SHORT RADIUS BEAM GUARD (MGS) SHORT RADIUS TERMINAL (MGS)

STATE OF WISCONSIN
DEPARTMENT OF TRANSPORTATION

APPROVED
May 2022 — DATE
/S/ Rodney Taylor — ROADWAY STANDARDS DEVE ENGINEER
FHWA

SDD 14B53 - 02i

GENERAL NOTES

DETAILS OF CONSTRUCTION, MATERIALS AND WORKMANSHIP NOT SHOWN ON THIS DRAWING SHALL CONFORM TO THE PERTINENT REQUIREMENTS OF THE STANDARD SPECIFICATIONS AND THE APPLICABLE SPECIAL PROVISIONS.

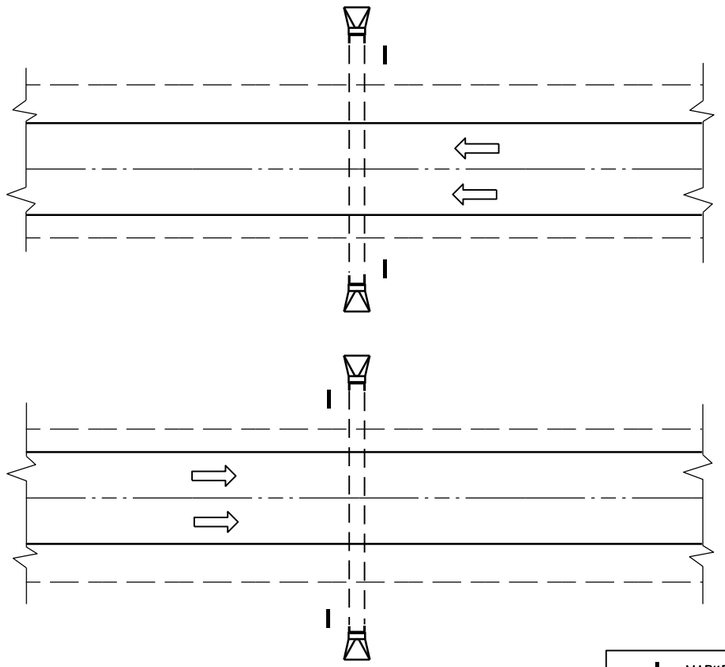

PLAN VIEW

DIVIDED HIGHWAY

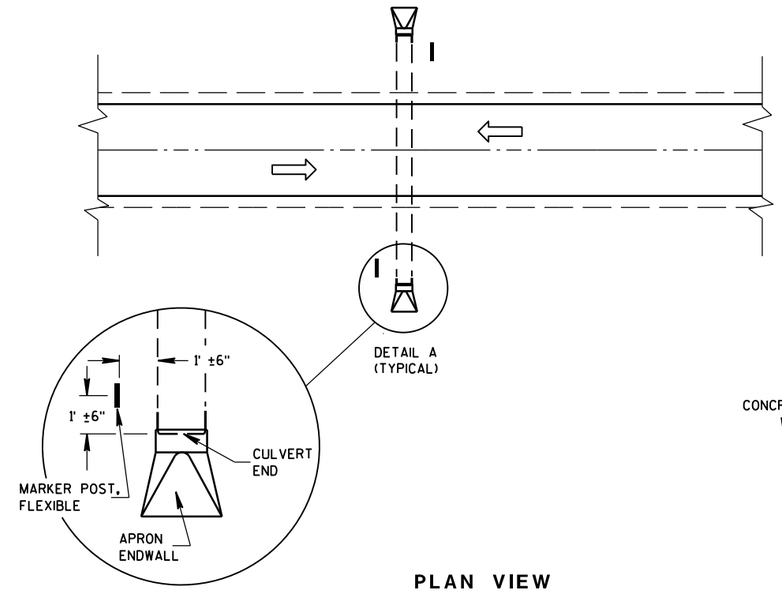

DETAIL A
(TYPICAL)

PLAN VIEW

UNDIVIDED HIGHWAY

MARKER POST, FLEXIBLE

DIRECTION OF TRAFFIC FLOW

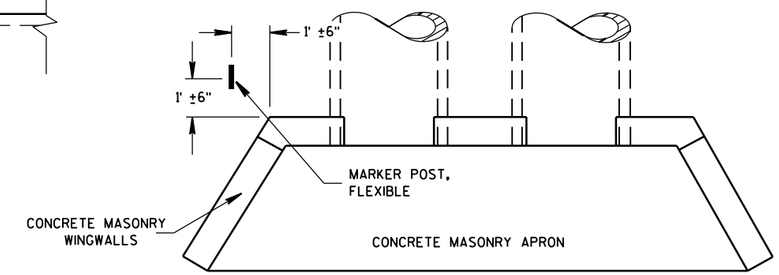

PLAN VIEW

CONCRETE MASONRY ENDWALLS FOR CULVERT PIPE AND PIPE ARCH

FLEXIBLE MARKER POST LOCATION

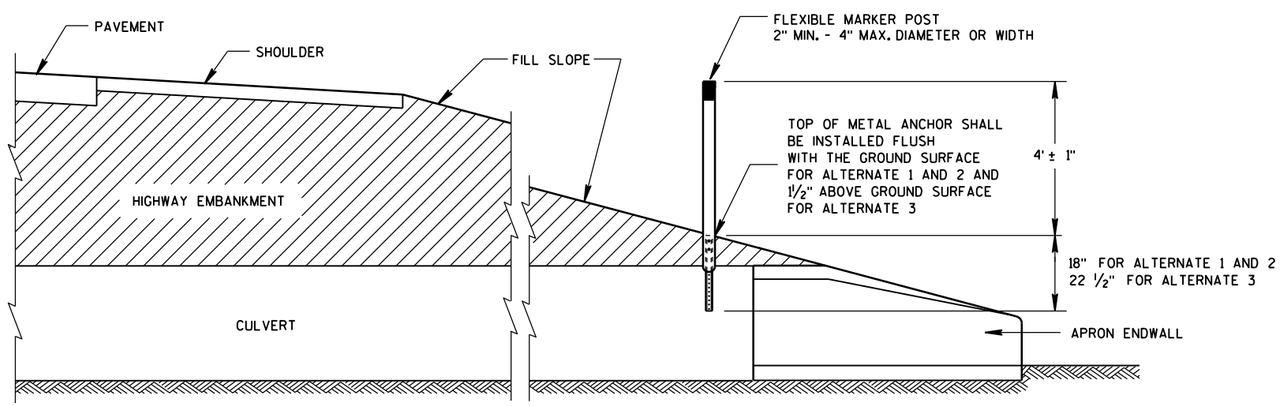

CROSS SECTION

FLEXIBLE MARKER POST

FLEXIBLE MARKER POST FOR CULVERT END

STATE OF WISCONSIN
DEPARTMENT OF TRANSPOR

6

6

S.D.D. 15 A 3-2a

S.D.D. 15 A 3-2a

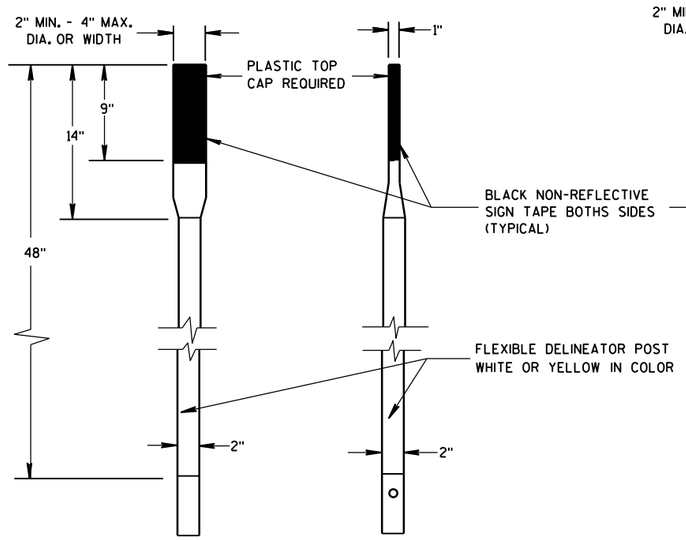

FRONT VIEW SIDE VIEW

ALTERNATE 1

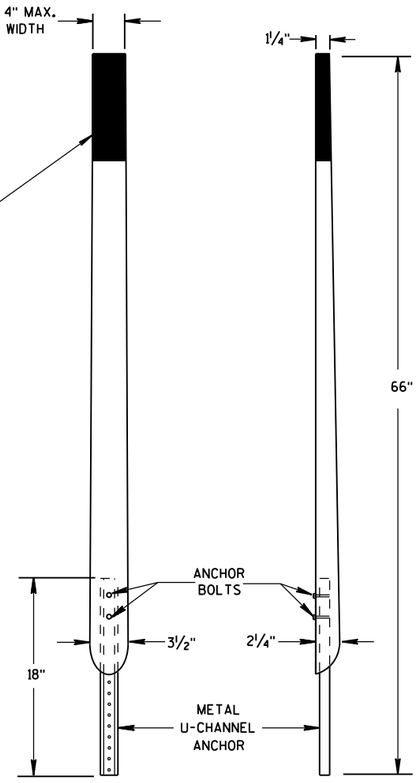

FRONT VIEW SIDE VIEW

ALTERNATE 2

FLEXIBLE MARKER POSTS

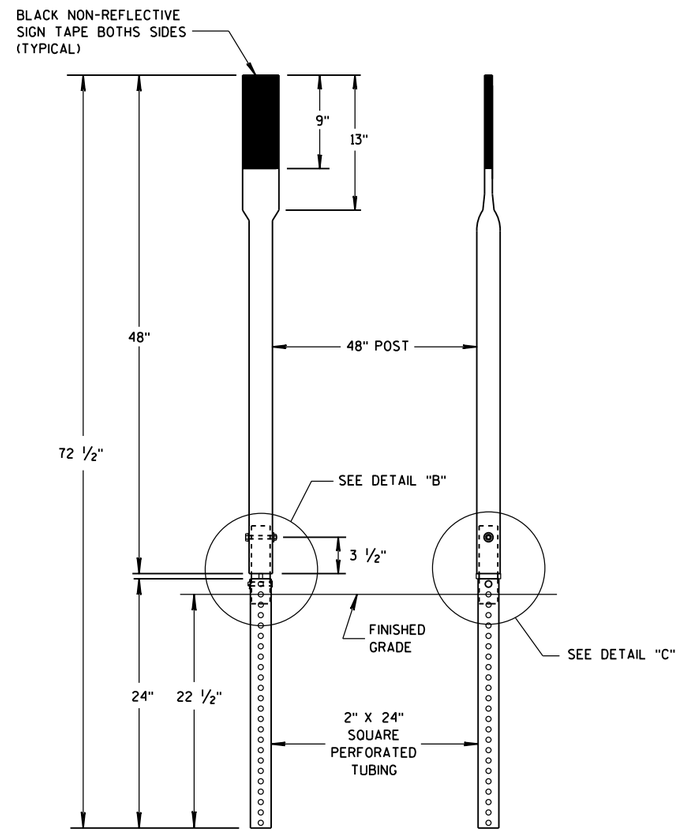

FRONT VIEW SIDE VIEW

ALTERNATE 3

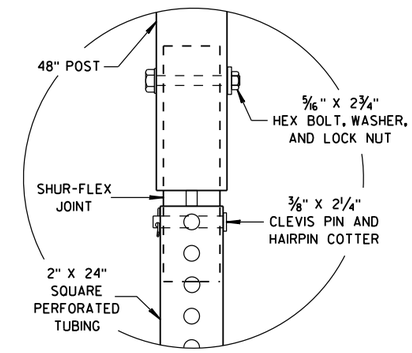

DETAIL B

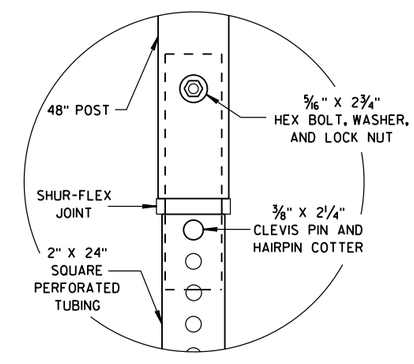

DETAIL C

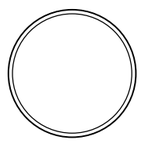

SECTION A-A

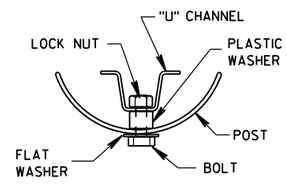

SECTION B-B

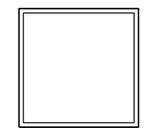

SECTION C-C

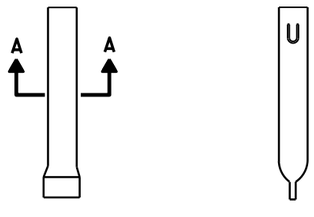

FRONT VIEW SIDE VIEW

ALTERNATE 1

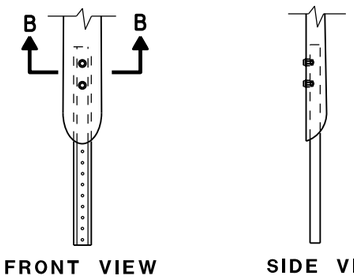

FRONT VIEW SIDE VIEW

ALTERNATE 2

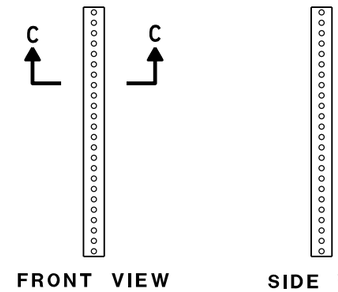

FRONT VIEW SIDE VIEW

ALTERNATE 3

FLEXIBLE MARKER POST ANCHORS

FLEXIBLE MARKER POST
FOR CULVERT END

STATE OF WISCONSIN
DEPARTMENT OF TRANSPORTATION

APPROVED
10/1/2012 /S/ Travis Feltes
DATE STATE TRAFFIC ENGINEER
FHWA

6

6

S.D.D. 15 A 3-2b

S.D.D. 15 A 3-2b

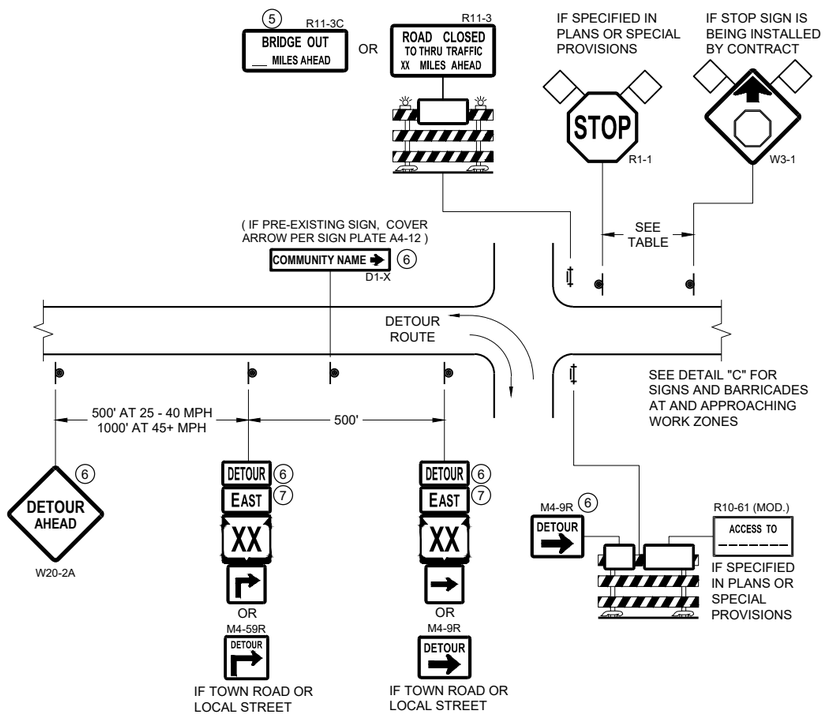

DETAIL A
MAINLINE CLOSURE WITH POSTED DETOUR

WORK ZONE GREATER THAN OR EQUAL TO ½ MILE FROM DETOUR ROUTE (1000 FEET IF URBAN)

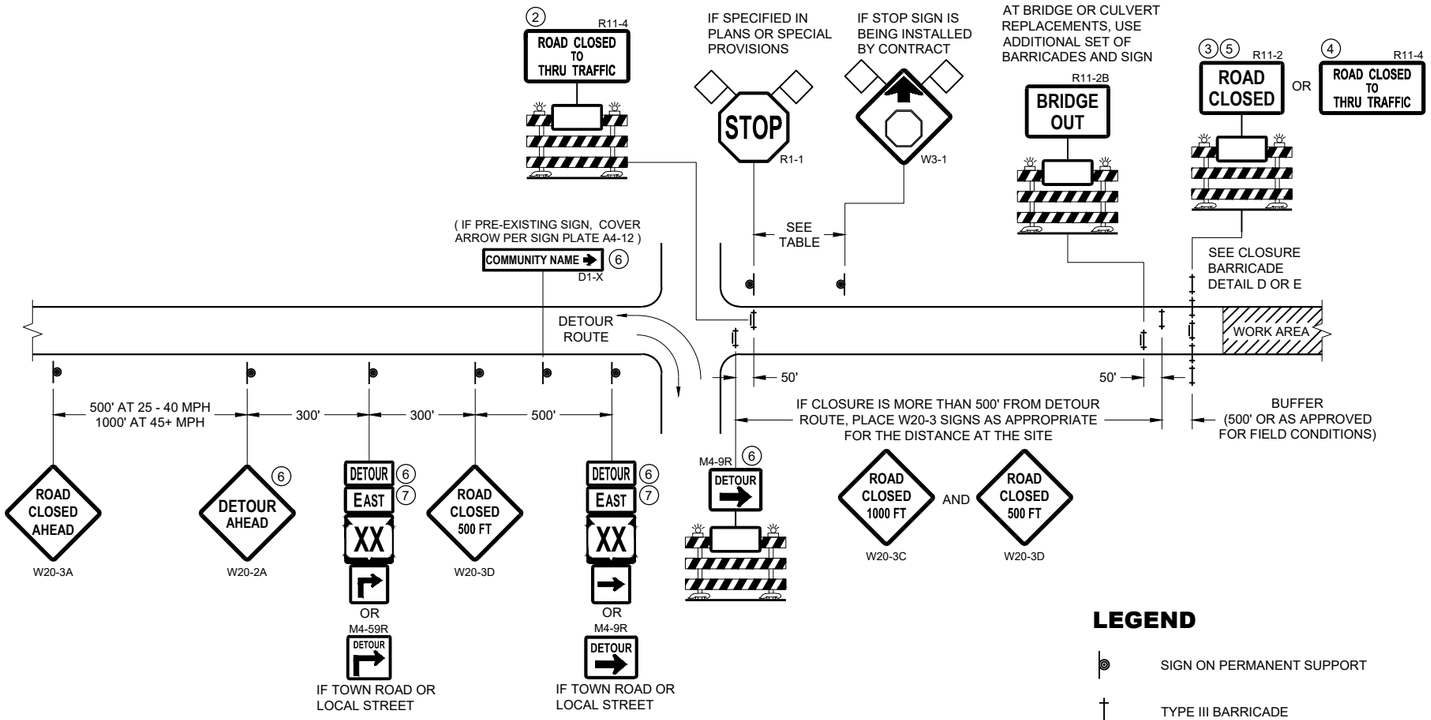

DETAIL B
MAINLINE CLOSURE WITH POSTED DETOUR

WORK ZONE LESS THAN ½ MILE FROM DETOUR ROUTE (1000 FEET IF URBAN)

LEGEND

- SIGN ON PERMANENT SUPPORT
- TYPE III BARRICADE
- TYPE III BARRICADE WITH ATTACHED SIGN
- TYPE "A" WARNING LIGHT (FLASHING)
- WORK AREA
- FLAGS, 16" X 16" MIN. (ORANGE)
- DETOUR — M4 - 8
- EAST — M3 - X
- XX (M1 - 4) OR XX (M1 - 6) OR COUNTY X (M1 - 5A)
- M05 - 1 OR M06 - 1

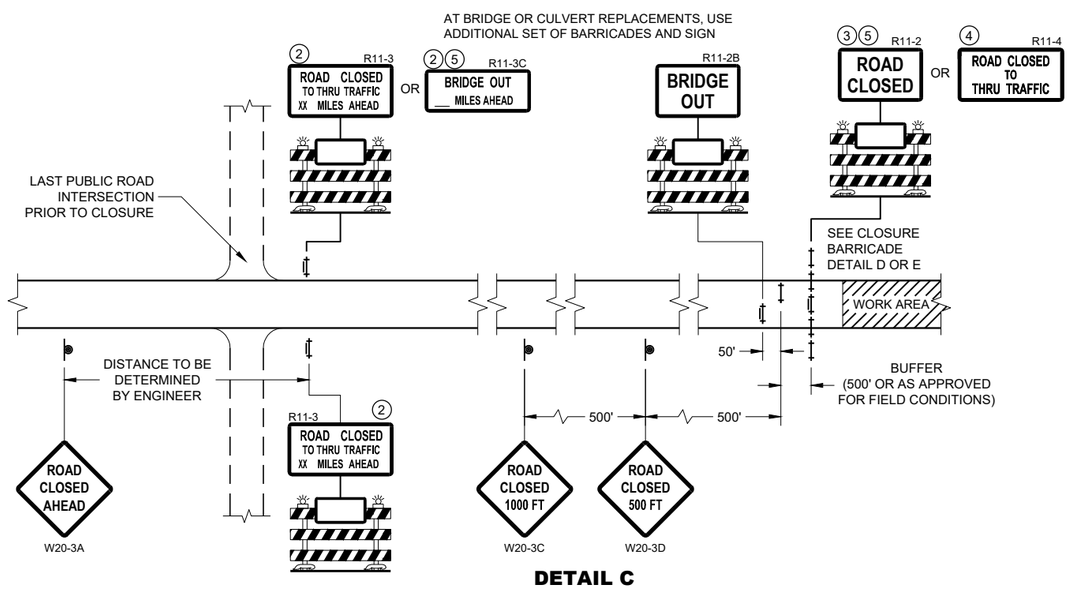

DETAIL C
MAINLINE CLOSURE, NO POSTED DETOUR

SPEED LIMIT (MPH)	"STOP AHEAD" ADVANCE WARNING DISTANCE (FT)
25	200
30	200
35	350
40	350
45	500
50	550
55	750

SEE SDD 15C2-SHEET "b" FOR GENERAL NOTES AND FOOTNOTES 1 THROUGH 7

BARRICADES AND SIGNS FOR MAINLINE CLOSURES

STATE OF WISCONSIN
DEPARTMENT OF TRANSPORTATION

APPROVED
May 2023 — DATE
/S/ Andrew Heidtke — WORK ZONE ENGINEER

FHWA

6

SDD 15C02 - 09a

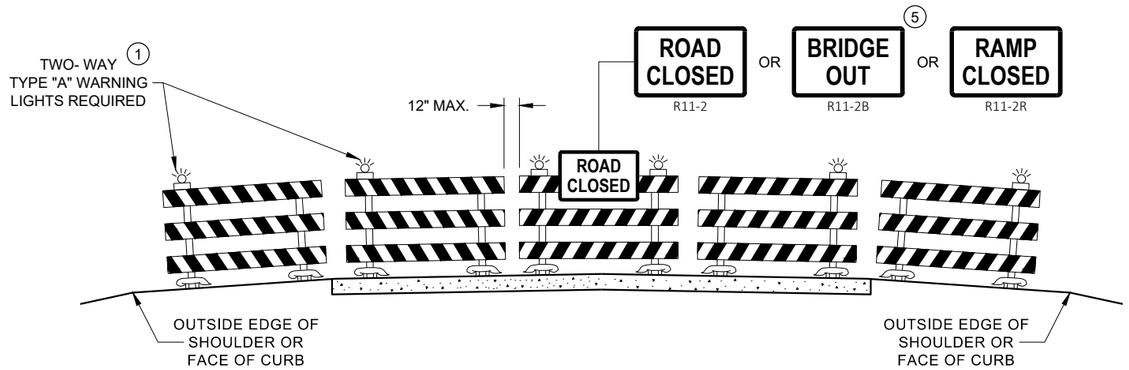

DETAIL D
ROAD CLOSURE BARRICADE DETAIL
APPROACH VIEW

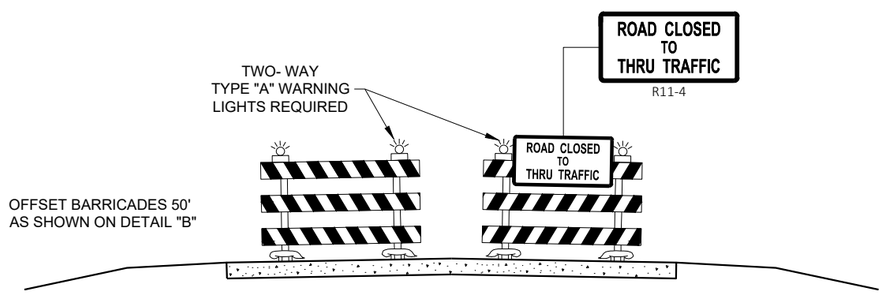

DETAIL E
LANE CLOSURE BARRICADE DETAIL
APPROACH VIEW

SEE SDD 15C2 - SHEET "a" FOR LEGEND

GENERAL NOTES

THE EXACT NUMBER, LOCATION, AND SPACING OF ALL SIGNS AND BARRICADES SHALL BE ADJUSTED TO FIT FIELD CONDITIONS AS APPROVED BY THE ENGINEER.

ANY SIGNS TEMPORARY OR EXISTING, WHICH CONFLICT WITH TRAFFIC CONTROL "IN USE", SHALL BE REMOVED OR COVERED AS NEEDED AND AS APPROVED BY THE ENGINEER.

THE SPACING BETWEEN TRAFFIC CONTROL SIGNS SHOULD BE ADJUSTED TO NOT CONFLICT WITH AND SHOULD PROVIDE A DESIRABLE MINIMUM OF 200 FEET CLEARANCE TO EXISTING SIGNS THAT WILL REMAIN IN PLACE.

BARRICADES THAT MUST BE MOVED FOR A WORK OPERATION SHALL BE IMMEDIATELY RE-ESTABLISHED UPON COMPLETION OF THE OPERATION, OR FOR CONTINUING OPERATIONS, AT THE END OF EACH WORKING DAY.

SIGNS THAT WILL BE IN PLACE LESS THAN 7 CONTINUOUS DAYS AND NIGHTS MAY BE MOUNTED ON PORTABLE SUPPORTS.

ALL TYPE III BARRICADES SHALL HAVE RAILS REFLECTORIZED ON BOTH FACES. STRIPES SHALL BE PROPERLY SLOPED DOWN TOWARD THE TRAFFIC SIDE OR AS SHOWN IN THE ROAD CLOSURE BARRICADE DETAIL "D" FOR FULL ROAD CLOSURES.

TYPE "A" LOW - INTENSITY FLASHING WARNING LIGHTS SHALL BE VISIBLE ON BOTH SIDES OF THE BARRICADE.

THE R11 - 2, R11 - 3, M4 - 9, R11 - 4, AND R10 - 61 SIGNS PLACED ON THE BARRICADES SHALL COVER NO MORE THAN THE TOP RAIL. THE SIGNS SHALL NOT COVER ANY PORTION OF THE MIDDLE RAIL OR BOTTOM RAILS.

"WO" AND "MO" SIGNS ARE THE SAME AS "W" AND "M" SIGNS EXCEPT THE BACKGROUND IS ORANGE.

ALL SIGNS SHALL BE 48" X 48" UNLESS OTHERWISE NOTED BELOW:
- R11 - 2 SHALL BE 48" X 30"
- R11 - 3 SHALL, R11 - 4 AND R10 - 61 SHALL BE 60 " X 30"
- M4 - 9 SHALL BE 30" X 24"
- M3 - X SHALL BE 24" X 12" (36" X 18" IF NEEDED TO MATCH EXISTING SIGNS)
- M4 - 8 SHALL BE 24" X 12" (36" X 18" IF NEEDED TO MATCH EXISTING SIGNS)
- M1 - 4, M1 - 5A AND M1 - 6 SHALL BE 24" X 24" (36" X 36" IF NEEDED TO MATCH EXISTING SIGNS)
- MO5 - 1 AND MO6 - 1 SHALL BE 21" X 21" (30" X 30" IF NEEDED TO MATCH EXISTING SIGNS)
- D1 - X SHALL BE AS SHOWN ON SPECIFIC PROJECT SIGNING DETAIL SHEETS.
- R1 - 1 SHALL BE 36" X 36"

1. TWO WARNING LIGHTS SHALL BE PROVIDED ON THE CENTER BARRICADE AND A MINIMUM OF ONE WARNING LIGHT SHALL BE PROVIDED ON EACH OF THE OTHER BARRICADES WITHIN THE ROADWAY LIMITS. SPACING OF THE WARNING LIGHTS SHALL BE UNIFORM TO THE EDGE OF ROADWAY AS SHOWN (APPROX. 8 FOOT LIGHT SPACING.
2. THESE SIGNS AND BARRICADES ARE NOT REQUIRED IF ROAD CLOSURE BEGINS AT AN INTERSECTION.
3. FOR ROAD CLOSURE WITHOUT LOCAL ACCESS TO PROJECT, SEE ROAD CLOSURE BARRICADE DETAIL "D".
4. FOR ROAD CLOSURE WITH LOCAL ACCESS TO PROJECT, SEE ROAD CLOSURE BARRICADE DETAIL "E".
5. FOR BRIDGE OR CULVERT REPLACEMENTS, SUBSTITUTE "BRIDGE OUT" INSTEAD OF "ROAD CLOSED" ON R11 - 2 AND R11 - 3 SIGNS.
6. INSTALL DETOUR AND COMMUNITY GUIDE SIGNS AND ARROWS ONLY IF SPECIFIED IN THE CONTRACT. IF THERE ARE EXISTING ROUTE MARKER ASSEMBLIES THAT WILL REMAIN IN PLACE, ADJUST THE LOCATION OF THE DETOUR ROUTE SIGNS TO CORRESPOND WITH THE EXISTING ASSEMBLIES. MODIFY EXISTING SIGNS WHERE POSSIBLE. SEE SPECIFIC PROJECT DETOUR SIGNING DETAIL SHEETS. IF DETOUR SIGNS ARE BEING INSTALLED BY OTHERS, PLACE THE CONTRACTED TRAFFIC CONTROL SIGNS TO ALLOW FOR PLACEMENT OF ALL WARNING, DETOUR AND GUIDE SIGNS AS SHOWN.
7. "EAST" CARDINAL DIRECTION MARKERS AND RIGHT TURN ARROWS ARE SHOWN. USE OTHER CARDINAL DIRECTIONS AND ARROWS AS APPROPRIATE.

BARRICADES AND SIGNS FOR VARIOUS CLOSURES

STATE OF WISCONSIN
DEPARTMENT OF TRANSPORTATION

APPROVED
May 2023 — DATE
/S/ Andrew Heidtke — WORK ZONE ENGINEE
FHWA

6
SDD 15C02 - 09b

THIS DRAWING PROVIDES GENERAL GUIDANCE ON TYPICAL DETOUR SIGN LAYOUT AND SPACING. SEE PROJECT DETOUR SIGNING SHEETS FOR SPECIFIC DETAILS FOR EACH PROJECT.

LEGEND

- SIGN ON PERMANENT SUPPORT
- WORK AREA
- DETOUR — M4 - 8
- EAST — M3 - X
- XX — M1 - 4 OR XX — M1 - 6 OR COUNTY X — M1 - 5A
- M05 - 1 OR M06 - 1 OR M06 - 1

GENERAL NOTES

THE EXACT NUMBER, LOCATION AND SPACING OF ALL SIGNS SHALL BE ADJUSTED TO FIT FIELD CONDITIONS AS APPROVED BY THE ENGINEER.

IF THERE ARE EXISTING ROUTE MARKER ASSEMBLIES THAT WILL REMAIN IN PLACE, ADJUST THE LOCATION OF THE DETOUR ROUTE SIGNS TO CORRESPOND WITH THE EXISTING ASSEMBLIES. SEE SPECIFIC PROJECT DETOUR SIGNING DETAIL SHEETS. MODIFY EXISTING SIGNS WHERE POSSIBLE.

THE SPACING BETWEEN TRAFFIC CONTROL AND DETOUR SIGNS SHOULD BE ADJUSTED TO NOT CONFLICT WITH AND TO PROVIDE A DESIRABLE MINIMUM OF 200 FEET CLEARANCE TO EXISTING SIGNS THAT WILL REMAIN IN PLACE.

ANY SIGNS TEMPORARY OR EXISTING, WHICH CONFLICT WITH TRAFFIC CONTROL "IN USE" SHALL BE REMOVED OR COVERED AS NEEDED AND AS APPROVED BY THE ENGINEER.

SIGNS THAT WILL BE IN PLACE LESS THAN 7 CONTINUOUS DAYS AND NIGHTS MAY BE MOUNTED ON PORTABLE SUPPORTS.

"MO" SIGNS ARE THE SAME AS "M" SIGNS EXCEPT THE BACKGROUND IS ORANGE.

SIGN SIZES SHALL BE AS FOLLOWS:

M3-X SHALL BE 24" X 12" (36" X 18" IF NEEDED TO MATCH EXISTING SIGNS)
M4-8 SHALL BE 24" X 12" (36" X 18" IF NEEDED TO MATCH EXISTING SIGNS)
M1-4, M1-5A AND M1-6 SHALL BE 24" X 24" (36" X 36" IF NEEDED TO MATCH EXISTING SIGNS)
M05-1 AND M06-1 SHALL BE 21" X 21" (30" X 30" IF NEEDED TO MATCH EXISTING SIGNS)
M4-9 AND M4-59 SHALL BE 30" X 24"
M4-8a SHALL BE 24" X 18"
G20-51 SHALL BE 60" X 24"
W20-2A SHALL BE 48" X 48"
D1-X SHALL BE AS SHOWN ON SPECIFIC PROJECT SIGNING DETAIL SHEETS.

* OPTIONAL SIGNS. SEE SPECIFIC PROJECT DETOUR SIGNING DETAIL SHEETS.

** FOR A TOWN ROAD OR LOCAL STREET DETOURED ONTO A STATE TRUNK HIGHWAY, PLACE A ROAD NAME PLAQUE ABOVE THE M4-9 SIGN AS SPECIFIED IN THE CONTRACT.

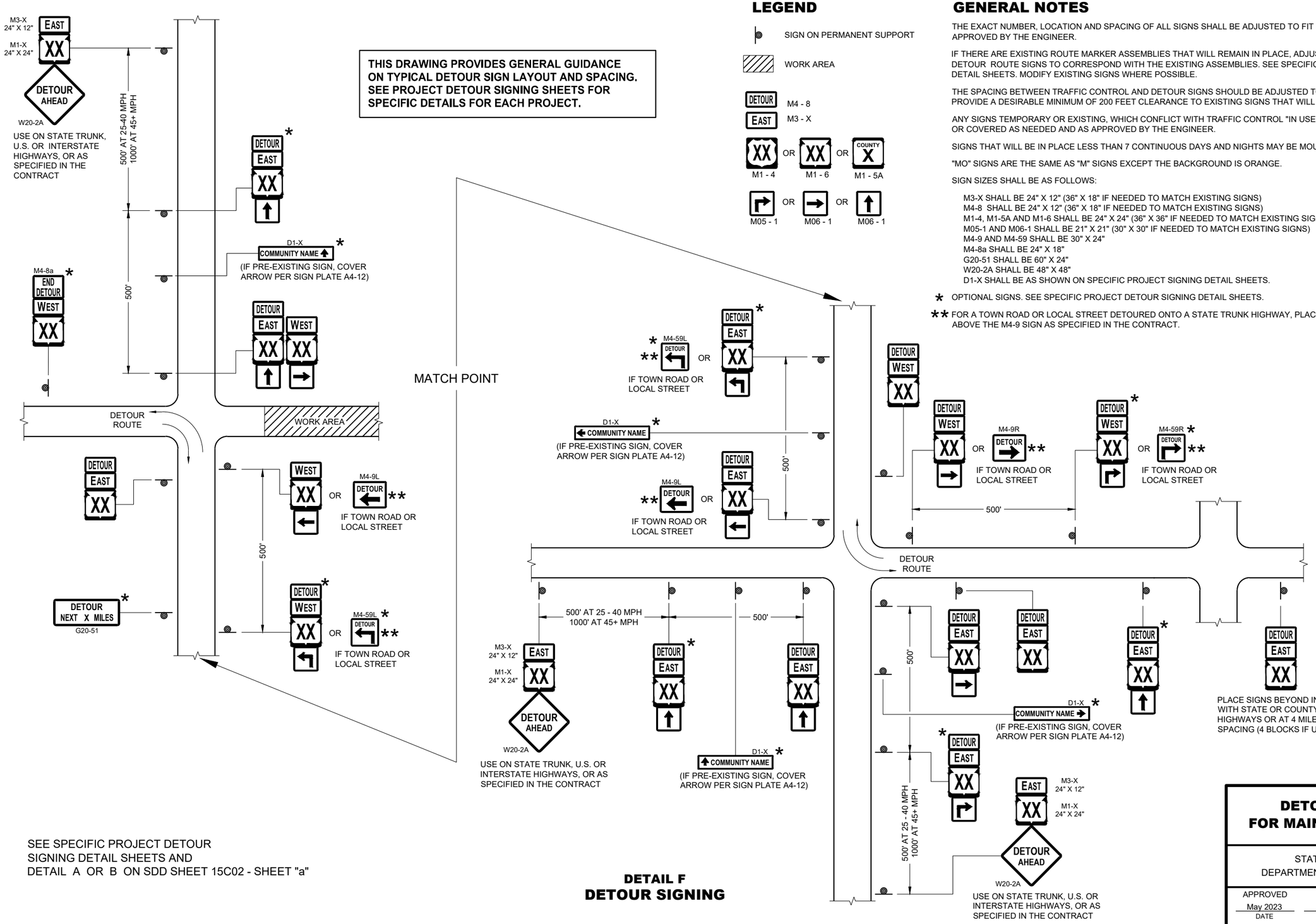

SEE SPECIFIC PROJECT DETOUR SIGNING DETAIL SHEETS AND DETAIL A OR B ON SDD SHEET 15C02 - SHEET "a"

DETAIL F
DETOUR SIGNING

DETOUR SIGNING FOR MAINLINE CLOSURES

STATE OF WISCONSIN
DEPARTMENT OF TRANSPORTATION

APPROVED
May 2023 — DATE
/S/ Andrew Heidtke — WORK ZONE ENGINEER
FHWA

6

SDD 15C02 - 09c

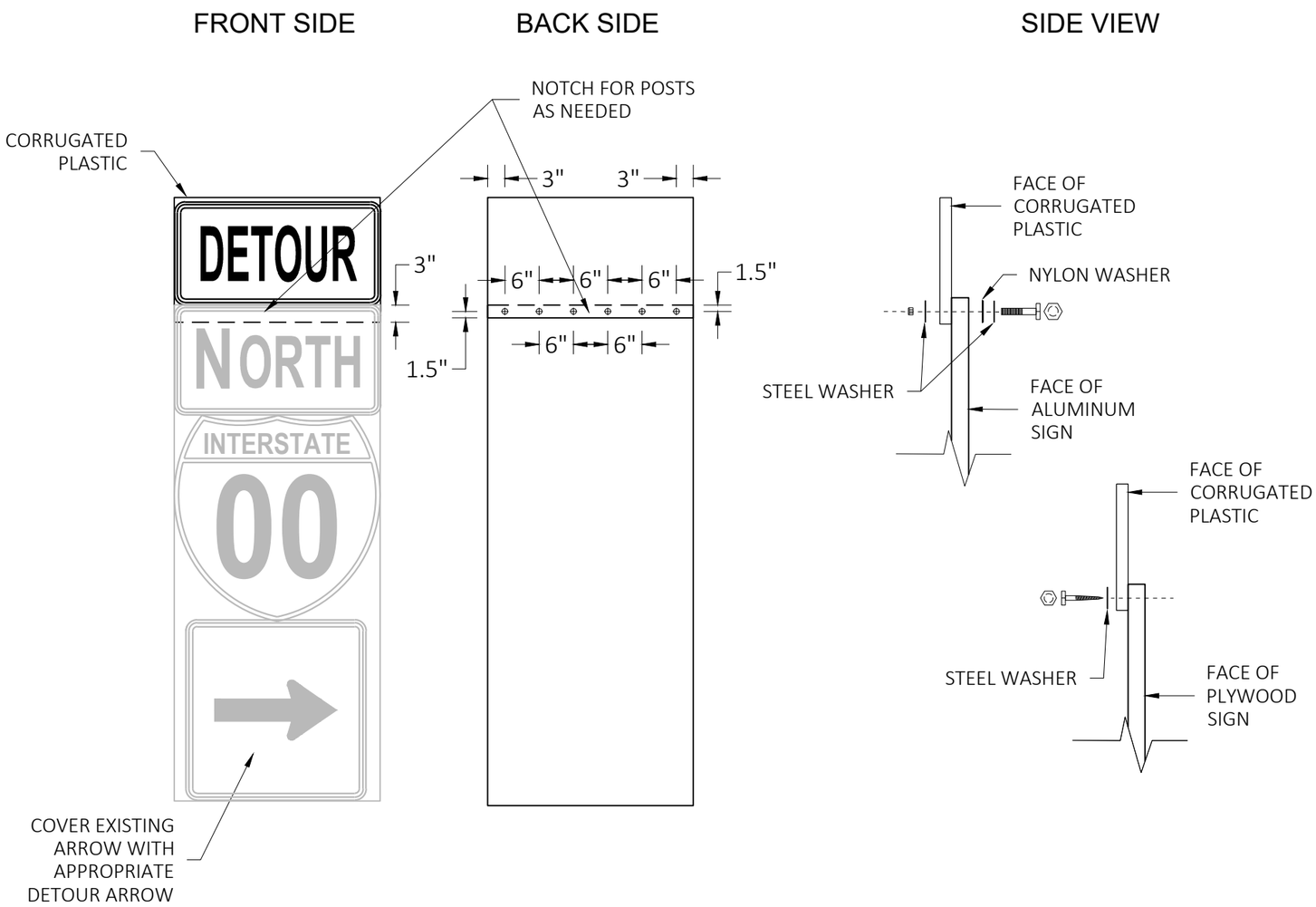

GENERAL NOTES

CELLS OF CORRUGATED PLASTIC SHALL BE VERTICALLY ORIENTED.

PROVIDE A 0.4-INCH THICK BASE CORRUGATED PLASTIC WITH A 0.035-INCH WALL THICKNESS AND 0.4-INCH CELL SIZE.

FOR 36" WIDE SIGNS: USE 6 FASTENERS AS SHOWN.

FOR 24" WIDE SIGNS: USE 4 FASTENERS WITH EDGE SPACING AS SHOWN AND 6" SPACING BETWEEN FASTENERS.

METAL WASHERS, NUTS, BOLTS AND LAGS SHALL HAVE HEXAGONAL HEADS AND SHALL BE EITHER:

A. HOT DIP GALVANIZED IN ACCORDANCE WITH ASTM DESIGNATION: A 153, CLASS D, OR SC 3.

B. ELECTRO-GALVANIZED IN ACCORDANCE WITH ASTM DESIGNATION: B 633, TYPE III, SC3

THREADS ON BOLTS AND NUTS SHALL BE MANUFACTURED WITH SUFFICIENT ALLOWANCE FOR THE CADMIUM PLATE OR GALVANIZED COATING TO PERMIT THE NUTS TO RUN FREELY ON THE BOLTS.

PLYWOOD SIGNS:
LAG SCREWS - 5/16" x 1"
ALUMINUM SIGNS:
MACHINE BOLTS - 5/16" x 1-1/4" LENGTH W/NUTS
WASHERS:
1-1/4" O.D. x 3/8" I.D. x 1/16" STEEL
1-1/4" O.D. x 3/8" I.D. x .080 NYLON

MODIFIED ROUTE ASSEMBLY FOR DETOUR SIGNING

MODIFIED ROUTE ASSEMBLY FOR DETOUR SIGNING

STATE OF WISCONSIN
DEPARTMENT OF TRANSPORTATION

APPROVED
May 2023 — DATE
/S/ Andrew Heidtke — ROADWAY STANDARDS DEVEL ENGINEER
FHWA

6

SDD 15C02-09h

*CONFIRM MARKING LINE WIDTH WITH THE MISCELLANEOUS QUANTITIES

GENERAL NOTES

DETAILS OF CONSTRUCTION NOT SHOWN ON THIS DRAWING SHALL CONFORM TO STANDARD SPECIFICATIONS AND SPECIAL PROVISIONS.

1. LOCATE THE NO PASSING ZONE W14-3 SIGN WITHIN 50 FEET OF THE "T" MARKING
2. MEASURE FROM EDGE OF MARKING TO JOINT LINE. THIS DOES NOT INCLUDE SPACE NEEDED FOR GROOVING OPERATIONS.

LEGEND

"T" MARKING

SIGN ON PERMANENT SUPPORT

DIRECTION OF TRAFFIC

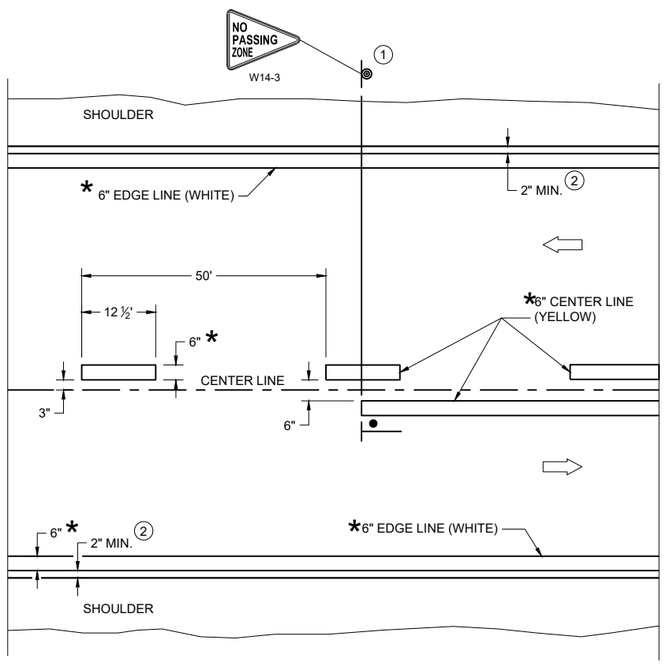

TWO WAY TRAFFIC

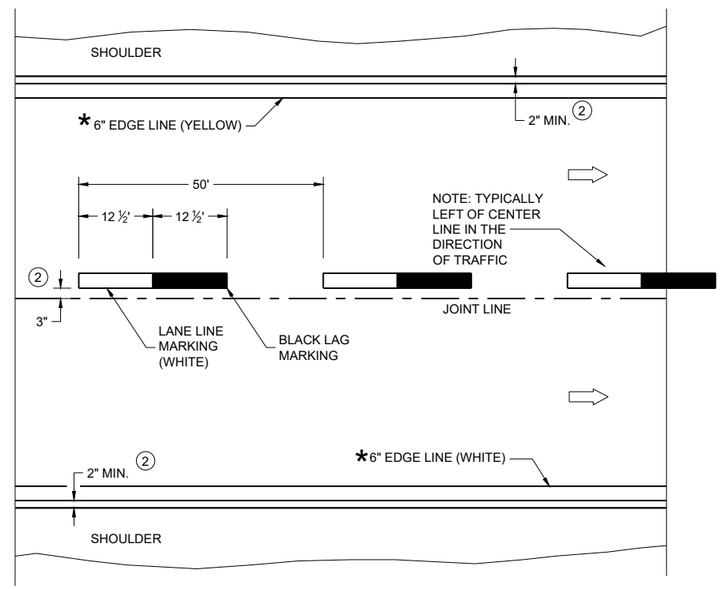

ONE WAY TRAFFIC

PERMANENT PAVEMENT MARKING

6

6

SDD 15C08-23a

SDD 15C08-23a

PERMANENT LONGITUDINAL PAVEMENT MARKINGS

STATE OF WISCONSIN
DEPARTMENT OF TRANSPORTATION

APPROVED

May 2023 — DATE

/S/ Jeannie Silver — Statewide Pavement Marking Engineer

FHWA

GENERAL NOTES

1. REFLECTIVE SHEETING SHALL FOLLOW THE REQUIREMENTS IN THE APPROVED PRODUCTS LISTING FOR SIGN SHEETING.
2. LOCATION OF WARNING LIGHTS WHEN SHOWN ON THE PLAN.

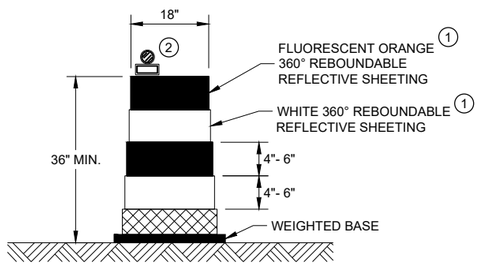

DRUM

BALLAST WIDTHS
RANGE FROM 24"-36"

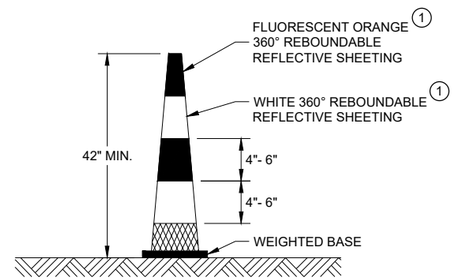

42" CONE

DO NOT USE IN TAPERS
½ SPACING OF DRUMS

BALLAST WIDTHS
RANGE FROM 14"-20"

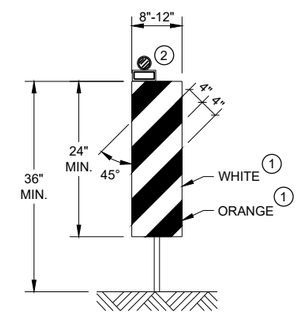

VERTICAL PANEL

THE STRIPES SHALL SLOPE DOWNWARD TO
THE TRAFFIC SIDE FOR CHANNELIZATION.

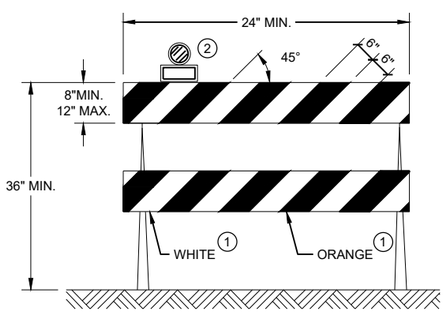

TYPE II BARRICADE

FOR RAILS LESS THAN 36" LONG, 4" WIDE STRIPES
MAY BE USED. ALL STRIPES SHALL SLOPE DOWNWARD
TO THE TRAFFIC SIDE FOR CHANNELIZATION.

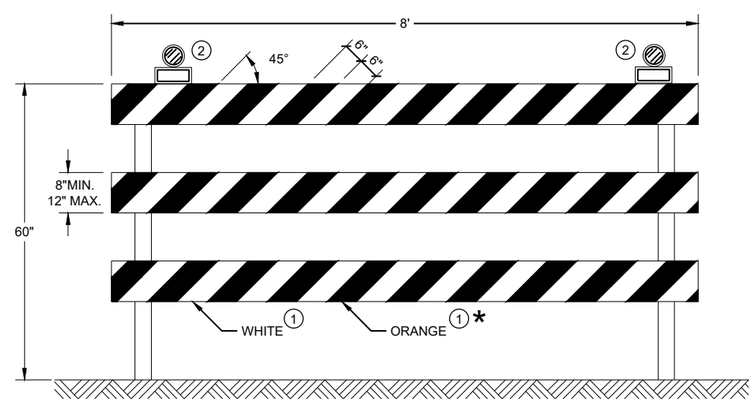

TYPE III BARRICADE

IF SIGN MOUNTED, DO NOT COVER MORE THAN 50% OF THE TOP
TWO RAILS OR 33% OF THE TOTAL AREA OF THE THREE RAILS.

* IF USED FOR A PERMANENT APPLICATION USE RED SHEETING.

CHANNELIZING DEVICES
DRUMS, CONES, BARRICADES
AND VERTICAL PANELS

STATE OF WISCONSIN
DEPARTMENT OF TRANSPORTATION

APPROVED
November 2022 /S/ Andrew Heidtke
DATE WORK ZONE ENGINEE
FHWA

6

6

SDD 15C11 - 10b

SDD 15C11 - 10b

GENERAL NOTES

STOP SIGN SHALL BE PLACED A MINIMUM OF 6 FEET TO A MAXIMUM OF 50 FEET FROM THE EDGELINE LOCATION.

1. 18-INCH STOP LINES MAY BE DELETED OR ADDED BY THE REGION MARKING ENGINEER BASED ON VISIBILITY AND SIGHT LINES.
2. NO STOP LINE IS REQUIRED IF STOP SIGN IS LESS THAN OR EQUAL TO 40 FEET FROM THE EDGELINE.
3. NO STOP LINE IS REQUIRED IF STOP SIGN IS LESS THAN OR EQUAL TO 30 FEET FROM THE FLANGE LINE EXTENSION.
4. MOVE CLOSER TO THE EDGE OF TRAVEL LINE AS NEEDED FOR VISIBILITY AND SIGHT LINES (NO CLOSER THAN 4 FEET).
5. LADDER BAR CROSSWALKS SHOULD ONLY BE USED FOR MID BLOCK CROSSINGS. USE 2 - 6" TRANSVERSE LINES.
6. POSTED SPEED LIMITS OF 40 MPH OR GREATER USE A MINIMUM WIDTH OF 8' FOR MIDBLOCK CROSSWALKS

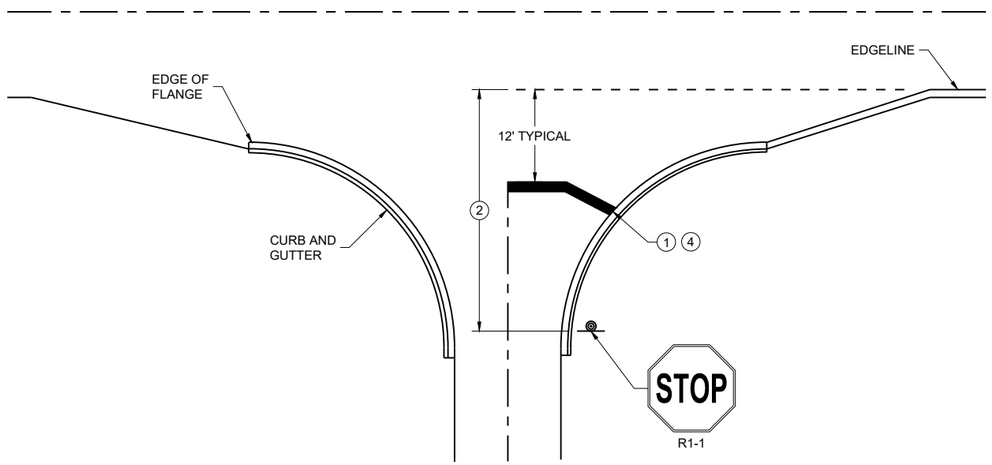

TYPICAL STOP LINE PAVEMENT MARKING WITH CURB AND GUTTER

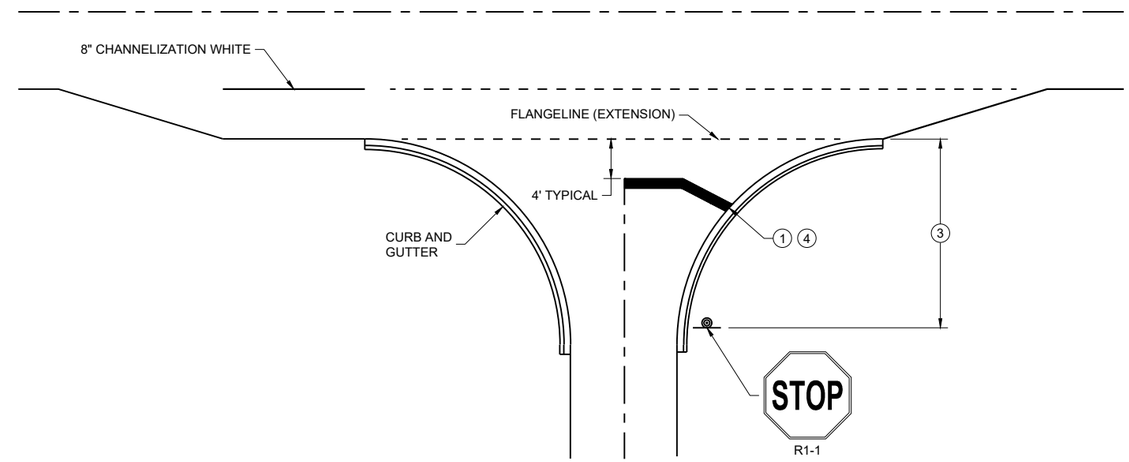

TYPICAL STOP LINE PAVEMENT MARKING FOR SIDE ROADS WITH RIGHT TURN LANE

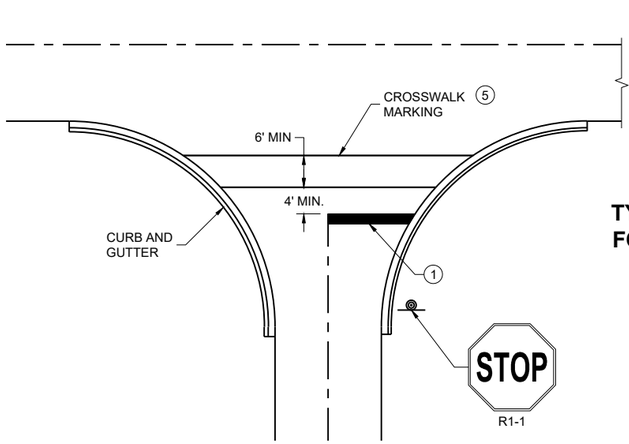

TYPICAL STOP LINE PAVEMENT MARKING FOR SIDE ROADS WITH CROSSWALK MARKING

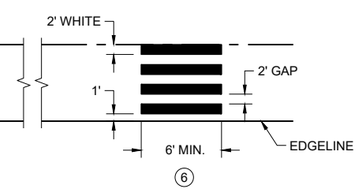

TYPICAL PAVEMENT MARKING FOR MID-BLOCK CROSSWALK 5

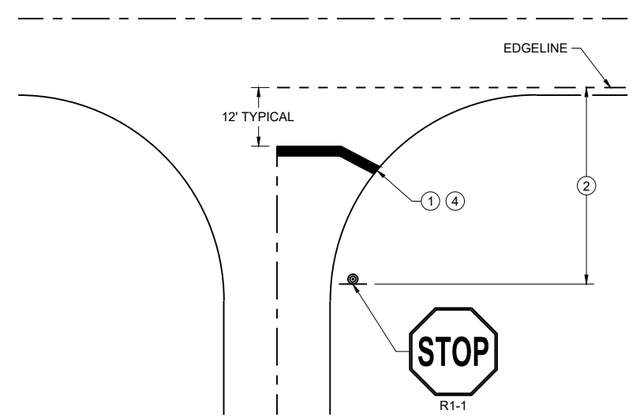

TYPICAL STOP LINE PAVEMENT MARKING WITHOUT CURB AND GUTTER

STOP LINE AND CROSSWALK PAVEMENT MARKING

STATE OF WISCONSIN
DEPARTMENT OF TRANSPORTATION

APPROVED
March 2024 — DATE
/S/ Matthew Rauch — STATE SIGNING AND MARKING ENGINEER

FHWA

6
SDD 15C33-05

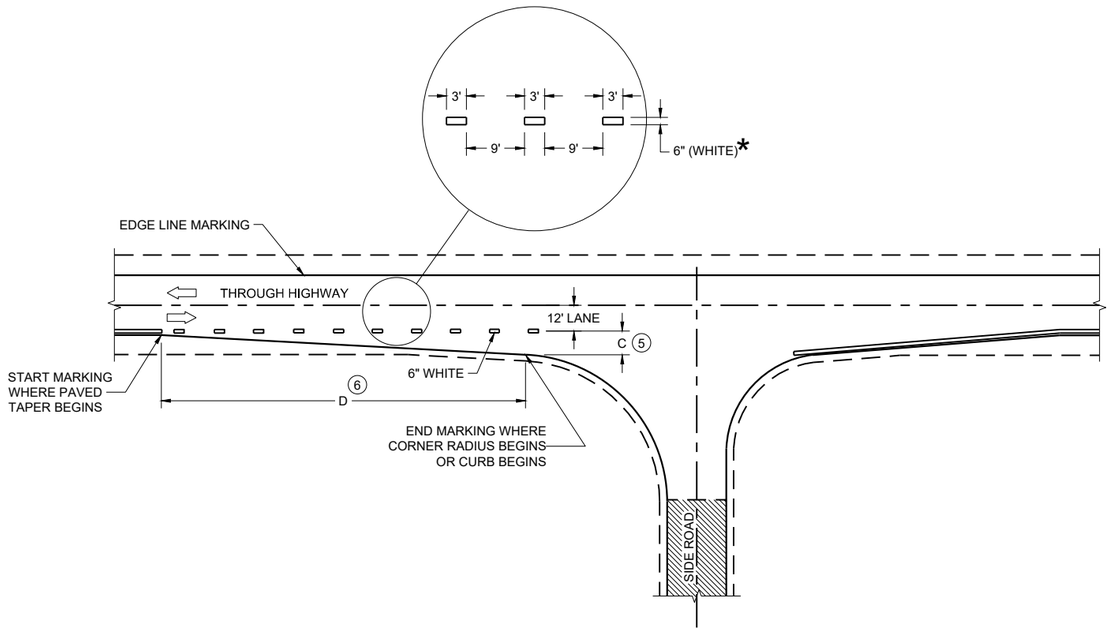

MINOR INTERSECTION

*CONFIRM MARKING LINE WIDTH WITH THE MISCELLANEOUS QUANTITIES

GENERAL NOTES

OMIT EDGE LINES THROUGH INTERSECTIONS. CONTINUE EDGE LINES THROUGH DRIVEWAYS.

1. WHEN DISTANCE "A" IS LESS THAN 250 FEET, OMIT LANE LINE.
2. WHEN DISTANCE "B" IS LESS THAN 100 FEET, OMIT CHANNELIZING LANE LINE.
3. BARRIER LINE ENDS AT SIDE ROAD PAVEMENT / SURFACE EDGE EXTENSION.
4. BARRIER LINE STARTS 500 FEET PRIOR TO THE BYPASS TAPER.
5. WHEN DISTANCE "C" IS LESS THAN 4 FEET, OMIT DOTTED EXTENSION.
6. WHEN DISTANCE "D" IS LESS THAN 50 FEET, OMIT DOTTED EXTENSION.

LEGEND

⇨ DIRECTION OF TRAVEL

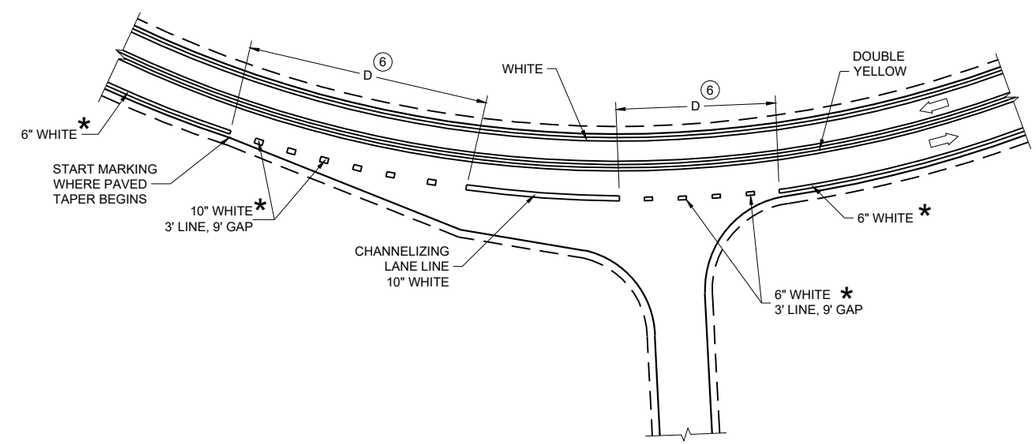

INTERSECTION ON OUTSIDE OF CURVE

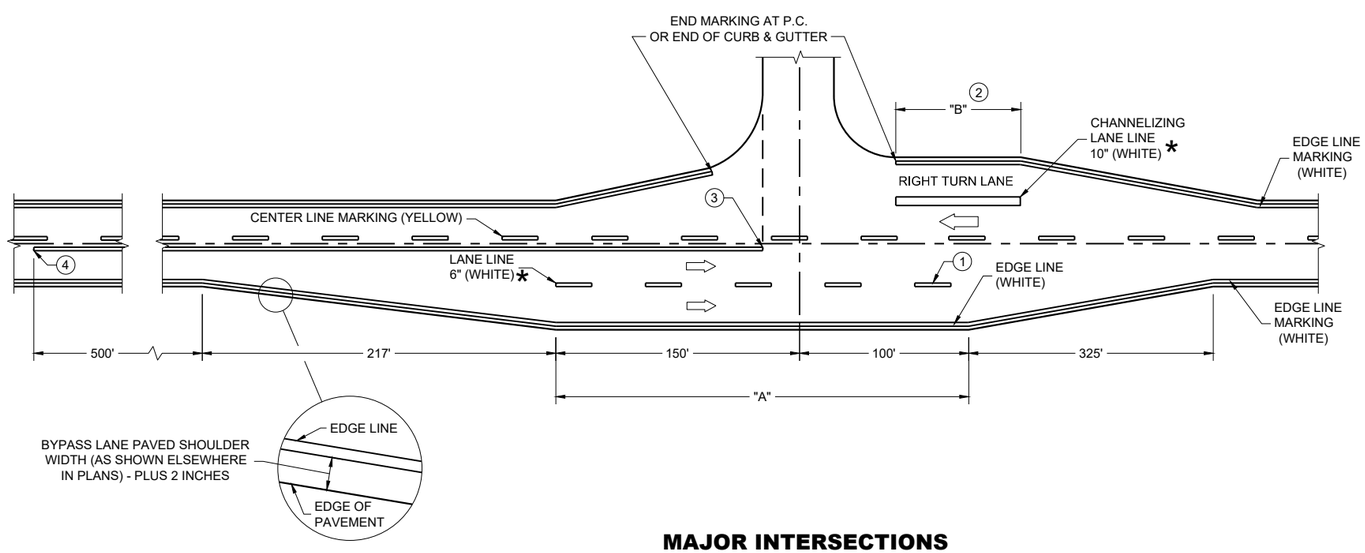

MAJOR INTERSECTIONS

(INTERSECTION WITH FULL RIGHT TURN LANE OR BYPASS LANE)

PAVEMENT MARKING (INTERSECTIONS)

STATE OF WISCONSIN
DEPARTMENT OF TRANSPORTATION

GENERAL NOTES

DRAWING NOT TO SCALE. ALL SIGNS AND POSTS ON THIS SHEET SHALL BE PAID FOR WITH 'TRAFFIC CONTROL SIGNS' BID ITEM. ALL SIDE ROADS WHICH ARE UNDER CONSTRUCTION OF CURB AND GUTTER AND/OR GRADING SHALL BE ADEQUATELY SIGNED.

ALL SIGNS AND DEVICES SHALL BE IN CONFORMANCE WITH THE WISCONSIN MANUAL OF UNIFORM TRAFFIC CONTROL DEVICES (WMUTCD). SIGN LAYOUTS SHALL BE IN ACCORDANCE WITH THE WISDOT STANDARD SIGN PLATES.

"WO" SIGNS ARE THE SAME AS "W" SIGNS EXCEPT THAT THE BACKGROUND IS ORANGE.

ALL SIGNS ARE 48" X 48" UNLESS OTHERWISE NOTED.

THE EXACT NUMBER, LOCATION AND SPACING OF ALL SIGNS AND DEVICES SHALL BE ADJUSTED TO FIT FIELD CONDITIONS AS DIRECTED BY THE ENGINEER.

ALL SIGNS INAPPROPRIATE TO THE STATUS OF THE CONTROL ZONE, INCLUDING PRE-EXISTING SIGNS IN THE VICINITY, SHALL BE COVERED OR REMOVED AS DIRECTED BY THE ENGINEER.

SEE 15C34 FOR ADDITIONAL TRAFFIC CONTROL SIGNING WHEN CENTERLINE PAVEMENT MAKINGS ARE MISSING. 'DO NOT PASS' SIGNS MUST BE INSTALLED ON THE SAME DAY AS MILLING OPERATIONS.

1. PLACE SIGNS 350' IN ADVANCE OF CHIP SEALED OR LOOSE GRAVEL SURFACES AND AT 1 MILE INTERVALS, OR AS DIRECTED BY THE ENGINEER.
2. PLACE SIGN 200' MIN. FROM INTERSECTION AND 200' MIN. AFTER ADVANCE WARNING SIGN SHOWN IN SDD 15C04.
3. ADD WO8-1 OR WO8-2 SIGN WHEN THE CONDITION IS PRESENT.

LEGEND

SIGN ON TEMPORARY SUPPORT

DIRECTION OF TRAFFIC

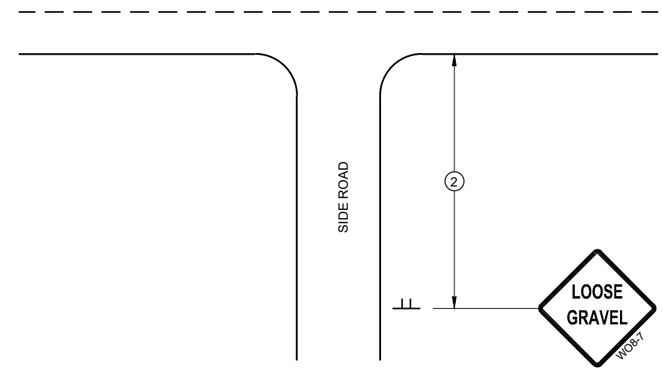

TYPICAL SIDE ROAD APPROACH SIGN DETAIL

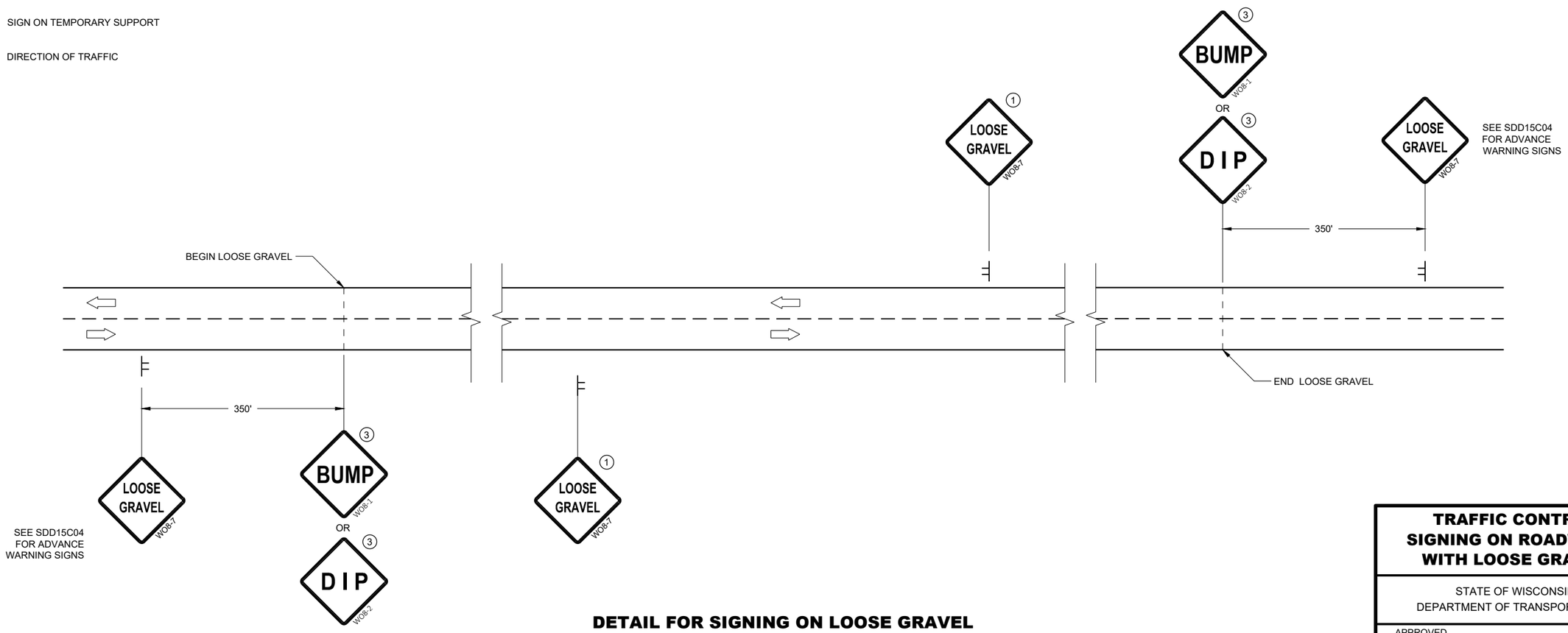

DETAIL FOR SIGNING ON LOOSE GRAVEL OR CHIP SEALED SURFACES

TRAFFIC CONTROL SIGNING ON ROADWAYS WITH LOOSE GRAVEL

STATE OF WISCONSIN
DEPARTMENT OF TRANSPORTATION

APPROVED
February 2021 — DATE
/S/ Andrew Heidtke — WORK ZONE ENGINEE
FHWA

6

SDD 15D45 - 03

NOTES

1. Sign is Type II- Type H Reflective
2. Color:
   Background - Green
   Message - White
3. Message Series - E

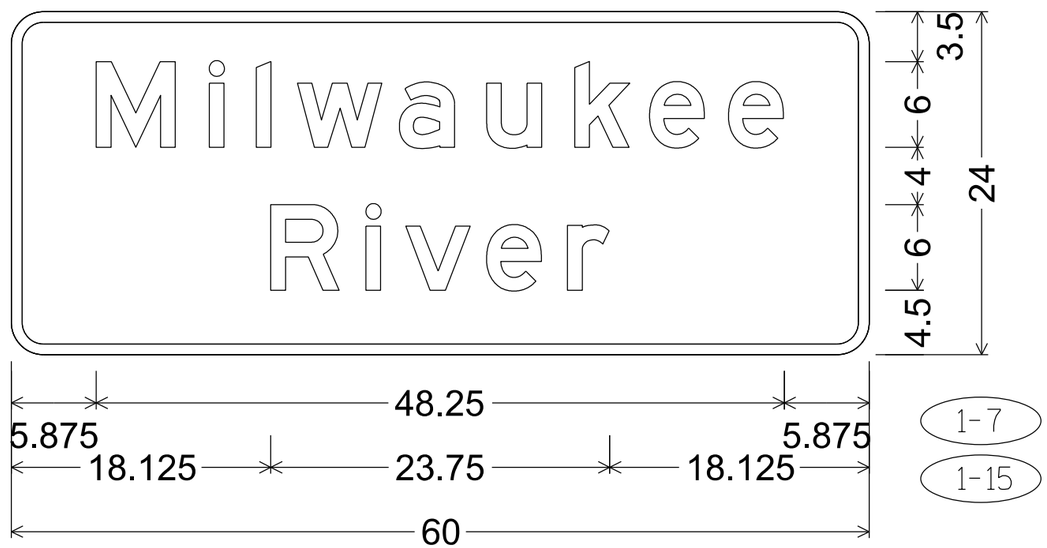

I3-1; 2.250" Radius, 0.750" Border

URBAN AREA

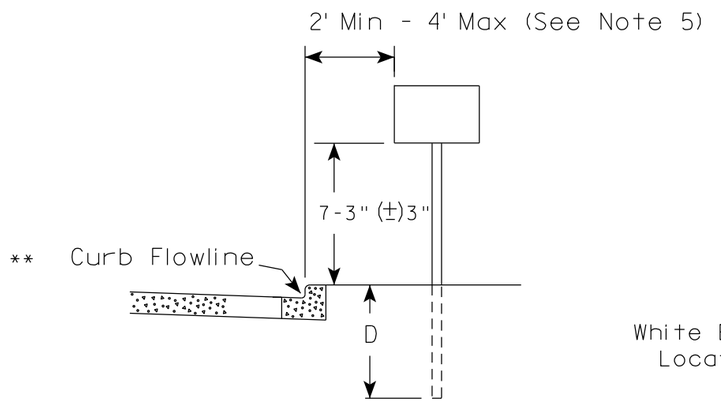

RURAL AREA (See Note 2)

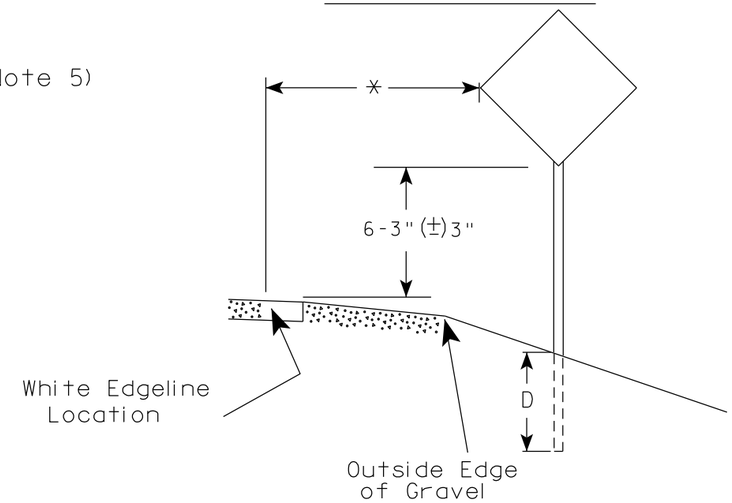

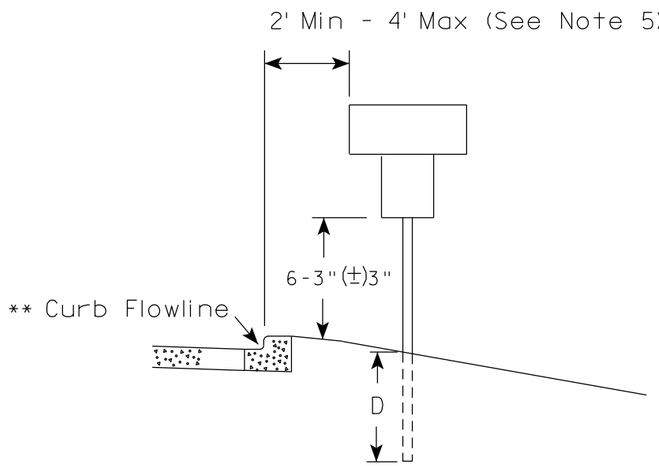

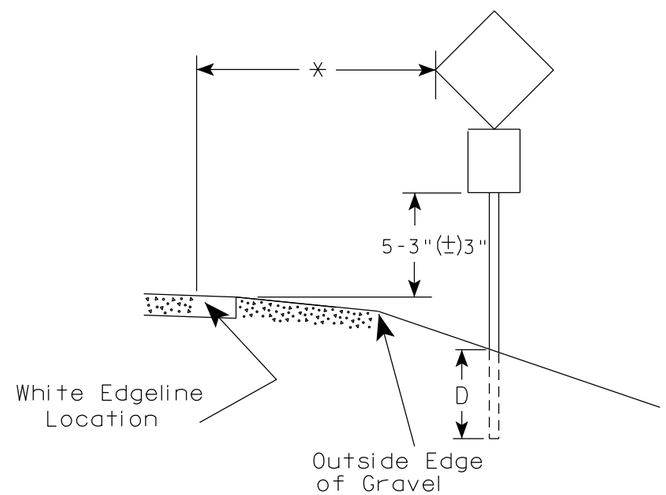

** The existence of curb and gutter does not in itself mandate the vertical clearance illustrated. That height is typically measured where there is sidewalk adjacent to the roadway or parking is permitted. In the absence of sidewalk vertical clearance is measured from the top of the curb. Offset of signs is measured from the flow line.

* 6 feet from edge of a paved shoulder or 12 feet from the edge of pavement (edge line location) or 2 feet from outside edge of gravel, whichever is greater unless directed by project engineer.

GENERAL NOTES

1. Signs wider than 4 feet or 20 sq.ft or larger, shall be mounted on multiple posts. Refer to plate A4-4.
2. If signs are mounted on or behind barrier wall, see A4-10 sign plate.
   The Double Arrow sign (W12-1D) shall be mounted at a height of 2'-3" (±) 3". The Chevron sign (W1-8), Roundabout Chevron panel (R6-4B), Enhanced Reference Markers, Clearance Markers (W5-52), Mile Markers (D10 series), In Road Object Markers (W5-54) & End of Road Markers (W5-56) shall be mounted at a height of 4'-3" (±) 3".
3. For expressways and freeways, mounting height is 7'- 3" (±) 3" or 6'-3" (±) 3" depending upon existence of a sub-sign.
4. Minimum mounting height for signs mounted on traffic signal poles is 5'- 3" (±) 3".
5. Offset distance shall be consistent with existing signs or consistent throughout length of project.
6. Folding signs shall be mounted at a height of 5'-3" (±) 3" or as directd by the Engineer.

POST EMBEDMENT DEPTH

Area of Sign Installation (Sq. Ft.)	D (Min)
20 or Less	4'
Greater than 20	5'

TYPICAL INSTALLATION OF PERMANENT TYPE II SIGNS ON SINGLE POSTS

WISCONSIN DEPT OF TRANSPORTATION

APPROVED Matthew R Rauch
for State Traffic Engineer

DATE 12/6/23 PLATE NO. A4-3.23

7 7

PROJECT NO:	HWY:	COUNTY:		SHEET NO: 105	E

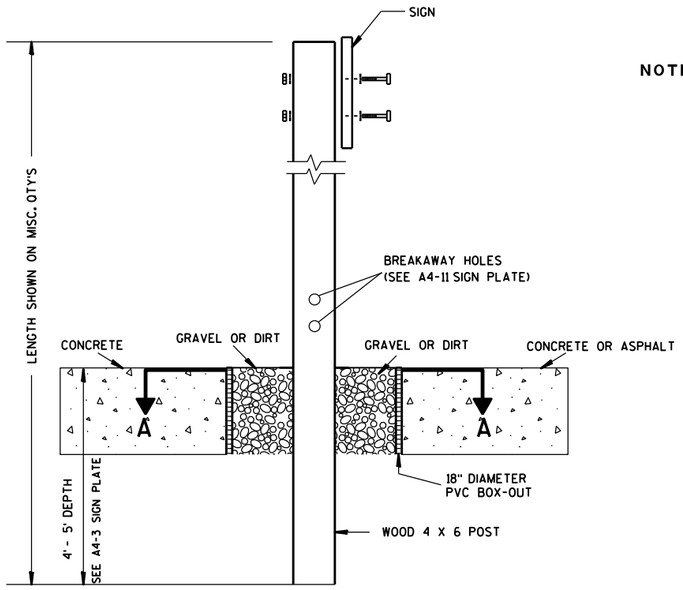

ELEVATION VIEW

DETAIL OF WOOD 4 X 6 SIGN POST IN BOX-OUT

NOTES:
1. ALL MATERIAL TO BE APPROVED BY ENGINEER PRIOR TO INSTALLATION
2. SEE SIGN PLATE A4-8 FOR SIGN HARDWARE REQUIREMENTS
3. 18 INCH X 18 INCH SQUARE BOX-OUTS MAY BE USED FOR INSTALLATIONS IN EXISTING CONCRETE OR ASPHALT LOCATIONS.

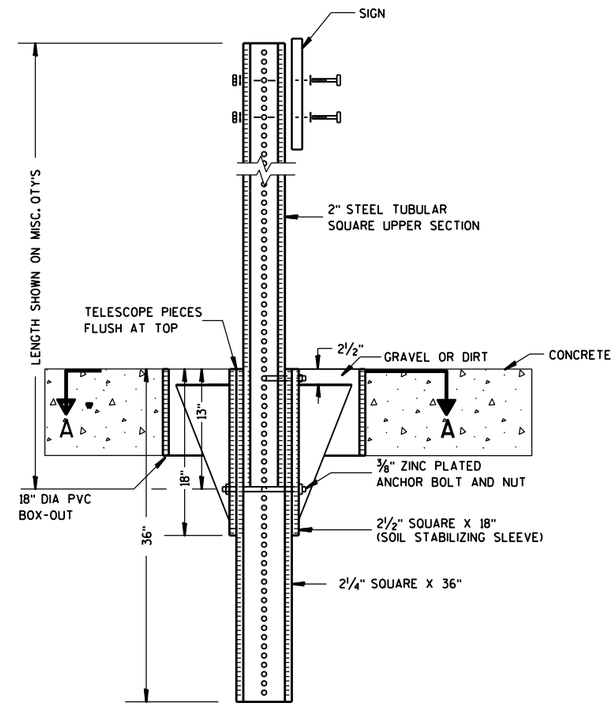

ELEVATION VIEW

DETAIL OF STEEL 2 X 2 SIGN POST IN BOX-OUT

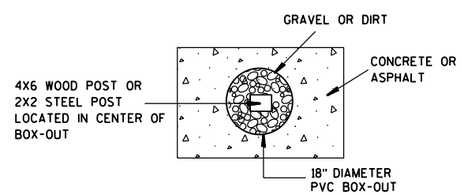

PLAN VIEW

FOR NEW CONCRETE/ASPHALT INSTALLATIONS

SIGN POST
BOX-OUTS
A4-3B

WISCONSIN DEPT OF TRANSPORTATION

APPROVED Matthew R Rauch
for State Traffic Engineer

DATE 1/27/14 PLATE NO. A4-3B.1

PROJECT NO:	HWY:	COUNTY:		SHEET NO:	E

URBAN AREA

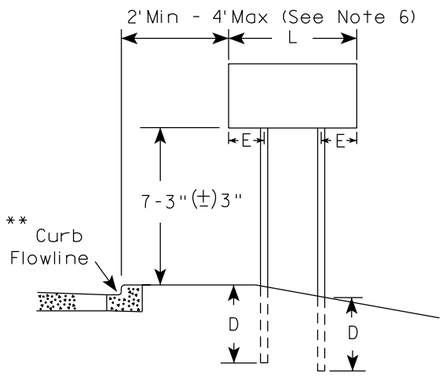

RURAL AREA (See Note 3)

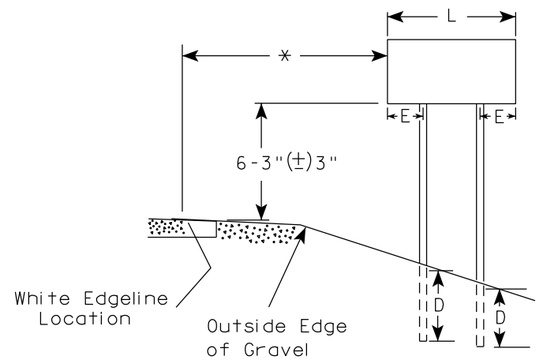

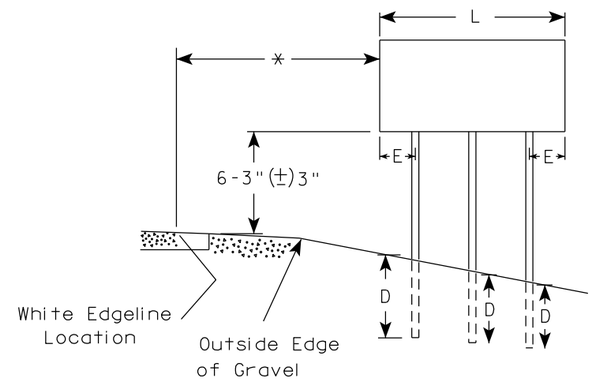

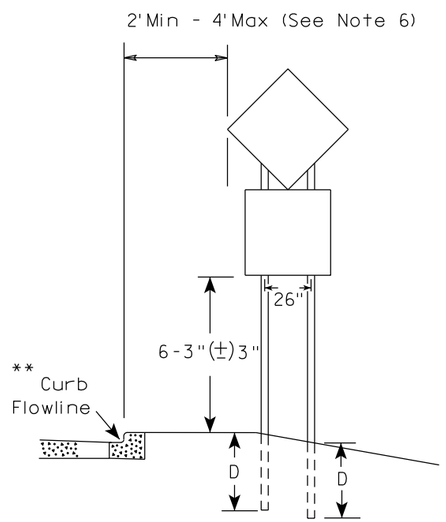

48" DIAMOND WARNING SIGN

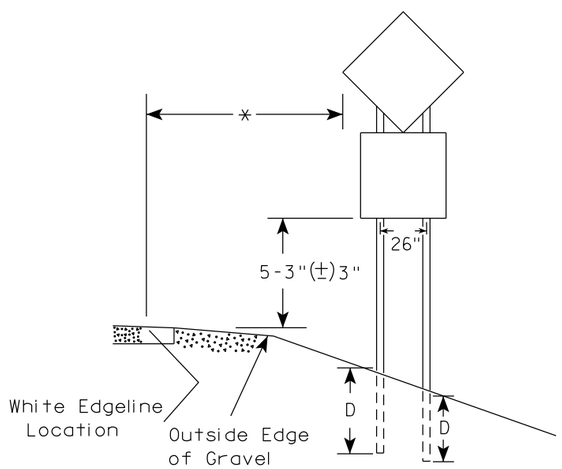

48" DIAMOND WARNING SIGN

GENERAL NOTES

1. For 3 or 4 post installations, individual post spacing shall be greater than 3'-6".
2. See tables below for required number of posts.
3. For expressways and freeways, mounting height is 7'-3" (±) 3" or 6'-3" (±) 3" depending upon existence of sub-sign.
4. The (±) tolerance for mounting height is 3 inches.
5. J-Assemblies are considered to be one sign for mounting height.
6. Offset distance shall be consistent with existing signs or consistent throughout length of project.
7. Folding signs shall be mounted at a height of 5'-3" (±) 3" or as directed by the engineer.
8. The Double Arrow sign (W12-1) shall be mounted at a height of 2'-3" (±) 3". The Chevron sign (W1-8), Roundabout Chevron panel (R6-4B), Clearance Markers (W5-52), Mile Markers (D10 series), In Road Object Markers (W5-54) & End of Road Markers (W5-56) shall be mounted at a height of 4"-3" (±) 3".

* 6 feet from edge of a paved shoulder or 12 feet from the edge of pavement (edge line location) or 2 feet from outside edge of gravel, whichever is greater unless directed by project engineer.

** The existence of curb and gutter does not in itself mandate the vertical clearance illustrated. That height is typically measured where there is sidewalk adjacent to the roadway or parking is permitted. In the absence of sidewalk vertical clearance is measured from the top of the curb. Offset of signs is measured from the flow line.

*** See A4-3 sign plate for signs 4' or less in width and less than 20 S.F. in area.

SIGN SHAPE OTHER THAN DIAMOND (TWO POSTS REQUIRED)	
L	E
*** Greater than 48" Less than 60"	12"
60" to 108"	L/5

SIGN SHAPE OTHER THAN DIAMOND (THREE POSTS REQUIRED)	
L	E
Greater than 108" to 144"	12"

POST EMBEDMENT DEPTH

Area of Sign Installation (Sq. Ft.)	D (Min)
20 or Less	4'
Greater than 20	5'

TYPICAL INSTALLATION OF TYPE II SIGNS ON MULTIPLE POSTS

WISCONSIN DEPT OF TRANSPORTATION

APPROVED Matthew R Rauch
for State Traffic Engineer

DATE 12/6/23 PLATE NO. A4-4.16

7

7

PROJECT NO:	HWY:	COUNTY:		SHEET NO: 107	E

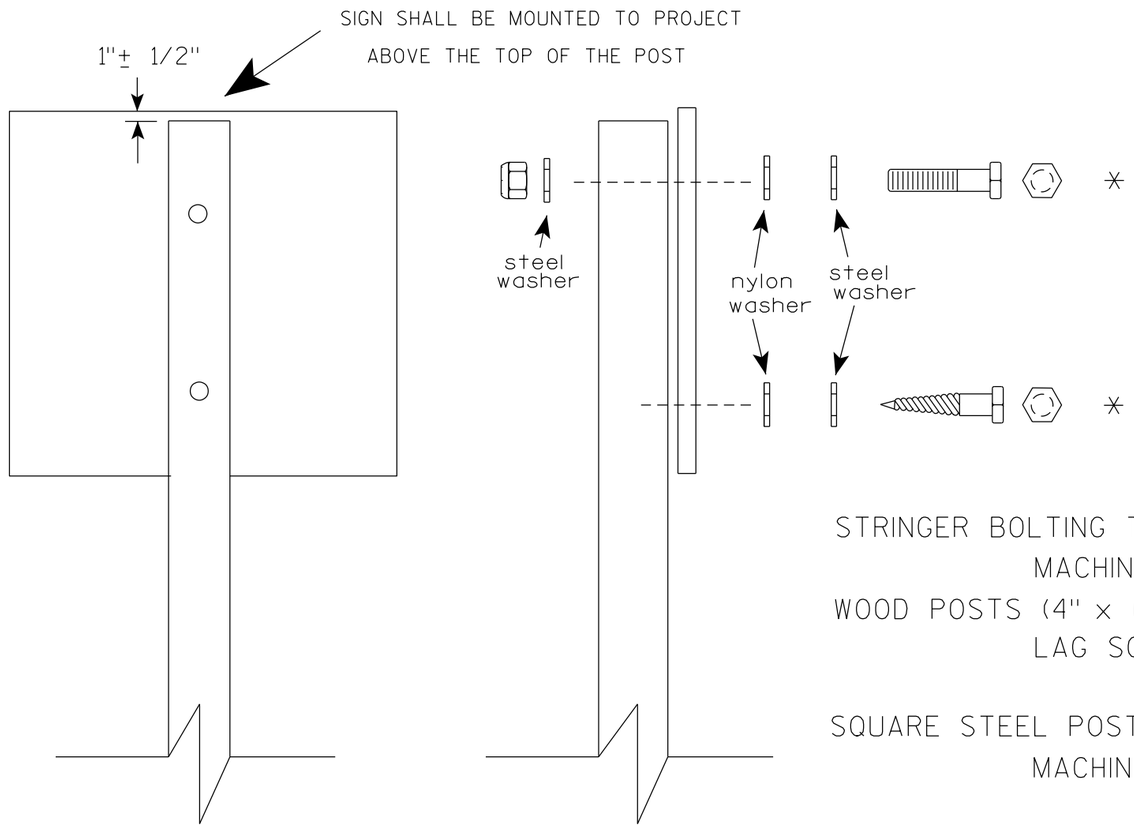

Nuts, bolts and lags used for mounting signs shall have hexagonal heads and shall be either :

a. Hot dip galvanized in accordance with ASTM Designation: A 153, Class D, or SC 3

b. Electro-galvanized in accordance with ASTM Designation : B 633, TYPE III, SC 3.

Threads on bolts and nuts shall be manufactured with sufficient allowance for the cadmium plate or galvanized coating to permit the nuts to run freely on the bolts.

STRINGER BOLTING TO ALUMINUM SIGNS (SEE SIGN PLATE A4-18)

MACHINE BOLTS - 5/16" X 1-3/4" Length w/ lock nuts

WOOD POSTS (4" x 6")

LAG SCREWS - 3/8" X 3" (NO STRINGERS ON BACK OF SIGN)

3/8" X 4" (STRINGERS ON BACK OF SIGN)

SQUARE STEEL POSTS (2" x 2")

MACHINE BOLTS - 3/8" X 3-1/4" Length w/ nuts (NO STRINGER ON BACK OF SIGN)

3/8" X 5" Length w/ nuts (STRINGERS ON BACK OF SIGN)

RIVETS - 9/32" (6605-9-6) BULB-TITE, TRI-FOLD, ALUMINUM BODY/MANDREL

O.D. FLANGE .720-.765 INCH, GRIP RANGE .042-.375 INCH

WASHERS (ALL POSTS) -

1-1/4" O.D. X 3/8" I.D. X 1/16" STEEL

1-1/4" O.D. X 3/8" I.D. X .080 NYLON

* Two different fastening systems are shown for illustration purposes. On any individual sign, either one or the other system shall be used. Actual number of fasteners per sign varies with the sign area, but normally there are two. For a single post installation, all signs greater than 9 sq. ft. require the use of 3 fasteners.

ATTACHMENT OF SIGNS TO POSTS

WISCONSIN DEPT OF TRANSPORTATION

APPROVED Matthew R Rauch
for State Traffic Engineer

DATE 4/1/2020 PLATE NO. A4-8.9

TELESCOPIC TUBING ANCHORS
TWO PIECE SYSTEM

2 1/4 " SQUARE
12 GAUGE
PERFORATED
GALVANIZED FINISH

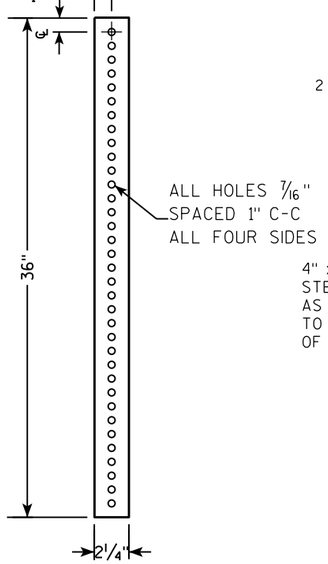

2 1/2 " SQUARE
12 GAUGE
OMNI-DIRECTIONAL
PERFORATED
SOIL STABILIZING SLEEVE
GALVANIZED FINISH

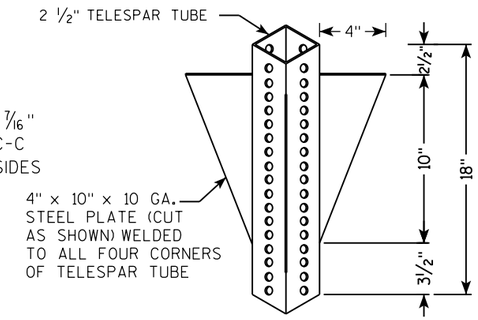

DETAIL OF TUBULAR STEEL SIGN POST
(IN POURED CONCRETE OR ASPHALT)

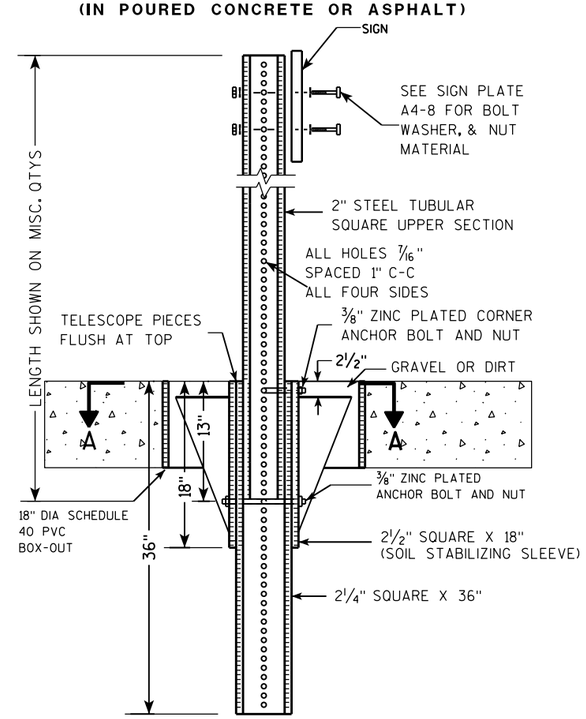

DETAIL OF TUBULAR STEEL SIGN POST
(IN LOCATIONS OTHER THAN POURED CONCRETE OR ASPHALT)

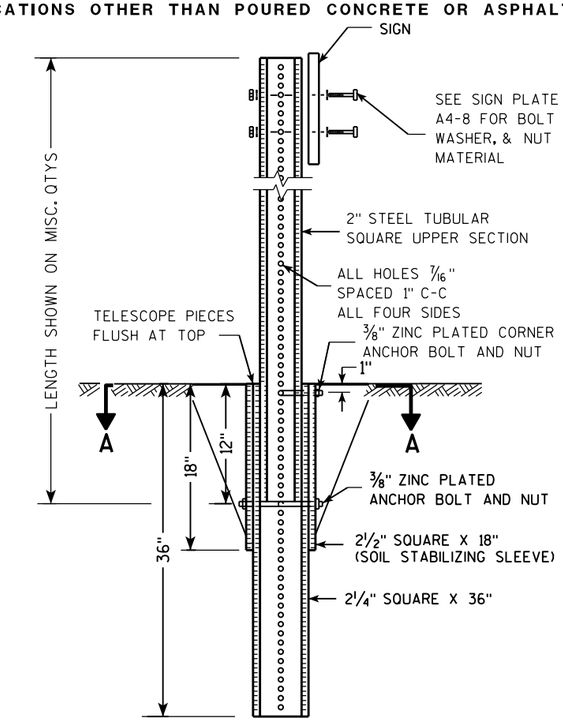

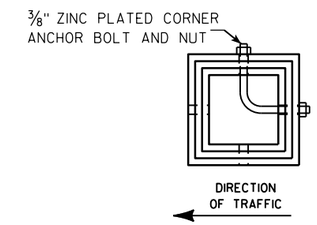

SECTION A-A

Area of Sign Installation (Sq. Ft.)	Number of Required Posts
9 or less	1
Greater than 9 less than or equal to 18	2
Greater than 18 less than or equal to 27	3

Signs wider than 3 feet or larger than 9 sq. ft shall be mounted on multiple posts (see above table).

TUBULAR STEEL
SIGN POST
A4-9

WISCONSIN DEPT OF TRANSPORTATION

APPROVED Matthew R Rauch
for State Traffic Engineer

DATE 2/05/15 PLATE A4-9.9

7 7

PROJECT NO:	HWY:	COUNTY:		SHEET NO:	E

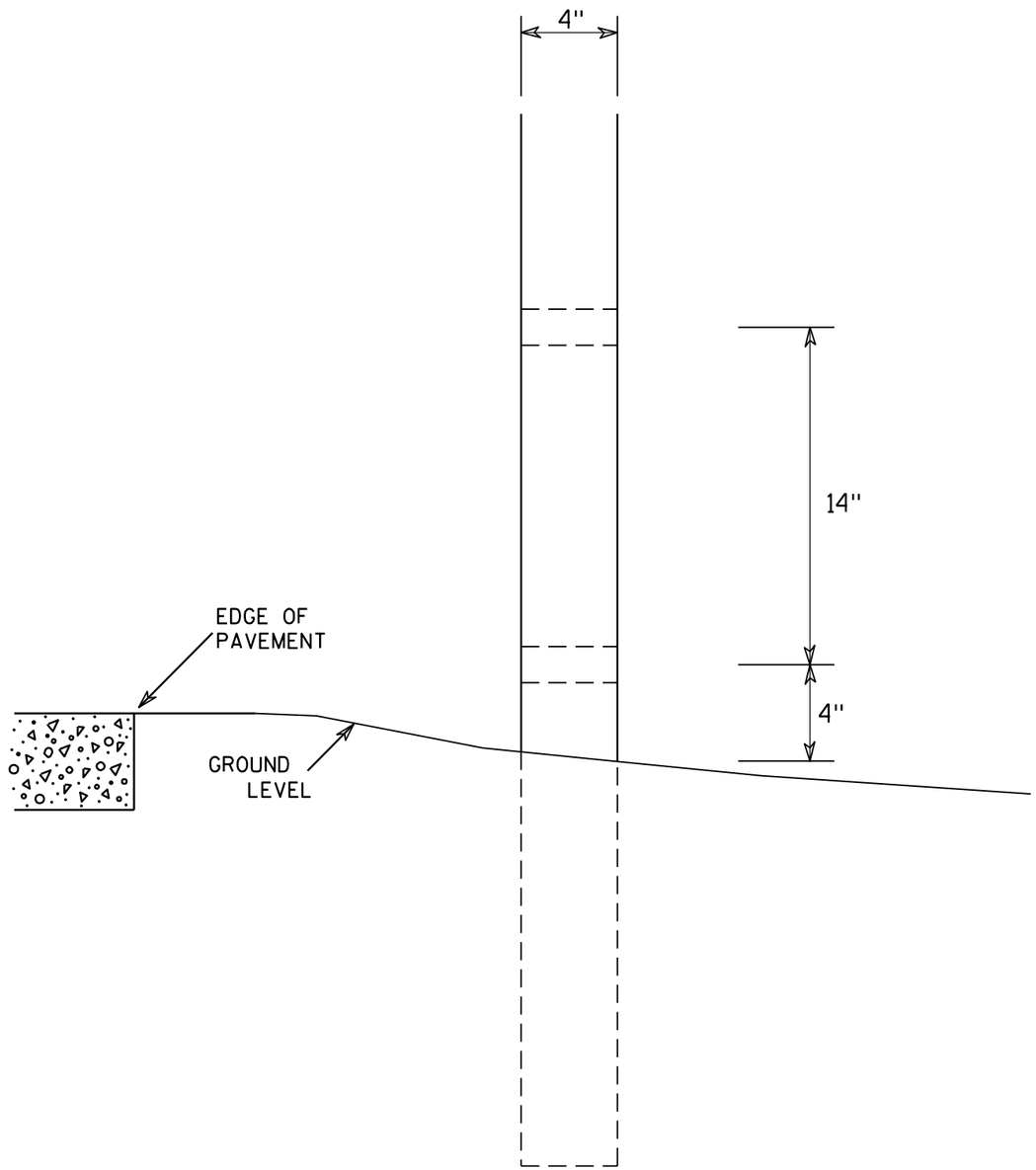

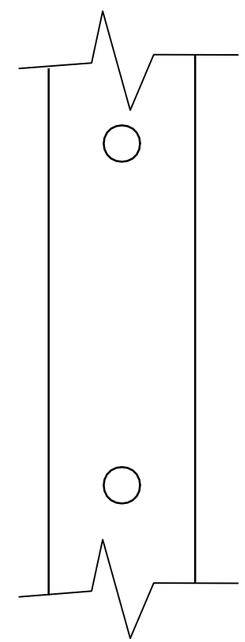

SIDE VIEW

GENERAL NOTES

1. All 4 x 6 Wood Posts shall be modified by having two 1½" diameter holes drilled perpendicular to the roadway centerline.

4 X 6 WOOD POST MODIFICATIONS

WISCONSIN DEPT OF TRANSPORTATION

APPROVED Chester J Spang for State Traffic Engineer

DATE 3/27/97 PLATE NO. A4-11.2

PROJECT NO:	HWY:	COUNTY:		SHEET NO: 110	E

BANDING

SINGLE SIGN

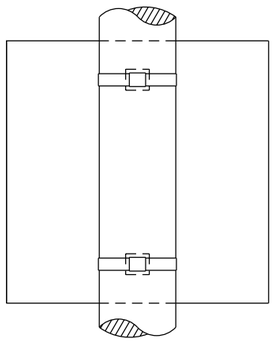

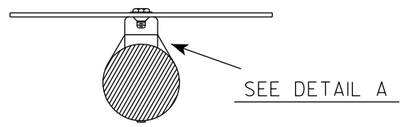

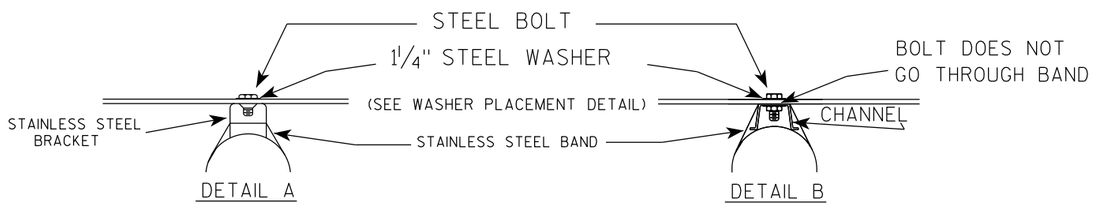

WASHER PLACEMENT

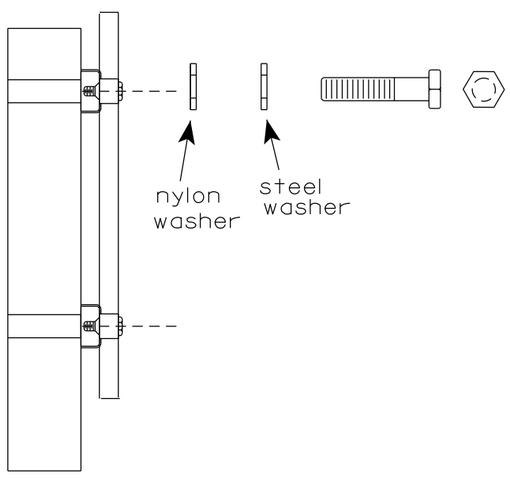

WASHERS (ALL POSTS) -
1-1/4" O.D. X 3/8" I.D. X 1/16" STEEL
1-1/4" O.D. X 3/8" I.D. X .080 NYLON
FOR ALL TYPE H SIGNS

GENERAL NOTES

1. Any sign over 3 feet in width shall use the V-Block banding method. See A5-10 standard plate.
2. Signs 3 feet or greater in height shall have three bracket bands installed. Signs less than 3 feet in height shall have two bracket bands installed.
3. Banding and assembly bracket shall be stainless steel. All bands shall be ¾" in width and 0.025" thickness.
4. ALL SIGN MOUNTING BOLTS AND WASHERS SHALL BE EITHER:
   a. Hot dip or mechanically galvanized in accordance with ASTM Designation: A 153, Class D
   b. Electro-galvanized in accordance with ASTM designation: B 633, Type III, SC 3

"J" ASSEMBLY

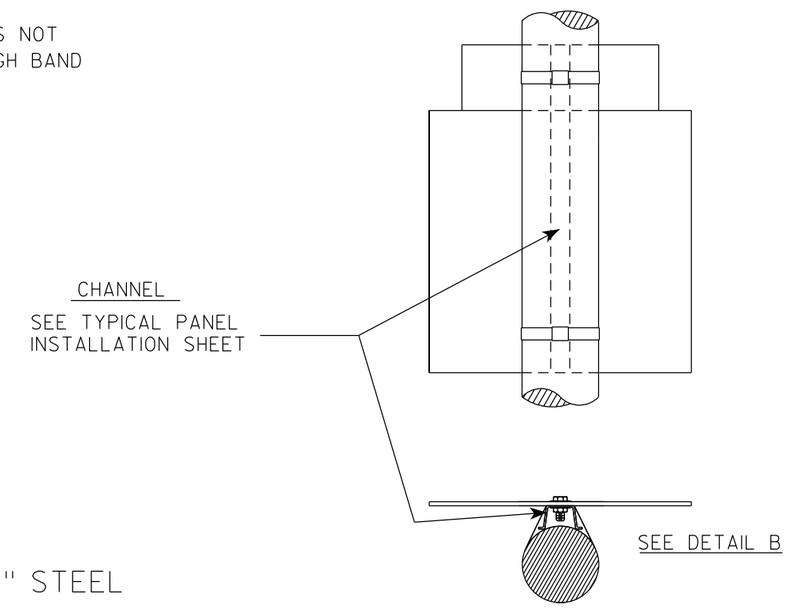

STANDARD SIGN
SIGN BANDING DETAILS

WISCONSIN DEPT OF TRANSPORTATION

APPROVED Matthew R Rauch for State Traffic Engineer

DATE 6/10/19 PLATE NO. A5-9.4

PROJECT NO:	HWY:	COUNTY:		SHEET NO: 111	E

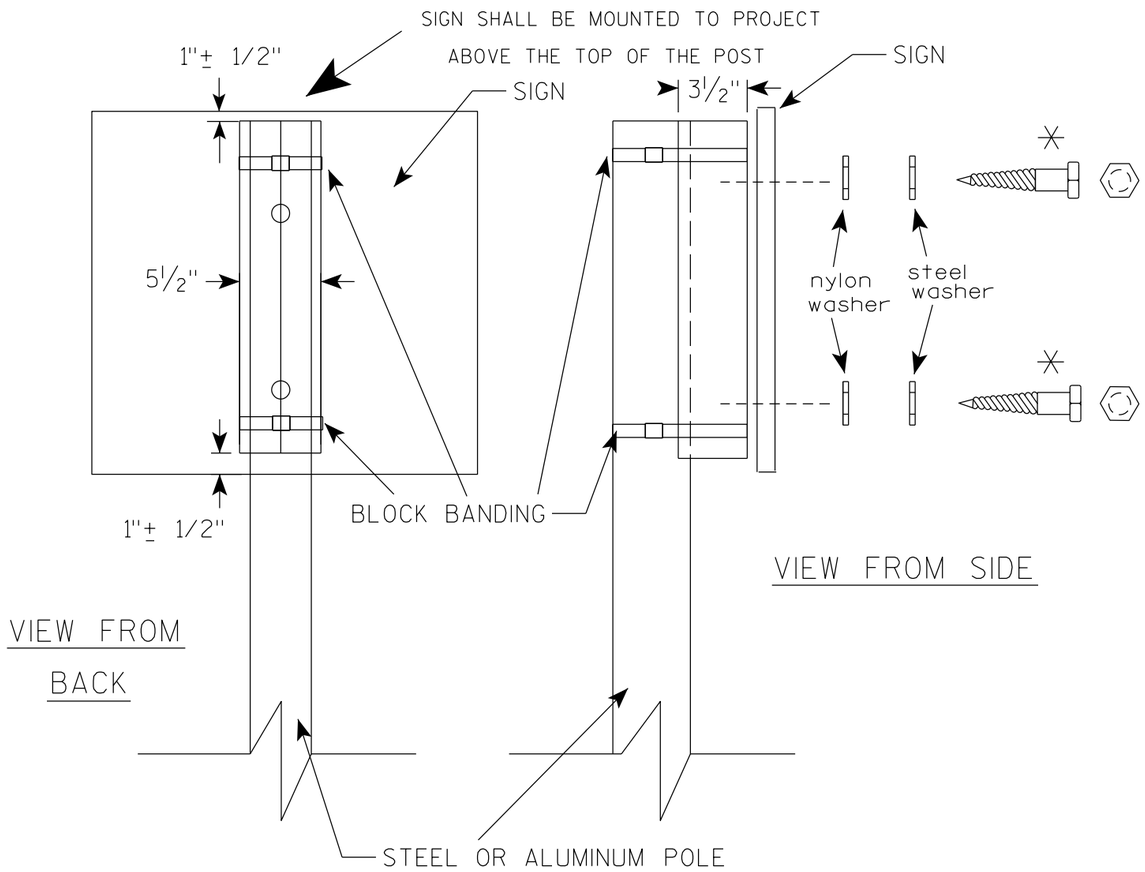

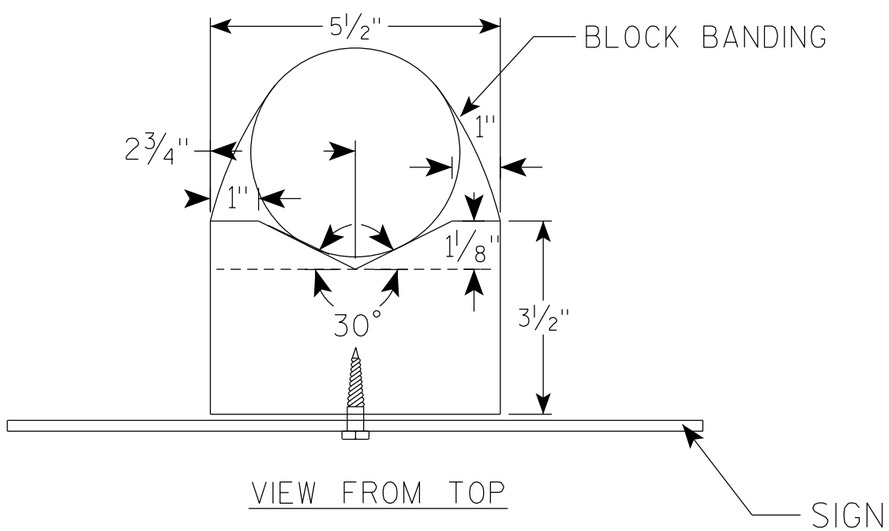

GENERAL NOTES

1. WOOD 4"X6" POST MATERIAL SHALL CONFORM TO 507.2.2 OF THE WisDOT STANDARD SPECIFICATIONS
2. BLOCK BANDING AND CLIPS SHALL BE STAINLESS STEEL, 3/4" WIDTH AND 0.025" THICKNESS
3. SIGNS 3' OR GREATER IN HEIGHT SHALL UTILIZE 3 BLOCK BANDS. SIGNS UNDER 3' IN HEIGHT SHALL UTILIZE 2 BLOCK BANDS
4. ACTUAL NUMBER OF FASTENERS PER SIGN VARIES WITH THE SIGN AREA, BUT NORNALLY THERE ARE TWO. FOR SIGNS GREATER THAN 9 S.F. 3 FASTENERS SHALL BE USED.
5. ALL SIGN MOUNTING BOLTS AND WASHERS SHALL BE EITHER:
   a. Hot dip or mechanically galvanized in accordance with ASTM Designation: A 153, Class D
   b. Electro-galvanized in accordance with ASTM Designation : B 633, TYPE III, SC 3
6. ALL BOLTS SHALL HAVE HEXAGONAL HEADS.
7. STEEL WASHERS SHALL BE 1 1/4" O.D. X 3/8" I.D. X 1/16"
8. NYLON WASHERS SHALL BE 1 1/4" O.D. X 3/8" I.D. X .080 FOR TYPE H OR TYPE F FACE SIGN

✳ LAG BOLTS SHALL BE 3/8" X 2 1/2"

7

7

BLOCK BANDING DETAIL
(V-BLOCK OPTION)

WISCONSIN DEPT OF TRANSPORTATION

APPROVED Matthew R Rauch
for State Traffic Engineer

DATE 4/19/2022 PLATE NO. A5-10.3

PROJECT NO:				SHEET NO: 112	E

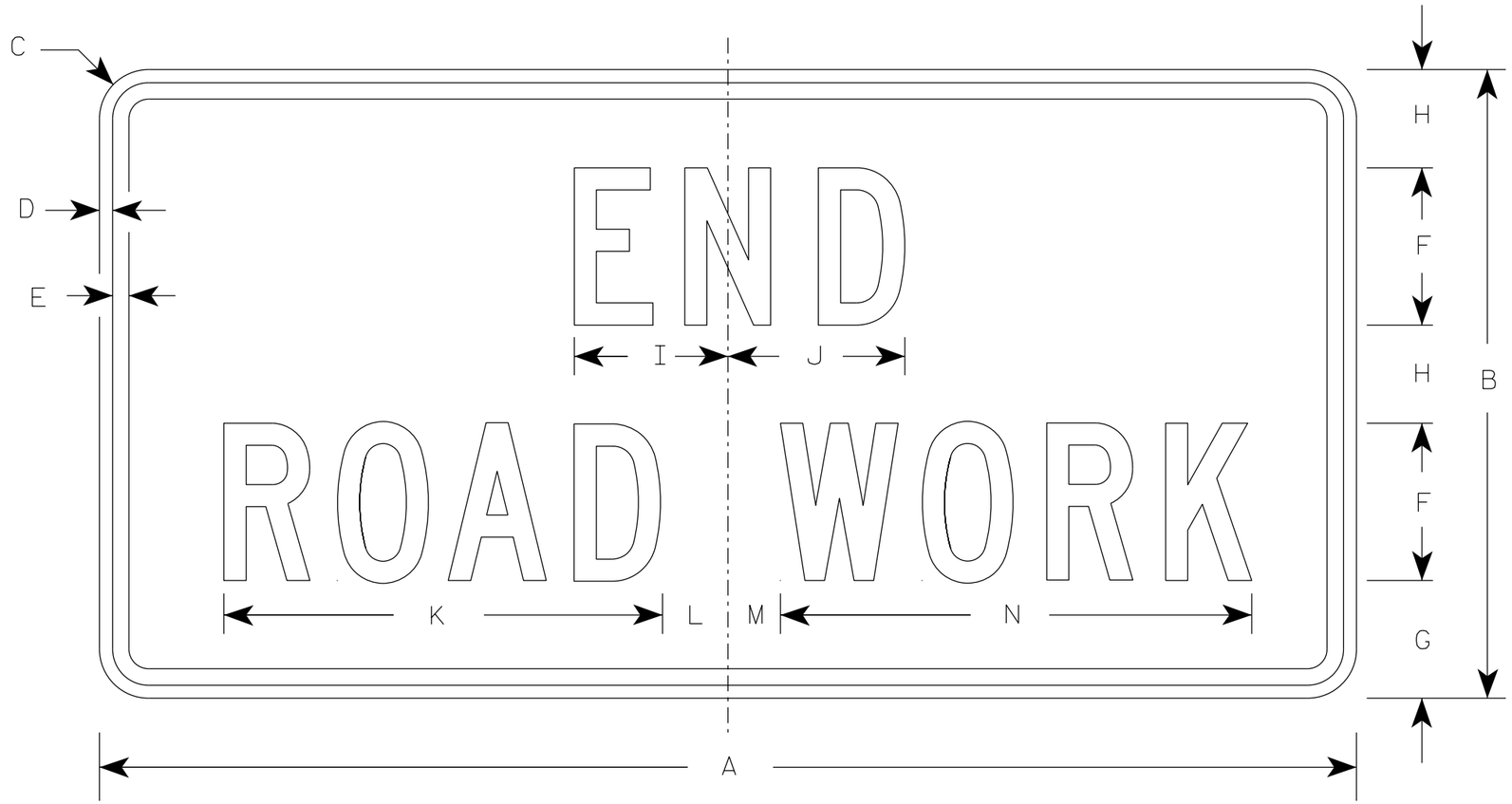

G20-2A

NOTES

1. Sign is Type II - Type F Reflective
2. Color:
   Background - Orange
   Message - Black
3. Message Series - C
4. Corners may be square or rounded when base material is plywood but borders shall be rounded as shown. When base material is metal, the corners and borders shall be rounded.

SIZE	A	B	C	D	E	F	G	H	I	J	K	L	M	N	O	P	Q	R	S	T	U	V	W	X	Y	Z	Area sq. ft.
1	36	18	1 1/2	3/8	1/2	4	3 3/4	2 1/2	4 1/8	4 1/8	11 1/8	2	1	12 1/8													4.5
2	48	24	1 7/8	1/2	5/8	6	4 1/2	3 3/4	5 7/8	6 3/4	16 3/4	2 1/2	1 3/4	18 1/2													8.0
2M	48	24	1 7/8	1/2	5/8	6	4 1/2	3 3/4	5 7/8	6 3/4	16 3/4	2 1/2	1 3/4	18 1/2													8.0
3	48	24	1 7/8	1/2	5/8	6	4 1/2	3 3/4	5 7/8	6 3/4	16 3/4	2 1/2	1 3/4	18 1/2													8.0
4	48	24	1 7/8	1/2	5/8	6	4 1/2	3 3/4	5 7/8	6 3/4	16 3/4	2 1/2	1 3/4	18 1/2													8.0
5	48	24	1 7/8	1/2	5/8	6	4 1/2	3 3/4	5 7/8	6 3/4	16 3/4	2 1/2	1 3/4	18 1/2													8.0

STANDARD SIGN

G20-2A

WISCONSIN DEPT OF TRANSPORTATION

APPROVED Matthew R Rauch
for State Traffic Engineer

DATE 1/26/2023 PLATE NO. G20-2A.10

PROJECT NO: | HWY: | COUNTY: | SHEET NO: 113 | E

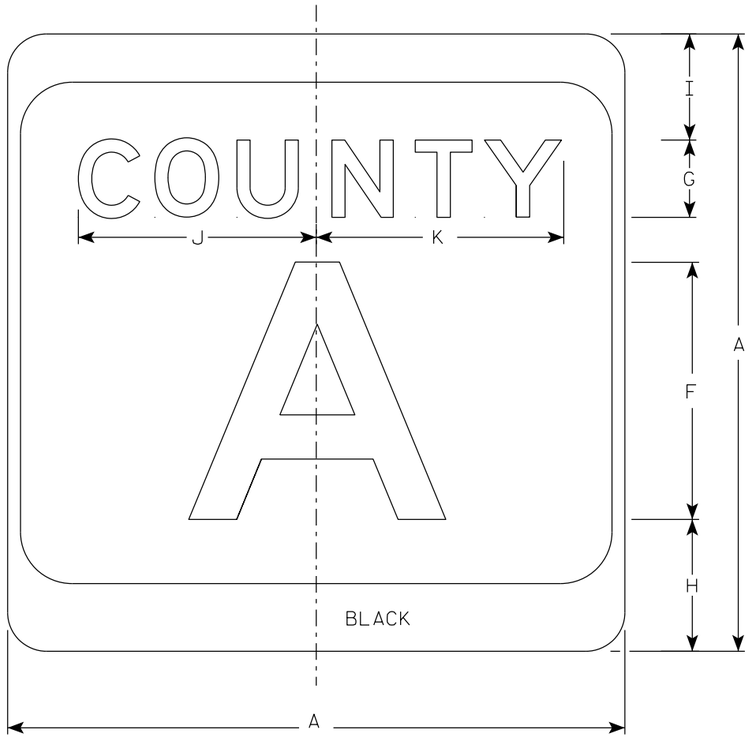

M1-5A

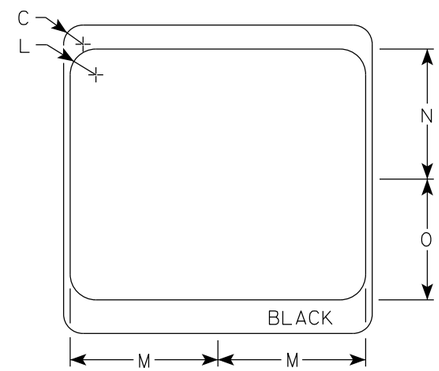

NOTES

1. Sign is Type II - Type H Reflective
2. Color:
   Background - White & Black
   Message - Black
3. Message Series - see Note 4
4. Message Series E for 1 letter.
   Message Series D for 2 letters unless message is too big then Series C.
   Message Series C for 3 letters unless message is too big then Series B.
5. Substitute appropriate letters & optically center to achieve proper balance.

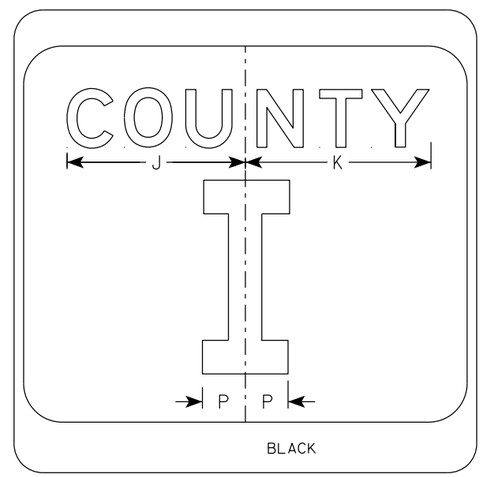

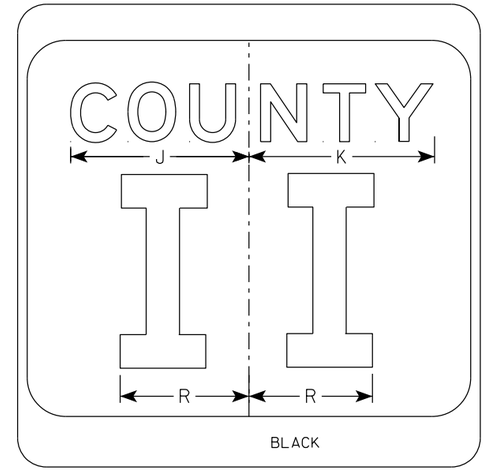

SIZE	A	B	C	D	E	F	G	H	I	J	K	L	M	N	O	P	Q	R	S	T	U	V	W	X	Y	Z	Area sq. ft.
1																											
2	24		1 1/2			10	3	5 1/8	4 1/8	9 1/4	9 5/8	2	11 1/2	10 1/8	9 3/8	2 1/4		6 5/8									4.0
2M	24		1 1/2			10	3	5 1/8	4 1/8	9 1/4	9 5/8	2	11 1/2	10 1/8	9 3/8	2 1/4		6 5/8									4.0
3	36		2 1/4			16	4	7 5/8	5 5/8	12 1/4	12 7/8	3	17 1/8	15 1/4	14	3 3/8		10									9.0
4	36		2 1/4			16	4	7 5/8	5 5/8	12 1/4	12 7/8	3	17 1/8	15 1/4	14	3 3/8		10									9.0
5	36		2 1/4			16	4	7 5/8	5 5/8	12 1/4	12 7/8	3	17 1/8	15 1/4	14	3 3/8		10									9.0

CTH MARKER
M1-5A FOR ASSEMBLIES

WISCONSIN DEPT OF TRANSPORTATION

APPROVED Matthew R Rauch
for State Traffic Engineer

DATE 11/8/2022 PLATE NO. M1-5A.9

PROJECT NO: | HWY: | COUNTY: | SHEET NO: | E

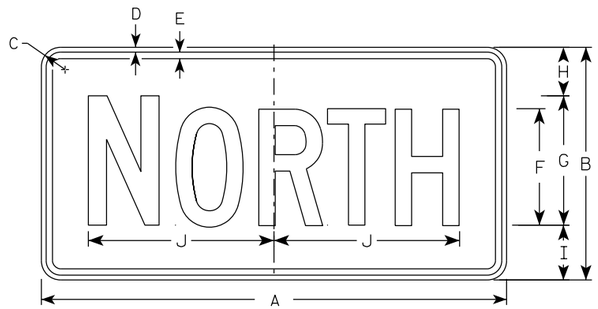

M3-1
MM3-1
MP3-1

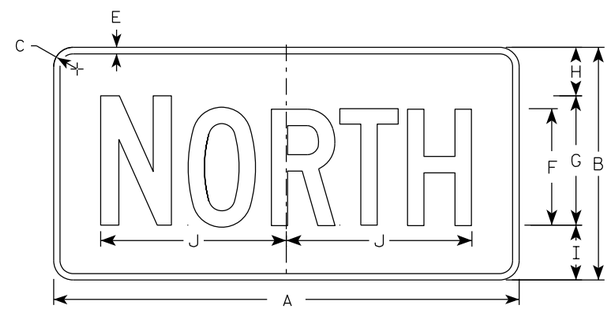

MB3-1
MK3-1
MN3-1

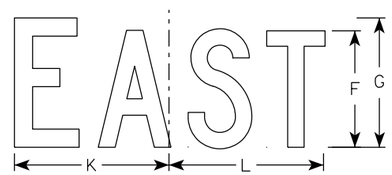

M3-2
MM3-2
MP3-2

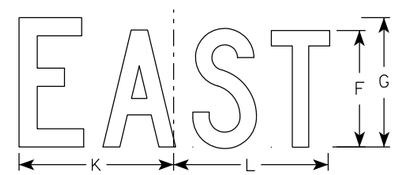

MB3-2
MK3-2
MN3-2

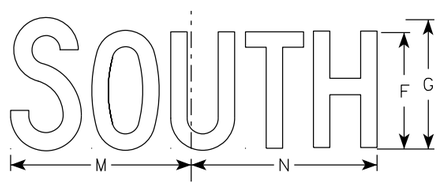

M3-3
MM3-3
MP3-3

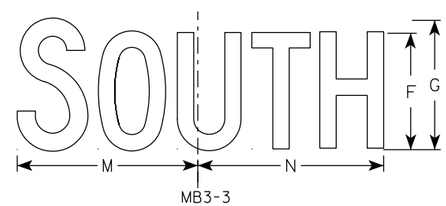

MB3-3
MK3-3
MN3-3

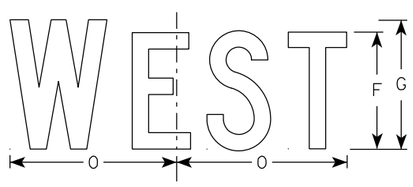

M3-4
MM3-4
MP3-4

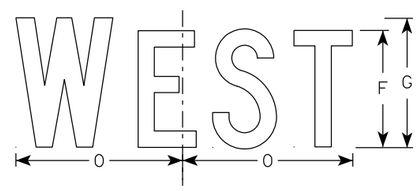

MB3-4
MK3-4
MN3-4

NOTES

1. All Signs Type II - Type H Reflective
2. Color:
   Background - See note 5
   Message - See note 5
3. Message Series - C
4. Corners may be square or rounded when base material is plywood but borders shall be rounded as shown. When base material is metal, the corners and borders shall be rounded.
5. M3-1 thru M3-4 Background - White
   Message - Black
   MB3-1 thru MB3-4 Background - Blue
   Message - White
   MK3-1 thru MK3-4 Background - Green
   Message - White
   MM3-1 thru MM3-4 Background - White
   Message - Green
   MN3-1 thru MN3-4 Background - Brown
   Message - White
   MP3-1 thru MP3-4 Background - White
   Message - Blue
6. Note the first letter of each direction is larger than the remainder of the message.

SIZE	A	B	C	D	E	F	G	H	I	J	K	L	M	N	O	P	Q	R	S	T	U	V	W	X	Y	Z	Area sq. ft.
1																											
2S	24	12	1 1/2	3/8	3/8	6	7	2 1/4	2 3/4	10 1/4	7 7/8	8 3/8	10 1/4	9 3/4	8 3/4												2.00
2M	24	12	1 1/2	3/8	3/8	6	7	2 1/4	2 3/4	10 1/4	7 7/8	8 3/8	10 1/4	9 3/4	8 3/4												2.00
3	36	18	1 1/2	3/8	1/2	9	10	3 3/4	4 1/4	14 3/8	12	12 1/8	14	14 1/8	13												4.5
4	36	18	1 1/2	3/8	1/2	9	10	3 3/4	4 1/4	14 3/8	12	12 1/8	14	14 1/8	13												4.5
5	36	18	1 1/2	3/8	1/2	9	10	3 3/4	4 1/4	14 3/8	12	12 1/8	14	14 1/8	13												4.5

STANDARD SIGNS
M3-1 THRU M3-4
SERIES

WISCONSIN DEPT OF TRANSPORTATION

APPROVED Matthew R Rauch
For State Traffic Engineer

DATE 2/8/2023 PLATE NO. M3-1.15

PROJECT NO: | HWY: | COUNTY: | SHEET NO: 115 | E

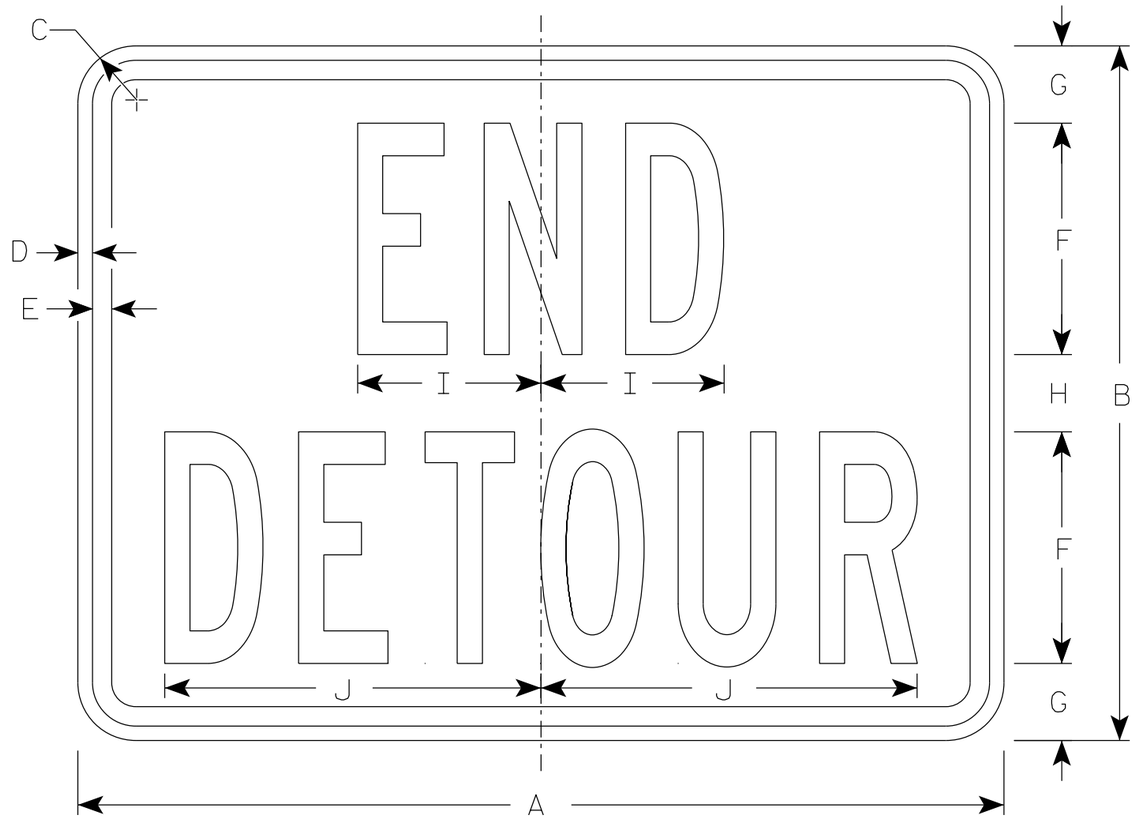

M4-8A

NOTES

1. Sign is Type II - Type F Reflective
2. Color:
   Background - Orange
   Message - Black
3. Message Series - B
4. Corners may be square or rounded when base material is plywood but borders shall be rounded as shown. When base material is metal, the corners and borders shall be rounded.

SIZE	A	B	C	D	E	F	G	H	I	J	K	L	M	N	O	P	Q	R	S	T	U	V	W	X	Y	Z	Area sq. ft.
1																											
2	24	18	1 1/2	3/8	1/2	6	2	2	4 3/4	9 3/4																	3.0
2M	24	18	1 1/2	3/8	1/2	6	2	2	4 3/4	9 3/4																	3.0
3	30	24	1 1/2	3/8	1/2	8	2 1/2	3	6 3/4	13																	5.0
4	30	24	1 1/2	3/8	1/2	8	2 1/2	3	6 3/4	13																	5.0
5	30	24	1 1/2	3/8	1/2	8	2 1/2	3	6 3/4	13																	5.0

STANDARD SIGN
M4-8A

WISCONSIN DEPT OF TRANSPORTATION

APPROVED Matthew R Rauch
for State Traffic Engineer

DATE 2/9/2023 PLATE NO. M4-8A.4

PROJECT NO: | HWY: | COUNTY: | SHEET NO: 116 | E

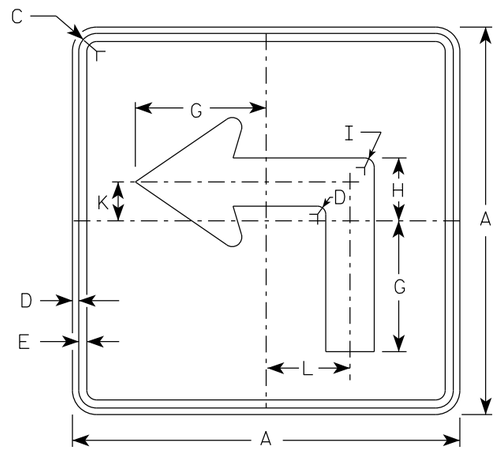

M5-1L
MM5-1L
MO5-1L
MP5-1L

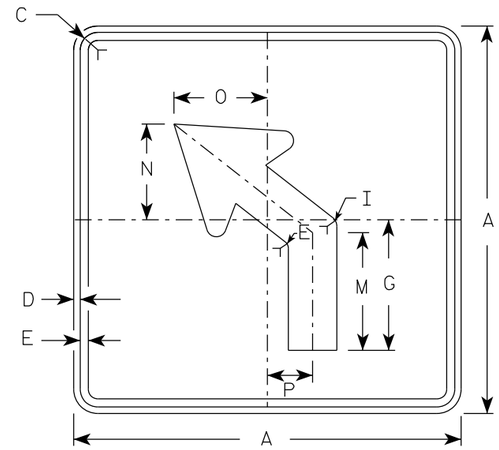

M5-2L
MM5-2L
MO5-2L
MP5-2L

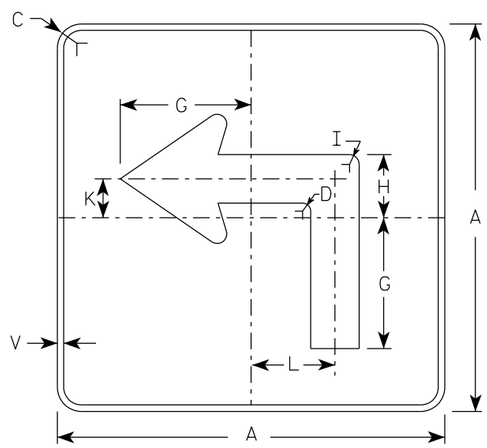

MB5-1L
MK5-1L
MN5-1L
MR5-1L

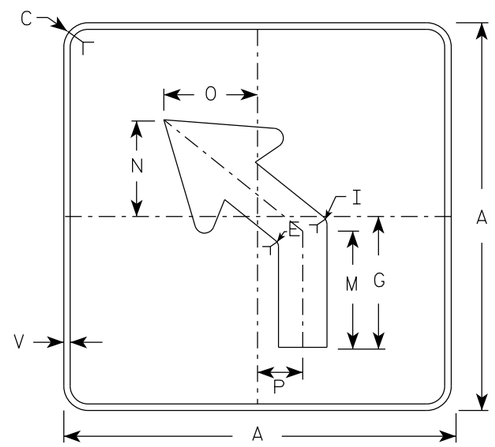

MB5-2L
MK5-2L
MN5-2L
MR5-2L

NOTES

1. Signs are Type II - Type H reflective except as shown
2. Color:
   Background - See note 4
   Message - See note 4
3. Corners may be square or rounded when base material is plywood but borders shall be rounded as shown. When base material is metal, the corners and borders shall be rounded.
4. M5-1 and M5-2 Background - White
   Message - Black
   MB5-1 and MB5-2 Background - Blue
   Message - White
   MK5-1 and MK5-2 Background - Green
   Message - White
   MM5-1 and MM5-2 Background - White
   Message - Green
   MN5-1 and MN5-2 Background - Brown
   Message - White
   MO5-1 and MO5-2 Background - Orange - Type F Reflective
   Message - Black
   MP5-1 and MP5-2 Background - White
   Message - Blue
   MR5-1 and MR5-2 Background - Brown
   Message - Yellow
5. M5-1R same as M5-1L except arrow points right.
6. M5-2R same as M5-2L except arrow tilts right.

ARROW DETAIL

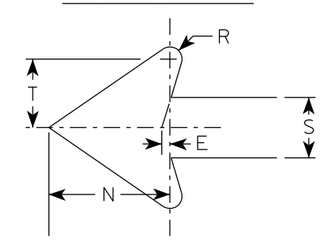

SIZE	A	B	C	D	E	F	G	H	I	J	K	L	M	N	O	P	Q	R	S	T	U	V	W	X	Y	Z	Area sq. ft.
1																											
2S	21		1 1/2	3/8	3/8		7	3 3/8	5/8		2 1/8	4 1/2	6 3/8	5 1/4	5	2 1/2		1/2	2 5/8	3		1/2					3.06
2M	21		1 1/2	3/8	3/8		7	3 3/8	5/8		2 1/8	4 1/2	6 3/8	5 1/4	5	2 1/2		1/2	2 5/8	3		1/2					3.06
3	30		1 7/8	1/2	5/8		10 1/8	4 7/8	7/8		3	6 1/2	9 1/8	7 1/2	7 1/4	3 1/2		3/4	3 3/4	4 1/4		1/2					6.25
4	30		1 7/8	1/2	5/8		10 1/8	4 7/8	7/8		3	6 1/2	9 1/8	7 1/2	7 1/4	3 1/2		3/4	3 3/4	4 1/4		1/2					6.25
5	30		1 7/8	1/2	5/8		10 1/8	4 7/8	7/8		3	6 1/2	9 1/8	7 1/2	7 1/4	3 1/2		3/4	3 3/4	4 1/4		1/2					6.25

STANDARD SIGN
M5-1 & M5-2

WISCONSIN DEPT OF TRANSPORTATION

APPROVED Matthew R Rauch
for State Traffic Engineer

DATE 2/13/2023 PLATE NO. M5-1.15

PROJECT NO: | HWY: | COUNTY: | SHEET NO: 117 | E

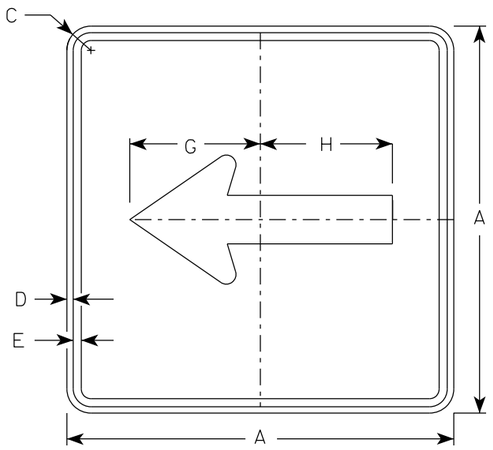

M6-1
MM6-1
MO6-1
MP6-1

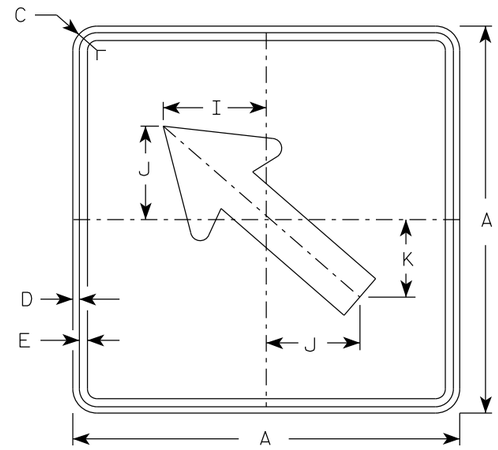

M6-2
MM6-2
MO6-2
MP6-2

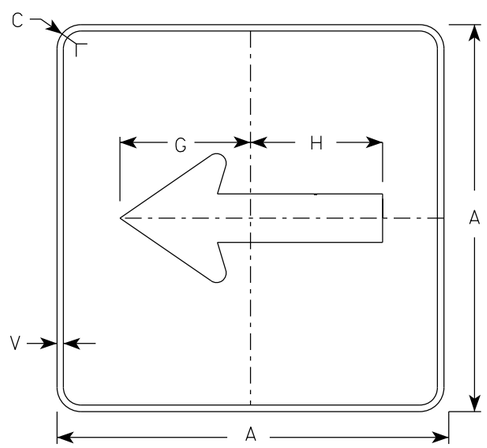

MB6-1
MK6-1
MN6-1
MR6-1

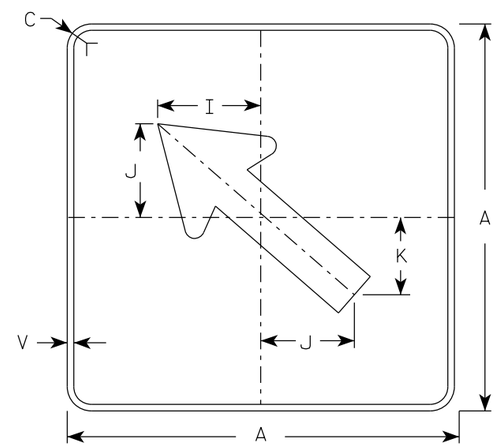

MB6-2
MK6-2
MN6-2
MR6-2

NOTES

1. Signs are Type II - Type H Reflective except as Shown
2. Color:
   Background - See note 4
   Message - See note 4
3. Corners may be square or rounded when base material is plywood but borders shall be rounded as shown. When base material is metal, the corners and borders shall be rounded.
4. M6-1 and M6-2 Background - White
   Message - Black
   MB6-1 and MB6-2 Background - Blue
   Message - White
   MK6-1 and MK6-2 Background - Green
   Message - White
   MM6-1 and MM6-2 Background - White
   Message - Green
   MN6-1 and MN6-2 Background - Brown
   Message - White
   MO6-1 and MO6-2 Background - Orange - Type F Reflective
   Message - Black
   MP6-1 and MP6-2 Background - White
   Message - Blue
   MR6-1 and MR6-2 Background - Brown
   Message - Yellow

ARROW DETAIL

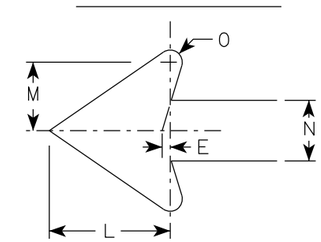

SIZE	A	B	C	D	E	F	G	H	I	J	K	L	M	N	O	P	Q	R	S	T	U	V	W	X	Y	Z	Area sq. ft.
1																											
2S	21		1 1/2	3/8	3/8		7 1/2	7 1/8	5 5/8	5	4 1/4	5 1/4	3	2 5/8	1/2							1/2					3.06
2M	21		1 1/2	3/8	3/8		7 1/2	7 1/8	5 5/8	5	4 1/4	5 1/4	3	2 5/8	1/2							1/2					3.06
3	30		1 7/8	1/2	5/8		10 3/4	10 1/4	8	7 1/4	6	7 1/2	4 1/4	3 3/4	3/4							1/2					6.25
4	30		1 7/8	1/2	5/8		10 3/4	10 1/4	8	7 1/4	6	7 1/2	4 1/4	3 3/4	3/4							1/2					6.25
5	30		1 7/8	1/2	5/8		10 3/4	10 1/4	8	7 1/4	6	7 1/2	4 1/4	3 3/4	3/4							1/2					6.25

STANDARD SIGN
M6-1 & M6-2
SERIES

WISCONSIN DEPT OF TRANSPORTATION

APPROVED Matthew R Rauch
for State Traffic Engineer

DATE 2/13/2023 PLATE NO. M6-1.16

PROJECT NO: | HWY: | COUNTY: | SHEET NO: 118 | E

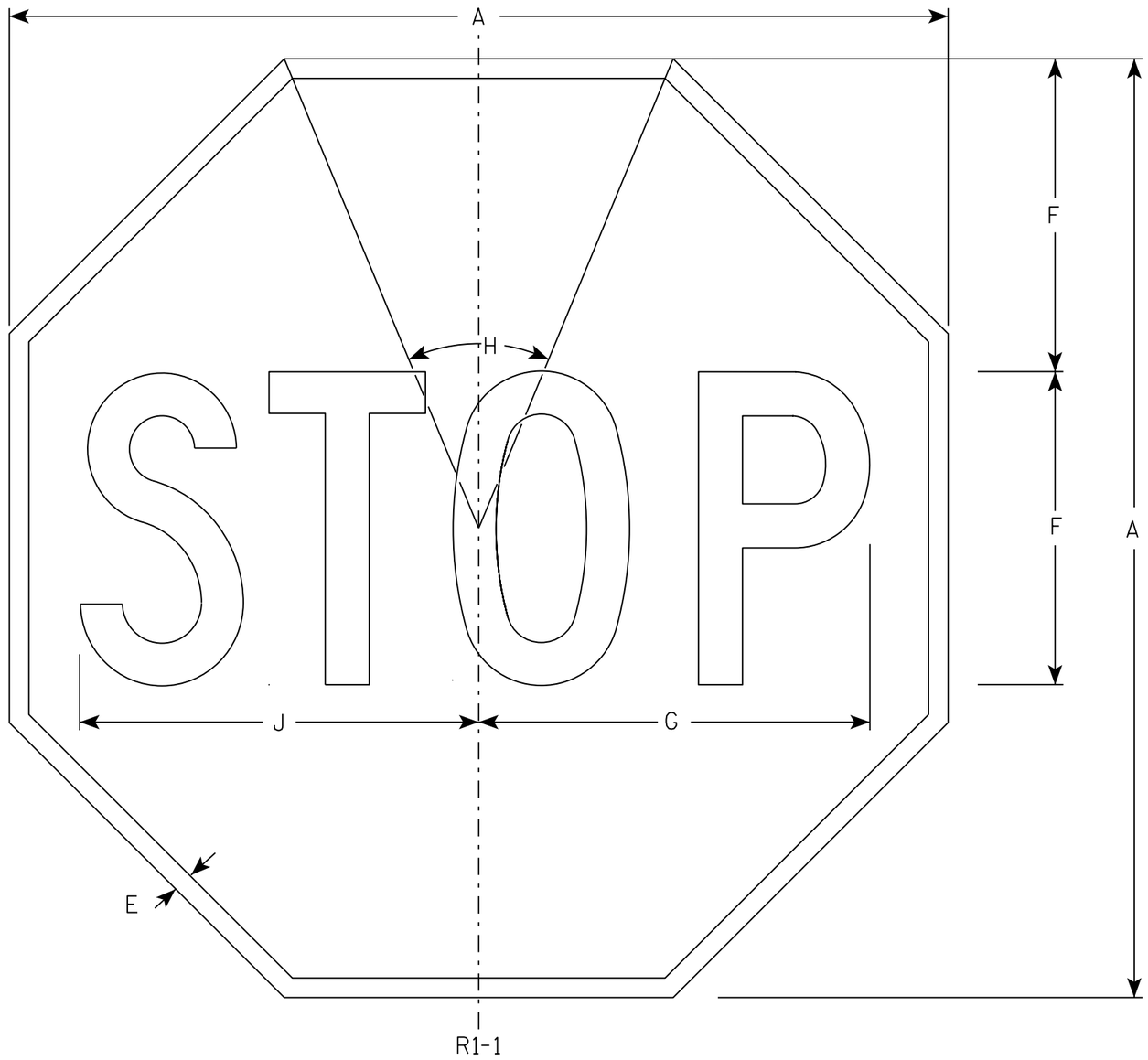

NOTES

1. Sign is Type II - Type H Reflective - reference WIS DOT Standard Specification for HIGHWAY and STRUCTURE CONSTRUCTION latest edition.
2. Color:
   Background - Red
   Message - White
3. Message Series - C

SIZE	A	B	C	D	E	F	G	H	I	J	K	L	M	N	O	P	Q	R	S	T	U	V	W	X	Y	Z	Area sq. ft.
1	30				5/8	10	12 1/2	45°		12 3/4																	5.18
2S	30				5/8	10	12 1/2	45°		12 3/4																	5.18
2M	36				3/4	12	15	45°		15 3/8																	7.46
3	36				3/4	12	15	45°		15 3/8																	7.46
4	48				1	16	20	45°		20 1/2																	13.25
5	48				1	16	20	45°		20 1/2																	13.25
6	18				3/8	6	7 3/4	45°		7 3/4																	1.86
7	12				1/4	4	5	45°		5 1/8																	0.78

STANDARD SIGN
R1-1

WISCONSIN DEPT OF TRANSPORTATION

APPROVED Matthew R Rauch
for State Traffic Engineer

DATE 11/12/15 PLATE NO. R1-1.13

PROJECT NO: | HWY: | COUNTY: | SHEET NO: 119 | E

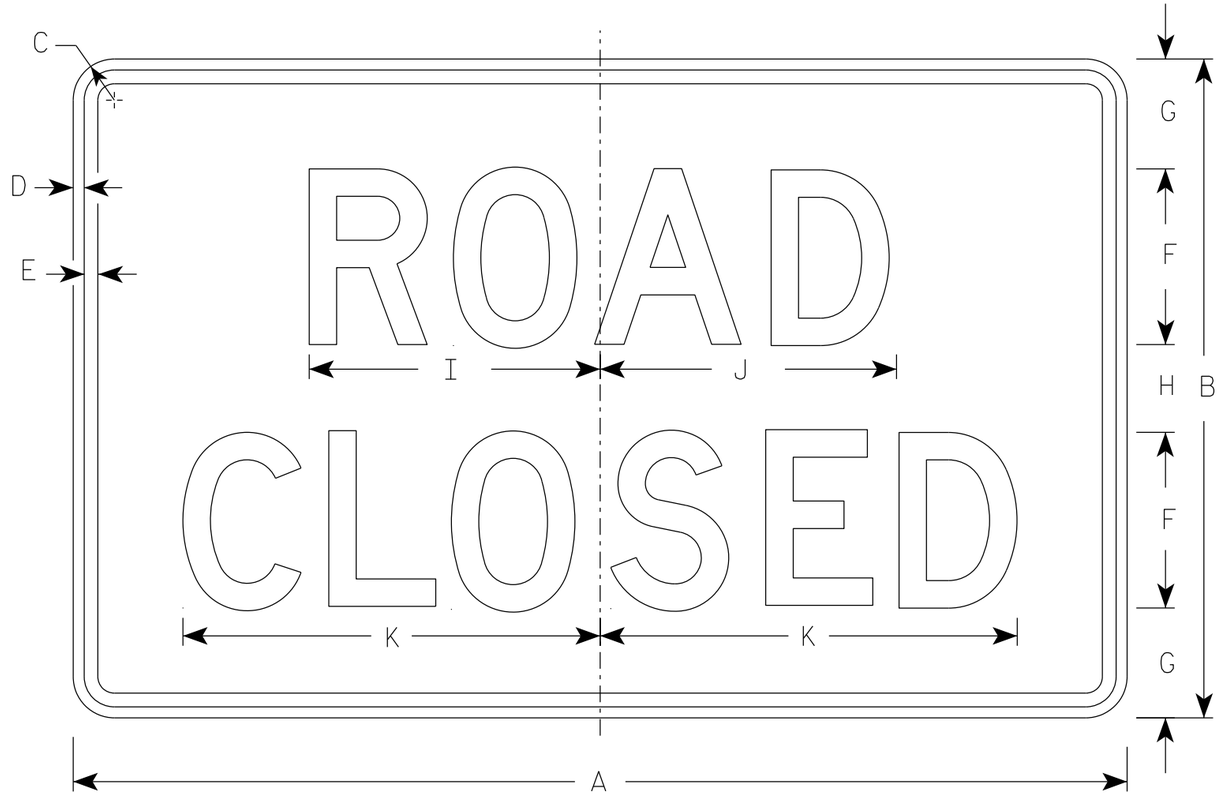

R11-2

NOTES

1. Sign is Type II - Type H Reflective
2. Color:
   Background - White
   Message - Black
3. Message Series - D
4. Corners may be square or rounded when base material is plywood but borders shall be rounded as shown. When base material is metal, the corners and borders shall be rounded.
5. Modify the message as required.

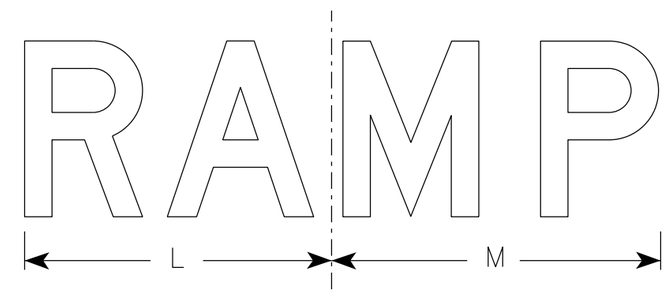

R11-2R

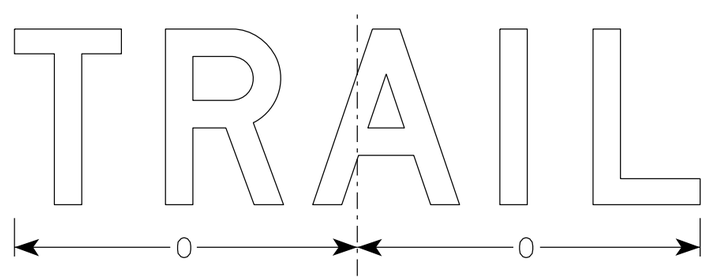

R11-2T

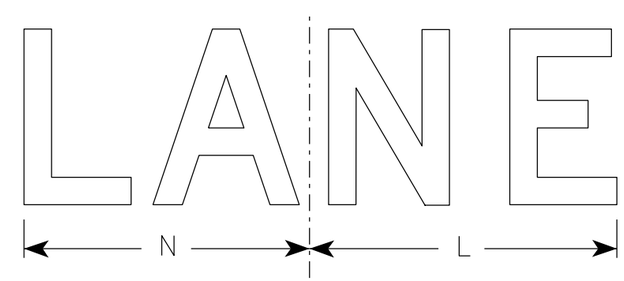

R11-2L

SIZE	A	B	C	D	E	F	G	H	I	J	K	L	M	N	O	P	Q	R	S	T	U	V	W	X	Y	Z	Area sq. ft.
1																											
2S	48	30	1 7/8	1/2	5/8	8	5	4	13 1/4	13 1/2	19	14	15	13	15 5/8												10.0
2M	48	30	1 7/8	1/2	5/8	8	5	4	13 1/4	13 1/2	19	14	15	13	15 5/8												10.0
3	48	30	1 7/8	1/2	5/8	8	5	4	13 1/4	13 1/2	19	14	15	13	15 5/8												10.0
4	48	30	1 7/8	1/2	5/8	8	5	4	13 1/4	13 1/2	19	14	15	13	15 5/8												10.0
5	48	30	1 7/8	1/2	5/8	8	5	4	13 1/4	13 1/2	19	14	15	13	15 5/8												10.0

STANDARD SIGN
R11-2

WISCONSIN DEPT OF TRANSPORTATION

APPROVED Matthew R Rauch
for State Traffic Engineer

DATE 2/5/24 PLATE NO. R11-2.12

PROJECT NO: | HWY: | COUNTY: | SHEET NO: E

7

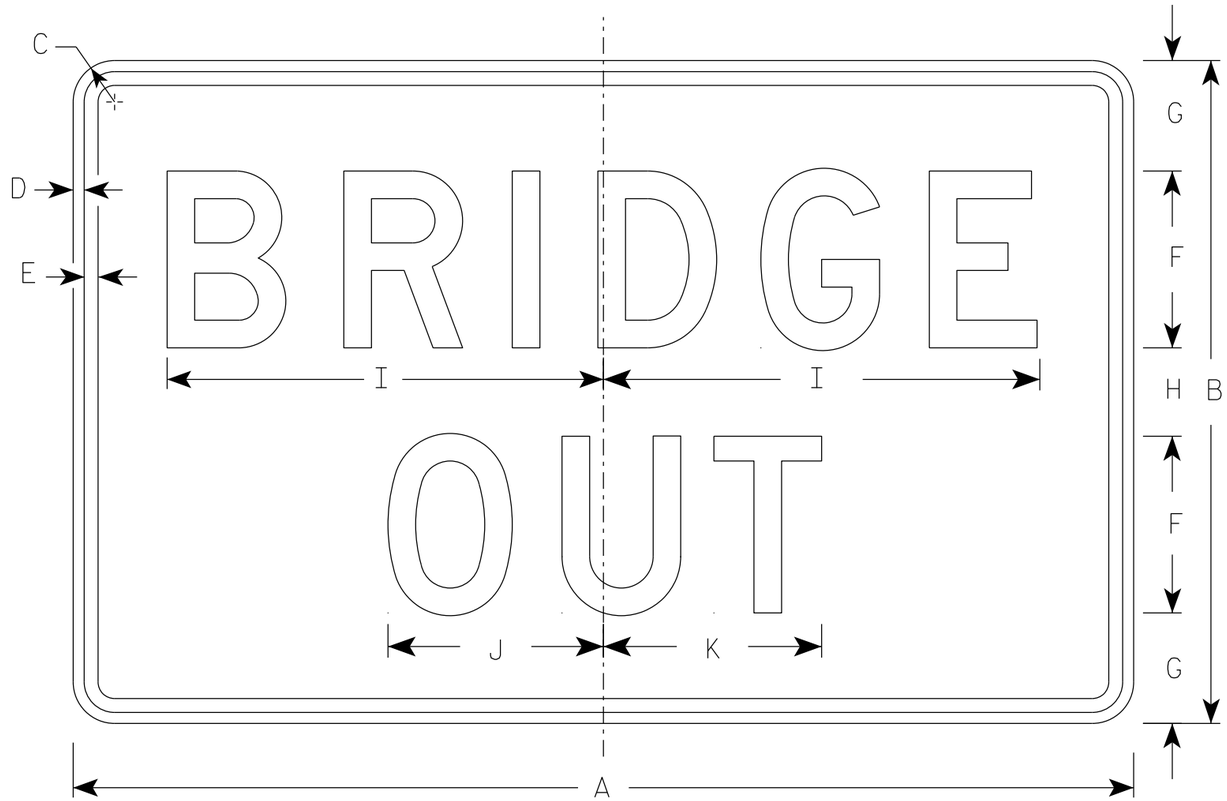

R11-2B

NOTES

1. Sign is Type II - Type H Reflective
2. Color:
   Background - White
   Message - Black
3. Message Series - D
4. Corners may be square or rounded when base material is plywood but borders shall be rounded as shown. When base material is metal, the corners and borders shall be rounded.

SIZE	A	B	C	D	E	F	G	H	I	J	K	L	M	N	O	P	Q	R	S	T	U	V	W	X	Y	Z	Area sq. ft.
1																											
2S	48	30	1 7/8	1/2	5/8	8	5	4	19 3/4	9 3/4	9 7/8																10.0
2M	48	30	1 7/8	1/2	5/8	8	5	4	19 3/4	9 3/4	9 7/8																10.0
3	48	30	1 7/8	1/2	5/8	8	5	4	19 3/4	9 3/4	9 7/8																10.0
4	48	30	1 7/8	1/2	5/8	8	5	4	19 3/4	9 3/4	9 7/8																10.0
5	48	30	1 7/8	1/2	5/8	8	5	4	19 3/4	9 3/4	9 7/8																10.0

STANDARD SIGN
R11-2B

WISCONSIN DEPT OF TRANSPORTATION

APPROVED Matthew R Rauch
For State Traffic Engineer

DATE 2/5/24 PLATE NO. R11-2B.3

PROJECT NO:

SHEET NO: 121 E

NOTES

1. Sign is Type II - Type H Reflective
2. Color:
   Background - White
   Message - Black
3. Message Series - C
4. Corners may be square or rounded when base material is plywood but borders shall be rounded as shown. When base material is metal, the corners and borders shall be rounded.
5. Substitute appropriate numerals to nearest quarter mile and optically adjust spacing to achieve proper balance.

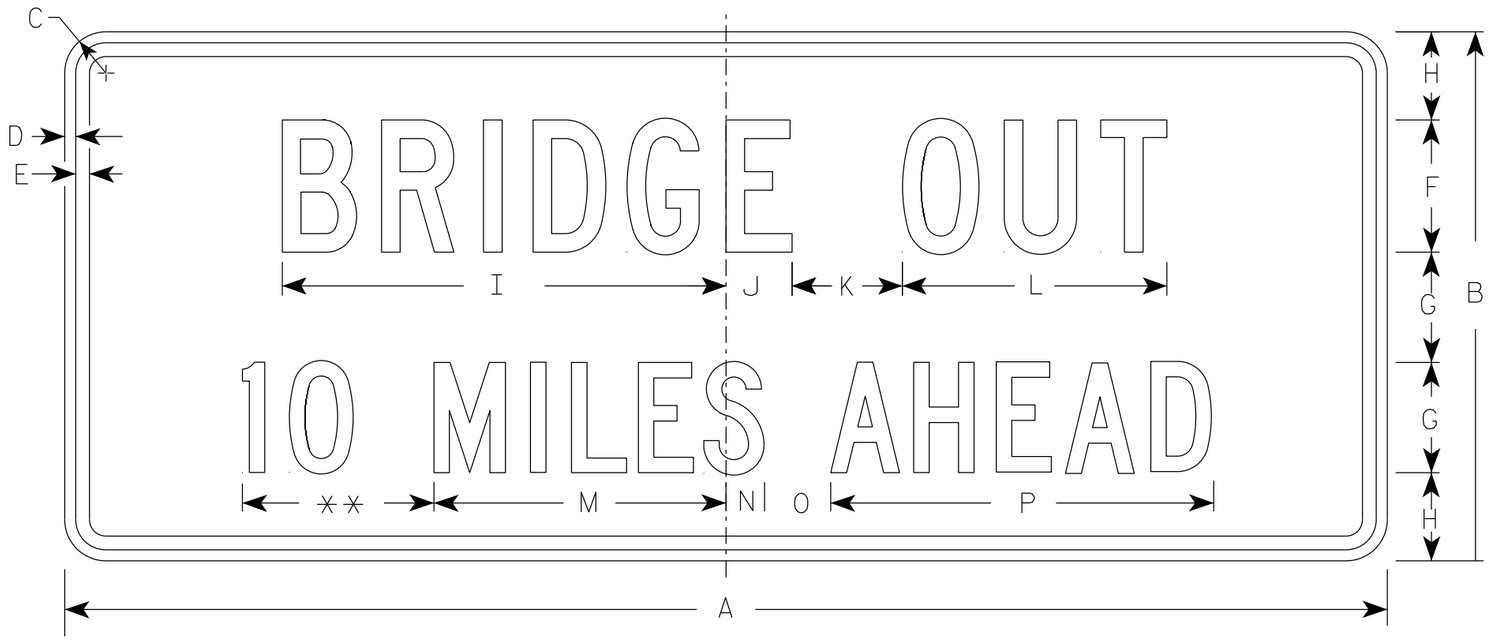

R11-3C

** See Note 5

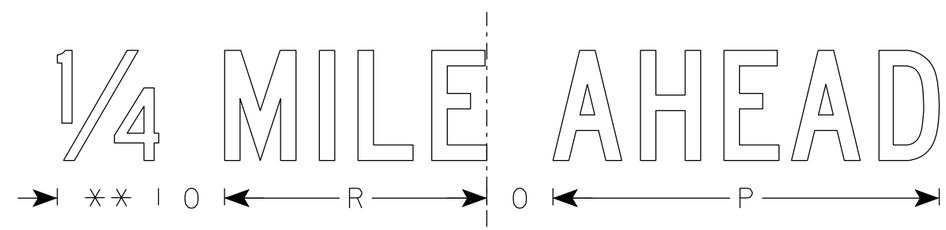

SIZE	A	B	C	D	E	F	G	H	I	J	K	L	M	N	O	P	Q	R	S	T	U	V	W	X	Y	Z	Area sq. ft.
1	36	15	1 1/2	1/2	5/8	4	3	2 1/2	13 1/4	2 1/4	3	8	8	1 1/2	2	10 3/4		7 1/8									3.75
2S	60	24	1 7/8	1/2	5/8	6	5	4	20 1/8	3	5	12	13 1/4	1 3/4	3	17 3/8		11 7/8									10.0
2M	60	24	1 7/8	1/2	5/8	6	5	4	20 1/8	3	5	12	13 1/4	1 3/4	3	17 3/8		11 7/8									10.0
3																											
4																											
5																											

STANDARD SIGN
R11-3C

WISCONSIN DEPT OF TRANSPORTATION

APPROVED Matthew R Rauch
for State Traffic Engineer

DATE 2/5/24 PLATE NO. R11-3C.4

PROJECT NO:

SHEET NO: 122 E

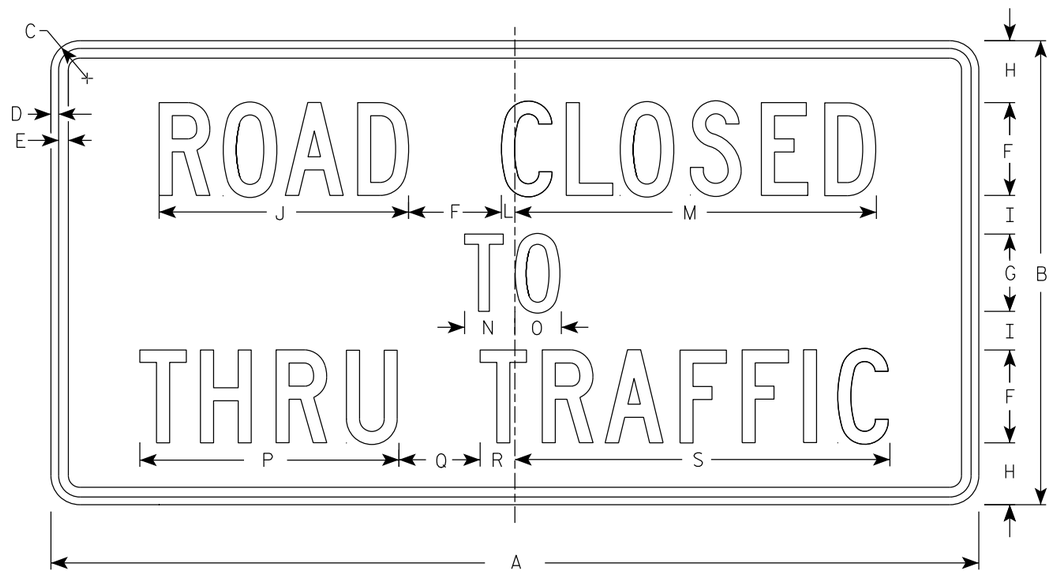

R11-4

NOTES

1. Sign is Type II - Type H Reflective
2. Color:
   Background - White
   Message - Black
3. Message Series - C
4. Corners may be square or rounded when base material is plywood but borders shall be rounded as shown. When base material is metal, the corners and borders shall be rounded.

SIZE	A	B	C	D	E	F	G	H	I	J	K	L	M	N	O	P	Q	R	S	T	U	V	W	X	Y	Z	Area sq. ft.
1																											
2S	60	30	1 7/8	1/2	5/8	6	5	4	2 1/2	16 1/8		7/8	23 3/8	3 1/4	3	16 3/4	5 1/4	2 1/4	24 1/4								12.5
2M	60	30	1 7/8	1/2	5/8	6	5	4	2 1/2	16 1/8		7/8	23 3/8	3 1/4	3	16 3/4	5 1/4	2 1/4	24 1/4								12.5
3																											
4																											
5																											

STANDARD SIGN
R11 - 4

WISCONSIN DEPT OF TRANSPORTATION

APPROVED Matthew R Rauch for State Traffic Engineer

DATE 2/5/24 PLATE NO. R11-4.4

PROJECT NO: | HWY: | COUNTY: | SHEET NO: 123 | E

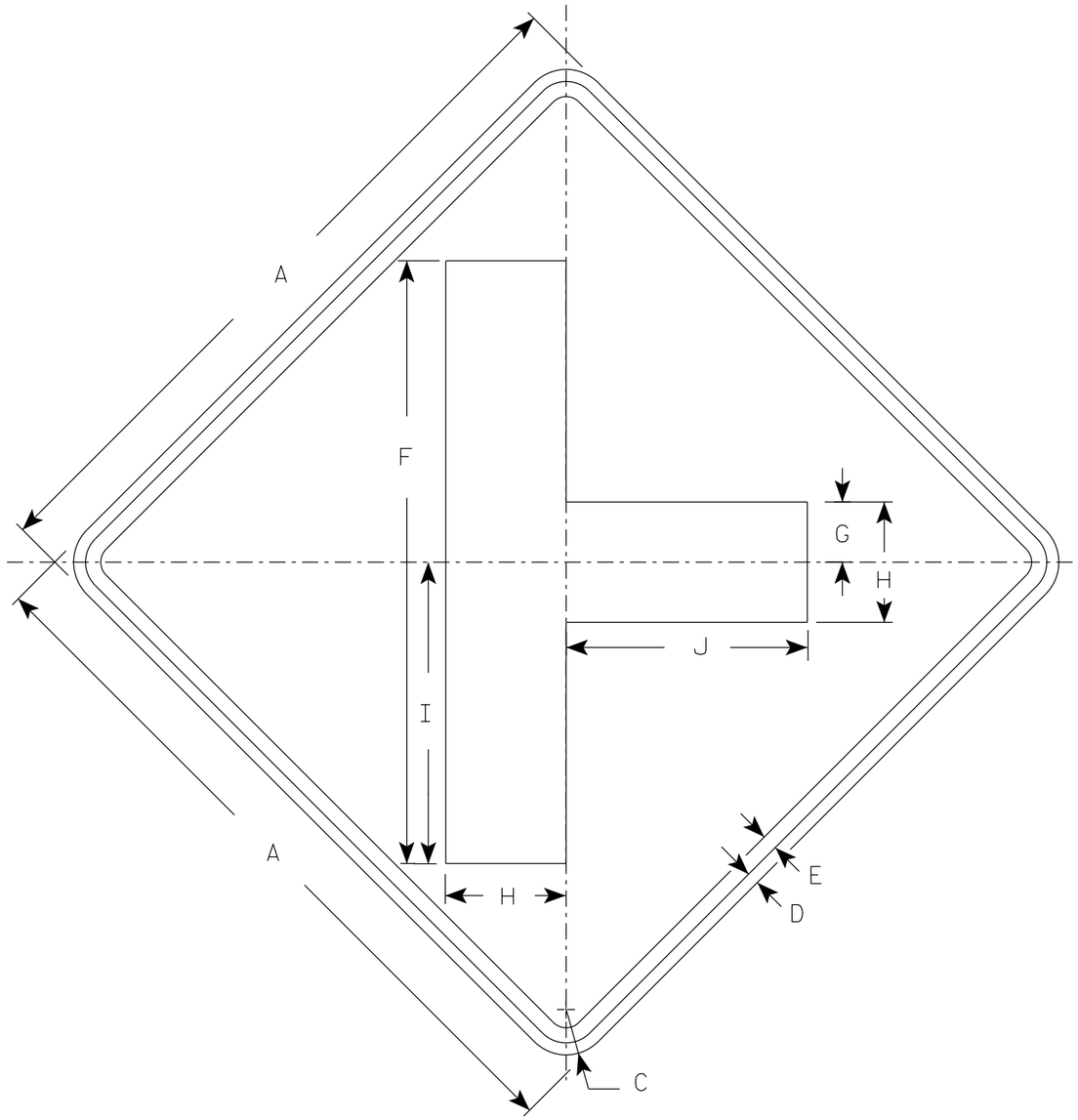

W2-2R

NOTES

1. Sign is Type II - Type F Reflective
2. Color:
   Background - Yellow
   Message - Black
3. W2-2L same as W2-2R but is rotated 180° when mounted.

SIZE	A	B	C	D	E	F	G	H	I	J	K	L	M	N	O	P	Q	R	S	T	U	V	W	X	Y	Z	Area sq. ft.
1	24		1 1/2	3/8	1/2	20	2	4	10	8																	4.0
2S	30		1 7/8	1/2	5/8	25	2 1/2	5	12 1/2	10																	6.25
2M	30		1 7/8	1/2	5/8	25	2 1/2	5	12 1/2	10																	6.25
3	36		2 1/4	5/8	3/4	30	3	6	15	12																	9.0
4	48		3	3/4	1	40	4	8	20	16																	16.0
5																											

STANDARD SIGN

W2-2 L&R

WISCONSIN DEPT OF TRANSPORTATION

APPROVED Matthew R Rauch
For State Traffic Engineer

DATE 8/16/2023 PLATE NO. W2-2.8

PROJECT NO: | HWY: | COUNTY: | SHEET NO: 124 | E

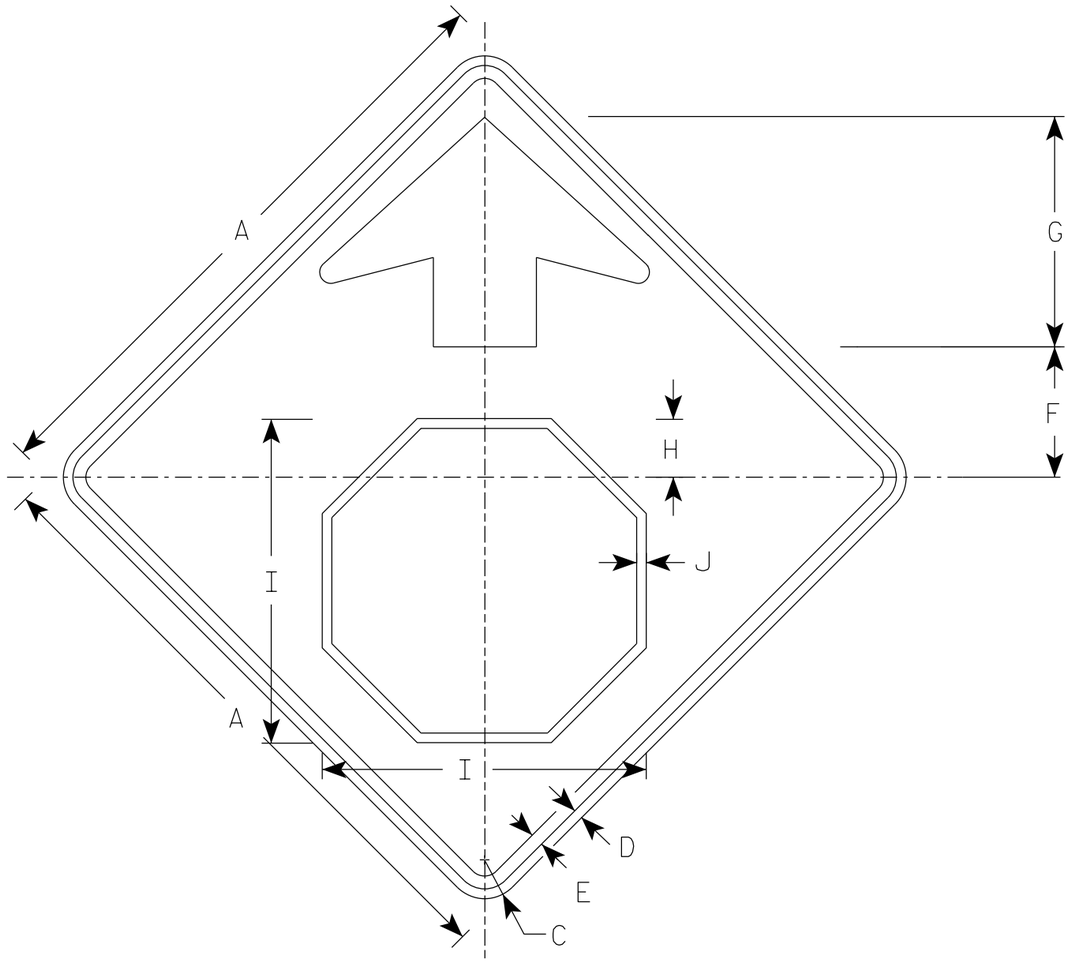

W3-1

NOTES

1. Sign is Type II - Type F Reflective
2. Color:
   Background - Yellow
   Arrow & Border - Black
   Stop Symbol - White Border on Red Background

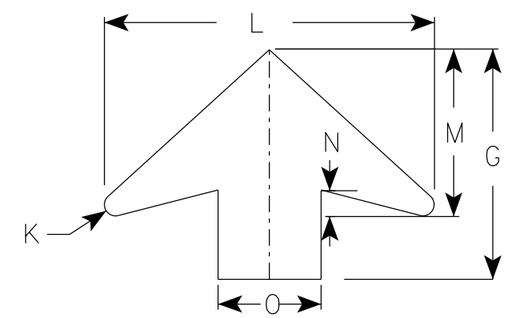

ARROW DETAIL

SIZE	A	B	C	D	E	F	G	H	I	J	K	L	M	N	O	P	Q	R	S	T	U	V	W	X	Y	Z	Area sq. ft.
1	30		1 7/8	1/2	5/8	6 1/4	11 1/4	2 7/8	15 3/4	1/2	1/2	16	8	1 1/4	5												6.25
2S	36		2 1/4	5/8	3/4	7 1/2	13 1/2	3 1/2	19	5/8	5/8	19 1/4	9 3/4	1 5/8	6												9.0
2M	36		2 1/4	5/8	3/4	7 1/2	13 1/2	3 1/2	19	5/8	5/8	19 1/4	9 3/4	1 5/8	6												9.0
3	36		2 1/4	5/8	3/4	7 1/2	13 1/2	3 1/2	19	5/8	5/8	19 1/4	9 3/4	1 5/8	6												9.0
4	48		3	3/4	1	10	17 7/8	4 1/2	25 1/8	3/4	7/8	25 5/8	13	2	8												16.0
5	48		3	3/4	1	10	17 7/8	4 1/2	25 1/8	3/4	7/8	25 5/8	13	2	8												16.0

STANDARD SIGN
W3-1

WISCONSIN DEPT OF TRANSPORTATION

APPROVED Matthew R Rauch
for State Traffic Engineer

DATE 8/17/2023 PLATE NO. W3-1.13

PROJECT NO:

SHEET NO: 125 E

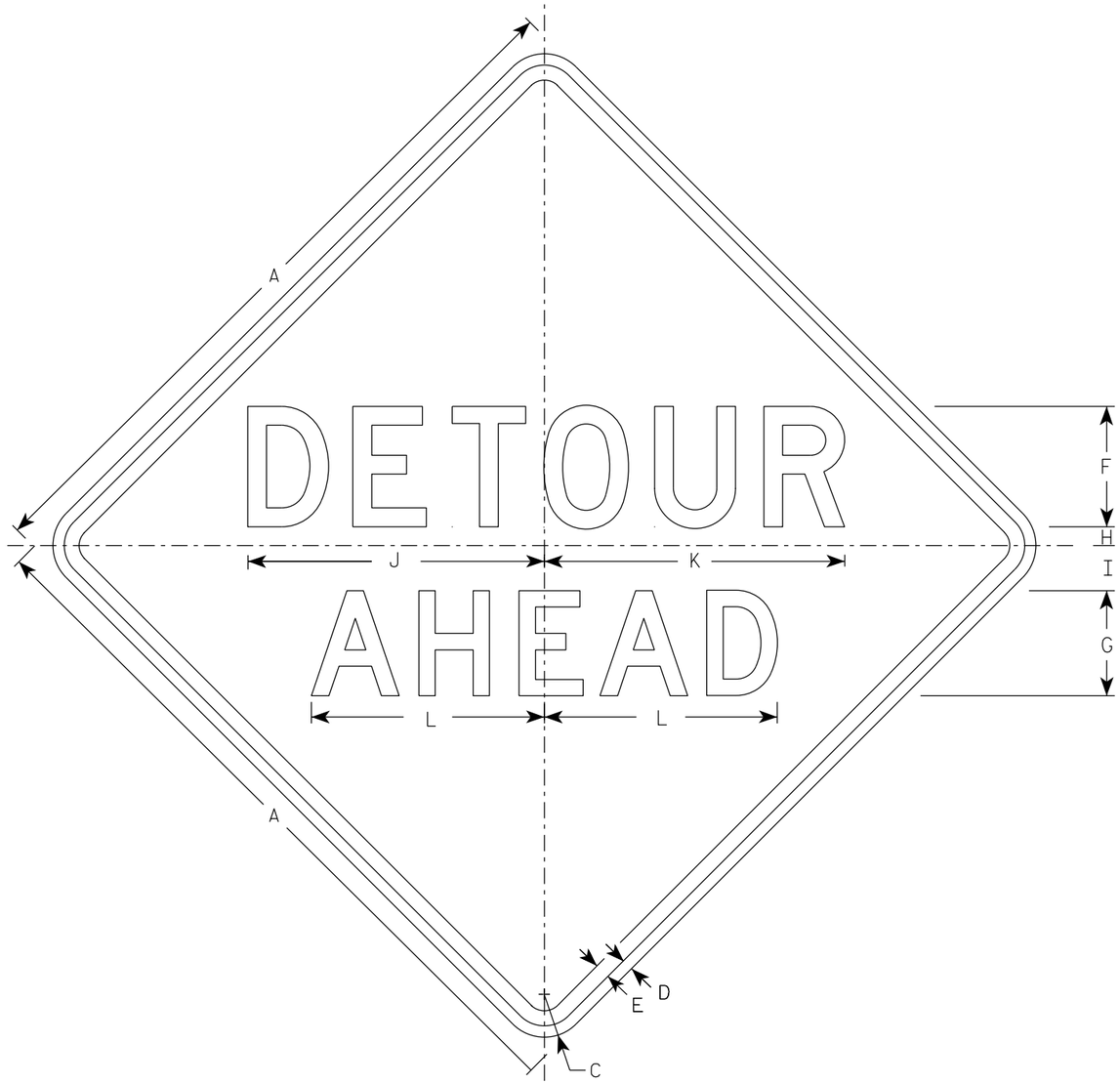

W20-2A

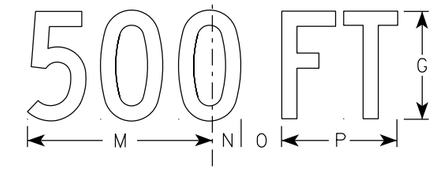

W20-2D

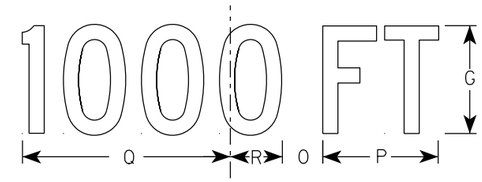

W20-2C

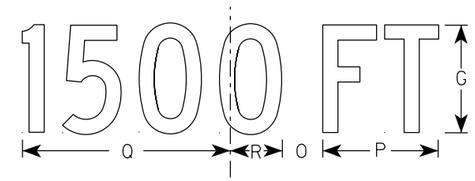

W20-2B

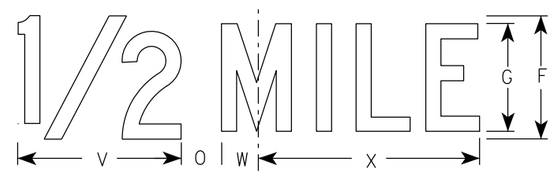

W20-2G

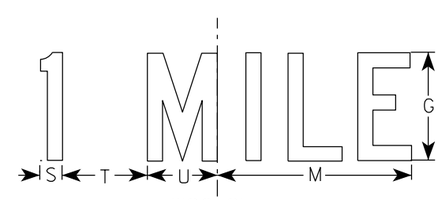

W20-2F

NOTES

1. Sign is Type II - Type F Reflective
2. Color:
   Background - Orange
   Message - Black
3. Message Series - See note 5
4. Corners may be square or rounded when base material is plywood but borders shall be rounded as shown. When base material is metal, the corners and borders shall be rounded.
5. Line 1 is Series D.
   Line 2 is Series D for AHEAD and Series C for all other distances.

SIZE	A	B	C	D	E	F	G	H	I	J	K	L	M	N	O	P	Q	R	S	T	U	V	W	X	Y	Z	Area sq. ft.
1	36		2 1/4	5/8	3/4	6	5	1	2 1/4	14 3/4	15	11 5/8	9	1 3/8	1 7/8	5 5/8	10 1/8	2 1/2	1 1/8	4 1/2	3 1/2	8	1 3/4	10 3/4			9.0
2S	48		3	3/4	1	8	7	1 1/4	3	19 3/4	20	15 1/2	12	1 7/8	2 5/8	7 1/2	13 1/2	3 3/8	1 1/2	6	4 5/8	10 5/8	2 3/8	14 3/8			16.0
2M	48		3	3/4	1	8	7	1 1/4	3	19 3/4	20	15 1/2	12	1 7/8	2 5/8	7 1/2	13 1/2	3 3/8	1 1/2	6	4 5/8	10 5/8	2 3/8	14 3/8			16.0
3	48		3	3/4	1	8	7	1 1/4	3	19 3/4	20	15 1/2	12	1 7/8	2 5/8	7 1/2	13 1/2	3 3/8	1 1/2	6	4 5/8	10 5/8	2 3/8	14 3/8			16.0
4	48		3	3/4	1	8	7	1 1/4	3	19 3/4	20	15 1/2	12	1 7/8	2 5/8	7 1/2	13 1/2	3 3/8	1 1/2	6	4 5/8	10 5/8	2 3/8	14 3/8			16.0
5	48		3	3/4	1	8	7	1 1/4	3	19 3/4	20	15 1/2	12	1 7/8	2 5/8	7 1/2	13 1/2	3 3/8	1 1/2	6	4 5/8	10 5/8	2 3/8	14 3/8			16.0

STANDARD SIGN
W20-2A,B,C,D,F & G

WISCONSIN DEPT OF TRANSPORTATION

APPROVED Matthew R Rauch
For State Traffic Engineer

DATE 1/10/2024 PLATE NO. W20-2.7

PROJECT NO: | HWY: | COUNTY: | SHEET NO: E

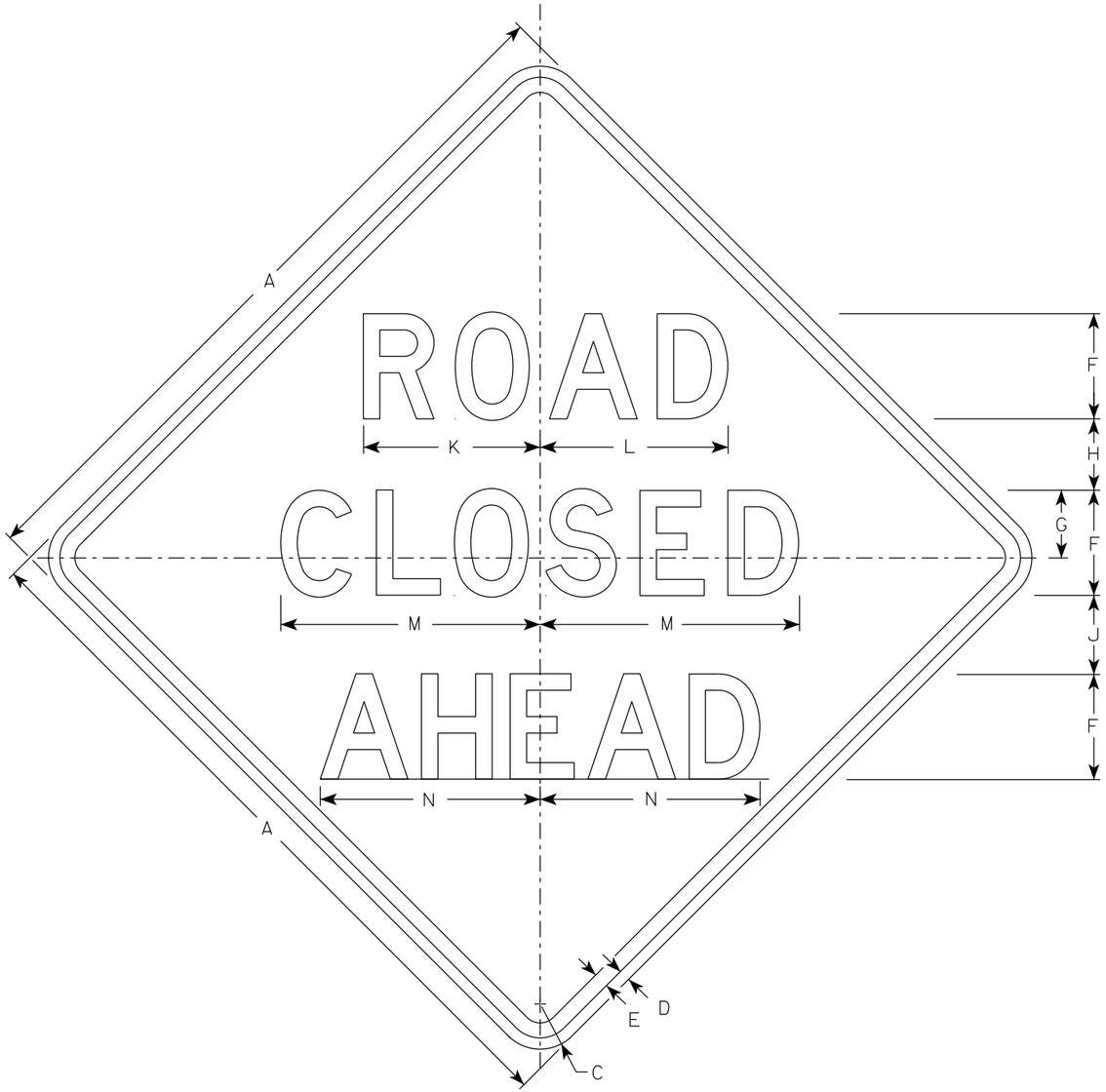

W20-3A

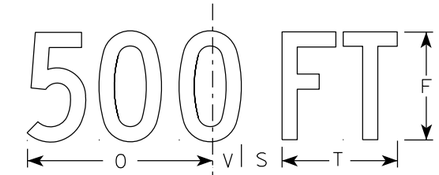

W20-3D

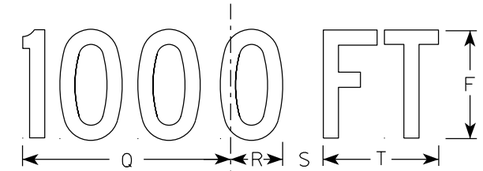

W20-3C

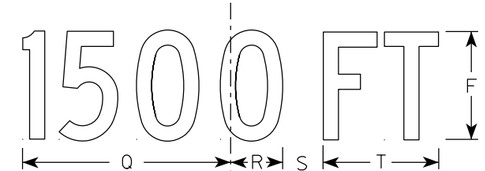

W20-3B

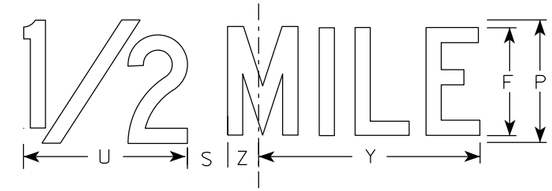

W20-3G

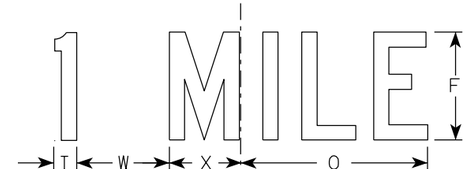

W20-3F

NOTES

1. Sign is Type II - Type F Reflective
2. Color:
   Background - Orange
   Message - Black
3. Message Series - see note 5
4. Corners may be square or rounded when base material is plywood but borders shall be rounded as shown. When base material is metal, the corners and borders shall be rounded.
5. Lines 1 and 2 are Series D.
   Line 3 is Series D for AHEAD and Series C for all other distances.

SIZE	A	B	C	D	E	F	G	H	I	J	K	L	M	N	O	P	Q	R	S	T	U	V	W	X	Y	Z	Area sq. ft.
1	36		2 1/4	5/8	3/4	5	3 3/8	3 1/2	1 1/8	4	8 3/8	8 7/8	12 1/2	11	9	6	10 1/8	2 1/2	1 7/8	5 5/8	8	1 3/8	4 1/2	3 1/2	10 3/4	1 3/4	9.0
2S	48		3	3/4	1	7	4 1/2	4 3/4	1 1/2	5 1/4	11 3/4	12 1/2	17 1/4	14 5/8	12	8	13 1/2	3 3/8	2 5/8	7 1/2	10 5/8	1 7/8	6	4 5/8	14 3/8	2 3/8	16.0
2M	48		3	3/4	1	7	4 1/2	4 3/4	1 1/2	5 1/4	11 3/4	12 1/2	17 1/4	14 5/8	12	8	13 1/2	3 3/8	2 5/8	7 1/2	10 5/8	1 7/8	6	4 5/8	14 3/8	2 3/8	16.0
3	48		3	3/4	1	7	4 1/2	4 3/4	1 1/2	5 1/4	11 3/4	12 1/2	17 1/4	14 5/8	12	8	13 1/2	3 3/8	2 5/8	7 1/2	10 5/8	1 7/8	6	4 5/8	14 3/8	2 3/8	16.0
4	48		3	3/4	1	7	4 1/2	4 3/4	1 1/2	5 1/4	11 3/4	12 1/2	17 1/4	14 5/8	12	8	13 1/2	3 3/8	2 5/8	7 1/2	10 5/8	1 7/8	6	4 5/8	14 3/8	2 3/8	16.0
5	48		3	3/4	1	7	4 1/2	4 3/4	1 1/2	5 1/4	11 3/4	12 1/2	17 1/4	14 5/8	12	8	13 1/2	3 3/8	2 5/8	7 1/2	10 5/8	1 7/8	6	4 5/8	14 3/8	2 3/8	16.0

STANDARD SIGN
W20-3A, B, C, D, F & G

WISCONSIN DEPT OF TRANSPORTATION

APPROVED Matthew R Rauch
for State Traffic Engineer

DATE 1/10/2024 PLATE NO. W20-3.8

PROJECT NO: | HWY: | COUNTY: | SHEET NO: E

STATE PROJECT NUMBER
4868-05-70

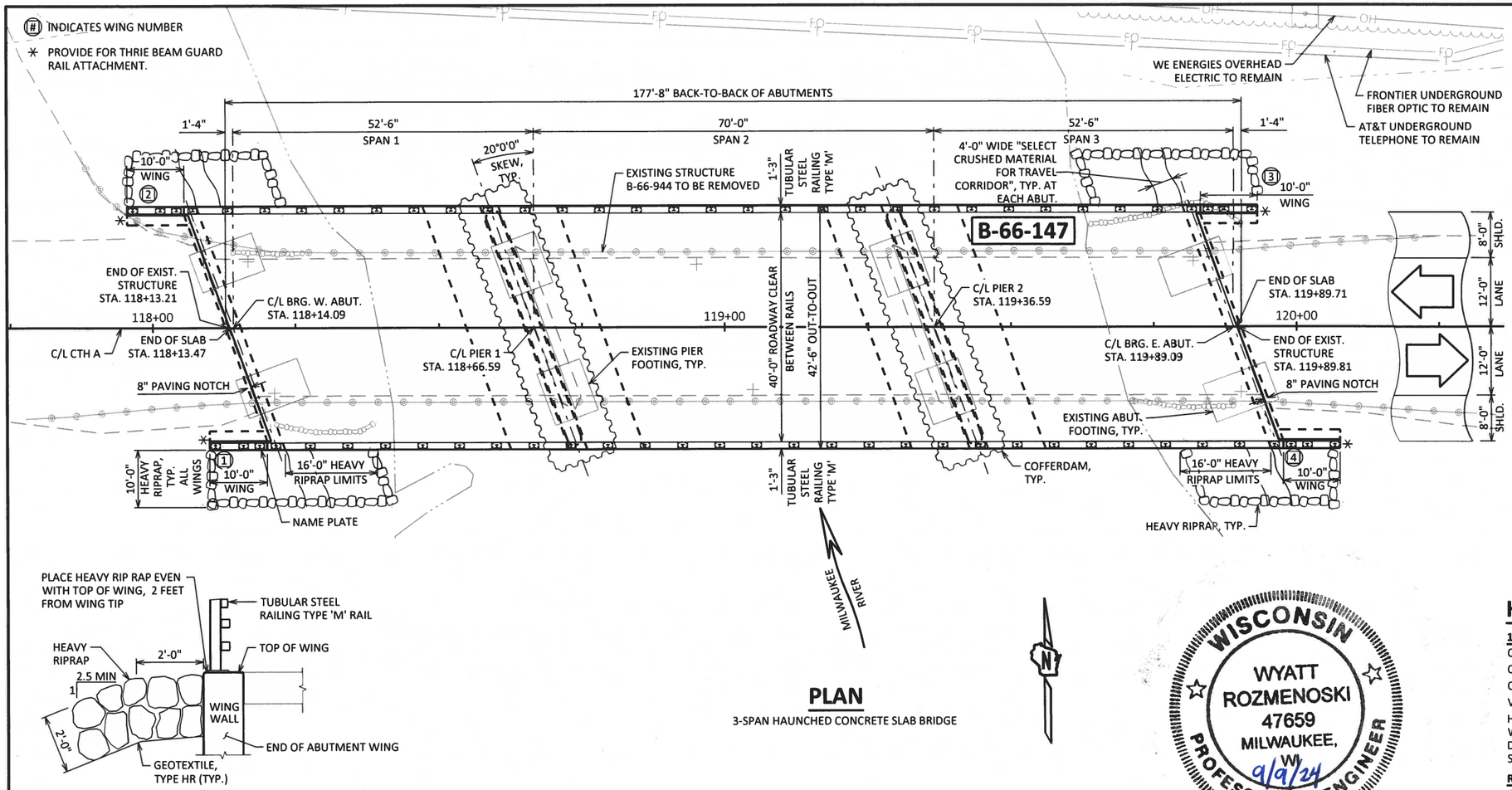

PLAN

3-SPAN HAUNCHED CONCRETE SLAB BRIDGE

SECTION A-A

TYPICAL FILL SECTION AT WING TIPS

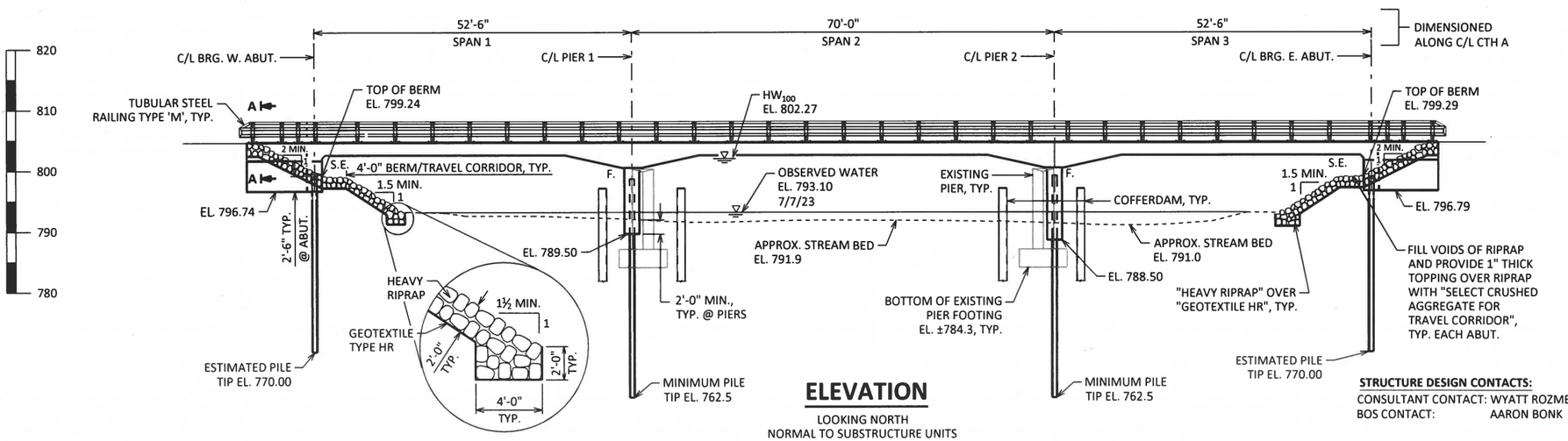

ELEVATION

LOOKING NORTH
NORMAL TO SUBSTRUCTURE UNITS

WISCONSIN
WYATT ROZMENOSKI
47659
MILWAUKEE, WI
9/9/24
PROFESSIONAL ENGINEER

DESIGN DATA

LIVE LOAD:

DESIGN LOADING: HL-93
INVENTORY RATING: RF = 1.22
OPERATING RATING: RF = 1.58
WISCONSIN STANDARD PERMIT VEHICLE (WIS-SPV): 240 (KIPS)

STRUCTURE IS DESIGNED FOR A FUTURE WEARING SURFACE OF 20 POUNDS PER SQUARE FOOT.

MATERIAL PROPERTIES:

CONCRETE MASONRY:
SUPERSTRUCTURE — f'_c = 4,000 PSI
ALL OTHER — f'_c = 3,500 PSI

BAR STEEL REINFORCEMENT
GRADE 60 — f_y = 60,000 PSI

STEEL PILING
ASTM A572 — f_y = 50,000 PSI

FOUNDATION DATA

ABUTMENTS TO BE SUPPORTED ON HP 12 x 53 PILING DRIVEN TO A REQUIRED DRIVING RESISTANCE OF 130 TONS ** PER PILE AS DETERMINED BY THE MODIFIED GATES DYNAMIC FORMULA.
ESTIMATED 30'-0" LONG AT WEST ABUT.
ESTIMATED 30'-0" LONG AT EAST ABUT.

PIERS TO BE SUPPORTED ON HP 12 x 53 PILING DRIVEN TO A REQUIRED DRIVING RESISTANCE OF 220 TONS ** PER PILE AS DETERMINED BY THE MODIFIED GATES DYNAMIC FORMULA AND TO A TOP EL. OF 762.5 OR DEEPER. THE WISDOT REGIONAL GEOTECHNICAL ENGINEER SHOULD BE CONTACTED AND BE PRESENT DURING PILE DRIVING OPERATIONS.
ESTIMATED 40'-0" LONG AT PIER 1
ESTIMATED 40'-0" LONG AT PIER 2

**THE FACTORED AXIAL RESISTANCE OF PILES IN COMPRESSION USED FOR DESIGN IS THE REQUIRED DRIVING RESISTANCE MULTIPLIED BY A RESISTANCE FACTOR OF 0.5 USING MODIFIED GATES TO DETERMINE PILE CAPACITY.

HYDRAULIC DATA

100-YEAR FREQUENCY:

Q_{100} TOTAL = 10,764 C.F.S.
Q_{100} BRIDGE = 7,820 C.F.S.
Q_{100} ROADWAY = 2,944 C.F.S
V_{100}= 5.64 F.P.S.
HW_{100}= EL. 802.27
WATERWAY AREA = 1,386.14 SQ. FT.
DRAINAGE AREA = 265 SQ. MI.
SCOUR CRITICAL CODE = 5

ROADWAY OVERTOPPING FREQUENCY:

Q_{50} TOTAL = 8,368 C.F.S.
HW_{50}= EL. 801.44

2-YEAR FREQUENCY:

Q_2= 2,250 C.F.S.
V_2= 2.78 F.P.S.
HW_2= EL. 796.83

TRAFFIC DATA

FEATURE ON: CTH A

ADT = 3,130 (2045)
R.D.S. = 60 MPH

LIST OF DRAWINGS:

NO.	DATE	REVISION	BY

GRAEF
275 W. Wisconsin Avenue
Suite 300
Milwaukee, WI 53203
414 / 259 1500
414 / 259 0037 fax
www.graef-usa.com

STATE OF WISCONSIN
DEPARTMENT OF TRANSPORATION

ACCEPTED SDR 09/09/24
CHIEF STRUCTURES DESIGN ENGINEER DATE

STRUCTURE B-66-147

CTH A OVER MILWAUKEE RIVER

COUNTY	TOWN
WASHINGTON	FARMINGTON

DESIGN SPEC.
AASHTO LRFD BRIDGE DESIGN SPECIFICATION

DESIGNED BY	WAR	DESIGNED CK'D	KGW	DRAWN BY	WAR	PLANS CK'D	KGW

GENERAL PLAN & ELEVATION

SHE 128

SCALE =

STRUCTURE DESIGN CONTACTS:

CONSULTANT CONTACT: WYATT ROZMENOSKI (414) 266-9066
BOS CONTACT: AARON BONK (608) 261-0261

8

8

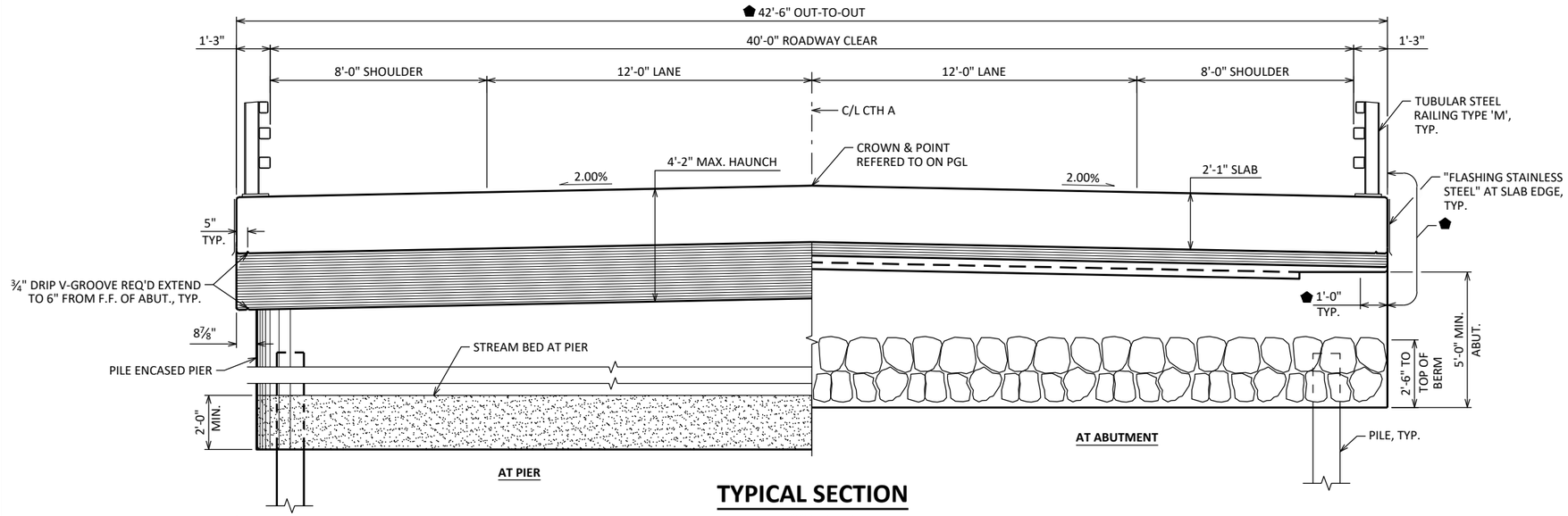

TYPICAL SECTION

LOOKING EAST
ALL DIMENSIONS TAKEN NORMAL TO C/L CTH A

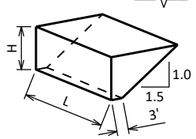

ABUTMENT BACKFILL DIAGRAM

L = OUT TO OUT OF ABUTMENT BODY INCLUDING WINGS (FT)
H = AVERAGE ABUTMENT FILL HEIGHT (FT)
EF = EXPANSION FACTOR (1.20 FOR CY BID ITEMS AND 1.00 FOR TON BID ITEMS)
V_{CF} = (L)(3.0')(H) + (L)(0.5)(1.5H)(H)
V_{CY} = V_{CF}(EF)/27
V_{TON} = V_{CY}(2.0)

BENCH MARKS

NO.	STATION	DESCRIPTION	ELEV.
CP6	110+14.14	FENO MONUMENT AT STATION OFFSET 33.04	797.71
CP7	127+07.49	FENO MONUMENT AT STATION OFFSET -28.25	799.85

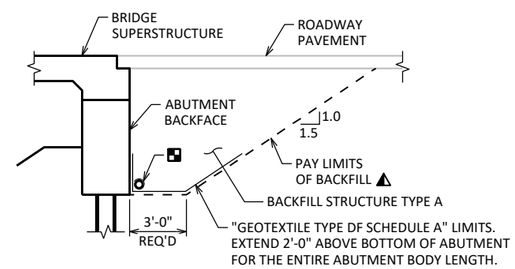

TYPICAL SECTION THRU ABUTMENT

TOTAL ESTIMATED QUANTITIES

BID ITEM NUMBER	BID ITEMS	UNIT	SUPER	W. ABUT.	PIER 1	PIER 2	E. ABUT.	TOTALS
203.0260	REMOVING STRUCTURE OVER WATERWAY MINIMAL DEBRIS B-66-944	EACH	--	--	--	--	--	1
206.1001	EXCAVATION FOR STRUCTURES BRIDGES B-66-147	EACH	--	--	--	--	--	1
206.5001	COFFERDAMS B-66-147	EACH	--	--	--	--	--	1
210.1500	BACKFILL STRUCTURE TYPE A	TON	--	196	--	--	196	392
311.0110	BREAKER RUN	TON	--	--	110	89	--	199
502.0100	CONCRETE MASONRY BRIDGES	CY	674.9	37.0	44.8	48.1	37.1	842
502.3200	PROTECTIVE SURFACE TREATMENT	SY	993	9	--	--	9	1,011
505.0400	BAR STEEL REINFORCEMENT HS STRUCTURES	LB	--	2,660	2,150	2,340	2,660	9,810
505.0600	BAR STEEL REINFORCEMENT HS COATED STRUCTURES	LB	116,130	1,390	90	90	1,390	119,090
513.4061	RAILING TUBULAR TYPE M	LF	356	23	--	--	23	402
516.0500	RUBBERIZED MEMBRANE WATERPROOFING	SY	--	12	--	--	12	24
550.0600	PILE REDRIVING	EACH	--	1	2	2	1	6
550.1120	PILING STEEL HP 12-INCH X 53 LB	LF	--	210	520	520	210	1,460
606.0300	RIPRAP HEAVY	CY	--	122	--	--	122	244
612.0406	PIPE UNDERDRAIN WRAPPED 6-INCH	LF	--	93	--	--	93	186
645.0111	GEOTEXTILE TYPE DF SCHEDULE A	SY	--	44	--	--	44	88
645.0120	GEOTEXTILE TYPE HR	SY	--	216	--	--	216	432
SPV.0090.01	FLASHING STAINLESS STEEL	LF	356	--	--	--	--	356
SPV.0195.01	SELECT CRUSHED MATERIAL FOR TRAVEL CORRIDOR	TON	--	18	--	--	18	36
	NON-BID ITEMS							
	FILLER	SIZE	---	---	---	---	---	½", ¾"
	NAME PLATE	EACH						1

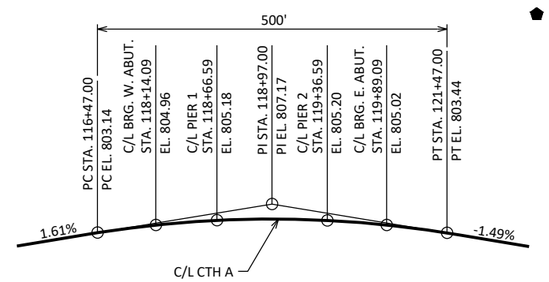

PROFILE GRADE LINE

GENERAL NOTES

DRAWINGS SHALL NOT BE SCALED.

ALL STATIONS AND ELEVATIONS ARE IN FEET. ELEVATIONS ARE REFERENCE TO THE NAVD (88) 2012 DATUM.

BAR STEEL REINFORCEMENT SHALL BE EMBEDDED 2" CLEAR UNLESS OTHERWISE SHOWN OR NOTED.

THE FIRST OR FIRST TWO DIGITS OF THE BAR MARK SIGNIFIES THE BAR SIZE.

BEVEL EXPOSED EDGES OF CONCRETE ¾" UNLESS OTHERWISE NOTED.

THE EXISTING GROUNDLINE SHALL BE THE UPPER LIMITS OF "EXCAVATION FOR STRUCTURES BRIDGES B-66-147" AT ABUTMENTS. THE EXISTING STREAM BED SHALL BE USED AS THE UPPER LIMITS OF EXCAVATION AT THE PIERS.

AT THE BACK FACE OF ABUTMENT ALL VOLUME WHICH CANNOT BE PLACED BEFORE ABUTMENT CONSTRUCTION AND IS NOT OCCUPIED BY THE NEW STRUCTURE SHALL BE BACKFILLED WITH "BACKFILL STRUCTURE TYPE A".

THE BACKFILL QUANTITIES ARE BASED ON THE PAY LIMITS SHOWN ON THE PLANS AND MAY NOT REFLECT ACTUAL PLACED QUANTITIES. "BACKFILL STRUCTURE TYPE A" REQUIRED DIRECTLY BEHIND ABUTMENTS AND ABUTMENT WINGS FOR 3 FEET. BACKFILL PLACED BEYOND PAY LIMITS OR EXCEEDING PLAN QUANTITIES SHALL BE INCIDENTAL TO EXCAVATION FOR STRUCTURES.

EXCAVATION BELOW THE ABUTMENT AND ABUTMENT BEDDING MATERIALS REQUIRES ENGINEER APPROVAL. GEOTEXTILE SHALL BE SET AT THE BOTTOM OF EXCAVATION AND EXTEND 2'-0" ABOVE BOTTOM OF ABUTMENT.

THE QUANTITY FOR BACKFILL STRUCTURE IS CALCULATED BASED ON THE DETAIL SHOWN IN THE PLANS.

THE SLOPE OF THE FILL IN FRONT OF THE ABUTMENTS SHALL BE COVERED WITH HEAVY RIPRAP AND GEOTEXTILE TYPE "HR" TO THE EXTENT SHOWN ON SHEET 1 AND THE ABUTMENT DETAILS.

SLAB FALSEWORK SHALL BE SUPPORTED ON PILES OR THE SUBSTRUCTURE, UNLESS AN ALTERNATE METHOD IS APPROVED BY THE ENGINEER.

AT ABUTMENTS AND PIERS, CONCRETE POURED UNDER WATER WILL BE ALLOWED AND SHALL BE DONE IN ACCORDANCE WITH SECTION 502.3.5.3 OF THE STANDARD SPECIFICATIONS.

EXISTING STRUCTURE B-66-944 IS A 3-SPAN STEEL WIDE FLANGE GIRDER BRIDGE WITH A WIDTH OF 27'-8" AND OVERALL LENGTH OF 177'-10" SUPPORTED ON SPREAD FOOTINGS. THE ENTIRE STRUCTURE IS TO BE REMOVED.

THE CONTRACTOR SHALL SUPPLY A NEW NAME PLATE IN ACCORDANCE WITH SECTION 502.3.11 OF THE STANDARD SPECIFICATIONS AND THE STANDARD DETAIL DRAWINGS. NAME PLATE TO SHOW ORIGINAL CONSTRUCTION YEAR 2025.

DURING REMOVAL OF EXISTING BRIDGE SUBSTRUCTURE, REMOVE ALL FOOTING CONCRETE THAT IS IN CONFLICT WITH THE PROPOSED PILING AT PIERS AND ABUTMENTS. COFFERDAMS ARE INTENDED FOR REMOVAL OF EXISTING PIER FOOTINGS WHERE WATER ELEVATION TO EXCAVATION LIMITS IS GREATER THAN 5 FEET OF DEPTH. AT PIERS, BACKFILL VOLUME OCCUPIED BY EXISTING STRUCTURE & NOT OCCUPIED BY NEW STRUCTURE AFTER PILES ARE DRIVEN WITH "BREAKER RUN" TO EXISTING STREAM BED/GROUNDLINE, SEE SECTION ON SHEET 12. PER RECORD DRAWINGS, EXISTING PIER COLUMN FOOTINGS ARE 8' WIDE X 9'-6" LONG X 3'-0" THICK.

LEGEND

▲ BACKFILL PAY LIMITS. BACKFILL BEYOND BACKFILL PAY LIMITS SHALL BE INCIDENTAL TO EXCAVATION FOR STRUCTURES. LIMITS OF EXCAVATION SHALL BE DETERMINED BY THE CONTRACTOR.

▞ PIPE UNDERDRAIN WRAPPED (6-INCH). SLOPE 0.5% MIN. TO SUITABLE DRAINAGE. ATTACH RODENT SHIELD AT ENDS OF PIPE UNDERDRAIN.

⬟ PROTECTIVE SURFACE TREATMENT TO BE APPLIED TO:
- ENTIRE TOP OF SLAB
- EDGES OF SLAB & 1'-0" WIDTH ALONG UNDERSIDE OF SLAB
- VERTICAL & HORIZ. FACES OF PAVING NOTCH
- TOP AND EXPOSED FACES OF WINGS
- THE END 1'-0" OF THE FRONT FACE OF ABUTMENT

NO.	DATE	REVISION	BY

STATE OF WISCONSIN
DEPARTMENT OF TRANSPORTATION

STRUCTURE B-66-147

DRAWN BY WAR | PLANS CK'D KGW

CROSS SECTION & QUANTITIES

SCALE =

8

8

BORING #	DATE COMPLETED	NORTHING (Y)	EASTING (X)
B-1	8/21/2023	200862	396602
B-2	8/22/2023	200874	396662
B-3	8/23/2023	200863	396737
B-4	8/21/2023	200872	396806
BORINGS COMPLETED BY: GEOCON			
REPORT COMPLETED BY: TERRACON			
ALL COORDINATES REFERENCED TO WCRS NAD 83(2011) WASHINGTON COUNTY			

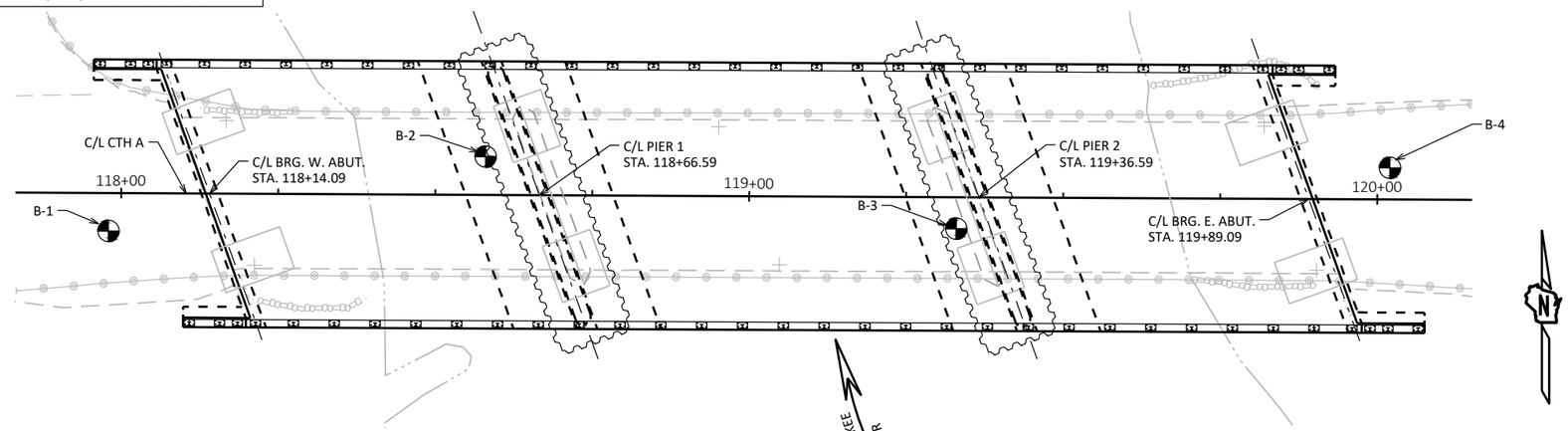

PLAN

3-SPAN HAUNCHED CONCRETE SLAB BRIDGE

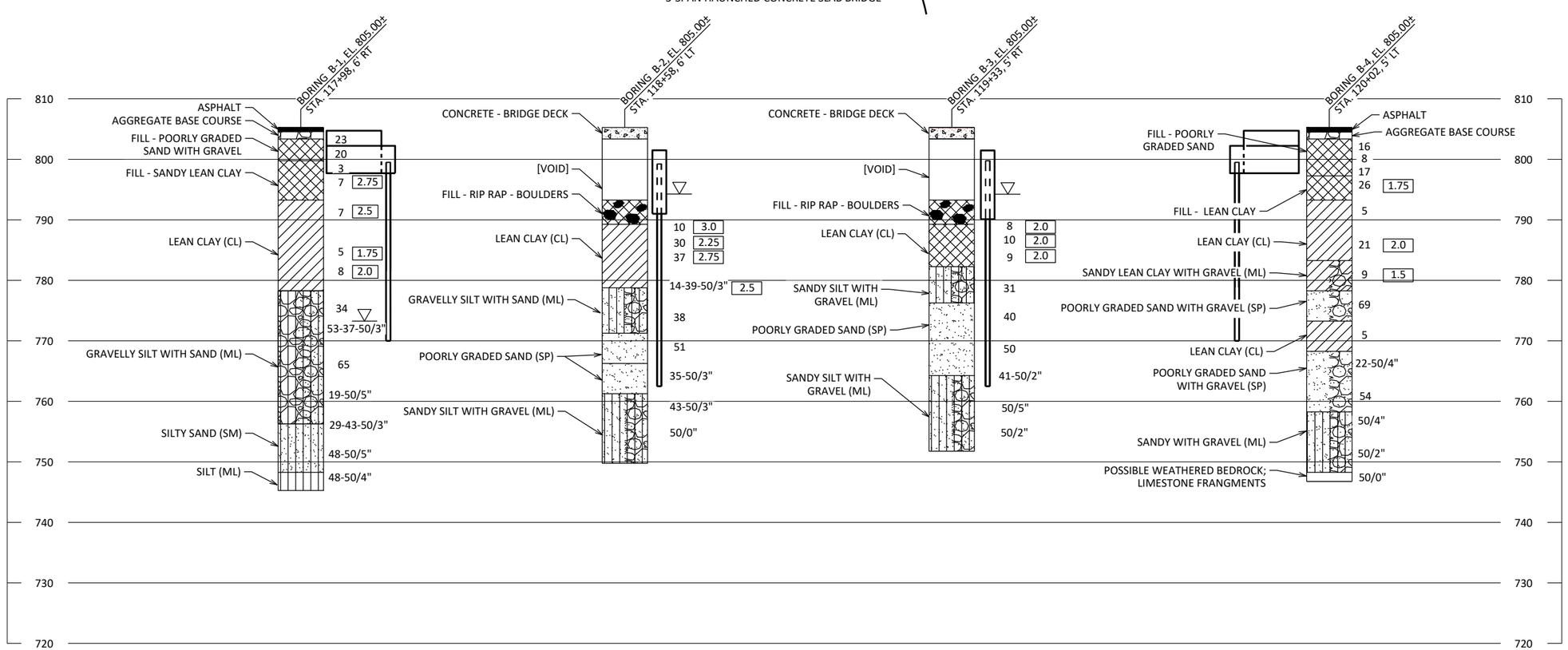

STATE PROJECT NUMBER

4868-05-70

MATERIAL SYMBOLS

ASPHALT, TOPSOIL, PEAT, CONCRETE, FILL, GRAVEL, SAND, CLAY, SILT, BOULDERS OR COBBLES, LIMESTONE, BEDROCK (UNKNOWN), SHALE, SANDSTONE, IGNEOUS/ META

LEGEND OF BORING

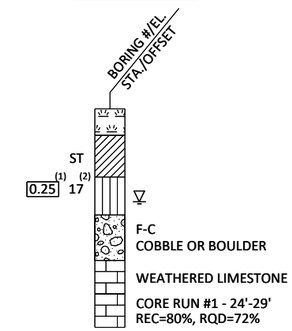

(1) UNCONFINED STRENGTH, AS DETERMINED BY A POCKET PENETROMETER (TSF)

(2) UNLESS OTHERWISE, SPECIFIED THE SPT 'N' VALUE IS BASED ON AASHTO T-206, STANDARD PENETRATION TEST. THE SPT 'N' VALUE PRESENTED HAS NOT BEEN CORRECTED FOR OVERBURDEN PRESSURE OR HAMMER EFFICIENCY.

GROUND WATER ELEVATION

- AT TIME OF DRILLING
- END OF DRILLING
- AFTER DRILLING

ABBREVIATIONS

F-FINE M-MEDIUM C-COARSE ST-SHELBY TUBE

SUBSURFACE EXPLORATION FOR FOUNDATION DESIGN AND BIDDERS INFORMATION

BORINGS WERE COMPLETED AT POINTS APPROXIMATELY AS INDICATED ON THIS DRAWING TO OBTAIN INFORMATION CONCERNING THE CHARACTER OF SUBSURFACE MATERIALS FOUND AT THE SITE. BECAUSE THE INVESTIGATED DEPTHS ARE LIMITED AND THE AREA OF THE BORINGS IS VERY SMALL IN RELATION TO THE ENTIRE SITE, THE WISCONSIN DEPARTMENT OF TRANSPORTATION DOES NOT WARRANT SIMILAR SUBSURFACE CONDITIONS BELOW, BETWEEN, OR BEYOND THESE BORINGS. VARIATIONS IN SOIL CONDITIONS SHOULD BE EXPECTED AND FLUCTUATIONS IN GROUNDWATER LEVELS MAY OCCUR.

NO.	DATE	REVISION	BY

STATE OF WISCONSIN
DEPARTMENT OF TRANSPORTATION

STRUCTURE B-66-147

DRAWN BY MS | PLANS CK'D KGW

SUBSURFACE EXPLORATION

SCALE =

8

8

STATE PROJECT NUMBER

4868-05-70

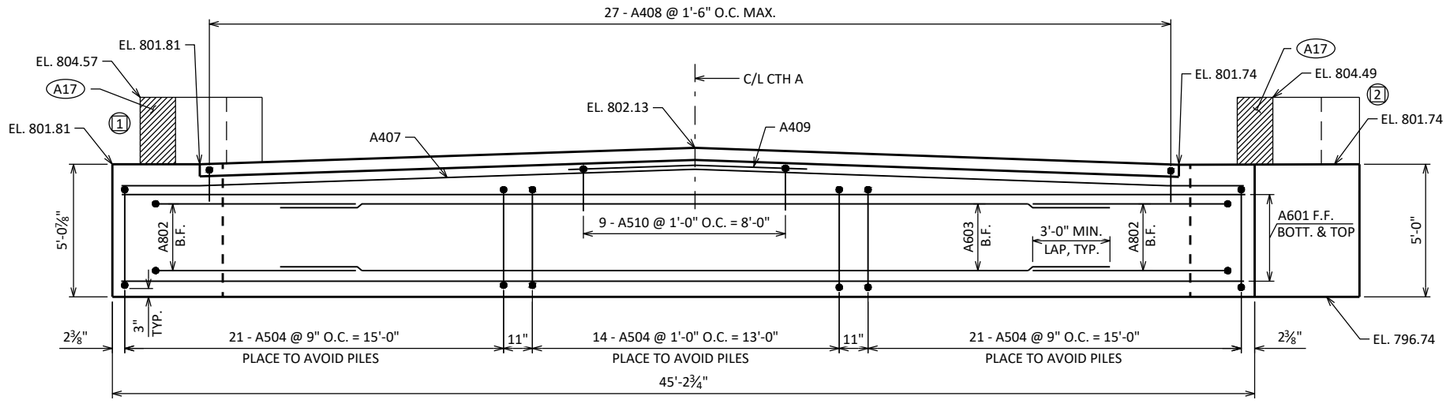

ELEVATION

LOOKING WEST
PILING NOT SHOWN FOR CLARITY

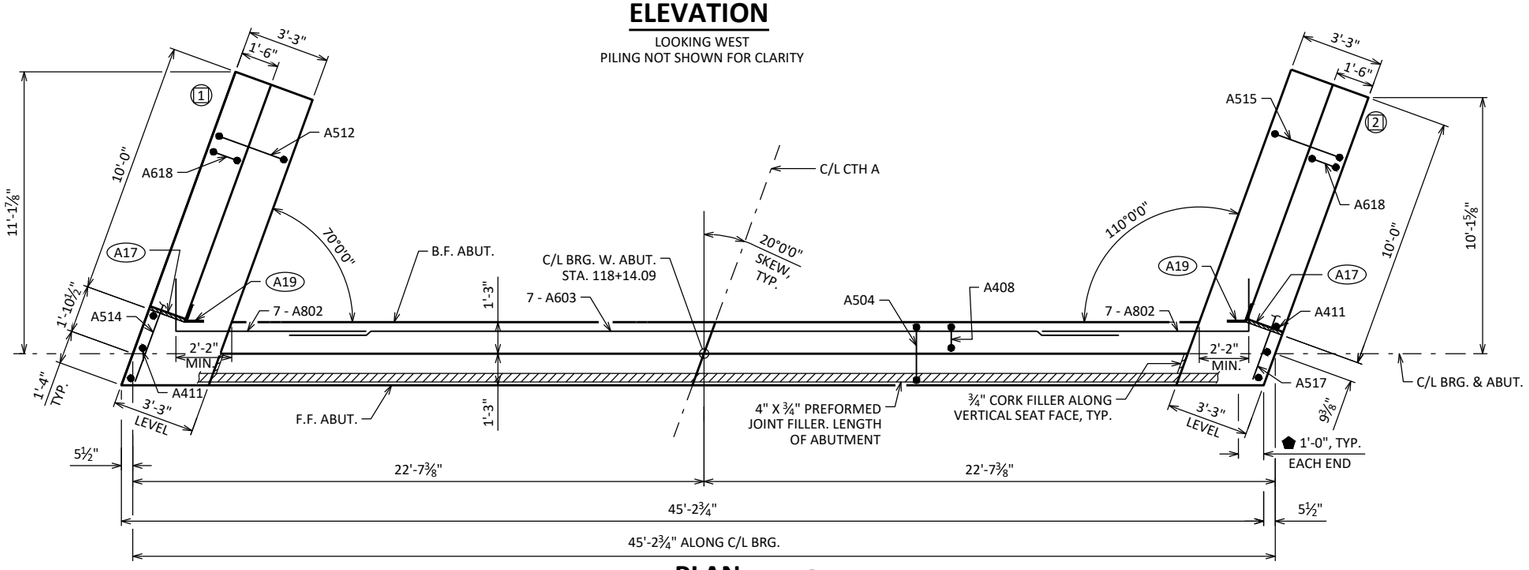

PLAN

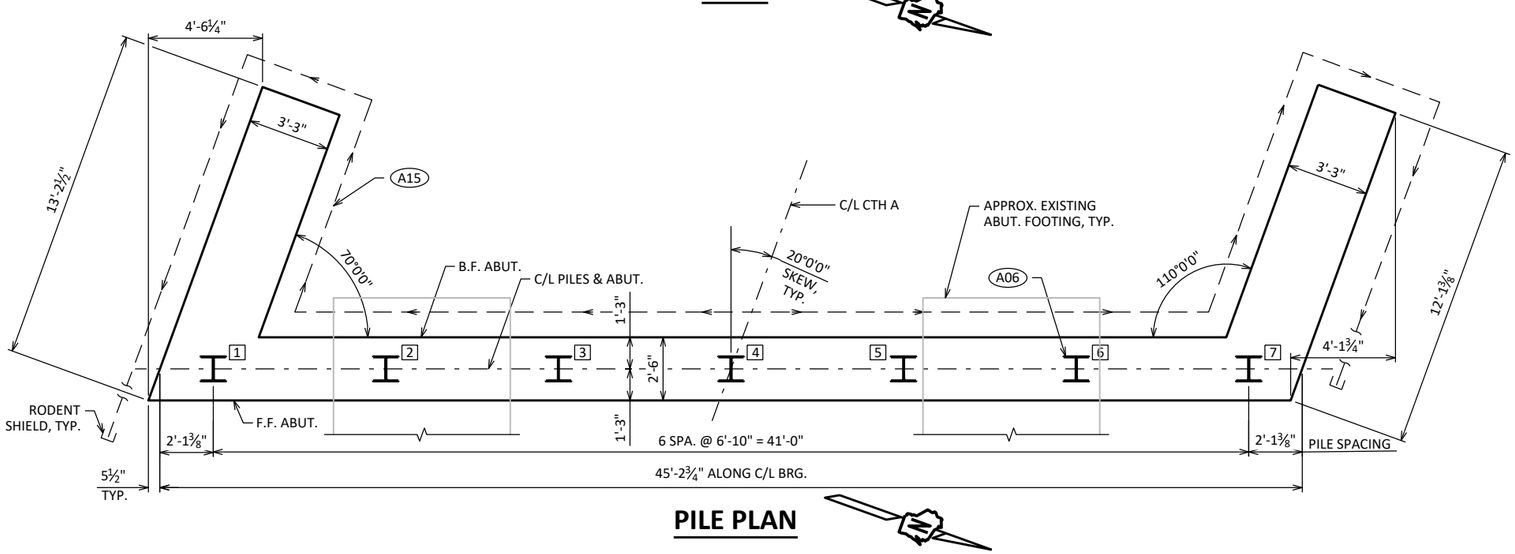

PILE PLAN

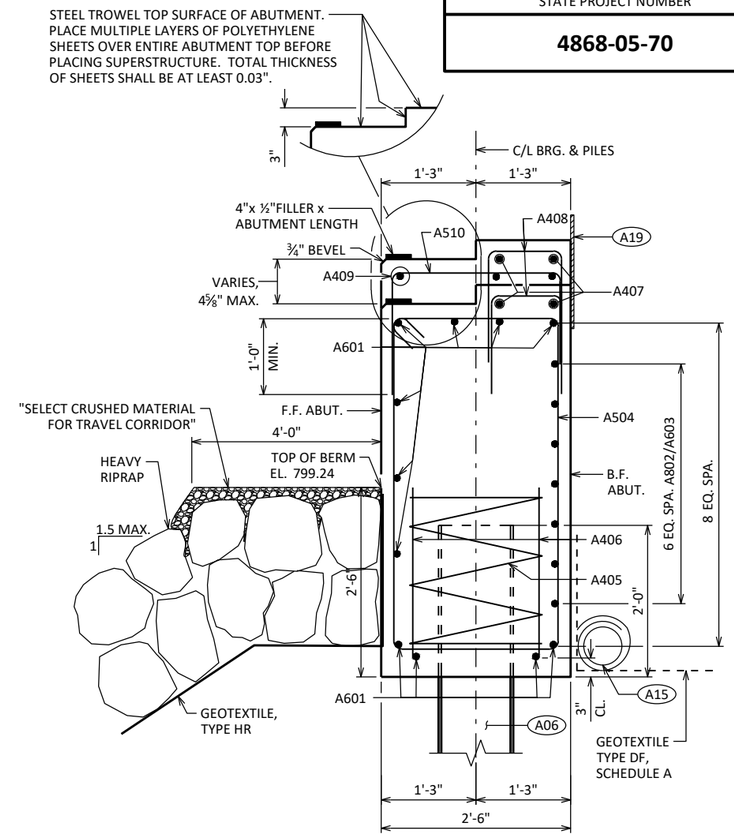

SECTION THRU BODY

LEGEND

- (A06) SUPPORT ABUTMENT ON HP 12 x 53 STEEL PILING, ESTIMATED 30'-0" LONG WITH A REQUIRED DRIVING RESISTANCE OF 130 TONS PER PILE.
- (A15) PIPE UNDERDRAIN WRAPPED (6-INCH). SLOPE 0.5% MIN. TO SUITABLE DRAINAGE. RODENT SHIELD REQUIRED. HIGH POINT = EL. 797.00
- (A17) ½" FILLER (INCLUDED IN WING LENGTH): SEAL ALL EXPOSED HORIZ. & VERT. SURFACES OF ½" FILLER WITH NON-STAINING GRAY NON-BITUMINOUS JOINT SEALER. (1" DEEP AND HOLD ⅛" BELOW SURFACE OF CONCRETE). EXTEND SEALER 3" BELOW GUTTER LINE AT INSIDE FACE.
- (A19) 18" (RMW) RUBBERIZED MEMBRANE WATERPROOFING SEAL ALL HORIZ. & VERT. JOINTS AT BACKFACE.
- ⬟ PROTECTIVE SURFACE TREATMENT TO BE APPLIED TO THE END 1'-0" OF THE FRONT OF ABUTMENT.
- (#) WING NUMBER
- [#] PILE NUMBER

NOTE

SEE SHEET 5 FOR PILE SPLICE DETAILS

SEE SHEET 7 FOR RODENT SHIELD DETAILS

NO.	DATE	REVISION	BY

STATE OF WISCONSIN
DEPARTMENT OF TRANSPORTATION

STRUCTURE B-66-147

DRAWN BY WAR | PLANS CK'D KGW

WEST ABUTMENT

SHEET 4 OF 13

8

8

STATE PROJECT NUMBER

4868-05-70

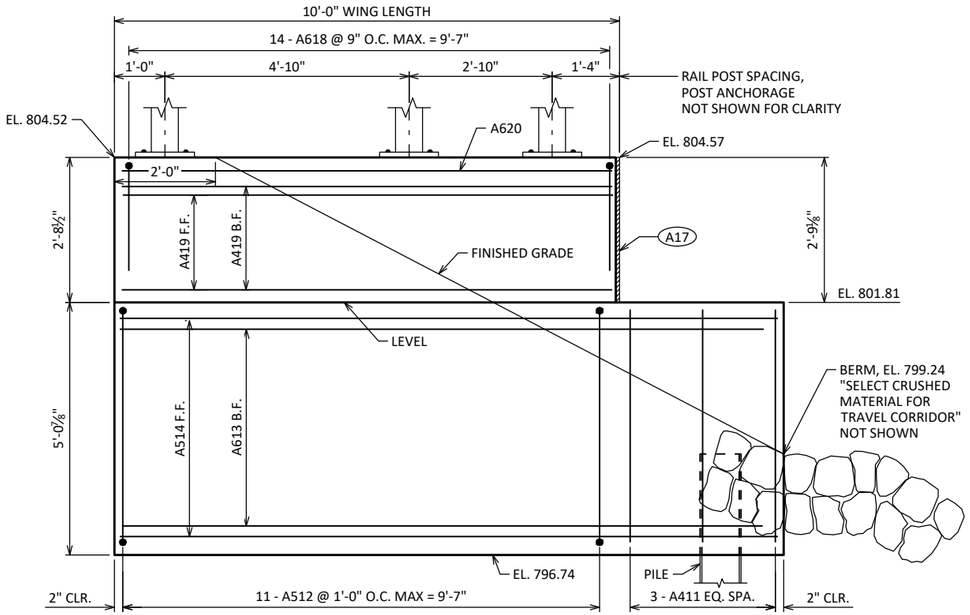

WING 1 ELEVATION

LOOKING AT F.F. WING

WEST ABUTMENT - BILL OF BARS

NOTE: THE FIRST OR FIRST TWO DIGITS OF THE BAR MARK SIGNIFIES THE BAR SIZE.

BAR MARK	COAT	NO. REQ'D.	LENGTH	BENT	BAR SERIES	LOCATION
A601		11	44'-10"			TOP, BOTTOM, & F.F. HORIZ.
A802		14	13'-4"	X		HORIZ. B.F. ENDS
A603		7	25'-0"			HORIZ. B.F. MIDDLE
A504		56	13'-6"	X		BODY VERT. STIRRUP
A405		7	28'-0"	X		PILE SPIRAL
A406		14	2'-3"			PILE VERTICAL
A407		2	44'-10"			HORIZ. SEAT
A408		27	4'-3"	X		VERT. SEAT
A409		3	10'-0"			HORIZ. AT CROWN
A510		9	4'-11"	X		VERT. AT CROWN
A411		6	4'-7"			BODY VERT. ENDS
A512	X	11	15'-10"	X		WING 1 VERT. STIRRUP
A613	X	8	11'-6"			WING 1 - LOWER HORIZ. B.F.
A514	X	6	12'-9"			WING 1 - LOWER HORIZ. F.F.
A515	X	11	15'-8"	X		WING 2 VERT. STIRRUP
A616	X	8	12'-9"			WING 2 - LOWER HORIZ. B.F.
A517	X	6	11'-9"			WING 2 - LOWER HORIZ. F.F.
A618	X	28	10'-6"	X		UPPER WING VERT.
A419	X	14	9'-7"			UPPER WING HORIZ.
A620	X	4	9'-7"			UPPER WING HORIZ. TOP

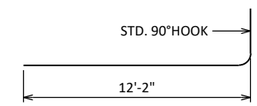

A802

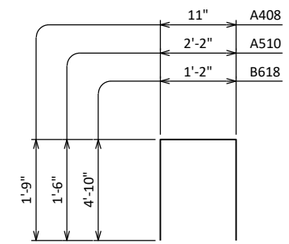

A408, A510, A618

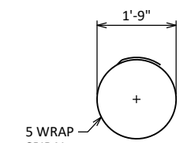

A405

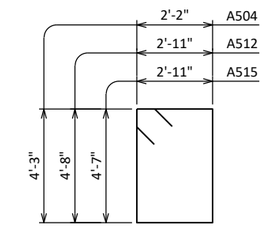

A504, A512, A515

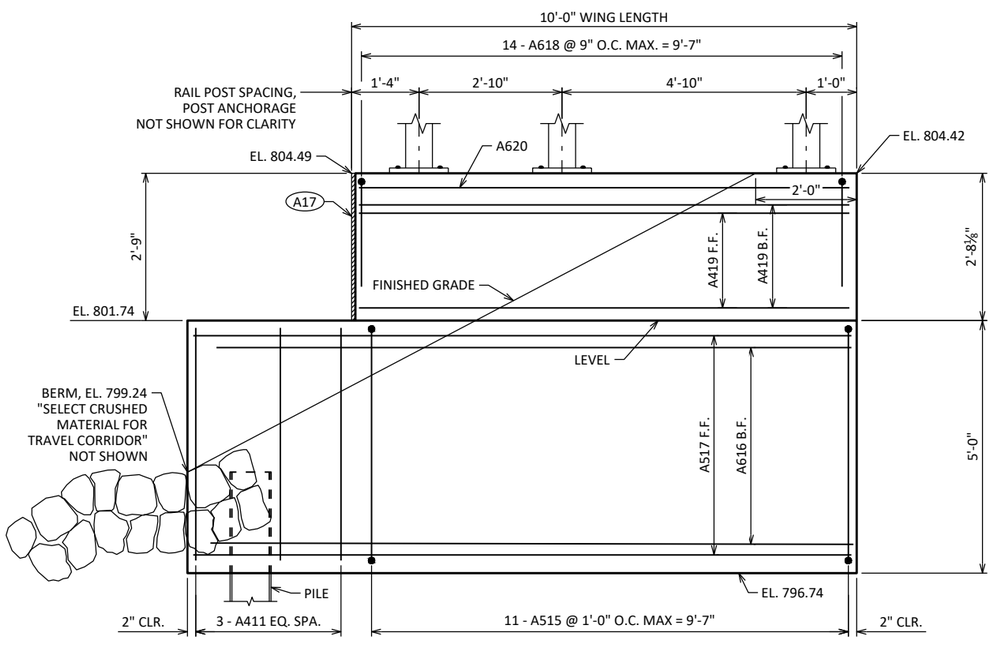

WING 2 ELEVATION

LOOKING AT F.F. WING

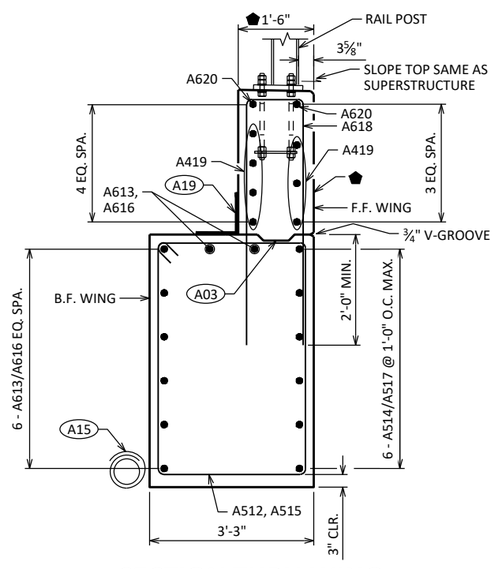

SECTION THRU WING

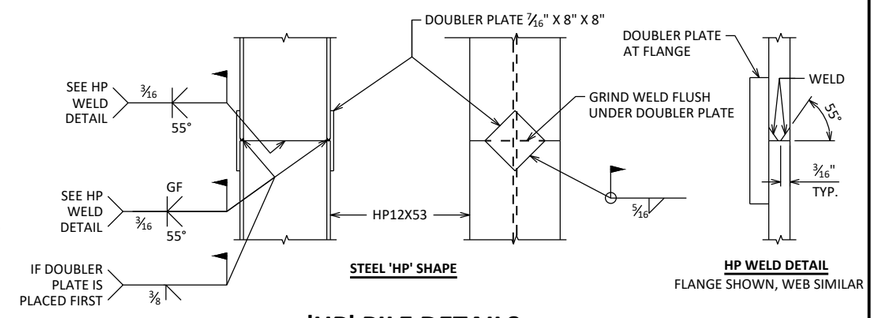

'HP' PILE DETAILS

LEGEND

(A03) OPTIONAL CONST. JOINT: KEYWAY FORMED BY BEVELED 2" x 6". (18" RMW @ B.F. & ¾" V-GROOVE @ F.F. IF JOINT IS USED).

(A15) PIPE UNDERDRAIN WRAPPED (6-INCH). SLOPE 0.5% MIN. TO SUITABLE DRAINAGE. RODENT SHIELD REQUIRED.

(A17) ½ " FILLER (INCLUDED IN WING LENGTH): SEAL ALL EXPOSED HORIZ. & VERT. SURFACES OF ½" FILLER WITH NON-STAINING GRAY NON-BITUMINOUS JOINT SEALER. (1" DEEP AND HOLD " BELOW SURFACE OF CONCRETE). EXTEND SEALER 3" BELOW GUTTER LINE AT INSIDE FACE.

(A19) 18" (RMW) RUBBERIZED MEMBRANE WATERPROOFING SEAL ALL HORIZ. & VERT. JOINTS AT BACKFACE.

⬟ PROTECTIVE SURFACE TREATMENT TO BE APPLIED TO THE EXPOSED TOP AND F.F. SURFACES OF THE WINGWALLS

NO.	DATE	REVISION	BY

STATE OF WISCONSIN
DEPARTMENT OF TRANSPORTATION

STRUCTURE B-66-147

DRAWN BY WAR PLANS CK'D KGW

WEST ABUTMENT DETAILS

SHEET 5 OF 13

8

8

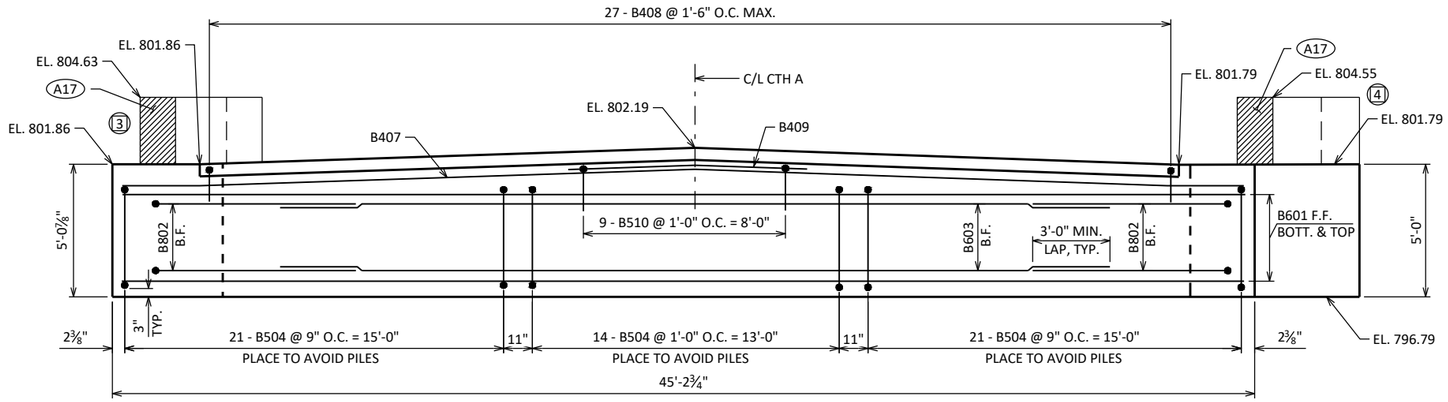

ELEVATION

LOOKING EAST
PILING NOT SHOWN FOR CLARITY

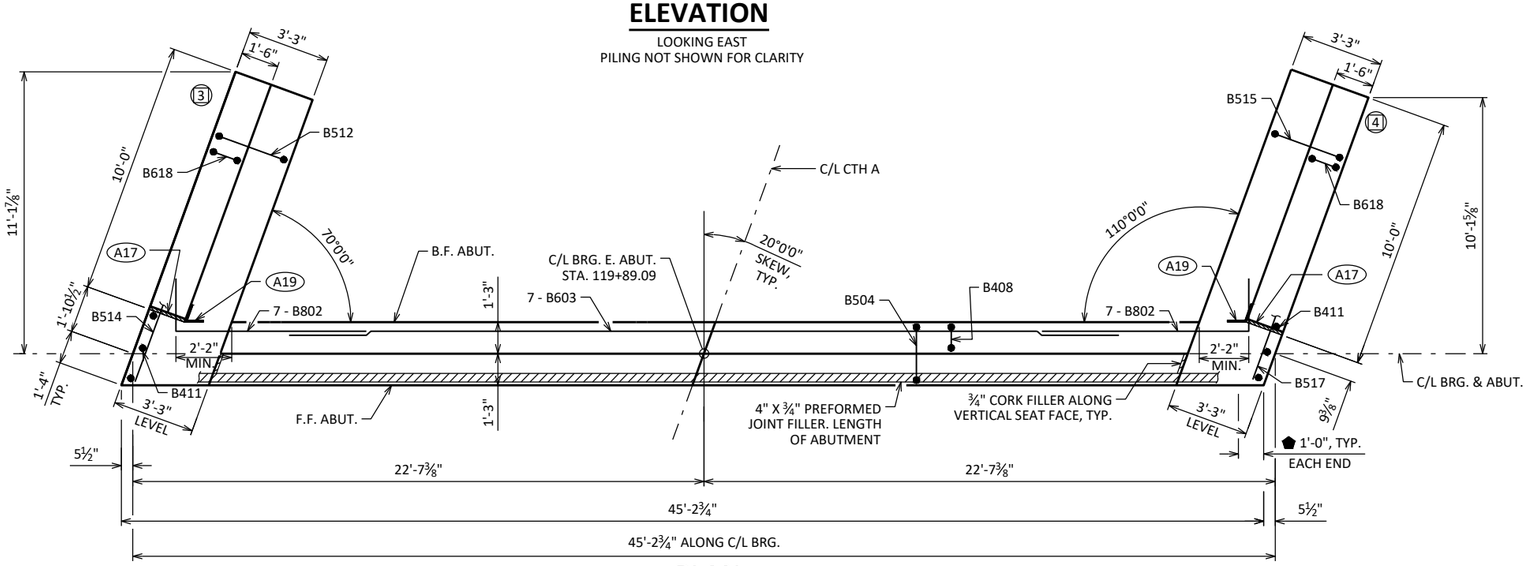

PLAN

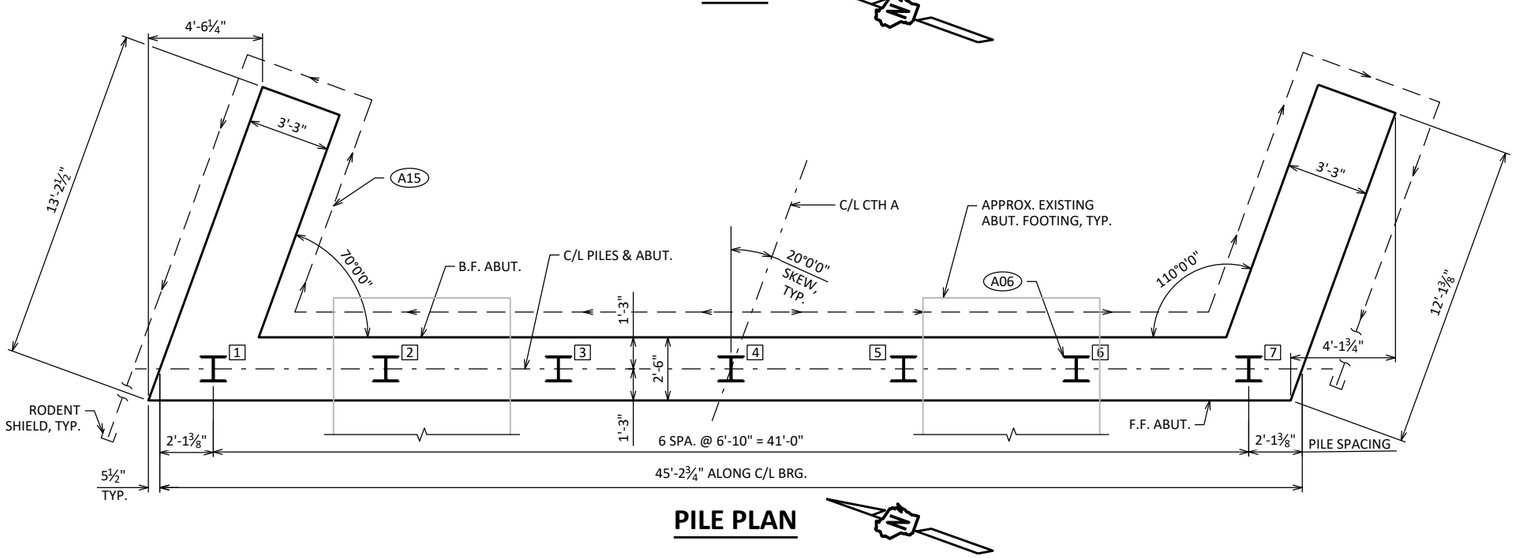

PILE PLAN

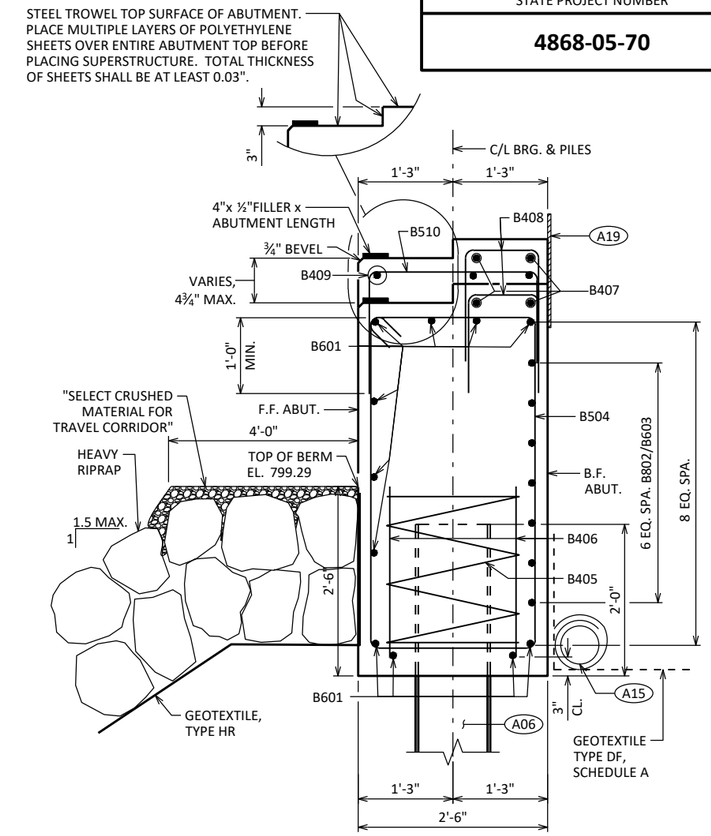

SECTION THRU BODY

LEGEND

- (A06) SUPPORT ABUTMENT ON HP 12 x 53 STEEL PILING, ESTIMATED 30'-0" LONG WITH A REQUIRED DRIVING RESISTANCE OF 130 TONS PER PILE.
- (A15) PIPE UNDERDRAIN WRAPPED (6-INCH). SLOPE 0.5% MIN. TO SUITABLE DRAINAGE. RODENT SHIELD REQUIRED. HIGH POINT = EL. 797.1
- (A17) ½" FILLER (INCLUDED IN WING LENGTH): SEAL ALL EXPOSED HORIZ. & VERT. SURFACES OF ½" FILLER WITH NON-STAINING GRAY NON-BITUMINOUS JOINT SEALER. (1" DEEP AND HOLD ⅛" BELOW SURFACE OF CONCRETE). EXTEND SEALER 3" BELOW GUTTER LINE AT INSIDE FACE.
- (A19) 18" (RMW) RUBBERIZED MEMBRANE WATERPROOFING SEAL ALL HORIZ. & VERT. JOINTS AT BACKFACE.
- ⬟ PROTECTIVE SURFACE TREATMENT TO BE APPLIED TO THE END 1'-0" OF THE FRONT OF ABUTMENT.
- (#) WING NUMBER
- [#] PILE NUMBER

NOTE

SEE SHEET 5 FOR PILE SPLICE DETAILS

SEE SHEET 7 FOR RODENT SHIELD DETAILS

NO.	DATE	REVISION	BY

STATE OF WISCONSIN
DEPARTMENT OF TRANSPORTATION

STRUCTURE B-66-147

DRAWN BY WAR PLANS CK'D KGW

EAST ABUTMENT

8

8

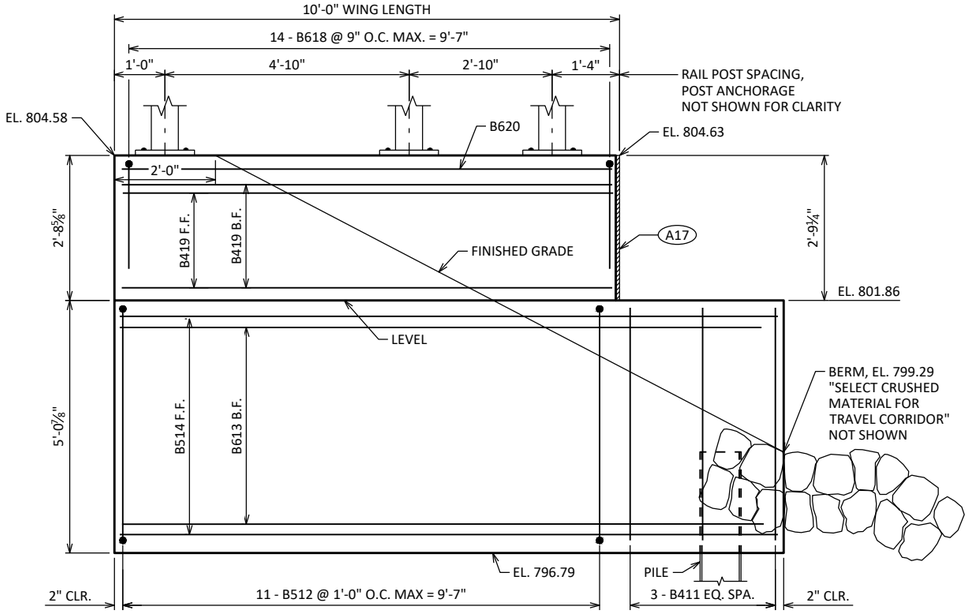

WING 3 ELEVATION

LOOKING AT F.F. WING

EAST ABUTMENT - BILL OF BARS

NOTE: THE FIRST OR FIRST TWO DIGITS OF THE BAR MARK SIGNIFIES THE BAR SIZE.

BAR MARK	COAT	NO. REQ'D.	LENGTH	BENT	BAR SERIES	LOCATION
B601		11	44'-10"			TOP, BOTTOM, & F.F. HORIZ.
B802		14	13'-4"	X		HORIZ. B.F. ENDS
B603		7	25'-0"			HORIZ. B.F. MIDDLE
B504		56	13'-6"	X		BODY VERT. STIRRUP
B405		7	28'-0"	X		PILE SPIRAL
B406		14	2'-3"			PILE VERTICAL
B407		2	44'-10"			HORIZ. SEAT
B408		27	4'-3"	X		VERT. SEAT
B409		3	10'-0"			HORIZ. AT CROWN
B510		9	4'-11"	X		VERT. AT CROWN
B411		6	4'-7"			BODY VERT. ENDS
B512	X	11	15'-10"	X		WING 3 VERT. STIRRUP
B613	X	8	11'-6"			WING 3 - LOWER HORIZ. B.F.
B514	X	6	12'-9"			WING 3 - LOWER HORIZ. F.F.
B515	X	11	15'-8"	X		WING 4 VERT. STIRRUP
B616	X	8	12'-9"			WING 4 - LOWER HORIZ. B.F.
B517	X	6	11'-9"			WING 4 - LOWER HORIZ. F.F.
B618	X	28	10'-6"	X		UPPER WING VERT.
B419	X	14	9'-7"			UPPER WING HORIZ.
B620	X	4	9'-7"			UPPER WING HORIZ. TOP

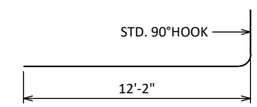

B802

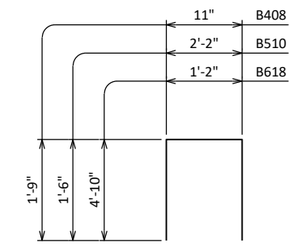

B408, B510, B618

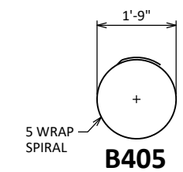

B405

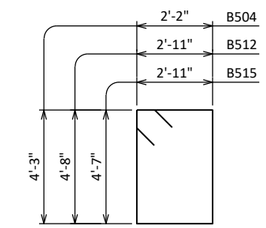

B504, B512, B515

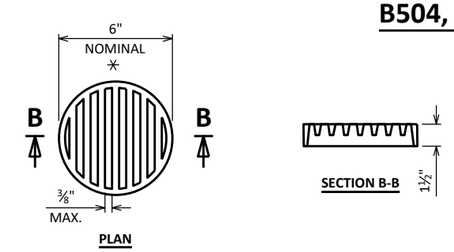

RODENT SHIELD DETAIL

✳ DIMENSIONS ARE APPROXIMATE. THE GRATE IS SIZED TO FIT INTO A PIPE COUPLING. ORIENT SO SLOTS ARE VERTICAL.

THE RODENT SHIELD, PIPE COUPLING AND SCREWS SHALL BE CONSIDERED INCIDENTAL TO THE BID ITEM "PIPE UNDERDRAIN WRAPPED 6-INCH".

THE RODENT SHIELD SHALL BE A PVC GRATE SIMILAR TO THIS DETAIL. THE GRATE IS COMMERCIALLY AVAILABLE AS A FLOOR STRAINER. A PIPE COUPLING IS REQUIRED FOR THE ATTACHMENT OF THIS SHIELD TO THE EXPOSED END OF THE PIPE UNDERDRAIN. THE SHIELD SHALL BE FASTENED TO THE PIPE COUPLING WITH TWO OR MORE NO. 10 X 1-INCH STAINLESS STEEL SHEET METAL SCREWS.

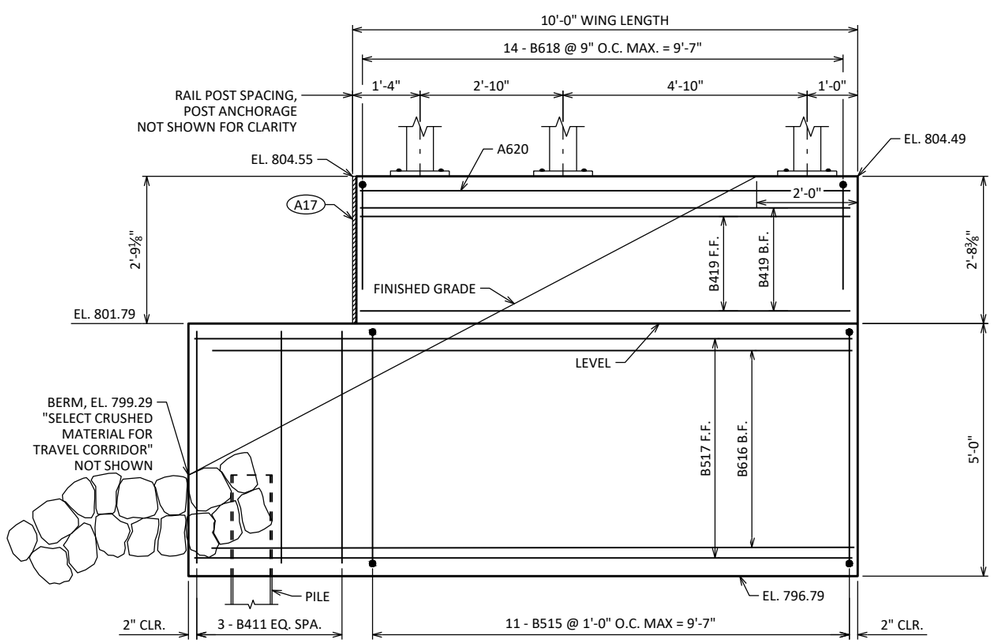

WING 4 ELEVATION

LOOKING AT F.F. WING

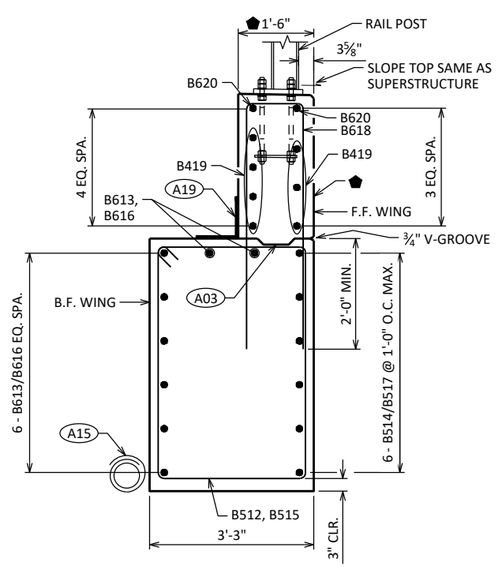

SECTION THRU WING

LEGEND

(A03) OPTIONAL CONST. JOINT: KEYWAY FORMED BY BEVELED 2" x 6". (18" RMW @ B.F. & ¾" V-GROOVE @ F.F. IF JOINT IS USED).

(A15) PIPE UNDERDRAIN WRAPPED (6-INCH). SLOPE 0.5% MIN. TO SUITABLE DRAINAGE. RODENT SHIELD REQUIRED.

(A17) ½ " FILLER (INCLUDED IN WING LENGTH): SEAL ALL EXPOSED HORIZ. & VERT. SURFACES OF ½" FILLER WITH NON-STAINING GRAY NON-BITUMINOUS JOINT SEALER. (1" DEEP AND HOLD " BELOW SURFACE OF CONCRETE). EXTEND SEALER 3" BELOW GUTTER LINE AT INSIDE FACE.

(A19) 18" (RMW) RUBBERIZED MEMBRANE WATERPROOFING SEAL ALL HORIZ. & VERT. JOINTS AT BACKFACE.

⬟ PROTECTIVE SURFACE TREATMENT TO BE APPLIED TO THE EXPOSED TOP AND F.F. SURFACES OF THE WINGWALLS

NO.	DATE	REVISION	BY

STATE OF WISCONSIN
DEPARTMENT OF TRANSPORTATION

STRUCTURE B-66-147

DRAWN BY WAR | PLANS CK'D KGW

EAST ABUTMENT DETAILS

8

8

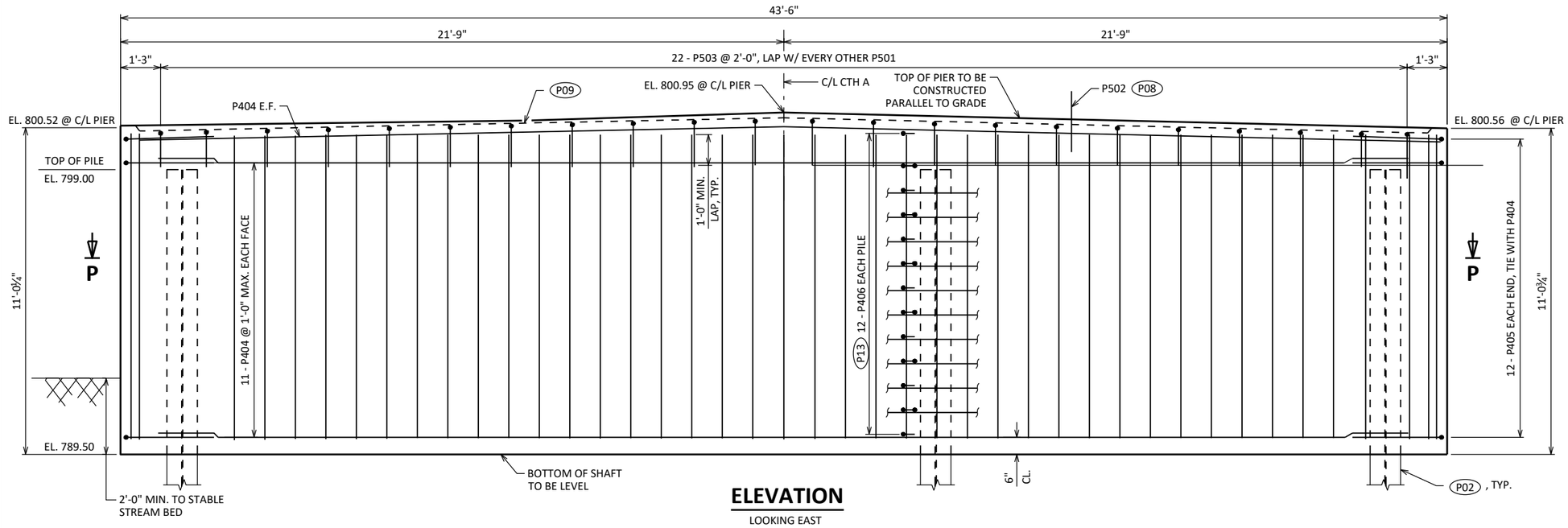

ELEVATION

LOOKING EAST

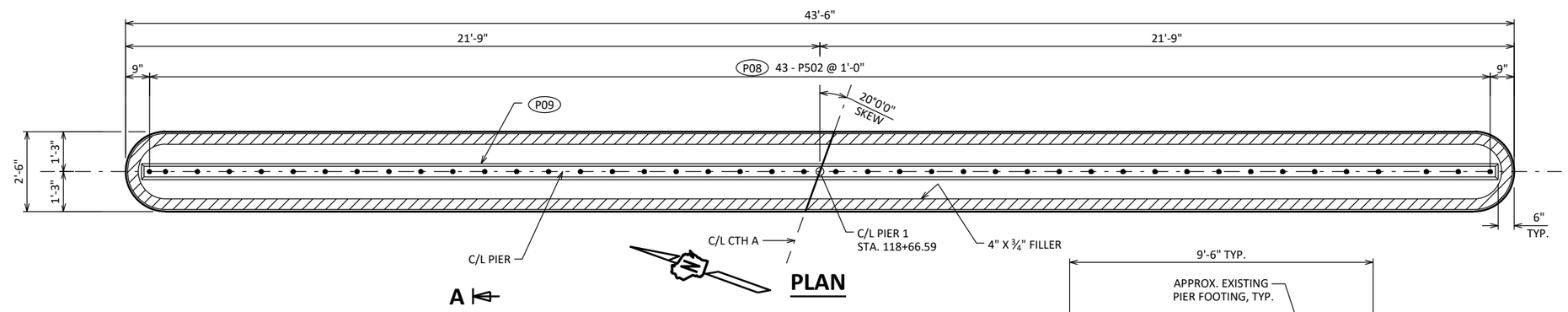

PLAN

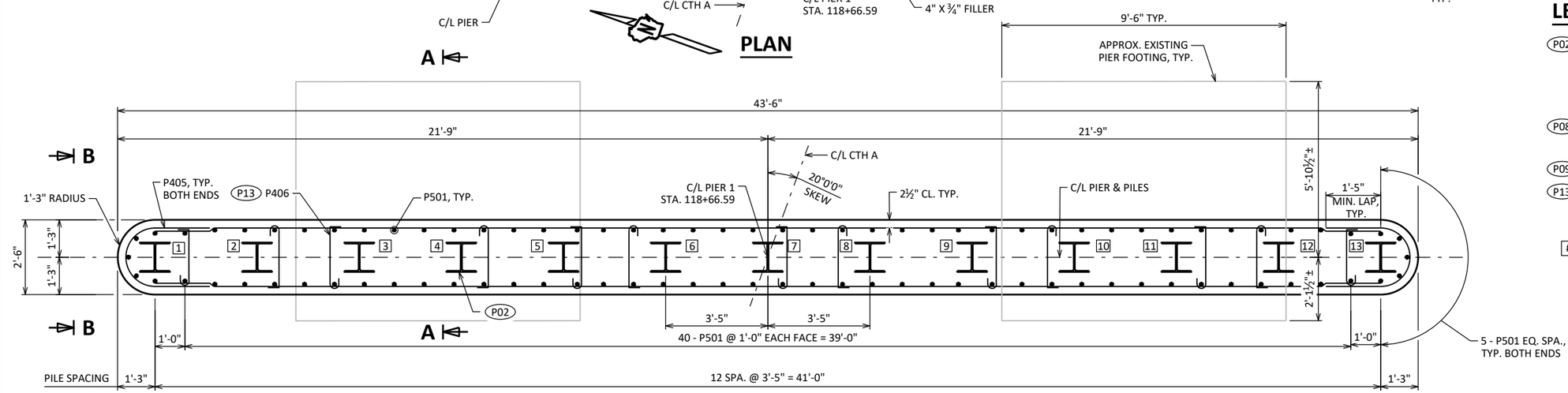

SECTION P-P

PIER 1 - BILL OF BARS

NOTE: THE FIRST OR FIRST TWO DIGITS OF THE BAR MARK SIGNIFIES THE BAR SIZE.

BAR MARK	COAT	NO. REQ'D.	LENGTH	BENT	LOCATION
P501		90	10'-4"		VERTICAL
P502	X	43	2'-0"		DOWELS
P503		22	5'-3"	X	STIRRUP TOP
P404		24	41'-0"		HORIZONTAL
P405		24	6'-4"	X	HORIZONTAL ENDS
P406		156	2'-11"	X	HORIZONTAL TIES

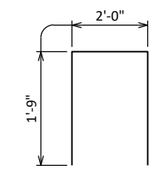

P503

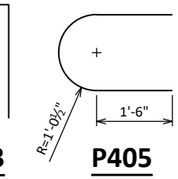

P405

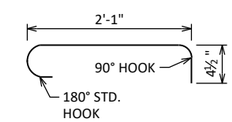

P406

NOTE

AT PIER 1, CONCRETE POURED UNDERWATER WILL BE ALLOWED AND SHALL BE DONE IN ACCORDNACE WITH STANDARD SPEC 502.3.5.3 CONCRETE POURED UNDERWATER SHALL NOT EXCEED 10.0 FEET IN DEPTH, UNLESS APPROVED OTHERWISE.

SEE SHEET 5 FOR PILE SPLICE DETAILS.

SEE SHEET 12 FOR SECTIONS A-A AND B-B.

LEGEND

- (P02) SUPPORT PIER ON HP 12 x 53 STEEL PILING, ESTIMATED 40'-0" LONG WITH A REQUIRED DRIVING RESISTANCE OF 220 TONS PER PILE AND TO A TIP EL. OF 762.5 OR DEEPER. THE WISDOT REGIONAL GEOTECHNICAL ENGINEER SHOULD BE CONTACTED AND BE PRESENT DURING PILE DRIVING OPERATIONS.
- (P08) BARS @ 1'-0" CTRS. MAY BE PLACED AFTER CONCRETE IS POURED BUT BEFORE INITIAL SET HAS TAKEN PLACE. (EMBED 1'-0" INTO CONC.)
- (P09) KEYED CONST. JOINT-FORMED BY BEVELED 2 x 6
- (P13) PLACE BARS ADJACENT TO EACH PILE, TIE TO NEAREST P501. VERTICAL SPACING TO MATCH P404. ALTERNATE THE POSITION OF THE 90° AND THE 180° HOOKS AT EACH VERTICAL LAYER OF TIES.
- [#] PILE NUMBER

NO.	DATE	REVISION	BY

STATE OF WISCONSIN
DEPARTMENT OF TRANSPORTATION

STRUCTURE B-66-147

DRAWN BY WAR | PLANS CK'D KGW

PIER 1

8

8

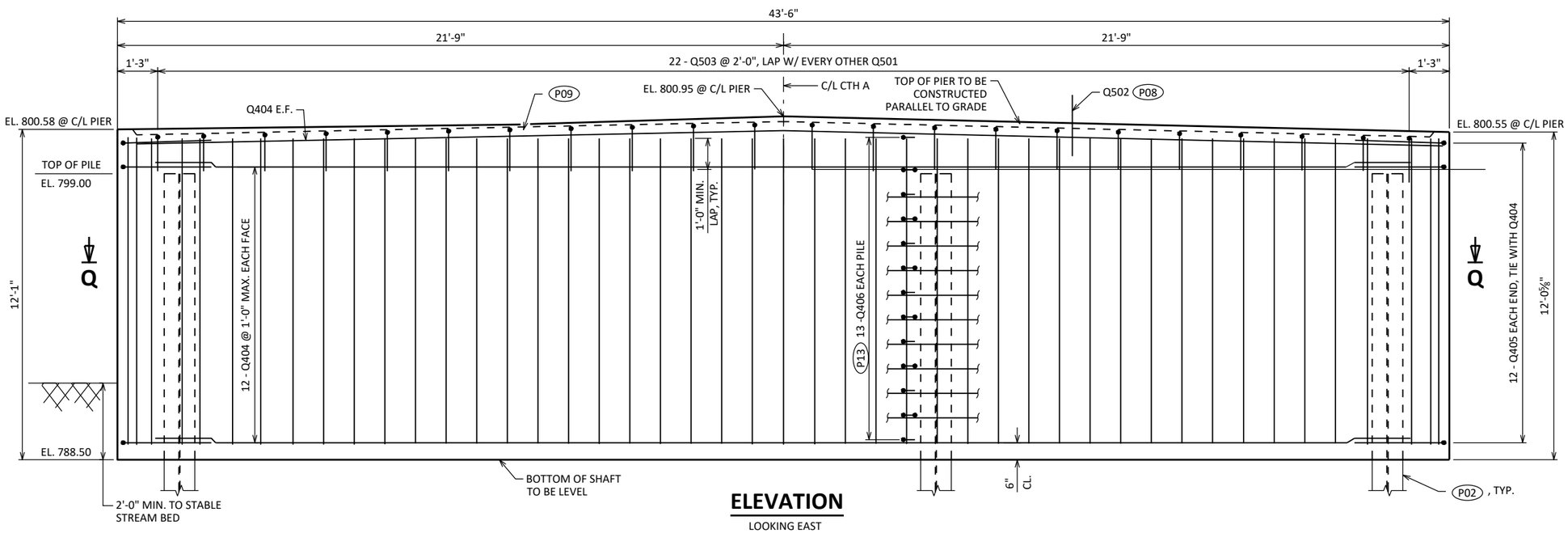

ELEVATION

LOOKING EAST

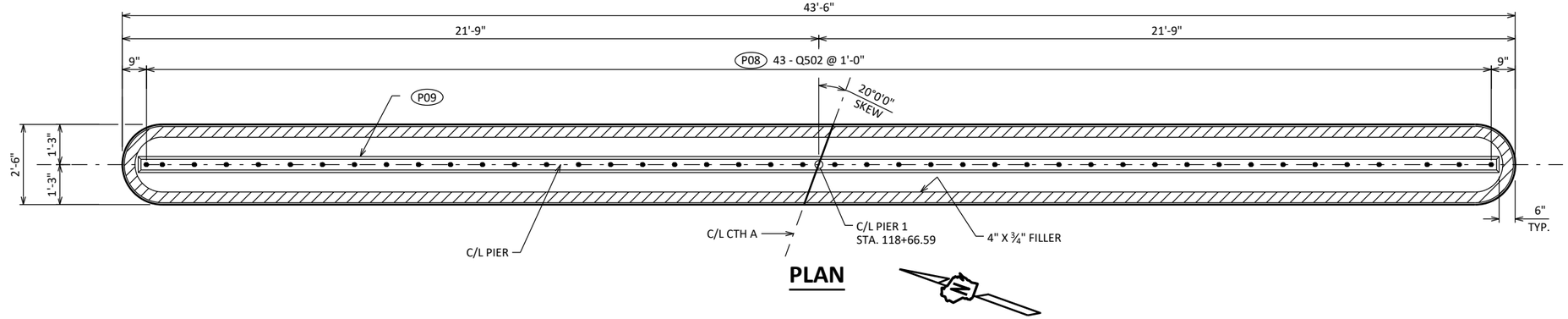

PLAN

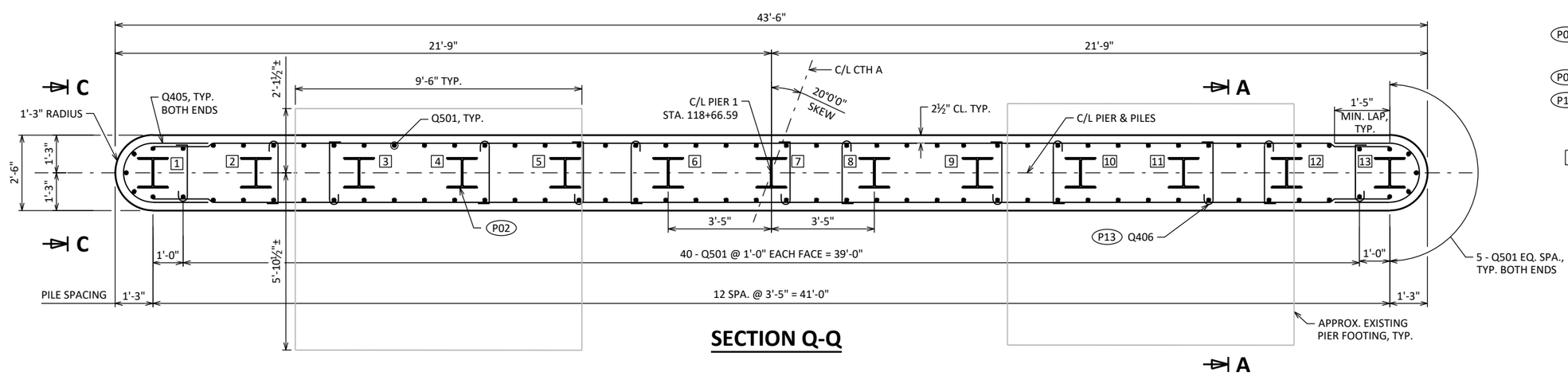

SECTION Q-Q

PIER 2 - BILL OF BARS

NOTE: THE FIRST OR FIRST TWO DIGITS OF THE BAR MARK SIGNIFIES THE BAR SIZE.

BAR MARK	COAT	NO. REQ'D.	LENGTH	BENT	LOCATION
Q501		90	11'-4"		VERTICAL
Q502	X	43	2'-0"		DOWELS
Q503		22	5'-3"	X	STIRRUP TOP
Q404		26	41'-0"		HORIZONTAL
Q405		26	6'-4"	X	HORIZONTAL ENDS
Q406		169	2'-11"	X	HORIZONTAL TIES

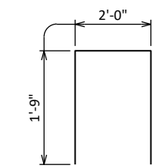

Q503

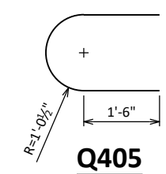

Q405

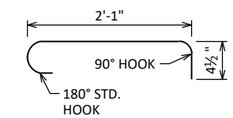

Q406

NOTE

AT PIER 2, CONCRETE POURED UNDERWATER WILL BE ALLOWED AND SHALL BE DONE IN ACCORDNACE WITH STANDARD SPEC 502.3.5.3 CONCRETE POURED UNDERWATER SHALL NOT EXCEED 10.0 FEET IN DEPTH, UNLESS APPROVED OTHERWISE.

SEE SHEET 5 FOR PILE SPLICE DETAILS.

SEE SHEET 12 FOR SECTIONS A-A AND C-C.

LEGEND

- P02 — SUPPORT PIER ON HP 12 x 53 STEEL PILING, ESTIMATED 40'-0" LONG WITH A REQUIRED DRIVING RESISTANCE OF 220 TONS PER PILE AND TO A TIP EL. OF 762.5 OR DEEPER. THE WISDOT REGIONAL GEOTECHNICAL ENGINEER SHOULD BE CONTACTED AND BE PRESENT DURING PILE DRIVING OPERATIONS.
- P08 — BARS @ 1'-0" CTRS. MAY BE PLACED AFTER CONCRETE IS POURED BUT BEFORE INITIAL SET HAS TAKEN PLACE. (EMBED 1'-0" INTO CONC.)
- P09 — KEYED CONST. JOINT-FORMED BY BEVELED 2 x 6
- P13 — PLACE BARS ADJACENT TO EACH PILE, TIE TO NEAREST Q501. VERTICAL SPACING TO MATCH Q404. ALTERNATE THE POSITION OF THE 90° AND THE 180° HOOKS AT EACH VERTICAL LAYER OF TIES.
- # — PILE NUMBER

NO.	DATE	REVISION	BY

STATE OF WISCONSIN
DEPARTMENT OF TRANSPORTATION

STRUCTURE B-66-147

DRAWN BY WAR | PLANS CK'D KGW

PIER 2

8

8

STATE PROJECT NUMBER

4868-05-70

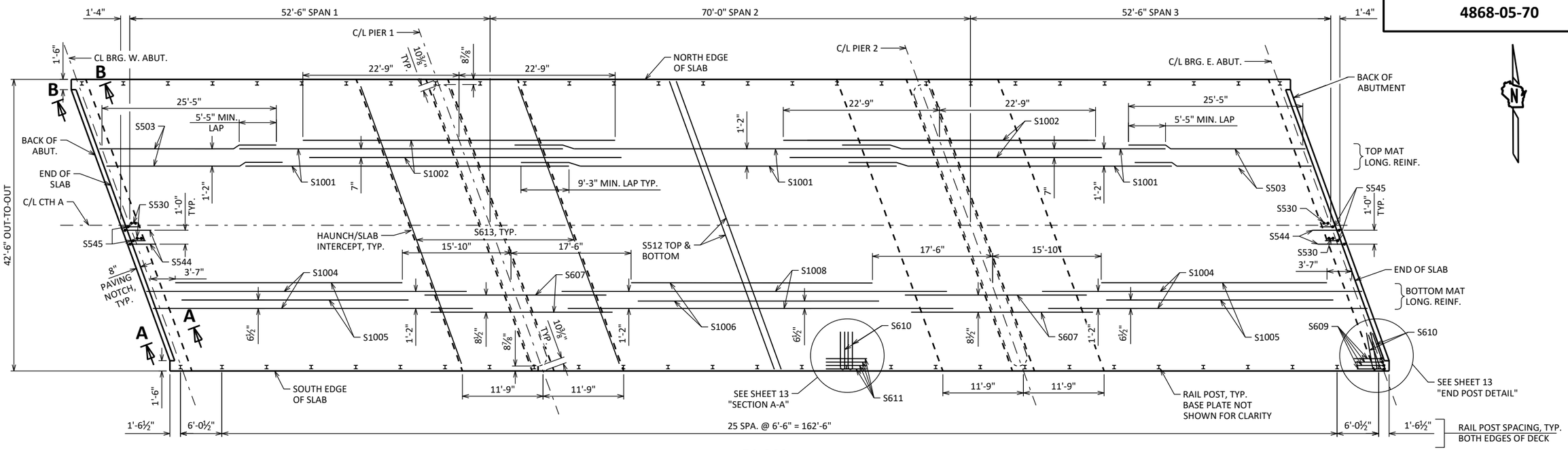

PLAN

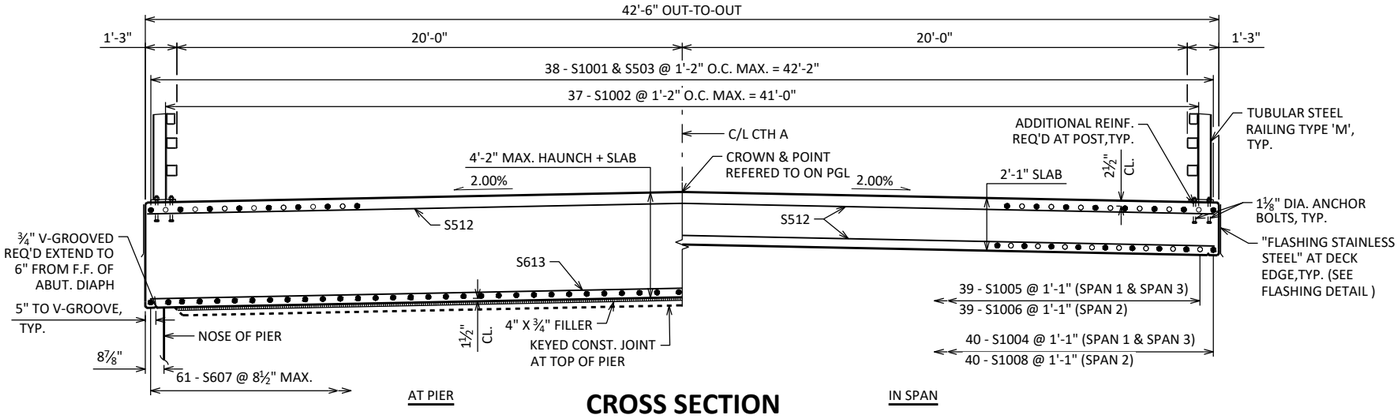

CROSS SECTION

LOOKING EAST
ALL DIMENSIONS TAKEN NORMAL TO C/L CTH A

TOP OF SLAB ELEVATIONS

SPAN 1

	LOCATION	C/L WEST ABUT.	1/10 PT.	2/10 PT.	3/10 PT.	4/10 PT.	5/10 PT.	6/10 PT.	7/10 PT.	8/10 PT.	9/10 PT.	C/L PIER 1
☆	NORTH SLAB EDGE	804.49	804.53	804.56	804.58	804.61	804.64	804.66	804.68	804.70	804.72	804.74
	C/L	804.96	804.99	805.02	805.05	805.07	805.09	805.12	805.13	805.15	805.17	805.18
☆	SOUTH SLAB EDGE	804.58	804.61	804.63	804.66	804.68	804.70	804.72	804.73	804.75	804.76	804.77

SPAN 2

	LOCATION	C/L PIER 1	1/10 PT.	2/10 PT.	3/10 PT.	4/10 PT.	5/10 PT.	6/10 PT.	7/10 PT.	8/10 PT.	9/10 PT.	C/L PIER 2
☆	NORTH SLAB EDGE	804.74	804.75	804.77	804.78	804.79	804.80	804.81	804.81	804.80	804.80	804.79
	C/L	805.18	805.20	805.21	805.22	805.23	805.23	805.23	805.23	805.22	805.22	805.20
☆	SOUTH SLAB EDGE	804.77	804.79	804.80	804.80	804.81	804.81	804.80	804.80	804.79	804.78	804.76

SPAN 3

	LOCATION	C/L PIER 2	1/10 PT.	2/10 PT.	3/10 PT.	4/10 PT.	5/10 PT.	6/10 PT.	7/10 PT.	8/10 PT.	9/10 PT.	C/L EAST ABUT.
☆	NORTH SLAB EDGE	804.79	804.78	804.77	804.76	804.75	804.73	804.72	804.70	804.68	804.66	804.63
	C/L	805.20	805.19	805.18	805.17	805.15	805.13	805.11	805.09	805.07	805.05	805.02
☆	SOUTH SLAB EDGE	804.76	804.75	804.73	804.72	804.70	804.68	804.66	804.64	804.61	804.58	804.55

☆ EDGE OF SLAB ELEVATION IS THE TOP OUTER EDGE OF THE SLAB

NOTES

SEE SHEET 11 FOR SECTIONS A-A & B-B.

FILL IN THE TABLE OF "SURVEY TOP OF SLAB ELEVATIONS" FOR EACH SPAN ON AS BUILT PLANS

THE BID ITEM "FLASHING STAINLESS STEEL" SHALL INCLUDE PROVIDING AND INSTALLING THE STAINLESS STEEL FLASHING, SILCONE CAULK AND 3/16" CONCRETE SCREWS.

FLASHING TO BE INSTALLED AFTER PROTECTIVE SURFACE TREATMENT APPLICATION.

CONCRETE SCREWS SHALL BE 410 STAINLESS STEEL.

EXTEND FLASHING TO B.F. OF ABUTMENT DIAPHRAGM.

TOP OF FLASHING TO BEGIN APPROX. 1-INCH BELOW TOP OF SLAB SURFACE.

THE FLASHING IS TO BE CONSTANT HEIGHT BASED ON THE THINNEST SLAB DEPTH OVER THE BRIDGE LENGTH.

PROVIDE 2" MINIMUM FLASHING OVERLAP, FASTEN WITH 3/16" X 2" (MIN.) CONCRETE SCREWS.

CAULK SHALL BE NON-STAINING, GRAY NON-BITUMINOUS JOINT SEALER.

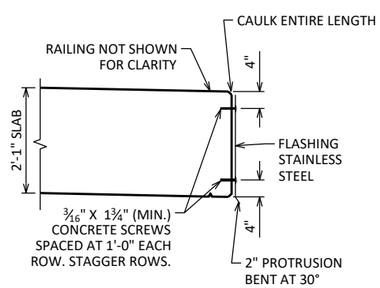

FLASHING DETAIL

SURVEY TOP OF SLAB ELEVATIONS

LOCATION	C/L BRG. W. ABUTMENT	5/10 PT.	C/L PIER 1	5/10 PT.	C/L PIER 2	5/10 PT.	C/L BRG. E. ABUTMENT
NORTH SLAB EDGE							
C/L CTH A							
SOUTH SLAB EDGE							

PRIOR TO RELEASING SLAB FALSEWORK, TAKE TOP OF SLAB ELEVATIONS AT THE C/L OF ABUTMENTS, THE C/L OF PIERS AND AT 5/10 PTS. TO VERIFY CAMBER. TAKE ELEVATIONS ALONG GUTTER LINES AND CROWN OR R/L. RECORD ELEVATIONS ON AS BUILT PLANS.

NO.	DATE	REVISION	BY

STATE OF WISCONSIN
DEPARTMENT OF TRANSPORTATION

STRUCTURE B-66-147

DRAWN BY CWG | PLANS CK'D WAR

SUPERSTRUCTURE

8

8

STATE PROJECT NUMBER

4868-05-70

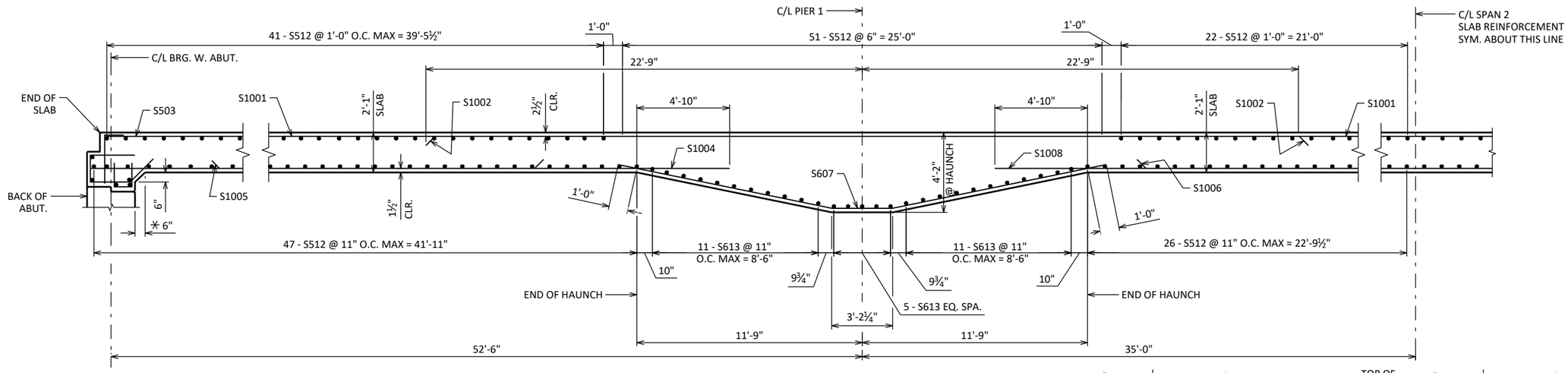

PART LONGITUDINAL SECTION

DIMENSIONED ALONG C/L CTH A UNLESS NOTED OTHERWISE

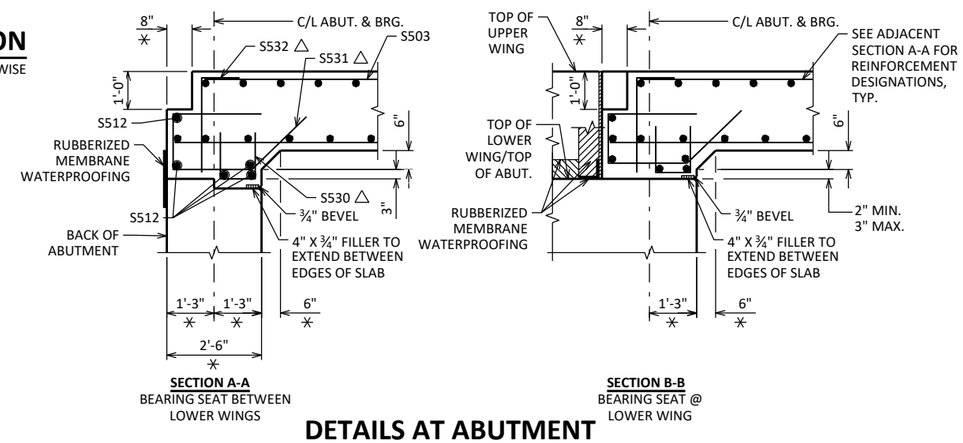

DETAILS AT ABUTMENT

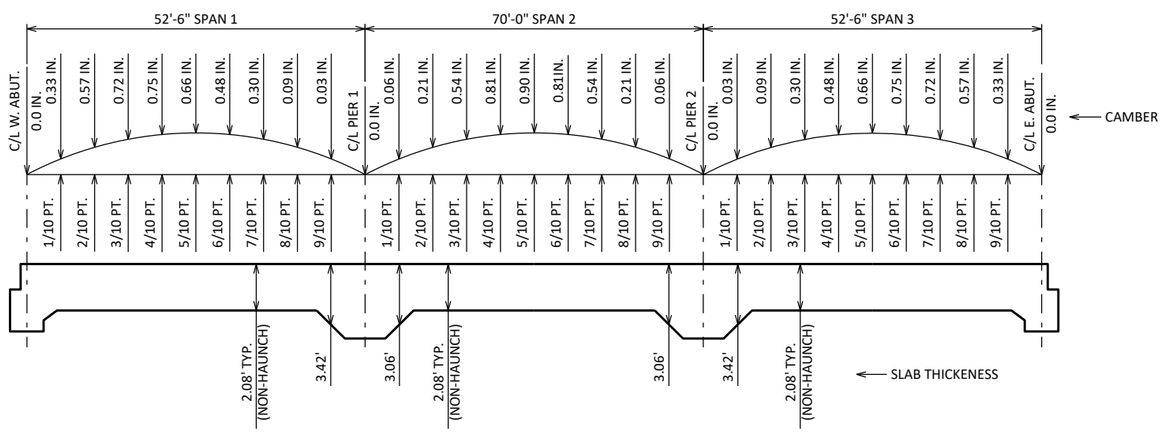

CAMBER AND SLAB THICKNESS DIAGRAM

CAMBER SHOWN IS BASED ON 3 TIMES DEAD LOAD DEFLECTIONS. CAMBER SPANS AS SHOWN TO PROVIDE FOR DEAD LOAD DEFLECTION AND FUTURE CREEP. CAMBER DOES NOT INCLUDE ALLOWANCE FOR FORM SETTLEMENT.

TO DETERMINE FALSEWORK ELEVATION AT EDGE OF SLAB, CROWN OR REFERENCE LINE FOLLOW THIS PROCEDURE:

	TOP OF SLAB ELEVATION AT FINAL GRADE
LESS	SLAB THICKNESS
PLUS	CAMBER
PLUS	FORM SETTLEMENT/DEFLECTION DUE TO PLACEMENT OF SLAB CONCRETE (TO BE COMPUTED BY THE CONTRACTOR)
EQUALS	TOP OF SLAB FALSEWORK ELEVATION

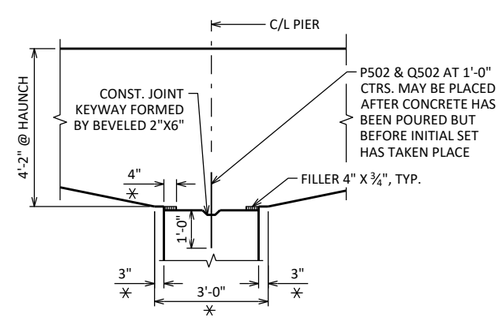

DETAIL AT PIER

NOTES

SEE SHEET 10 FOR SECTION A-A & B-B LOCATIONS.

TOP TRANSVERSE BARS IN SLAB SHALL BE SUPPORTED BY INDIVIDUAL BAR CHAIRS AT APPROXIMATELY 3'-0" CENTERS EACH WAY. BOTTOM LONGITUDINAL BARS SHALL BE SUPPORTED BY CONTINUOUS BAR CHAIRS AT APPROXIMATELY 4'-0" CENTERS.

ALL SLAB THICKNESS DIMENSIONS ARE MINIMUM. ANY TOLERANCES NECESSARY TO CORRECT CONSTRUCTION DISCREPANCIES ARE TO BE PLUS (+).

CAMBER SPANS AS SHOWN TO PROVIDE FOR DEAD LOAD DEFLECTION AND FUTURE CREEP. CAMBER DOES NOT INCLUDE ALLOWANCE FOR FORM SETTLEMENT.

LEGEND

✳ DIMENSION TAKEN NORMAL TO C/L SUBSTRUCTURE.

△ BARS PLACED PARALLEL TO "C/L CTH A" AND SPACE PERPENDICULAR TO "C/L CTH A" @ 1'-0" MAX.

NO.	DATE	REVISION	BY

STATE OF WISCONSIN
DEPARTMENT OF TRANSPORTATION

STRUCTURE B-66-147

DRAWN BY CWG | PLANS CK'D WAR

SUPERSTRUCTURE DETAILS

SHEET 11 OF 13

8

8

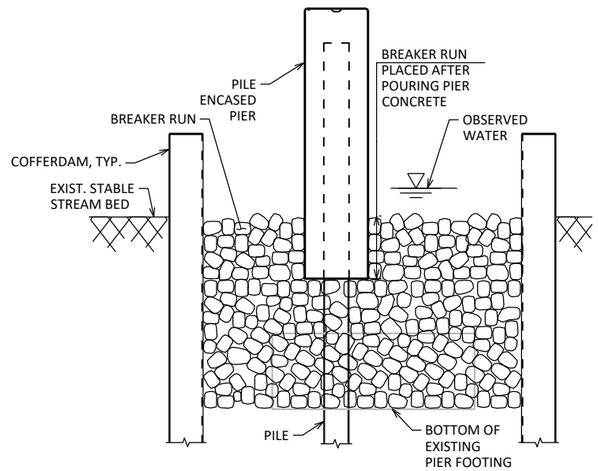

SECTION A-A

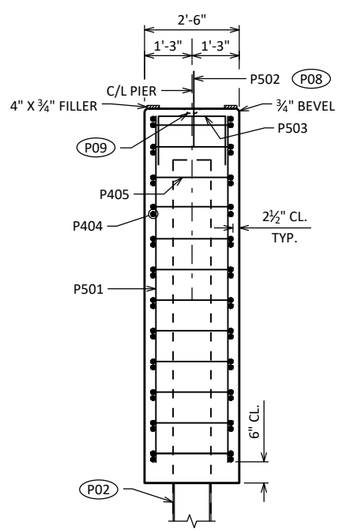

SECTION B-B

PIER 1

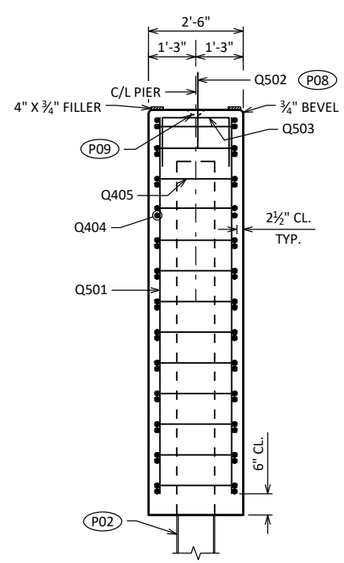

SECTION C-C

PIER 2

SUPERSTRUCTURE - BILL OF BARS

NOTE: THE FIRST OR FIRST TWO DIGITS OF THE BAR MARK SIGNIFIES THE BAR SIZE.

BAR MARK	COAT	NO. REQ'D.	LENGTH	BENT	BAR SERIES	LOCATION
S1001	X	114	51'-6"			LONGITUDINAL TOP
S1002	X	74	45'-6"			LONGITUDINAL TOP - OVER PIER
S503	X	76	26'-0"			LONGITUDINAL TOP - SPAN 1 & 3
S1004	X	80	46'-9"			LONGITUDINAL BOTTOM - SPAN 1 & 3
S1005	X	78	33'-1"			LONGITUDINAL BOTTOM - SPAN 1 & 3
S1006	X	39	35'-0"			LONGITUDINAL BOTTOM - SPAN 2
S607	X	122	25'-11"	X		LONGITUDINAL BOTTOM - OVER PIER
S1008	X	40	56'-2"			LONGITUDINAL BOTTOM - SPAN 2
S609	X	16	4'-8"	X		LONGITUDINAL TOP AT END RAIL POST
S610	X	112	11'-2"	X		TRANSVERSE TOP AT RAIL POST
S611	X	208	6'-0"			LONGITUDINAL TOP AT INTERIOR RAIL POST
S512	X	384	44'-10"			TRANSVERSE TOP & BOTTOM
S613	X	54	44'-10"			TRANSVERSE BOTTOM AT HAUNCHES
S530	X	88	3'-3"	X		END OF SLAB
S531	X	88	7'-10"	X		END OF SLAB
S532	X	88	3'-10"	X		END OF SLAB

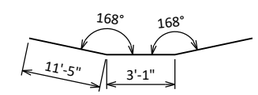

S607

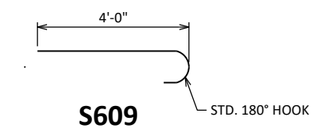

S609

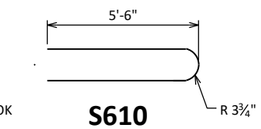

S610

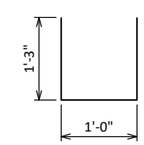

S530

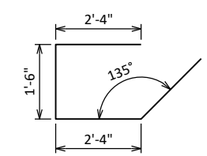

S531

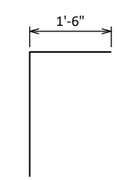

S532

LEGEND

(P02) SUPPORT PIER ON HP 12 x 53 STEEL PILING, ESTIMATED 40'-0" LONG WITH A REQUIRED DRIVING RESISTANCE OF 220 TONS PER PILE.

(P08) BARS @ 1'-0" CTRS. MAY BE PLACED AFTER CONCRETE IS POURED BUT BEFORE INITIAL SET HAS TAKEN PLACE. (EMBED 1'-0" INTO CONC.)

(P09) KEYED CONST. JOINT-FORMED BY BEVELED 2 x 6

NO.	DATE	REVISION	BY

STATE OF WISCONSIN
DEPARTMENT OF TRANSPORTATION

STRUCTURE B-66-147

DRAWN BY CWG | PLANS CK'D WAR

SUPERSTRUCTURE BILL OF BARS & PIER DETAILS

8

8

STATE PROJECT NUMBER

4868-05-70

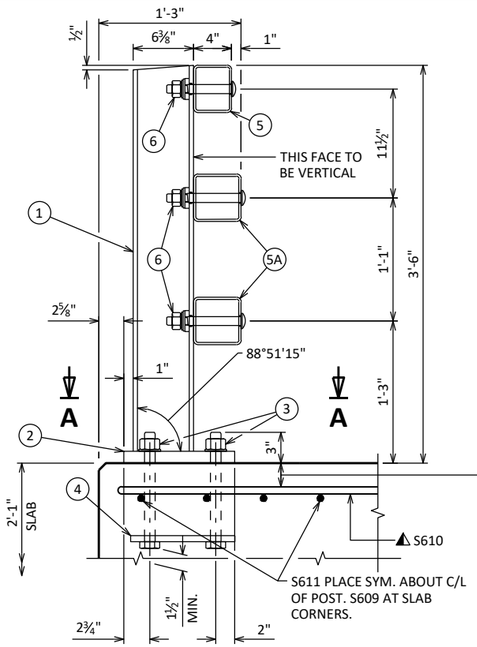

SECTION THRU RAILING ON DECK

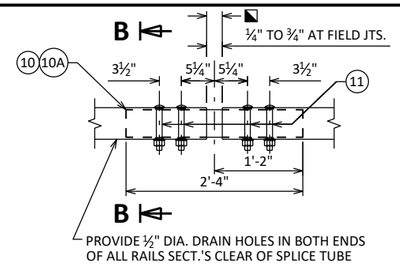

FIELD ERECTION JOINT DETAIL

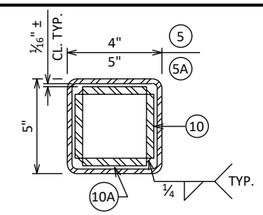

SECTION B-B

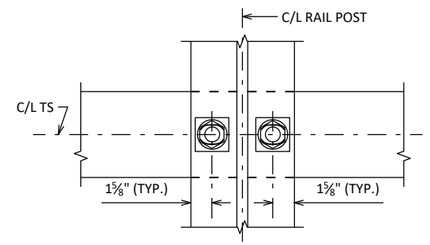

SECTION THRU POST WEB

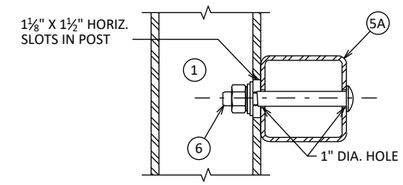

SECTION THRU RAIL

NOTE: CONNECTIONS AT LOWER RAILS SHOWN. CONNECTIONS AT TOP RAIL SIMILAR.

TYPICAL RAIL TO POST CONNECTIONS

SHOP RAIL SPLICE DETAIL

LOCATION MUST BE SHOWN ON SHOP DRAWINGS

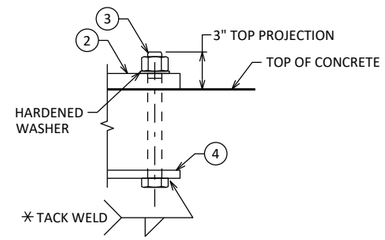

ANCHOR BOLTS

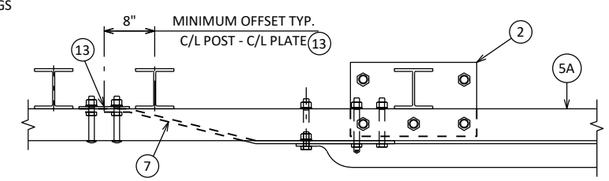

TOP VIEW AT END POST

THRIE BEAM RAIL ATTACHMENT

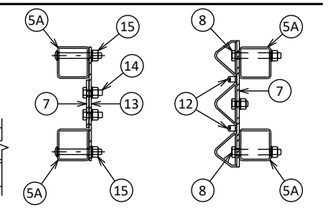

SECTION C-C SECTION D-D

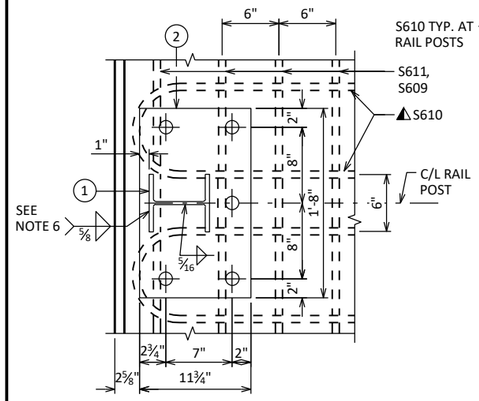

SECTION A-A

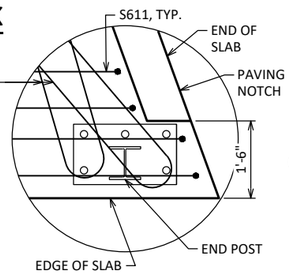

END POST DETAIL

REINFORCEMENT AT CORNERS

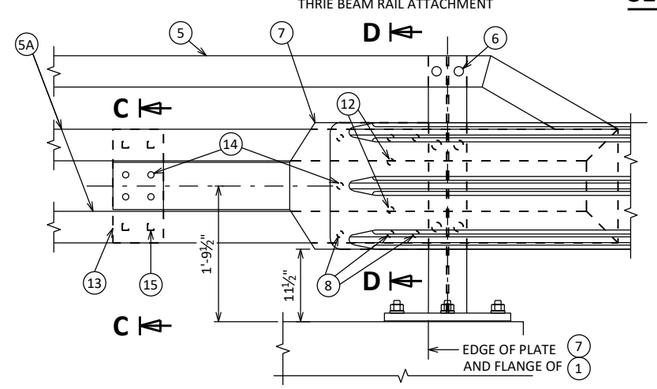

DETAIL AT END POST

THRIE BEAM RAIL ATTACHMENT

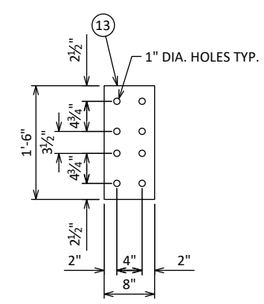

ANCHOR PLATE

AT BEAM GUARD ATTACHMENT

LEGEND

1. W6 X 25 WITH 1⅛" X 1½" HORIZ. SLOTS ON EACH SIDE OF POST FOR BOLT NO. 6. CUT BOTTOM OF POST TO MATCH CROSS SLOPE OF ROADWAY. PLACE POST VERTICAL. PLACE POSTS NORMAL TO GRADE LINE.
2. PLATE 1¼" X 11¾" X 1'-8" WITH 1 7/16" DIA. OVERSIZED HOLES FOR ANCHOR BOLTS NO. 3. WELD TO NO. 1 AS SHOWN.
3. ASTM A449 - 1⅛" DIA. ANCHOR BOLTS WITH NUT AND HARDENED WASHER (ALL GALVANIZED). 5 REQ'D. PER POST. THREAD 3" AND PLACE NORMAL TO PLATE NO. 2. CHAMFER TOP OF BOLTS BEFORE THREADING. USE 1'-9" LONG IN ABUTMENT WINGS. AT POSTS ON CONCRETE SLAB SUPERSTRUCTURES WHERE THE SLAB THICKNESS IS > 16" USE 1'-3" LONG. USE 10¾" LONG AT ALL OTHER LOCATIONS. (AN EQUIVALENT THREADED ROD WITH NUTS AND HARDENED WASHERS MAY BE SUBSTITUTED FOR ANCHOR BOLTS IN WINGS IF REQ'D. FOR CONSTRUCTABILITY.)
4. ⅝" X 11" X 1'-8" ANCHOR PLATE (GALVANIZED) WITH 1 3/16" DIA. HOLES FOR ANCHOR BOLTS NO. 3
5. TS 5 X 4 X 0.25 STRUCTURAL TUBING. ATTACH TO NO. 1 WITH NO. 6.
5A. TS 5 X 5 X 0.25 STRUCTURAL TUBING. ATTACH TO NO. 1 WITH NO. 6.
6. ⅞" DIA. A325 SLOTTED ROUND HEAD BOLT WITH NUT, 3/16" X 1⅝" X 1⅝" MIN. WASHER, AND LOCK WASHER (2 REQ'D. AT EACH RAIL TO POST LOCATION.)
7. ½" THK. BACK-UP PLATE WITH 2 - ⅞" X 1½" THREADED SHOP WELDED STUDS (NO. 12). BOLT TO RAIL AS SHOWN IN DETAIL. REQUIRED AT THRIE BEAM GUARD RAIL ATTACHMENTS ONLY. PLACE SYMMETRICALLY ABOUT TUBES NO. 5A.
8. 1" DIA. HOLES IN PLATE NO. 7 & TUBES NO. 5A FOR ⅞" DIA. A325 BOLTS WITH HEX NUTS AND WASHERS. 6 HOLES IN TUBES AND PLATE NO. 7.
9. SPLICE SLEEVE FABRICATED FROM ¼" PLATE. PROVIDE "SLIDING FIT".
10. ⅜" X 3⅝" X 2'-4" PLATE. 2 PER RAIL. USED IN NO. 5 & 5A.
10A. ⅜" X 2⅝" X 2'-4" PLATE USED IN NO. 5, ⅜" X 3⅝" X 2'-4" PLATE USED IN NO. 5A. 2 PER RAIL.
11. ⅞" DIA. A325 ROUND HEAD BOLT WITH NUT, WASHER, AND LOCK WASHER. USE 15/16" X 1¼" LONGIT. SLOTTED HOLES AT FIELD JOINTS AND 15/16" X 2¼" MIN. LONGIT. SLOTTED HOLES AT EXP. JOINTS IN PLATE NO. 10A. PROVIDE 15/16" DIA. ROUND HOLES IN TUBE NO. 5 AND NO. 5A.
12. ⅞" DIA. X 1½" LONG THREADED SHOP WELDED STUDS (2 REQ'D).
13. ⅜" X 8" X 1'-6" PLATE. BOLT TO RAIL AS SHOWN IN DETAIL. REQ'D. AT THRIE BEAM GUARD RAIL ATTACHMENTS ONLY. PLACE SYM. ABOUT TUBES NO. 5A.
14. ⅞" DIA. X 2" LONG A325 HEX BOLT WITH NUT AND WASHER (5 REQ'D.).
15. 1" DIA. HOLES IN TUBES NO. 5A FOR ⅞" DIA. A325 ROUND HEAD BOLT WITH NUT, WASHER AND LOCK WASHER (4 REQ'D.). 4 HOLES IN TUBES.

GENERAL NOTES

1. BID ITEM SHALL BE "RAILING TUBULAR TYPE M" WHICH INCLUDES ALL ITEMS SHOWN.
2. RAIL POST AND BASE PLATES SHALL CONFORM TO THE REQUIREMENTS OF ASTM A709 GRADE 50. HOLLOW RAILING STRUCTURAL TUBING SHALL CONFORM TO THE REQUIREMENTS OF ASTM A500 GRADE B OR C WITH A CERTIFIED FY = 50 KSI. ANCHOR PLATES, AND SPLICE TUBE PLATES SHALL CONFORM TO THE REQUIREMENTS OF ASTM A709 GRADE 36.
3. THE NUT SECURING THE POST BASE PLATE TO THE CONCRETE SHALL BE TIGHTENED TO A SNUG FIT AND GIVEN AN ADDITIONAL ⅛ TURN.
4. RAILS SHALL BE CONTINUOUS OVER A MINIMUM OF THREE (3) POSTS WITHOUT SPLICES WHERE POSSIBLE. RAILS SHALL BE SPLICED IN A PANEL OVER EXPANSION JOINTS.
5. ENDS OF TUBE SECTIONS SHALL BE SAWED. GRIND SMOOTH EXPOSED EDGES. ALL CUT ENDS SHALL BE TRUE AND SMOOTH.
6. WELD IS THE SAME ON BOTH FLANGES. FLANGE WELD DOES NOT REQUIRE MAGNETIC PARTICLE TESTING.
7. FILL BOLT SLOT OPENINGS IN POST SHIMS AND PLATE NO. 2 AND CAULK AROUND PERIMETER OF PLATE NO. 2 WITH NON-STAINING GRAY NON-BITUMINOUS JOINT SEALER. STEEL POST SHIMS MAY BE USED UNDER POSTS WHERE REQ'D. FOR ALIGNMENT.
8. POST BASE PLATES SHALL BE FLAT WITH ALL SURFACES SMOOTH AND FREE FROM WARP AND ALL EDGES SMOOTH, STRAIGHT AND VERTICAL. ALL PLATE CUTS SHALL BE MACHINE OR MACHINE FLAME CUT.
9. ALL MATERIAL SHALL BE GALVANIZED AFTER FABRICATION. PRIOR TO GALVANIZING, ALL STEEL RAILING POSTS & STEEL TUBING SHALL BE GIVEN A NO. 6 BLAST CLEANING BY SSPC SPECIFICATIONS.

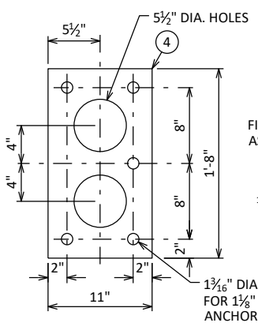

ANCHOR PLATE

AT RAIL TO DECK CONNECTION

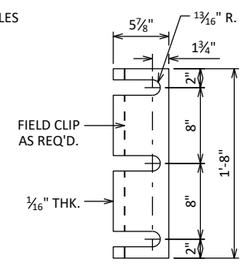

POST SHIM DETAIL

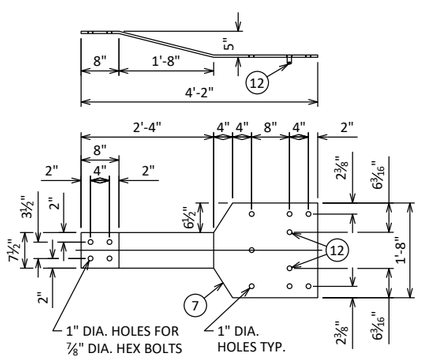

BACK-UP PLATE DETAIL

AT BEAM GUARD ATTACHMENT

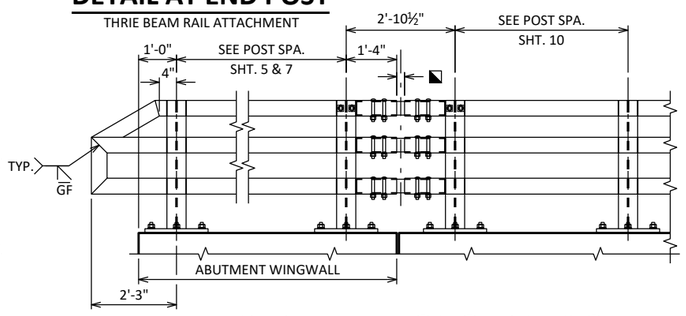

PART ELEVATION OF RAILING

LEGEND

- TIE TO TOP MAT OF STEEL.
- ANCHOR BOLT ASSEMBLY MAY BE TACK WELDED, EITHER IN THE SHOP, OR IN THE FIELD AFTER THE ANCHOR PLATE IS PLACED.
- ¼" TO ¾" OPENING

NO.	DATE	REVISION	BY

STATE OF WISCONSIN
DEPARTMENT OF TRANSPORTATION

STRUCTURE B-66-147

DRAWN BY WAR PLANS CK'D KGW

TUBULAR STEEL RAILING TYPE "M"

SHEET 13 OF 13

8

8

STATION	REAL STATION	DISTANCE	AREA (SF)			INCREMENTAL VOL (CY) (UNADJUSTED)			CUMULATIVE VOL (CY)		
			CUT	SALVAGED/UNUSABLE PAVEMENT MATERIAL	FILL	CUT	SALVAGED/UNUSABLE PAVEMENT MATERIAL	FILL	CUT	EXPANDED FILL	MASS ORDINATE
									1.00	1.25	
						NOTE 1	NOTE 2	NOTE 3	NOTE 1		NOTE 8
112+90	11290.00	0.00	50.23	9.94	2.20	0	0	0	0	0	0
113+00	11300.00	10.00	45.27	8.92	23.59	18	3	5	18	6	9
113+13	11313.00	13.00	39.06	9.69	11.45	20	4	8	38	16	15
113+50	11350.00	37.00	38.42	7.76	35.21	53	12	32	91	56	16
114+00	11400.00	50.00	38.66	7.42	40.37	71	14	70	162	144	-15
114+50	11450.00	50.00	32.03	7.43	49.14	65	14	83	227	248	-68
115+00	11500.00	50.00	24.14	7.44	66.92	52	14	107	279	381	-163
115+50	11550.00	50.00	22.73	7.41	83.99	43	14	140	322	556	-309
116+00	11600.00	50.00	28.88	7.34	100.75	48	14	171	370	770	-489
116+19.732	11619.73	19.73	32.07	7.30	107.36	22	5	76	392	865	-567
116+50	11650.00	30.27	38.59	7.30	118.66	40	8	127	432	1,024	-694
116+69.749	11669.75	19.75	44.69	7.31	127.17	30	5	90	462	1,136	-781
116+92.444	11692.44	22.69	39.70	7.33	130.46	35	6	108	497	1,271	-887
117+00	11700.00	7.56	39.00	7.34	71.39	11	2	28	508	1,306	-913
117+28.202	11728.20	28.20	45.35	7.43	60.14	44	8	69	552	1,393	-964
117+50	11750.00	21.80	48.97	10.34	48.90	38	7	44	590	1,448	-988
117+75	11775.00	25.00	81.69	18.40	37.10	60	13	40	650	1,498	-991
117+95.568	11795.57	20.57	52.79	9.19	0.00	51	11	14	701	1,515	-968
118+09.945	11809.94	14.38	24.84	3.99	0.00	21	4	0	722	1,515	-951
119+00	11900.00	90.06	0.00	8.85	0.00	41	21	0	763	1,515	-931
119+93.228	11993.23	93.23	19.90	4.00	0.71	34	22	1	797	1,516	-920
120+07.605	12007.60	14.38	40.33	7.84	1.28	16	3	1	813	1,518	-909
120+50	12050.00	42.40	33.25	7.66	123.15	58	12	98	871	1,640	-985
120+67.853	12067.85	17.85	30.78	7.52	121.53	21	5	81	892	1,741	-1,070
120+69.731	12069.73	1.88	30.44	7.51	120.95	2	1	8	894	1,751	-1,079
120+70.976	12070.98	1.25	30.21	7.51	121.16	1	0	6	895	1,759	-1,086
120+72.853	12072.85	1.88	29.88	7.50	121.77	2	1	8	897	1,769	-1,095
120+95.956	12095.96	23.10	26.17	7.43	132.99	24	6	109	921	1,905	-1,213
120+97.834	12097.83	1.88	25.91	7.43	133.44	2	1	9	923	1,916	-1,223
121+00	12100.00	2.17	25.60	7.42	134.22	2	1	11	925	1,930	-1,236
121+20.924	12120.92	20.92	21.96	7.39	107.45	18	6	94	943	2,048	-1,342
121+22.801	12122.80	1.88	21.62	7.39	106.78	2	1	7	945	2,056	-1,349
121+50	12150.00	27.20	17.25	7.39	117.30	20	7	113	965	2,198	-1,478
121+70.94	12170.94	20.94	14.52	7.38	98.99	12	6	84	977	2,303	-1,577
121+72.816	12172.82	1.88	14.28	7.38	97.52	1	1	7	978	2,311	-1,585
122+00	12200.00	27.18	10.43	7.36	80.79	12	7	90	990	2,424	-1,693
122+50	12250.00	50.00	9.27	7.38	53.02	18	14	124	1,008	2,579	-1,844
123+00	12300.00	50.00	19.02	7.44	32.74	26	14	79	1,034	2,678	-1,931
123+50	12350.00	50.00	38.05	7.44	18.99	53	14	48	1,087	2,738	-1,952
124+00	12400.00	50.00	45.29	7.47	13.01	77	14	30	1,164	2,775	-1,926
124+50	12450.00	50.00	46.17	7.44	5.98	85	14	18	1,249	2,798	-1,878
124+93	12493.00	43.00	49.75	8.54	2.22	76	13	7	1,325	2,806	-1,823
125+00	12500.00	7.00	51.14	8.86	1.95	13	2	1	1,338	2,808	-1,814
125+25	12525.00	25.00	54.10	9.92	0.48	49	9	1	1,387	2,809	-1,775

Notes:	
1 - CUT	CUT INCLUDES SALVAGED/UNUSABLE PAVEMENT MATERIAL
2 - SALVAGED/UNUSABLE PAVEMENT MATERIAL	THIS DOES NOT SHOW UP IN CROSS SECTIONS
3 - FILL	DOES NOT INCLUDE UNUSABLE PAVEMENT EXC VOLUME
8 - MASS ORDINATE	[CUT - SALVAGED PAVT - (FILL * FILL FACTOR)]

STATION	REAL STATION	DISTANCE	AREA (SF)				INCREMENTAL VOL (CY) (UNADJUSTED)				CUMULATIVE VOL (CY)			
			CUT	SALVAGED/UNUSABLE PAVEMENT MATERIAL	FILL	MARSH EXC	CUT	SALVAGED/UNUSABLE PAVEMENT MATERIAL	FILL	MARSH EXC	CUT	EXPANDED FILL	REDUCED MARSH IN FILL	MASS ORDINATE
							NOTE 1	NOTE 2	NOTE 3		1.00 NOTE 1	1.25	1.00 NOTE 6	NOTE 8
200+23.925	20023.92	0.00	23.49	3.35	32.45	0.00	0	0	0	0	0	0	0	0
200+35.944	20035.94	12.02	7.34	1.49	185.47	0.00	7	1	49	0	7	61	0	-55
200+50	20050.00	14.06	76.15	7.00	187.37	0.00	22	2	97	0	29	183	0	-157
200+63.115	20063.11	13.11	49.52	6.39	116.35	0.00	31	3	74	0	60	275	0	-221
200+75	20075.00	11.89	38.55	6.16	97.13	0.00	19	3	47	0	79	334	0	-264
201+00	20100.00	25.00	26.86	5.96	50.23	1.20	30	6	68	1	109	419	1	-325
201+25	20125.00	25.00	14.66	5.76	33.68	0.00	19	5	39	1	128	468	2	-360
201+50	20150.00	25.00	16.84	5.75	32.30	0.00	15	5	31	0	143	506	2	-388
201+75	20175.00	25.00	22.39	5.64	19.21	0.00	18	5	24	0	161	536	2	-405
202+00	20200.00	25.00	30.35	5.54	1.15	0.00	24	5	9	0	185	548	2	-398
202+05	20205.00	5.00	31.23	5.53	0.00	0.00	6	1	0	0	191	548	2	-393

Notes:	
1 - CUT	CUT INCLUDES SALVAGED/UNUSABLE PAVEMENT MATERIAL
2 - SALVAGED/UNUSABLE PAVEMENT MATERIAL	THIS DOES NOT SHOW UP IN CROSS SECTIONS
3 - FILL	DOES NOT INCLUDE UNUSABLE PAVEMENT EXC VOLUME
4 - EXPANDED MARSH BACKFILL	WILL BE BACKFILLED WITH GRANULAR BACKFILL (OR CUT, OR BORROW)
8 - MASS ORDINATE	[CUT - SALVAGED PAVT - (FILL * FILL FACTOR)]

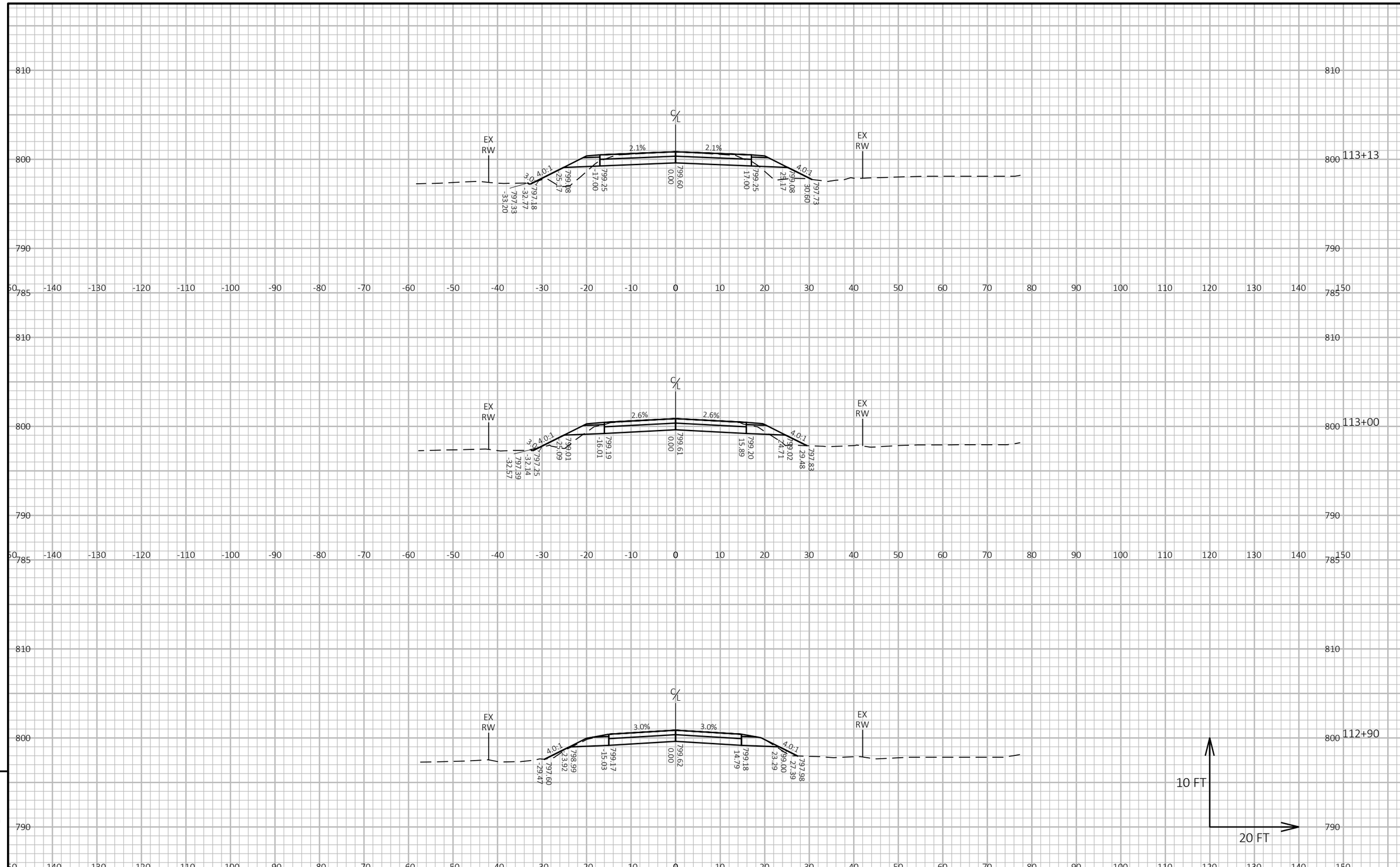

9

PROJECT NO: 4868-05-70	HWY: CTH A	COUNTY: WASHINGTON	CROSS SECTIONS: CTH A	SHEET 143	E

FILE NAME : X:\ML\2023\20230044\DESIGN\TRANSPORTATION\SHEETSPLAN\090201-XS.DWG
LAYOUT NAME - 090201_xs
PLOT DATE : 8/1/2024 9:38 AM
PLOT BY : DABROWSKI, MATTHEW
PLOT NAME :
PLOT SCALE : 1 IN:20 FT HORZ. / 1 IN:10 FT VERT.
WISDOT/CADDS SHEET 49

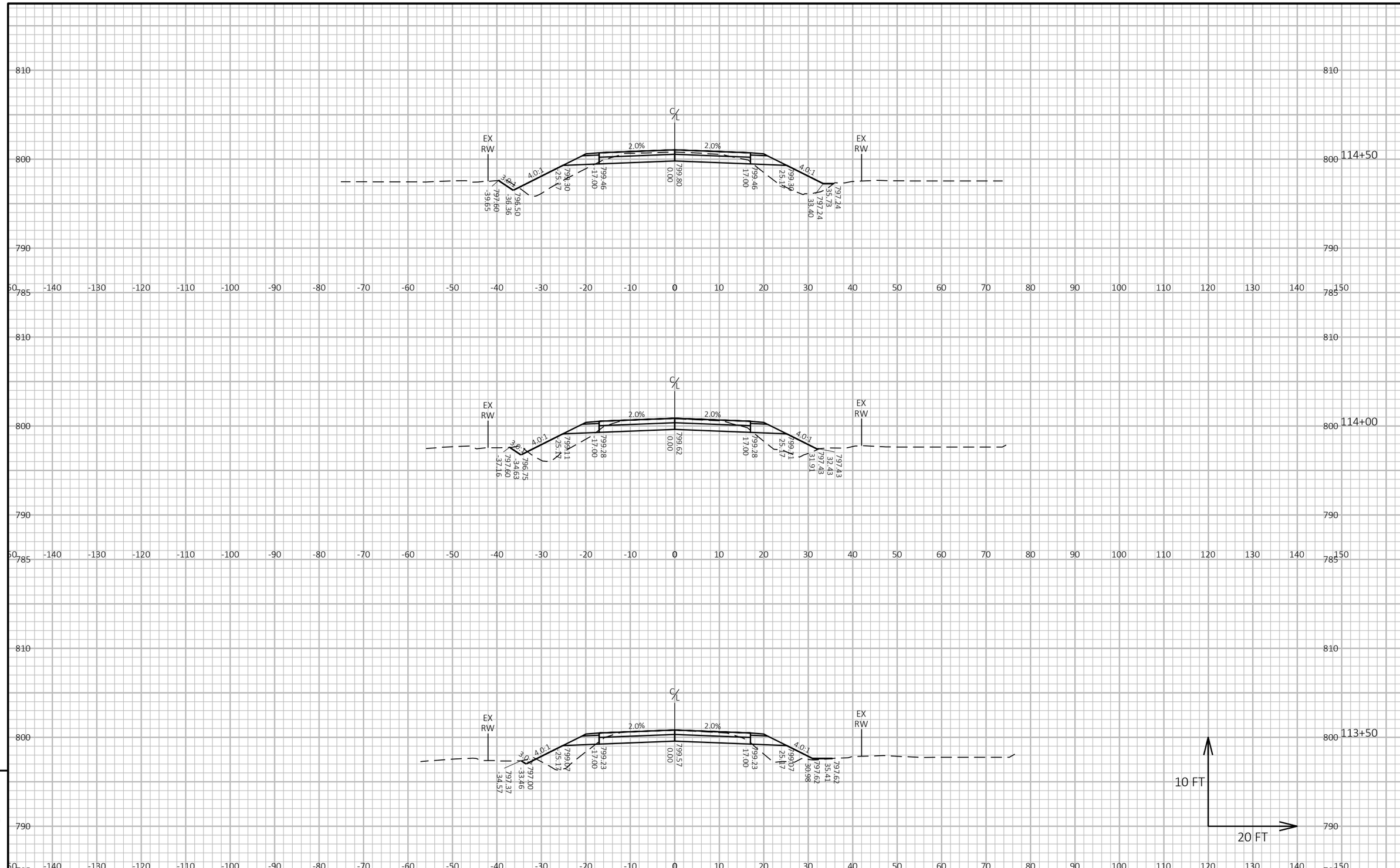

9

9

PROJECT NO: 4868-05-70	HWY: CTH A	COUNTY: WASHINGTON	CROSS SECTIONS: CTH A	SHEET 144	E

FILE NAME : X:\ML\2023\20230044\DESIGN\TRANSPORTATION\SHEETSPLAN\090201-XS.DWG
LAYOUT NAME - 090202_xs
PLOT DATE : 8/1/2024 9:38 AM
PLOT BY : DABROWSKI, MATTHEW
PLOT NAME :
PLOT SCALE : 1 IN:20 FT HORZ. / 1 IN:10 FT VERT.
WISDOT/CADDS SHEET 49

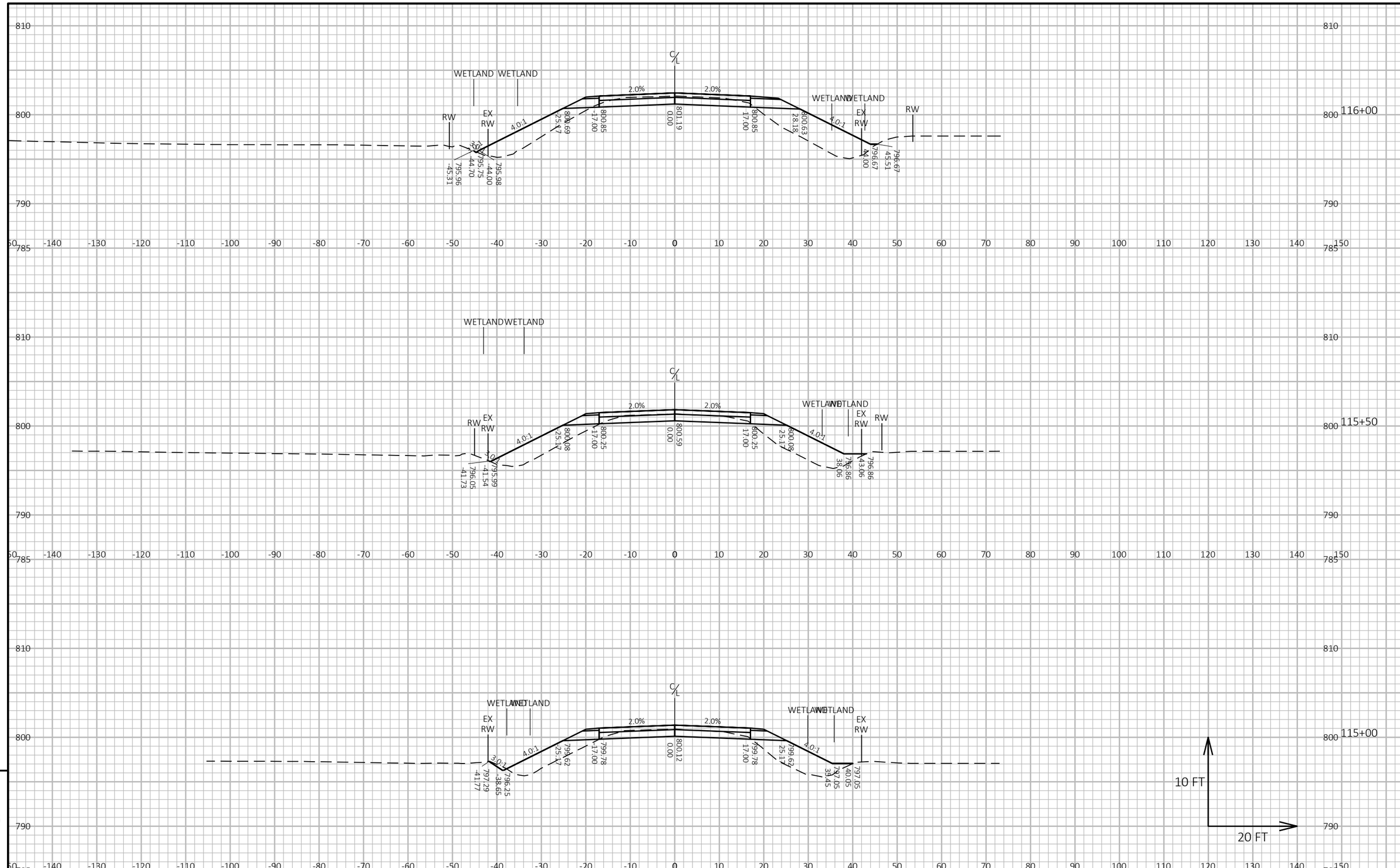

9

9

PROJECT NO: 4868-05-70	HWY: CTH A	COUNTY: WASHINGTON	CROSS SECTIONS: CTH A	SHEET 145	E

FILE NAME : X:\ML\2023\20230044\DESIGN\TRANSPORTATION\SHEETSPLAN\090201-XS.DWG
LAYOUT NAME - 090203_xs
PLOT DATE : 8/1/2024 9:38 AM
PLOT BY : DABROWSKI, MATTHEW
PLOT NAME :
PLOT SCALE : 1 IN:20 FT HORZ. / 1 IN:10 FT VERT.
WISDOT/CADDS SHEET 49

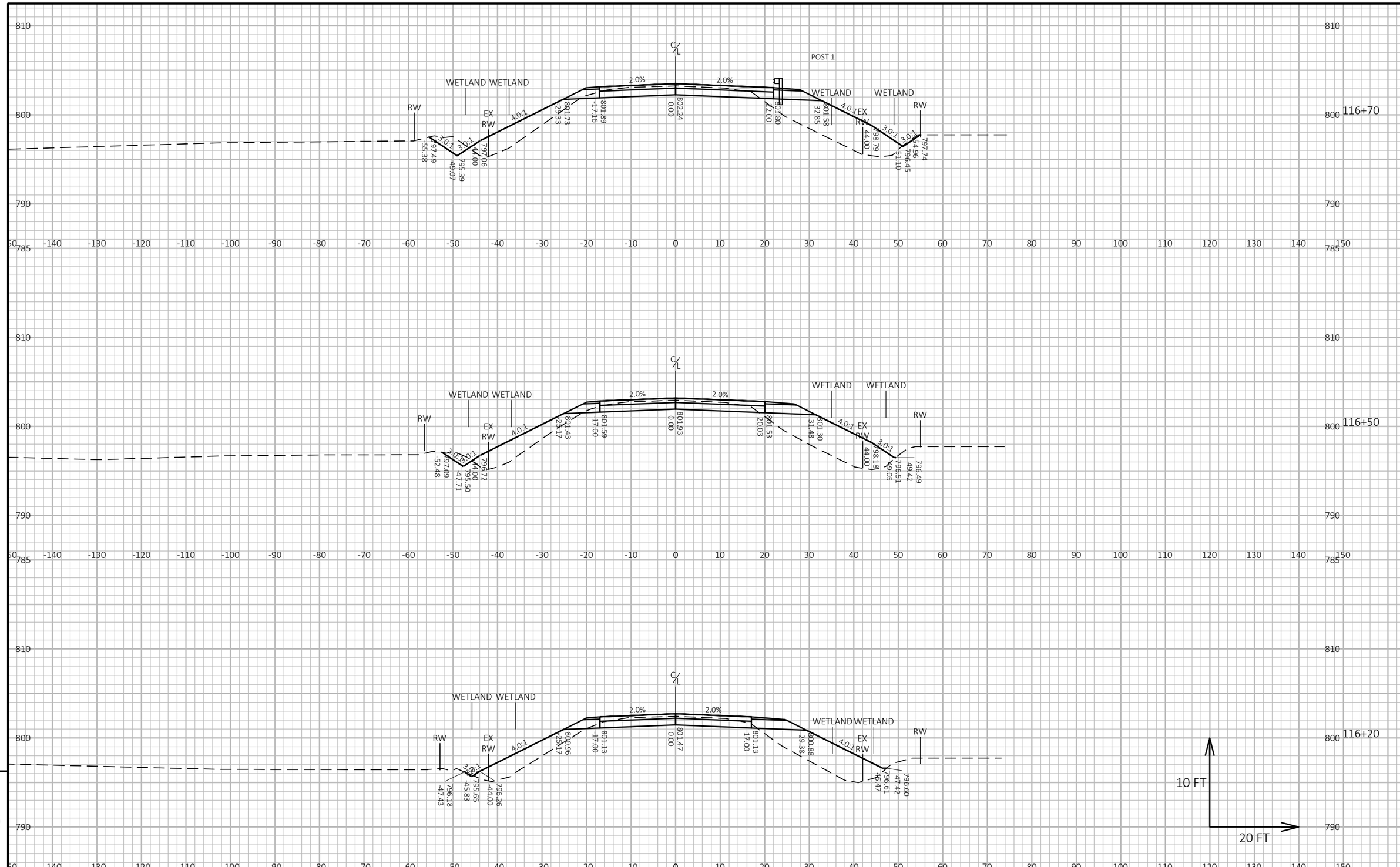

PROJECT NO: 4868-05-70	HWY: CTH A	COUNTY: WASHINGTON	CROSS SECTIONS: CTH A	SHEET 146	E

FILE NAME : X:\ML\2023\20230044\DESIGN\TRANSPORTATION\SHEETSPLAN\090201-XS.DWG
LAYOUT NAME - 090204_xs
PLOT DATE : 8/1/2024 9:38 AM
PLOT BY : DABROWSKI, MATTHEW
PLOT NAME :
PLOT SCALE : 1 IN:20 FT HORZ. / 1 IN:10 FT VERT.
WISDOT/CADDS SHEET 49

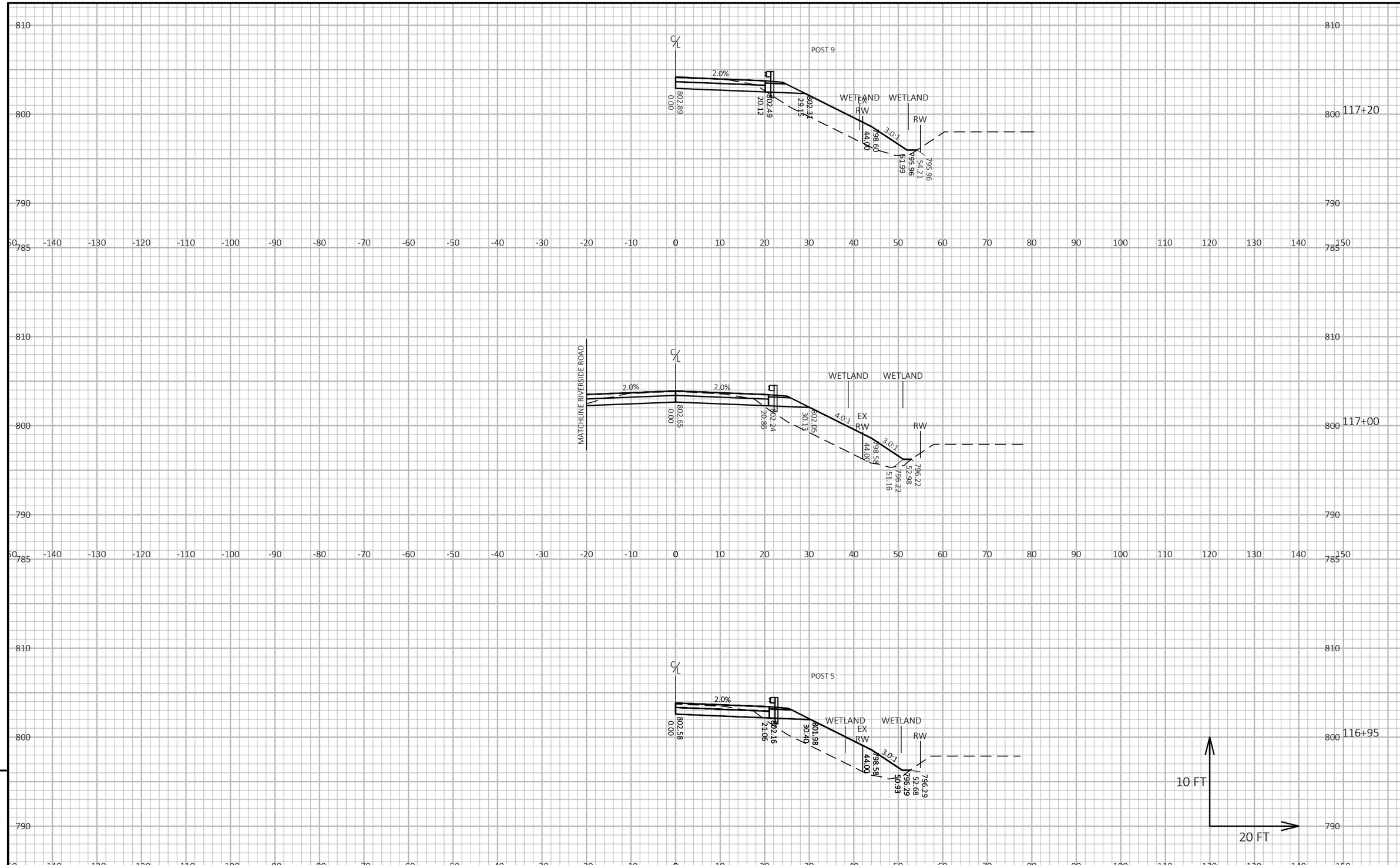

9

9

PROJECT NO: 4868-05-70	HWY: CTH A	COUNTY: WASHINGTON	CROSS SECTIONS: CTH A	SHEET 147	E

FILE NAME : X:\ML\2023\20230044\DESIGN\TRANSPORTATION\SHEETSPLAN\090201-XS.DWG
LAYOUT NAME - 090205_xs
PLOT DATE : 8/1/2024 9:39 AM
PLOT BY : DABROWSKI, MATTHEW
PLOT NAME :
PLOT SCALE : 1 IN:20 FT HORZ. / 1 IN:10 FT VERT.
WISDOT/CADDS SHEET 49

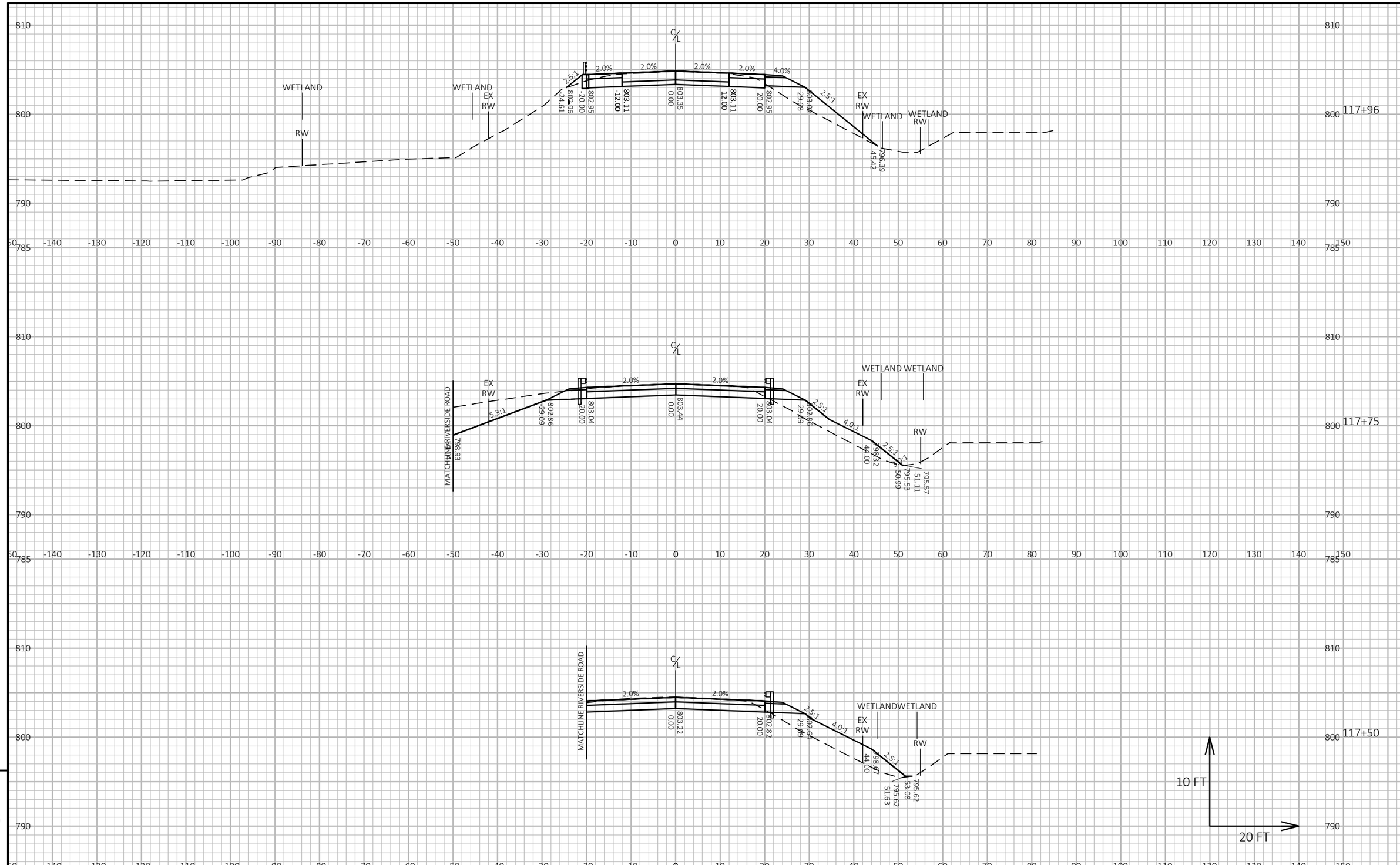

9

9

PROJECT NO: 4868-05-70	HWY: CTH A	COUNTY: WASHINGTON	CROSS SECTIONS: CTH A	SHEET 148	E

FILE NAME : X:\ML\2023\20230044\DESIGN\TRANSPORTATION\SHEETSPLAN\090201-XS.DWG
LAYOUT NAME - 090206_xs
PLOT DATE : 8/1/2024 9:39 AM
PLOT BY : DABROWSKI, MATTHEW
PLOT NAME :
PLOT SCALE : 1 IN:20 FT HORZ. / 1 IN:10 FT VERT.
WISDOT/CADDS SHEET 49

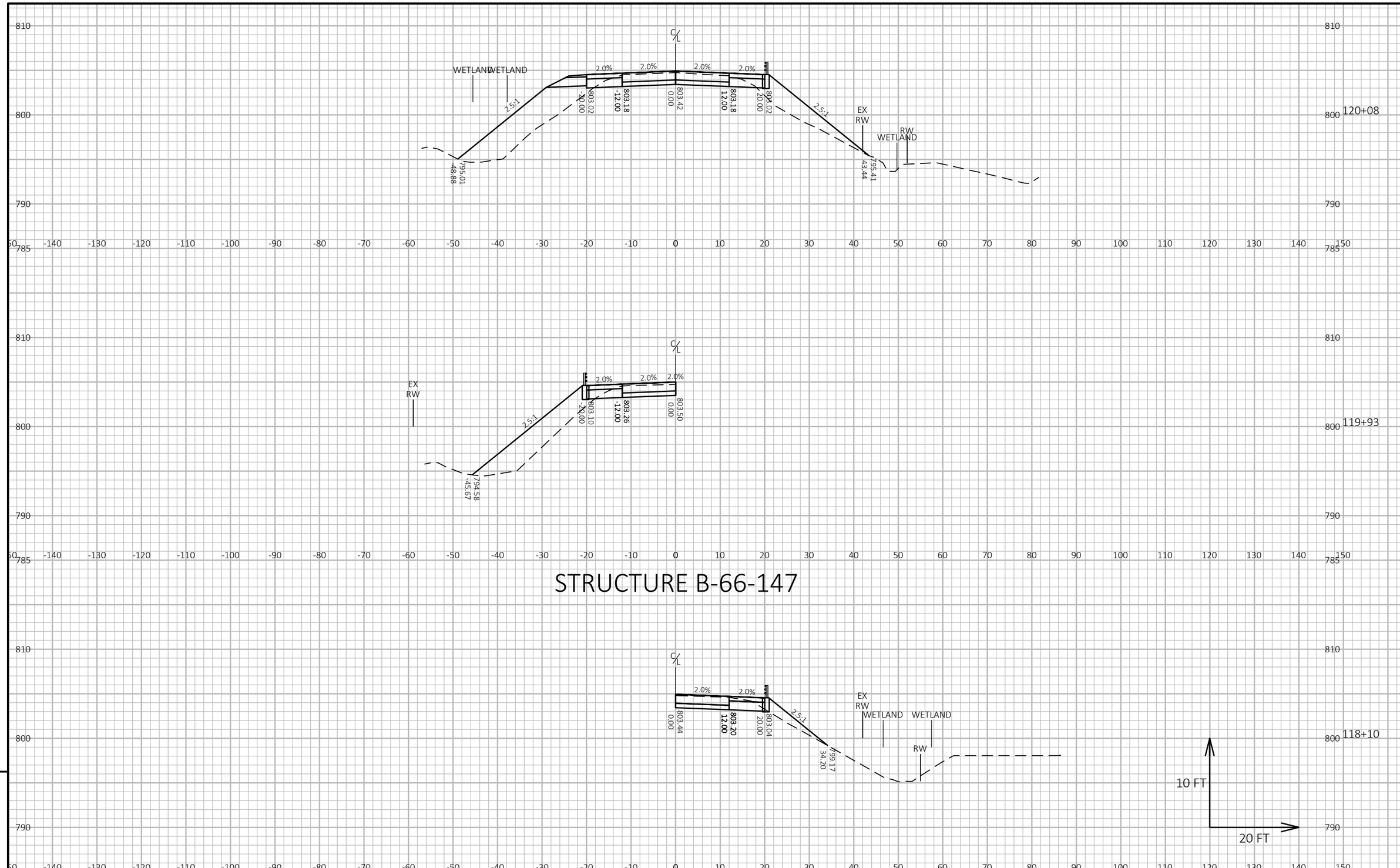

9

9

PROJECT NO: 4868-05-70	HWY: CTH A	COUNTY: WASHINGTON	CROSS SECTIONS: CTH A	SHEET 149	E

FILE NAME : X:\ML\2023\20230044\DESIGN\TRANSPORTATION\SHEETSPLAN\090201-XS.DWG
LAYOUT NAME - 090207_xs
PLOT DATE : 8/1/2024 9:39 AM
PLOT BY : DABROWSKI, MATTHEW
PLOT NAME :
PLOT SCALE : 1 IN:20 FT HORZ. / 1 IN:10 FT VERT.
WISDOT/CADDS SHEET 49

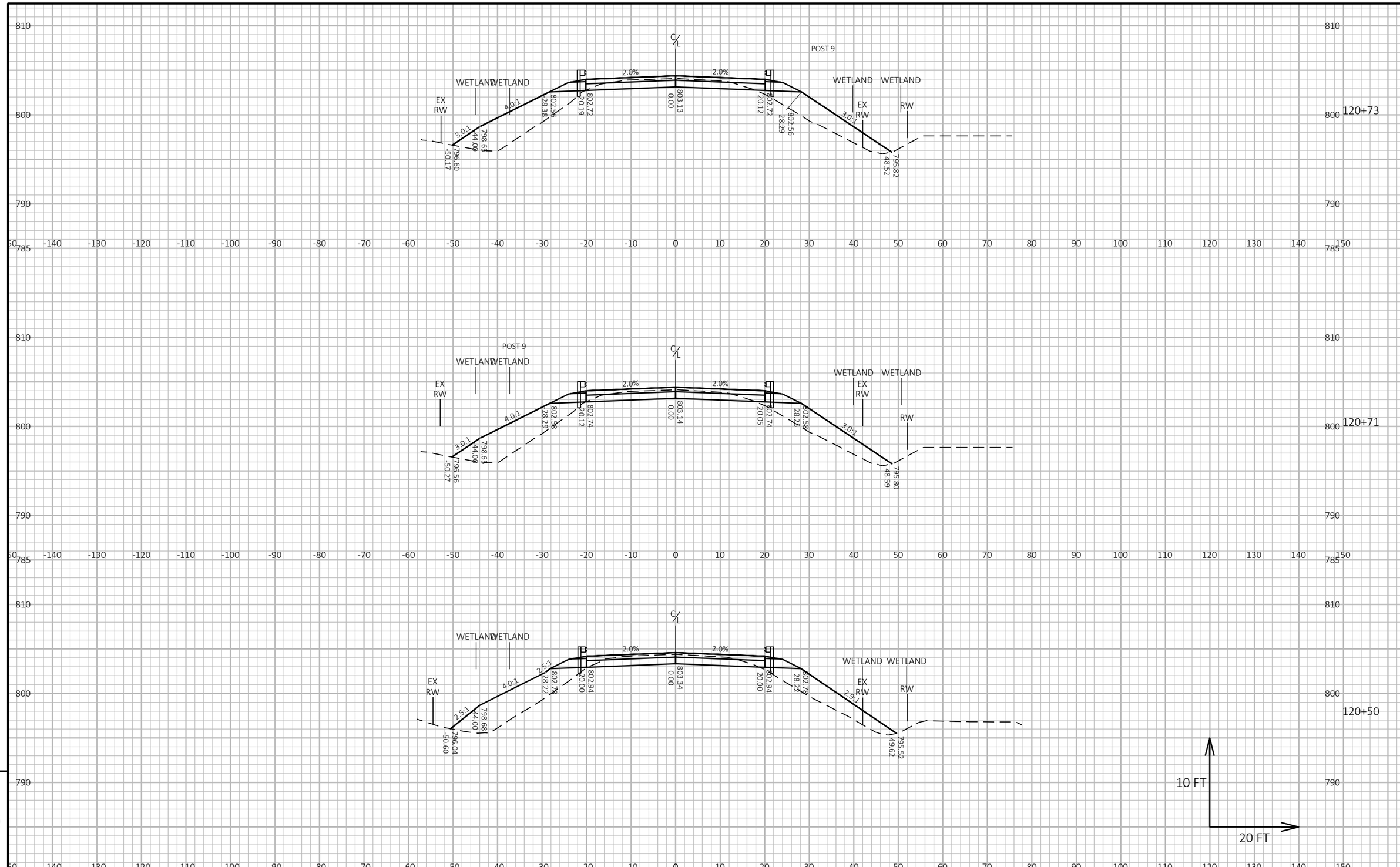

9

9

PROJECT NO: 4868-05-70	HWY: CTH A	COUNTY: WASHINGTON	CROSS SECTIONS: CTH A	SHEET 150	E

FILE NAME : X:\ML\2023\20230044\DESIGN\TRANSPORTATION\SHEETSPLAN\090201-XS.DWG
LAYOUT NAME - 090208_xs
PLOT DATE : 8/1/2024 9:39 AM
PLOT BY : DABROWSKI, MATTHEW
PLOT NAME :
PLOT SCALE : 1 IN:20 FT HORZ. / 1 IN:10 FT VERT.
WISDOT/CADDS SHEET 49

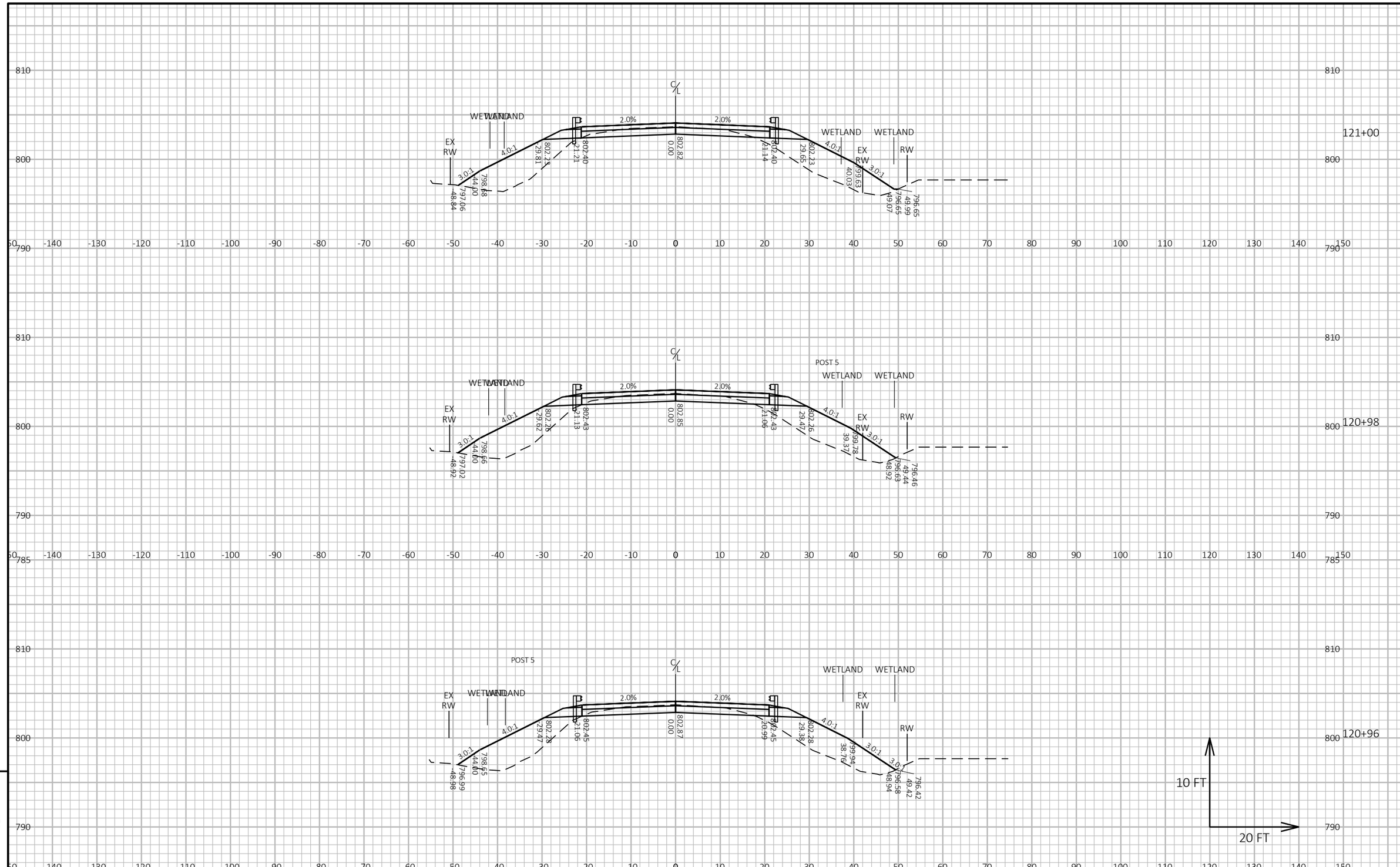

PROJECT NO: 4868-05-70	HWY: CTH A	COUNTY: WASHINGTON	CROSS SECTIONS: CTH A	SHEET 151	E

FILE NAME : X:\ML\2023\20230044\DESIGN\TRANSPORTATION\SHEETSPLAN\090201-XS.DWG
LAYOUT NAME - 090209_xs
PLOT DATE : 8/1/2024 9:39 AM
PLOT BY : DABROWSKI, MATTHEW
PLOT NAME :
PLOT SCALE : 1 IN:20 FT HORZ. / 1 IN:10 FT VERT.
WISDOT/CADDS SHEET 49

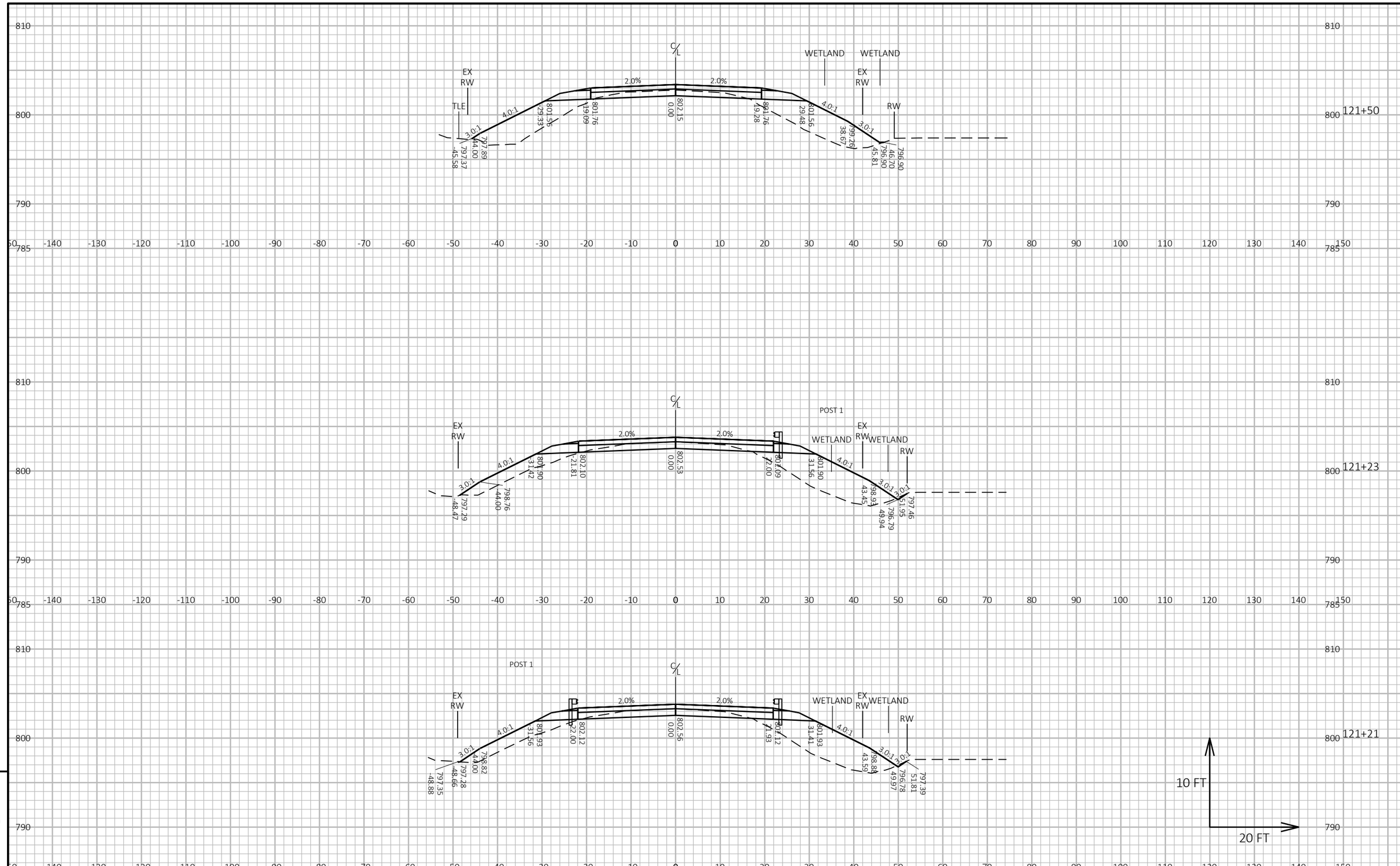

PROJECT NO: 4868-05-70	HWY: CTH A	COUNTY: WASHINGTON	CROSS SECTIONS: CTH A	SHEET 152	E

FILE NAME : X:\ML\2023\20230044\DESIGN\TRANSPORTATION\SHEETSPLAN\090201-XS.DWG
LAYOUT NAME - 090210_xs
PLOT DATE : 8/1/2024 9:39 AM
PLOT BY : DABROWSKI, MATTHEW
PLOT NAME :
PLOT SCALE : 1 IN:20 FT HORZ. / 1 IN:10 FT VERT.
WISDOT/CADDS SHEET 49

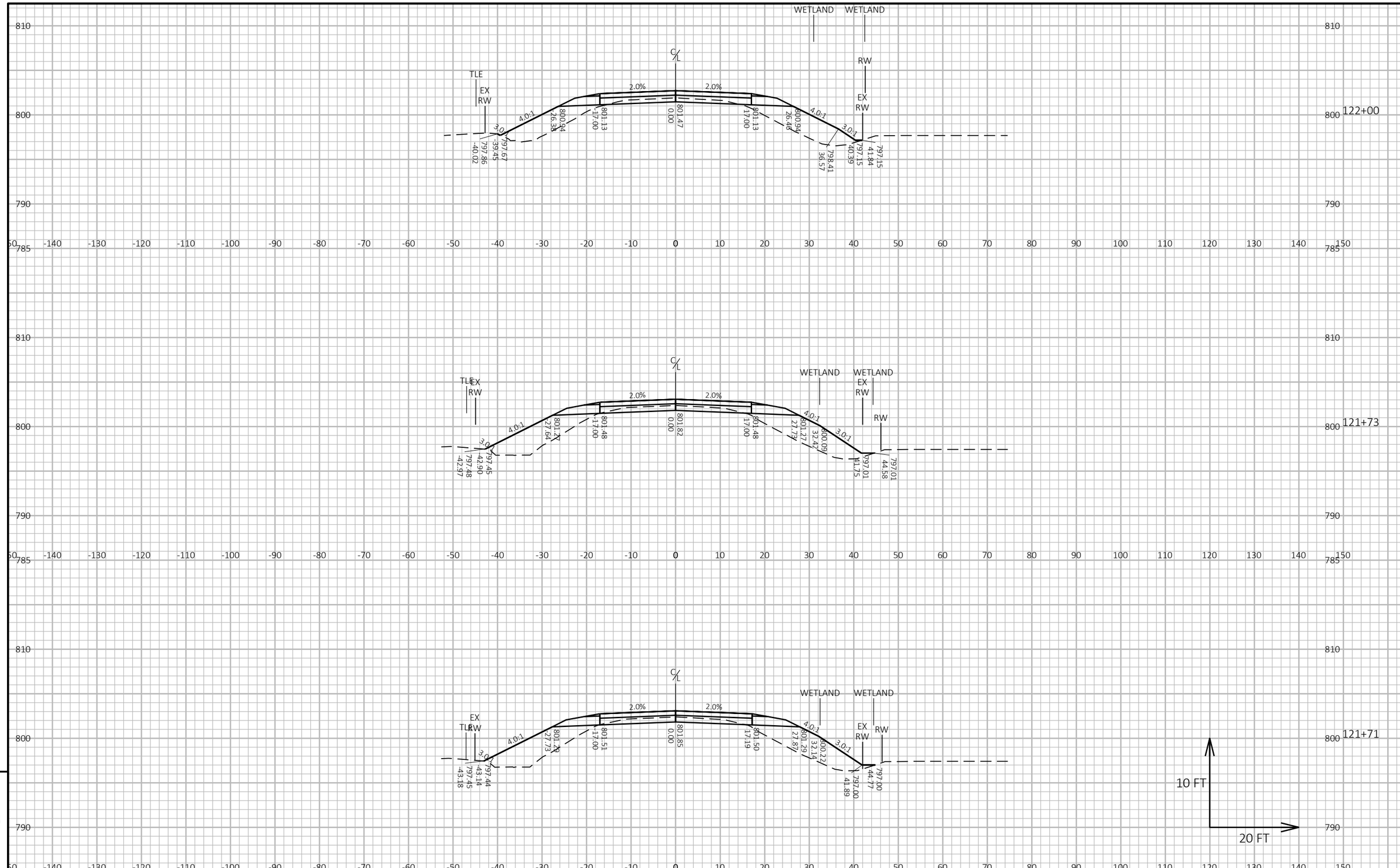

9

9

PROJECT NO: 4868-05-70	HWY: CTH A	COUNTY: WASHINGTON	CROSS SECTIONS: CTH A	SHEET 153	E

FILE NAME : X:\ML\2023\20230044\DESIGN\TRANSPORTATION\SHEETSPLAN\090201-XS.DWG
LAYOUT NAME - 090211_xs
PLOT DATE : 8/1/2024 9:39 AM
PLOT BY : DABROWSKI, MATTHEW
PLOT NAME :
PLOT SCALE : 1 IN:20 FT HORZ. / 1 IN:10 FT VERT.
WISDOT/CADDS SHEET 49

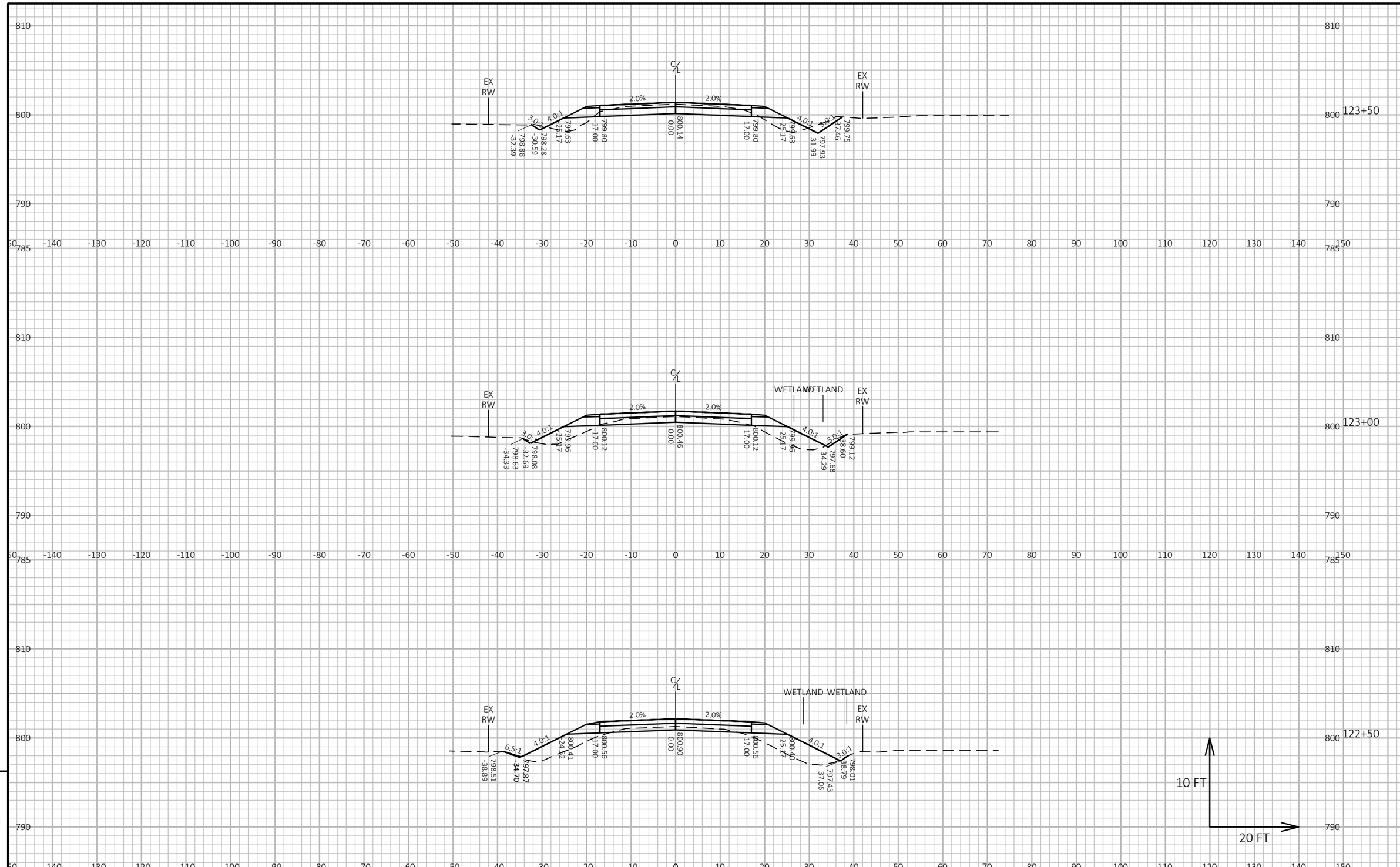

PROJECT NO: 4868-05-70	HWY: CTH A	COUNTY: WASHINGTON	CROSS SECTIONS: CTH A	SHEET 154	E

FILE NAME : X:\ML\2023\20230044\DESIGN\TRANSPORTATION\SHEETSPLAN\090201-XS.DWG
LAYOUT NAME - 090212_xs
PLOT DATE : 8/1/2024 9:39 AM
PLOT BY : DABROWSKI, MATTHEW
PLOT NAME :
PLOT SCALE : 1 IN:20 FT HORZ. / 1 IN:10 FT VERT.
WISDOT/CADDS SHEET 49

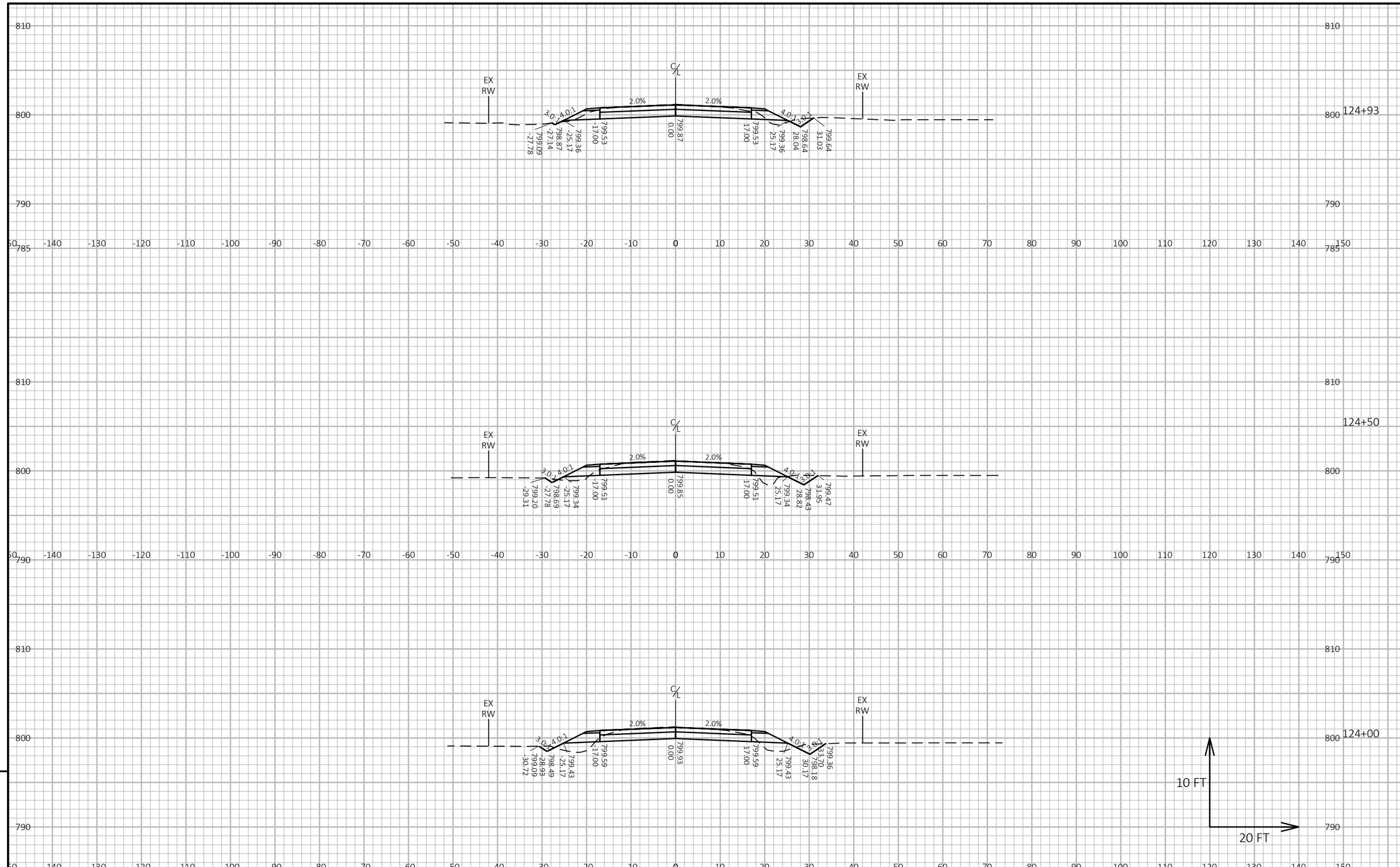

9

9

PROJECT NO: 4868-05-70	HWY: CTH A	COUNTY: WASHINGTON	CROSS SECTIONS: CTH A	SHEET 155	E

FILE NAME : X:\ML\2023\20230044\DESIGN\TRANSPORTATION\SHEETSPLAN\090201-XS.DWG
LAYOUT NAME - 090213_xs
PLOT DATE : 8/1/2024 9:39 AM
PLOT BY : DABROWSKI, MATTHEW
PLOT NAME :
PLOT SCALE : 1 IN:20 FT HORZ. / 1 IN:10 FT VERT.
WISDOT/CADDS SHEET 49

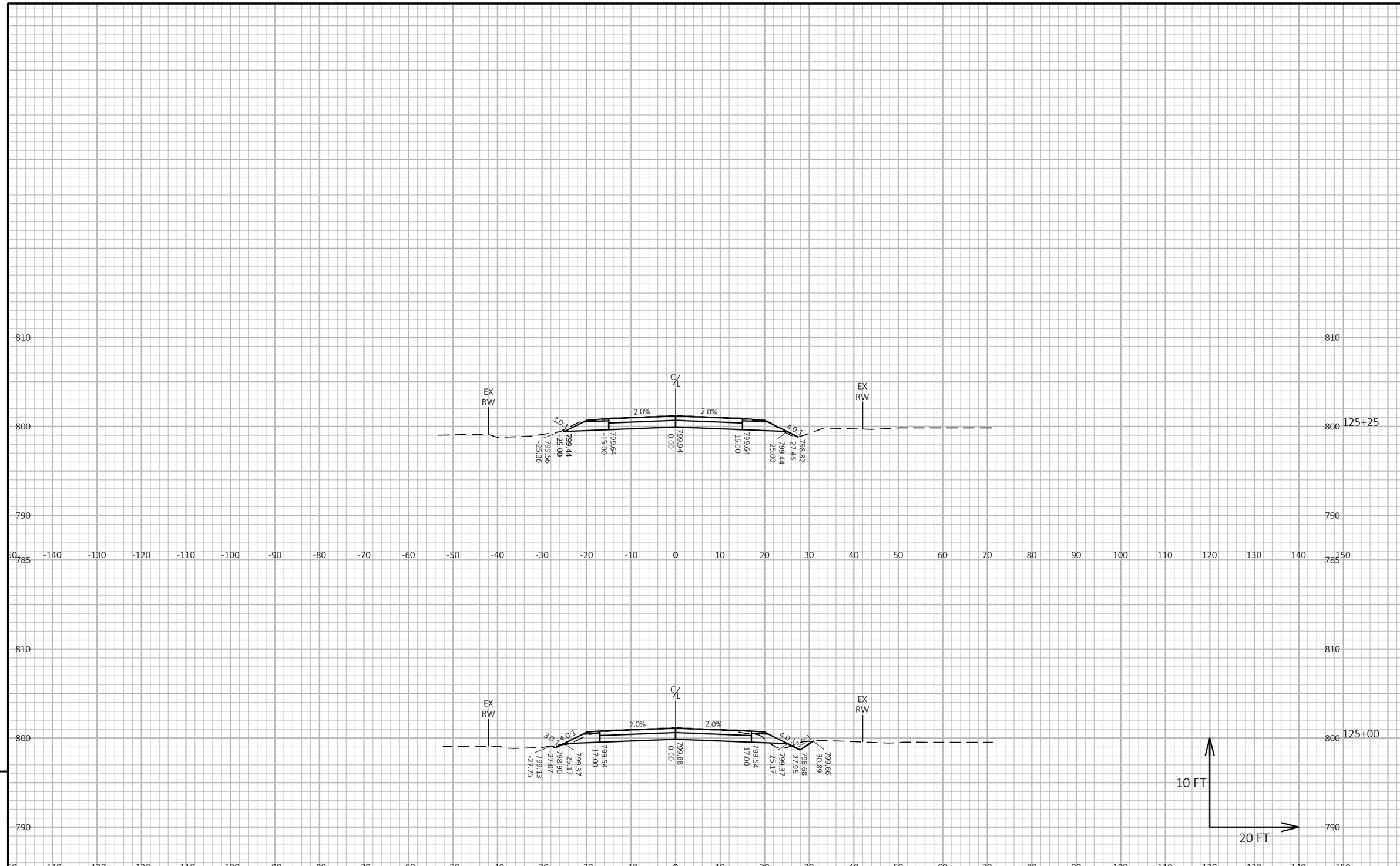

PROJECT NO: 4868-05-70	HWY: CTH A	COUNTY: WASHINGTON	CROSS SECTIONS: CTH A	SHEET 156	E

FILE NAME : X:\ML\2023\20230044\DESIGN\TRANSPORTATION\SHEETSPLAN\090201-XS.DWG
LAYOUT NAME - 090214_xs
PLOT DATE : 8/1/2024 9:39 AM
PLOT BY : DABROWSKI, MATTHEW
PLOT NAME :
PLOT SCALE : 1 IN:20 FT HORZ. / 1 IN:10 FT VERT.
WISDOT/CADDS SHEET 49

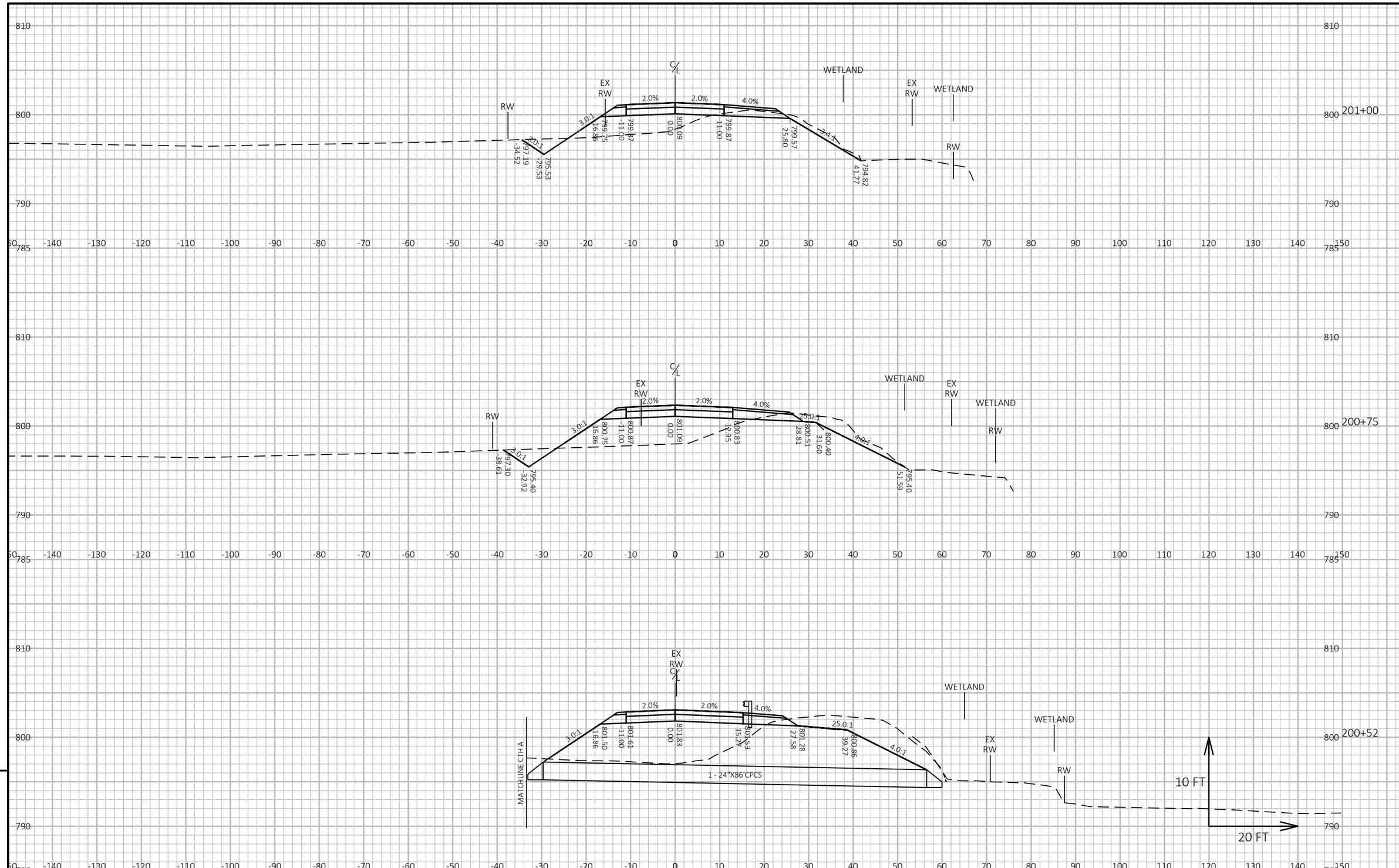

9

9

PROJECT NO: 4868-05-70	HWY: CTH A	COUNTY: WASHINGTON	CROSS SECTIONS: RIVERSIDE ROAD	SHEET 157	E

FILE NAME : X:\ML\2023\20230044\DESIGN\TRANSPORTATION\SHEETSPLAN\090202-XS.DWG
LAYOUT NAME - 090201_xs
PLOT DATE : 8/1/2024 9:41 AM
PLOT BY : DABROWSKI, MATTHEW
PLOT NAME :
PLOT SCALE : 1 IN:20 FT HORZ. / 1 IN:10 FT VERT.
WISDOT/CADDS SHEET 49

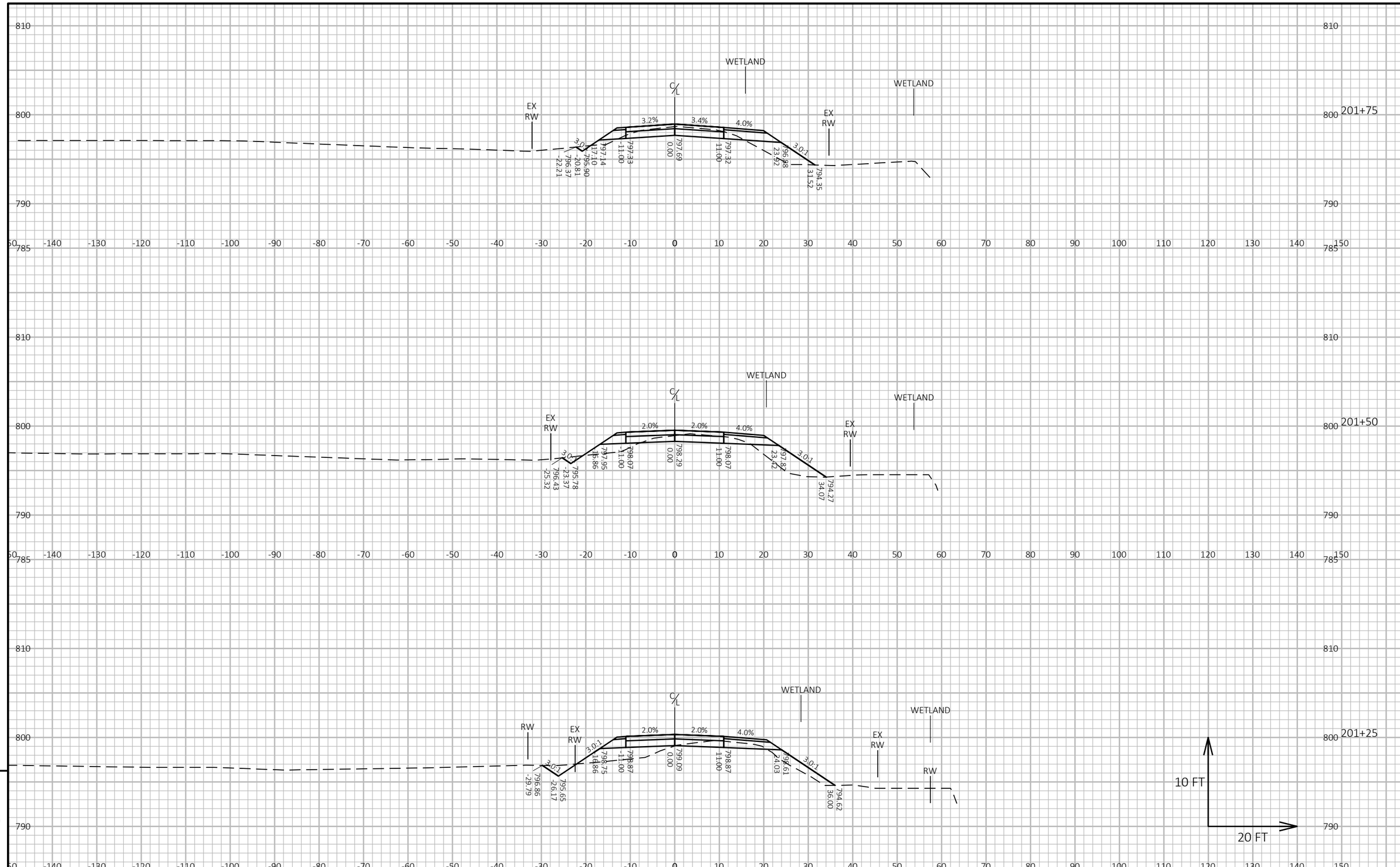

9

9

PROJECT NO: 4868-05-70	HWY: CTH A	COUNTY: WASHINGTON	CROSS SECTIONS: RIVERSIDE ROAD	SHEET 158	E

FILE NAME : X:\ML\2023\20230044\DESIGN\TRANSPORTATION\SHEETSPLAN\090202-XS.DWG
LAYOUT NAME - 090202_xs
PLOT DATE : 8/1/2024 9:39 AM
PLOT BY : DABROWSKI, MATTHEW
PLOT NAME :
PLOT SCALE : 1 IN:20 FT HORZ. / 1 IN:10 FT VERT.
WISDOT/CADDS SHEET 49

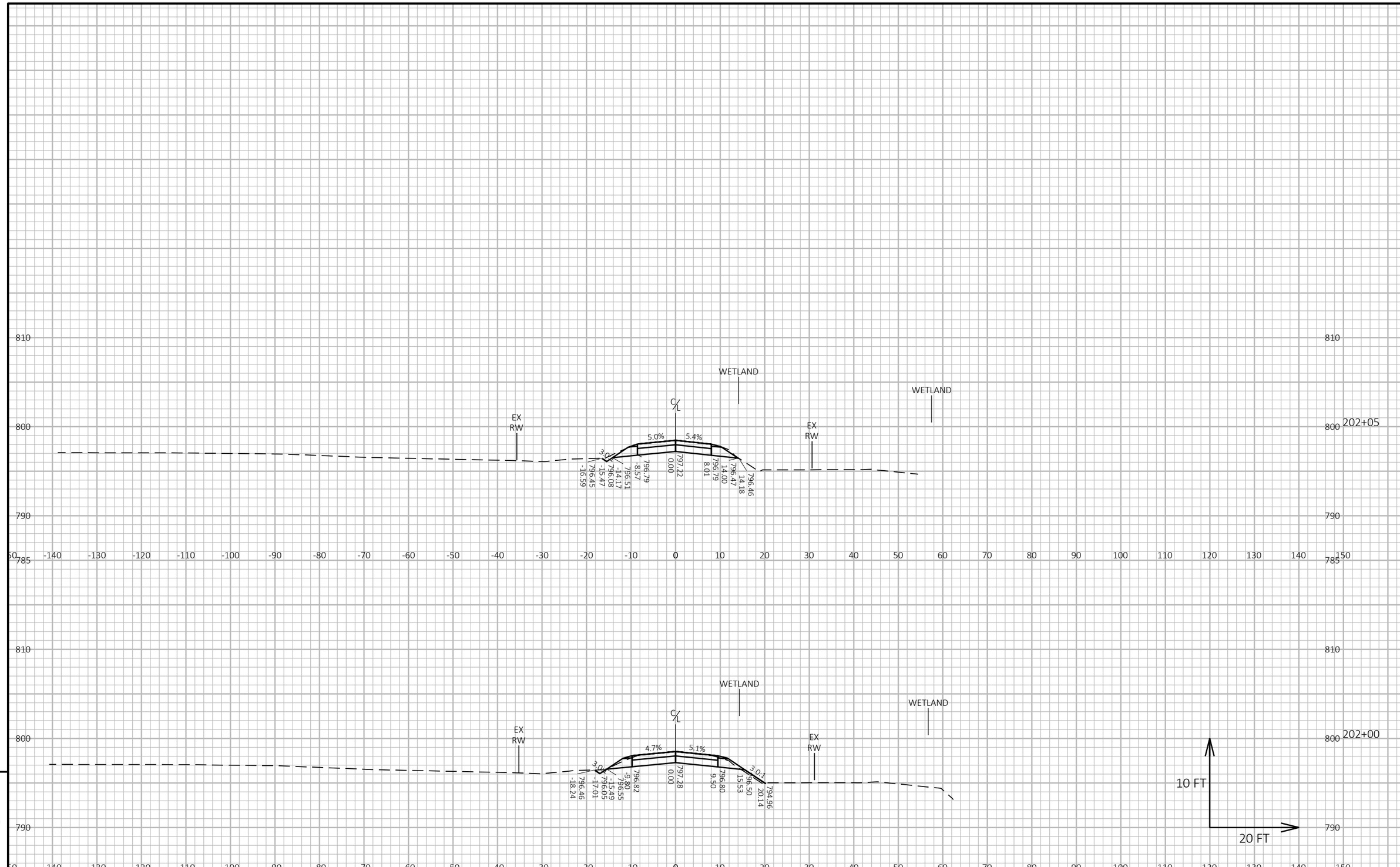

PROJECT NO: 4868-05-70	HWY: CTH A	COUNTY: WASHINGTON	CROSS SECTIONS: RIVERSIDE ROAD	SHEET 159	E

FILE NAME : X:\ML\2023\20230044\DESIGN\TRANSPORTATION\SHEETSPLAN\090202-XS.DWG
LAYOUT NAME - 090203_xs
PLOT DATE : 8/1/2024 9:39 AM
PLOT BY : DABROWSKI, MATTHEW
PLOT NAME :
PLOT SCALE : 1 IN:20 FT HORZ. / 1 IN:10 FT VERT.
WISDOT/CADDS SHEET 49

Wisconsin Department of Transportation

Dedicated people creating transportation solutions through innovation and exceptional service.

http://www.dot.wisconsin.gov