WIS

PROJECT ID: 6834-01-70

COUNTY: WAUPACA

NOVEMBER 2024

ORDER OF SHEETS

Section No.	1	Title
Section No.	2	Typical Sections and Details
Section No.	3	Estimate of Quantities
Section No.	3	Miscellaneous Quantities
~~Section No.~~	~~4~~	~~Right of Way Plat~~
Section No.	5	Plan and Profile
Section No.	6	Standard Detail Drawings
Section No.	7	Sign Plates
~~Section No.~~	~~8~~	~~Structure Plans~~
Section No.	9	Computer Earthwork Data
Section No.	9	Cross Sections

TOTAL SHEETS = 170

36

N

DESIGN DESIGNATION

A.A.D.T.	2024	=	1000
A.A.D.T.	2044	=	1100
D.H.V.		=	140
D.D.		=	50/50
T.		=	7.7%
DESIGN SPEED		=	30/40 MPH
ESALS		=	140,000

CONVENTIONAL SYMBOLS

PLAN

- CORPORATE LIMITS
- PROPERTY LINE
- LOT LINE
- LIMITED HIGHWAY EASEMENT
- EXISTING RIGHT OF WAY
- PROPOSED OR NEW R/W LINE
- SLOPE INTERCEPT
- REFERENCE LINE (300'EB')
- EXISTING CULVERT
- PROPOSED CULVERT (Box or Pipe)
- COMBUSTIBLE FLUIDS (CAUTION)
- MARSH AREA
- WOODED OR SHRUB AREA

PROFILE

- GRADE LINE
- ORIGINAL GROUND
- MARSH OR ROCK PROFILE (To be noted as such) (ROCK)
- SPECIAL DITCH (LABEL)
- GRADE ELEVATION (95.36)
- CULVERT (Profile View)

UTILITIES

- ELECTRIC (E)
- FIBER OPTIC (FO)
- GAS (G)
- SANITARY SEWER (SAN)
- STORM SEWER (SS)
- TELEPHONE (T)
- WATER (W)
- UTILITY PEDESTAL
- POWER POLE
- TELEPHONE POLE

STATE OF WISCONSIN
DEPARTMENT OF TRANSPORTATION

PLAN OF PROPOSED IMPROVEMENT

WINNEBAGO COUNTY LINE - STH 110

CTH AH TO LIND STREET

CTH H
WAUPACA COUNTY

STATE PROJECT NUMBER
6834-01-70

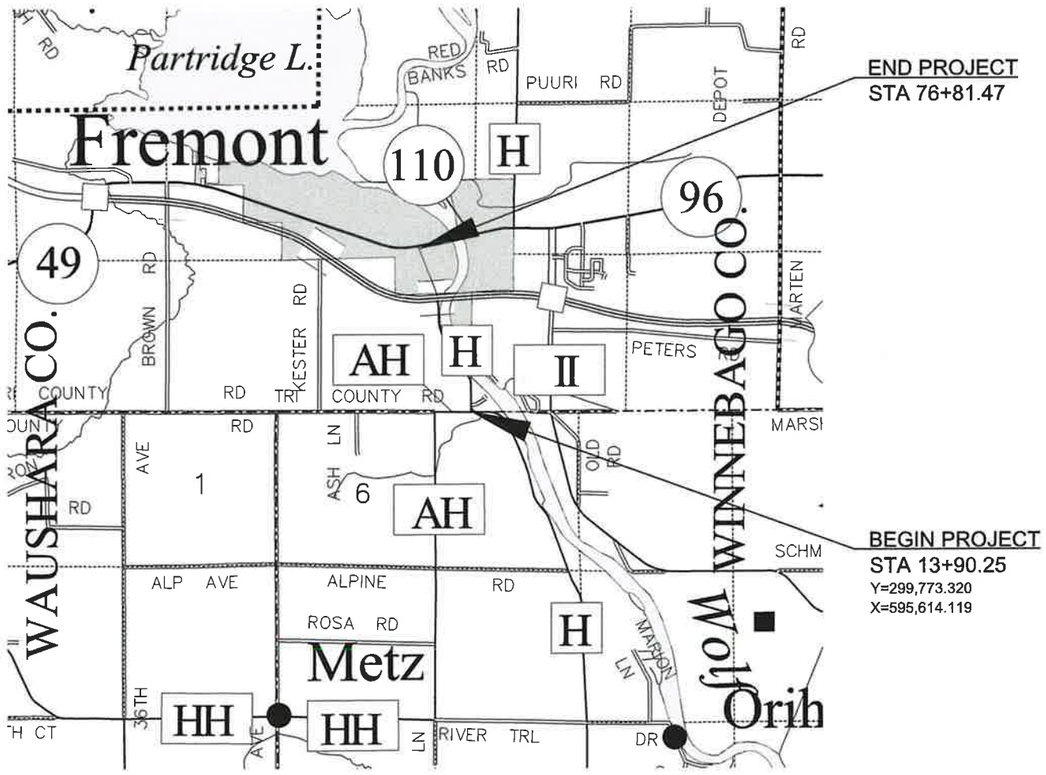

END PROJECT
STA 76+81.47

BEGIN PROJECT
STA 13+90.25
Y=299,773.320
X=595,614.119

LAYOUT

SCALE 0 1 MI

TOTAL NET LENGTH OF CENTERLINE = 1.19 MI

HORIZONTAL POSITIONS SHOWN ON THIS PLAN ARE WISCONSIN COORDINATE REFERENCE SYSTEM (WISCRS), WAUPACA COUNTY, NAD83 (2011), IN U.S. SURVEY FEET. POSITIONS SHOWN ARE GRID COORDINATES, GRID BEARINGS, AND GRID DISTANCES. GRID DISTANCES ARE THE SAME AS GROUND DISTANCES.

ELEVATIONS ARE REFERENCED TO NAVD 88 (2012). GPS DERIVED ELEVATIONS ARE BASED ON GEOID 18

STATE PROJECT	FEDERAL PROJECT	
	PROJECT	CONTRACT
6834-01-70	WISC 2025056	1

ACCEPTED FOR

WAUPACA COUNTY

DATE: 6/25/24 (Signature and Title of Official)

ORIGINAL PLANS PREPARED BY

Robert E. Lee & Associates, Inc.
1250 Centennial Centre Blvd | Hobart, WI | 920-662-9641 | releeinc.com

WISCONSIN
ASHLEY NELSON
E-43981
GREEN BAY, WI
PROFESSIONAL ENGINEER

DATE: 6/25/24 (Professional Engineer Signature)

STATE OF WISCONSIN
DEPARTMENT OF TRANSPORTATION

PREPARED BY

Surveyor	ROBERT E. LEE & ASSOCIATES, INC.
Designer	ROBERT E. LEE & ASSOCIATES, INC.
Project Manager	JASON SCHAEFFER
Regional Examiner	REGIONAL EXAMINER
Regional Supervisor	DANIEL ERVA, PE

APPROVED FOR THE DEPARTMENT

DATE: 9/10/2024 (Signature)

E

UTILITIES CONTACTS

VILLAGE OF FREMONT
SANITARY SEWER
MEGAN WUNDERLICH
317 WOLF RIVER DRIVE
FREMONT, WI 54940
PHONE: (920) 446-2411
EMAIL: clerk@villageoffremontwi.gov

WOLF RIVER SANITARY DISTRICT
SANITARY SEWER
CHRIS JONES
PO BOX 346
FREMONT, WI 54940
PHONE: (702) 715-4764
EMAIL: WRSD@townfremontwi.gov

WE ENERGIES-GAS
GAS
LARRY KOCH
800 S LYNNDALE DR
APPLETON, WI 54914
PHONE: (715) 421.7249
EMAIL: larry.koch@we-energies.com

BRIGHTSPEED
COMMUNICATION LINE
KEVIN ZICKERT
224 INDUSTRIAL DR
NORTH PRAIRIE, WI 53153
PHONE: (883) 363-2360
EMAIL: relocations@brightspeed.com

WE ENERGIES-ELEC
ELECTRIC
ZACH DUGA
800 S LYNNDALE DR
APPLETON, WI 54914
PHONE: (262) 380-3458
EMAIL: zachary.duga@we-energies.com

ORDER OF SECTION 2 DETAIL SHEETS

GENERAL NOTES
PROJECT OVERVIEW
TYPICAL SECTIONS
CONSTRUCTION DETAILS
EROSION CONTROL
PERMANENT SIGNING & PAVEMENT MARKING
TRAFFIC CONTROL

CTH H 4 1/2-INCHES		
LAYER	THICKNESS	TYPE
UPPER	2-INCHES	4 MT 58-28 S
LOWER	2 1/2-INCHES	3 MT 58-28 S

WISCONSIN DNR LIAISON

JEREMIAH SCHIEFELBEIN
NORTH CENTRAL/ EAST REGION
2984 SHAWANO AVE
GREEN BAY, WI 54313
PHONE: 920-360-3784
EMAIL: Jeremiah.Schiefelbien@wisconsin.gov

DESIGN PROJECT MANAGER

ASHLEY NELSON, PE
ROBERT E LEE & ASSOCIATES, INC.
1250 CENTENNIAL CENTRE BOULEVARD
HOBART, WI 54155
PHONE: 920-544-4526
EMAIL: anelson@releeinc.com

DOT PROJECT MANAGER

JASON SCHAEFFER
NORTH CENTRAL REGION
510 HANSON LAKE RD
RHINELANDER, WI 54501
PHONE: 715-421-7309
EMAIL: Jason.Schaeffer@dot.wi.gov

COUNTY HIGHWAY COMMISSIONER

CASEY BEYERSDORF
WAUPACA
2670 COUNTY ROAD A
WAUPACA, WI 54981
PHONE: 715-258-7152
EMAIL: casey.beyersdorf@co.waupaca.wi.us

DOT REGIONAL ENVIORNMENTAL COORDINATOR

BREE RICHARDSON
NORTH CENTRAL REGION
1681 2ND AVE S
WISCONSIN RAPIDS, WI 54495
PHONE: 715-421-8089
EMAIL: bree.richardson@dot.wi.gov

GENERAL NOTES

THE LOCATIONS OF EXISTING AND PROPOSED UTILITY INSTALLATIONS AS SHOWN ON THE PLAN ARE APPROXIMATE. THERE MAY BE OTHER UTILITY INSTALLATIONS WITHIN THE PROJECT THAT ARE NOT SHOWN.

NOTIFY DIGGERS HOTLINE AND AFFECTED UTILITIES PRIOR TO THE START OF WORK. ANY LOCAL MUNICIPAL UTILITY WHICH IS NOT A MEMBER OF THE DIGGERS HOTLINE MUST BE CONTACTED SEPARATELY.

NO TREES OR SHRUBS ARE TO BE REMOVED WITHOUT THE APPROVAL OF THE ENGINEER.

THE CONTRACTOR SHALL BE RESPONSIBLE FOR RESHAPING AND SEEDING ANY PREVIOUSLY GRASSED AREAS WHICH ARE DISTURBED BY ANY OPERATION OUTSIDE OF THE NORMAL CONSTRUCTION LIMITS AT THE CONTRACTOR EXPENSE.

A SAWED JOINT IS REQUIRED WHERE NEW HMA PAVEMENT MEETS EXISTING HMA PAVEMENT.

FERTILIZER SHALL NOT BE USED WITHIN 20 FEET OF NAVIGABLE WATERWAYS OR WETLANDS.

PLACE ALL TOPSOIL IN ALL GRASSED AREAS DESIGNATED BY THE ENGINEER IMMEDIATELY AFTER GRADING HAS BEEN COMPLETED. SEED, EMAT AND FERTILIZE ALL AREAS 7 DAYS AFTER PLACEMENT OF TOPSOIL.

THE EROSION CONTROL FEATURES AS SHOWN ON THE PLAN ARE AT SUGGESTED LOCATIONS. EXACT LOCATION WILL BE DETERMINED BY THE ENGINEER IN THE FIELD.

2

RUNOFF COEFFICIENT TABLE

	HYDROLOGIC SOIL GROUP											
	A			B			C			D		
	SLOPE RANGE (PERCENT)			SLOPE RANGE (PERCENT)			SLOPE RANGE (PERCENT)			SLOPE RANGE (PERCENT)		
LAND USE:	0-2	2-6	6 & OVER	0-2	2-6	6 & OVER	0-2	2-6	6 & OVER	0-2	2-6	6 & OVER
ROW CROPS:	.08 .22	.16 .30	.22 .38	.12 .26	.20 .34	.27 .44	.15 .30	.24 .37	.33 .50	.19 .34	.28 .41	.38 .56
MEDIAN STRIPTURF:	.19 .24	.20 .26	.24 .30	.19 .25	.22 .28	.26 .33	.20 .26	.23 .30	.30 .37	.20 .27	.25 .32	.30 .40
SIDE SLOPETURF:			.25 .32			.27 .34			.28 .36			.30 .38
PAVEMENT:												
ASPHALT:	.70 - .95											
CONCRETE:	.80 - .95											
BRICK:	.70 - .80											
DRIVES, WALKS:	.75 - .85											
ROOFS:	.75 - .95											
GRAVEL ROADS, SHOULDERS:	.40 - .60											

TOTAL PROJECT AREA = 9.37 ACRES
TOTAL AREA EXPECTED TO BE DISTURBED BY CONSTRUCTION ACTIVITIES = 7.85 ACRES

DIGGERS HOTLINE
Dial 811 or (800)242-8511
www.DiggersHotline.com

2

2

N

WINNEBAGO COUNTY
WAUPACA COUNTY

CTH AH

TOWN OF WOLF RIVER

TOWN OF FREMONT

TRI-COUNTY RD

BEGIN PROJECT
STA 13+90.25
Y=299,773.320
X=595,614.119

15+00
20+00
25+00
30+00
35+00
40+00
45+00
50+00
55+00
60+00
65+00
70+00
75+00

C/L CTH H

END PROJECT
STA 76+81.47

WELCH RD

WOLF RIVER

USH 10

LIND ST

STH 110

FISHERMAN'S
PARK

S RIVER RD

S RIVER RD

WOLF RIVER
CROSSING PARK

VILLAGE OF FREMONT

STH 110

ARROWHEAD RD

USH 10

S RIVER RD

RIVERVIEW DR

MARKET ST

RIVERVIEW CT

PROJECT NO: 6834-01-70	HWY: CTH H	COUNTY: WAUPACA	PROJECT OVERVIEW	SHEET 3	E

FILE NAME : R:\2200\2288\2288015\68340100\SHEETS\020201-PO.DWG
LAYOUT NAME - 01

PLOT DATE : 9/10/2024 12:23 PM PLOT BY : ERIC HANDLER PLOT NAME : PLOT SCALE : 1 IN:500 FT

WISDOT/CADDS SHEET 42

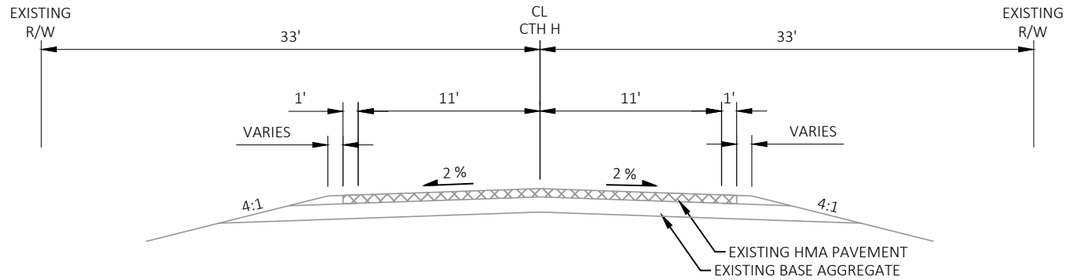

EXISTING TYPICAL SECTION CTH H

STA 13+90 - 76+81

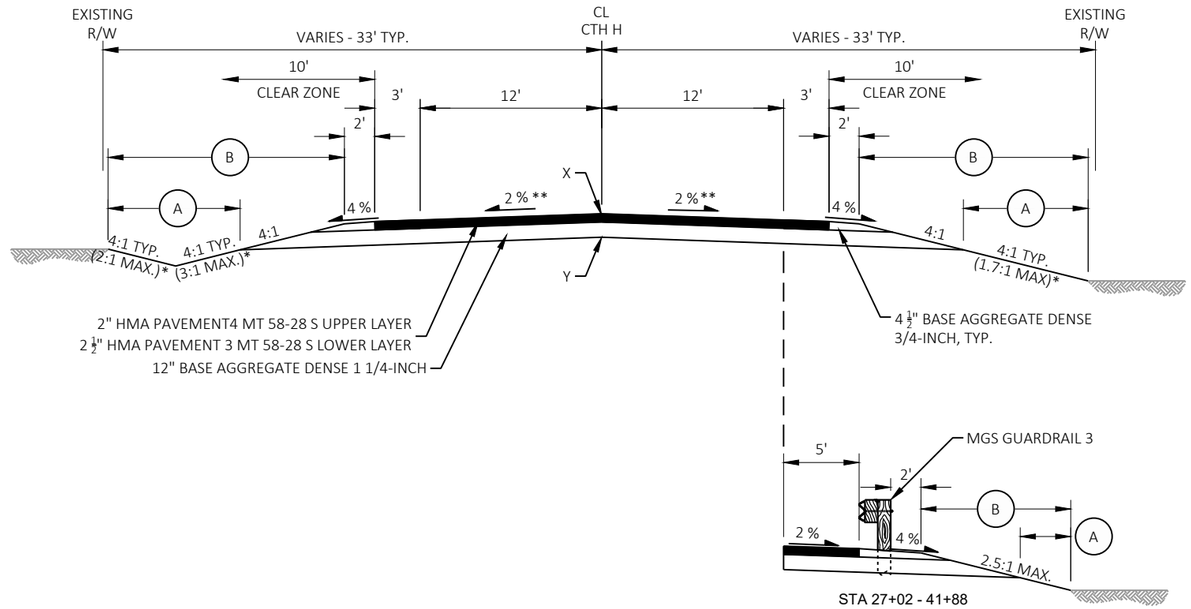

STA 27+02 - 41+88

PROPOSED TYPICAL SECTION CTH H

STA 13+90 - 76+81

(A) TOPSOIL AND EROSION MAT

(B) SEED AND FERTILIZER

X - POINT REFERRED TO ON PROFILE

Y - POINT REFERRED TO ON CROSS SECTION

* - MAINTAIN 10' CLEAR ZONE PRIOR TO SLOPES STEEPER THAN 4:1

** - SEE SUPERELEVATION TABLE ON NEXT SHEET

PROJECT NO: 6834-01-70	HWY: CTH H	COUNTY: WAUPACA	TYPICAL SECTIONS	SHEET 4	E

SUPERELEVATION REPORT FOR CTH H					
TRANSITION EVENT POINTS		RATE (FT/FT)			
		LEFT OF CROWNLINE		RIGHT OF CROWNLINE	
LOCATION	STATION	LEFT SHOULDER	LEFT LANE	RIGHT LANE	RIGHT SHOULDER
CURVE 1					
MANUAL	13+89.83	0.002	0.002	-0.06	-0.06
BEGIN FULL SUPER	14+29.37	0.04	0.04	-0.04	-0.04
END FULL SUPER	17+02.88	0.04	0.04	-0.04	-0.04
REVERSE CROWN	17+44.38	0.02	0.02	-0.02	-0.04
LEVEL CROWN	17+85.88	0	0	-0.02	-0.04
BEGIN NORMAL CROWN	18+27.38	-0.02	-0.02	-0.02	-0.04
BEGIN NORMAL SHOULDER	18+68.88	-0.04	-0.02	-0.02	-0.04
CURVE 2					
END NORMAL SHOULDER	23+86.44	-0.04	-0.02	-0.02	-0.04
END NORMAL CROWN	24+27.94	-0.04	-0.02	-0.02	-0.02
LEVEL CROWN	24+69.44	-0.04	-0.02	0	0
REVERSE CROWN	25+10.94	-0.04	-0.02	0.02	0.02
BEGIN FULL SUPER	25+52.44	-0.04	-0.04	0.04	0.04
END FULL SUPER	28+09.46	-0.04	-0.04	0.04	0.04
REVERSE CROWN	28+50.96	-0.04	-0.02	0.02	0.02
LEVEL CROWN	28+92.46	-0.04	-0.02	0	0
BEGIN NORMAL CROWN	29+33.96	-0.04	-0.02	-0.02	-0.02
BEGIN NORMAL SHOULDER	29+75.46	-0.025	-0.02	-0.02	-0.035
CURVE 3					
END NORMAL SHOULDER	29+49.44	-0.035	-0.02	-0.02	-0.025
END NORMAL CROWN	29+90.98	-0.02	-0.02	-0.02	-0.04
LEVEL CROWN	30+32.52	0	0	-0.02	-0.04
REVERSE CROWN	30+74.06	0.02	0.02	-0.02	-0.04
BEGIN FULL SUPER	30+86.52	0.026	0.026	-0.026	-0.04
END FULL SUPER	35+06.90	0.026	0.026	-0.026	-0.04
REVERSE CROWN	35+19.37	0.026	0.026	-0.026	-0.04
LEVEL CROWN	35+60.90	0.027	0.027	-0.027	-0.04
BEGIN NORMAL CROWN	36+02.44	0.028	0.028	-0.028	-0.04
BEGIN NORMAL SHOULDER	36+43.98	0.029	0.029	-0.029	-0.04
CURVE 4					
END NORMAL SHOULDER	35+23.12	0.026	0.026	-0.026	-0.04
END NORMAL CROWN	35+64.45	0.027	0.027	-0.027	-0.04
LEVEL CROWN	36+05.79	0.028	0.028	-0.028	-0.04
REVERSE CROWN	36+47.12	0.029	0.029	-0.029	-0.04
BEGIN FULL SUPER	36+67.79	0.03	0.03	-0.03	-0.04
END FULL SUPER	39+64.71	0.03	0.03	-0.03	-0.04
REVERSE CROWN	39+85.37	0.02	0.02	-0.02	-0.04
LEVEL CROWN	40+26.71	0	0	-0.02	-0.04
BEGIN NORMAL CROWN	40+68.04	-0.02	-0.02	-0.02	-0.04
BEGIN NORMAL SHOULDER	41+09.37	-0.04	-0.02	-0.02	-0.04
CURVE 6					
END NORMAL SHOULDER	44+46.84	-0.04	-0.02	-0.02	-0.04
END NORMAL CROWN	44+82.84	-0.02	-0.02	-0.02	-0.04
LEVEL CROWN	45+18.84	0	0	-0.02	-0.04
BEGIN FULL SUPER	45+54.84	0.02	0.02	-0.02	-0.04
REVERSE CROWN	45+54.84	0.02	0.02	-0.02	-0.04
END FULL SUPER	51+93.81	0.02	0.02	-0.02	-0.04
REVERSE CROWN	51+93.81	0.02	0.02	-0.02	-0.04
LEVEL CROWN	52+29.81	0	0	-0.02	-0.04
BEGIN NORMAL CROWN	52+65.81	-0.02	-0.02	-0.02	-0.04
BEGIN NORMAL SHOULDER	53+01.81	-0.04	-0.02	-0.02	-0.04
CURVE 8					
END NORMAL SHOULDER	57+95.59	-0.04	-0.02	-0.02	-0.04
END NORMAL CROWN	58+32.02	-0.04	-0.02	-0.02	-0.02
LEVEL CROWN	58+68.44	-0.04	-0.02	0	0
REVERSE CROWN	59+04.87	-0.04	-0.02	0.02	0.02
BEGIN FULL SUPER	59+19.44	-0.04	-0.028	0.028	0.028
END FULL SUPER	60+87.08	-0.04	-0.028	0.028	0.028
REVERSE CROWN	61+01.65	-0.04	-0.02	0.02	0.02
LEVEL CROWN	61+38.08	-0.04	-0.02	0	0
BEGIN NORMAL CROWN	61+74.51	-0.04	-0.02	-0.02	-0.02
BEGIN NORMAL SHOULDER	62+10.94	-0.04	-0.02	-0.02	-0.04

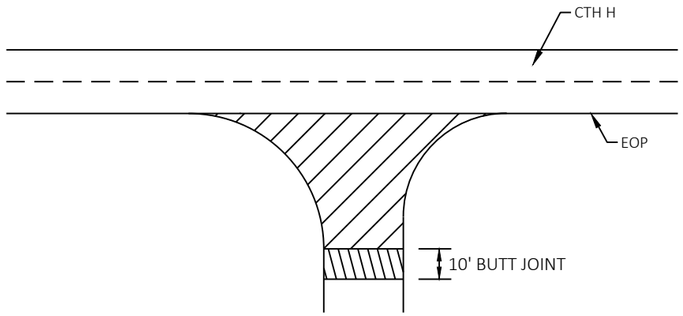

REMOVING ASPHALTIC SURFACE (PAID FOR UNDER EXCAVATION COMMON BID ITEM)

REMOVING ASPHALTIC SURFACE BUTT JOINTS
SEE BUTT JOINT DETAIL

NOTE: WHEN MATCHING TO AN UNPAVED SURFACE
BUTT JOINT IS NOT REQUIRED

SIDE ROADS

WITHOUT CURB AND GUTTER

CTH AH
WELCH ROAD
LIND STREET

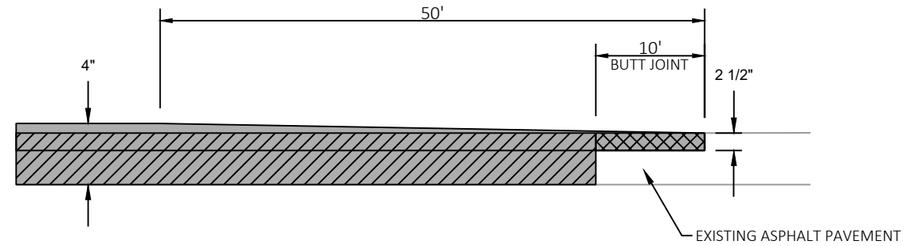

PROFILE TRANSITION

STA 15+63, OFFSET 20.6' LT
STA 17+77, OFFSET 42.8' RT
STA 76+70, OFFSET 40.3' LT

LEGEND

COMMON EXCAVATION

REMOVING ASPHALTIC SURFACE BUTT JOINTS

HMA PAVEMENT

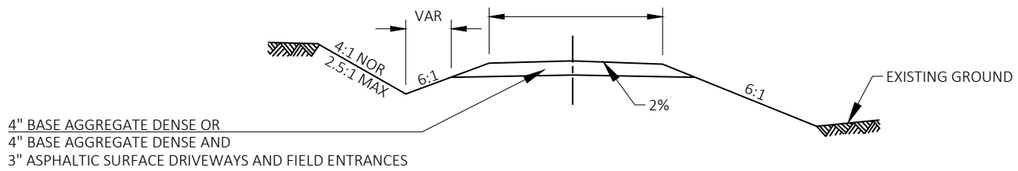

TYPICAL CROSS SECTION

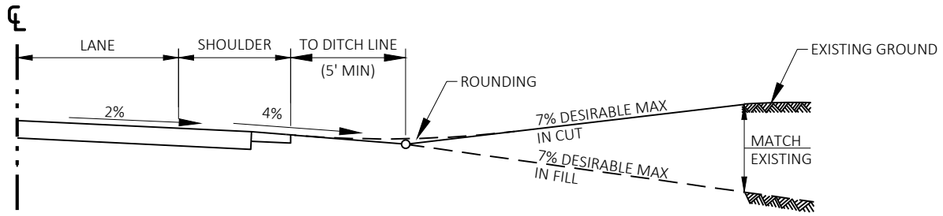

TYPICAL PROFILE VIEW

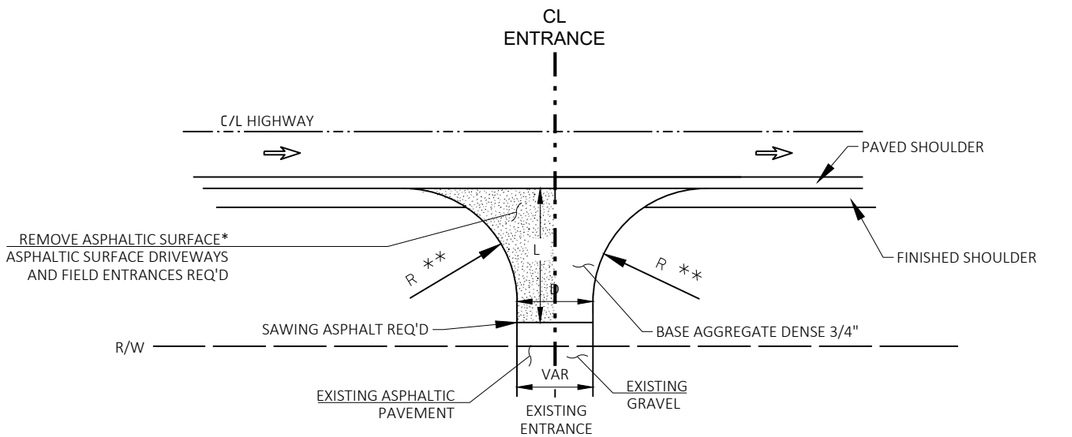

L=VARIABLE, EXACT LENGTH TO BE DETERMINED IN THE FIELD BY THE ENGINEER

D=DRIVEWAY WIDTH
D=20'TYP(PE & FE) (16'MIN-24'MAX)
D=28'TYP(CE & FARM ENT) (24'MIN-35'MAX)

* PAID FOR UNDER EXCAVATION COMMON BID ITEM

** RADIUS IS TANGENT AT PAVED SHOULDER EDGE
R=30' FOR 0' TO 3' PAVED SHOULDER
R=25' FOR GREATER THAN 3' PAVED SHOULDER

PLAN VIEW

RURAL DRIVEWAY INTERSECTION (PE, FE & CE)

(FOR NEW CONSTRUCTION)

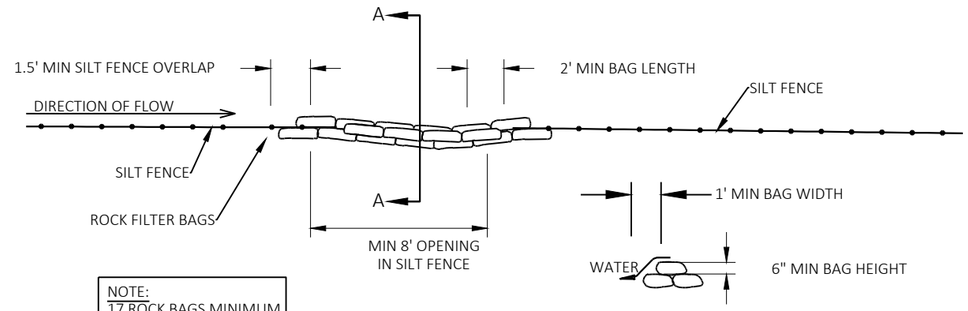

NOTE:
17 ROCK BAGS MINIMUM PER 8' OPENING.

TOP VIEW

SECTION A-A

ROCK BAGS USED FOR SILT FENCE RELIEF

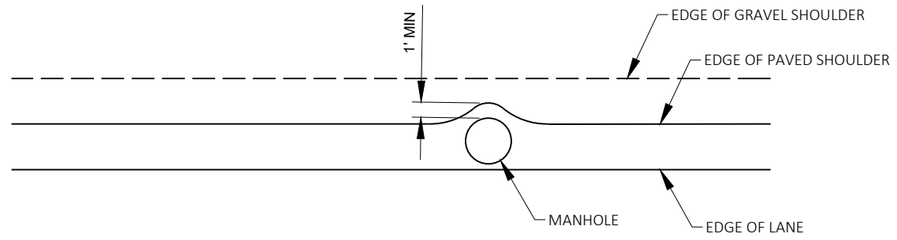

PAVED SHOULDER AT MANHOLE

SEE PLANS FOR LOCATIONS

LEGEND

- EROSION MAT URBAN CLASS I, TYPE B
- CULVERT PIPE CHECK
- TEMPORARY DITCH CHECK
- SILT FENCE
- SLOPE INTERCEPT
- F — SILT FENCE OPENING ROCK BAGS
- INLET PROTECTION
- A — INLET PROTECTION TYPE
- SURFACE WATER FLOW

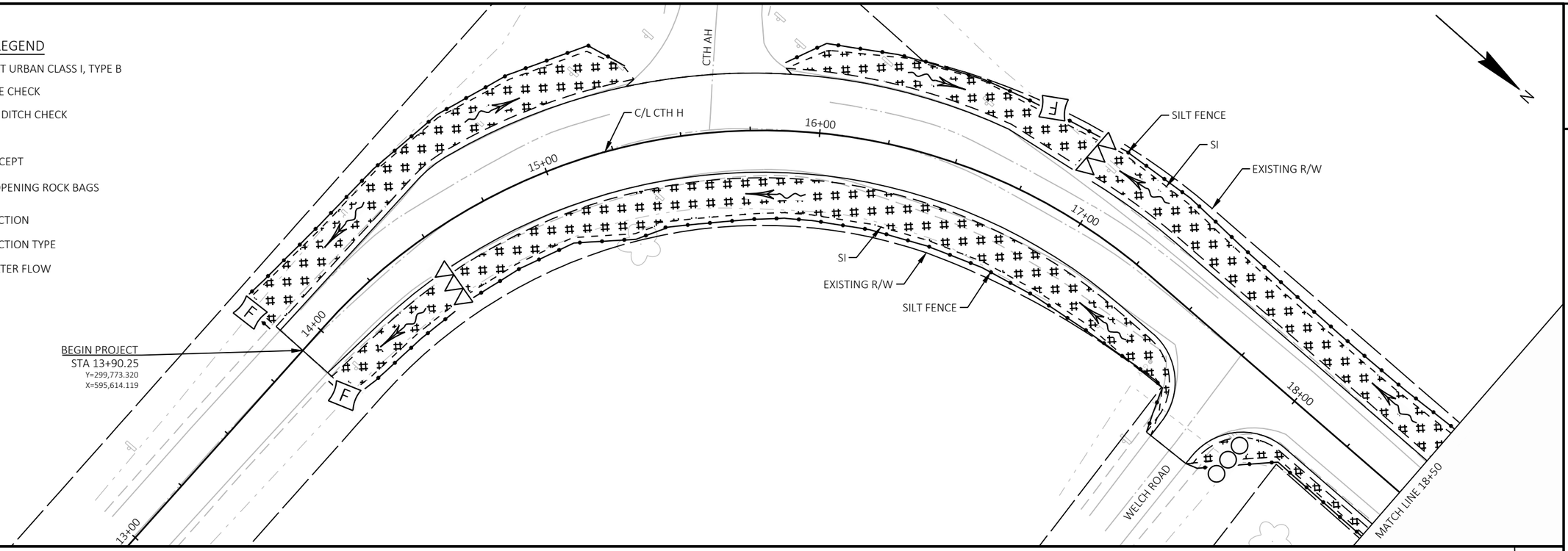

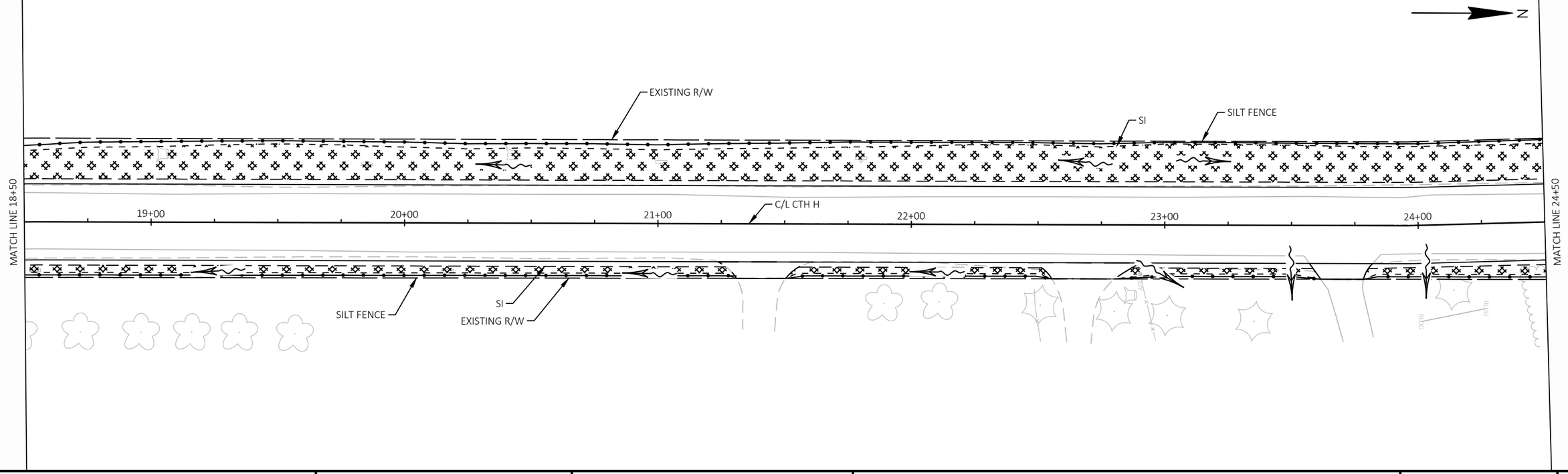

PROJECT NO: 6834-01-70	HWY: CTH H	COUNTY: WAUPACA	EROSION CONTROL	SHEET 8	E

2

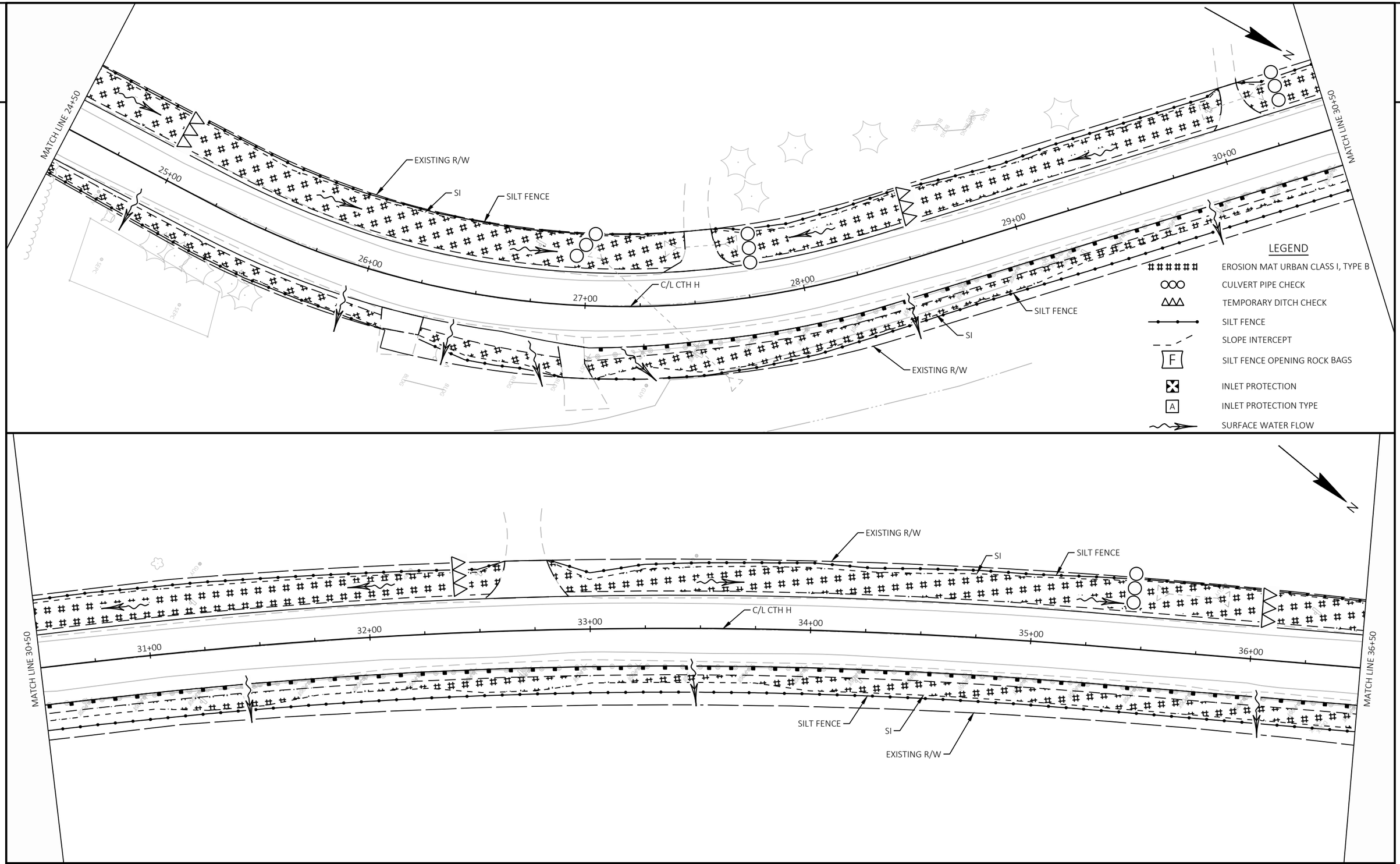

PROJECT NO: 6834-01-70	HWY: CTH H	COUNTY: WAUPACA	EROSION CONTROL	SHEET 9	E

2

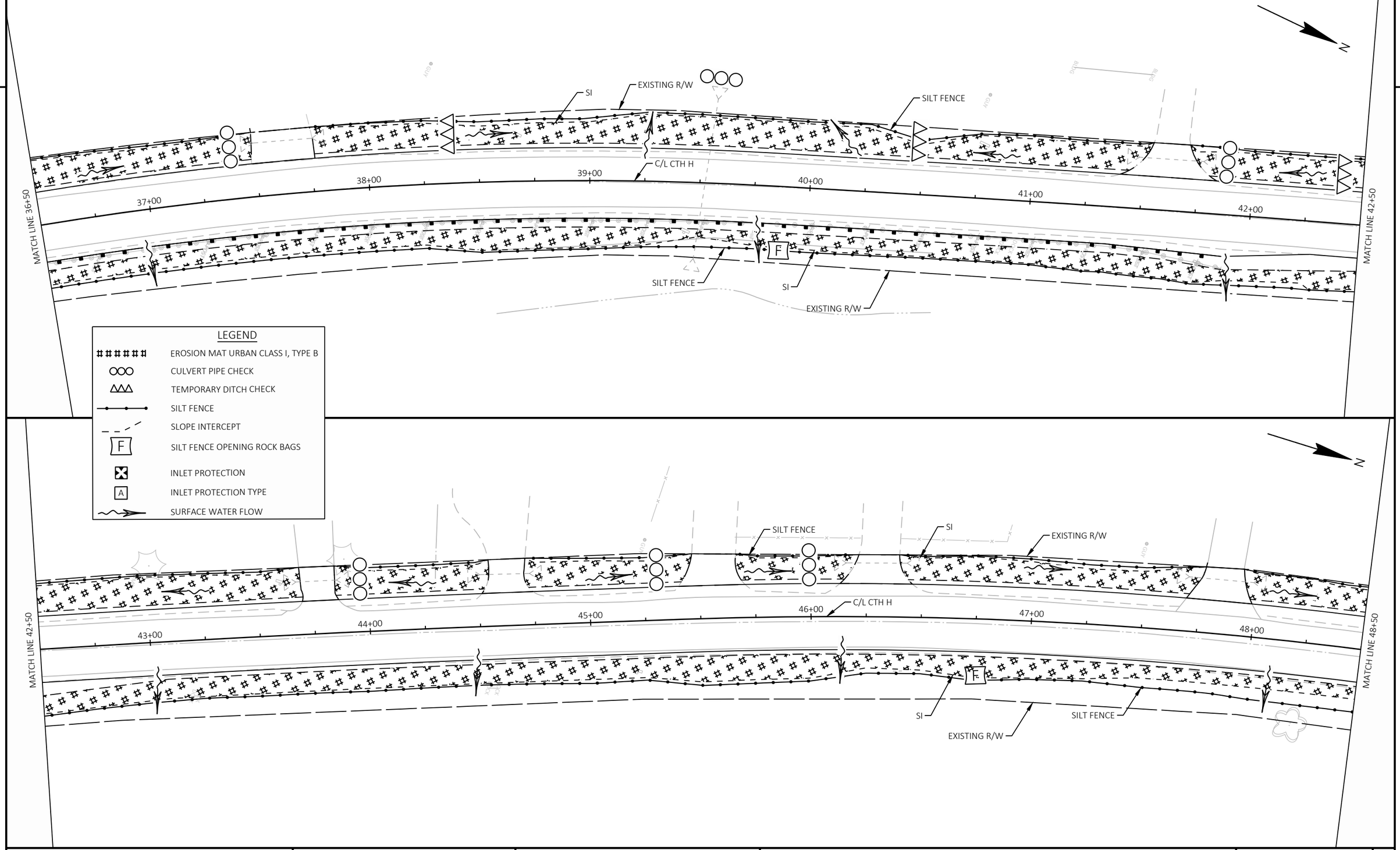

PROJECT NO: 6834-01-70	HWY: CTH H	COUNTY: WAUPACA	EROSION CONTROL	SHEET 10	E

FILE NAME : R:\2200\2288\2288015\68340100\SHEETS\022001-EC.DWG
LAYOUT NAME - 03
PLOT DATE : 9/10/2024 12:25 PM
PLOT BY : ERIC HANDLER
PLOT NAME :
PLOT SCALE : 1 IN:40 FT
WISDOT/CADDS SHEET 44

2

N

SILT FENCE

EXISTING R/W

SI

MATCH LINE 48+50

49+00

50+00

51+00

52+00

53+00

C/L CTH H

54+00

MATCH LINE 54+50

SI

EXISTING R/W

SILT FENCE

LEGEND

- EROSION MAT URBAN CLASS I, TYPE B
- CULVERT PIPE CHECK
- TEMPORARY DITCH CHECK
- SILT FENCE
- SLOPE INTERCEPT
- F — SILT FENCE OPENING ROCK BAGS
- INLET PROTECTION
- A — INLET PROTECTION TYPE
- SURFACE WATER FLOW

N

EXISTING R/W

SI

SILT FENCE

MATCH LINE 54+50

55+00

56+00

57+00

C/L CTH H

58+00

59+00

60+00

MATCH LINE 60+50

SILT FENCE

EXISTING R/W

SI

PROJECT NO: 6834-01-70	HWY: CTH H	COUNTY: WAUPACA	EROSION CONTROL	SHEET 11	E

2

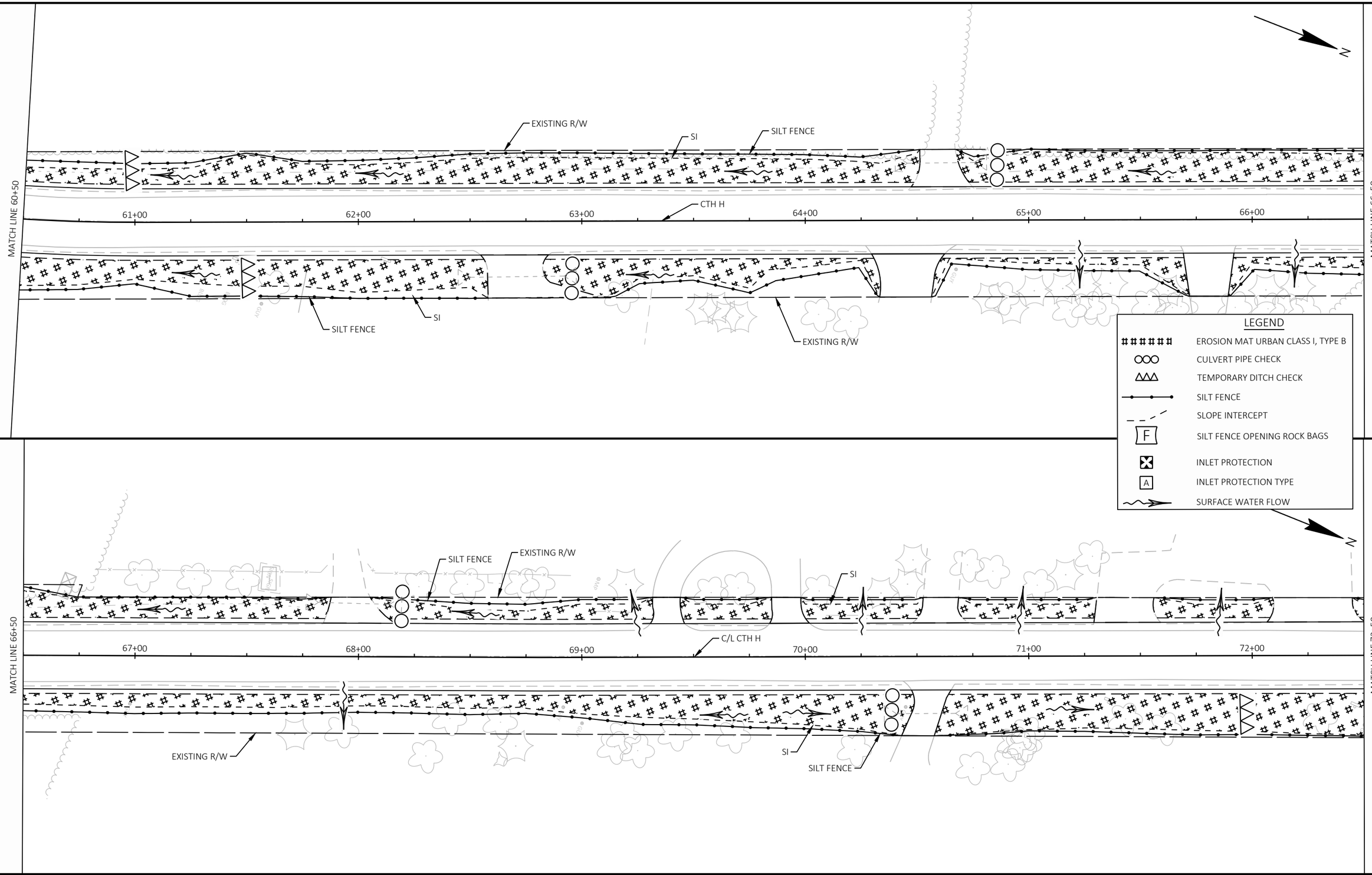

2

PROJECT NO: 6834-01-70	HWY: CTH H	COUNTY: WAUPACA	EROSION CONTROL	SHEET 12	E

FILE NAME : R:\2200\2288\2288015\68340100\SHEETS\022001-EC.DWG
LAYOUT NAME - 05

PLOT DATE : 9/10/2024 12:25 PM PLOT BY : ERIC HANDLER PLOT NAME : PLOT SCALE : 1 IN:40 FT

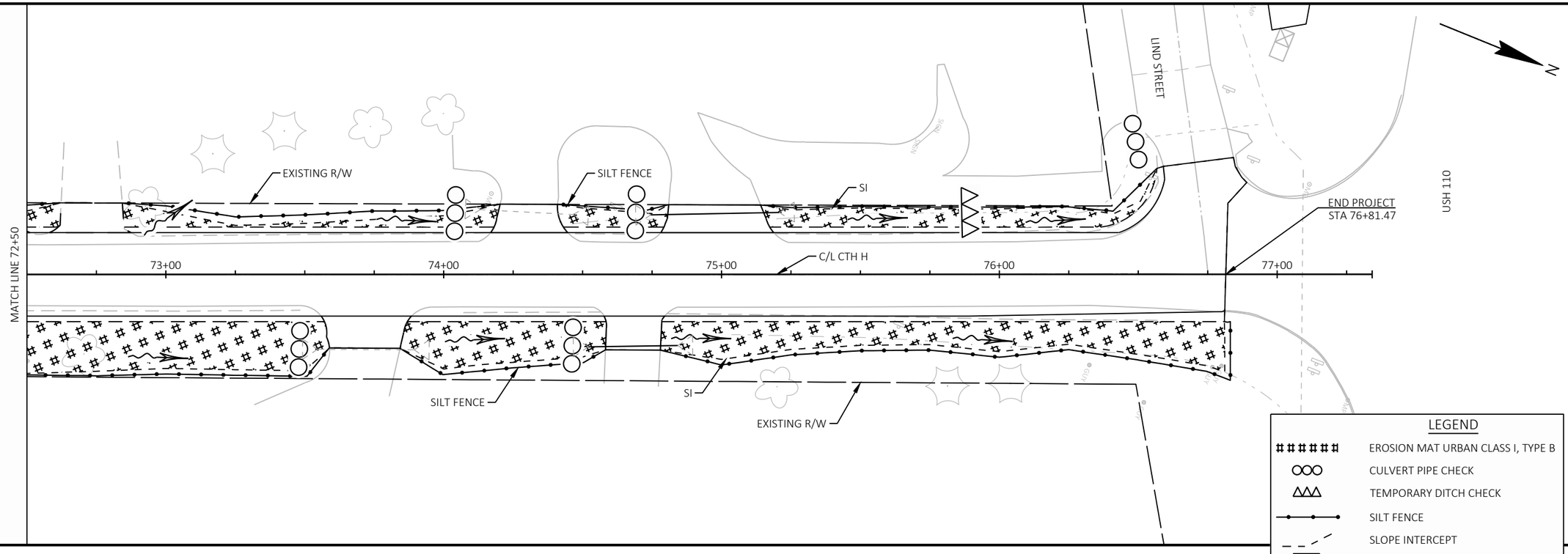

LEGEND

- EROSION MAT URBAN CLASS I, TYPE B
- CULVERT PIPE CHECK
- TEMPORARY DITCH CHECK
- SILT FENCE
- SLOPE INTERCEPT
- F — SILT FENCE OPENING ROCK BAGS
- INLET PROTECTION
- A — INLET PROTECTION TYPE
- SURFACE WATER FLOW

NOTES:
1. ALL PROPOSED SIGNS CALLED OUT IN THE PLAN HAVE ASSOCIATED QUANTITIES FOR REMOVAL OF EXISTING SIGNS AND SMALL SIGN SUPPORTS UNLESS OTHERWISE NOTED.

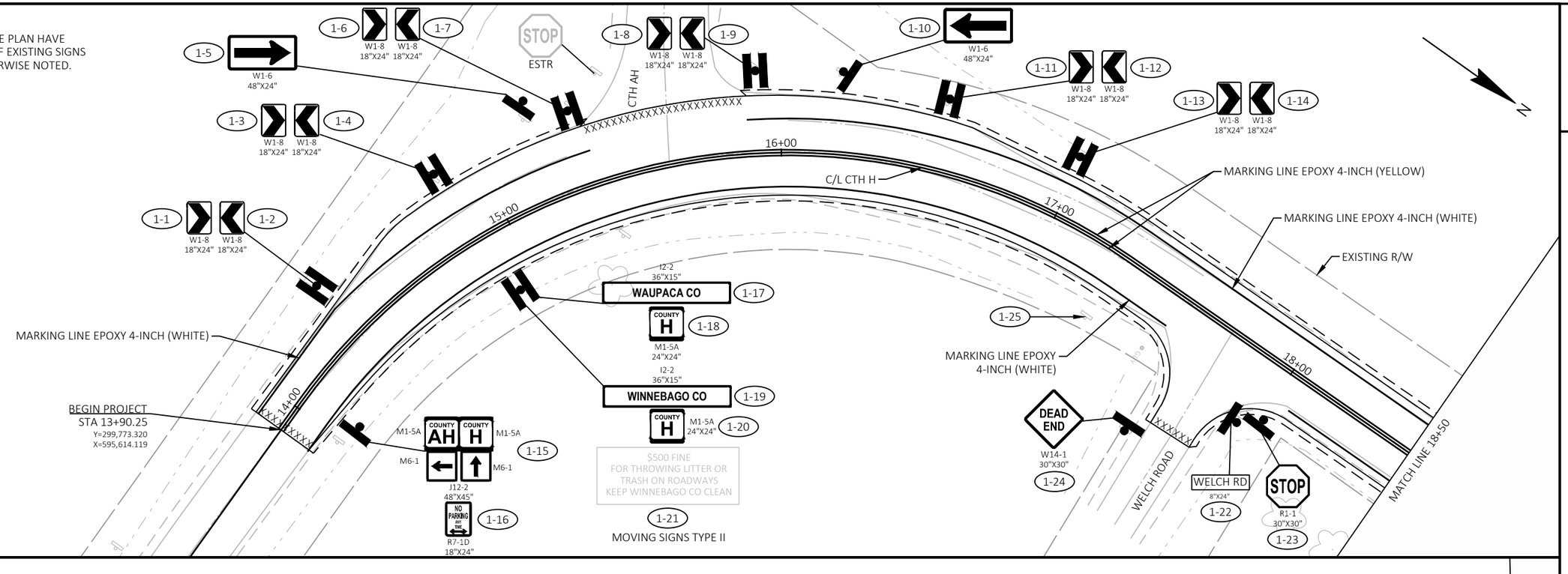

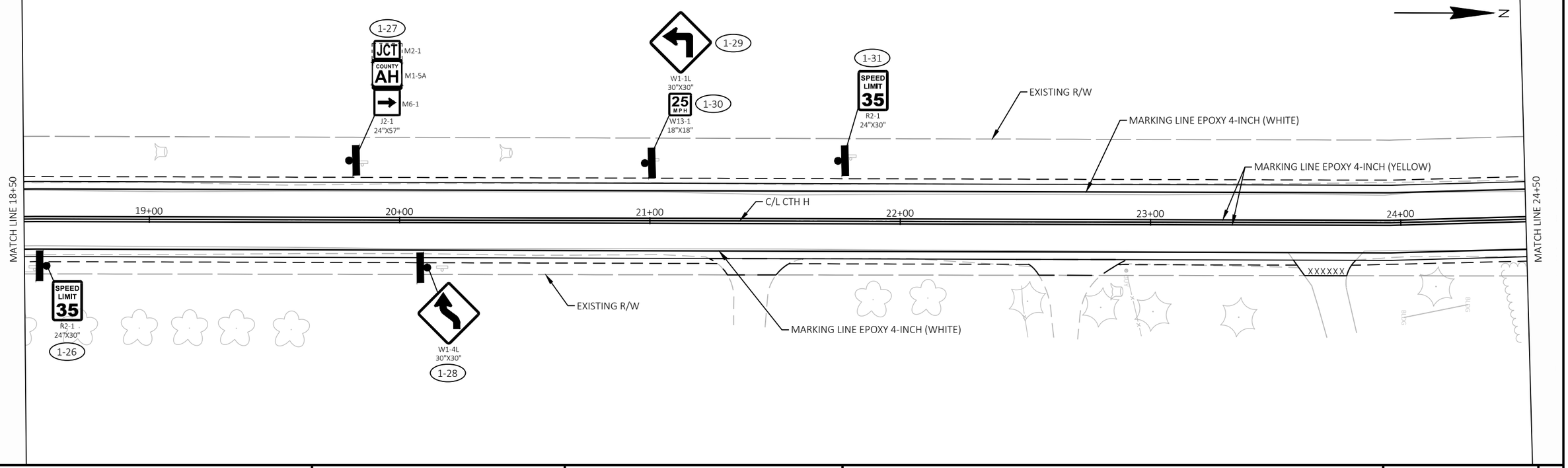

PROJECT NO: 6834-01-70	HWY: CTH H	COUNTY: WAUPACA	PERMANENT SIGNING & PAVEMENT MARKING PLANS	SHEET 14	E

NOTES:
1. ALL PROPOSED SIGNS CALLED OUT IN THE PLAN HAVE ASSOCIATED QUANTITIES FOR REMOVAL OF EXISTING SIGNS AND SMALL SIGN SUPPORTS UNLESS OTHERWISE NOTED.

2

MATCH LINE 24+50

MARKING LINE EPOXY 4-INCH (WHITE)

EXISTING R/W

25+00

26+00

27+00

C/L CTH H

28+00

29+00

30+00

MATCH LINE 30+50

2-1
NO PARKING ANY TIME
R7-1D
18"X24"

SPEED LIMIT 35
R2-1
24"X30"
2-5

MARKING LINE EPOXY 4-INCH (YELLOW)

MARKING LINE EPOXY 4-INCH (WHITE)

EXISTING R/W

2-2
W1-6
48"X24"

2-3
W1-6
48"X24"

NO PARKING ANY TIME
R7-1D
18"X24"
2-4

2

MATCH LINE 30+50

2-8
W1-4R
30"X30"

2-6
NO PARKING ANY TIME
R7-1D
18"X24"

MARKING LINE EPOXY 4-INCH (WHITE)

EXISTING R/W

MARKING LINE EPOXY 4-INCH (YELLOW)

2-10
SPEED LIMIT 35
R2-1
24"X30"

31+00

32+00

33+00

C/L CTH H

34+00

35+00

36+00

MATCH LINE 36+50

EXISTING R/W

MARKING LINE EPOXY 4-INCH (WHITE)

NO PARKING ANY TIME
R7-1D
18"X24"
2-7

W1-5R
30"X30"
2-9

PROJECT NO: 6834-01-70	HWY: CTH H	COUNTY: WAUPACA	PERMANENT SIGNING & PAVEMENT MARKING PLANS	SHEET 15	E

FILE NAME : R:\2200\2288\2288015\68340100\SHEETS\023201-PS.DWG
LAYOUT NAME - 02

PLOT DATE : 9/10/2024 12:26 PM PLOT BY : ERIC HANDLER PLOT NAME : PLOT SCALE : 1 IN:40 FT

WISDOT/CADDS SHEET 44

NOTES:
1. ALL PROPOSED SIGNS CALLED OUT IN THE PLAN HAVE ASSOCIATED QUANTITIES FOR REMOVAL OF EXISTING SIGNS AND SMALL SIGN SUPPORTS UNLESS OTHERWISE NOTED.

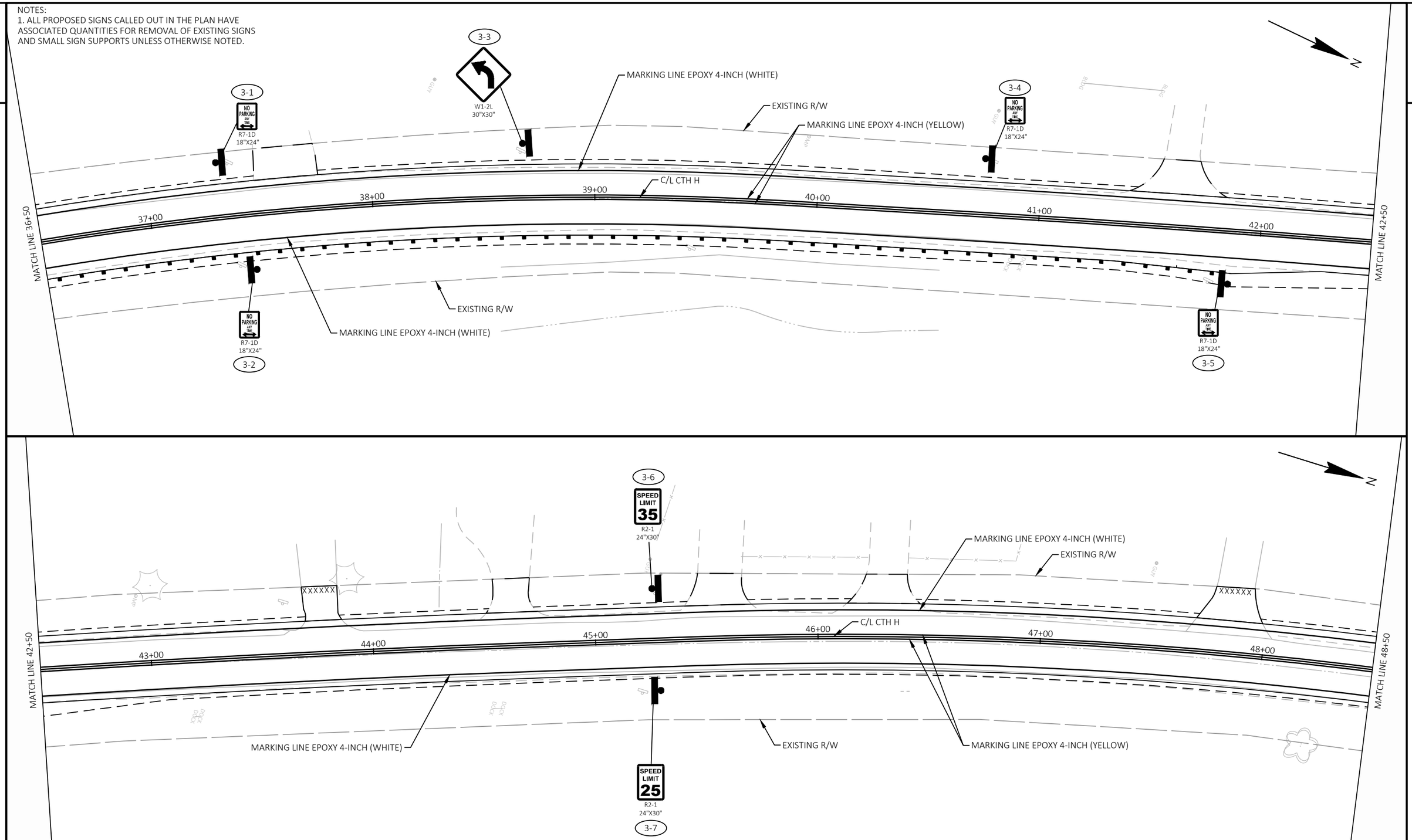

PROJECT NO: 6834-01-70	HWY: CTH H	COUNTY: WAUPACA	PERMANENT SIGNING & PAVEMENT MARKING PLANS	SHEET 16	E

NOTES:
1. ALL PROPOSED SIGNS CALLED OUT IN THE PLAN HAVE ASSOCIATED QUANTITIES FOR REMOVAL OF EXISTING SIGNS AND SMALL SIGN SUPPORTS UNLESS OTHERWISE NOTED.

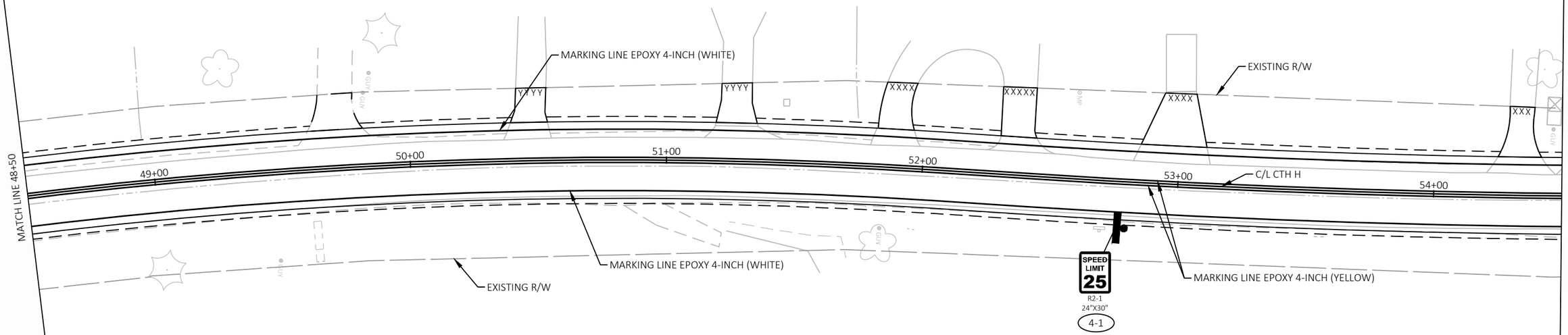

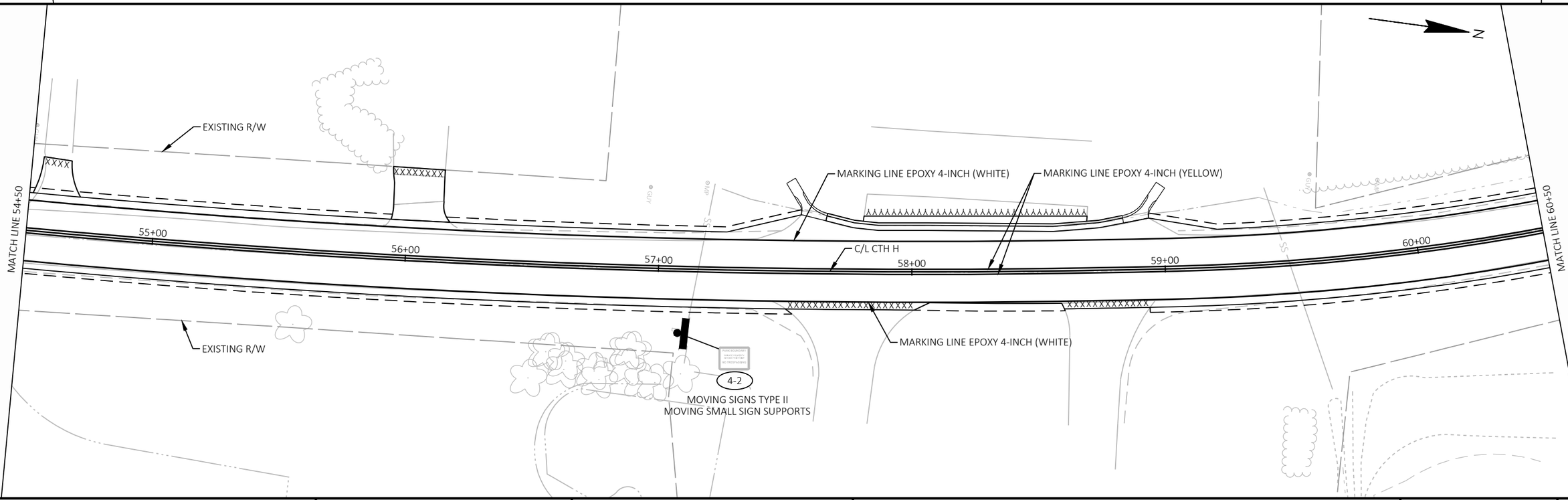

PROJECT NO: 6834-01-70	HWY: CTH H	COUNTY: WAUPACA	PERMANENT SIGNING & PAVEMENT MARKING PLANS	SHEET 17	E

FILE NAME : R:\2200\2288\2288015\68340100\SHEETS\023201-PS.DWG
LAYOUT NAME - 04
PLOT DATE : 9/10/2024 12:26 PM
PLOT BY : ERIC HANDLER
PLOT NAME :
PLOT SCALE : 1 IN:40 FT

NOTES:
1. ALL PROPOSED SIGNS CALLED OUT IN THE PLAN HAVE ASSOCIATED QUANTITIES FOR REMOVAL OF EXISTING SIGNS AND SMALL SIGN SUPPORTS UNLESS OTHERWISE NOTED.

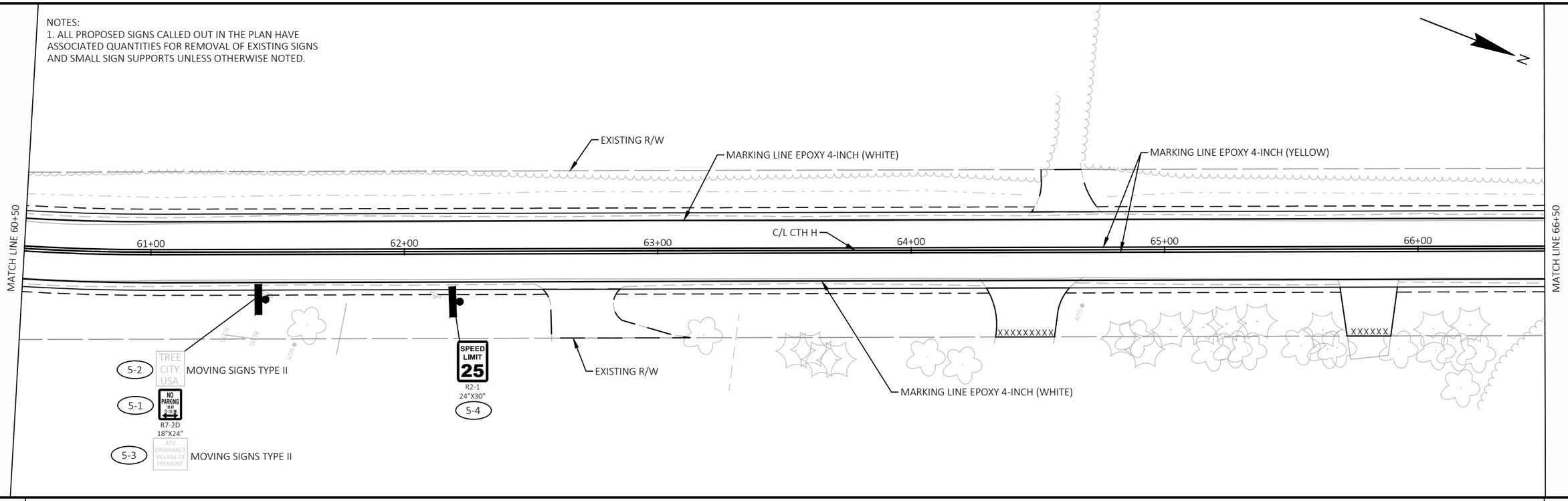

PROJECT NO: 6834-01-70	HWY: CTH H	COUNTY: WAUPACA	PERMANENT SIGNING & PAVEMENT MARKING PLANS	SHEET 18	E

FILE NAME : R:\2200\2288\2288015\68340100\SHEETS\023201-PS.DWG
LAYOUT NAME - 05
PLOT DATE : 9/10/2024 12:26 PM
PLOT BY : ERIC HANDLER
PLOT NAME :
PLOT SCALE : 1 IN:40 FT

NOTES:
1. ALL PROPOSED SIGNS CALLED OUT IN THE PLAN HAVE ASSOCIATED QUANTITIES FOR REMOVAL OF EXISTING SIGNS AND SMALL SIGN SUPPORTS UNLESS OTHERWISE NOTED.

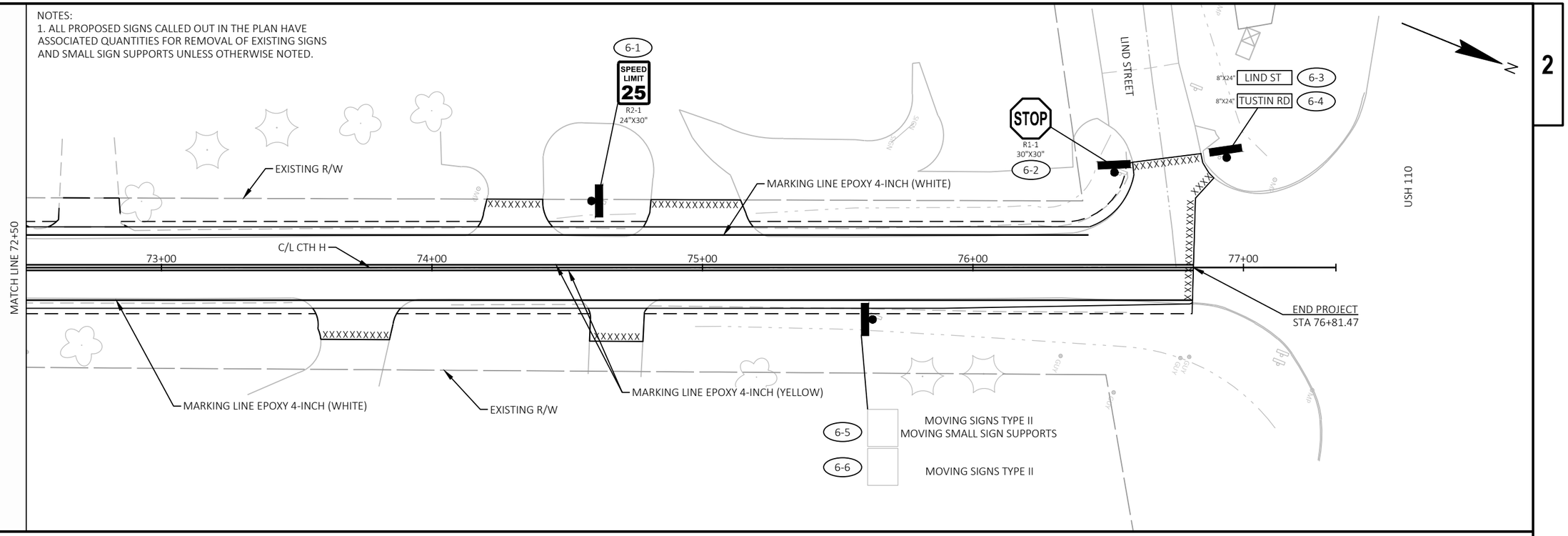

PROJECT NO: 6834-01-70	HWY: CTH H	COUNTY: WAUPACA	PERMANENT SIGNING & PAVEMENT MARKING PLANS	SHEET 19	E

2

GENERAL NOTES FOR TRAFFIC CONTROL

1) THE EXACT NUMBER, LOCATION, AND SPACING OF ALL SIGN DEVICES SHALL BE ADJUSTED TO FIT FIELD CONDITIONS AS DIRECTED BY THE ENGINEER.
2) CONFLICTING TRAFFIC SIGNS SHALL BE COVERED OR REMOVED AS DIRECTED BY THE ENGINEER.
3) ALL TYPE III BARRICADES SHALL BE 8' WIDE, UNLESS OTHERWISE NOTED, AND EQUIPPED WITH TWO TYPE A (LOW INTENSITY FLASHING) LIGHTS.

GENERAL NOTES FOR STAGING

CTH H
- CTH H TO BE CLOSED TO THRU TRAFFIC FOR DURATION OF CONSTRUCTION.
- BEGIN MAINLINE CLOSURE AT APPROXIMATE STA. 16+00.
- MAINTAIN ACCESS TO RESIDENCES AND BUSINESSES AT ALL TIMES. TEMPORARY DISRUPTIONS TO ACCESS MUST BE COORDINATED WITH THE PROPERTY/BUSINESS OWNER 7 DAYS IN ADVANCE.

CTH H & CTH AH INTERSECTION
- KEEP INTERSECTION OPEN AT ALL TIMES TO MAINTAIN DETOUR TRAFFIC.
- CONSTRUCT THE INTERSECTION (PAVEMENT REMOVAL, GRADING, AND PAVING) FROM STA. 13+90 TO STA. 16+00 UNDER FLAGGING OPERATION.

LEGEND

TYPE III BARRICADE WITH TYPE A WARNING LIGHT

TYPE III BARRICADE WITH ATTACHED SIGN AND TYPE A WARNING LIGHT

SIGN ON PERMANENT SUPPORT

WORK AREA CLOSED TO THRU TRAFFIC

WORK AREA COMPLETED UNDER FLAGGING OPERATION

1. SEE SDD "BARRICADES AND SIGNS FOR SIDEROAD CLOSURES", DETAIL 4
2. SEE DETOUR PLAN AND SDD "BARRICADES AND SIGNS FOR MAINLINE CLOSURE", DETAIL B
3. SEE SDD "TRAFFIC CONTROL FOR LANE CLOSURE WITH FLAGGING OPERATION"
4. SEE SDD "TRAFFIC CONTROL, ADVANCE WARNING SIGNS 40 MPH OR LESS TWO WAY UNDIVIDED ROAD OPEN TO TRAFFIC"
5. SEE SDD "TRAFFIC CONTROL, ADVANCE WARNING SIGNS 45 MPH OR GREATER TWO WAY UNDIVIDED ROAD OPEN TO TRAFFIC"

A: ROAD WORK AHEAD W20-1A

B: ROAD WORK 500 FT W20-1D

C: END ROAD WORK G20-2A 48"X24"

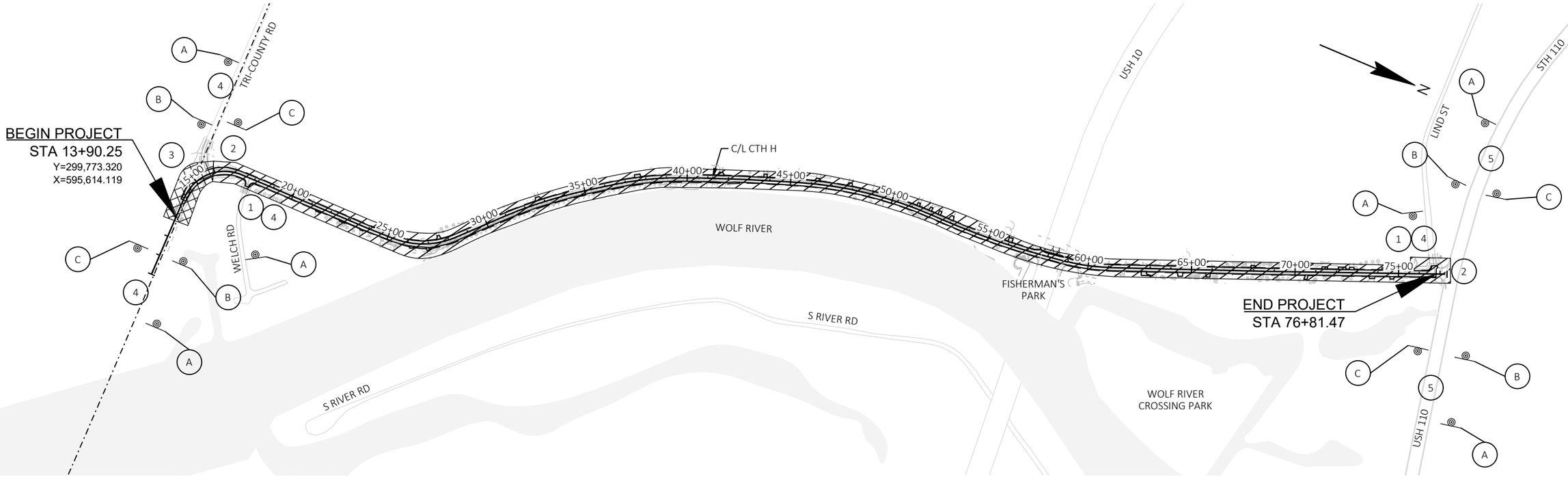

PROJECT NO: 6834-01-70	HWY: CTH H	COUNTY: WAUPACA	TRAFFIC CONTROL GENERAL NOTES & ADVANCED WARNING PLAN	SHEET 20	E

SEE SDD "BARRICADES AND SIGNS FOR MAINLINE, DETOUR, ON RAMP, OFF RAMP CLOSURES AND ADVANCED WIDTH RESTRICTIONS" FOR ADDITIONAL INFORMATION ON SIGN PLACEMENT AND SPACING.

N

R11-4
60" X 30"
ROAD CLOSED TO THRU TRAFFIC
TYPE III BARRICADE

M4-9R
30"X24"
DETOUR
TYPE III BARRICADE

DETOUR
COUNTY H
COVER

DETOUR
COUNTY H
COVER

STH 110

USH 10

STH 110/CTH H

END PROJECT
STA 76+81.47

STH 49

BROWN RD

KESTER RD

CTH H

COUNTY H
COVER

BEGIN PROJECT
STA 13+90.25
Y=299,773.320
X=595,614.119

TRI COUNTY RD

CTH AH

CTH H

R11-4
60" X 30"
ROAD CLOSED TO THRU TRAFFIC
TYPE III BARRICADE

M4-9L
30"X24"
DETOUR
TYPE III BARRICADE

A — COUNTY H — M1-5A 24"X24"
B — M6-1 21"X21"
C — M6-1 21"X21"
D — M6-1 21"X21"
E — M5-1R 21"X21"
F — M5-1L 21"X21"
G — DETOUR — M4-8 24"X12"
H — END DETOUR — M4-8A 24"X18"
I — ROAD CLOSED AHEAD — W20-3A
J — DETOUR AHEAD — W20-2A
K — ROAD CLOSED 500 FT — W20-3D

LEGEND

- DETOUR ROUTE
- TYPE III BARRICADE WITH TYPE A WARNING LIGHT
- TYPE III BARRICADE WITH ATTACHED SIGN AND TYPE A WARNING LIGHT
- SIGN ON EXISTING SUPPORT
- SIGN ON PERMANENT SUPPORT
- WORK AREA

PROJECT NO: 6834-01-70	HWY: CTH H	COUNTY: WAUPACA	DETOUR PLAN CTH H CLOSURE	SHEET 21	E

FILE NAME : R:\2200\2288\2288015\68340100\SHEETS\027001-DT.DWG
LAYOUT NAME - Plan 1 IN 1000 FT
PLOT DATE : 9/10/2024 12:27 PM
PLOT BY : ERIC HANDLER
PLOT NAME :
PLOT SCALE : 1 IN:2000 FT

WISDOT/CADDS SHEET 42

Estimate Of Quantities

6834-01-70

Line	Item	Item Description	Unit	Total	Qty
0002	204.0100	Removing Concrete Pavement	SY	55.000	55.000
0004	204.0115	Removing Asphaltic Surface Butt Joints	SY	113.000	113.000
0006	204.0150	Removing Curb & Gutter	LF	118.000	118.000
0008	204.0155	Removing Concrete Sidewalk	SY	4.000	4.000
0010	204.0165	Removing Guardrail	LF	1,486.000	1,486.000
0012	204.0175	Removing Concrete Slope Paving	SY	27.000	27.000
0014	205.0100	Excavation Common	CY	12,564.000	12,564.000
0016	213.0100	Finishing Roadway (project) 01. 6834-01-70	EACH	1.000	1.000
0018	305.0110	Base Aggregate Dense 3/4-Inch	TON	1,290.000	1,290.000
0020	305.0120	Base Aggregate Dense 1 1/4-Inch	TON	19,590.000	19,590.000
0022	455.0605	Tack Coat	GAL	1,520.000	1,520.000
0024	460.2000	Incentive Density HMA Pavement	DOL	3,590.000	3,590.000
0026	460.6223	HMA Pavement 3 MT 58-28 S	TON	3,110.000	3,110.000
0028	460.6224	HMA Pavement 4 MT 58-28 S	TON	2,490.000	2,490.000
0030	465.0120	Asphaltic Surface Driveways and Field Entrances	TON	96.000	96.000
0032	601.0557	Concrete Curb & Gutter 6-Inch Sloped 36-Inch Type D	LF	118.000	118.000
0034	602.3010	Concrete Surface Drains	CY	2.000	2.000
0036	604.0400	Slope Paving Concrete	SY	27.000	27.000
0038	606.0200	Riprap Medium	CY	4.000	4.000
0040	614.2300	MGS Guardrail 3	LF	1,380.000	1,380.000
0042	614.2610	MGS Guardrail Terminal EAT	EACH	2.000	2.000
0044	619.1000	Mobilization	EACH	1.000	1.000
0046	624.0100	Water	MGAL	209.000	209.000
0048	625.0100	Topsoil	SY	12,251.000	12,251.000
0050	628.1504	Silt Fence	LF	11,770.000	11,770.000
0052	628.1520	Silt Fence Maintenance	LF	11,770.000	11,770.000
0054	628.1905	Mobilizations Erosion Control	EACH	3.000	3.000
0056	628.1910	Mobilizations Emergency Erosion Control	EACH	3.000	3.000
0058	628.2008	Erosion Mat Urban Class I Type B	SY	12,251.000	12,251.000
0060	628.7005	Inlet Protection Type A	EACH	2.000	2.000
0062	628.7504	Temporary Ditch Checks	LF	150.000	150.000
0064	628.7555	Culvert Pipe Checks	EACH	40.000	40.000
0066	628.7570	Rock Bags	EACH	140.000	140.000
0068	629.0210	Fertilizer Type B	CWT	8.000	8.000
0070	630.0140	Seeding Mixture No. 40	LB	221.000	221.000
0072	630.0200	Seeding Temporary	LB	331.000	331.000
0074	630.0500	Seed Water	MGAL	275.000	275.000
0076	634.0614	Posts Wood 4x6-Inch X 14-FT	EACH	6.000	6.000
0078	634.0616	Posts Wood 4x6-Inch X 16-FT	EACH	30.000	30.000
0080	634.0618	Posts Wood 4x6-Inch X 18-FT	EACH	3.000	3.000
0082	634.0812	Posts Tubular Steel 2x2-Inch X 12-FT	EACH	2.000	2.000
0084	637.2230	Signs Type II Reflective F	SF	249.860	249.860
0086	638.2102	Moving Signs Type II	EACH	6.000	6.000
0088	638.2602	Removing Signs Type II	EACH	61.000	61.000
0090	638.3000	Removing Small Sign Supports	EACH	40.000	40.000
0092	638.4000	Moving Small Sign Supports	EACH	2.000	2.000
0094	642.5001	Field Office Type B	EACH	1.000	1.000
0096	643.0300	Traffic Control Drums	DAY	550.000	550.000
0098	643.0420	Traffic Control Barricades Type III	DAY	550.000	550.000

6834-01-70

Line	Item	Item Description	Unit	Total	Qty
0100	643.0705	Traffic Control Warning Lights Type A	DAY	1,100.000	1,100.000
0102	643.0900	Traffic Control Signs	DAY	4,125.000	4,125.000
0104	643.0920	Traffic Control Covering Signs Type II	EACH	3.000	3.000
0106	643.5000	Traffic Control	EACH	1.000	1.000
0108	645.0130	Geotextile Type R	SY	32.000	32.000
0110	646.1020	Marking Line Epoxy 4-Inch	LF	25,028.000	25,028.000
0112	650.4500	Construction Staking Subgrade	LF	6,291.000	6,291.000
0114	650.5000	Construction Staking Base	LF	6,291.000	6,291.000
0116	650.5500	Construction Staking Curb Gutter and Curb & Gutter	LF	118.000	118.000
0118	650.9911	Construction Staking Supplemental Control (project) 01. 6834-01-70	EACH	1.000	1.000
0120	650.9920	Construction Staking Slope Stakes	LF	6,291.000	6,291.000
0122	690.0150	Sawing Asphalt	LF	448.000	448.000
0124	690.0250	Sawing Concrete	LF	112.000	112.000
0126	740.0440	Incentive IRI Ride	DOL	2,384.000	2,384.000
0128	ASP.1T0A	On-the-Job Training Apprentice at $5.00/HR	HRS	1,200.000	1,200.000
0130	ASP.1T0G	On-the-Job Training Graduate at $5.00/HR	HRS	600.000	600.000

3

REMOVING CONCRETE ITEMS

CATEGORY	STATION	-	STATION	LOCATION	204.0100 REMOVING CONCRETE PAVEMENT SY	204.0155 REMOVING CONCRETE SIDEWALK SY	204.0175 REMOVING CONCRETE SLOPE PAVING SY
0010	49+60			RT	-	4	-
0010	50+50			LT	30	-	-
0010	51+25			LT	25	-	-
0010	57+81	-	58+70	LT	-	-	27
				TOTAL 0010	55	4	27

BUTT JOINTS

CATEGORY	STATION	LOCATION	204.0115 REMOVING ASPHALTIC SURFACE BUTT JOINTS SY
0010	15+65	LT	67
0010	17+75	RT	18
0010	76+70	LT	28
		TOTAL 0010	113

3

BASE AGGREGATE

CATEGORY	STATION	TO	STATION	LOCATION	305.0110 BASE AGGREGATE DENSE 3/4-INCH TON	305.0120 BASE AGGREGATE DENSE 1 1/4-INCH TON	624.0100 WATER MGAL
0010	13+90	-	76+81	RT/LT	890	19,590	205
0010	13+90	-	76+81	DRIVEWAYS	400	0	4
				TOTAL 0010	1,290	19,590	209

DIVISION	FROM/TO STATION	LOCATION	205.0100 COMMON EXCAVATION (1) CUT (2)	205.0100 COMMON EXCAVATION (1) EBS EXCAVATION (3)	SALVAGED/UNUSABLE PAVEMENT MATERIAL (4)	AVAILABLE MATERIAL (5)	UNEXPANDED FILL	EXPANDED FILL (13) FACTOR 1.25	MASS ORDINATE +/- (14)	WASTE (15)	208.0100 BORROW	COMMENT
DIVISION 1												
CTH H	13+90.25/76+81.09		12,564	0	1,864	10,700	378	473	10,228	10,228	0	
DIVISION 1 SUBTOTAL			12,564	0	1,864	10,700	378	473	10,228	10,228	0	
GRAND TOTAL			12,564	0	1,864	10,700	378	473	10,228	10,228	0	
TOTAL COMMON EXC			12,564									

NOTES:
(1) COMMON EXCAVATION IS THE SUM OF THE CUT AND EBS EXCAVATION COLUMNS. ITEM NUMBER 205.0100
(2) SALVAGED/UNSUABLE PAVEMENT MATERIAL IS INCLUDED IN CUT.
(3) EBS EXCAVATION TO BE BACKFILLED WITH SELECT BORROW MATERIAL. NOTE: THIS IS DESIGNERS CHOICE, CAN BE BACKFILLED WITH BORROW, OR CUT AS WELL.
(4) SALVAGED/UNUSABLE PAVEMENT MATERIAL
(5) AVAILABLE MATERIAL = CUT - SALVAGED/UNUSUABLE PAVEMENT MATERIAL
(13) EXPANDED FILL FACTOR = 1.25
DEPENDING ON SELECTIONS: **EXPANDED FILL = (UNEXPANDED FILL) * FILL FACTOR**
(14) THE MASS ORDINATE + OR - QTY CALCULATED FOR THE DIVISION. PLUS QUANTITY INDICATES AN EXCESS OF MATERIAL WITHIN THE DIVISION. MINUS INDICATES A SHORTAGE OF MATERIAL WITHIN THE DIVISION.
(15) FACTORS USED TO COMPUTE ANTICIPATED WASTE AND THE COMPUTED WASTE VOLUME IDENTIFIED ARE FOR GENERAL INFORMATION ONLY.

HMA ITEMS

CATEGORY	STATION	TO	STATION	LOCATION	455.0605 TACK COAT GAL	460.6223 HMA PAVEMENT 3 MT 58-28 S TON	460.6224 HMA PAVEMENT 4 MT 58-28 S TON	465.0120 ASPHALTIC SURFACE DRIVEWAYS AND FIELD ENTRANCES TON
0010	13+90	-	76+81	MAINLINE	1,520	3,110	2,490	96
				TOTAL 0010	1,520	3,110	2,490	96

SLOPE PAVING CONCRETE

CATEGORY	STATION	-	STATION	LOCATION	604.0400 SLOPE PAVING CONCRETE SY
0010	57+81	-	58+70	LT	27
				TOTAL 0010	27

CURB & GUTTER

CATEGORY	STATION	TO	STATION	LOCATION	204.0150 REMOVING CURB & GUTTER LF	601.0557 CONCRETE CURB & GUTTER 6-INCH SLOPED 36-INCH TYPE D LF
0010	57+66	-	58+84	LT	118	118
				TOTAL 0010	118	118

GUARDRAIL

CATEGORY	STATION	TO	STATION	LOCATION	204.0165 REMOVING GUARDRAIL LF	614.2300 MGS GUARDRAIL 3 LF	614.2610 MGS GUARDRAIL TERMINAL EAT EACH
0010	27+02	-	41+88	CTH H RT	1,486	1,380	2
				TOTAL 0010	1,486	1,380	2

RESTORATION

CATEGORY	STATION	TO	STATION	LOCATION	625.0100 TOPSOIL SY	628.2008 EROSION MAT URBAN CLASS I, TYPE B SY	629.0210 FERTILIZER TYPE B CWT	630.0140 SEEDING MIXTURE NO. 40 LB	630.0200 SEEDING TEMPORARY LB	630.0500 SEED WATER MGAL
0010	13+90	-	76+81	CTH H	12,251	12,251	8	221	331	275
				TOTAL 0010	12,251	12,251	8	221	331	275

FLUMES

CATEGORY	STATION	TO	STATION	LOCATION	602.3010 CONCRETE SURFACE DRAINS CY	645.0130 GEOTEXTILE FABRIC TYPE R SY	606.0200 RIPRAP MEDIUM CY
0010	57+66			LT	1	16	2
0010	58+84			LT	1	16	2
				TOTAL 0010	2	32	4

EROSION CONTROL

CATEGORY	STATION	TO	STATION	LOCATION	628.1504 SILT FENCE LF	628.1520 SILT FENCE MAINTENANCE LF	628.1905 MOBILIZATIONS EROSION CONTROL EACH	628.1910 MOBILIZATIONS EMERGENCY EROSION CONTROL EACH	628.7005 INLET PROTECTION TYPE A EACH	628.7504 TEMPORARY DITCH CHECKS LF	628.7555 CULVERT PIPE CHECKS EACH	628.7570 ROCK BAGS EACH
0010	13+90	-	76+81	CTH H, LT/RT	11,770	11,770	3	3	2	150	40	140
				TOTAL 0010	11,770	11,770	3	3	2	150	40	140

NOTE: ROCK BAGS USED AT SILT FENCE OPENING LOCATIONS

PAVEMENT MARKING

CATEGORY	STATION	TO	STATION	LOCATION	646.1020 MARKING LINE EPOXY 4-INCH WHITE LF	646.1020 MARKING LINE EPOXY 4-INCH YELLOW LF
0010	13+90	-	15+40	LT	150	--
0010	15+90	-	76+45	LT	6,055	--
0010	13+90	-	17+50	RT	360	--
0010	18+00	-	76+81	RT	5,881	--
0010	13+90	-	76+81	RT	--	12,582
				TOTAL 0010	25,028	

TRAFFIC CONTROL

CATEGORY	LOCATION	STAGE DAYS	643.0300 TRAFFIC CONTROL DRUMS EACH	643.0300 TRAFFIC CONTROL DRUMS DAY	643.0420 TRAFFIC CONTROL BARRICADES TYPE III EACH	643.0420 TRAFFIC CONTROL BARRICADES TYPE III DAY	643.0705 TRAFFIC CONTROL WARNING LIGHTS TYPE A EACH	643.0705 TRAFFIC CONTROL WARNING LIGHTS TYPE A DAY	643.0900 TRAFFIC CONTROL SIGNS EACH	643.0900 TRAFFIC CONTROL SIGNS DAY	643.0920 TRAFFIC CONTROL COVERING SIGNS TYPE II EACH	643.5000 TRAFFIC CONTROL EACH
0010	DETOUR ROUTE/MAINLINE CLOSURE	55	10	550	6	330	12	660	57	3135	3	-
0010	ADVANCE WARNING/SIDEROADS	55	0	0	4	220	8	440	18	990	-	1
	TOTAL 0010			550		550		1,100		4,125	3	1

SAWING

CATEGORY	STATION	TO	STATION	LOCATION	690.0150 SAWING ASPHALT LF	690.0250 SAWING CONCRETE LF
0010	13+90			LT/RT	23	-
0010	23+65	-	23+80	RT	15	-
0010	43+70	-	43+85	LT	15	-
0010	47+77	-	47+95	LT	18	-
0010	50+40	-	50+52	LT	-	12
0010	51+20	-	51+34	LT	-	12
0010	51+85	-	51+97	LT	12	-
0010	52+30	-	52+44	LT	14	-
0010	52+95	-	53+07	LT	12	-
0010	54+30	-	54+40	LT	10	-
0010	54+54	-	54+66	LT	12	-
0010	55+95	-	56+15	LT	20	-
0010	57+81	-	58+70	LT	-	88
0010	57+50	-	58+00	RT	50	-
0010	58+60	-	58+95	RT	35	-
0010	64+30	-	64+55	RT	25	-
0010	65+70	-	65+88	RT	18	-
0010	69+30	-	69+45	LT	15	-
0010	69+85	-	69+98	LT	13	-
0010	70+42	-	70+58	RT	16	-
0010	73+57	-	73+83	RT	26	-
0010	74+20	-	74+40	LT	20	-
0010	74+56	-	74+76	RT	20	-
0010	74+80	-	75+13	LT	33	-
0010		76+81		LT/RT	49	-
				TOTAL 0010	448	112

CONSTRUCTION STAKING

CATEGORY	STATION	TO	STATION	LOCATION	650.4500 CONSTRUCTION STAKING SUBGRADE LF	650.5000 CONSTRUCTION STAKING BASE LF	650.5500 CONSTRUCTION STAKING CURB & GUTTER LF	650.9911.01 CONSTRUCTION STAKING SUPPLEMENTAL CONTROL (PROJECT) (01. 6834-01-70) EACH	650.9920 CONSTRUCTION STAKING SLOPE STAKES LF
0010	13+90	-	76+81	CTH H	6,291	6,291	118	1	6,291
				TOTAL 0010	6,291	6,291	118	1	6,291

TYPE II SIGNS

CATEGORY	SIGN NO.	SIGN CODE	MESSAGE	SIGN SIZE W (IN)	X	H (IN)	643.0614 POSTS WOOD 4X6-INCH X 14-FT EACH	634.0616 POSTS WOOD 4X6-INCH X 16-FT EACH	634.0618 POSTS WOOD 4X6-INCH X 86-FT EACH	634.0812 POSTS TUBULAR STEEL 2X2-INCH X 12-FT EACH	637.2230 SIGNS TYPE II REFLECTIVE F SF	638.2102 MOVING SIGNS TYPE II EACH	638.2602 REMOVING SIGNS TYPE II EACH	638.3000 REMOVING SMALL SIGN SUPPORTS EACH	638.4000 MOVINGS MALL SIGN SUPPORTS EACH	REMARKS
0010	1-1	W1-8		18	X	24	1	-	-	-	3.00	-	1	1	-	
0010	1-2	W1-8		18	X	24	-	-	-	-	3.00	-	1	-	-	ON SAME POST AS 1-1
0010	1-3	W1-8		18	X	24	1	-	-	-	3.00	-	1	1	-	
0010	1-4	W1-8		18	X	24	-	-	-	-	3.00	-	1	-	-	ON SAME POST AS 1-3
0010	1-5	W1-6		48	X	24	-	1	-	-	8.00	-	1	1	-	
0010	1-6	W1-8		18	X	24	1	-	-	-	3.00	-	1	1	-	
0010	1-7	W1-8		18	X	24	-	-	-	-	3.00	-	1	-	-	ON SAME POST AS 1-6
0010	1-8	W1-8		18	X	24	1	-	-	-	3.00	-	1	1	-	
0010	1-9	W1-8		18	X	24	-	-	-	-	3.00	-	1	-	-	ON SAME POST AS 1-8
0010	1-10	W1-6		48	X	24	-	1	-	-	8.00	-	1	1	-	
0010	1-11	W1-8		18	X	24	1	-	-	-	3.00	-	1	1	-	
0010	1-12	W1-8		18	X	24	-	-	-	-	3.00	-	1	-	-	ON SAME POST AS 1-11
0010	1-13	W1-8		18	X	24	1	-	-	-	3.00	-	1	1	-	
0010	1-14	W1-8		18	X	24	-	-	-	-	3.00	-	1	-	-	ON SAME POST AS 1-13
0010	1-15	J12-2 M1-5A M1-5A M6-1 M6-1	 AH H	48	X X X X X	45	-	-	1	-	15.00	-	- 1 1 1 1	1	-	
0010	1-16	R7-1D		18	X	24	-	-	-	-	3.00	-	1	-	-	ON SAME POST AS 1-15
0010	1-17	I2-2	WAUPACA CO	36	X	15	-	1	-	-	3.75	-	1	1	-	
0010	1-18	M1-5A	H	24	X	24	-	-	-	-	4.00	-	1	-	-	ON SAME POST AS 1-17
0010	1-19	I2-2	WINNEBAGO COUNTY	36	X	15	-	-	-	-	3.75	-	1	-	-	ON SAME POST AS 1-17
0010	1-20	M1-5A	H	24	X	24	-	-	-	-	4.00	-	1	-	-	ON SAME POST AS 1-17
0010	1-21	-	"$500 FINE FOR THROWING LITTER OR TRASH ON ROADWAYS KEEP WINNEBAGO CO CLEAN"	-	X	-	-	-	-	-	-	1	-	-	-	SALVAGE EXISTING SIGN; INSTALL ON SAME POST AS 1-17
0010	1-22	-	WELCH RD	8	X	24	-	-	-	1	1.33	-	1	-	-	
0010	1-23	R1-1		30	X	30	-	1	-	-	5.18	-	1	-	-	
0010	1-24	W14-1		30	X	30	-	1	-	-	6.25	-	1	-	-	
0010	1-25	-		-	X	-	-	-	-	-	-	-	-	1	-	
0010	1-26	R2-1	35	24	X	30	-	1	-	-	5.00	-	1	1	-	
0010	1-27	J2-1 M2-1 M1-5A M6-1	 AH	24	X X X X	57	-	-	1	-	9.50	-	- 1 1 1	1	-	
0010	1-28	W1-4L		30	X	30	-	1	-	-	6.25	-	1	1	-	
0010	1-29	W1-1L		30	X	30	-	1	-	-	6.25	-	1	1	-	
0010	1-30	W13-1	25	18	X	18	-	-	-	-	2.25	-	1	-	-	ON SAME POST AS 1-29
0010	1-31	R2-1	35	24	X	30	-	1	-	-	5.00	-	1	1	-	
0010	2-1	R7-1D		18	X	24	-	1	-	-	3.00	-	1	1	-	
0010	2-2	W1-6		48	X	24	-	1	-	-	8.00	-	1	1	-	
0010	2-3	W1-6		48	X	24	-	-	-	-	8.00	-	1	-	-	ON SAME POST AS 2-2
0010	2-4	R7-1D		18	X	24	-	1	-	-	3.00	-	1	1	-	
0010	2-5	R2-1	35	24	X	30	-	1	-	-	5.00	-	1	1	-	
0010	2-6	R7-1D		18	X	24	-	1	-	-	3.00	-	1	1	-	
0010	2-7	R7-1D		18	X	24	-	1	-	-	3.00	-	1	1	-	
0010	2-8	W1-4R		30	X	30	-	1	-	-	6.25	-	1	1	-	
0010	2-9	W1-5R		30	X	30	-	1	-	-	6.25	-	1	1	-	
0010	2-10	R2-1		24	X	30	-	1	-	-	5.00	-	1	1	-	

(CONTINUED ON FOLLOWING SHEET)

3

TYPE II SIGNS (CONTINUED)

CATEGORY	SIGN NO.	SIGN CODE	MESSAGE	SIGN SIZE W (IN)	X	H (IN)	643.0614 POSTS WOOD 4X6-INCH X 14-FT EACH	634.0616 POSTS WOOD 4X6-INCH X 16-FT EACH	634.0618 POSTS WOOD 4X6-INCH X 86-FT EACH	634.0812 POSTS TUBULAR STEEL 2X2-INCH X 12-FT EACH	637.2230 SIGNS TYPE II REFLECTIVE F SF	638.2102 MOVING SIGNS TYPE II EACH	638.2602 REMOVING SIGNS TYPE II EACH	638.3000 REMOVING SMALL SIGN SUPPORTS EACH	638.4000 MOVING SMALL SIGN SUPPORTS EACH	REMARKS
0010	3-1	R7-1D		18	X	24	-	1	-	-	3.00	-	1	1	-	
0010	3-2	R7-1D		18	X	24	-	1	-	-	3.00	-	1	1	-	
0010	3-3	W1-2L		30	X	30	-	1	-	-	6.25	-	1	1	-	
0010	3-4	R7-1D		18	X	24	-	1	-	-	3.00	-	1	1	-	
0010	3-5	R7-1D		18	X	24	-	1	-	-	3.00	-	1	1	-	
0010	3-6	R2-1	35	24	X	30	-	1	-	-	5.00	-	1	1	-	
0010	3-7	R2-1	25	24	X	30	-	1	-	-	5.00	-	1	1	-	
0010	4-1	R2-1	25	24	X	30	-	1	-	-	5.00	-	1	1	-	
0010	4-2	-	PARK BOUNDARY - NO TRESSPASSING	-	X	-	-	-	-	-	-	1	-	-	1	SALVAGE SIGN AND WOOD POST; INSTALL IN EXISTING LOCATION
0010	5-1	R7-2D	1:00 AM TO 7:00 AM	18	X	24	-	1	-	-	3.00	-	1	1	-	
0010	5-2	-	TREE CITY USA	-	X	-	-	-	-	-	-	1	-	-	-	SALVAGE SIGN AND INSTALL ON SAME POST AS 5-1
0010	5-3	-	ATV ORDINANCE (VILLAGE OF FREMONT)	-	X	-	-	-	-	-	-	1	-	-	-	SALVAGE SIGN AND INSTALL ON SAME POST AS 5-1
0010	5-4	R2-1	25	24	X	30	-	1	-	-	5.00	-	1	1	-	
0010	5-5	W3-1		30	X	30	-	1	-	-	6.25	-	1	1	-	
0010 0010 0010	5-6	J1-1 52-1 51-6	 110	24	X X X	39	-	-	1	-	6.50	-	2	1	-	
0010	6-1	R2-1	25	24	X	30	-	1	-	-	5.00	-	1	1	-	
0010	6-2	R1-1		30	X	30	-	-	-	-	5.18	-	1	1	-	
0010	6-3	-	LIND ST	8	X	24	-	-	-	1	1.33	-	1	1	-	
0010	6-4	-	TUSTIN RD	8	X	24	-	-	-	-	1.33	-	1	-	-	ON SAME POST AS 6-3
0010	6-5	-		-	X	-	-	-	-	-	-	1	-	-	1	SALVAGE SIGN AND POST; INSTALL IN EXISTING LOCATION
0010	6-6	-		-	X	-	-	-	-	-	-	1	-	-	-	ON SAME POST AS 6-5; SALVAGE SIGN
			TOTAL 0010				6	30	3	2	249.86	6	61	40	2	

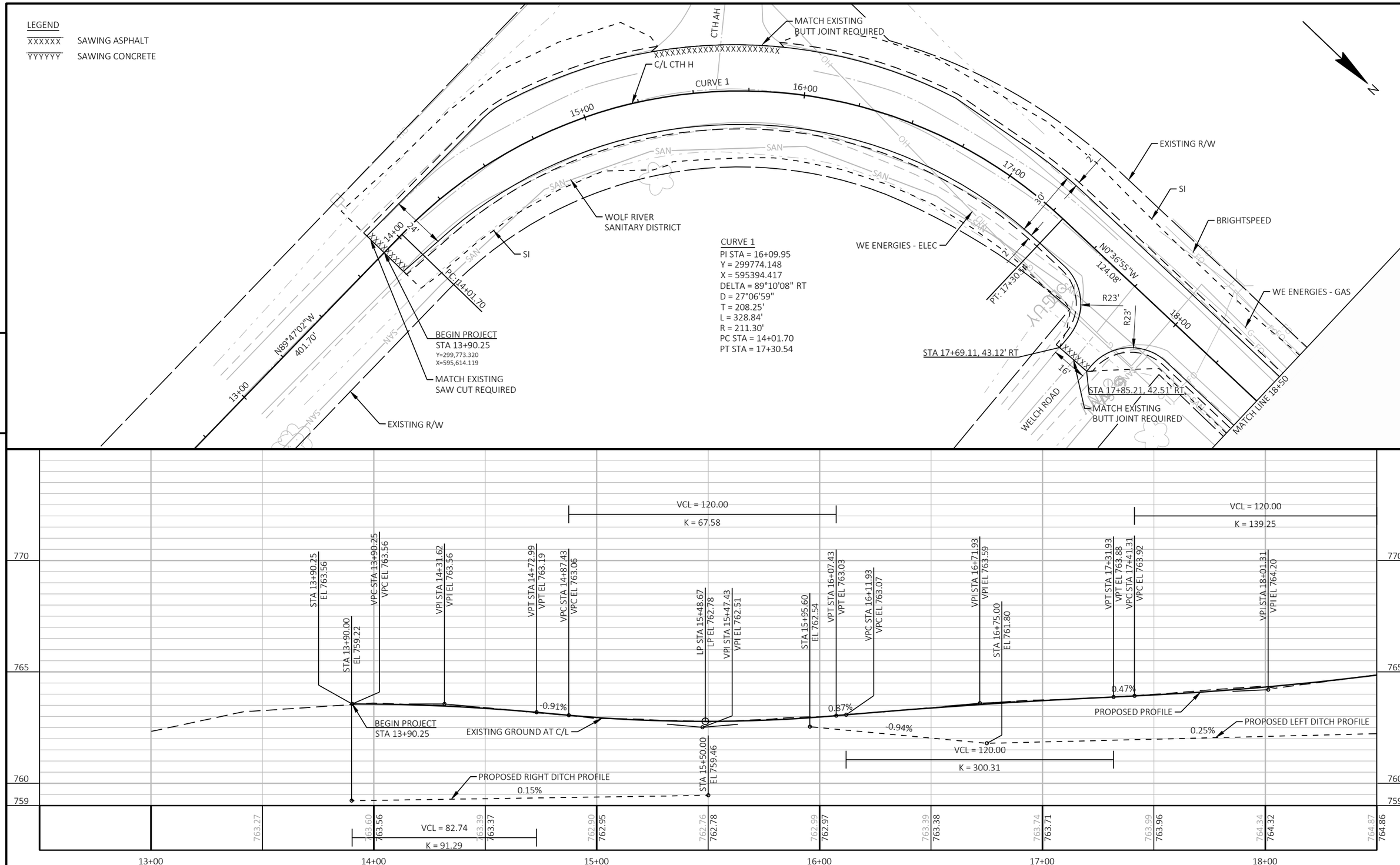

PROJECT NO: 6834-01-70	HWY: CTH H	COUNTY: WAUPACA	PLAN AND PROFILE: CTH H	SHEET 29	E

FILE NAME : R:\2200\2288\2288015\68340100\SHEETS\050101-PP.DWG
LAYOUT NAME - 01
PLOT DATE : 9/10/2024 12:29 PM
PLOT BY : ERIC HANDLER
PLOT NAME :
PLOT SCALE : 1 IN:40 FT
WISDOT/CADDS SHEET 44

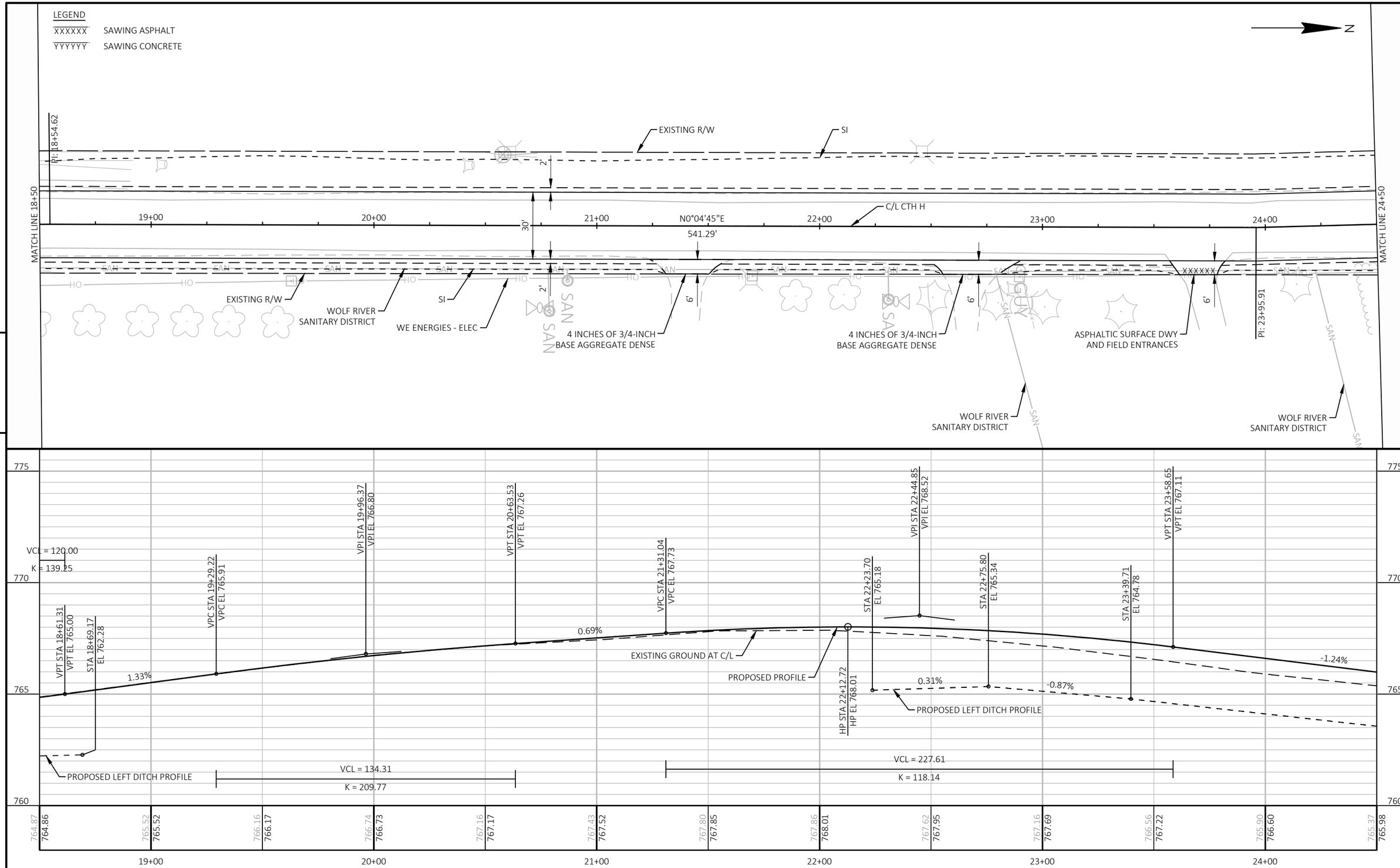

PROJECT NO: 6834-01-70	HWY: CTH H	COUNTY: WAUPACA	PLAN AND PROFILE: CTH H	SHEET 30	E

FILE NAME : R:\2200\2288\2288015\68340100\SHEETS\050101-PP.DWG
LAYOUT NAME - 02
PLOT DATE : 9/10/2024 12:29 PM
PLOT BY : ERIC HANDLER
PLOT NAME :
PLOT SCALE : 1 IN:40 FT
WISDOT/CADDS SHEET 44

LEGEND

XXXXXX SAWING ASPHALT

YYYYYY SAWING CONCRETE

CURVE 2
PI STA = 26+89.40
Y = 300941.126
X = 595383.305
DELTA = 44°44'23" LT
D = 14°19'26"
T = 164.62'
L = 312.34'
R = 400.00'
PC STA = 25+24.78
PT STA = 28+37.12

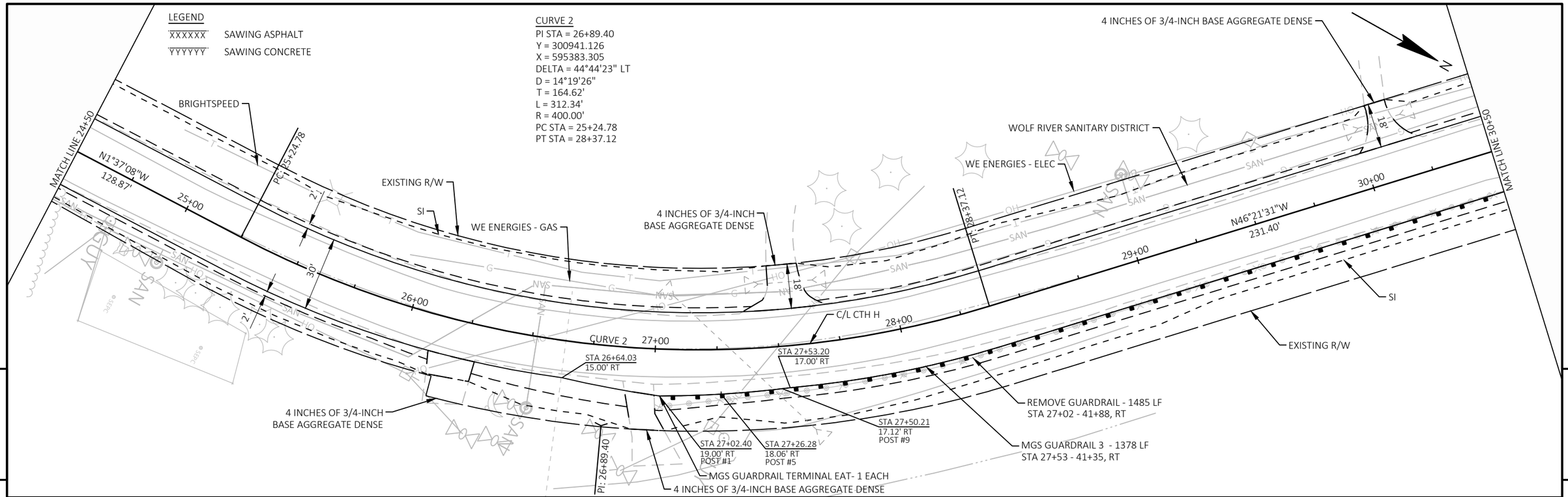

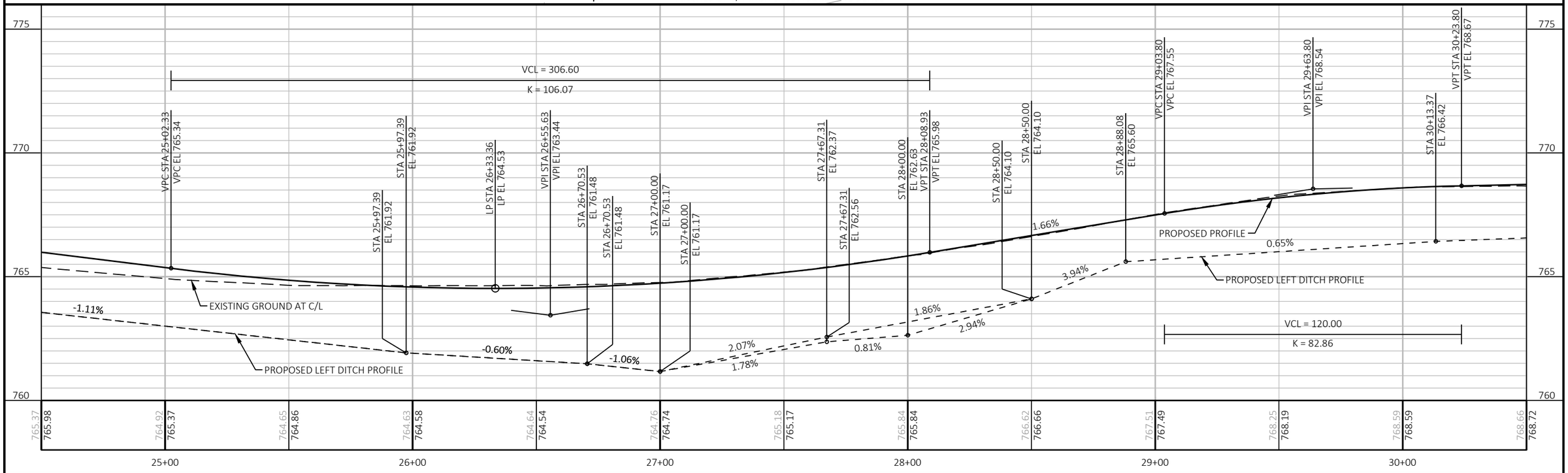

PROJECT NO: 6834-01-70	HWY: CTH H	COUNTY: WAUPACA	PLAN AND PROFILE: CTH H	SHEET 31	E

FILE NAME : R:\2200\2288\2288015\68340100\SHEETS\050101-PP.DWG
LAYOUT NAME - 03

PLOT DATE : 9/10/2024 12:29 PM PLOT BY : ERIC HANDLER PLOT NAME : PLOT SCALE : 1 IN:40 FT

WISDOT/CADDS SHEET 44

LEGEND

XXXXXX SAWING ASPHALT

YYYYYY SAWING CONCRETE

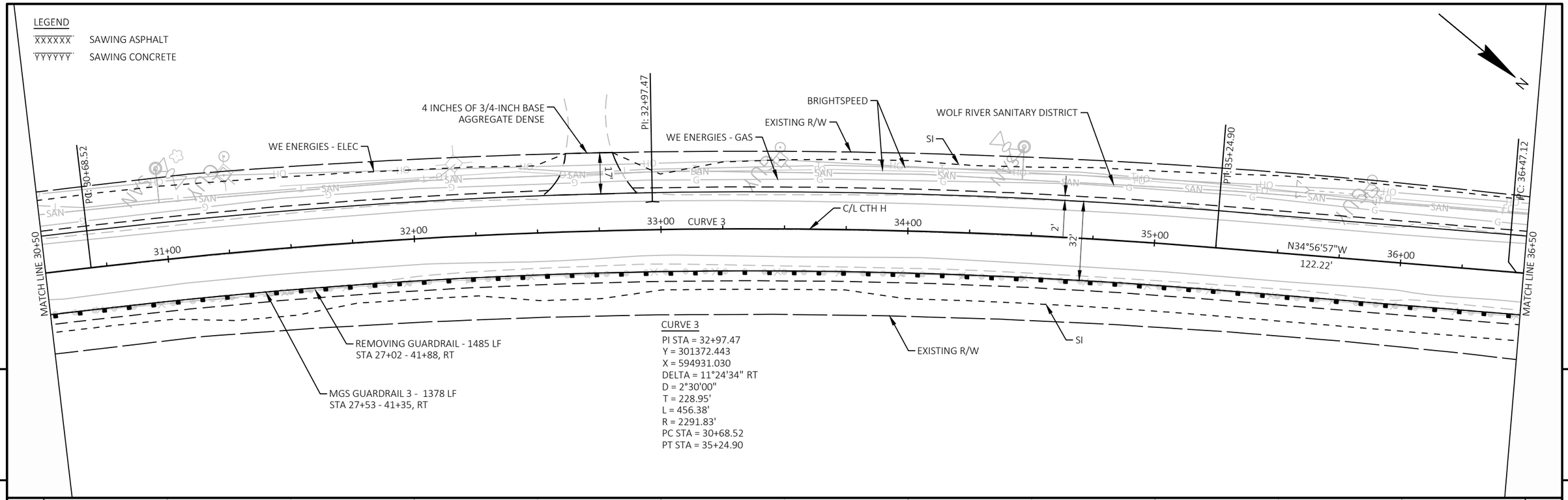

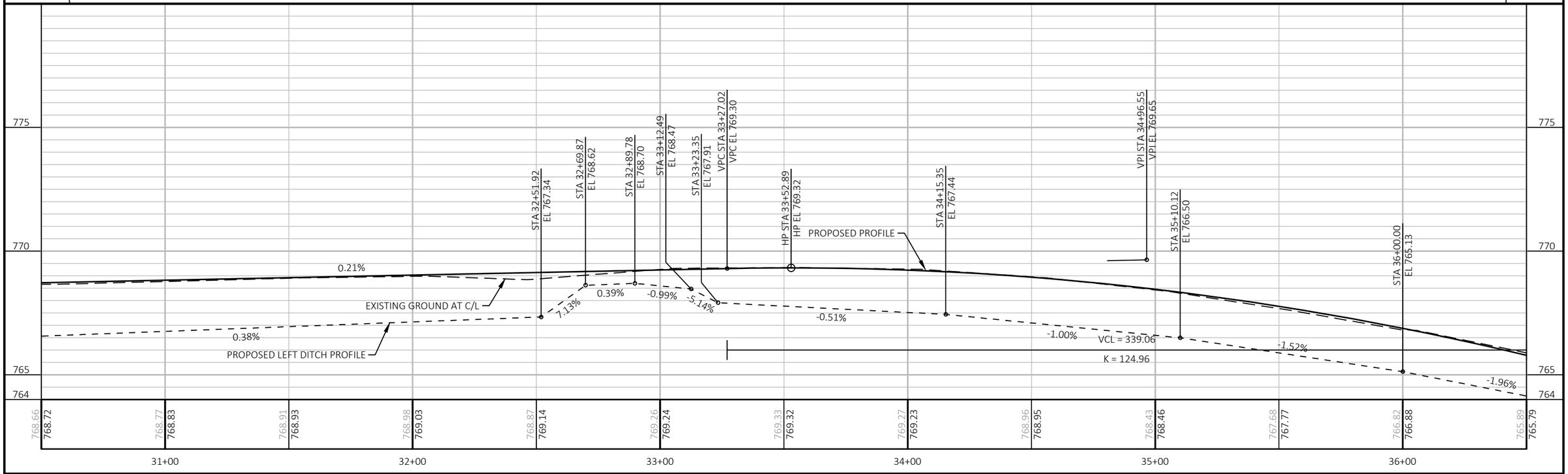

PROJECT NO: 6834-01-70	HWY: CTH H	COUNTY: WAUPACA	PLAN AND PROFILE: CTH H	SHEET 32	E

FILE NAME : R:\2200\2288\2288015\68340100\SHEETS\050101-PP.DWG
LAYOUT NAME - 04

PLOT DATE : 9/10/2024 12:29 PM PLOT BY : ERIC HANDLER PLOT NAME : PLOT SCALE : 1 IN:40 FT

WISDOT/CADDS SHEET 44

LEGEND

XXXXXX SAWING ASPHALT

YYYYYY SAWING CONCRETE

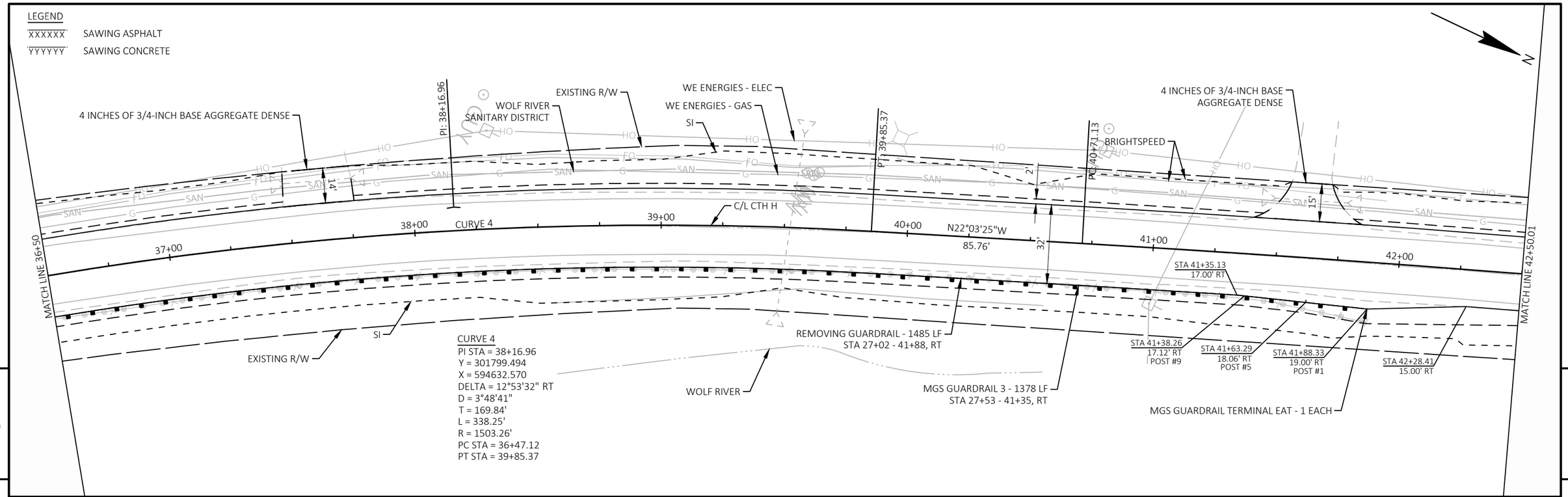

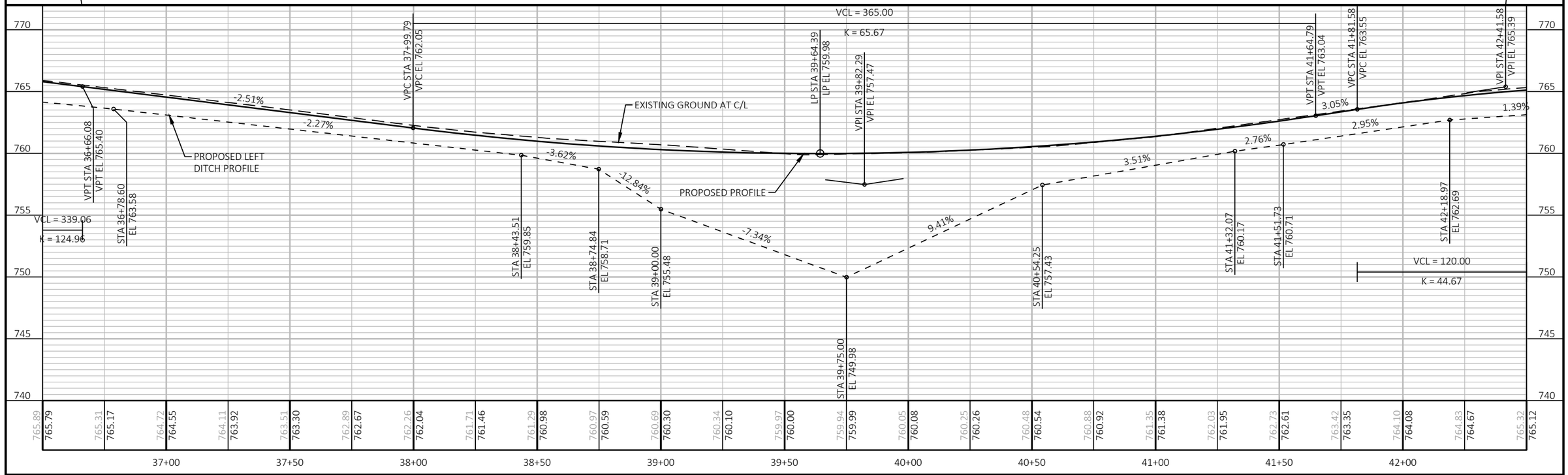

PROJECT NO: 6834-01-70	HWY: CTH H	COUNTY: WAUPACA	PLAN AND PROFILE: CTH H	SHEET 33	E

FILE NAME : R:\2200\2288\2288015\68340100\SHEETS\050101-PP.DWG
LAYOUT NAME - 05

PLOT DATE : 9/10/2024 12:29 PM PLOT BY : ERIC HANDLER PLOT NAME : PLOT SCALE : 1 IN:40 FT

WISDOT/CADDS SHEET 44

LEGEND

XXXXXX SAWING ASPHALT

YYYYYY SAWING CONCRETE

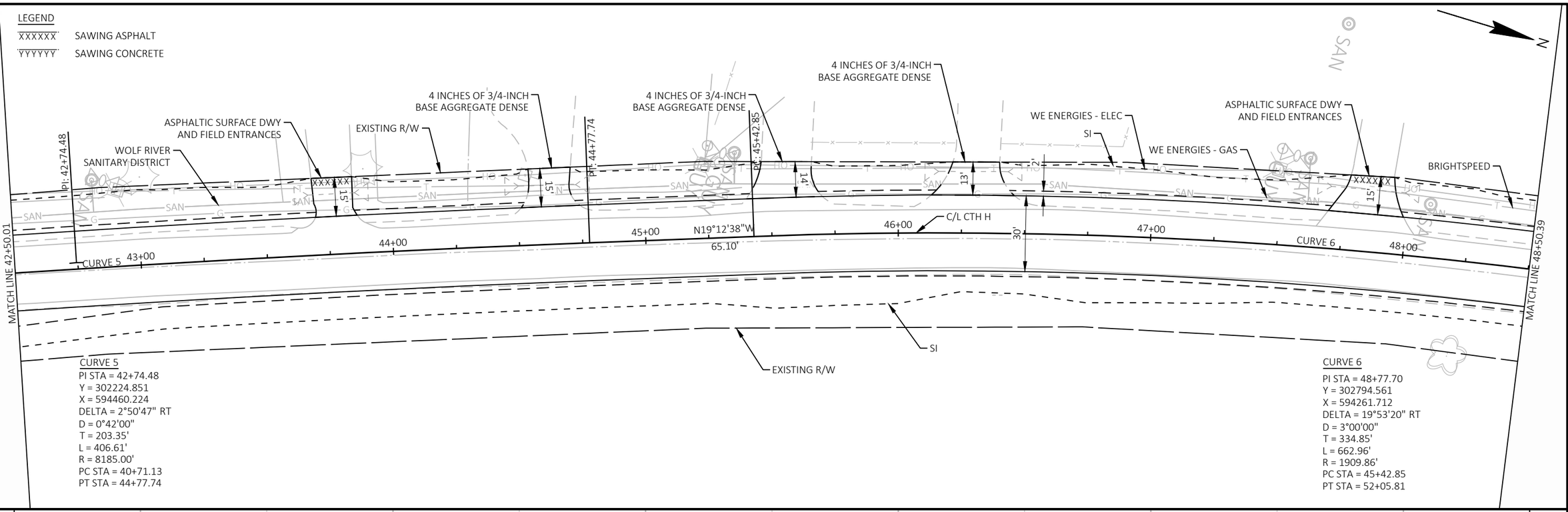

CURVE 5

PI STA = 42+74.48
Y = 302224.851
X = 594460.224
DELTA = 2°50'47" RT
D = 0°42'00"
T = 203.35'
L = 406.61'
R = 8185.00'
PC STA = 40+71.13
PT STA = 44+77.74

CURVE 6

PI STA = 48+77.70
Y = 302794.561
X = 594261.712
DELTA = 19°53'20" RT
D = 3°00'00"
T = 334.85'
L = 662.96'
R = 1909.86'
PC STA = 45+42.85
PT STA = 52+05.81

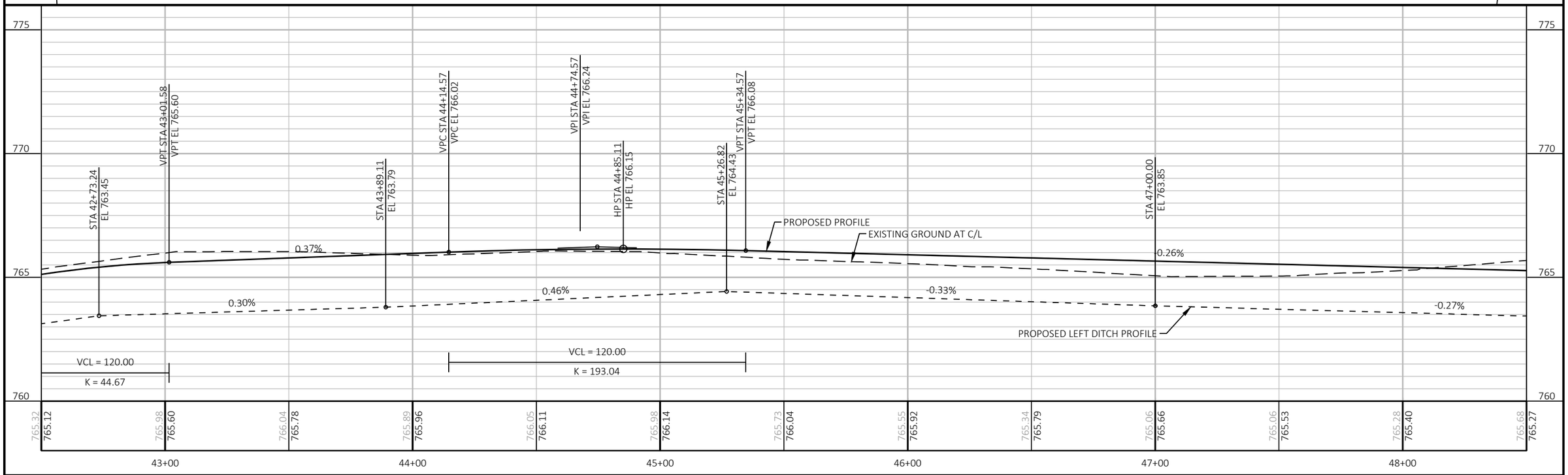

PROJECT NO: 6834-01-70	HWY: CTH H	COUNTY: WAUPACA	PLAN AND PROFILE: CTH H	SHEET 34	E

LEGEND

XXXXXX SAWING ASPHALT

YYYYYY SAWING CONCRETE

N

WOLF RIVER SANITARY DISTRICT

PI: 48+77.70

4 INCHES OF 3/4-INCH BASE AGGREGATE DENSE

WE ENERGIES - ELEC

BRIGHTSPEED

SI

ASPHALTIC SURFACE DWY AND FIELD ENTRANCES

ASPHALTIC SURFACE DWY AND FIELD ENTRANCES

ASPHALTIC SURFACE DWY AND FIELD ENTRANCES

ASPHALTIC SURFACE DWY AND FIELD ENTRANCES

ASPHALTIC SURFACE DWY AND FIELD ENTRANCES

WE ENERGIES - GAS

EXISTING R/W

14"

13"

15"

18"

19"

2'

21"

20"

MATCH LINE 48+50.39

CURVE 6

49+00

50+00

51+00

52+00

N0°40'42"E

35.59'

30'

53+00

C/L CTH H

CURVE 7

54+00

MATCH LINE 54+47

11'

REMOVING CONCRETE SIDEWALK - 4 SY

REMOVE CONCRETE SIDEWALK TO 11-FOOT JOINT. TOP STEP AND LANDING TO REMAIN.

EXISTING R/W

PT: 52+05.81

PC: 52+41.40

2'

SI

CURVE 6	CURVE 7
PI STA = 48+77.70	PI STA = 55+65.32
Y = 302794.561	Y = 303488.874
X = 594261.712	X = 594269.933
DELTA = 19°53'20" RT	DELTA = 9°41'40" LT
D = 3°00'00"	D = 1°30'00"
T = 334.85'	T = 323.92'
L = 662.96'	L = 646.29'
R = 1909.86'	R = 3819.72'
PC STA = 45+42.85	PC STA = 52+41.40
PT STA = 52+05.81	PT STA = 58+87.70

770

765

760

757

VPC STA 48+76.49
VPC EL 765.21

VPI STA 49+38.18
VPI EL 765.05

VPT STA 49+99.86
VPT EL 764.16

PROPOSED PROFILE

EXISTING GROUND AT C/L

PROPOSED LEFT DITCH PROFILE

-1.44%

-1.48%

-1.85%

-0.69%

0.02%

-0.32%

-1.01%

-0.93%

VCL = 118.93

K = 81.70

VCL = 123.37

K = 104.42

VCL = 93.91

K = 91.04

VCL = 105.28

K = 607.43

STA 49+37.69
EL 763.20

STA 50+51.53
EL 761.52

VPC STA 50+88.52
VPC EL 762.89

STA 51+13.69
EL 760.37

VPI STA 51+47.93
VPI EL 762.03

STA 51+61.23
EL 760.04

LP STA 52+05.98
LP EL 762.04

VPT STA 52+07.45
VPT EL 762.04

VPC STA 52+31.87
VPC EL 762.05

HP STA 52+33.51
HP EL 762.05

VPI STA 52+78.82
VPI EL 762.06

STA 52+79.64
EL 759.66

VPT STA 53+25.78
VPT EL 761.58

VPC STA 54+02.73
VPC EL 760.80

765.68	765.27	765.37	765.12	764.88	764.76	764.18	764.16	763.43	763.44	762.75	762.73	762.16	762.23	762.08	762.05	762.04	762.03	761.79	761.80	761.31	761.33	760.86	760.83	760.28	760.34

49+00 50+00 51+00 52+00 53+00 54+00

PROJECT NO: 6834-01-70	HWY: CTH H	COUNTY: WAUPACA	PLAN AND PROFILE: CTH H	SHEET 35 E

FILE NAME : R:\2200\2288\2288015\68340100\SHEETS\050101-PP.DWG
LAYOUT NAME - 07

PLOT DATE : 9/10/2024 12:30 PM PLOT BY : ERIC HANDLER PLOT NAME : PLOT SCALE : 1 IN:40 FT

WISDOT/CADDS SHEET 44

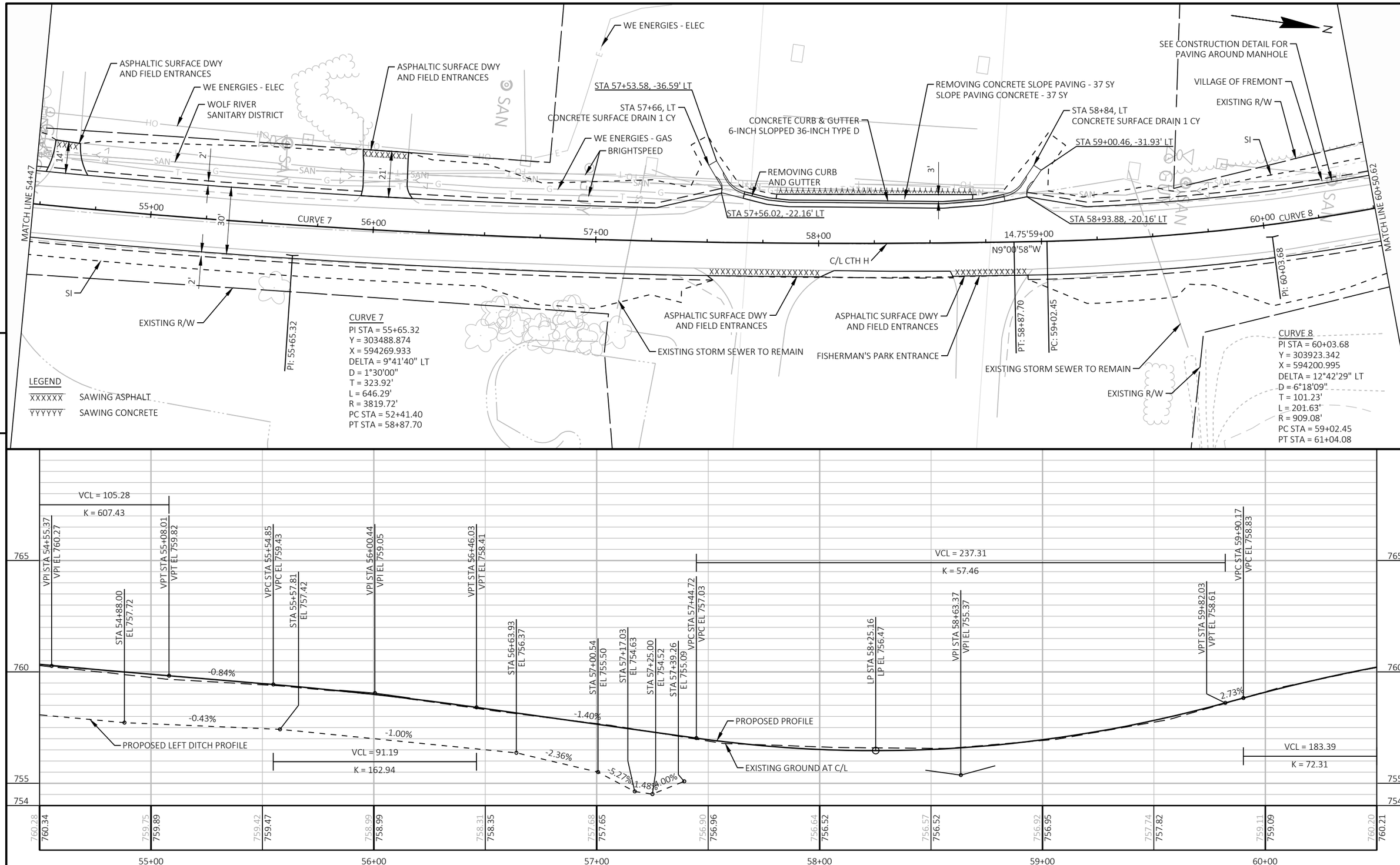

PROJECT NO: 6834-01-70	HWY: CTH H	COUNTY: WAUPACA	PLAN AND PROFILE: CTH H	SHEET 36	E

FILE NAME : R:\2200\2288\2288015\68340100\SHEETS\050101-PP.DWG
LAYOUT NAME - 08
PLOT DATE : 9/10/2024 12:30 PM
PLOT BY : ERIC HANDLER
PLOT NAME :
PLOT SCALE : 1 IN:40 FT
WISDOT/CADDS SHEET 44

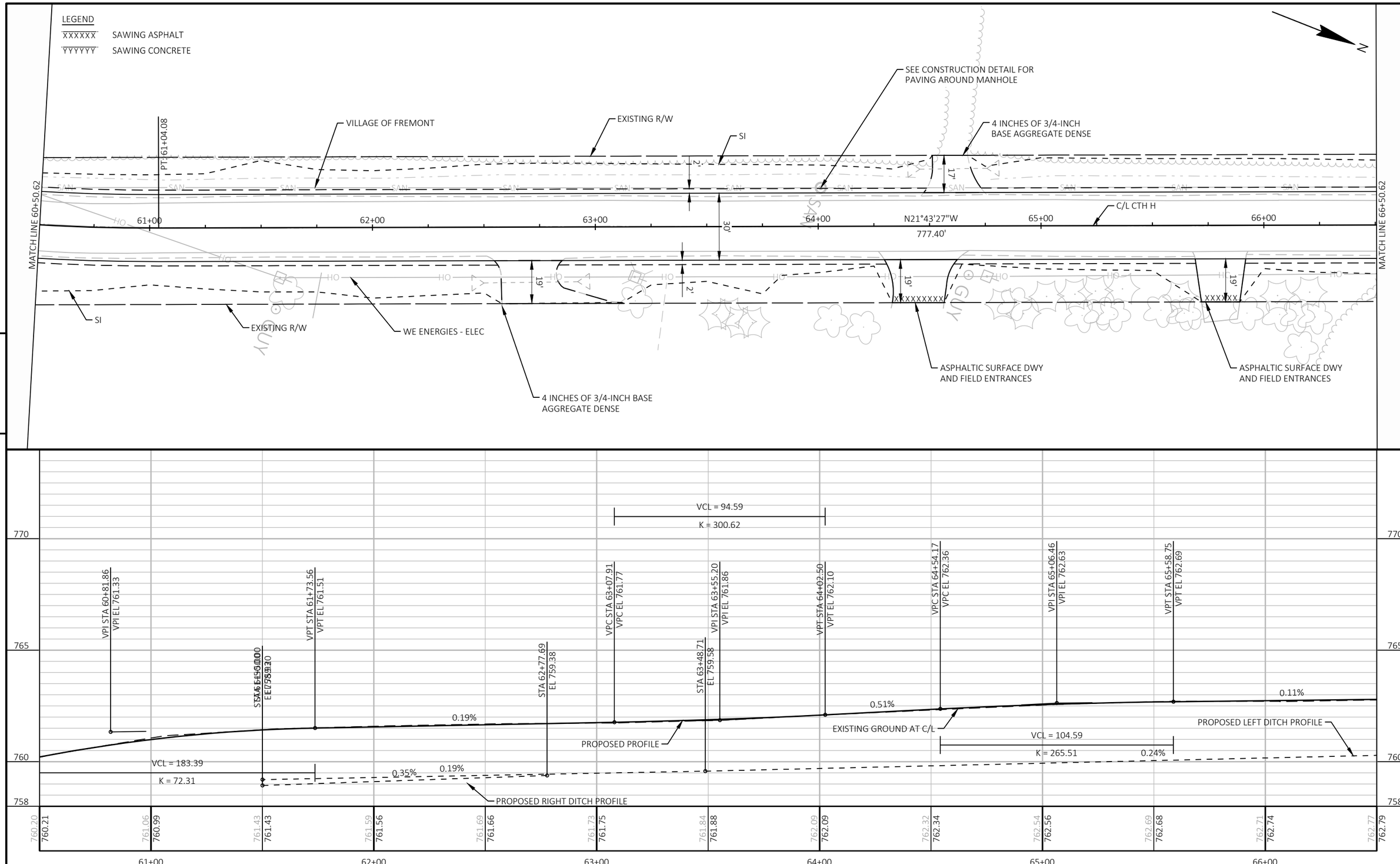

PROJECT NO: 6834-01-70	HWY: CTH H	COUNTY: WAUPACA	PLAN AND PROFILE: CTH H	SHEET 37	E

FILE NAME : R:\2200\2288\2288015\68340100\SHEETS\050101-PP.DWG
LAYOUT NAME - 09
PLOT DATE : 9/10/2024 12:30 PM
PLOT BY : ERIC HANDLER
PLOT NAME :
PLOT SCALE : 1 IN:40 FT
WISDOT/CADDS SHEET 44

LEGEND

XXXXXX SAWING ASPHALT

YYYYYY SAWING CONCRETE

SEE CONSTRUCTION DETAIL FOR PAVING AROUND MANHOLE

4 INCHES OF 3/4-INCH BASE AGGREGATE DENSE

VILLAGE OF FREMONT

PI: 68+81.48

ASPHALTIC SURFACE DWY AND FIELD ENTRANCES

SI

EXISTING R/W

MATCH LINE 66+50.62

MATCH LINE 72+50.62

67+00 68+00 69+00 70+00 71+00 72+00

C/L CTH H

12' 12' 12' 11' 11' 30' 2' 2' 21'

WE ENERGIES - ELEC

EXISTING R/W

SI

ASPHALTIC SURFACE DWY AND FIELD ENTRANCES

N

770 765 760 758

VPC STA 66+65.21 VPC EL 762.81

VPI STA 67+10.80 VPI EL 762.86

VPT STA 67+56.40 VPT EL 762.88

STA 67+50.94 EL 760.52

STA 68+25.00 EL 760.95

STA 68+85.27 EL 761.01

VPC STA 69+85.81 VPC EL 762.95

HP STA 69+89.81 HP EL 762.95

VPI STA 70+45.43 VPI EL 762.97

VPT STA 71+05.05 VPT EL 762.41

STA 71+34.75 EL 759.89

VPC STA 71+49.77 VPC EL 761.99

VPI STA 71+95.29 VPI EL 761.56

VPT STA 72+40.82 VPT EL 760.79

0.03% 0.58% -0.45% -0.94% -1.76%

VCL = 91.18

K = 1116.64

VCL = 119.24

K = 122.22

VCL = 91.05

K = 121.93

PROPOSED LEFT DITCH PROFILE

EXISTING GROUND AT C/L

PROPOSED PROFILE

PROPOSED RIGHT DITCH PROFILE

762.77 762.79 762.85 762.85 762.84 762.88 762.87 762.89 762.88 762.91 762.94 762.93 762.96 762.94 762.89 762.95 762.81 762.81 762.47 762.46 762.02 761.99 761.42 761.41 760.69 760.64

67+00 68+00 69+00 70+00 71+00 72+00

PROJECT NO: 6834-01-70	HWY: CTH H	COUNTY: WAUPACA	PLAN AND PROFILE: CTH H	SHEET 38	E

LEGEND

XXXXXX SAWING ASPHALT

YYYYYY SAWING CONCRETE

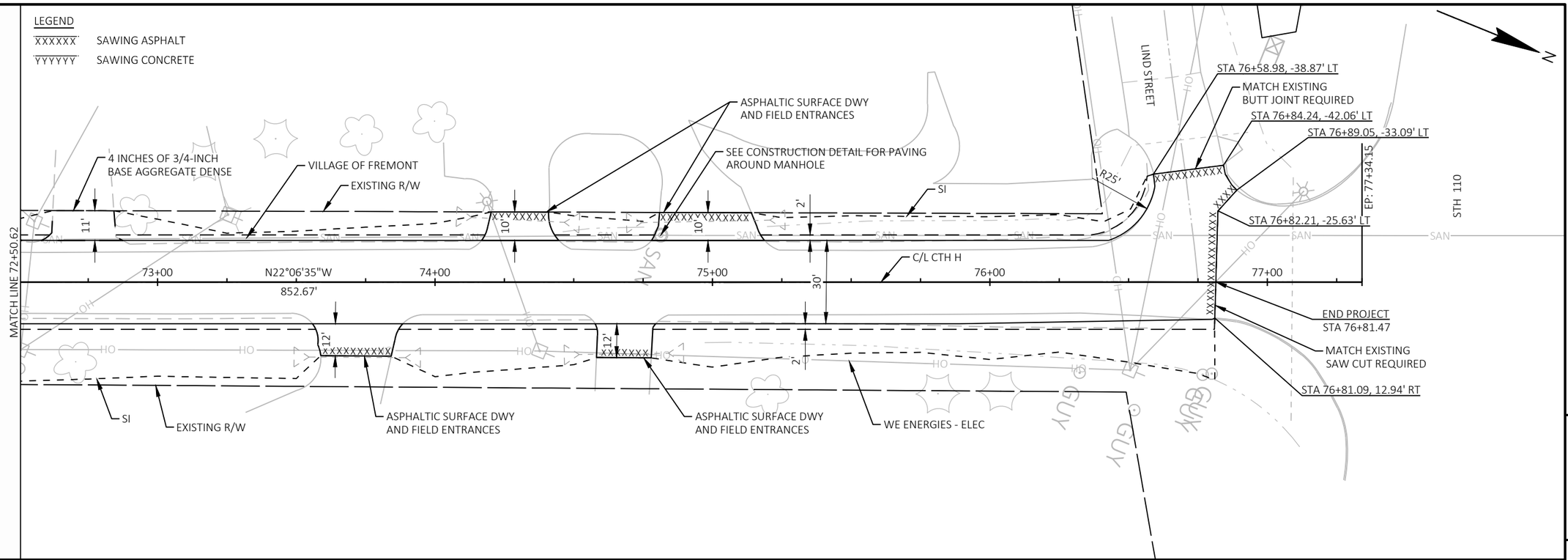

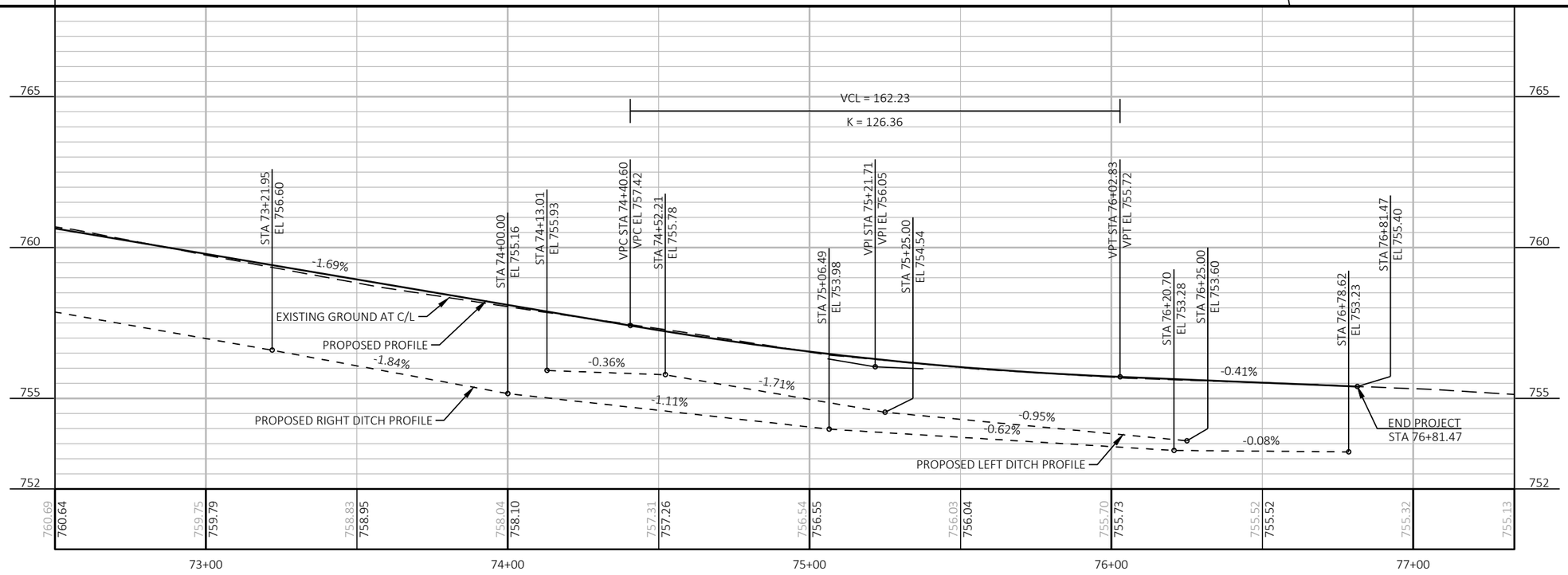

PROJECT NO: 6834-01-70	HWY: CTH H	COUNTY: WAUPACA	PLAN AND PROFILE: CTH H	SHEET 39	E

FILE NAME : R:\2200\2288\2288015\68340100\SHEETS\050101-PP.DWG
LAYOUT NAME - 11

PLOT DATE : 9/10/2024 12:30 PM PLOT BY : ERIC HANDLER PLOT NAME : PLOT SCALE : 1 IN:40 FT

WISDOT/CADDS SHEET 44

Standard Detail Drawing List

08D01-23A	CONCRETE CURB & GUTTER
08D01-23B	CONCRETE CURB, TIES AND CURB AND GUTTER APPLICATIONS
08D04-07	CONCRETE SURFACE DRAINS & ASPHALTIC FLUMES
08E08-03	TYPICAL INSTALLATIONS OF EROSION BALES / TEMPORARY DITCH CHECKS
08E09-06	SILT FENCE
08E10-02	INLET PROTECTION TYPE A, B, C AND D
08E15-01	CULVERT PIPE CHECK
13C19-03	HMA LONGITUDINAL JOINTS
14B29-01	SAFETY EDGE
14B42-07A	MIDWEST GUARDRAIL SYSTEM (MGS) GUARDRAIL
14B42-07B	MIDWEST GUARDRAIL SYSTEM (MGS) GUARDRAIL
14B42-07C	MIDWEST GUARDRAIL SYSTEM (MGS) GUARDRAIL
14B42-07D	MIDWEST GUARDRAIL SYSTEM (MGS) GUARDRAIL
14B44-04A	MIDWEST GUARDRAIL SYSTEM ENERGY ABSORBING TERMINAL (MGS)
14B44-04B	MIDWEST GUARDRAIL SYSTEM ENERGY ABSORBING TERMINAL (MGS)
14B44-04C	MIDWEST GUARDRAIL SYSTEM ENERGY ABSORBING TERMINAL (MGS)
15C02-09A	BARRICADES AND SIGNS FOR MAINLINE CLOSURES
15C02-09B	BARRICADES AND SIGNS FOR VARIOUS CLOSURES
15C02-09C	DETOUR SIGNING FOR MAINLINE CLOSURES
15C02-09H	MODIFIED ROUTE ASSEMBLY FOR DETOUR SIGNING
15C03-05	BARRICADES AND SIGNS FOR SIDEROAD CLOSURES
15C04-05	TRAFFIC CONTROL, ADVANCE WARNING SIGNS 45 M.P.H. OR GREATER TWO-WAY UNDIVIDED ROAD OPEN TO TRAFFIC
15C05-05	TRAFFIC CONTROL, ADVANCE WARNING SIGNS 40 M.P.H. OR LESS
15C08-23A	PERMANENT LONGITUDINAL PAVEMENT MARKINGS
15C11-10B	CHANNELIZING DEVICES DRUMS, CONES, BARRICADES AND VERTICAL PANELS
15C12-09A	TRAFFIC CONTROL FOR LANE CLOSURE WITH FLAGGING OPERATION
15D45-03	TRAFFIC CONTROL, SIGNING ON ROADWAYS WITH LOOSE GRAVEL

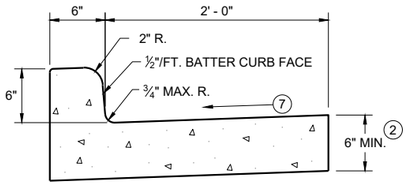

TYPES A (1) & D

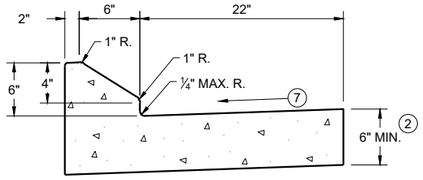

6" SLOPED CURB TYPES G (1) & J

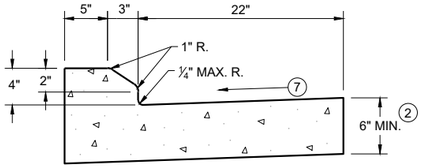

4" SLOPED CURB TYPES G (1) & J

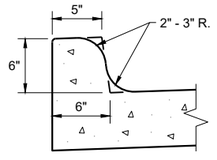

TYPES K (1) & L
(OPTIONAL CURB SHAPE)

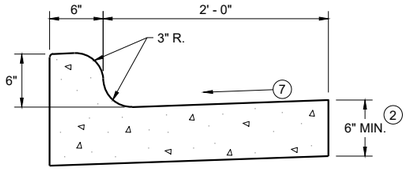

TYPES K (1) & L

CONCRETE CURB AND GUTTER 30"

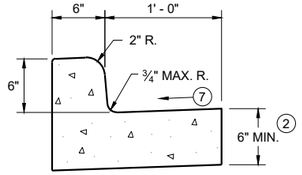

TYPES A (1) & D

CONCRETE CURB AND GUTTER 18"

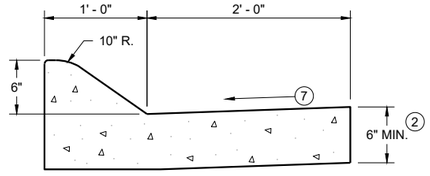

6" SLOPED CURB TYPES A (1) & D

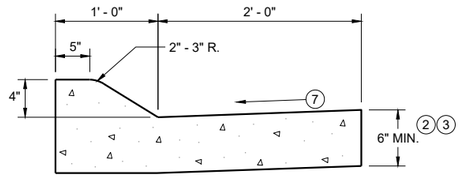

4" SLOPED CURB TYPES A (1) & D

CONCRETE CURB AND GUTTER 36"

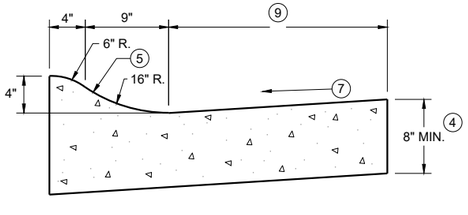

4" SLOPED CURB TYPES R (1) & T

TBT & TBTT	X
30"	22"
36"	28"

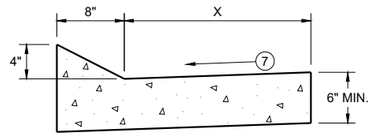

TYPES TBT & TBTT (1)

CONCRETE CURB AND GUTTER

PAVEMENT THICKNESS AND MAXIMUM CONCRETE PANEL WIDTH TABLE

PAVEMENT THICKNESS	MAXIMUM PANEL WIDTH
LESS THAN 10"	12'
10" & ABOVE	15'

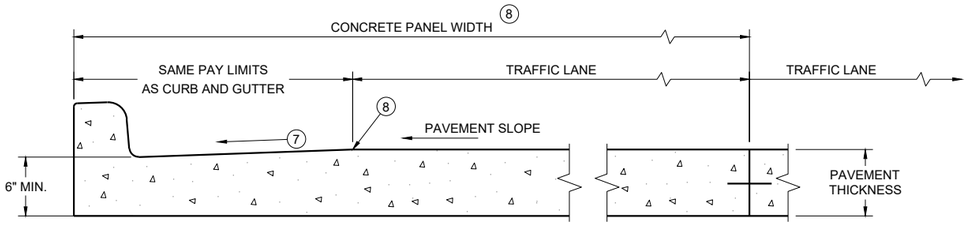

PARTIAL SECTION OF PAVEMENT * WITH INTEGRAL CURB AND GUTTER

* BIKE LANE IS NOT SHOWN

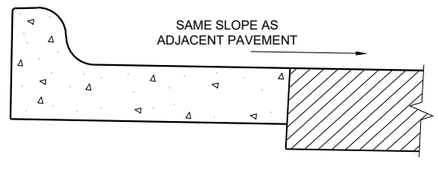

REVERSE SLOPE GUTTER (6)
(TYPICAL FOR ALL CURB & GUTTER TYPES)

GENERAL NOTES

DETAILS OF CONSTRUCTION AND WORKMANSHIP NOT SHOWN ON THIS DRAWING SHALL CONFORM TO THE PERTINENT REQUIREMENTS OF THE CONTRACT.

PAVEMENT TIES AND TIE BARS SHALL BE EPOXY COATED IN CONFORMANCE WITH SUBSECTION 505.2.6.2 OF THE STANDARD SPECIFICATIONS.

INTEGRAL CURB AND GUTTER SHALL CONFORM TO THE DETAILS SHOWN FOR CONCRETE CURB AND GUTTER INCLUDING THE TRANSVERSE GUTTER SLOPE.

UNLESS OTHERWISE SHOWN ON THE TYPICAL CROSS SECTIONS, THE BASE AGGREGATE AND COMMON EXCAVATION LIMITS ARE 2' - 0" BEHIND THE BACK OF CURBS.

(1) TIE BARS ARE REQUIRED FOR CURB AND GUTTERS TYPES A, G, K, R, AND TBTT.

(2) THE BOTTOM OF CURB AND GUTTER MAY BE CONSTRUCTED EITHER LEVEL OR PARALLEL TO THE SLOPE OF THE SUBGRADE OR BASE AGGREGATE PROVIDED A 6" MINIMUM GUTTER THICKNESS IS MAINTAINED.

(3) USE 8" MINIMUM GUTTER THICKNESS WHEN USED WITH AN ADJACENT CONCRETE TRUCK APRON PLACED BEHIND BACK OF CURB.

(4) THE BOTTOM OF CURB AND GUTTER MAY BE CONSTRUCTED EITHER LEVEL OR PARALLEL TO THE SLOPE OF THE SUBGRADE OR BASE AGGREGATE PROVIDED A 8" MINIMUM GUTTER THICKNESS IS MAINTAINED.

(5) UNLESS OTHERWISE NOTED, FOR STAKING PURPOSES THE FACE OF CURB IS 6" FROM THE BACK OF CURB.

(6) WHEN REVERSE SLOPE GUTTER IS REQUIRED, THE LOCATION(S) WILL BE SHOWN ELSEWHERE IN THE PLAN.

(7) USE 4% GUTTER CROSS SLOPE UNLESS OTHERWISE NOTED IN THE PLANS.

(8) INCLUDE LONGITUDINAL JOINT AND TIE BARS ALONG LANE EDGE WHEN CONCRETE PANEL WIDTH EXCEEDS THE MAXIMUM WIDTH PER TABLE BELOW. LONGITUDINAL JOINT(S) ARE NOT ALLOWED WITHIN TRAFFIC LANES AND BIKE LANES. LONGITUDINAL JOINT MAY BE SAWED.

(9) CONCRETE CURB AND GUTTER 4-INCH SLOPED 30-INCH TYPE "R" AND "T" = 17 INCHES
CONCRETE CURB AND GUTTER 4-INCH SLOPED 36-INCH TYPE "R" AND "T" = 23 INCHES

CONCRETE CURB AND GUTTER

STATE OF WISCONSIN
DEPARTMENT OF TRANSPORTATION

SDD 08D01-23a

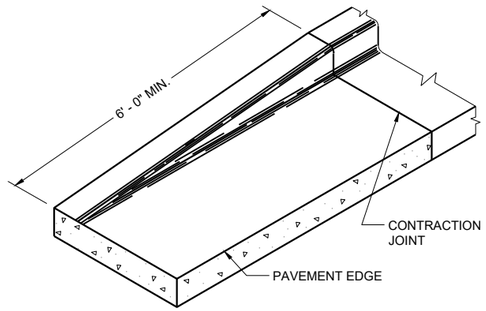

END SECTION CURB AND GUTTER

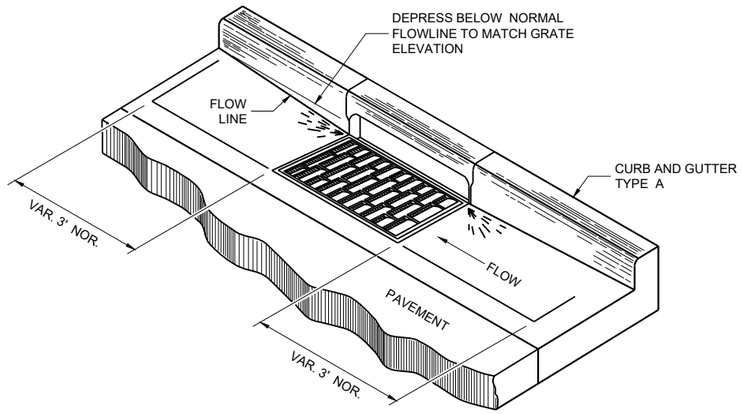

DETAIL OF CURB AND GUTTER AT INLETS

(TYPICAL H INLET COVER SHOWN)

GENERAL NOTES

DETAILS OF CONSTRUCTION AND WORKMANSHIP NOT SHOWN ON THIS DRAWING SHALL CONFORM TO THE PERTINENT REQUIREMENTS OF THE CONTRACT.

PAVEMENT TIES AND TIE BARS SHALL BE EPOXY COATED IN CONFORMANCE WITH SUBSECTION 505.2.6.2 OF THE STANDARD SPECIFICATIONS.

UNLESS OTHERWISE SHOWN ON THE TYPICAL CROSS SECTIONS, THE BASE AGGREGATE AND COMMON EXCAVATION LIMITS ARE 2' - 0" BEHIND THE BACK OF CURBS.

(1) TIE BARS ARE REQUIRED FOR CURB AND GUTTERS TYPES A, G, K, R, AND TBTT.

(2) THE BOTTOM OF CURB AND GUTTER MAY BE CONSTRUCTED EITHER LEVEL OR PARALLEL TO THE SLOPE OF THE SUBGRADE OR BASE AGGREGATE PROVIDED A 6" MINIMUM GUTTER THICKNESS IS MAINTAINED.

(10) REFER TO SDD 08D18 AND 08D19 FOR ADDITIONAL DRIVEWAY ENTRANCE CURB DETAILS.

(11) PLACE 1" THICK EXPANSION JOINT MATERIAL BETWEEN VERTICAL FACE CURB TYPES EXTENDING FROM THE TOP OF CURB TO 1 INCH BELOW THE ADJOINING CONCRETE SURFACE. RIGID CONCRETE STRUCTURES INCLUDE RAISED CONCRETE MEDIANS, CONCRETE SAFETY ISLANDS, SPLITTER ISLANDS, OR LOCATIONS IDENTIFIED ON THE PLANS.

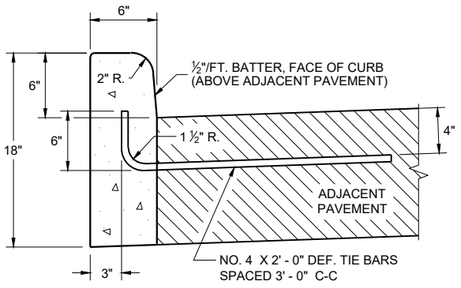

TYPES A (1) & D

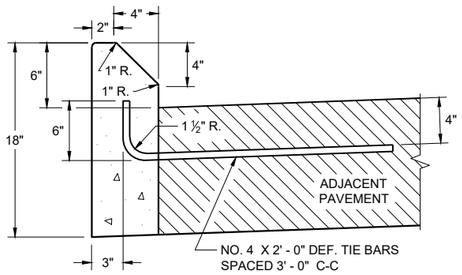

TYPES G (1) & J

CONCRETE CURB

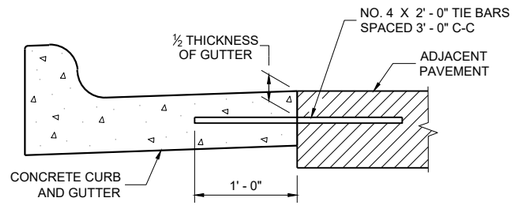

TYPICAL TIE BAR LOCATION (1)

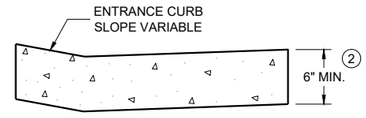

DRIVEWAY ENTRANCE CURB (10)

(WHEN DIRECTED BY THE ENGINEER)

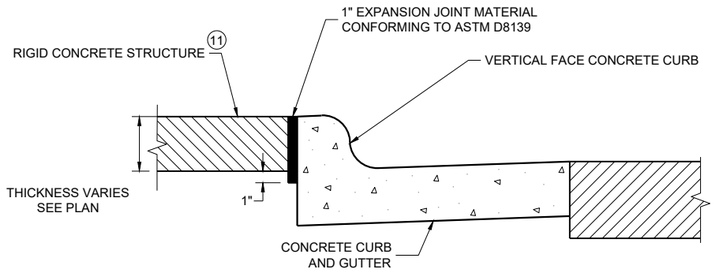

EXPANSION JOINT DETAIL FOR VERTICAL CURB ABUTTING A RIGID STRUCTURE (11)

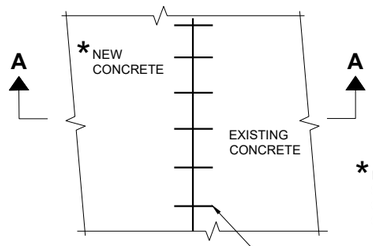

PLAN VIEW

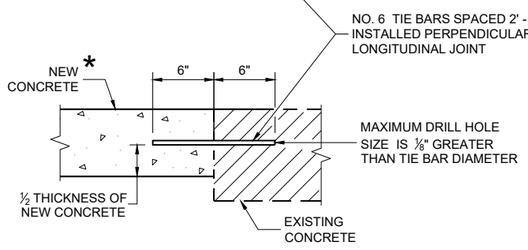

SECTION A - A

TIE BARS DRILLED INTO EXISTING PAVEMENT

CONCRETE CURB, TIES AND CURB AND GUTTER APPLICATIONS

STATE OF WISCONSIN
DEPARTMENT OF TRANSPORTATION

APPROVED
May 2023 — DATE
/S/ Rodnery Taylor — ROADWAY STANDARDS DEVELOPMENT UNIT SUPERVISOR

FHWA

6

SDD 08D01-23b

6

SDD 08D01-23b

NOTE: TAPER CURB ENDS TO GUTTER IN 1' - 0"

ASPHALTIC FLUME

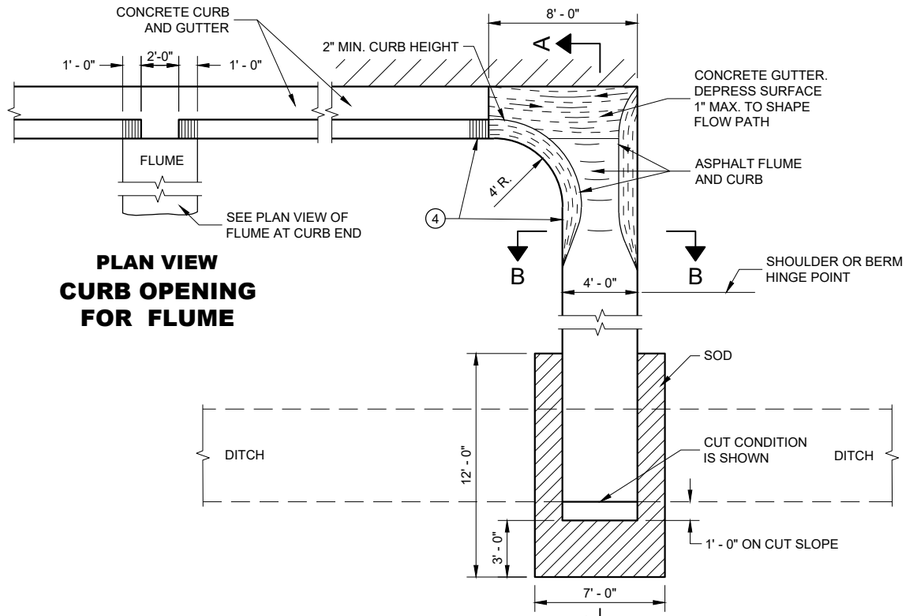

PLAN VIEW
CURB OPENING FOR FLUME

PLAN VIEW
FLUME AT CURB END

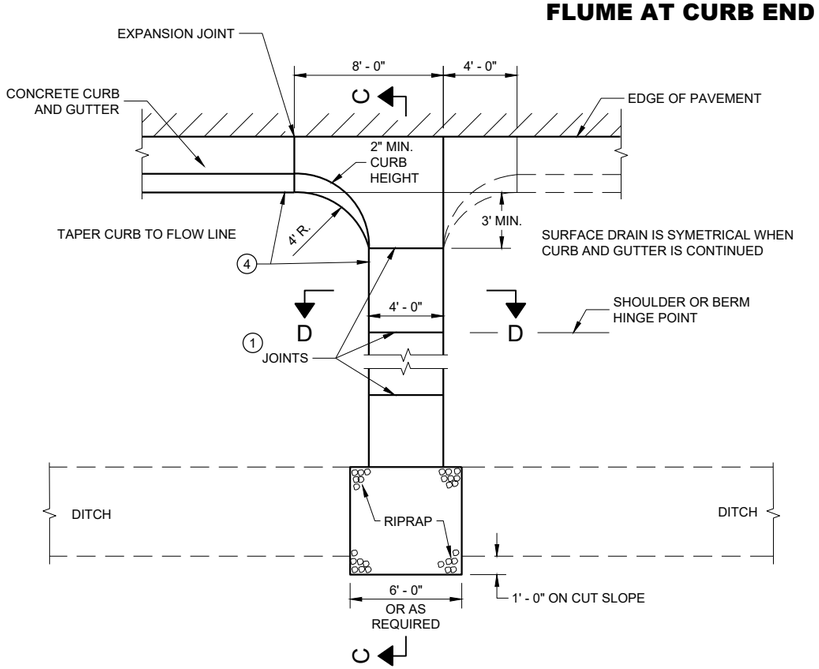

PLAN VIEW
CONCRETE SURFACE DRAIN

GENERAL NOTES

DETAILS OF CONSTRUCTION, MATERIALS AND WORKMANSHIP NOT SHOWN ON THIS DRAWING SHALL CONFORM TO PERTINENT REQUIREMENTS OF THE STANDARD SPECIFICATIONS AND APPLICABLE SPECIAL PROVISIONS.

4" X 4" - W3.0 X W3.0 CONCRETE REINFORCEMENT SHALL BE IN ACCORDANCE WITH AASHTO SPECIFICATION M55.

1. JOINTS SHALL BE ⅛" TO ¼" WIDE BY 1½" DEEP AND SPACED AT UNIFORM INTERVALS OF APPROXIMATELY 4 FEET.
2. GEOTEXTILE TYPE "R" SHALL UNDERLAY THE FULL LENGTH AND WIDTH OF THE CONCRETE SURFACE DRAIN AND RIPRAP.
3. CONCRETE SURFACE DRAIN WITHOUT CURB AND GUTTER MAY BE USED ON BACKSLOPES WHEN SPECIFIED.
4. ANGLE OF FLUME IN RELATION TO BACK OF CURB TO BE CONSTRUCTED PER THE PLAN DETAILS OR AS DIRECTED BY THE ENGINEER. ANGLE OF FLUME MAY BE OTHER THAN 90 DEGREES AS SHOWN.

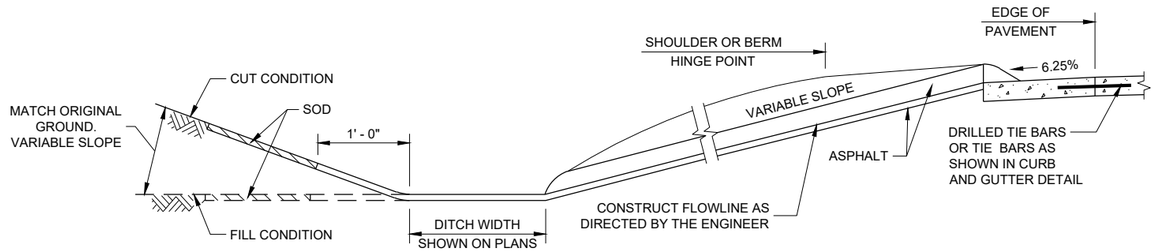

SECTION A - A

SECTION B - B

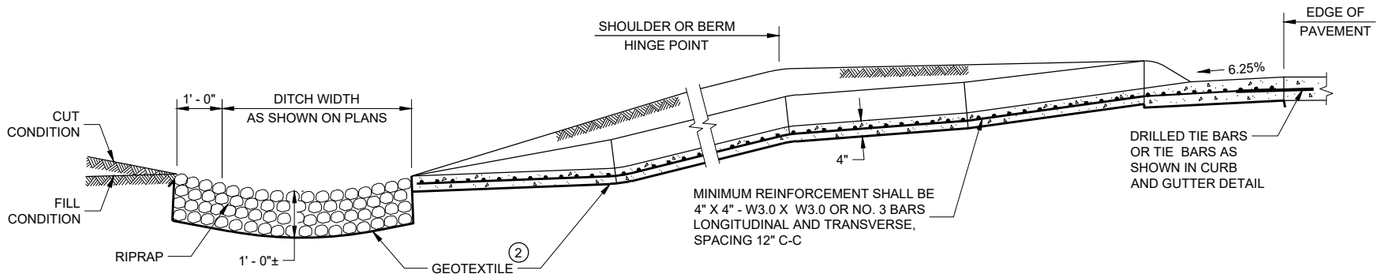

SECTION C - C

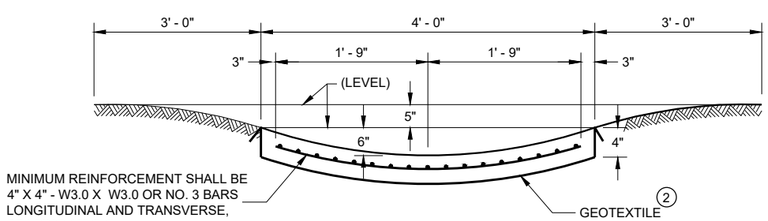

SECTION D - D

CONCRETE SURFACE DRAINS AND ASPHALTIC FLUMES

STATE OF WISCONSIN
DEPARTMENT OF TRANSPORTATION

APPROVED
May 2023
DATE

/S/ Rodney Taylor
ROADWAY STANDARDS DEVE ENGINEER

FHWA

6

SDD 08D04 - 07

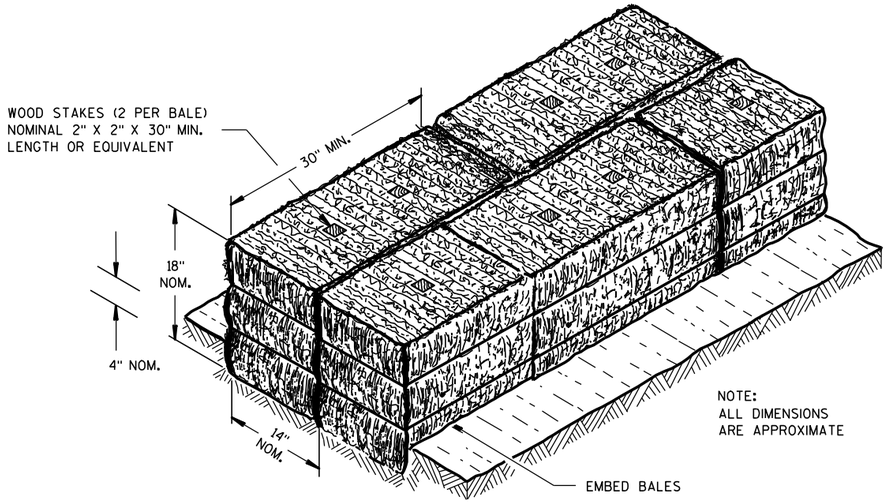

SECTION A-A

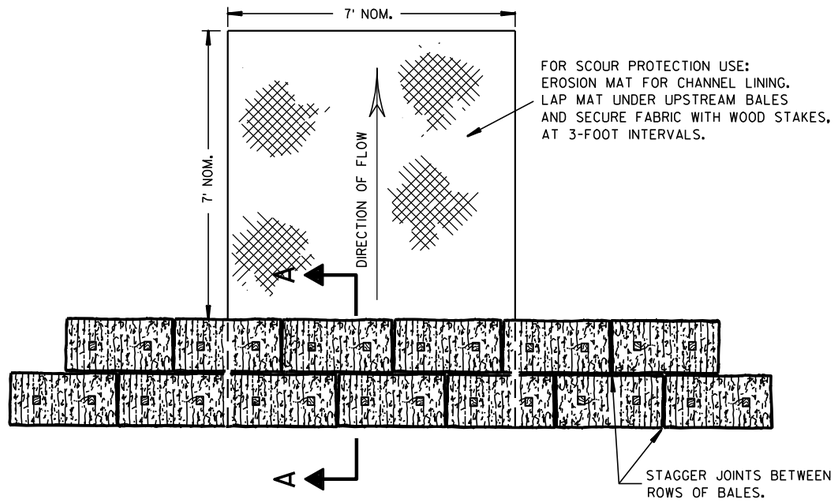

PLAN VIEW

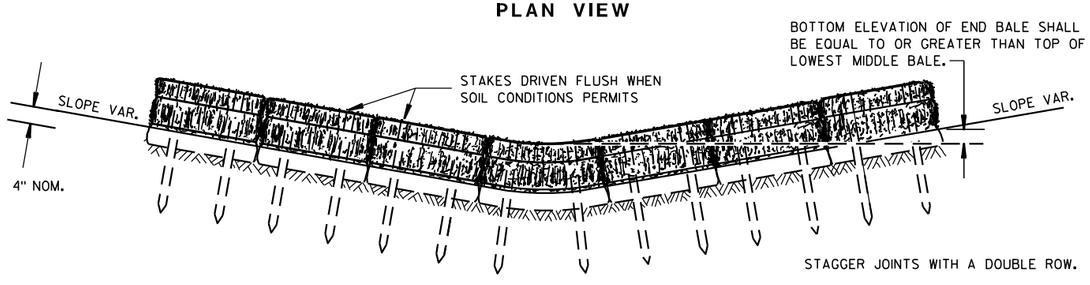

FRONT ELEVATION

TEMPORARY DITCH CHECK USING EROSION BALES (1)

GENERAL NOTES

DETAILS OF CONSTRUCTION, MATERIALS AND WORKMANSHIP NOT SHOWN ON THIS DRAWING SHALL CONFORM TO THE PERTINENT REQUIREMENTS OF THE STANDARD SPECIFICATIONS AND THE APPLICABLE SPECIAL PROVISIONS.

(1) TEMPORARY DITCH CHECKS EITHER EROSION BALES OR MANUFACTURED SHALL BE PAID FOR UNDER THE BID ITEM OF TEMPORARY DITCH CHECK. THE DEPARTMENT WILL NOT PAY FOR TEMPORARY DITCH CHECKS CONSTRUCTED OF A SINGLE ROW OF EROSION BALES.

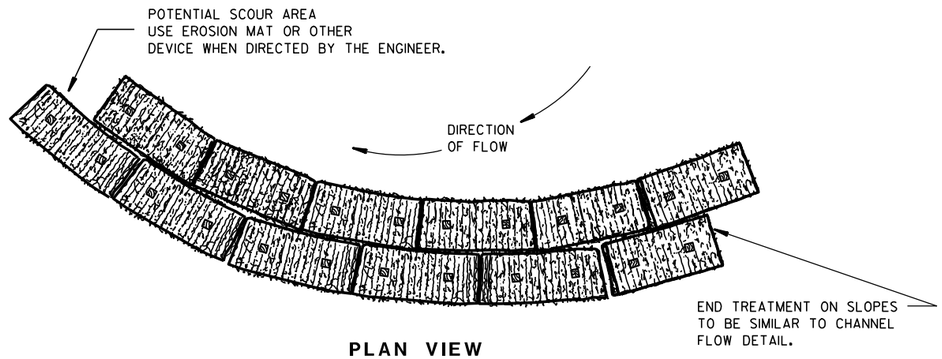

PLAN VIEW

WHEN ALTERING THE DIRECTION OF FLOW

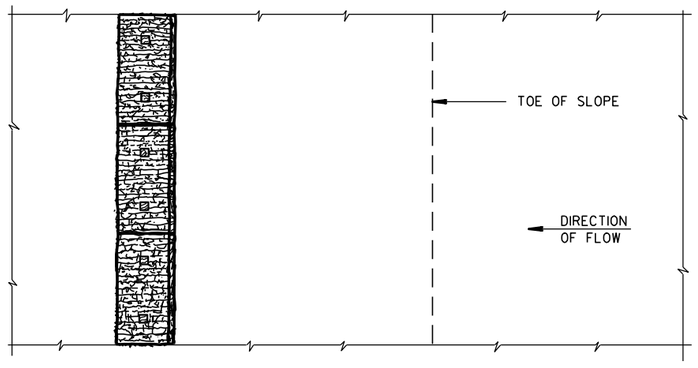

PLAN VIEW

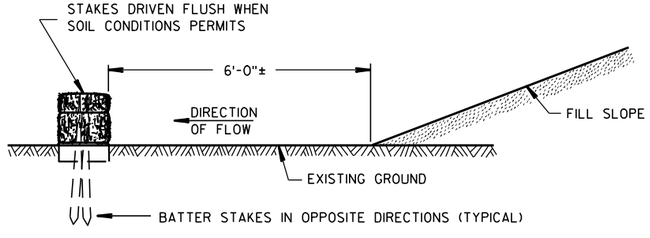

FRONT ELEVATION

WHEN EXISTING GROUND SLOPES AWAY FROM FILL SLOPE

EROSION BALES FOR SHEET FLOW

TYPICAL INSTALLATIONS OF EROSION BALES / TEMPORARY DITCH CHECKS

STATE OF WISCONSIN
DEPARTMENT OF TRANSPORTATION

APPROVED

6/04/02 DATE — /S/ Beth Cannestra — CHIEF ROADWAY DEVELOPMENT ENGINEER

FHWA

6
S.D.D. 8 E 8-3

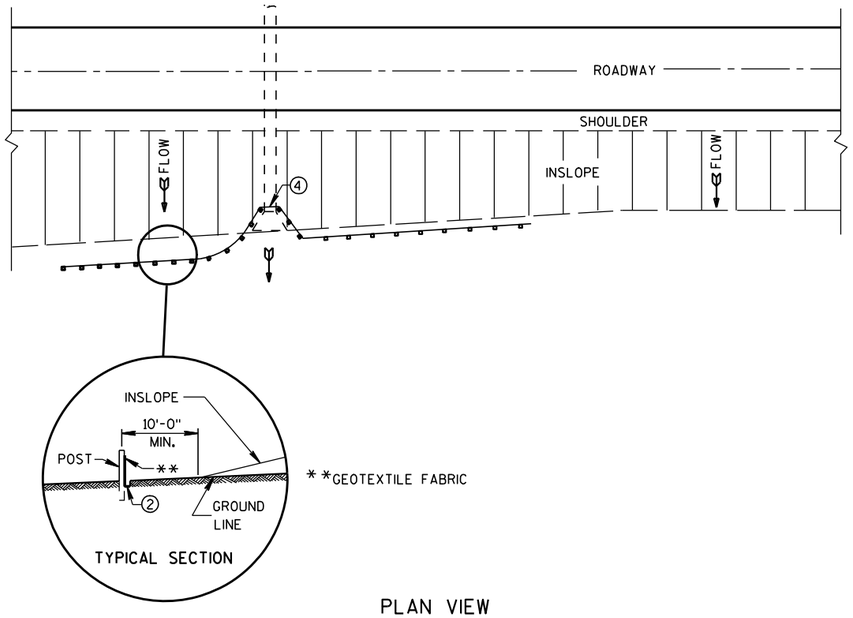

PLAN VIEW

TYPICAL APPLICATION OF SILT FENCE

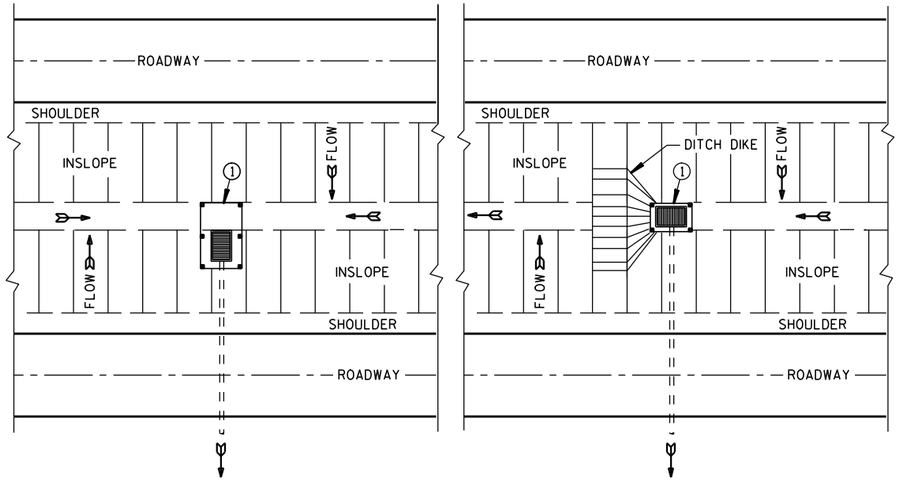

PLAN VIEW

SILT FENCE AT MEDIAN SURFACE DRAINS

GENERAL NOTES

DETAILS OF CONSTRUCTION NOT SHOWN ON THIS DRAWING SHALL CONFORM TO THE PERTINENT REQUIREMENTS OF THE STANDARD SPECIFICATIONS AND APPLICABLE SPECIAL PROVISIONS.

1. HORIZONTAL BRACE REQUIRED WITH 2" X 4" WOODEN FRAME OR EQUIVALENT AT TOP OF POSTS.
2. FOR MANUAL INSTALLATIONS THE TRENCH SHALL BE A MINIMUM OF 4" WIDE & 6" DEEP TO BURY AND ANCHOR THE GEOTEXTILE FABRIC. FOLD MATERIAL TO FIT TRENCH AND BACKFILL & COMPACT TRENCH WITH EXCAVATED SOIL.
3. WOOD POSTS SHALL BE A MINIMUM SIZE OF 1⅛" X 1⅛" OF OAK OR HICKORY.
4. SILT FENCE TO EXTEND ACROSS THE TOP OF THE PIPE.
5. CONSTRUCT SILT FENCE FROM A CONTINUOUS ROLL IF POSSIBLE BY CUTTING LENGTHS TO AVOID JOINTS. IF A JOINT IS NECESSARY USE ONE OF THE FOLLOWING TWO METHODS; A) OVERLAP THE END POSTS AND TWIST, OR ROTATE, AT LEAST 180 DEGREES, B) HOOK THE END OF EACH SILT FENCE LENGTH.

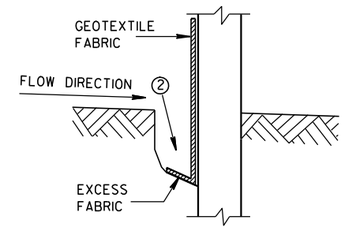

TRENCH DETAIL

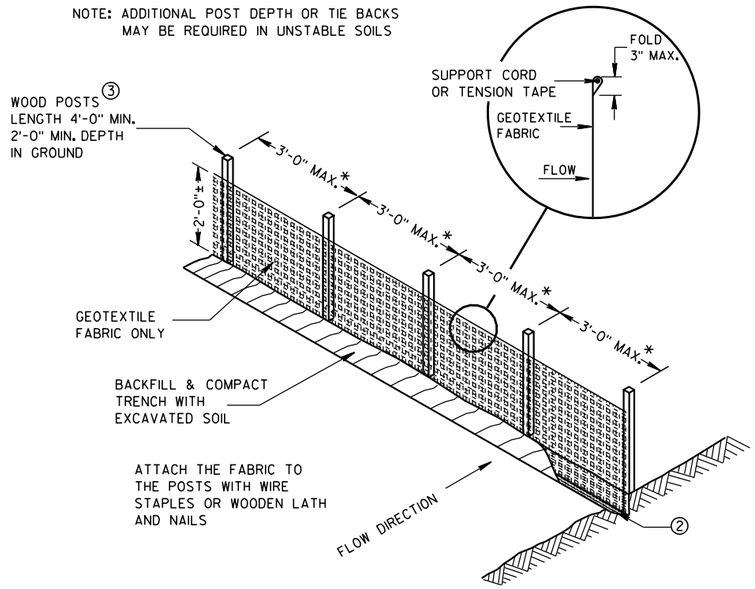

*NOTE: 8'-0" POST SPACING ALLOWED IF A WOVEN GEOTEXTILE FABRIC IS USED.

SILT FENCE

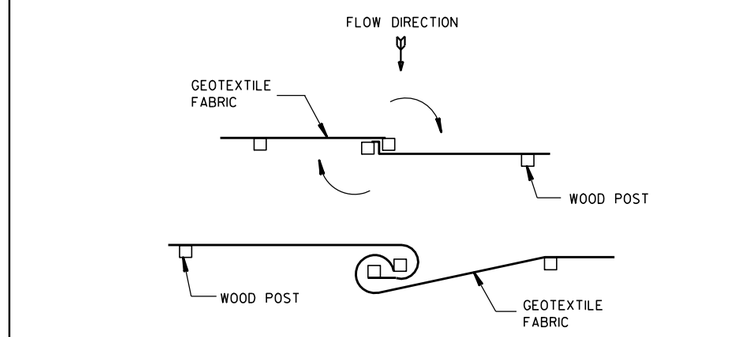

TWIST METHOD

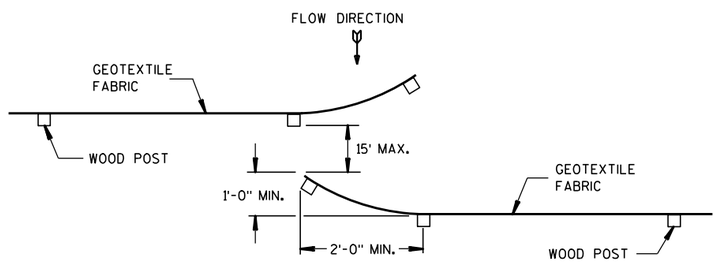

HOOK METHOD

JOINING TWO LENGTHS OF SILT FENCE 5

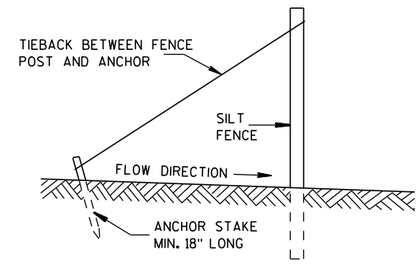

SILT FENCE TIE BACK

(WHEN REQUIRED BY THE ENGINEER)

SILT FENCE

STATE OF WISCONSIN
DEPARTMENT OF TRANSPORTATION

APPROVED
4-29-05 DATE
/S/ Beth Cannestra
CHIEF ROADWAY DEVELOPMENT ENGINEER
FHWA

6

S.D.D. 8 E 9-6

6

S.D.D. 8 E 9-6

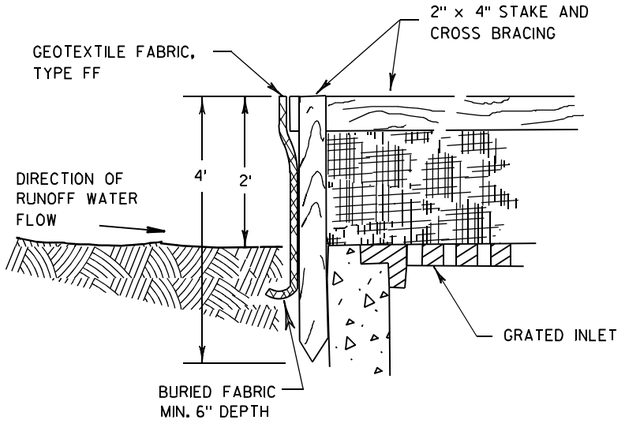

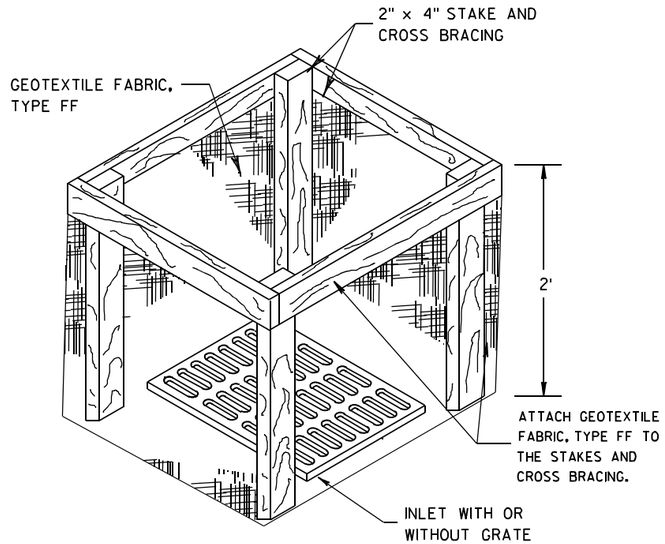

INLET PROTECTION, TYPE A

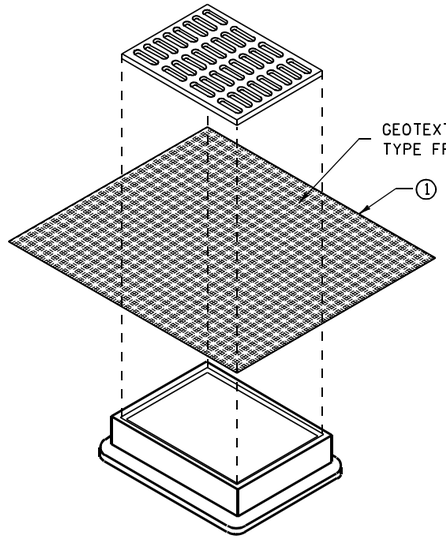

INLET PROTECTION, TYPE B
(WITHOUT CURB BOX)

(CAN BE INSTALLED IN ANY INLET WITHOUT A CURB BOX)

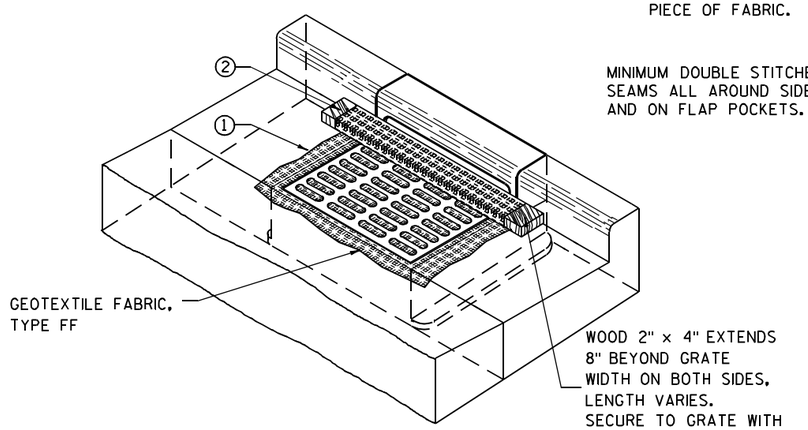

INLET PROTECTION, TYPE C (WITH CURB BOX)

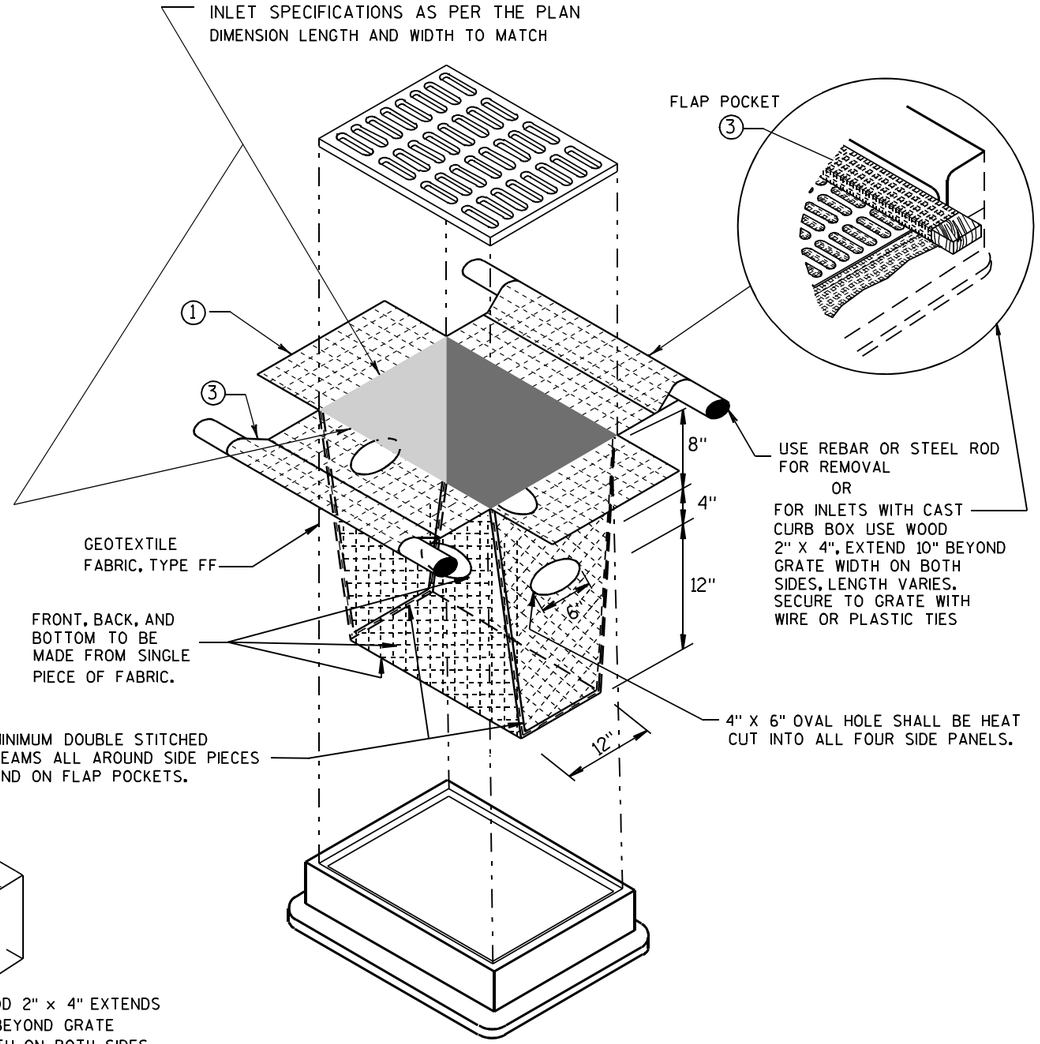

INLET PROTECTION, TYPE D

(CAN BE INSTALLED IN ANY INLET TYPE WITH
OR WITHOUT A CURB BOX AS PER NOTE ②)

GENERAL NOTES

INLET PROTECTION DEVICES SHALL BE MAINTAINED OR REPLACED AT THE DIRECTION OF THE ENGINEER.

MANUFACTURED ALTERNATIVES APPROVED AND LISTED ON THE DEPARTMENT'S EROSION CONTROL PRODUCT ACCEPTABILITY LIST MAY BE SUBSTITUTED.

WHEN REMOVING OR MAINTAINING INLET PROTECTION, CARE SHALL BE TAKEN SO THAT THE SEDIMENT TRAPPED ON THE GEOTEXTILE FABRIC DOES NOT FALL INTO THE INLET. ANY MATERIAL FALLING INTO THE INLET SHALL BE REMOVED IMMEDIATELY.

① FINISHED SIZE, INCLUDING FLAP POCKETS WHERE REQUIRED, SHALL EXTEND A MINIMUM OF 10" AROUND THE PERIMETER TO FACILITATE MAINTENANCE OR REMOVAL.

② FOR INLET PROTECTION, TYPE C (WITH CURB BOX), AN ADDITIONAL 18" OF FABRIC IS WRAPPED AROUND THE WOOD AND SECURED WITH STAPLES. THE WOOD SHALL NOT BLOCK THE ENTIRE HEIGHT OF THE CURB BOX OPENING.

③ FLAP POCKETS SHALL BE LARGE ENOUGH TO ACCEPT WOOD 2X4.

INSTALLATION NOTES

TYPE B & C

TRIM EXCESS FABRIC IN THE FLOW LINE TO WITHIN 3" OF THE GRATE.

THE CONTRACTOR SHALL DEMONSTRATE A METHOD OF MAINTENANCE, USING A SEWN FLAP, HAND HOLDS OR OTHER METHOD TO PREVENT ACCUMULATED SEDIMENT FROM ENTERING THE INLET.

TYPE D

DO NOT INSTALL INLET PROTECTION TYPE D IN INLETS SHALLOWER THAN 30", MEASURED FROM THE BOTTOM OF THE INLET TO THE TOP OF THE GRATE.

TRIM EXCESS FABRIC IN THE FLOW LINE TO WITHIN 3" OF THE GRATE.

THE INSTALLED BAG SHALL HAVE A MINIMUM SIDE CLEARANCE, BETWEEN THE INLET WALLS AND THE BAG, MEASURED AT THE BOTTOM OF THE OVERFLOW HOLES, OF 3". WHERE NECESSARY THE CONTRACTOR SHALL CINCH THE BAG, USING PLASTIC ZIP TIES, TO ACHIEVE THE 3" CLEARANCE. THE TIES SHALL BE PLACED AT A MAXIMUM OF 4" FROM THE BOTTOM OF THE BAG.

INLET PROTECTION
TYPE A, B, C, AND D

STATE OF WISCONSIN
DEPARTMENT OF TRANSPORTATION

APPROVED
10/16/02
DATE
/S/ Beth Cannestra
CHIEF ROADWAY DEVELOPMENT ENGINEER
FHWA

6
S.D.D. 8 E 10-2

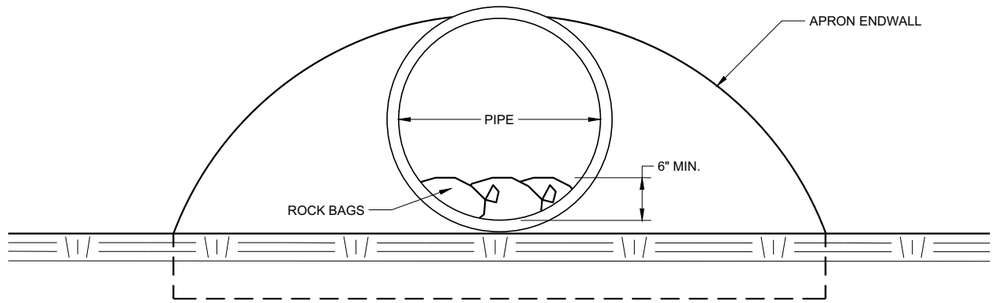

END VIEW

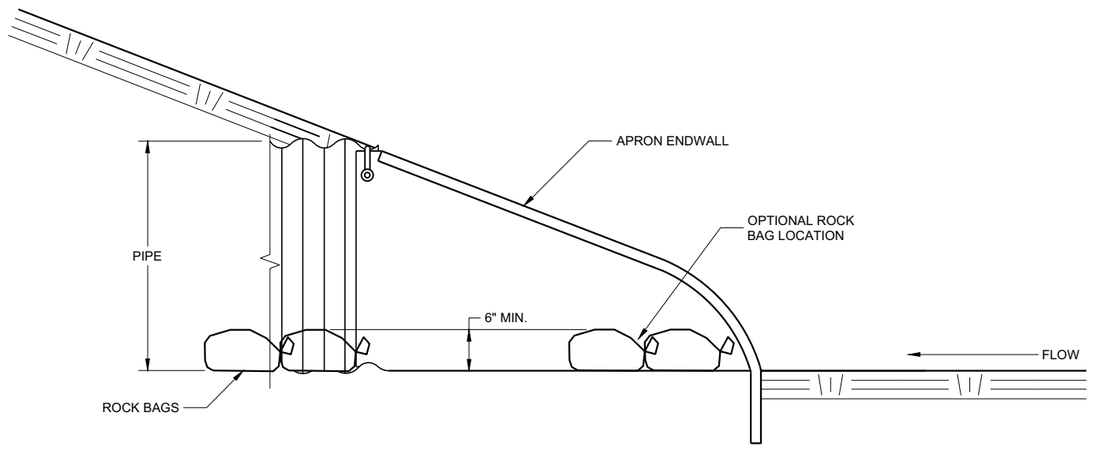

SIDE VIEW

CULVERT PIPE CHECK

(INSTALL ON INLET END ONLY)

CULVERT PIPE CHECK

STATE OF WISCONSIN
DEPARTMENT OF TRANSPORTATION

APPROVED
May 2019
DATE

/S/ Daniel Schave
EROSION CONTROL ENGI

FHWA

6

SDD 08E15 - 01

6

SDD 08E15 - 01

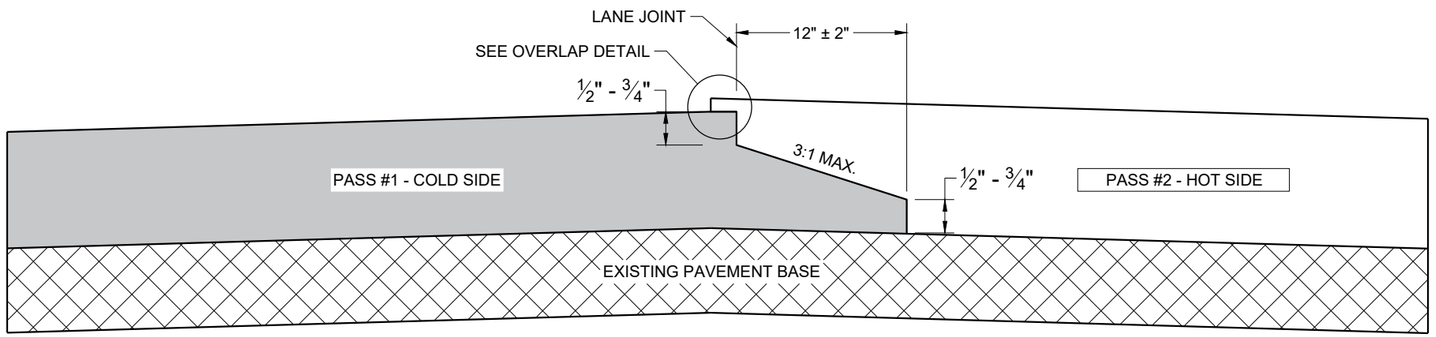

TYPICAL PAVEMENT CROSS SECTION
NOTCHED WEDGE JOINT

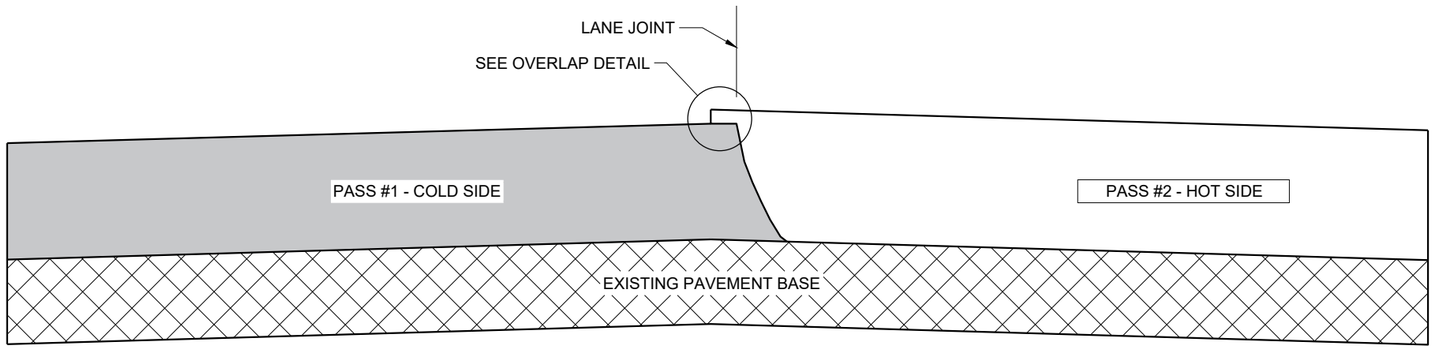

TYPICAL PAVEMENT CROSS SECTION
VERTICAL JOINT

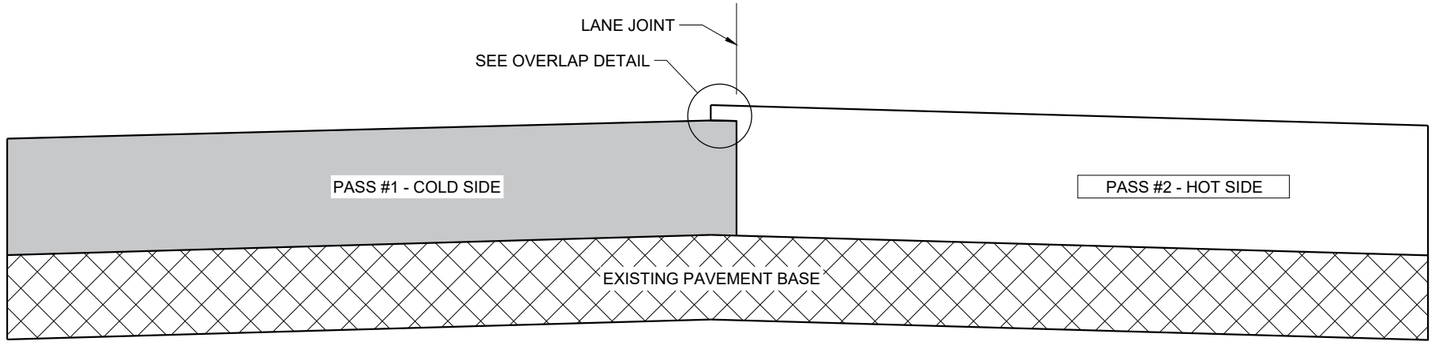

TYPICAL PAVEMENT CROSS SECTION
VERTICAL JOINT (MILLED)

GENERAL NOTES

IN ADDITION TO THE DETAILS PROVIDED IN THIS DRAWING, CONFORM TO STANDARD SPECIFICATION 450.3.2.8 FOR WHEN A NOTCHED WEDGE JOINT IS REQUIRED AND FOR GENERAL JOINT CONSTRUCTION REQUIREMENTS.

FOR ALL LONGITUDINAL JOINTS, ENSURE THE PAVER SCREED OVERLAPS THE PREVIOUSLY PLACED PAVEMENT BY 1" ± 0.5" AND THE HOT SIDE OF THE JOINT REMAINS HIGHER THAN THE COLD SIDE BY APPROXIMATELY 0.1" AFTER FINAL COMPACTION. (IT WILL BE FLUSH WHEN PAVING IN ECHELON.)

ONLY REMOVE THE LONGITUDINAL NOTCHED WEDGE JOINT FOR SMA PAVEMENT OR AS DIRECTED BY THE ENGINEER TO ADDRESS SPECIFIC LENGTHS OF JOINT DAMAGED BY TRAFFIC.

WHEN MILLING BACK OR REMOVING ANY LONGITUDINAL JOINT, LIMIT THE MATERIAL REMOVED TO 2" FROM THE TOP NOTCH OR FROM THE VERTICAL JOINT EDGE ON THE COLD SIDE OF THE JOINT.

USE LONGITUDINAL MILLED JOINT AS PLANS SHOW OR THE AS THE ENGINEER DIRECTS.

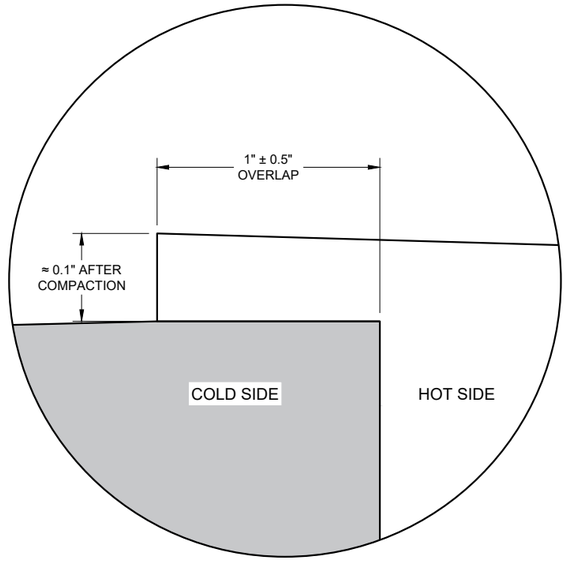

OVERLAP DETAIL (TYPICAL)

6

6

SDD 13C19 - 03

SDD 13C19 - 03

HMA LONGITUDINAL JOINTS

STATE OF WISCONSIN
DEPARTMENT OF TRANSPORTATION

APPROVED
November 2020
DATE

/S/ Steven Hefel
HMA PAVEMENT ENGIN

FHWA

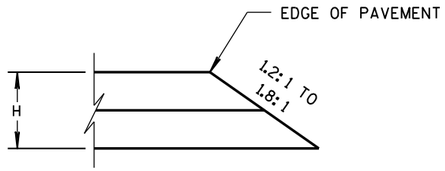

CONSTRUCTED WITH FINAL TWO LAYERS

FOR H 5" OR LESS

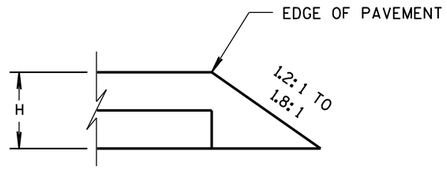

CONSTRUCTED WITH FINAL LAYER

FOR H 5" OR LESS

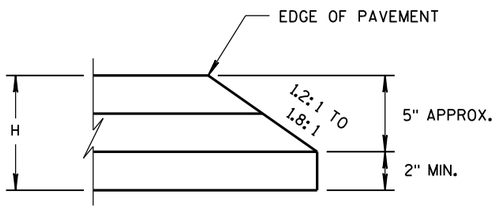

CONSTRUCTED WITH FINAL TWO LAYERS

FOR H GREATER THAN 5"

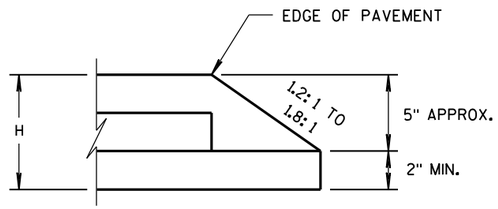

CONSTRUCTED WITH FINAL LAYER

FOR H GREATER THAN 5"

HMA PAVEMENT AND HMA OVERLAYS

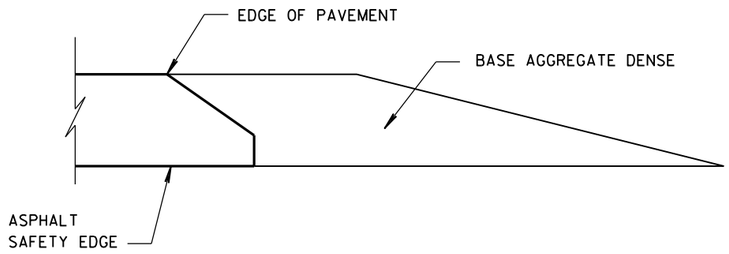

FINISHED SHOULDER AGGREGATE PLACEMENT

6

6

S.D.D. 14 B 29-1

S.D.D. 14 B 29-1

SAFETY EDGE SM

STATE OF WISCONSIN
DEPARTMENT OF TRANSPORTATION

APPROVED

11/30/2012
DATE

/S/ Jerry H. Zoda
ROADWAY STANDARDS DEVELOPMENT ENGINEER

FHWA

(1) WOOD OR STEEL POSTS (w6X9 OR w6X8.5) MAY BE USED. DO NOT INTERMIX WOOD AND STEEL POSTS. INSTALL STEEL POSTS WITH HOLES ON APPROACHING TRAFFIC SIDE.

(2) USE WOOD OR APPROVED PLASTIC BLOCKOUTS. WOOD BLOCKOUTS MAY BE CONSTRUCTED OUT OF TWO OR MORE WOOD BLOCKOUTS. SEE ALTERNATE WOOD BLOCKOUT DETAIL. DIMENSIONS OF APPROVED PLASTIC BLOCKOUTS MAY VARY.

(3) IF ROCK IS ENCOUNTERED DURING EXCAVATION, PROVIDE A HOLE 12 INCHES IN DIAMETER EXTENDING 20 INCHES DEEP INTO THE ROCK. PLACE APPROXIMATELY 2 1/2" INCHES OF GRANULAR MATERIAL IN THE BOTTOM OF THE HOLE. CUT THE POSTS THE TO LENGTH AMD INSTALL. BACKFILL WITH EXCAVATED MATERIAL AND COMPACT. BACKFILL IS TO BE FREE OF LARGE ROCKS.

(4) WHEN THE DISTANCE FROM BACK OF POST TO SHOULDER HINGE POINT IS LESS THAN 2 FEET INSTALL LONGER POST AT HALF POST SPACING (K).

(5) FOR NEW MGS INSTALLATION TOP OF W-BEAM RAIL TOLERANCE IS ±1". FOR EXISTING MGS INSTALLATION TOP OF W-BEAM IS BETWEEN 27 ¾" TO 32".

(6) WHEN USING STEEL POST AND WOOD BLOCKOUTS INSTALL FOUR 16D GALVANIZED NAILS. INSTALL NAILS AT THE BACK CORNERS OF THE BLOCK AND BEND THE NAILS OVER THE FLANGE OF THE STEEL POST.

(7) TOTAL POST LENGTH FOR TYPE K IS 7' - 0".
TOTAL POST LENGTH FOR OTHER MGS TYPES IS 6' - 0".

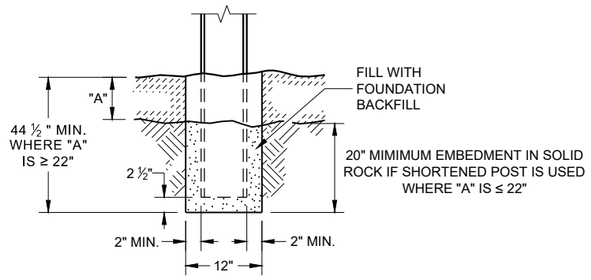

END VIEW
SETTING STEEL OR WOOD POST IN ROCK (3)

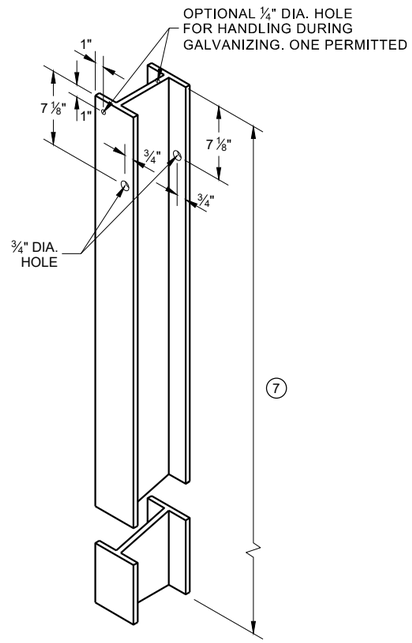

STEEL POST & HOLE PUNCHING DETAIL (W 6 X 9) (1)

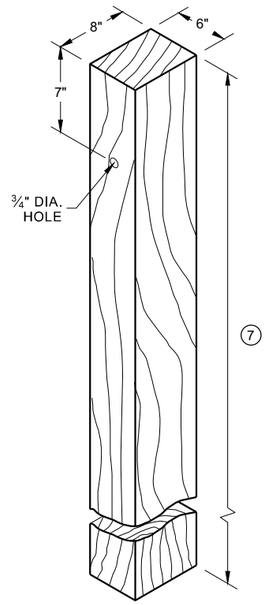

WOOD POST (6" X 8") NOMINAL (1)

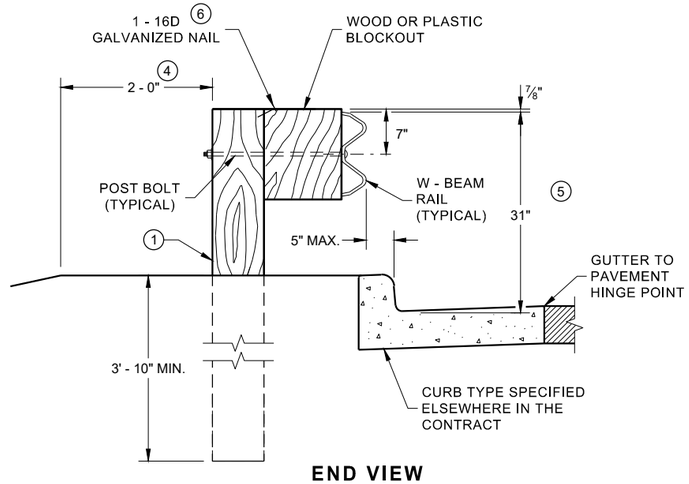

END VIEW
LOCATED ALONG A CURBED ROADWAY

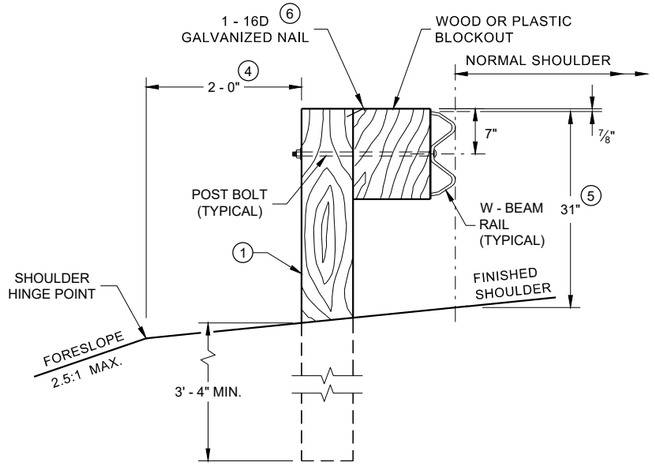

END VIEW
LOCATED ALONG A ROADWAY SHOULDER STANDARD INSTALLATION

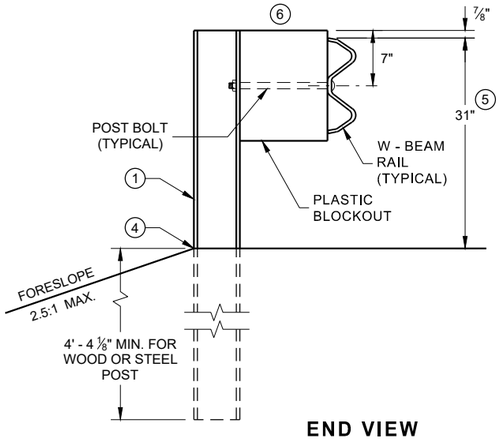

END VIEW
MGS LONGER POST AT HALFPOST SPACING W BEAM (K)

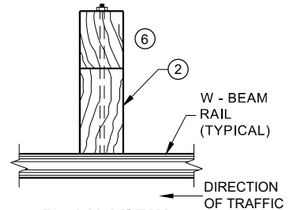

PLAN VIEW
WOOD POST, BLOCKOUT & BEAM

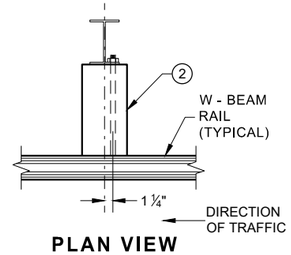

PLAN VIEW
STEEL POST, PLASTIC BLOCKOUT & BEAM

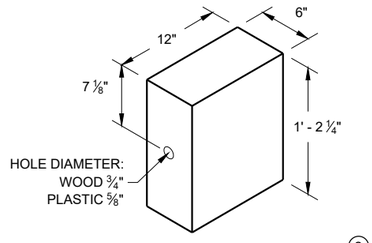

WOOD OR PLASTIC BLOCKOUT (2)

MIDWEST GUARDRAIL SYSTEM (MGS) GUARDRAIL

STATE OF WISCONSIN
DEPARTMENT OF TRANSPORTATION

SDD 14B42 - 07a

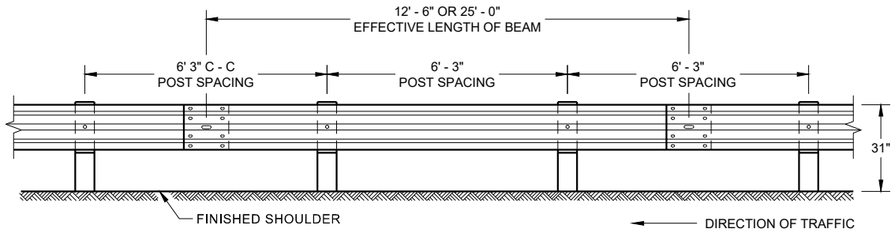

FRONT VIEW
POST SPACING STANDARD INSTALLATION

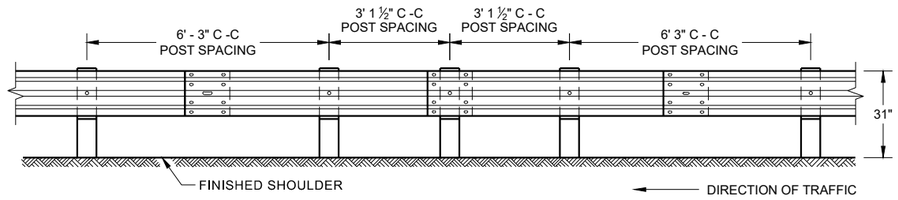

FRONT VIEW
HALF POST SPACING (HS) AND HALF POST SPACING WITH LONGER POSTS (K)

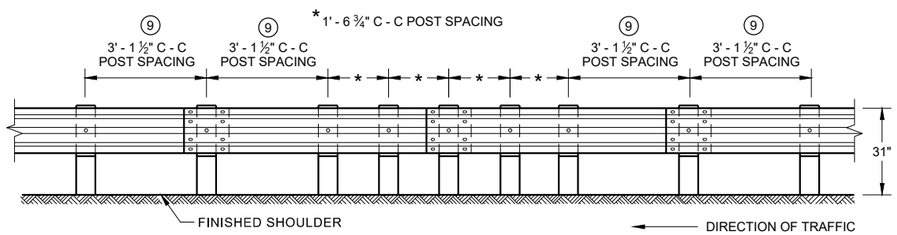

FRONT VIEW
QUARTER POST SPACING (QS)

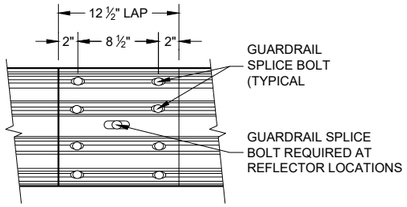

FRONT VIEW
MID-SPAN BEAM SPLICE

GENERAL NOTES

(8) DO NOT INSTALL REFLECTORS ON THE FIRST 50 FEET OF THE APPROACH END OF THE ENERGY ABSORBING TERMINAL.

(9) 25 FEET OF HALF POST SPACING IS REQUIRED ON APPROACH AND DEPARTURE ENDS OF QUARTER POST SPACING.

POST BOLTS ARE A ⅝" DIAMETER ASTM A307 GUARDRAIL BOLT. A POST BOLT REQUIRES ⅝" DIAMETER A563A DOUBLE RECESSED (DR) HEAVY HEX NUT AND ⅝" DIAMETER F844 FLAT WASHER. POST BOLTS MAY BE LONGER IF MULTIPLE BLOCKOUTS ARE BEING USED.

GUARD RAIL SPLICE BOLTS ARE A ⅝" DIAMETER ASTM A307 GUARDRAIL HEAD BOLT. A GUARDRAIL SPLICE BOLT REQUIRES ⅝" DIAMETER A563A DOUBLE RECESSED (DR) HEAVY HEX NUT.

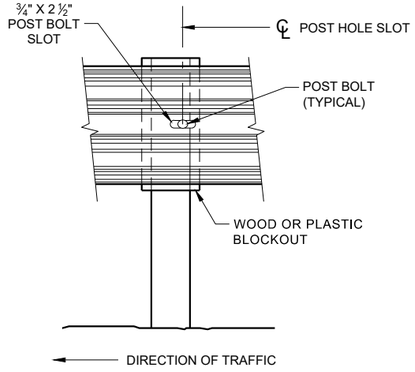

FRONT VIEW AT STEEL POST

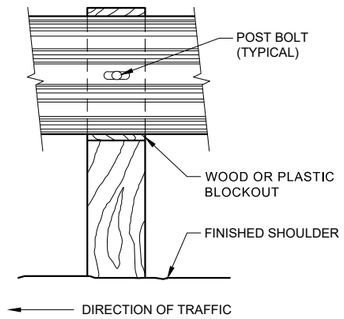

FRONT VIEW AT WOOD POST

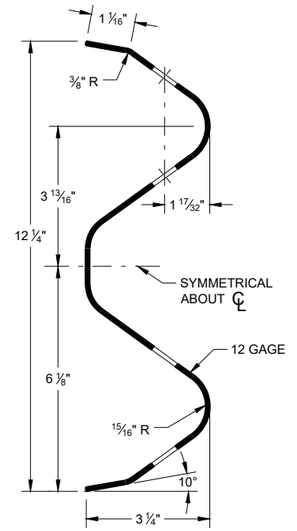

SECTION THRU W-BEAM RAIL

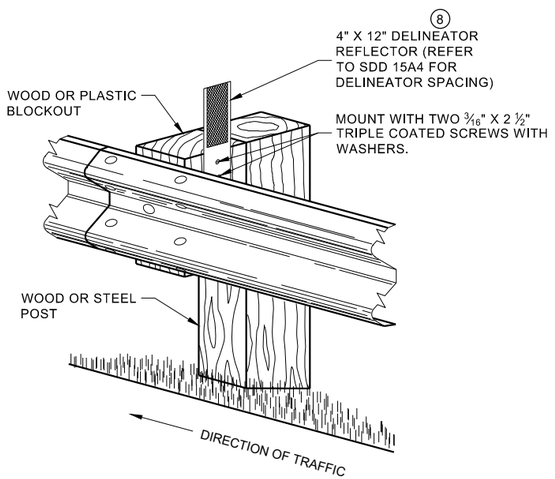

ONE SIDED REFLECTOR DETAIL AND TYPICAL INSTALLATION

MIDWEST GUARDRAIL SYSTEM (MGS) GUARDRAIL

STATE OF WISCONSIN
DEPARTMENT OF TRANSPORTATION

6
SDD 14B42 - 07b

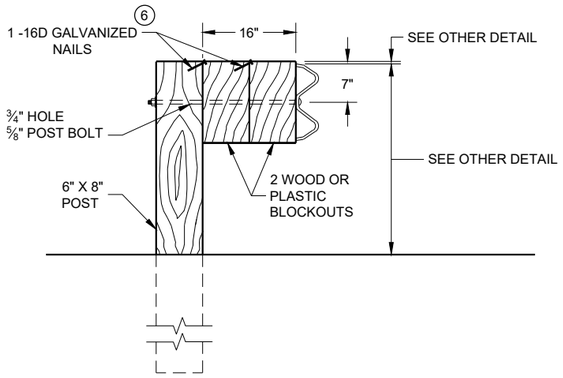

DETAIL FOR 16" BLOCKOUT DEPTH

IT IS ACCEPTABLE TO USE BLOCKOUTS UP TO 16" DEEP TO INCREASE THE POST OFFSET TO AVOID UNDERGROUND OBSTACLES. THERE IS NO LIMIT TO THE NUMBER OF POSTS THAT CAN HAVE ADDITIONAL BLOCKOUTS UP TO 16" DEEP.

NOTE:

1. ALL FILLETS SHALL HAVE A MINIMUM RADIUS OF 3⁄16".
2. IF THE BOLT EXTENDS MORE THAN ¼" FROM THE NUT THE BOLT SHOULD BE TRIMMED BACK.

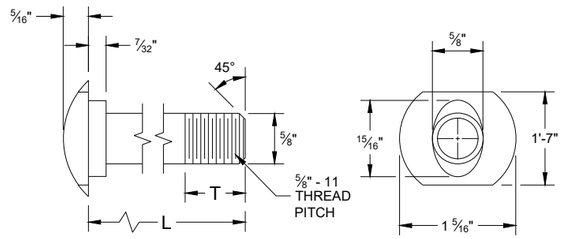

POST BOLT TABLE

L	T (MIN.)
1 ¼"	1 ⅛"
2"	1 ¾"
10"	4"
14"	4 1⁄16"
18"	4"
21"	4 1⁄16"
25"	4"

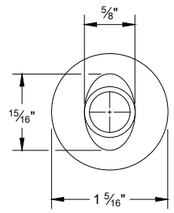

ALTERNATE BOLT HEAD

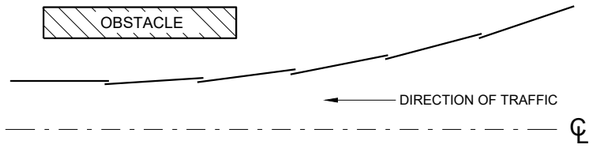

PLAN VIEW
BEAM LAPPING DETAIL

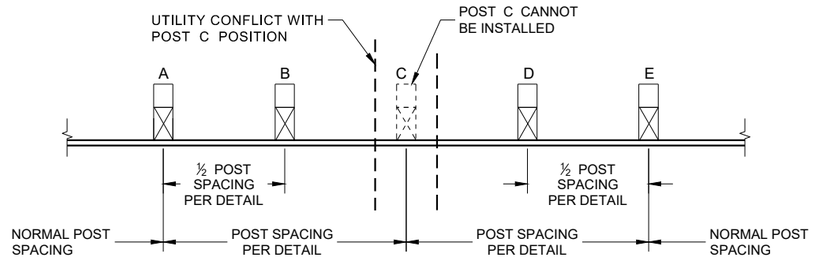

POST DRIVING FOR CONTINUOUS UNDERGROUND OBSTRUCTION

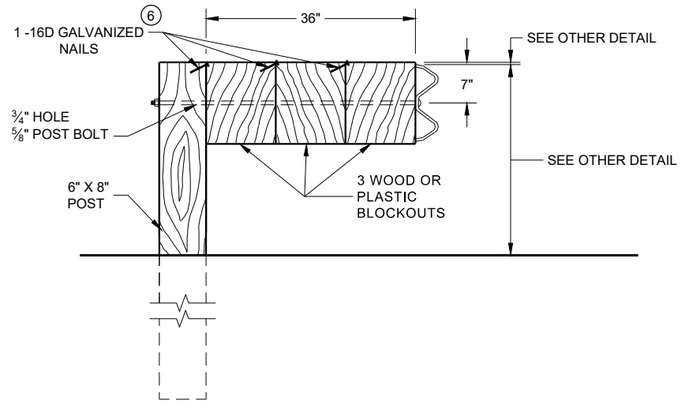

DETAIL FOR 36" BLOCKOUT DEPTH

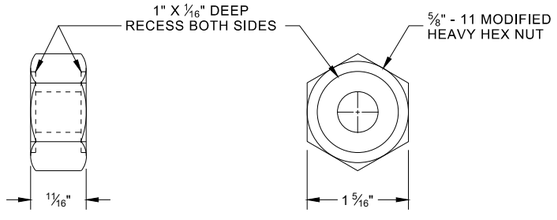

POST BOLT, SPLICE BOLT AND RECESS NUT

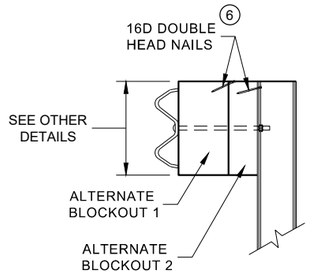

SIDE VIEW

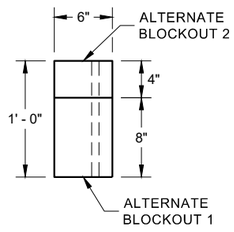

PLAN VIEW

ALTERNATE WOOD BLOCKOUT DETAIL

NOTES: UNDER SPECIAL CIRCUMSTANCES, SUCH AS AVOIDING OBSTACLES THAT ARE NOT RELOCATED, IT IS ACCEPTABLE TO INSTALL ADDITIONAL BLOCKOUTS TO OBTAIN UP TO 36" DEPTH FOR ONE OR TWO POSTS IN A SECTION OF GUARDRAIL.

DO NOT USE 16" OR 36" BLOCKOUTS IF IT CAUSES THE POST TO BE DRIVEN BEYOND SHOULDER HINGE POINT OR CAUSES A FIXED OBJECT TO BE WITHIN THE DEFLECTION DISTANCE OF THE BARRIER.

(6) WHEN USING STEEL POST AD WOOD BLOCKOUTS, INSTALL FOUR 16D GALVANIZED NAILS. INSTALL NAILS AT THE BACK CORNERS OF THE BLOCK AND BEND THE NAILS OVER THE FLANGE OF THE STEEL POST.

MIDWEST GUARDRAIL SYSTEM (MGS) GUARDRAIL

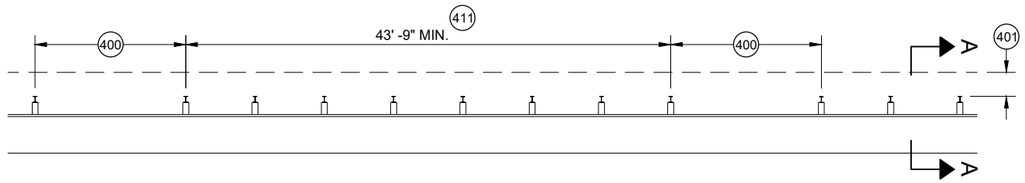

MISSING POST IN MGS GUARDRAIL

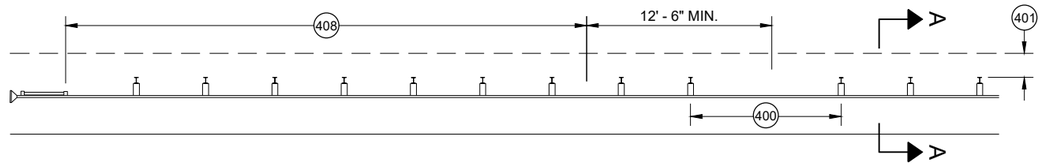

MISSING POST IN MGS GUARDRAIL NEAR EAT

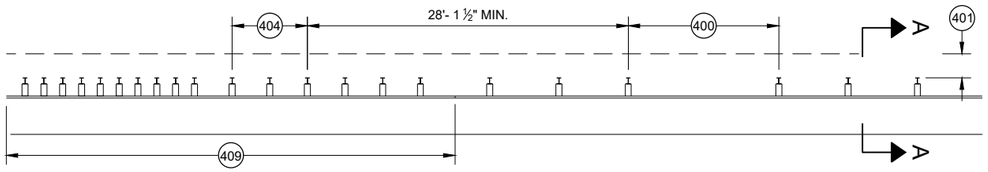

MISSING POST IN MGS GUARDRAIL NEAR AN APPROACH TRANSITION

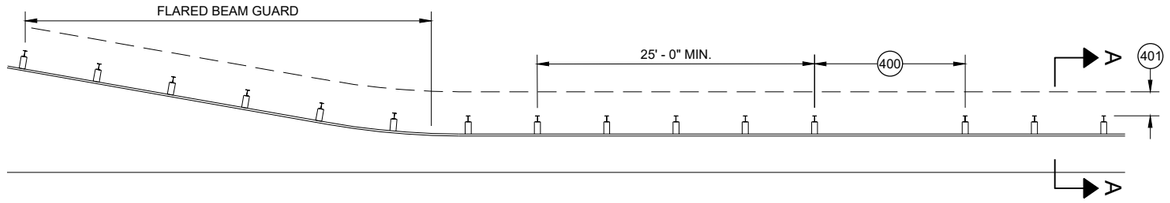

MISSING POST IN MGS GUARDRAIL NEAR FLARED BEAM GUARD

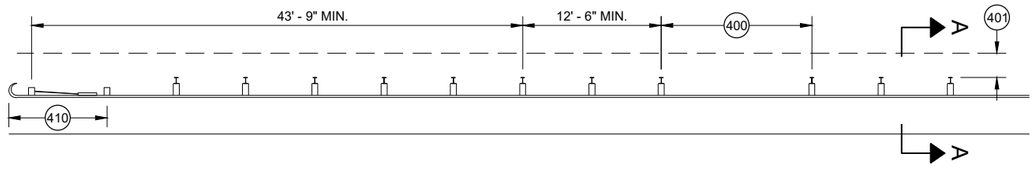

MISSING POST IN MGS GUARDRAIL NEAR A TYPE 2 END TERMINAL

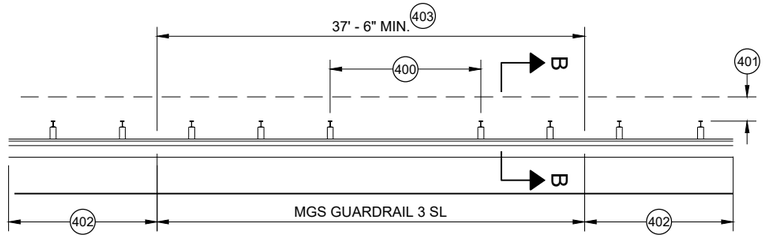

MISSING POST IN SHORT SPAN MGS GUARDRAIL NEAR CURB (SL) 407

400 MAX SPAN 12' - 6"
401 2' MIN.
402 MGS GUARDRAIL 3
403 NESTING BEAM GUARD
404 ASYMMETRIC TRANSITION
405 SOIL WELL DRAINED AND COMPACTED
406 SEE OTHER DRAWINGS IN THIS SDD
407 SEE OTHER DRAWINGS FOR MIN. SPACING BETWEEN SPANS
408 SEE SDD 14B44
409 SEE SDD 14B45
410 SEE SDD 14B47
411 MINIMUM DISTANCE BETWEEN MISSING POST SPANS.

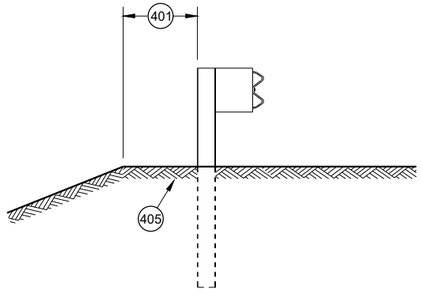

SECTION A - A 406

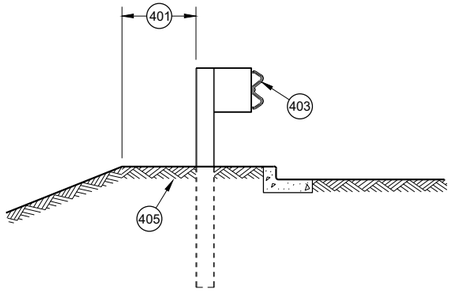

SECTION B - B 406

MIDWEST GUARDRAIL SYSTEM (MGS) GUARDRAIL

STATE OF WISCONSIN
DEPARTMENT OF TRANSPORTATION

APPROVED
May 2021
DATE
/S/ Rodney Taylor
ROADWAY STANDARDS DEVE
UNIT SUPERVISOR

FHWA

6

SDD 14B42 - 07d

GENERAL NOTES

(A) THE SLOPE IN THE AREA BOUNDED BY THE GRADELINE, THE HINGE POINT LINE (HPL) AND THE CLEAR ZONE LIMITS (CZL) SHALL BE 4:1 OR FLATTER.

(B) AFTER FINAL ASSEMBLY, RECHECK CABLE TO BE SURE IT IS TAUT AND HAS NOT RELAXED

(C) DIFFERENT MANUFACTURERS REQUIRE DIFFERENT PERFORATED W - BEAM RAIL END PANELS. SEE MANUFACTURER'S INFORMATION.

(D) ATTACH ALUMINUM SHEET TO E.A.T. HEAD USING 4 STAINLESS STEEL SELF - TAPPING SCREWS. ONE SCREW PER CORNER.

(E) HARDWARE MAY VARY BETWEEN MANUFACTURER. SEE MANUFACTURER'S DRAWING FOR INFORMATION.

DIMENSIONS MAY VARY, MANUFACTURER'S INFORMATION.

SEE SDD 14B42 FOR MORE INFORMATION.

* DO NOT ATTACH BLOCKOUTS TO POST 1 AND 2.

DO NOT INSTALL REFLECTORS ON THE FIRST 50 FEET OF THE APPROACH END OF THE ENERGY ABSORBING TERMINAL.

SEE MANUFACTURER'S DRAWING FOR SPLICE LOCATION, HARDWARE DIMENSIONS AND INSTALLATION INSTRUCTIONS.

THE CENTER OF THE UPPER 3 ½" DIAMETER HOLE ON POST NUMBER 3 THROUGH POST 9 IS TO BE FLUSH WITH THE GROUND LINE UP TO A MAXIMUM OF 2" ABOVE GROUND LINE. WOOD BLOCKS ON POSTS NUMBERED 3 THROUGH 9 MAY BE ADJUSTED UP TO 3" ABOVE THE TOP OF POST.

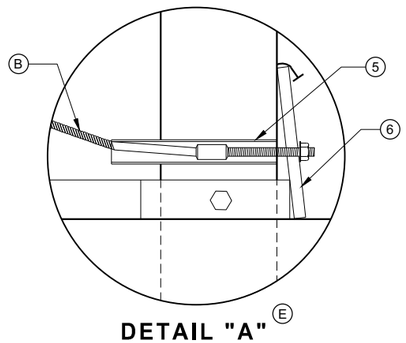

DETAIL "A" (E)

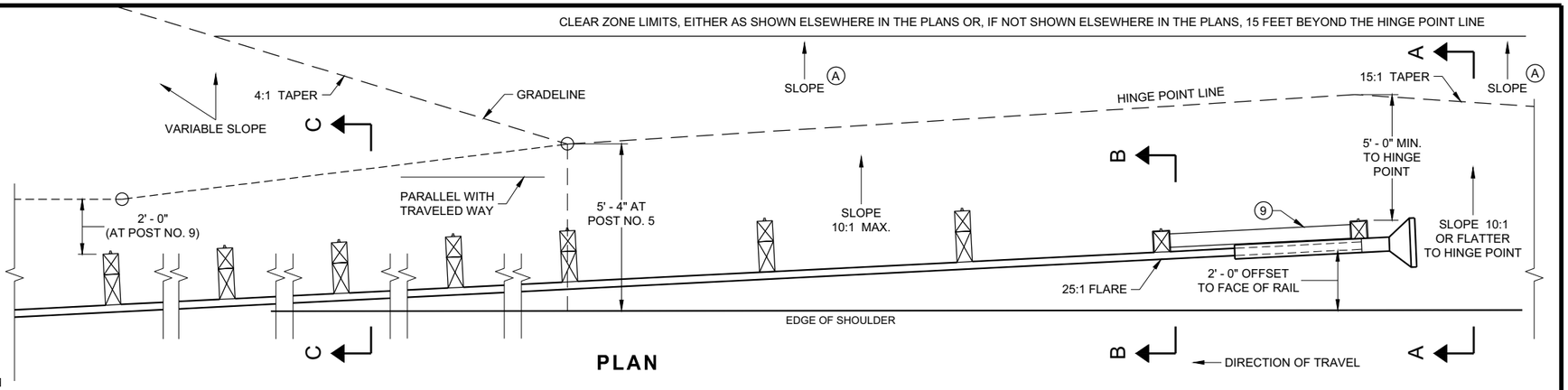

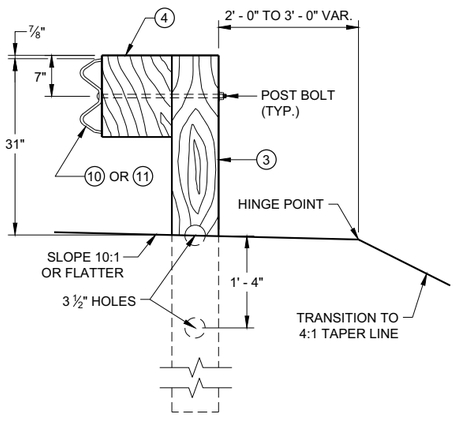

SECTION C - C
TYPICAL AT POST NOS. 3 - 9

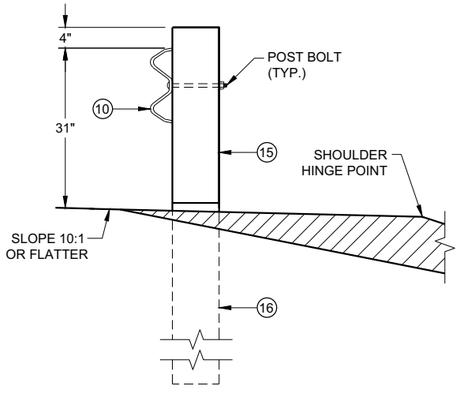

SECTION B - B
TYPICAL AT POST NO. 2*

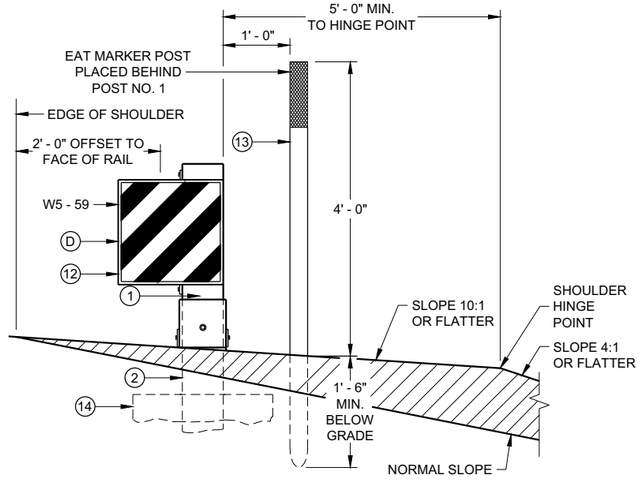

SECTION A - A
TYPICAL AT POST NO. 1*

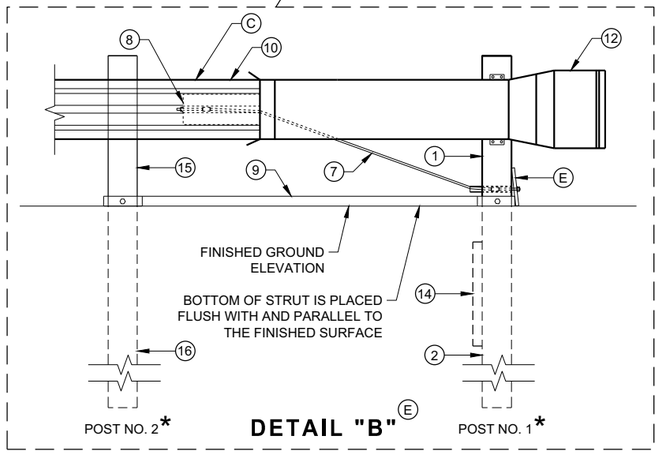

DETAIL "B" (E)

MIDWEST GUARDRAIL SYSTEM
ENERGY ABSORBING TERMINAL (MGS)

STATE OF WISCONSIN
DEPARTMENT OF TRANSPORTATION

SDD 14B44 - 04a

SDD 14B44 - 04a

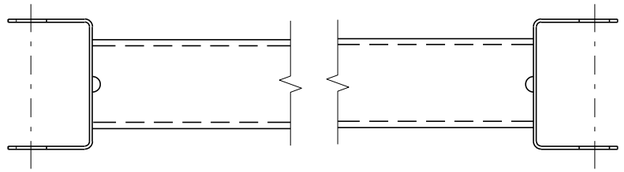

GENERIC GROUND STRUT ⑨ Ⓔ

BILL OF MATERIALS

PART NO.	DESCRIPTION MATERIALS PROVIDED BY MGS EAT MANUFACTURER. SEE MANUGACTURER'S DETAILS FOR MORE INFORMATION.
①	UPPER POST NO. 1 6" X 6" TUBE
②	LOWER POST NO. 1
③	WOOD CRT
④	WOOD BLOCKOUT
⑤	PIPE SLEEVE
⑥	BEARING PLATE
⑦	BCT CABLE ASSEMBLY
⑧	ANCHOR CABLE BOX
⑨	GROUND STRUT
⑩	PERFORATED W-BEAM RAIL END PANEL, 12'-6" LONG.
⑪	STANDARD W-BEAM RAIL. MULTIPLE SECTIONS REQUIRED. SECTIONS VARY IN LENGTH.
⑫	IMPACT HEAD
⑬	EAT MARKER POST - YELLOW (SEE APPROVED PRODUCTS LIST)
⑭	SOIL PLATE
⑮	UPPER POST NO. 2
⑯	LOWER POST NO. 2

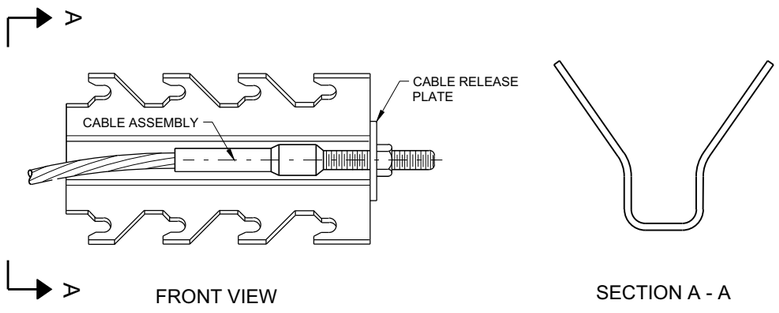

GENERIC ANCHOR CABLE BOX ⑨ Ⓔ

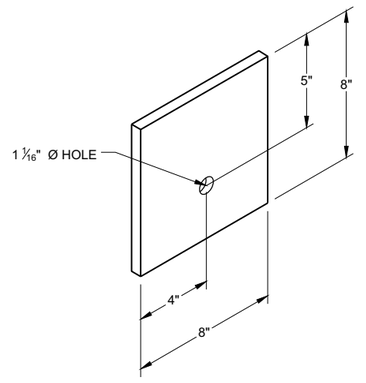

BEARING PLATE ⑥ Ⓔ

6

6

SDD 14B44 - 04b

SDD 14B44 - 04b

MIDWEST GUARDRAIL SYSTEM
ENERGY ABSORBING TERMINAL
(MGS)

STATE OF WISCONSIN
DEPARTMENT OF TRANSPORTATION

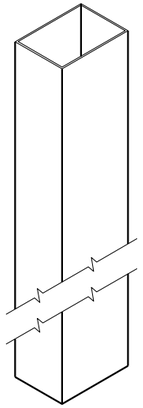

UPPER POST NO. 1 (1) (E)

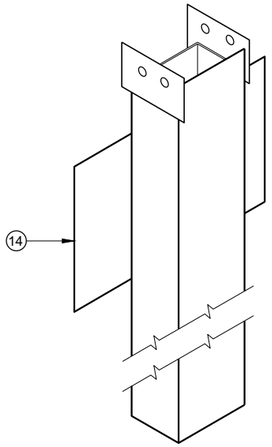

LOWER POST NO. 1 (2) (E)

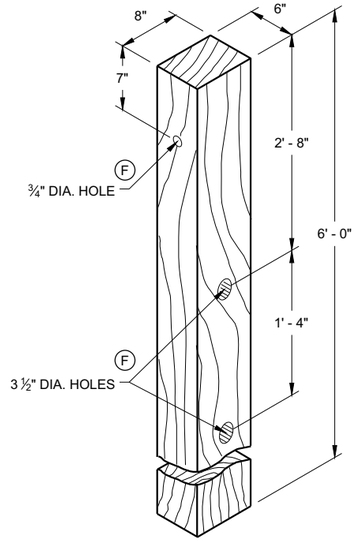

WOOD CRT POST (3) (E)
POSTS NUMBER 3-9

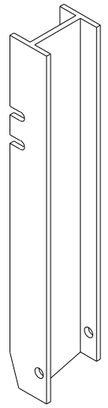

UPPER POST NO. 2 (15) (E)

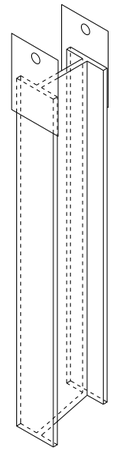

LOWER POST NO. 2 (16) (E)

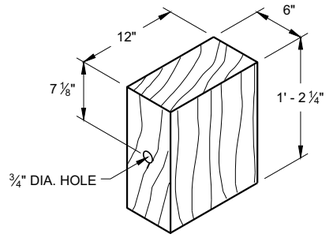

WOOD BLOCKOUT (4)
REQ'D. AT ALL POSTS EXCEPT POST NO'S 1 & 2

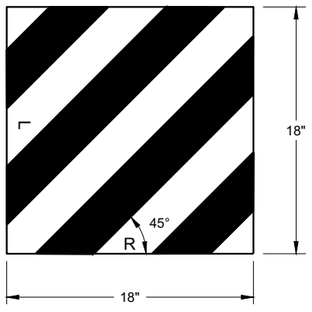

W5 - 59

REFLECTIVE SHEETING DETAIL (E)

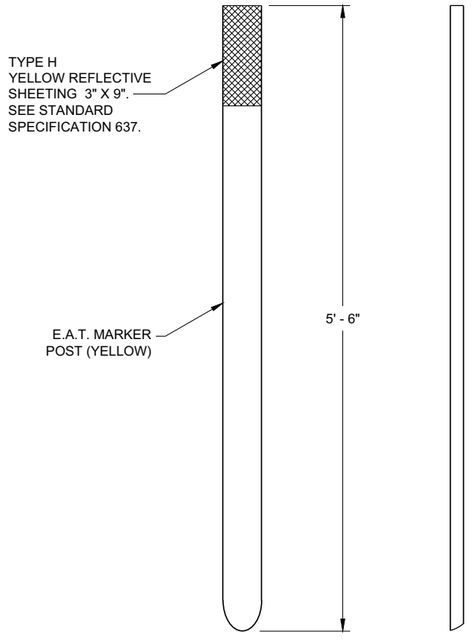

FRONT VIEW SIDE VIEW

E.A.T. MARKER POST (13)

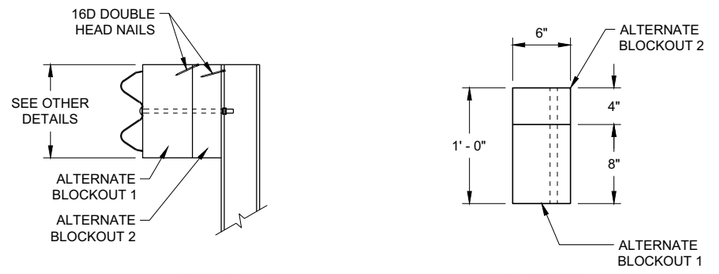

SIDE VIEW TOP VIEW

ALTERNATE WOOD BLOCKOUT DETAIL

MIDWEST GUARDRAIL SYSTEM ENERGY ABSORBING TERMINAL (MGS)

STATE OF WISCONSIN
DEPARTMENT OF TRANSPORTATION

APPROVED
7/2018 DATE
/S/ Rodney Taylor
ROADWAY STANDARDS DEVE UNIT SUPERVISOR

FHWA

6

SDD 14B44 - 04c

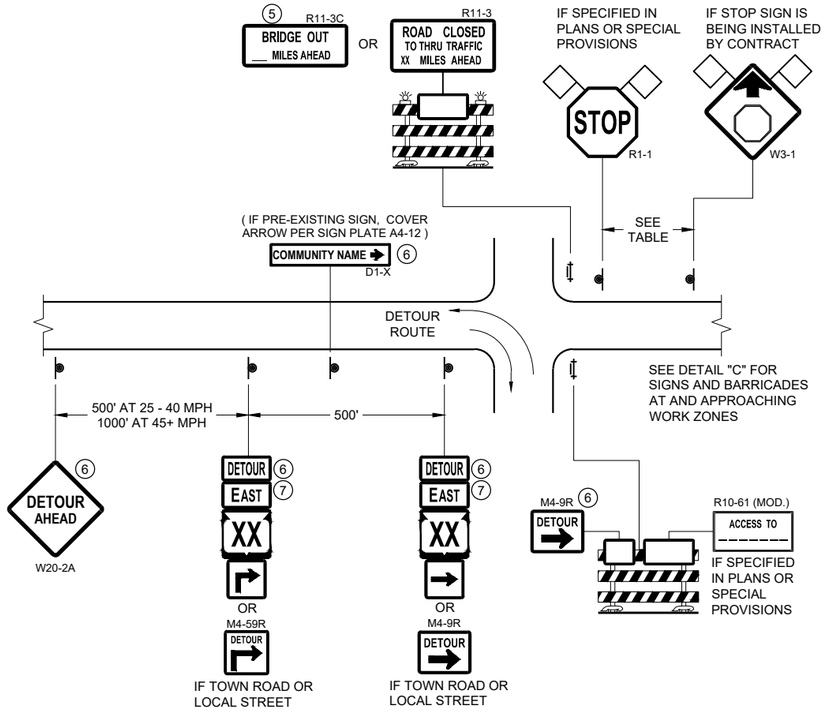

DETAIL A
MAINLINE CLOSURE WITH POSTED DETOUR

WORK ZONE GREATER THAN OR EQUAL TO ½ MILE FROM DETOUR ROUTE (1000 FEET IF URBAN)

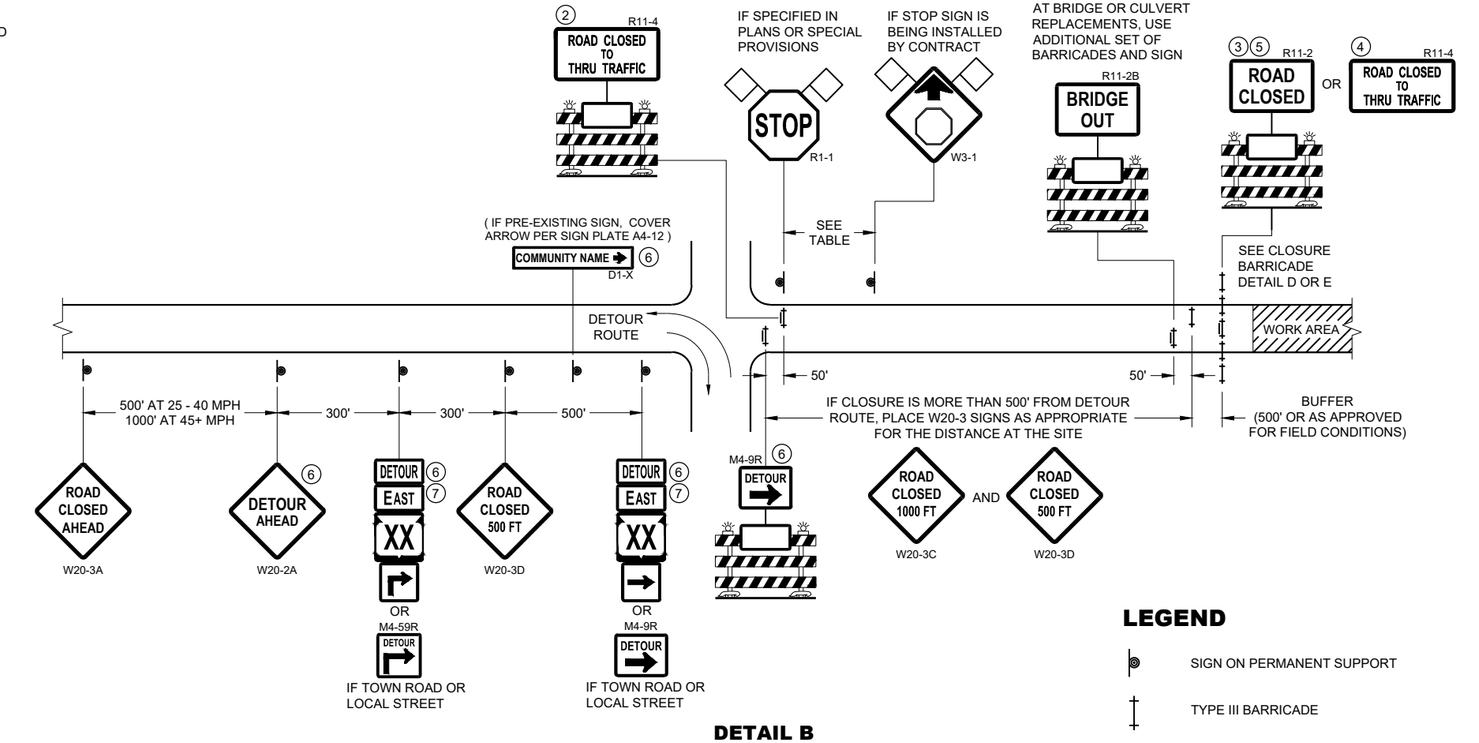

DETAIL B
MAINLINE CLOSURE WITH POSTED DETOUR

WORK ZONE LESS THAN ½ MILE FROM DETOUR ROUTE (1000 FEET IF URBAN)

LEGEND

- SIGN ON PERMANENT SUPPORT
- TYPE III BARRICADE
- TYPE III BARRICADE WITH ATTACHED SIGN
- TYPE "A" WARNING LIGHT (FLASHING)
- WORK AREA
- FLAGS, 16" X 16" MIN. (ORANGE)

DETOUR M4 - 8
EAST M3 - X
XX M1 - 4 OR XX M1 - 6 OR COUNTY X M1 - 5A
M05 - 1 OR M06 - 1

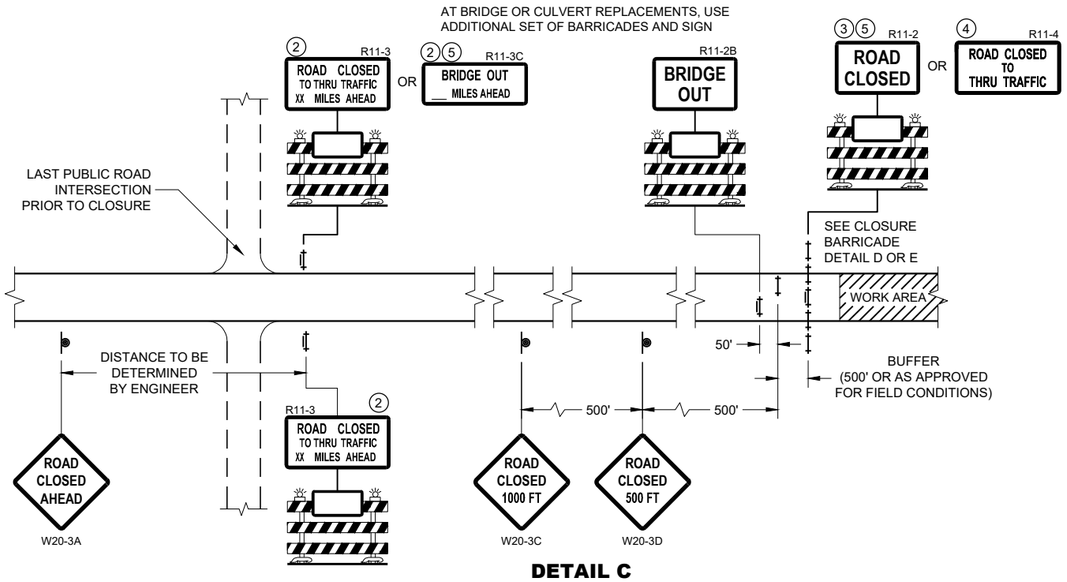

DETAIL C
MAINLINE CLOSURE, NO POSTED DETOUR

SPEED LIMIT (MPH)	"STOP AHEAD" ADVANCE WARNING DISTANCE (FT)
25	200
30	200
35	350
40	350
45	500
50	550
55	750

SEE SDD 15C2-SHEET "b" FOR GENERAL NOTES AND FOOTNOTES ① THROUGH ⑦

BARRICADES AND SIGNS FOR MAINLINE CLOSURES

STATE OF WISCONSIN
DEPARTMENT OF TRANSPORTATION

APPROVED
May 2023
DATE
/S/ Andrew Heidtke
WORK ZONE ENGINEER

FHWA

6

SDD 15C02 - 09a

6

SDD 15C02 - 09a

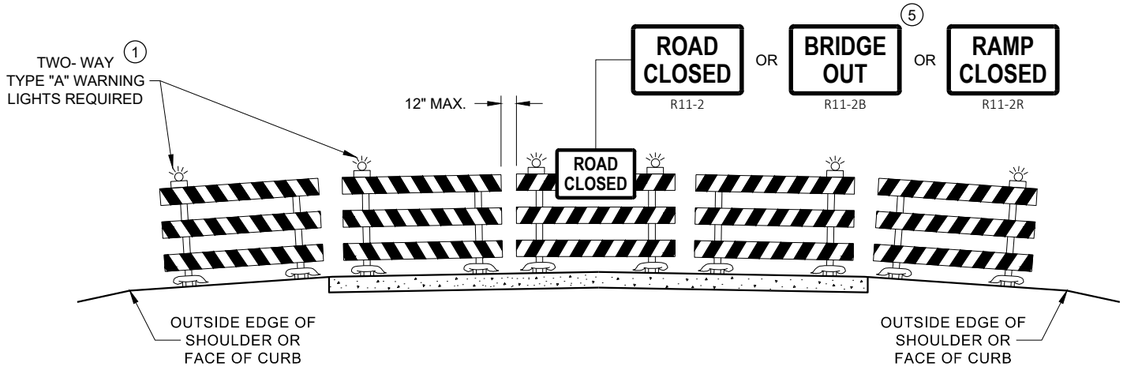

DETAIL D
ROAD CLOSURE BARRICADE DETAIL
APPROACH VIEW

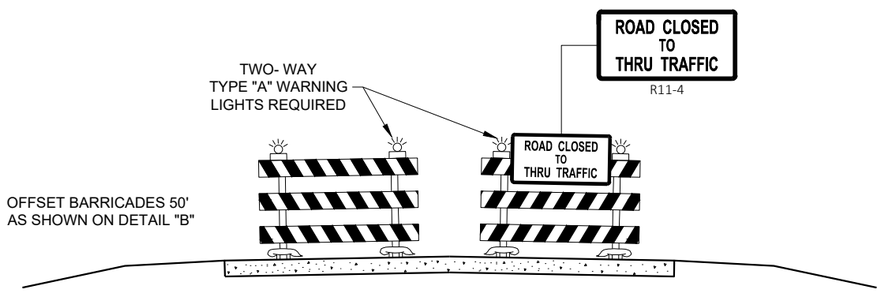

DETAIL E
LANE CLOSURE BARRICADE DETAIL
APPROACH VIEW

SEE SDD 15C2 - SHEET "a" FOR LEGEND

GENERAL NOTES

THE EXACT NUMBER, LOCATION, AND SPACING OF ALL SIGNS AND BARRICADES SHALL BE ADJUSTED TO FIT FIELD CONDITIONS AS APPROVED BY THE ENGINEER.

ANY SIGNS TEMPORARY OR EXISTING, WHICH CONFLICT WITH TRAFFIC CONTROL "IN USE", SHALL BE REMOVED OR COVERED AS NEEDED AND AS APPROVED BY THE ENGINEER.

THE SPACING BETWEEN TRAFFIC CONTROL SIGNS SHOULD BE ADJUSTED TO NOT CONFLICT WITH AND SHOULD PROVIDE A DESIRABLE MINIMUM OF 200 FEET CLEARANCE TO EXISTING SIGNS THAT WILL REMAIN IN PLACE.

BARRICADES THAT MUST BE MOVED FOR A WORK OPERATION SHALL BE IMMEDIATELY RE-ESTABLISHED UPON COMPLETION OF THE OPERATION, OR FOR CONTINUING OPERATIONS, AT THE END OF EACH WORKING DAY.

SIGNS THAT WILL BE IN PLACE LESS THAN 7 CONTINUOUS DAYS AND NIGHTS MAY BE MOUNTED ON PORTABLE SUPPORTS.

ALL TYPE III BARRICADES SHALL HAVE RAILS REFLECTORIZED ON BOTH FACES. STRIPES SHALL BE PROPERLY SLOPED DOWN TOWARD THE TRAFFIC SIDE OR AS SHOWN IN THE ROAD CLOSURE BARRICADE DETAIL "D" FOR FULL ROAD CLOSURES.

TYPE "A" LOW - INTENSITY FLASHING WARNING LIGHTS SHALL BE VISIBLE ON BOTH SIDES OF THE BARRICADE.

THE R11 - 2, R11 - 3, M4 - 9, R11 - 4, AND R10 - 61 SIGNS PLACED ON THE BARRICADES SHALL COVER NO MORE THAN THE TOP RAIL. THE SIGNS SHALL NOT COVER ANY PORTION OF THE MIDDLE RAIL OR BOTTOM RAILS.

"WO" AND "MO" SIGNS ARE THE SAME AS "W" AND "M" SIGNS EXCEPT THE BACKGROUND IS ORANGE.

ALL SIGNS SHALL BE 48" X 48" UNLESS OTHERWISE NOTED BELOW:
- R11 - 2 SHALL BE 48" X 30"
- R11 - 3 SHALL, R11 - 4 AND R10 - 61 SHALL BE 60 " X 30"
- M4 - 9 SHALL BE 30" X 24"
- M3 - X SHALL BE 24" X 12" (36" X 18" IF NEEDED TO MATCH EXISTING SIGNS)
- M4 - 8 SHALL BE 24" X 12" (36" X 18" IF NEEDED TO MATCH EXISTING SIGNS)
- M1 - 4, M1 - 5A AND M1 - 6 SHALL BE 24" X 24" (36" X 36" IF NEEDED TO MATCH EXISTING SIGNS)
- MO5 - 1 AND MO6 - 1 SHALL BE 21" X 21" (30" X 30" IF NEEDED TO MATCH EXISTING SIGNS)
- D1 - X SHALL BE AS SHOWN ON SPECIFIC PROJECT SIGNING DETAIL SHEETS.
- R1 - 1 SHALL BE 36" X 36"

(1) TWO WARNING LIGHTS SHALL BE PROVIDED ON THE CENTER BARRICADE AND A MINIMUM OF ONE WARNING LIGHT SHALL BE PROVIDED ON EACH OF THE OTHER BARRICADES WITHIN THE ROADWAY LIMITS. SPACING OF THE WARNING LIGHTS SHALL BE UNIFORM TO THE EDGE OF ROADWAY AS SHOWN (APPROX. 8 FOOT LIGHT SPACING.

(2) THESE SIGNS AND BARRICADES ARE NOT REQUIRED IF ROAD CLOSURE BEGINS AT AN INTERSECTION.

(3) FOR ROAD CLOSURE WITHOUT LOCAL ACCESS TO PROJECT, SEE ROAD CLOSURE BARRICADE DETAIL "D".

(4) FOR ROAD CLOSURE WITH LOCAL ACCESS TO PROJECT, SEE ROAD CLOSURE BARRICADE DETAIL "E".

(5) FOR BRIDGE OR CULVERT REPLACEMENTS, SUBSTITUTE "BRIDGE OUT" INSTEAD OF "ROAD CLOSED" ON R11 - 2 AND R11 - 3 SIGNS.

(6) INSTALL DETOUR AND COMMUNITY GUIDE SIGNS AND ARROWS ONLY IF SPECIFIED IN THE CONTRACT. IF THERE ARE EXISTING ROUTE MARKER ASSEMBLIES THAT WILL REMAIN IN PLACE, ADJUST THE LOCATION OF THE DETOUR ROUTE SIGNS TO CORRESPOND WITH THE EXISTING ASSEMBLIES. MODIFY EXISTING SIGNS WHERE POSSIBLE. SEE SPECIFIC PROJECT DETOUR SIGNING DETAIL SHEETS. IF DETOUR SIGNS ARE BEING INSTALLED BY OTHERS, PLACE THE CONTRACTED TRAFFIC CONTROL SIGNS TO ALLOW FOR PLACEMENT OF ALL WARNING, DETOUR AND GUIDE SIGNS AS SHOWN.

(7) "EAST" CARDINAL DIRECTION MARKERS AND RIGHT TURN ARROWS ARE SHOWN. USE OTHER CARDINAL DIRECTIONS AND ARROWS AS APPROPRIATE.

BARRICADES AND SIGNS FOR VARIOUS CLOSURES

STATE OF WISCONSIN
DEPARTMENT OF TRANSPORTATION

APPROVED
May 2023 — DATE
/S/ Andrew Heidtke — WORK ZONE ENGINEER
FHWA

6
SDD 15C02 - 09b

THIS DRAWING PROVIDES GENERAL GUIDANCE ON TYPICAL DETOUR SIGN LAYOUT AND SPACING. SEE PROJECT DETOUR SIGNING SHEETS FOR SPECIFIC DETAILS FOR EACH PROJECT.

LEGEND

- SIGN ON PERMANENT SUPPORT
- WORK AREA
- DETOUR / EAST — M4 - 8, M3 - X
- XX — M1 - 4; OR XX — M1 - 6; OR COUNTY X — M1 - 5A
- M05 - 1; OR M06 - 1; OR M06 - 1

GENERAL NOTES

THE EXACT NUMBER, LOCATION AND SPACING OF ALL SIGNS SHALL BE ADJUSTED TO FIT FIELD CONDITIONS AS APPROVED BY THE ENGINEER.

IF THERE ARE EXISTING ROUTE MARKER ASSEMBLIES THAT WILL REMAIN IN PLACE, ADJUST THE LOCATION OF THE DETOUR ROUTE SIGNS TO CORRESPOND WITH THE EXISTING ASSEMBLIES. SEE SPECIFIC PROJECT DETOUR SIGNING DETAIL SHEETS. MODIFY EXISTING SIGNS WHERE POSSIBLE.

THE SPACING BETWEEN TRAFFIC CONTROL AND DETOUR SIGNS SHOULD BE ADJUSTED TO NOT CONFLICT WITH AND TO PROVIDE A DESIRABLE MINIMUM OF 200 FEET CLEARANCE TO EXISTING SIGNS THAT WILL REMAIN IN PLACE.

ANY SIGNS TEMPORARY OR EXISTING, WHICH CONFLICT WITH TRAFFIC CONTROL "IN USE" SHALL BE REMOVED OR COVERED AS NEEDED AND AS APPROVED BY THE ENGINEER.

SIGNS THAT WILL BE IN PLACE LESS THAN 7 CONTINUOUS DAYS AND NIGHTS MAY BE MOUNTED ON PORTABLE SUPPORTS.

"MO" SIGNS ARE THE SAME AS "M" SIGNS EXCEPT THE BACKGROUND IS ORANGE.

SIGN SIZES SHALL BE AS FOLLOWS:

- M3-X SHALL BE 24" X 12" (36" X 18" IF NEEDED TO MATCH EXISTING SIGNS)
- M4-8 SHALL BE 24" X 12" (36" X 18" IF NEEDED TO MATCH EXISTING SIGNS)
- M1-4, M1-5A AND M1-6 SHALL BE 24" X 24" (36" X 36" IF NEEDED TO MATCH EXISTING SIGNS)
- M05-1 AND M06-1 SHALL BE 21" X 21" (30" X 30" IF NEEDED TO MATCH EXISTING SIGNS)
- M4-9 AND M4-59 SHALL BE 30" X 24"
- M4-8a SHALL BE 24" X 18"
- G20-51 SHALL BE 60" X 24"
- W20-2A SHALL BE 48" X 48"
- D1-X SHALL BE AS SHOWN ON SPECIFIC PROJECT SIGNING DETAIL SHEETS.

* OPTIONAL SIGNS. SEE SPECIFIC PROJECT DETOUR SIGNING DETAIL SHEETS.

** FOR A TOWN ROAD OR LOCAL STREET DETOURED ONTO A STATE TRUNK HIGHWAY, PLACE A ROAD NAME PLAQUE ABOVE THE M4-9 SIGN AS SPECIFIED IN THE CONTRACT

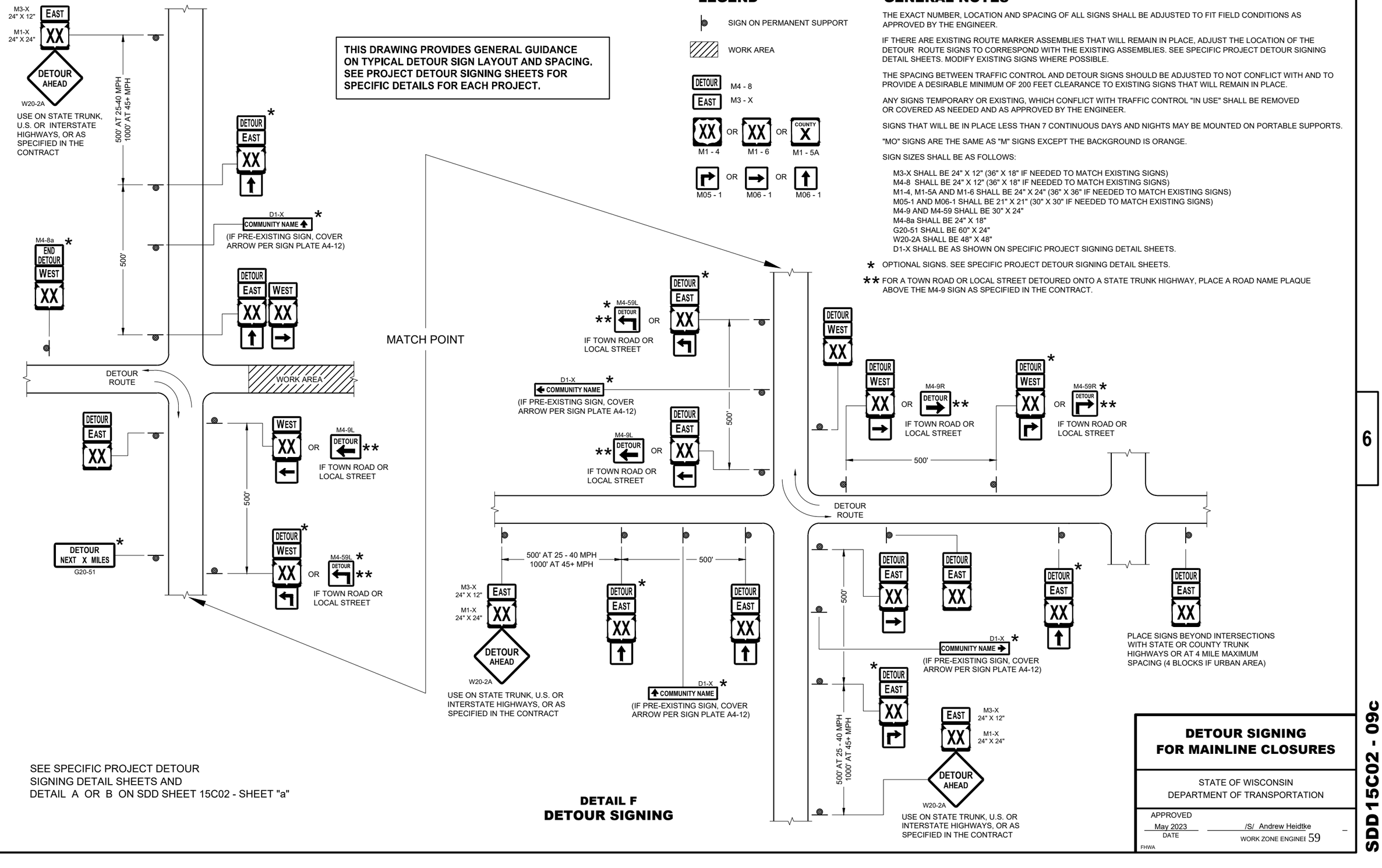

SEE SPECIFIC PROJECT DETOUR SIGNING DETAIL SHEETS AND DETAIL A OR B ON SDD SHEET 15C02 - SHEET "a"

DETAIL F
DETOUR SIGNING

DETOUR SIGNING FOR MAINLINE CLOSURES

STATE OF WISCONSIN
DEPARTMENT OF TRANSPORTATION

APPROVED
May 2023
DATE

/S/ Andrew Heidtke
WORK ZONE ENGINEER

FHWA

6

SDD 15C02 - 09c

FRONT SIDE

BACK SIDE

SIDE VIEW

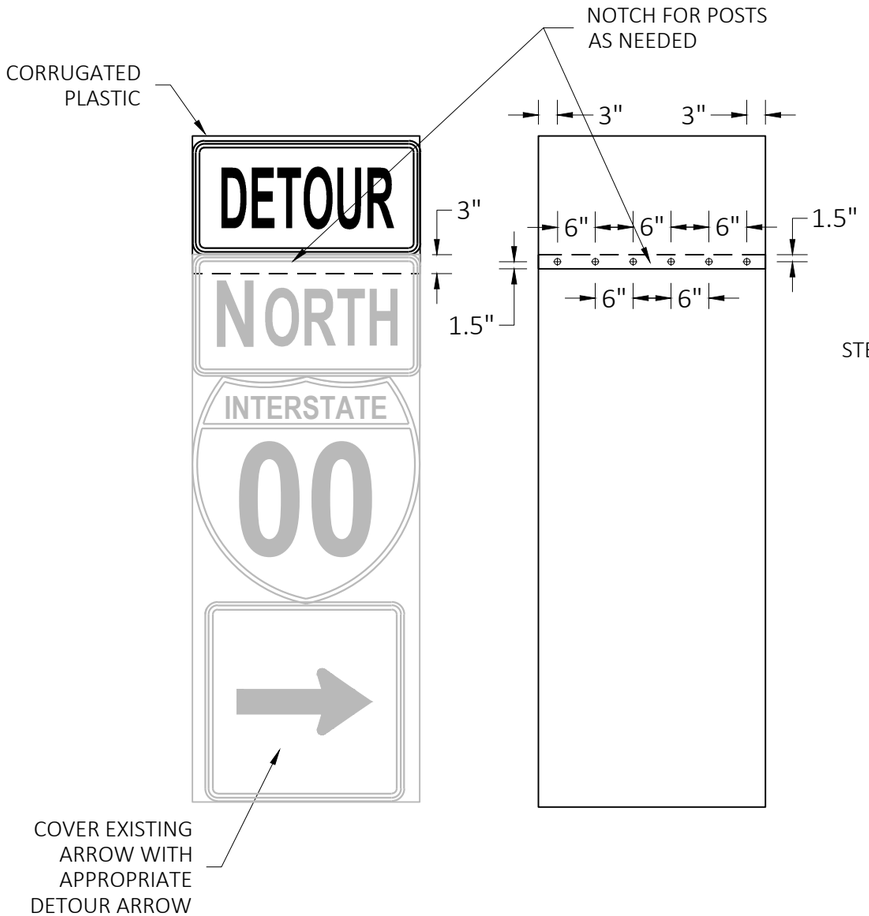

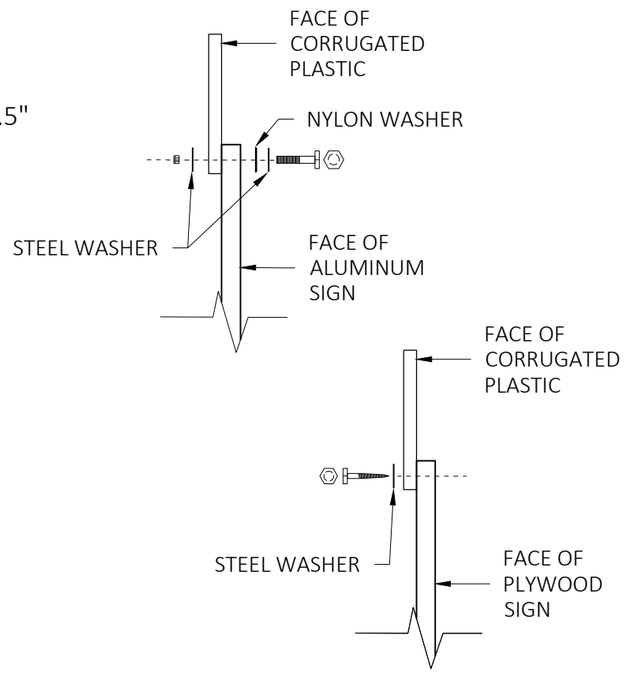

GENERAL NOTES

CELLS OF CORRUGATED PLASTIC SHALL BE VERTICALLY ORIENTED.

PROVIDE A 0.4-INCH THICK BASE CORRUGATED PLASTIC WITH A 0.035-INCH WALL THICKNESS AND 0.4-INCH CELL SIZE.

FOR 36" WIDE SIGNS: USE 6 FASTENERS AS SHOWN.

FOR 24" WIDE SIGNS: USE 4 FASTENERS WITH EDGE SPACING AS SHOWN AND 6" SPACING BETWEEN FASTENERS.

METAL WASHERS, NUTS, BOLTS AND LAGS SHALL HAVE HEXAGONAL HEADS AND SHALL BE EITHER:

A. HOT DIP GALVANIZED IN ACCORDANCE WITH ASTM DESIGNATION: A 153, CLASS D, OR SC 3.

B. ELECTRO-GALVANIZED IN ACCORDANCE WITH ASTM DESIGNATION: B 633, TYPE III, SC3

THREADS ON BOLTS AND NUTS SHALL BE MANUFACTURED WITH SUFFICIENT ALLOWANCE FOR THE CADMIUM PLATE OR GALVANIZED COATING TO PERMIT THE NUTS TO RUN FREELY ON THE BOLTS.

PLYWOOD SIGNS:
LAG SCREWS - 5/16" x 1"
ALUMINUM SIGNS:
MACHINE BOLTS - 5/16" x 1-1/4" LENGTH W/NUTS
WASHERS:
1-1/4" O.D. x 3/8" I.D. x 1/16" STEEL
1-1/4" O.D. x 3/8" I.D. x .080 NYLON

MODIFIED ROUTE ASSEMBLY FOR DETOUR SIGNING

MODIFIED ROUTE ASSEMBLY FOR DETOUR SIGNING

STATE OF WISCONSIN
DEPARTMENT OF TRANSPORTATION

APPROVED
May 2023 — DATE
/S/ Andrew Heidtke — ROADWAY STANDARDS DEVEL ENGINEER
FHWA

6
SDD 15C02-09h

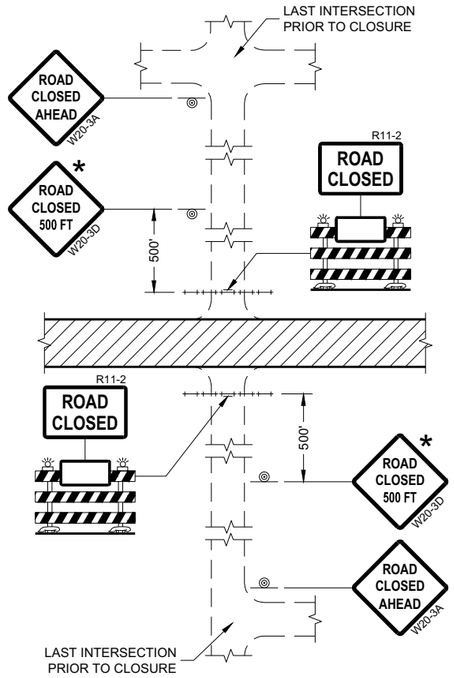

DETAIL 1
(NO ACCESS TO PROJECT)

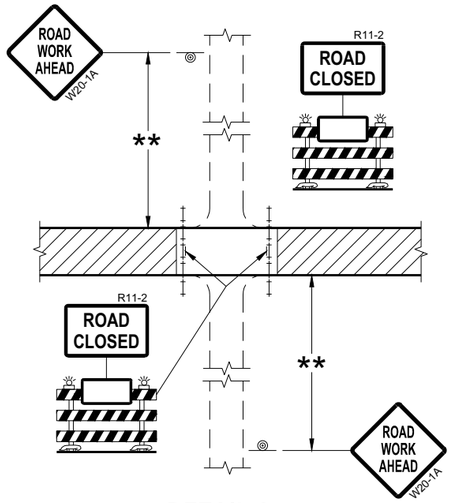

DETAIL 2
(PUBLIC CROSS-TRAFFIC MAINTAINED.
NO ACCESS TO PROJECT)

GENERAL NOTES

THE EXACT NUMBER, LOCATION, AND SPACING OF ALL SIGNS AND BARRICADES SHALL BE ADJUSTED TO FIT FIELD CONDITIONS AS APPROVED BY THE ENGINEER.

ANY SIGNS TEMPORARY OR EXISTING, WHICH CONFLICT WITH TRAFFIC CONTROL "IN USE" SHALL BE REMOVED OR COVERED AS NEEDED AND AS APPROVED BY THE ENGINEER.

THE SPACING BETWEEN TRAFFIC CONTROL SIGNS SHOULD BE ADJUSTED TO NOT CONFLICT WITH AND SHOULD PROVIDE A DESIRABLE MINIMUM OF 200 FEET CLEARANCE (500 FEET DESIRABLE) TO EXISTING SIGNS THAT WILL REMAIN IN PLACE.

IF A "STOP" SIGN MUST BE REMOVED FOR A WORK OPERATION, A TEMPORARY "STOP" SIGN SHALL BE PLACED PRIOR TO THE SIGN REMOVAL, OR A FLAGGER SHALL BE PROVIDED UNTIL THE SIGN IS REESTABLISHED.

BARRICADES THAT MUST BE MOVED FOR A WORK OPERATION SHALL BE IMMEDIATELY REESTABLISHED UPON COMPLETION OF THE OPERATION OR FOR CONTINUING OPERATIONS, AT THE END OF EACH WORKING DAY.

SIGNS THAT WILL BE IN PLACE LESS THAN SEVEN CONTINUOUS DAYS AND NIGHTS MAY BE MOUNTED ON PORTABLE SUPPORTS.

ALL TYPE III BARRICADES SHALL HAVE RAILS REFLECTORIZED ON BOTH FACES. STRIPES SHALL BE PROPERLY SLOPED DOWN TOWARD THE TRAFFIC SIDE OR AS SHOWN IN THE ROAD CLOSURE BARRICADE DETAIL "D" FOR FULL ROAD CLOSURES.

TYPE "A" LOW-INTENSITY FLASHING WARNING LIGHTS SHALL BE VISIBLE ON BOTH SIDES OF THE BARRICADE.

THE R11-2, R11-3, AND R11-4 SIGNS PLACED ON BARRICADES SHALL COVER NO MORE THAN THE TOP RAIL. THE SIGNS SHALL NOT COVER ANY PORTION OF THE MIDDLE OR BOTTOM RAILS.

ALL SIGNS SHALL BE 48" X 48" UNLESS OTHERWISE NOTED BELOW:
R11-2 SHALL BE 48" X 30".
R11-4 AND R11-3 SHALL BE 60" X 30".

* OMIT THE "ROAD CLOSED 500 FT." SIGN IF THE LAST INTERSECTION IS 500 FEET OR LESS FROM THE WORK ZONE.

** 500' MAX. OR AT LAST INTERSECTION, WHICHEVER IS CLOSEST.

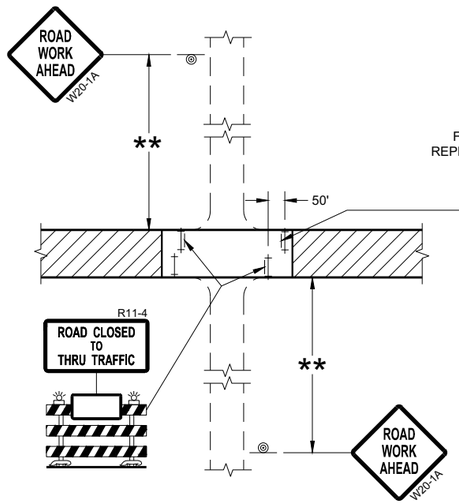

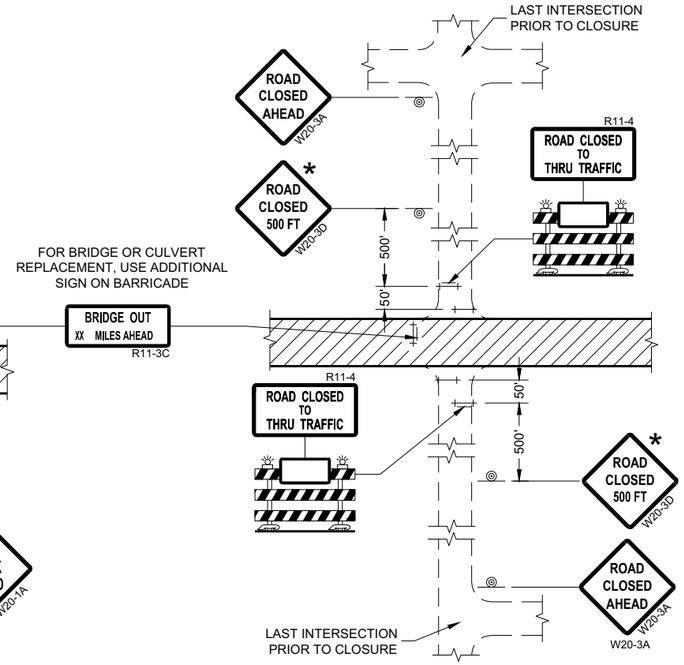

DETAIL 3
(PUBLIC CROSS-TRAFFIC MAINTAINED.
CONTRACTOR, LOCAL BUSINESS AND
RESIDENT ACCESS TO PROJECT)

DETAIL 4
(CONTRACTOR, LOCAL BUSINESS AND
RESIDENT ACCESS TO PROJECT)

LEGEND

- SIGN ON PERMANENT SUPPORT
- TYPE III BARRICADE
- TYPE III BARRICADE WITH ATTACHED SIGN
- TYPE "A" WARNING LIGHT (FLASHING)
- WORK AREA

BARRICADES AND SIGNS FOR SIDEROAD CLOSURES

STATE OF WISCONSIN
DEPARTMENT OF TRANSPORTATION

APPROVED
July 2018
DATE
/S/ Andrew Heidtke
WORK ZONE ENGINEE

FHWA

6

SDD 15C03 - 05

GENERAL NOTES

THE EXACT NUMBER, LOCATION, AND SPACING OF ALL SIGNS AND DEVICES SHALL BE ADJUSTED TO FIT FIELD CONDITIONS.

THE SPACING BETWEEN TRAFFIC CONTROL SIGNS SHOULD BE ADJUSTED TO NOT CONFLICT WITH AND SHOULD PROVIDE A MINIMUM OF 200 FEET (500 FEET DESIRABLE) CLEARANCE TO EXISTING SIGNS THAT WILL REMAIN IN PLACE.

ALL SIGNS ARE 48" X 48" UNLESS OTHERWISE NOTED.

SIGNS THAT WILL BE IN PLACE LESS THAN SEVEN CONTINUOUS DAYS AND NIGHTS MAY BE MOUNTED ON PORTABLE SUPPORTS.

IF A "STOP" SIGN MUST BE REMOVED FOR A WORK OPERATION, A TEMPORARY "STOP" SIGN SHALL BE PLACED PRIOR TO THE SIGN REMOVAL, OR A FLAGGER SHALL BE PROVIDED UNTIL THE SIGN IS REESTABLISHED.

* OMIT G20-1 SIGNS IF LENGTH OF WORK AREA IS 2 MILES OR LESS

** PLACE AN ADDITIONAL W20-1A "ROAD WORK AHEAD" SIGN IF WORK AREA WITHIN THE PROJECT IS SEPARATED BY MORE THAN 2 MILES FROM PREVIOUS WORK AREA.

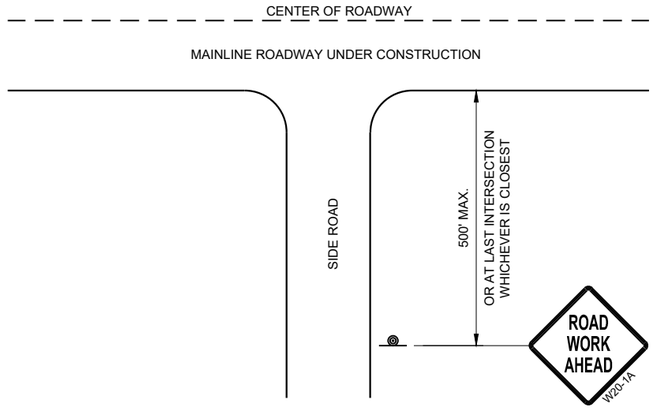

TYPICAL SIDE ROAD APPROACH WARNING SIGN DETAIL

LEGEND

SIGN ON PERMANENT SUPPORT

DIRECTION OF TRAFFIC

WORK AREA

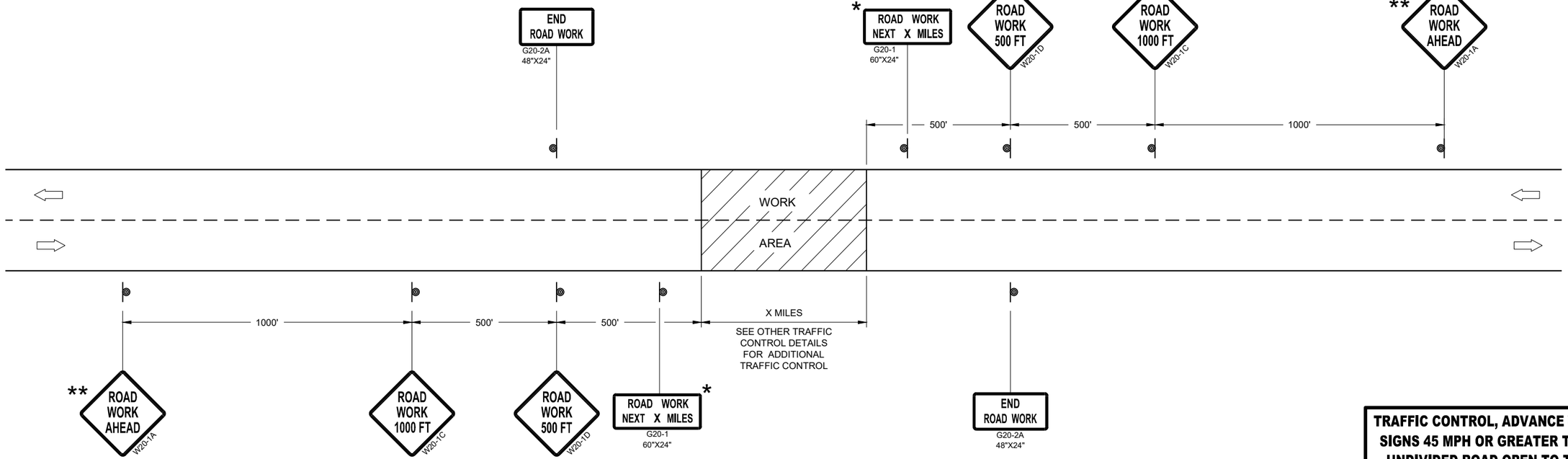

TRAFFIC CONTROL, ADVANCE WARNING SIGNS 45MPH OR GREATER

TRAFFIC CONTROL, ADVANCE WARNING SIGNS 45 MPH OR GREATER TWO-WAY UNDIVIDED ROAD OPEN TO TRAFFIC

STATE OF WISCONSIN
DEPARTMENT OF TRANSPORTATION

APPROVED
July 2018
DATE

/S/ Andrew Heidtke
WORK ZONE ENGINEE

FHWA

6

SDD 15C04 - 05

GENERAL NOTES

THE EXACT NUMBER, LOCATION, AND SPACING OF ALL SIGNS AND DEVICES SHALL BE ADJUSTED TO FIT FIELD CONDITIONS.

THE SPACING BETWEEN TRAFFIC CONTROL SIGNS SHOULD BE ADJUSTED TO NOT CONFLICT WITH AND SHOULD PROVIDE A MINIMUM OF 200 FEET (500 FEET DESIRABLE) CLEARANCE TO EXISTING SIGNS THAT WILL REMAIN IN PLACE.

ALL SIGNS ARE 48" X 48" UNLESS OTHERWISE NOTED. IF NECESSARY DUE TO SPACE CONSTRAINTS, 36"X36" SIGNS MAY BE USED INSTEAD OF 48" X 48" SIGNS.

SIGNS THAT WILL BE IN PLACE LESS THAN SEVEN CONTINUOUS DAYS AND NIGHTS MAY BE MOUNTED ON PORTABLE SUPPORTS.

IF A "STOP" SIGN MUST BE REMOVED FOR A WORK OPERATION, A TEMPORARY "STOP" SIGN SHALL BE PLACED PRIOR TO THE SIGN REMOVAL, OR A FLAGGER SHALL BE PROVIDED UNTIL THE SIGN IS REESTABLISHED.

* THE THIRD W20-1 SIGN IS REQUIRED ONLY IF THERE IS AN INTERSECTION BETWEEN THE "ROAD WORK 500 FEET" SIGN AND THE WORK ZONE. ADJUST THE PLACEMENT OF THIS SIGN BASED ON INTERSECTION LOCATION AND OTHER FIELD CONDITIONS.

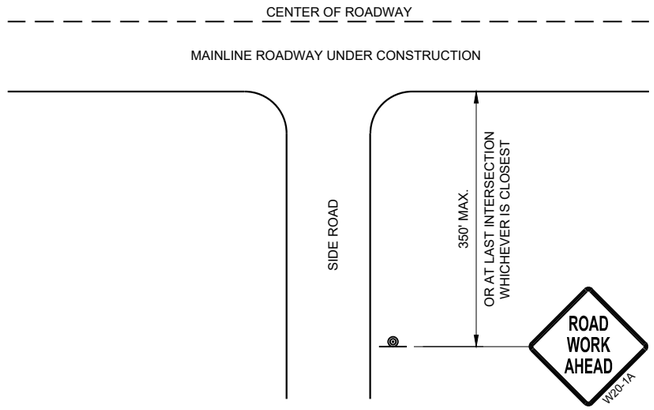

TYPICAL SIDE ROAD APPROACH WARNING SIGN DETAIL

LEGEND

- SIGN ON PERMANENT SUPPORT
- DIRECTION OF TRAFFIC
- WORK AREA

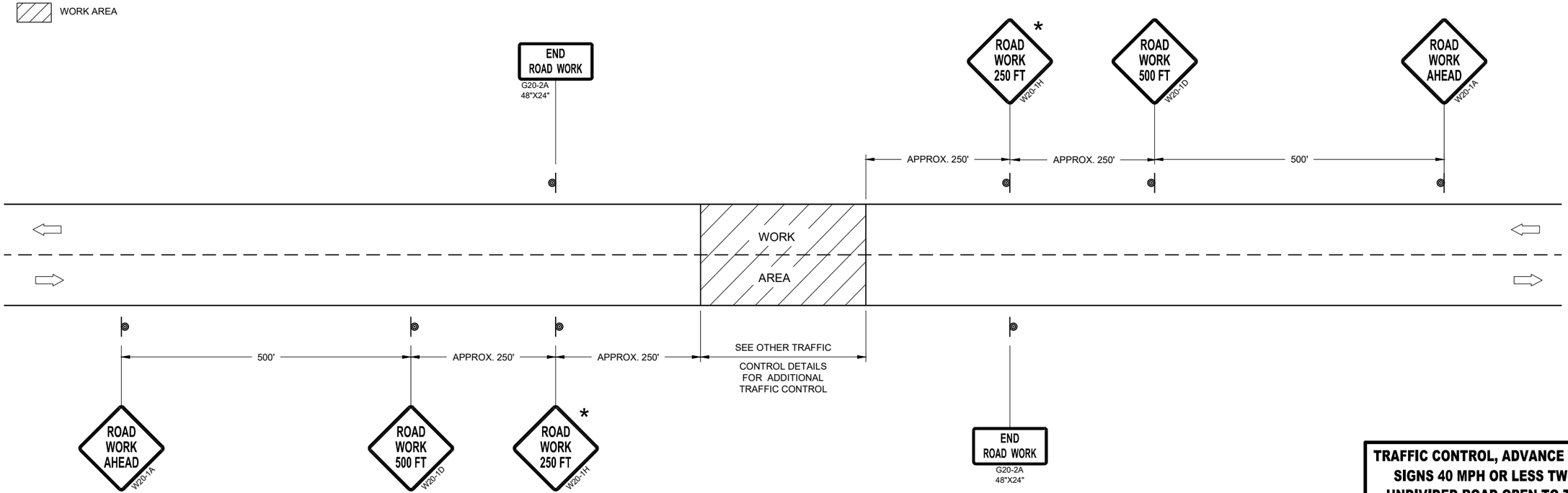

TRAFFIC CONTROL, ADVANCE WARNING SIGNS 40MPH OR LESS

TRAFFIC CONTROL, ADVANCE WARNING SIGNS 40 MPH OR LESS TWO-WAY UNDIVIDED ROAD OPEN TO TRAFFIC

STATE OF WISCONSIN
DEPARTMENT OF TRANSPORTATION

APPROVED
July 2018
DATE

/S/ Andrew Heidtke
WORK ZONE ENGINEE

FHWA

6

SDD 15C05 - 05

GENERAL NOTES

DETAILS OF CONSTRUCTION NOT SHOWN ON THIS DRAWING SHALL CONFORM TO STANDARD SPECIFICATIONS AND SPECIAL PROVISIONS.

(1) LOCATE THE NO PASSING ZONE W14-3 SIGN WITHIN 50 FEET OF THE "T" MARKING

(2) MEASURE FROM EDGE OF MARKING TO JOINT LINE. THIS DOES NOT INCLUDE SPACE NEEDED FOR GROOVING OPERATIONS.

*CONFIRM MARKING LINE WIDTH WITH THE MISCELLANEOUS QUANTITIES

LEGEND

"T" MARKING

SIGN ON PERMANENT SUPPORT

DIRECTION OF TRAFFIC

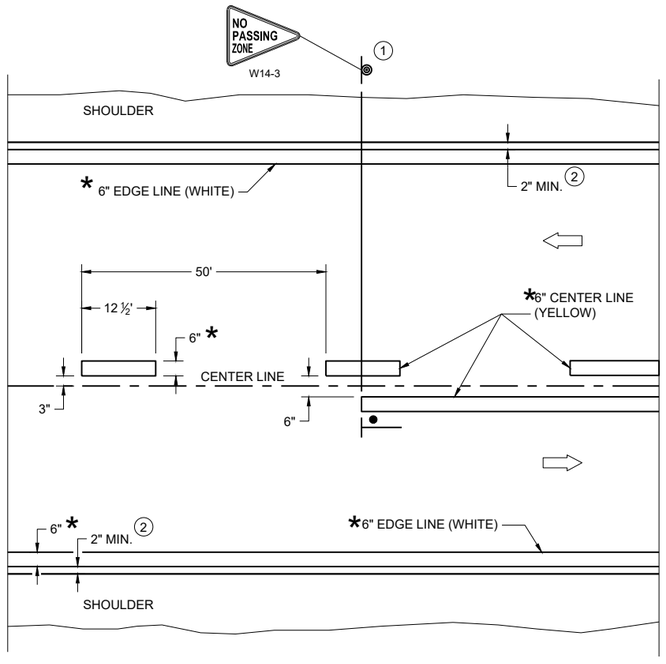

TWO WAY TRAFFIC

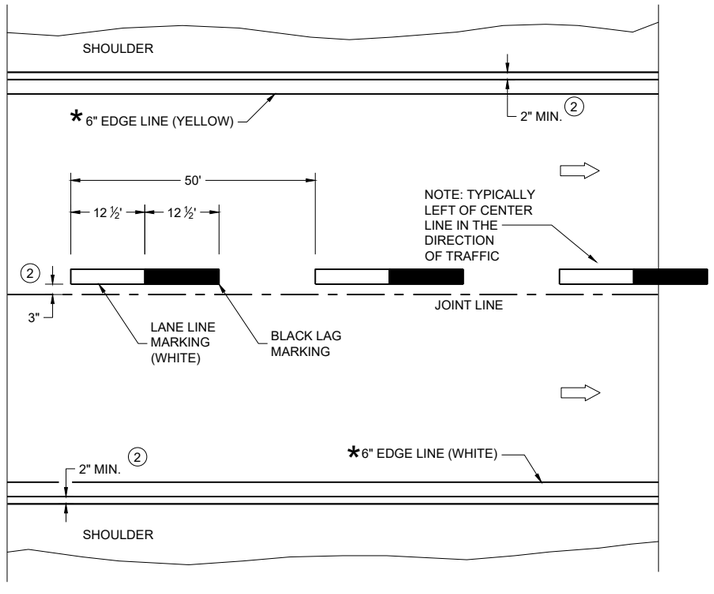

ONE WAY TRAFFIC

PERMANENT PAVEMENT MARKING

PERMANENT LONGITUDINAL PAVEMENT MARKINGS

STATE OF WISCONSIN
DEPARTMENT OF TRANSPORTATION

APPROVED
May 2023 — DATE
/S/ Jeannie Silver — Statewide Pavement Marking Engineer
FHWA

6

SDD 15C08-23a

GENERAL NOTES

1. REFLECTIVE SHEETING SHALL FOLLOW THE REQUIREMENTS IN THE APPROVED PRODUCTS LISTING FOR SIGN SHEETING.
2. LOCATION OF WARNING LIGHTS WHEN SHOWN ON THE PLAN.

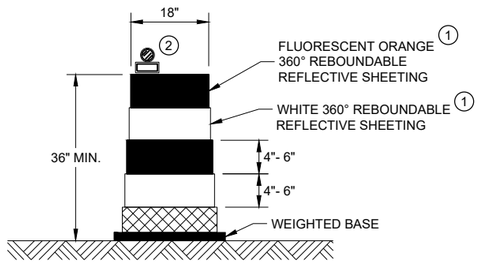

DRUM

BALLAST WIDTHS
RANGE FROM 24"-36"

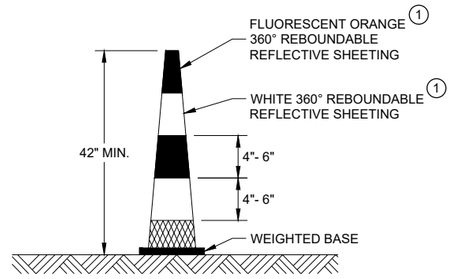

42" CONE

DO NOT USE IN TAPERS
½ SPACING OF DRUMS

BALLAST WIDTHS
RANGE FROM 14"-20"

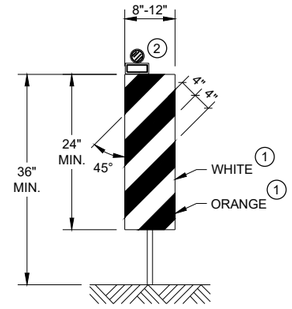

VERTICAL PANEL

THE STRIPES SHALL SLOPE DOWNWARD TO
THE TRAFFIC SIDE FOR CHANNELIZATION.

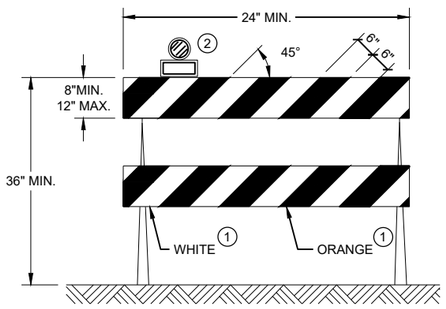

TYPE II BARRICADE

FOR RAILS LESS THAN 36" LONG, 4" WIDE STRIPES
MAY BE USED. ALL STRIPES SHALL SLOPE DOWNWARD
TO THE TRAFFIC SIDE FOR CHANNELIZATION.

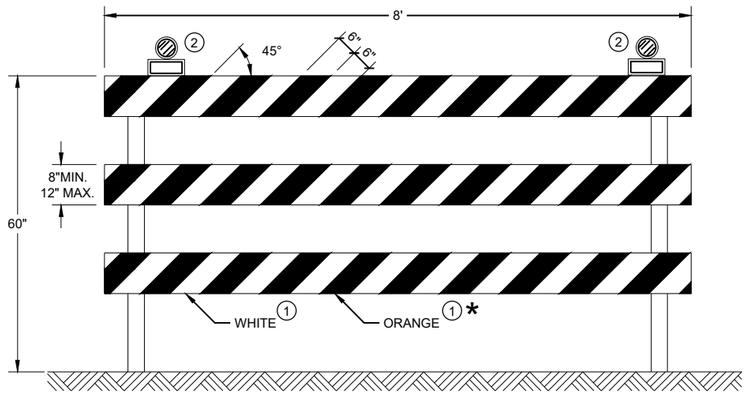

TYPE III BARRICADE

IF SIGN MOUNTED, DO NOT COVER MORE THAN 50% OF THE TOP
TWO RAILS OR 33% OF THE TOTAL AREA OF THE THREE RAILS.

* IF USED FOR A PERMANENT APPLICATION USE RED SHEETING.

CHANNELIZING DEVICES DRUMS, CONES, BARRICADES AND VERTICAL PANELS

STATE OF WISCONSIN
DEPARTMENT OF TRANSPORTATION

APPROVED
November 2022
DATE

/S/ Andrew Heidtke
WORK ZONE ENGINEE

FHWA

6

SDD 15C11 - 10b

6

SDD 15C11 - 10b

LEGEND

SIGN ON PORTABLE OR PERMANENT SUPPORT

TEMPORARY PORTABLE RUMBLE STRIP ARRAY

DIRECTION OF TRAFFIC

WORK AREA

FLAGGER, EQUIPPED WITH STOP/SLOW PADDLE FASTENED ON SUPPORT STAFF

GENERAL NOTES

DETAILS OF TRAFFIC CONTROL DEVICES AND INSTALLATION NOT SHOWN ON THIS DRAWING SHALL CONFORM TO THE PERTINENT REQUIREMENTS OF THE STANDARD SPECIFICATIONS, THE SPECIAL PROVISIONS, AND THE MANUAL ON UNIFORM TRAFFIC CONTROL DEVICES.

ALL SIGNS ARE 48" X 48" UNLESS OTHERWISE NOTED.

"WO" SIGNS ARE THE SAME AS "W" SIGNS EXCEPT THE BACKGROUND IS ORANGE.

THE EXACT NUMBER, LOCATION AND SPACING OF ALL SIGNS, DEVICES, AND LOCATION OF ALL FLAGGERS SHALL BE ADJUSTED TO FIT FIELD CONDITIONS AS APPROVED BY THE ENGINEER.

THE FIRST ADVANCE WARNING SIGN SHOULD TYPICALLY BE LOCATED IN ADVANCE OF THE ANTICIPATED TRAFFIC BACKUP OR QUEUE.

WHEN A SIDE ROAD OR RAMP INTERSECTS THE FACILITY ON WHICH THE WORK IS BEING PERFORMED, ADDITIONAL TRAFFIC CONTROLS SHALL BE PROVIDED AS SPECIFIED IN THE PLANS AND/OR THE SPECIAL PROVISIONS OR AS APPROVED BY THE ENGINEER.

FLAGGING

FLAGGERS SHALL BE IN SIGHT OF EACH OTHER OR IN DIRECT COMMUNICATION AT ALL TIMES. THEY SHALL BE EQUIPPED WITH STOP/SLOW PADDLES FASTENED ON SUPPORT STAFFS. WHEN THE FLAGGING OPERATION IS NOT IN EFFECT REMOVE TEMPORARY PORTABLE RUMBLE STRIPS PRIOR TO COVERING OR REMOVING ALL ADVANCE SIGNING.

(1) FOR MOVING WORK OPERATIONS, POST ADDITIONAL W20-7A FLAGGER SIGNS AT APPROXIMATELY 3,500' INTERVALS IN THE MOVING WORK OPERATION OR AS APPROVED BY THE ENGINEER.

(2) SIGN NOT REQUIRED IF FLAGGING OPERATION OCCURS WITHIN A SIGNED ROAD WORK ZONE AREA.

WHEN THE DISTANCE BETWEEN FLAGGERS EXCEEDS 2 MILES, A PILOT CAR IS REQUIRED. WHEN CURVES REDUCE SIGHT DISTANCE BELOW 400', A PILOT CAR IS REQUIRED.

TEMPORARY PORTABLE RUMBLE STRIPS

UTILIZE TEMPORARY PORTABLE RUMBLE STRIPS ON ALL FLAGGING OPERATIONS.

(3) EACH TEMPORARY PORTABLE RUMBLE STRIP ARRAY CONSISTS OF THREE RUMBLE STRIPS PLACED TRANSVERSE ACROSS THE LANE AT THE LOCATIONS SHOWN. WITHIN EACH ARRAY, SPACING BETWEEN RUMBLE STRIPS SHALL BE 15 FEET ON CENTER

ONLY USE TEMPORARY PORTABLE RUMBLE STRIPS FROM THE APPROVED PRODUCTS LIST.

INSTALL TEMPORARY RUMBLE STRIPS PER MANUFACTURER'S RECOMMENDATIONS.

PLACE ADVANCE SIGNING PRIOR TO INSTALLING TEMPORARY RUMBLE STRIPS.

DO NOT INSTALL TEMPORARY PORTABLE RUMBLE STRIPS ON GRAVEL, MILLED SURFACES, OR ASPHALT THAT HAS BEEN PAVED LESS THAN 12 HOURS.

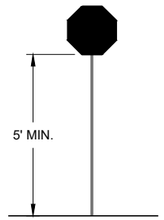

STOP/SLOW PADDLE ON SUPPORT STAFF

SIGN AND TEMPORARY RUMBLE STRIP ARRAY SPACING TABLE

SPEED LIMIT	SPACING "A"
25-30 MPH	200'
35-40 MPH	350'
45-55 MPH	500'

WO3-4

USE OF WO3-4 SIGN IS OPTIONAL. WHEN USED, THIS SIGN SHALL BE LOCATED BETWEEN THE W20-7A AND W20-4A SIGNS, USING SPACING "A".

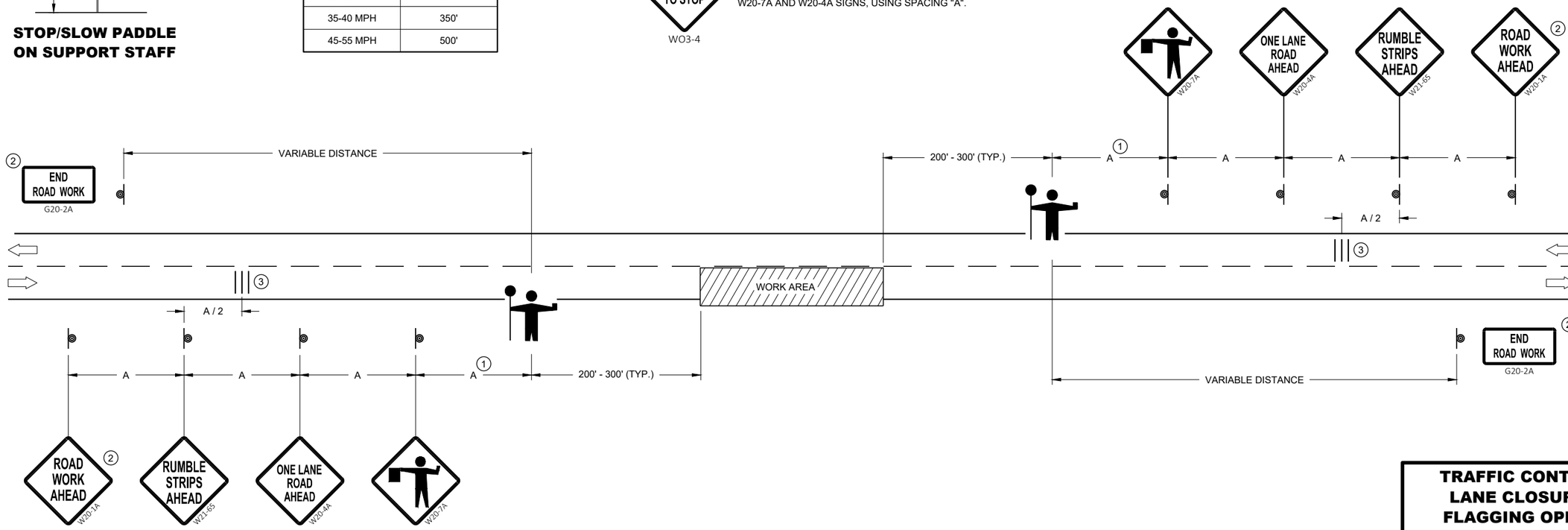

TRAFFIC CONTROL FOR LANE CLOSURE WITH FLAGGING OPERATION

STATE OF WISCONSIN
DEPARTMENT OF TRANSPORTATION

APPROVED
May 2022
DATE

/S/ Andrew Heidtke
WORK ZONE ENGINEE

FHWA

6

SDD 15C12 - 09a

6

SDD 15C12 - 09a

GENERAL NOTES

DRAWING NOT TO SCALE. ALL SIGNS AND POSTS ON THIS SHEET SHALL BE PAID FOR WITH 'TRAFFIC CONTROL SIGNS' BID ITEM. ALL SIDE ROADS WHICH ARE UNDER CONSTRUCTION OF CURB AND GUTTER AND/OR GRADING SHALL BE ADEQUATELY SIGNED.

ALL SIGNS AND DEVICES SHALL BE IN CONFORMANCE WITH THE WISCONSIN MANUAL OF UNIFORM TRAFFIC CONTROL DEVICES (WMUTCD). SIGN LAYOUTS SHALL BE IN ACCORDANCE WITH THE WISDOT STANDARD SIGN PLATES.

"WO" SIGNS ARE THE SAME AS "W" SIGNS EXCEPT THAT THE BACKGROUND IS ORANGE.

ALL SIGNS ARE 48" X 48" UNLESS OTHERWISE NOTED.

THE EXACT NUMBER, LOCATION AND SPACING OF ALL SIGNS AND DEVICES SHALL BE ADJUSTED TO FIT FIELD CONDITIONS AS DIRECTED BY THE ENGINEER.

ALL SIGNS INAPPROPRIATE TO THE STATUS OF THE CONTROL ZONE, INCLUDING PRE-EXISTING SIGNS IN THE VICINITY, SHALL BE COVERED OR REMOVED AS DIRECTED BY THE ENGINEER.

SEE 15C34 FOR ADDITIONAL TRAFFIC CONTROL SIGNING WHEN CENTERLINE PAVEMENT MAKINGS ARE MISSING. 'DO NOT PASS' SIGNS MUST BE INSTALLED ON THE SAME DAY AS MILLING OPERATIONS.

(1) PLACE SIGNS 350' IN ADVANCE OF CHIP SEALED OR LOOSE GRAVEL SURFACES AND AT 1 MILE INTERVALS, OR AS DIRECTED BY THE ENGINEER.

(2) PLACE SIGN 200' MIN. FROM INTERSECTION AND 200' MIN. AFTER ADVANCE WARNING SIGN SHOWN IN SDD 15C04.

(3) ADD WO8-1 OR WO8-2 SIGN WHEN THE CONDITION IS PRESENT.

LEGEND

SIGN ON TEMPORARY SUPPORT

DIRECTION OF TRAFFIC

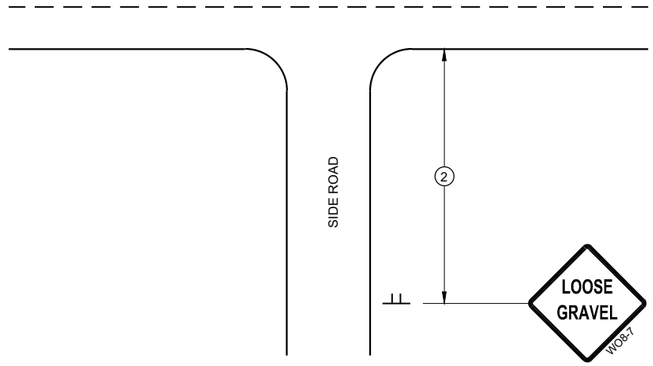

TYPICAL SIDE ROAD APPROACH SIGN DETAIL

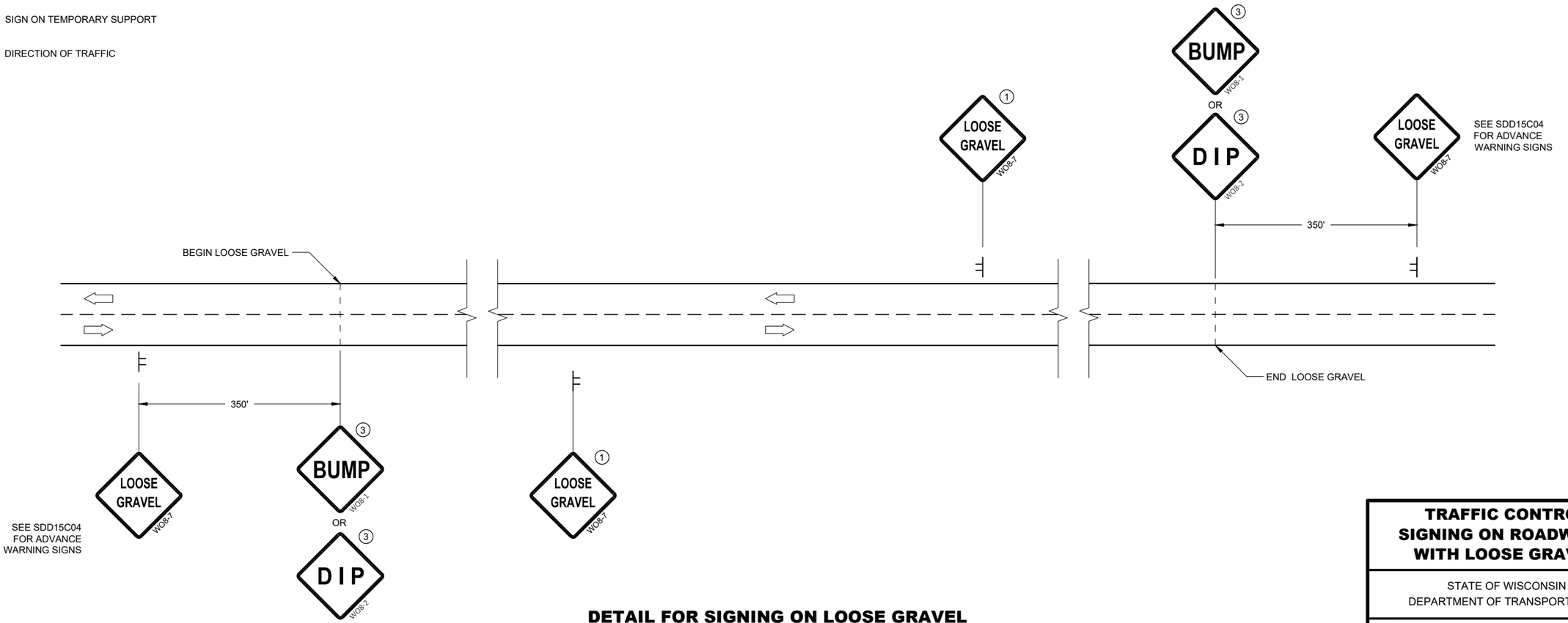

DETAIL FOR SIGNING ON LOOSE GRAVEL OR CHIP SEALED SURFACES

TRAFFIC CONTROL SIGNING ON ROADWAYS WITH LOOSE GRAVEL

STATE OF WISCONSIN
DEPARTMENT OF TRANSPORTATION

APPROVED
February 2021
DATE

/S/ Andrew Heidtke
WORK ZONE ENGINEE

FHWA

6

SDD 15D45 - 03

TYPICAL ASSEMBLIES

J1-1

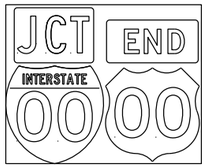

J1-2

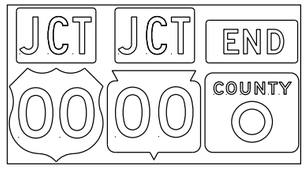

J1-3

JR1-1

J2-1

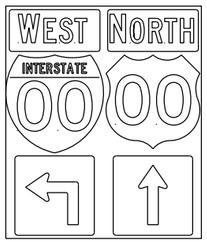

J2-2

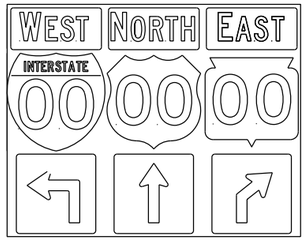

J2-3

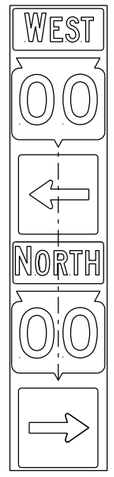

JV
(Typical Vertical J-Assembly
See Note 10 and 11)

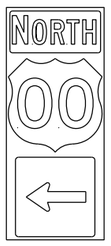

J3-1

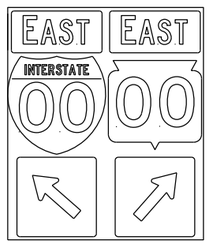

J3-2

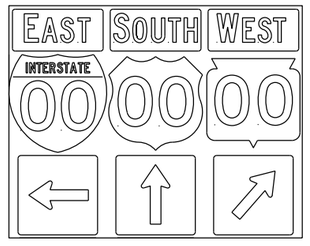

J3-3

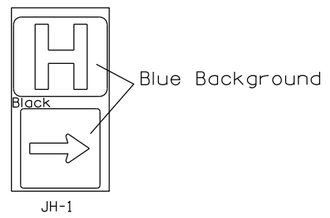

JH-1

J4-1

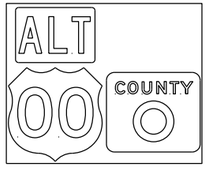

J4-2

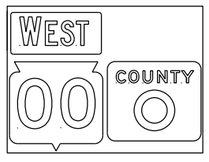

J4-2

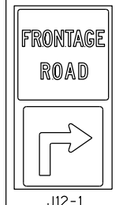

J12-1

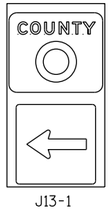

J13-1

J32-1

J33-1

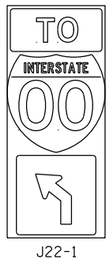

J22-1

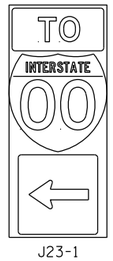

J23-1

JR13-1

JR23-1

JR99-1

NOTES

1. Signs are Type II - Type H Reflective
2. Color:
   Background - Black Non-reflective
   Message - see Note 4
3. Message Series - See Note 4
4. The colors and message spacing on each marker shall be according to the applicable route marker panel specifications.
5. Certain marker heads require the component pieces to be the same color. As an example, all the components used with an M1-1 Interstate marker shall be blue.
6. Single panel j-assemblies shall only be used with route marker shields that are same size. If the route marker shields are different size use multiple piece component.
7. Route assemblies that have 24 inch route shields and have dimensions greater than 48 inches (both vertical and horizontal) shall have one horizontal splice between the arrows and route shields. Vertical splices shall not be used on route assemblies with a horizontal dimension of 144 inches or less. The contractor shall not use more than one vertical joint per sign and the joint shall be between route shields.
8. Route assemblies that have 36 inch shields and have dimensions greater than 48 inchs (both vertical and horizontal) shall have two horizontal splices. One horizontal splice shall be between the cardinal direction and route shields and the other horizontal splice shall be between the arrows and route shields. Vertical splices shall not be used on route assemblies with a horizontal dimension of 144 or less. The contractor shall not use more than one vertical joint per sign and the joint shall be between route shields.
9. All Vertical J Assemblies are given a Sign Code of JV
10. For JV Assemblies that have a mixture of Interstate and Non-Interstate shields, arrows and cardinals shall be white on blue.
11. For JV Assemblies that have a mixture of Non-Interstate and Auto-Tour shields, arrows and cardinals shall be black on white.

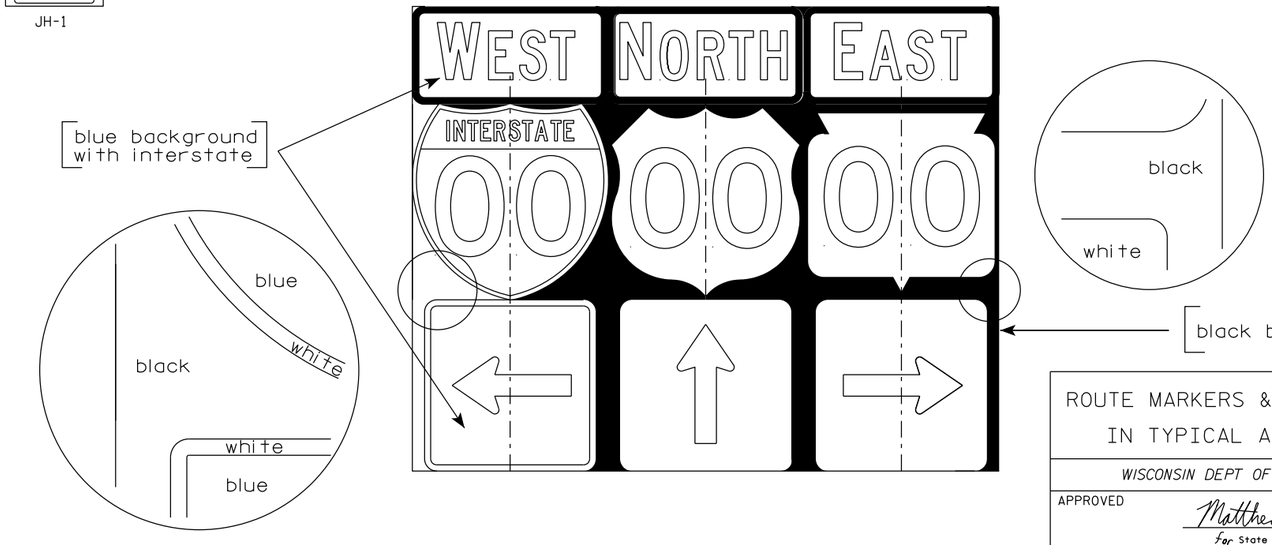

ROUTE MARKERS & COMPONENTS IN TYPICAL ASSEMBLIES

WISCONSIN DEPT OF TRANSPORTATION

APPROVED Matthew R Rauch
for State Traffic Engineer

DATE 6/7/23 PLATE NO. A2-1S.10

PROJECT NO:

SHEET NO: 68 E

URBAN AREA

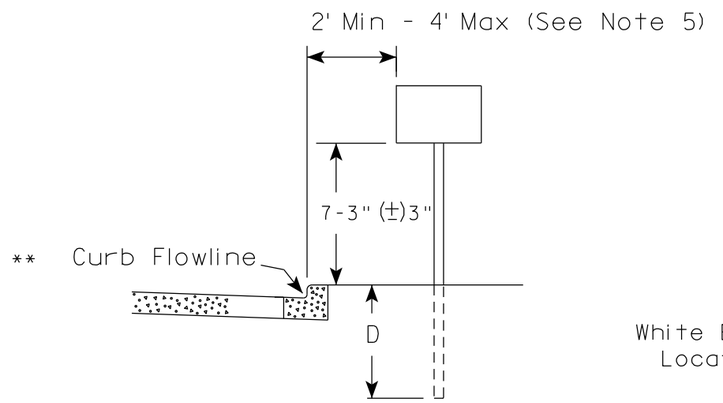

RURAL AREA (See Note 2)

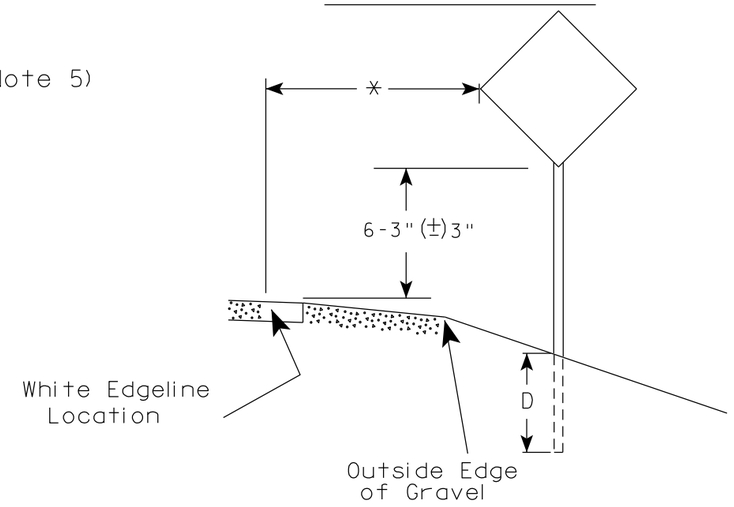

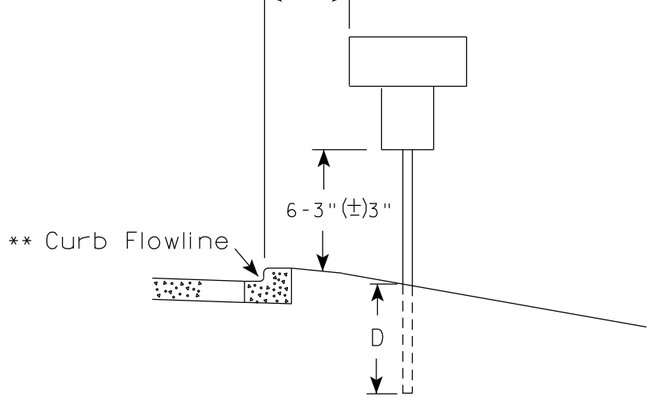

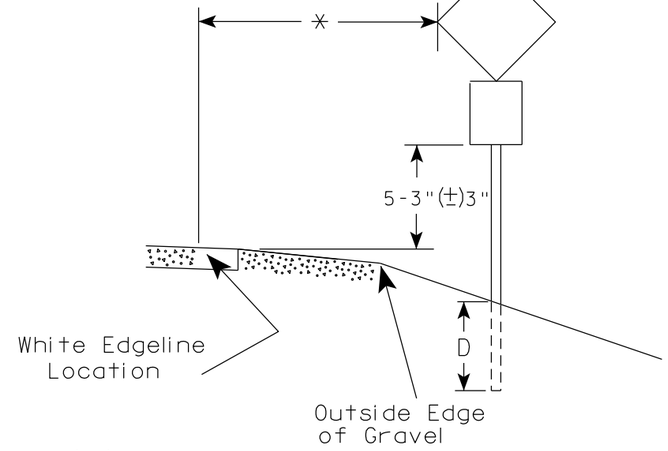

** The existence of curb and gutter does not in itself mandate the vertical clearance illustrated. That height is typically measured where there is sidewalk adjacent to the roadway or parking is permitted. In the absence of sidewalk vertical clearance is measured from the top of the curb. Offset of signs is measured from the flow line.

* 6 feet from edge of a paved shoulder or 12 feet from the edge of pavement (edge line location) or 2 feet from outside edge of gravel, whichever is greater unless directed by project engineer.

POST EMBEDMENT DEPTH

Area of Sign Installation (Sq. Ft.)	D (Min)
20 or Less	4'
Greater than 20	5'

GENERAL NOTES

1. Signs wider than 4 feet or 20 sq.ft or larger, shall be mounted on multiple posts. Refer to plate A4-4.
2. If signs are mounted on or behind barrier wall, see A4-10 sign plate.
   The Double Arrow sign (W12-1D) shall be mounted at a height of 2'-3" (±) 3". The Chevron sign (W1-8), Roundabout Chevron panel (R6-4B), Enhanced Reference Markers, Clearance Markers (W5-52), Mile Markers (D10 series), In Road Object Markers (W5-54) & End of Road Markers (W5-56) shall be mounted at a height of 4'-3" (±) 3".
3. For expressways and freeways, mounting height is 7'- 3" (±) 3" or 6'-3" (±) 3" depending upon existence of a sub-sign.
4. Minimum mounting height for signs mounted on traffic signal poles is 5'- 3" (±) 3".
5. Offset distance shall be consistent with existing signs or consistent throughout length of project.
6. Folding signs shall be mounted at a height of 5'-3" (±) 3" or as directd by the Engineer.

TYPICAL INSTALLATION OF PERMANENT TYPE II SIGNS ON SINGLE POSTS

WISCONSIN DEPT OF TRANSPORTATION

APPROVED Matthew R Rauch
for State Traffic Engineer

DATE 12/6/23 PLATE NO. A4-3.23

PROJECT NO:	HWY:	COUNTY:		SHEET NO: 69	E

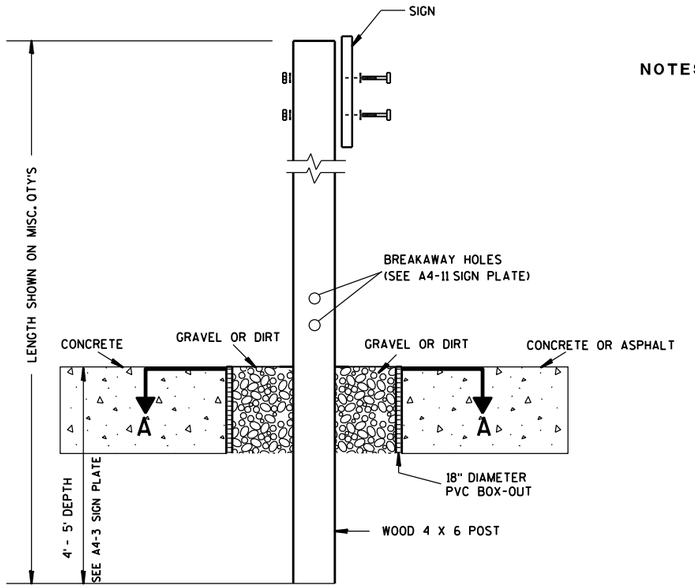

ELEVATION VIEW

DETAIL OF WOOD 4 X 6 SIGN POST IN BOX-OUT

NOTES:
1. ALL MATERIAL TO BE APPROVED BY ENGINEER PRIOR TO INSTALLATION
2. SEE SIGN PLATE A4-8 FOR SIGN HARDWARE REQUIREMENTS
3. 18 INCH X 18 INCH SQUARE BOX-OUTS MAY BE USED FOR INSTALLATIONS IN EXISTING CONCRETE OR ASPHALT LOCATIONS.

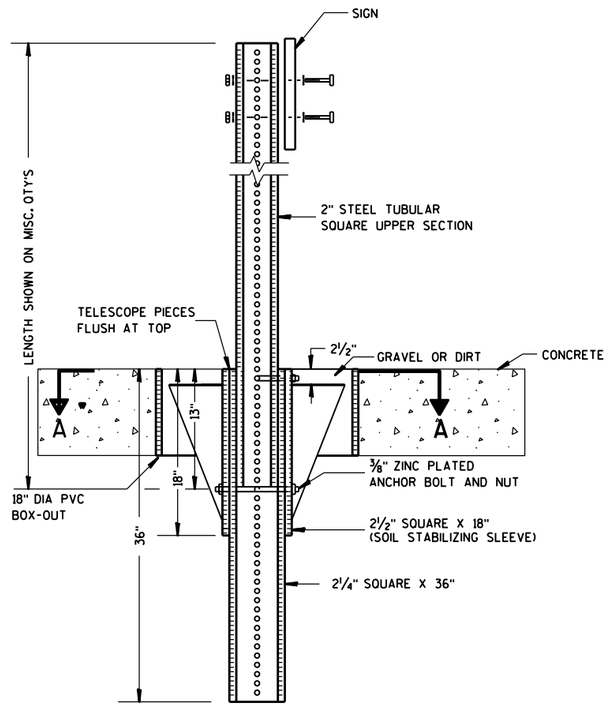

ELEVATION VIEW

DETAIL OF STEEL 2 X 2 SIGN POST IN BOX-OUT

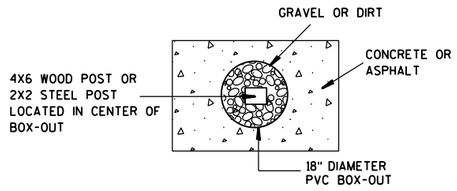

PLAN VIEW

FOR NEW CONCRETE/ASPHALT INSTALLATIONS

SIGN POST BOX-OUTS A4-3B

WISCONSIN DEPT OF TRANSPORTATION

APPROVED Matthew R Rauch
for State Traffic Engineer

DATE 1/27/14 PLATE NO. A4-3B.1

PROJECT NO:	HWY:	COUNTY:		SHEET NO:	E

FILE NAME : C:\CAEFiles\Projects\tr_stdplate\A43B.DGN PLOT DATE : 27-JAN-2014 09:48 PLOT BY : mscsja PLOT NAME : PLOT SCALE : 13.659812:1.000000 WISDOT/CADDS SHEET 42

URBAN AREA

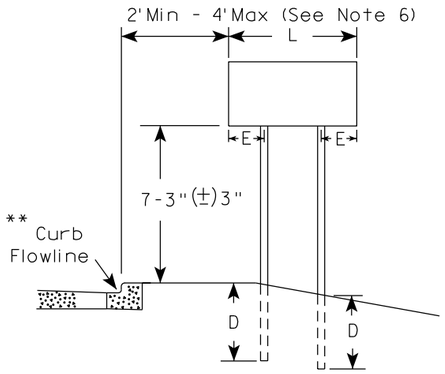

RURAL AREA (See Note 3)

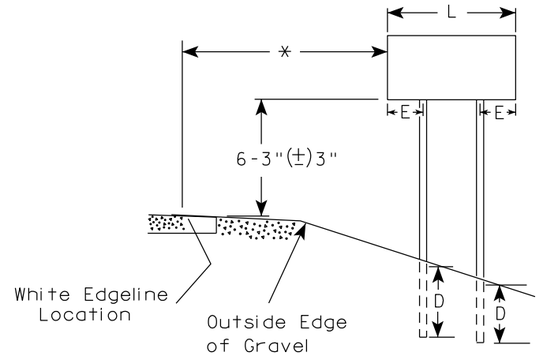

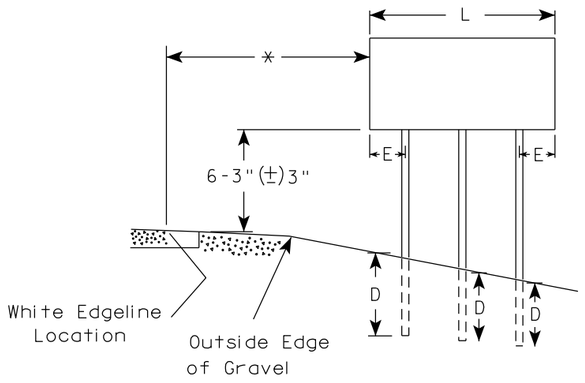

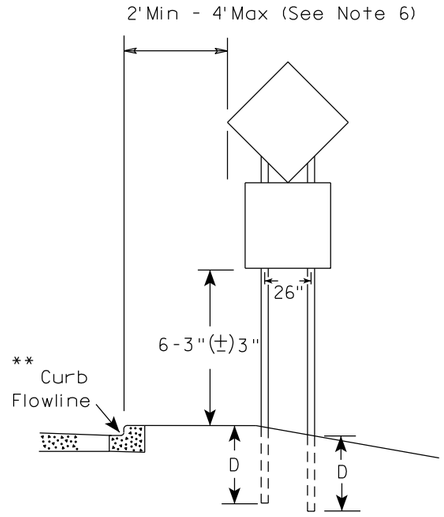

48" DIAMOND WARNING SIGN

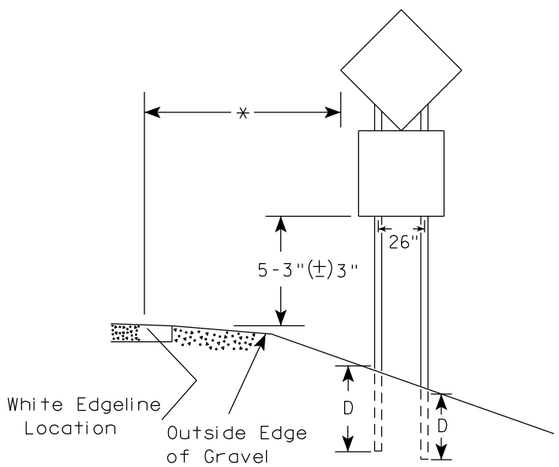

48" DIAMOND WARNING SIGN

SIGN SHAPE OTHER THAN DIAMOND (TWO POSTS REQUIRED)		
	L	E
***	Greater than 48" Less than 60"	12"
	60" to 108"	L/5

SIGN SHAPE OTHER THAN DIAMOND (THREE POSTS REQUIRED)	
L	E
Greater than 108" to 144"	12"

GENERAL NOTES

1. For 3 or 4 post installations, individual post spacing shall be greater than 3'-6".
2. See tables below for required number of posts.
3. For expressways and freeways, mounting height is 7'-3" (±) 3" or 6'-3" (±) 3" depending upon existence of sub-sign.
4. The (±) tolerance for mounting height is 3 inches.
5. J-Assemblies are considered to be one sign for mounting height.
6. Offset distance shall be consistent with existing signs or consistent throughout length of project.
7. Folding signs shall be mounted at a height of 5'-3" (±) 3" or as directed by the engineer.
8. The Double Arrow sign (W12-1) shall be mounted at a height of 2'-3" (±) 3". The Chevron sign (W1-8), Roundabout Chevron panel (R6-4B), Clearance Markers (W5-52), Mile Markers (D10 series), In Road Object Markers (W5-54) & End of Road Markers (W5-56) shall be mounted at a height of 4"-3" (±) 3".

* 6 feet from edge of a paved shoulder or 12 feet from the edge of pavement (edge line location) or 2 feet from outside edge of gravel, whichever is greater unless directed by project engineer.

** The existence of curb and gutter does not in itself mandate the vertical clearance illustrated. That height is typically measured where there is sidewalk adjacent to the roadway or parking is permitted. In the absence of sidewalk vertical clearance is measured from the top of the curb. Offset of signs is measured from the flow line.

*** See A4-3 sign plate for signs 4' or less in width and less than 20 S.F. in area.

POST EMBEDMENT DEPTH

Area of Sign Installation (Sq. Ft.)	D (Min)
20 or Less	4'
Greater than 20	5'

TYPICAL INSTALLATION OF TYPE II SIGNS ON MULTIPLE POSTS

WISCONSIN DEPT OF TRANSPORTATION

APPROVED Matthew R Rauch
for State Traffic Engineer

DATE 12/6/23 PLATE NO. A4-4.16

PROJECT NO:	HWY:	COUNTY:		SHEET NO: 71	E

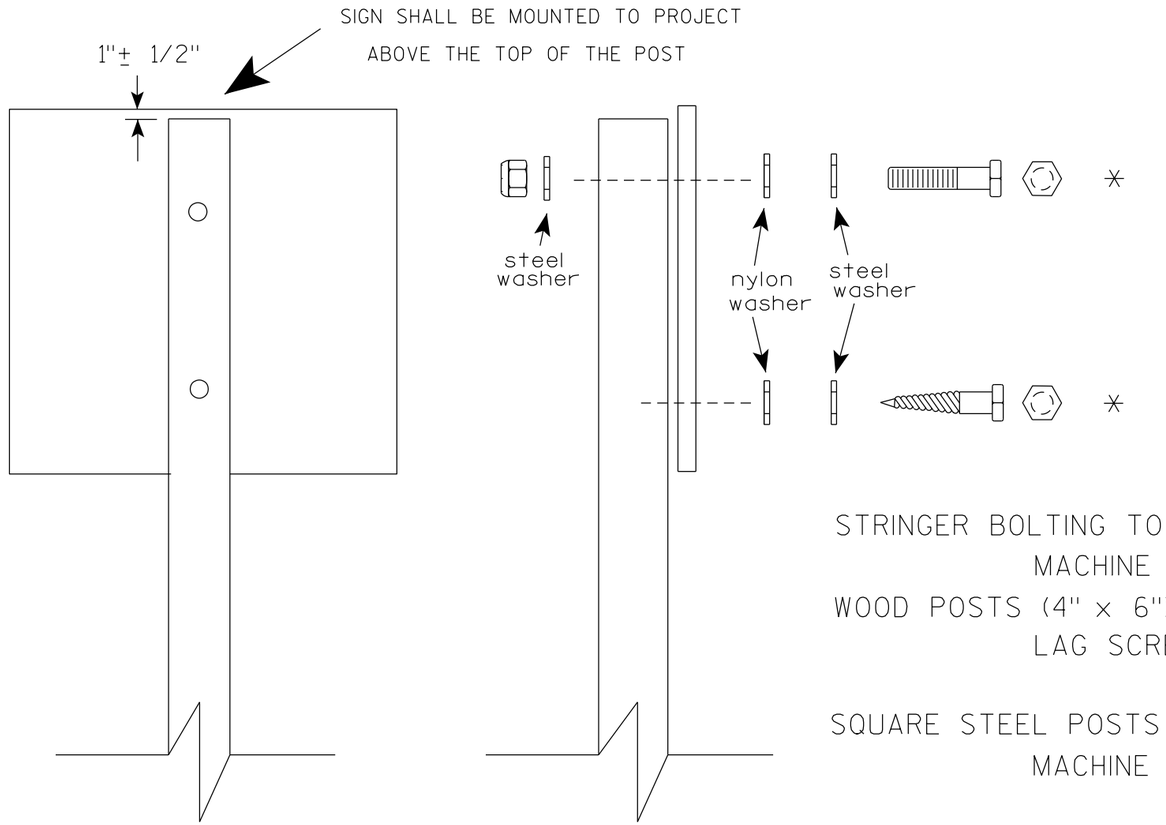

Nuts, bolts and lags used for mounting signs shall have hexagonal heads and shall be either :

a. Hot dip galvanized in accordance with ASTM Designation: A 153, Class D, or SC 3

b. Electro-galvanized in accordance with ASTM Designation : B 633, TYPE III, SC 3.

Threads on bolts and nuts shall be manufactured with sufficient allowance for the cadmium plate or galvanized coating to permit the nuts to run freely on the bolts.

STRINGER BOLTING TO ALUMINUM SIGNS (SEE SIGN PLATE A4-18)

MACHINE BOLTS - 5/16" X 1-3/4" Length w/ lock nuts

WOOD POSTS (4" x 6")

LAG SCREWS - 3/8" X 3" (NO STRINGERS ON BACK OF SIGN)
3/8" X 4" (STRINGERS ON BACK OF SIGN)

SQUARE STEEL POSTS (2" x 2")

MACHINE BOLTS - 3/8" X 3-1/4" Length w/ nuts (NO STRINGER ON BACK OF SIGN)
3/8" X 5" Length w/ nuts (STRINGERS ON BACK OF SIGN)

RIVETS - 9/32" (6605-9-6) BULB-TITE, TRI-FOLD, ALUMINUM BODY/MANDREL
O.D. FLANGE .720-.765 INCH, GRIP RANGE .042-.375 INCH

WASHERS (ALL POSTS) -

1-1/4" O.D. X 3/8" I.D. X 1/16" STEEL
1-1/4" O.D. X 3/8" I.D. X .080 NYLON

* Two different fastening systems are shown for illustration purposes. On any individual sign, either one or the other system shall be used. Actual number of fasteners per sign varies with the sign area, but normally there are two. For a single post installation, all signs greater than 9 sq. ft. require the use of 3 fasteners.

ATTACHMENT OF SIGNS TO POSTS

WISCONSIN DEPT OF TRANSPORTATION

APPROVED Matthew R Rauch
for State Traffic Engineer

DATE 4/1/2020 PLATE NO. A4-8.9

TELESCOPIC TUBING ANCHORS
TWO PIECE SYSTEM

2 1/4 " SQUARE
12 GAUGE
PERFORATED
GALVANIZED FINISH

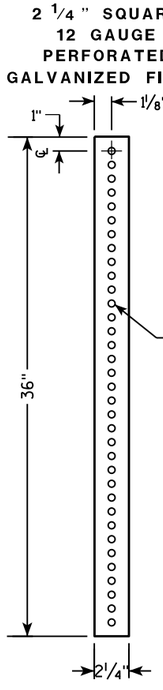

2 1/2 " SQUARE
12 GAUGE
OMNI-DIRECTIONAL
PERFORATED
SOIL STABILIZING SLEEVE
GALVANIZED FINISH

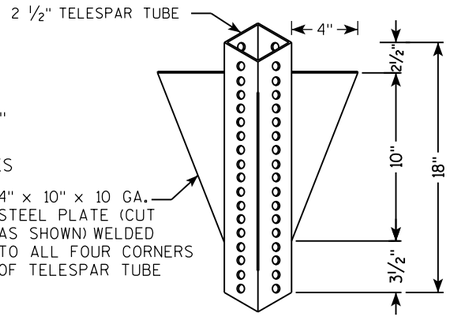

DETAIL OF TUBULAR STEEL SIGN POST
(IN POURED CONCRETE OR ASPHALT)

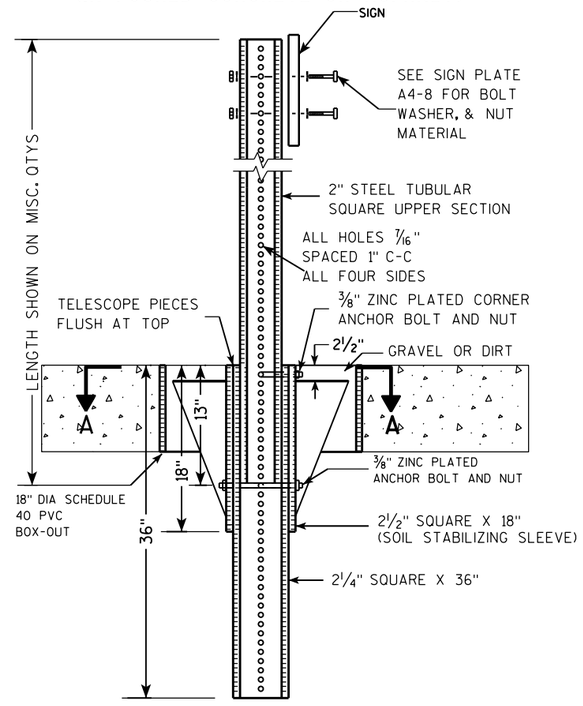

DETAIL OF TUBULAR STEEL SIGN POST
(IN LOCATIONS OTHER THAN POURED CONCRETE OR ASPHALT)

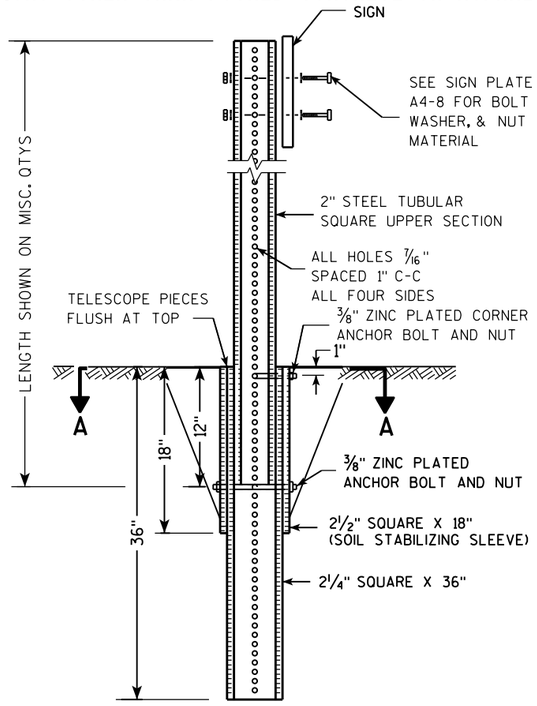

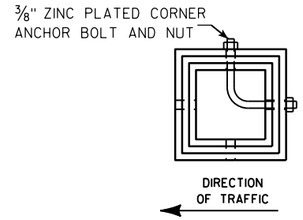

SECTION A-A

Area of Sign Installation (Sq. Ft.)	Number of Required Posts
9 or less	1
Greater than 9 less than or equal to 18	2
Greater than 18 less than or equal to 27	3

Signs wider than 3 feet or larger than 9 sq. ft shall be mounted on multiple posts (see above table).

TUBULAR STEEL
SIGN POST
A4-9

WISCONSIN DEPT OF TRANSPORTATION

APPROVED Matthew R Rauch
for State Traffic Engineer

DATE 2/05/15 PLATE 73 A4-9.9

PROJECT NO:	HWY:	COUNTY:		SHEET NO:	E

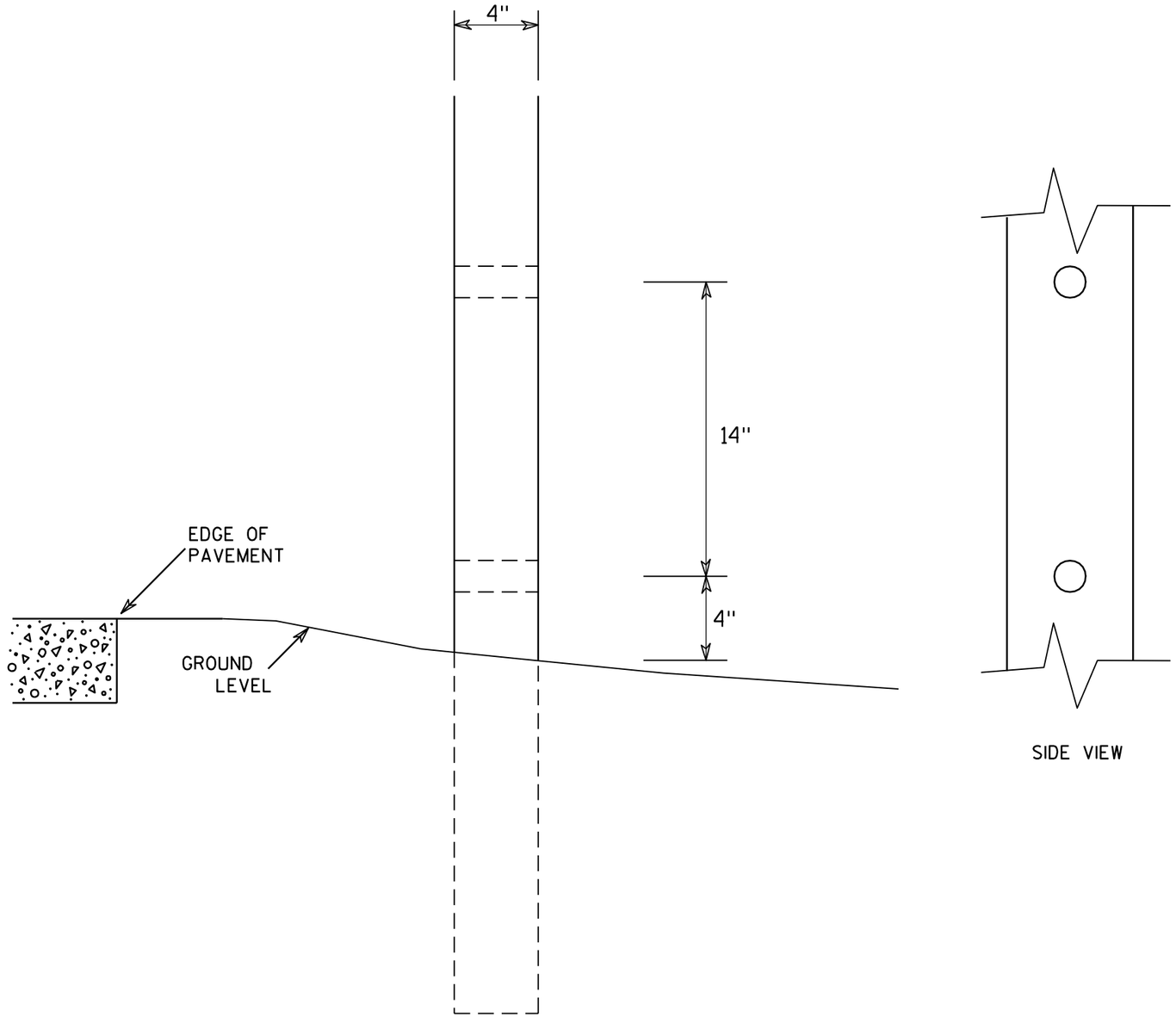

SIDE VIEW

GENERAL NOTES

1. All 4 x 6 Wood Posts shall be modified by having two 1½" diameter holes drilled perpendicular to the roadway centerline.

4 X 6 WOOD POST MODIFICATIONS

WISCONSIN DEPT OF TRANSPORTATION

APPROVED Chester J Spang for State Traffic Engineer

DATE 3/27/97 PLATE NO. A4-11.2

PROJECT NO:	HWY:	COUNTY:		SHEET NO: 74	E

BANDING

SINGLE SIGN

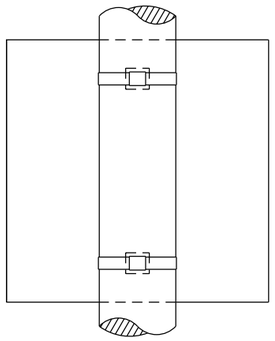

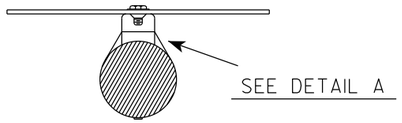

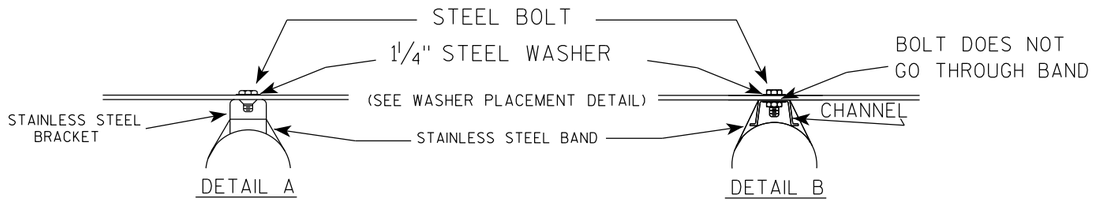

WASHER PLACEMENT

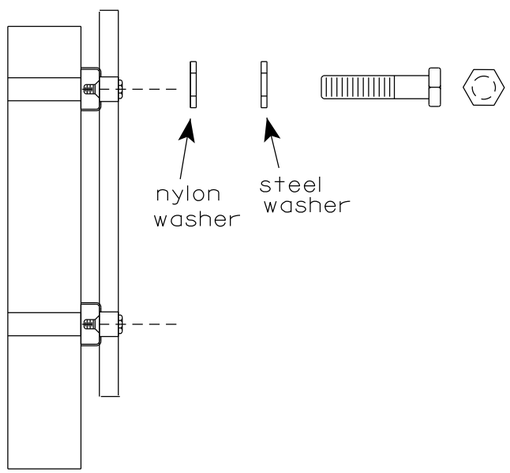

WASHERS (ALL POSTS) -
1-1/4" O.D. X 3/8" I.D. X 1/16" STEEL
1-1/4" O.D. X 3/8" I.D. X .080 NYLON
FOR ALL TYPE H SIGNS

GENERAL NOTES

1. Any sign over 3 feet in width shall use the V-Block banding method. See A5-10 standard plate.
2. Signs 3 feet or greater in height shall have three bracket bands installed. Signs less than 3 feet in height shall have two bracket bands installed.
3. Banding and assembly bracket shall be stainless steel. All bands shall be ¾" in width and 0.025" thickness.
4. ALL SIGN MOUNTING BOLTS AND WASHERS SHALL BE EITHER:
   a. Hot dip or mechanically galvanized in accordance with ASTM Designation: A 153, Class D
   b. Electro-galvanized in accordance with ASTM designation: B 633, Type III, SC 3

"J" ASSEMBLY

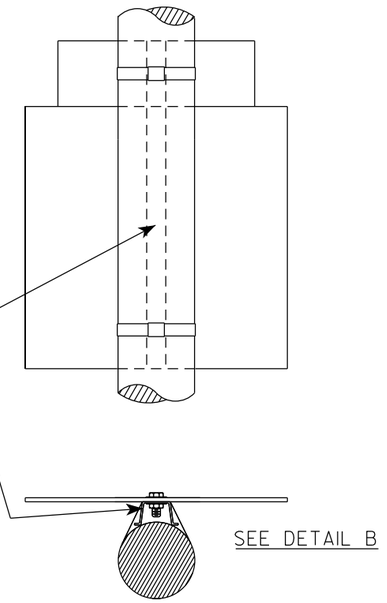

STANDARD SIGN
SIGN BANDING DETAILS

WISCONSIN DEPT OF TRANSPORTATION

APPROVED Matthew R Rauch
for State Traffic Engineer

DATE 6/10/19 PLATE NO. A5-9.4

PROJECT NO:	HWY:	COUNTY:		SHEET NO: 75	E

FILE NAME : C:\CAEfiles\Projects\tr_stdplate\A59.dgn PLOT DATE : 10-JUN 2019 4:10 PLOT BY : mscj9h PLOT NAME : PLOT SCALE : $$.....plotscale.....$$

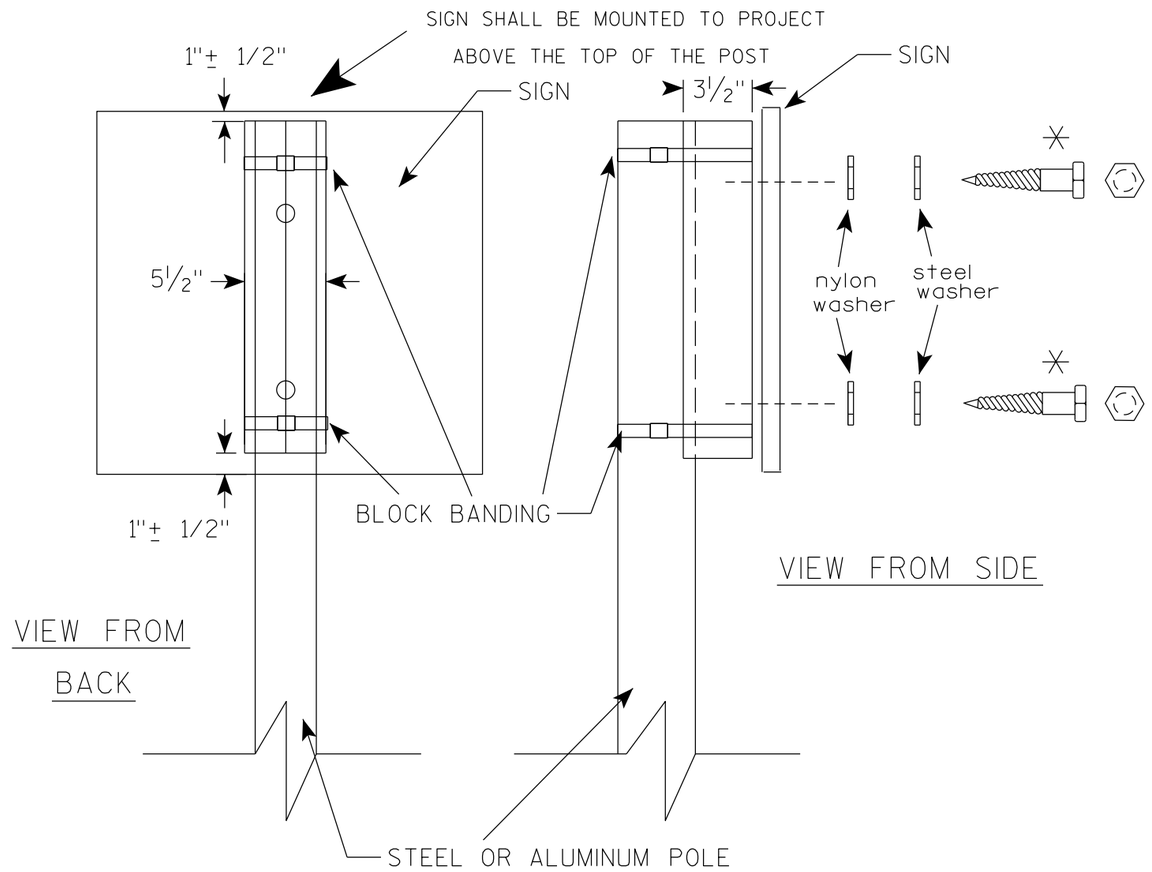

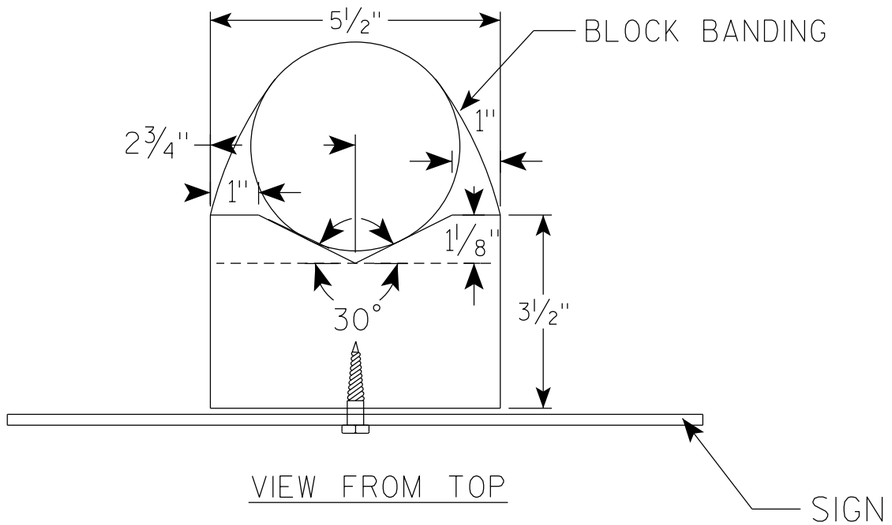

GENERAL NOTES

1. WOOD 4"X6" POST MATERIAL SHALL CONFORM TO 507.2.2 OF THE WisDOT STANDARD SPECIFICATIONS
2. BLOCK BANDING AND CLIPS SHALL BE STAINLESS STEEL, ¾" WIDTH AND 0.025" THICKNESS
3. SIGNS 3' OR GREATER IN HEIGHT SHALL UTILIZE 3 BLOCK BANDS. SIGNS UNDER 3' IN HEIGHT SHALL UTILIZE 2 BLOCK BANDS
4. ACTUAL NUMBER OF FASTENERS PER SIGN VARIES WITH THE SIGN AREA, BUT NORNALLY THERE ARE TWO. FOR SIGNS GREATER THAN 9 S.F. 3 FASTENERS SHALL BE USED.
5. ALL SIGN MOUNTING BOLTS AND WASHERS SHALL BE EITHER:
   a. Hot dip or mechanically galvanized in accordance with ASTM Designation: A 153, Class D
   b. Electro-galvanized in accordance with ASTM Designation : B 633, TYPE III, SC 3
6. ALL BOLTS SHALL HAVE HEXAGONAL HEADS.
7. STEEL WASHERS SHALL BE 1¼" O.D. X ⅜" I.D. X 1/16"
8. NYLON WASHERS SHALL BE 1¼" O.D. X ⅜" I.D. X .080 FOR TYPE H OR TYPE F FACE SIGN

✳ LAG BOLTS SHALL BE ⅜" X 2½"

BLOCK BANDING DETAIL (V-BLOCK OPTION)

WISCONSIN DEPT OF TRANSPORTATION

APPROVED Matthew R Rauch
for State Traffic Engineer

DATE 4/19/2022 PLATE NO. A5-10.3

PROJECT NO:

SHEET NO: 76 E

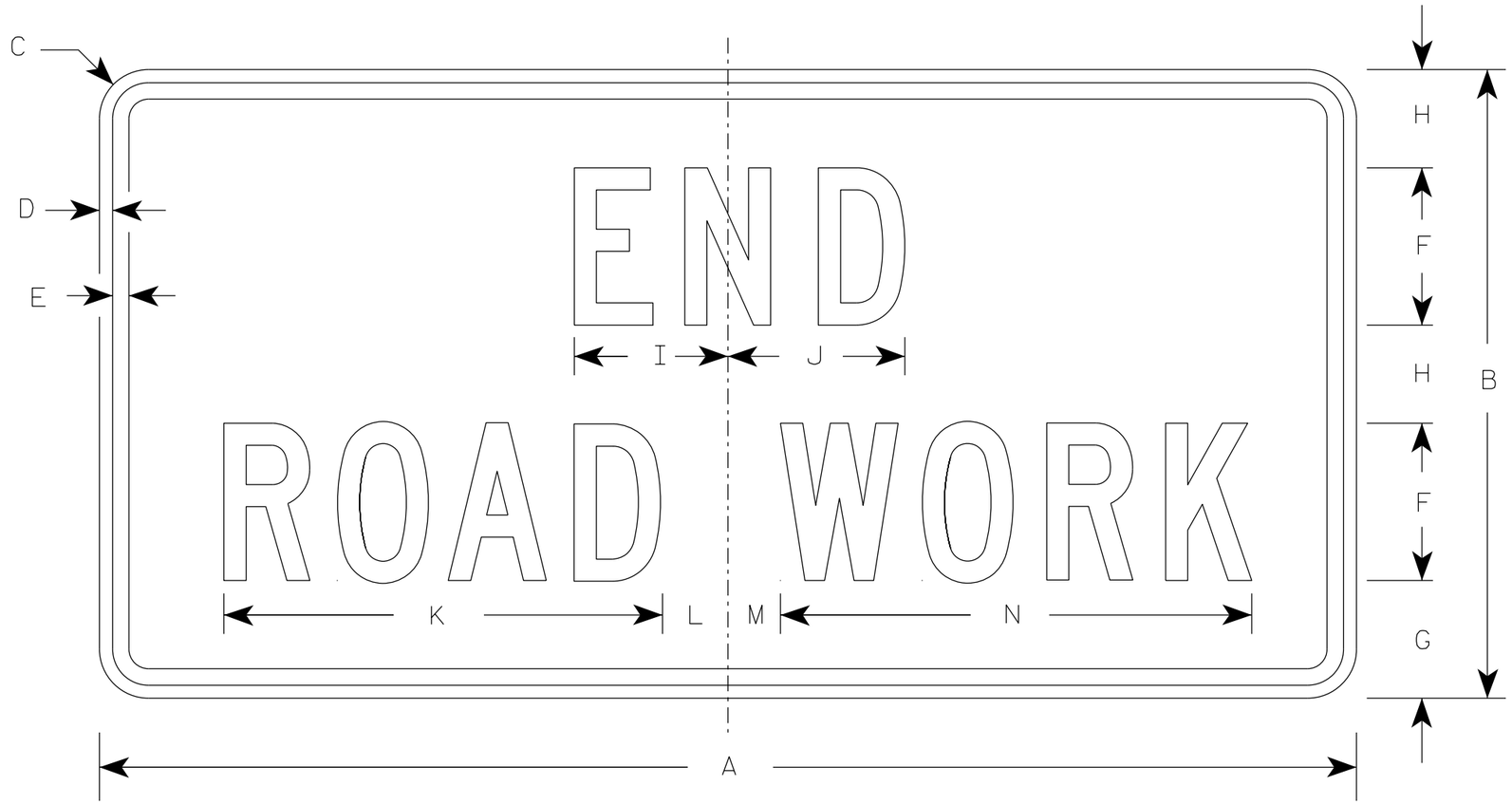

G20-2A

NOTES

1. Sign is Type II - Type F Reflective
2. Color:
   Background - Orange
   Message - Black
3. Message Series - C
4. Corners may be square or rounded when base material is plywood but borders shall be rounded as shown. When base material is metal, the corners and borders shall be rounded.

SIZE	A	B	C	D	E	F	G	H	I	J	K	L	M	N	O	P	Q	R	S	T	U	V	W	X	Y	Z	Area sq. ft.
1	36	18	1 1/2	3/8	1/2	4	3 3/4	2 1/2	4 1/8	4 1/8	11 1/8	2	1	12 1/8													4.5
2	48	24	1 7/8	1/2	5/8	6	4 1/2	3 3/4	5 7/8	6 3/4	16 3/4	2 1/2	1 3/4	18 1/2													8.0
2M	48	24	1 7/8	1/2	5/8	6	4 1/2	3 3/4	5 7/8	6 3/4	16 3/4	2 1/2	1 3/4	18 1/2													8.0
3	48	24	1 7/8	1/2	5/8	6	4 1/2	3 3/4	5 7/8	6 3/4	16 3/4	2 1/2	1 3/4	18 1/2													8.0
4	48	24	1 7/8	1/2	5/8	6	4 1/2	3 3/4	5 7/8	6 3/4	16 3/4	2 1/2	1 3/4	18 1/2													8.0
5	48	24	1 7/8	1/2	5/8	6	4 1/2	3 3/4	5 7/8	6 3/4	16 3/4	2 1/2	1 3/4	18 1/2													8.0

STANDARD SIGN

G20-2A

WISCONSIN DEPT OF TRANSPORTATION

APPROVED Matthew R Rauch
for State Traffic Engineer

DATE 1/26/2023 PLATE NO. G20-2A.10

PROJECT NO: | HWY: | COUNTY: | SHEET NO: 77 E

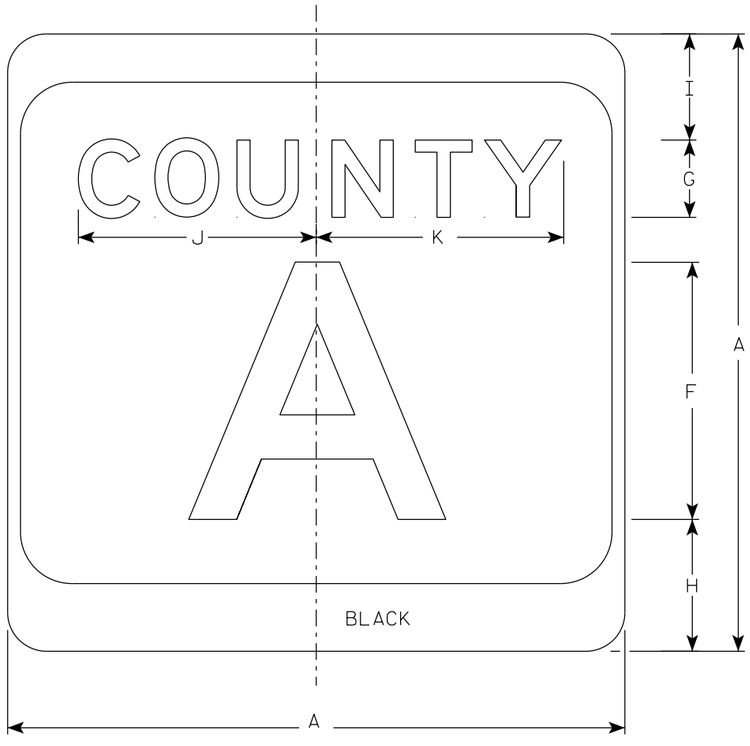

M1-5A

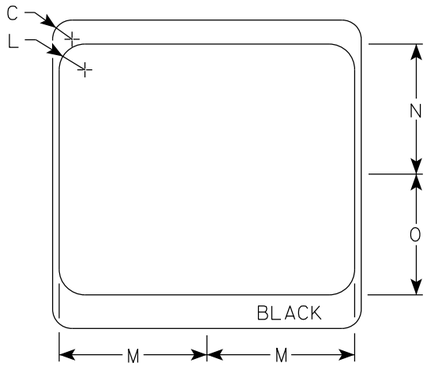

NOTES

1. Sign is Type II - Type H Reflective
2. Color:
   Background - White & Black
   Message - Black
3. Message Series - see Note 4
4. Message Series E for 1 letter.
   Message Series D for 2 letters unless message is too big then Series C.
   Message Series C for 3 letters unless message is too big then Series B.
5. Substitute appropriate letters & optically center to achieve proper balance.

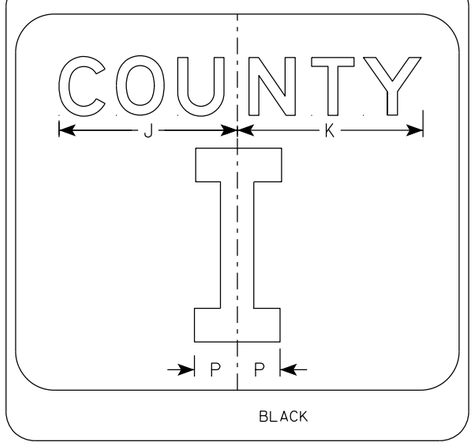

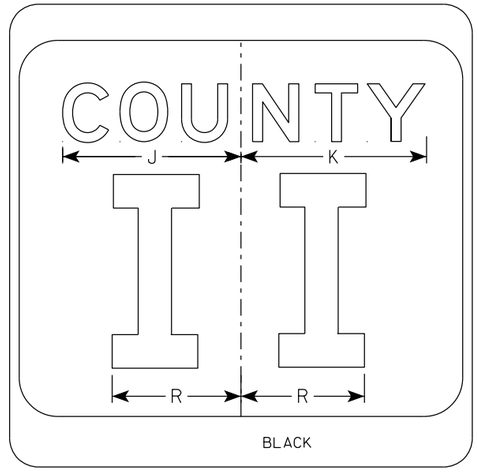

SIZE	A	B	C	D	E	F	G	H	I	J	K	L	M	N	O	P	Q	R	S	T	U	V	W	X	Y	Z	Area sq. ft.
1																											
2	24		1 1/2			10	3	5 1/8	4 1/8	9 1/4	9 5/8	2	11 1/2	10 1/8	9 3/8	2 1/4		6 5/8									4.0
2M	24		1 1/2			10	3	5 1/8	4 1/8	9 1/4	9 5/8	2	11 1/2	10 1/8	9 3/8	2 1/4		6 5/8									4.0
3	36		2 1/4			16	4	7 5/8	5 5/8	12 1/4	12 7/8	3	17 1/8	15 1/4	14	3 3/8		10									9.0
4	36		2 1/4			16	4	7 5/8	5 5/8	12 1/4	12 7/8	3	17 1/8	15 1/4	14	3 3/8		10									9.0
5	36		2 1/4			16	4	7 5/8	5 5/8	12 1/4	12 7/8	3	17 1/8	15 1/4	14	3 3/8		10									9.0

CTH MARKER
M1-5A FOR ASSEMBLIES

WISCONSIN DEPT OF TRANSPORTATION

APPROVED Matthew R Rauch
for State Traffic Engineer

DATE 11/8/2022 PLATE NO. M1-5A.9

PROJECT NO:	HWY:	COUNTY:		SHEET NO:	E

FILE NAME : C:\CAEfiles\Projects\tr_stdplate\M15A.dgn PLOT DATE : 8-NOV 2022 8:26 PLOT BY : dotc4c PLOT NAME : PLOT SCALE : $$.....plotscale.....$$ WISDOT/CADDS SHEET 42

7

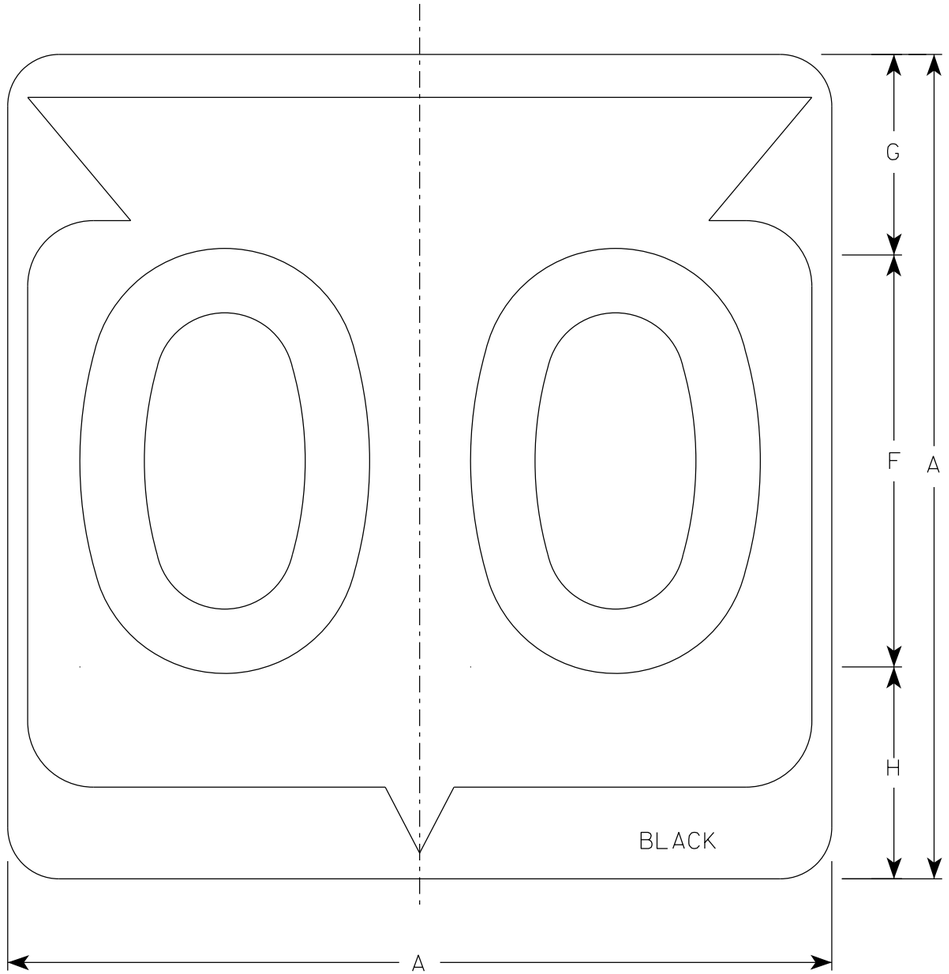

M1-6

NOTES

1. Sign is Type II - Type H Reflective
2. Color:
   Background - White
   Message - Black
3. Message Series - D except 3 number signs Series C

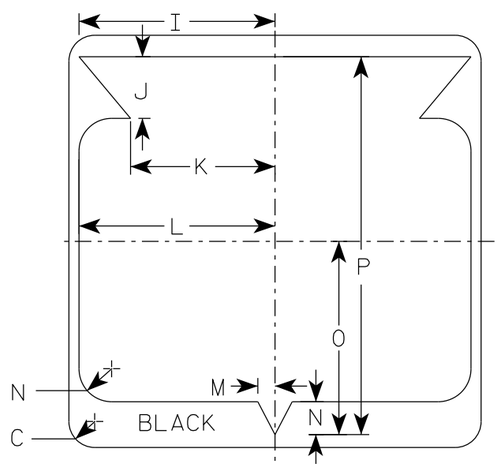

SIZE	A	B	C	D	E	F	G	H	I	J	K	L	M	N	O	P	Q	R	S	T	U	V	W	X	Y	Z	Area sq. ft.
1																											
2	24		1 1/2			12	5 1/2	6 1/2	10 1/4	2 1/2	8 7/8	11 1/2	1	1 7/8	11 1/4	21 7/8											4.0
2M	24		1 1/2			12	5 1/2	6 1/2	10 1/4	2 1/2	8 7/8	11 1/2	1	1 7/8	11 1/4	21 7/8											4.0
3	36		2 1/4			18	8 3/4	9 1/4	15 3/8	5 3/8	12 5/8	17 1/8	1 1/2	2 7/8	16 7/8	33											9.0
4	36		2 1/4			18	8 3/4	9 1/4	15 3/8	5 3/8	12 5/8	17 1/8	1 1/2	2 7/8	16 7/8	33											9.0
5	36		2 1/4			18	8 3/4	9 1/4	15 3/8	5 3/8	12 5/8	17 1/8	1 1/2	2 7/8	16 7/8	33											9.0

STATE ROUTE MARKER
M1-6 FOR ASSEMBLIES

WISCONSIN DEPT OF TRANSPORTATION

APPROVED Matthew R Rauch
for State Traffic Engineer

DATE 11/8/2022 PLATE NO. M1-6.11

PROJECT NO:	HWY:	COUNTY:		SHEET NO: 79	E

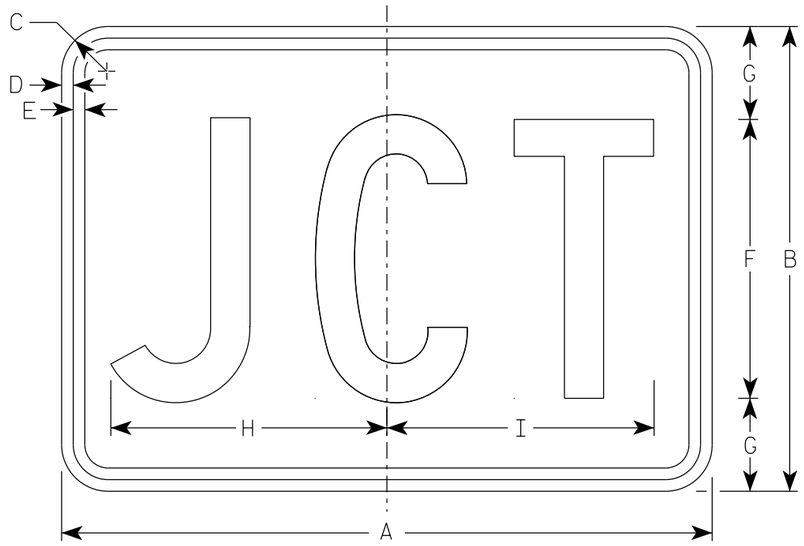

M2-1
MM2-1
MP2-1

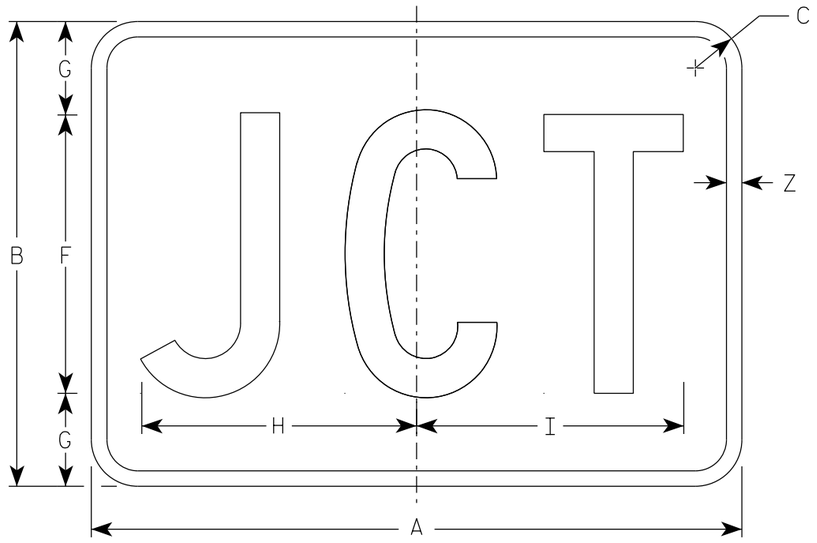

MB2-1
MK2-1
MN2-1
MR2-1

NOTES

1. Sign is Type II - Type H Reflective
2. Color:
   Background - See note 5
   Message - See note 5
3. Message Series - C
4. M2-1 Background - White
   Message - Black
   MB2-1 Background - Blue
   Message - White
   MK2-1 Background - Green
   Message - White
   MM2-1 Background - White
   Message - Green
   MN2-1 Background - Brown
   Message - White
   MP2-1 Background - White
   Message - Blue
   MR2-1 Background - Brown
   Message - Yellow

SIZE	A	B	C	D	E	F	G	H	I	J	K	L	M	N	O	P	Q	R	S	T	U	V	W	X	Y	Z	Area sq. ft.
1																											
2S	21	15	1 1/2	3/8	3/8	9	3	8 7/8	8 5/8																	1/2	2.20
2M	21	15	1 1/2	3/8	3/8	9	3	8 7/8	8 5/8																	1/2	2.20
3	30	21	1 1/2	3/8	3/8	13	4	12 7/8	12 3/8																	1/2	4.40
4	30	21	1 1/2	3/8	3/8	13	4	12 7/8	12 3/8																	1/2	4.40
5	30	21	1 1/2	3/8	3/8	13	4	12 7/8	12 3/8																	1/2	4.40

STANDARD SIGN
M2-1

WISCONSIN DEPT OF TRANSPORTATION

APPROVED Matthew R Rauch
for State Traffic Engineer

DATE 2/8/2023 PLATE NO. M2-1.14

PROJECT NO: | HWY: | COUNTY: | SHEET NO: 80 | E

NOTES

1. Sign is Type II - Type F Reflective
2. Color:
   Background - Orange
   Message - Black
3. Message Series - B
4. Corners may be square or rounded when base material is plywood but borders shall be rounded as shown. When base material is metal, the corners and borders shall be rounded.

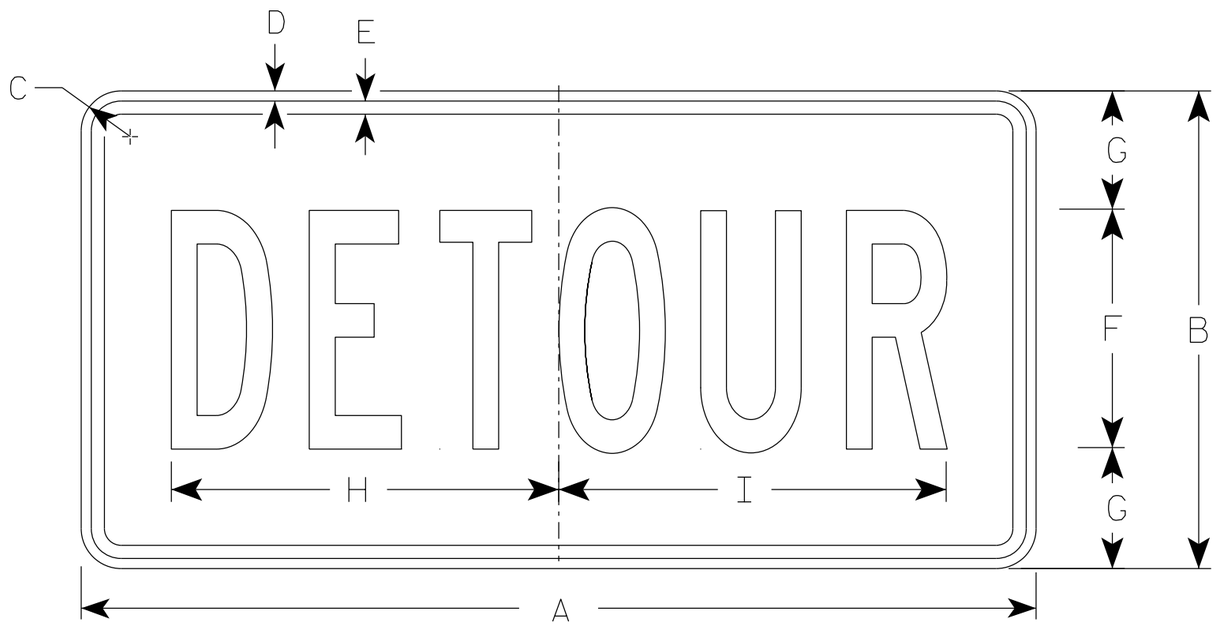

M4-8

SIZE	A	B	C	D	E	F	G	H	I	J	K	L	M	N	O	P	Q	R	S	T	U	V	W	X	Y	Z	Area sq. ft.
1																											
2	24	12	1 1/2	3/8	3/8	6	3	10	10 1/4																		2.0
2M	24	12	1 1/2	3/8	3/8	6	3	10	10 1/4																		2.0
3	36	18	1 1/2	3/8	1/2	9	4 1/2	14 5/8	14 1/2																		4.5
4	36	18	1 1/2	3/8	1/2	9	4 1/2	14 5/8	14 1/2																		4.5
5	36	18	1 1/2	3/8	1/2	9	4 1/2	14 5/8	14 1/2																		4.5

STANDARD SIGN
M4-8

WISCONSIN DEPT OF TRANSPORTATION

APPROVED Matthew R Rauch
for State Traffic Engineer

DATE 2/9/2023 PLATE NO. M4-8.4

PROJECT NO:	HWY:	COUNTY:		SHEET NO: 81	E

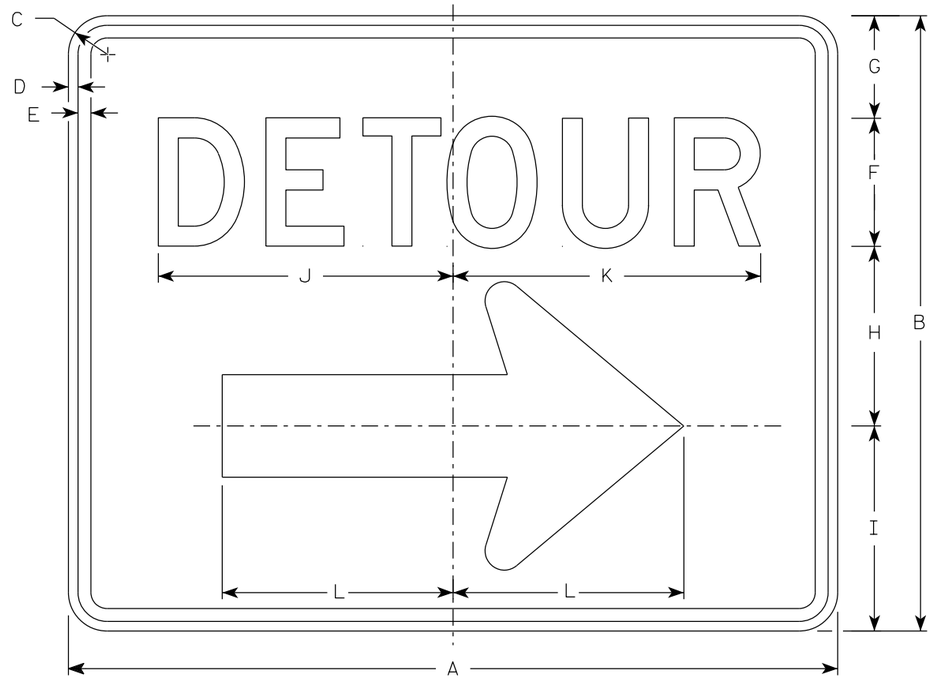

M4-9R

NOTES

1. Sign is Type II - Type F Reflective
2. Color:
   Background - Orange
   Message - Black
3. Message Series - D
4. Corners may be square or rounded when base material is plywood but borders shall be rounded as shown. When base material is metal, the corners and borders shall be rounded.
4. M4-9L is the same as M4-9R except the arrow is reversed.

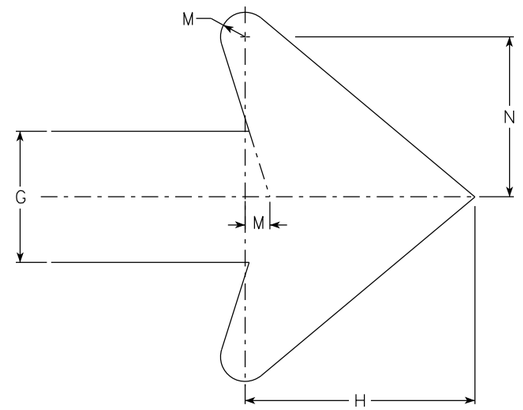

Arrow Detail

SIZE	A	B	C	D	E	F	G	H	I	J	K	L	M	N	O	P	Q	R	S	T	U	V	W	X	Y	Z	Area sq. ft.
1																											
2	30	24	1 1/2	3/8	1/2	5	4	7	8	11 1/2	12	9	3/4	4 7/8													5.00
2M	30	24	1 1/2	3/8	1/2	5	4	7	8	11 1/2	12	9	3/4	4 7/8													5.00
3	30	24	1 1/2	3/8	1/2	5	4	7	8	11 1/2	12	9	3/4	4 7/8													5.00
4	48	36	1 7/8	1/2	5/8	8	6	10 1/2	11 5/8	20 5/8	20 1/2	13 1/4	1 1/8	6 7/8													12.0
5	48	36	1 7/8	1/2	5/8	8	6	10 1/2	11 5/8	20 5/8	20 1/2	13 1/4	1 1/8	6 7/8													12.0

STANDARD SIGN
M4-9 R & L

WISCONSIN DEPT OF TRANSPORTATION

APPROVED Matthew R Rauch
For State Traffic Engineer

DATE 2/9/2023 PLATE NO. M4-9R.6

PROJECT NO:	HWY:	COUNTY:		SHEET NO:	E

FILE NAME : C:\CAEfiles\Projects\tr_stdplate\M49R.dgn PLOT DATE : 21-MARCH 2023 1:40 PLOT BY : dotc4c PLOT NAME : PLOT SCALE : $$.....plotscale.....$$ WISDOT/CADDS SHEET 42

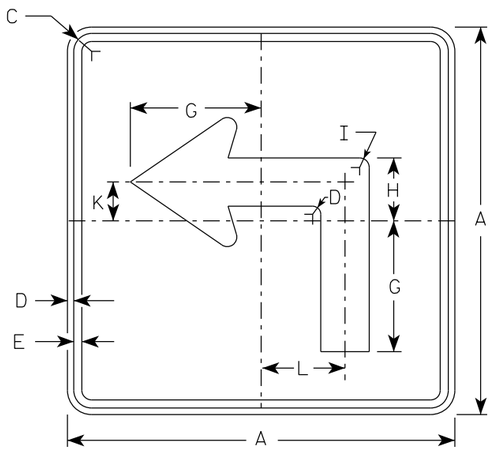

M5-1L
MM5-1L
MO5-1L
MP5-1L

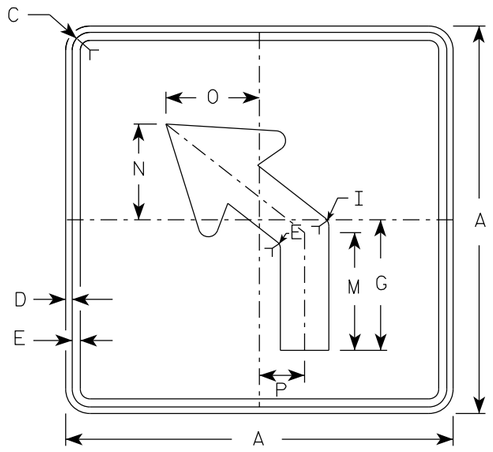

M5-2L
MM5-2L
MO5-2L
MP5-2L

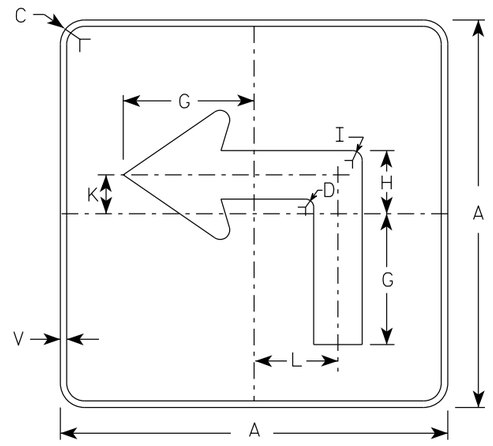

MB5-1L
MK5-1L
MN5-1L
MR5-1L

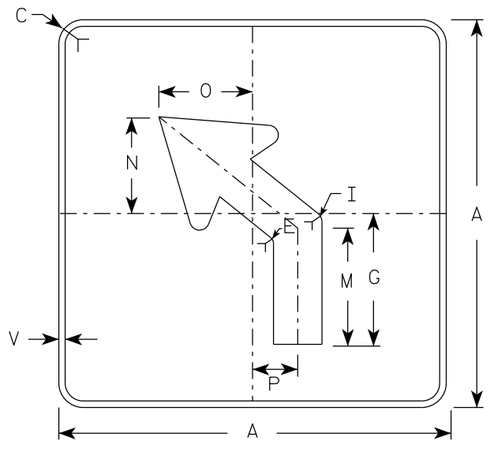

MB5-2L
MK5-2L
MN5-2L
MR5-2L

NOTES

1. Signs are Type II - Type H reflective except as shown
2. Color:
   Background - See note 4
   Message - See note 4
3. Corners may be square or rounded when base material is plywood but borders shall be rounded as shown. When base material is metal, the corners and borders shall be rounded.
4. M5-1 and M5-2 Background - White
   Message - Black
   MB5-1 and MB5-2 Background - Blue
   Message - White
   MK5-1 and MK5-2 Background - Green
   Message - White
   MM5-1 and MM5-2 Background - White
   Message - Green
   MN5-1 and MN5-2 Background - Brown
   Message - White
   MO5-1 and MO5-2 Background - Orange - Type F Reflective
   Message - Black
   MP5-1 and MP5-2 Background - White
   Message - Blue
   MR5-1 and MR5-2 Background - Brown
   Message - Yellow
5. M5-1R same as M5-1L except arrow points right.
6. M5-2R same as M5-2L except arrow tilts right.

ARROW DETAIL

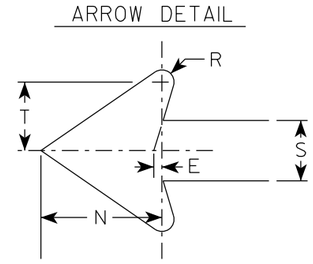

SIZE	A	B	C	D	E	F	G	H	I	J	K	L	M	N	O	P	Q	R	S	T	U	V	W	X	Y	Z	Area sq. ft.
1																											
2S	21		1 1/2	3/8	3/8		7	3 3/8	5/8		2 1/8	4 1/2	6 3/8	5 1/4	5	2 1/2		1/2	2 5/8	3		1/2					3.06
2M	21		1 1/2	3/8	3/8		7	3 3/8	5/8		2 1/8	4 1/2	6 3/8	5 1/4	5	2 1/2		1/2	2 5/8	3		1/2					3.06
3	30		1 7/8	1/2	5/8		10 1/8	4 7/8	7/8		3	6 1/2	9 1/8	7 1/2	7 1/4	3 1/2		3/4	3 3/4	4 1/4		1/2					6.25
4	30		1 7/8	1/2	5/8		10 1/8	4 7/8	7/8		3	6 1/2	9 1/8	7 1/2	7 1/4	3 1/2		3/4	3 3/4	4 1/4		1/2					6.25
5	30		1 7/8	1/2	5/8		10 1/8	4 7/8	7/8		3	6 1/2	9 1/8	7 1/2	7 1/4	3 1/2		3/4	3 3/4	4 1/4		1/2					6.25

STANDARD SIGN
M5-1 & M5-2

WISCONSIN DEPT OF TRANSPORTATION

APPROVED Matthew R Rauch
for State Traffic Engineer

DATE 2/13/2023 PLATE NO. M5-1.15

PROJECT NO: | HWY: | COUNTY: | SHEET NO: 83 | E

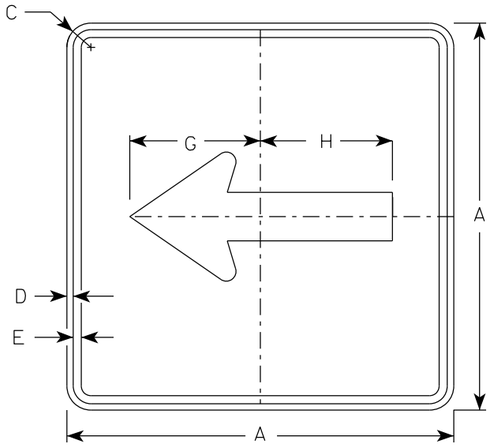

M6-1
MM6-1
MO6-1
MP6-1

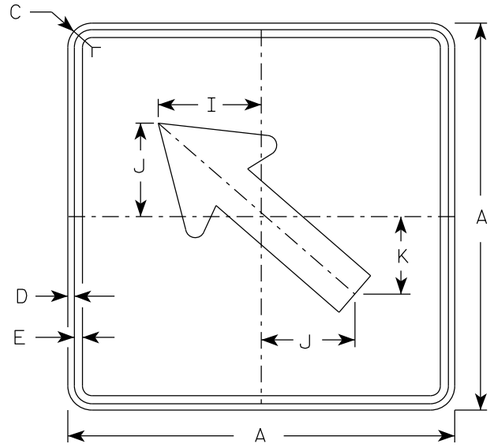

M6-2
MM6-2
MO6-2
MP6-2

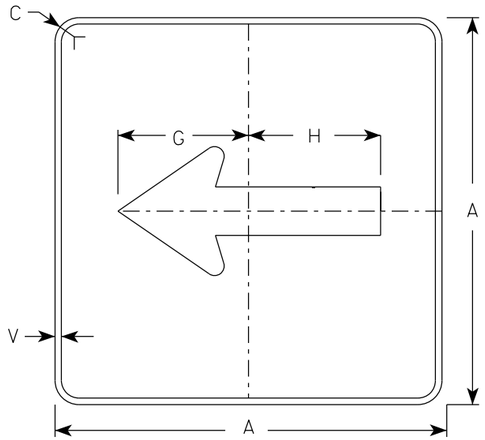

MB6-1
MK6-1
MN6-1
MR6-1

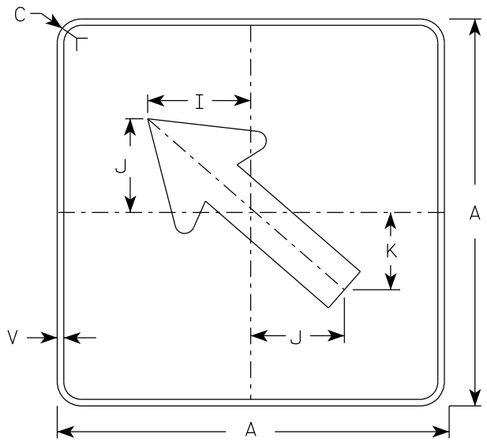

MB6-2
MK6-2
MN6-2
MR6-2

NOTES

1. Signs are Type II - Type H Reflective except as Shown
2. Color:
   Background - See note 4
   Message - See note 4
3. Corners may be square or rounded when base material is plywood but borders shall be rounded as shown. When base material is metal, the corners and borders shall be rounded.
4. M6-1 and M6-2 Background - White
   Message - Black
   MB6-1 and MB6-2 Background - Blue
   Message - White
   MK6-1 and MK6-2 Background - Green
   Message - White
   MM6-1 and MM6-2 Background - White
   Message - Green
   MN6-1 and MN6-2 Background - Brown
   Message - White
   MO6-1 and MO6-2 Background - Orange - Type F Reflective
   Message - Black
   MP6-1 and MP6-2 Background - White
   Message - Blue
   MR6-1 and MR6-2 Background - Brown
   Message - Yellow

ARROW DETAIL

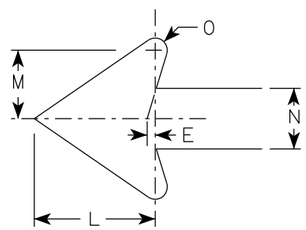

SIZE	A	B	C	D	E	F	G	H	I	J	K	L	M	N	O	P	Q	R	S	T	U	V	W	X	Y	Z	Area sq. ft.
1																											
2S	21		1 1/2	3/8	3/8		7 1/2	7 1/8	5 5/8	5	4 1/4	5 1/4	3	2 5/8	1/2							1/2					3.06
2M	21		1 1/2	3/8	3/8		7 1/2	7 1/8	5 5/8	5	4 1/4	5 1/4	3	2 5/8	1/2							1/2					3.06
3	30		1 7/8	1/2	5/8		10 3/4	10 1/4	8	7 1/4	6	7 1/2	4 1/4	3 3/4	3/4							1/2					6.25
4	30		1 7/8	1/2	5/8		10 3/4	10 1/4	8	7 1/4	6	7 1/2	4 1/4	3 3/4	3/4							1/2					6.25
5	30		1 7/8	1/2	5/8		10 3/4	10 1/4	8	7 1/4	6	7 1/2	4 1/4	3 3/4	3/4							1/2					6.25

STANDARD SIGN
M6-1 & M6-2
SERIES

WISCONSIN DEPT OF TRANSPORTATION

APPROVED Matthew R Rauch
for State Traffic Engineer

DATE 2/13/2023 PLATE NO. M6-1.16

PROJECT NO: | HWY: | COUNTY: | SHEET NO: 84 | E

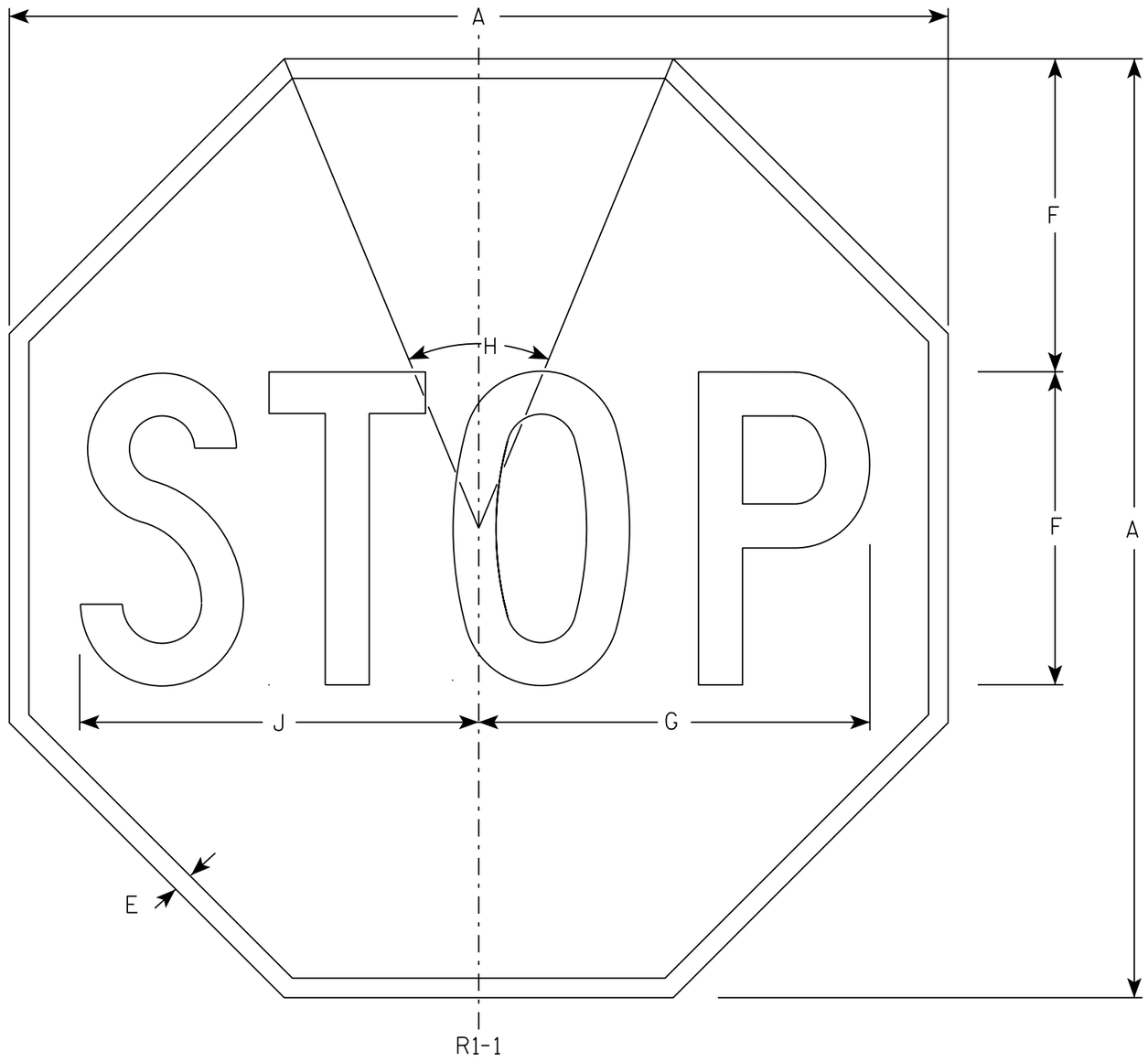

NOTES

1. Sign is Type II - Type H Reflective - reference WIS DOT Standard Specification for HIGHWAY and STRUCTURE CONSTRUCTION latest edition.
2. Color:
   Background - Red
   Message - White
3. Message Series - C

SIZE	A	B	C	D	E	F	G	H	I	J	K	L	M	N	O	P	Q	R	S	T	U	V	W	X	Y	Z	Area sq. ft.
1	30				5/8	10	12 1/2	45°		12 3/4																	5.18
2S	30				5/8	10	12 1/2	45°		12 3/4																	5.18
2M	36				3/4	12	15	45°		15 3/8																	7.46
3	36				3/4	12	15	45°		15 3/8																	7.46
4	48				1	16	20	45°		20 1/2																	13.25
5	48				1	16	20	45°		20 1/2																	13.25
6	18				3/8	6	7 3/4	45°		7 3/4																	1.86
7	12				1/4	4	5	45°		5 1/8																	0.78

STANDARD SIGN
R1-1

WISCONSIN DEPT OF TRANSPORTATION

APPROVED Matthew R Rauch
for State Traffic Engineer

DATE 11/12/15 PLATE NO. R1-1.13

PROJECT NO:	HWY:	COUNTY:		SHEET NO: 85	E

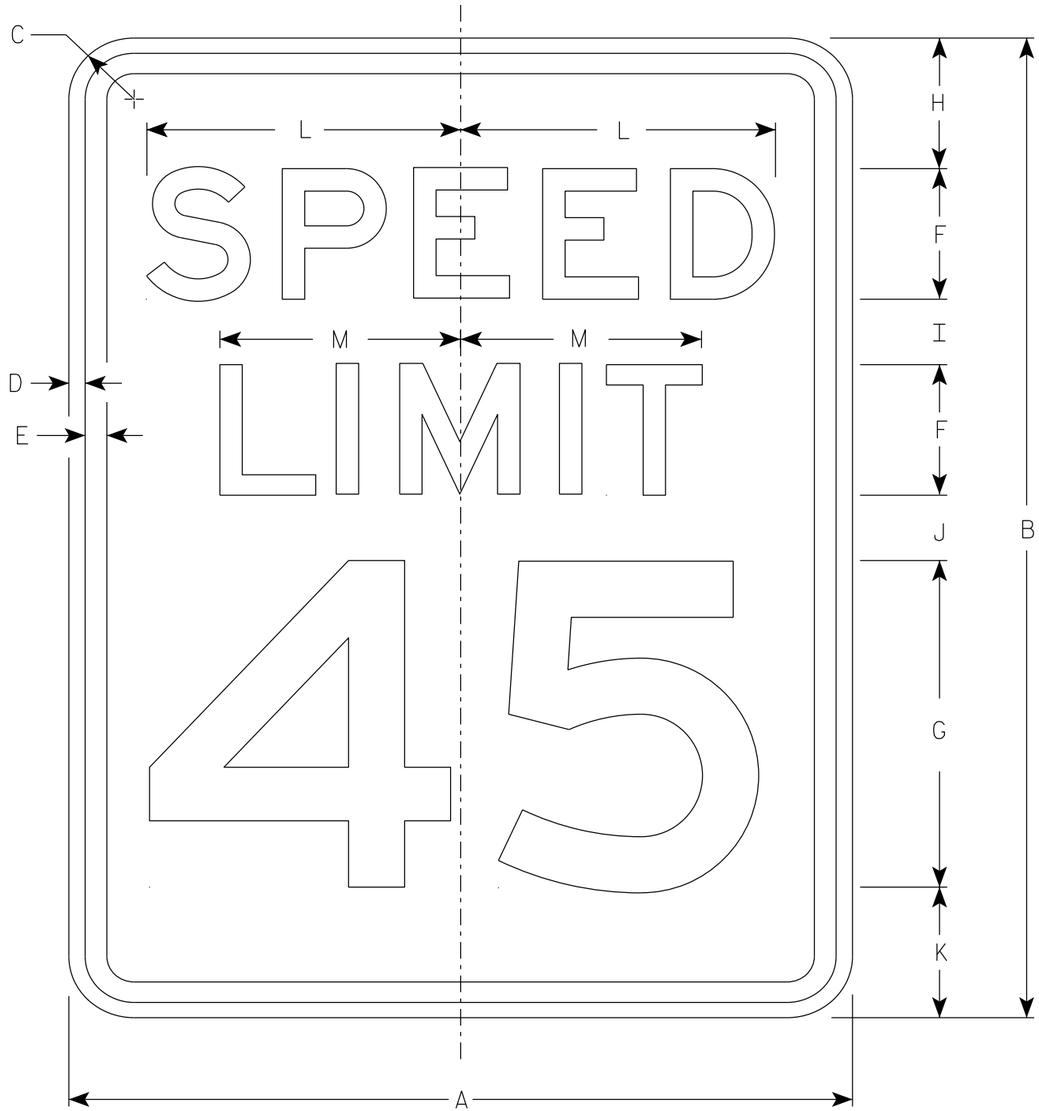

R2-1

NOTES

1. Sign is Type II - Type H Reflective
2. Color:
   Background - White
   Message - Black
3. Message Series - E
4. Substitute appropriate numerals and optically adjust spacing to achieve proper balance.

SIZE	A	B	C	D	E	F	G	H	I	J	K	L	M	N	O	P	Q	R	S	T	U	V	W	X	Y	Z	Area sq. ft.
1	18	24	1 1/2	3/8	1/2	3	8	3	2	2	3	7 1/4	5 1/2														3.0
2S	24	30	1 1/2	3/8	1/2	4	10	3	2 1/4	3 3/8	3 3/8	9 5/8	7 3/8														5.0
2M	30	36	1 7/8	1/2	5/8	5	12	5	2 1/2	2 1/2	4	12	9 1/4														7.5
3	36	48	1 7/8	1/2	5/8	6	14	6	5	5	6	14 3/8	11														12.0
4	36	48	1 7/8	1/2	5/8	6	14	6	5	5	6	14 3/8	11														12.0
5	48	60	3	3/4	1	8	20	6	4 1/2	6 3/4	6 3/4	19 1/4	14 5/8														20.0

STANDARD SIGN
R2-1

WISCONSIN DEPT OF TRANSPORTATION

APPROVED Matthew R Rauch
for State Traffic Engineer

DATE 2/1/23 PLATE NO. R2-1.14

PROJECT NO: | HWY: | COUNTY: | SHEET NO: 86 | E

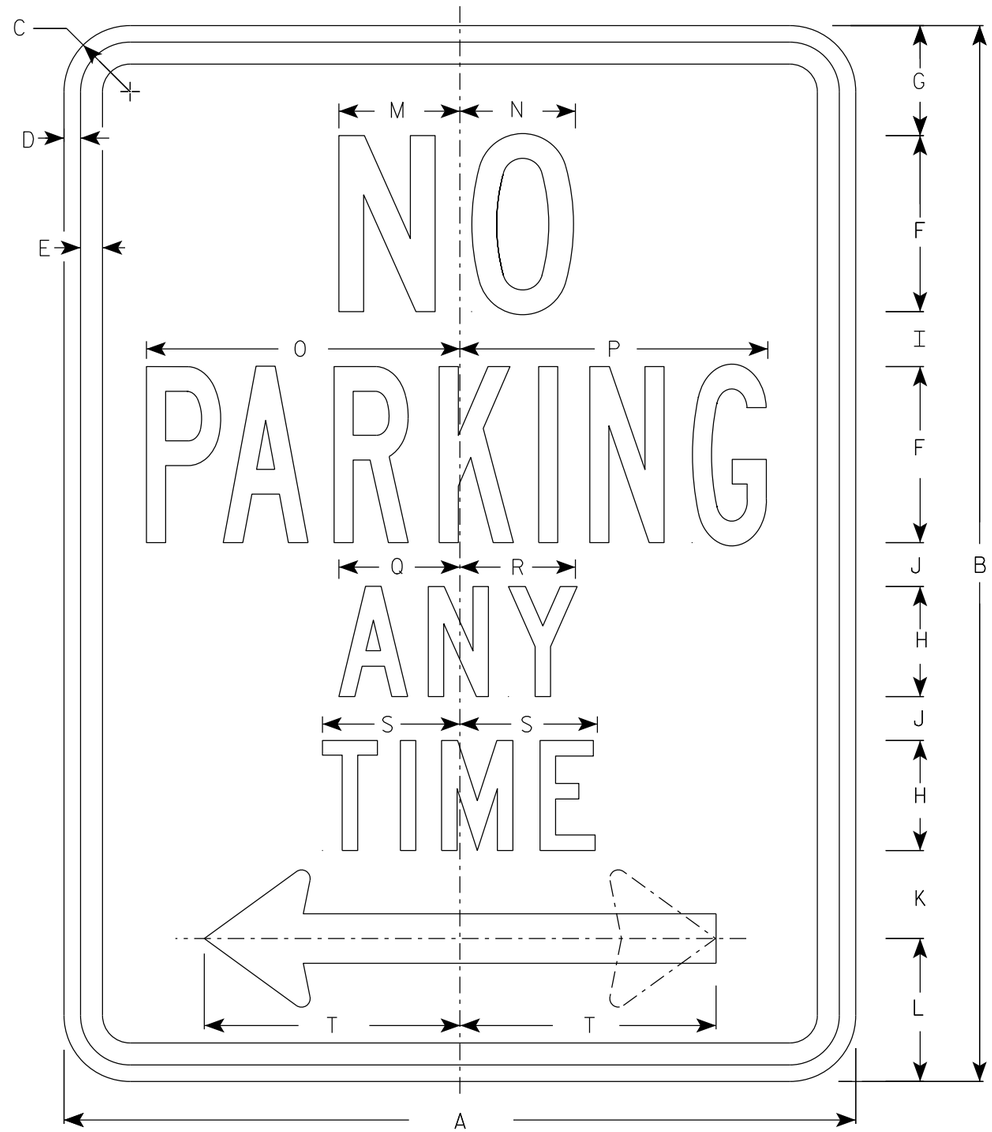

R7-1

NOTES

1. Sign is Type II - Type H Reflective
2. Color:
   Background - White
   Message - Red
3. Message Series - See Note 4
4. Lines 1, 3 and 4 are series C, line 2 is series B.
5. R7-1D (double arrow)
   R7-1L (left arrow)
   R7-1R (right arrow)

ARROW DETAIL

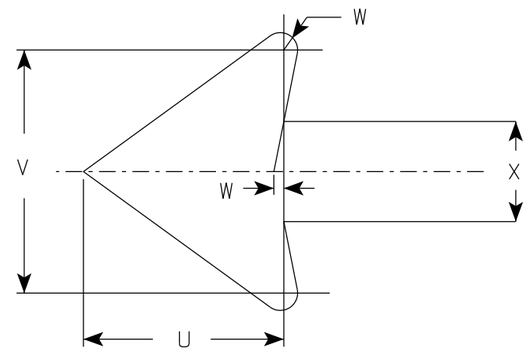

SIZE	A	B	C	D	E	F	G	H	I	J	K	L	M	N	O	P	Q	R	S	T	U	V	W	X	Y	Z	Area sq. ft.
1	12	18	1 1/2	3/8	3/8	3	1 7/8	2	7/8	5/8	1 1/2	2 1/2	2	2	4 7/8	4 7/8	2 1/4	2 1/8	2 1/2	3 7/8	1 1/2	1 3/4	1/8	3/4			1.5
2S	18	24	1 1/2	3/8	1/2	4	2 1/2	2 1/2	1 1/4	1	2	3 1/4	2 3/4	2 5/8	7 1/8	7	2 3/4	2 5/8	3 1/8	5 7/8	2 1/4	2 5/8	1/4	1 1/8			3.0
2M	24	30	1 1/2	3/8	1/2	5	3	3	2	1 1/4	2 1/2	4	3 1/4	3 3/8	9 1/4	9 1/4	3 1/4	3 1/4	3 3/4	7 3/4	3	3 1/2	1/4	1 1/2			5.0
3	24	30	1 1/2	3/8	1/2	5	3	3	2	1 1/4	2 1/2	4	3 1/4	3 3/8	9 1/4	9 1/4	3 1/4	3 1/4	3 3/4	7 3/4	3	3 1/2	1/4	1 1/2			5.0
4																											
5																											

STANDARD SIGN
R7-1

WISCONSIN DEPT OF TRANSPORTATION

APPROVED Matthew R Rauch
for State Traffic Engineer

DATE 10/26/23 PLATE NO. R7-1.11

PROJECT NO: | HWY: | COUNTY: | SHEET NO: 87 E

7

7

R7-2

* - See Note 5

NOTES

1. Sign is Type II - Type H Reflective
2. Color:
   Background - White
   Message - Red
3. Message Series - See Note 6
4. Substitute appropriate numerals as required & adjust spacing to achieve proper balance.
5. R7-2D (double arrow)
   R7-2L (left arrow)
   R7-2R (right arrow)
6. Lines 1, 3 and 4 are series C, line 2 is series B.

ARROW DETAIL

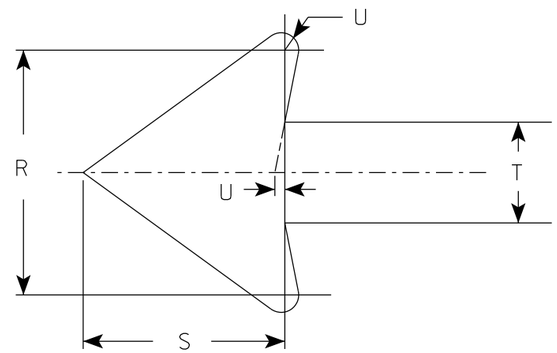

SIZE	A	B	C	D	E	F	G	H	I	J	K	L	M	N	O	P	Q	R	S	T	U	V	W	X	Y	Z	Area sq. ft.
1	12	18	1 1/2	3/8	3/8	3	1 7/8	1 1/2	7/8	7/8	2	2 1/2	2	2	4 7/8	4 7/8	3 7/8	1 3/4	1 1/2	3/4	1/8						1.5
2S	18	24	1 1/2	3/8	1/2	4	2 1/2	2 1/2	1 1/4	1	2	3 1/4	2 3/4	2 5/8	7 1/8	7	5 7/8	2 5/8	2 1/4	1 1/8	1/4						3.0
2M	24	30	1 1/2	3/8	1/2	5	3	3	2	1 1/4	2 1/2	4	3 1/4	3 3/8	9 1/4	9 1/4	7 3/4	3 1/2	3	1 1/2	1/4						5.0
3	24	30	1 1/2	3/8	1/2	5	3	3	2	1 1/4	2 1/2	4	3 1/4	3 3/8	9 1/4	9 1/4	7 3/4	3 1/2	3	1 1/2	1/4						5.0
4																											
5																											

STANDARD SIGN
R7-2

WISCONSIN DEPT OF TRANSPORTATION

APPROVED Matthew R Rauch
for State Traffic Engineer

DATE 10/26/23 PLATE NO. R7-2.10

PROJECT NO:	HWY:	COUNTY:		SHEET NO: 88	E

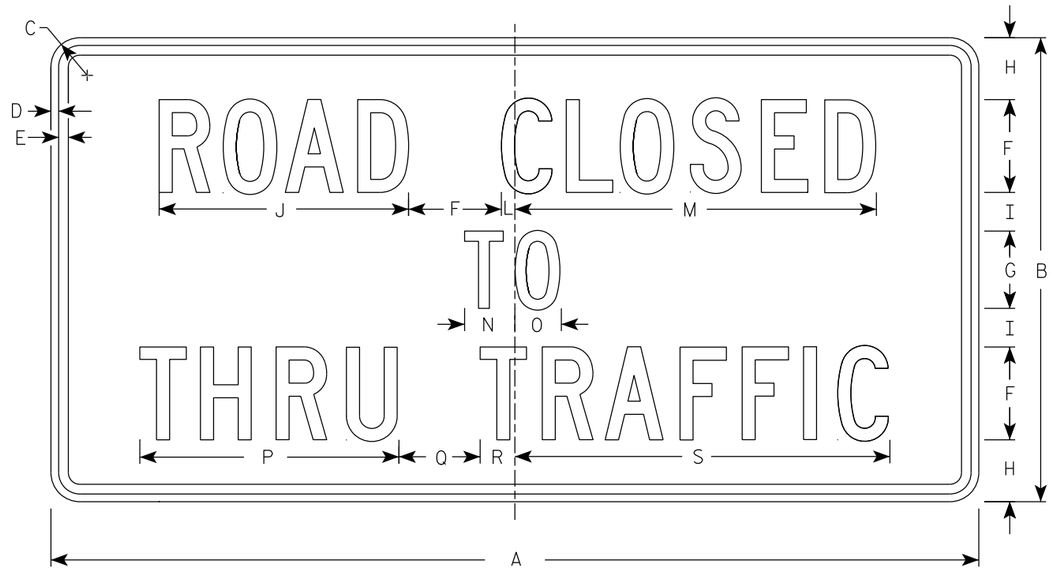

R11-4

NOTES

1. Sign is Type II - Type H Reflective
2. Color:
   Background - White
   Message - Black
3. Message Series - C
4. Corners may be square or rounded when base material is plywood but borders shall be rounded as shown. When base material is metal, the corners and borders shall be rounded.

SIZE	A	B	C	D	E	F	G	H	I	J	K	L	M	N	O	P	Q	R	S	T	U	V	W	X	Y	Z	Area sq. ft.
1																											
2S	60	30	1 7/8	1/2	5/8	6	5	4	2 1/2	16 1/8		7/8	23 3/8	3 1/4	3	16 3/4	5 1/4	2 1/4	24 1/4								12.5
2M	60	30	1 7/8	1/2	5/8	6	5	4	2 1/2	16 1/8		7/8	23 3/8	3 1/4	3	16 3/4	5 1/4	2 1/4	24 1/4								12.5
3																											
4																											
5																											

STANDARD SIGN
R11 - 4

WISCONSIN DEPT OF TRANSPORTATION

APPROVED Matthew R Rauch
for State Traffic Engineer

DATE 2/5/24 PLATE NO. R11-4.4

PROJECT NO:	HWY:	COUNTY:		SHEET NO: 89	E

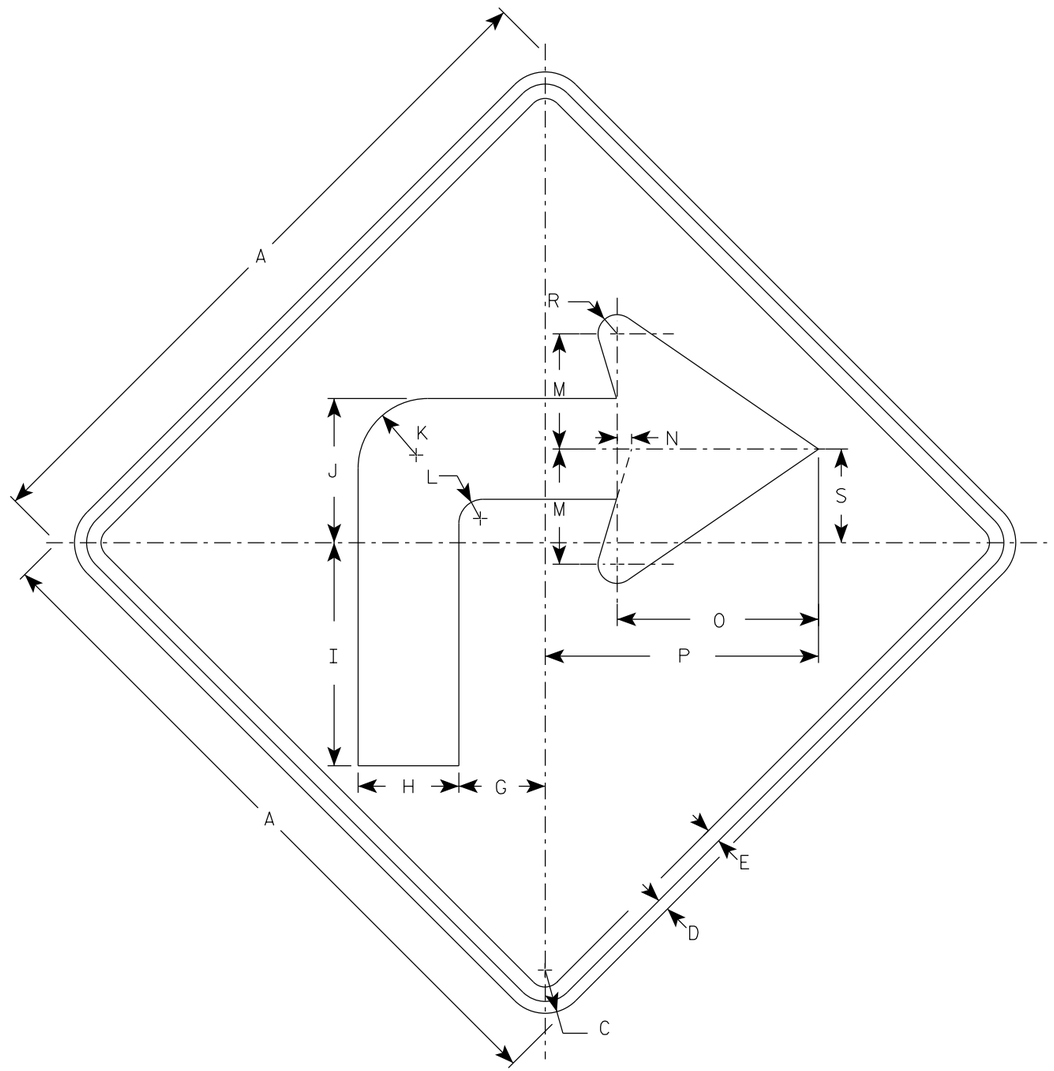

W1-1R

NOTES

1. Sign is Type II - Type F Reflective
2. Color:
   Background - Yellow
   Message - Black
3. W1-1L is the same as W1-1R except the arrow is reversed along the vertical centerline.

SIZE	A	B	C	D	E	F	G	H	I	J	K	L	M	N	O	P	Q	R	S	T	U	V	W	X	Y	Z	Area sq. ft.
1	24		1 1/2	3/8	1/2		3	3 1/2	7 3/4	5	2 1/2	7/8	4	1/2	7	9 1/2		5/8	3 1/4								4.0
2S	36		2 1/4	5/8	3/4		4 1/2	5 1/4	11 5/8	7 1/2	3 5/8	1 1/4	6	3/4	10 1/2	14 1/4		1	4 7/8								9.0
2M	36		2 1/4	5/8	3/4		4 1/2	5 1/4	11 5/8	7 1/2	3 5/8	1 1/4	6	3/4	10 1/2	14 1/4		1	4 7/8								9.0
3	36		2 1/4	5/8	3/4		4 1/2	5 1/4	11 5/8	7 1/2	3 5/8	1 1/4	6	3/4	10 1/2	14 1/4		1	4 7/8								9.0
4	48		3	3/4	1		6	7	15 1/2	10	4 7/8	1 5/8	8	1	14	19		1 1/4	6 1/2								16.0
5	48		3	3/4	1		6	7	15 1/2	10	4 7/8	1 5/8	8	1	14	19		1 1/4	6 1/2								16.0

STANDARD SIGN
W1-1

WISCONSIN DEPT OF TRANSPORTATION

APPROVED Matthew R Rauch
for State Traffic Engineer

DATE 3/22/2023 PLATE NO. W1-1.12

PROJECT NO: | HWY: | COUNTY: | SHEET NO: E

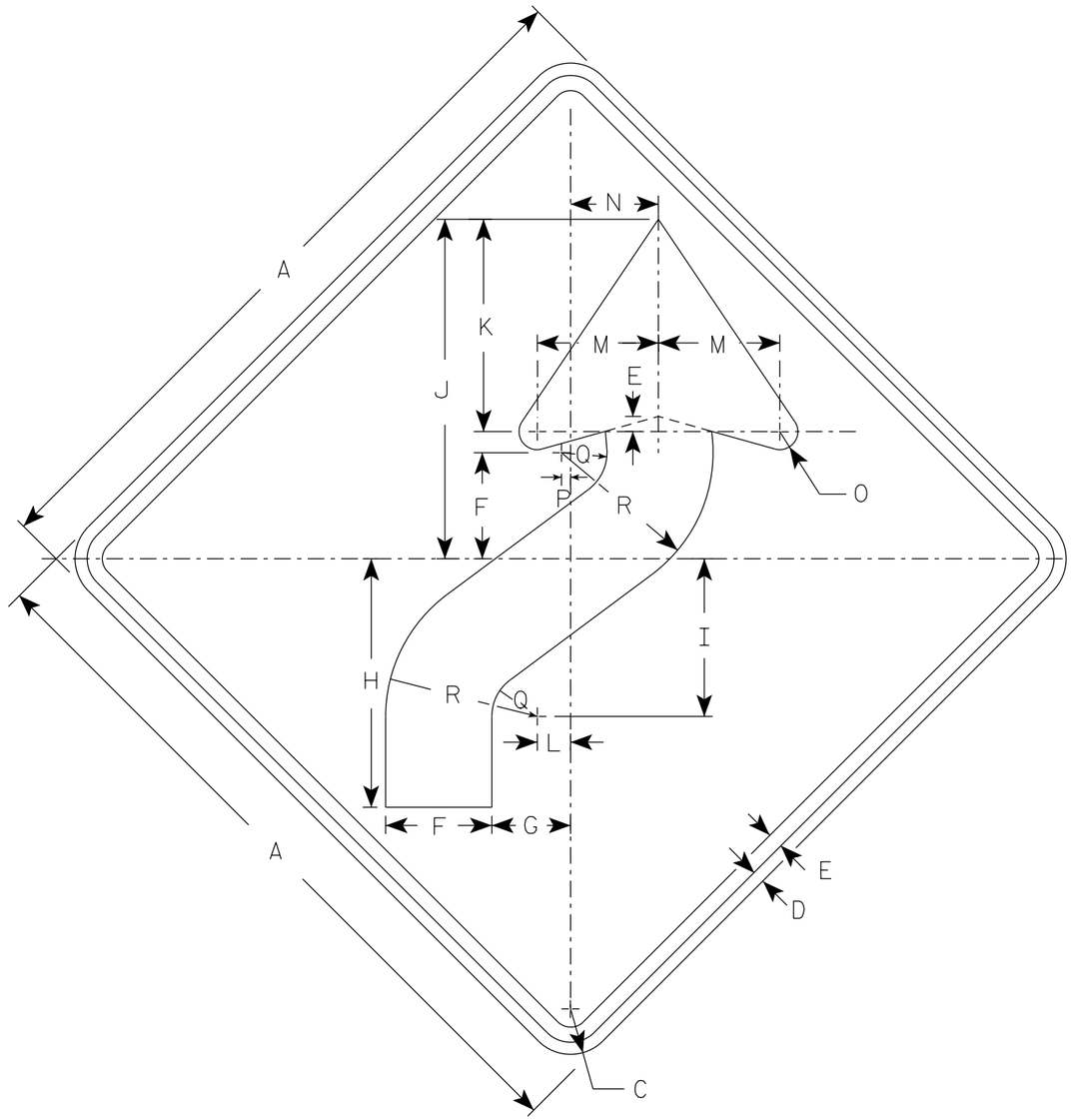

W1-4R

NOTES

1. Sign is Type II - Type F Reflective
2. Color:
   Background - Yellow
   Message - Black
3. W1-4L is the same as W1-4R except the arrow is reversed along the vertical centerline.

SIZE	A	B	C	D	E	F	G	H	I	J	K	L	M	N	O	P	Q	R	S	T	U	V	W	X	Y	Z	Area sq. ft.
1	24		1 1/2	3/8	1/2	3 1/2	2 5/8	8 1/4	5 1/4	11 1/4	7	1 1/8	4	3	5/8	1/4	1 1/2	5									4.0
2S	30		1 7/8	1/2	5/8	4 3/8	3 1/4	10 1/4	6 1/2	14	8 3/4	1 3/8	5	3 5/8	3/4	3/8	1 7/8	6 1/4									6.25
2M	36		2 1/4	5/8	3/4	5 1/4	4	12 3/8	7 7/8	16 7/8	10 1/2	1 5/8	6	4 1/2	1	1/2	2 1/4	7 1/2									9.0
3	36		2 1/4	5/8	3/4	5 1/4	4	12 3/8	7 7/8	16 7/8	10 1/2	1 5/8	6	4 1/2	1	1/2	2 1/4	7 1/2									9.0
4	36		2 1/4	5/8	3/4	5 1/4	4	12 3/8	7 7/8	16 7/8	10 1/2	1 5/8	6	4 1/2	1	1/2	2 1/4	7 1/2									9.0
5	48		3	3/4	1	7	5 1/4	16 1/2	10 1/2	22 1/2	14	2 1/4	8	6	1 1/4	5/8	3	10									16.0

STANDARD SIGN
W1-4

WISCONSIN DEPT OF TRANSPORTATION

APPROVED Matthew R Rauch
For State Traffic Engineer

DATE 3/23/2023 PLATE NO. W1-4.12

PROJECT NO:	HWY:	COUNTY:		SHEET NO: E

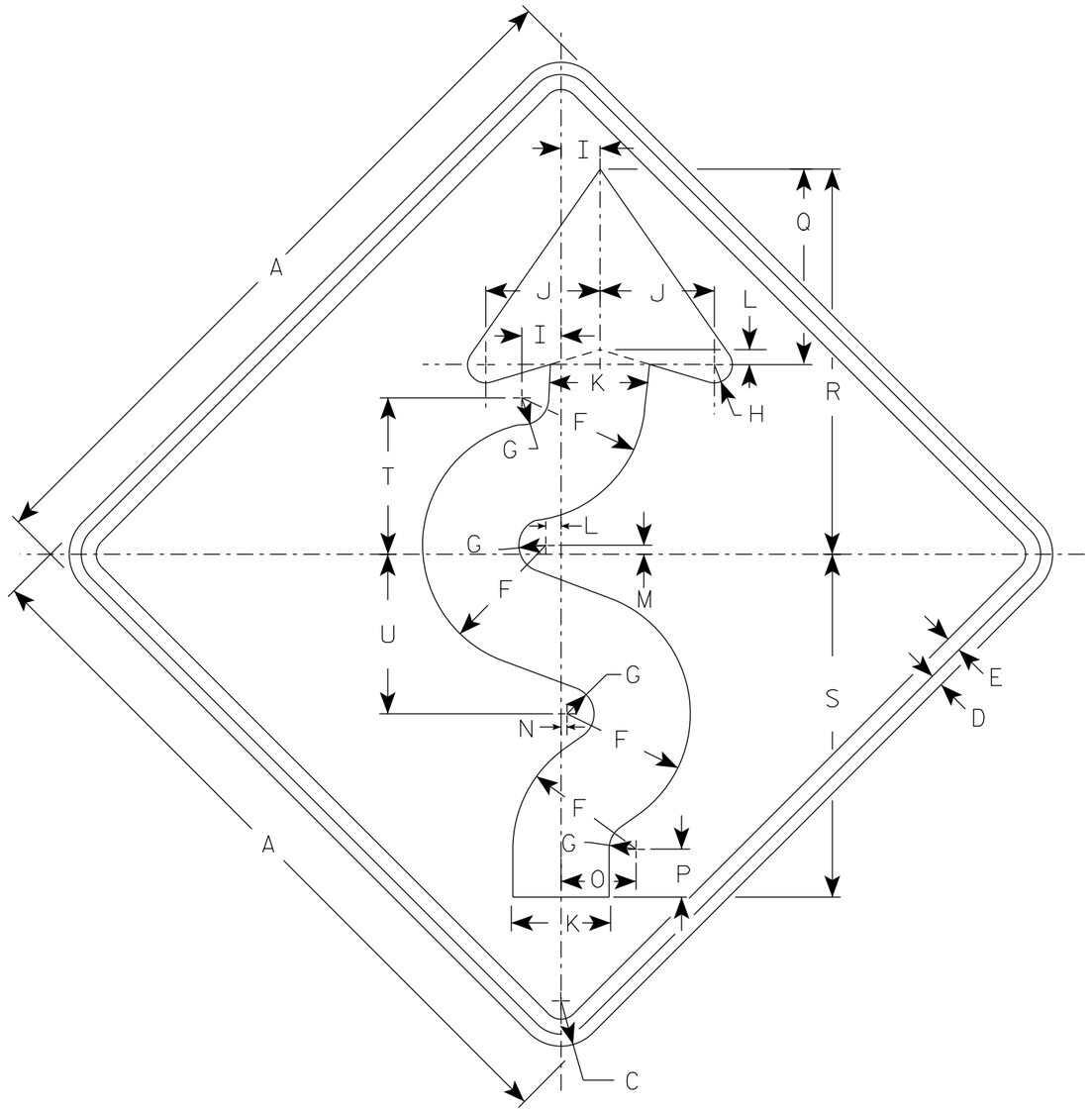

W1-5R

NOTES

1. Sign is Type II - Type F Reflective
2. Color:
   Background - Yellow
   Message - Black
3. W1-5L is the same as W1-5R except the arrow is reversed along the vertical centerline.
4. If used with W13-1 of 30 MPH or less, use 36" sign for Size 2S.

SIZE	A	B	C	D	E	F	G	H	I	J	K	L	M	N	O	P	Q	R	S	T	U	V	W	X	Y	Z	Area sq. ft.
1	24		1 1/2	3/8	1/2	4 1/8	7/8	5/8	1 1/4	3 3/4	3 1/4	1/2	1/4	1/8	2 1/2	1 5/8	6 1/2	12 3/4	11 3/8	5 1/4	5 1/4						4.0
2S	30		1 7/8	1/2	5/8	5 1/8	1 1/8	3/4	1 5/8	4 3/4	4 1/8	5/8	3/8	1/4	3 1/8	2	8 1/8	16	14 1/4	6 1/2	6 5/8						6.25
2M	36		2 1/4	5/8	3/4	6 1/4	1 3/8	1	1 7/8	5 5/8	4 7/8	3/4	3/8	1/4	3 3/4	2 7/8	9 3/4	19 1/8	17 1/8	7 3/4	7 7/8						9.0
3	36		2 1/4	5/8	3/4	6 1/4	1 3/8	1	1 7/8	5 5/8	4 7/8	3/4	3/8	1/4	3 3/4	2 7/8	9 3/4	19 1/8	17 1/8	7 3/4	7 7/8						9.0
4	36		2 1/4	5/8	3/4	6 1/4	1 3/8	1	1 7/8	5 5/8	4 7/8	3/4	3/8	1/4	3 3/4	2 7/8	9 3/4	19 1/8	17 1/8	7 3/4	7 7/8						9.0
5	48		3	3/4	1	8 1/4	1 3/4	1 1/4	2 1/2	7 1/2	6 1/2	1	1/2	3/8	5	3 1/4	13	25 1/2	22 3/4	10 3/8	10 1/2						16.0

STANDARD SIGN
W1-5

WISCONSIN DEPT OF TRANSPORTATION

APPROVED Matthew R Rauch
for State Traffic Engineer

DATE 4/11/2023 PLATE NO. W1-5.10

PROJECT NO: | HWY: | COUNTY: | SHEET NO: 92 E

FILE NAME : C:\CAEfiles\Projects\tr_stdplate\W15.dgn PLOT DATE : 30-OCT 2023 10:04 PLOT BY : dotc4c PLOT NAME : PLOT SCALE : $$.....plotscale.....$$ WISDOT/CADDS SHEET 42

NOTES

1. Sign is Type II - Type F Reflective
2. Color:
   Background - Yellow
   Message - Black

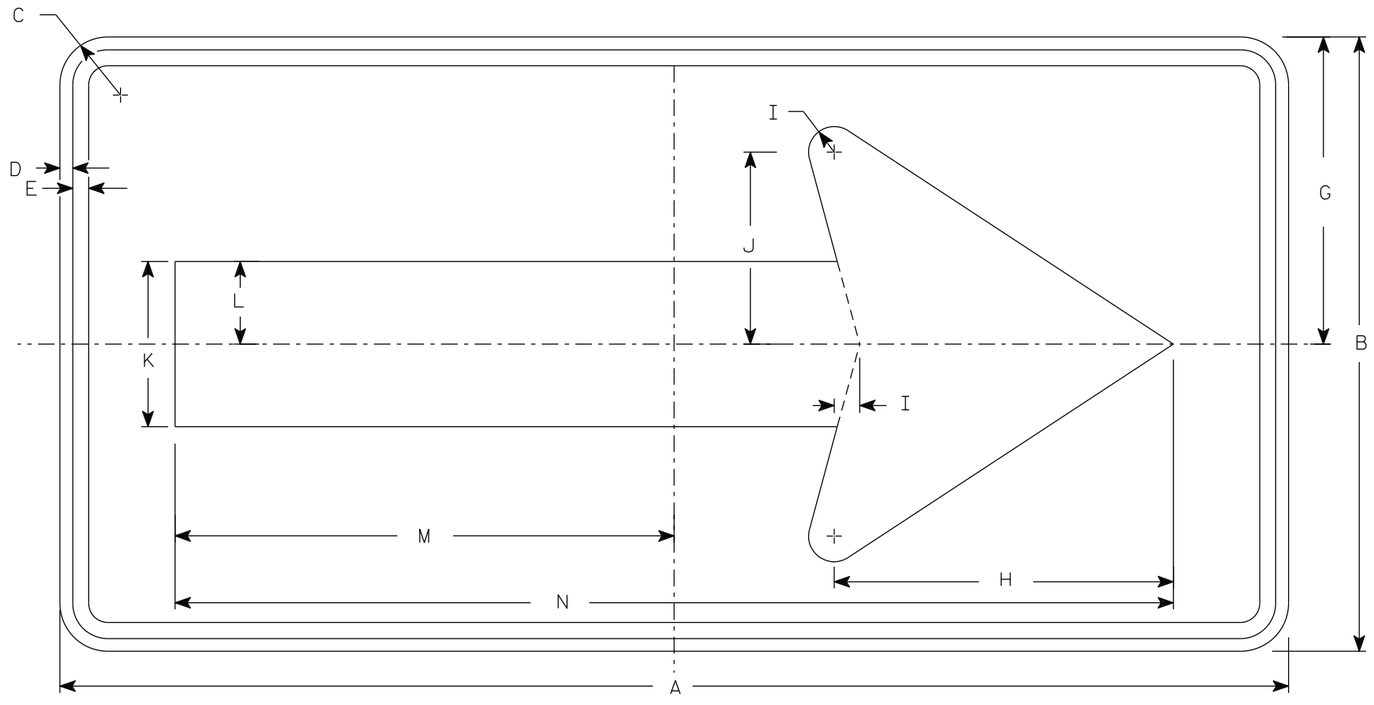

W1-6

SIZE	A	B	C	D	E	F	G	H	I	J	K	L	M	N	O	P	Q	R	S	T	U	V	W	X	Y	Z	Area sq. ft.
1	36	18	1 1/2	3/8	3/8		9	10	3/4	5 5/8	4 3/4	2 3/8	14 5/8	29 1/4													4.5
2S	48	24	1 7/8	1/2	5/8		12	13 1/4	1	7 1/2	6 1/2	3 1/4	19 1/2	39													8.0
2M	48	24	1 7/8	1/2	5/8		12	13 1/4	1	7 1/2	6 1/2	3 1/4	19 1/2	39													8.0
3	60	30	1 7/8	1/2	5/8		15	16 1/4	1 1/4	9 1/4	8	4	24 3/8	48 3/4													12.5
4	60	30	1 7/8	1/2	5/8		15	16 1/4	1 1/4	9 1/4	8	4	24 3/8	48 3/4													12.5
5	96	48	3	3/4	1		24	26 1/2	2	15	13	6 1/2	39	78													32.0

STANDARD SIGN

W1-6

WISCONSIN DEPT OF TRANSPORTATION

APPROVED Matthew R Rauch
for State Traffic Engineer

DATE 4/13/2023 PLATE NO. W1-6.9

PROJECT NO:	HWY:	COUNTY:		SHEET NO:	E

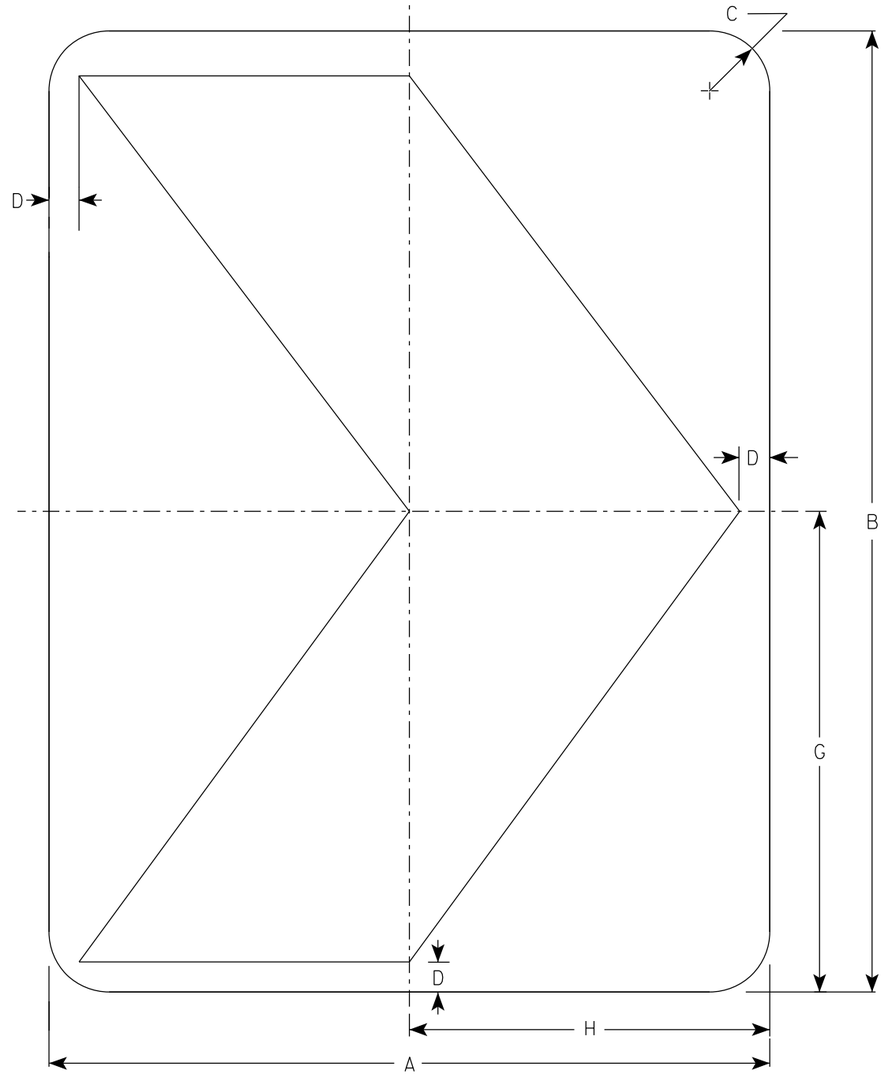

W1-8

NOTES

1. Sign is Type II - Type F Reflective
2. Color:
   Background - Yellow
   Message - Black

SIZE	A	B	C	D	E	F	G	H	I	J	K	L	M	N	O	P	Q	R	S	T	U	V	W	X	Y	Z	Area sq. ft.
1	12	18	1 ½	½			9	6																			1.5
2S	18	24	1 ½	¾			12	9																			3.0
2M	18	24	1 ½	¾			12	9																			3.0
3	24	30	1 ½	1			15	12																			5.0
4	30	36	1 ⅞	1 ¼			18	15																			7.5
5	36	48	1 ⅞	1 ½			24	18																			12.0

STANDARD SIGN

W1-8

WISCONSIN DEPT OF TRANSPORTATION

APPROVED Matthew R Rauch
for State Traffic Engineer

DATE 5/11/2023 PLATE NO. W1-8.7

PROJECT NO:

SHEET NO: 94 **E**

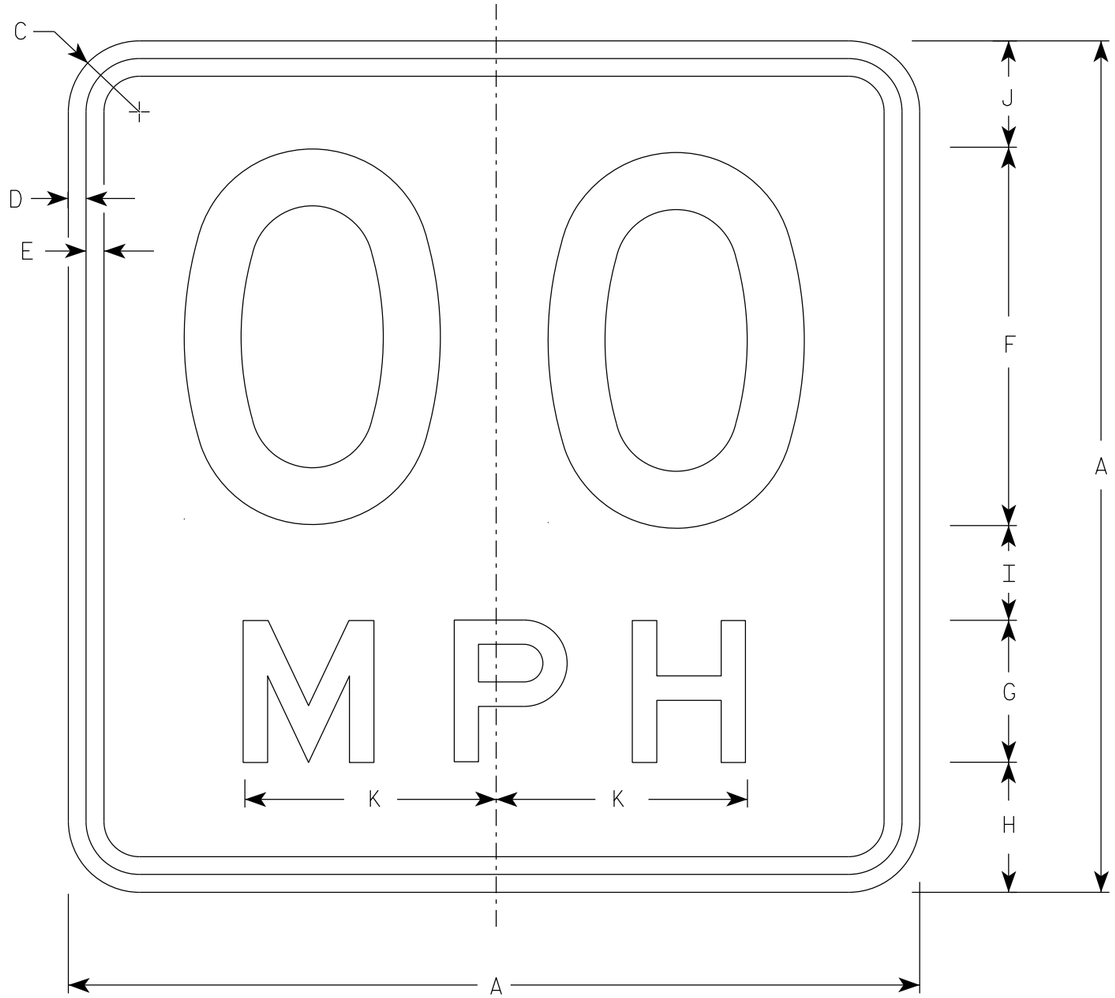

W13-1

* For 30" x 30" Warning Signs, use 18" x 18" W13-1 signs.
For 36" x 36" Warning Signs, use 24" x 24" W13-1 signs.

NOTES

1. Sign is Type II - Type F Reflective
2. Color:
   Background - Yellow
   Message - Black
3. Message Series - See Note 5
4. Substitute appropriate numerals and optically space about centerline to achieve proper balance.
5. Line 1 is Series D
   Line 2 is Series E

SIZE	A	B	C	D	E	F	G	H	I	J	K	L	M	N	O	P	Q	R	S	T	U	V	W	X	Y	Z	Area sq. ft.
1	18		1 1/2	3/8	3/8	8	3	2 3/4	2	2 1/4	5 3/8																2.25
* 2S	18		1 1/2	3/8	3/8	8	3	2 3/4	2	2 1/4	5 3/8																2.25
* 2M	18		1 1/2	3/8	3/8	8	3	2 3/4	2	2 1/4	5 3/8																2.25
3	24		1 1/2	3/8	1/2	10	4	4	2 3/4	3 1/4	6 5/8																4.00
4	36		2 1/4	5/8	3/4	16	6	5 1/2	4	4 1/2	10 5/8																9.00
5	36		2 1/4	5/8	3/4	16	6	5 1/2	4	4 1/2	10 5/8																9.00

STANDARD SIGN
W13-1

WISCONSIN DEPT OF TRANSPORTATION

APPROVED Matthew R Rauch
for State Traffic Engineer

DATE 1/8/2024 PLATE NO. W13-1.17

PROJECT NO: | HWY: | COUNTY: | SHEET NO: 95 | E

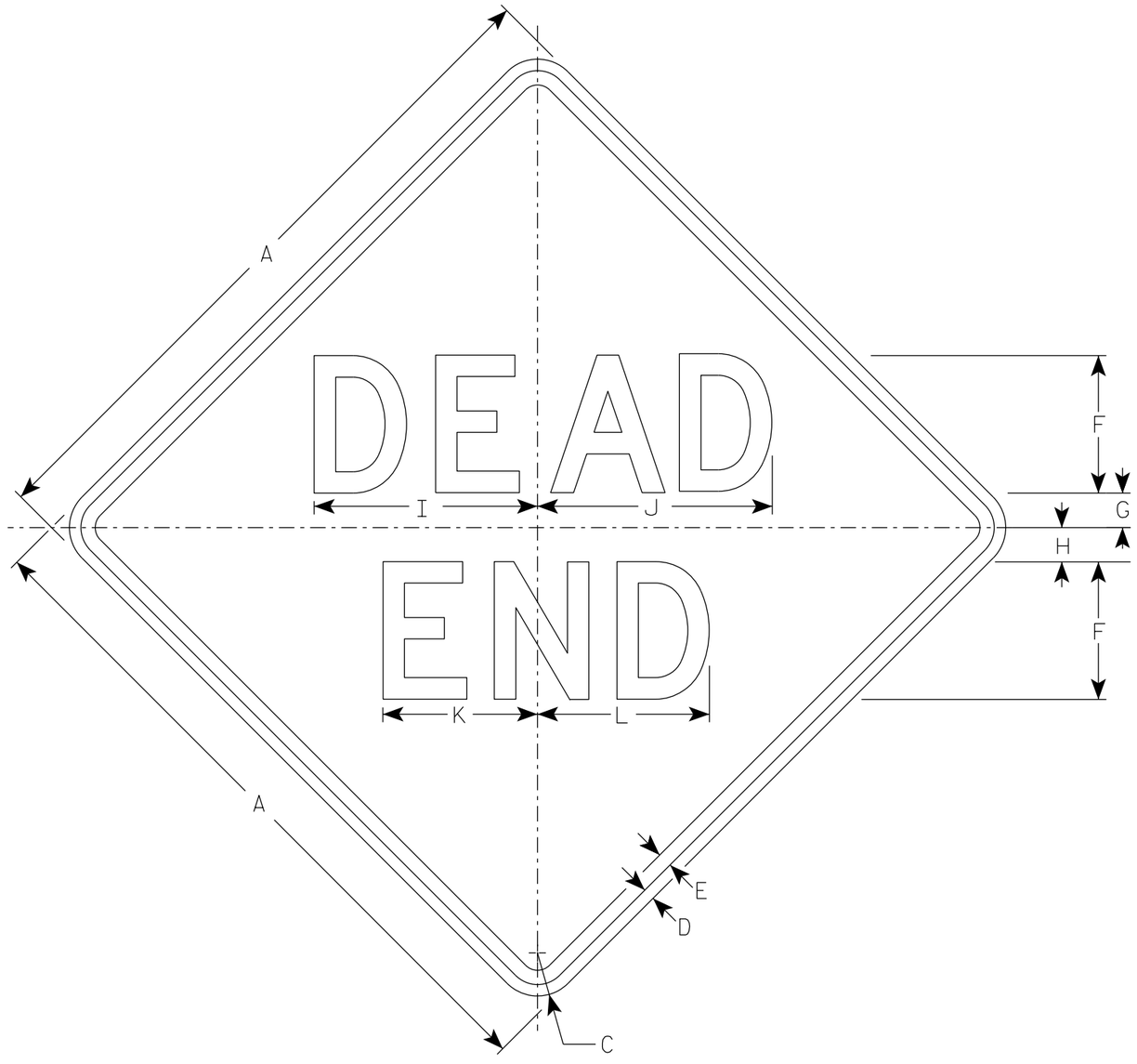

W14-1

NOTES

1. Sign is Type II - Type F Reflective
2. Color:
   Background - Yellow
   Message - Black
3. Message Series - D

SIZE	A	B	C	D	E	F	G	H	I	J	K	L	M	N	O	P	Q	R	S	T	U	V	W	X	Y	Z	Areq sq. ft.
1	24		1 1/2	3/8	1/2	5	1	2	8 1/4	8 5/8	5 5/8	6 1/4															4.0
2S	30		1 7/8	1/2	5/8	6	1 1/2	2 1/2	9 3/4	10 1/4	6 3/4	7 1/2															6.25
2M	30		1 7/8	1/2	5/8	6	1 1/2	2 1/2	9 3/4	10 1/4	6 3/4	7 1/2															6.25
3	36		2 1/4	5/8	3/4	7	2	3	11 3/8	12	7 7/8	8 3/4															9.0
4																											
5																											

STANDARD SIGN
W14-1

WISCONSIN DEPT OF TRANSPORTATION

APPROVED Matthew R Rauch
for State Traffic Engineer

DATE 1/8/2024 PLATE NO. W14-1.8

PROJECT NO: | HWY: | COUNTY: | SHEET NO: E

FILE NAME : C:\CAEfiles\Projects\tr_stdplate\W141.dgn PLOT DATE : 8-Jan 2024 2:36 PLOT BY : dotc4c PLOT NAME : PLOT SCALE : $$.....plotscale.....$$ WISDOT/CADDS SHEET 42

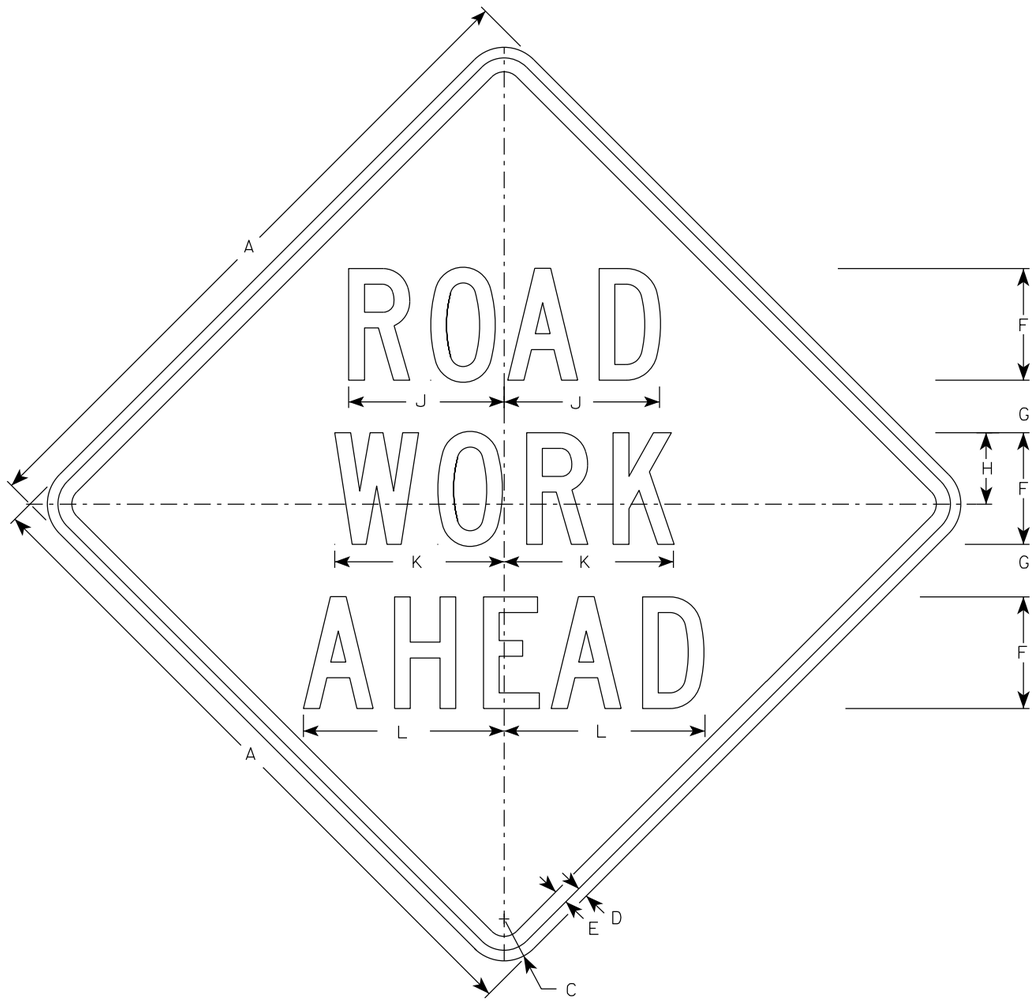

W20-1A

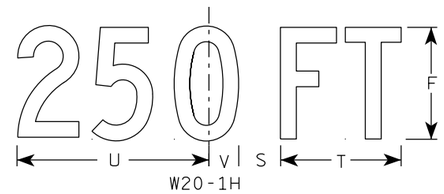

W20-1H

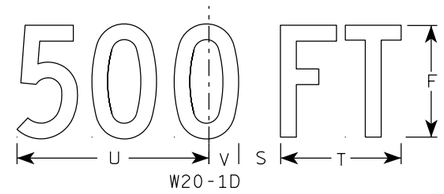

W20-1D

W20-1C

W20-1B

NOTES

1. Sign is Type II - Type F Reflective
2. Color:
   Background - Orange
   Message - Black
3. Message Series - C
4. Corners may be square or rounded when base material is plywood but borders shall be rounded as shown. When base material is metal, the corners and borders shall be rounded.

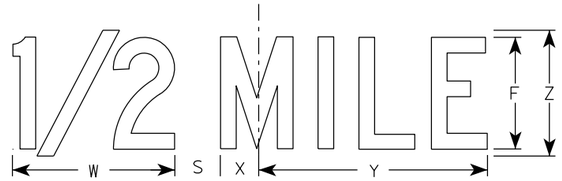

W20-1G

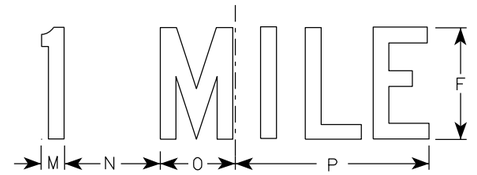

W20-1F

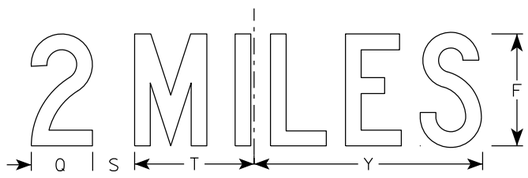

W20-1E

SIZE	A	B	C	D	E	F	G	H	I	J	K	L	M	N	O	P	Q	R	S	T	U	V	W	X	Y	Z	Area sq. ft.
1	36		2 1/4	5/8	3/4	5	2 5/8	3 1/4	10 1/8	7	7 5/8	8 7/8	1 1/8	4 1/2	3 1/2	9	3 1/4	2 1/2	2 1/4	5 5/8	9	1 3/8	8	1 3/4	10 3/4	6	9.0
2S	48		3	3/4	1	8	3 3/4	5 1/8	15 3/8	11 1/8	12 1/8	14 3/8	1 5/8	6 7/8	5 3/8	13 7/8	4 3/8	3 7/8	3	8 5/8	13 3/4	2 1/8	11 7/8	2 3/4	16 3/8	9	16.0
2M	48		3	3/4	1	8	3 3/4	5 1/8	15 3/8	11 1/8	12 1/8	14 3/8	1 5/8	6 7/8	5 3/8	13 7/8	4 3/8	3 7/8	3	8 5/8	13 3/4	2 1/8	11 7/8	2 3/4	16 3/8	9	16.0
3	48		3	3/4	1	8	3 3/4	5 1/8	15 3/8	11 1/8	12 1/8	14 3/8	1 5/8	6 7/8	5 3/8	13 7/8	4 3/8	3 7/8	3	8 5/8	13 3/4	2 1/8	11 7/8	2 3/4	16 3/8	9	16.0
4	48		3	3/4	1	8	3 3/4	5 1/8	15 3/8	11 1/8	12 1/8	14 3/8	1 5/8	6 7/8	5 3/8	13 7/8	4 3/8	3 7/8	3	8 5/8	13 3/4	2 1/8	11 7/8	2 3/4	16 3/8	9	16.0
5	48		3	3/4	1	8	3 3/4	5 1/8	15 3/8	11 1/8	12 1/8	14 3/8	1 5/8	6 7/8	5 3/8	13 7/8	4 3/8	3 7/8	3	8 5/8	13 3/4	2 1/8	11 7/8	2 3/4	16 3/8	9	16.0

STANDARD SIGN
W20-1A, B, C, D, E, F, G & H

WISCONSIN DEPT OF TRANSPORTATION

APPROVED Matthew R Rauch
For State Traffic Engineer

DATE 1/10/2024 PLATE NO. W20-1.12

PROJECT NO:

SHEET NO: 97 E

FILE NAME : C:\CAEfiles\Projects\tr_stdplate\W201.DGN PLOT DATE : 10-JAN 2024 11:16 PLOT BY : dotc4c

WISDOT/CADDS SHEET 42

7

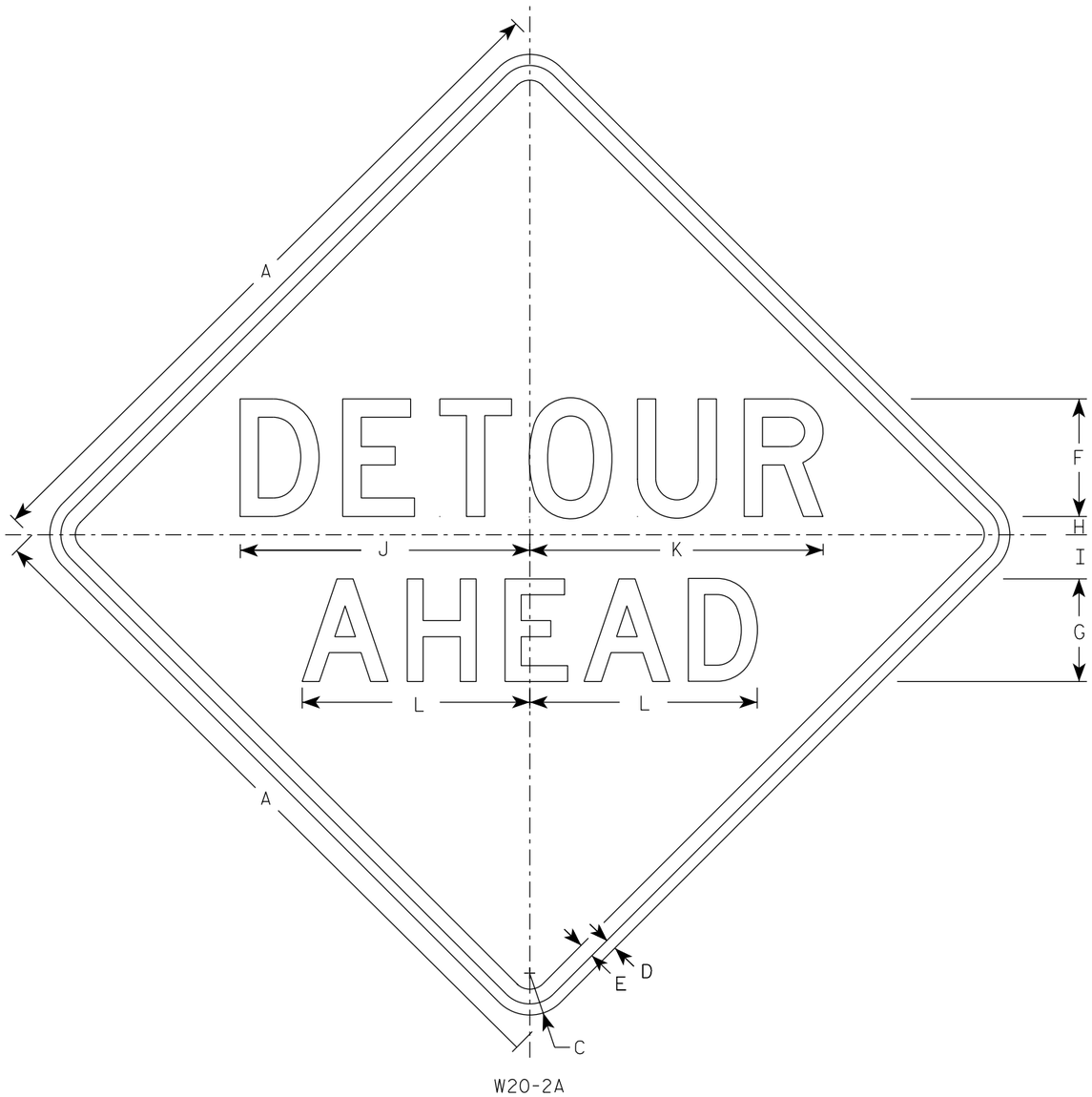

W20-2A

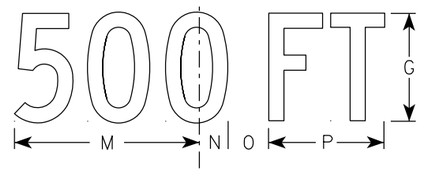

W20-2D

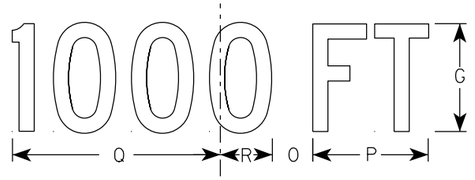

W20-2C

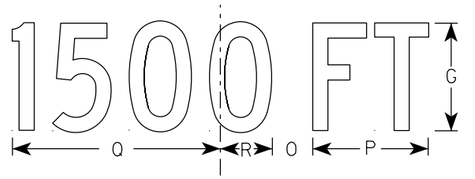

W20-2B

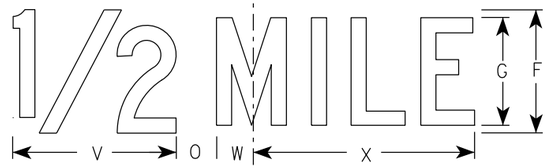

W20-2G

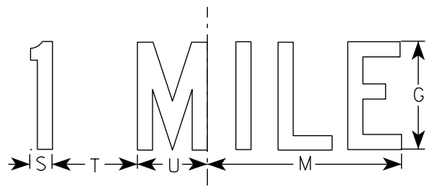

W20-2F

NOTES

1. Sign is Type II - Type F Reflective
2. Color:
   Background - Orange
   Message - Black
3. Message Series - See note 5
4. Corners may be square or rounded when base material is plywood but borders shall be rounded as shown. When base material is metal, the corners and borders shall be rounded.
5. Line 1 is Series D.
   Line 2 is Series D for AHEAD and Series C for all other distances.

SIZE	A	B	C	D	E	F	G	H	I	J	K	L	M	N	O	P	Q	R	S	T	U	V	W	X	Y	Z	Area sq. ft.
1	36		2 1/4	5/8	3/4	6	5	1	2 1/4	14 3/4	15	11 5/8	9	1 3/8	1 7/8	5 5/8	10 1/8	2 1/2	1 1/8	4 1/2	3 1/2	8	1 3/4	10 3/4			9.0
2S	48		3	3/4	1	8	7	1 1/4	3	19 3/4	20	15 1/2	12	1 7/8	2 5/8	7 1/2	13 1/2	3 3/8	1 1/2	6	4 5/8	10 5/8	2 3/8	14 3/8			16.0
2M	48		3	3/4	1	8	7	1 1/4	3	19 3/4	20	15 1/2	12	1 7/8	2 5/8	7 1/2	13 1/2	3 3/8	1 1/2	6	4 5/8	10 5/8	2 3/8	14 3/8			16.0
3	48		3	3/4	1	8	7	1 1/4	3	19 3/4	20	15 1/2	12	1 7/8	2 5/8	7 1/2	13 1/2	3 3/8	1 1/2	6	4 5/8	10 5/8	2 3/8	14 3/8			16.0
4	48		3	3/4	1	8	7	1 1/4	3	19 3/4	20	15 1/2	12	1 7/8	2 5/8	7 1/2	13 1/2	3 3/8	1 1/2	6	4 5/8	10 5/8	2 3/8	14 3/8			16.0
5	48		3	3/4	1	8	7	1 1/4	3	19 3/4	20	15 1/2	12	1 7/8	2 5/8	7 1/2	13 1/2	3 3/8	1 1/2	6	4 5/8	10 5/8	2 3/8	14 3/8			16.0

STANDARD SIGN
W20-2A,B,C,D,F & G

WISCONSIN DEPT OF TRANSPORTATION

APPROVED Matthew R Rauch
For State Traffic Engineer

DATE 1/10/2024 PLATE NO. W20-2.7

PROJECT NO:	HWY:	COUNTY:		SHEET NO:	E

FILE NAME : C:\CAEfiles\Projects\tr_stdplate\W202.DGN PLOT DATE : 10-JAN 2024 11:36 PLOT BY : dotc4c PLOT NAME : PLOT SCALE : $$.....plotscale.....$$ WISDOT/CADDS SHEET 42

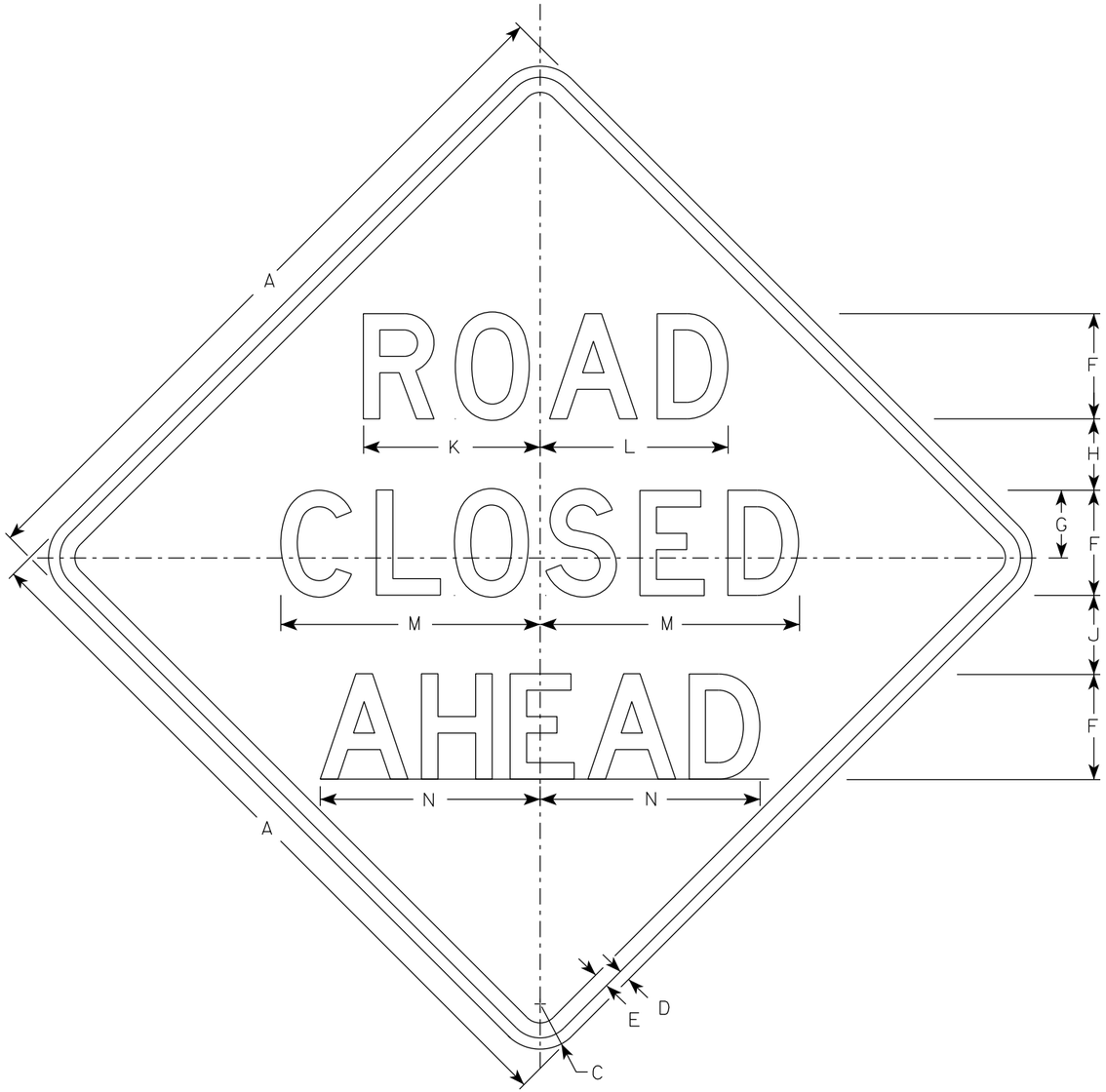

W20-3A

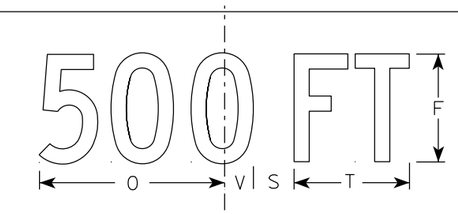

W20-3D

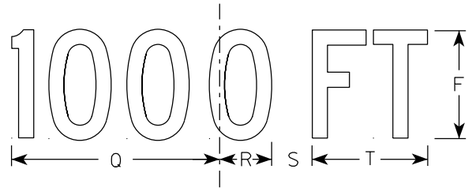

W20-3C

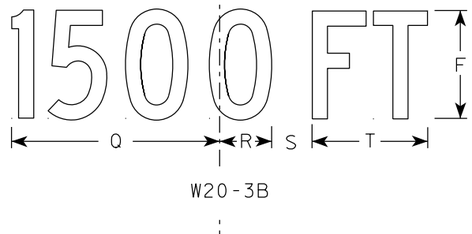

W20-3B

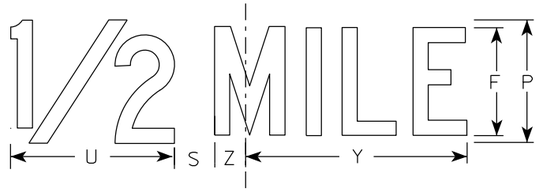

W20-3G

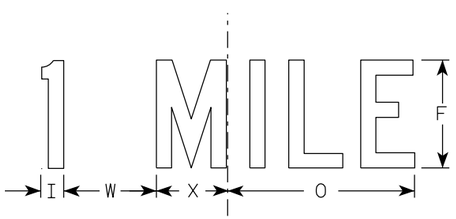

W20-3F

NOTES

1. Sign is Type II - Type F Reflective
2. Color:
   Background - Orange
   Message - Black
3. Message Series - see note 5
4. Corners may be square or rounded when base material is plywood but borders shall be rounded as shown. When base material is metal, the corners and borders shall be rounded.
5. Lines 1 and 2 are Series D.
   Line 3 is Series D for AHEAD and Series C for all other distances.

SIZE	A	B	C	D	E	F	G	H	I	J	K	L	M	N	O	P	Q	R	S	T	U	V	W	X	Y	Z	Area sq. ft.
1	36		2 1/4	5/8	3/4	5	3 3/8	3 1/2	1 1/8	4	8 3/8	8 7/8	12 1/2	11	9	6	10 1/8	2 1/2	1 7/8	5 5/8	8	1 3/8	4 1/2	3 1/2	10 3/4	1 3/4	9.0
2S	48		3	3/4	1	7	4 1/2	4 3/4	1 1/2	5 1/4	11 3/4	12 1/2	17 1/4	14 5/8	12	8	13 1/2	3 3/8	2 5/8	7 1/2	10 5/8	1 7/8	6	4 5/8	14 3/8	2 3/8	16.0
2M	48		3	3/4	1	7	4 1/2	4 3/4	1 1/2	5 1/4	11 3/4	12 1/2	17 1/4	14 5/8	12	8	13 1/2	3 3/8	2 5/8	7 1/2	10 5/8	1 7/8	6	4 5/8	14 3/8	2 3/8	16.0
3	48		3	3/4	1	7	4 1/2	4 3/4	1 1/2	5 1/4	11 3/4	12 1/2	17 1/4	14 5/8	12	8	13 1/2	3 3/8	2 5/8	7 1/2	10 5/8	1 7/8	6	4 5/8	14 3/8	2 3/8	16.0
4	48		3	3/4	1	7	4 1/2	4 3/4	1 1/2	5 1/4	11 3/4	12 1/2	17 1/4	14 5/8	12	8	13 1/2	3 3/8	2 5/8	7 1/2	10 5/8	1 7/8	6	4 5/8	14 3/8	2 3/8	16.0
5	48		3	3/4	1	7	4 1/2	4 3/4	1 1/2	5 1/4	11 3/4	12 1/2	17 1/4	14 5/8	12	8	13 1/2	3 3/8	2 5/8	7 1/2	10 5/8	1 7/8	6	4 5/8	14 3/8	2 3/8	16.0

STANDARD SIGN
W20-3A, B, C, D, F & G

WISCONSIN DEPT OF TRANSPORTATION

APPROVED Matthew R Rauch
for State Traffic Engineer

DATE 1/10/2024 PLATE NO. W20-3.8

PROJECT NO: | HWY: | COUNTY: | SHEET NO: E

FILE NAME : C:\CAEfiles\Projects\tr_stdplate\W203.DGN PLOT DATE : 10-JAN 2024 12:02 PLOT BY : dotc4c PLOT NAME : PLOT SCALE : $$.....plotscale.....$$ WISDOT/CADDS SHEET 42

DIVISION - CTH H

STATION	REAL STATION	DISTANCE	AREA (SF)		INCREMENTAL VOL (CY)		CUMULATIVE VOL (CY)		
			CUT	FILL	CUT	FILL	CUT	EXPANDED FILL	MASS ORDINATE
							1.00	1.25	
					NOTE 1	NOTE 2	NOTE 1		
13+90.25	1390.25	0.00	51.07	0.11	0	0	0	0	0
14+00.00	1400.00	9.75	51.23	0.58	18	0	18	0	18
14+50.00	1450.00	50.00	47.60	0.38	92	1	110	1	109
15+00.00	1500.00	50.00	59.97	0.00	100	0	210	1	209
15+50.00	1550.00	50.00	51.29	0.00	103	0	313	1	312
16+00.00	1600.00	50.00	58.65	0.00	102	0	415	1	414
16+50.00	1650.00	50.00	58.85	0.00	109	0	524	1	523
17+00.00	1700.00	50.00	48.70	3.09	100	3	624	5	619
17+50.00	1750.00	50.00	36.92	1.77	79	5	703	11	692
18+00.00	1800.00	50.00	37.96	0.37	69	2	772	14	758
18+50.00	1850.00	50.00	48.87	0.00	80	0	852	14	838
19+00.00	1900.00	50.00	52.43	0.00	94	0	946	14	932
19+50.00	1950.00	50.00	57.00	0.00	101	0	1,047	14	1,033
20+00.00	2000.00	50.00	57.69	0.00	106	0	1,153	14	1,139
20+50.00	2050.00	50.00	58.56	0.00	108	0	1,261	14	1,247
21+00.00	2100.00	50.00	52.65	0.00	103	0	1,364	14	1,350
21+50.00	2150.00	50.00	52.74	0.00	98	0	1,462	14	1,448
22+00.00	2200.00	50.00	46.51	1.04	92	1	1,554	15	1,539
22+50.00	2250.00	50.00	46.97	0.00	87	1	1,641	16	1,625
23+00.00	2300.00	50.00	40.36	0.00	81	0	1,722	16	1,706
23+50.00	2350.00	50.00	35.14	0.00	70	0	1,792	16	1,776
24+00.00	2400.00	50.00	28.41	0.00	59	0	1,851	16	1,835
24+50.00	2450.00	50.00	32.94	0.00	57	0	1,908	16	1,892
25+00.00	2500.00	50.00	40.17	0.46	68	0	1,976	16	1,960
25+50.00	2550.00	50.00	44.93	2.51	79	3	2,055	20	2,035
26+00.00	2600.00	50.00	59.39	0.02	97	2	2,152	23	2,130
26+50.00	2650.00	50.00	53.63	2.33	105	2	2,257	25	2,232
27+00.00	2700.00	50.00	65.77	0.00	111	2	2,368	28	2,341
27+50.00	2750.00	50.00	71.71	0.00	127	0	2,495	28	2,468
28+00.00	2800.00	50.00	58.43	0.00	121	0	2,616	28	2,589
28+50.00	2850.00	50.00	60.66	0.00	110	0	2,726	28	2,699
29+00.00	2900.00	50.00	60.31	0.75	112	1	2,838	29	2,809
29+50.00	2950.00	50.00	64.58	0.00	116	1	2,954	30	2,924
30+00.00	3000.00	50.00	68.83	0.00	124	0	3,078	30	3,048
30+50.00	3050.00	50.00	56.31	0.00	116	0	3,194	30	3,164
31+00.00	3100.00	50.00	48.98	0.25	97	0	3,291	30	3,261
31+50.00	3150.00	50.00	52.07	0.60	94	1	3,385	31	3,354
32+00.00	3200.00	50.00	43.51	1.34	89	2	3,474	34	3,440
32+50.00	3250.00	50.00	39.79	2.58	77	4	3,551	39	3,512
33+00.00	3300.00	50.00	48.93	0.00	82	2	3,633	41	3,592
33+50.00	3350.00	50.00	52.79	0.00	94	0	3,727	41	3,686
34+00.00	3400.00	50.00	54.65	0.00	99	0	3,826	41	3,785
34+50.00	3450.00	50.00	53.21	1.21	100	1	3,926	43	3,884
35+00.00	3500.00	50.00	54.78	1.21	100	2	4,026	45	3,981
35+50.00	3550.00	50.00	52.84	1.41	100	2	4,126	48	4,079

DIVISION - CTH H (CONTINUED)

STATION	REAL STATION	DISTANCE	AREA (SF)		INCREMENTAL VOL (CY)		CUMULATIVE VOL (CY)		
			CUT	FILL	CUT	FILL	CUT	EXPANDED FILL	MASS ORDINATE
							1.00	1.25	
					NOTE 1	NOTE 2	NOTE 1		
36+00.00	3600.00	50.00	56.17	0.42	101	2	4,227	50	4,177
36+50.00	3650.00	50.00	59.93	0.54	107	1	4,334	51	4,283
37+00.00	3700.00	50.00	61.41	0.17	112	1	4,446	53	4,394
37+50.00	3750.00	50.00	83.78	0.00	134	0	4,580	53	4,528
38+00.00	3800.00	50.00	71.26	0.00	144	0	4,724	53	4,672
38+50.00	3850.00	50.00	77.20	0.00	137	0	4,861	53	4,809
39+00.00	3900.00	50.00	70.66	1.06	137	1	4,998	54	4,944
39+50.00	3950.00	50.00	45.06	11.28	107	11	5,105	68	5,038
40+00.00	4000.00	50.00	46.27	7.56	85	17	5,190	89	5,101
40+50.00	4050.00	50.00	51.39	0.01	90	7	5,280	98	5,183
41+00.00	4100.00	50.00	60.73	0.56	104	1	5,384	99	5,285
41+50.00	4150.00	50.00	77.27	0.00	128	1	5,512	100	5,412
42+00.00	4200.00	50.00	62.71	0.00	130	0	5,642	100	5,542
42+50.00	4250.00	50.00	74.00	0.00	127	0	5,769	100	5,669
43+00.00	4300.00	50.00	76.51	0.00	139	0	5,908	100	5,808
43+50.00	4350.00	50.00	66.92	0.00	133	0	6,041	100	5,941
44+00.00	4400.00	50.00	59.15	0.00	117	0	6,158	100	6,058
44+50.00	4450.00	50.00	66.25	0.00	116	0	6,274	100	6,174
45+00.00	4500.00	50.00	63.57	0.00	120	0	6,394	100	6,294
45+50.00	4550.00	50.00	48.78	0.00	104	0	6,498	100	6,398
46+00.00	4600.00	50.00	34.68	0.90	77	1	6,575	101	6,474
46+50.00	4650.00	50.00	30.80	0.66	61	1	6,636	103	6,534
47+00.00	4700.00	50.00	20.20	14.20	47	14	6,683	120	6,563
47+50.00	4750.00	50.00	26.42	4.11	43	17	6,726	141	6,585
48+00.00	4800.00	50.00	53.78	0.00	74	4	6,800	146	6,654
48+50.00	4850.00	50.00	75.12	0.00	119	0	6,919	146	6,773
49+00.00	4900.00	50.00	63.22	0.00	128	0	7,047	146	6,901
49+50.00	4950.00	50.00	53.07	0.77	108	1	7,155	148	7,008
50+00.00	5000.00	50.00	46.79	1.53	92	2	7,247	150	7,097
50+50.00	5050.00	50.00	55.01	0.00	94	1	7,341	151	7,190
51+00.00	5100.00	50.00	42.19	9.04	90	8	7,431	161	7,270
51+50.00	5150.00	50.00	40.60	2.77	77	11	7,508	175	7,333
52+00.00	5200.00	50.00	58.67	0.08	92	3	7,600	179	7,421
52+50.00	5250.00	50.00	74.08	0.01	123	0	7,723	179	7,544
53+00.00	5300.00	50.00	90.65	0.00	153	0	7,876	179	7,697
53+50.00	5350.00	50.00	64.71	0.11	144	0	8,020	179	7,841
54+00.00	5400.00	50.00	66.76	0.56	122	1	8,142	180	7,962
54+50.00	5450.00	50.00	68.09	0.00	125	1	8,267	181	8,086
55+00.00	5500.00	50.00	52.00	0.00	111	0	8,378	181	8,197
55+50.00	5550.00	50.00	57.27	0.00	101	0	8,479	181	8,298
56+00.00	5600.00	50.00	82.93	0.00	130	0	8,609	181	8,428
56+50.00	5650.00	50.00	51.49	0.33	124	0	8,733	181	8,552
57+00.00	5700.00	50.00	51.29	7.79	95	8	8,828	191	8,637
57+50.00	5750.00	50.00	42.57	0.00	87	7	8,915	200	8,715
58+00.00	5800.00	50.00	44.98	0.00	81	0	8,996	200	8,796

DIVISION - CTH H (CONTINUED)

STATION	REAL STATION	DISTANCE	AREA (SF)		INCREMENTAL VOL (CY)		CUMULATIVE VOL (CY)		
			CUT	FILL	CUT	FILL	CUT	EXPANDED FILL	MASS ORDINATE
							1.00	1.25	
					NOTE 1	NOTE 2	NOTE 1		
58+50.00	5850.00	50.00	44.41	0.00	83	0	9,079	200	8,879
59+00.00	5900.00	50.00	42.43	0.00	80	0	9,159	200	8,959
59+50.00	5950.00	50.00	46.14	0.00	82	0	9,241	200	9,041
60+00.00	6000.00	50.00	41.17	12.11	81	11	9,322	214	9,108
60+50.00	6050.00	50.00	40.41	8.76	76	19	9,398	238	9,161
61+00.00	6100.00	50.00	42.77	5.51	77	13	9,475	254	9,221
61+50.00	6150.00	50.00	50.63	6.95	86	12	9,561	269	9,292
62+00.00	6200.00	50.00	64.23	5.39	106	11	9,667	283	9,385
62+50.00	6250.00	50.00	52.29	10.00	108	14	9,775	300	9,475
63+00.00	6300.00	50.00	45.24	10.25	90	19	9,865	324	9,541
63+50.00	6350.00	50.00	45.46	9.25	84	18	9,949	346	9,603
64+00.00	6400.00	50.00	46.93	6.80	86	15	10,035	365	9,670
64+50.00	6450.00	50.00	62.04	0.00	101	6	10,136	373	9,764
65+00.00	6500.00	50.00	43.99	7.25	98	7	10,234	381	9,853
65+50.00	6550.00	50.00	46.30	6.05	84	12	10,318	396	9,922
66+00.00	6600.00	50.00	46.68	4.89	86	10	10,404	409	9,995
66+50.00	6650.00	50.00	44.77	3.59	85	8	10,489	419	10,070
67+00.00	6700.00	50.00	42.59	4.80	81	8	10,570	429	10,141
67+50.00	6750.00	50.00	41.31	3.31	78	8	10,648	439	10,209
68+00.00	6800.00	50.00	54.45	0.00	89	3	10,737	443	10,295
68+50.00	6850.00	50.00	43.66	0.85	91	1	10,828	444	10,384
69+00.00	6900.00	50.00	48.27	0.00	85	1	10,913	445	10,468
69+50.00	6950.00	50.00	52.99	0.00	94	0	11,007	445	10,562
70+00.00	7000.00	50.00	56.57	0.00	101	0	11,108	445	10,663
70+50.00	7050.00	50.00	78.21	0.00	125	0	11,233	445	10,788
71+00.00	7100.00	50.00	67.24	0.00	135	0	11,368	445	10,923
71+50.00	7150.00	50.00	68.00	0.00	125	0	11,493	445	11,048
72+00.00	7200.00	50.00	64.99	0.00	123	0	11,616	445	11,171
72+50.00	7250.00	50.00	67.24	0.00	122	0	11,738	445	11,293
73+00.00	7300.00	50.00	60.29	0.00	118	0	11,856	445	11,411
73+50.00	7350.00	50.00	51.48	0.92	103	1	11,959	446	11,513
74+00.00	7400.00	50.00	51.15	1.09	95	2	12,054	449	11,605
74+50.00	7450.00	50.00	46.06	3.39	90	4	12,144	454	11,690
75+00.00	7500.00	50.00	54.64	1.61	93	5	12,237	460	11,777
75+50.00	7550.00	50.00	43.45	2.58	91	4	12,328	465	11,863
76+00.00	7600.00	50.00	45.24	2.17	82	4	12,410	470	11,940
76+50.00	7650.00	50.00	51.35	0.00	89	2	12,499	473	12,027
76+81.09	7681.09	31.09	62.29	0.00	65	0	12,564	473	12,092

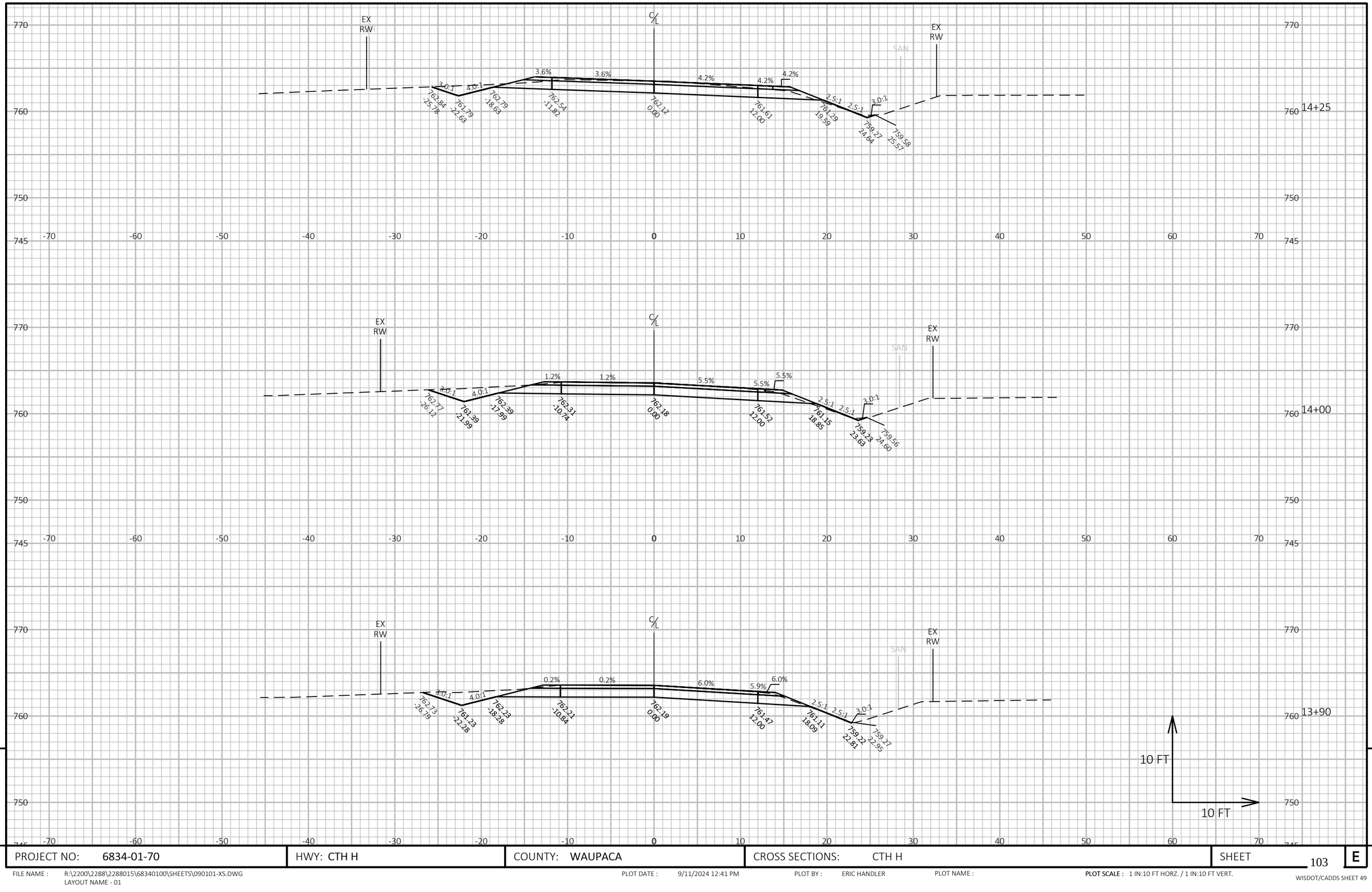

9

9

PROJECT NO: 6834-01-70	HWY: CTH H	COUNTY: WAUPACA	CROSS SECTIONS: CTH H	SHEET 103	E

FILE NAME : R:\2200\2288\2288015\68340100\SHEETS\090101-XS.DWG
LAYOUT NAME - 01

PLOT DATE : 9/11/2024 12:41 PM

PLOT BY : ERIC HANDLER

PLOT NAME :

PLOT SCALE : 1 IN:10 FT HORZ. / 1 IN:10 FT VERT.

WISDOT/CADDS SHEET 49

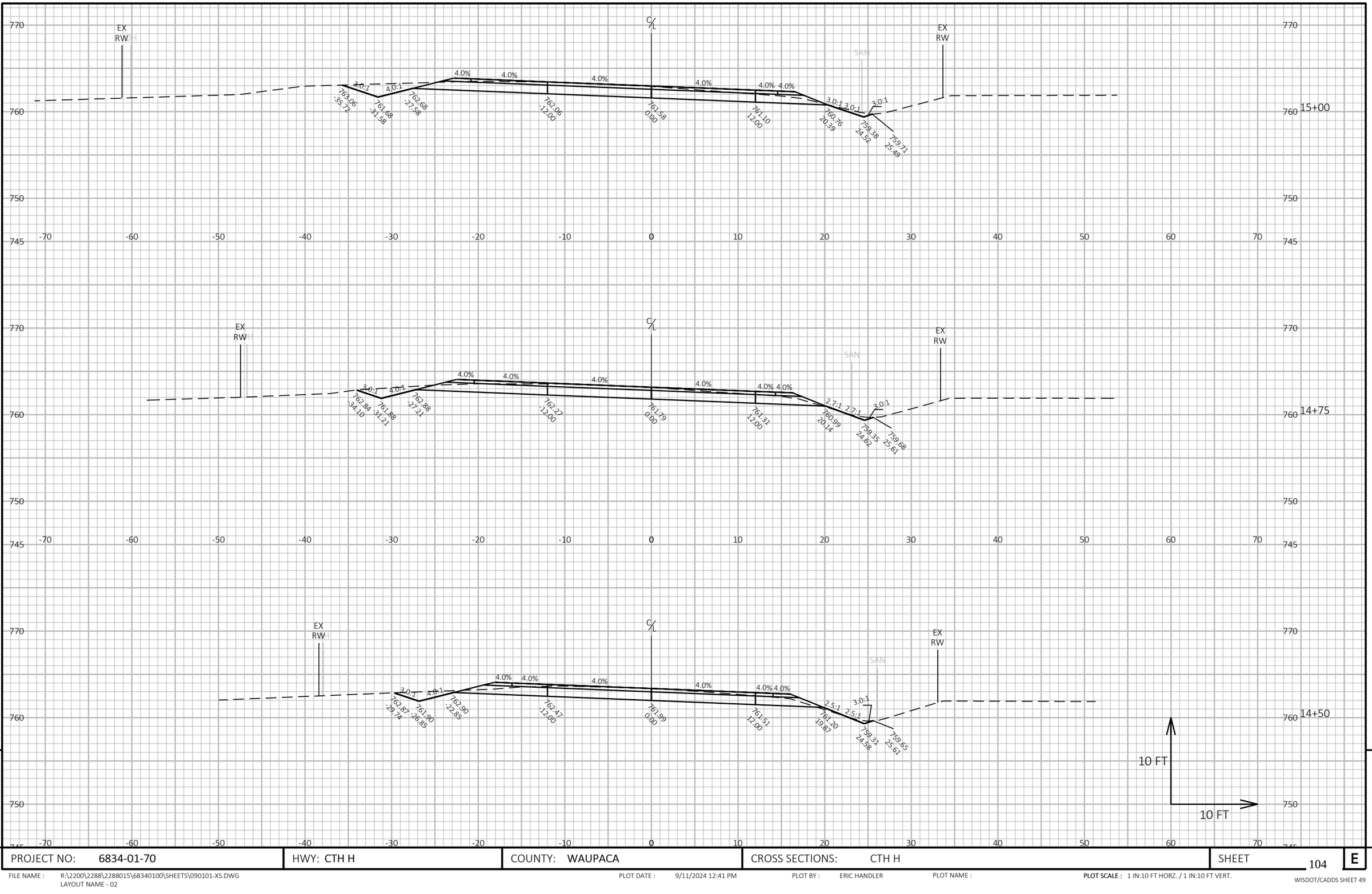

9

9

PROJECT NO: 6834-01-70	HWY: CTH H	COUNTY: WAUPACA	CROSS SECTIONS: CTH H	SHEET 104	E

FILE NAME : R:\2200\2288\2288015\68340100\SHEETS\090101-XS.DWG
LAYOUT NAME - 02

PLOT DATE : 9/11/2024 12:41 PM

PLOT BY : ERIC HANDLER

PLOT NAME :

PLOT SCALE : 1 IN:10 FT HORZ. / 1 IN:10 FT VERT.

WISDOT/CADDS SHEET 49

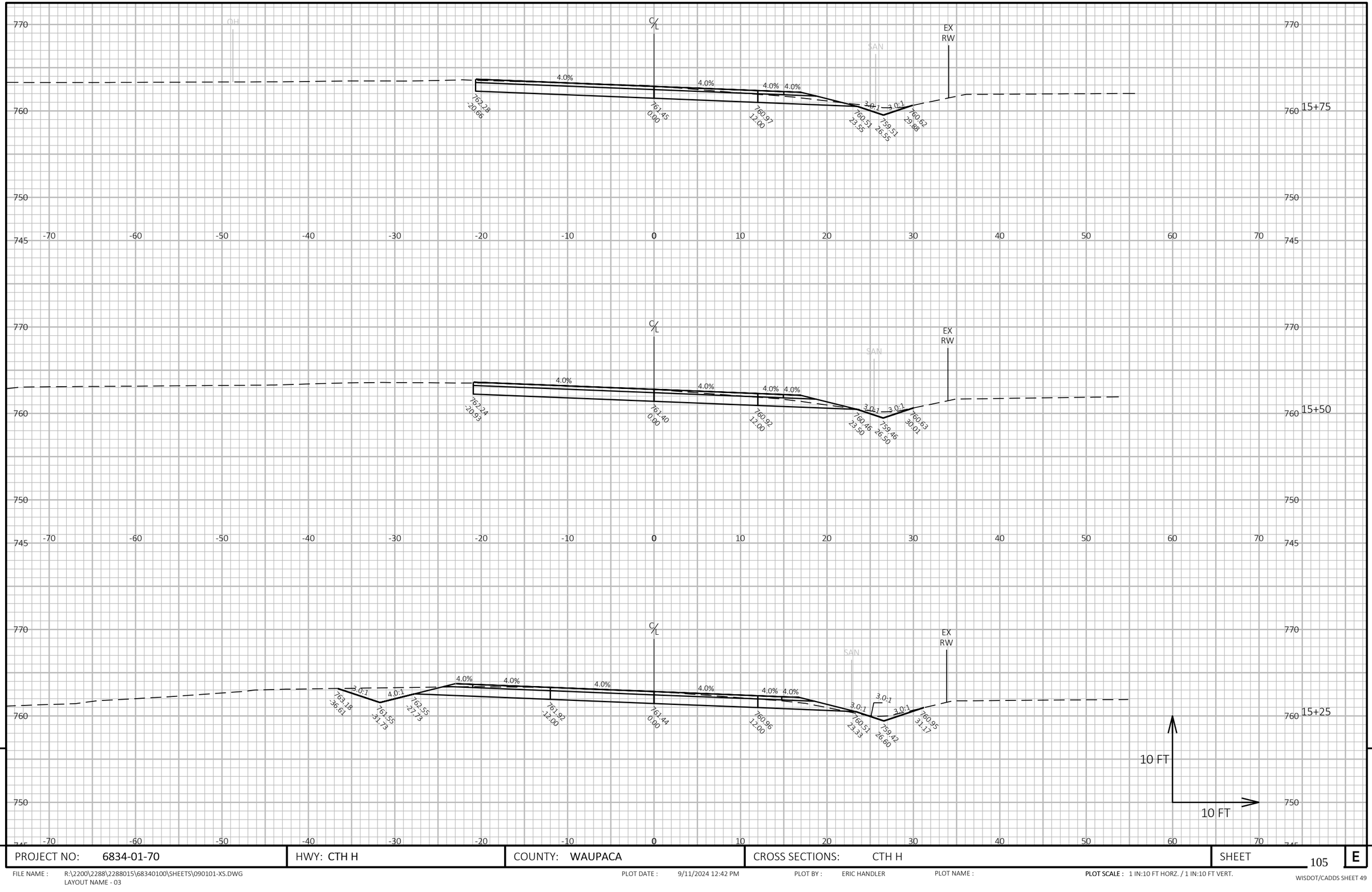

9

9

PROJECT NO: 6834-01-70	HWY: CTH H	COUNTY: WAUPACA	CROSS SECTIONS: CTH H	SHEET 105	E

FILE NAME : R:\2200\2288\2288015\68340100\SHEETS\090101-XS.DWG
LAYOUT NAME - 03

PLOT DATE : 9/11/2024 12:42 PM PLOT BY : ERIC HANDLER PLOT NAME : PLOT SCALE : 1 IN:10 FT HORZ. / 1 IN:10 FT VERT.

WISDOT/CADDS SHEET 49

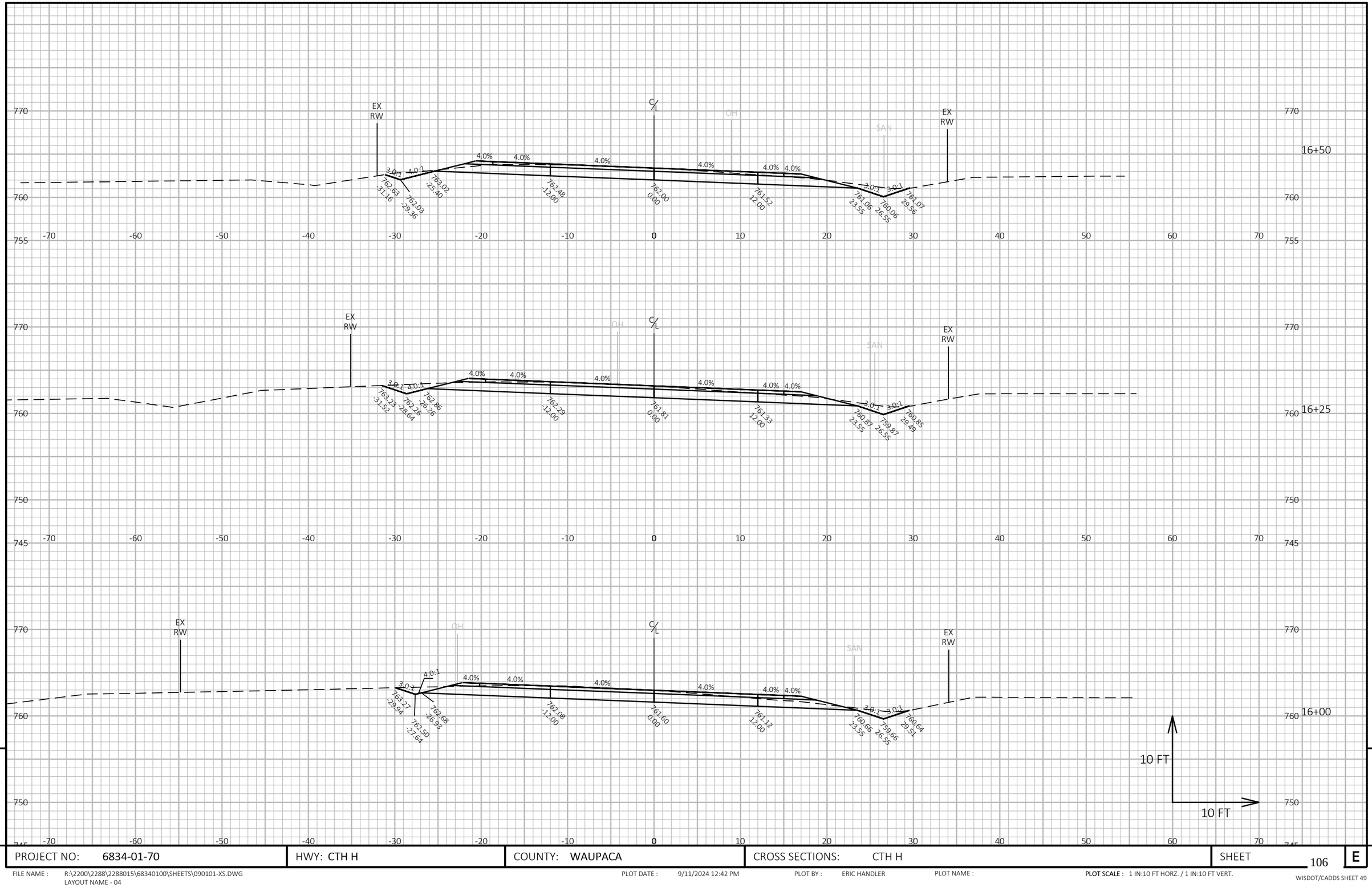

9

9

PROJECT NO: 6834-01-70	HWY: CTH H	COUNTY: WAUPACA	CROSS SECTIONS: CTH H	SHEET 106	E

FILE NAME : R:\2200\2288\2288015\68340100\SHEETS\090101-XS.DWG
LAYOUT NAME - 04

PLOT DATE : 9/11/2024 12:42 PM PLOT BY : ERIC HANDLER PLOT NAME : PLOT SCALE : 1 IN:10 FT HORZ. / 1 IN:10 FT VERT.

WISDOT/CADDS SHEET 49

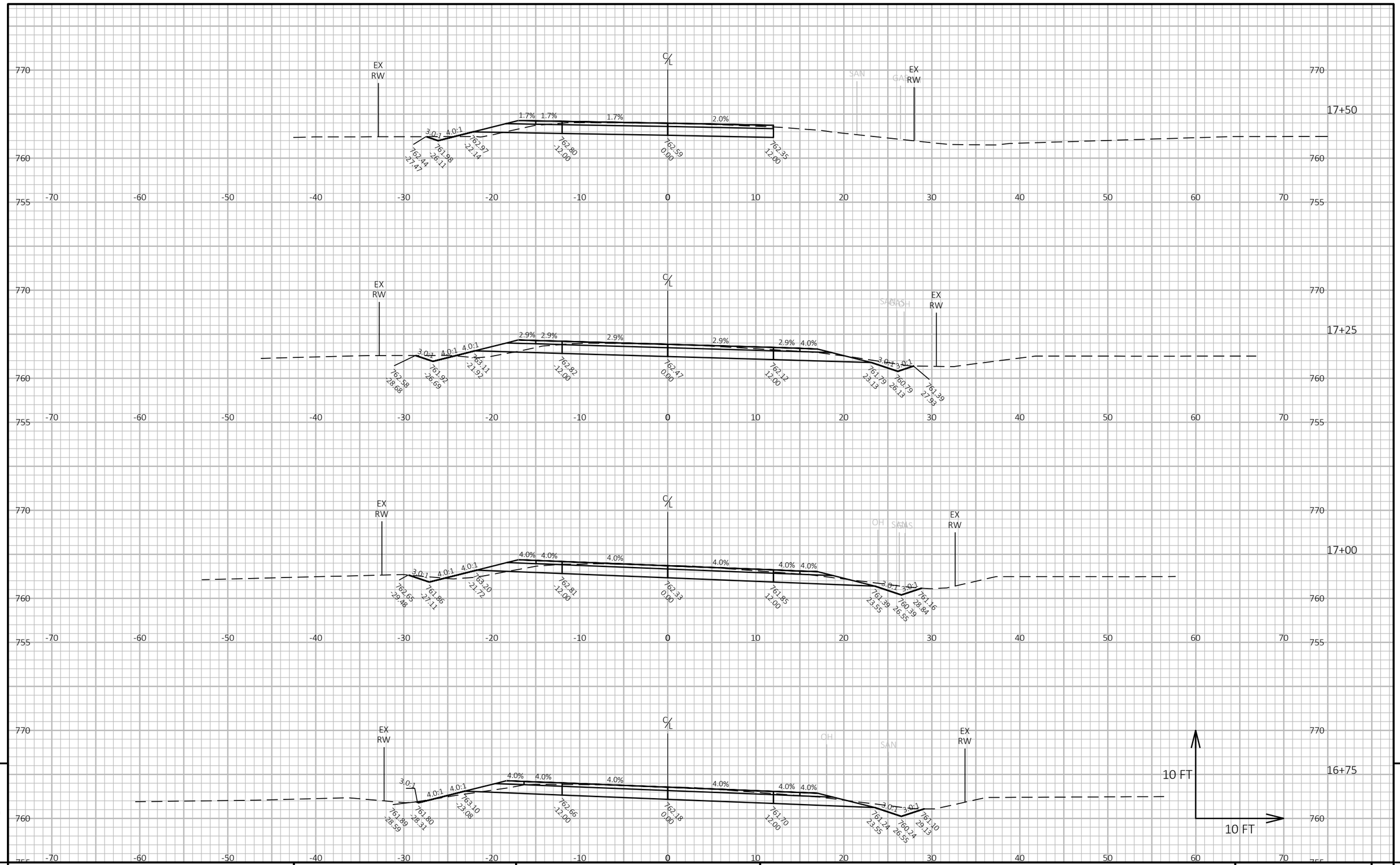

9

9

PROJECT NO: 6834-01-70	HWY: CTH H	COUNTY: WAUPACA	CROSS SECTIONS: CTH H	SHEET 107	E

FILE NAME : R:\2200\2288\2288015\68340100\SHEETS\090101-XS.DWG
LAYOUT NAME - 05

PLOT DATE : 9/11/2024 12:42 PM

PLOT BY : ERIC HANDLER

PLOT NAME :

PLOT SCALE : 1 IN:10 FT HORZ. / 1 IN:10 FT VERT.

WISDOT/CADDS SHEET 49

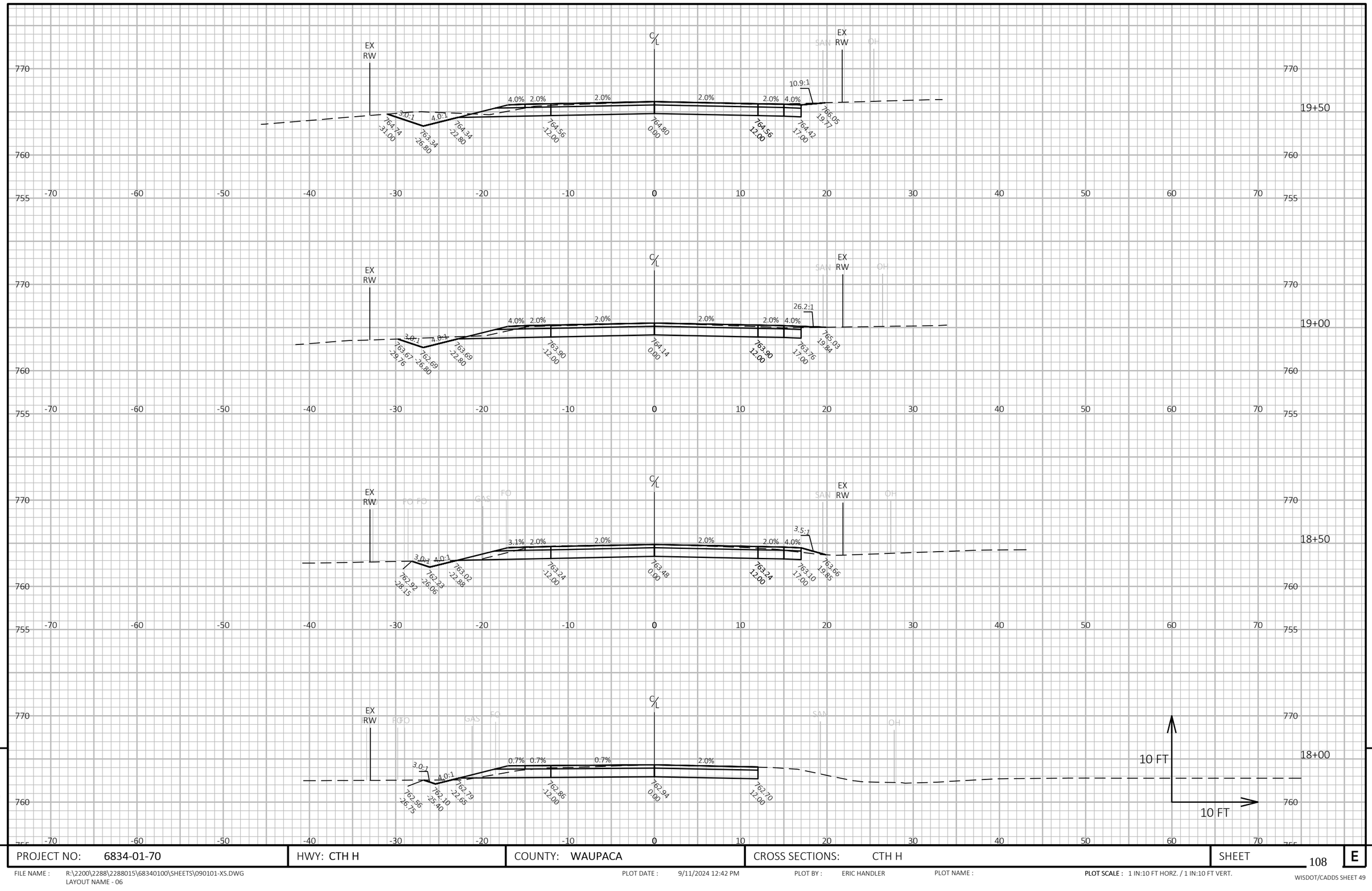

9

9

PROJECT NO: 6834-01-70	HWY: CTH H	COUNTY: WAUPACA	CROSS SECTIONS: CTH H	SHEET 108	E

FILE NAME : R:\2200\2288\2288015\68340100\SHEETS\090101-XS.DWG
LAYOUT NAME - 06

PLOT DATE : 9/11/2024 12:42 PM PLOT BY : ERIC HANDLER PLOT NAME : **PLOT SCALE :** 1 IN:10 FT HORZ. / 1 IN:10 FT VERT.

WISDOT/CADDS SHEET 49

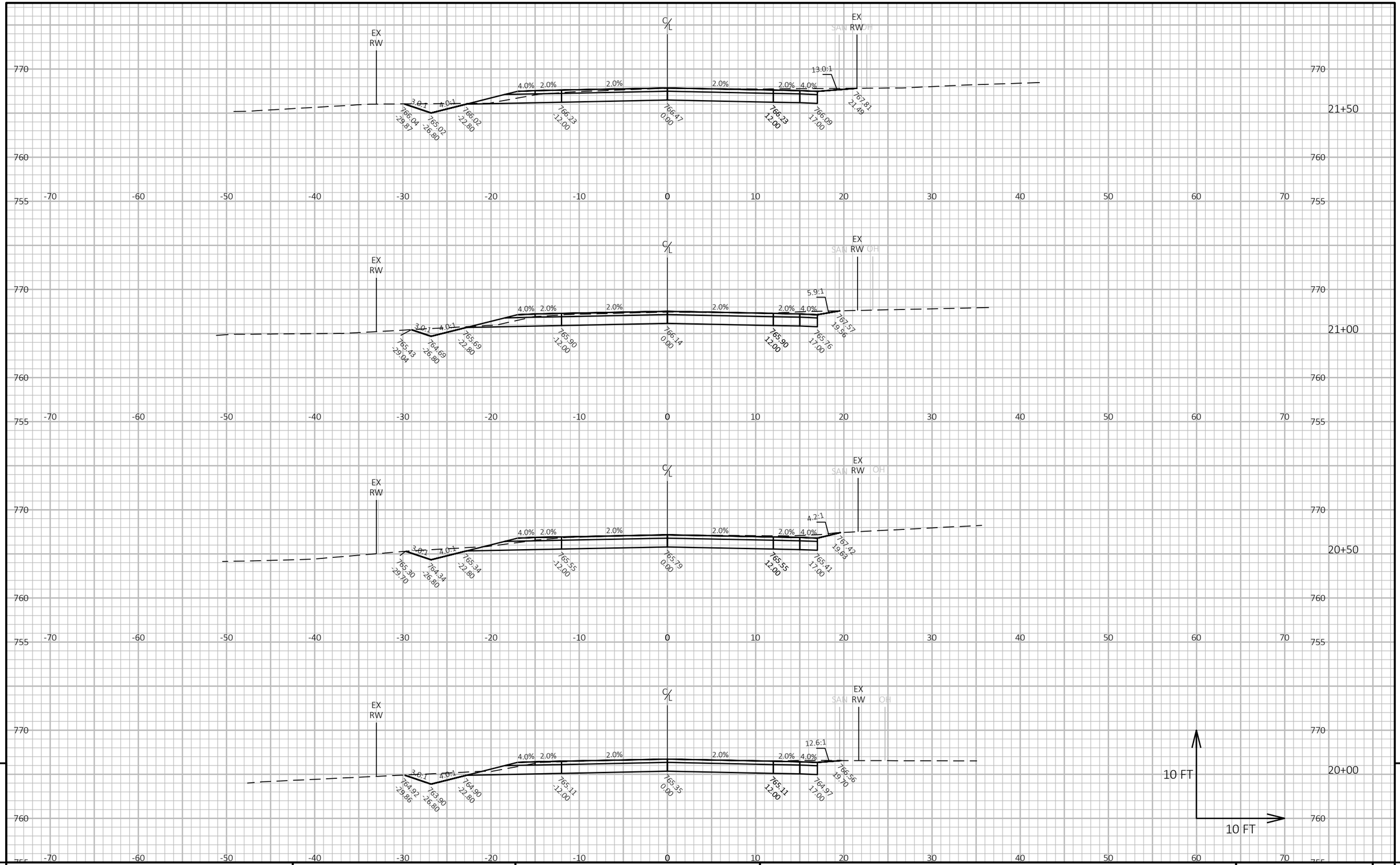

9

9

PROJECT NO: 6834-01-70	HWY: CTH H	COUNTY: WAUPACA	CROSS SECTIONS: CTH H	SHEET 109	E

FILE NAME : R:\2200\2288\2288015\68340100\SHEETS\090101-XS.DWG
LAYOUT NAME - 07

PLOT DATE : 9/11/2024 12:42 PM PLOT BY : ERIC HANDLER PLOT NAME : **PLOT SCALE :** 1 IN:10 FT HORZ. / 1 IN:10 FT VERT.

WISDOT/CADDS SHEET 49

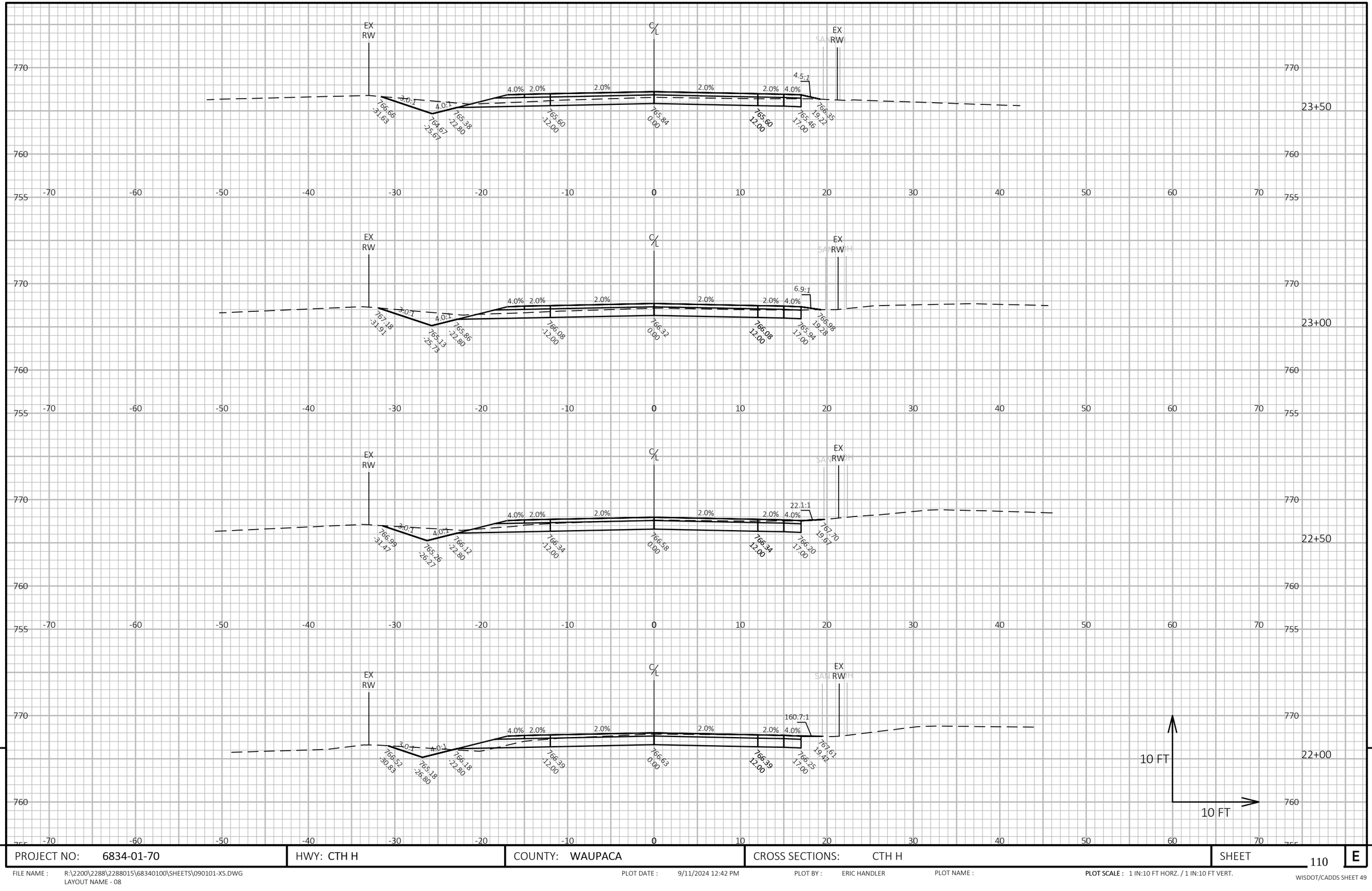

9

9

PROJECT NO: 6834-01-70	HWY: CTH H	COUNTY: WAUPACA	CROSS SECTIONS: CTH H	SHEET 110	E

FILE NAME : R:\2200\2288\2288015\68340100\SHEETS\090101-XS.DWG
LAYOUT NAME - 08

PLOT DATE : 9/11/2024 12:42 PM PLOT BY : ERIC HANDLER PLOT NAME : **PLOT SCALE :** 1 IN:10 FT HORZ. / 1 IN:10 FT VERT.

WISDOT/CADDS SHEET 49

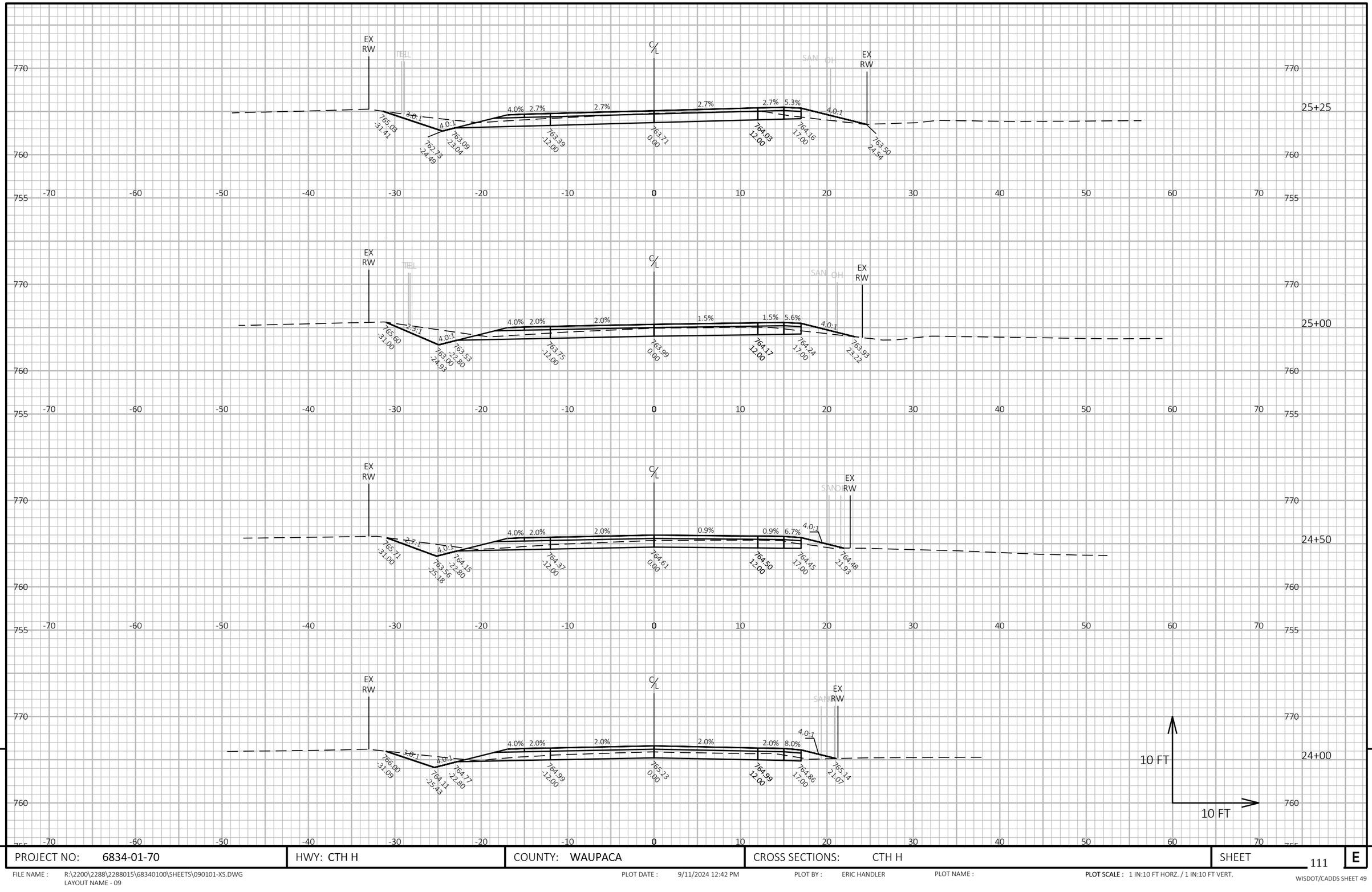

9

9

PROJECT NO: 6834-01-70	HWY: CTH H	COUNTY: WAUPACA	CROSS SECTIONS: CTH H	SHEET 111	E

FILE NAME : R:\2200\2288\2288015\68340100\SHEETS\090101-XS.DWG
LAYOUT NAME - 09

PLOT DATE : 9/11/2024 12:42 PM PLOT BY : ERIC HANDLER PLOT NAME : **PLOT SCALE :** 1 IN:10 FT HORZ. / 1 IN:10 FT VERT.

WISDOT/CADDS SHEET 49

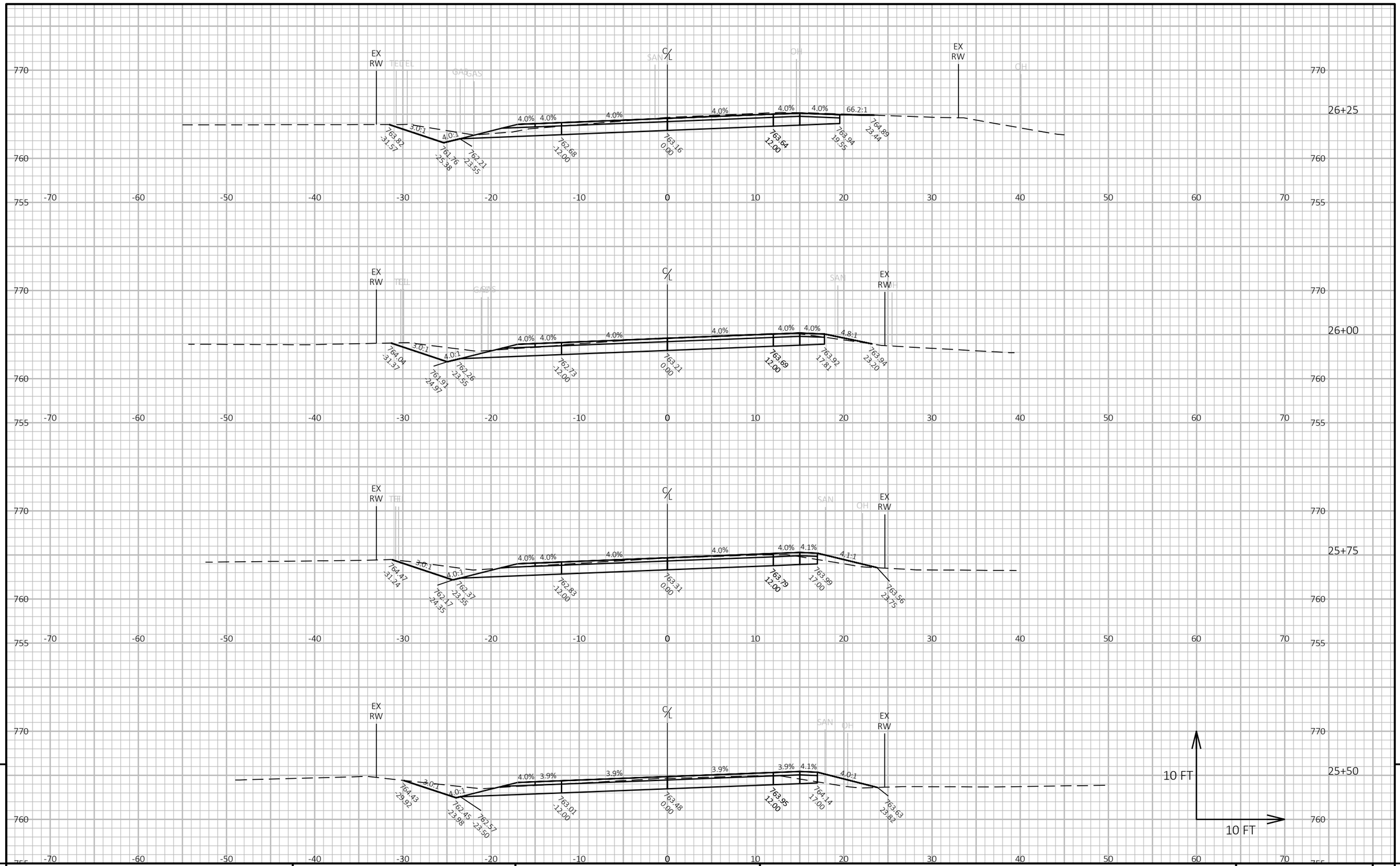

9

9

PROJECT NO: 6834-01-70	HWY: CTH H	COUNTY: WAUPACA	CROSS SECTIONS: CTH H	SHEET 112	E

FILE NAME : R:\2200\2288\2288015\68340100\SHEETS\090101-XS.DWG
LAYOUT NAME - 10

PLOT DATE : 9/11/2024 12:42 PM PLOT BY : ERIC HANDLER PLOT NAME : **PLOT SCALE :** 1 IN:10 FT HORZ. / 1 IN:10 FT VERT.

WISDOT/CADDS SHEET 49

PROJECT NO: 6834-01-70	HWY: CTH H	COUNTY: WAUPACA	CROSS SECTIONS: CTH H	SHEET 113	E

FILE NAME : R:\2200\2288\2288015\68340100\SHEETS\090101-XS.DWG
LAYOUT NAME - 11

PLOT DATE : 9/11/2024 12:42 PM

PLOT BY : ERIC HANDLER

PLOT NAME :

PLOT SCALE : 1 IN:10 FT HORZ. / 1 IN:10 FT VERT.

WISDOT/CADDS SHEET 49

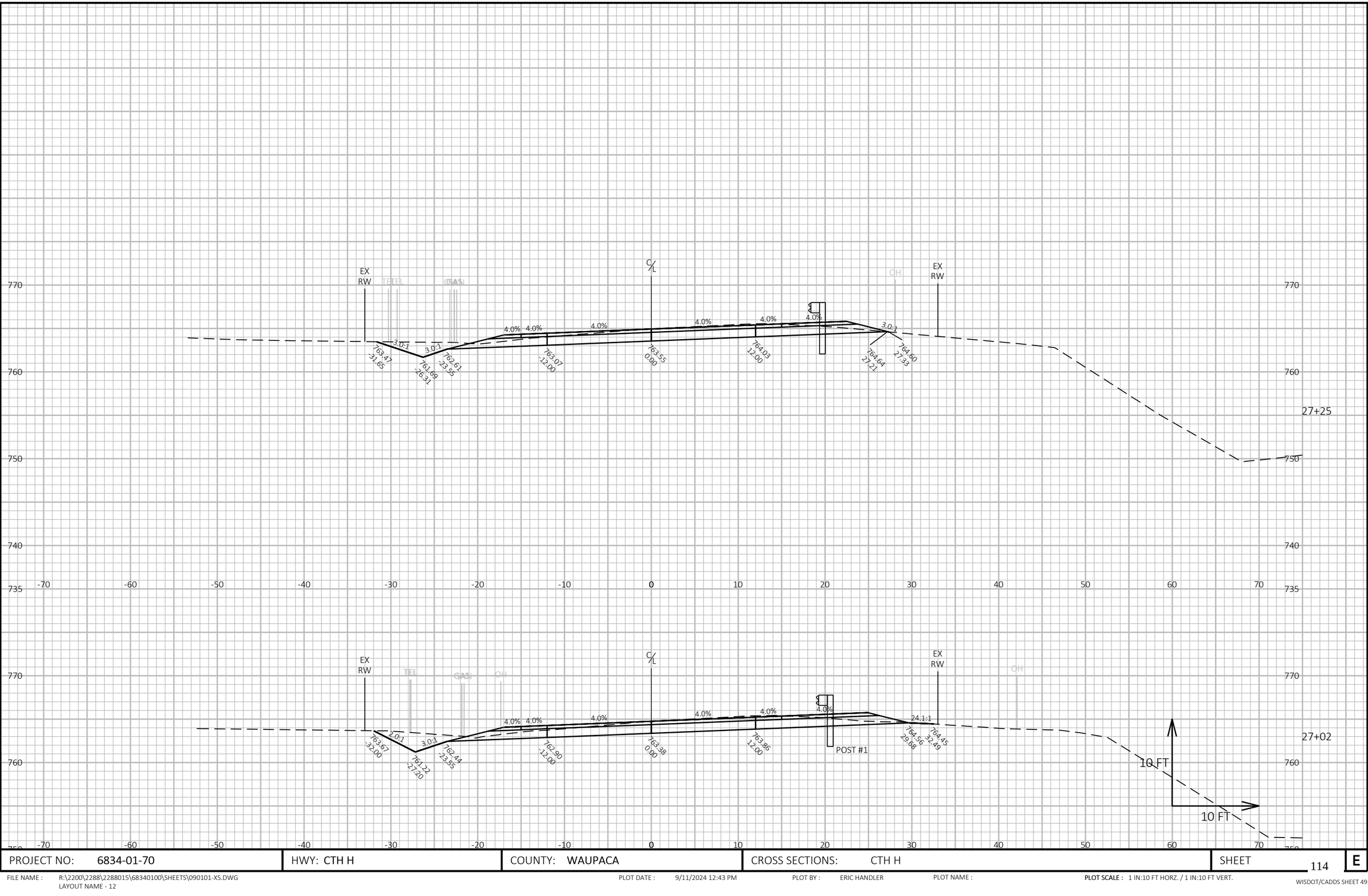

PROJECT NO: 6834-01-70	HWY: CTH H	COUNTY: WAUPACA	CROSS SECTIONS: CTH H	SHEET 114 E

FILE NAME : R:\2200\2288\2288015\68340100\SHEETS\090101-XS.DWG
LAYOUT NAME - 12

PLOT DATE : 9/11/2024 12:43 PM PLOT BY : ERIC HANDLER PLOT NAME : PLOT SCALE : 1 IN:10 FT HORZ. / 1 IN:10 FT VERT.

WISDOT/CADDS SHEET 49

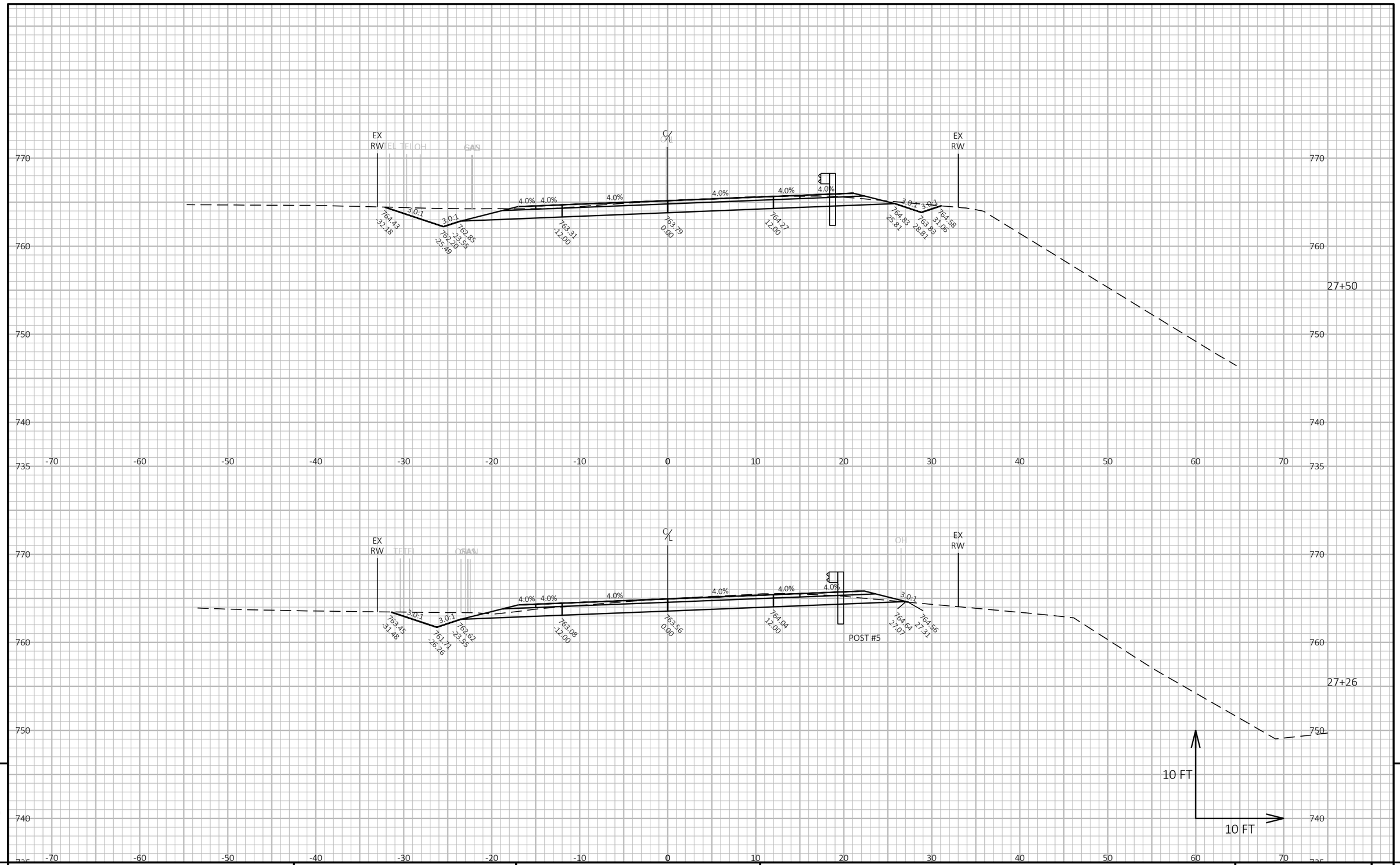

9

9

PROJECT NO: 6834-01-70	HWY: CTH H	COUNTY: WAUPACA	CROSS SECTIONS: CTH H	SHEET 115	E

FILE NAME : R:\2200\2288\2288015\68340100\SHEETS\090101-XS.DWG
LAYOUT NAME - 13

PLOT DATE : 9/11/2024 12:43 PM

PLOT BY : ERIC HANDLER

PLOT NAME :

PLOT SCALE : 1 IN:10 FT HORZ. / 1 IN:10 FT VERT.

WISDOT/CADDS SHEET 49

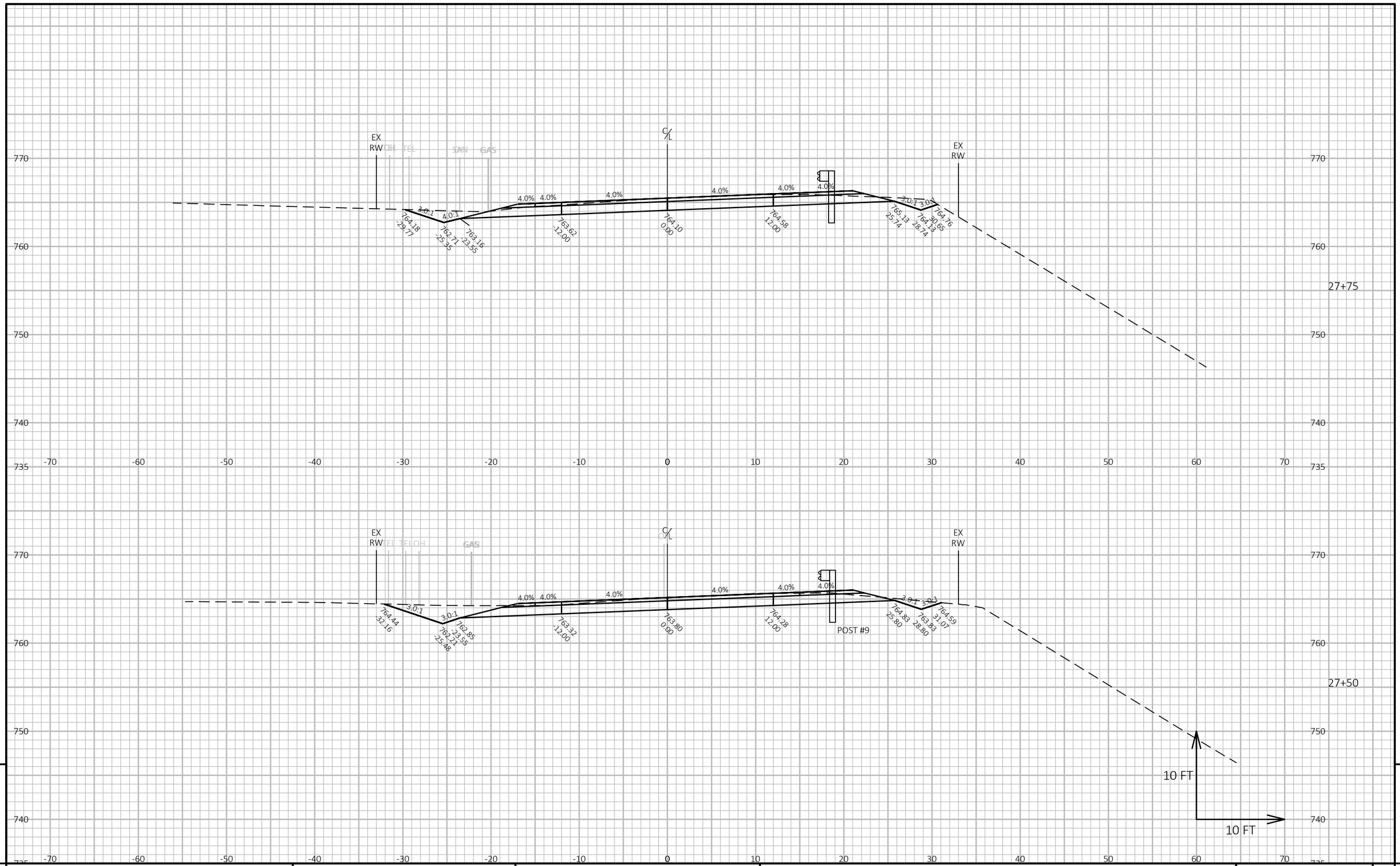

PROJECT NO: 6834-01-70	HWY: CTH H	COUNTY: WAUPACA	CROSS SECTIONS: CTH H	SHEET 116	E

FILE NAME : R:\2200\2288\2288015\68340100\SHEETS\090101-XS.DWG
LAYOUT NAME - 14

PLOT DATE : 9/11/2024 12:43 PM PLOT BY : ERIC HANDLER PLOT NAME : PLOT SCALE : 1 IN:10 FT HORZ. / 1 IN:10 FT VERT.

WISDOT/CADDS SHEET 49

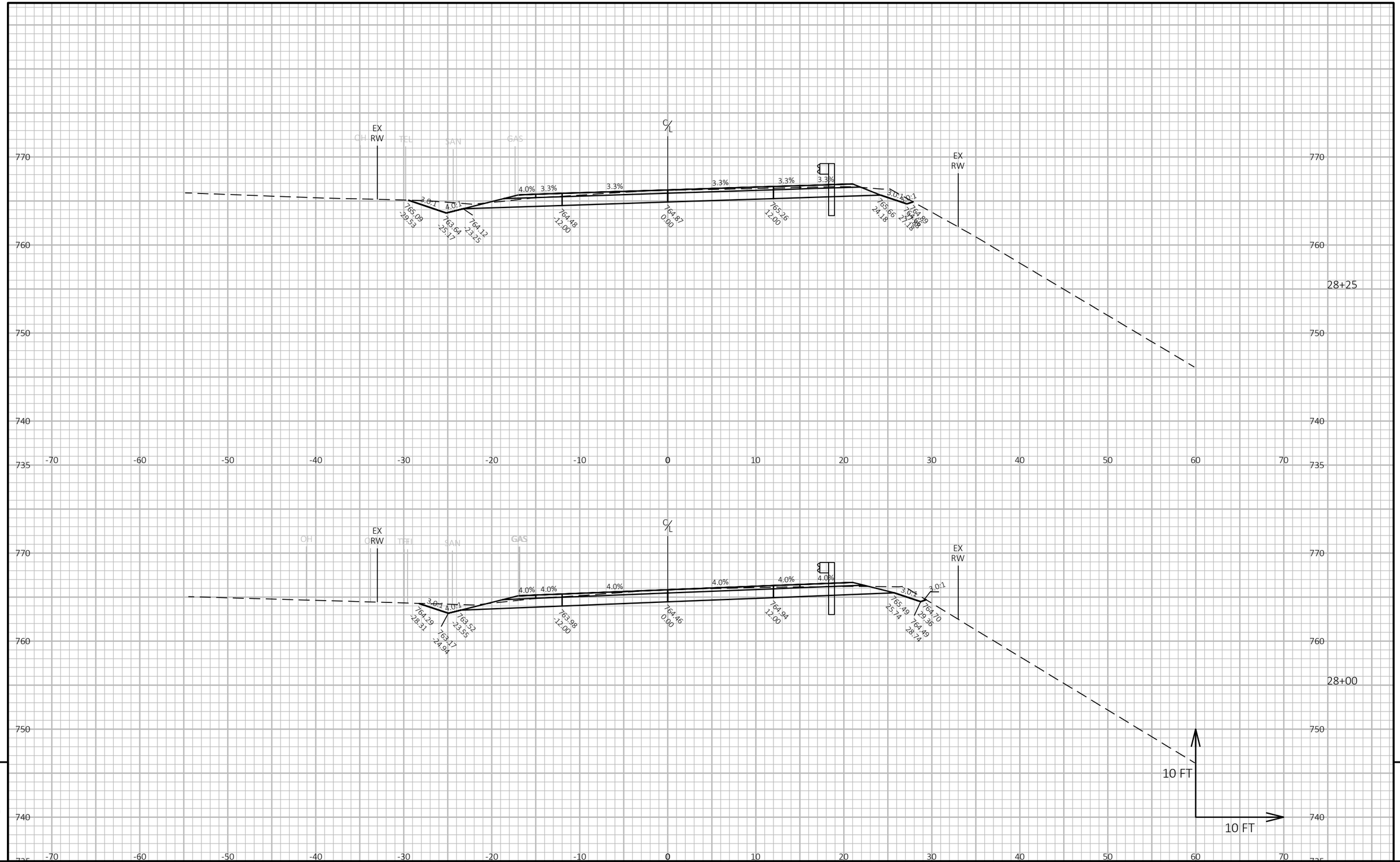

PROJECT NO: 6834-01-70	HWY: CTH H	COUNTY: WAUPACA	CROSS SECTIONS: CTH H	SHEET 117	E

FILE NAME : R:\2200\2288\2288015\68340100\SHEETS\090101-XS.DWG
LAYOUT NAME - 15

PLOT DATE : 9/11/2024 12:43 PM PLOT BY : ERIC HANDLER PLOT NAME : PLOT SCALE : 1 IN:10 FT HORZ. / 1 IN:10 FT VERT.

WISDOT/CADDS SHEET 49

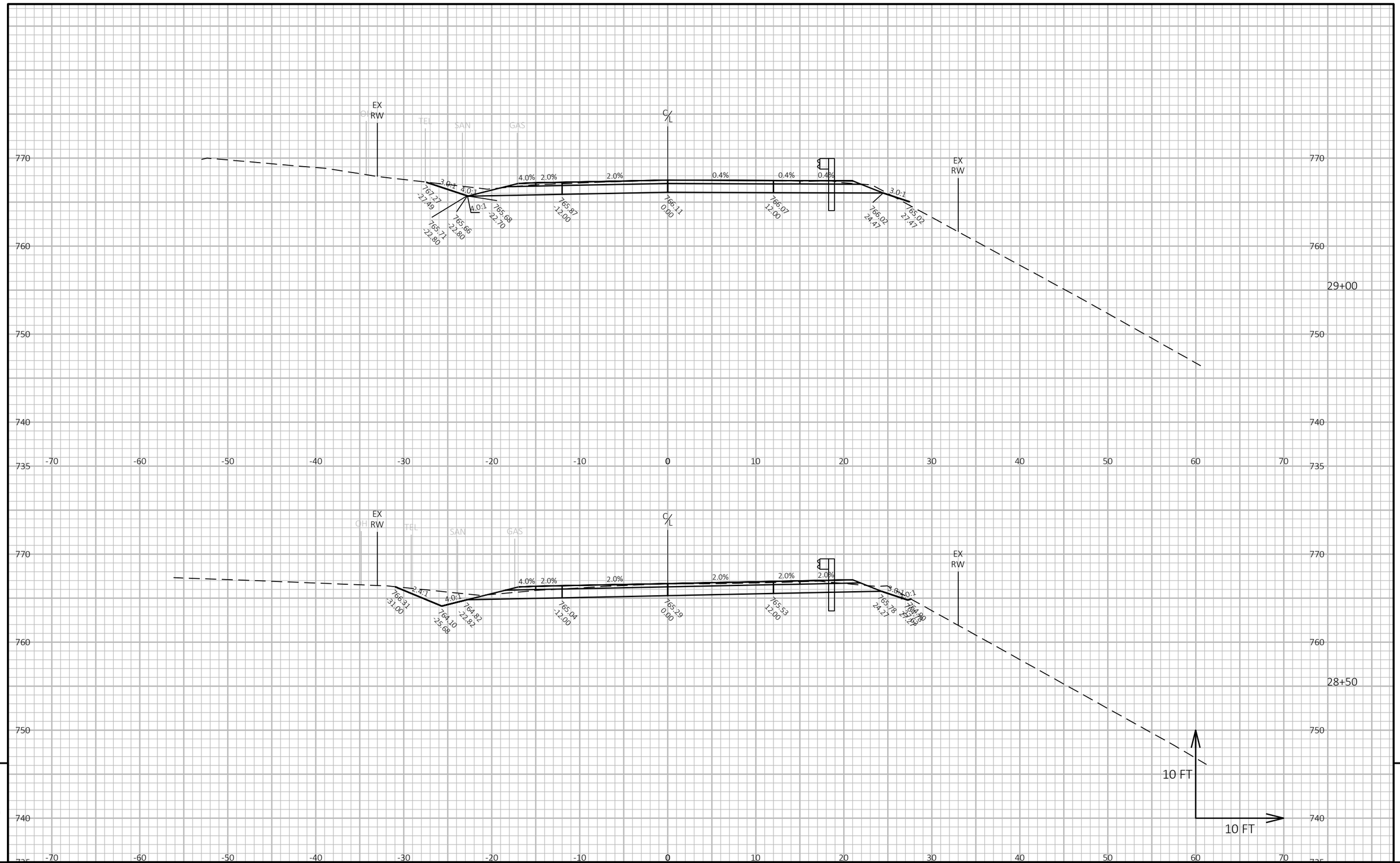

9

9

PROJECT NO: 6834-01-70	HWY: CTH H	COUNTY: WAUPACA	CROSS SECTIONS: CTH H	SHEET 118	E

FILE NAME : R:\2200\2288\2288015\68340100\SHEETS\090101-XS.DWG
LAYOUT NAME - 16

PLOT DATE : 9/11/2024 12:44 PM PLOT BY : ERIC HANDLER PLOT NAME : **PLOT SCALE :** 1 IN:10 FT HORZ. / 1 IN:10 FT VERT.

WISDOT/CADDS SHEET 49

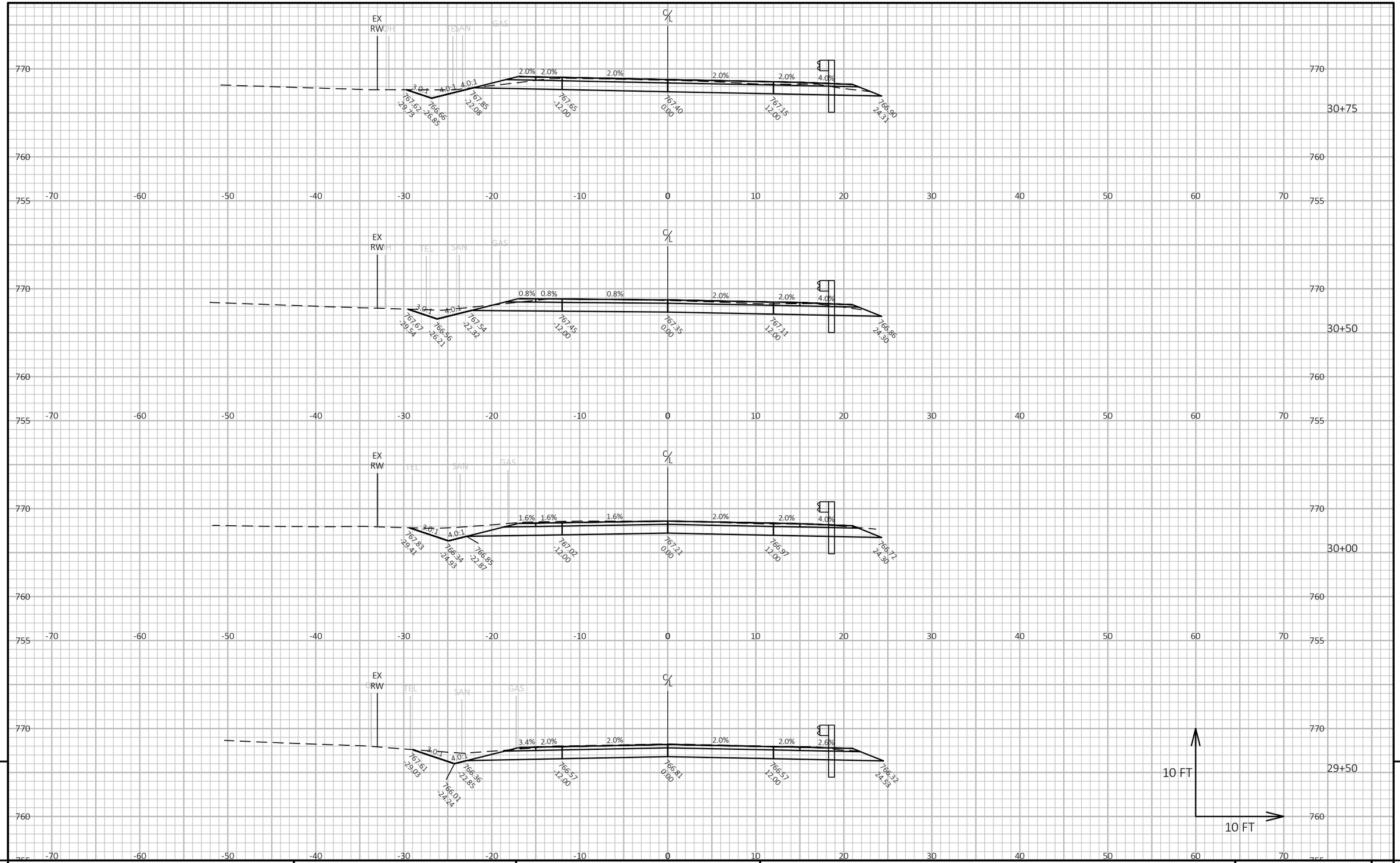

9

9

PROJECT NO: 6834-01-70	HWY: CTH H	COUNTY: WAUPACA	CROSS SECTIONS: CTH H	SHEET 119	E

FILE NAME : R:\2200\2288\2288015\68340100\SHEETS\090101-XS.DWG
LAYOUT NAME - 17

PLOT DATE : 9/11/2024 12:44 PM PLOT BY : ERIC HANDLER PLOT NAME : **PLOT SCALE :** 1 IN:10 FT HORZ. / 1 IN:10 FT VERT.

WISDOT/CADDS SHEET 49

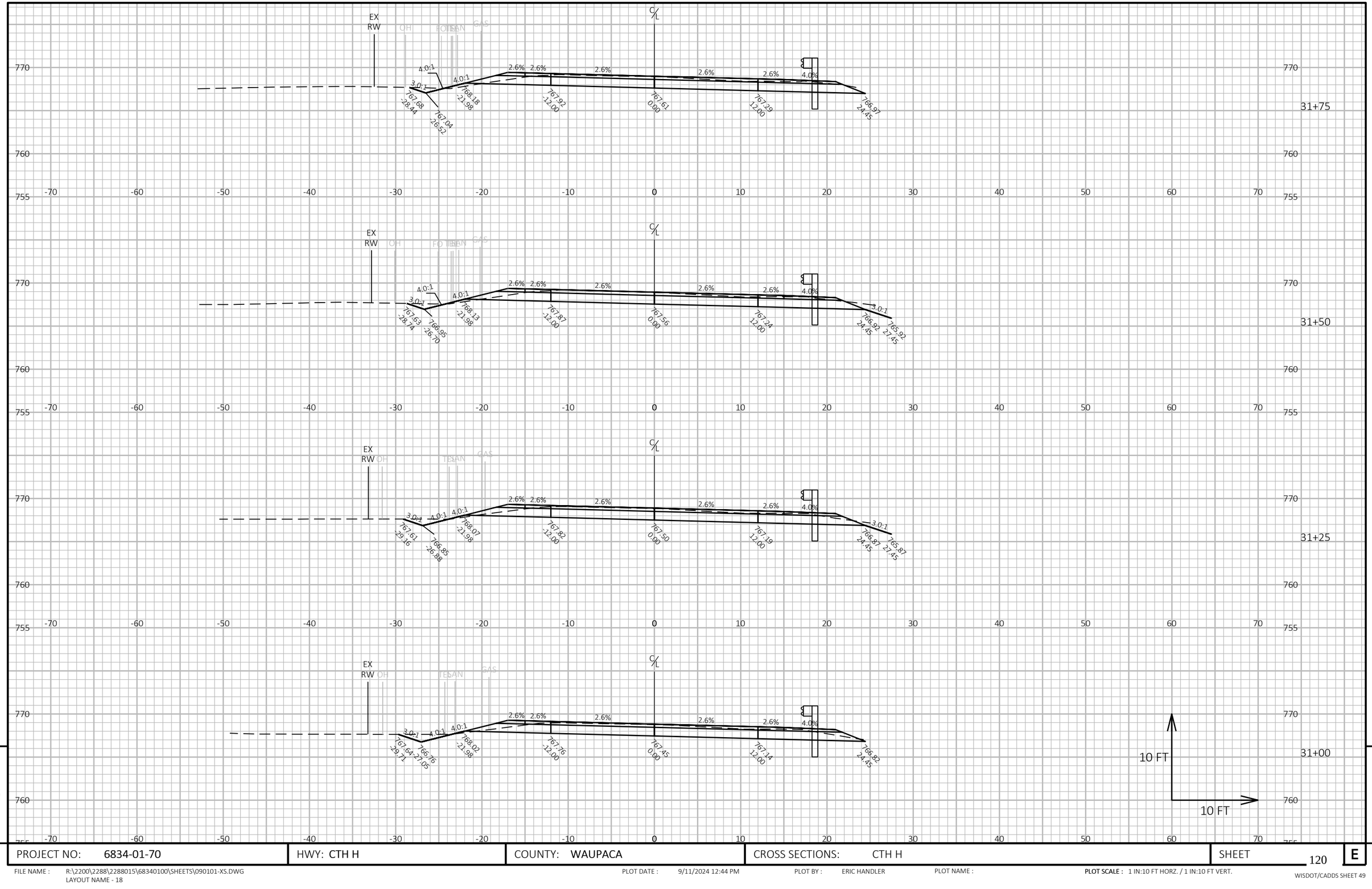

9

9

PROJECT NO: 6834-01-70	HWY: CTH H	COUNTY: WAUPACA	CROSS SECTIONS: CTH H	SHEET 120	E

FILE NAME : R:\2200\2288\2288015\68340100\SHEETS\090101-XS.DWG
LAYOUT NAME - 18

PLOT DATE : 9/11/2024 12:44 PM PLOT BY : ERIC HANDLER PLOT NAME : **PLOT SCALE :** 1 IN:10 FT HORZ. / 1 IN:10 FT VERT.

WISDOT/CADDS SHEET 49

PROJECT NO: 6834-01-70	HWY: CTH H	COUNTY: WAUPACA	CROSS SECTIONS: CTH H	SHEET 121	E

FILE NAME : R:\2200\2288\2288015\68340100\SHEETS\090101-XS.DWG
LAYOUT NAME - 19

PLOT DATE : 9/11/2024 12:44 PM

PLOT BY : ERIC HANDLER

PLOT NAME :

PLOT SCALE : 1 IN:10 FT HORZ. / 1 IN:10 FT VERT.

WISDOT/CADDS SHEET 49

9

9

PROJECT NO: 6834-01-70	HWY: CTH H	COUNTY: WAUPACA	CROSS SECTIONS: CTH H	SHEET 122	E

FILE NAME : R:\2200\2288\2288015\68340100\SHEETS\090101-XS.DWG
LAYOUT NAME - 20

PLOT DATE : 9/11/2024 12:45 PM

PLOT BY : ERIC HANDLER

PLOT NAME :

PLOT SCALE : 1 IN:10 FT HORZ. / 1 IN:10 FT VERT.

WISDOT/CADDS SHEET 49

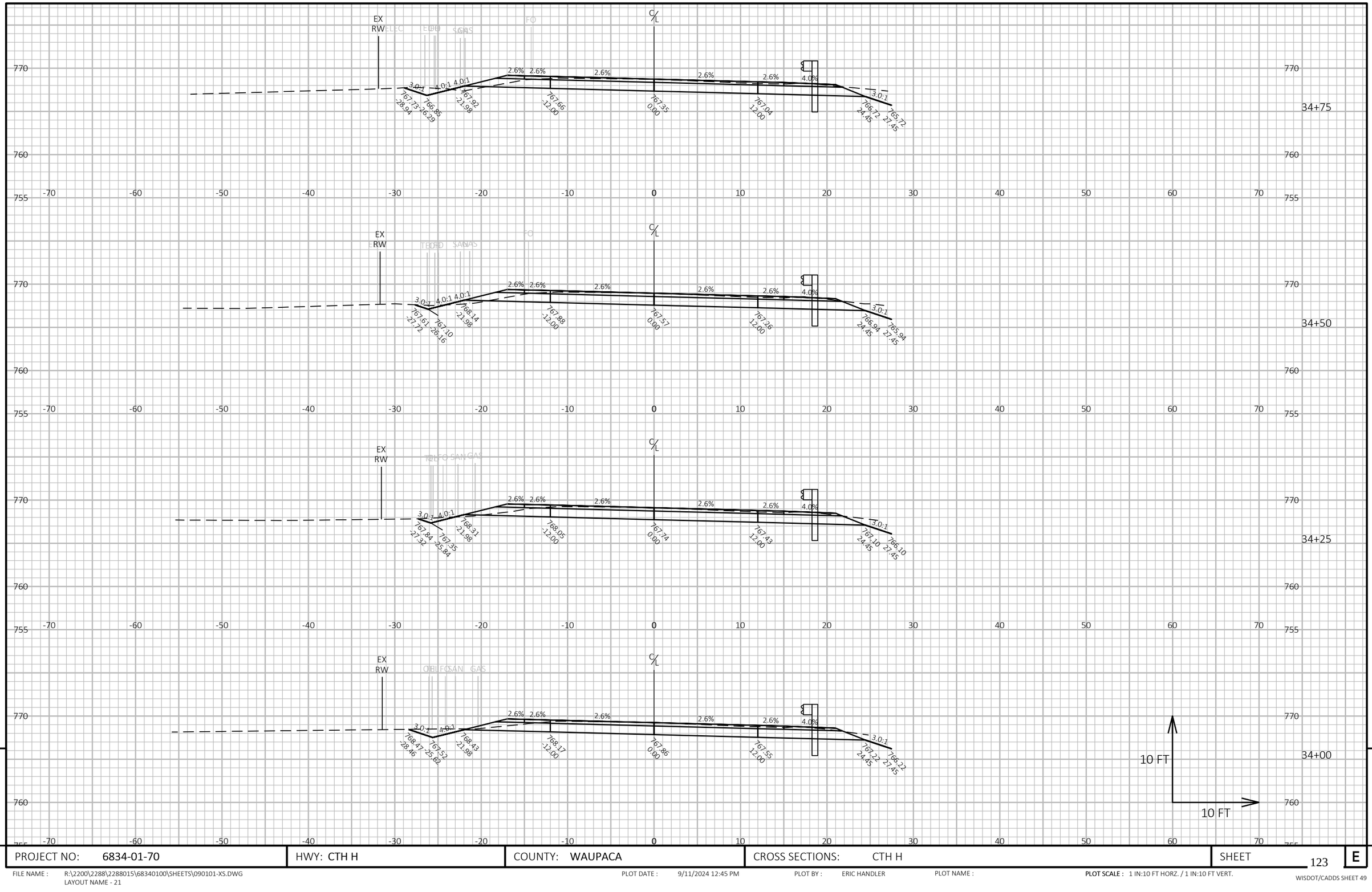

PROJECT NO: 6834-01-70	HWY: CTH H	COUNTY: WAUPACA	CROSS SECTIONS: CTH H	SHEET 123	E

FILE NAME : R:\2200\2288\2288015\68340100\SHEETS\090101-XS.DWG
LAYOUT NAME - 21

PLOT DATE : 9/11/2024 12:45 PM

PLOT BY : ERIC HANDLER

PLOT NAME :

PLOT SCALE : 1 IN:10 FT HORZ. / 1 IN:10 FT VERT.

WISDOT/CADDS SHEET 49

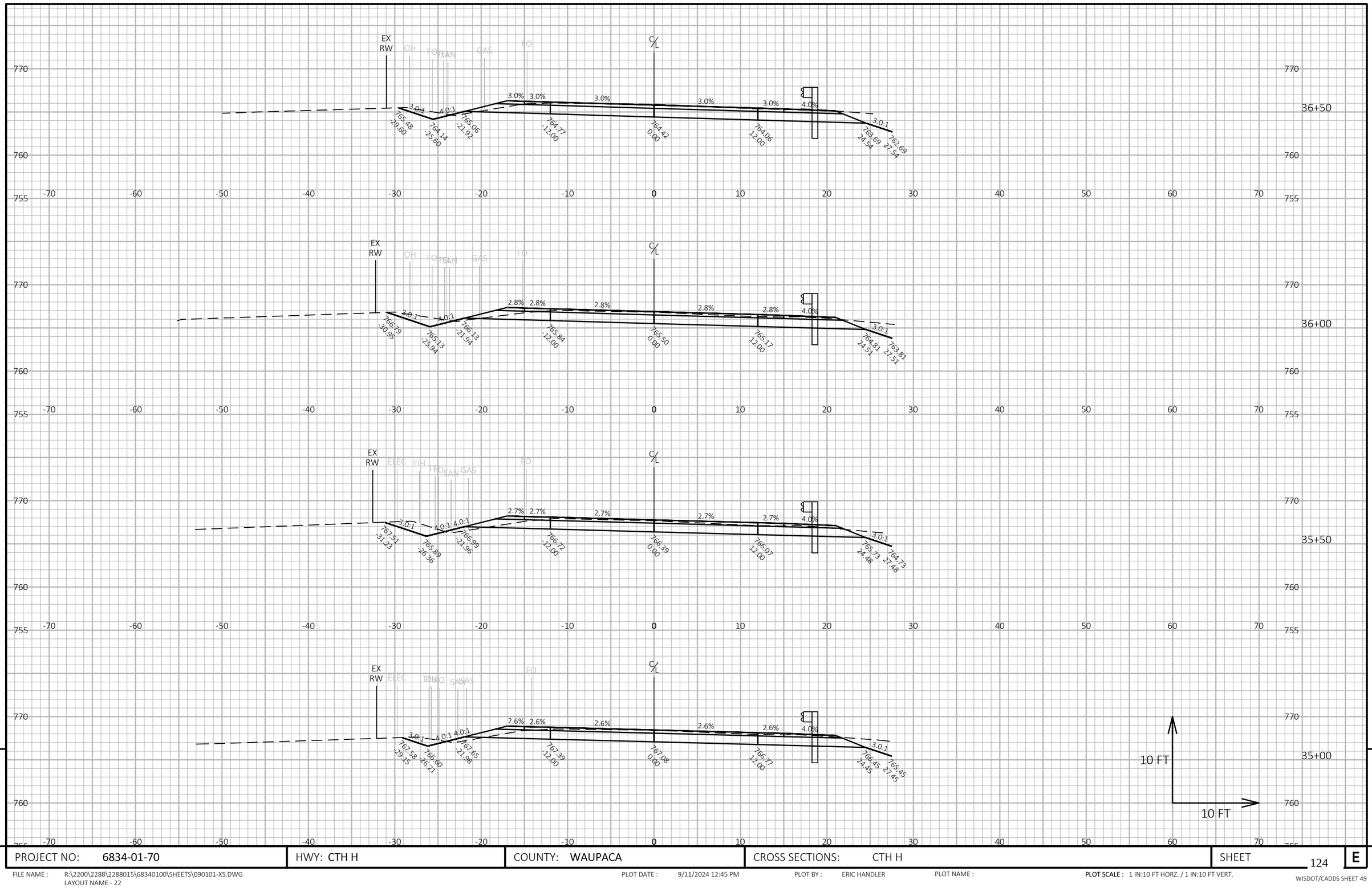

9

9

PROJECT NO: 6834-01-70	HWY: CTH H	COUNTY: WAUPACA	CROSS SECTIONS: CTH H	SHEET 124	E

FILE NAME : R:\2200\2288\2288015\68340100\SHEETS\090101-XS.DWG
LAYOUT NAME - 22

PLOT DATE : 9/11/2024 12:45 PM

PLOT BY : ERIC HANDLER

PLOT NAME :

PLOT SCALE : 1 IN:10 FT HORZ. / 1 IN:10 FT VERT.

WISDOT/CADDS SHEET 49

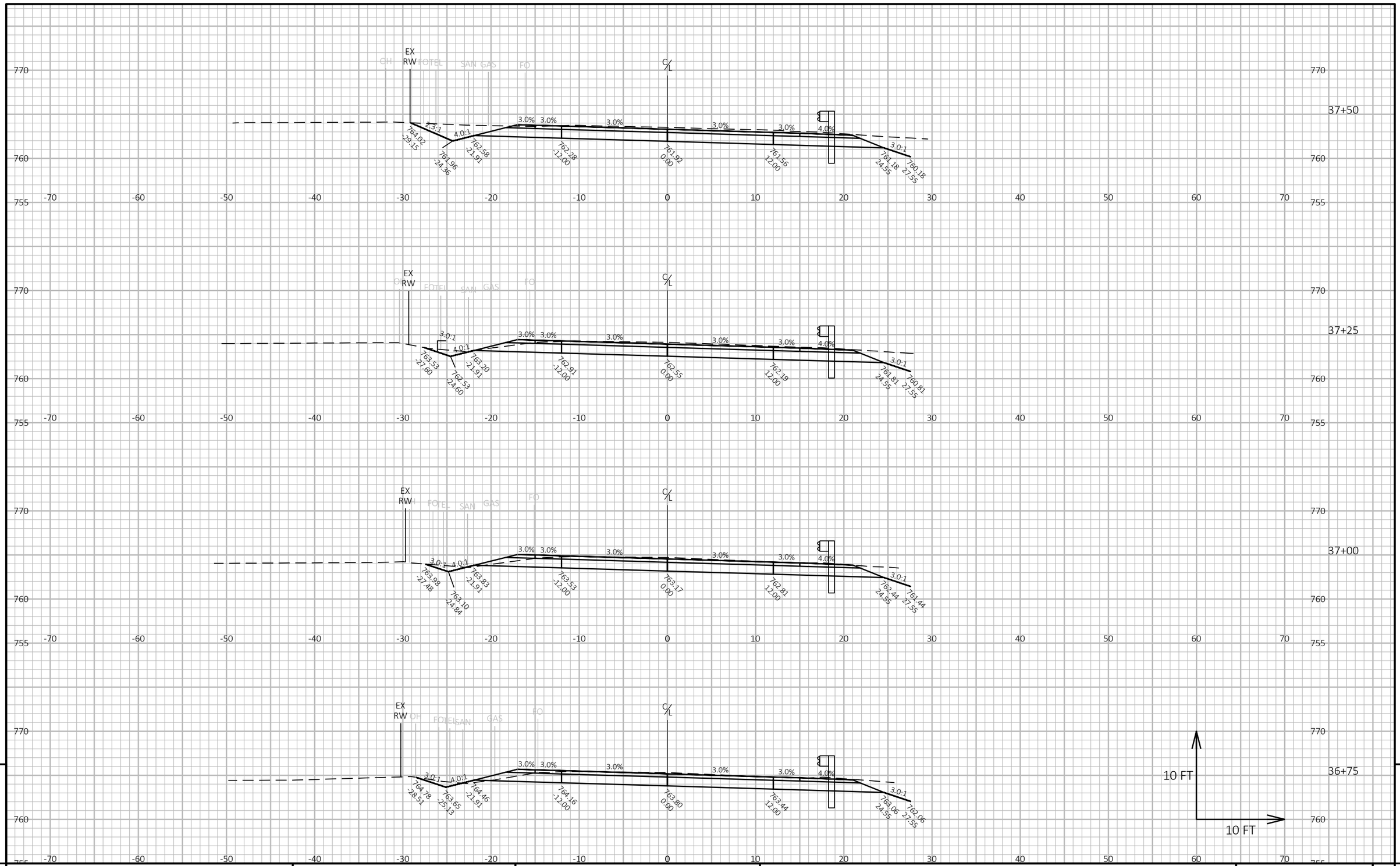

9

9

PROJECT NO: 6834-01-70	HWY: CTH H	COUNTY: WAUPACA	CROSS SECTIONS: CTH H	SHEET 125	E

FILE NAME : R:\2200\2288\2288015\68340100\SHEETS\090101-XS.DWG
LAYOUT NAME - 23

PLOT DATE : 9/11/2024 12:45 PM PLOT BY : ERIC HANDLER PLOT NAME : **PLOT SCALE :** 1 IN:10 FT HORZ. / 1 IN:10 FT VERT.

WISDOT/CADDS SHEET 49

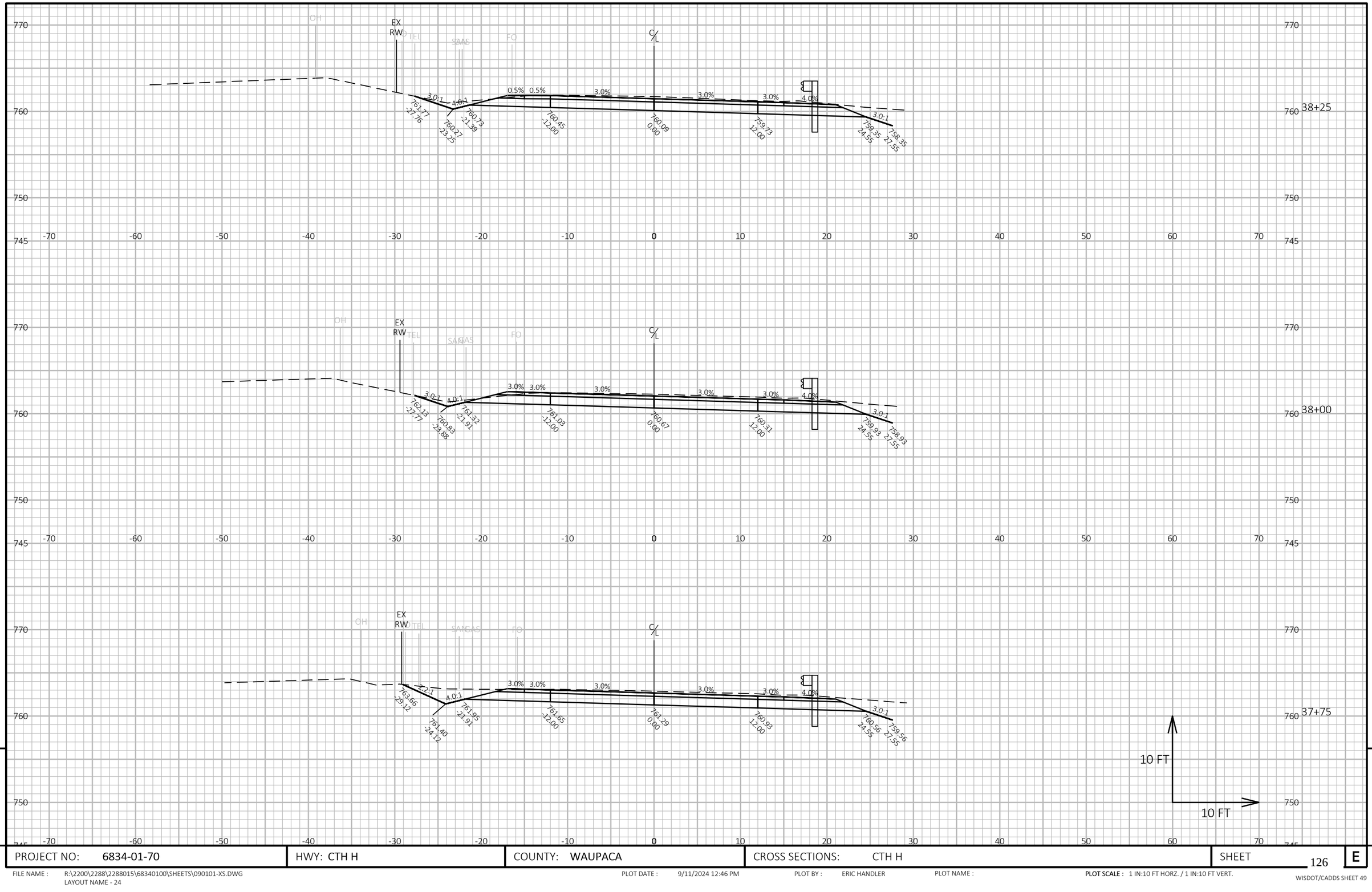

PROJECT NO: 6834-01-70	HWY: CTH H	COUNTY: WAUPACA	CROSS SECTIONS: CTH H	SHEET 126 E

FILE NAME : R:\2200\2288\2288015\68340100\SHEETS\090101-XS.DWG
LAYOUT NAME - 24

PLOT DATE : 9/11/2024 12:46 PM PLOT BY : ERIC HANDLER PLOT NAME : PLOT SCALE : 1 IN:10 FT HORZ. / 1 IN:10 FT VERT.

WISDOT/CADDS SHEET 49

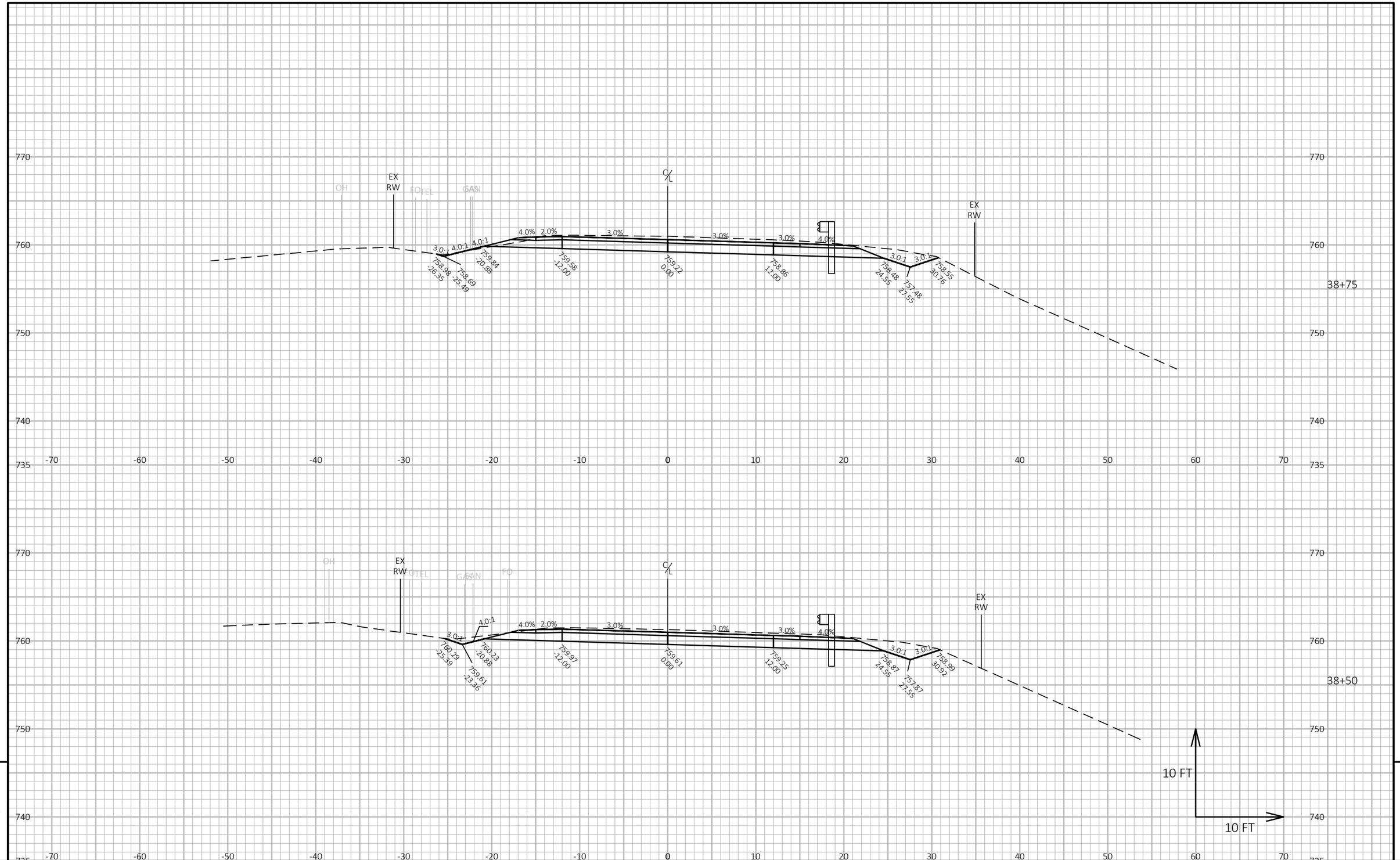

9 9

PROJECT NO: 6834-01-70	HWY: CTH H	COUNTY: WAUPACA	CROSS SECTIONS: CTH H	SHEET 127	E

FILE NAME : R:\2200\2288\2288015\68340100\SHEETS\090101-XS.DWG
LAYOUT NAME - 25

PLOT DATE : 9/11/2024 12:46 PM PLOT BY : ERIC HANDLER PLOT NAME : PLOT SCALE : 1 IN:10 FT HORZ. / 1 IN:10 FT VERT.

WISDOT/CADDS SHEET 49

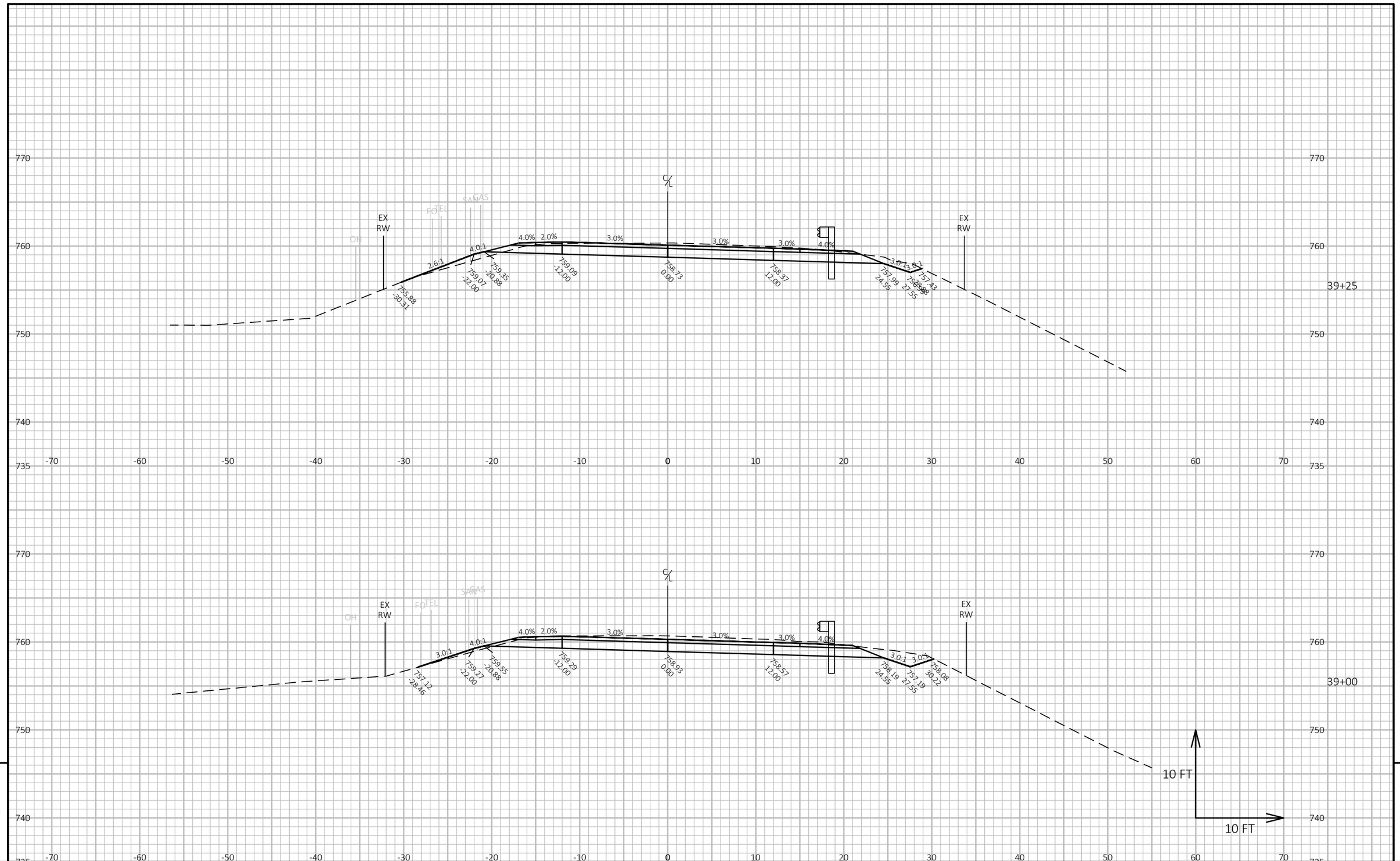

9

9

PROJECT NO: 6834-01-70	HWY: CTH H	COUNTY: WAUPACA	CROSS SECTIONS: CTH H	SHEET 128	E

FILE NAME : R:\2200\2288\2288015\68340100\SHEETS\090101-XS.DWG
LAYOUT NAME - 26

PLOT DATE : 9/11/2024 12:46 PM PLOT BY : ERIC HANDLER PLOT NAME : PLOT SCALE : 1 IN:10 FT HORZ. / 1 IN:10 FT VERT.

WISDOT/CADDS SHEET 49

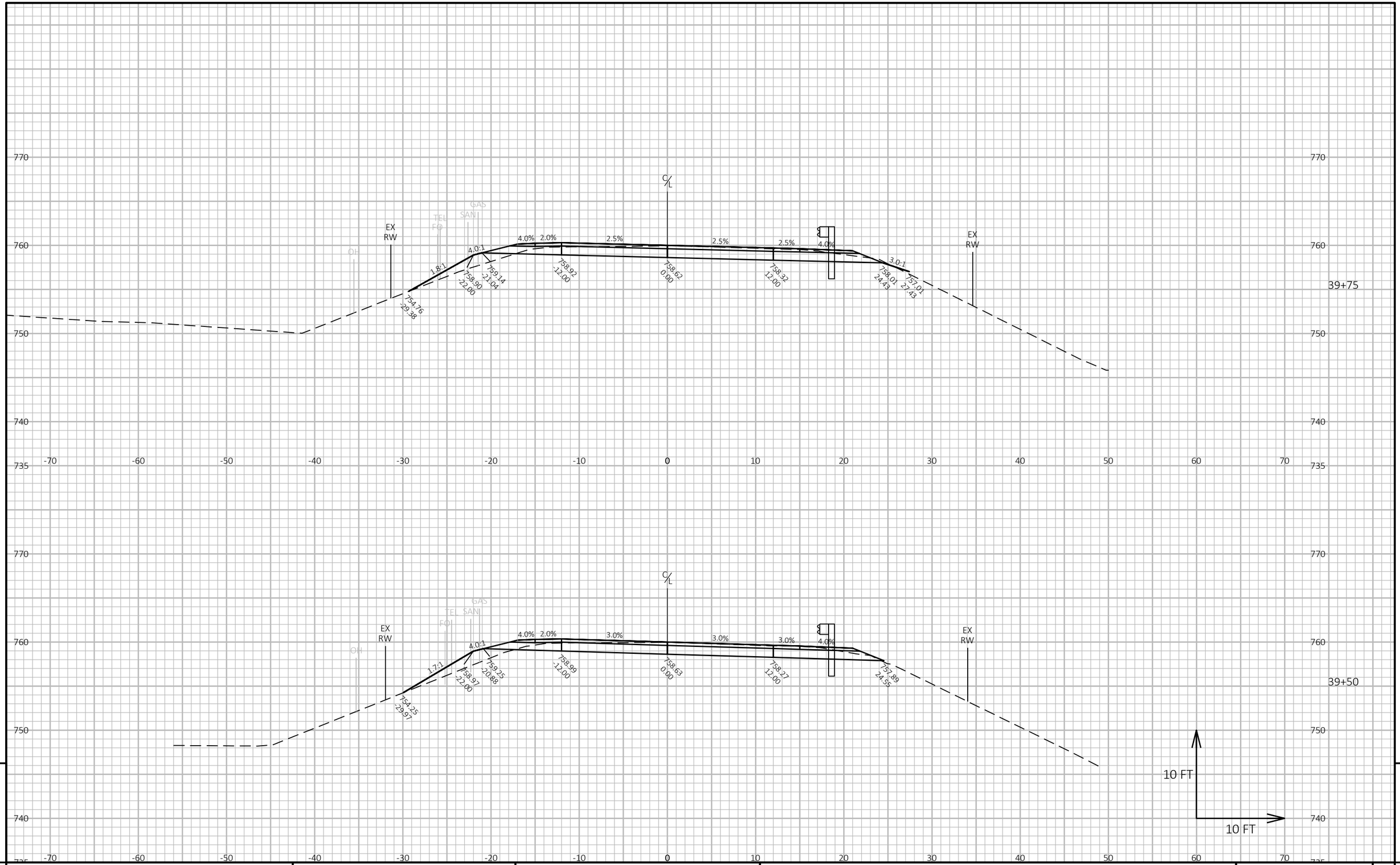

PROJECT NO: 6834-01-70	HWY: CTH H	COUNTY: WAUPACA	CROSS SECTIONS: CTH H	SHEET 129 E

FILE NAME : R:\2200\2288\2288015\68340100\SHEETS\090101-XS.DWG
LAYOUT NAME - 27

PLOT DATE : 9/11/2024 12:46 PM PLOT BY : ERIC HANDLER PLOT NAME : **PLOT SCALE :** 1 IN:10 FT HORZ. / 1 IN:10 FT VERT.

WISDOT/CADDS SHEET 49

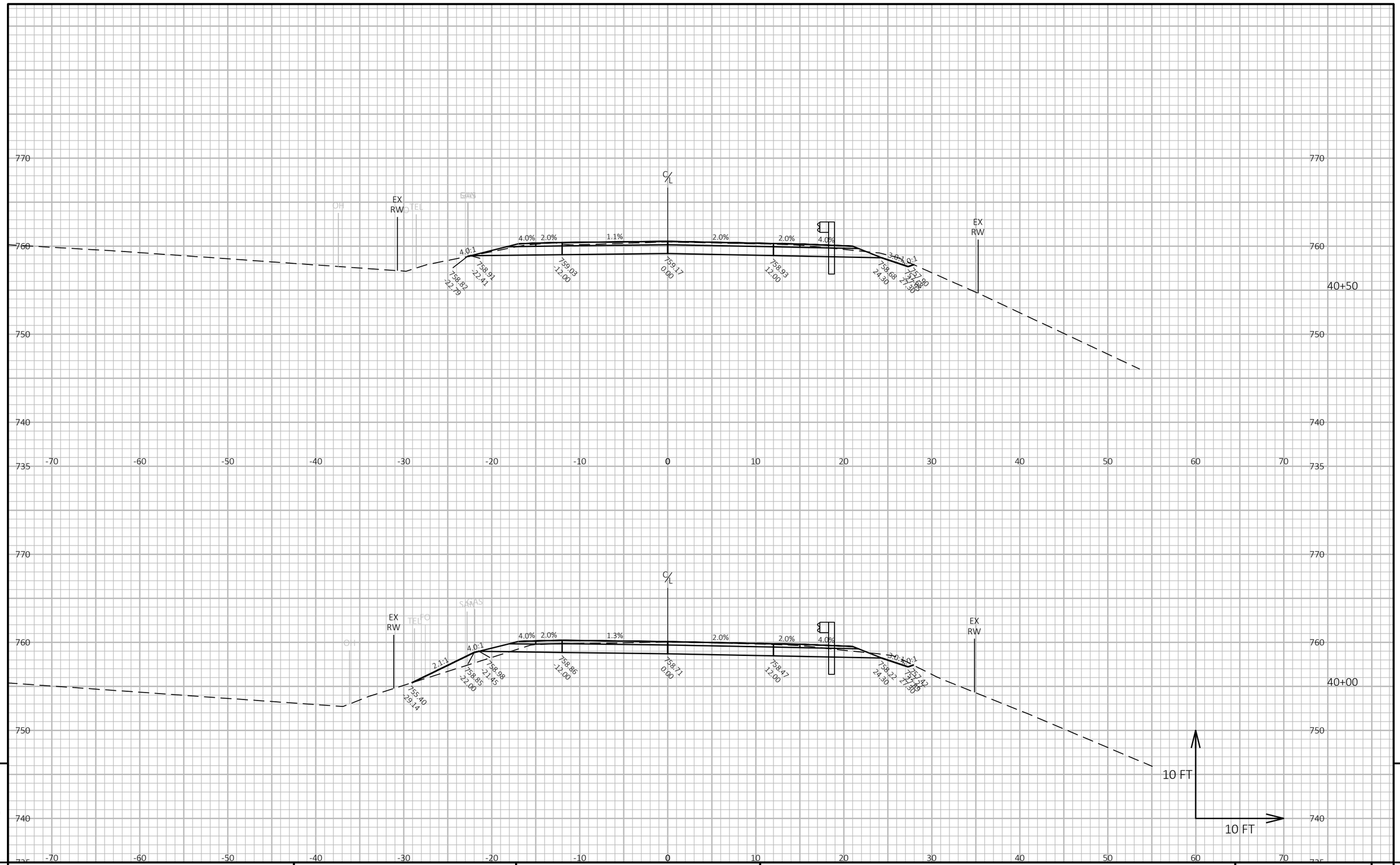

PROJECT NO: 6834-01-70	HWY: CTH H	COUNTY: WAUPACA	CROSS SECTIONS: CTH H	SHEET 130	E

FILE NAME : R:\2200\2288\2288015\68340100\SHEETS\090101-XS.DWG
LAYOUT NAME - 28

PLOT DATE : 9/11/2024 12:47 PM PLOT BY : ERIC HANDLER PLOT NAME : PLOT SCALE : 1 IN:10 FT HORZ. / 1 IN:10 FT VERT.

WISDOT/CADDS SHEET 49

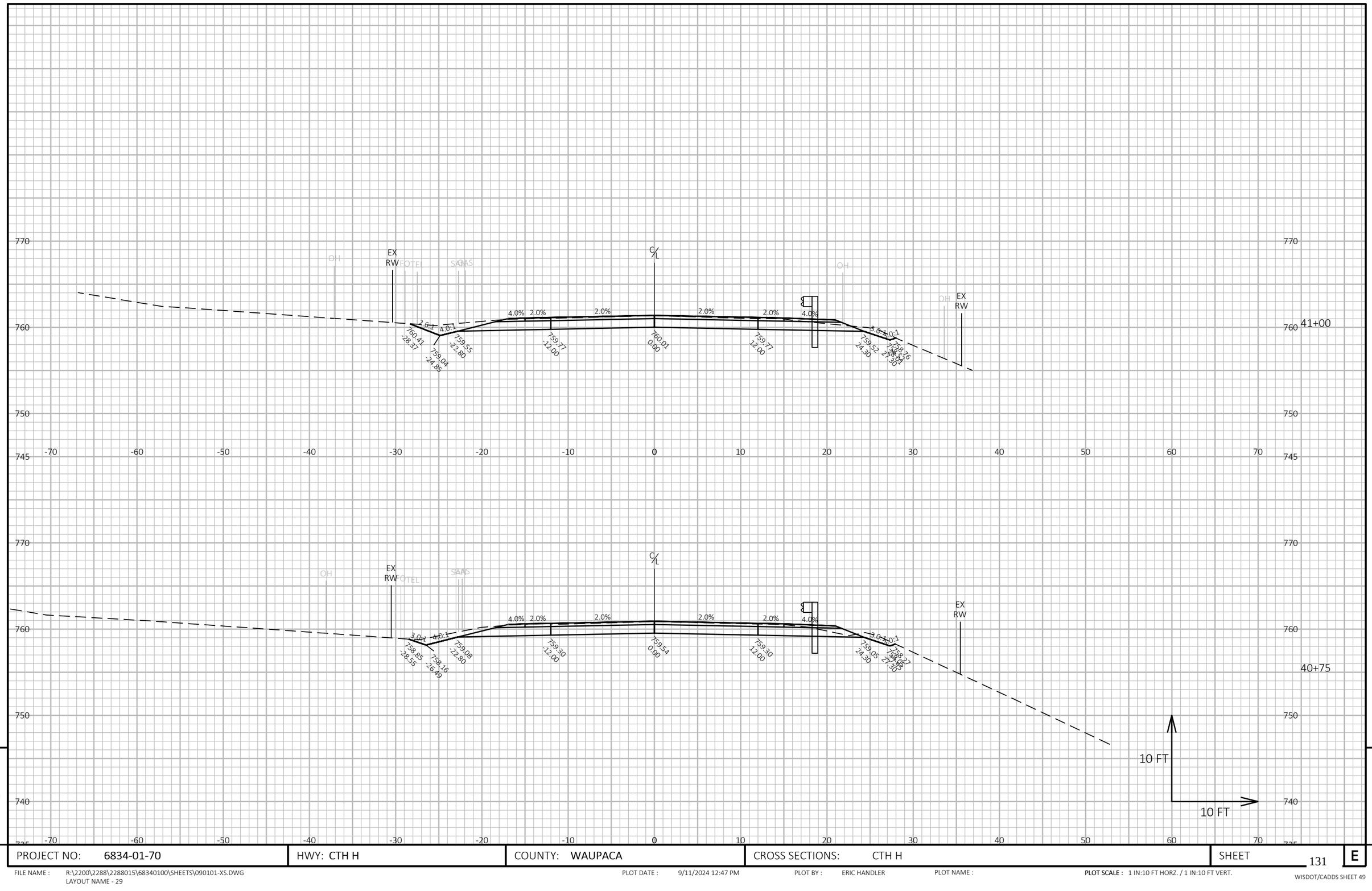

PROJECT NO: 6834-01-70	HWY: CTH H	COUNTY: WAUPACA	CROSS SECTIONS: CTH H	SHEET 131	E

FILE NAME : R:\2200\2288\2288015\68340100\SHEETS\090101-XS.DWG
LAYOUT NAME - 29

PLOT DATE : 9/11/2024 12:47 PM PLOT BY : ERIC HANDLER PLOT NAME : PLOT SCALE : 1 IN:10 FT HORZ. / 1 IN:10 FT VERT.

WISDOT/CADDS SHEET 49

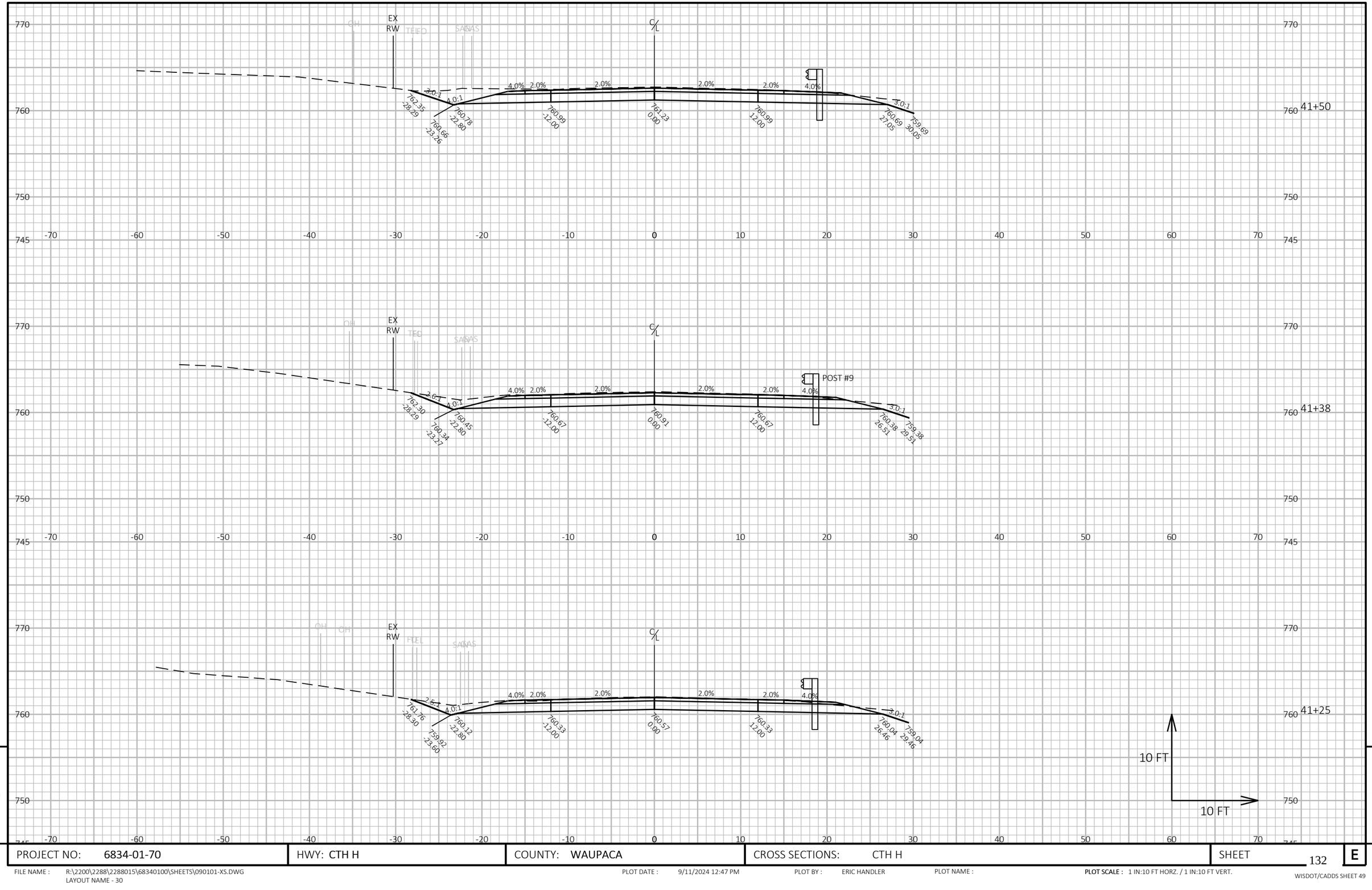

PROJECT NO: 6834-01-70	HWY: CTH H	COUNTY: WAUPACA	CROSS SECTIONS: CTH H	SHEET 132	E

FILE NAME : R:\2200\2288\2288015\68340100\SHEETS\090101-XS.DWG
LAYOUT NAME - 30

PLOT DATE : 9/11/2024 12:47 PM PLOT BY : ERIC HANDLER PLOT NAME : PLOT SCALE : 1 IN:10 FT HORZ. / 1 IN:10 FT VERT.

WISDOT/CADDS SHEET 49

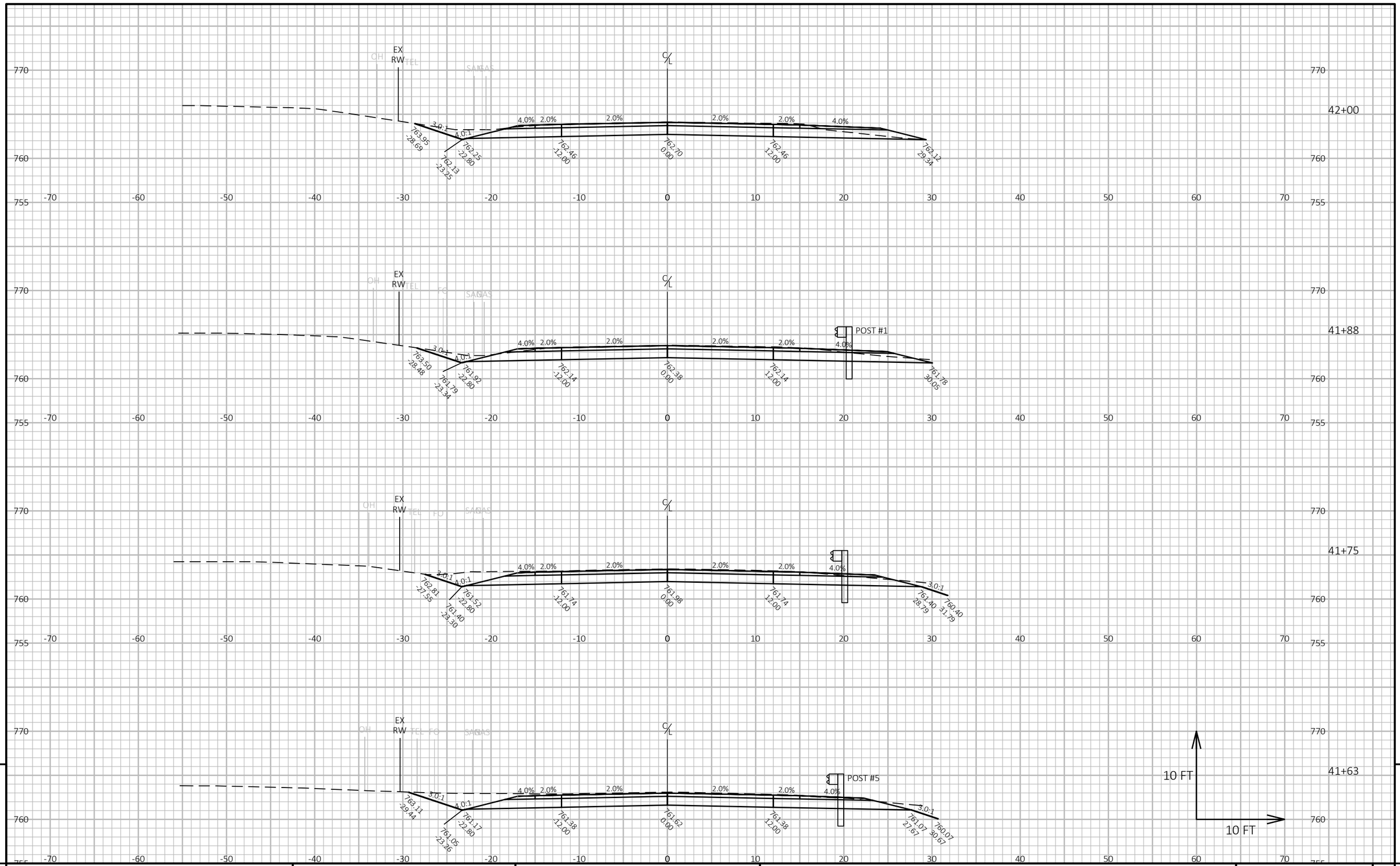

9

9

PROJECT NO: 6834-01-70	HWY: CTH H	COUNTY: WAUPACA	CROSS SECTIONS: CTH H	SHEET 133	E

FILE NAME : R:\2200\2288\2288015\68340100\SHEETS\090101-XS.DWG
LAYOUT NAME - 31

PLOT DATE : 9/11/2024 12:47 PM

PLOT BY : ERIC HANDLER

PLOT NAME :

PLOT SCALE : 1 IN:10 FT HORZ. / 1 IN:10 FT VERT.

WISDOT/CADDS SHEET 49

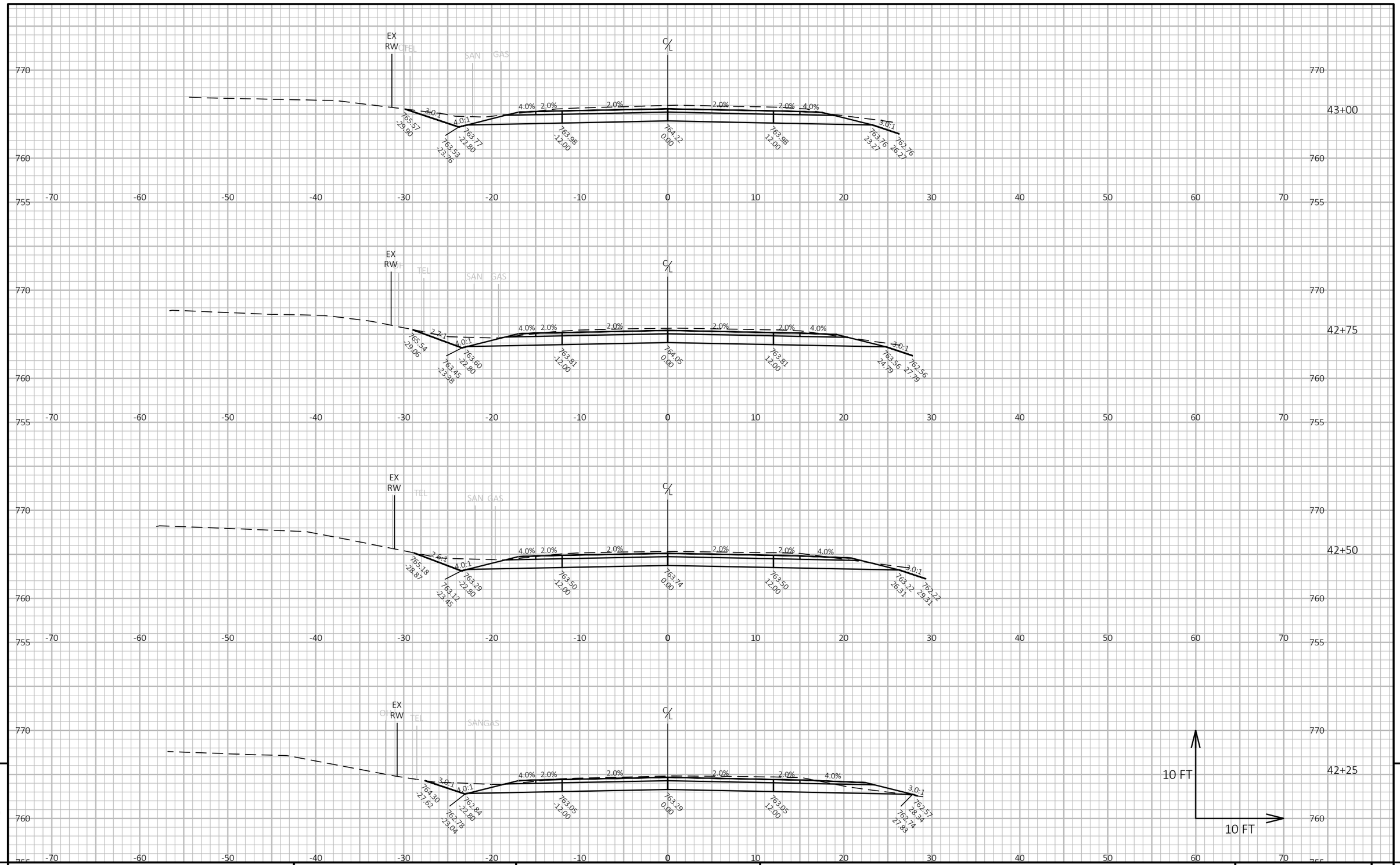

PROJECT NO: 6834-01-70	HWY: CTH H	COUNTY: WAUPACA	CROSS SECTIONS: CTH H	SHEET 134	E

FILE NAME : R:\2200\2288\2288015\68340100\SHEETS\090101-XS.DWG
LAYOUT NAME - 32

PLOT DATE : 9/11/2024 12:48 PM PLOT BY : ERIC HANDLER PLOT NAME : **PLOT SCALE :** 1 IN:10 FT HORZ. / 1 IN:10 FT VERT.

WISDOT/CADDS SHEET 49

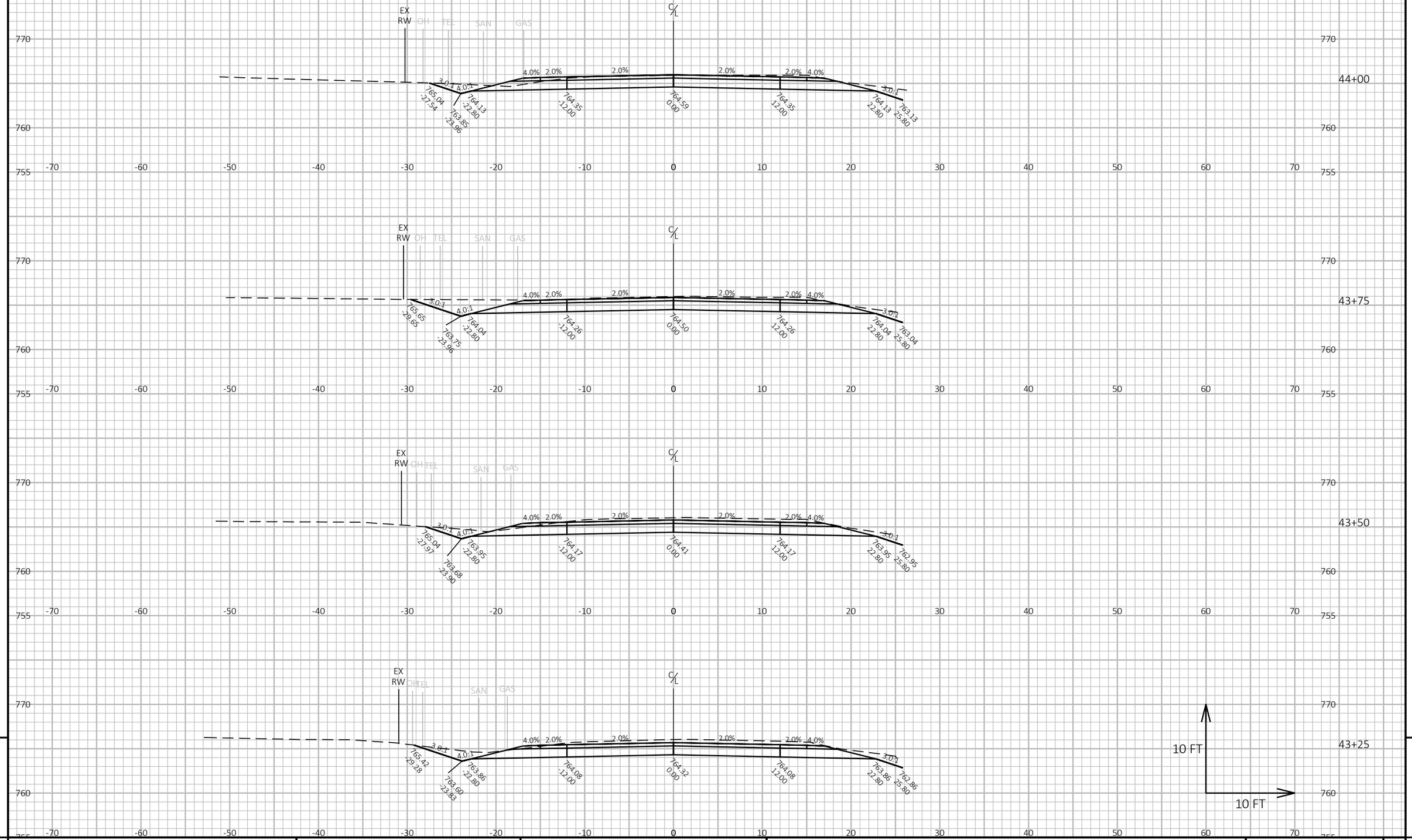

9

9

PROJECT NO: 6834-01-70	HWY: CTH H	COUNTY: WAUPACA	CROSS SECTIONS: CTH H	SHEET 135	E

FILE NAME : R:\2200\2288\2288015\68340100\SHEETS\090101-XS.DWG
LAYOUT NAME - 33

PLOT DATE : 9/11/2024 12:48 PM PLOT BY : ERIC HANDLER PLOT NAME : **PLOT SCALE :** 1 IN:10 FT HORZ. / 1 IN:10 FT VERT.

WISDOT/CADDS SHEET 49

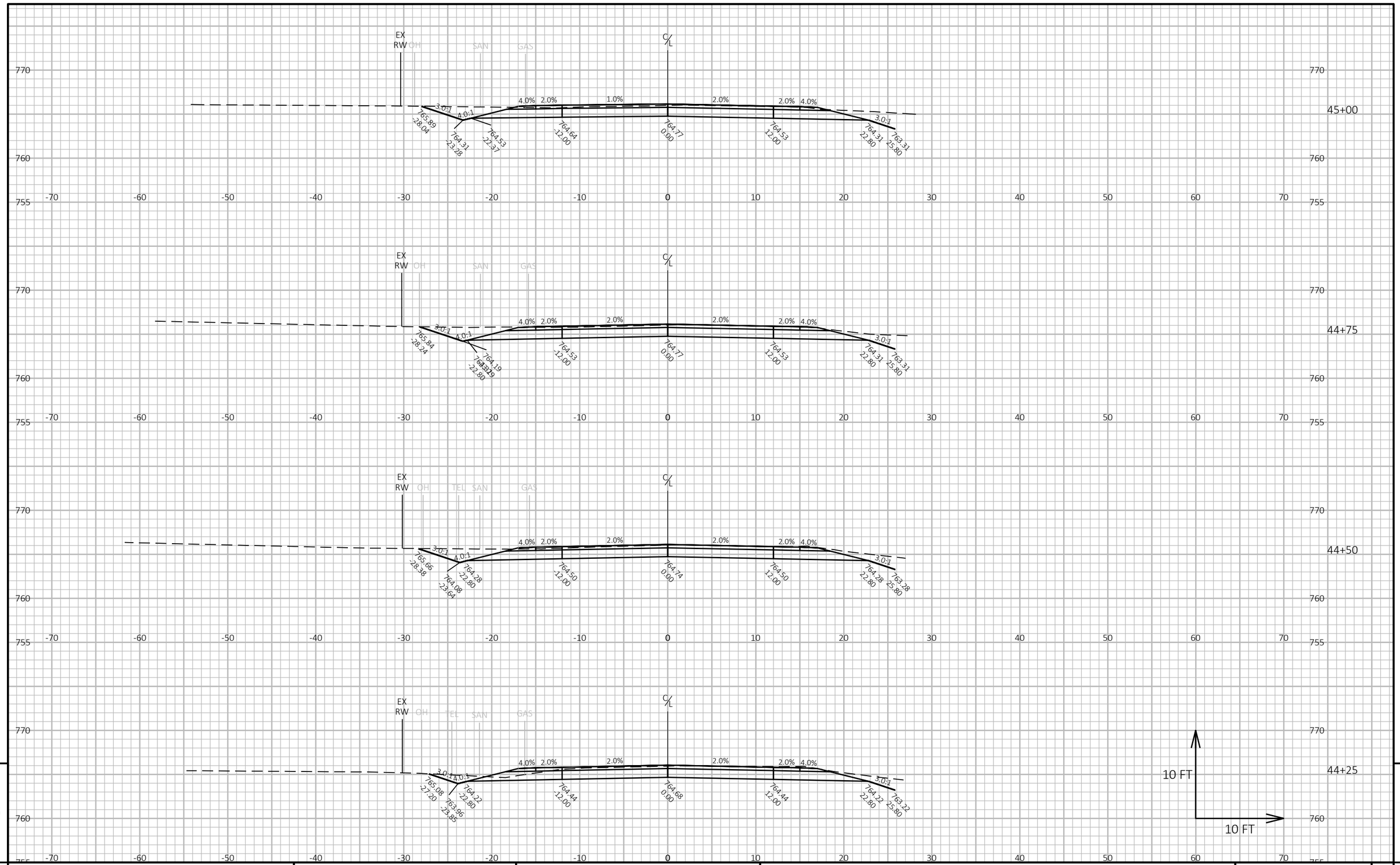

9

9

PROJECT NO: 6834-01-70	HWY: CTH H	COUNTY: WAUPACA	CROSS SECTIONS: CTH H	SHEET 136	E

FILE NAME : R:\2200\2288\2288015\68340100\SHEETS\090101-XS.DWG
LAYOUT NAME - 34

PLOT DATE : 9/11/2024 12:48 PM PLOT BY : ERIC HANDLER PLOT NAME : **PLOT SCALE :** 1 IN:10 FT HORZ. / 1 IN:10 FT VERT.

WISDOT/CADDS SHEET 49

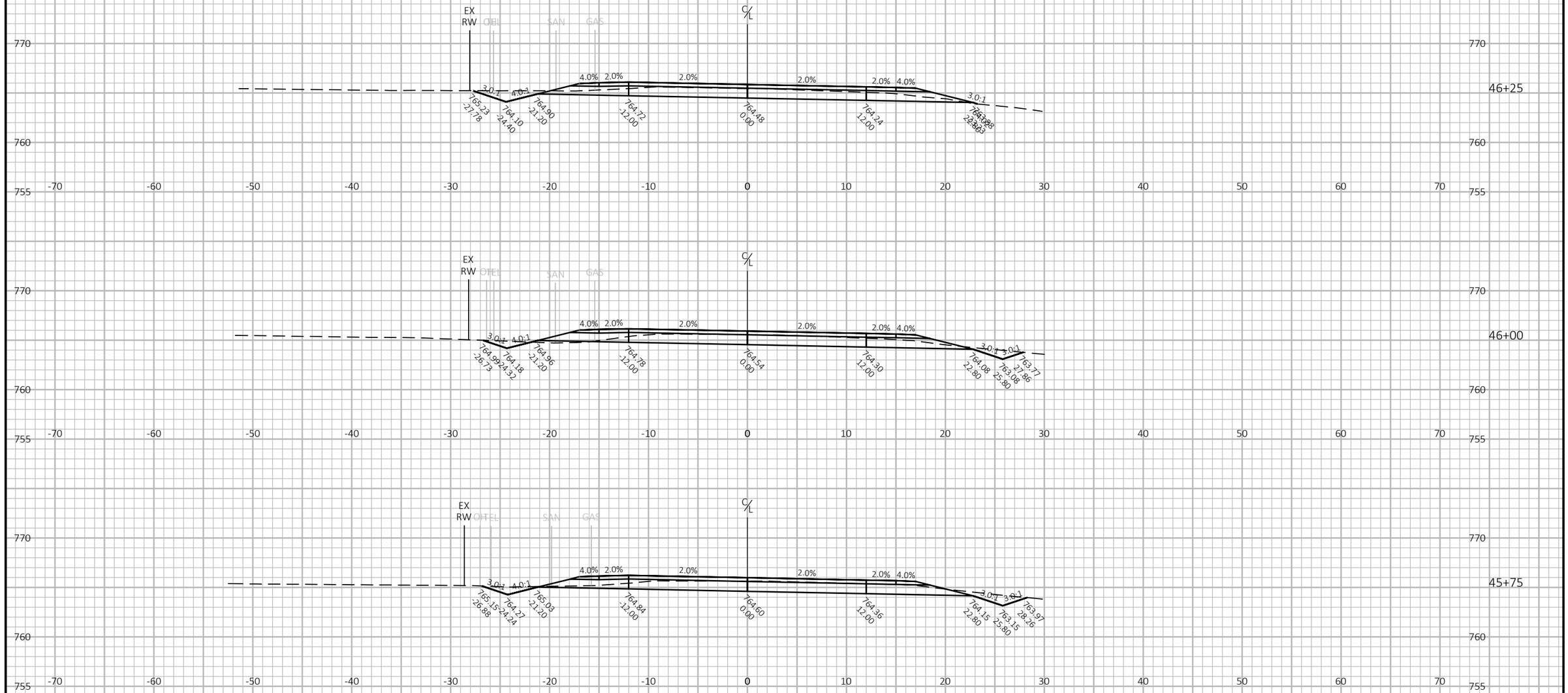

9

9

PROJECT NO: 6834-01-70	HWY: CTH H	COUNTY: WAUPACA	CROSS SECTIONS: CTH H	SHEET 137	E

FILE NAME : R:\2200\2288\2288015\68340100\SHEETS\090101-XS.DWG
LAYOUT NAME - 35

PLOT DATE : 9/11/2024 12:48 PM

PLOT BY : ERIC HANDLER

PLOT NAME :

PLOT SCALE : 1 IN:10 FT HORZ. / 1 IN:10 FT VERT.

WISDOT/CADDS SHEET 49

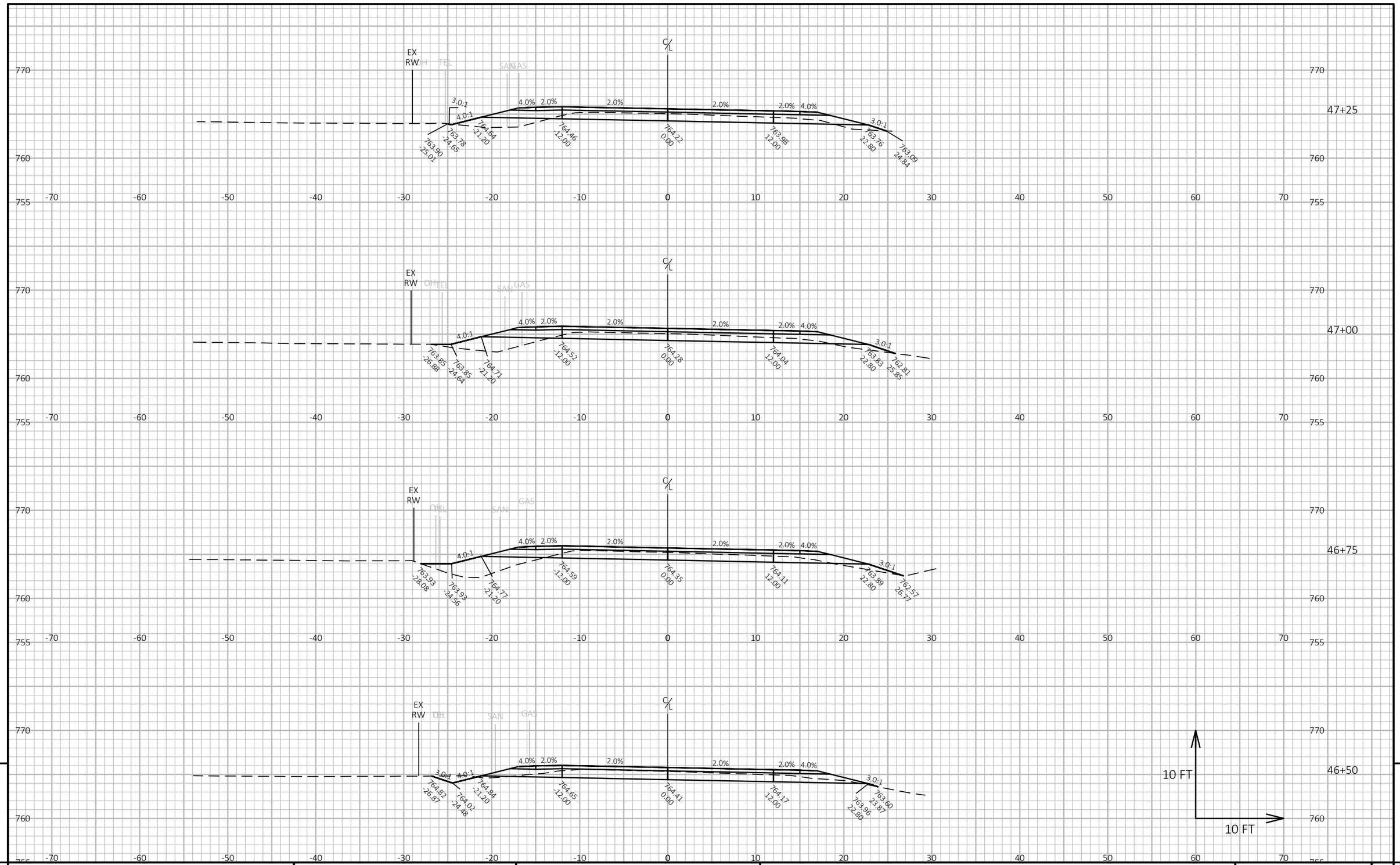

9

9

PROJECT NO: 6834-01-70	HWY: CTH H	COUNTY: WAUPACA	CROSS SECTIONS: CTH H	SHEET 138	E

FILE NAME : R:\2200\2288\2288015\68340100\SHEETS\090101-XS.DWG
LAYOUT NAME - 36

PLOT DATE : 9/11/2024 12:49 PM

PLOT BY : ERIC HANDLER

PLOT NAME :

PLOT SCALE : 1 IN:10 FT HORZ. / 1 IN:10 FT VERT.

WISDOT/CADDS SHEET 49

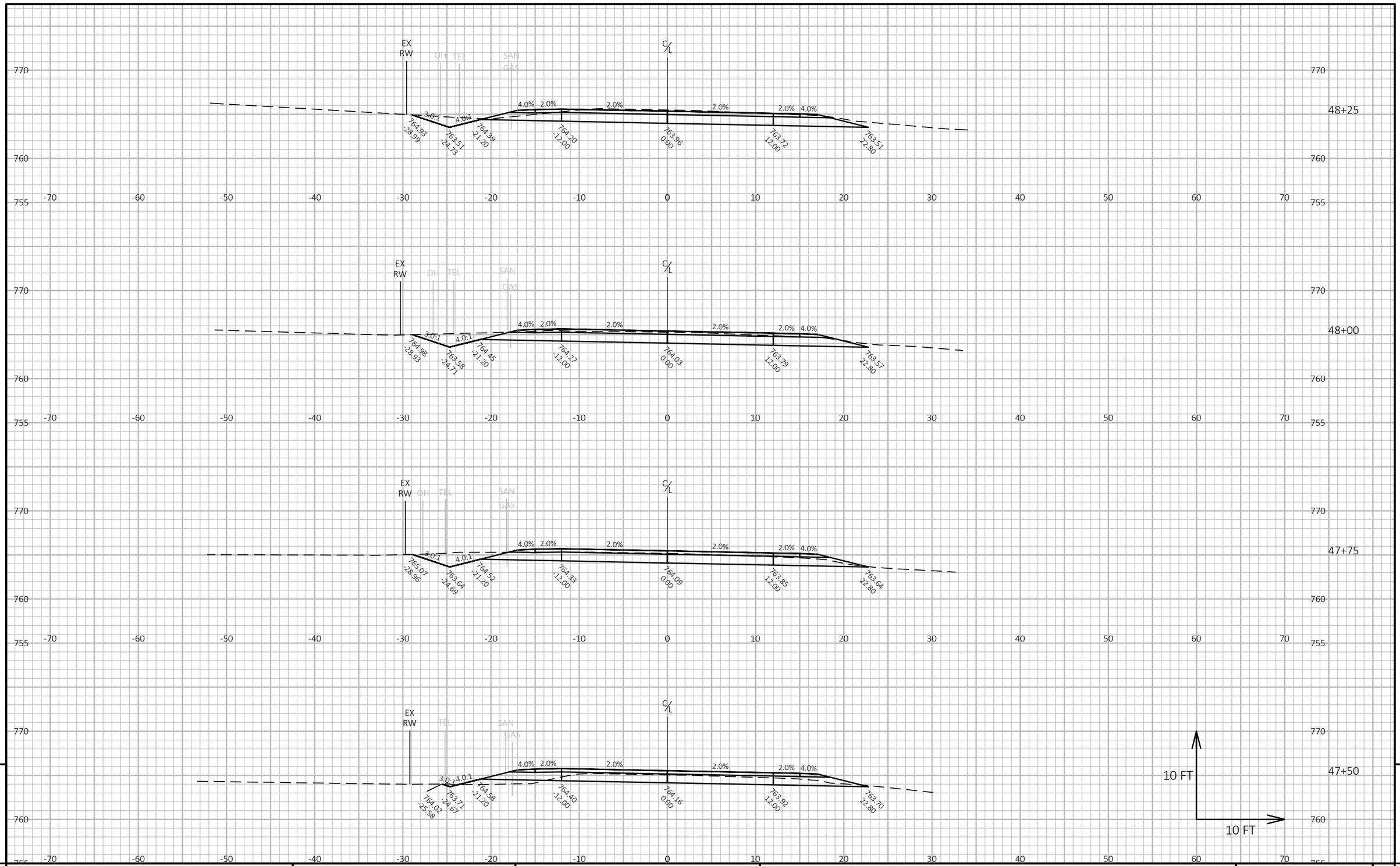

9

9

PROJECT NO: 6834-01-70	HWY: CTH H	COUNTY: WAUPACA	CROSS SECTIONS: CTH H	SHEET 139	E

FILE NAME : R:\2200\2288\2288015\68340100\SHEETS\090101-XS.DWG
LAYOUT NAME - 37

PLOT DATE : 9/11/2024 12:49 PM PLOT BY : ERIC HANDLER PLOT NAME : **PLOT SCALE :** 1 IN:10 FT HORZ. / 1 IN:10 FT VERT.

WISDOT/CADDS SHEET 49

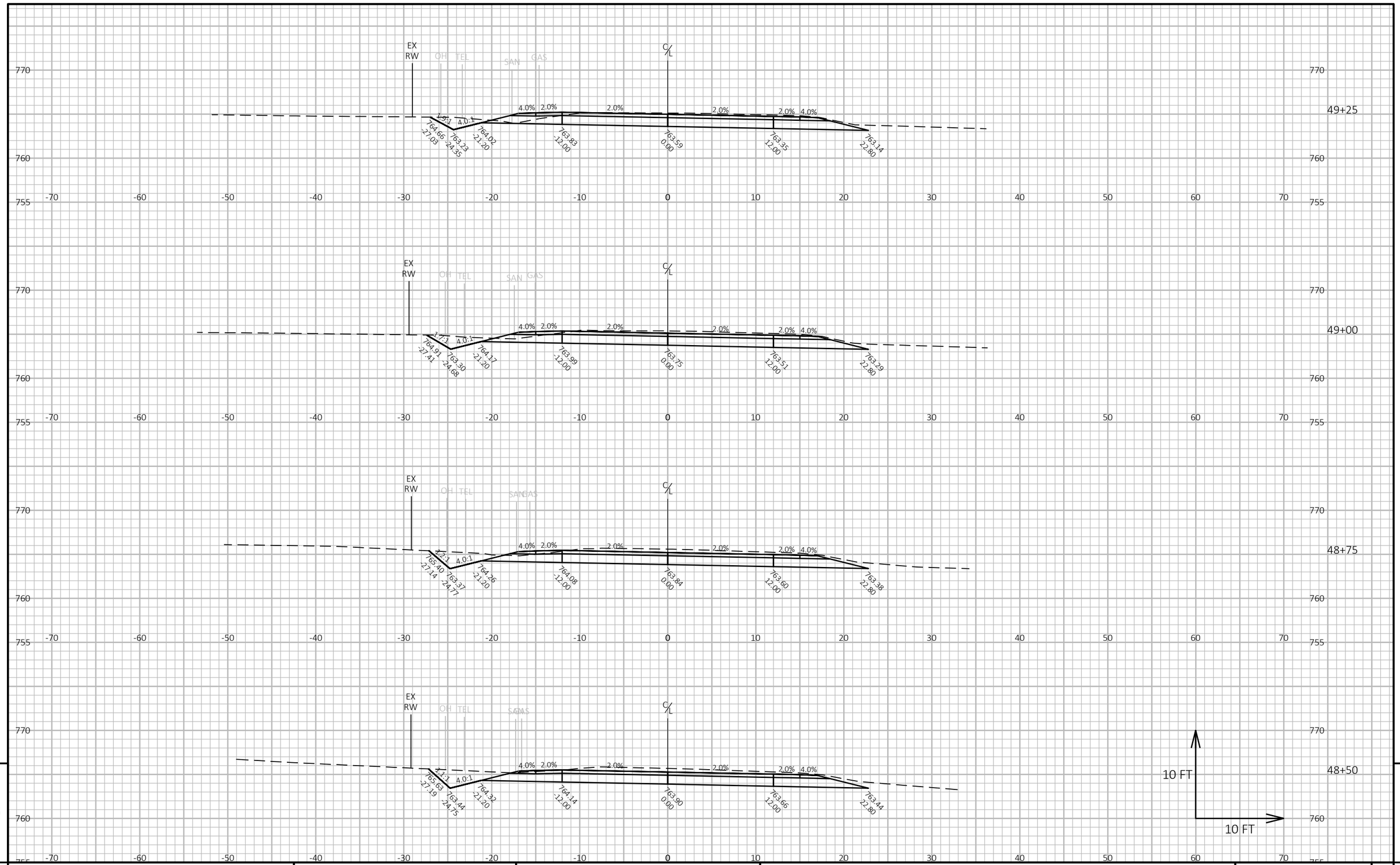

9

9

PROJECT NO: 6834-01-70	HWY: CTH H	COUNTY: WAUPACA	CROSS SECTIONS: CTH H	SHEET 140	E

FILE NAME : R:\2200\2288\2288015\68340100\SHEETS\090101-XS.DWG
LAYOUT NAME - 38

PLOT DATE : 9/11/2024 12:49 PM

PLOT BY : ERIC HANDLER

PLOT NAME :

PLOT SCALE : 1 IN:10 FT HORZ. / 1 IN:10 FT VERT.

WISDOT/CADDS SHEET 49

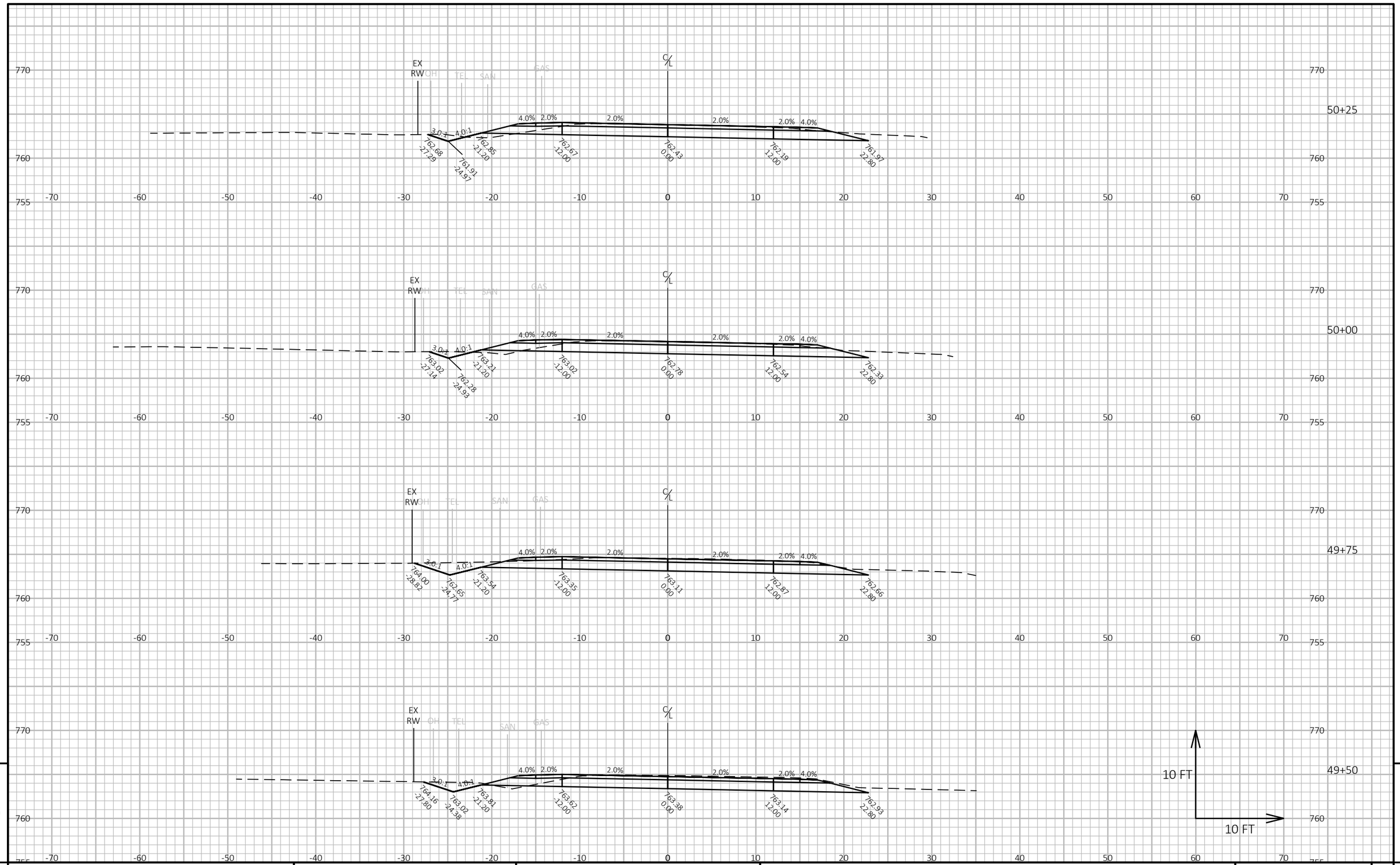

9

9

PROJECT NO: 6834-01-70	HWY: CTH H	COUNTY: WAUPACA	CROSS SECTIONS: CTH H	SHEET 141	E

FILE NAME : R:\2200\2288\2288015\68340100\SHEETS\090101-XS.DWG
LAYOUT NAME - 39

PLOT DATE : 9/11/2024 12:49 PM

PLOT BY : ERIC HANDLER

PLOT NAME :

PLOT SCALE : 1 IN:10 FT HORZ. / 1 IN:10 FT VERT.

WISDOT/CADDS SHEET 49

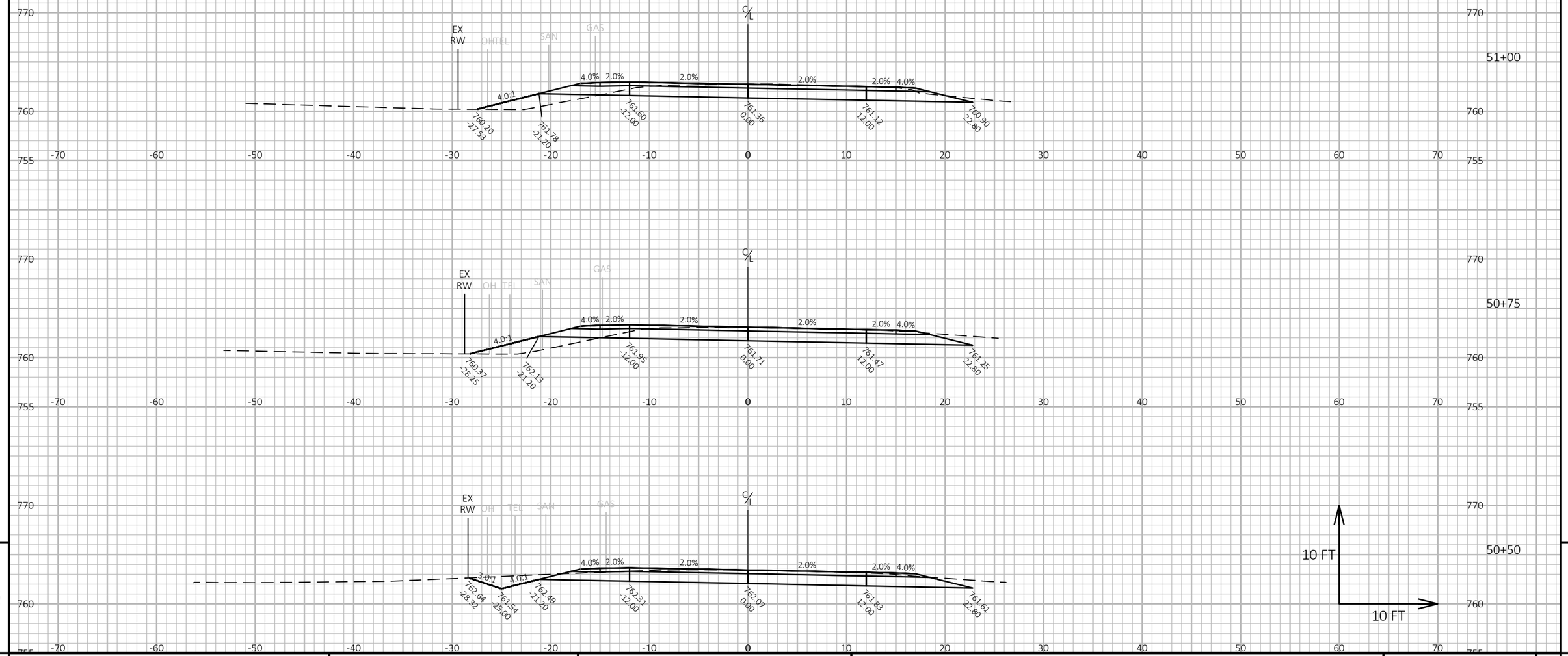

9

9

PROJECT NO: 6834-01-70	HWY: CTH H	COUNTY: WAUPACA	CROSS SECTIONS: CTH H	SHEET 142	E

FILE NAME : R:\2200\2288\2288015\68340100\SHEETS\090101-XS.DWG
LAYOUT NAME - 40

PLOT DATE : 9/11/2024 12:50 PM PLOT BY : ERIC HANDLER PLOT NAME : **PLOT SCALE :** 1 IN:10 FT HORZ. / 1 IN:10 FT VERT.

WISDOT/CADDS SHEET 49

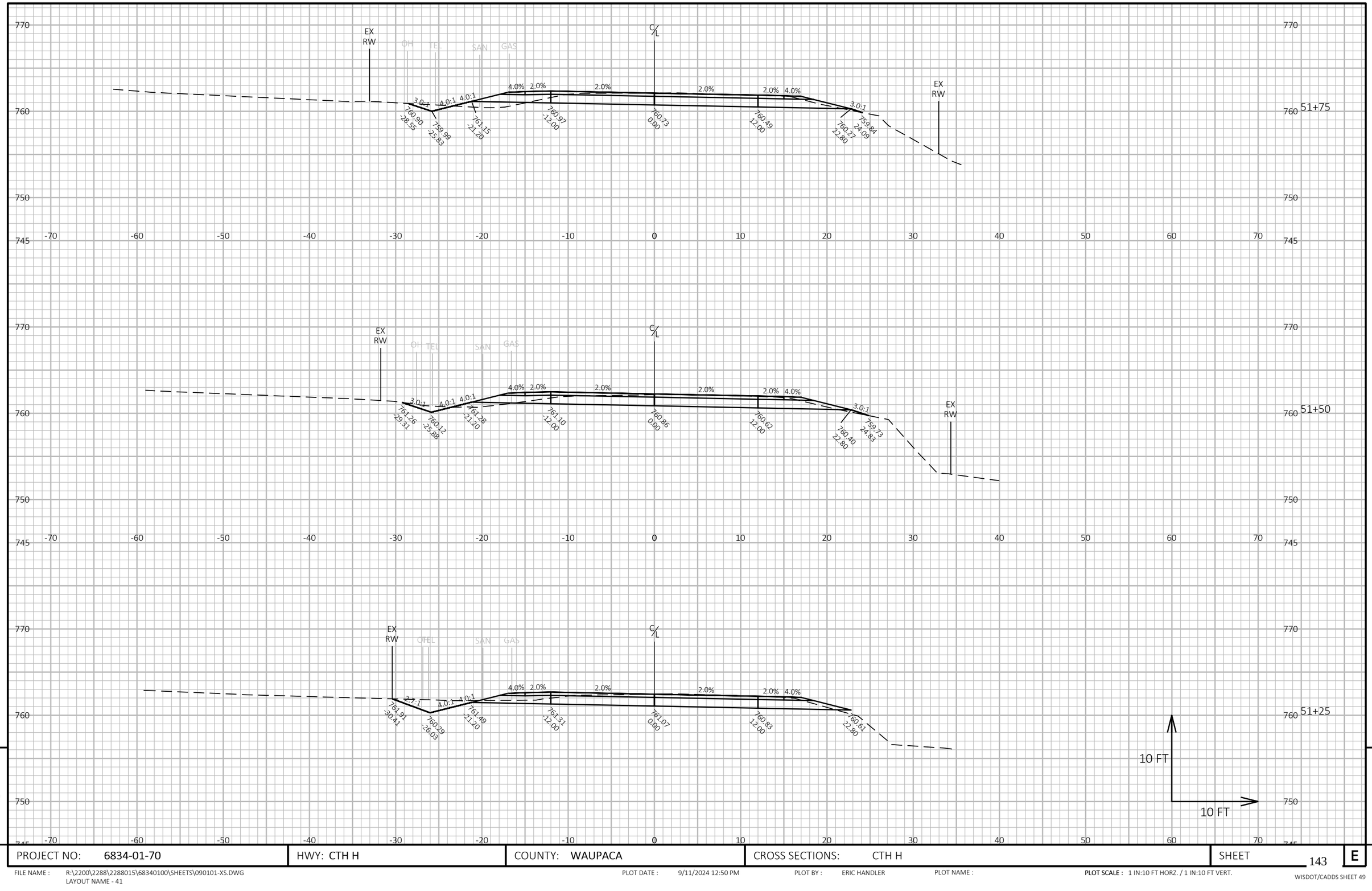

PROJECT NO: 6834-01-70	HWY: CTH H	COUNTY: WAUPACA	CROSS SECTIONS: CTH H	SHEET 143	E

FILE NAME : R:\2200\2288\2288015\68340100\SHEETS\090101-XS.DWG
LAYOUT NAME - 41

PLOT DATE : 9/11/2024 12:50 PM

PLOT BY : ERIC HANDLER

PLOT NAME :

PLOT SCALE : 1 IN:10 FT HORZ. / 1 IN:10 FT VERT.

WISDOT/CADDS SHEET 49

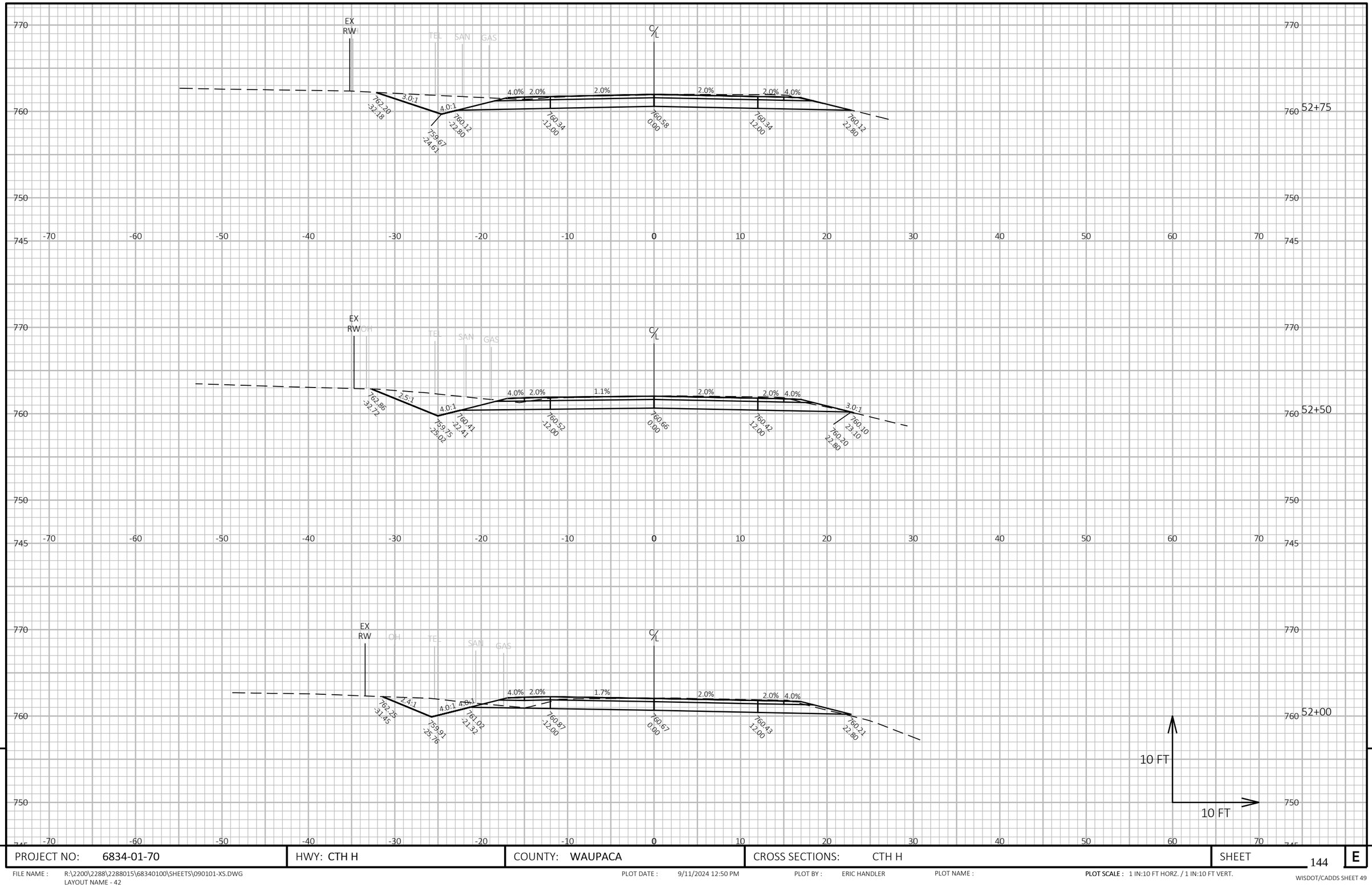

9

9

PROJECT NO: 6834-01-70	HWY: CTH H	COUNTY: WAUPACA	CROSS SECTIONS: CTH H	SHEET 144	E

FILE NAME : R:\2200\2288\2288015\68340100\SHEETS\090101-XS.DWG
LAYOUT NAME - 42

PLOT DATE : 9/11/2024 12:50 PM

PLOT BY : ERIC HANDLER

PLOT NAME :

PLOT SCALE : 1 IN:10 FT HORZ. / 1 IN:10 FT VERT.

WISDOT/CADDS SHEET 49

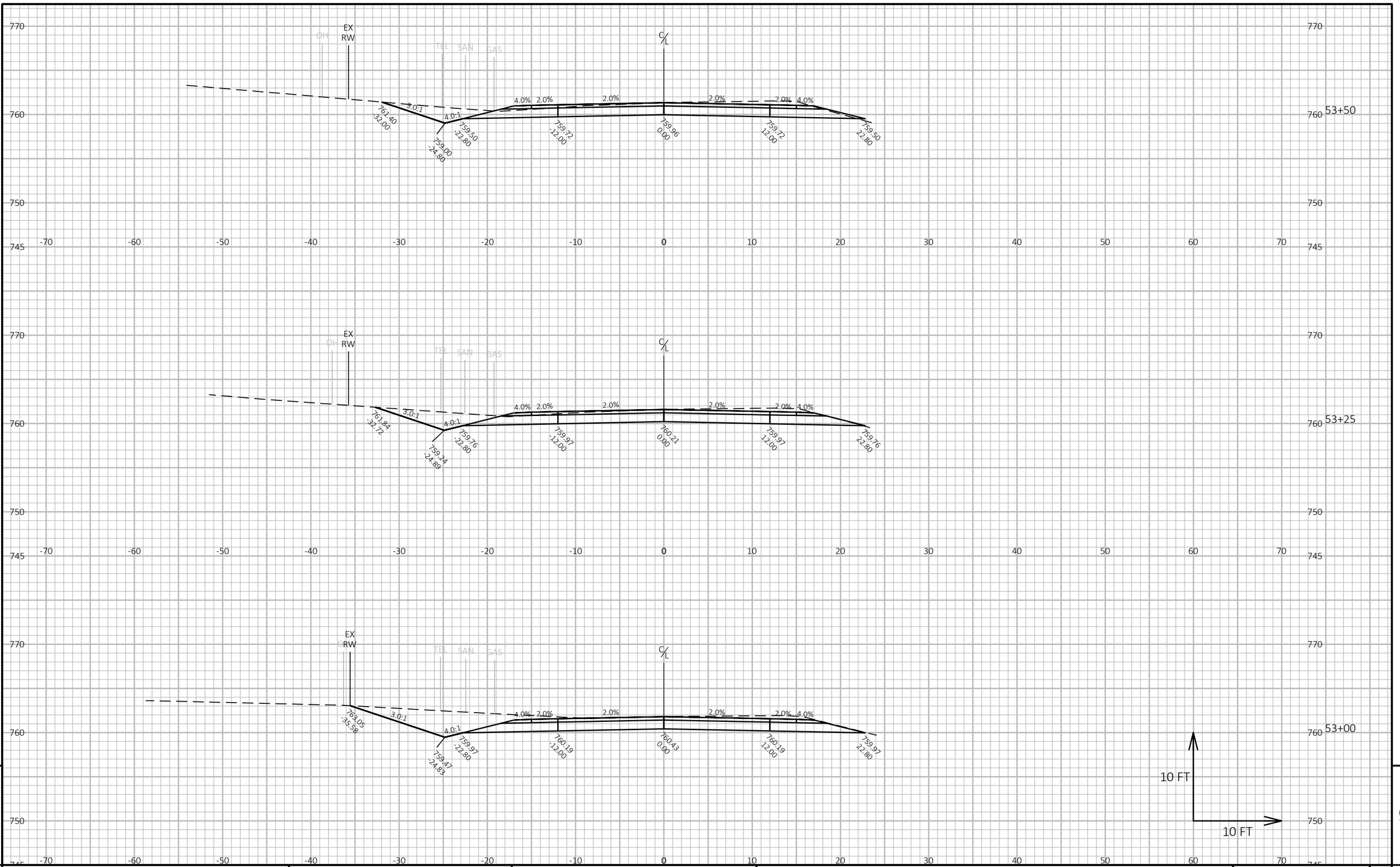

PROJECT NO: 6834-01-70	HWY: CTH H	COUNTY: WAUPACA	CROSS SECTIONS: CTH H	SHEET 145 E

FILE NAME : R:\2200\2288\2288015\68340100\SHEETS\090101-XS.DWG
LAYOUT NAME - 43

PLOT DATE : 9/11/2024 12:51 PM PLOT BY : ERIC HANDLER PLOT NAME : PLOT SCALE : 1 IN:10 FT HORZ. / 1 IN:10 FT VERT.

WISDOT/CADDS SHEET 49

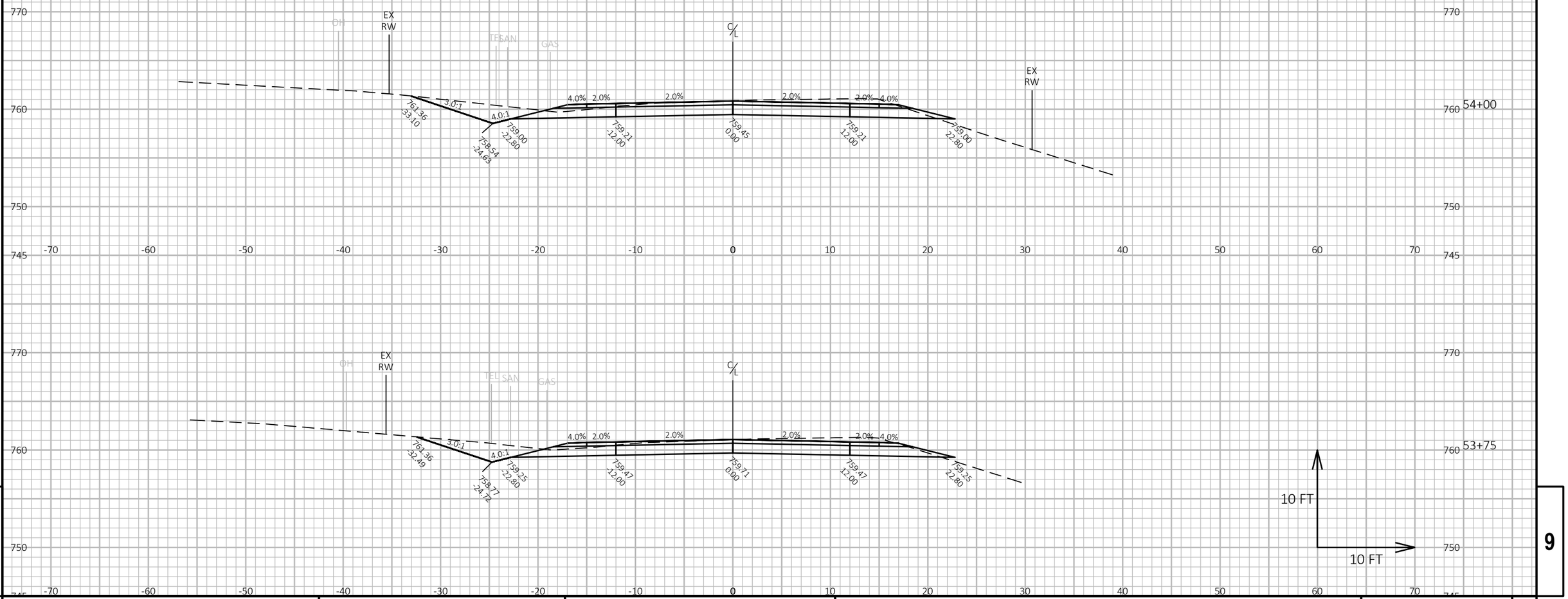

PROJECT NO: 6834-01-70	HWY: CTH H	COUNTY: WAUPACA	CROSS SECTIONS: CTH H	SHEET 146	E

FILE NAME : R:\2200\2288\2288015\68340100\SHEETS\090101-XS.DWG
LAYOUT NAME - 44

PLOT DATE : 9/11/2024 12:51 PM PLOT BY : ERIC HANDLER PLOT NAME : **PLOT SCALE :** 1 IN:10 FT HORZ. / 1 IN:10 FT VERT.

WISDOT/CADDS SHEET 49

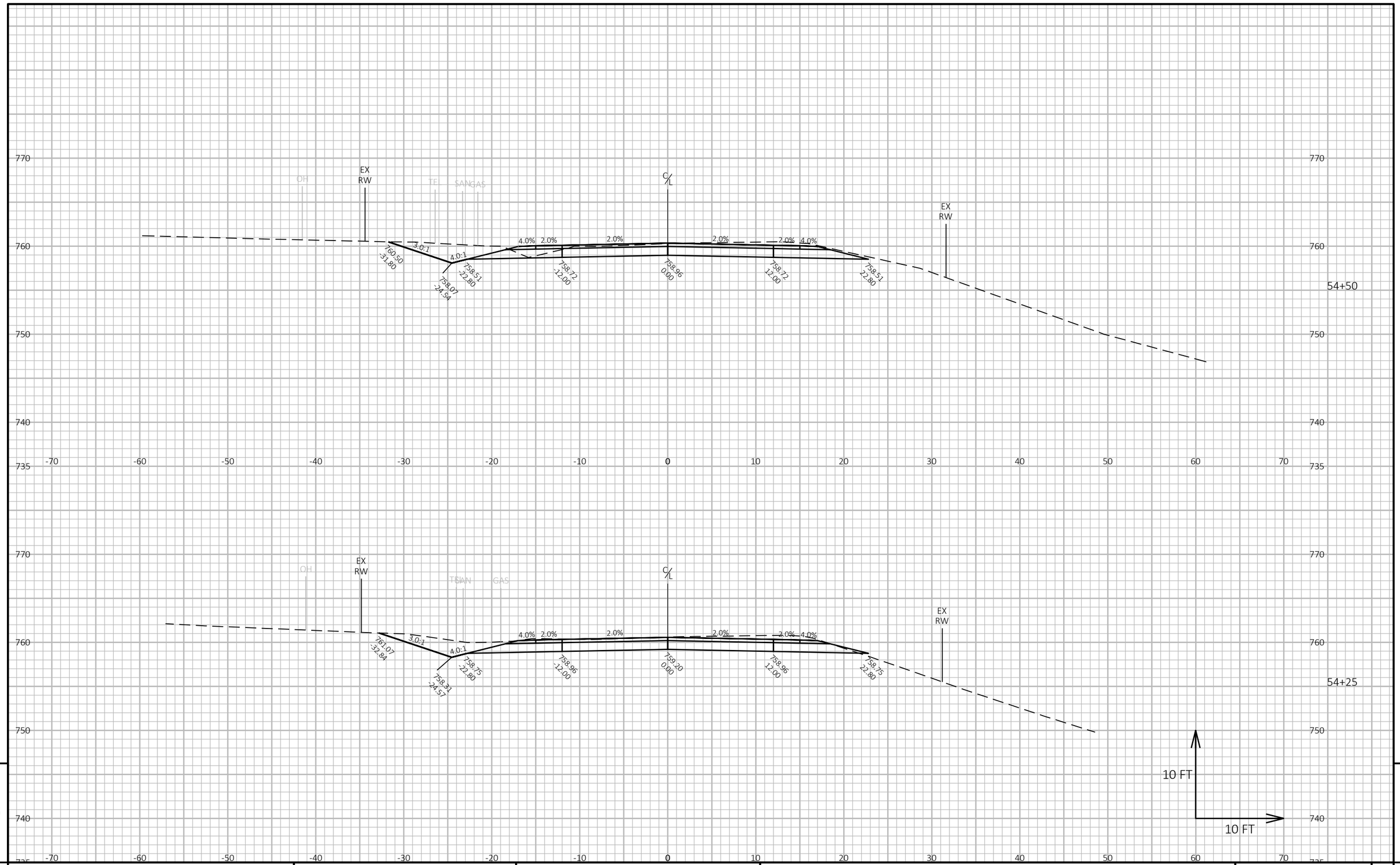

9

9

PROJECT NO: 6834-01-70	HWY: CTH H	COUNTY: WAUPACA	CROSS SECTIONS: CTH H	SHEET 147	E

FILE NAME : R:\2200\2288\2288015\68340100\SHEETS\090101-XS.DWG
LAYOUT NAME - 45

PLOT DATE : 9/11/2024 12:51 PM PLOT BY : ERIC HANDLER PLOT NAME : **PLOT SCALE :** 1 IN:10 FT HORZ. / 1 IN:10 FT VERT.

WISDOT/CADDS SHEET 49

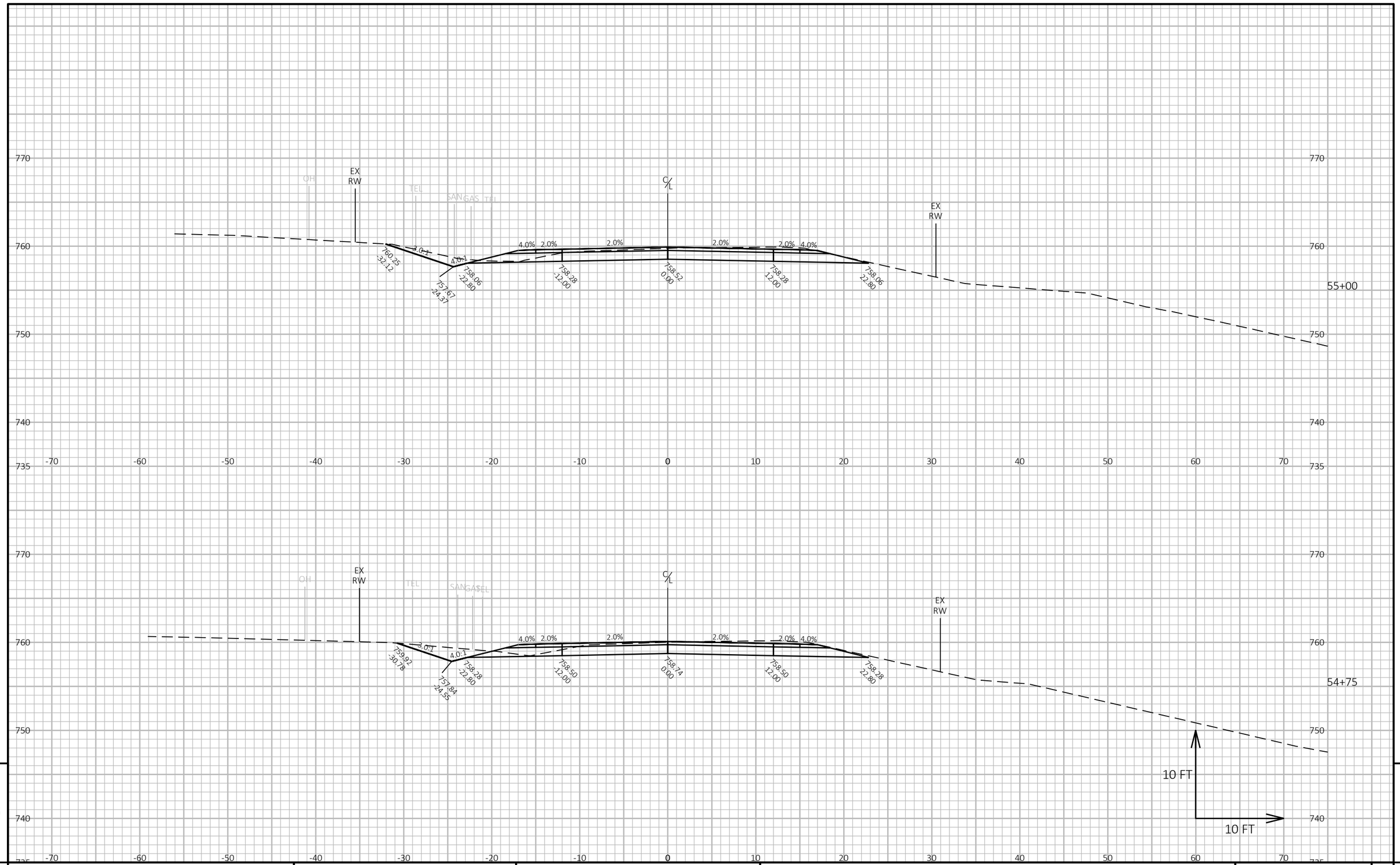

9

9

PROJECT NO: 6834-01-70	HWY: CTH H	COUNTY: WAUPACA	CROSS SECTIONS: CTH H	SHEET 148	E

FILE NAME : R:\2200\2288\2288015\68340100\SHEETS\090101-XS.DWG
LAYOUT NAME - 46

PLOT DATE : 9/11/2024 12:52 PM PLOT BY : ERIC HANDLER PLOT NAME : PLOT SCALE : 1 IN:10 FT HORZ. / 1 IN:10 FT VERT.

WISDOT/CADDS SHEET 49

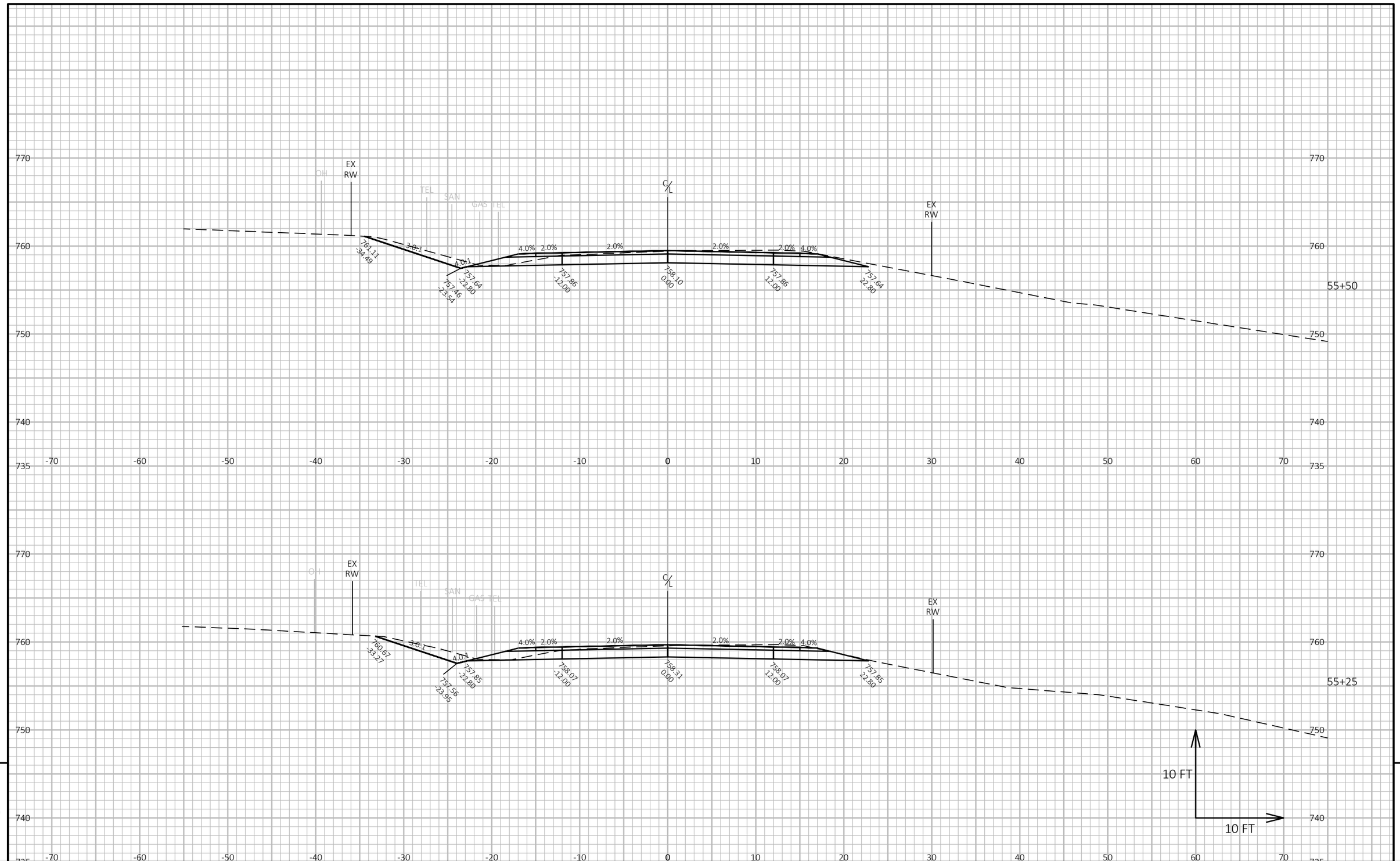

9

9

PROJECT NO: 6834-01-70	HWY: CTH H	COUNTY: WAUPACA	CROSS SECTIONS: CTH H	SHEET 149	E

FILE NAME : R:\2200\2288\2288015\68340100\SHEETS\090101-XS.DWG
LAYOUT NAME - 47

PLOT DATE : 9/11/2024 12:52 PM PLOT BY : ERIC HANDLER PLOT NAME : **PLOT SCALE :** 1 IN:10 FT HORZ. / 1 IN:10 FT VERT.

WISDOT/CADDS SHEET 49

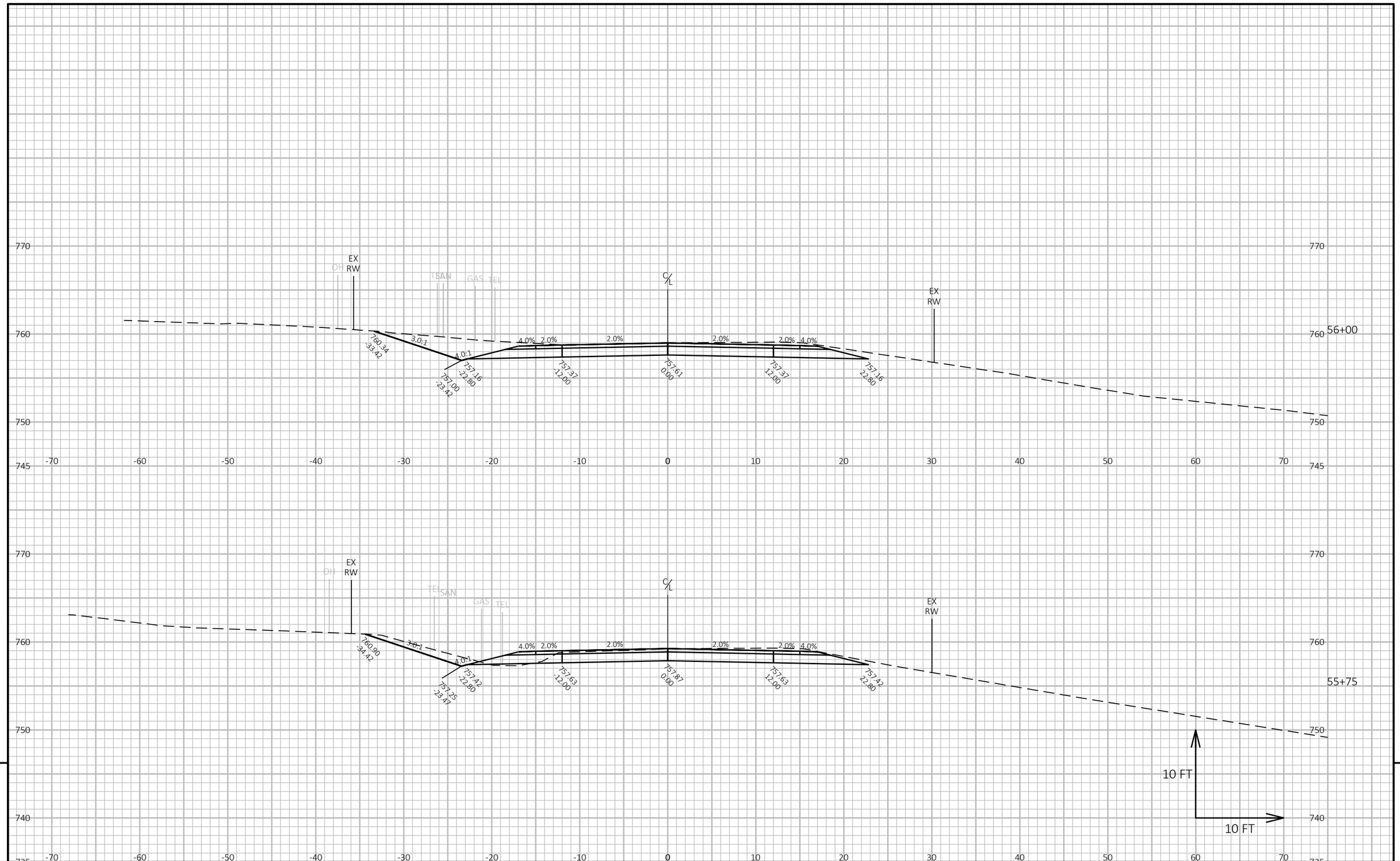

PROJECT NO: 6834-01-70	HWY: CTH H	COUNTY: WAUPACA	CROSS SECTIONS: CTH H	SHEET 150	E

FILE NAME : R:\2200\2288\2288015\68340100\SHEETS\090101-XS.DWG
LAYOUT NAME - 48

PLOT DATE : 9/11/2024 12:52 PM PLOT BY : ERIC HANDLER PLOT NAME : PLOT SCALE : 1 IN:10 FT HORZ. / 1 IN:10 FT VERT.

WISDOT/CADDS SHEET 49

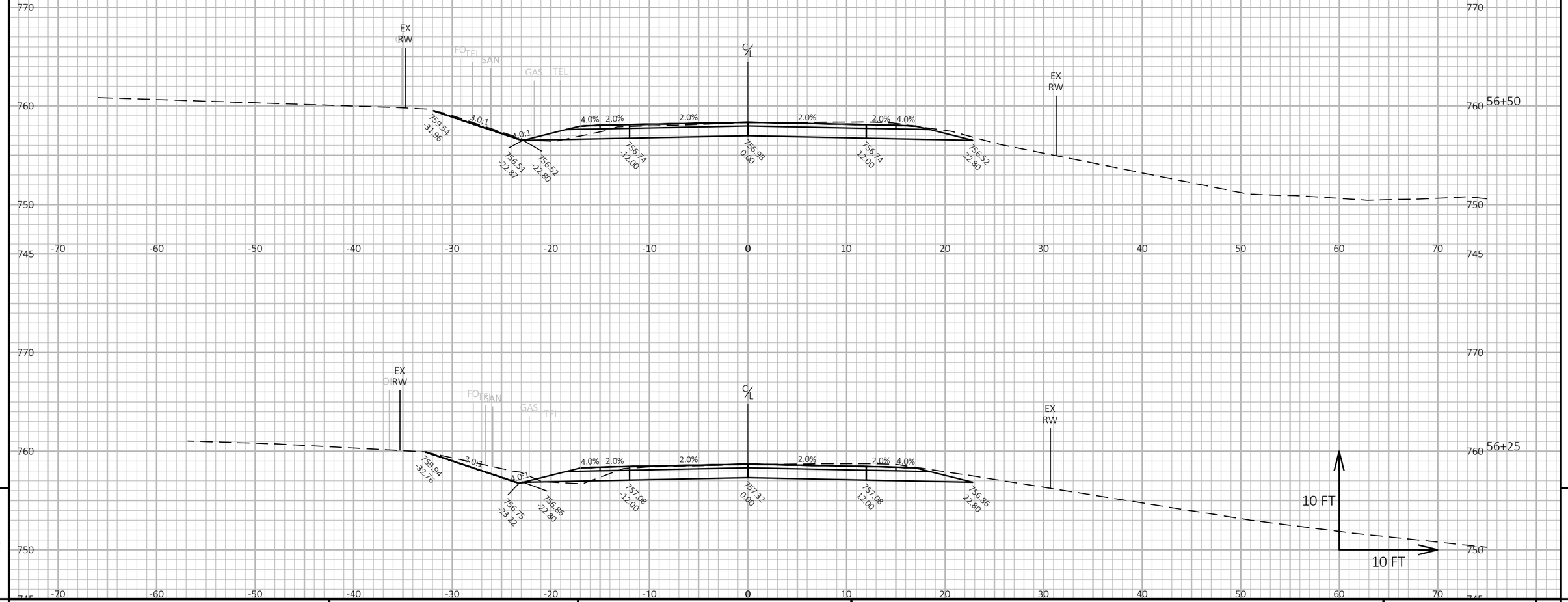

9

9

PROJECT NO: 6834-01-70	HWY: CTH H	COUNTY: WAUPACA	CROSS SECTIONS: CTH H	SHEET 151	E

FILE NAME : R:\2200\2288\2288015\68340100\SHEETS\090101-XS.DWG
LAYOUT NAME - 49

PLOT DATE : 9/11/2024 12:53 PM PLOT BY : ERIC HANDLER PLOT NAME : **PLOT SCALE :** 1 IN:10 FT HORZ. / 1 IN:10 FT VERT.

WISDOT/CADDS SHEET 49

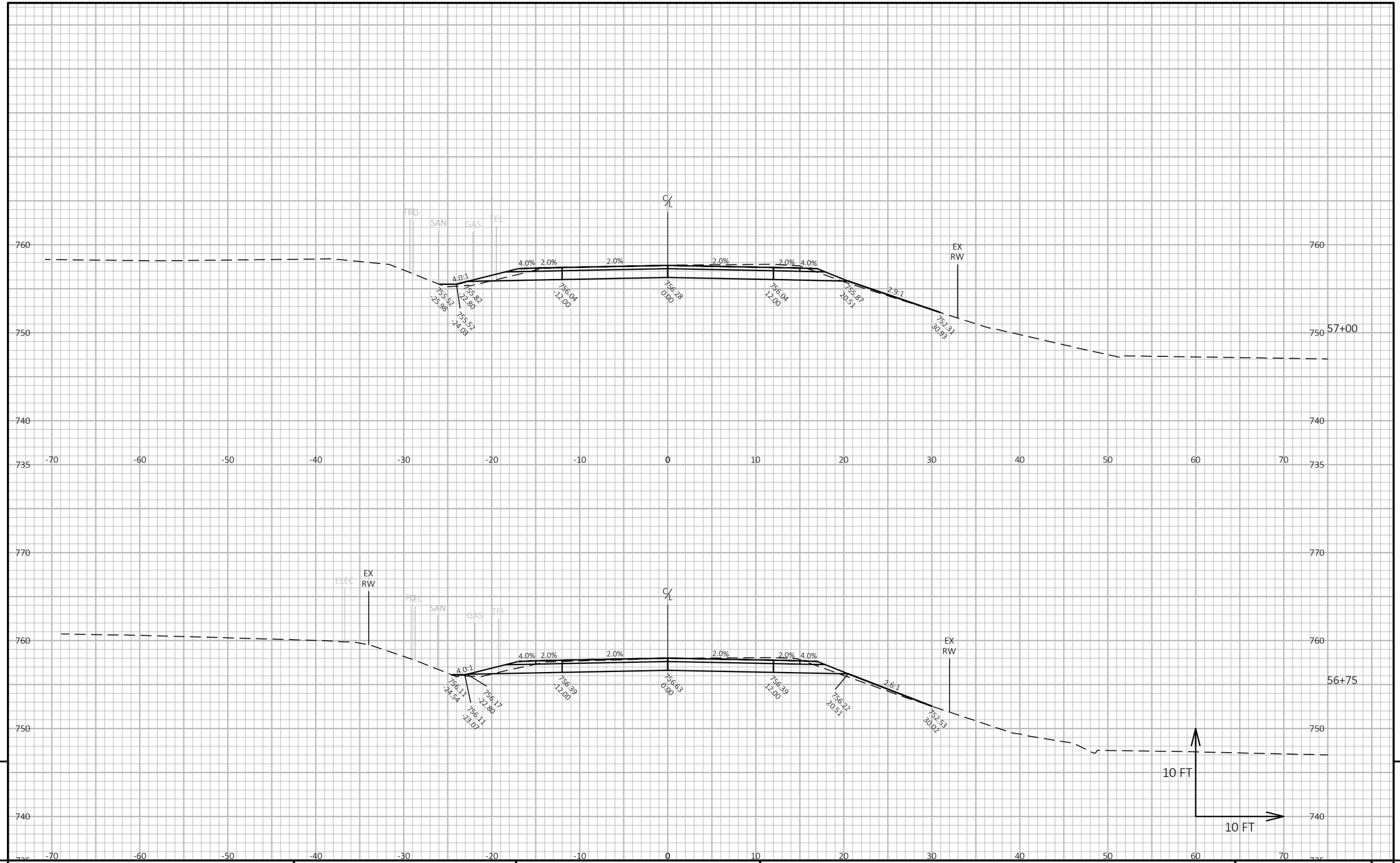

9

9

PROJECT NO: 6834-01-70	HWY: CTH H	COUNTY: WAUPACA	CROSS SECTIONS: CTH H	SHEET 152	E

FILE NAME : R:\2200\2288\2288015\68340100\SHEETS\090101-XS.DWG
LAYOUT NAME - 50

PLOT DATE : 9/11/2024 12:53 PM PLOT BY : ERIC HANDLER PLOT NAME : **PLOT SCALE :** 1 IN:10 FT HORZ. / 1 IN:10 FT VERT.

WISDOT/CADDS SHEET 49

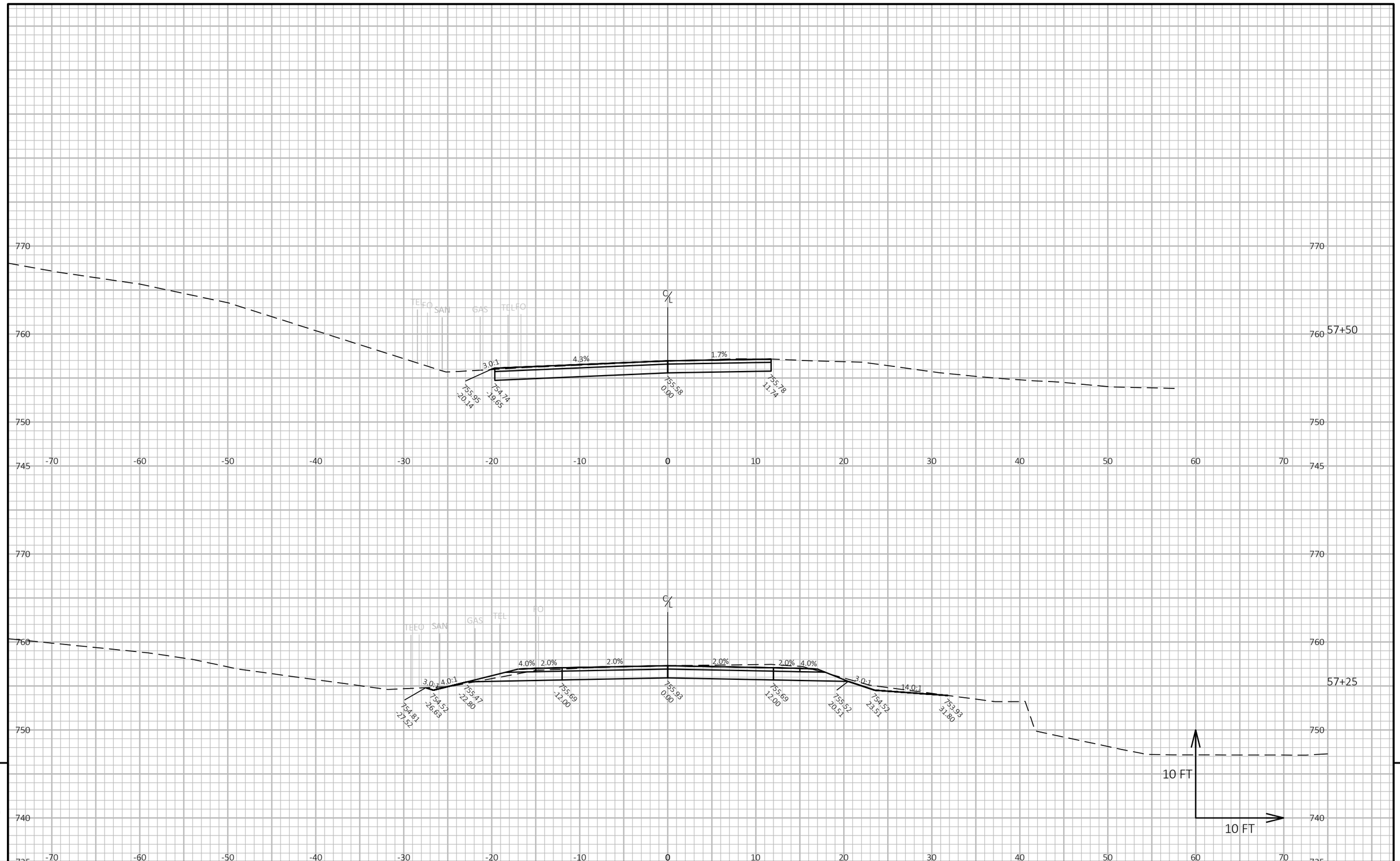

9

9

PROJECT NO: 6834-01-70	HWY: CTH H	COUNTY: WAUPACA	CROSS SECTIONS: CTH H	SHEET 153	E

FILE NAME : R:\2200\2288\2288015\68340100\SHEETS\090101-XS.DWG
LAYOUT NAME - 51

PLOT DATE : 9/11/2024 12:53 PM PLOT BY : ERIC HANDLER PLOT NAME : **PLOT SCALE :** 1 IN:10 FT HORZ. / 1 IN:10 FT VERT.

WISDOT/CADDS SHEET 49

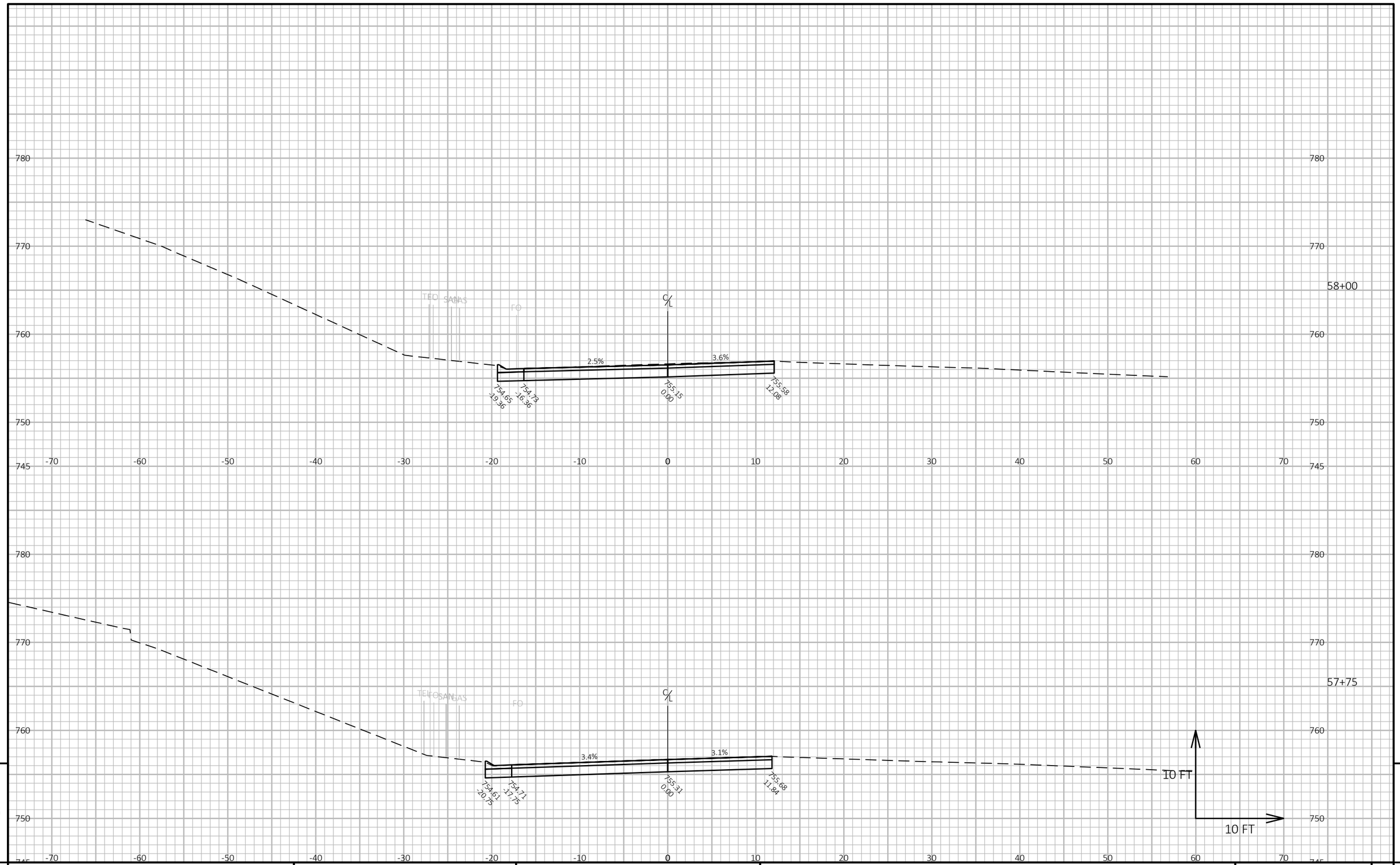

9

9

PROJECT NO: 6834-01-70	HWY: CTH H	COUNTY: WAUPACA	CROSS SECTIONS: CTH H	SHEET 154	E

FILE NAME : R:\2200\2288\2288015\68340100\SHEETS\090101-XS.DWG
LAYOUT NAME - 52

PLOT DATE : 9/11/2024 12:54 PM PLOT BY : ERIC HANDLER PLOT NAME : **PLOT SCALE :** 1 IN:10 FT HORZ. / 1 IN:10 FT VERT.

WISDOT/CADDS SHEET 49

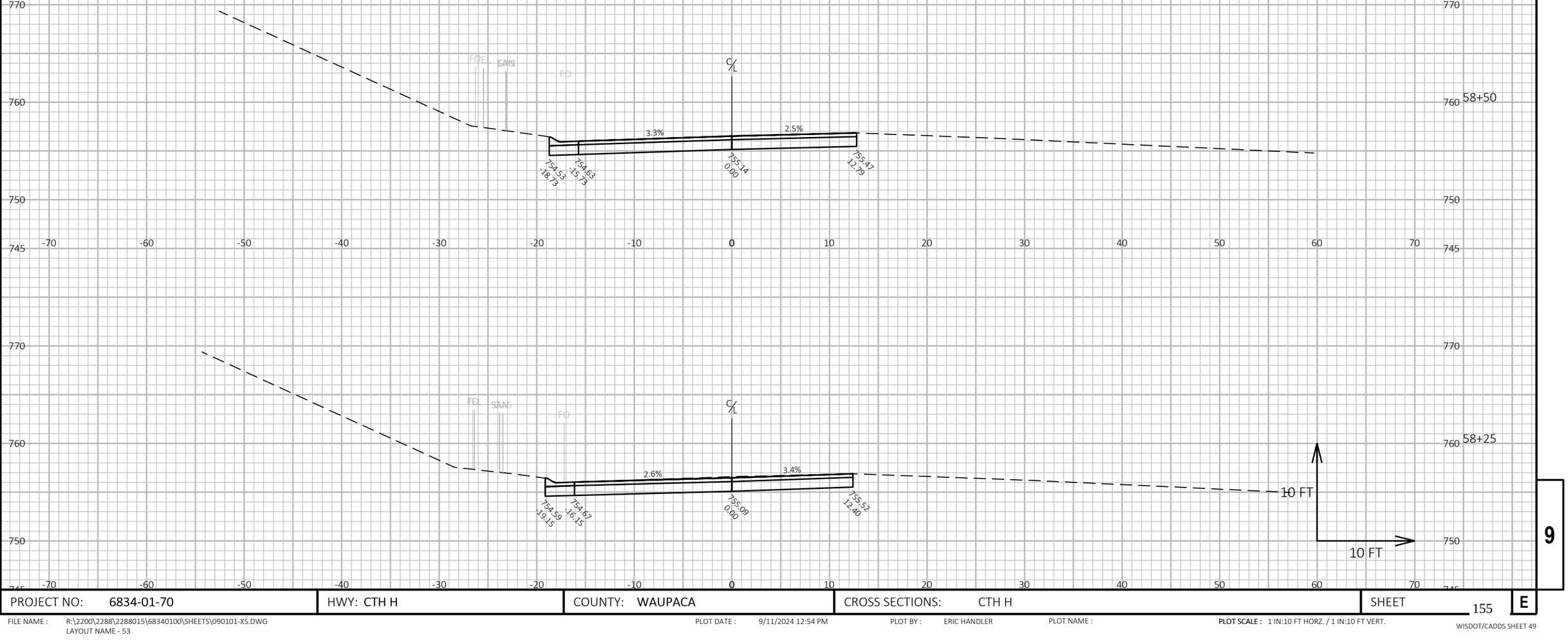

9

9

PROJECT NO: 6834-01-70	HWY: CTH H	COUNTY: WAUPACA	CROSS SECTIONS: CTH H	SHEET 155	E

FILE NAME : R:\2200\2288\2288015\68340100\SHEETS\090101-XS.DWG
LAYOUT NAME - 53

PLOT DATE : 9/11/2024 12:54 PM

PLOT BY : ERIC HANDLER

PLOT NAME :

PLOT SCALE : 1 IN:10 FT HORZ. / 1 IN:10 FT VERT.

WISDOT/CADDS SHEET 49

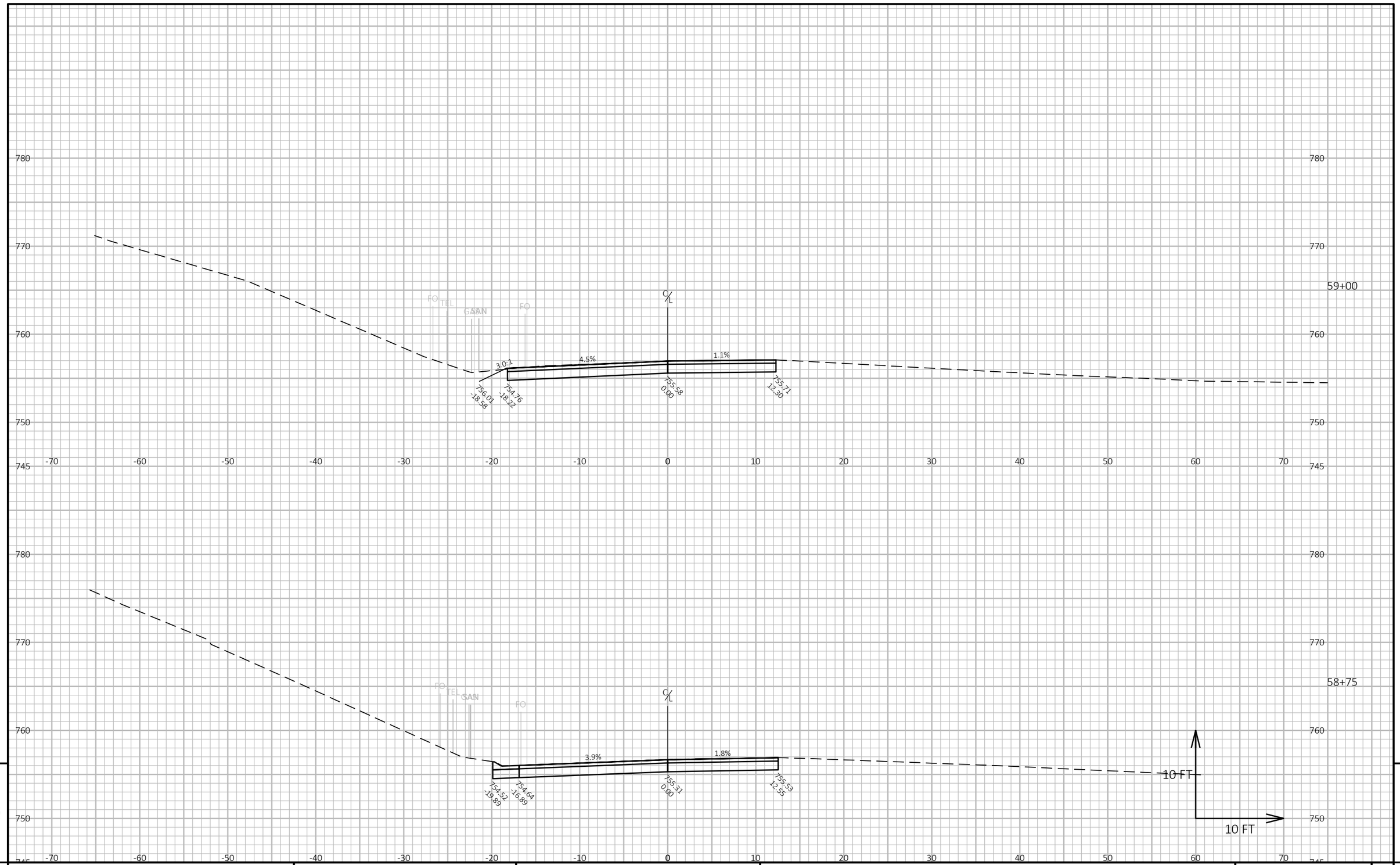

9

9

PROJECT NO: 6834-01-70	HWY: CTH H	COUNTY: WAUPACA	CROSS SECTIONS: CTH H	SHEET 156	E

FILE NAME : R:\2200\2288\2288015\68340100\SHEETS\090101-XS.DWG
LAYOUT NAME - 54

PLOT DATE : 9/11/2024 12:54 PM PLOT BY : ERIC HANDLER PLOT NAME : **PLOT SCALE :** 1 IN:10 FT HORZ. / 1 IN:10 FT VERT.

WISDOT/CADDS SHEET 49

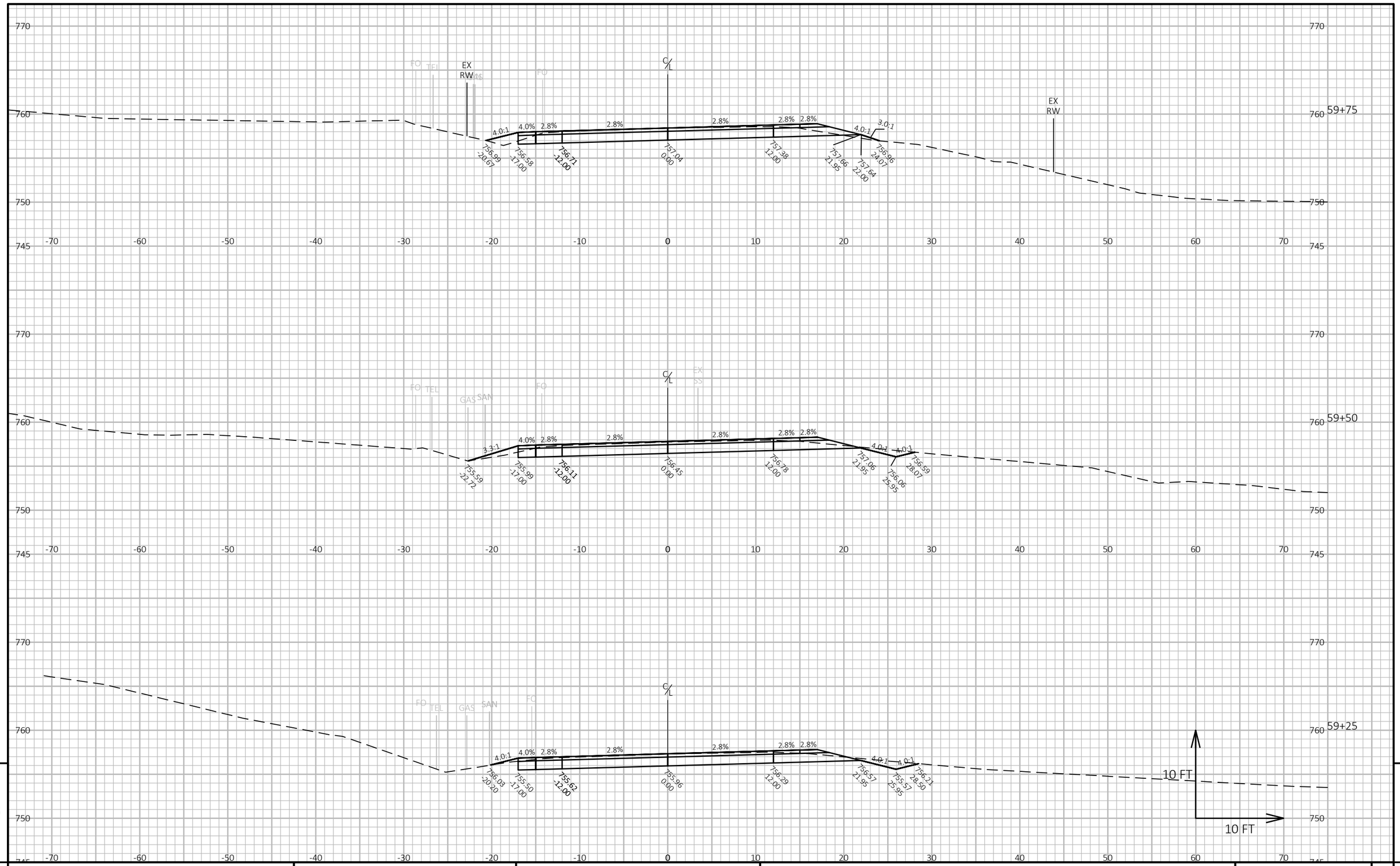

9

9

PROJECT NO: 6834-01-70	HWY: CTH H	COUNTY: WAUPACA	CROSS SECTIONS: CTH H	SHEET 157	E

FILE NAME : R:\2200\2288\2288015\68340100\SHEETS\090101-XS.DWG
LAYOUT NAME - 55

PLOT DATE : 9/11/2024 12:54 PM PLOT BY : ERIC HANDLER PLOT NAME : **PLOT SCALE :** 1 IN:10 FT HORZ. / 1 IN:10 FT VERT.

WISDOT/CADDS SHEET 49

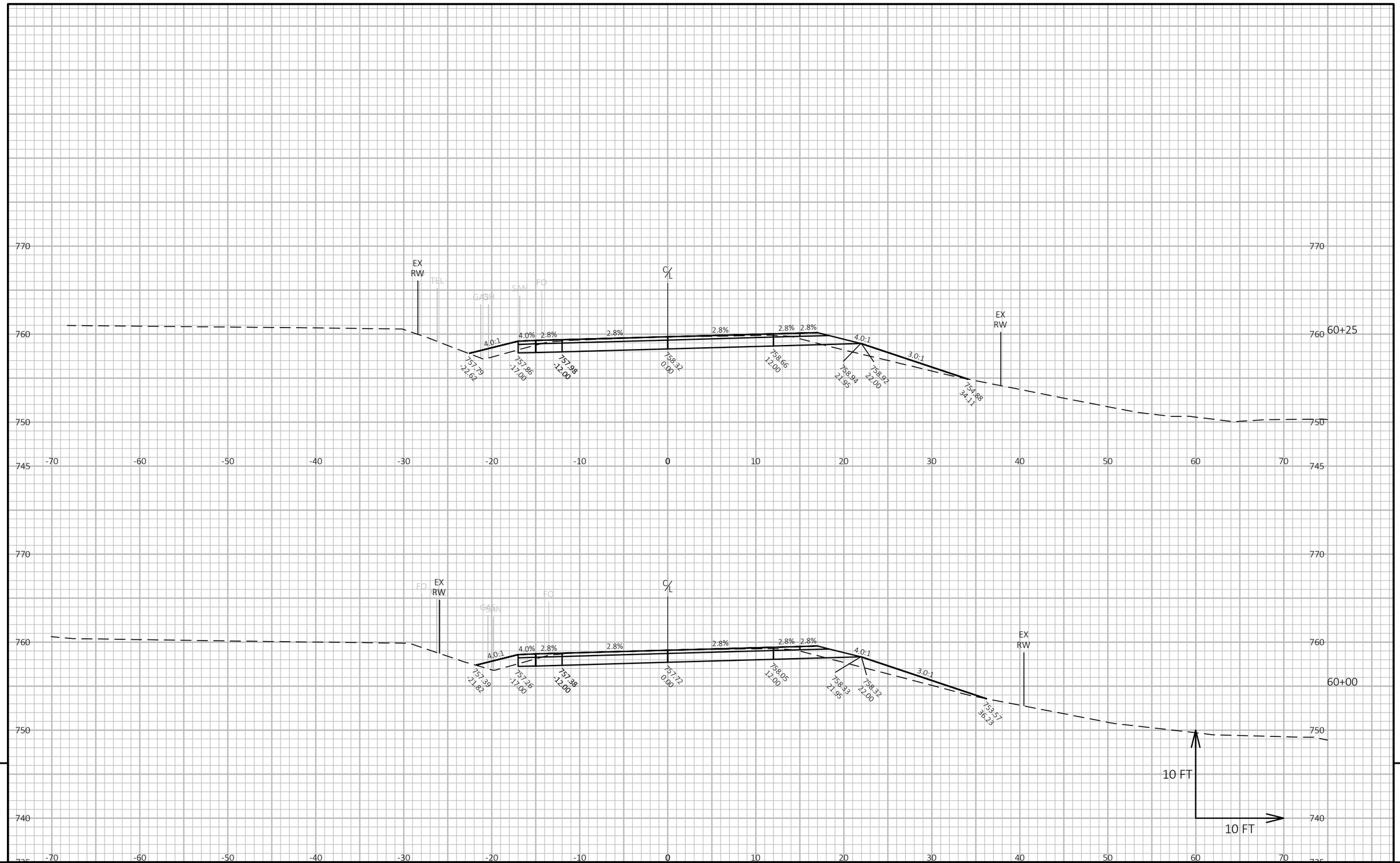

9

9

PROJECT NO: 6834-01-70	HWY: CTH H	COUNTY: WAUPACA	CROSS SECTIONS: CTH H	SHEET 158	E

FILE NAME : R:\2200\2288\2288015\68340100\SHEETS\090101-XS.DWG
LAYOUT NAME - 56

PLOT DATE : 9/11/2024 12:55 PM

PLOT BY : ERIC HANDLER

PLOT NAME :

PLOT SCALE : 1 IN:10 FT HORZ. / 1 IN:10 FT VERT.

WISDOT/CADDS SHEET 49

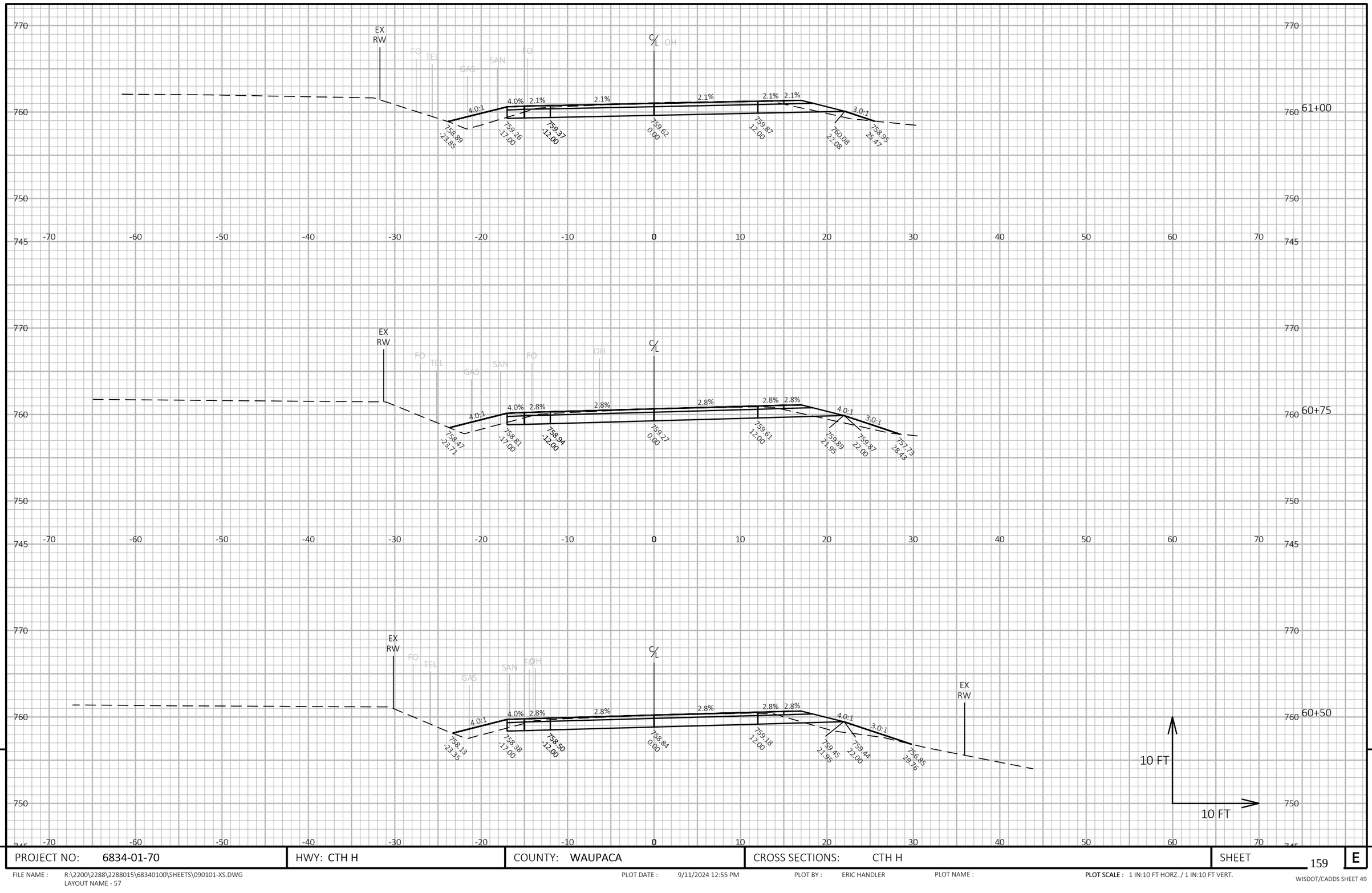

9

9

PROJECT NO: 6834-01-70	HWY: CTH H	COUNTY: WAUPACA	CROSS SECTIONS: CTH H	SHEET 159	E

FILE NAME : R:\2200\2288\2288015\68340100\SHEETS\090101-XS.DWG
LAYOUT NAME - 57

PLOT DATE : 9/11/2024 12:55 PM

PLOT BY : ERIC HANDLER

PLOT NAME :

PLOT SCALE : 1 IN:10 FT HORZ. / 1 IN:10 FT VERT.

WISDOT/CADDS SHEET 49

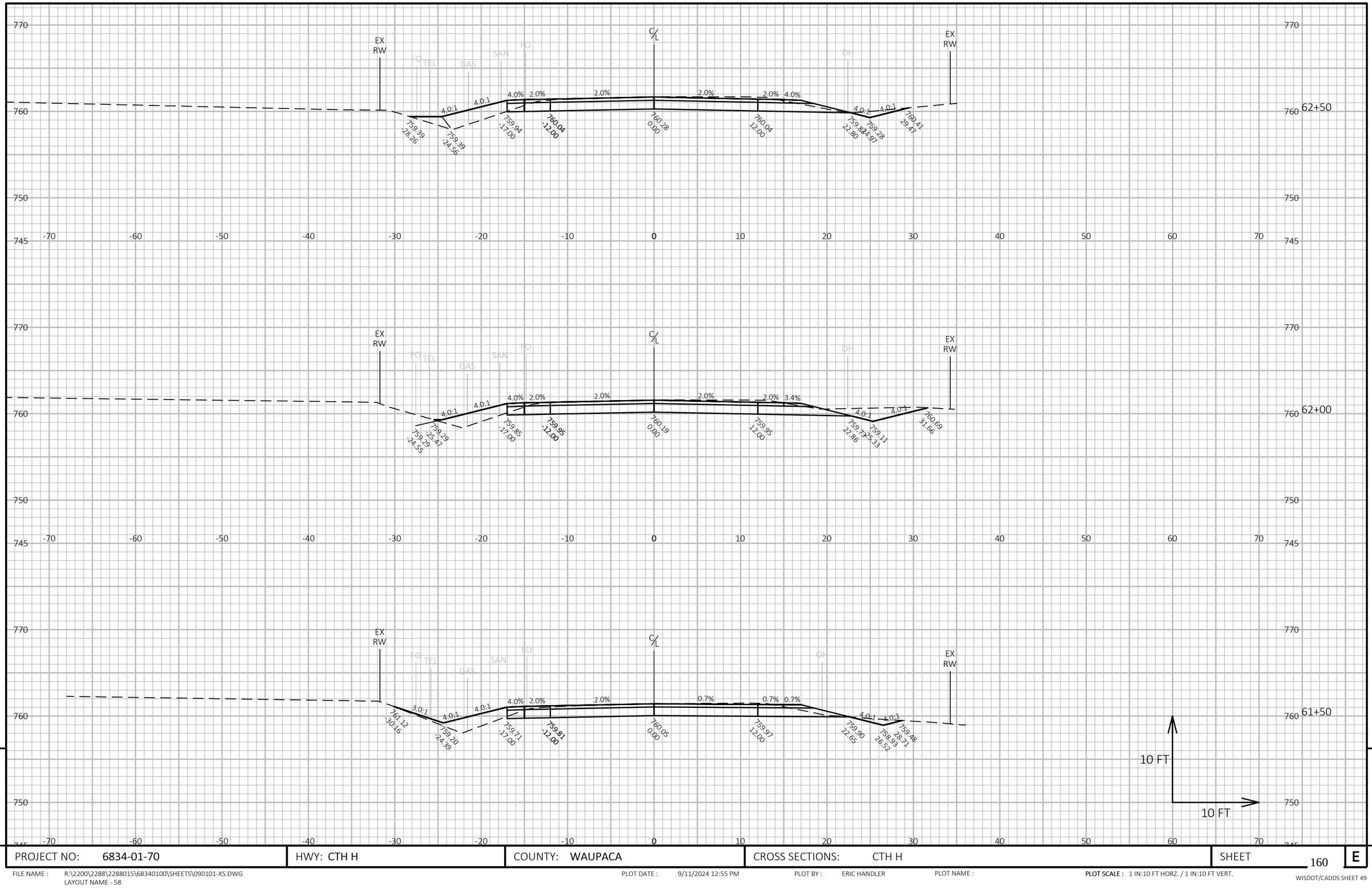

PROJECT NO: 6834-01-70	HWY: CTH H	COUNTY: WAUPACA	CROSS SECTIONS: CTH H	SHEET 160 E

FILE NAME : R:\2200\2288\2288015\68340100\SHEETS\090101-XS.DWG
LAYOUT NAME - 58

PLOT DATE : 9/11/2024 12:55 PM PLOT BY : ERIC HANDLER PLOT NAME : PLOT SCALE : 1 IN:10 FT HORZ. / 1 IN:10 FT VERT.

WISDOT/CADDS SHEET 49

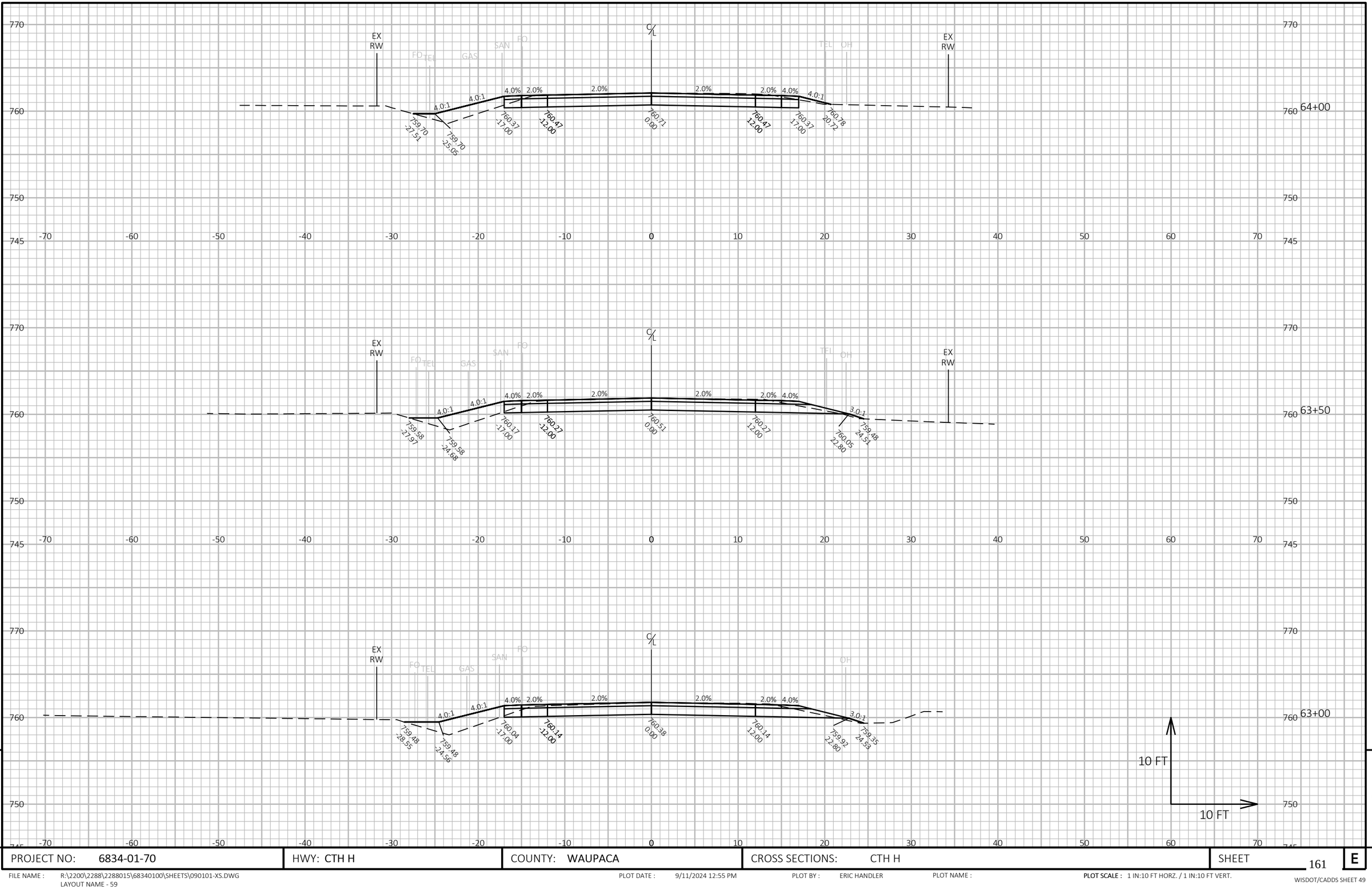

9

9

PROJECT NO: 6834-01-70	HWY: CTH H	COUNTY: WAUPACA	CROSS SECTIONS: CTH H	SHEET 161	E

FILE NAME : R:\2200\2288\2288015\68340100\SHEETS\090101-XS.DWG
LAYOUT NAME - 59

PLOT DATE : 9/11/2024 12:55 PM PLOT BY : ERIC HANDLER PLOT NAME : **PLOT SCALE :** 1 IN:10 FT HORZ. / 1 IN:10 FT VERT.

WISDOT/CADDS SHEET 49

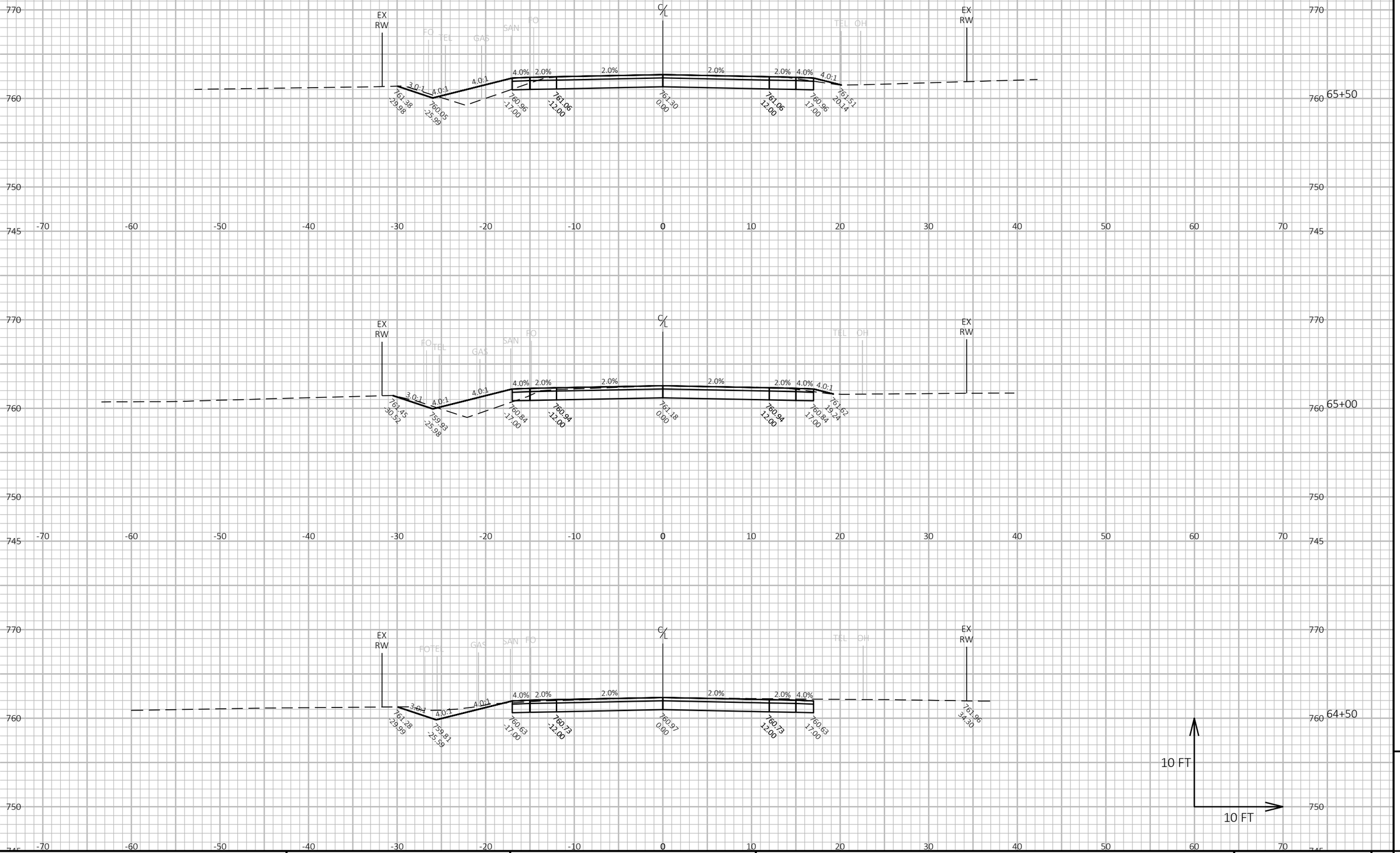

9

9

PROJECT NO: 6834-01-70	HWY: CTH H	COUNTY: WAUPACA	CROSS SECTIONS: CTH H	SHEET 162	E

FILE NAME : R:\2200\2288\2288015\68340100\SHEETS\090101-XS.DWG
LAYOUT NAME - 60

PLOT DATE : 9/11/2024 12:56 PM

PLOT BY : ERIC HANDLER

PLOT NAME :

PLOT SCALE : 1 IN:10 FT HORZ. / 1 IN:10 FT VERT.

WISDOT/CADDS SHEET 49

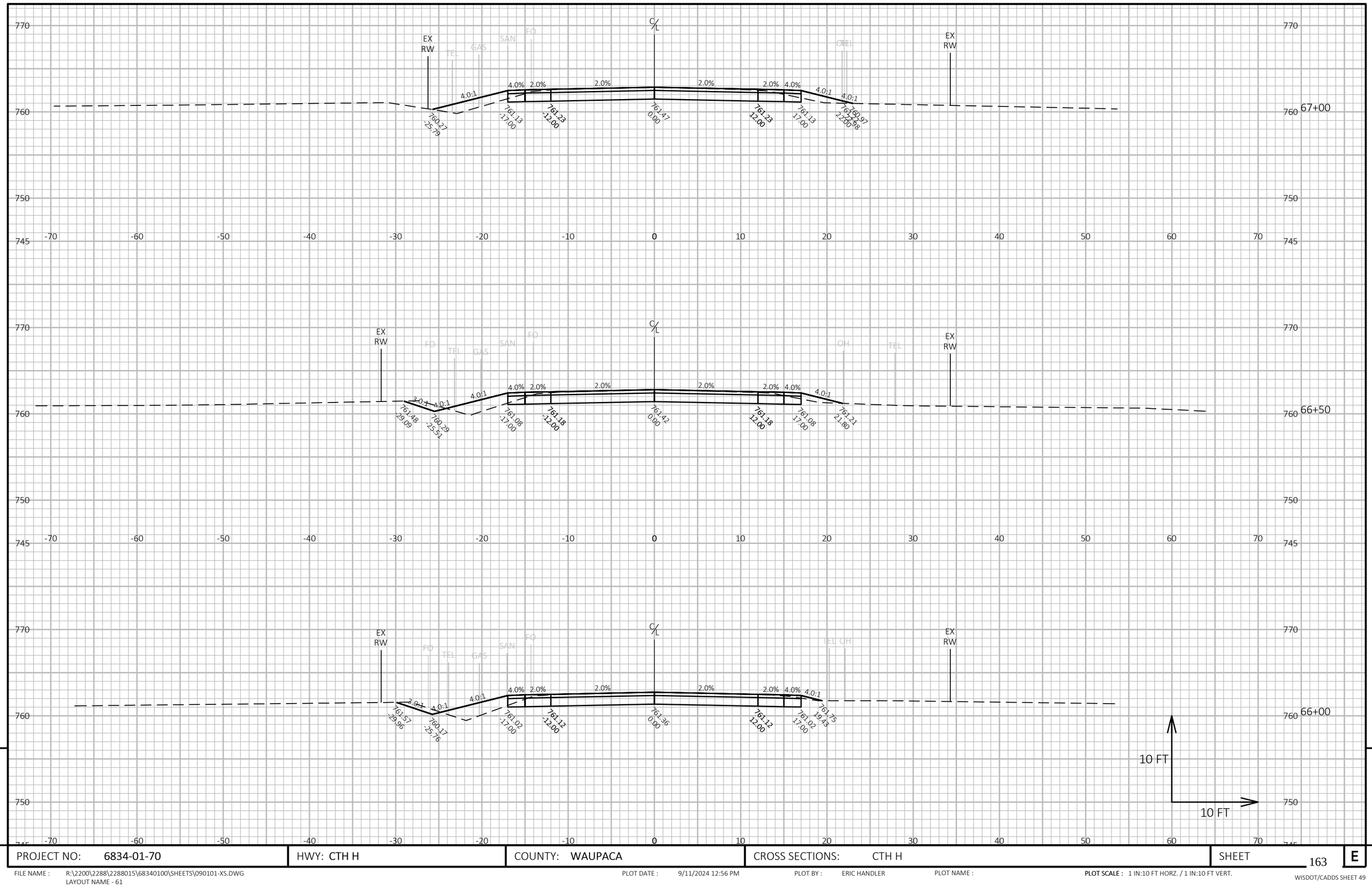

9

9

PROJECT NO: 6834-01-70	HWY: CTH H	COUNTY: WAUPACA	CROSS SECTIONS: CTH H	SHEET 163	E

FILE NAME : R:\2200\2288\2288015\68340100\SHEETS\090101-XS.DWG
LAYOUT NAME - 61

PLOT DATE : 9/11/2024 12:56 PM PLOT BY : ERIC HANDLER PLOT NAME : **PLOT SCALE :** 1 IN:10 FT HORZ. / 1 IN:10 FT VERT.

WISDOT/CADDS SHEET 49

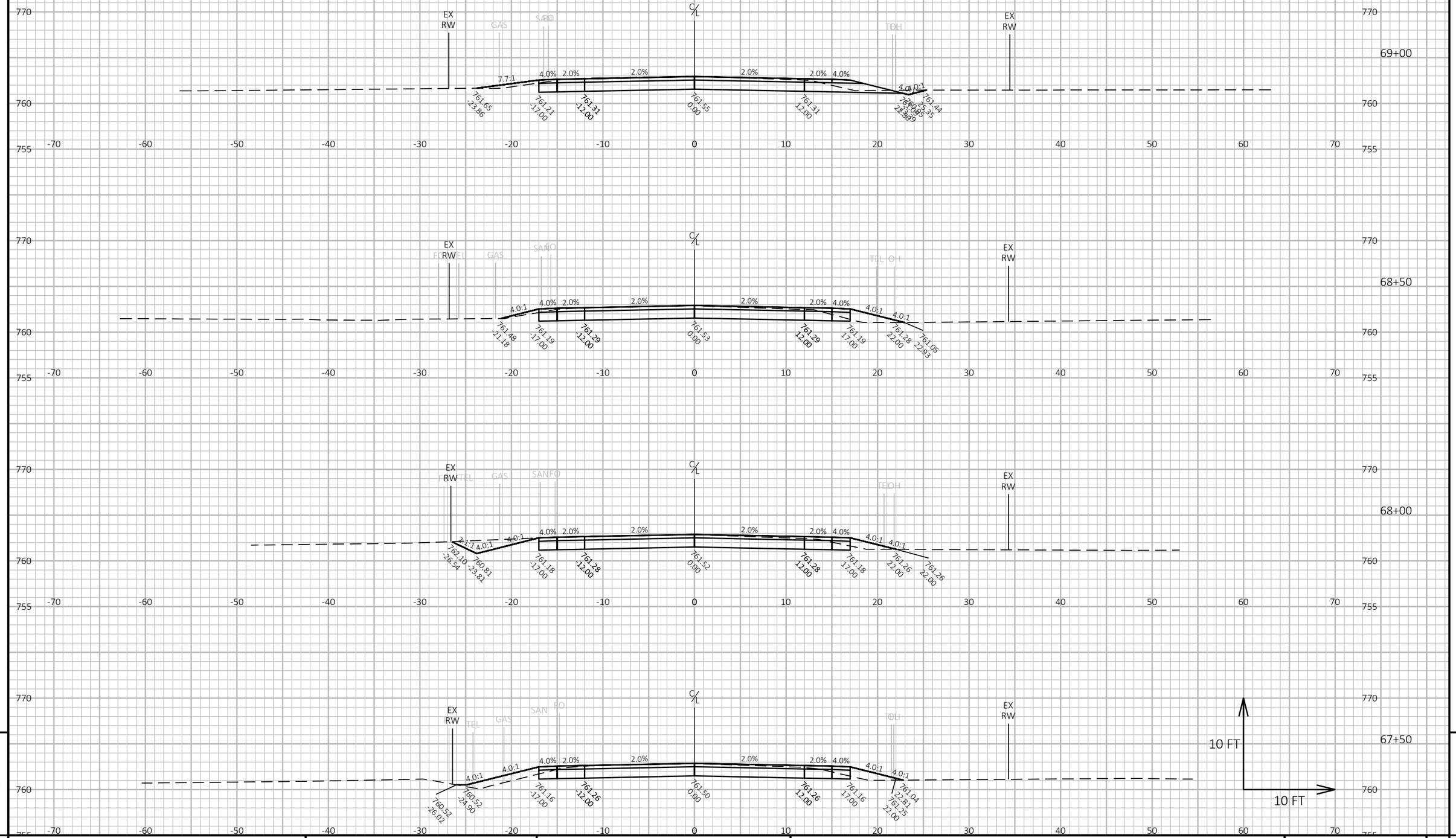

9

9

PROJECT NO: 6834-01-70	HWY: CTH H	COUNTY: WAUPACA	CROSS SECTIONS: CTH H	SHEET 164	E

FILE NAME : R:\2200\2288\2288015\68340100\SHEETS\090101-XS.DWG
LAYOUT NAME - 62

PLOT DATE : 9/11/2024 12:56 PM PLOT BY : ERIC HANDLER PLOT NAME : **PLOT SCALE :** 1 IN:10 FT HORZ. / 1 IN:10 FT VERT.

WISDOT/CADDS SHEET 49

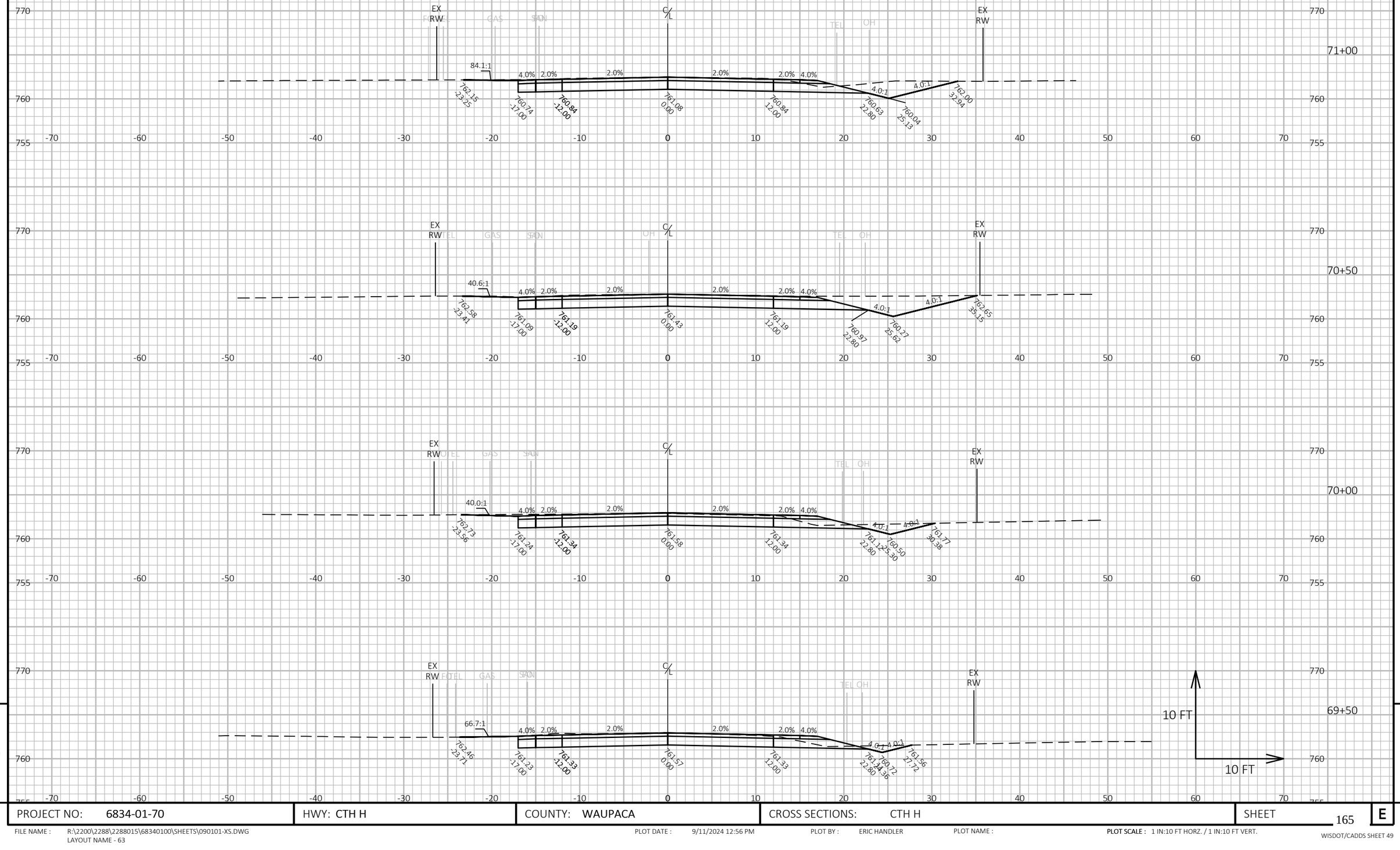

9

9

PROJECT NO: 6834-01-70	HWY: CTH H	COUNTY: WAUPACA	CROSS SECTIONS: CTH H	SHEET 165	E

FILE NAME : R:\2200\2288\2288015\68340100\SHEETS\090101-XS.DWG
LAYOUT NAME - 63

PLOT DATE : 9/11/2024 12:56 PM

PLOT BY : ERIC HANDLER

PLOT NAME :

PLOT SCALE : 1 IN:10 FT HORZ. / 1 IN:10 FT VERT.

WISDOT/CADDS SHEET 49

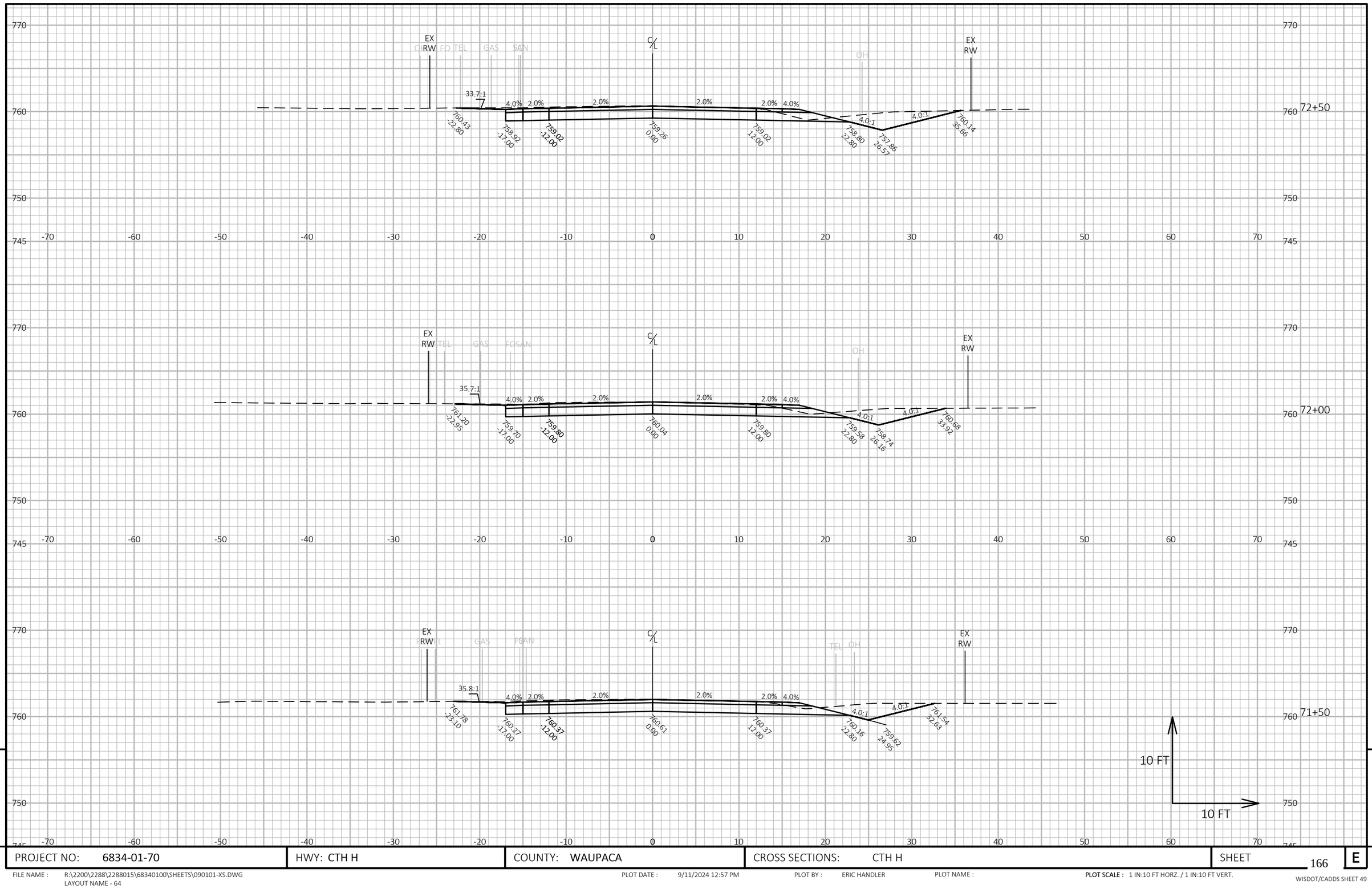

9

9

PROJECT NO: 6834-01-70	HWY: CTH H	COUNTY: WAUPACA	CROSS SECTIONS: CTH H	SHEET 166	E

FILE NAME : R:\2200\2288\2288015\68340100\SHEETS\090101-XS.DWG
LAYOUT NAME - 64

PLOT DATE : 9/11/2024 12:57 PM PLOT BY : ERIC HANDLER PLOT NAME : PLOT SCALE : 1 IN:10 FT HORZ. / 1 IN:10 FT VERT.

WISDOT/CADDS SHEET 49

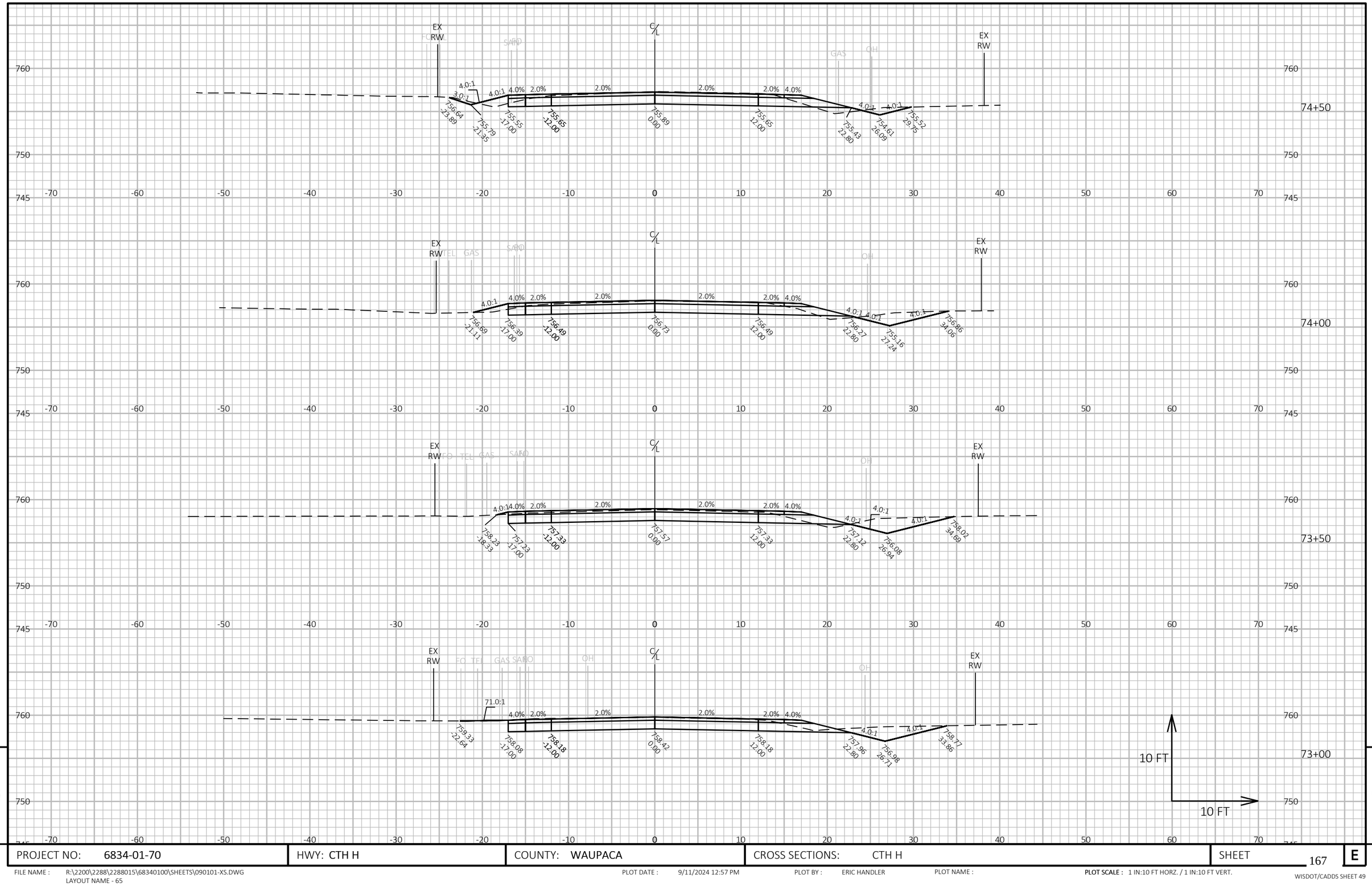

9

9

PROJECT NO: 6834-01-70	HWY: CTH H	COUNTY: WAUPACA	CROSS SECTIONS: CTH H	SHEET 167	E

FILE NAME : R:\2200\2288\2288015\68340100\SHEETS\090101-XS.DWG
LAYOUT NAME - 65

PLOT DATE : 9/11/2024 12:57 PM PLOT BY : ERIC HANDLER PLOT NAME :

PLOT SCALE : 1 IN:10 FT HORZ. / 1 IN:10 FT VERT.

WISDOT/CADDS SHEET 49

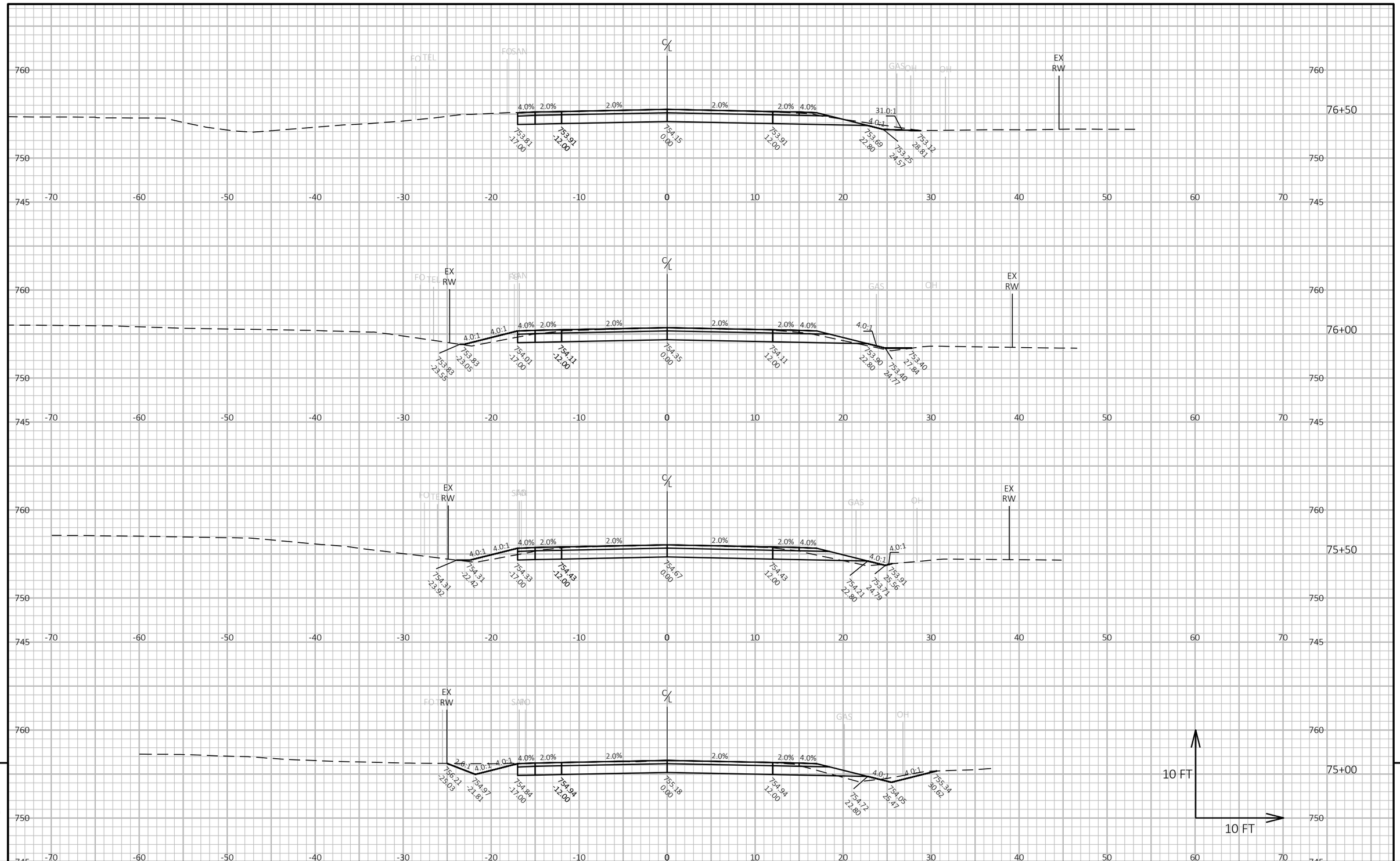

9

9

PROJECT NO: 6834-01-70	HWY: CTH H	COUNTY: WAUPACA	CROSS SECTIONS: CTH H	SHEET 168	E

FILE NAME : R:\2200\2288\2288015\68340100\SHEETS\090101-XS.DWG
LAYOUT NAME - 66

PLOT DATE : 9/11/2024 12:57 PM PLOT BY : ERIC HANDLER PLOT NAME : **PLOT SCALE :** 1 IN:10 FT HORZ. / 1 IN:10 FT VERT.

WISDOT/CADDS SHEET 49

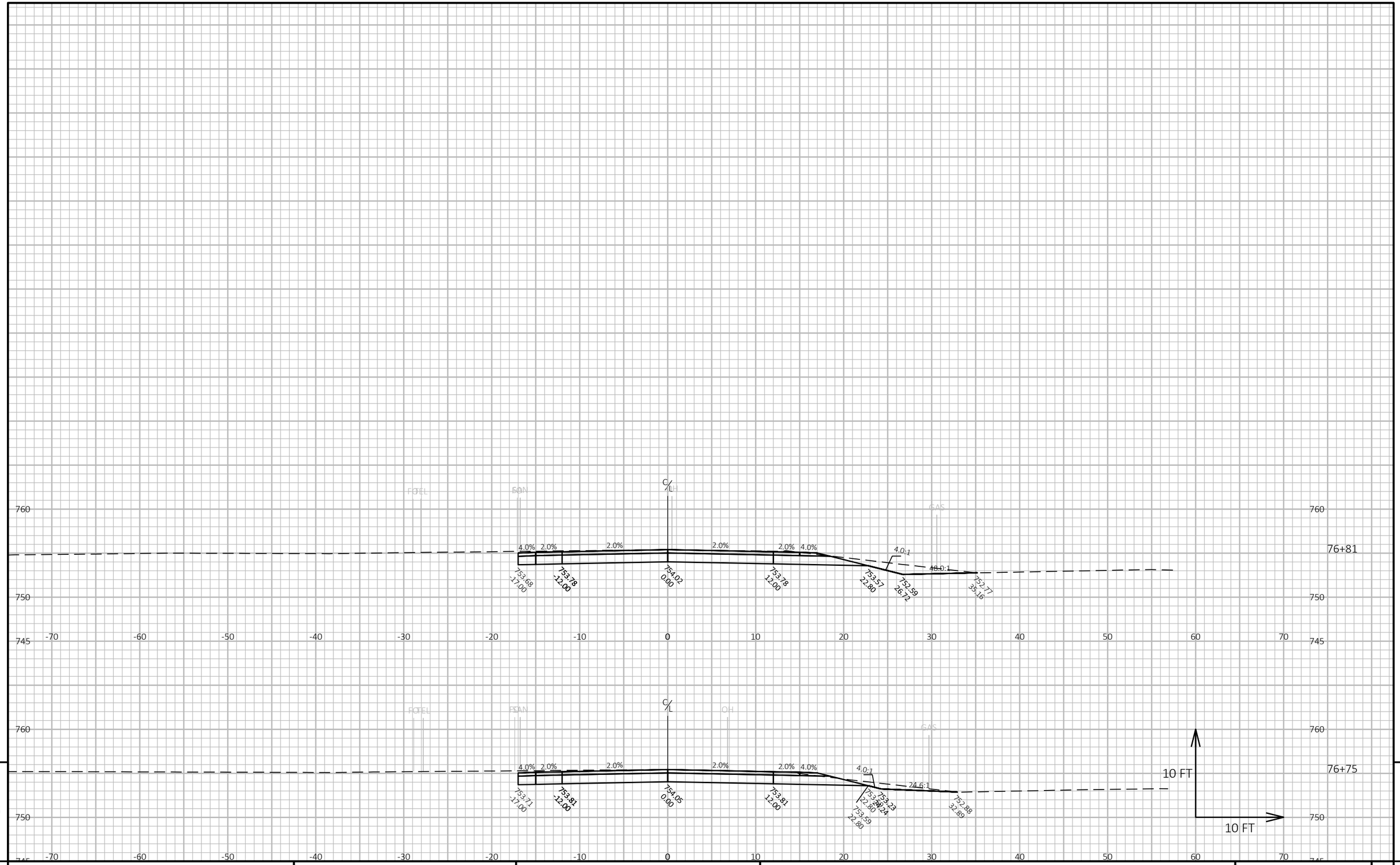

9

9

PROJECT NO: 6834-01-70	HWY: CTH H	COUNTY: WAUPACA	CROSS SECTIONS: CTH H	SHEET 169	E

FILE NAME : R:\2200\2288\2288015\68340100\SHEETS\090101-XS.DWG
LAYOUT NAME - 67

PLOT DATE : 9/11/2024 12:57 PM PLOT BY : ERIC HANDLER PLOT NAME : PLOT SCALE : 1 IN:10 FT HORZ. / 1 IN:10 FT VERT.

WISDOT/CADDS SHEET 49

Wisconsin Department of Transportation

Dedicated people creating transportation solutions
through innovation and exceptional service.

http://www.dot.wisconsin.gov