EAU

PROJECT ID: 7224-00-73

W/ITH: N/A

COUNTY: BUFFALO

48

NOVEMBER 2024

ORDER OF SHEETS

TOTAL SHEETS = 88

STATE PROJECT	FEDERAL PROJECT	
	PROJECT	CONTRACT
7224-00-73	WISC 2025085	1

STATE OF WISCONSIN
DEPARTMENT OF TRANSPORTATION

PLAN OF PROPOSED IMPROVEMENT

T BUFFALO, WINONA CONNECTOR

T BUFFALO PARK - GREAT RIVER ST TRAIL

NON-HWY
BUFFALO COUNTY

STATE PROJECT NUMBER
7224-00-73

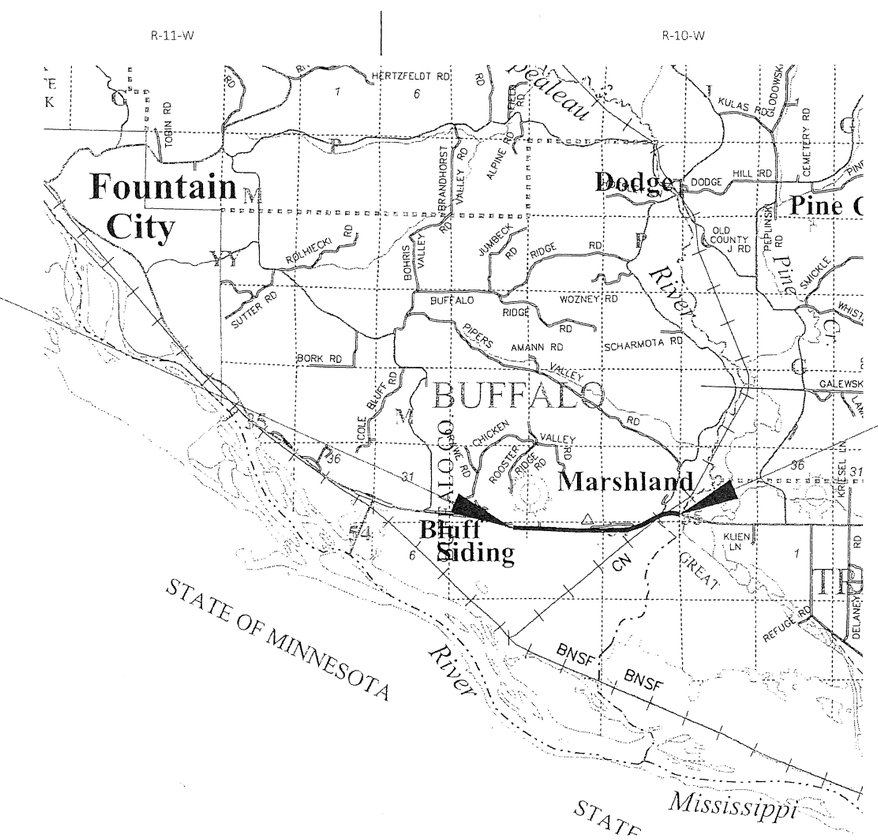

DESIGN DESIGNATION 7224-00-03

A.A.D.T.	2024	=	N/A
A.A.D.T.	2044	=	N/A
D.H.V.		=	N/A
D.D.		=	N/A
T.		=	N/A
DESIGN SPEED		=	20 MPH
ESALS		=	N/A

CONVENTIONAL SYMBOLS

PLAN
- CORPORATE LIMITS
- PROPERTY LINE
- LOT LINE
- LIMITED HIGHWAY EASEMENT
- EXISTING RIGHT OF WAY
- PROPOSED OR NEW R/W LINE
- SLOPE INTERCEPT
- REFERENCE LINE (300FT)
- EXISTING CULVERT
- PROPOSED CULVERT (Box or Pipe)
- COMBUSTIBLE FLUIDS (CAUTION)
- MARSH AREA
- WOODED OR SHRUB AREA

PROFILE
- GRADE LINE
- ORIGINAL GROUND
- MARSH OR ROCK PROFILE (To be noted as such) (ROCK)
- SPECIAL DITCH (LABEL)
- GRADE ELEVATION (95.36)
- CULVERT (Profile View)

UTILITIES
- ELECTRIC (E)
- FIBER OPTIC (FO)
- GAS (G)
- SANITARY SEWER (SAN)
- STORM SEWER (SS)
- TELEPHONE (T)
- WATER (W)
- UTILITY PEDESTAL
- POWER POLE
- TELEPHONE POLE

LAYOUT
SCALE 0 — 2 MI

TOTAL NET LENGTH OF CENTERLINE = 2.303 MI

HORIZONTAL POSITIONS SHOWN ON THIS PLAN ARE WISCONSIN COORDINATE REFERENCE SYSTEM (WISCRS), BUFFALO COUNTY, NAD83 (2011), IN U.S. SURVEY FEET. POSITIONS SHOWN ARE GRID COORDINATES, GRID BEARINGS, AND GRID DISTANCES. GRID DISTANCES ARE THE SAME AS GROUND DISTANCES.

ELEVATIONS ARE REFERENCED TO NAVD 88 (2012). GPS DERIVED ELEVATIONS ARE BASED ON GEOID 12A

ACCEPTED FOR
BUFFALO COUNTY

Date 8/6/24 (Signature and Title of Official)

ORIGINAL PLANS PREPARED BY

SEH
Building a Better World for All of Us™
Short Elliott Hendrickson Inc.
329 Jay Street, Suite 301
La Crosse, WI 54601-4007
608.782.3161 main | 888.908.8166 fax
www.sehinc.com

WISCONSIN
ALEIGHA J. BURG
45000-6
BROWNSVILLE
MN
PROFESSIONAL ENGINEER

8/6/2024 (Date) (Signature)

STATE OF WISCONSIN
DEPARTMENT OF TRANSPORTATION

PREPARED BY

Surveyor	SEH
Designer	SEH
Project Manager	TOU YANG
Regional Examiner	WISDOT NW REGION
Regional Supervisor	TOU YANG

APPROVED FOR THE DEPARTMENT
DATE: 8/12/2024 (Signature)

E

GERNEAL NOTES

WHEN THE QUANTITY OF BASE AGGREGATE OR HMA PAVEMENT IS MEASURED OF PAYMENT BY THE TON OR CUBIC YARD, THE DEPTH OR THICKNESS OF THE LAYER SHOWN ON THE PLAN IS APPROXIMATE AND THE ACTUAL THICKNESS WILL DEPEND ON THE DISTRIBUTION OF THE MATERIAL AS DIRECTED BY THE ENGINEER

THE LOCATION OF EXISTING AND PROPOSED UTILITY INSTALLATIONS AS SHOWN ON THE PLAN IS APPROXIMATE. THERE MAY BE OTHER UTILITY INSTALLATION WITHIN THE PROJECT AREA THAT ARE NOT SHOWN.

CURVE DATA IS BASED ON THE ARC DEFINITION.

BEARING SHOWN ON THE PLANS ARE PROJECTED BEARINGS TO THE NEAREST SECOND.

THE LOCATION OF ALL DRIVEWAYS WILL BE DETERMINED BY THE ENGINEER.

GRADE TO MATCH PROPOSED CROSS SLOPE AND SUPER ELEVATION.

BEARING SHOWN ON THE PLAN ARE REFERENCED TO THE EXISTING ROADWAY CENTERLINE ARE ARE ASSUMED.

NO TREES OR SHRUBS ARE TO BE REMOVED WITHOUT THE APPROVAL OF THE ENGINEER.

WETLANDS, WATERWAYS, AND OTHER ENVIRONMENTALLY SENSITIVE AREAS SHALL BE PROTECTED AT ALL TIMES. DO NOT STORE EQUIPMENT OR MATERIALS NEAR THESE SITES UNLESS APPROVED BY THE ENGINEER.

CROSS SECTIONS SHOWN INCLUDE THE THICKNESS OF SALVAGED TOPSOIL WHERE REQUIRED. SALVAGED TOPSOIL SHALL BE PLACED WITH 4-INCH TYPICAL DEPTH.

TRAFFIC CONTROL DEVICES SHALL BE ADJUSTED TO FIT FIELD CONDITIONS AS DIRECTED BY THE ENGINEER.

REMOVAL OF EROSION CONTROL DEVICES IS INCLUDED IN THE COST OF THEIR RESPECTIVE BID ITEMS.

THE EROSION CONTROL FEATURES AS SHOWN IN THE PLANS ARE AT THE SUGGESTED LOCATIONS. EXACT LOCATIONS WILL BE DETERMINED BY THE ENGINEER IN THE FIELD.

DIGGERS HOTLINE

Dial 811 or (800)242-8511

www.DiggersHotline.com

RUNOFF COEFFICIENT TABLE

	HYDROLOGIC SOIL GROUP											
	A			B			C			D		
	SLOPE RANGE (PERCENT)			SLOPE RANGE (PERCENT)			SLOPE RANGE (PERCENT)			SLOPE RANGE (PERCENT)		
LAND USE:	0-2	2-6	6 & OVER	0-2	2-6	6 & OVER	0-2	2-6	6 & OVER	0-2	2-6	6 & OVER
ROW CROPS	.08 .22	.16 .30	.22 .38	.12 .26	.20 .34	.27 .44	.15 .30	.24 .37	.33 .50	.19 .34	.28 .41	.38 .56
MEDIAN STRIP-TURF	.19 .24	.20 .26	.24 .30	.19 .25	.22 .28	.26 .33	.20 .26	.23 .30	.30 .37	.20 .27	.25 .32	.30 .40
SIDE SLOPE-TURF			.25 .32			.27 .34			.28 .36			.30 .38
PAVEMENT:												
ASPHALT	.70 - .95											
CONCRETE	.80 - .95											
BRICK	.70 - .80											
DRIVES, WALKS	.75 - .85											
ROOFS	.75 - .95											
GRAVEL ROADS, SHOULDERS	.40 - .60											

TOTAL PROJECT AREA = 62.3 ACRES
TOTAL AREA EXPECTED TO BE DISTURBED BY CONSTRUCTION ACTIVITIES = 10.2 ACRES

CONTROL POINT TABLE

NO	STATION	OFFSET	CORRDINATES	DESCRIPTION
	-	-	Y = 214542.048 X = 626429.872	60 D NAIL
310	2010+92.89	51.91' LT	Y = 214266.085 X = 627559.589	60 D NAIL
110	2018+49.53	0.34' LT	Y = 214022.070 X = 628284.773	60 D NAIL
213	2022+20.44	53.45' LT	Y = 214061.071 X = 628656.732	60 D NAIL
109	2032+36.06	0.96' LT	Y = 213982.525 X = 629670.642	60 D NAIL
108	2046+60.07	3.29' LT	Y = 213948.129 X = 631094.266	60 D NAIL
6351	2061+61.07	4.46' RT	Y = 213911.945 X = 632594.925	60 D NAIL
211	2067+62.87	85.03' LT	Y = 214008.546 X = 633195.622	60 D NAIL
106	2070+06.90	0.12' RT	Y = 213926.3620 X = 633440.604	60 D NAIL
105	2084+60.76	0.78' LT	Y = 213944.514 X = 634894.344	60 D NAIL
103	2107+67.43	2.93' RT	Y = 214344.244 X = 637141.036	60 D NAIL
9895	2119+65.95	96.26' LT	Y = 215056.692 X = 638107.049	60 D NAIL
100	-	-	Y = 215006.743 X = 638762.723	60 D NAIL

UTILITY CONTACTS

BRIGHTSPEED
1905 WARD AVENUE
LA CROSSE, WI 54601
PHONE: 608.780.0895
ATTENTION: TOM MURRAY
EMAIL: TOM.L.MURRAY@BRIGHTSPEED.COM

XCEL ENERGY - TRANSMISSION
414 NICOLLET MALL
MINNEAPOLIS, MN 55401
PHONE: 612.321.3109
ATTENTION: MITCHELL DIENGER
EMAIL: MITCHELL.DIENGER@XCELENERGY.COM

XCEL ENERGY - ELECTRIC
3215 COMMERCE STREET
LA CROSSE, WI 54603
PHONE: 608.789.3628
ATTENTION: LAURA JORSTAD
EMAIL: LAURA.JORSTAD@XCELENERGY.COM

BUFFALO COUNTY

COUNTY ADMINISTRATIVE COORDINATOR
407 SOUTH SECOND ST
ALMA, WI 54610
PHONE: 608.685.6235
ATTENTION: LEE ENGFER
EMAIL: LEE.ENGFER@CO.BUFFALO.WI.US

WISDOT

NW REGION EAU CLAIRE OFFICE
718 W CLAIREMONT AVENUE
EAU CLAIRE, WI 54701-6127
PHONE: 715.395.3032
ATTENTION: JEFFREY OLSON
EMAIL: JEFFREY.OLSON@DOT.WI.GOV

TREMPEALEAU NATIONAL WILDLIFE REFUGE

REFUGE MANAGER
W28488 REFUGE ROAD
TREMPEALEAU, WI 54661
PHONE: 608.780.7301
ATTENTION: CASEY BRYAN
EMAIL: CASEY_BRYAN@FWS.COM

TOWN OF BUFFALO

TOWN OF BUFFALO CHAIRMAN
W394 BLUFF SIDING ROAD
FOUNTAIN CITY, WI 54629
PHONE: 608.687.5791
ATTENTION: STEVE JAMES
EMAIL: TOBCHAIRMAN@GMAIL.COM

DESIGN CONTACTS

SEH
10 NORTH BRIDGE ST
CHIPPEWA FALLS, WI
PHONE: 715.720.6200
ATTENTION: TARA KRISTA
EMAIL: TKRISTA@SEHINC.COM

WDNR CONTACTS

EAU CLAIRE SERVICE CENTER
1300 W CLAIREMONT AVENUE
EAU CLAIRE, WI 54701-6127
PHONE: 715.495.1903
ATTENTION: AMY LESIK
EMAIL: AMY.LESIK@WISCONSIN.GOV

RAILROAD COORDINATOR

NORTHEAST REGION, SUPERIOR
1701 NORTH 4TH STREET
SUPERIOR, WI 54880
PHONE: 715.392.7960
ATTENTION: ANNA DAVEY
EMAIL: ANNA.DAVEY@DOT.STATE.WI.US

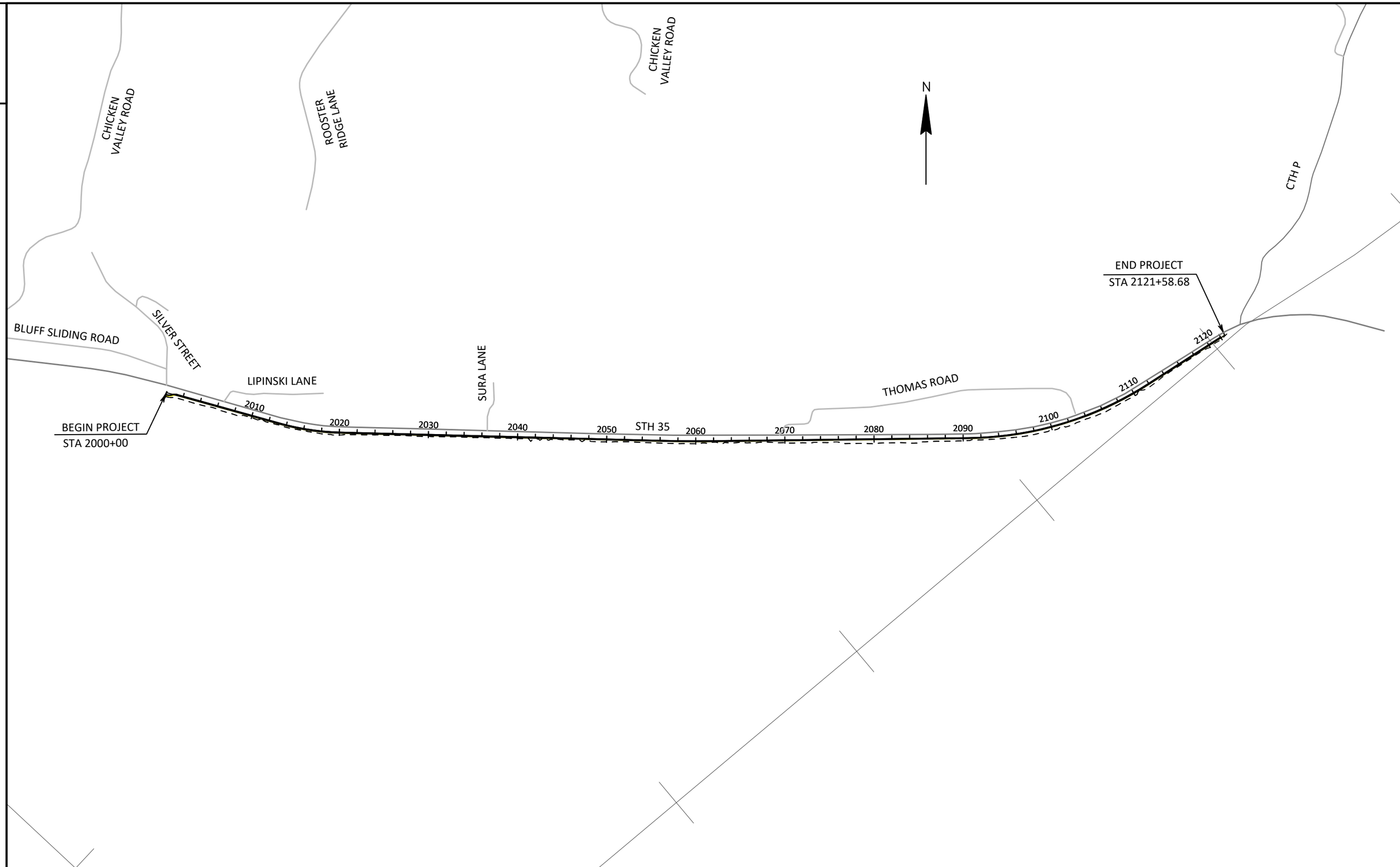

PROJECT NO: 7224-00-73	HWY: NON-HWY	COUNTY: BUFFALO	PROJECT OVERVIEW	SHEET 3	E

FILE NAME : \\SP-PZ1.SEHINC.COM\PZPROJECTS1\AE\B\BUFFC\163204\5-FINAL-DSGN\51-DRAWINGS\40-TRANSHWY\C3D\72240002\SHEETSPLAN\SEC 02 TYP SEC & DETAILS\020201_PO.DWG PLOT DATE : 8/9/2024 12:27 PM PLOT BY : SEH LAYOUT NAME : 01 PLOT SCALE : 1.0 IN = 1000.0 FT

WISDOT/CADDS SHEET 42

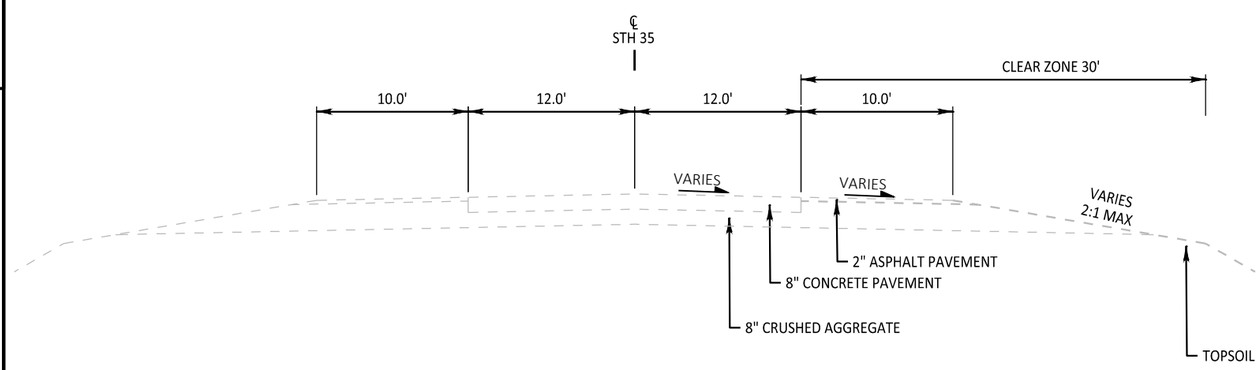

TYPICAL EXISTING SECTION, STH 35
STA 2000+00 TO STA 2121+59

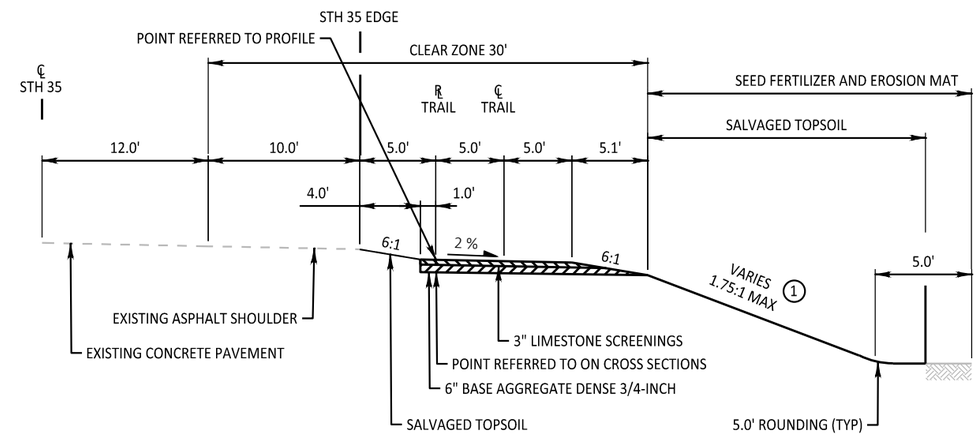

TYPICAL FINISHED SECTION
STA 2001+28 TO STA 2043+07
STA 2104+32 TO STA 2121+59

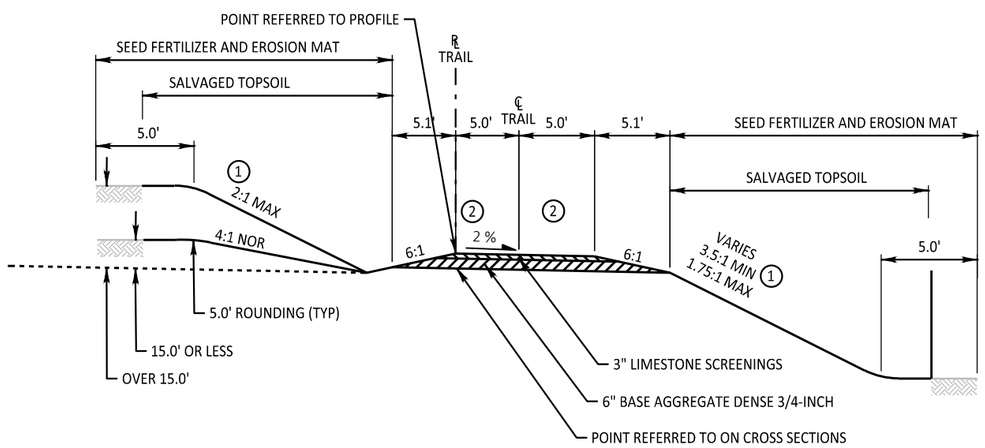

TYPICAL FINISHED SECTION
STA 2000+00 TO STA 2001+28

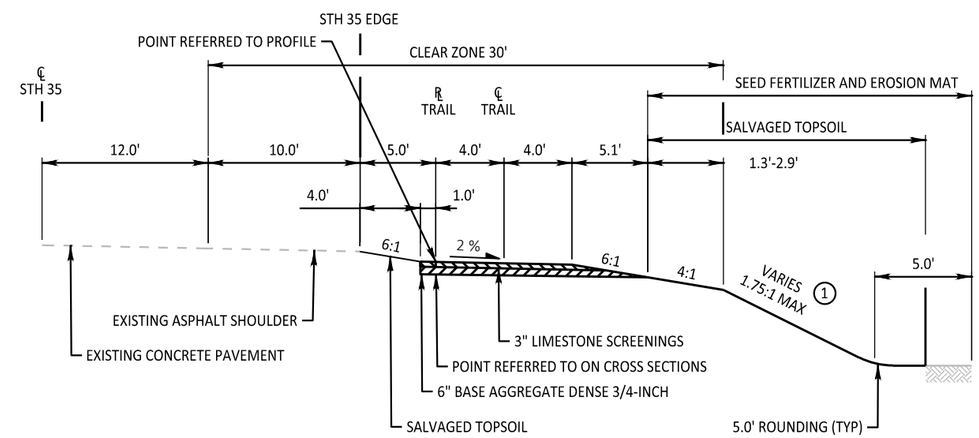

TYPICAL FINISHED SECTION
STA 2043+07 TO STA 2104+32

1. ON ALL 2:1 SLOPES USE EROSION MAT CLASS II, TYPE C
2. CROSS SLOPE TRANSITIONS FROM STA 2124+03 NTO STA 2124+24 REVERSE CROWN

PROJECT NO: 7224-00-73	HWY: NON-HWY	COUNTY: BUFFALO	TYPICAL SECTIONS	SHEET 4	E

2

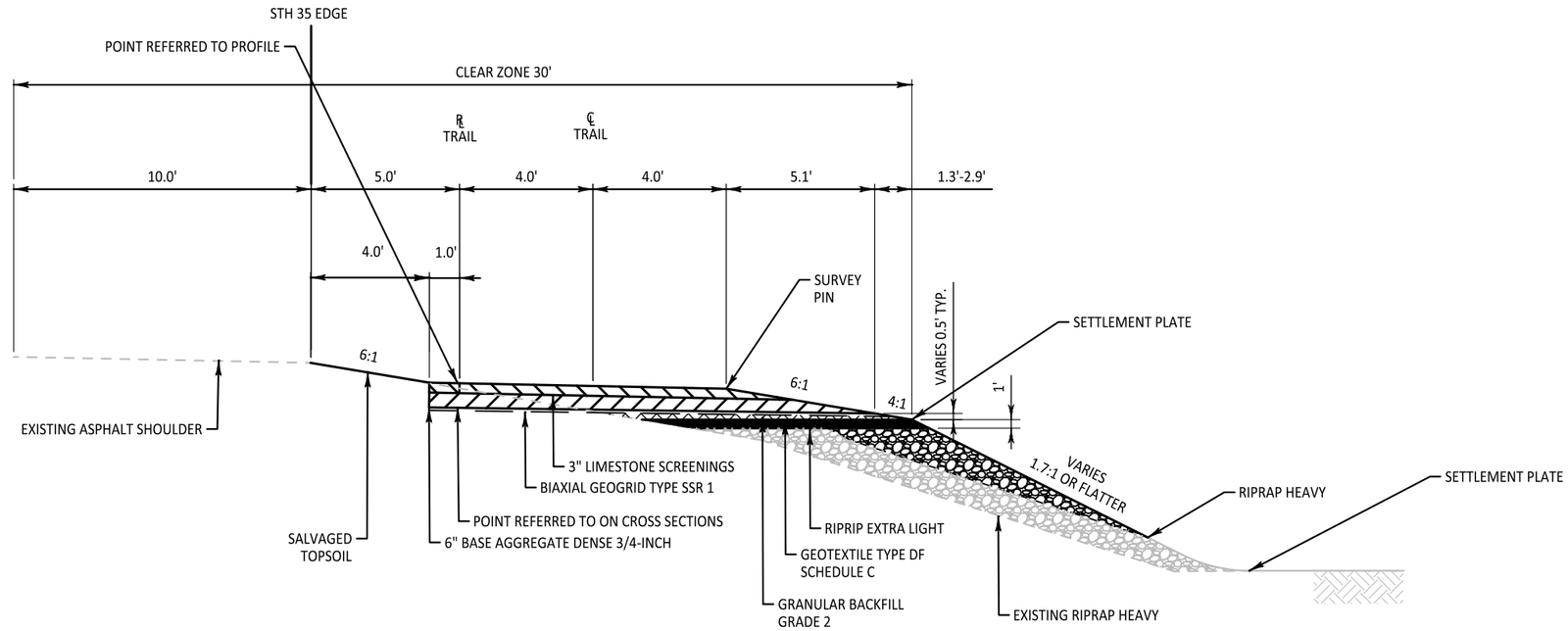

SPECIAL SUBGRADE STABILIZATION (STA 2050+00 - 2055+00)

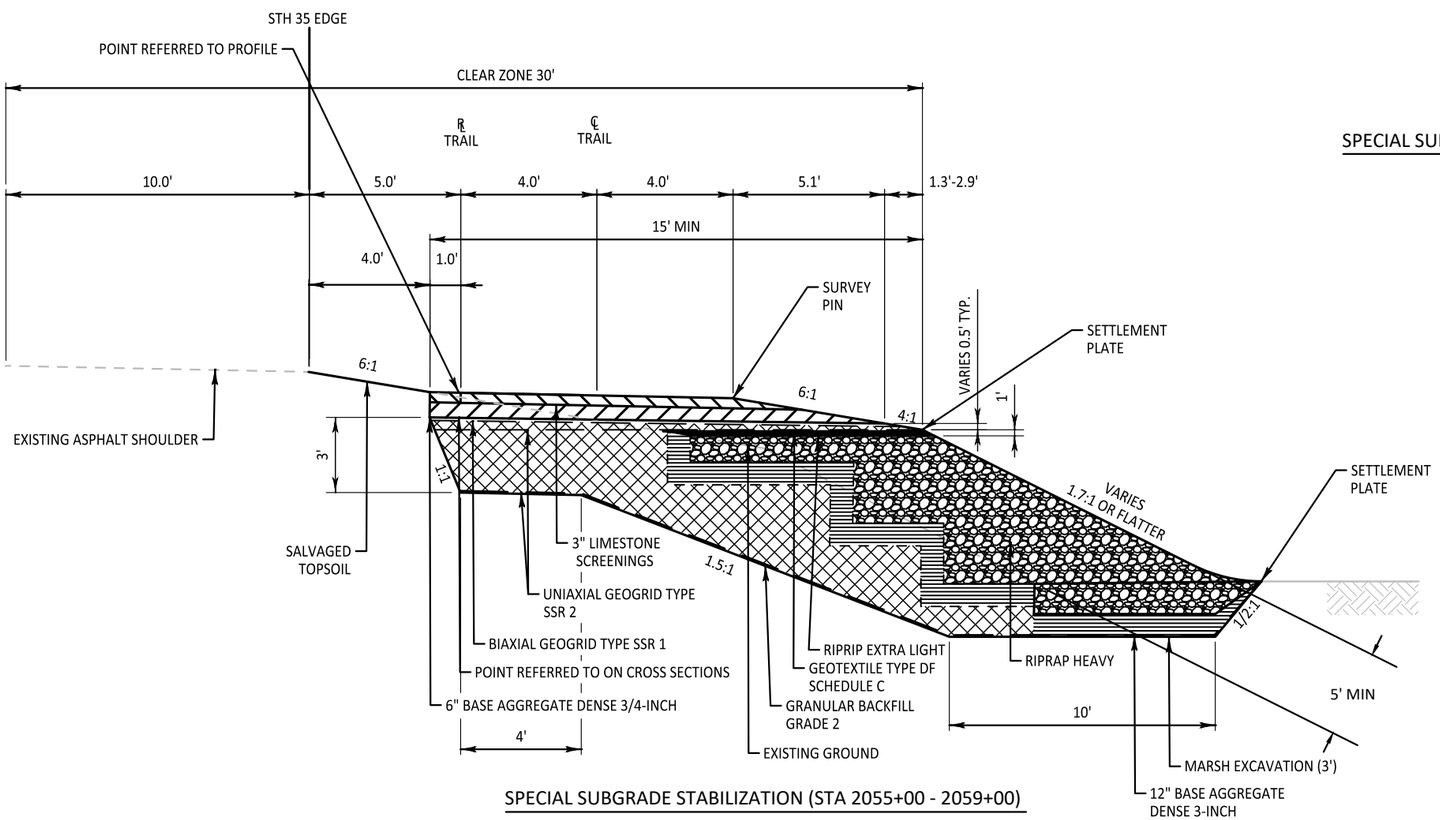

SPECIAL SUBGRADE STABILIZATION (STA 2055+00 - 2059+00)

*BENCHING TO BE 6' HORIZONTAL STEPS AND 4' VERTICAL STEPS.

PROJECT NO: 7224-00-73	HWY: NON-HIGHWAY	COUNTY: BUFFALO	CONSTRUCTION DETAILS	SHEET 5	E

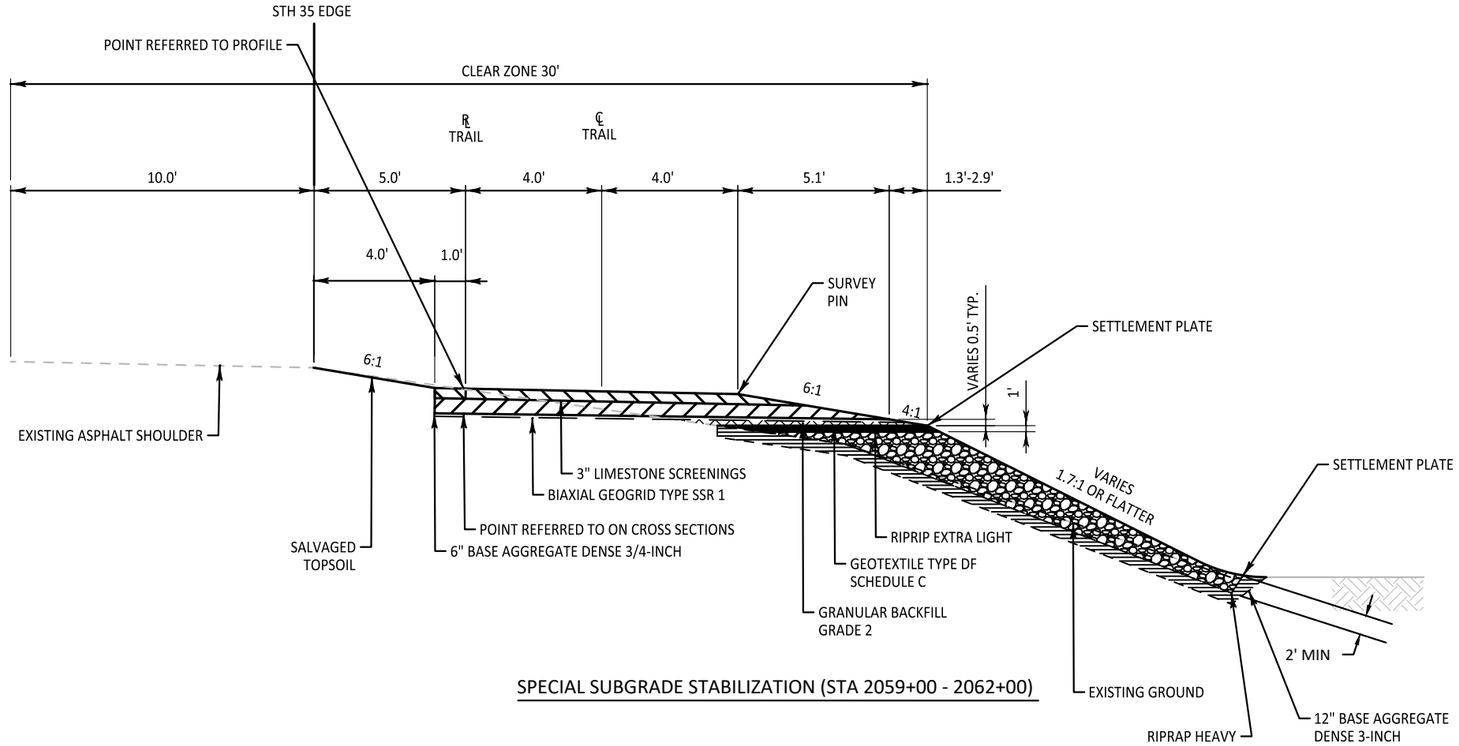

SPECIAL SUBGRADE STABILIZATION (STA 2059+00 - 2062+00)

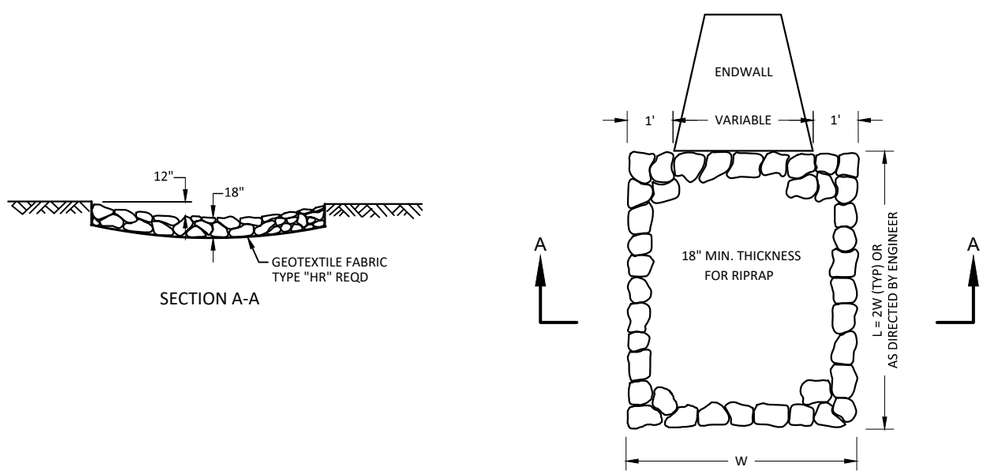

RIPRAP MEDIUM TREATMENT AT CULVERTS

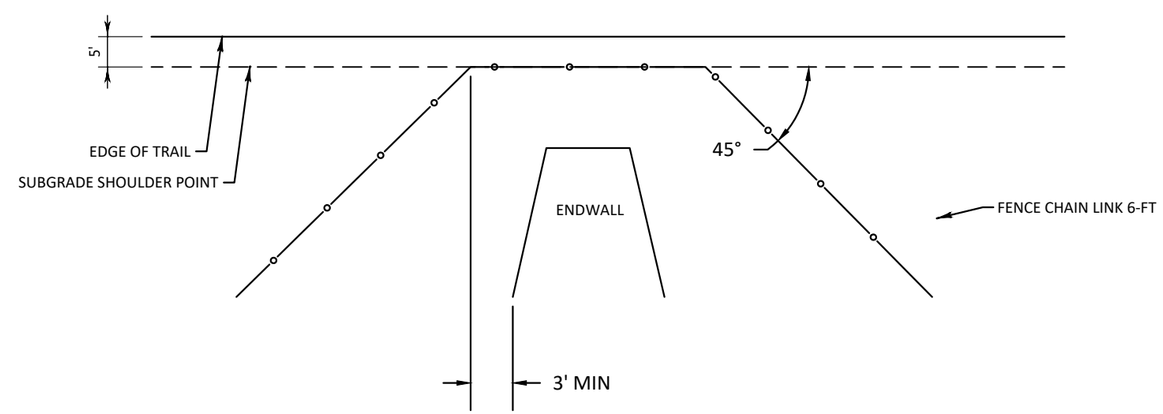

FENCE CHAIN LINK 6-FT AT CULVERT PIPES

INSTALL AT 60-INCH CULVERT PIPES AT STA 2043+69 AND AT 42-INCH CULVERT PIPES AT STA 2089+03

2

2

PLAN VIEW

SETTLEMENT PLATE SHALL BE CONSTRUCTED OF 3/4" PLYWOOD (EXTERIOR).

SETTLEMENT PLATE

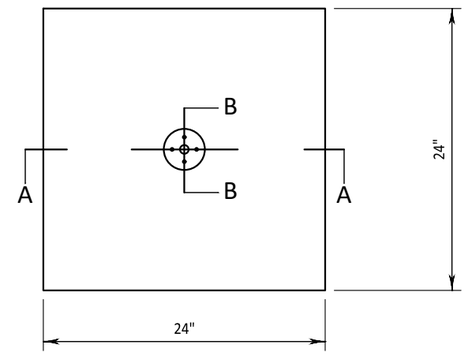

SECTION A-A

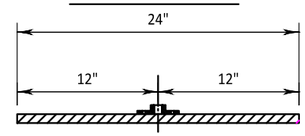

FLOOR FLANGE SHALL BE BOLTED TO THE PLATE WITH A MINIMUM OF THREE 1/4" BY 1-1/2" BOLTS

SECTION B-B

STANDARD BLACK 3/4" FLOOR FLANGE

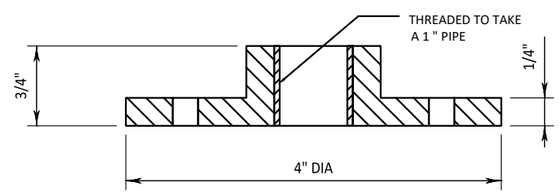

RISER PIPE & COUPLING

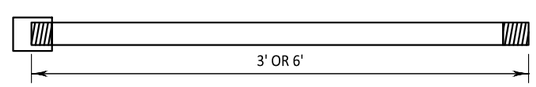

(OPTION OF SUPPLIER)

RISER PIPE SHALL BE A 1 " STANDARD WEIGHT BLACK STEEL PIPE (ASTM A120)

SETTLEMENT PLATE INSTALLATION

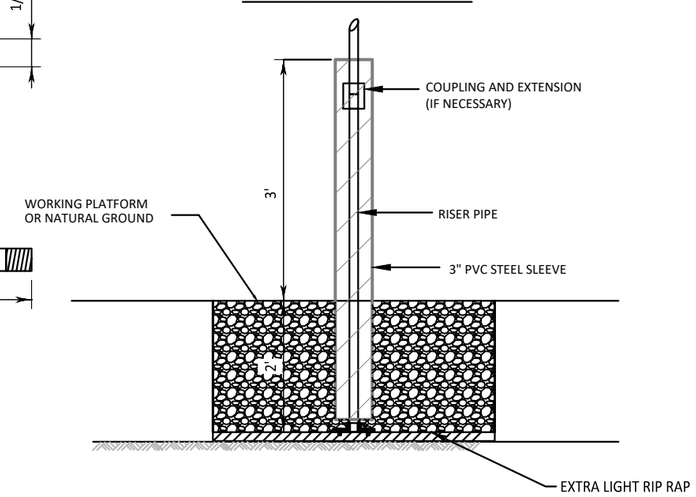

NOTE:

1. NOTIFY ENGINEER AND COORDINATE SURVEY OF EXISTING RISER PRIOR TO PLACING RISER EXTENSIONS.
2. SEE SPECIAL PROVISIONS FOR SETTLEMENT PLATE MONITORING REQUIREMENTS.

SETTLEMENT PLATE DETAIL (NOT TO SCALE)

Estimate Of Quantities

7224-00-73

Line	Item	Item Description	Unit	Total	Qty
0002	201.0205	Grubbing	STA	75.000	75.000
0004	204.9060.S	Removing (item description) 01. Apron Endwalls	EACH	8.000	8.000
0006	205.0100	Excavation Common	CY	3,058.000	3,058.000
0008	205.0400	Excavation Marsh	CY	519.000	519.000
0010	208.0100	Borrow	CY	9,874.000	9,874.000
0012	209.2500	Backfill Granular Grade 2	TON	1,490.000	1,490.000
0014	213.0100	Finishing Roadway (project) 01. 7224-00-73	EACH	1.000	1.000
0016	305.0110	Base Aggregate Dense 3/4-Inch	TON	5,980.000	5,980.000
0018	305.0130	Base Aggregate Dense 3-Inch	TON	1,260.000	1,260.000
0020	521.1024	Apron Endwalls for Culvert Pipe Steel 24-Inch	EACH	1.000	1.000
0022	521.1030	Apron Endwalls for Culvert Pipe Steel 30-Inch	EACH	4.000	4.000
0024	521.1036	Apron Endwalls for Culvert Pipe Steel 36-Inch	EACH	1.000	1.000
0026	521.1042	Apron Endwalls for Culvert Pipe Steel 42-Inch	EACH	2.000	2.000
0028	521.3124	Culvert Pipe Corrugated Steel 24-Inch	LF	2.000	2.000
0030	521.3130	Culvert Pipe Corrugated Steel 30-Inch	LF	20.000	20.000
0032	521.3136	Culvert Pipe Corrugated Steel 36-Inch	LF	8.000	8.000
0034	521.3142	Culvert Pipe Corrugated Steel 42-Inch	LF	7.000	7.000
0036	606.0050	Riprap Extra-Light	CY	250.000	250.000
0038	606.0200	Riprap Medium	CY	49.000	49.000
0040	606.0300	Riprap Heavy	CY	3,350.000	3,350.000
0042	616.0206	Fence Chain Link 6-FT	LF	140.000	140.000
0044	618.0100	Maintenance and Repair of Haul Roads (project) 01. 7224-00-72	EACH	1.000	1.000
0046	619.1000	Mobilization	EACH	1.000	1.000
0048	624.0100	Water	MGAL	80.000	80.000
0050	625.0500	Salvaged Topsoil	SY	22,885.000	22,885.000
0052	627.0200	Mulching	SY	6,755.000	6,755.000
0054	628.1504	Silt Fence	LF	12,440.000	12,440.000
0056	628.1520	Silt Fence Maintenance	LF	12,440.000	12,440.000
0058	628.1905	Mobilizations Erosion Control	EACH	6.000	6.000
0060	628.1910	Mobilizations Emergency Erosion Control	EACH	6.000	6.000
0062	628.2027	Erosion Mat Class II Type C	SY	15,610.000	15,610.000
0064	629.0205	Fertilizer Type A	CWT	12.300	12.300
0066	630.0175	Seeding Mixture No. 75	LB	123.000	123.000
0068	630.0200	Seeding Temporary	LB	527.000	527.000
0070	630.0400	Seeding Nurse Crop	LB	140.000	140.000
0072	630.0500	Seed Water	MGAL	20.000	20.000
0074	633.5200	Markers Culvert End	EACH	7.000	7.000
0076	634.0612	Posts Wood 4x6-Inch X 12-FT	EACH	4.000	4.000
0078	637.2210	Signs Type II Reflective H	SF	5.860	5.860
0080	637.2230	Signs Type II Reflective F	SF	4.500	4.500
0082	638.2102	Moving Signs Type II	EACH	8.000	8.000
0084	638.4000	Moving Small Sign Supports	EACH	8.000	8.000
0086	642.5001	Field Office Type B	EACH	1.000	1.000
0088	643.0300	Traffic Control Drums	DAY	15,390.000	15,390.000
0090	643.0715	Traffic Control Warning Lights Type C	DAY	570.000	570.000
0092	643.0900	Traffic Control Signs	DAY	912.000	912.000
0094	643.5000	Traffic Control	EACH	1.000	1.000
0096	645.0113	Geotextile Type DF Schedule C	SY	365.000	365.000
0098	645.0120	Geotextile Type HR	SY	2,408.000	2,408.000

Estimate Of Quantities

7224-00-73

Line	Item	Item Description	Unit	Total	Qty
0100	650.4500	Construction Staking Subgrade	LF	12,159.000	12,159.000
0102	650.5000	Construction Staking Base	LF	12,159.000	12,159.000
0104	650.9911	Construction Staking Supplemental Control (project) 01. 7224-00-73	EACH	1.000	1.000
0106	650.9920	Construction Staking Slope Stakes	LF	12,159.000	12,159.000
0108	ASP.1T0A	On-the-Job Training Apprentice at $5.00/HR	HRS	300.000	300.000
0110	ASP.1T0G	On-the-Job Training Graduate at $5.00/HR	HRS	300.000	300.000
0112	SPV.0060	Special 01. Site Mowing Project 7224-00-73	EACH	1.000	1.000
0114	SPV.0060	Special 02. Settlement Plate	EACH	16.000	16.000
0116	SPV.0060	Special 03. Survey Pin	EACH	8.000	8.000
0118	SPV.0180	Special 01. Biaxial Geogrid Type SSR 1	SY	1,870.000	1,870.000
0120	SPV.0180	Special 02. Uniaxial Geogrid Type SSR 2	SY	2,180.000	2,180.000
0122	SPV.0195	Special 01. Limestone Screenings	TON	2,030.000	2,030.000

3

CLEARING AND GRUBBING

STATION-STATION	LOCATION	201.0205 GRUBBING STA
2000+00 - 2014+00	RT	14
2014+00 - 2021+00	RT	2
2041+00 - 2044+00	RT	3
2047+00 - 2051+00	RT	4
2058+00 - 2060+00	RT	2
2063+00 - 2113+00	RT	50
ITEM TOTALS		75

REMOVING ENDWALLS

STATION-STATION	LOCATION	204.9060.S REMOVING APRON ENDWALLS EACH
2006+37	RT	1
2054+03	RT	1
2058+76	RT	1
2085+45	RT	1
2089+03	RT	2
2098+97	RT	1
2107+58	RT	1
ITEM TOTALS		8

BASE AGGREGATE

STATION	-	STATION	LOCATION	209.2500 GRANULAR BACKFILL GRADE 2 TON	305.0110 DENSE 3/4-INCH TON	624.0100 * WATER MGAL	REMARKS
2000+00	-	2121+59	LT & RT	1490	5980	60	-
ITEM TOTALS				1490	5980	60	

* LOCATED ELSEWHERE IN PLAN

3

EARTHWORK SUMMARY (PROJECT ID 7224-00-73)

FROM/TO STATION	LOCATION	205.0100 COMMON EXCAVATION (1) CUT (2)	205.0400 EXCAVATION MARSH (3)	SALVAGED / UNUSABLE PAVEMENT MATERIAL (4)	AVAILABLE MATERIAL (5)	REDUCED MARSH IN FILL (6) FACTOR 0.6	UNEXPANDED FILL	EXPANDED FILL (7) FACTOR 1.25	MASS ORDINATE +/- (8)	208.0100 BORROW
2000+00 - 2050+00	PROJECT	909	0	0	909	0	2,024	2,530	-1,621	1,621
2050+00 - 2062+00	PROJECT	1299	519	0	1,299	311	0	0	1,610	-1,610
2062+00 - 2121+59	PROJECT	850	0	0	850	0	8,570	10,713	-9,863	9,863
PROJECT TOTAL		3,058	519							9,874

NOTES:

(1) COMMON EXCAVATION IS THE SUM OF THE CUT AND EBS EXCAVATION COLUMNS. ITEM NUMBER 205.0100

(2) SALVAGED/UNSUABLE PAVEMENT MATERIAL IS INCLUDED IN CUT.

(3) MARSH EXCAVATION TO BE BACKFILLED WITH HEAVY RIPRAP.

(4) SALVAGED/UNUSABLE PAVEMENT MATERIAL

(5) AVAILABLE MATERIAL = CUT - SALVAGED/UNUSUABLE PAVEMENT MATERIAL

(6) MARSH EXCAVATION - EXCAVATED MARSH MATERIAL US UNUSABLE IN FILLS OUTSIDE OF THE 1:1 SLOPE. MARSH IN FILL REDUCTION FACTOR = 0.60.

(7) EXPANDED FILL FACTOR = X.6X

(8) THE MASS ORDINATE + OR - QTY CALCULATED FOR THE DIVISION. PLUS QUANTITY INDICATES AN EXCESS OF MATERIAL WITHIN THE DIVISION.

MINUS INDICATES A SHORTAGE OF MATERIAL WITHIN THE DIVISION.

3

FENCING ITEMS

STATION	-	STATION	LOCATION	616.0206 FENCE CHAIN LINK 6-FT LF	REMARKS
2043+45	-	2044+05	RT	75	-
2088+85	-	2089+35	RT	65	-
ITEM TOTALS				140	

RIPRAP AND GEOTEXTILE

STATION	-	STATION	LOCATION	305.0130 BASE AGGREGATE DENSE 3-INCH TON	606.0050 RIPRAP EXTRA LIGHT CY	606.0200 RIPRAP MEDIUM CY	606.0300 RIPRAP HEAVY CY	645.0113 GEOTEXTILE TYPE DF SCHEDULE C SY	645.0120 GEOTEXTILE TYPE HR SY	SPV.0180.01 BIAXIAL GEOGRID TYPE SSR 1 SY	SPV.0180.02 UNIAXIAL GEOGRID TYPE SSR 2 SY
	2006+37		RT	-	-	7	-	-	14	-	-
	2054+03		RT	-	-	5	-	-	11	-	-
	2058+76		RT	-	-	4	-	-	8	-	-
2045+38	-	2062+00	RT	1260	250	-	1810	365	-	1870	2180
	2085+45		RT	-	-	5	-	-	11	-	-
	2089+03		RT	-	-	16	-	-	32	-	-
2085+00	-	2097+50	RT	-	-	-	1540	-	2310	-	-
	2098+97		RT	-	-	5	-	-	11	-	-
	2107+58		RT	-	-	5	-	-	11	-	-
ITEM TOTALS				1260	250	49	3350	365	2408	1870	2180

CULVERT PIPES

STATION	LOCATION	PIPE THICKNESS	521.3124 24-INCH LF	521.3130 30-INCH LF	521.3136 36-INCH LF	521.3142 42-INCH LF	521.1024 APRON ENDWALLS FOR CULVERT PIPE CORRUGATED STEEL 24-INCH EACH	521.1030 30-INCH EACH	521.1036 36-INCH EACH	521.1042 42-INCH EACH	633.5200 MARKERS CULVERT END EACH
2006+37	RT	0.079"	-	-	8	-	-	-	1	-	1
2054+03	RT	0.079"	-	6	-	-	-	1	-	-	1
2058+76	RT	0.064"	2	-	-	-	1	-	-	-	1
2085+45	RT	0.079"	-	6	-	-	-	1	-	-	1
2089+03	RT	0.109"	-	-	-	7	-	-	-	2	1
2098+97	RT	0.079"	-	4	-	-	-	1	-	-	1
2107+58	RT	0.079"	-	4	-	-	-	1	-	-	1
PROJECT TOTALS			2	20	8	7	1	4	1	2	7

TOPSOIL, MULCHING AND SEEDING

STATION	LOCATION	625.0500 SALVAGED TOPSOIL SY	627.0200 MULCHING SY	629.0205 FERTILIZER TYPE A CWT	630.0175 SEEDING MIXTURE NO. 75 LB	630.0200 SEEDING TEMPORARY LB	630.0400 NURSE CROP LB	630.05 SEED WATER MGAL
2000+00 - 2121+59	LT & RT	22885	6755	12.3	123	527	140	20
ITEM TOTALS		22885	6755	12.3	123	527	140	20

3

3

EROSION CONTROL ITEMS

STATION	LOCATION	628.1504 SILT FENCE LF	628.1520 SILT FENCE MAINTENANCE LF	628.2027 EROSION MAT CLASS II TYPE C SY
2000+00 - 2121+59	LT & RT	12440	12440	15610
ITEM TOTALS		12440	12440	15610

MOBILIZATIONS EROSION CONTROL

STATION - STATION	628.1905 EROSION CONTROL EACH	628.1910 EMERGENCY EROSION CONTROL EACH
2000+00 - 2121+59	6	6
ITEM TOTALS	6	6

MOVING SIGNS

SIGN CODE	LOCATION	MESSAGE	638.2101 MOVING SIGNS TYPE II EACH	638.4000 MOVING SMALL SIGN SUPPORTS EACH	REMARKS
M1-1	2002+50 LT	NO PASSING ZONE	1	1	MOVE OUT OF TRAIL BETWEEN ROADWAY SHOULDER AND TRAIL
M2-1	2025+17 LT	NO PASSING ZONE	1	1	MOVE OUT OF TRAIL BETWEEN ROADWAY SHOULDER AND TRAIL
M2-2	2028+52 LT	WAYSIDE 1/2 MILE	1	1	MOVE OUT OF TRAIL BETWEEN ROADWAY SHOULDER AND TRAIL
M4-1	2054+75 LT	WAYSIDE	1	1	MOVE OUT OF TRAIL BETWEEN ROADWAY SHOULDER AND TRAIL
M5-1	2069+59 LT	MARSHLAND	1	1	MOVE OUT OF TRAIL BETWEEN ROADWAY SHOULDER AND TRAIL
M8-1	2112+70 LT	JCT CTH P	1	1	MOVE OUT OF TRAIL BETWEEN ROADWAY SHOULDER AND TRAIL
M8-2	2116+27 LT	RAILROAD CROSSING	1	1	MOVE OUT OF TRAIL BETWEEN ROADWAY SHOULDER AND TRAIL
M8-3	2118+02 LT	BUS STOP AHEAD	1	1	MOVE OUT OF TRAIL BETWEEN ROADWAY SHOULDER AND TRAIL
		ITEM TOTALS	8	8	

CONSTRUCTION STAKING

STATION	-	STATION	LOCATION	650.4500 SUBGRADE LF	650.5000 BASE LF	650.9911 SUPPLEMENTAL CONTROL (7224-00-73) EACH	650.9920 SLOPE STAKES LF
2000+00	-	2121+59	LT & RT	12159	12159	1	12159
ITEM TOTALS				12159	12159	1	12159

LIMESTONE SCREENINGS

STATION	-	STATION	LOCATION	SPV .0195.01 TON	624.0100 WATER* MGAL
2000+00	-	2121+59	RT	2030	20
ITEM TOTALS				2030	20

* LOCATED ELSEWHERE IN PLAN

3

3

PERMANENT SIGNING

SIGN NUMBER	SIGN CODE	MESSAGE	TYPE II SIZE	637.2210 SIGNS TYPE II REFLECTIVE H SF	637.2230 SIGNS TYPE II REFLECTIVE F SF	634.0612 POSTS WOOD 4X6-INCH 12-FT EACH	REMARKS
							INSTALL
1-1	R5-3	NO MOTOR VEHICLES	24"X24"	4.00	-	1	INSTALL
1-2	R1-1	STOP	18"X18"	1.86	-	1	INSTALL
1-3	W11-15 MOD	TURTLE CROSSING	18"X18"	-	2.25	1	INSTALL
5-1	W11-15 MOD	TURTLE CROSSING	18"X18"	-	2.25	1	INSTALL
ITEM TOTALS				5.86	4.50	4	

MOWING

STATION	-	STATION	LOCATION	SPV.0060.01 SITE MOWING PROJECT 7224-00-73 EACH
2000+00	-	2121+59	LT&RT	1
ITEM TOTALS				1

TRAFFIC CONTROL

LOCATION	APPROX. SERVICE PERIOD DAYS	643.0300 TRAFFIC CONTROL DRUMS QTY.	DAYS	643.0715 TRAFFIC CONTROL WARNING LIGHTS TYPE C QTY.	DAYS	643.0900 TRAFFIC CONTROL SIGNS QTY.	DAYS	NOTES
ENTIRE PROJECT	114	135	15390	5	570	8	912	-
							912	
PROJECT TOTALS			15390		570		912	

SETTLEMENT PLATES

STATION	LOCATION	SPV.0060.02 SETTLEMENT PLATE EACH	SPV.0060.03 SURVEY PIN EACH
2049+00	RT	2	1
2051+00	RT	2	1
2054+00	RT	2	1
2056+00	RT	2	1
2058+00	RT	2	1
2060+00	RT	2	1
2062+00	RT	2	1
2064+00	RT	2	1
ITEM TOTALS		16	8

CONVENTIONAL SYMBOLS

SECTION LINE
QUARTER LINE
SIXTEENTH LINE
NEW REFERENCE LINE
NEW R/W LINE
EXISTING R/W OR HE LINE
PROPERTY LINE
LOT, TIE & OTHER MINOR LINES
SLOPE INTERCEPT
CORPORATE LIMITS
UNDERGROUND FACILITY (COMMUNICATIONS, ELECTRIC, ETC)
NEW R/W (FEE OR HE) (HATCHING VARIES BY OWNER)
TEMPORARY LIMITED EASEMENT AREA
EASEMENT AREA (PERMANENT LIMITED OR RESTRICTED DEVELOPMENT)
TRANSMISSION STRUCTURES
BUILDING
TO BE REMOVED
BRIDGE
CULVERT

SECTION CORNER SYMBOL
SECTION CORNER MONUMENT
GEODETIC SURVEY MONUMENT
SIXTEENTH CORNER MONUMENT
SIGN
OFF-PREMISE SIGN
R/W MONUMENT (TO BE SET)
NON-MONUMENTED R/W POINT
FOUND IRON PIN (1-INCH UNLESS NOTED)

	COMPENSABLE	NON-COMPENSABLE
ELECTRIC POLE		
TELEPHONE POLE		
PEDESTAL (LABEL TYPE) (TV, TEL, ELEC, ETC.)		

ACCESS RESTRICTED BY ACQUISITION
NO ACCESS (BY STATUTORY AUTHORITY)
ACCESS RESTRICTED (BY PREVIOUS PROJECT OR CONTROL)
NO ACCESS (NEW HIGHWAY)
PARCEL NUMBER 25
UTILITY NUMBER 40
PARALLEL OFFSETS

CONVENTIONAL UTILITY SYMBOLS

WATER	W
GAS	G
TELEPHONE	T
OVERHEAD TRANSMISSION LINES	OH
ELECTRIC	E
CABLE TELEVISION	TV
FIBER OPTIC	FO
SANITARY SEWER	SAN
STORM SEWER	SS
ELECTRIC TOWER	

CONVENTIONAL ABBREVIATIONS

ACCESS RIGHTS	AR	POINT OF COMPOUND CURVE	PCC
ACRES	AC	POINT OF INTERSECTION	PI
AHEAD	AH	PROPERTY LINE	PL
ALUMINUM	ALUM	RECORDED AS	(100')
AND OTHERS	ET AL	REEL / IMAGE	R/I
BACK	BK	REFERENCE LINE	R/L
BLOCK	BLK	REMAINING	REM
CENTERLINE	C/L	RESTRICTIVE DEVELOPMENT EASEMENT	RDE
CERTIFIED SURVEY MAP	CSM	RIGHT	RT
CONCRETE	CONC	RIGHT OF WAY	R/W
COUNTY	CO	SECTION	SEC
COUNTY TRUNK HIGHWAY	CTH	SEPTIC VENT	SEPV
DISTANCE	DIST	SQUARE FEET	SF
CORNER	COR	STATE TRUNK HIGHWAY	STH
DOCUMENT NUMBER	DOC	STATION	STA
EASEMENT	EASE	TELEPHONE PEDESTAL	TP
EXISTING	EX	TEMPORARY LIMITED EASEMENT	TLE
GAS VALVE	GV	TRANSPORTATION PROJECT PLAT	TPP
GRID NORTH	GN	UNITED STATES HIGHWAY	USH
HIGHWAY EASEMENT	HE	VOLUME	V
IDENTIFICATION	ID		
LAND CONTRACT	LC		
LEFT	LT		
MONUMENT	MON		
NATIONAL GEODETIC SURVEY	NGS		
NUMBER	NO		
OUTLOT	OL		
PAGE	P		
POINT OF TANGENCY	PT		
PERMANENT LIMITED EASEMENT	PLE		
POINT OF BEGINNING	POB		
POINT OF CURVATURE	PC		

CURVE DATA ABBREVIATIONS

LONG CHORD	LCH
LONG CHORD BEARING	LCB
RADIUS	R
DEGREE OF CURVE	D
CENTRAL ANGLE	Δ/DELTA
LENGTH OF CURVE	L
TANGENT	T
DIRECTION AHEAD	DA
DIRECTION BACK	DB

NOTES:

POSITIONS SHOWN ON THIS PLAT ARE WISCONSIN COORDINATE REFERENCE SYSTEM COORDINATES (WISCRS), BUFFALO COUNTY, NAD 83 (2011) IN US SURVEY FEET. VALUES SHOWN ARE GRID COORDINATES, GRID BEARINGS, AND GRID DISTANCES. GRID DISTANCES MAY BE USED AS GROUND DISTANCES.

RIGHT-OF-WAY BOUNDARIES ARE DEFINED WITH COURSES OF THE PERIMETER OF THE HIGHWAY LANDS REFERENCED TO THE U.S. PUBLIC LAND SURVEY SYSTEM OR OTHER "SURVEYS" OF PUBLIC RECORD.

DIMENSIONING FOR THE NEW RIGHT-OF-WAY IS MEASURED ALONG AND PERPENDICULAR TO NEW REFERENCE LINES.

PROPERTY LINES SHOWN ON THIS PLAT FOR PROPERTIES BEING IMPACTED ARE DRAWN FROM DATA DERIVED FROM FILED/RECORDED MAPS AND DOCUMENTS OF PUBLIC RECORD. THIS PLAT MAY NOT BE A TRUE REPRESENTATION OF EXISTING PROPERTY LINES, EXCLUDING RIGHT-OF-WAY, AND SHOULD NOT BE USED AS A SUBSTITUTE FOR AN ACCURATE FIELD SURVEY.

PARCEL AND UTILITY IDENTIFICATION NUMBERS MAY NOT POINT TO ALL AREAS OF ACQUISITION, AS NOTED ON THE TPP DETAIL PAGES.

INFORMATION FOR THE BASIS OF EXISTING HIGHWAY RIGHT-OF-WAY POINTS OF REFERENCE AND ACCESS CONTROL ARE LISTED ON THE TPP DETAIL PAGES.

A TEMPORARY LIMITED EASEMENT (TLE) IS A RIGHT FOR CONSTRUCTION PURPOSES, AS DEFINED HEREIN, INCLUDING THE RIGHT TO OPERATE NECESSARY EQUIPMENT THEREON, THE RIGHT OF INGRESS AND EGRESS, AS LONG AS REQUIRED FOR SUCH PUBLIC PURPOSE, INCLUDING THE RIGHT TO PRESERVE, PROTECT, REMOVE, OR PLANT THEREON ANY VEGETATION THAT THE HIGHWAY AUTHORITIES MAY DEEM DESIRABLE. ALL (TLES) ON THIS PLAT EXPIRE AT THE COMPLETION OF THE CONSTRUCTION PROJECT FOR WHICH THIS INSTRUMENT IS GIVEN.

AN EASEMENT FOR HIGHWAY PURPOSES (HE), AS LONG AS SO USED, INCLUDING THE RIGHT TO PRESERVE, PROTECT, REMOVE OR PLANT THEREON ANY VEGETATION THAT THE HIGHWAY AUTHORITIES MAY DEEM DESIRABLE.

FOR CURRENT ACCESS/DRIVEWAY INFORMATION, CONTACT THE PLANNING UNIT OF BUFFALO COUNTY HIGHWAY DEPATMENT.

ALL NEW RIGHT-OF-WAY MONUMENTS WILL BE TYPE 2 (TYPICALLY ¾" X 24" IRON REBARS), UNLESS OTHERWISE NOTED, AND WILL BE PLACED PRIOR TO THE COMPLETION OF THE PROJECT.

SECTION CORNER MONUMENT TYPE AND COORDINATE VALUE INFORMATION SHOWN ON THE DETAIL SHEETS WAS PROVIDED BY OTHERS.

R/W PROJECT NUMBER 7224-00-03	SHEET NUMBER	TOTAL SHEETS
FEDERAL PROJECT NUMBER 7224-00-03	4.01	4

PLAT OF RIGHT OF WAY REQUIRED FOR

T BUFFALO, WINONA CONNECTOR
T BUFFALO PARK - GREAT RIVER ST TRAIL

NON-HIGHWAY | BUFFALO COUNTY

CONSTRUCTION PROJECT NUMBER 7224-00-73

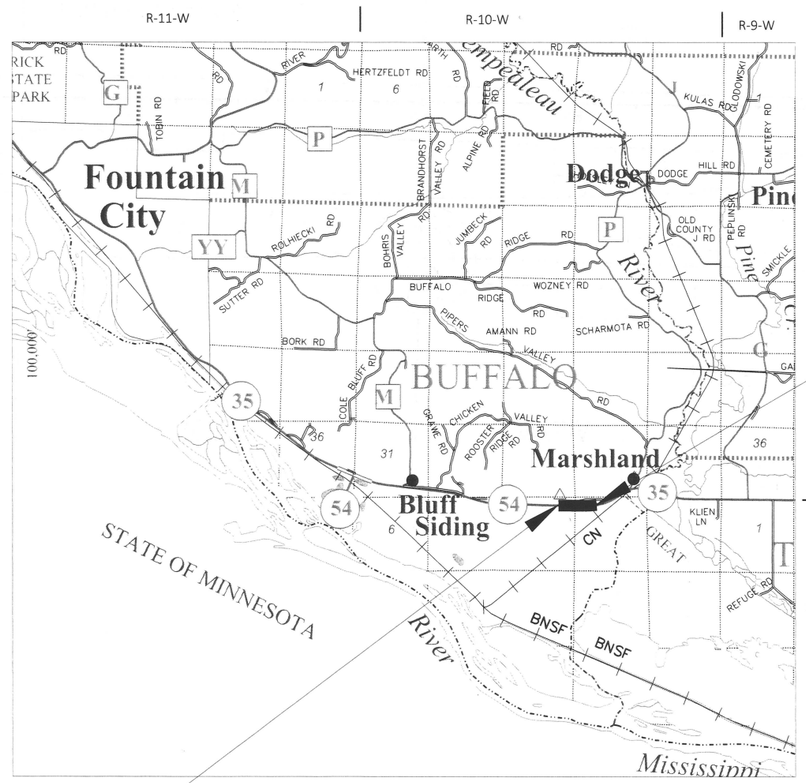

END RELOCATION
STA 2097+00.00
Y = 214012.005
X = 636129.867

518.257 FEET SOUTH AND 933.987 FEET WEST OF THE NORTH QUARTER CORNER OF SECTION 3, T19N, R10W

BEGIN RELOCATION
STA 2075+00.00
Y = 213932.349
X = 633933.649

512.401 FEET SOUTH AND 495.048 FEET WEST OF THE NORTHWEST CORNER OF SECTION 3, T18N, R10W

LAYOUT
SCALE 0 — 2 MI

TOTAL NET LENGTH OF CENTERLINE = 0.417 MILES

THIS PLAT IS A GRAPHIC REPRESENTATION AND IS FOR REFERENCE PURPOSES ONLY. DEEDS MUST BE CHECKED TO DETERMINE PROPERTY BOUNDARIES AND ACCESS RIGHTS.

REVISION DATE
11-27-2024 N.C.
1-16-2024 N.C.
8-7-2024

Original Plat Prepared by

SEH
10 N BRIDGE ST
CHIPPEWA FALLS WI 54729

WISCONSIN
JASON L. CANCE
S-2688
CHIPPEWA FALLS WI
LAND SURVEYOR

(Signature) 9-13-2023 (Date)

ACCEPTED FOR
COUNTY OF BUFFALO
DATE: 9-13-2023
(SIGNATURE & TITLE OF OFFICAL)

SCHEDULE OF LANDS AND INTERESTS									
PARCEL NUMBER	SHEET NUMBER	OWNER(S)	INTEREST REQUIRED	R/W NEW AC	R/W EXIST AC	R/W TOTAL AC	HE AC	TLE AC	PLE AC
1	4.03/4.04	UNITED STATES OF AMERICA	PLE/TLE	---	---	---	---	0.65	0.03

OWNERS NAME SHOWN FOR REFERENCE PURPOSE ONLY AN SUBJECT TO CHANGE PRIOR TO THE TRANSFER OF LAND AND INTEREST TO THE COUNTY

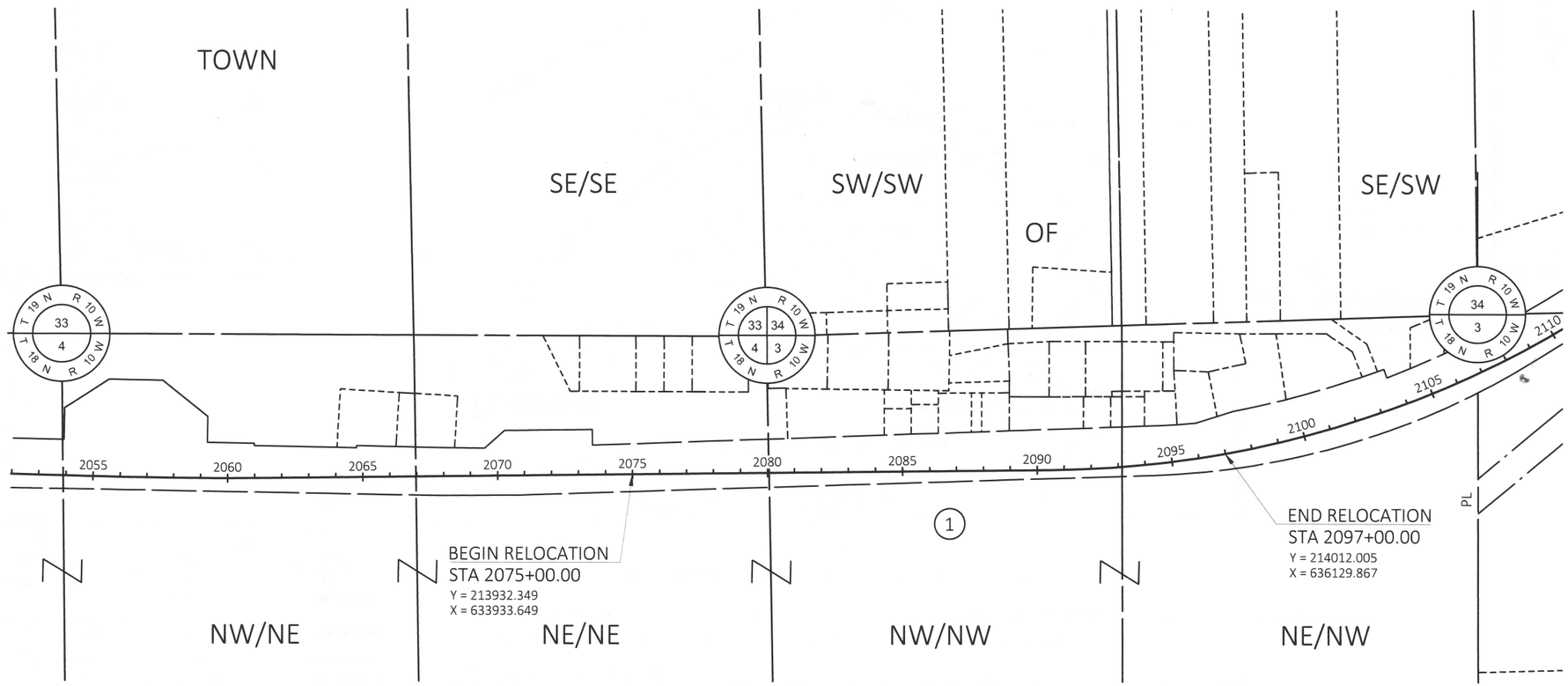

REVISION DATE 11-27-2023 1-16-2024 N.C. 8-7-2024	DATE 8-7-2024	SCALE, FEET 0 100 200	HWY: STATE TRAIL	STATE R/W PROJECT NUMBER 7224-00-03	PLAT SHEET 4.02
	GRID FACTOR N/A		COUNTY: BUFFALO	CONSTRUCTION PROJECT NUMBER 7224-00-73	PS&E SHEET E

FILE NAME : OVERVIEW (PHASE 2).DWG
LAYOUT NAME - overview
PLOT DATE : 8/8/2024 9:49 AM PLOT BY : SEH PLOT NAME : PLOT SCALE : Custom

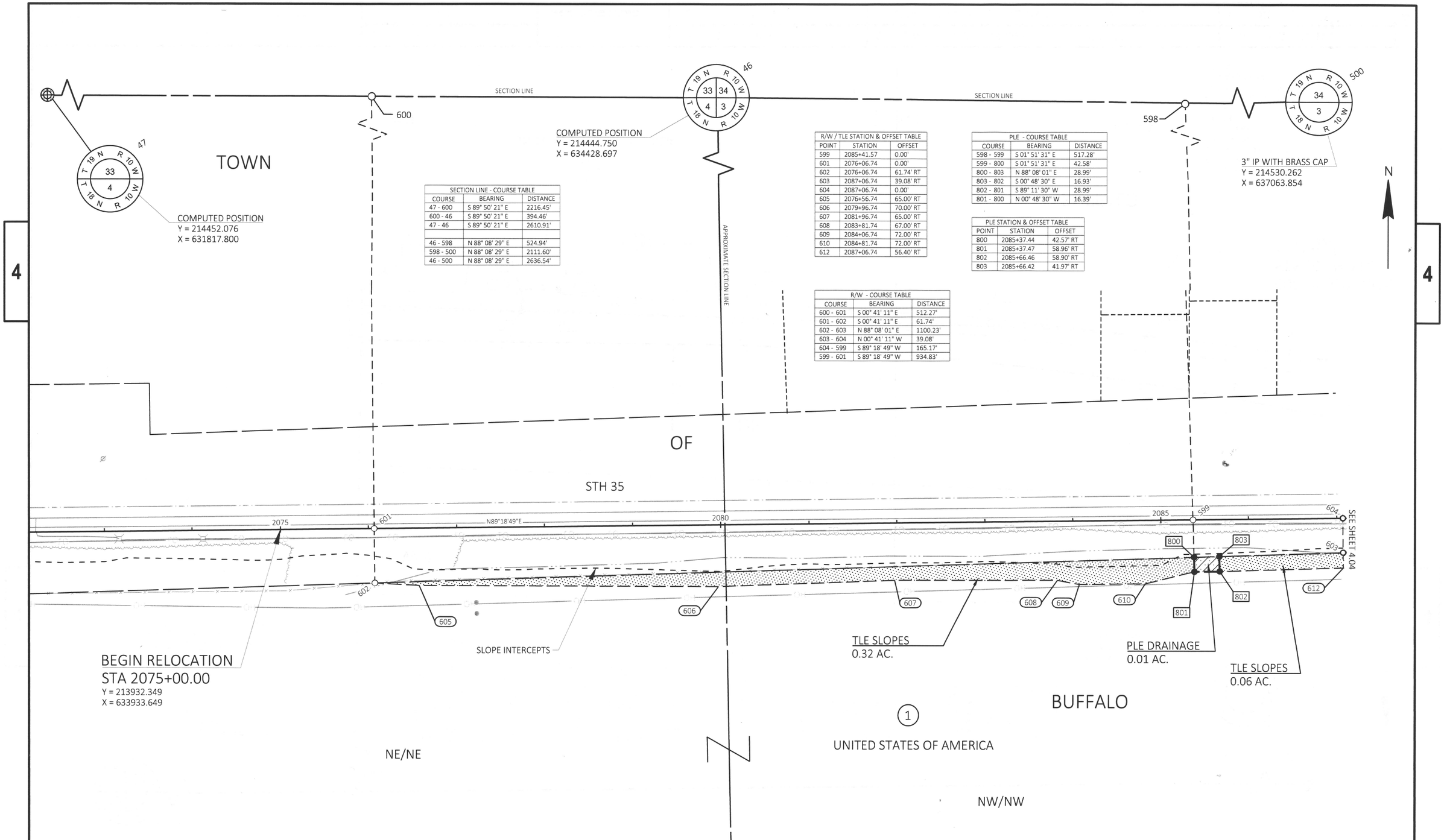

SECTION LINE - COURSE TABLE		
COURSE	BEARING	DISTANCE
47 - 600	S 89° 50' 21" E	2216.45'
600 - 46	S 89° 50' 21" E	394.46'
47 - 46	S 89° 50' 21" E	2610.91'
46 - 598	N 88° 08' 29" E	524.94'
598 - 500	N 88° 08' 29" E	2111.60'
46 - 500	N 88° 08' 29" E	2636.54'

R/W / TLE STATION & OFFSET TABLE		
POINT	STATION	OFFSET
599	2085+41.57	0.00'
601	2076+06.74	0.00'
602	2076+06.74	61.74' RT
603	2087+06.74	39.08' RT
604	2087+06.74	0.00'
605	2076+56.74	65.00' RT
606	2079+96.74	70.00' RT
607	2081+96.74	65.00' RT
608	2083+81.74	67.00' RT
609	2084+06.74	72.00' RT
610	2084+81.74	72.00' RT
612	2087+06.74	56.40' RT

PLE - COURSE TABLE		
COURSE	BEARING	DISTANCE
598 - 599	S 01° 51' 31" E	517.28'
599 - 800	S 01° 51' 31" E	42.58'
800 - 803	N 88° 08' 01" E	28.99'
803 - 802	S 00° 48' 30" E	16.93'
802 - 801	S 89° 11' 30" W	28.99'
801 - 800	N 00° 48' 30" W	16.39'

PLE STATION & OFFSET TABLE		
POINT	STATION	OFFSET
800	2085+37.44	42.57' RT
801	2085+37.47	58.96' RT
802	2085+66.46	58.90' RT
803	2085+66.42	41.97' RT

R/W - COURSE TABLE		
COURSE	BEARING	DISTANCE
600 - 601	S 00° 41' 11" E	512.27'
601 - 602	S 00° 41' 11" E	61.74'
602 - 603	N 88° 08' 01" E	1100.23'
603 - 604	N 00° 41' 11" W	39.08'
604 - 599	S 89° 18' 49" W	165.17'
599 - 601	S 89° 18' 49" W	934.83'

REVISION DATE 11-27-2023 1-16-2024 N.C. 8-7-2024 N.C.	DATE 8-7-2024	SCALE, FEET 0 50 100	HWY: STATE TRAIL	STATE R/W PROJECT NUMBER 7224-00-03	PLAT SHEET 4.03
	GRID FACTOR N/A		COUNTY: BUFFALO	CONSTRUCTION PROJECT NUMBER 7224-00-73	PS&E SHEET E

FILE NAME : 4.01.DWG
LAYOUT NAME - 03
PLOT DATE : 8/8/2024 9:50 AM
PLOT BY : SEH
PLOT NAME :
PLOT SCALE : 1 IN:100 FT
WISDOT/CAD

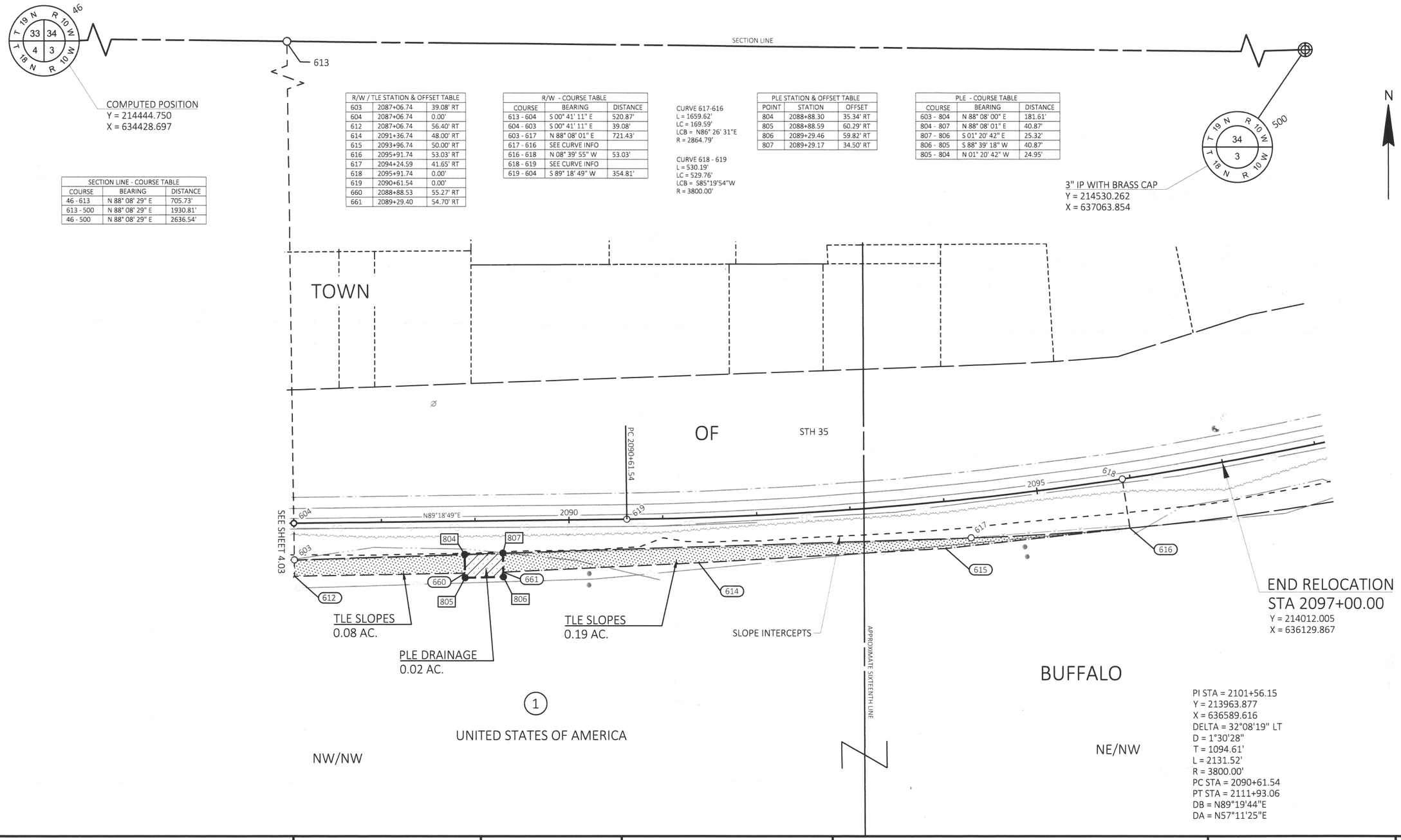

SECTION LINE - COURSE TABLE		
COURSE	BEARING	DISTANCE
46 - 613	N 88° 08' 29" E	705.73'
613 - 500	N 88° 08' 29" E	1930.81'
46 - 500	N 88° 08' 29" E	2636.54'

R/W / TLE STATION & OFFSET TABLE		
603	2087+06.74	39.08' RT
604	2087+06.74	0.00'
612	2087+06.74	56.40' RT
614	2091+36.74	48.00' RT
615	2093+96.74	50.00' RT
616	2095+91.74	53.03' RT
617	2094+24.59	41.65' RT
618	2095+91.74	0.00'
619	2090+61.54	0.00'
660	2088+88.53	55.27' RT
661	2089+29.40	54.70' RT

R/W - COURSE TABLE		
COURSE	BEARING	DISTANCE
613 - 604	S 00° 41' 11" E	520.87'
604 - 603	S 00° 41' 11" E	39.08'
603 - 617	N 88° 08' 01" E	721.43'
617 - 616	SEE CURVE INFO	
616 - 618	N 08° 39' 55" W	53.03'
618 - 619	SEE CURVE INFO	
619 - 604	S 89° 18' 49" W	354.81'

CURVE 617-616
L = 1659.62'
LC = 169.59'
LCB = N86° 26' 31"E
R = 2864.79'

CURVE 618 - 619
L = 530.19'
LC = 529.76'
LCB = S85°19'54"W
R = 3800.00'

PLE STATION & OFFSET TABLE		
POINT	STATION	OFFSET
804	2088+88.30	35.34' RT
805	2088+88.59	60.29' RT
806	2089+29.46	59.82' RT
807	2089+29.17	34.50' RT

PLE - COURSE TABLE		
COURSE	BEARING	DISTANCE
603 - 804	N 88° 08' 00" E	181.61'
804 - 807	N 88° 08' 01" E	40.87'
807 - 806	S 01° 20' 42" E	25.32'
806 - 805	S 88° 39' 18" W	40.87'
805 - 804	N 01° 20' 42" W	24.95'

PI STA = 2101+56.15
Y = 213963.877
X = 636589.616
DELTA = 32°08'19" LT
D = 1°30'28"
T = 1094.61'
L = 2131.52'
R = 3800.00'
PC STA = 2090+61.54
PT STA = 2111+93.06
DB = N89°19'44"E
DA = N57°11'25"E

4

4

REVISION DATE			
11-27-2023			
1-16-2024 N.C.			
8-7-2024			

DATE 8-7-2024	SCALE, FEET 0 50 100	HWY: STATE TRAIL	STATE R/W PROJECT NUMBER 7224-00-03	PLAT SHEET 4.04	
GRID FACTOR N/A		COUNTY: BUFFALO	CONSTRUCTION PROJECT NUMBER 7224-00-73	PS&E SHEET	E

FILE NAME : 4.01.DWG
LAYOUT NAME - 04
PLOT DATE : 8/8/2024 9:50 AM PLOT BY : SEH PLOT NAME : PLOT SCALE : 1 IN:100 FT

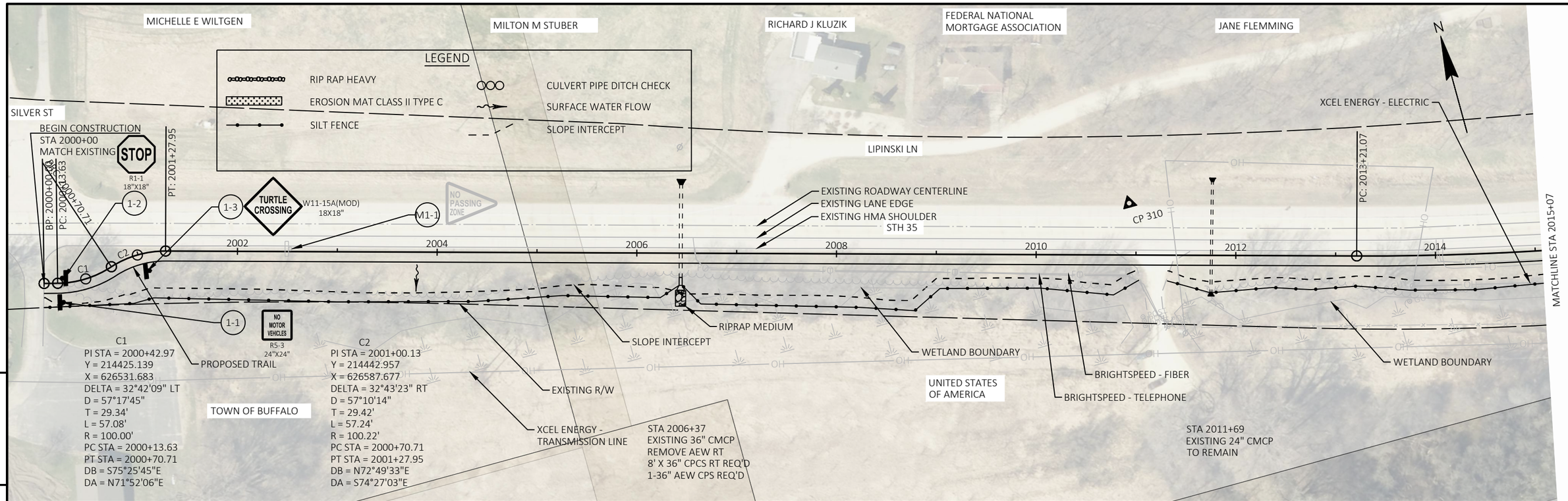

5

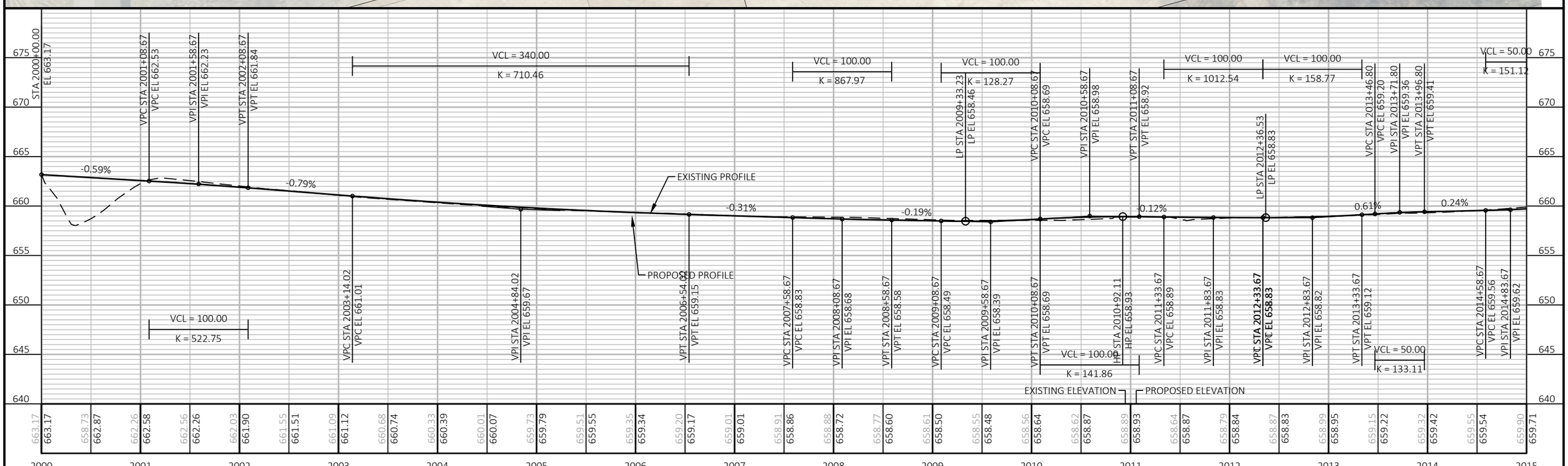

5

PROJECT NO: 7224-00-73	HWY: NON-HWY	COUNTY: BUFFALO	PLAN AND PROFILE: WINONA CONNECTOR	SHEET 18	E

FILE NAME : \\SP-PZ1.SEHINC.COM\PZPROJECTS1\AE\B\BUFFC\163204\5-FINAL-DSGN\51-DRAWINGS\40-TRANSHWY\C3D\72240002\SHEETSPLAN\SEC 05 PLAN AND PROFILE\050101_PN.DWG
LAYOUT NAME - 01
PLOT DATE : 8/9/2024 12:37 PM
PLOT BY : MATTHEW WINTER
PLOT NAME :
PLOT SCALE : 1 IN:100 FT

WISDOT/CADDS SHEET 44

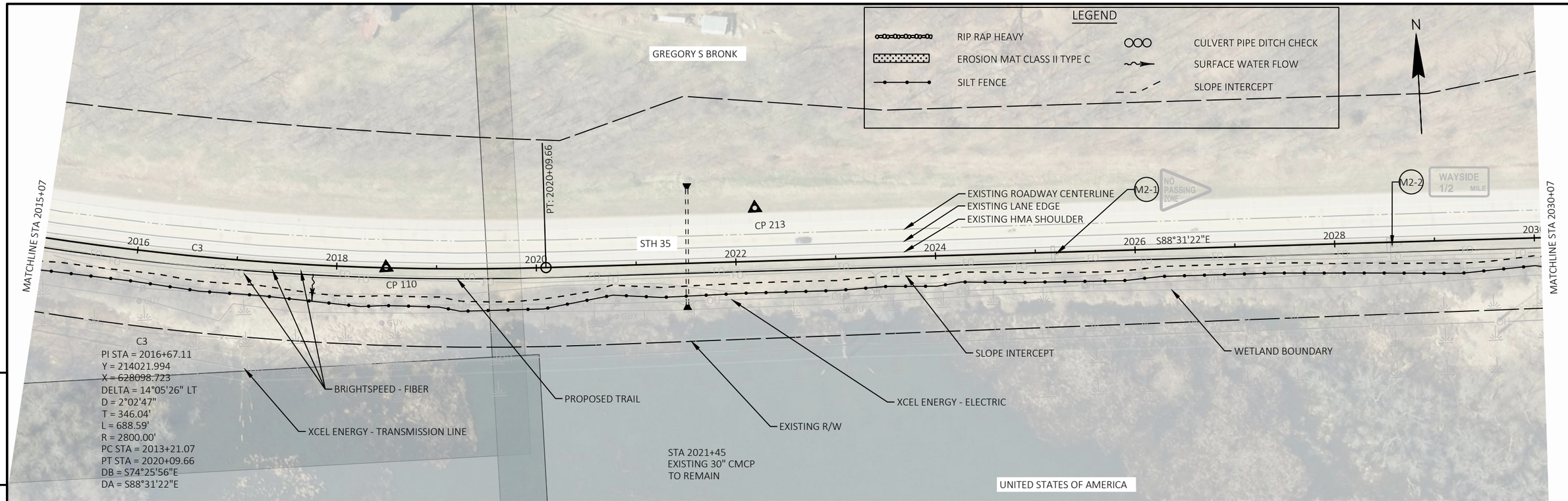

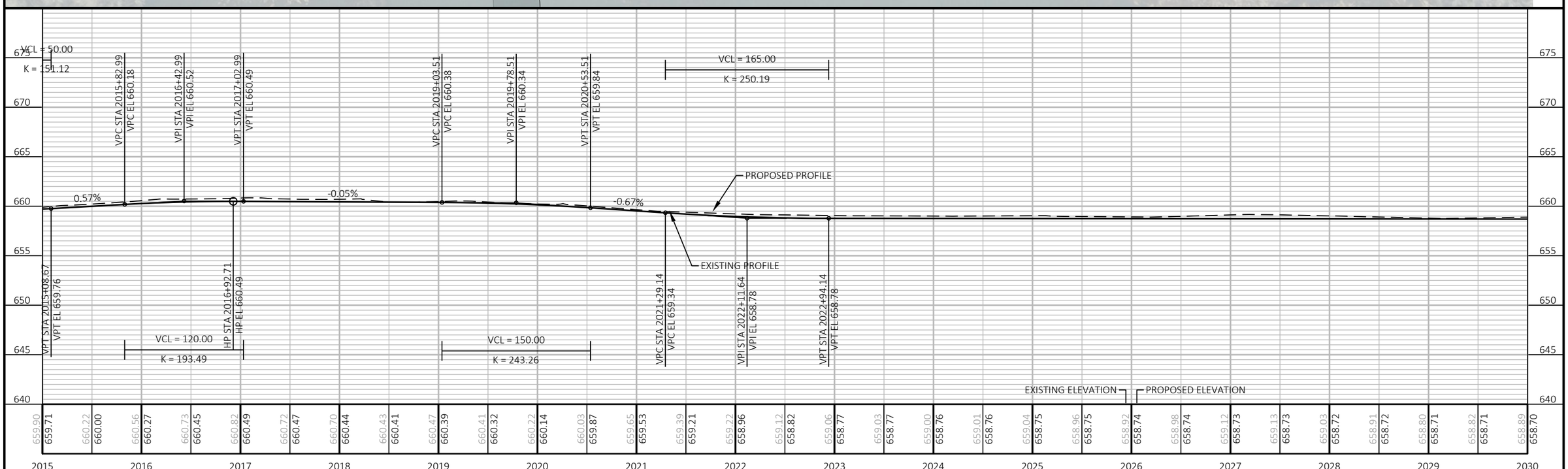

PROJECT NO: 7224-00-73	HWY: NON-HWY	COUNTY: BUFFALO	PLAN AND PROFILE: WINONA CONNECTOR	SHEET 19	E

FILE NAME : \\SP-PZ1.SEHINC.COM\PZPROJECTS1\AE\B\BUFFC\163204\5-FINAL-DSGN\51-DRAWINGS\40-TRANSHWY\C3D\72240002\SHEETSPLAN\SEC 05 PLAN AND PROFILE\050101_PN.DWG
LAYOUT NAME - 02
PLOT DATE : 8/9/2024 12:37 PM
PLOT BY : MATTHEW WINTER
PLOT NAME :
PLOT SCALE : 1 IN:100 FT
WISDOT/CADDS SHEET 44

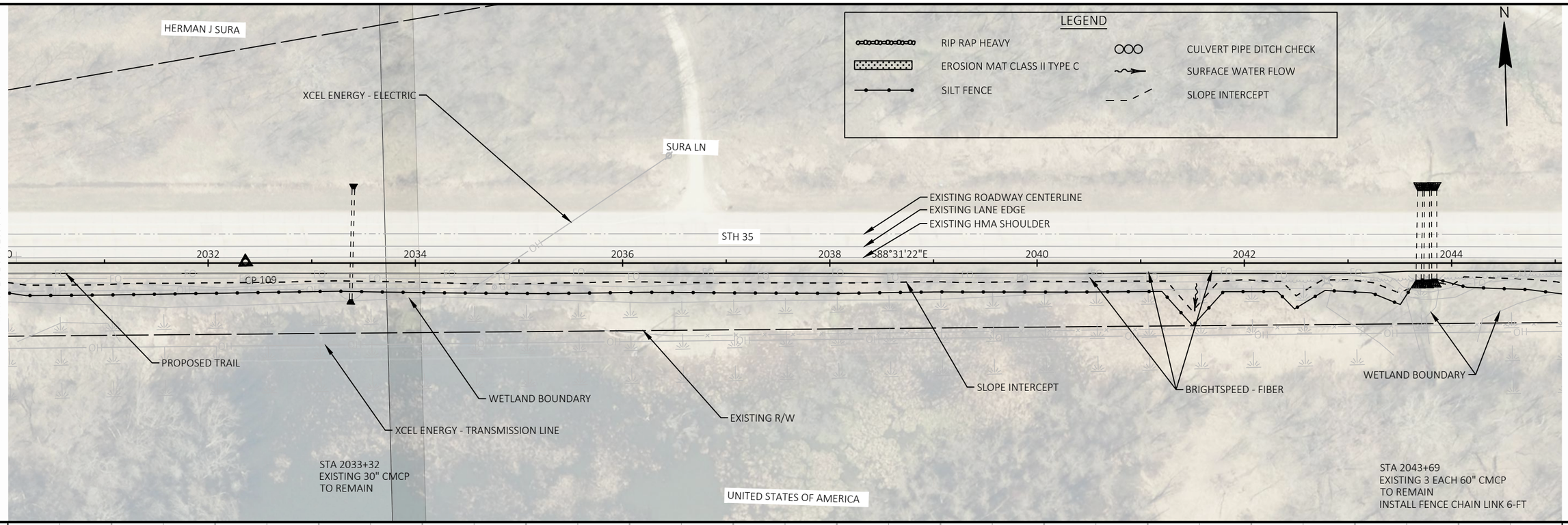

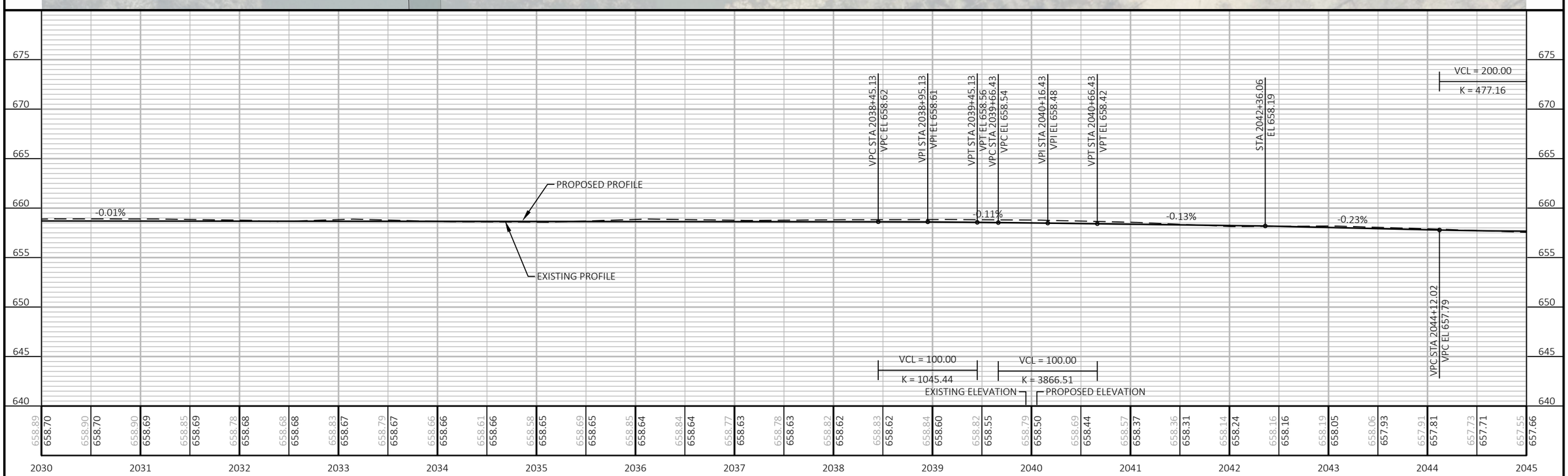

5

5

PROJECT NO: 7224-00-73	HWY: NON-HWY	COUNTY: BUFFALO	PLAN AND PROFILE: WINONA CONNECTOR	SHEET 20	E

FILE NAME : \\SP-PZ1.SEHINC.COM\PZPROJECTS1\AE\B\BUFFC\163204\5-FINAL-DSGN\51-DRAWINGS\40-TRANSHWY\C3D\72240002\SHEETSPLAN\SEC 05 PLAN AND PROFILE\050101_PN.DWG
LAYOUT NAME - 03
PLOT DATE : 8/9/2024 12:37 PM
PLOT BY : MATTHEW WINTER
PLOT NAME :
PLOT SCALE : 1 IN:100 FT
WISDOT/CADDS SHEET 44

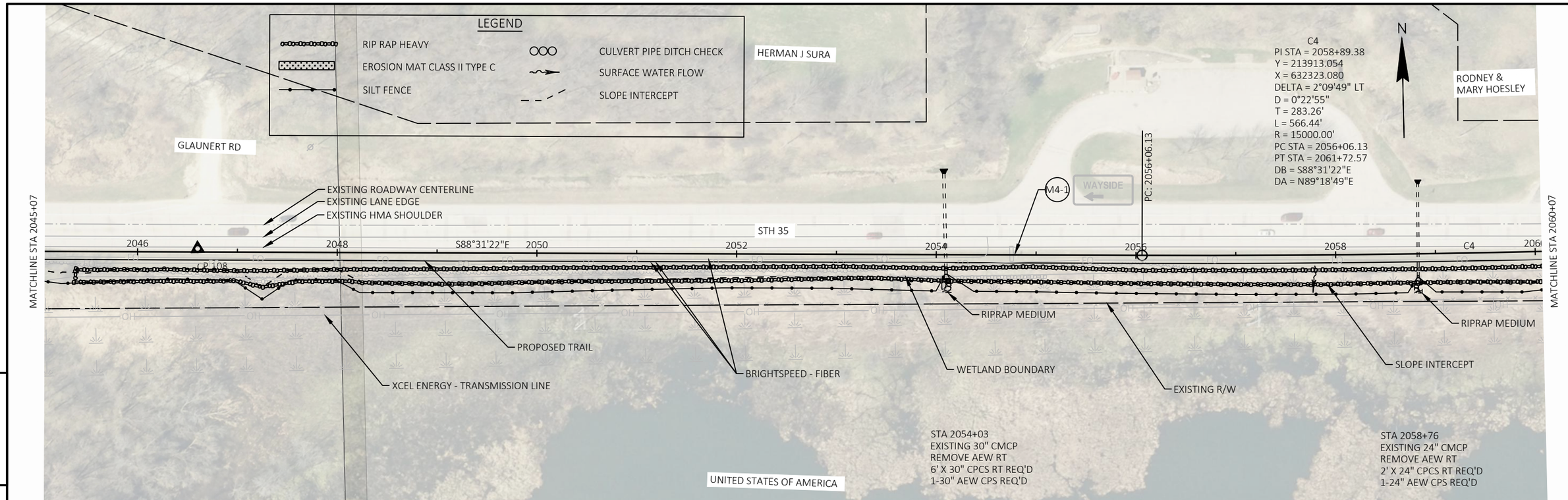

5

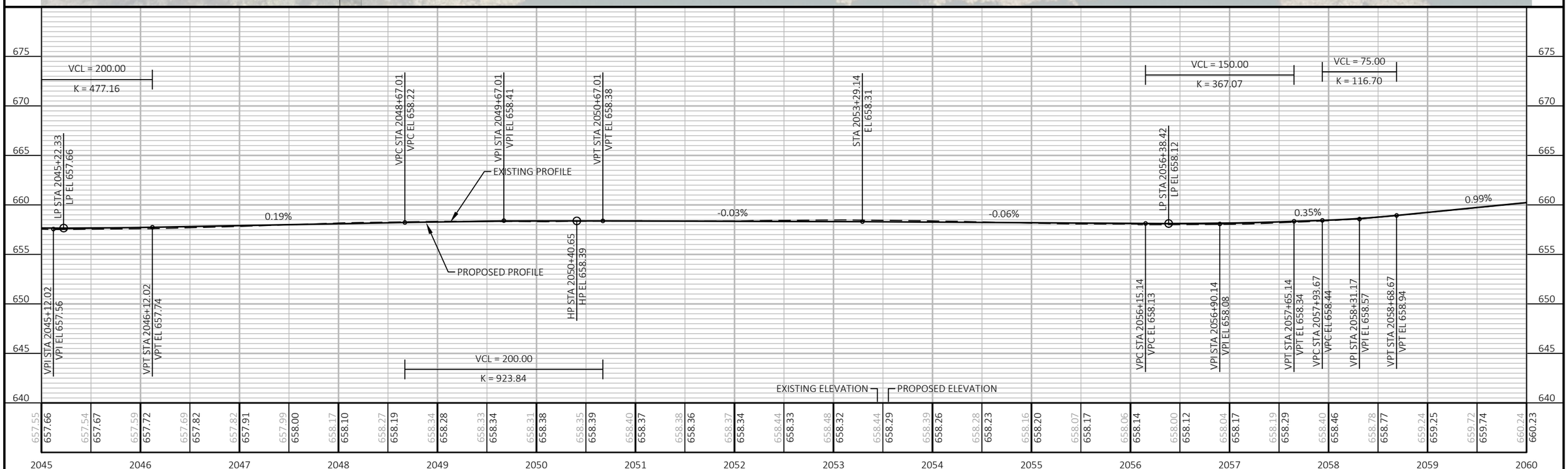

5

PROJECT NO: 7224-00-73	HWY: NON-HWY	COUNTY: BUFFALO	PLAN AND PROFILE: WINONA CONNECTOR	SHEET 21	E

FILE NAME : \\SP-PZ1.SEHINC.COM\PZPROJECTS1\AE\B\BUFFC\163204\5-FINAL-DSGN\51-DRAWINGS\40-TRANSHWY\C3D\72240002\SHEETSPLAN\SEC 05 PLAN AND PROFILE\050101_PN.DWG
LAYOUT NAME - 04
PLOT DATE : 8/9/2024 12:37 PM
PLOT BY : MATTHEW WINTER
PLOT NAME :
PLOT SCALE : 1 IN:100 FT
WISDOT/CADDS SHEET 44

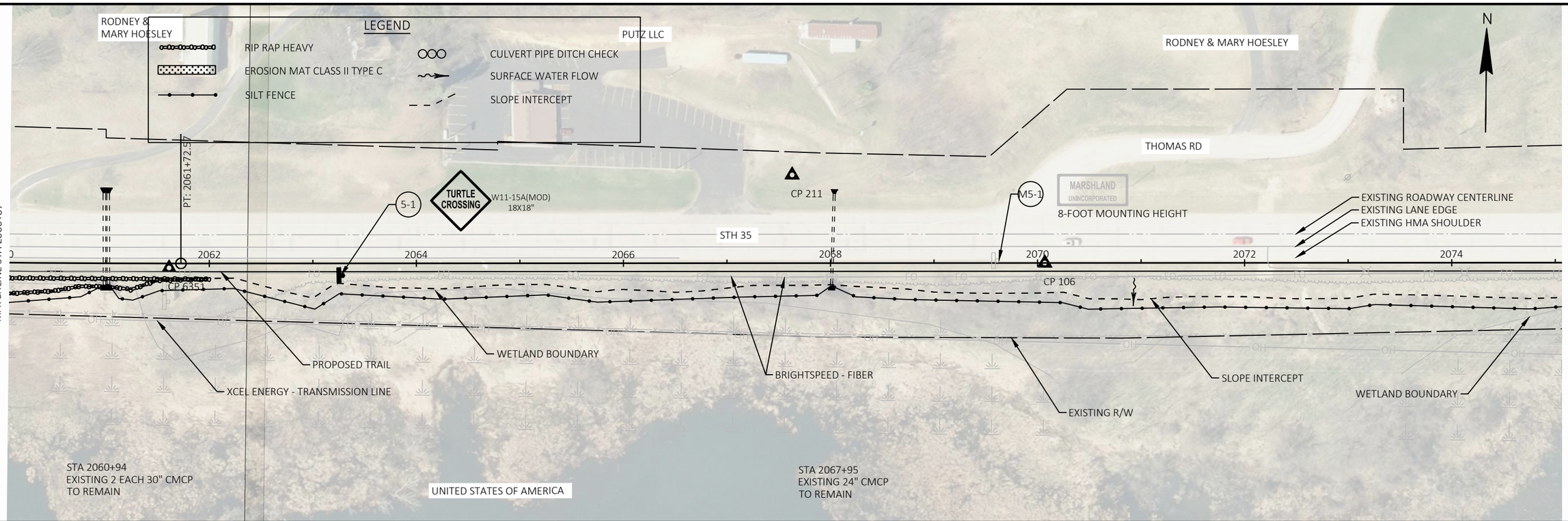

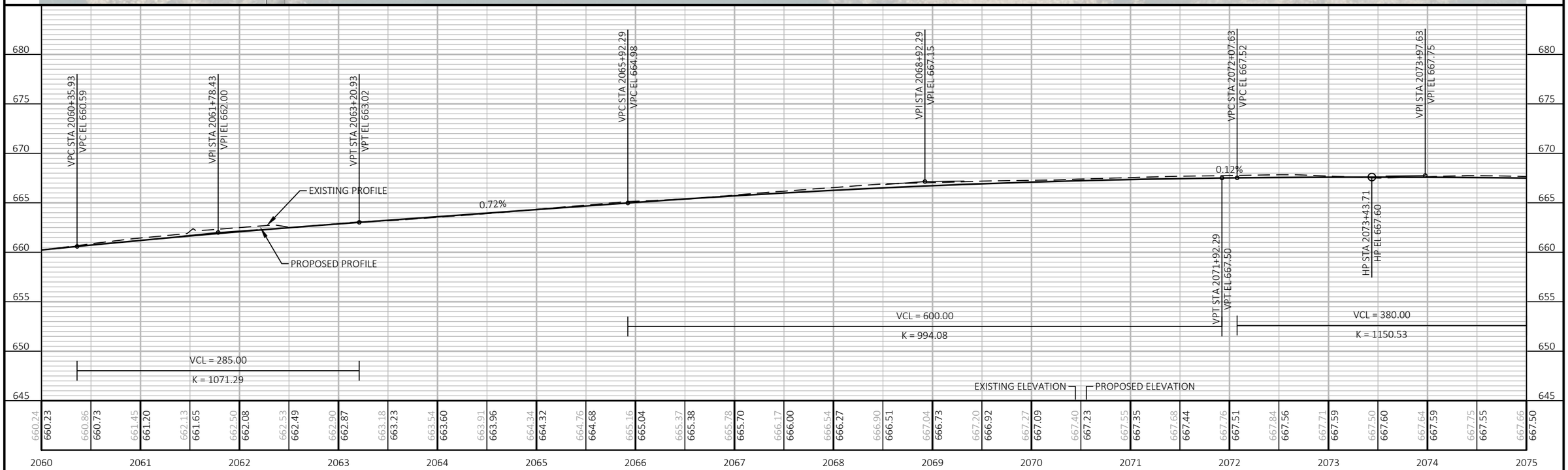

PROJECT NO: 7224-00-73	HWY: NON-HWY	COUNTY: BUFFALO	PLAN AND PROFILE: WINONA CONNECTOR	SHEET 22	E

FILE NAME : \\SP-PZ1.SEHINC.COM\PZPROJECTS1\AE\B\BUFFC\163204\5-FINAL-DSGN\51-DRAWINGS\40-TRANSHWY\C3D\72240002\SHEETSPLAN\SEC 05 PLAN AND PROFILE\050101_PN.DWG
LAYOUT NAME - 05
PLOT DATE : 8/9/2024 12:37 PM
PLOT BY : MATTHEW WINTER
PLOT NAME :
PLOT SCALE : 1 IN:100 FT
WISDOT/CADDS SHEET 44

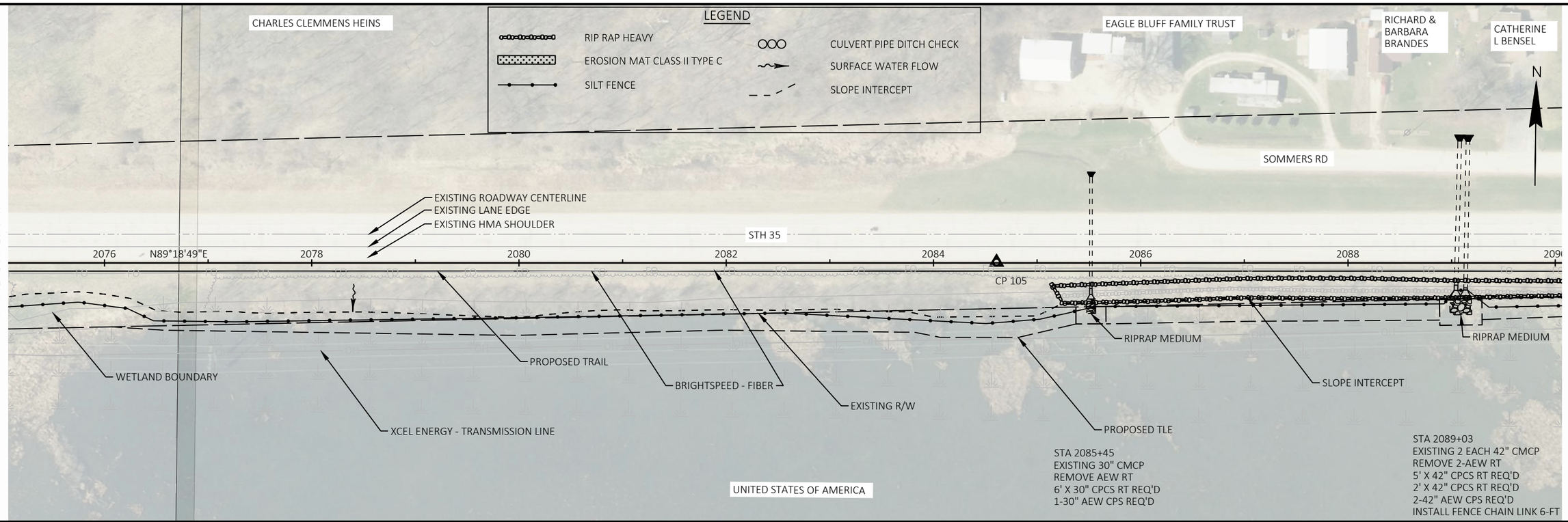

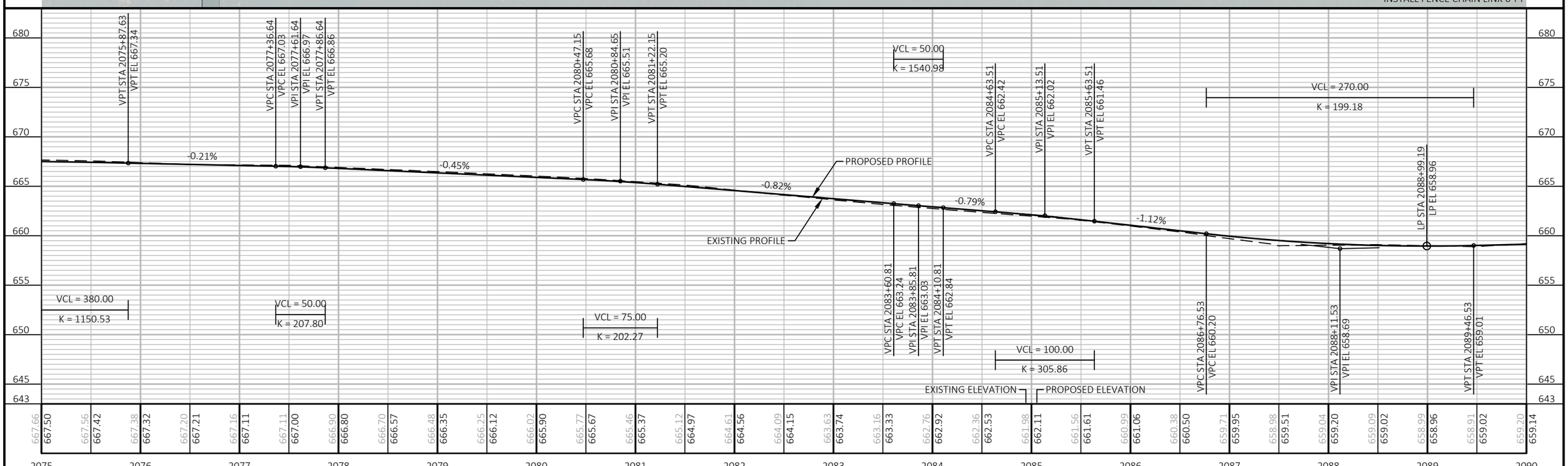

PROJECT NO: 7224-00-73	HWY: NON-HWY	COUNTY: BUFFALO	PLAN AND PROFILE: WINONA CONNECTOR	SHEET 23	E

FILE NAME : \\SP-PZ1.SEHINC.COM\PZPROJECTS1\AE\B\BUFFC\163204\5-FINAL-DSGN\51-DRAWINGS\40-TRANSHWY\C3D\72240002\SHEETSPLAN\SEC 05 PLAN AND PROFILE\050101_PN.DWG
LAYOUT NAME - 06
PLOT DATE : 8/9/2024 12:37 PM
PLOT BY : MATTHEW WINTER
PLOT NAME :
PLOT SCALE : 1 IN:100 FT

WISDOT/CADDS SHEET 44

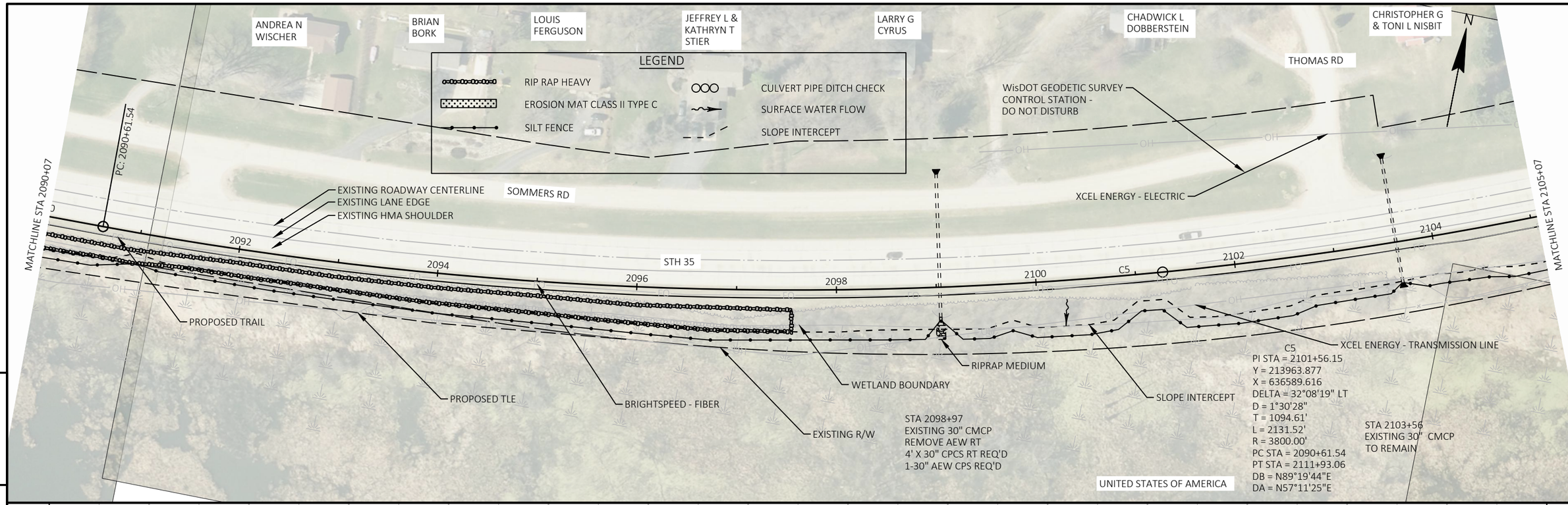

5

5

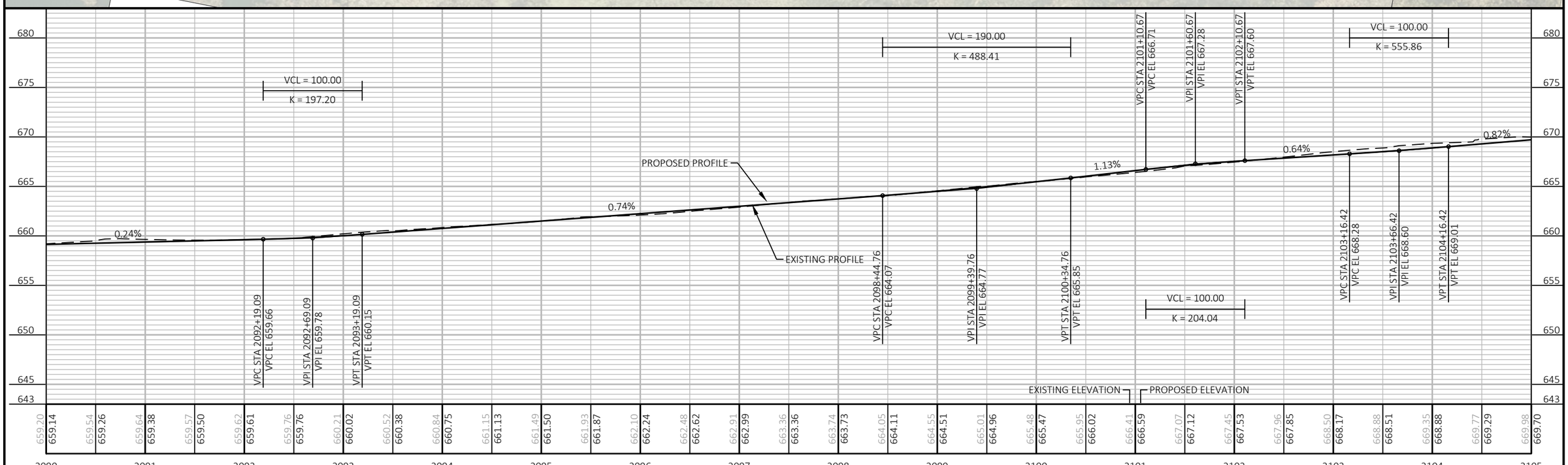

PROJECT NO: 7224-00-73	HWY: NON-HWY	COUNTY: BUFFALO	PLAN AND PROFILE: WINONA CONNECTOR	SHEET 24	E

FILE NAME : \\SP-PZ1.SEHINC.COM\PZPROJECTS1\AE\B\BUFFC\163204\5-FINAL-DSGN\51-DRAWINGS\40-TRANSHWY\C3D\72240002\SHEETSPLAN\SEC 05 PLAN AND PROFILE\050101_PN.DWG
LAYOUT NAME - 07
PLOT DATE : 8/9/2024 12:38 PM
PLOT BY : MATTHEW WINTER
PLOT NAME :
PLOT SCALE : 1 IN:100 FT

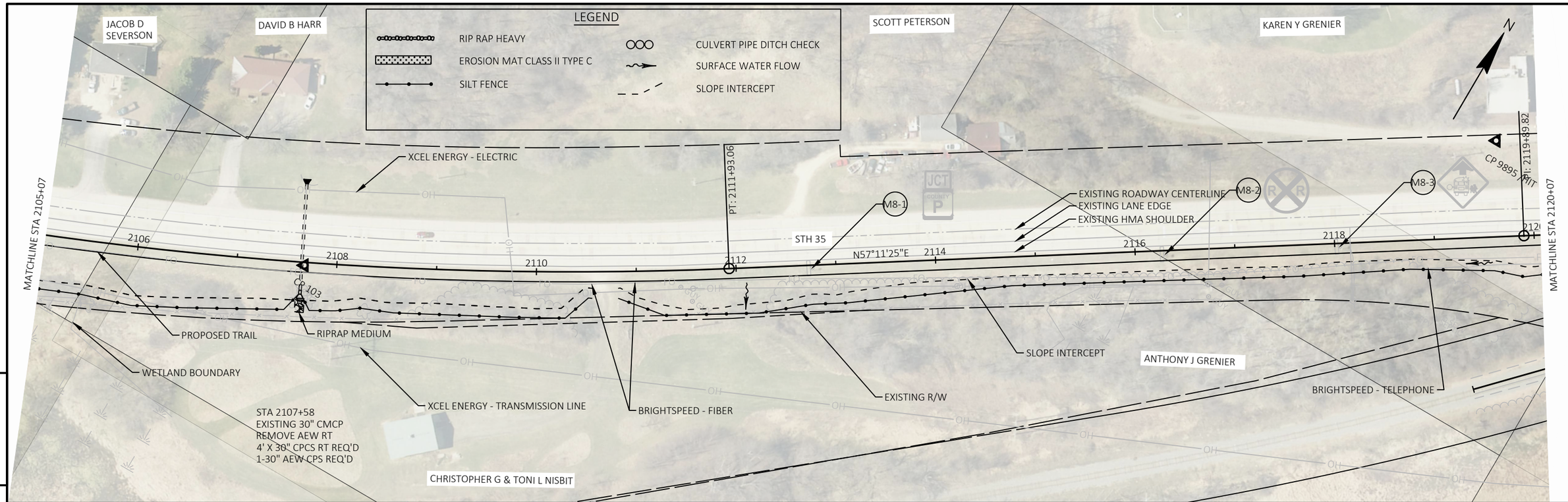

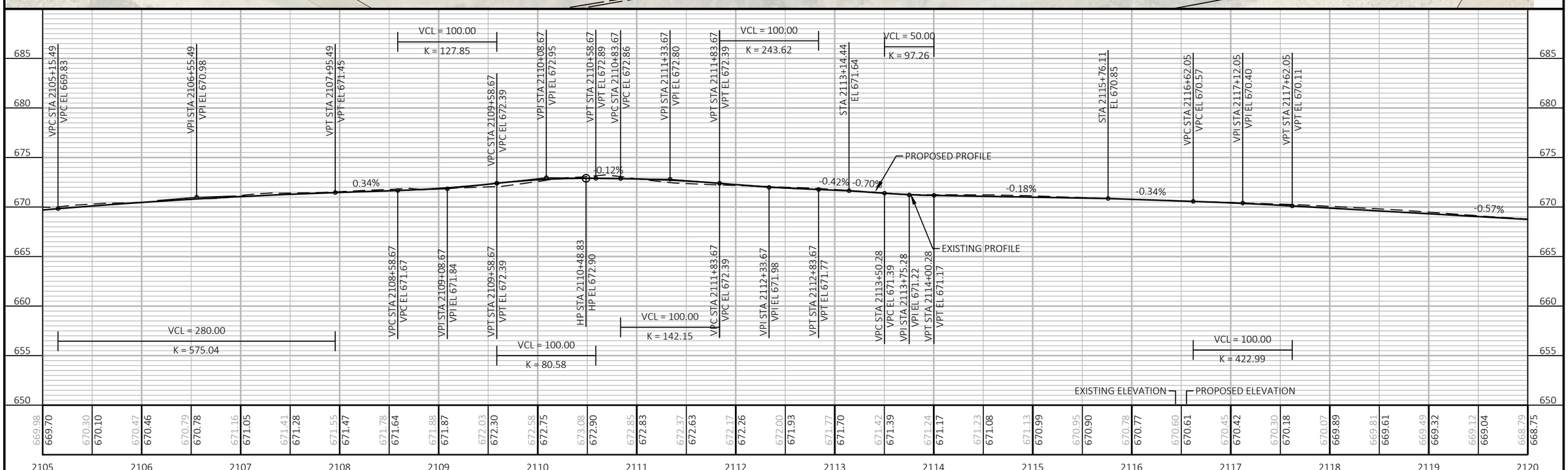

5

5

PROJECT NO: 7224-00-73	HWY: NON-HWY	COUNTY: BUFFALO	PLAN AND PROFILE: WINONA CONNECTOR	SHEET 25	E

FILE NAME : \\SP-PZ1.SEHINC.COM\PZPROJECTS1\AE\B\BUFFC\163204\5-FINAL-DSGN\51-DRAWINGS\40-TRANSHWY\C3D\72240002\SHEETSPLAN\SEC 05 PLAN AND PROFILE\050101_PN.DWG
LAYOUT NAME - 08
PLOT DATE : 8/9/2024 12:38 PM
PLOT BY : MATTHEW WINTER
PLOT NAME :
PLOT SCALE : 1 IN:100 FT

WISDOT/CADDS SHEET 44

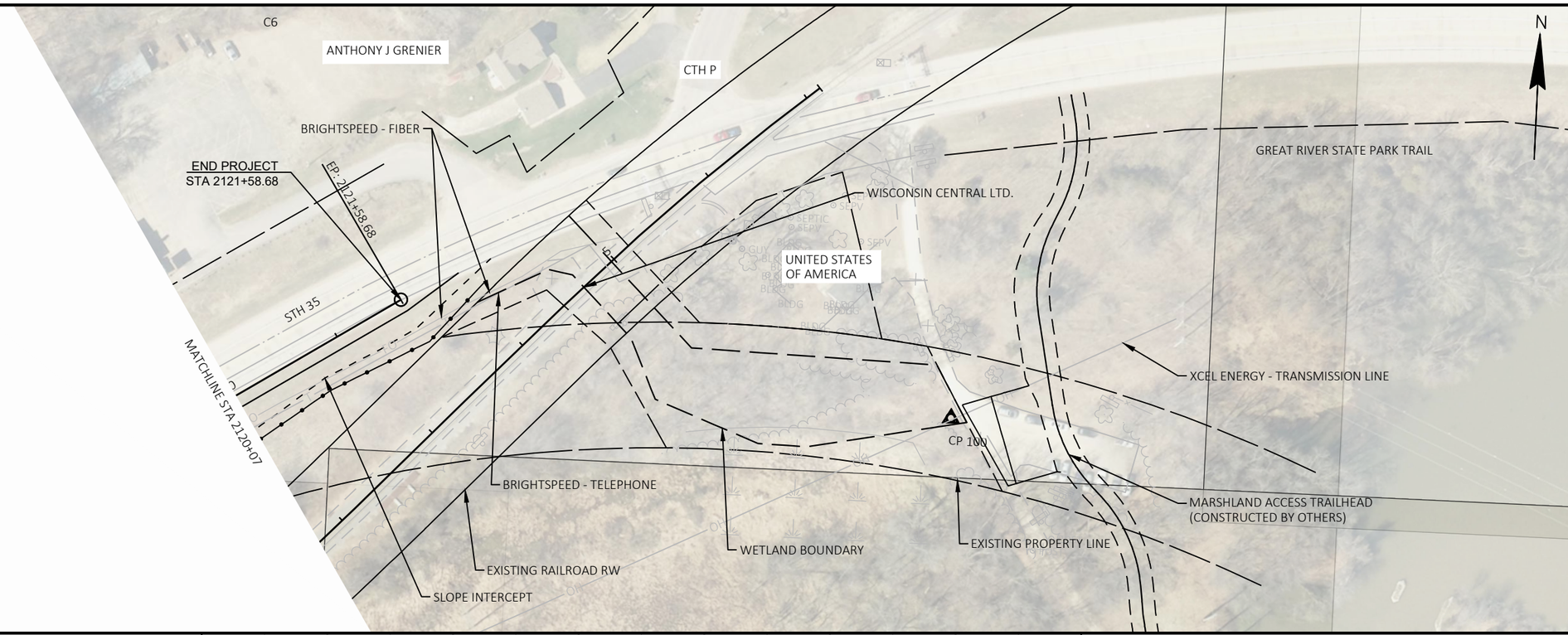

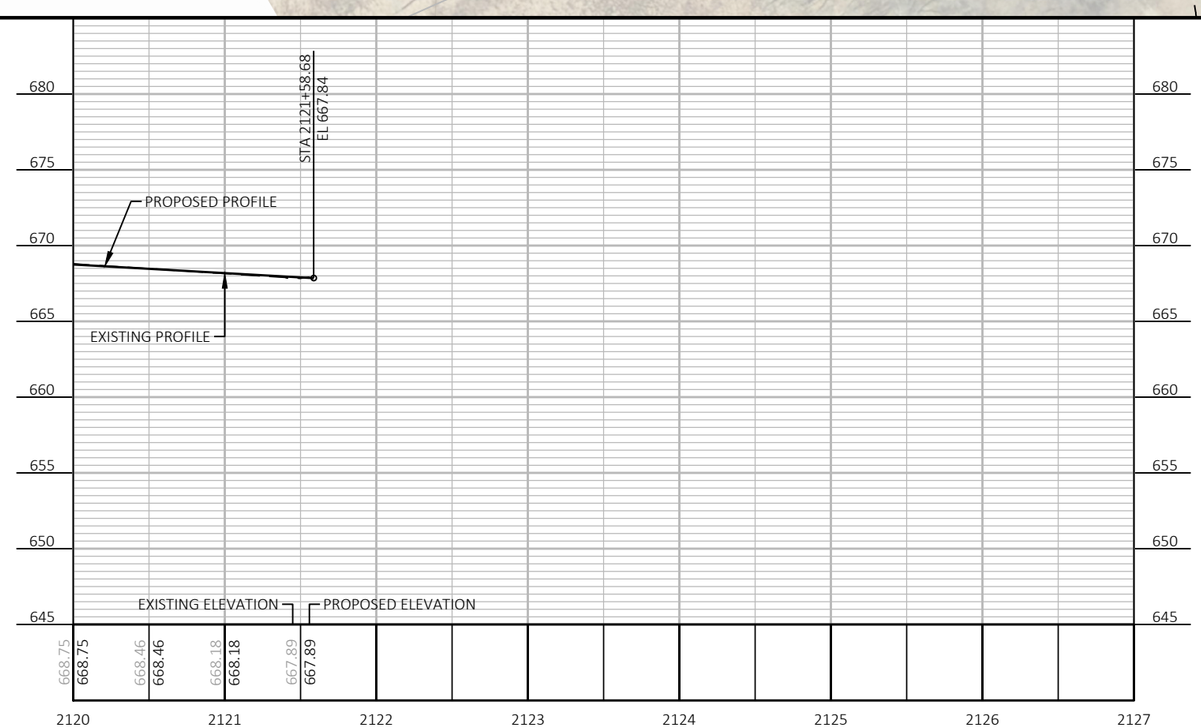

PROJECT NO: 7224-00-73	HWY: NON-HWY	COUNTY: BUFFALO	PLAN AND PROFILE: WINONA CONNECTOR	SHEET 26	E

FILE NAME : \\SP-PZ1.SEHINC.COM\PZPROJECTS1\AE\B\BUFFC\163204\5-FINAL-DSGN\51-DRAWINGS\40-TRANSHWY\C3D\72240002\SHEETSPLAN\SEC 05 PLAN AND PROFILE\050101_PN.DWG PLOT DATE : 9/16/2024 12:46 PM PLOT BY : MATTHEW WINTER PLOT NAME : PLOT SCALE : 1 IN:100 FT
LAYOUT NAME - 09

WISDOT/CADDS SHEET 44

Standard Detail Drawing List

08E09-06	SILT FENCE
08F01-11	APRON ENDWALLS FOR CULVERT PIPE
15A03-02A	FLEXIBLE MARKER POST FOR CULVERT END
15A03-02B	FLEXIBLE MARKER POST FOR CULVERT END
15B03-15A	FENCE CHAIN LINK
15B03-15B	FENCE CHAIN LINK
15C04-05	TRAFFIC CONTROL, ADVANCE WARNING SIGNS 45 M.P.H. OR GREATER TWO-WAY UNDIVIDED ROAD OPEN TO TRAFFIC
15D28-04	TRAFFIC CONTROL, WORK ON SHOULDER OR PARKING LANE, UNDIVIDED ROADWAY

6

6

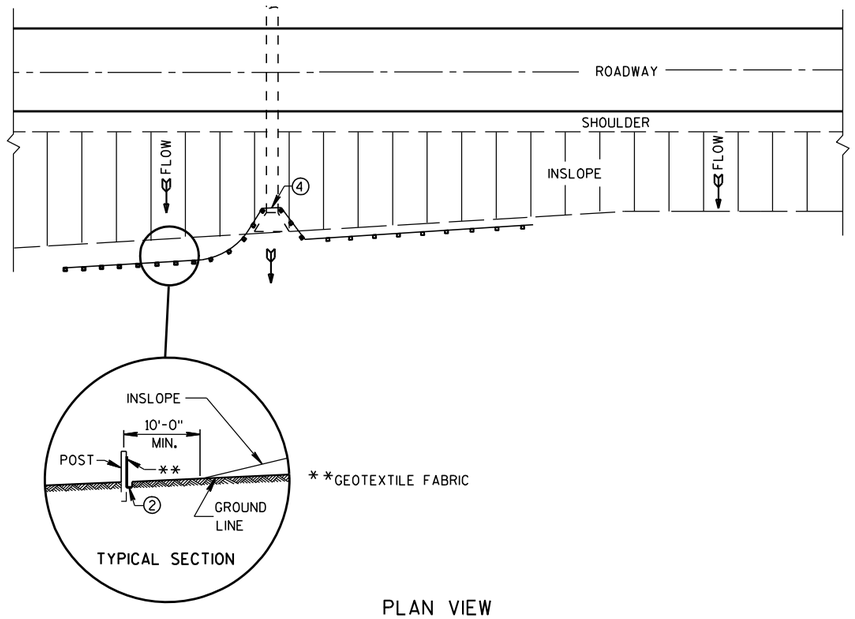

PLAN VIEW

TYPICAL APPLICATION OF SILT FENCE

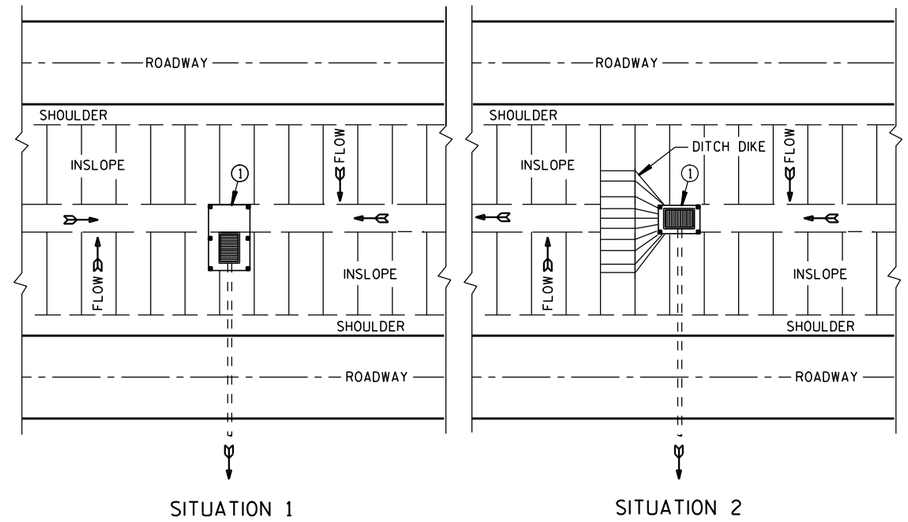

PLAN VIEW

SILT FENCE AT MEDIAN SURFACE DRAINS

GENERAL NOTES

DETAILS OF CONSTRUCTION NOT SHOWN ON THIS DRAWING SHALL CONFORM TO THE PERTINENT REQUIREMENTS OF THE STANDARD SPECIFICATIONS AND APPLICABLE SPECIAL PROVISIONS.

① HORIZONTAL BRACE REQUIRED WITH 2" X 4" WOODEN FRAME OR EQUIVALENT AT TOP OF POSTS.

② FOR MANUAL INSTALLATIONS THE TRENCH SHALL BE A MINIMUM OF 4" WIDE & 6" DEEP TO BURY AND ANCHOR THE GEOTEXTILE FABRIC. FOLD MATERIAL TO FIT TRENCH AND BACKFILL & COMPACT TRENCH WITH EXCAVATED SOIL.

③ WOOD POSTS SHALL BE A MINIMUM SIZE OF 1⅛" X 1⅛" OF OAK OR HICKORY.

④ SILT FENCE TO EXTEND ACROSS THE TOP OF THE PIPE.

⑤ CONSTRUCT SILT FENCE FROM A CONTINUOUS ROLL IF POSSIBLE BY CUTTING LENGTHS TO AVOID JOINTS. IF A JOINT IS NECESSARY USE ONE OF THE FOLLOWING TWO METHODS; A) OVERLAP THE END POSTS AND TWIST, OR ROTATE, AT LEAST 180 DEGREES. B) HOOK THE END OF EACH SILT FENCE LENGTH.

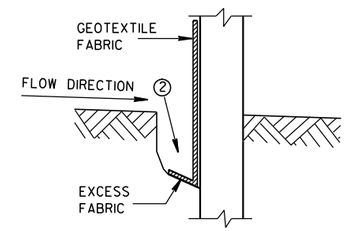

TRENCH DETAIL

NOTE: ADDITIONAL POST DEPTH OR TIE BACKS MAY BE REQUIRED IN UNSTABLE SOILS

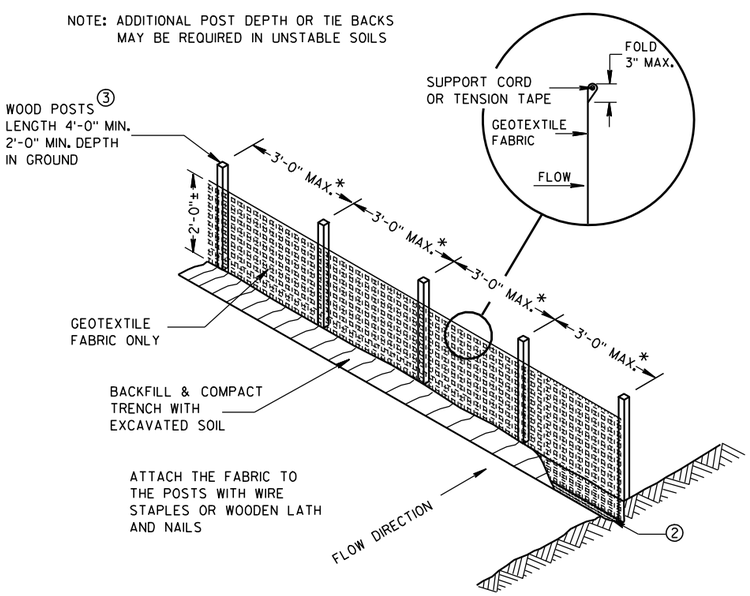

*NOTE: 8'-0" POST SPACING ALLOWED IF A WOVEN GEOTEXTILE FABRIC IS USED.

SILT FENCE

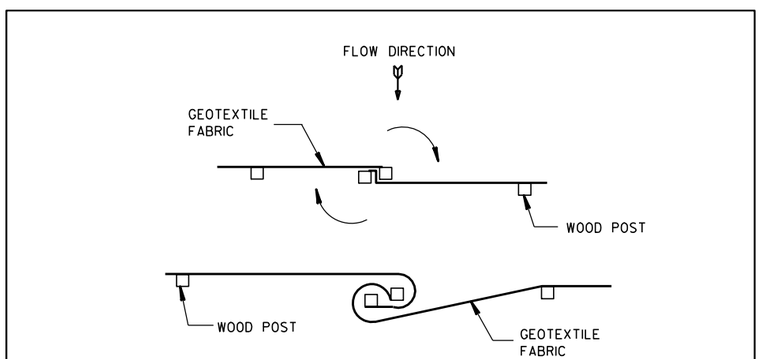

TWIST METHOD

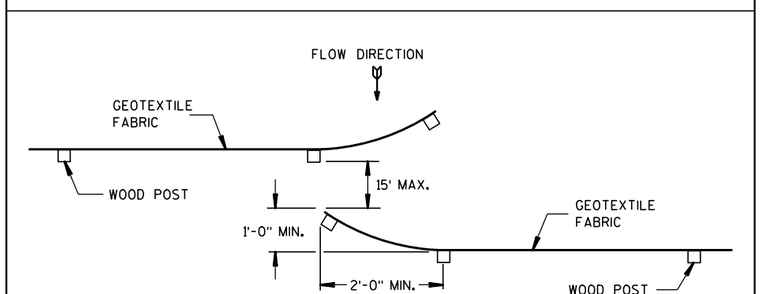

HOOK METHOD

JOINING TWO LENGTHS OF SILT FENCE ⑤

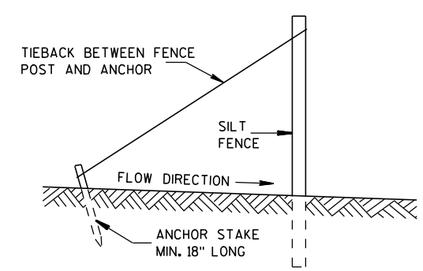

SILT FENCE TIE BACK

(WHEN REQUIRED BY THE ENGINEER)

SILT FENCE
STATE OF WISCONSIN DEPARTMENT OF TRANSPORTATION
APPROVED 4-29-05 DATE — /S/ Beth Cann-- CHIEF ROADWAY DEVELOP ENGINEER FHWA

6

6

S.D.D. 8 E 9-6

S.D.D. 8 E 9-6

METAL APRON ENDWALLS

PIPE DIA. (IN.)	MIN. THICK. (Inches) STEEL	MIN. THICK. (Inches) ALUM.	DIMENSIONS (Inches) A (±1")	B (MAX.)	H (±1")	L (±1 1/2")	L1 ①	L2 ①	W (±2")	APPROX. SLOPE	BODY
12	.064	.060	6	6	6	21	12	17 1/2	24	2 1/2 to 1	1 Pc.
15	.064	.060	7	8	6	26	14	21 3/4	30	2 1/2 to 1	1 Pc.
18	.064	.060	8	10	6	31	15	28 1/4	36	2 1/2 to 1	1 Pc.
21	.064	.060	9	12	6	36	18	29 5/8	42	2 1/2 to 1	1 Pc.
24	.064	.075	10	13	6	41	18	37 1/4	48	2 1/2 to 1	1 Pc.
30	.079	.075	12	16	8	51	18	52 1/4	60	2 1/2 to 1	1 Pc.
36	.079	.105	14	19	9	60	24	59 3/4	72	2 1/2 to 1	2 Pc.
42	.109	.105	16	22	11	69	24	75 5/8	84	2 1/2 to 1	2 Pc.
48	.109	.105	18	27	12	78	24	81	90	2 1/4 to 1	3 Pc.
54	.109	.105	18	30	12	84	30	85 1/2	102	2 1/4 to 1	3 Pc.
60	.109×	.105×	18	33	12	87	—	—	114	2 to 1	3 Pc.
66	.109×	.105×	18	36	12	87	—	—	120	2 to 1	3 Pc.
72	.109×	.105×	18	39	12	87	—	—	126	2 to 1	3 Pc.
78	.109×	.105×	18	42	12	87	—	—	132	1 1/2 to 1	3 Pc.
84	.109×	.105×	18	45	12	87	—	—	138	1 1/2 to 1	3 Pc.
90	.109×	.105×	18	37	12	87	—	—	144	1 1/2 to 1	3 Pc.
96	.109×	.105×	18	35	12	87	—	—	150	1 1/2 to 1	3 Pc.

× EXCEPT CENTER PANEL
SEE GENERAL NOTES

REINFORCED CONCRETE APRON ENDWALLS

PIPE DIA. (IN.)	DIMENSIONS (Inches) T	A	B	C	D	E	G	APPROX. SLOPE
12	2	4	24	48 7/8	72 7/8	24	2	3 to 1
15	2 1/4	6	27	46	73	30	2 1/4	3 to 1
18	2 1/2	9	27	46	73	36	2 1/2	3 to 1
21	2 3/4	9	36	37 1/2	73 1/2	42	2 3/4	3 to 1
24	3	9 1/2	43 1/2	30	73 1/2	48	3	3 to 1
27	3 1/4	10 1/2	49 1/2	24	73 1/2	54	3 1/4	3 to 1
30	3 1/2	12	54	19 3/4	73 1/2	60	3 1/2	3 to 1
36	4	15	63	34 3/4	97 3/4	72	4	3 to 1
42	4 1/2	21	63	35	98	78	4 1/2	3 to 1
48	5	24	72	26	98	84	5	3 to 1
54	5 1/2	27	65	*33 1/4-**35	*98 1/4-**100	90	5 1/2	2 2/5 to 1
60	6	*30-**35	60	39	99	96	5	2 to 1
66	6 1/2	*24-**30	*72-**78	*21-**27	99	102	5 1/2	2 to 1
72	7	*24-**36	78	21	99	108	6	2 to 1
78	7 1/2	*24-**36	78	21	99	114	6 1/2	2 to 1
84	8	36	90 1/2	21	111 1/2	120	6 1/2	1 1/2 to 1
90	8 1/2	41	87 1/2	24	111 1/2	132	6 1/2	1 1/2 to 1

*MINIMUM
**MAXIMUM

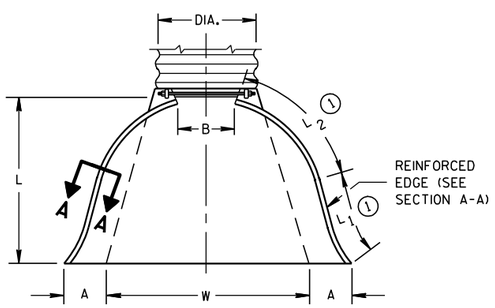

PLAN VIEW

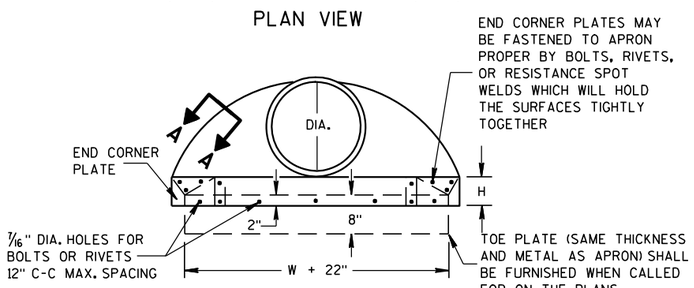

END VIEW

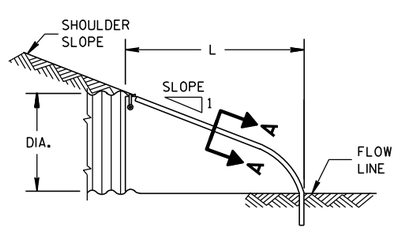

SIDE ELEVATION

METAL ENDWALLS

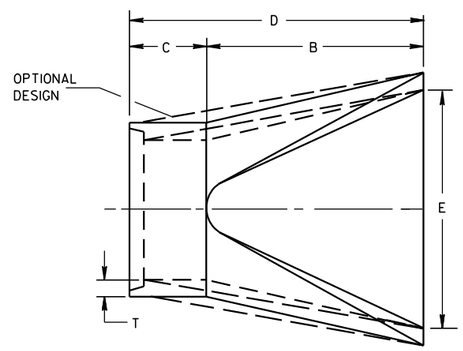

PLAN

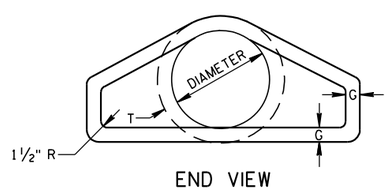

END VIEW

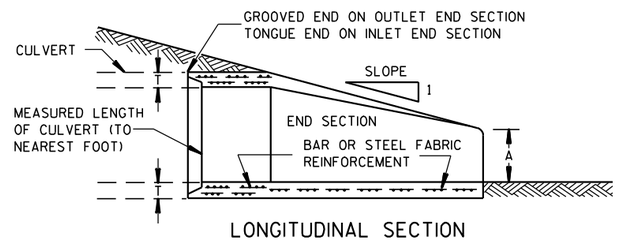

LONGITUDINAL SECTION

CONCRETE ENDWALLS

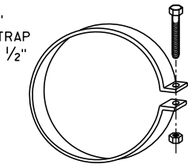

ALTERNATE FOR TYPE 1 CONNECTION

END SECTION CONNECTOR STRAP

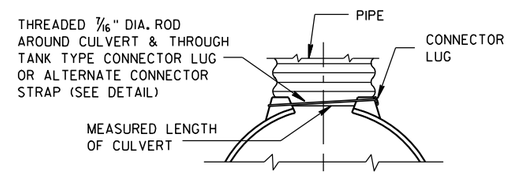

TYPE 1
FOR 12" THRU 24" CORR. PIPE

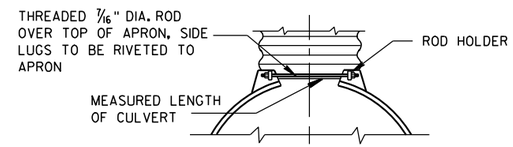

TYPE 2
FOR 30" THRU 96" CORR. PIPE

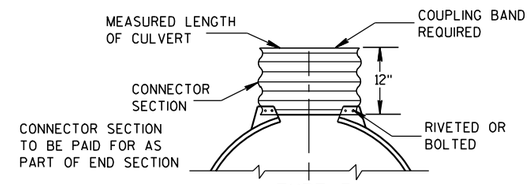

TYPE 3
FOR 42" THRU 96" CORR. PIPE

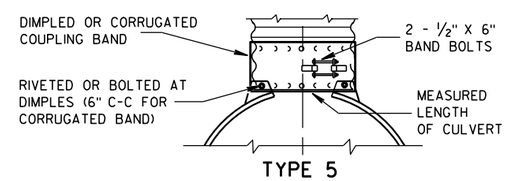

TYPE 5
ALTERNATE FOR:
ALL SIZES CORRUGATED CIRCULAR PIPE

NOTE: DIMPLED BAND FITS OVER OUTSIDE OF ENDWALL, AND CORRUGATED BAND FITS INSIDE ENDWALL. DIMPLED BAND MAY BE USED WITH HELICALLY CORRUGATED PIPE.

FOR CIRCUMFERENTIALLY CORRUGATED PIPE USE ENDWALL CONNECTION DETAILS 1, 2, 3 OR 5 AS APPLICABLE.

FOR HELICALLY CORRUGATED PIPE USE ENDWALL CONNECTION DETAILS 1, 2 OR 5.

FOR HELICALLY CORRUGATED PIPES WITH TWO CIRCUMFERENTIAL CORRUGATIONS AT EACH END USE ENDWALL CONNECTION DETAILS 1, 2 OR 3.

CONNECTION DETAILS

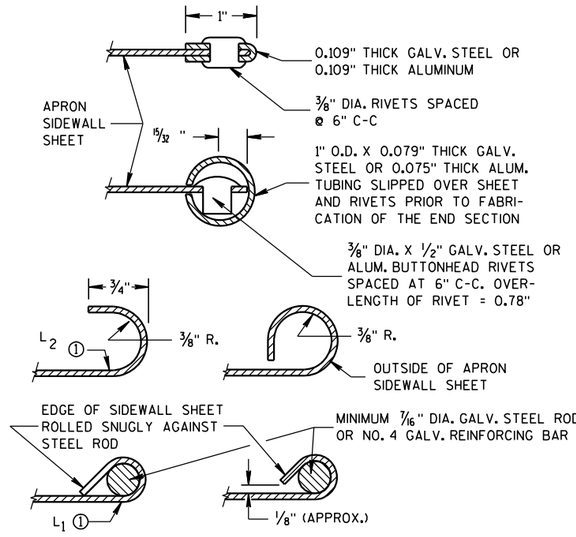

SECTION A-A

GENERAL NOTES

DETAILS OF CONSTRUCTION, MATERIALS AND WORKMANSHIP NOT SHOWN ON THIS DRAWING SHALL CONFORM TO THE PERTINENT REQUIREMENTS OF THE STANDARD SPECIFICATIONS AND THE APPLICABLE SPECIAL PROVISIONS.

CONCRETE CULVERT ENDWALLS MAY NOT BE USED WITH GALVANIZED STEEL OR ALUMINUM CULVERT PIPE OR VISE VERSA. GALVANIZED STEEL OR ALUMINUM ENDWALLS SHALL NORMALLY BE INSTALLED ON CULVERT PIPE OF THE SAME METAL.

ALL THREE PIECE STEEL APRON ENDWALLS FOR 60" DIAMETER PIPE AND LARGER SHALL HAVE 0.109" SIDES AND 0.138" CENTER PANELS. ALL THREE PIECE ALUMINUM APRON ENDWALLS FOR 60" DIAMETER PIPE AND LARGER SHALL HAVE 0.105" SIDES AND 0.134" CENTER PANELS. THE WIDTH OF CENTER PANELS SHALL BE GREATER THAN 20 PERCENT OF THE PIPE PERIMETER.

LAP SEAMS SHALL BE TIGHTLY JOINED BY GALVANIZED RIVETS OR BOLTS FOR STEEL UNITS AND ALUMINUM RIVETS AND BOLTS FOR ALUMINUM UNITS. FOR THE 60" THROUGH 96" DIAMETER APRON ENDWALL SIZES, THE REINFORCED EDGES AND CENTER PANEL SEAMS SHALL BE FURTHER REINFORCED WITH GALVANIZED STEEL OR ALUMINUM STIFFENER ANGLES. THE ANGLES SHALL BE ATTACHED BY GALVANIZED NUTS AND BOLTS FOR STEEL UNITS AND ALUMINUM NUTS AND BOLTS FOR ALUMINUM UNITS.

WHERE TWO OR MORE PIPES WITH APRON ENDWALLS ARE LAID ADJACENT TO EACH OTHER, THEY SHALL BE SEPARATED BY A DISTANCE SUFFICIENT TO PROVIDE A MINIMUM CLEARANCE OF 6 INCHES BETWEEN APRON ENDWALLS.

① FOR PIPE SIZES UP TO 60" DIAMETER, A 180° ROLLED EDGE MAY BE USED INSTEAD OF STEEL ROD REINFORCEMENT. SEE SECTION A-A.

APRON ENDWALLS FOR CULVERT PIPE

STATE OF WISCONSIN
DEPARTMENT OF TRANSPORTATION

APPROVED
11/30/94 — DATE
/S/ Rory L. Rhinesmith — CHIEF ROADWAY DEVELOPMENT ENGINEER
FHWA

GENERAL NOTES

DETAILS OF CONSTRUCTION, MATERIALS AND WORKMANSHIP NOT SHOWN ON THIS DRAWING SHALL CONFORM TO THE PERTINENT REQUIREMENTS OF THE STANDARD SPECIFICATIONS AND THE APPLICABLE SPECIAL PROVISIONS.

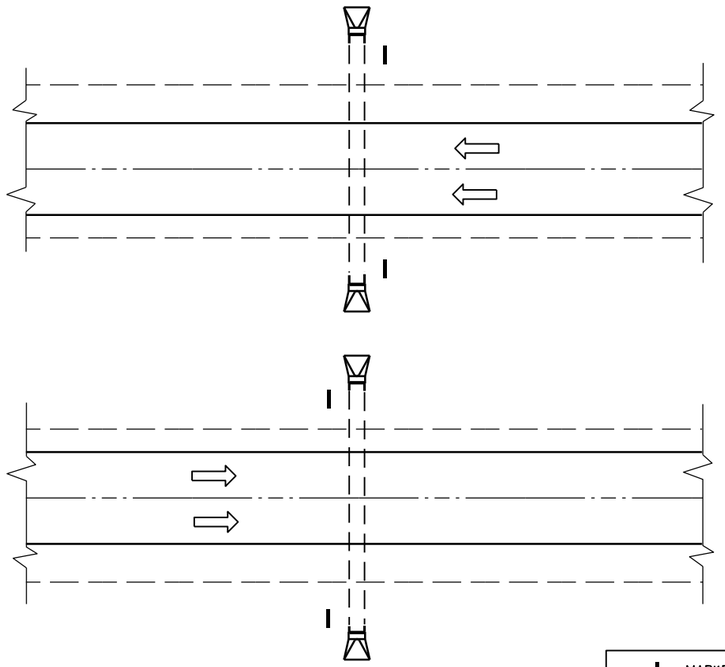

PLAN VIEW

DIVIDED HIGHWAY

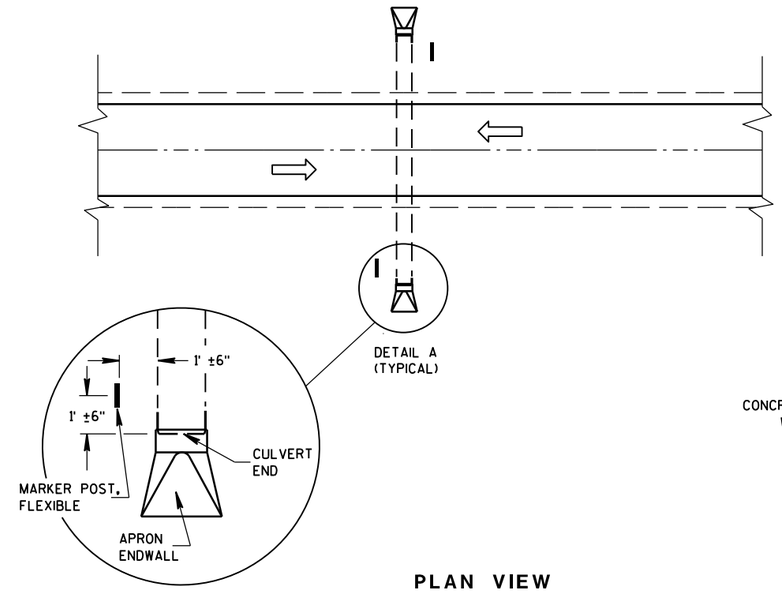

DETAIL A
(TYPICAL)

PLAN VIEW

UNDIVIDED HIGHWAY

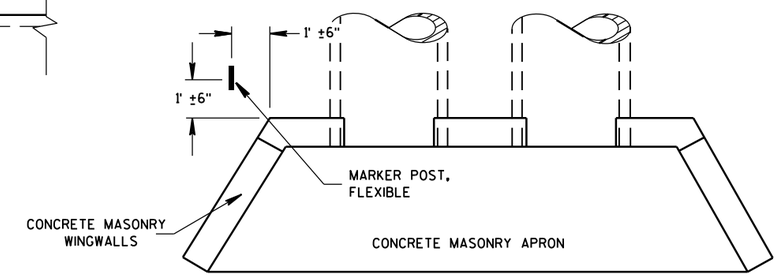

PLAN VIEW

CONCRETE MASONRY ENDWALLS FOR CULVERT PIPE AND PIPE ARCH

MARKER POST, FLEXIBLE

DIRECTION OF TRAFFIC FLOW

FLEXIBLE MARKER POST LOCATION

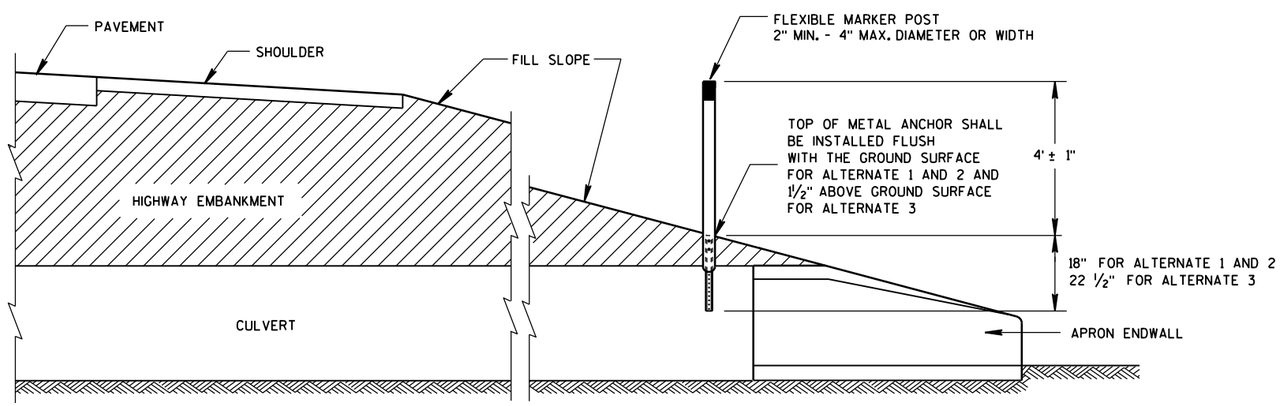

CROSS SECTION

FLEXIBLE MARKER POST

FLEXIBLE MARKER POST FOR CULVERT END

STATE OF WISCONSIN
DEPARTMENT OF TRANSPORTATION

6

6

S.D.D. 15 A 3-2a

S.D.D. 15 A 3-2a

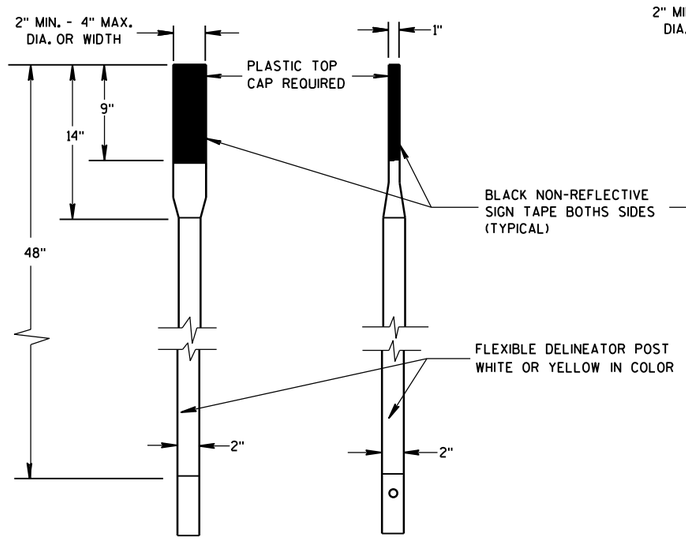

FRONT VIEW SIDE VIEW

ALTERNATE 1

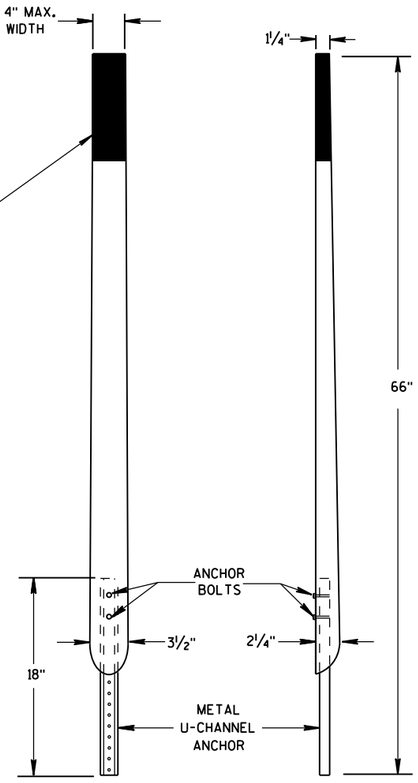

FRONT VIEW SIDE VIEW

ALTERNATE 2

FLEXIBLE MARKER POSTS

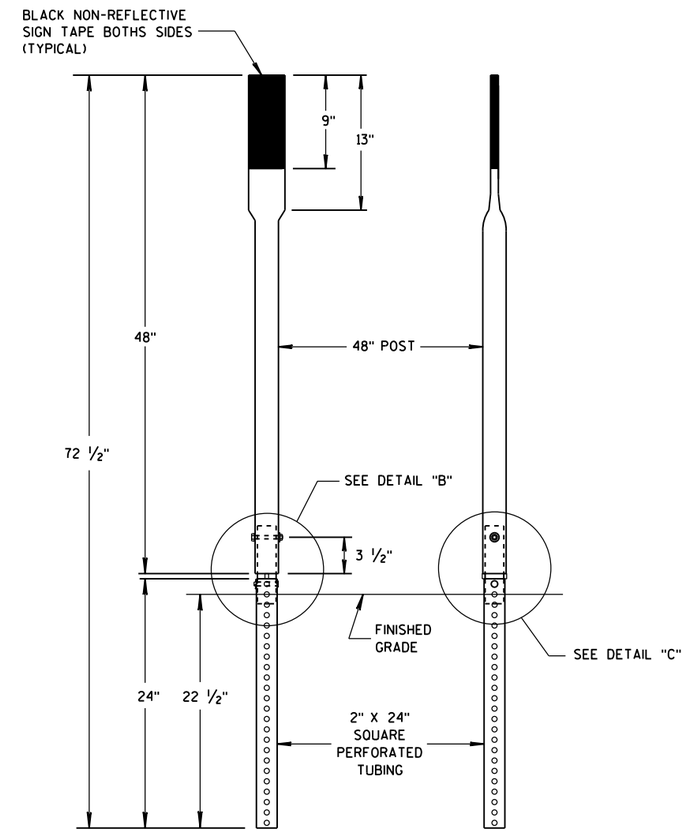

FRONT VIEW SIDE VIEW

ALTERNATE 3

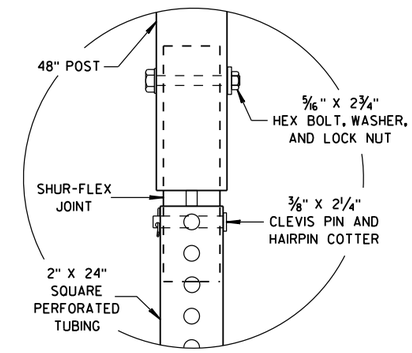

DETAIL B

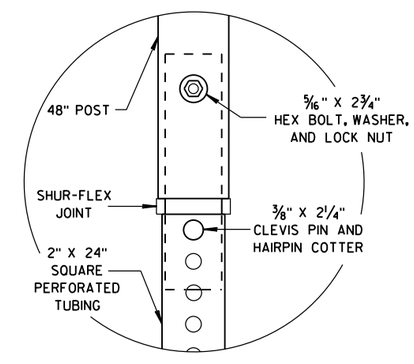

DETAIL C

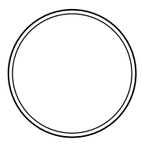

SECTION A-A

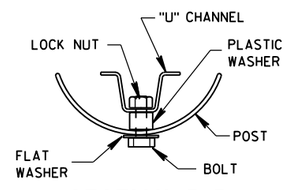

SECTION B-B

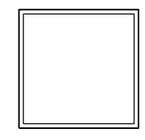

SECTION C-C

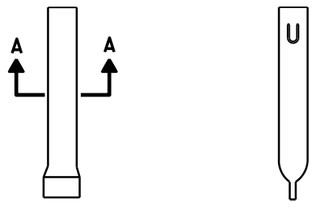

FRONT VIEW SIDE VIEW

ALTERNATE 1

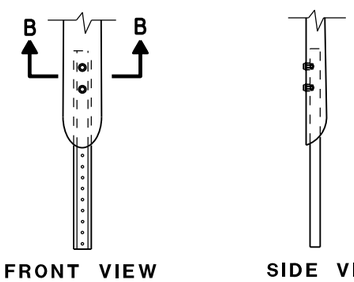

FRONT VIEW SIDE VIEW

ALTERNATE 2

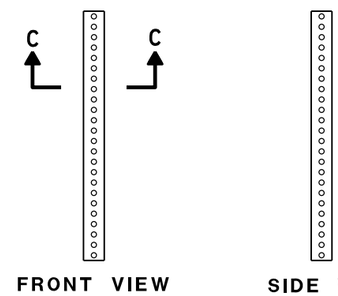

FRONT VIEW SIDE VIEW

ALTERNATE 3

FLEXIBLE MARKER POST ANCHORS

FLEXIBLE MARKER POST
FOR CULVERT END

STATE OF WISCONSIN
DEPARTMENT OF TRANSPORTATION

APPROVED
10/1/2012 /S/ Travis Feltes
DATE STATE TRAFFIC ENGINEER
FHWA

6

6

S.D.D. 15 A 3-2b

S.D.D. 15 A 3-2b

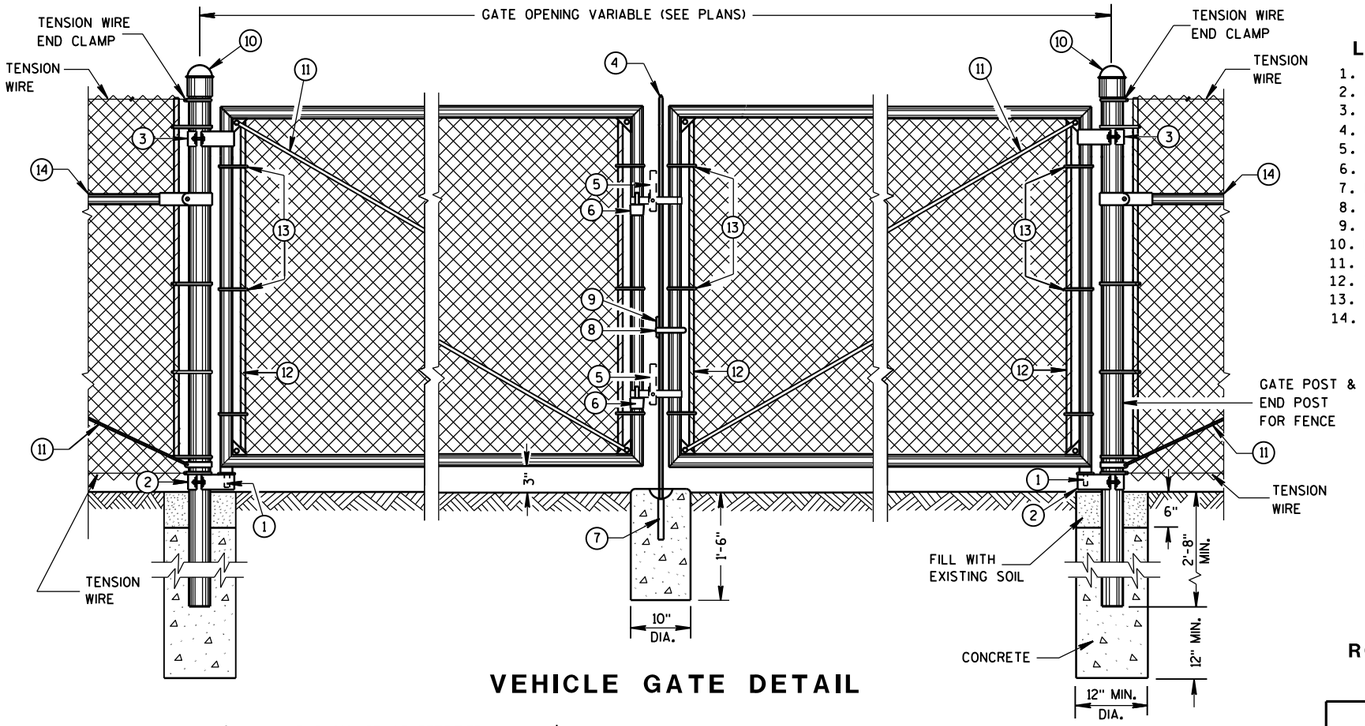

VEHICLE GATE DETAIL

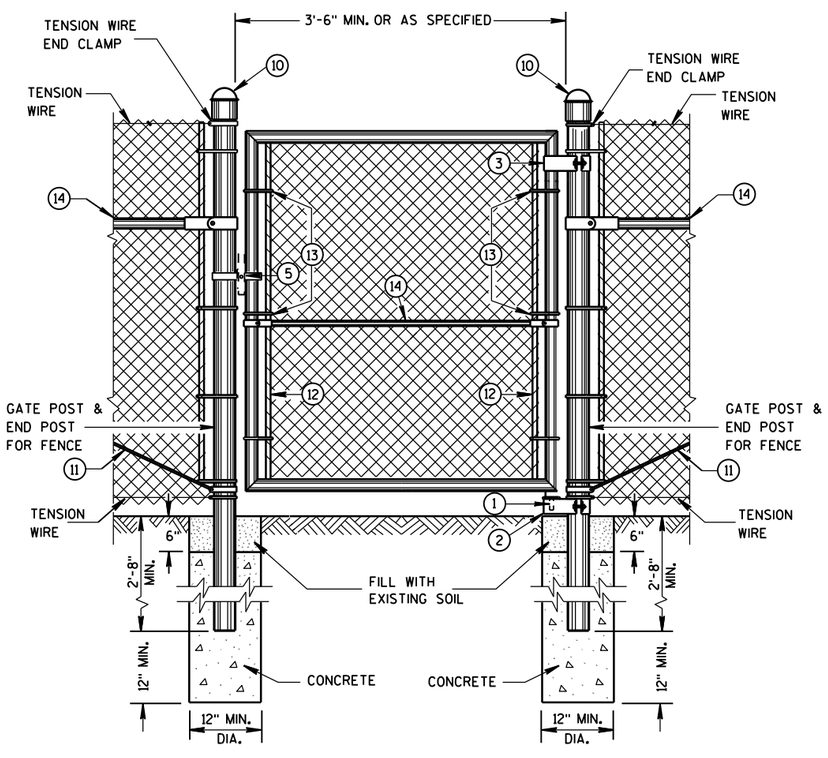

PEDESTRIAN GATE DETAIL

LEGEND

1. STRAIGHT PLUG
2. BOTTOM HINGE
3. TOP HINGE
4. PLUNGER ROD
5. FULCRUM LATCH
6. FORK CATCH *
7. PLUNGER ROD CATCH
8. LOCK KEEPER GUIDE
9. LOCK KEEPER
10. DOME TOPS
11. TRUSS RODS
12. TENSION BAR
13. TENSION BANDS
14. BRACE RAIL

*NOT REQUIRED ON SINGLE SWING PEDESTRIAN GATE

GENERAL NOTES

FENCE POSTS INSTALLED ON CONCRETE WALLS SHALL BE ANCHORED INTO EMBEDDED METAL SLEEVES OR CORED HOLE BY FILLING THE ANNULAR SPACE WITH PEA GRAVEL FOLLOWED BY AN EPOXY RESIN ADHESIVE. THE EPOXY RESIN ADHESIVE SHALL CONFORM TO THE REQUIREMENTS OF AASHTO M 235, CLASS A, B OR C.

USE FENCE FABRIC KNUCKLED AT BOTH SELVAGES.

FOR LEAF GATES GREATER THAN 8 FEET WIDE, INSTALL INTERIOR VERTICAL BRACE RAIL AT 8 FOOT INTERVALS.

FOR FABRIC HEIGHTS GREATER THAN 8 FEET, INSTALL INTERIOR HORIZONTAL BRACE RAILS TO LEAF GATE.

MAXIMUM SAG FOR OUTER GATE MEMBER SHALL NOT EXCEED THE GREATER OF 1% OF THE LEAF GATE WIDTH OR 2 INCHES.

USE TYPE 2, CLASS 3, MARCELLED/CRIMPED, TENSION WIRE PER ASTM A 817.

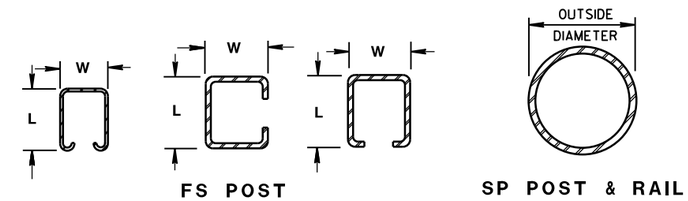

CROSS SECTIONS OF POSTS AND RAILS

ROLLED-FORMED STEEL FENCE POST (2.0 OZ./SQ. FT. COATING)

POST TYPE	LENGTH (L) INCH	WIDTH (W) INCH	WEIGHT LBS/FT
FS1	1.625	1.25	1.35
FS2†	1.875	1.625	1.850
FS2	1.875	1.625	2.400
FS3	2.250	1.700	2.780

ROUND STEEL FENCE POST (1.8 OZ./SQ. FT. COATING)

POST TYPE	OUTSIDE DIMENSION INCH	WALL THICKNESS INCH	WEIGHT LBS/FT
SP1	1.660	0.140	2.270
SP2	1.900	0.145	2.720
SP3	2.375	0.154	3.650
SP4	2.875	0.203	5.800
SP5	4.000	0.226	9.120
SP6	6.625	0.280	18.990
SP7	8.625	0.322	28.580

REQUIRED FENCE POST SIZES

USE	FABRIC HEIGHTS FEET	POST TYPE
TERMINAL POSTS **	LESS THAN OR EQUAL TO 6 FT.	SP3
	GREATER THAN OR EQUAL TO 6 FT.	SP4
LINE POSTS	LESS THAN OR EQUAL TO 6 FT.	SP2
	LESS THAN OR EQUAL TO 8 FT.	SP3
	GREATER THAN OR EQUAL TO 8 FT.	SP4
	LESS THAN OR EQUAL TO 8 FT.	FS2 OR FS2†
	GREATER THAN OR EQUAL TO 8 FT.	FS3

REQUIRED POST SIZE FOR GATES

USE	LEAF WIDTHS FEET	POST TYPE
GATES	LESS THAN OR EQUAL TO 6 FT.	SP4
	LESS THAN OR EQUAL TO 13 FT.	SP5
	LESS THAN OR EQUAL TO 18 FT.	SP6
	LESS THAN OR EQUAL TO 23 FT.	SP7

BRACE RAIL TYPES

USE		TYPE
BRACE RAIL		SP1 OR FS1

** INCLUDES END, CORNER, ANGLE, INTERSECTION AND INTERMEDIATE BRACED POSTS

FENCE CHAIN LINK

STATE OF WISCONSIN
DEPARTMENT OF TRANSPORTATION

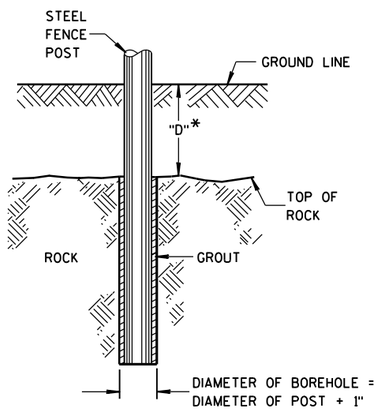

*IF "D" IS LESS THAN 2'-6", DRILL ROCK AND INSTALL GROUT

ROCK INSTALLATION OF LINE POST

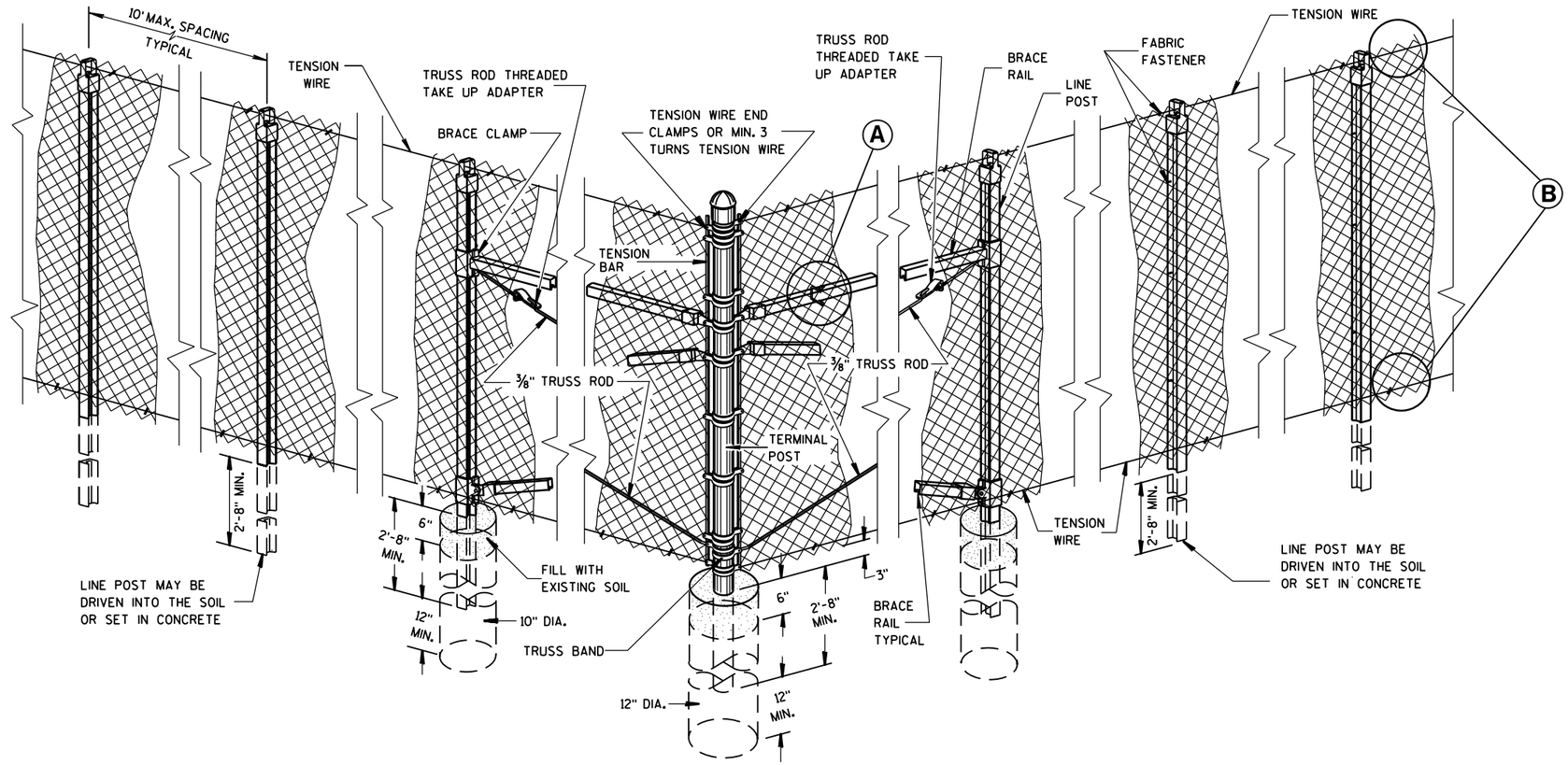

END, CORNER, ANGLE INTERSECTION & INTERMEDIATE BRACED POSTS

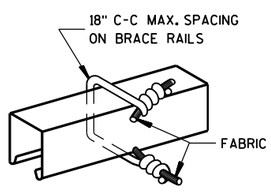

BRACE RAIL
FABRIC FASTENER
(A)

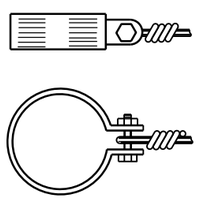

TENSION WIRE END CLAMP

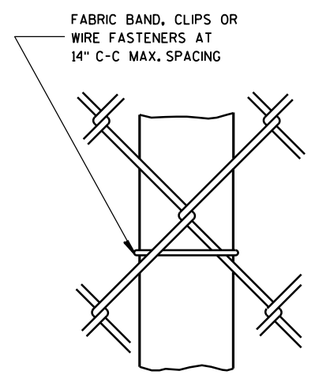

LINE POST
FABRIC FASTENER

AT TOP

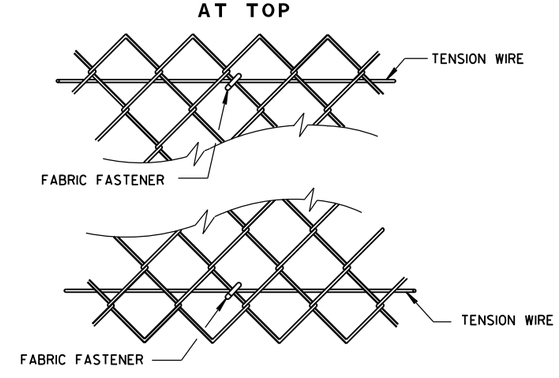

AT BOTTOM
SELVAGES
(B)

FENCE CHAIN LINK	
STATE OF WISCONSIN DEPARTMENT OF TRANSPORTATION	
APPROVED FEB. 2015 DATE	/S/ Jerry H. Zogg ROADWAY STANDARDS DEVELOPMENT ENGINEER
FHWA	

6

6

S.D.D. 15 B 3-15b

S.D.D. 15 B 3-15b

GENERAL NOTES

THE EXACT NUMBER, LOCATION, AND SPACING OF ALL SIGNS AND DEVICES SHALL BE ADJUSTED TO FIT FIELD CONDITIONS.

THE SPACING BETWEEN TRAFFIC CONTROL SIGNS SHOULD BE ADJUSTED TO NOT CONFLICT WITH AND SHOULD PROVIDE A MINIMUM OF 200 FEET (500 FEET DESIRABLE) CLEARANCE TO EXISTING SIGNS THAT WILL REMAIN IN PLACE.

ALL SIGNS ARE 48" X 48" UNLESS OTHERWISE NOTED.

SIGNS THAT WILL BE IN PLACE LESS THAN SEVEN CONTINUOUS DAYS AND NIGHTS MAY BE MOUNTED ON PORTABLE SUPPORTS.

IF A "STOP" SIGN MUST BE REMOVED FOR A WORK OPERATION, A TEMPORARY "STOP" SIGN SHALL BE PLACED PRIOR TO THE SIGN REMOVAL, OR A FLAGGER SHALL BE PROVIDED UNTIL THE SIGN IS REESTABLISHED.

* OMIT G20-1 SIGNS IF LENGTH OF WORK AREA IS 2 MILES OR LESS

** PLACE AN ADDITIONAL W20-1A "ROAD WORK AHEAD" SIGN IF WORK AREA WITHIN THE PROJECT IS SEPARATED BY MORE THAN 2 MILES FROM PREVIOUS WORK AREA.

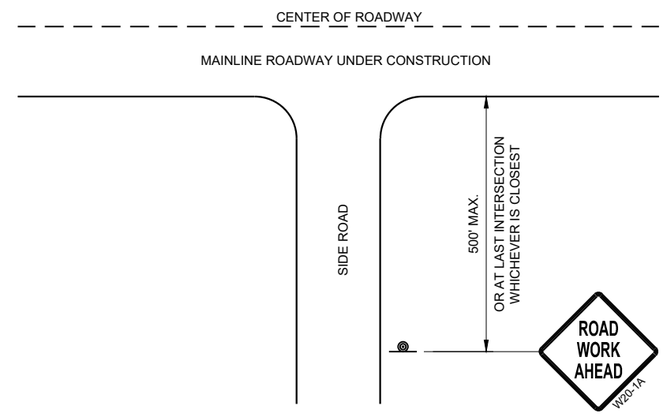

TYPICAL SIDE ROAD APPROACH WARNING SIGN DETAIL

LEGEND

- SIGN ON PERMANENT SUPPORT
- DIRECTION OF TRAFFIC
- WORK AREA

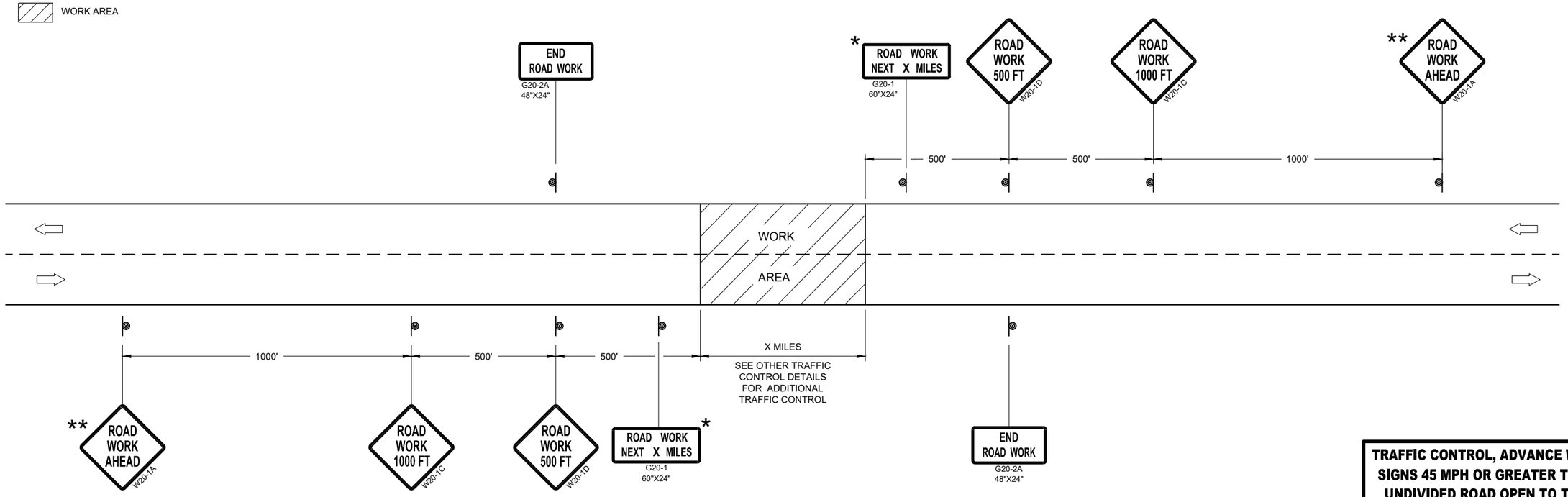

TRAFFIC CONTROL, ADVANCE WARNING SIGNS 45MPH OR GREATER

TRAFFIC CONTROL, ADVANCE WARNING SIGNS 45 MPH OR GREATER TWO-WAY UNDIVIDED ROAD OPEN TO TRAFFIC

STATE OF WISCONSIN
DEPARTMENT OF TRANSPORTATION

APPROVED
July 2018 — DATE
/S/ Andrew Heidtke — WORK ZONE ENGINEE
FHWA

6
SDD 15C04 - 05

LEGEND

SIGN ON PERMANENT SUPPORT

TRAFFIC CONTROL DRUM

DIRECTION OF TRAFFIC

WORK ZONE

GENERAL NOTES

ALL SIGNS ARE 48"X48" UNLESS OTHERWISE NOTED. IF NECESSARY DUE TO SPACE CONSTRAINTS IN URBAN AREAS, 36" X 36" SIGNS MAY BE USED IF APPROVED BY THE REGIONAL TRAFFIC UNIT.

"WO" SIGN IS THE SAME AS "W" SIGN EXCEPT THE BACKGROUND IS ORANGE.

ANY SIGNS TEMPORARY OR EXISTING, WHICH CONFLICT WITH THE TRAFFIC CONTROL "IN USE" SHALL BE REMOVED OR COVERED AS NEEDED AND AS APPROVED BY THE ENGINEER.

THE EXACT NUMBER, LOCATION, AND SPACING OF ALL SIGNS AND DEVICES SHALL BE ADJUSTED TO FIT FIELD CONDITIONS AS APPROVED BY THE ENGINEER.

CHANNELIZING DEVICES PLACED ADJACENT TO WORK AREA SHALL BE PULLED BACK FROM THE TRAVEL LANE WHEN WORK IS NOT IN PROGRESS.

SIGNS THAT WILL BE IN PLACE LESS THAN 7 CONTINUOUS DAYS AND NIGHTS MAY BE MOUNTED ON PORTABLE SUPPORTS.

W20-1A AND G20-2A SIGNS ARE NOT REQUIRED IF THE WORK AREA IS WITHIN A LARGER WORK ZONE WHERE THESE SIGNS ARE ALREADY PRESENT. G20-2A SIGNS MAY ALSO BE OMITTED IF DURATION OF WORK IS LESS THAN 7 CONTINUOUS DAYS AND NIGHTS.

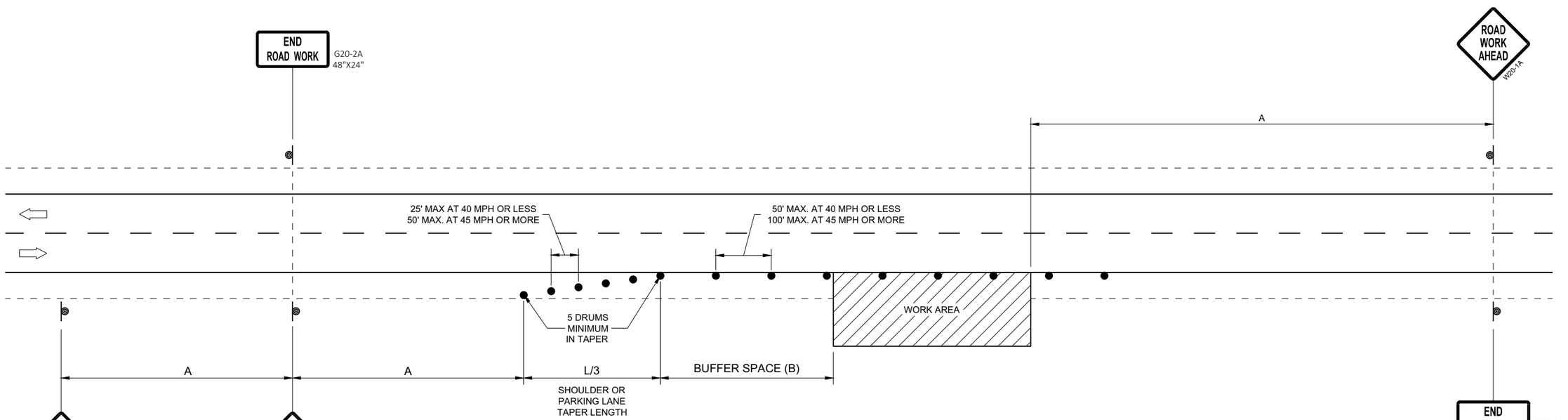

OR
IF TRAFFIC CONTROL DEVICES
ENCROACH ONTO TRAVELED WAY, USE

POSTED SPEED LIMIT PRIOR TO WORK STARTING (MPH)	ADVANCE WARNING SIGN SPACING (A) FEET	SHOULDER TAPER L / 3 W, LATERAL OFFSET (FT)						BUFFER SPACE (B) FEET
		3	4	5	6	7	8	
25	200'	10	14	17	21	24	28	55
30	200'	15	20	25	30	35	40	85
35	350'	20	27	34	40	47	54	120
40	350'	26	35	44	53	62	70	170
45	500'	45	59	74	89	104	119	220
50	500'	50	66	83	99	116	132	280
55	500'	54	73	91	109	127	145	335'

TRAFFIC CONTROL, WORK ON SHOULDER OR PARKING LANE, UNDIVIDED ROADWAY

STATE OF WISCONSIN
DEPARTMENT OF TRANSPORTATION

APPROVED
May 2020
DATE

/S/ Andrew Heidtke
STATEWIDE WORK ZONE T
SAFETY ENGINEER

FHWA

6

SDD 15D28 - 04

URBAN AREA

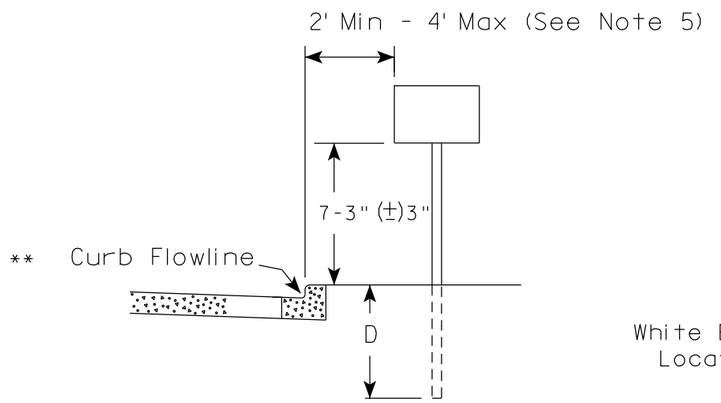

RURAL AREA (See Note 2)

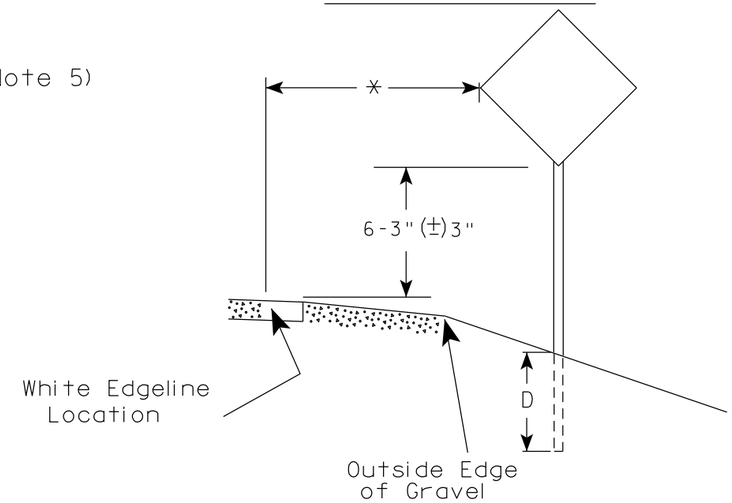

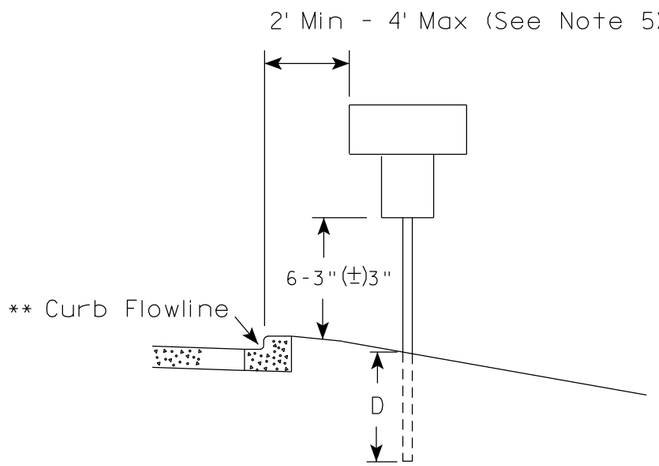

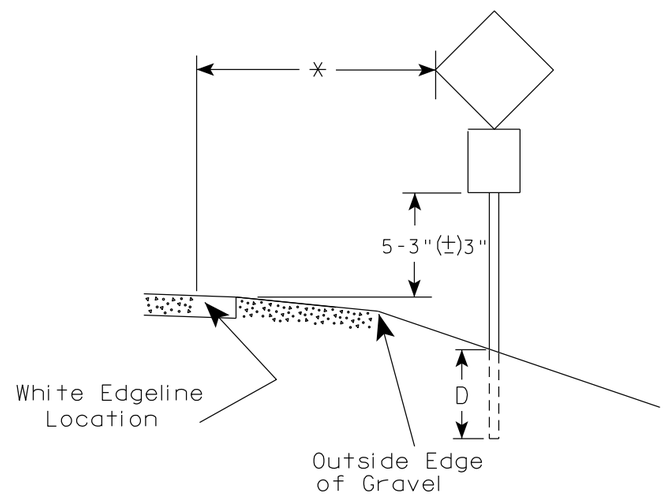

** The existence of curb and gutter does not in itself mandate the vertical clearance illustrated. That height is typically measured where there is sidewalk adjacent to the roadway or parking is permitted. In the absence of sidewalk vertical clearance is measured from the top of the curb. Offset of signs is measured from the flow line.

* 6 feet from edge of a paved shoulder or 12 feet from the edge of pavement (edge line location) or 2 feet from outside edge of gravel, whichever is greater unless directed by project engineer.

GENERAL NOTES

1. Signs wider than 4 feet or 20 sq.ft or larger, shall be mounted on multiple posts. Refer to plate A4-4.
2. If signs are mounted on or behind barrier wall, see A4-10 sign plate.
   The Double Arrow sign (W12-1D) shall be mounted at a height of 2'-3" (±) 3". The Chevron sign (W1-8), Roundabout Chevron panel (R6-4B), Enhanced Reference Markers, Clearance Markers (W5-52), Mile Markers (D10 series), In Road Object Markers (W5-54) & End of Road Markers (W5-56) shall be mounted at a height of 4'-3" (±) 3".
3. For expressways and freeways, mounting height is 7'- 3" (±) 3" or 6'-3" (±) 3" depending upon existence of a sub-sign.
4. Minimum mounting height for signs mounted on traffic signal poles is 5'- 3" (±) 3".
5. Offset distance shall be consistent with existing signs or consistent throughout length of project.
6. Folding signs shall be mounted at a height of 5'-3" (±) 3" or as directd by the Engineer.

POST EMBEDMENT DEPTH

Area of Sign Installation (Sq. Ft.)	D (Min)
20 or Less	4'
Greater than 20	5'

TYPICAL INSTALLATION OF PERMANENT TYPE II SIGNS ON SINGLE POSTS

WISCONSIN DEPT OF TRANSPORTATION

APPROVED Matthew R Rauch
for State Traffic Engineer

DATE 12/6/23 PLATE NO. A4-3.23

7 7

PROJECT NO:	HWY:	COUNTY:		SHEET NO: 36	E

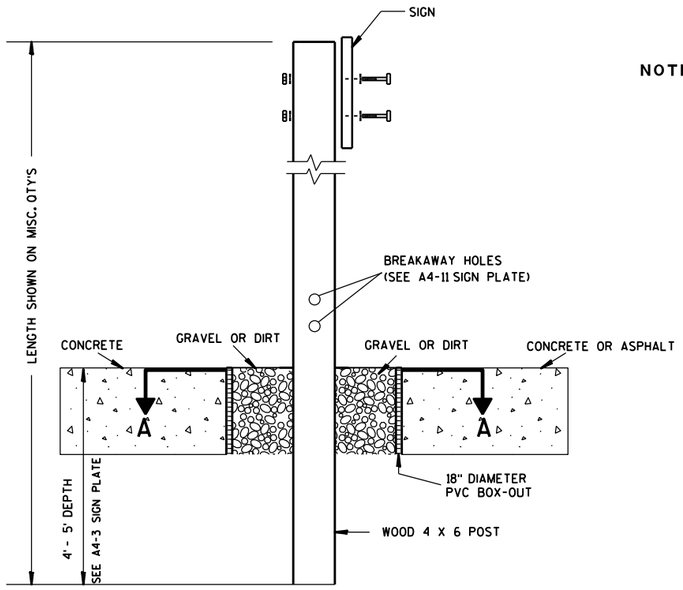

ELEVATION VIEW

DETAIL OF WOOD 4 X 6 SIGN POST IN BOX-OUT

NOTES:
1. ALL MATERIAL TO BE APPROVED BY ENGINEER PRIOR TO INSTALLATION
2. SEE SIGN PLATE A4-8 FOR SIGN HARDWARE REQUIREMENTS
3. 18 INCH X 18 INCH SQUARE BOX-OUTS MAY BE USED FOR INSTALLATIONS IN EXISTING CONCRETE OR ASPHALT LOCATIONS.

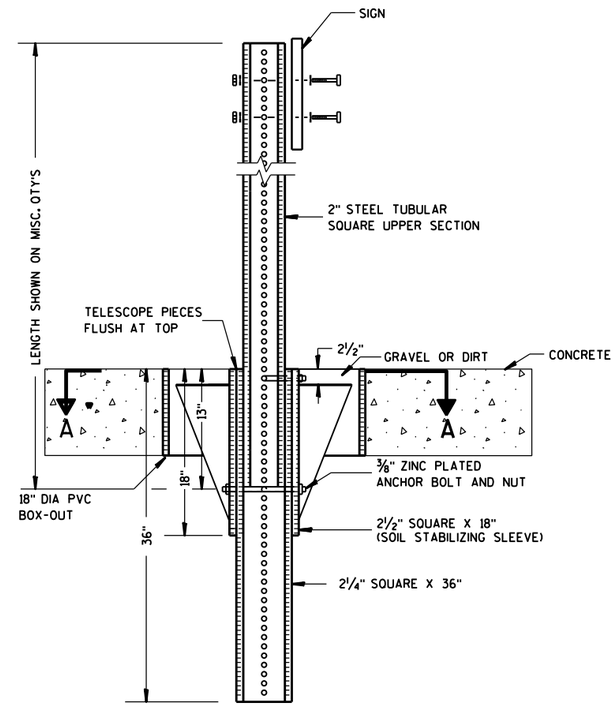

ELEVATION VIEW

DETAIL OF STEEL 2 X 2 SIGN POST IN BOX-OUT

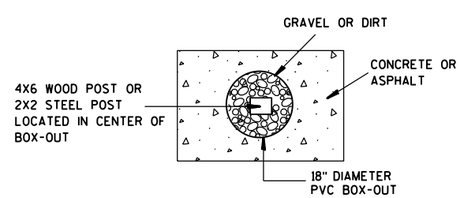

PLAN VIEW

FOR NEW CONCRETE/ASPHALT INSTALLATIONS

SIGN POST
BOX-OUTS
A4-3B

WISCONSIN DEPT OF TRANSPORTATION

APPROVED Matthew R Rauch
for State Traffic Engineer

DATE 1/27/14 PLATE NO. A4-3B.1

PROJECT NO:	HWY:	COUNTY:		SHEET NO:	E

URBAN AREA

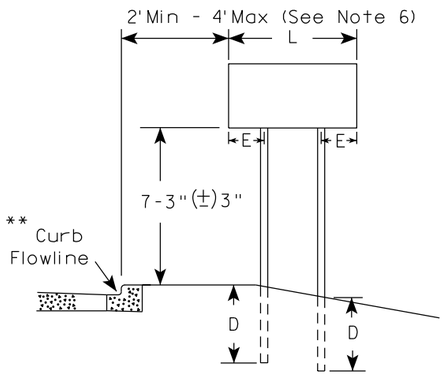

RURAL AREA (See Note 3)

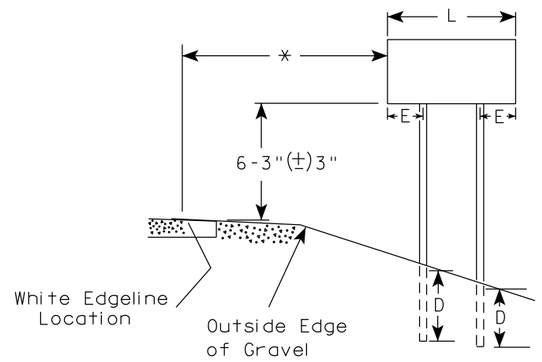

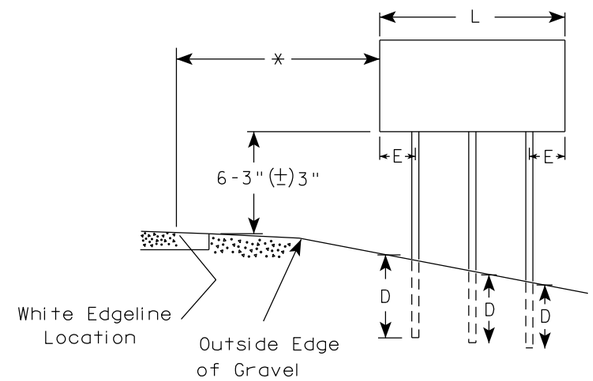

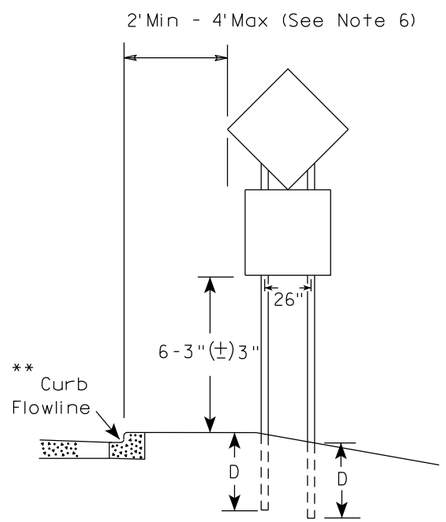

48" DIAMOND WARNING SIGN

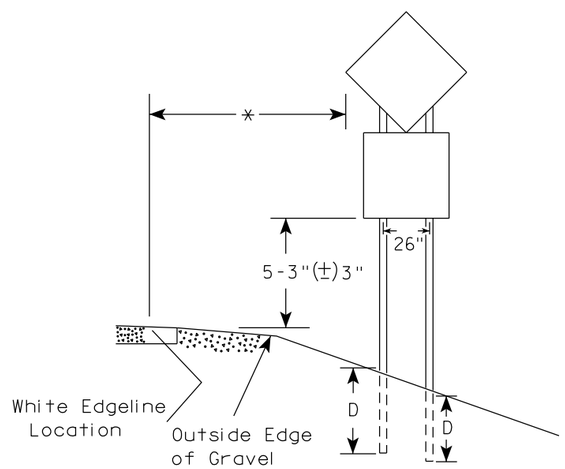

48" DIAMOND WARNING SIGN

GENERAL NOTES

1. For 3 or 4 post installations, individual post spacing shall be greater than 3'-6".
2. See tables below for required number of posts.
3. For expressways and freeways, mounting height is 7'-3" (±) 3" or 6'-3" (±) 3" depending upon existence of sub-sign.
4. The (±) tolerance for mounting height is 3 inches.
5. J-Assemblies are considered to be one sign for mounting height.
6. Offset distance shall be consistent with existing signs or consistent throughout length of project.
7. Folding signs shall be mounted at a height of 5'-3" (±) 3" or as directed by the engineer.
8. The Double Arrow sign (W12-1) shall be mounted at a height of 2'-3" (±) 3". The Chevron sign (W1-8), Roundabout Chevron panel (R6-4B), Clearance Markers (W5-52), Mile Markers (D10 series), In Road Object Markers (W5-54) & End of Road Markers (W5-56) shall be mounted at a height of 4"-3" (±) 3".

* 6 feet from edge of a paved shoulder or 12 feet from the edge of pavement (edge line location) or 2 feet from outside edge of gravel, whichever is greater unless directed by project engineer.

** The existence of curb and gutter does not in itself mandate the vertical clearance illustrated. That height is typically measured where there is sidewalk adjacent to the roadway or parking is permitted. In the absence of sidewalk vertical clearance is measured from the top of the curb. Offset of signs is measured from the flow line.

*** See A4-3 sign plate for signs 4' or less in width and less than 20 S.F. in area.

SIGN SHAPE OTHER THAN DIAMOND (TWO POSTS REQUIRED)	
L	E
*** Greater than 48" Less than 60"	12"
60" to 108"	L/5

SIGN SHAPE OTHER THAN DIAMOND (THREE POSTS REQUIRED)	
L	E
Greater than 108" to 144"	12"

POST EMBEDMENT DEPTH

Area of Sign Installation (Sq. Ft.)	D (Min)
20 or Less	4'
Greater than 20	5'

TYPICAL INSTALLATION OF TYPE II SIGNS ON MULTIPLE POSTS

WISCONSIN DEPT OF TRANSPORTATION

APPROVED Matthew R Rauch
for State Traffic Engineer

DATE 12/6/23 PLATE NO. A4-4.16

PROJECT NO:	HWY:	COUNTY:		SHEET NO: 38	E

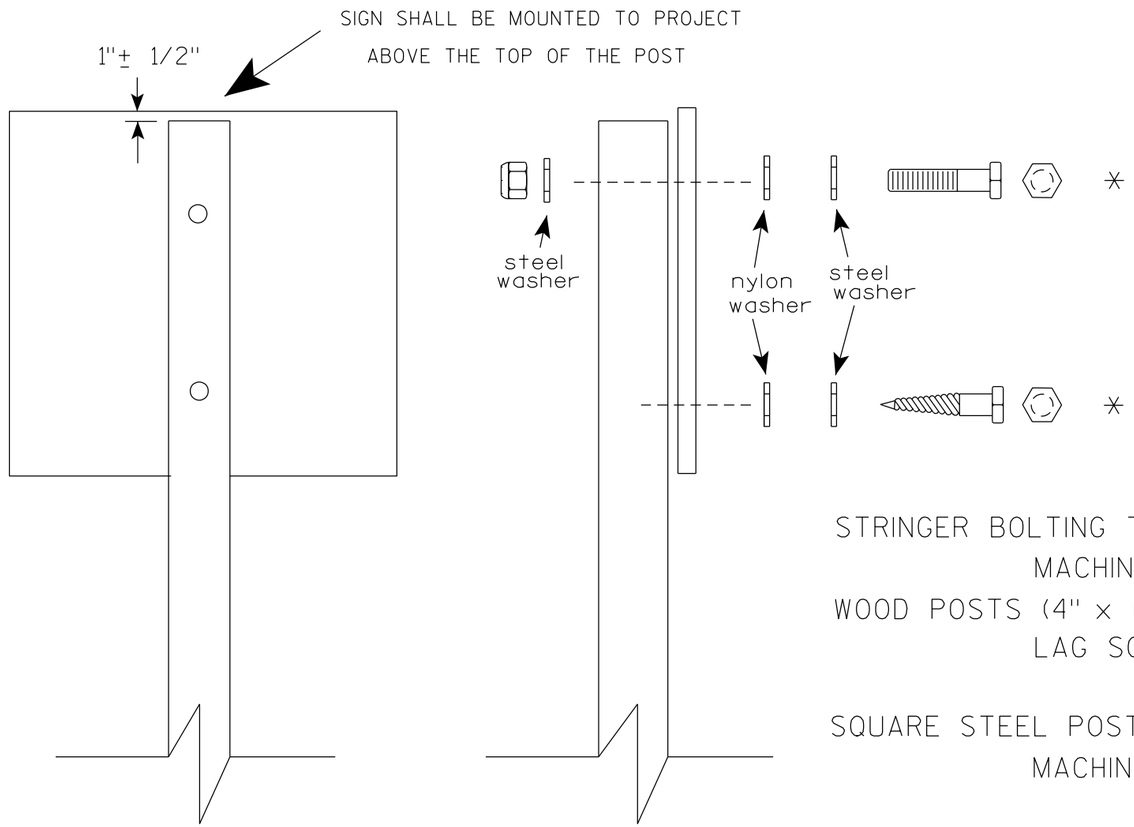

Nuts, bolts and lags used for mounting signs shall have hexagonal heads and shall be either :

a. Hot dip galvanized in accordance with ASTM Designation: A 153, Class D, or SC 3

b. Electro-galvanized in accordance with ASTM Designation : B 633, TYPE III, SC 3.

Threads on bolts and nuts shall be manufactured with sufficient allowance for the cadmium plate or galvanized coating to permit the nuts to run freely on the bolts.

STRINGER BOLTING TO ALUMINUM SIGNS (SEE SIGN PLATE A4-18)

MACHINE BOLTS - 5/16" X 1-3/4" Length w/ lock nuts

WOOD POSTS (4" x 6")

LAG SCREWS - 3/8" X 3" (NO STRINGERS ON BACK OF SIGN)
3/8" X 4" (STRINGERS ON BACK OF SIGN)

SQUARE STEEL POSTS (2" x 2")

MACHINE BOLTS - 3/8" X 3-1/4" Length w/ nuts (NO STRINGER ON BACK OF SIGN)
3/8" X 5" Length w/ nuts (STRINGERS ON BACK OF SIGN)

RIVETS - 9/32 " (6605-9-6) BULB-TITE, TRI-FOLD, ALUMINUM BODY/MANDREL
O.D. FLANGE .720-.765 INCH, GRIP RANGE .042-.375 INCH

WASHERS (ALL POSTS) -

1-1/4" O.D. X 3/8" I.D. X 1/16" STEEL
1-1/4" O.D. X 3/8" I.D. X .080 NYLON

* Two different fastening systems are shown for illustration purposes. On any individual sign, either one or the other system shall be used. Actual number of fasteners per sign varies with the sign area, but normally there are two. For a single post installation, all signs greater than 9 sq. ft. require the use of 3 fasteners.

ATTACHMENT OF SIGNS TO POSTS

WISCONSIN DEPT OF TRANSPORTATION

APPROVED Matthew R Rauch
for State Traffic Engineer

DATE 4/1/2020 PLATE NO. A4-8.9

TELESCOPIC TUBING ANCHORS
TWO PIECE SYSTEM

2 1/4 " SQUARE
12 GAUGE
PERFORATED
GALVANIZED FINISH

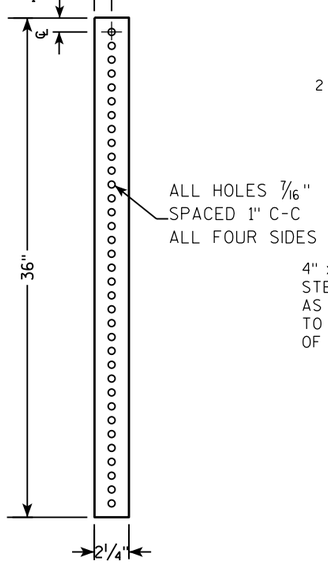

2 1/2 " SQUARE
12 GAUGE
OMNI-DIRECTIONAL
PERFORATED
SOIL STABILIZING SLEEVE
GALVANIZED FINISH

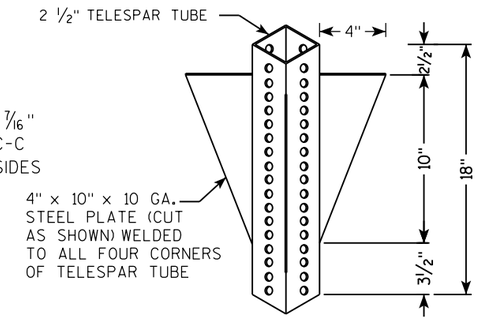

DETAIL OF TUBULAR STEEL SIGN POST
(IN POURED CONCRETE OR ASPHALT)

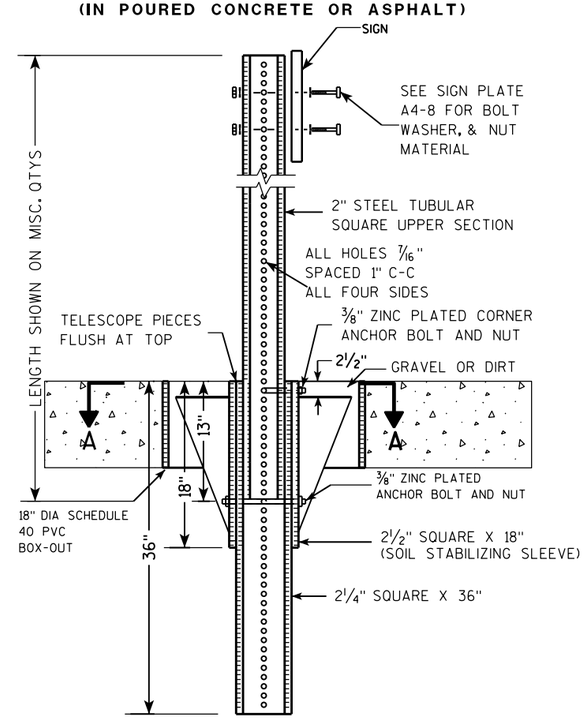

DETAIL OF TUBULAR STEEL SIGN POST
(IN LOCATIONS OTHER THAN POURED CONCRETE OR ASPHALT)

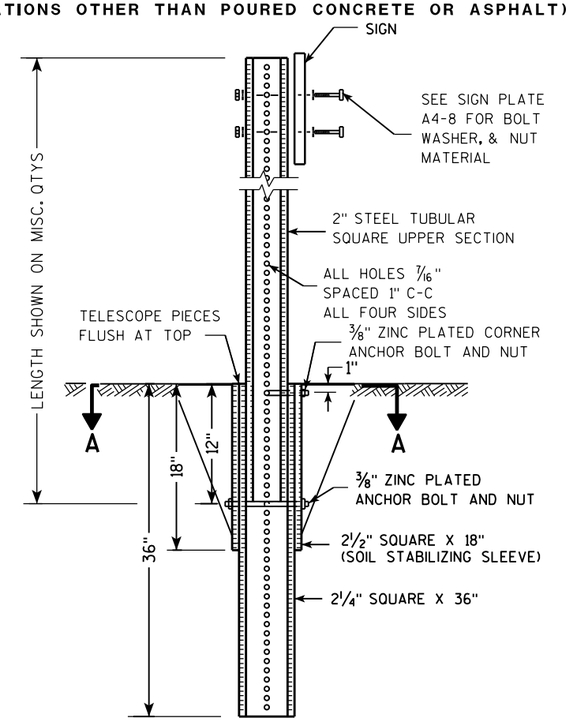

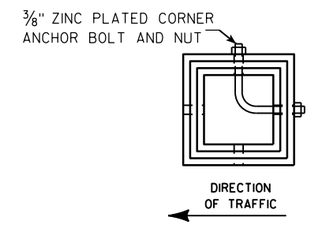

SECTION A-A

Area of Sign Installation (Sq. Ft.)	Number of Required Posts
9 or less	1
Greater than 9 less than or equal to 18	2
Greater than 18 less than or equal to 27	3

Signs wider than 3 feet or larger than 9 sq. ft shall be mounted on multiple posts (see above table).

TUBULAR STEEL
SIGN POST
A4-9

WISCONSIN DEPT OF TRANSPORTATION

APPROVED Matthew R Rauch
for State Traffic Engineer

DATE 2/05/15 PLATE A4-9.9

7 7

PROJECT NO:	HWY:	COUNTY:		SHEET NO:	E

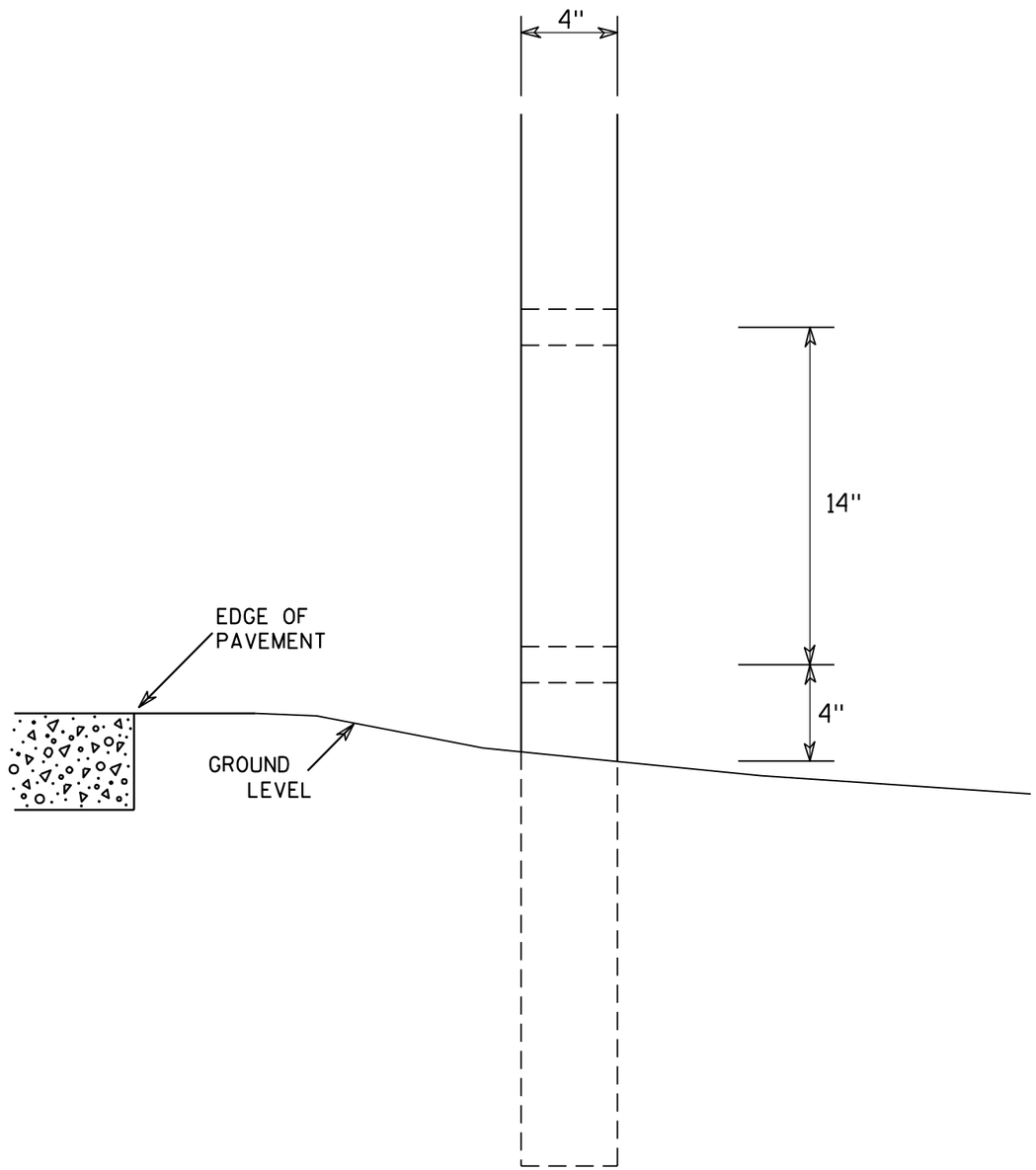

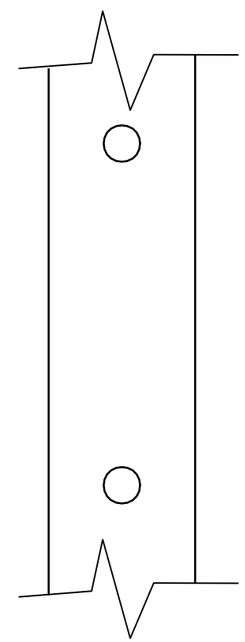

SIDE VIEW

GENERAL NOTES

1. All 4 x 6 Wood Posts shall be modified by having two 1½" diameter holes drilled perpendicular to the roadway centerline.

7

7

4 X 6 WOOD POST MODIFICATIONS

WISCONSIN DEPT OF TRANSPORTATION

APPROVED Chester J Spang for State Traffic Engineer

DATE 3/27/97 PLATE NO. A4-11.2

PROJECT NO:	HWY:	COUNTY:		SHEET NO: 41	E

BANDING

SINGLE SIGN

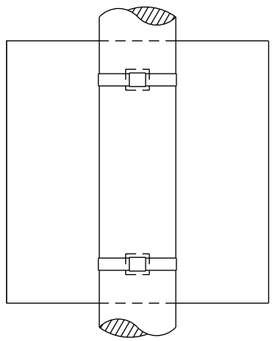

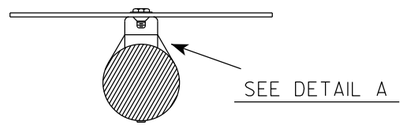

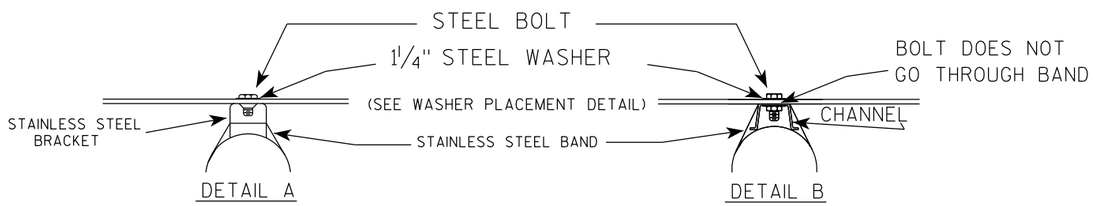

WASHER PLACEMENT

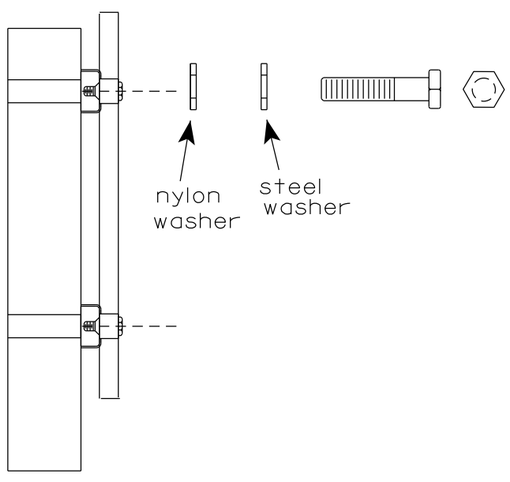

WASHERS (ALL POSTS) -
1-1/4" O.D. X 3/8" I.D. X 1/16" STEEL
1-1/4" O.D. X 3/8" I.D. X .080 NYLON
FOR ALL TYPE H SIGNS

GENERAL NOTES

1. Any sign over 3 feet in width shall use the V-Block banding method. See A5-10 standard plate.
2. Signs 3 feet or greater in height shall have three bracket bands installed. Signs less than 3 feet in height shall have two bracket bands installed.
3. Banding and assembly bracket shall be stainless steel. All bands shall be ¾" in width and 0.025" thickness.
4. ALL SIGN MOUNTING BOLTS AND WASHERS SHALL BE EITHER:
   a. Hot dip or mechanically galvanized in accordance with ASTM Designation: A 153, Class D
   b. Electro-galvanized in accordance with ASTM designation: B 633, Type III, SC 3

"J" ASSEMBLY

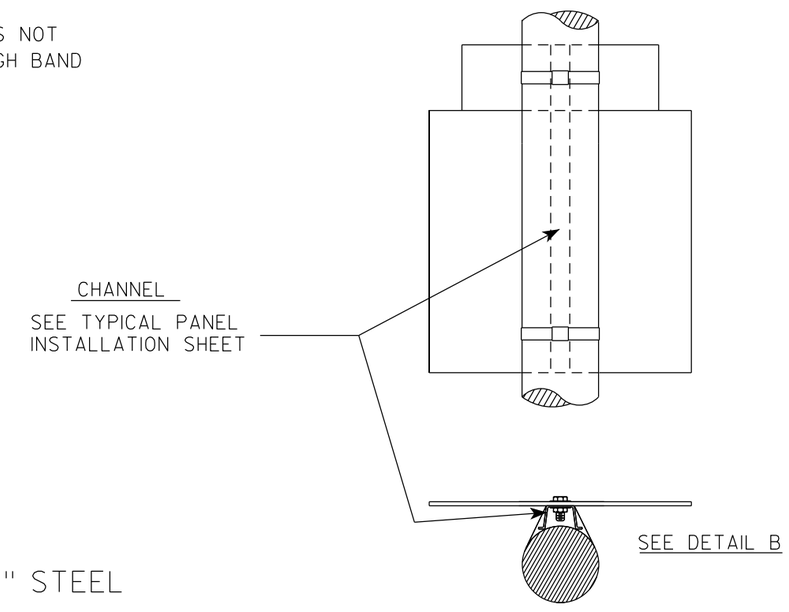

STANDARD SIGN
SIGN BANDING DETAILS

WISCONSIN DEPT OF TRANSPORTATION

APPROVED Matthew R Rauch for State Traffic Engineer

DATE 6/10/19 PLATE NO. A5-9.4

PROJECT NO:	HWY:	COUNTY:		SHEET NO: 42	E

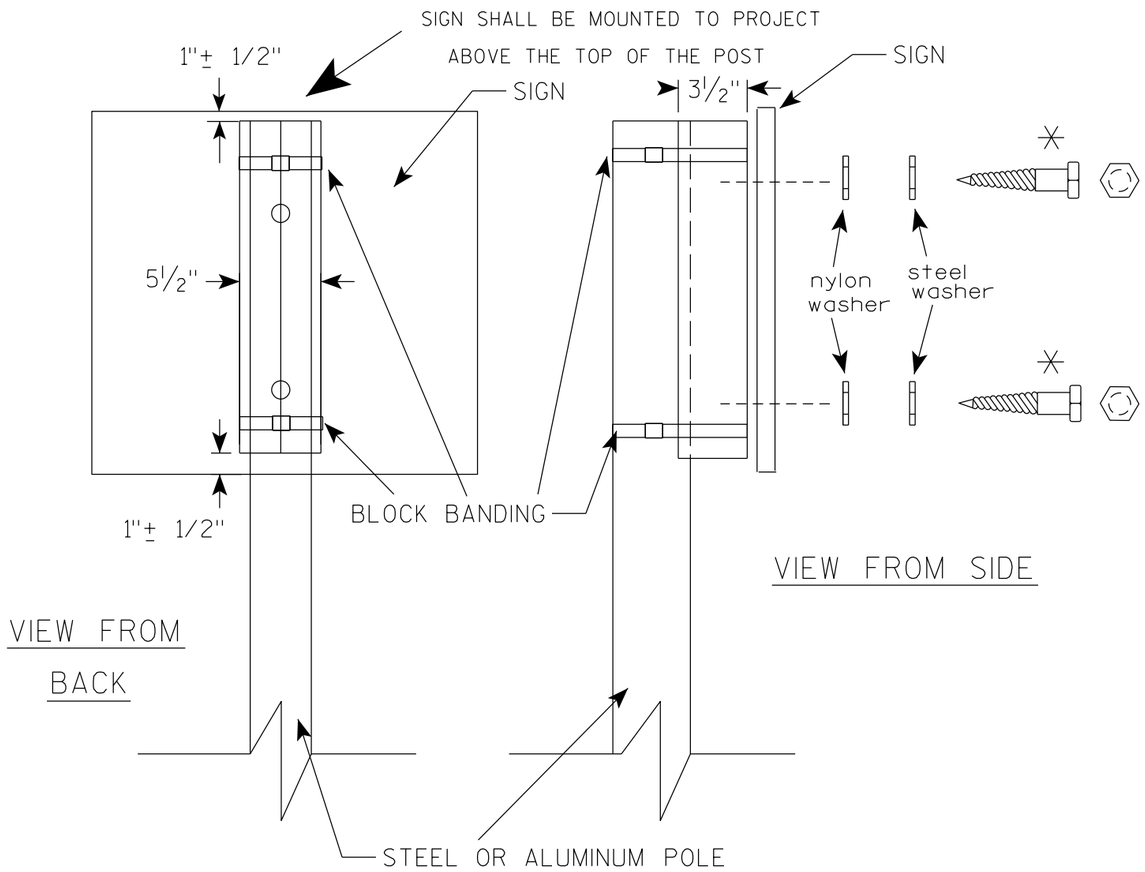

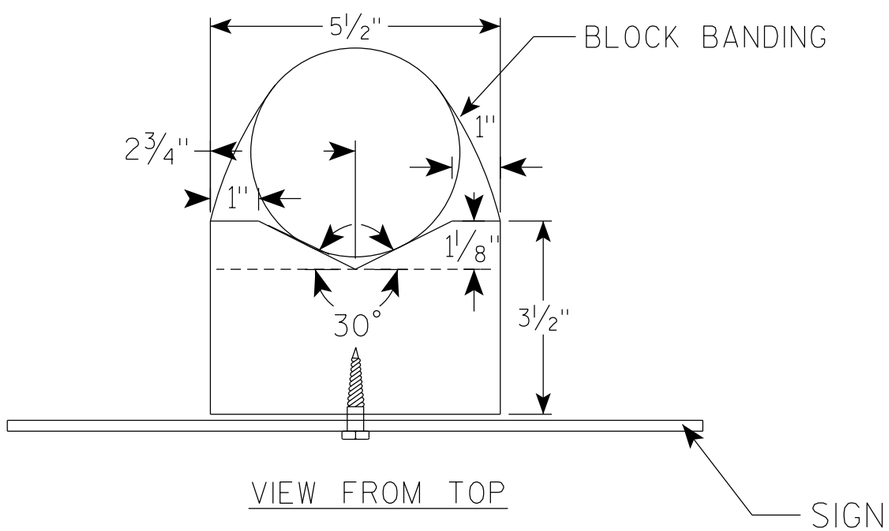

GENERAL NOTES

1. WOOD 4"X6" POST MATERIAL SHALL CONFORM TO 507.2.2 OF THE WisDOT STANDARD SPECIFICATIONS
2. BLOCK BANDING AND CLIPS SHALL BE STAINLESS STEEL, 3/4" WIDTH AND 0.025" THICKNESS
3. SIGNS 3' OR GREATER IN HEIGHT SHALL UTILIZE 3 BLOCK BANDS. SIGNS UNDER 3' IN HEIGHT SHALL UTILIZE 2 BLOCK BANDS
4. ACTUAL NUMBER OF FASTENERS PER SIGN VARIES WITH THE SIGN AREA, BUT NORNALLY THERE ARE TWO. FOR SIGNS GREATER THAN 9 S.F. 3 FASTENERS SHALL BE USED.
5. ALL SIGN MOUNTING BOLTS AND WASHERS SHALL BE EITHER:
   a. Hot dip or mechanically galvanized in accordance with ASTM Designation: A 153, Class D
   b. Electro-galvanized in accordance with ASTM Designation : B 633, TYPE III, SC 3
6. ALL BOLTS SHALL HAVE HEXAGONAL HEADS.
7. STEEL WASHERS SHALL BE 1 1/4" O.D. X 3/8" I.D. X 1/16"
8. NYLON WASHERS SHALL BE 1 1/4" O.D. X 3/8" I.D. X .080 FOR TYPE H OR TYPE F FACE SIGN

✳ LAG BOLTS SHALL BE 3/8" X 2 1/2"

7

7

BLOCK BANDING DETAIL
(V-BLOCK OPTION)

WISCONSIN DEPT OF TRANSPORTATION

APPROVED Matthew R Rauch
for State Traffic Engineer

DATE 4/19/2022 PLATE NO. A5-10.3

PROJECT NO:				SHEET NO: 43	E

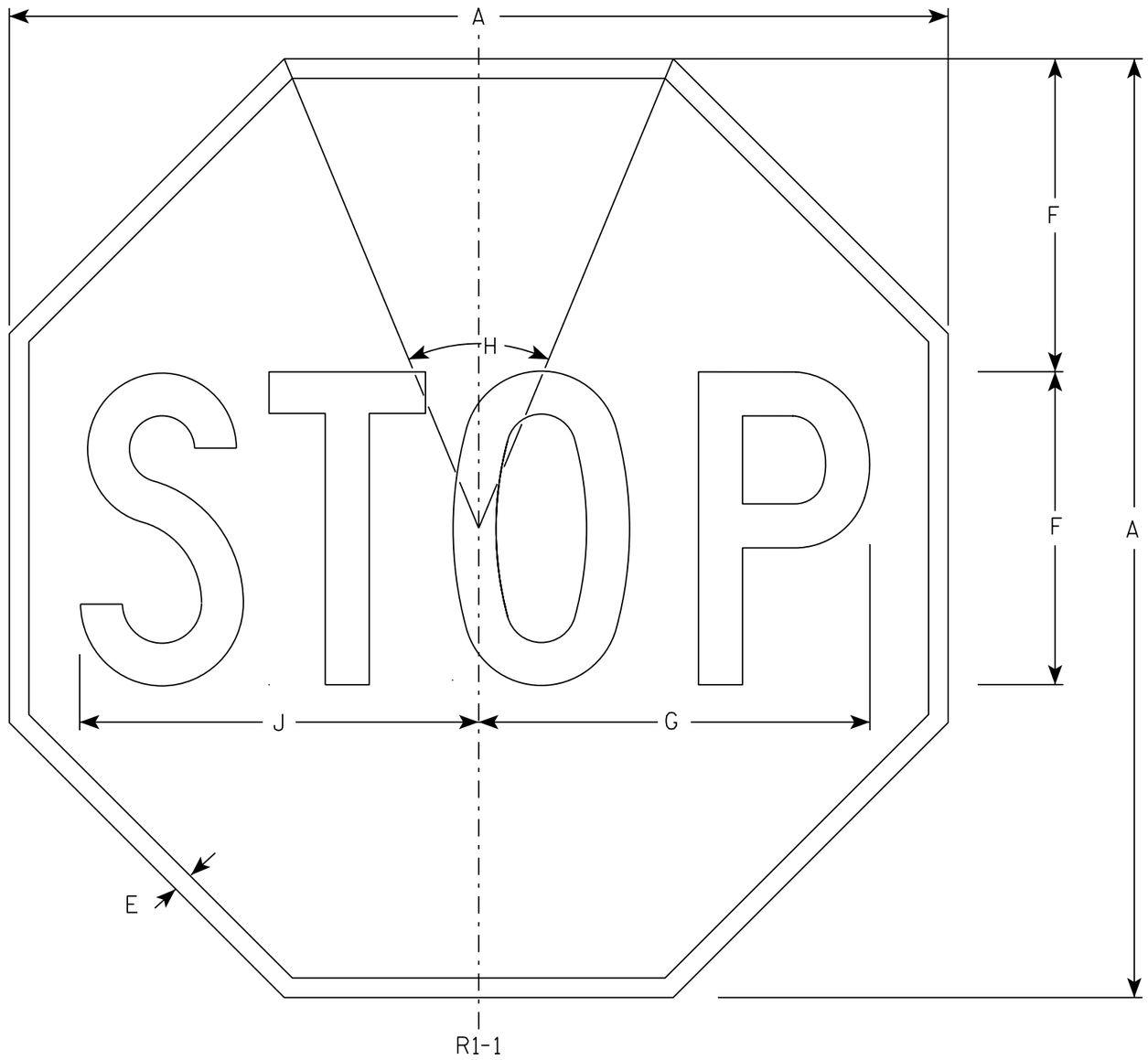

NOTES

1. Sign is Type II - Type H Reflective - reference WIS DOT Standard Specification for HIGHWAY and STRUCTURE CONSTRUCTION latest edition.
2. Color:
   Background - Red
   Message - White
3. Message Series - C

SIZE	A	B	C	D	E	F	G	H	I	J	K	L	M	N	O	P	Q	R	S	T	U	V	W	X	Y	Z	Area sq. ft.
1	30				5/8	10	12 1/2	45°		12 3/4																	5.18
2S	30				5/8	10	12 1/2	45°		12 3/4																	5.18
2M	36				3/4	12	15	45°		15 3/8																	7.46
3	36				3/4	12	15	45°		15 3/8																	7.46
4	48				1	16	20	45°		20 1/2																	13.25
5	48				1	16	20	45°		20 1/2																	13.25
6	18				3/8	6	7 3/4	45°		7 3/4																	1.86
7	12				1/4	4	5	45°		5 1/8																	0.78

STANDARD SIGN
R1-1

WISCONSIN DEPT OF TRANSPORTATION

APPROVED Matthew R Rauch
for State Traffic Engineer

DATE 11/12/15 PLATE NO. R1-1.13

PROJECT NO: | HWY: | COUNTY: | SHEET NO: 44 | E

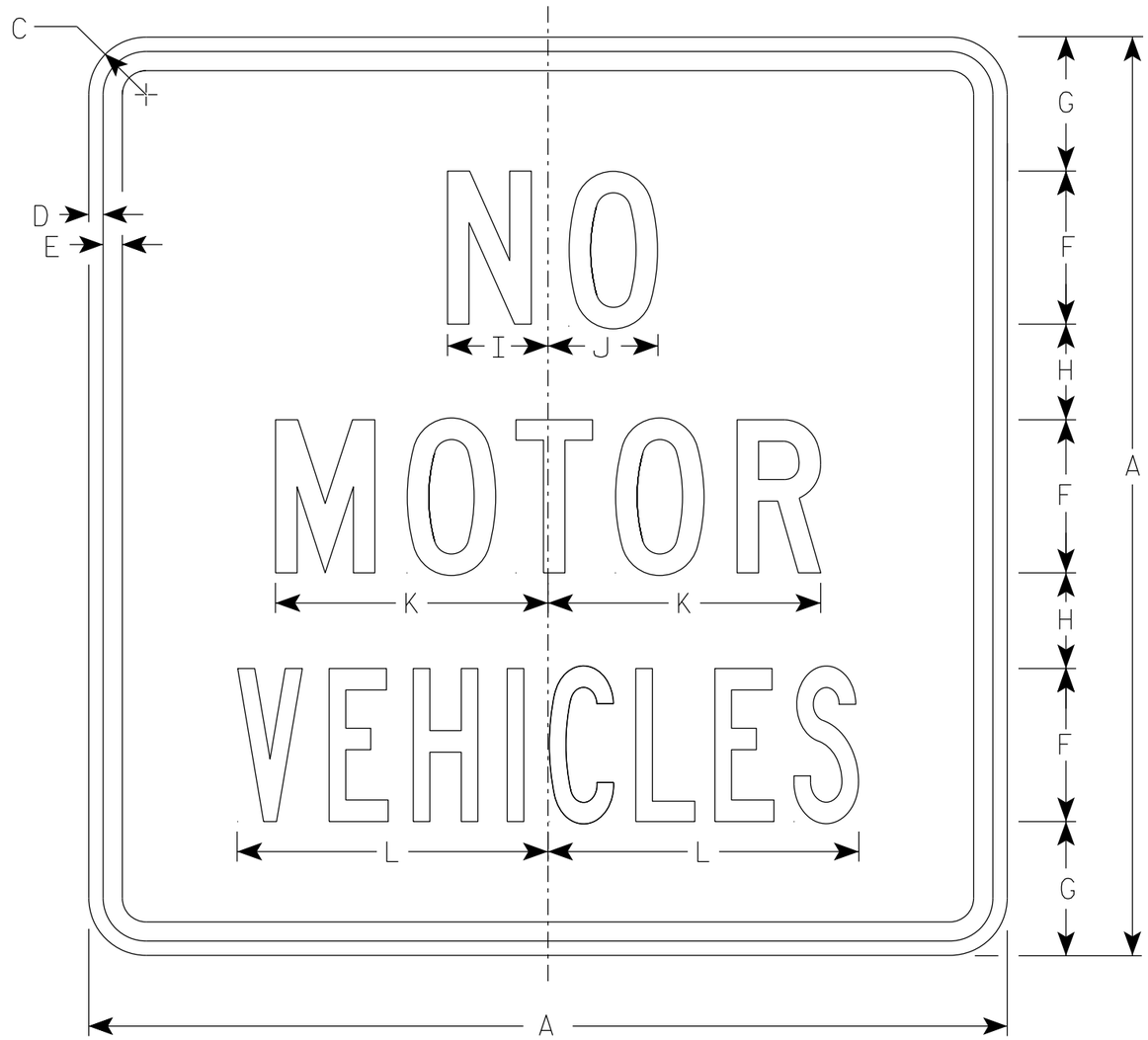

R5-3

NOTES

1. Sign is Type II - Type H Reflective
2. Color:
   Background - White
   Message - Black
3. Message Series - See Note 4
4. Lines 1 & 2 are Series C.
   Line 3 is Series B.

SIZE	A	B	C	D	E	F	G	H	I	J	K	L	M	N	O	P	Q	R	S	T	U	V	W	X	Y	Z	Area sq. ft.
1																											
2S	24		1 1/2	3/8	1/2	4	3 1/2	2 1/2	2 5/8	2 7/8	7 1/8	8 1/8															4.0
2M	24		1 1/2	3/8	1/2	4	3 1/2	2 1/2	2 5/8	2 7/8	7 1/8	8 1/8															4.0
3																											
4																											
5																											

STANDARD SIGN
R5-3

WISCONSIN DEPT OF TRANSPORTATION

APPROVED Matthew R Rauch
for State Traffic Engineer

DATE 8/17/23 PLATE NO. R5-3.3

PROJECT NO: | HWY: | COUNTY: | SHEET NO: 45 | E

CATEGORY	STATION	REAL STATION	DISTANCE	AREA (SF) CUT	AREA (SF) MARSH EXC	AREA (SF) FILL	INCREMENTAL VOL (CY) CUT	INCREMENTAL VOL (CY) MARSH EXC	INCREMENTAL VOL (CY) FILL	CUMULATIVE VOL (CY) CUT 1.00	CUMULATIVE VOL (CY) EXPANDED FILL 1.25	CUMULATIVE VOL (CY) REDUCED MARSH IN FILL 0.60	CUMULATIVE VOL (CY) MASS ORDINATE
0010	2000+00	200000	0	9.17	0.00	0.00	0	0	0	0	0	0	0
	2001+00	200100	100	1.45	0.00	50.04	20	0	93	20	116	0	-96
	2002+00	200200	100	3.70	0.00	43.09	10	0	172	29	331	0	-302
	2003+00	200300	100	2.78	0.00	48.38	12	0	169	41	543	0	-502
	2004+00	200400	100	2.55	0.00	45.47	10	0	174	51	760	0	-709
	2005+00	200500	100	2.55	0.00	37.53	9	0	154	61	953	0	-892
	2006+00	200600	100	3.35	0.00	18.57	11	0	104	71	1,082	0	-1,011
	2006+44	200644	44	3.86	0.00	32.19	6	0	41	77	1,134	0	-1,057
	2007+00	200700	56	4.66	0.00	26.51	9	0	61	86	1,210	0	-1,124
	2008+00	200800	100	5.27	0.00	25.71	18	0	97	105	1,331	0	-1,227
	2009+00	200900	100	4.31	0.00	6.21	18	0	59	122	1,405	0	-1,283
	2010+00	201000	100	2.91	0.00	8.50	13	0	27	136	1,439	0	-1,303
	2011+00	201100	100	8.24	0.00	0.22	21	0	16	156	1,459	0	-1,303
	2011+76	201176	76	2.35	0.00	12.70	15	0	18	171	1,482	0	-1,311
	2012+00	201200	24	2.71	0.00	9.35	2	0	10	173	1,494	0	-1,321
	2013+00	201300	100	4.28	0.00	5.72	13	0	28	186	1,529	0	-1,343
	2014+00	201400	100	2.68	0.00	13.59	13	0	36	199	1,574	0	-1,374
	2015+00	201500	100	6.09	0.00	7.38	16	0	39	216	1,622	0	-1,407
	2016+00	201600	100	6.70	0.00	4.64	24	0	22	239	1,650	0	-1,411
	2017+00	201700	100	6.53	0.00	9.36	25	0	26	264	1,683	0	-1,419
	2018+00	201800	100	5.44	0.00	18.23	22	0	51	286	1,746	0	-1,461
	2019+00	201900	100	3.72	0.00	19.75	17	0	70	303	1,834	0	-1,531
	2020+00	202000	100	3.73	0.00	22.07	14	0	77	317	1,931	0	-1,614
	2021+00	202100	100	4.60	0.00	7.64	15	0	55	332	2,000	0	-1,668
	2021+51	202151	51	5.22	0.00	7.52	9	0	14	341	2,018	0	-1,676
	2022+00	202200	49	5.89	0.00	6.29	10	0	13	351	2,033	0	-1,682
	2023+00	202300	100	6.02	0.00	6.51	22	0	24	373	2,063	0	-1,690
	2024+00	202400	100	6.42	0.00	3.42	23	0	18	397	2,086	0	-1,690
	2025+00	202500	100	7.46	0.00	3.03	26	0	12	422	2,101	0	-1,679
	2026+00	202600	100	5.21	0.00	4.45	23	0	14	446	2,118	0	-1,673
	2027+00	202700	100	8.23	0.00	1.40	25	0	11	471	2,132	0	-1,661
	2028+00	202800	100	6.98	0.00	2.89	28	0	8	499	2,142	0	-1,643
	2029+00	202900	100	4.17	0.00	7.12	21	0	19	519	2,165	0	-1,646
	2030+00	203000	100	5.74	0.00	1.65	18	0	16	538	2,185	0	-1,648
	2031+00	203100	100	5.23	0.00	6.91	20	0	16	558	2,205	0	-1,647
	2032+00	203200	100	4.58	0.00	4.45	18	0	21	576	2,231	0	-1,655
	2033+00	203300	100	6.31	0.00	1.10	20	0	10	596	2,244	0	-1,648
	2033+38	203338	38	6.14	0.00	1.37	9	0	2	605	2,246	0	-1,641
	2034+00	203400	62	4.04	0.00	3.21	12	0	5	617	2,253	0	-1,636
	2035+00	203500	100	3.27	0.00	6.26	14	0	18	630	2,275	0	-1,644
	2036+00	203600	100	6.97	0.00	1.34	19	0	14	649	2,292	0	-1,643
	2037+00	203700	100	5.47	0.00	2.82	23	0	8	672	2,302	0	-1,630
	2038+00	203800	100	5.81	0.00	3.03	21	0	11	693	2,316	0	-1,622
	2039+00	203900	100	7.07	0.00	1.39	24	0	8	717	2,326	0	-1,609
	2040+00	204000	100	7.29	0.00	1.44	27	0	5	744	2,332	0	-1,589
	2041+00	204100	100	5.74	0.00	2.45	24	0	7	768	2,341	0	-1,574
	2042+00	204200	100	4.92	0.00	0.63	20	0	6	788	2,349	0	-1,561
	2043+00	204300	100	5.66	0.00	1.70	20	0	4	807	2,354	0	-1,547
	2043+68	204368	68	5.56	0.00	1.86	14	0	4	821	2,360	0	-1,538
	2043+76	204376	8	5.63	0.00	0.43	2	0	0	823	2,360	0	-1,537
	2043+83	204383	7	5.74	0.00	0.54	1	0	0	824	2,360	0	-1,536
	2044+00	204400	17	6.05	0.00	0.50	4	0	0	828	2,361	0	-1,532
	2045+00	204500	100	4.50	0.00	1.82	20	0	4	848	2,366	0	-1,518
	2046+00	204600	100	3.26	0.00	2.13	14	0	7	862	2,375	0	-1,513

CONTINUED ON NEXT TABLE

CATEGORY	STATION	REAL STATION	DISTANCE	AREA (SF) CUT	AREA (SF) MARSH EXC	AREA (SF) FILL	INCREMENTAL VOL (CY) CUT	INCREMENTAL VOL (CY) MARSH EXC	INCREMENTAL VOL (CY) FILL	CUMULATIVE VOL (CY) CUT 1.00	CUMULATIVE VOL (CY) EXPANDED FILL 1.25	CUMULATIVE VOL (CY) REDUCED MARSH IN FILL 0.60	CUMULATIVE VOL (CY) MASS ORDINATE
0010	2047+00	204700	100	2.97	0.00	4.73	12	0	13	874	2,391	0	-1,517
	2048+00	204800	100	3.65	0.00	6.89	12	0	22	886	2,418	0	-1,532
	2049+00	204900	100	3.29	0.00	20.85	13	0	51	899	2,482	0	-1,583
	2050+00	205000	100	2.40	0.00	0.00	11	0	39	909	2,530	0	-1,621
	2051+00	205100	100	3.26	0.00	0.00	10	0	0	920	2,530	0	-1,611
	2052+00	205200	100	3.05	0.00	0.00	12	0	0	931	2,530	0	-1,599
	2053+00	205300	100	4.38	0.00	0.00	14	0	0	945	2,530	0	-1,585
	2054+00	205400	100	3.95	0.00	0.00	15	0	0	961	2,530	0	-1,570
	2054+09	205409	9	3.83	0.00	0.00	1	0	0	962	2,530	0	-1,568
	2055+00	205500	91	68.83	34.83	0.00	122	59	0	1,084	2,530	35	-1,411
	2056+00	205600	100	64.08	31.11	0.00	246	122	0	1,330	2,530	108	-1,091
	2057+00	205700	100	69.59	31.97	0.00	248	117	0	1,578	2,530	179	-774
	2058+00	205800	100	80.87	31.91	0.00	279	118	0	1,857	2,530	250	-424
	2058+82	205882	82	91.52	29.35	0.00	262	93	0	2,118	2,530	305	-107
	2059+00	205900	18	2.84	0.00	0.00	31	10	0	2,150	2,530	311	-69
	2060+00	206000	100	2.74	0.00	0.00	10	0	0	2,160	2,530	311	-59
	2060+99	206099	99	4.62	0.00	0.00	13	0	0	2,174	2,530	311	-45
	2061+00	206100	1	4.64	0.00	0.00	0	0	0	2,174	2,530	311	-45
	2061+03	206103	3	4.70	0.00	0.00	1	0	0	2,174	2,530	311	-45
	2062+00	206200	97	14.27	0.00	0.00	34	0	0	2,208	2,530	311	-11
	2063+00	206300	100	3.62	0.00	20.42	33	0	38	2,242	2,578	311	-25
	2064+00	206400	100	2.55	0.00	15.03	11	0	66	2,253	2,660	311	-95
	2065+00	206500	100	3.24	0.00	10.87	11	0	48	2,264	2,720	311	-145
	2066+00	206600	100	3.81	0.00	12.82	13	0	44	2,277	2,774	311	-186
	2067+00	206700	100	4.00	0.00	12.36	14	0	47	2,291	2,833	311	-230
	2068+00	206800	100	5.60	0.00	8.93	18	0	39	2,309	2,882	311	-262
	2068+02	206802	2	5.64	0.00	8.80	0	0	1	2,309	2,883	311	-262
	2069+00	206900	98	4.85	0.00	18.67	19	0	50	2,328	2,945	311	-305
	2070+00	207000	100	4.60	0.00	17.69	18	0	67	2,346	3,029	311	-372
	2071+00	207100	100	5.11	0.00	35.42	18	0	98	2,364	3,152	311	-477
	2072+00	207200	100	5.12	0.00	29.59	19	0	120	2,383	3,303	311	-609
	2073+00	207300	100	3.86	0.00	30.30	17	0	111	2,400	3,441	311	-731
	2074+00	207400	100	3.66	0.00	34.94	14	0	121	2,413	3,592	311	-868
	2075+00	207500	100	4.79	0.00	28.08	16	0	117	2,429	3,738	311	-998
	2076+00	207600	100	4.28	0.00	13.68	17	0	77	2,446	3,835	311	-1,078
	2077+00	207700	100	3.57	0.00	49.41	15	0	117	2,460	3,981	311	-1,209
	2078+00	207800	100	3.17	0.00	70.65	12	0	222	2,473	4,259	311	-1,475
	2079+00	207900	100	4.20	0.00	60.23	14	0	242	2,487	4,562	311	-1,764
	2080+00	208000	100	3.94	0.00	101.17	15	0	299	2,502	4,935	311	-2,123
	2081+00	208100	100	3.71	0.00	76.02	14	0	328	2,516	5,346	311	-2,519
	2082+00	208200	100	3.36	0.00	66.99	13	0	265	2,529	5,677	311	-2,837
	2083+00	208300	100	2.31	0.00	79.21	11	0	271	2,539	6,015	311	-3,164
	2084+00	208400	100	2.53	0.00	109.75	9	0	350	2,548	6,452	311	-3,593
	2085+00	208500	100	1.80	0.00	95.56	8	0	380	2,556	6,928	311	-4,060
	2085+52	208552	52	1.92	0.00	89.57	4	0	178	2,560	7,151	311	-4,279
	2086+00	208600	48	2.01	0.00	82.10	3	0	153	2,563	7,341	311	-4,467
	2087+00	208700	100	2.01	0.00	54.63	7	0	253	2,571	7,658	311	-4,776
	2088+00	208800	100	1.47	0.00	61.93	6	0	216	2,577	7,928	311	-5,039
	2089+00	208900	100	2.78	0.00	41.09	8	0	191	2,585	8,166	311	-5,270
	2089+05	208905	5	2.72	0.00	40.38	1	0	8	2,586	8,176	311	-5,279
	2089+14	208914	9	2.60	0.00	38.84	1	0	13	2,587	8,192	311	-5,294
	2090+00	209000	86	3.41	0.00	25.49	10	0	102	2,596	8,320	311	-5,413
	2091+00	209100	100	4.80	0.00	6.47	15	0	59	2,611	8,394	311	-5,471
	2092+00	209200	100	4.09	0.00	19.77	16	0	49	2,628	8,455	311	-5,516
							2628	519	6764				

CATEGORY	STATION	REAL STATION	DISTANCE	AREA (SF)			INCREMENTAL VOL (CY)			CUMULATIVE VOL (CY)			
				CUT	MARSH EXC	FILL	CUT	MARSH EXC	FILL	CUT 1.00	EXPANDED FILL 1.25		MASS ORDINATE
0010	2093+00	209300	100	7.29	0.00	21.66	21	0	77	2,649	8,551	311	-5,591
	2094+00	209400	100	3.43	0.00	44.21	20	0	122	2,669	8,703	311	-5,723
	2095+00	209500	100	2.73	0.00	66.18	11	0	204	2,680	8,959	311	-5,968
	2096+00	209600	100	1.84	0.00	47.51	8	0	211	2,689	9,222	311	-6,222
	2097+00	209700	100	2.36	0.00	60.79	8	0	201	2,696	9,473	311	-6,465
	2098+00	209800	100	3.30	0.00	69.05	10	0	240	2,707	9,773	311	-6,755
	2099+00	209900	100	3.33	0.00	41.41	12	0	205	2,719	10,029	311	-6,999
	2099+03	209903	3	3.39	0.00	40.11	0	0	5	2,720	10,035	311	-7,004
	2100+00	210000	97	3.13	0.00	77.99	12	0	212	2,731	10,300	311	-7,257
	2101+00	210100	100	2.28	0.00	16.16	10	0	174	2,741	10,518	311	-7,465
	2102+00	210200	100	2.59	0.00	79.55	9	0	177	2,750	10,739	311	-7,678
	2103+00	210300	100	6.55	0.00	29.66	17	0	202	2,767	10,992	311	-7,914
	2103+64	210364	64	6.55	0.00	27.53	16	0	68	2,783	11,077	311	-7,983
	2104+00	210400	36	8.02	0.00	30.02	10	0	38	2,792	11,125	311	-8,021
	2105+00	210500	100	5.34	0.00	61.51	25	0	170	2,817	11,337	311	-8,208
	2106+00	210600	100	3.26	0.00	88.24	16	0	277	2,833	11,683	311	-8,539
	2107+00	210700	100	4.27	0.00	41.58	14	0	240	2,847	11,984	311	-8,826
	2107+65	210765	65	4.60	0.00	29.98	11	0	86	2,858	12,091	311	-8,923
	2108+00	210800	35	4.33	0.00	25.33	6	0	36	2,864	12,136	311	-8,962
	2109+00	210900	100	2.78	0.00	36.10	13	0	114	2,877	12,278	311	-9,091
	2110+00	211000	100	1.71	0.00	45.08	8	0	150	2,885	12,466	311	-9,270
	2111+00	211100	100	5.34	0.00	6.72	13	0	96	2,898	12,586	311	-9,377
	2112+00	211200	100	2.52	0.00	54.22	15	0	113	2,913	12,727	311	-9,504
	2113+00	211300	100	3.97	0.00	14.99	12	0	128	2,925	12,887	311	-9,652
	2114+00	211400	100	4.06	0.00	8.03	15	0	43	2,940	12,941	311	-9,690
	2115+00	211500	100	4.50	0.00	5.04	16	0	24	2,955	12,971	311	-9,705
	2116+00	211600	100	3.43	0.00	7.51	15	0	23	2,970	13,000	311	-9,719
	2117+00	211700	100	4.04	0.00	5.31	14	0	24	2,984	13,030	311	-9,735
	2118+00	211800	100	5.79	0.00	2.86	18	0	15	3,002	13,049	311	-9,736
	2119+00	211900	100	5.67	0.00	3.72	21	0	12	3,023	13,064	311	-9,730
	2120+00	212000	100	3.29	0.00	19.96	17	0	44	3,040	13,119	311	-9,768
	2121+00	212100	100	2.93	0.00	15.60	12	0	66	3,051	13,201	311	-9,839
	2121+59	212158.68	59	3.35	0.00	15.27	7	0	34	3,058	13,243	311	-9,874
							430	0	3830				

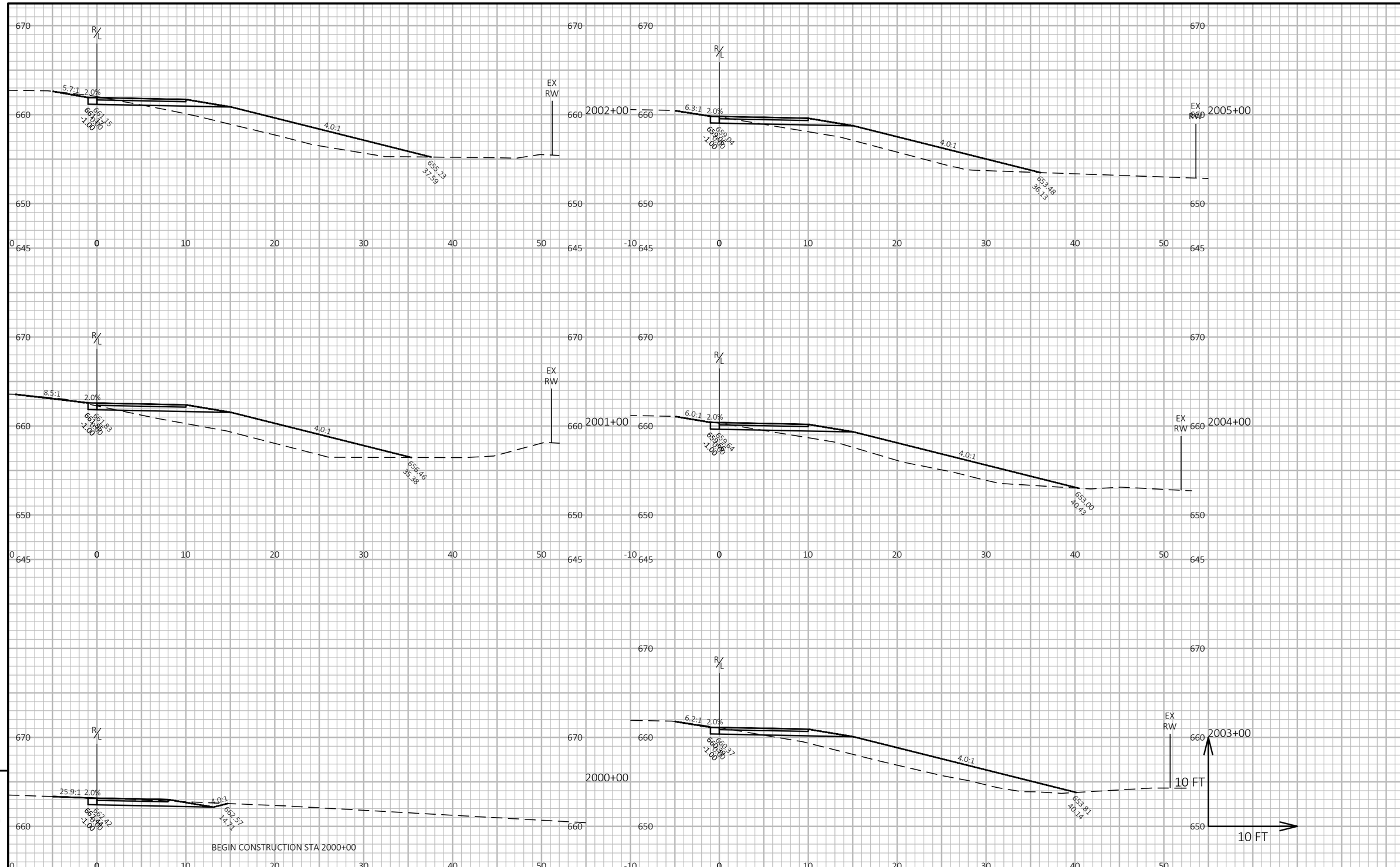

PROJECT NO: 7224-00-73	HWY: NON-HIGHWAY	COUNTY: BUFFALO	CROSS SECTIONS: CROSS SECTION	SHEET 48	E

FILE NAME : \\SP-PZ1.SEHINC.COM\PZPROJECTS1\AE\B\BUFFC\163204\5-FINAL-DSGN\51-DRAWINGS\40-TRANSHWY\C3D\72240002\SHEETSPLAN\SEC 09 B CROSS SECTIONS\090201-XS.DWG
LAYOUT NAME - 113
PLOT DATE : 8/9/2024 12:16 PM
PLOT BY : MATTHEW WINTER
PLOT NAME :
PLOT SCALE : 1 IN:10 FT HORZ. / 1 IN:10 FT VERT.

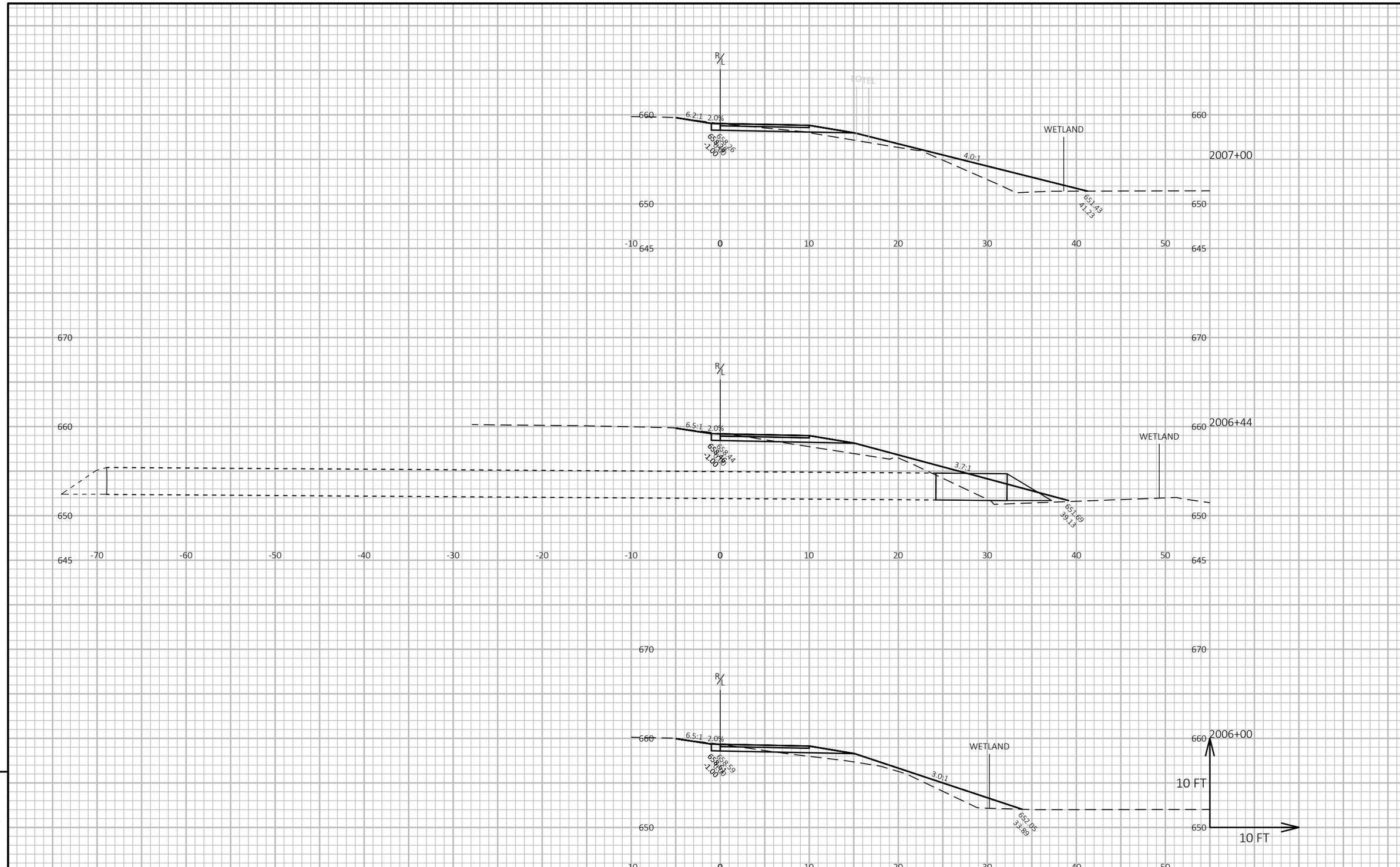

9

9

PROJECT NO: 7224-00-73	HWY: NON-HIGHWAY	COUNTY: BUFFALO	CROSS SECTIONS: CROSS SECTION	SHEET 49	E

FILE NAME : \\SP-PZ1.SEHINC.COM\PZPROJECTS1\AE\B\BUFFC\163204\5-FINAL-DSGN\51-DRAWINGS\40-TRANSHWY\C3D\72240002\SHEETSPLAN\SEC 09 B CROSS SECTIONS\090201-XS.DWG
LAYOUT NAME - 114
PLOT DATE : 8/9/2024 12:16 PM
PLOT BY : MATTHEW WINTER
PLOT NAME :
PLOT SCALE : 1 IN:10 FT HORZ. / 1 IN:10 FT VERT.
WISDOT/CADDS SHEET 49

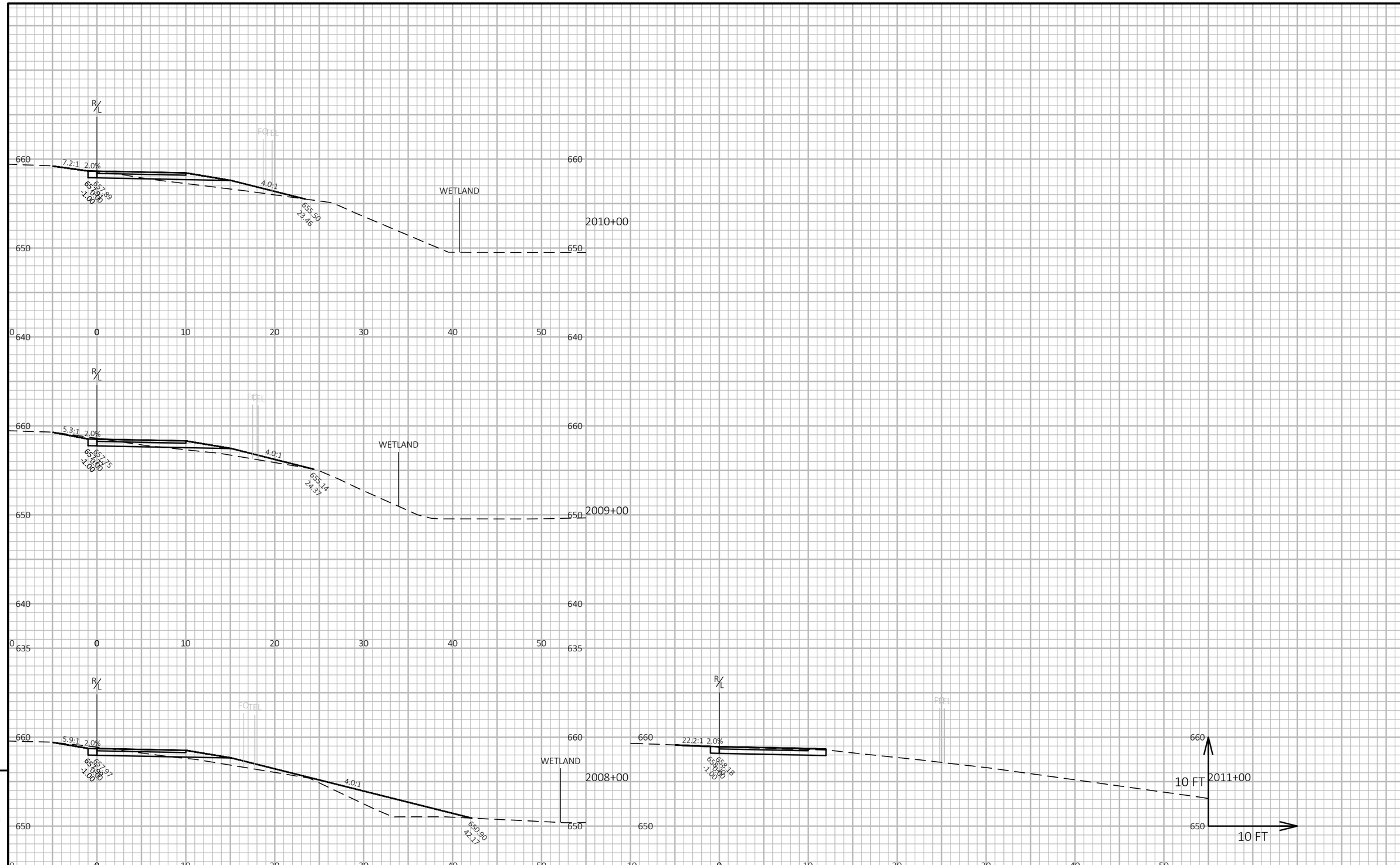

9

9

PROJECT NO: 7224-00-73	HWY: NON-HIGHWAY	COUNTY: BUFFALO	CROSS SECTIONS: CROSS SECTION	SHEET 50	E

FILE NAME : \\SP-PZ1.SEHINC.COM\PZPROJECTS1\AE\B\BUFFC\163204\5-FINAL-DSGN\51-DRAWINGS\40-TRANSHWY\C3D\72240002\SHEETSPLAN\SEC 09 B CROSS SECTIONS\090201-XS.DWG
LAYOUT NAME - 115
PLOT DATE : 8/9/2024 12:16 PM
PLOT BY : MATTHEW WINTER
PLOT NAME :
PLOT SCALE : 1 IN:10 FT HORZ. / 1 IN:10 FT VERT.

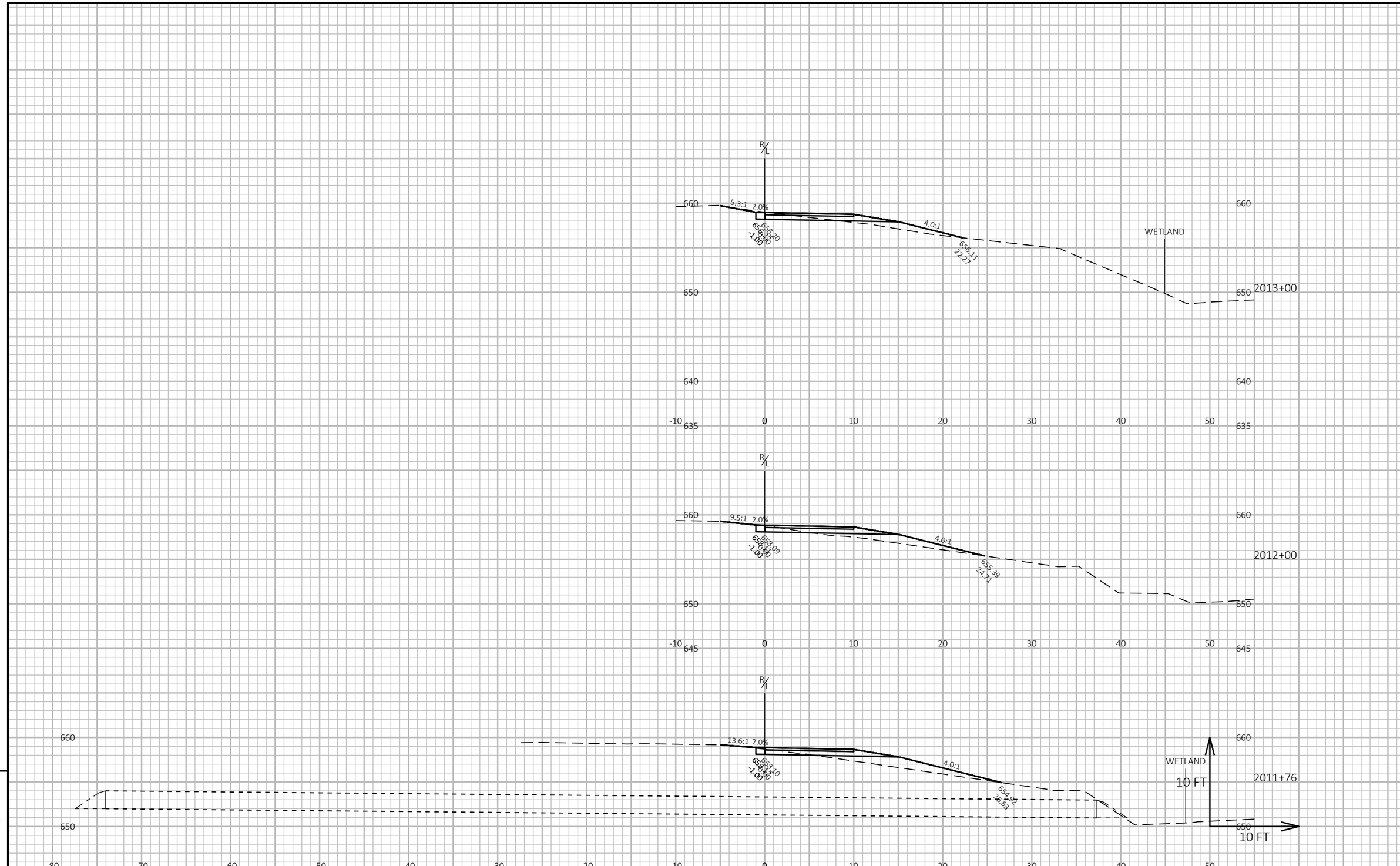

PROJECT NO: 7224-00-73	HWY: NON-HIGHWAY	COUNTY: BUFFALO	CROSS SECTIONS: CROSS SECTION	SHEET 51	E

FILE NAME : \\SP-PZ1.SEHINC.COM\PZPROJECTS1\AE\B\BUFFC\163204\5-FINAL-DSGN\51-DRAWINGS\40-TRANSHWY\C3D\72240002\SHEETSPLAN\SEC 09 B CROSS SECTIONS\090201-XS.DWG
LAYOUT NAME - 116
PLOT DATE : 8/9/2024 12:16 PM
PLOT BY : MATTHEW WINTER
PLOT NAME :
PLOT SCALE : 1 IN:10 FT HORZ. / 1 IN:10 FT VERT.

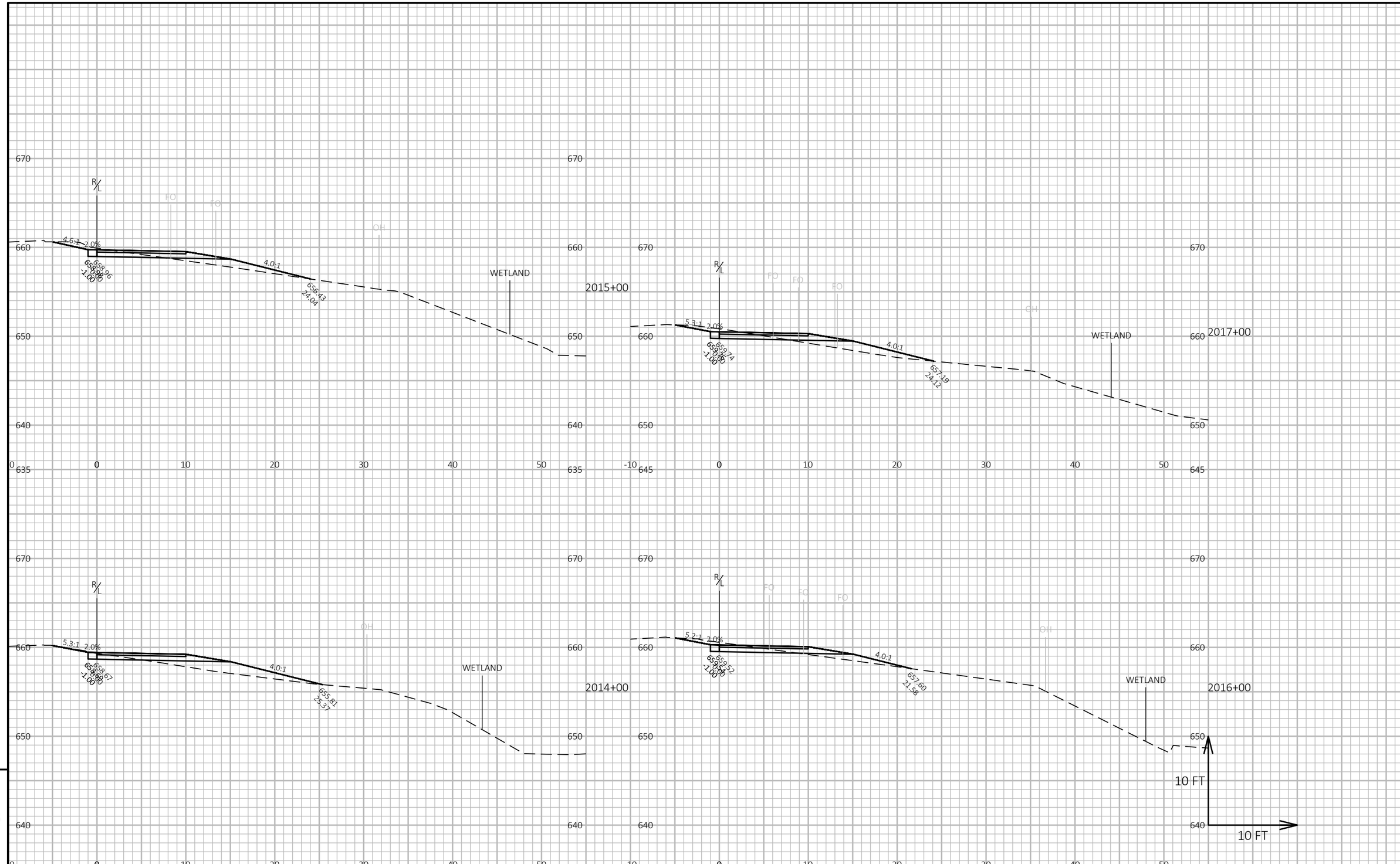

PROJECT NO: 7224-00-73	HWY: NON-HIGHWAY	COUNTY: BUFFALO	CROSS SECTIONS: CROSS SECTION	SHEET 52	E

FILE NAME : \\SP-PZ1.SEHINC.COM\PZPROJECTS1\AE\B\BUFFC\163204\5-FINAL-DSGN\51-DRAWINGS\40-TRANSHWY\C3D\72240002\SHEETSPLAN\SEC 09 B CROSS SECTIONS\090201-XS.DWG
LAYOUT NAME - 117
PLOT DATE : 8/9/2024 12:16 PM
PLOT BY : MATTHEW WINTER
PLOT NAME :
PLOT SCALE : 1 IN:10 FT HORZ. / 1 IN:10 FT VERT.

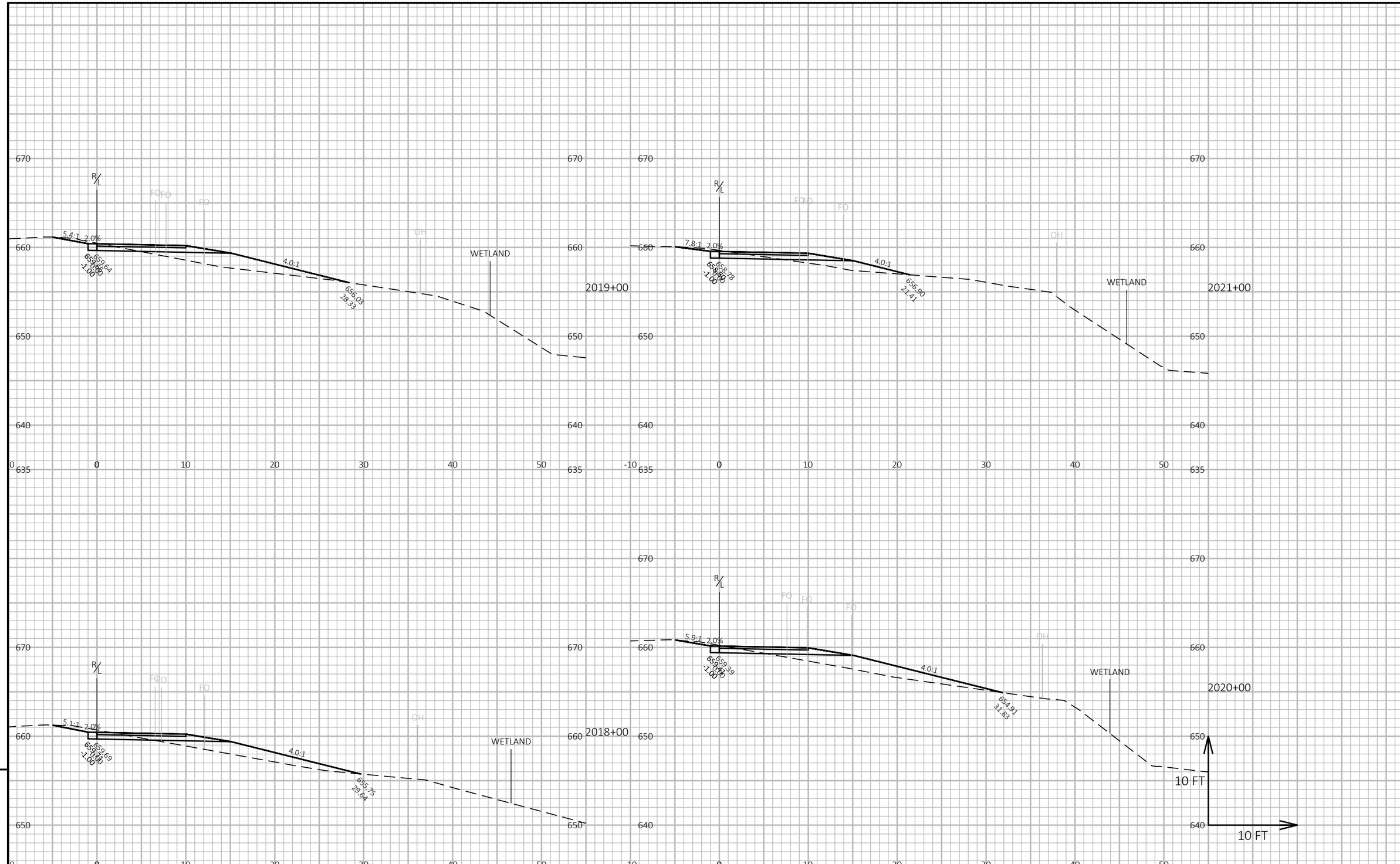

PROJECT NO: 7224-00-73	HWY: NON-HIGHWAY	COUNTY: BUFFALO	CROSS SECTIONS: CROSS SECTION	SHEET 53	E

FILE NAME : \\SP-PZ1.SEHINC.COM\PZPROJECTS1\AE\B\BUFFC\163204\5-FINAL-DSGN\51-DRAWINGS\40-TRANSHWY\C3D\72240002\SHEETSPLAN\SEC 09 B CROSS SECTIONS\090201-XS.DWG
LAYOUT NAME - 118
PLOT DATE : 8/9/2024 12:16 PM
PLOT BY : MATTHEW WINTER
PLOT NAME :
PLOT SCALE : 1 IN:10 FT HORZ. / 1 IN:10 FT VERT.
WISDOT/CADDS SHEET 49

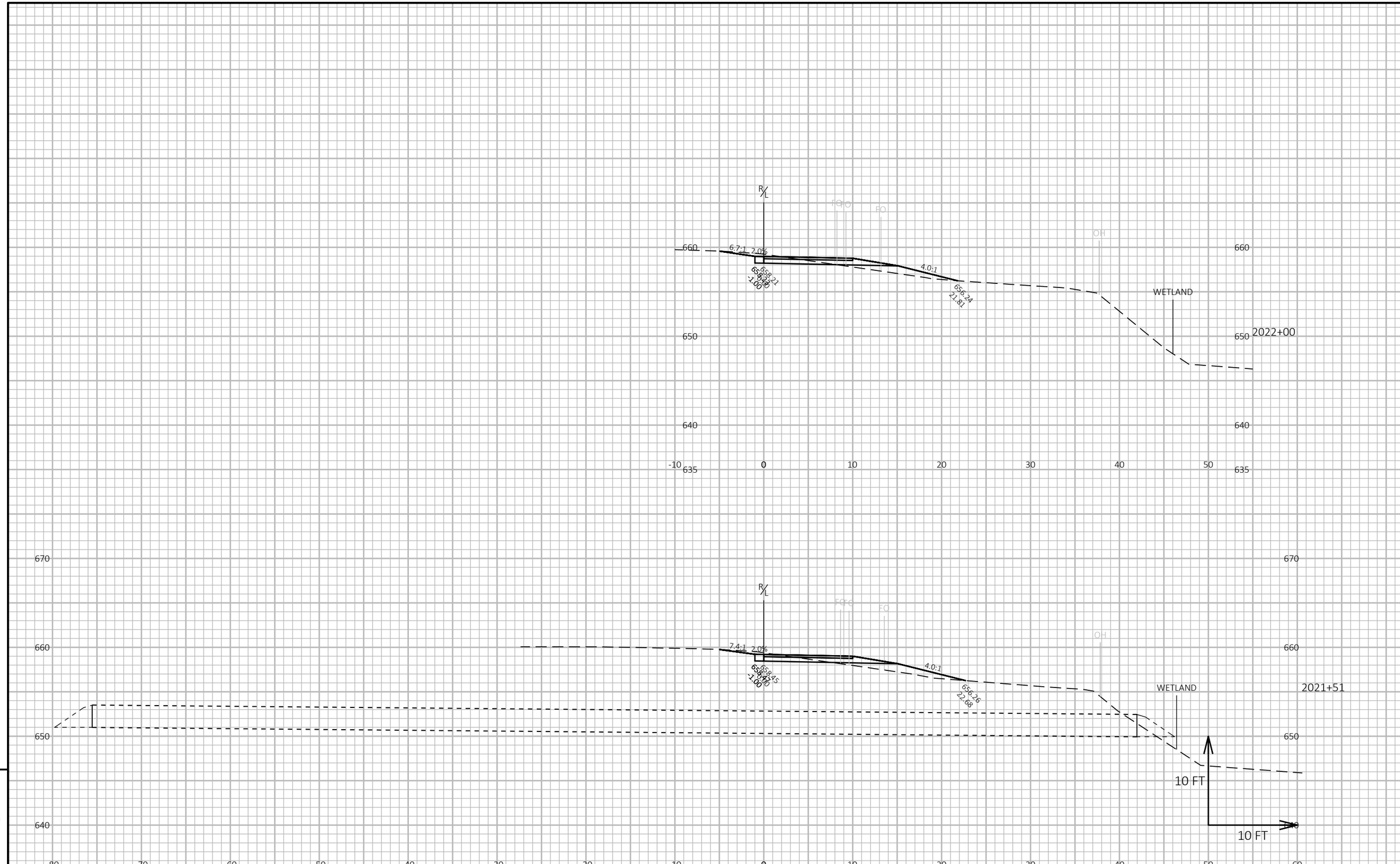

PROJECT NO: 7224-00-73	HWY: NON-HIGHWAY	COUNTY: BUFFALO	CROSS SECTIONS: CROSS SECTION	SHEET 54	E

FILE NAME : \\SP-PZ1.SEHINC.COM\PZPROJECTS1\AE\B\BUFFC\163204\5-FINAL-DSGN\51-DRAWINGS\40-TRANSHWY\C3D\72240002\SHEETSPLAN\SEC 09 B CROSS SECTIONS\090201-XS.DWG
LAYOUT NAME - 119
PLOT DATE : 8/9/2024 12:16 PM
PLOT BY : MATTHEW WINTER
PLOT NAME :
PLOT SCALE : 1 IN:10 FT HORZ. / 1 IN:10 FT VERT.
WISDOT/CADDS SHEET 49

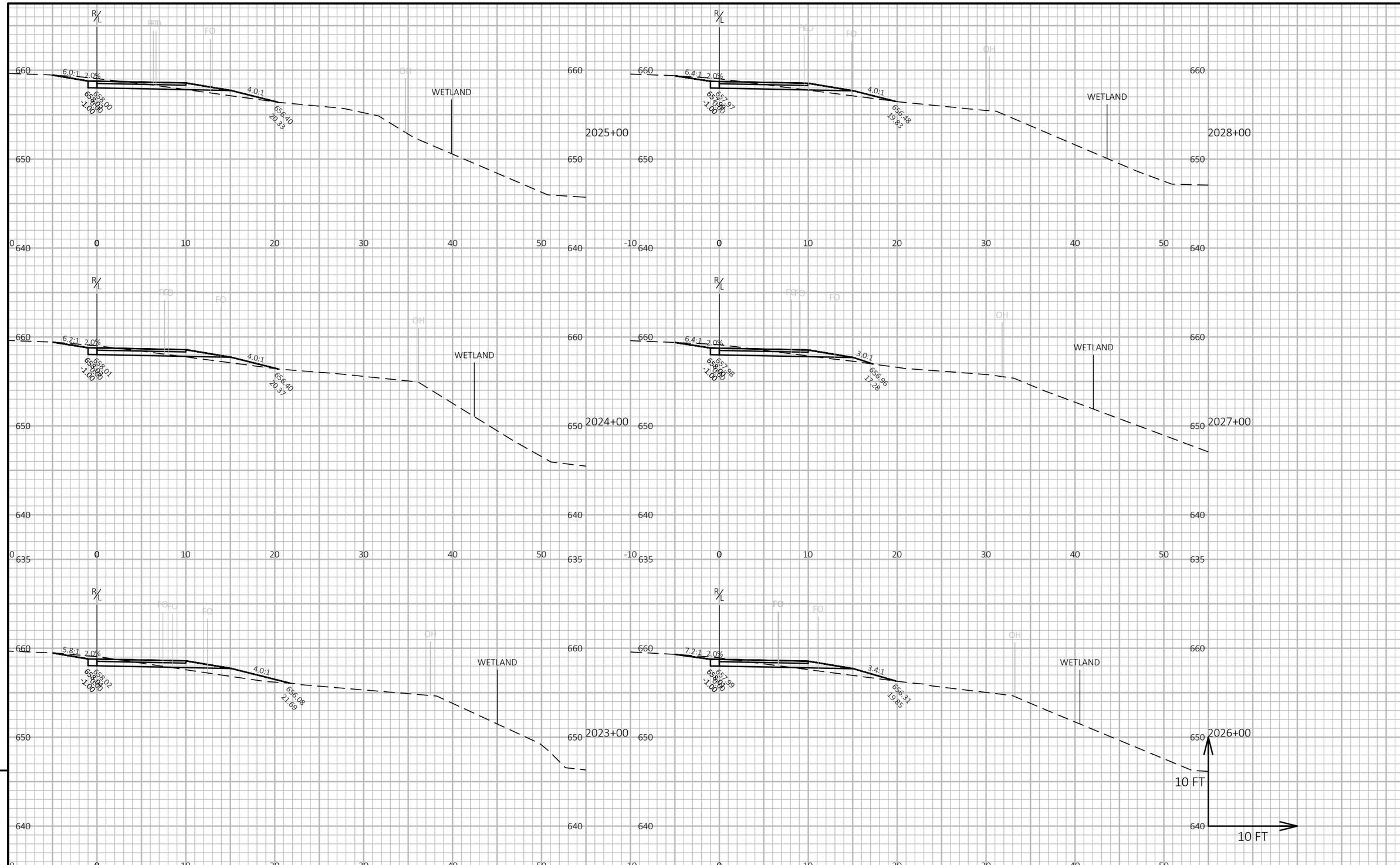

PROJECT NO: 7224-00-73	HWY: NON-HIGHWAY	COUNTY: BUFFALO	CROSS SECTIONS: CROSS SECTION	SHEET 55	E

FILE NAME : \\SP-PZ1.SEHINC.COM\PZPROJECTS1\AE\B\BUFFC\163204\5-FINAL-DSGN\51-DRAWINGS\40-TRANSHWY\C3D\72240002\SHEETSPLAN\SEC 09 B CROSS SECTIONS\090201-XS.DWG
LAYOUT NAME - 120
PLOT DATE : 8/9/2024 12:16 PM
PLOT BY : MATTHEW WINTER
PLOT NAME :
PLOT SCALE : 1 IN:10 FT HORZ. / 1 IN:10 FT VERT.
WISDOT/CADDS SHEET 49

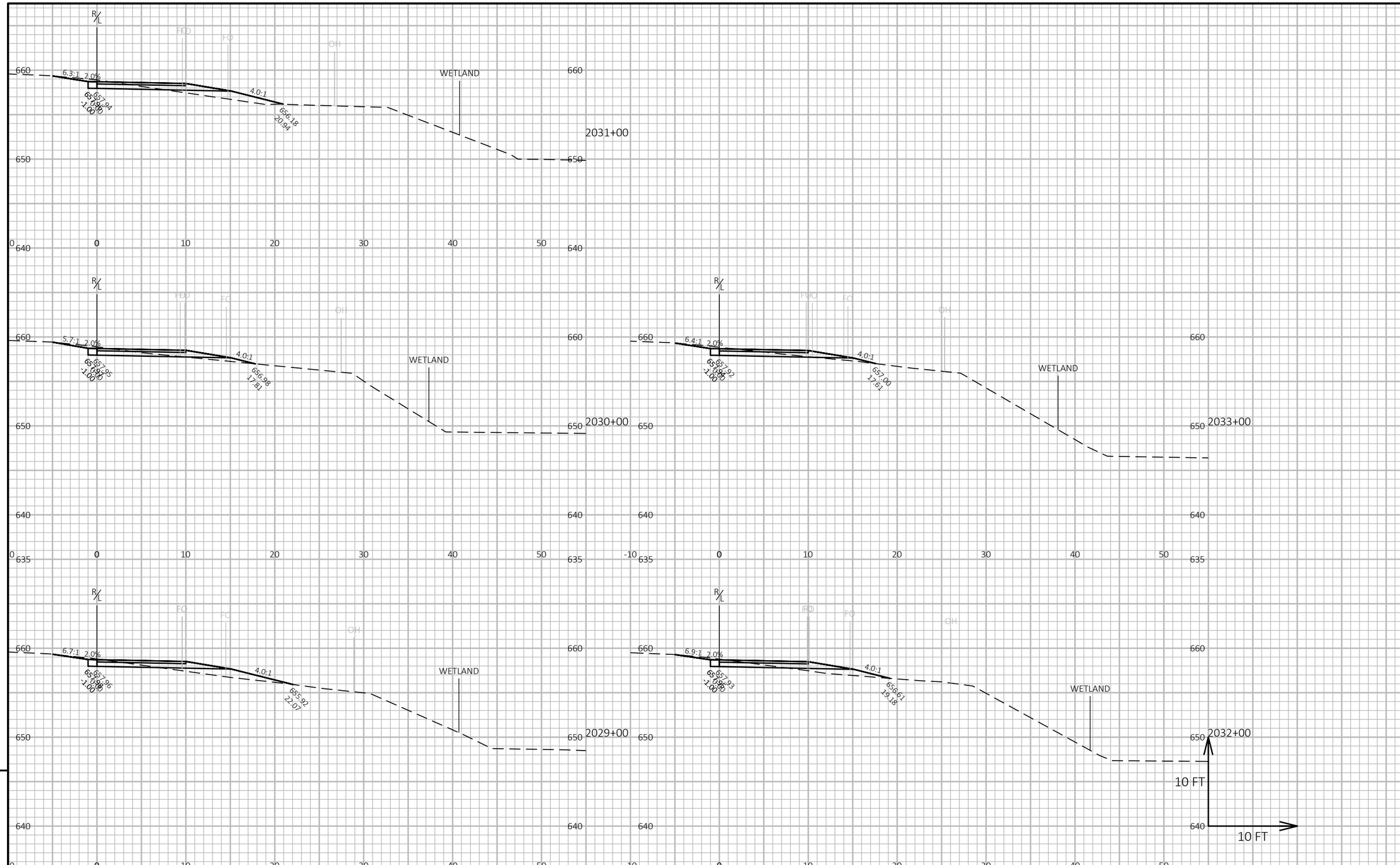

PROJECT NO: 7224-00-73	HWY: NON-HIGHWAY	COUNTY: BUFFALO	CROSS SECTIONS: CROSS SECTION	SHEET 56	E

FILE NAME : \\SP-PZ1.SEHINC.COM\PZPROJECTS1\AE\B\BUFFC\163204\5-FINAL-DSGN\51-DRAWINGS\40-TRANSHWY\C3D\72240002\SHEETSPLAN\SEC 09 B CROSS SECTIONS\090201-XS.DWG
LAYOUT NAME - 121
PLOT DATE : 8/9/2024 12:17 PM
PLOT BY : MATTHEW WINTER
PLOT NAME :
PLOT SCALE : 1 IN:10 FT HORZ. / 1 IN:10 FT VERT.
WISDOT/CADDS SHEET 49

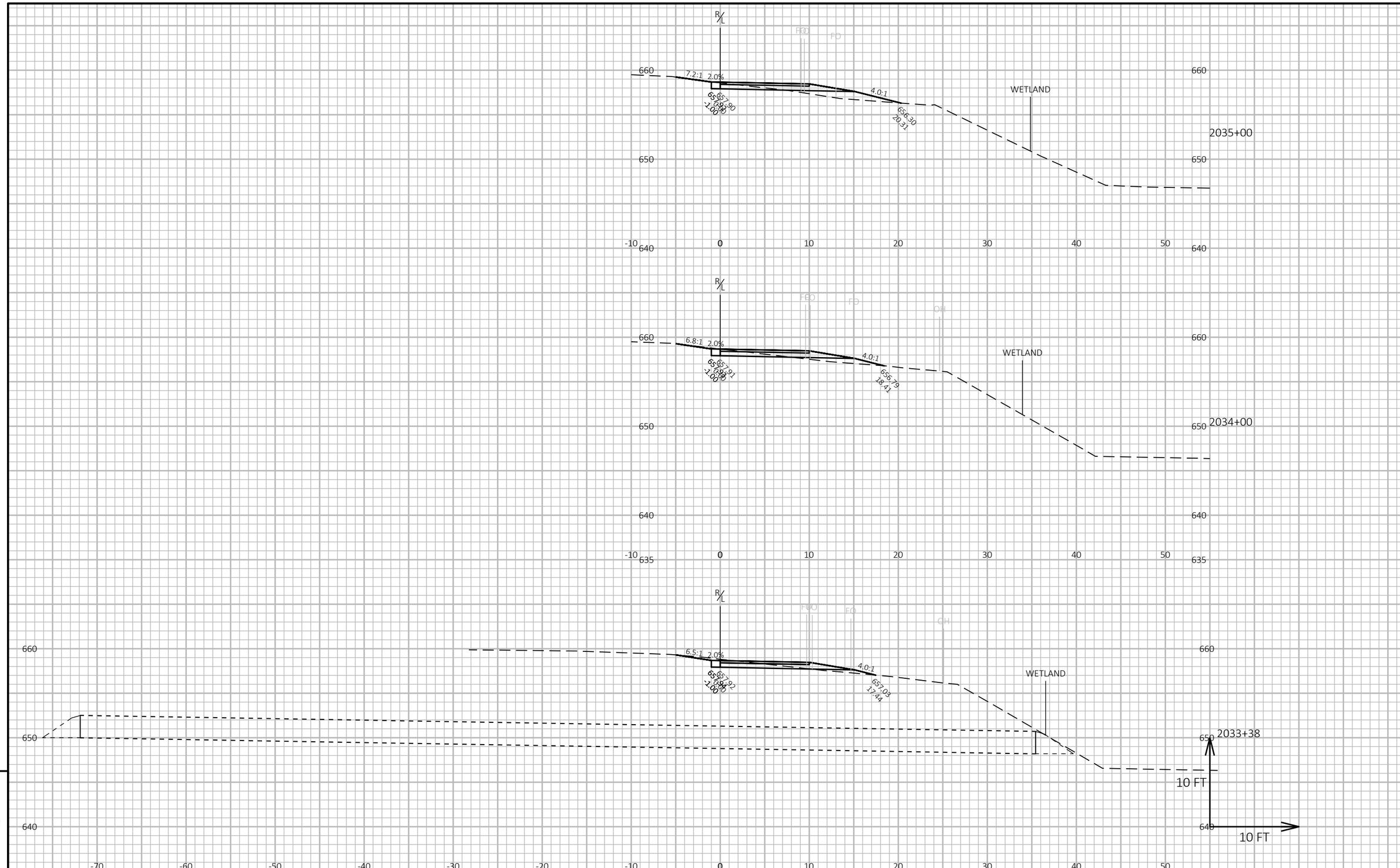

PROJECT NO: 7224-00-73	HWY: NON-HIGHWAY	COUNTY: BUFFALO	CROSS SECTIONS: CROSS SECTION	SHEET 57	E

FILE NAME : \\SP-PZ1.SEHINC.COM\PZPROJECTS1\AE\B\BUFFC\163204\5-FINAL-DSGN\51-DRAWINGS\40-TRANSHWY\C3D\72240002\SHEETSPLAN\SEC 09 B CROSS SECTIONS\090201-XS.DWG
LAYOUT NAME - 122
PLOT DATE : 8/9/2024 12:17 PM
PLOT BY : MATTHEW WINTER
PLOT NAME :
PLOT SCALE : 1 IN:10 FT HORZ. / 1 IN:10 FT VERT.
WISDOT/CADDS SHEET 49

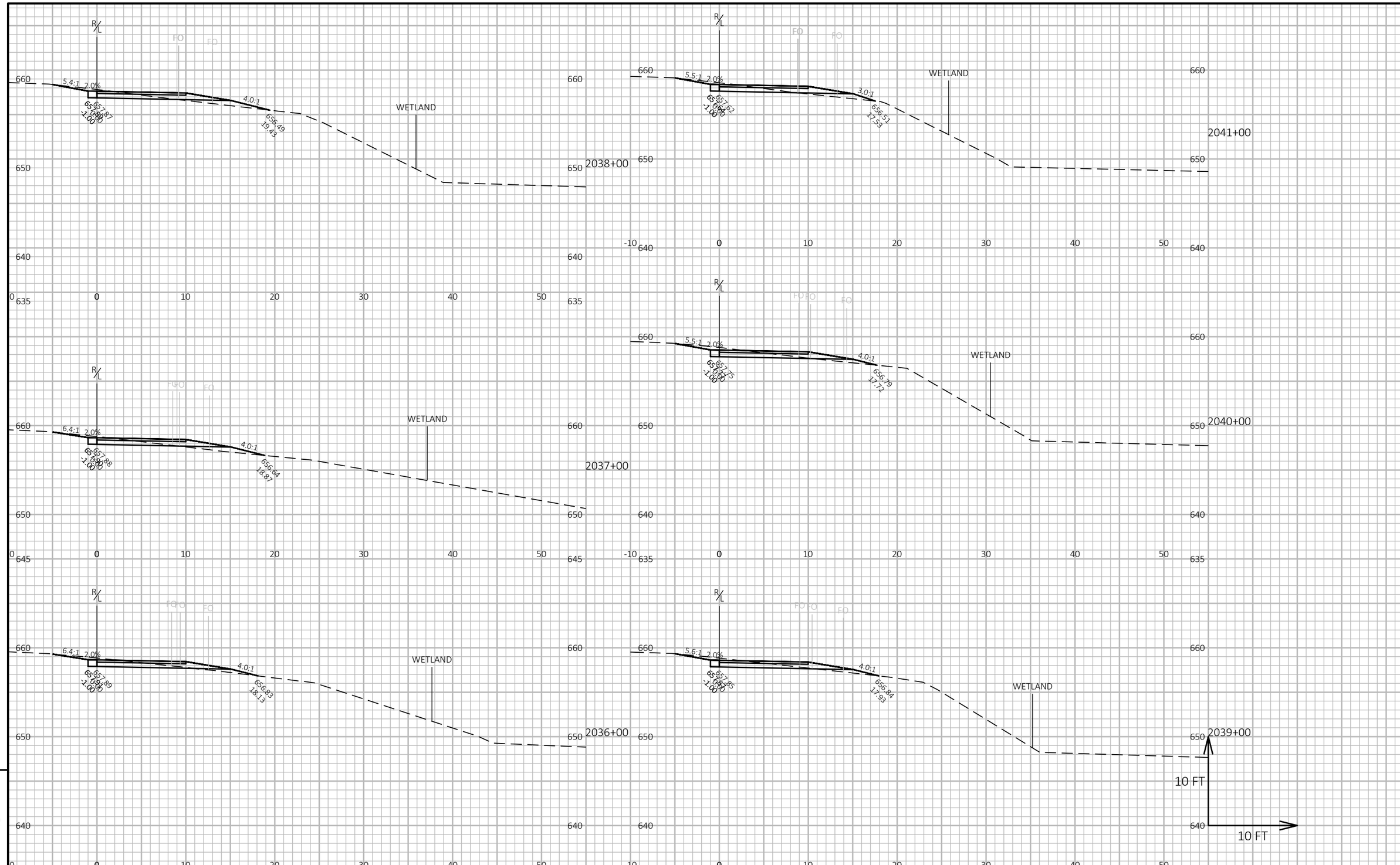

PROJECT NO: 7224-00-73	HWY: NON-HIGHWAY	COUNTY: BUFFALO	CROSS SECTIONS: CROSS SECTION	SHEET 58	E

FILE NAME : \\SP-PZ1.SEHINC.COM\PZPROJECTS1\AE\B\BUFFC\163204\5-FINAL-DSGN\51-DRAWINGS\40-TRANSHWY\C3D\72240002\SHEETSPLAN\SEC 09 B CROSS SECTIONS\090201-XS.DWG PLOT DATE : 8/9/2024 12:17 PM PLOT BY : MATTHEW WINTER PLOT NAME : PLOT SCALE : 1 IN:10 FT HORZ. / 1 IN:10 FT VERT.
LAYOUT NAME - 123

WISDOT/CADDS SHEET 49

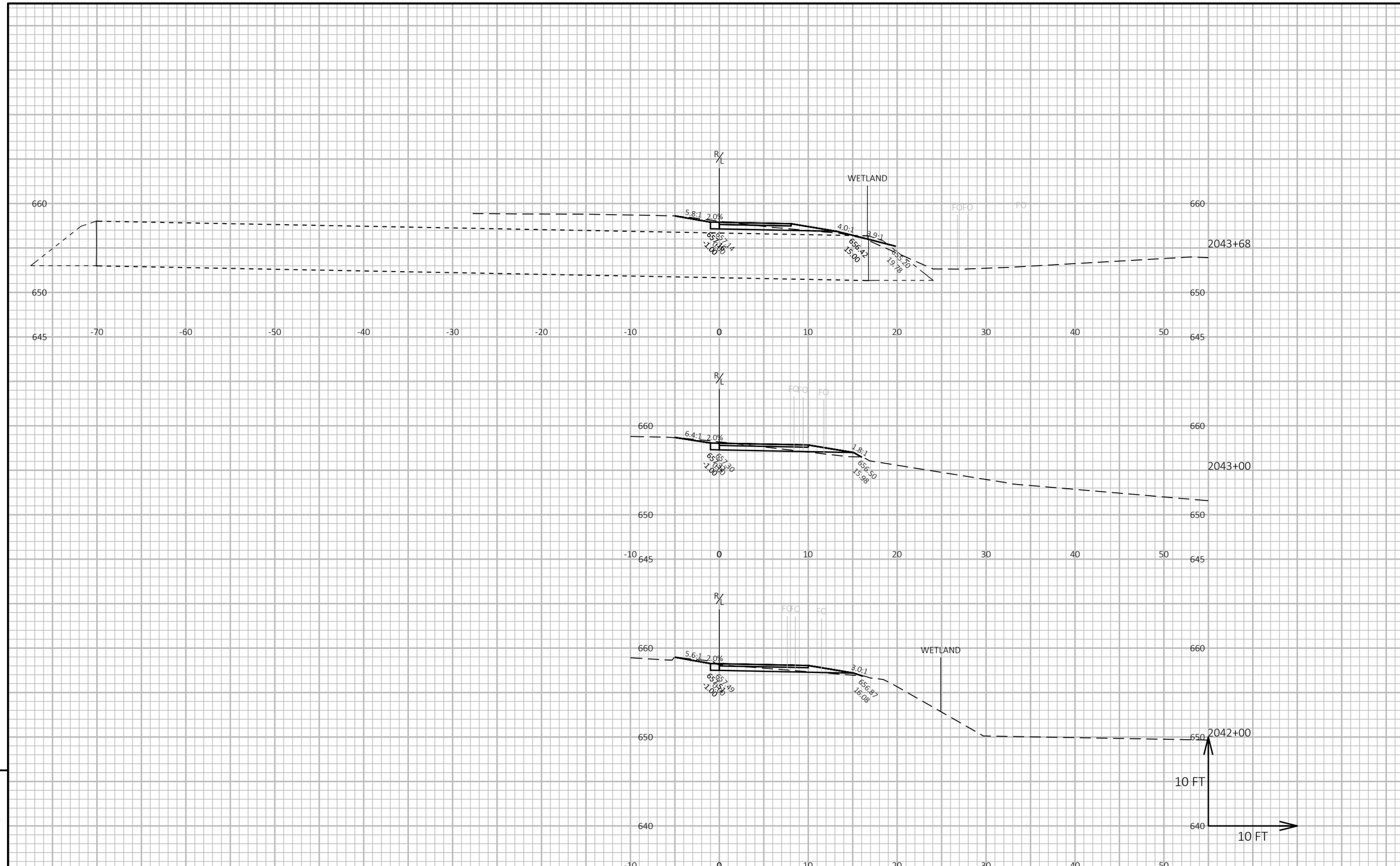

9

9

PROJECT NO: 7224-00-73	HWY: NON-HIGHWAY	COUNTY: BUFFALO	CROSS SECTIONS: CROSS SECTION	SHEET 59	E

FILE NAME : \\SP-PZ1.SEHINC.COM\PZPROJECTS1\AE\B\BUFFC\163204\5-FINAL-DSGN\51-DRAWINGS\40-TRANSHWY\C3D\72240002\SHEETSPLAN\SEC 09 B CROSS SECTIONS\090201-XS.DWG
LAYOUT NAME - 124
PLOT DATE : 8/9/2024 12:17 PM
PLOT BY : MATTHEW WINTER
PLOT NAME :
PLOT SCALE : 1 IN:10 FT HORZ. / 1 IN:10 FT VERT.

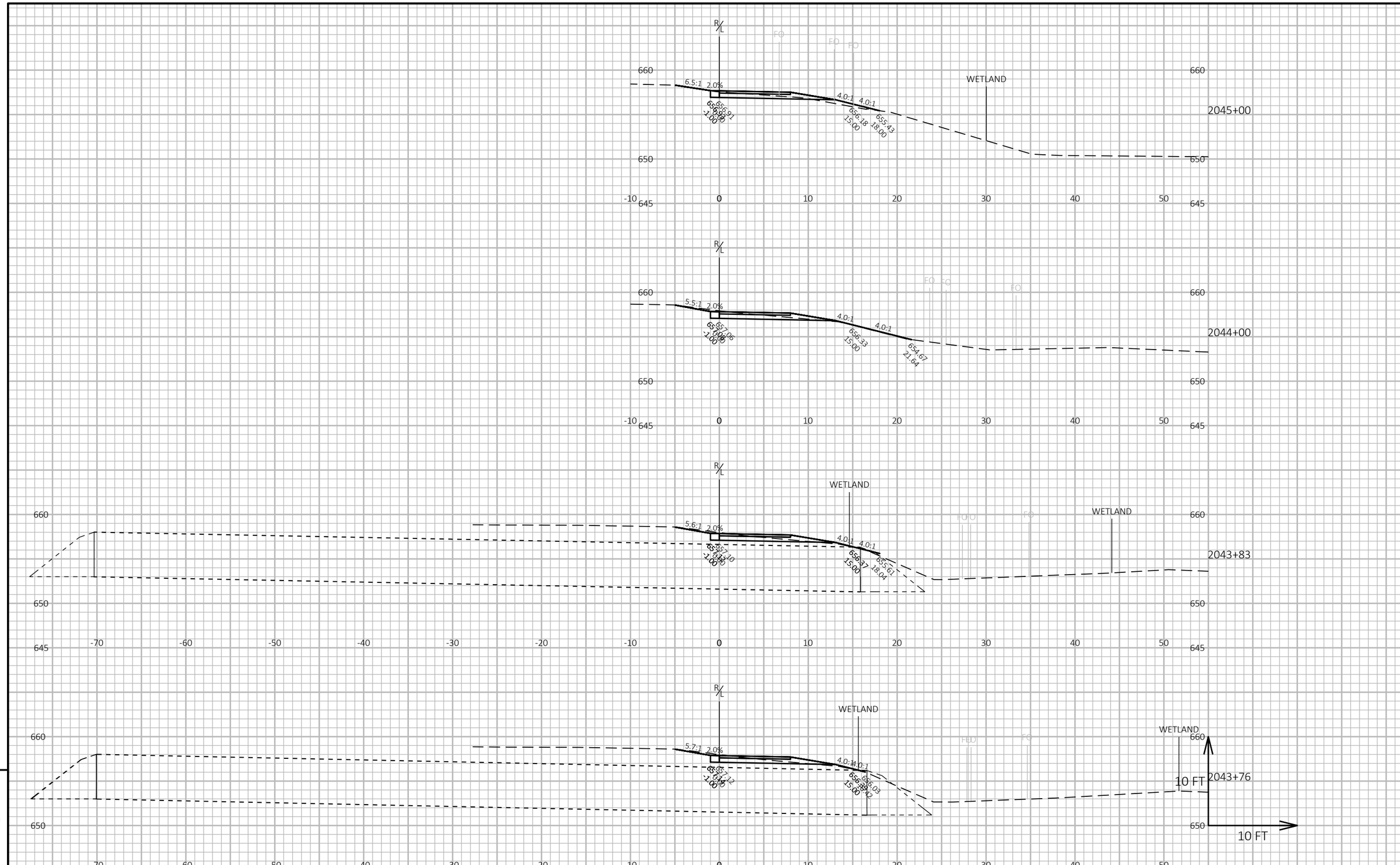

PROJECT NO: 7224-00-73	HWY: NON-HIGHWAY	COUNTY: BUFFALO	CROSS SECTIONS: CROSS SECTION	SHEET 60	E

FILE NAME : \\SP-PZ1.SEHINC.COM\PZPROJECTS1\AE\B\BUFFC\163204\5-FINAL-DSGN\51-DRAWINGS\40-TRANSHWY\C3D\72240002\SHEETSPLAN\SEC 09 B CROSS SECTIONS\090201-XS.DWG
LAYOUT NAME - 125
PLOT DATE : 8/9/2024 12:17 PM
PLOT BY : MATTHEW WINTER
PLOT NAME :
PLOT SCALE : 1 IN:10 FT HORZ. / 1 IN:10 FT VERT.

WISDOT/CADDS SHEET 49

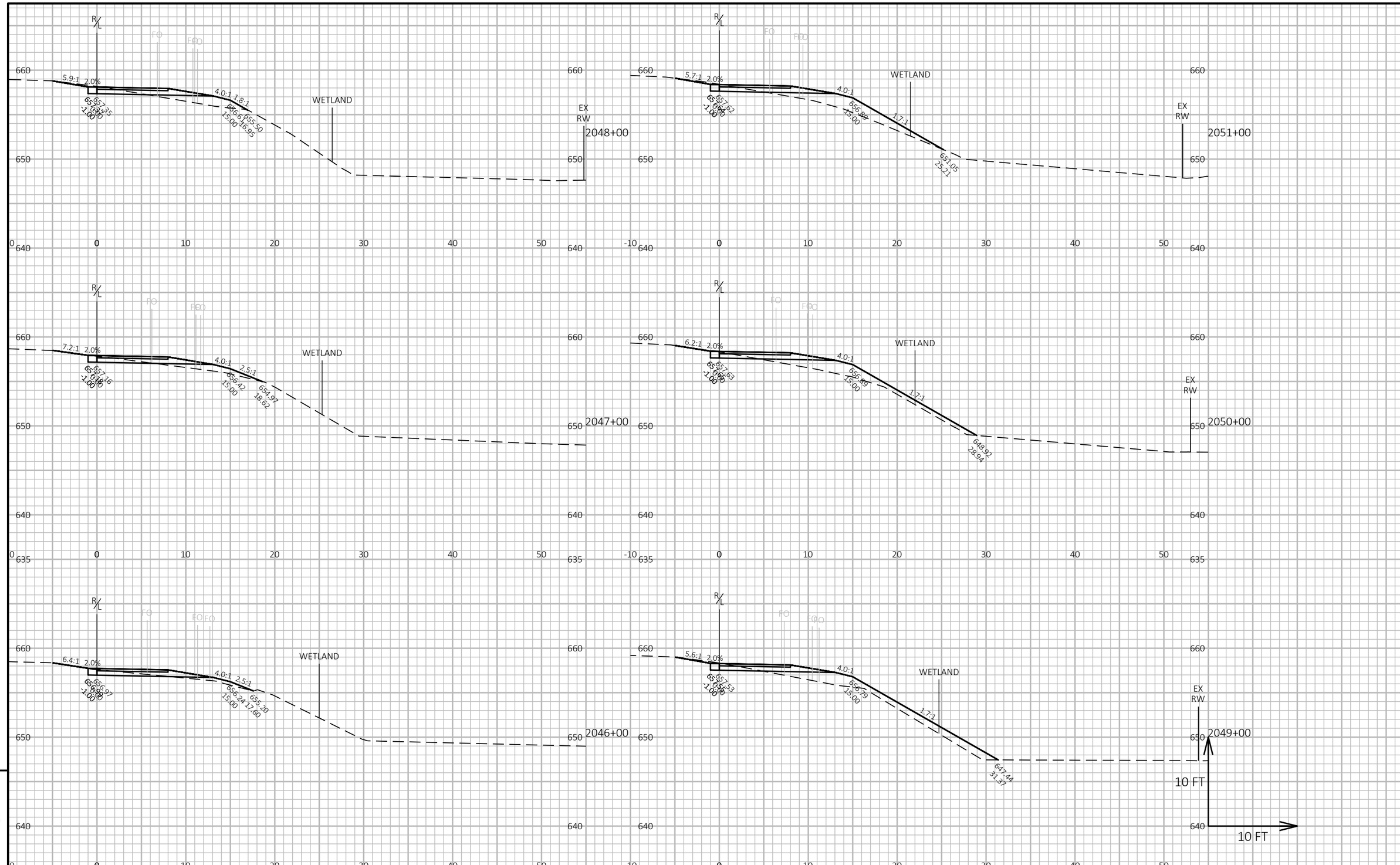

PROJECT NO: 7224-00-73	HWY: NON-HIGHWAY	COUNTY: BUFFALO	CROSS SECTIONS: CROSS SECTION	SHEET 61	E

FILE NAME : \\SP-PZ1.SEHINC.COM\PZPROJECTS1\AE\B\BUFFC\163204\5-FINAL-DSGN\51-DRAWINGS\40-TRANSHWY\C3D\72240002\SHEETSPLAN\SEC 09 B CROSS SECTIONS\090201-XS.DWG
LAYOUT NAME - 126
PLOT DATE : 8/9/2024 12:17 PM
PLOT BY : MATTHEW WINTER
PLOT NAME :
PLOT SCALE : 1 IN:10 FT HORZ. / 1 IN:10 FT VERT.
WISDOT/CADDS SHEET 49

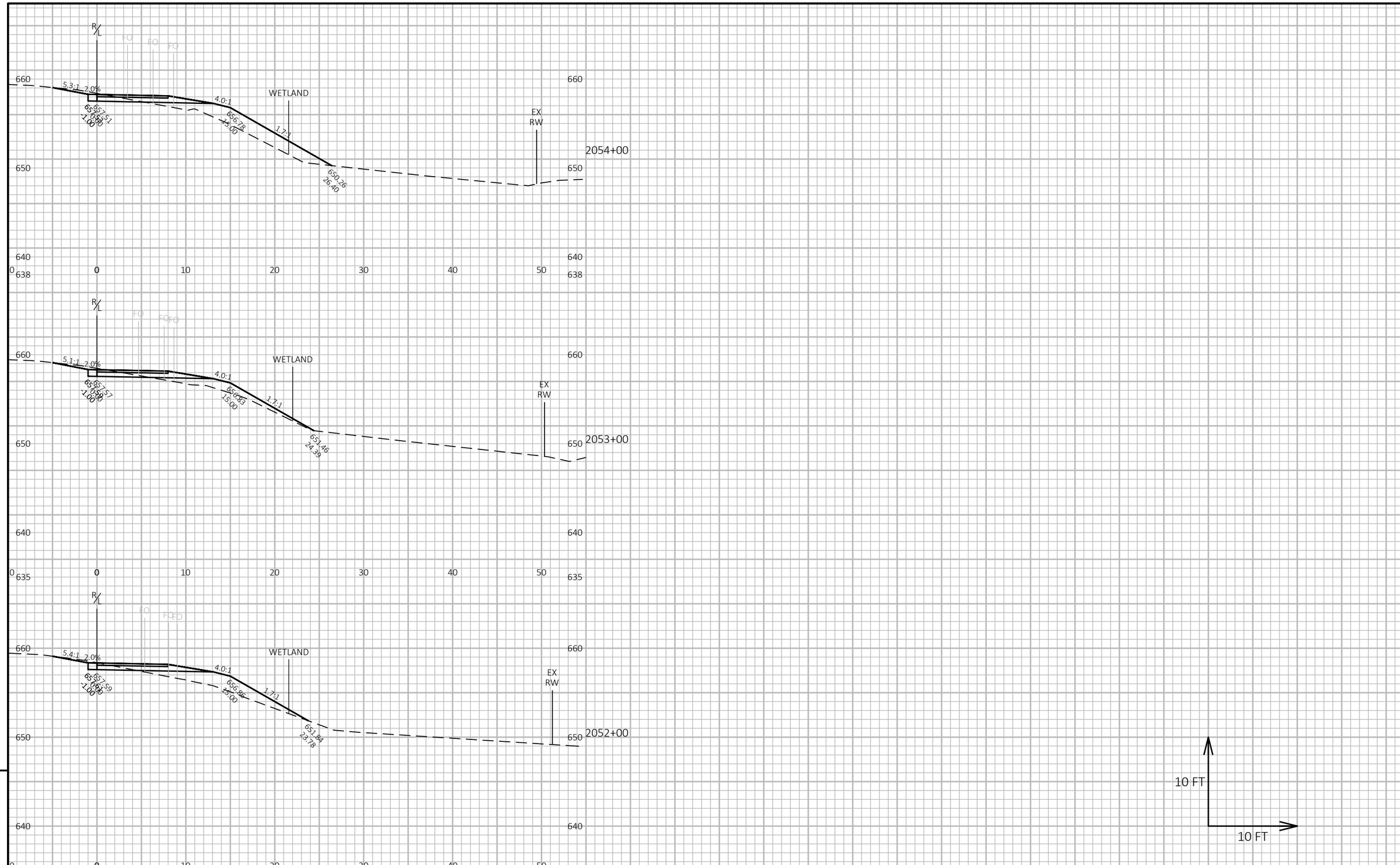

9

9

PROJECT NO: 7224-00-73	HWY: NON-HIGHWAY	COUNTY: BUFFALO	CROSS SECTIONS: CROSS SECTION	SHEET 62	E

FILE NAME : \\SP-PZ1.SEHINC.COM\PZPROJECTS1\AE\B\BUFFC\163204\5-FINAL-DSGN\51-DRAWINGS\40-TRANSHWY\C3D\72240002\SHEETSPLAN\SEC 09 B CROSS SECTIONS\090201-XS.DWG
LAYOUT NAME - 127
PLOT DATE : 8/9/2024 12:17 PM
PLOT BY : MATTHEW WINTER
PLOT NAME :
PLOT SCALE : 1 IN:10 FT HORZ. / 1 IN:10 FT VERT.
WISDOT/CADDS SHEET 49

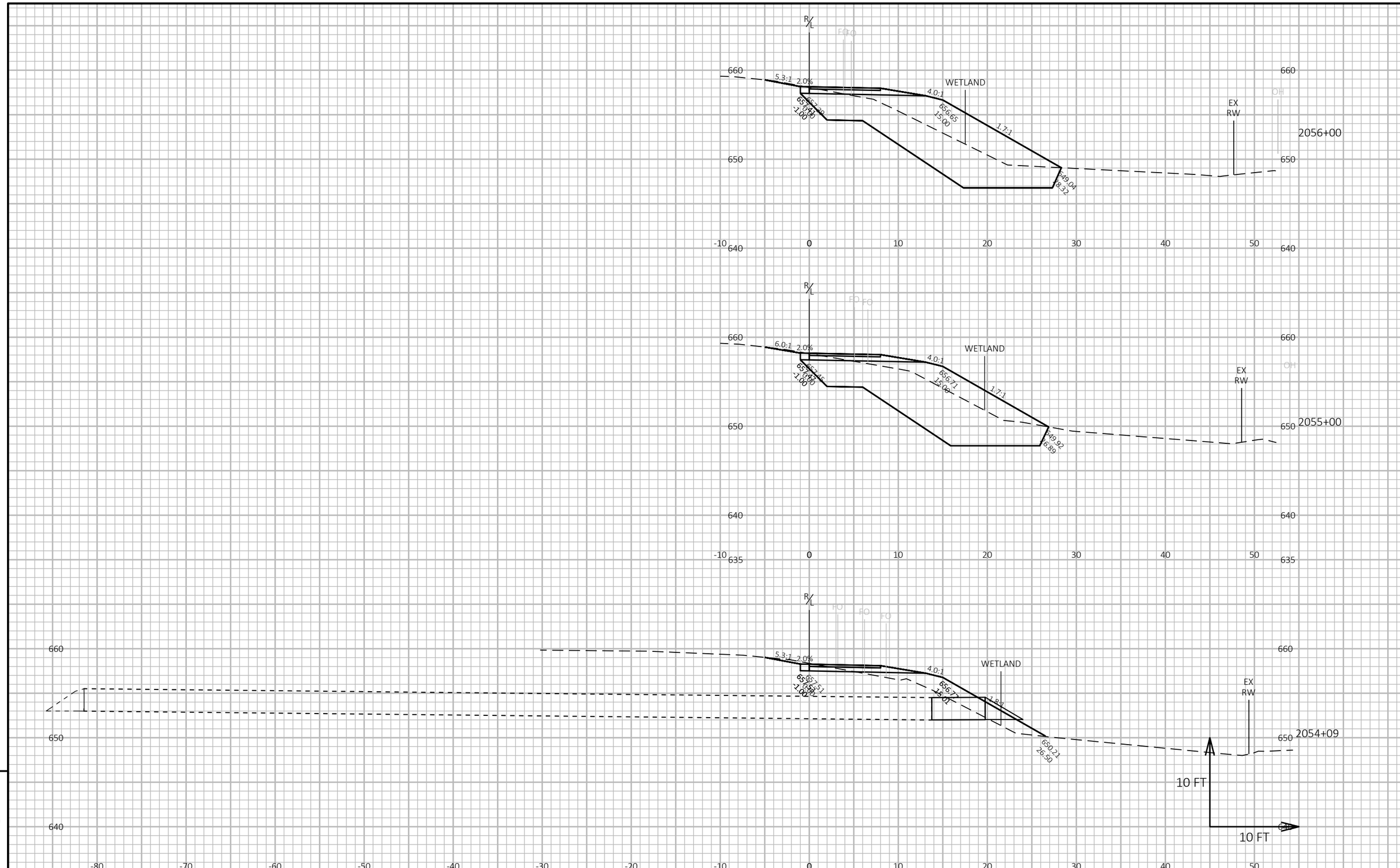

PROJECT NO: 7224-00-73	HWY: NON-HIGHWAY	COUNTY: BUFFALO	CROSS SECTIONS: CROSS SECTION	SHEET 63	E

FILE NAME : \\SP-PZ1.SEHINC.COM\PZPROJECTS1\AE\B\BUFFC\163204\5-FINAL-DSGN\51-DRAWINGS\40-TRANSHWY\C3D\72240002\SHEETSPLAN\SEC 09 B CROSS SECTIONS\090201-XS.DWG PLOT DATE : 8/9/2024 12:17 PM PLOT BY : MATTHEW WINTER PLOT NAME : PLOT SCALE : 1 IN:10 FT HORZ. / 1 IN:10 FT VERT.
LAYOUT NAME - 128

WISDOT/CADDS SHEET 49

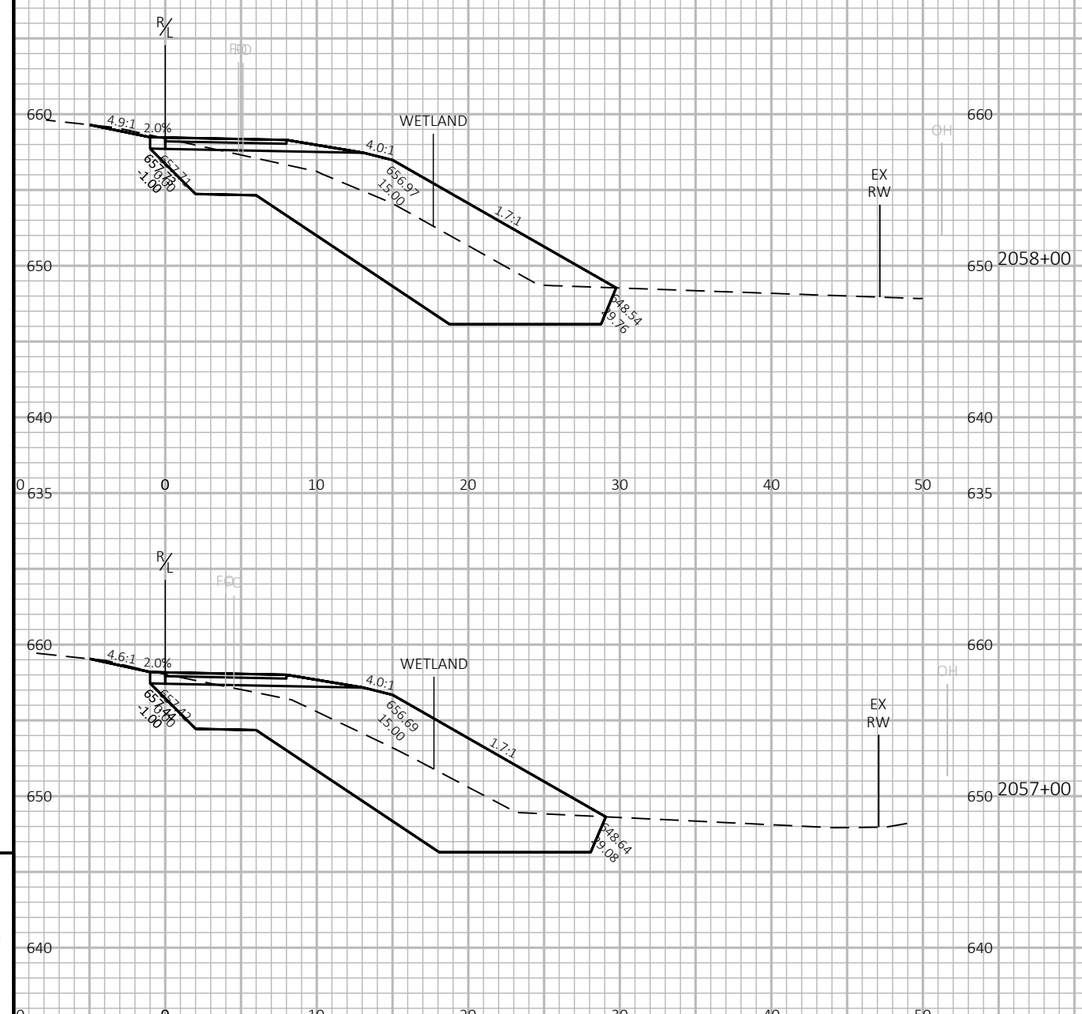

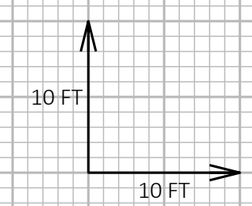

9

9

PROJECT NO: 7224-00-73	HWY: NON-HIGHWAY	COUNTY: BUFFALO	CROSS SECTIONS: CROSS SECTION	SHEET 64	E

FILE NAME : \\SP-PZ1.SEHINC.COM\PZPROJECTS1\AE\B\BUFFC\163204\5-FINAL-DSGN\51-DRAWINGS\40-TRANSHWY\C3D\72240002\SHEETSPLAN\SEC 09 B CROSS SECTIONS\090201-XS.DWG
LAYOUT NAME - 129
PLOT DATE : 8/9/2024 12:17 PM
PLOT BY : MATTHEW WINTER
PLOT NAME :
PLOT SCALE : 1 IN:10 FT HORZ. / 1 IN:10 FT VERT.
WISDOT/CADDS SHEET 49

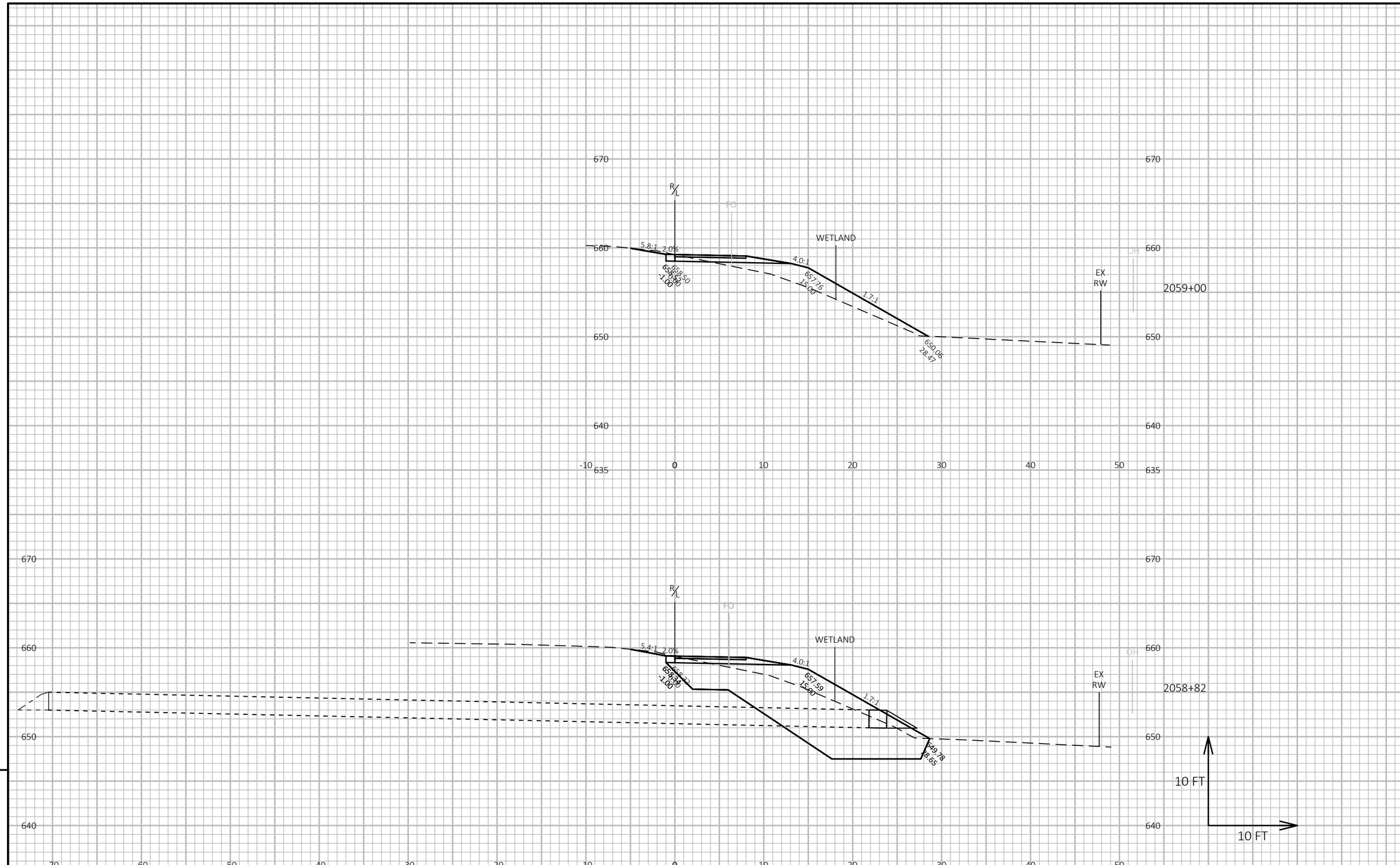

9

9

PROJECT NO: 7224-00-73	HWY: NON-HIGHWAY	COUNTY: BUFFALO	CROSS SECTIONS: CROSS SECTION	SHEET 65	E

FILE NAME : \\SP-PZ1.SEHINC.COM\PZPROJECTS1\AE\B\BUFFC\163204\5-FINAL-DSGN\51-DRAWINGS\40-TRANSHWY\C3D\72240002\SHEETSPLAN\SEC 09 B CROSS SECTIONS\090201-XS.DWG
LAYOUT NAME - 130
PLOT DATE : 8/9/2024 12:17 PM
PLOT BY : MATTHEW WINTER
PLOT NAME :
PLOT SCALE : 1 IN:10 FT HORZ. / 1 IN:10 FT VERT.

WISDOT/CADDS SHEET 49

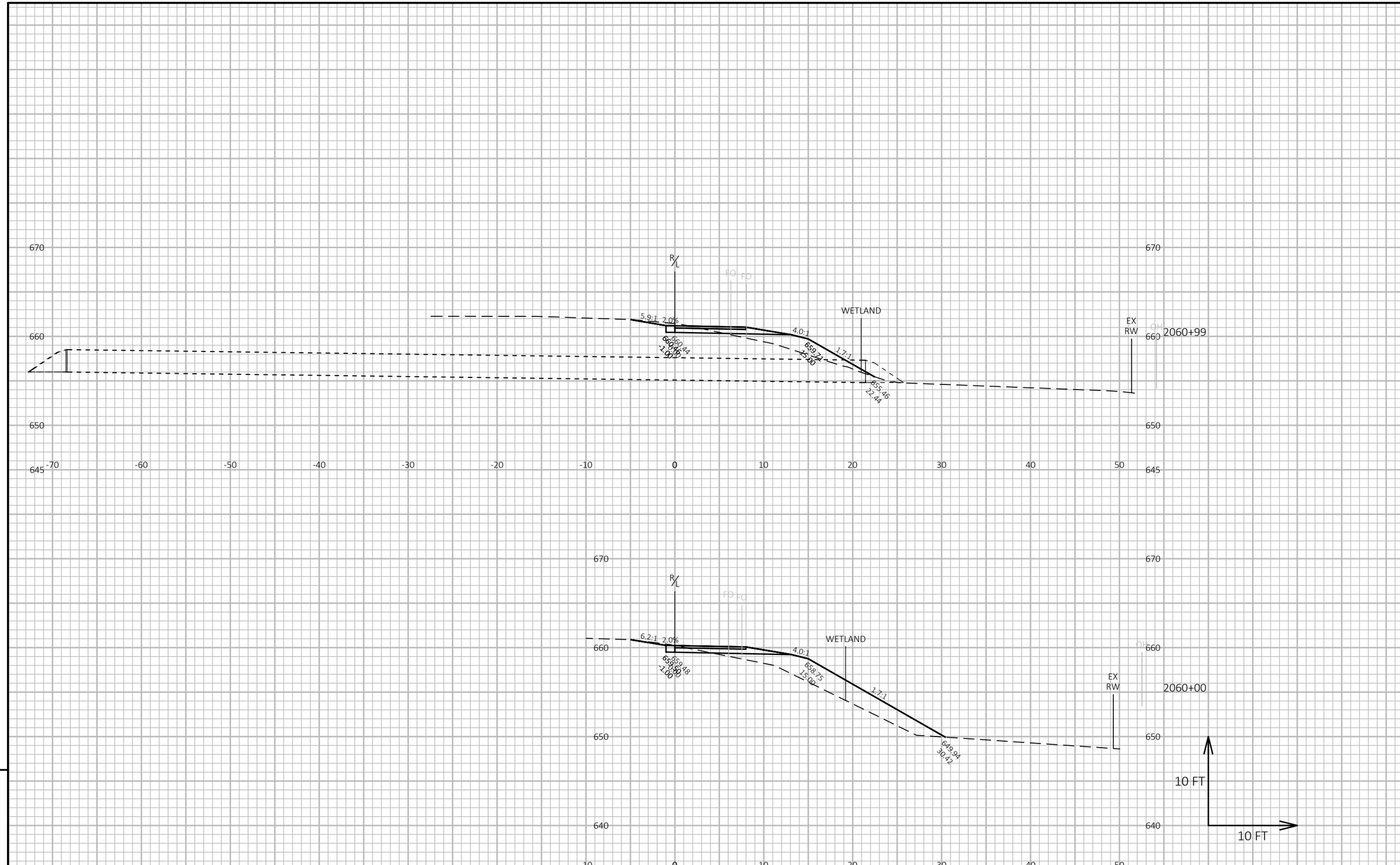

PROJECT NO: 7224-00-73	HWY: NON-HIGHWAY	COUNTY: BUFFALO	CROSS SECTIONS: CROSS SECTION	SHEET 66	E

FILE NAME : \\SP-PZ1.SEHINC.COM\PZPROJECTS1\AE\B\BUFFC\163204\5-FINAL-DSGN\51-DRAWINGS\40-TRANSHWY\C3D\72240002\SHEETSPLAN\SEC 09 B CROSS SECTIONS\090201-XS.DWG
LAYOUT NAME - 131
PLOT DATE : 8/9/2024 12:17 PM
PLOT BY : MATTHEW WINTER
PLOT NAME :
PLOT SCALE : 1 IN:10 FT HORZ. / 1 IN:10 FT VERT.

WISDOT/CADDS SHEET 49

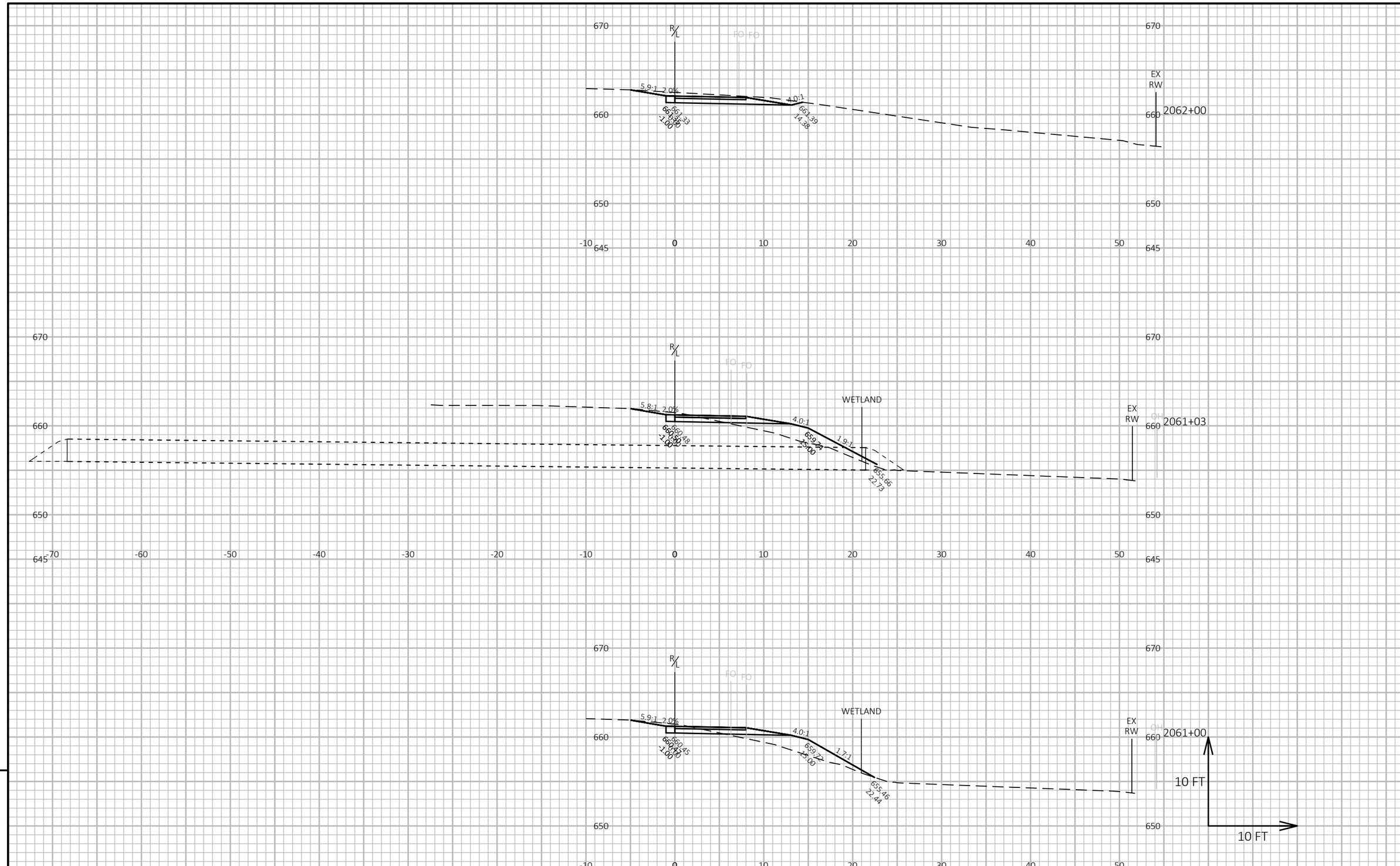

9

9

PROJECT NO: 7224-00-73	HWY: NON-HIGHWAY	COUNTY: BUFFALO	CROSS SECTIONS: CROSS SECTION	SHEET 67	E

FILE NAME : \\SP-PZ1.SEHINC.COM\PZPROJECTS1\AE\B\BUFFC\163204\5-FINAL-DSGN\51-DRAWINGS\40-TRANSHWY\C3D\72240002\SHEETSPLAN\SEC 09 B CROSS SECTIONS\090201-XS.DWG
LAYOUT NAME - 132
PLOT DATE : 8/9/2024 12:17 PM
PLOT BY : MATTHEW WINTER
PLOT NAME :
PLOT SCALE : 1 IN:10 FT HORZ. / 1 IN:10 FT VERT.
WISDOT/CADDS SHEET 49

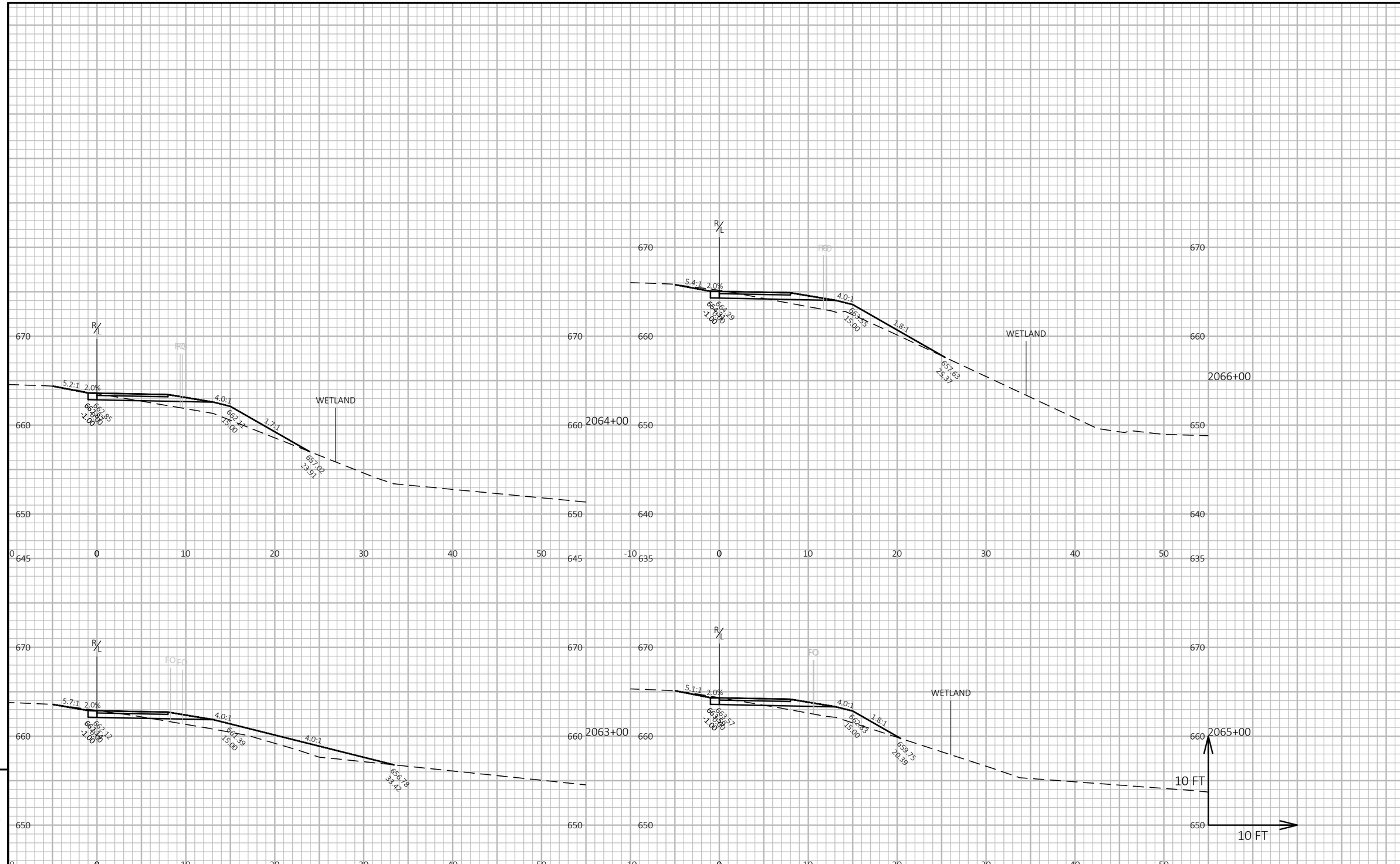

PROJECT NO: 7224-00-73	HWY: NON-HIGHWAY	COUNTY: BUFFALO	CROSS SECTIONS: CROSS SECTION	SHEET 68	E

FILE NAME : \\SP-PZ1.SEHINC.COM\PZPROJECTS1\AE\B\BUFFC\163204\5-FINAL-DSGN\51-DRAWINGS\40-TRANSHWY\C3D\72240002\SHEETSPLAN\SEC 09 B CROSS SECTIONS\090201-XS.DWG
LAYOUT NAME - 133
PLOT DATE : 8/9/2024 12:18 PM
PLOT BY : MATTHEW WINTER
PLOT NAME :
PLOT SCALE : 1 IN:10 FT HORZ. / 1 IN:10 FT VERT.
WISDOT/CADDS SHEET 49

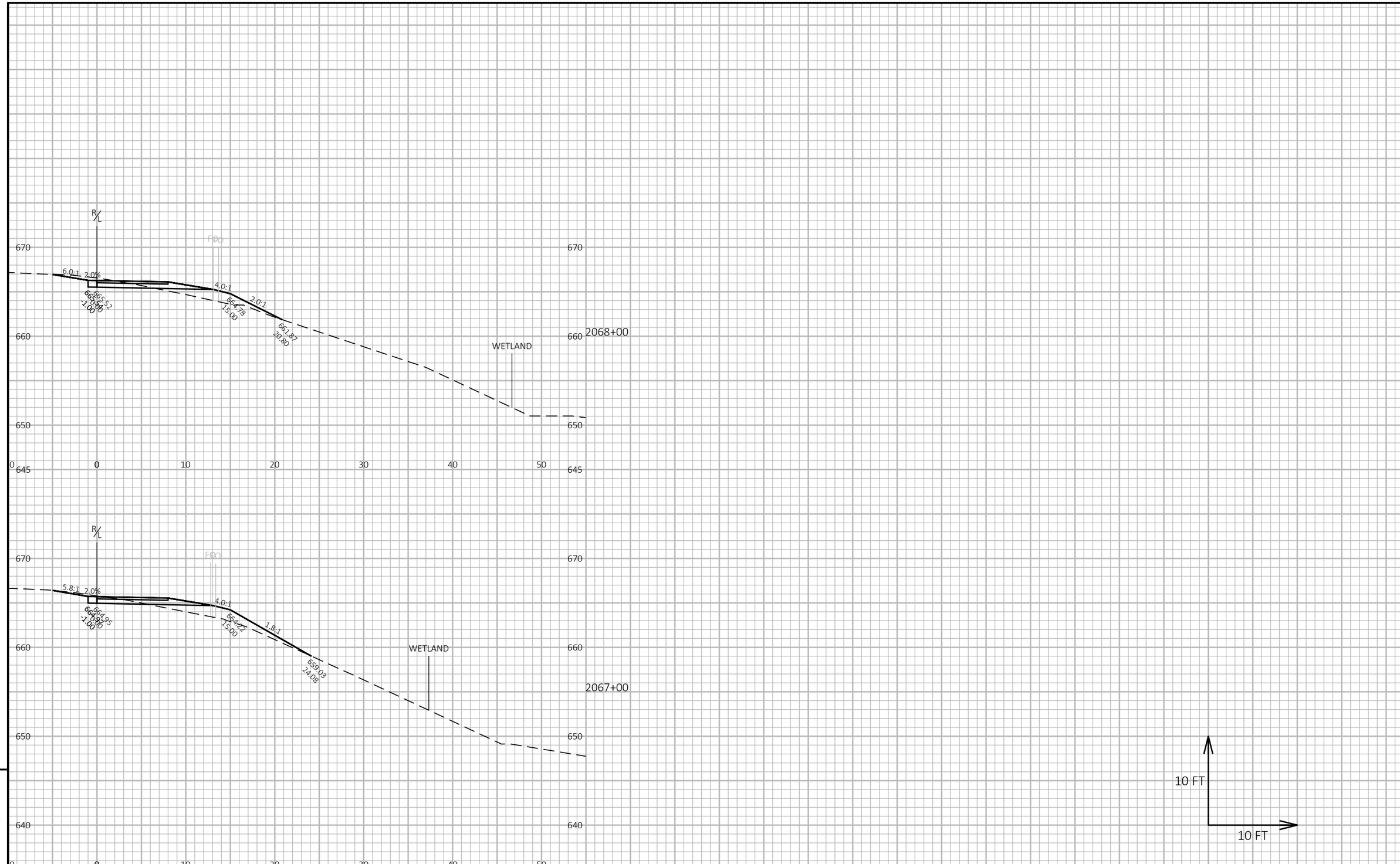

9

9

PROJECT NO: 7224-00-73	HWY: NON-HIGHWAY	COUNTY: BUFFALO	CROSS SECTIONS: CROSS SECTION	SHEET 69	E

FILE NAME : \\SP-PZ1.SEHINC.COM\PZPROJECTS1\AE\B\BUFFC\163204\5-FINAL-DSGN\51-DRAWINGS\40-TRANSHWY\C3D\72240002\SHEETSPLAN\SEC 09 B CROSS SECTIONS\090201-XS.DWG
LAYOUT NAME - 134
PLOT DATE : 8/9/2024 12:18 PM
PLOT BY : MATTHEW WINTER
PLOT NAME :
PLOT SCALE : 1 IN:10 FT HORZ. / 1 IN:10 FT VERT.

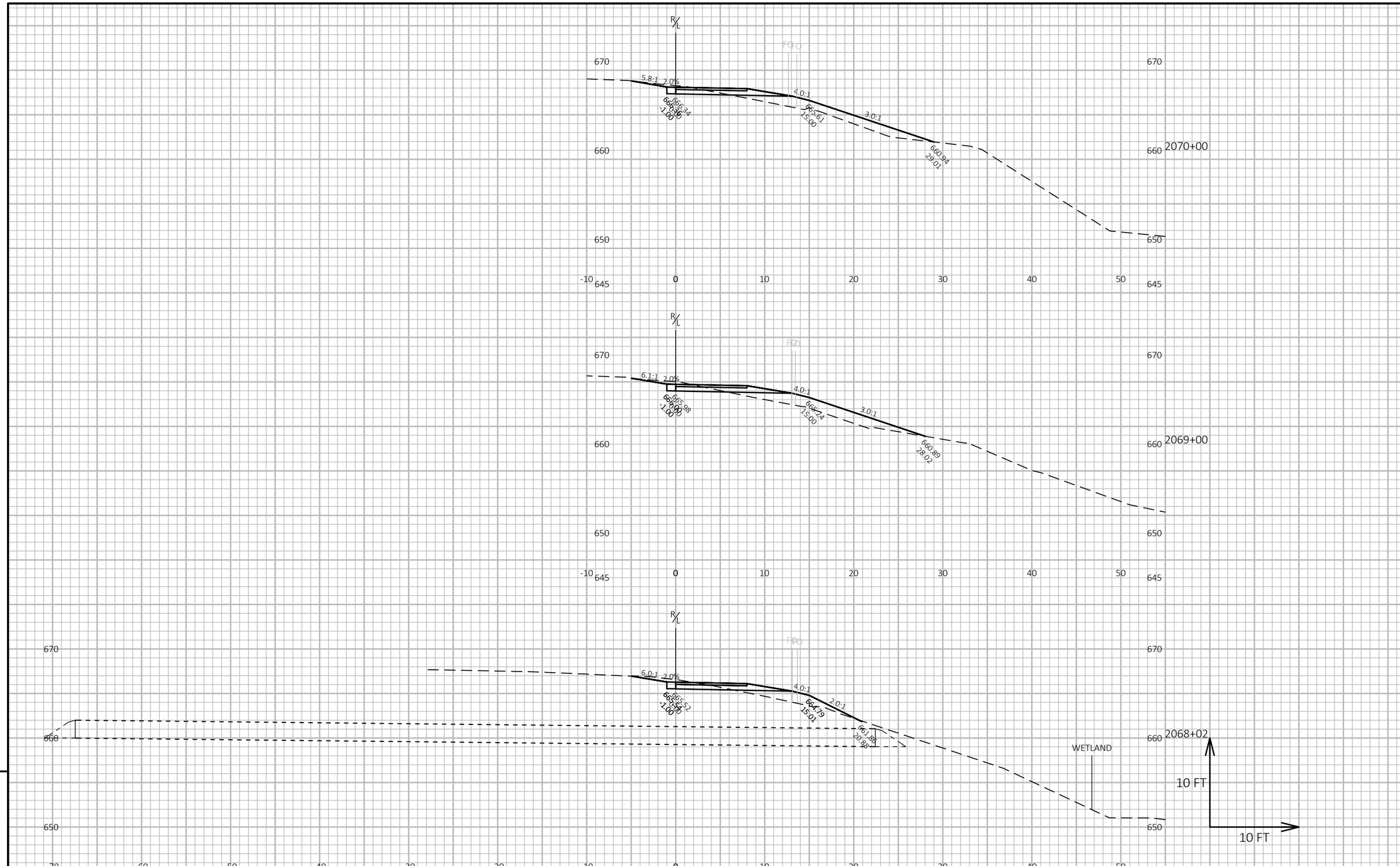

9

9

PROJECT NO: 7224-00-73	HWY: NON-HIGHWAY	COUNTY: BUFFALO	CROSS SECTIONS: CROSS SECTION	SHEET 70	E

FILE NAME : \\SP-PZ1.SEHINC.COM\PZPROJECTS1\AE\B\BUFFC\163204\5-FINAL-DSGN\51-DRAWINGS\40-TRANSHWY\C3D\72240002\SHEETSPLAN\SEC 09 B CROSS SECTIONS\090201-XS.DWG
LAYOUT NAME - 135
PLOT DATE : 8/9/2024 12:18 PM
PLOT BY : MATTHEW WINTER
PLOT NAME :
PLOT SCALE : 1 IN:10 FT HORZ. / 1 IN:10 FT VERT.
WISDOT/CADDS SHEET 49

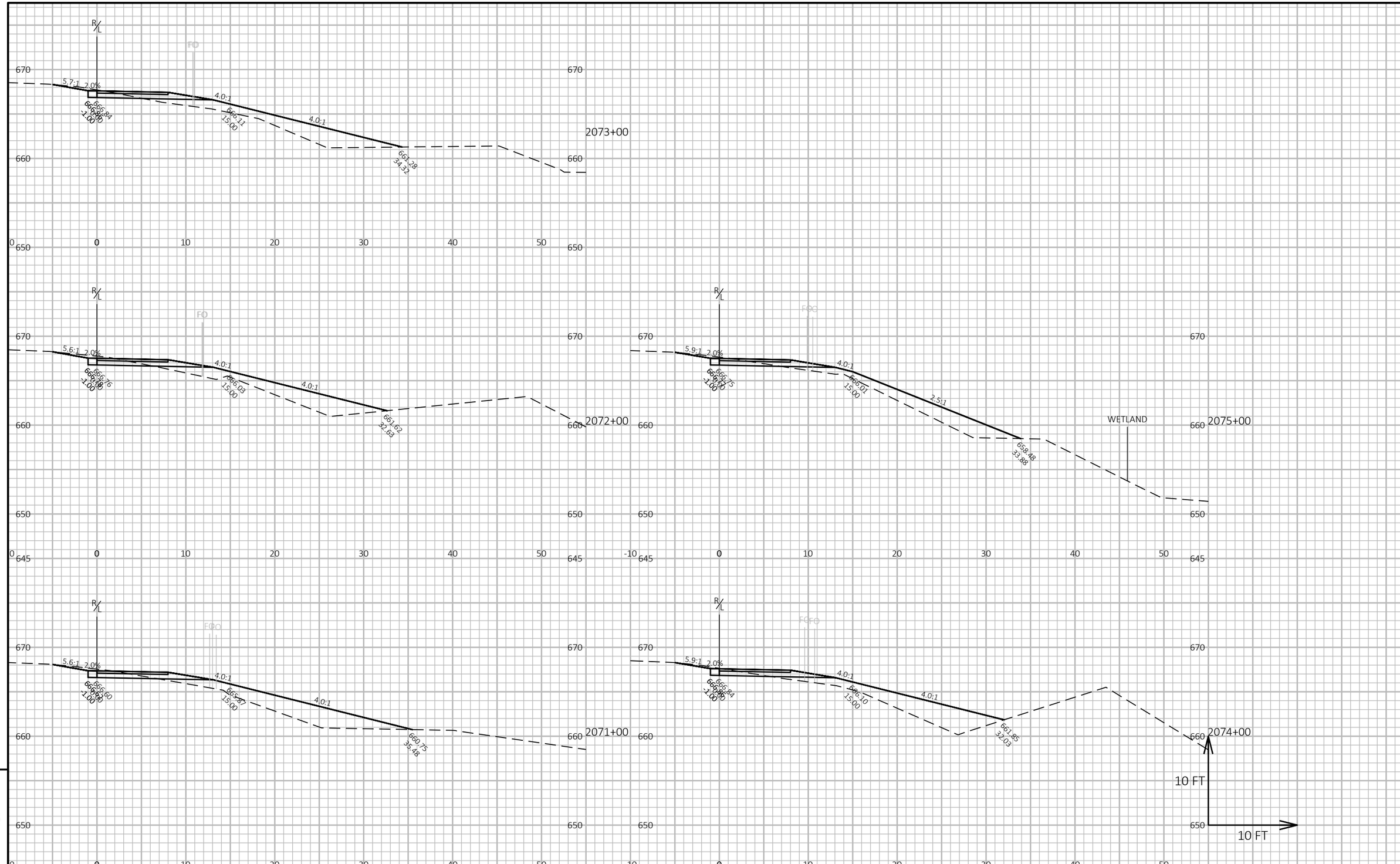

PROJECT NO: 7224-00-73	HWY: NON-HIGHWAY	COUNTY: BUFFALO	CROSS SECTIONS: CROSS SECTION	SHEET 71	E

FILE NAME : \\SP-PZ1.SEHINC.COM\PZPROJECTS1\AE\B\BUFFC\163204\5-FINAL-DSGN\51-DRAWINGS\40-TRANSHWY\C3D\72240002\SHEETSPLAN\SEC 09 B CROSS SECTIONS\090201-XS.DWG
LAYOUT NAME - 136
PLOT DATE : 8/9/2024 12:18 PM
PLOT BY : MATTHEW WINTER
PLOT NAME :
PLOT SCALE : 1 IN:10 FT HORZ. / 1 IN:10 FT VERT.
WISDOT/CADDS SHEET 49

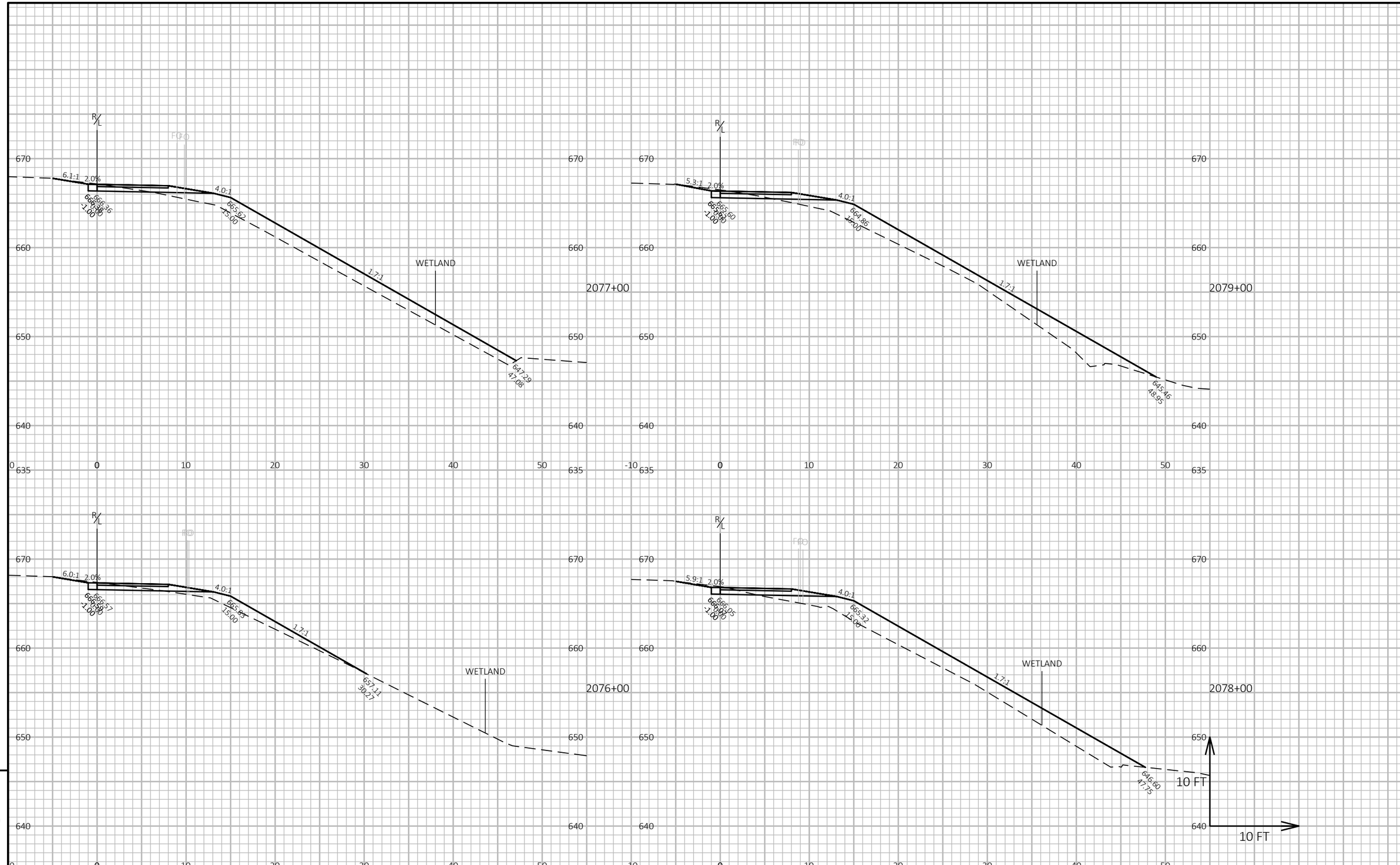

PROJECT NO: 7224-00-73	HWY: NON-HIGHWAY	COUNTY: BUFFALO	CROSS SECTIONS: CROSS SECTION	SHEET 72	E

FILE NAME : \\SP-PZ1.SEHINC.COM\PZPROJECTS1\AE\B\BUFFC\163204\5-FINAL-DSGN\51-DRAWINGS\40-TRANSHWY\C3D\72240002\SHEETSPLAN\SEC 09 B CROSS SECTIONS\090201-XS.DWG
LAYOUT NAME - 137
PLOT DATE : 8/9/2024 12:18 PM
PLOT BY : MATTHEW WINTER
PLOT NAME :
PLOT SCALE : 1 IN:10 FT HORZ. / 1 IN:10 FT VERT.

WISDOT/CADDS SHEET 49

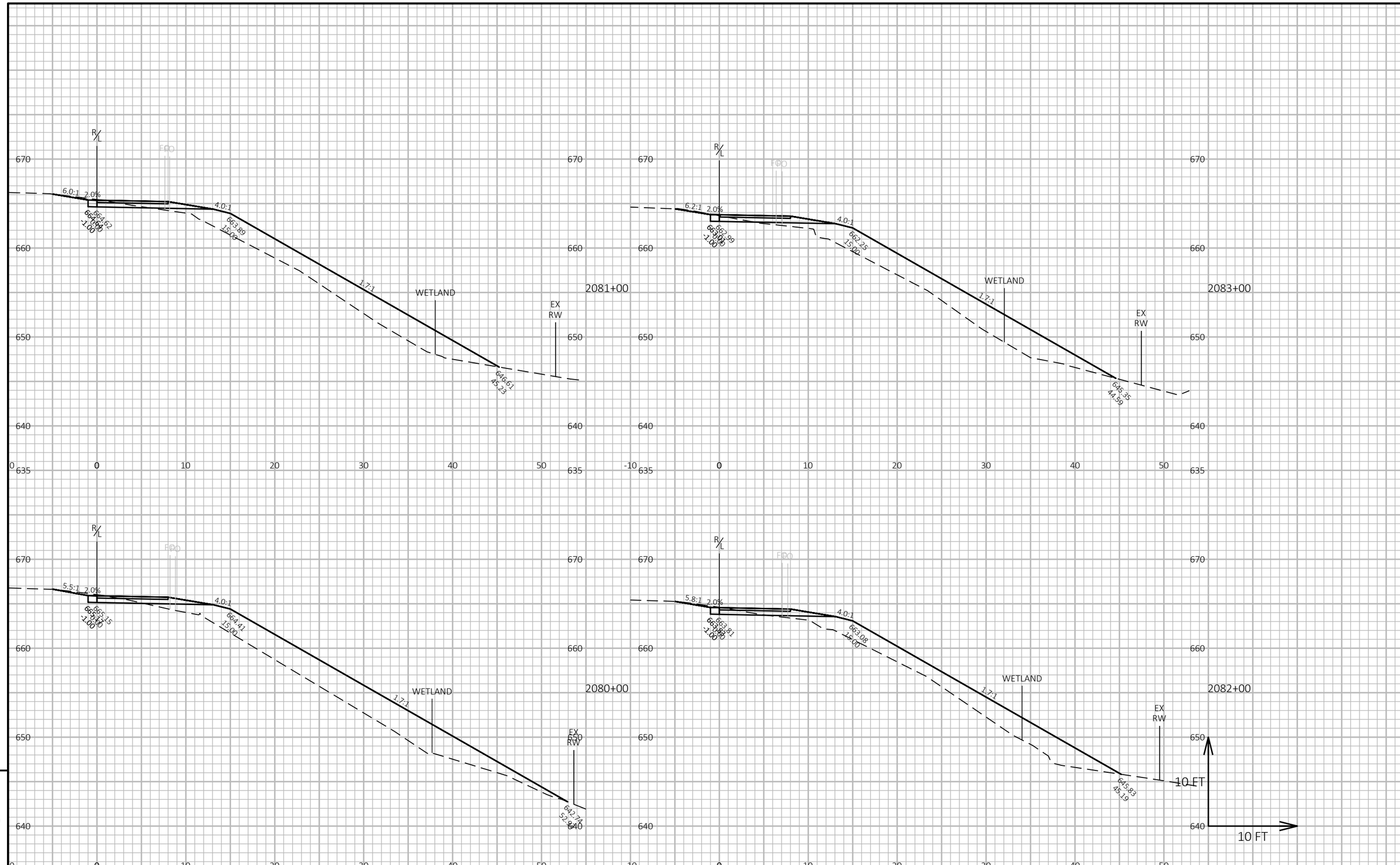

PROJECT NO: 7224-00-73	HWY: NON-HIGHWAY	COUNTY: BUFFALO	CROSS SECTIONS: CROSS SECTION	SHEET 73	E

FILE NAME : \\SP-PZ1.SEHINC.COM\PZPROJECTS1\AE\B\BUFFC\163204\5-FINAL-DSGN\51-DRAWINGS\40-TRANSHWY\C3D\72240002\SHEETSPLAN\SEC 09 B CROSS SECTIONS\090201-XS.DWG
LAYOUT NAME - 138
PLOT DATE : 8/9/2024 12:18 PM
PLOT BY : MATTHEW WINTER
PLOT NAME :
PLOT SCALE : 1 IN:10 FT HORZ. / 1 IN:10 FT VERT.

WISDOT/CADDS SHEET 49

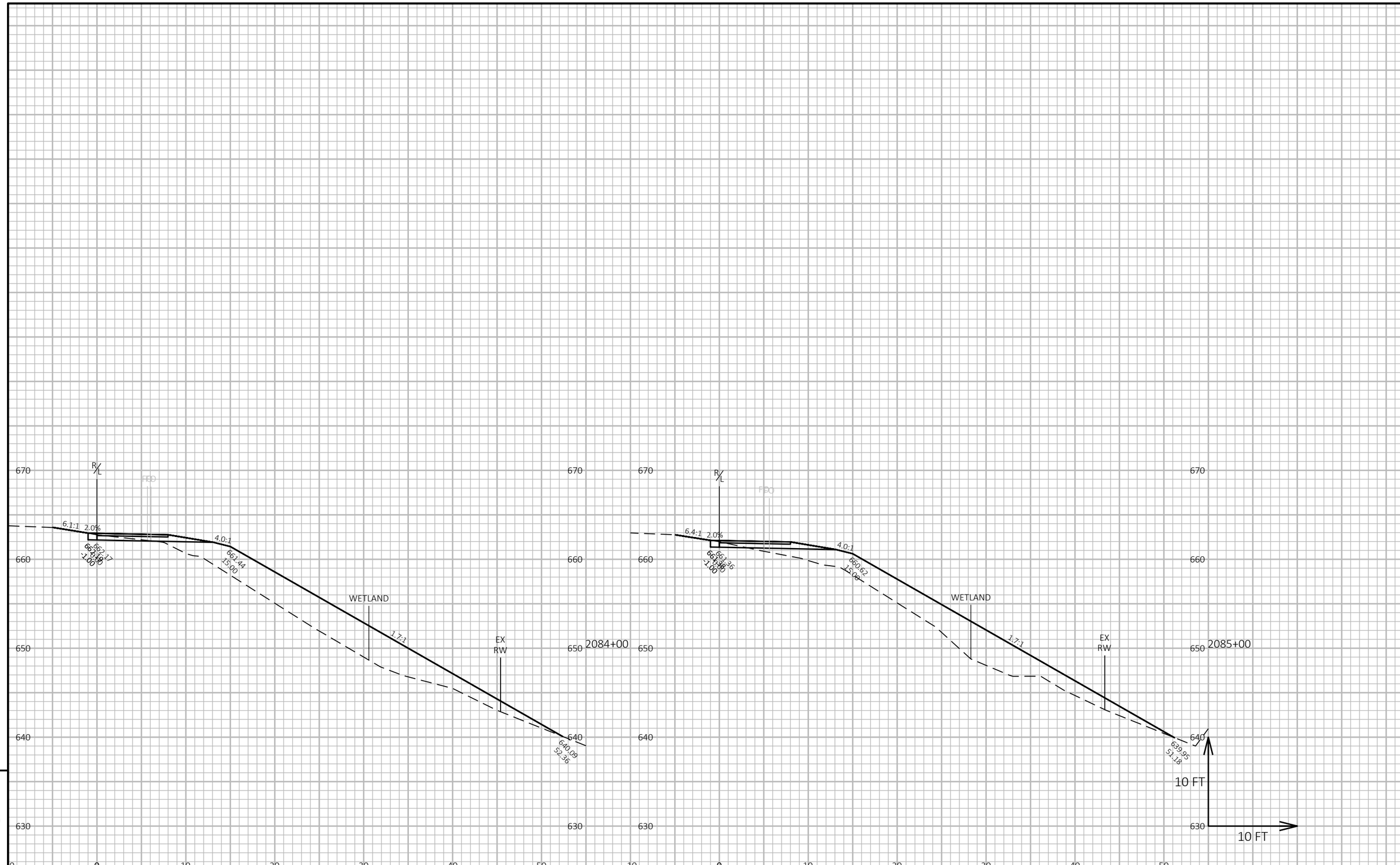

9

9

PROJECT NO: 7224-00-73	HWY: NON-HIGHWAY	COUNTY: BUFFALO	CROSS SECTIONS: CROSS SECTION	SHEET 74	E

FILE NAME : \\SP-PZ1.SEHINC.COM\PZPROJECTS1\AE\B\BUFFC\163204\5-FINAL-DSGN\51-DRAWINGS\40-TRANSHWY\C3D\72240002\SHEETSPLAN\SEC 09 B CROSS SECTIONS\090201-XS.DWG
LAYOUT NAME - 139
PLOT DATE : 8/9/2024 12:18 PM
PLOT BY : MATTHEW WINTER
PLOT NAME :
PLOT SCALE : 1 IN:10 FT HORZ. / 1 IN:10 FT VERT.

WISDOT/CADDS SHEET 49

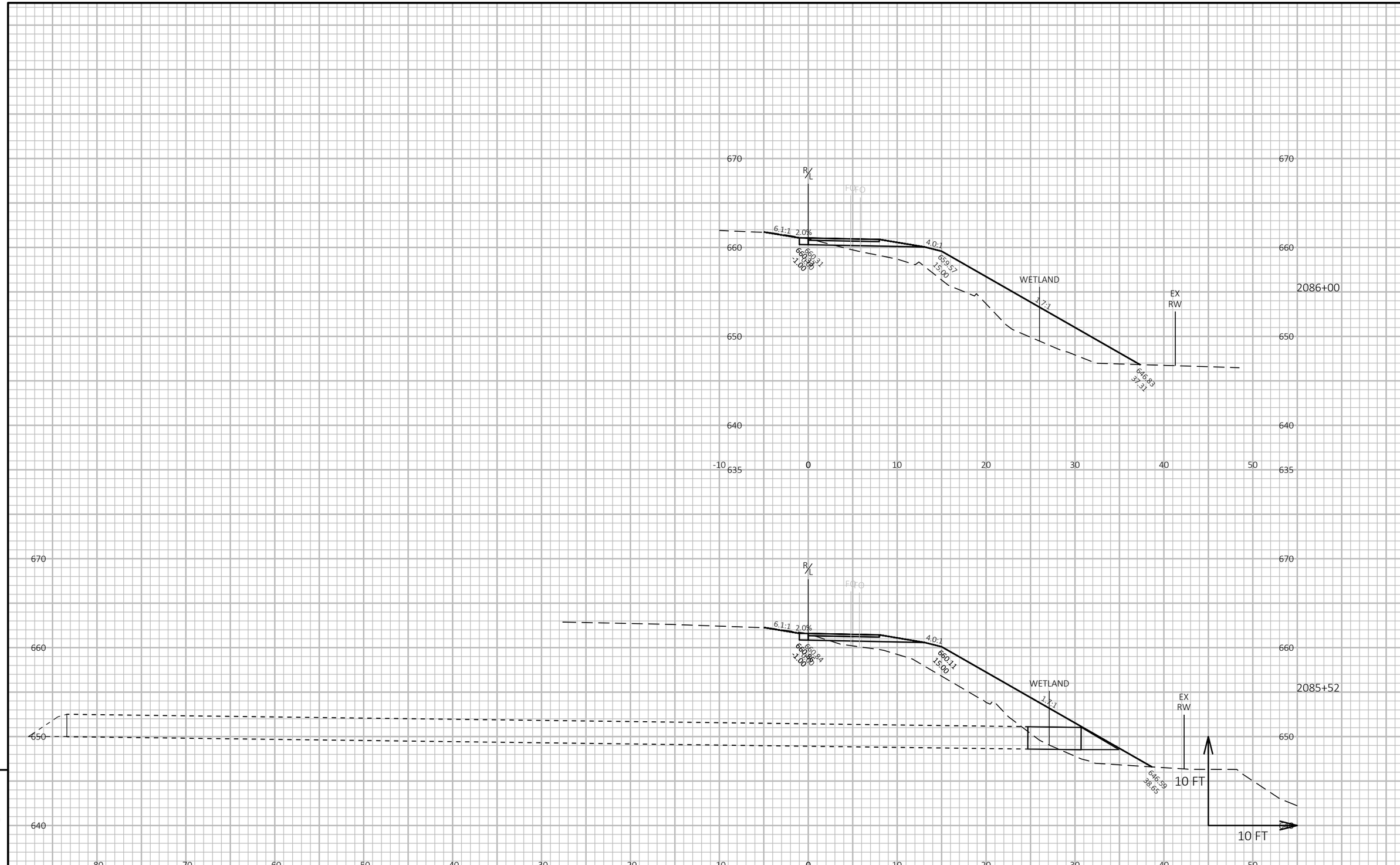

9

9

PROJECT NO: 7224-00-73	HWY: NON-HIGHWAY	COUNTY: BUFFALO	CROSS SECTIONS: CROSS SECTION	SHEET 75	E

FILE NAME : \\SP-PZ1.SEHINC.COM\PZPROJECTS1\AE\B\BUFFC\163204\5-FINAL-DSGN\51-DRAWINGS\40-TRANSHWY\C3D\72240002\SHEETSPLAN\SEC 09 B CROSS SECTIONS\090201-XS.DWG
LAYOUT NAME - 140
PLOT DATE : 8/9/2024 12:18 PM
PLOT BY : MATTHEW WINTER
PLOT NAME :
PLOT SCALE : 1 IN:10 FT HORZ. / 1 IN:10 FT VERT.
WISDOT/CADDS SHEET 49

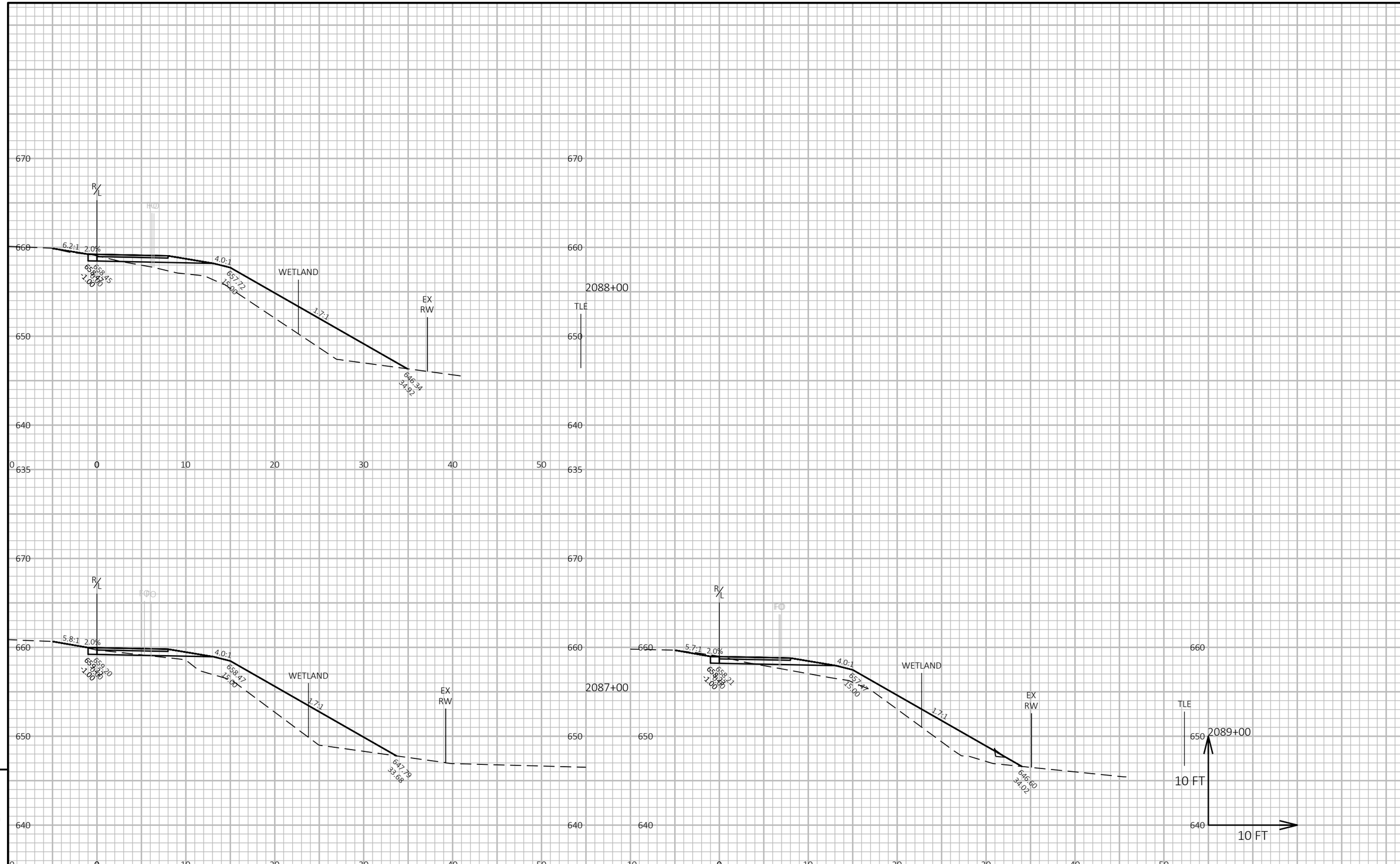

PROJECT NO: 7224-00-73	HWY: NON-HIGHWAY	COUNTY: BUFFALO	CROSS SECTIONS: CROSS SECTION	SHEET 76	E

FILE NAME : \\SP-PZ1.SEHINC.COM\PZPROJECTS1\AE\B\BUFFC\163204\5-FINAL-DSGN\51-DRAWINGS\40-TRANSHWY\C3D\72240002\SHEETSPLAN\SEC 09 B CROSS SECTIONS\090201-XS.DWG
LAYOUT NAME - 141
PLOT DATE : 8/9/2024 12:18 PM
PLOT BY : MATTHEW WINTER
PLOT NAME :
PLOT SCALE : 1 IN:10 FT HORZ. / 1 IN:10 FT VERT.
WISDOT/CADDS SHEET 49

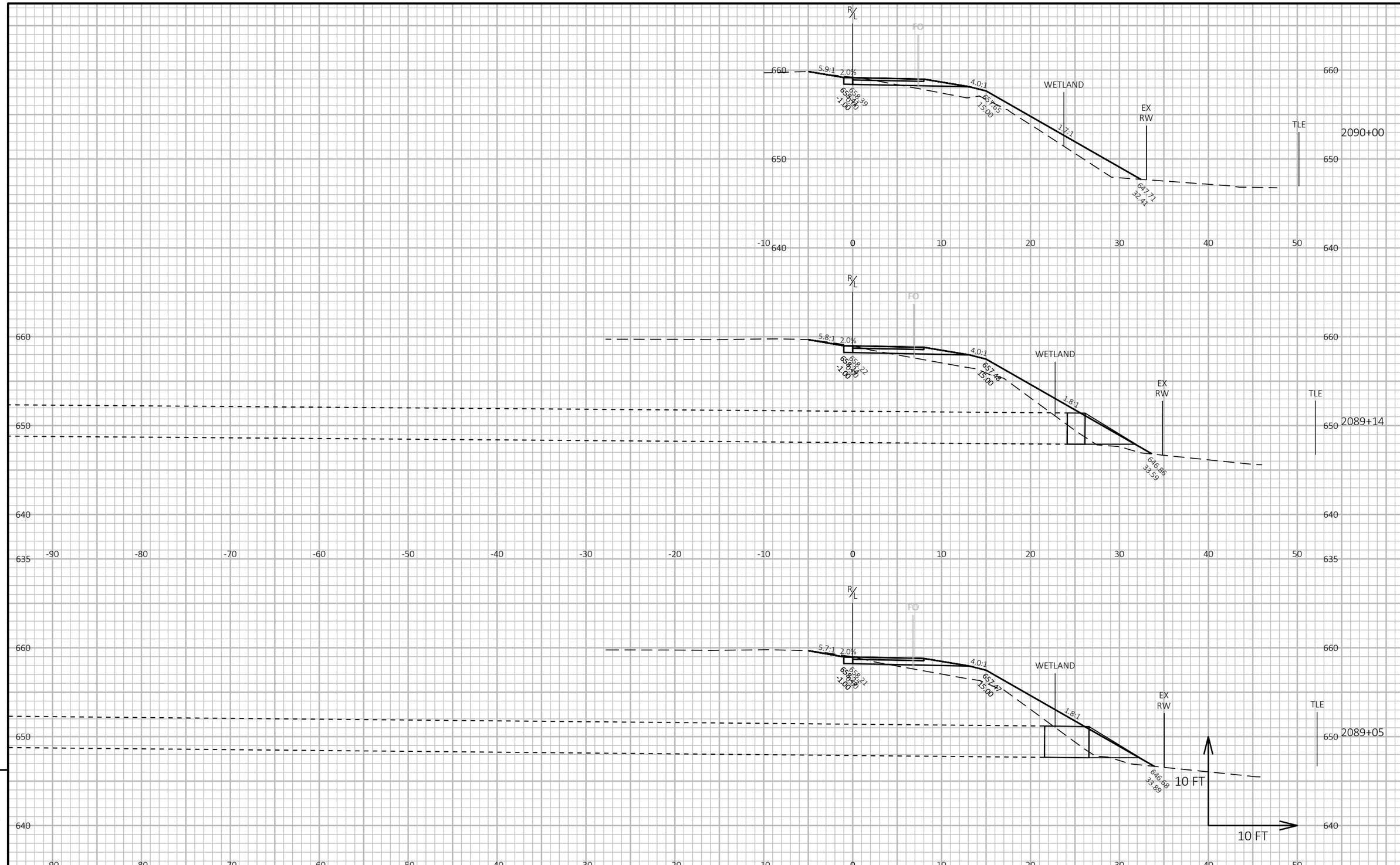

9

9

PROJECT NO: 7224-00-73	HWY: NON-HIGHWAY	COUNTY: BUFFALO	CROSS SECTIONS: CROSS SECTION	SHEET 77	E

FILE NAME : \\SP-PZ1.SEHINC.COM\PZPROJECTS1\AE\B\BUFFC\163204\5-FINAL-DSGN\51-DRAWINGS\40-TRANSHWY\C3D\72240002\SHEETSPLAN\SEC 09 B CROSS SECTIONS\090201-XS.DWG
LAYOUT NAME - 142
PLOT DATE : 8/9/2024 12:18 PM
PLOT BY : MATTHEW WINTER
PLOT NAME :
PLOT SCALE : 1 IN:10 FT HORZ. / 1 IN:10 FT VERT.

WISDOT/CADDS SHEET 49

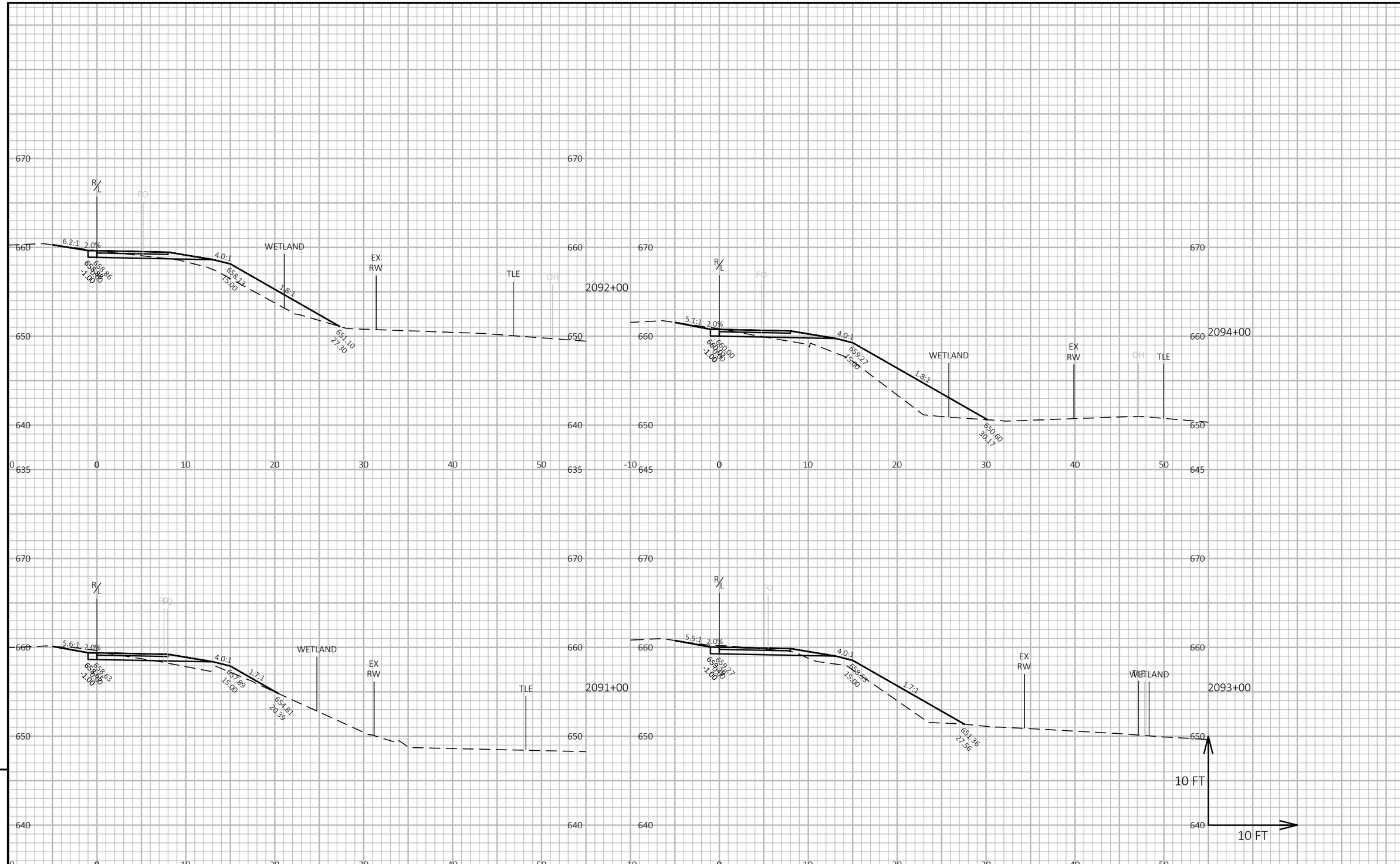

9

9

PROJECT NO: 7224-00-73	HWY: NON-HIGHWAY	COUNTY: BUFFALO	CROSS SECTIONS: CROSS SECTION	SHEET 78	E

FILE NAME : \\SP-PZ1.SEHINC.COM\PZPROJECTS1\AE\B\BUFFC\163204\5-FINAL-DSGN\51-DRAWINGS\40-TRANSHWY\C3D\72240002\SHEETSPLAN\SEC 09 B CROSS SECTIONS\090201-XS.DWG
LAYOUT NAME - 143
PLOT DATE : 8/9/2024 12:18 PM
PLOT BY : MATTHEW WINTER
PLOT NAME :
PLOT SCALE : 1 IN:10 FT HORZ. / 1 IN:10 FT VERT.

WISDOT/CADDS SHEET 49

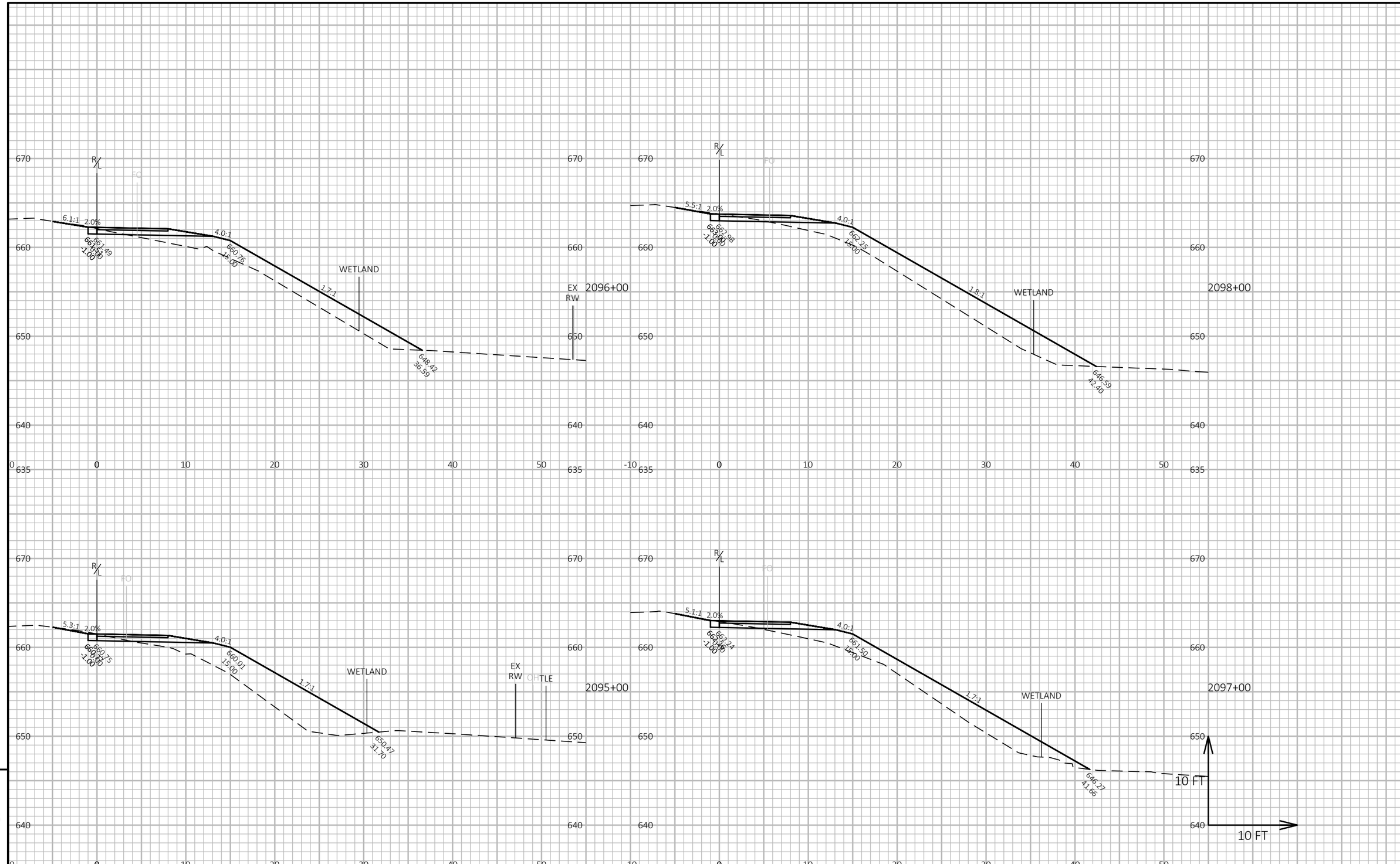

PROJECT NO: 7224-00-73	HWY: NON-HIGHWAY	COUNTY: BUFFALO	CROSS SECTIONS: CROSS SECTION	SHEET 79	E

FILE NAME : \\SP-PZ1.SEHINC.COM\PZPROJECTS1\AE\B\BUFFC\163204\5-FINAL-DSGN\51-DRAWINGS\40-TRANSHWY\C3D\72240002\SHEETSPLAN\SEC 09 B CROSS SECTIONS\090201-XS.DWG
LAYOUT NAME - 144
PLOT DATE : 8/9/2024 12:18 PM
PLOT BY : MATTHEW WINTER
PLOT NAME :
PLOT SCALE : 1 IN:10 FT HORZ. / 1 IN:10 FT VERT.
WISDOT/CADDS SHEET 49

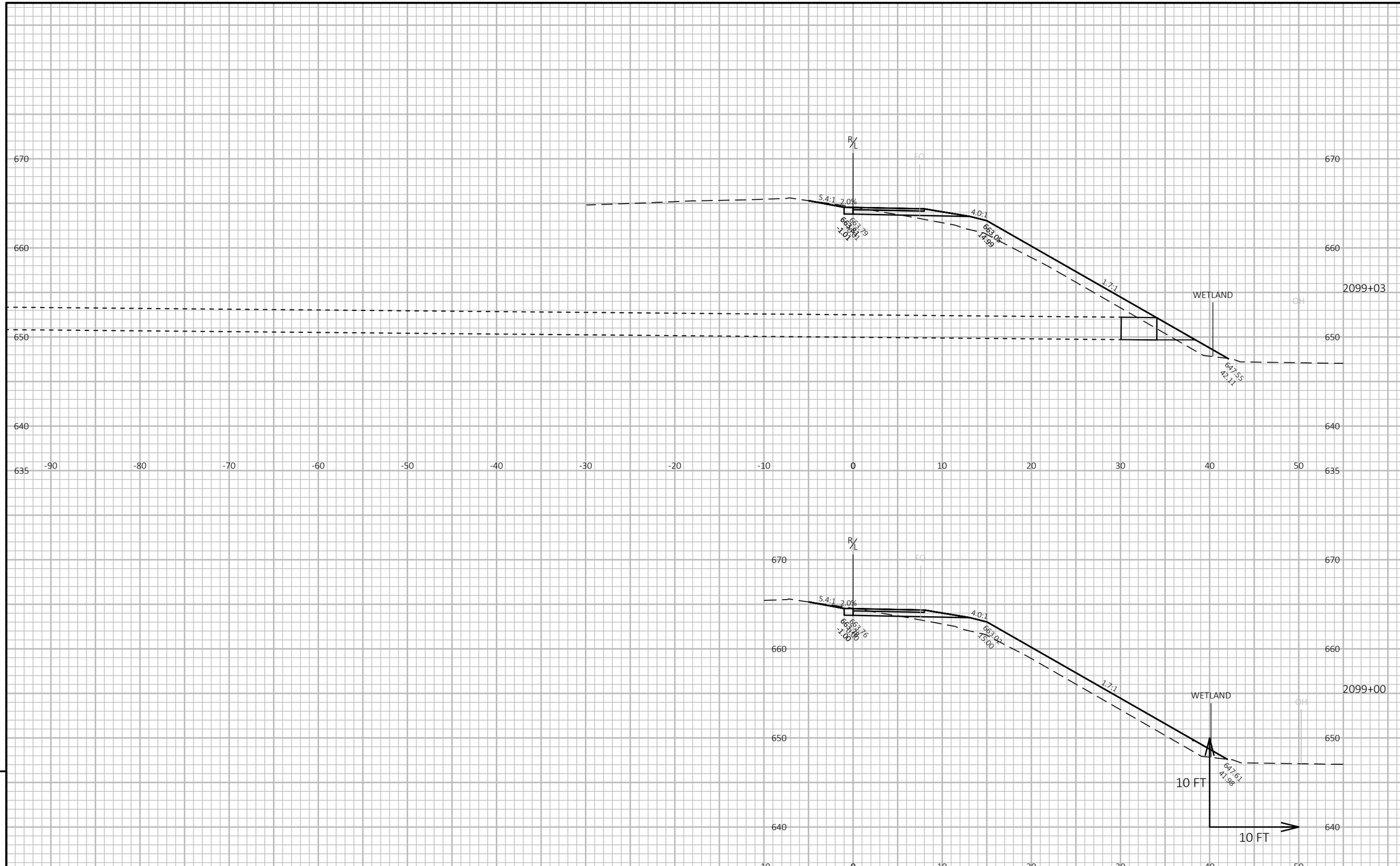

9

9

PROJECT NO: 7224-00-73	HWY: NON-HIGHWAY	COUNTY: BUFFALO	CROSS SECTIONS: CROSS SECTION	SHEET 80	E

FILE NAME : \\SP-PZ1.SEHINC.COM\PZPROJECTS1\AE\B\BUFFC\163204\5-FINAL-DSGN\51-DRAWINGS\40-TRANSHWY\C3D\72240002\SHEETSPLAN\SEC 09 B CROSS SECTIONS\090201-XS.DWG
LAYOUT NAME - 145
PLOT DATE : 8/9/2024 12:19 PM
PLOT BY : MATTHEW WINTER
PLOT NAME :
PLOT SCALE : 1 IN:10 FT HORZ. / 1 IN:10 FT VERT.
WISDOT/CADDS SHEET 49

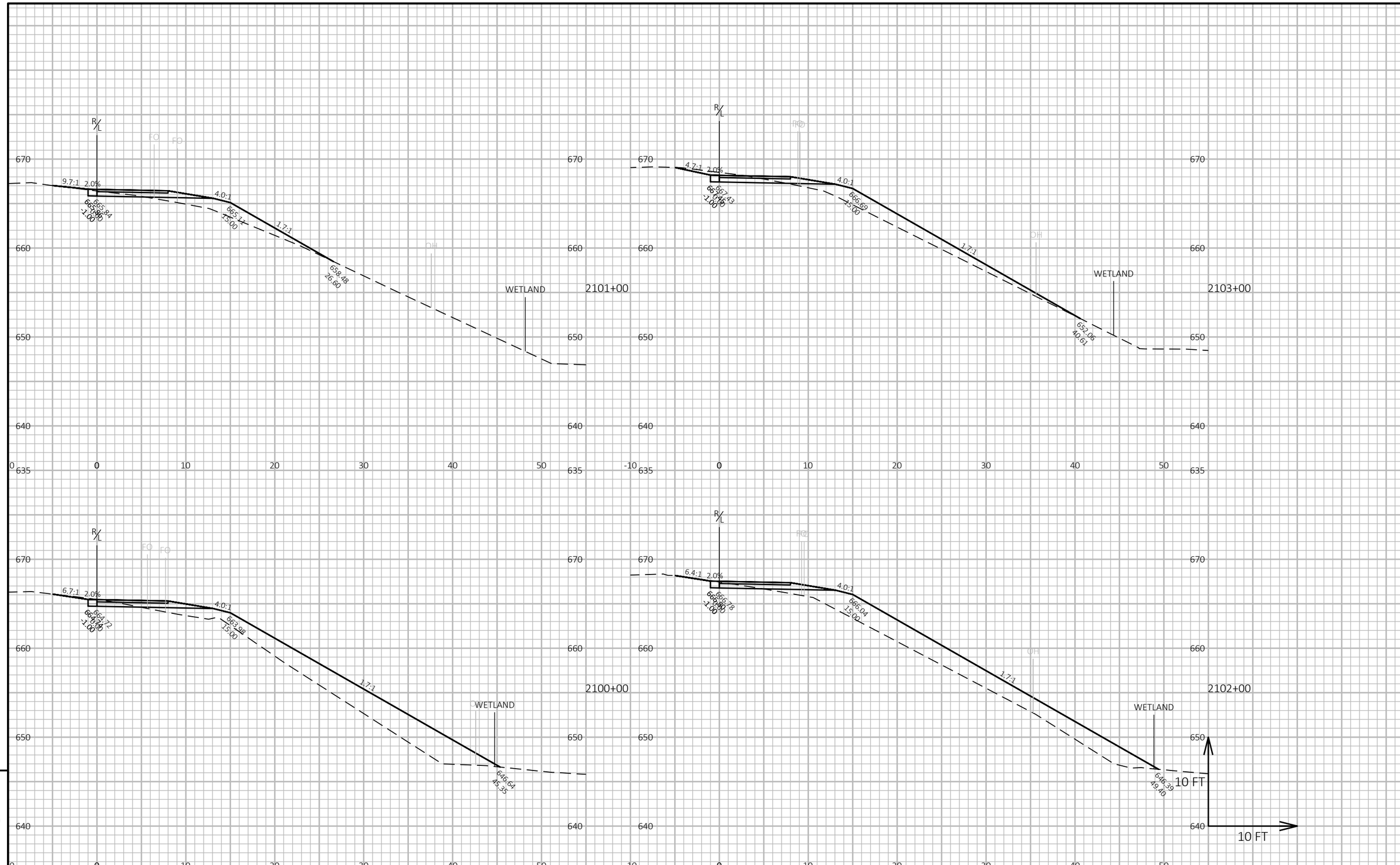

9

9

PROJECT NO: 7224-00-73	HWY: NON-HIGHWAY	COUNTY: BUFFALO	CROSS SECTIONS: CROSS SECTION	SHEET 81	E

FILE NAME : \\SP-PZ1.SEHINC.COM\PZPROJECTS1\AE\B\BUFFC\163204\5-FINAL-DSGN\51-DRAWINGS\40-TRANSHWY\C3D\72240002\SHEETSPLAN\SEC 09 B CROSS SECTIONS\090201-XS.DWG
LAYOUT NAME - 146
PLOT DATE : 8/9/2024 12:19 PM
PLOT BY : MATTHEW WINTER
PLOT NAME :
PLOT SCALE : 1 IN:10 FT HORZ. / 1 IN:10 FT VERT.

WISDOT/CADDS SHEET 49

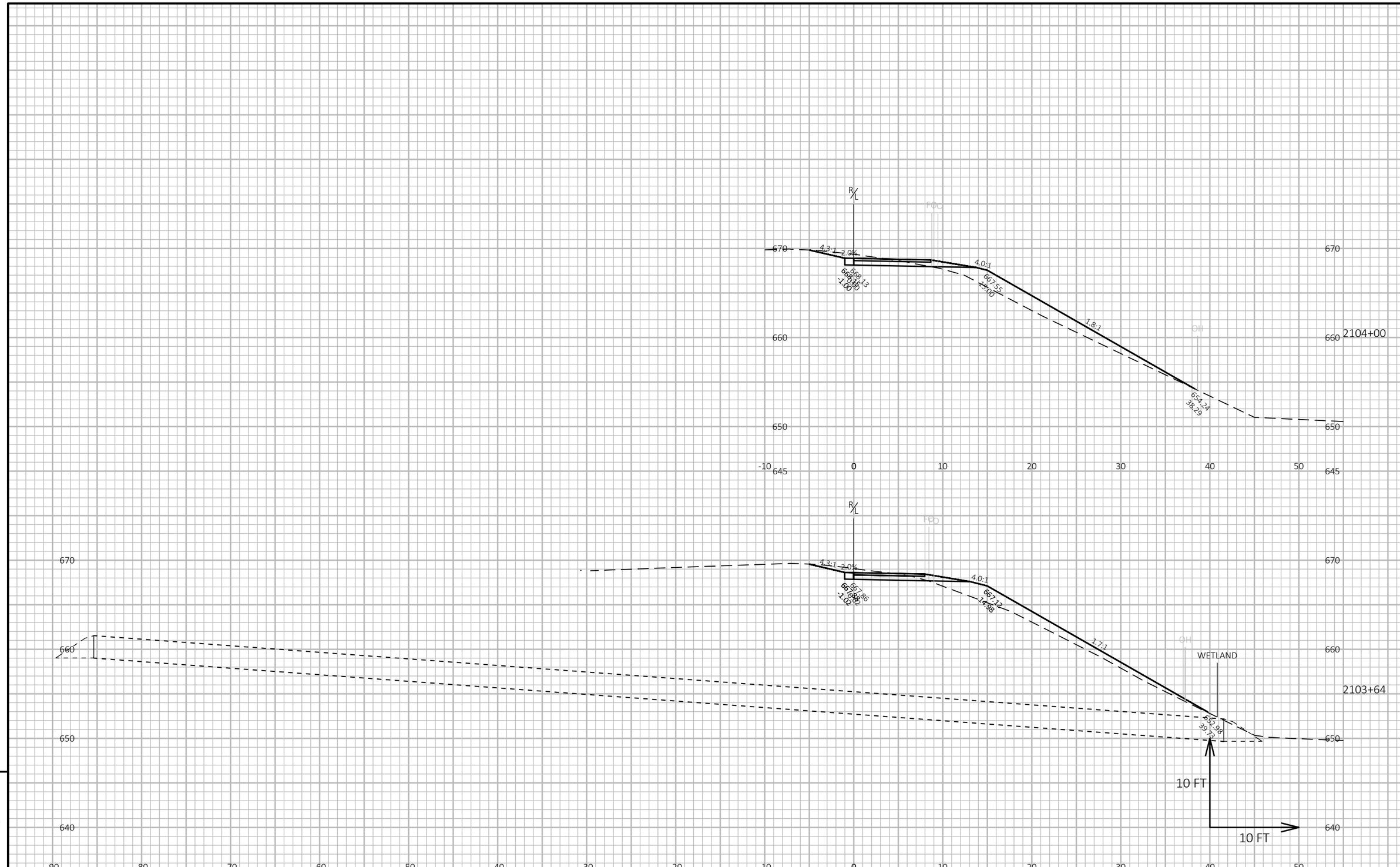

9

9

PROJECT NO: 7224-00-73	HWY: NON-HIGHWAY	COUNTY: BUFFALO	CROSS SECTIONS: CROSS SECTION	SHEET 82	E

FILE NAME : \\SP-PZ1.SEHINC.COM\PZPROJECTS1\AE\B\BUFFC\163204\5-FINAL-DSGN\51-DRAWINGS\40-TRANSHWY\C3D\72240002\SHEETSPLAN\SEC 09 B CROSS SECTIONS\090201-XS.DWG
LAYOUT NAME - 147
PLOT DATE : 8/9/2024 12:19 PM
PLOT BY : MATTHEW WINTER
PLOT NAME :
PLOT SCALE : 1 IN:10 FT HORZ. / 1 IN:10 FT VERT.
WISDOT/CADDS SHEET 49

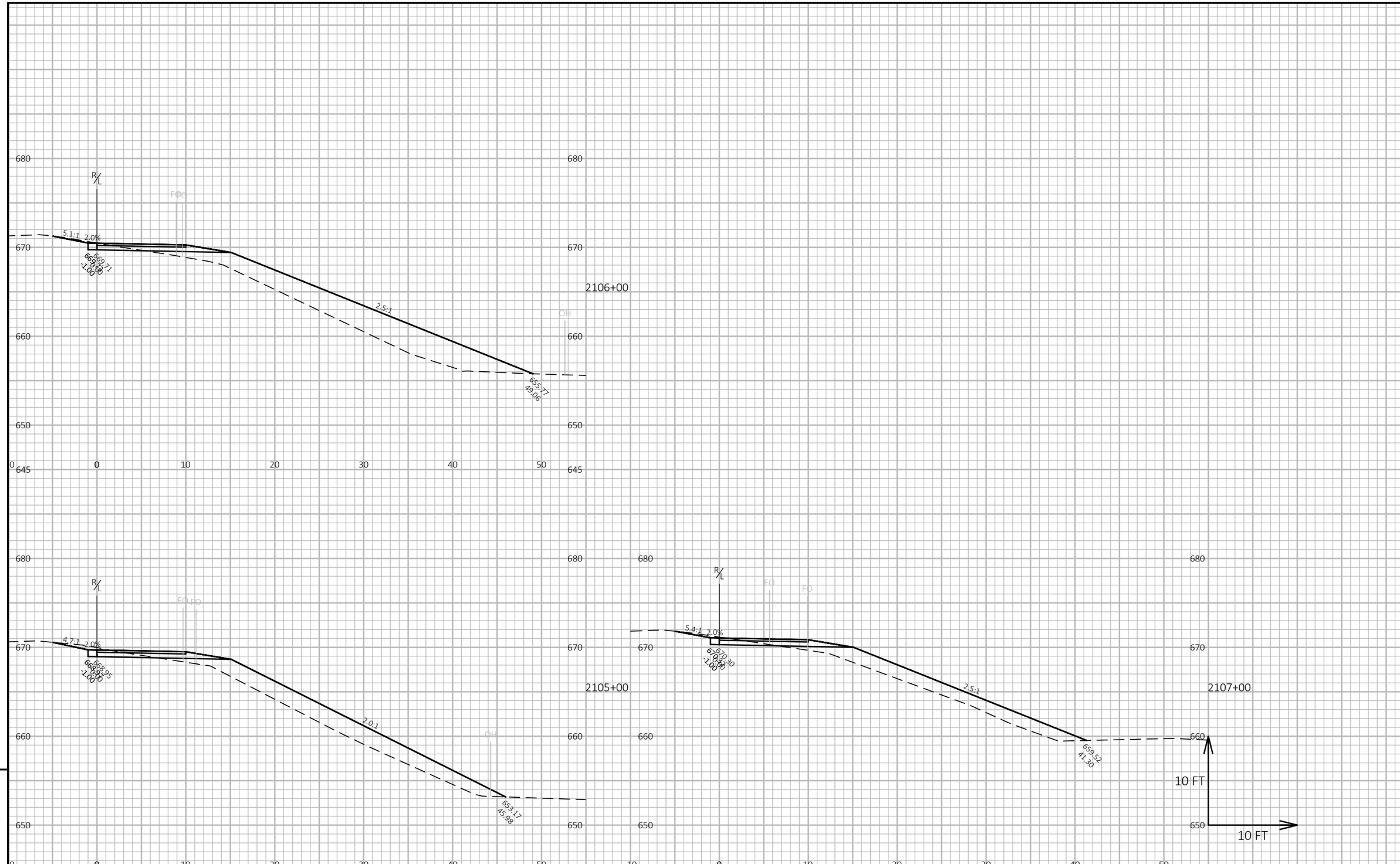

PROJECT NO: 7224-00-73	HWY: NON-HIGHWAY	COUNTY: BUFFALO	CROSS SECTIONS: CROSS SECTION	SHEET 83	E

FILE NAME : \\SP-PZ1.SEHINC.COM\PZPROJECTS1\AE\B\BUFFC\163204\5-FINAL-DSGN\51-DRAWINGS\40-TRANSHWY\C3D\72240002\SHEETSPLAN\SEC 09 B CROSS SECTIONS\090201-XS.DWG
LAYOUT NAME - 148
PLOT DATE : 8/9/2024 12:19 PM
PLOT BY : MATTHEW WINTER
PLOT NAME :
PLOT SCALE : 1 IN:10 FT HORZ. / 1 IN:10 FT VERT.
WISDOT/CADDS SHEET 49

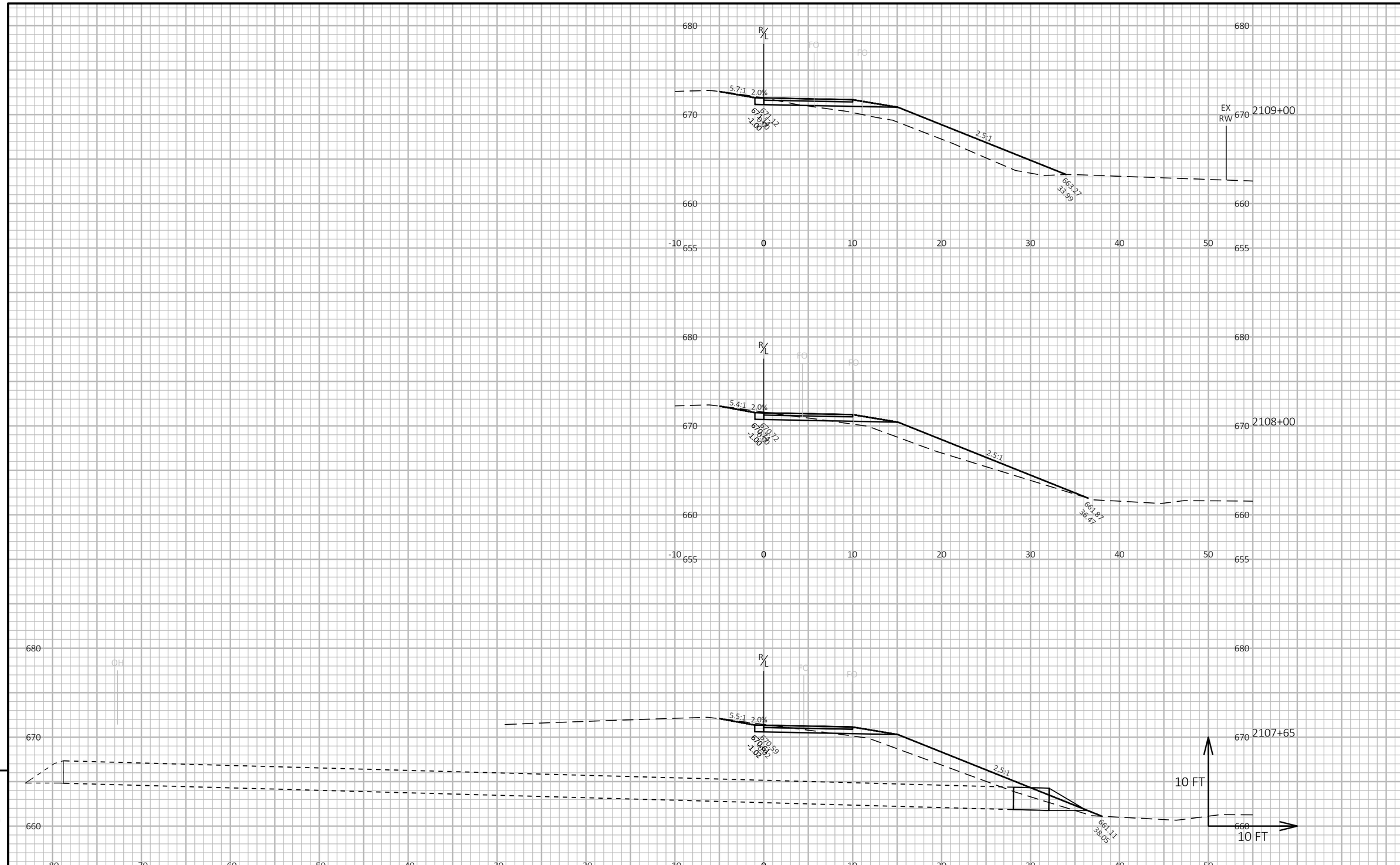

PROJECT NO: 7224-00-73	HWY: NON-HIGHWAY	COUNTY: BUFFALO	CROSS SECTIONS: CROSS SECTION	SHEET 84	E

FILE NAME : \\SP-PZ1.SEHINC.COM\PZPROJECTS1\AE\B\BUFFC\163204\5-FINAL-DSGN\51-DRAWINGS\40-TRANSHWY\C3D\72240002\SHEETSPLAN\SEC 09 B CROSS SECTIONS\090201-XS.DWG
LAYOUT NAME - 149
PLOT DATE : 8/9/2024 12:19 PM
PLOT BY : MATTHEW WINTER
PLOT NAME :
PLOT SCALE : 1 IN:10 FT HORZ. / 1 IN:10 FT VERT.
WISDOT/CADDS SHEET 49

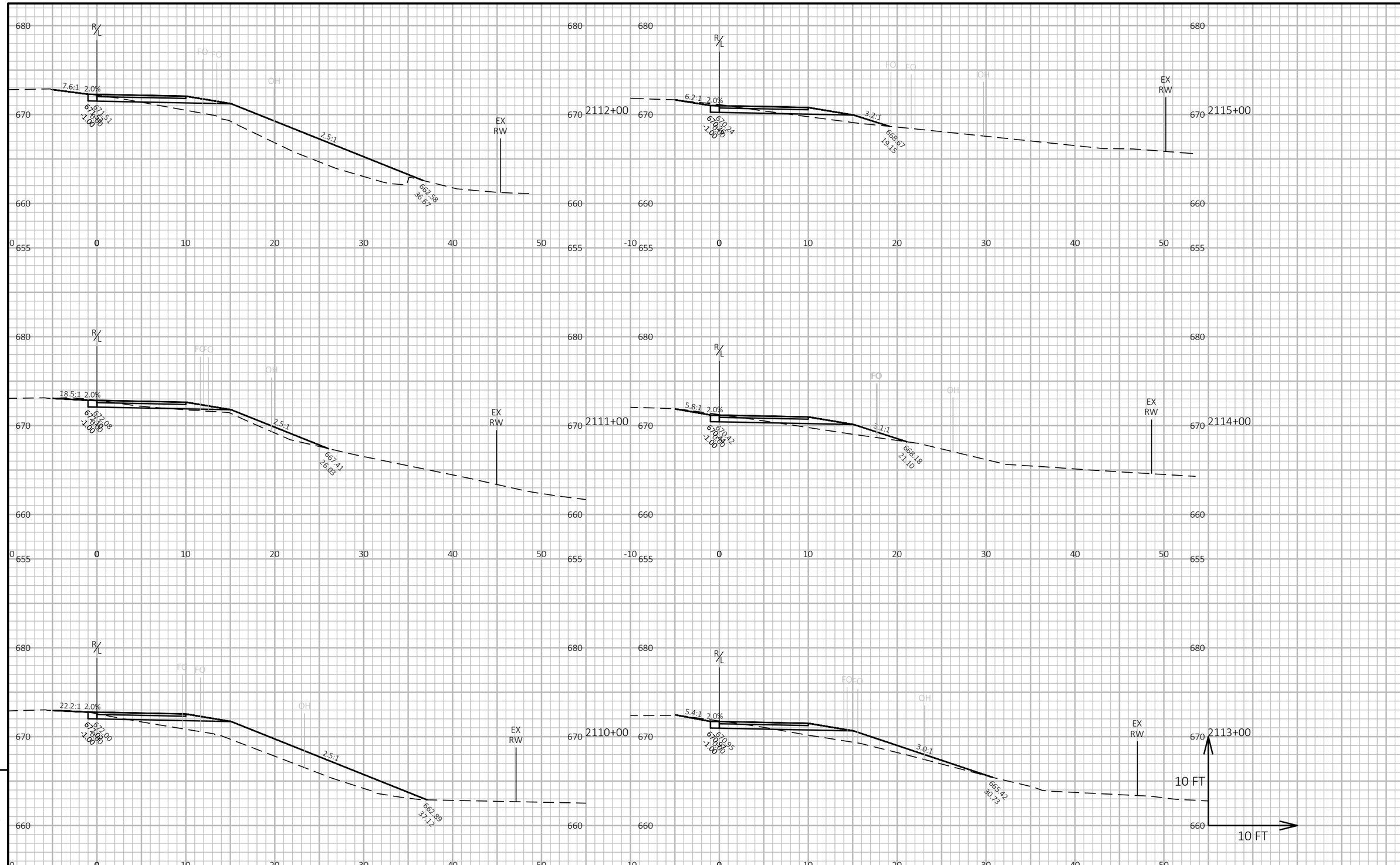

PROJECT NO: 7224-00-73	HWY: NON-HIGHWAY	COUNTY: BUFFALO	CROSS SECTIONS: CROSS SECTION	SHEET 85	E

FILE NAME : \\SP-PZ1.SEHINC.COM\PZPROJECTS1\AE\B\BUFFC\163204\5-FINAL-DSGN\51-DRAWINGS\40-TRANSHWY\C3D\72240002\SHEETSPLAN\SEC 09 B CROSS SECTIONS\090201-XS.DWG
LAYOUT NAME - 150
PLOT DATE : 8/9/2024 12:19 PM
PLOT BY : MATTHEW WINTER
PLOT NAME :
PLOT SCALE : 1 IN:10 FT HORZ. / 1 IN:10 FT VERT.
WISDOT/CADDS SHEET 49

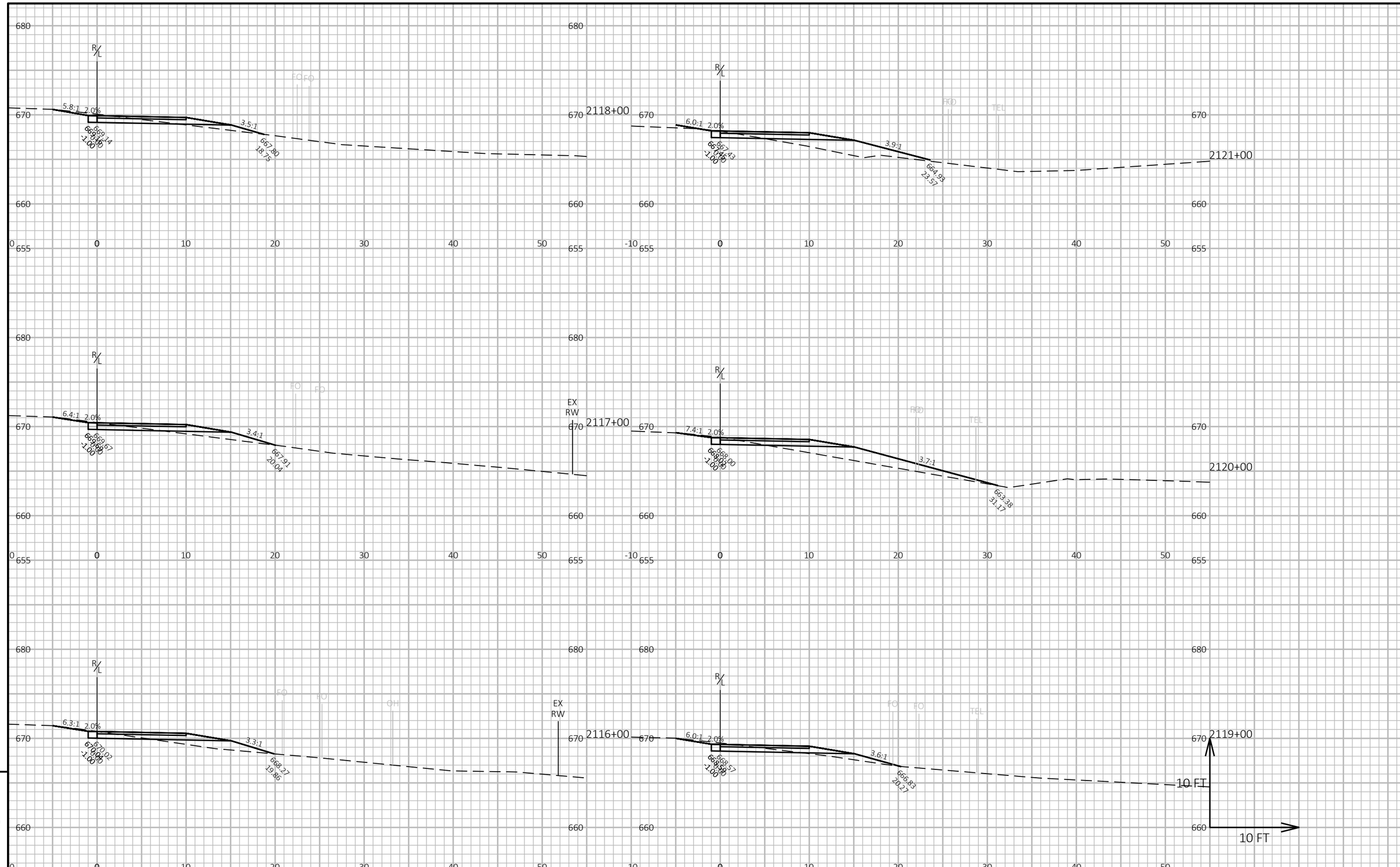

PROJECT NO: 7224-00-73	HWY: NON-HIGHWAY	COUNTY: BUFFALO	CROSS SECTIONS: CROSS SECTION	SHEET 86	E

FILE NAME : \\SP-PZ1.SEHINC.COM\PZPROJECTS1\AE\B\BUFFC\163204\5-FINAL-DSGN\51-DRAWINGS\40-TRANSHWY\C3D\72240002\SHEETSPLAN\SEC 09 B CROSS SECTIONS\090201-XS.DWG
LAYOUT NAME - 151
PLOT DATE : 8/9/2024 12:19 PM
PLOT BY : MATTHEW WINTER
PLOT NAME :
PLOT SCALE : 1 IN:10 FT HORZ. / 1 IN:10 FT VERT.
WISDOT/CADDS SHEET 49

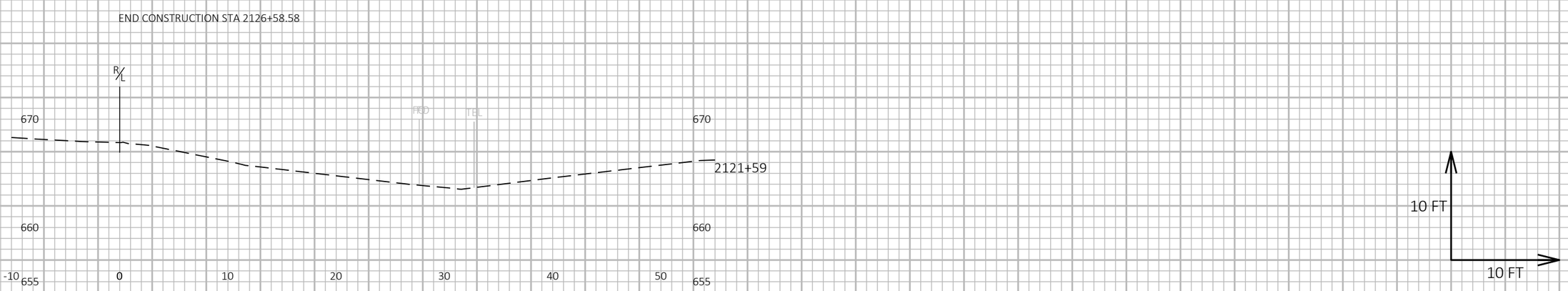

9

9

PROJECT NO: 7224-00-73	HWY: NON-HIGHWAY	COUNTY: BUFFALO	CROSS SECTIONS: CROSS SECTION	SHEET 87	E

FILE NAME : \\SP-PZ1.SEHINC.COM\PZPROJECTS1\AE\B\BUFFC\163204\5-FINAL-DSGN\51-DRAWINGS\40-TRANSHWY\C3D\72240002\SHEETSPLAN\SEC 09 B CROSS SECTIONS\090201-XS.DWG PLOT DATE : 8/9/2024 12:19 PM PLOT BY : MATTHEW WINTER PLOT NAME : PLOT SCALE : 1 IN:10 FT HORZ. / 1 IN:10 FT VERT.
LAYOUT NAME - 152

WISDOT/CADDS SHEET 49

Wisconsin Department of Transportation

Dedicated people creating transportation solutions through innovation and exceptional service.

http://www.dot.wisconsin.gov