GRE | DECEMBER 2024

PROJECT ID: 4150-14-71

WITH: N/A

COUNTY: DOOR

ORDER OF SHEETS

TOTAL SHEETS = 162

N

DESIGN DESIGNATION

A.A.D.T.	2023	=	4,160
A.A.D.T.	2043	=	4,730
D.H.V.		=	N/A
D.D.		=	50/50
T.		=	11.0% (AADT)
DESIGN SPEED		=	35/40 MPH
ESALS		=	1,100,000

CONVENTIONAL SYMBOLS

COUNTY LINE
CORPORATE LIMITS
PROPERTY LINE
LIMITED EASEMENT
EXISTING RIGHT OF WAY
PROPOSED OR NEW R/W LINE
FENCE
GUARD RAIL
SLOPE INTERCEPT
ORIGINAL GROUND
MARSH OR ROCK PROFILE (To be noted as such) — ROCK
MARSH AREA
WOODED OR SHRUB AREA
STREAM OR WATER EDGE
BUSH
PINE TREE (SIZE)
TREE (SIZE)
TRAFFIC SIGNAL CONTROL CABINET
TRAFFIC SIGNAL
TRAFFIC SIGNAL MAST-ARM
TRAFFIC SIGNAL WITH LIGHT
EXISTING PULL BOX
BOLLARD

COMBUSTIBLE FLUIDS

UNDERGROUND UTILITIES
GAS — (SIZE) G
SANITARY SEWER — (SIZE) SAN
STORM SEWER — (SIZE) SS
WATER — (SIZE) W
ELECTRIC — E
TELEPHONE — T
FIBER OPTIC — FO
CABLE TELEVISION — TV
FORCE MAIN — FM
MANHOLE — MH
UTILITY PEDESTAL
FIBER OPTIC HAND HOLE — HH
POWER POLE
TELEPHONE POLE
RAILROAD
HYDRANT
LIGHT POLE
RAILROAD SIGNAL
SIGN
TRANSMISSION TOWER
VALVE — (TYPE)
CURB STOP — CS
EXISTING CULVERT — (SIZE, TYPE)
PROPOSED CULVERT (Box or Pipe)

CAUTION

STATE OF WISCONSIN
DEPARTMENT OF TRANSPORTATION

PLAN OF PROPOSED IMPROVEMENT

SUMMIT RD - BAILEYS HARBOR

SUMMIT RD - CTH Q

STH 57
DOOR COUNTY

STATE PROJECT NUMBER
4150-14-71

STATE PROJECT	FEDERAL PROJECT	
	PROJECT	CONTRACT
4150-14-71	WISC 2025105	1

BEGIN PROJECT 4150-14-71
STA. 763+16.18
Y = 238,911.8236
X = 558,406.3837

END PROJECT 4150-14-71
STA. 839+67.89

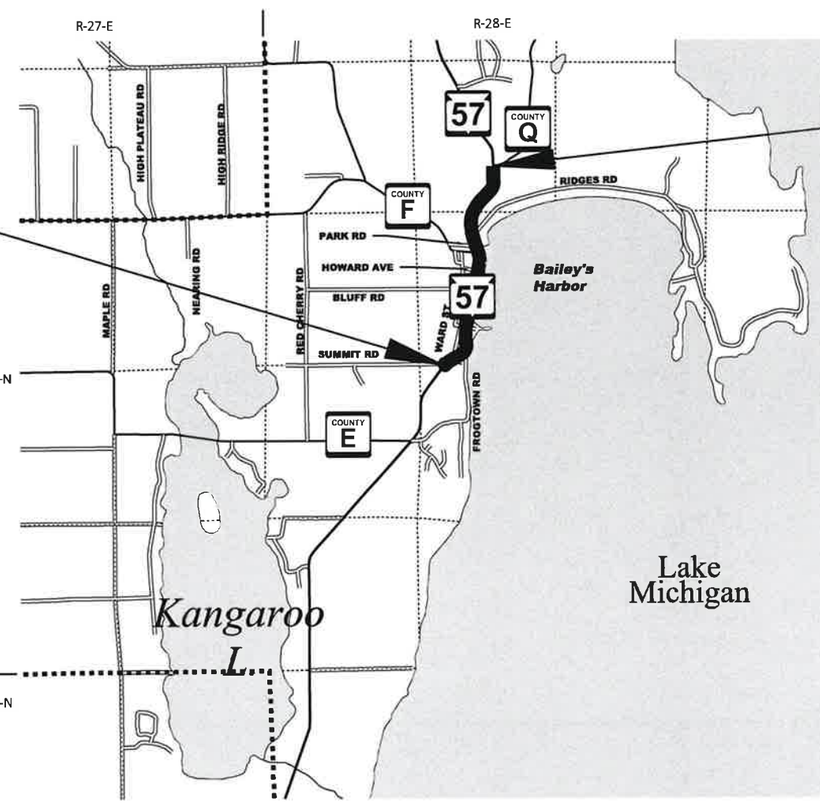

LAYOUT

SCALE 0 — 1 MI

TOTAL NET LENGTH OF CENTERLINE = 1.449 MI

HORIZONTAL POSITIONS SHOWN ON THIS PLAN ARE WISCONSIN COUNTY COORDINATES, DOOR COUNTY, NAD83 (2011), IN U.S. SURVEY FEET. VALUES ARE GRID COORDINATES, GRID BEARINGS, AND GRID DISTANCES. GRID DISTANCES MAY BE USED AS GROUND DISTANCES.

VERTICAL POSITIONS SHOWN ON THIS PLAN ARE VERTICAL DATUM NAVD 88 (2012).

ORIGINAL PLANS PREPARED BY

raSmith
CREATIVITY BEYOND ENGINEERING
rasmith.com

WISCONSIN PROFESSIONAL ENGINEER
LUKE S. SIEBERT
E-41762
APPLETON
WI

8/13/2024 (Date) (Signature)

STATE OF WISCONSIN
DEPARTMENT OF TRANSPORTATION

PREPARED BY

Surveyor	COLEMAN ENGINEERING COMPANY
Designer	raSmith
Project Manager	PAUL BRAUER
Regional Examiner	REGIONAL EXAMINER
Regional Supervisor	DAN SEGERSTROM

APPROVED FOR THE DEPARTMENT

DATE: 8/14/2024 Paul Brauer, P.E. (Signature)

E

UTILITY CONTACTS

BAILEYS HARBOR WASTEWATER TREATMENT FACILITY
SANITARY SEWER
DON PRUST
2605 SUMMIT ROAD
BAILEYS HARBOR, WI 54202
(920) 839-2037
BHWW@BAILEYSHARBORWI.GOV

FIVE STAR ENERGY
COMMUNICATION
SARAH LAWRENZ
300 INDUSTRIAL DRIVE
RANDOM LAKE, WI 53075
(920) 447-9267
SARAH.LAWRENZ@BERTRAMCOMMUNICATIONS.COM

FRONTIER COMMUNICATIONS OF WI LLC
COMMUNICATION
CHRIS POLLACK
421 4TH ST
WAUSAU, WI 54403
(715) 847-1240, CELL: (715) 297-4773
CHRISTOPHER.POLLACK@FTR.COM

NSIGHT TELESERVICES
COMMUNICATION
SKEETER MROCZYNSKI
470 SECURITY BOULEVARD
GREEN BAY, WI 54313
(920) 637-7384
SKEETER.MROCZYNSKI@NSIGHT.COM

WISCONSIN PUBLIC SERVICE CORPORATION
ELECTRICITY
WENDY CHRIST
P.O. BOX 19001
GREEN BAY, WI 54307-9001
(920) 617-5173
UTILITIESRELOCATION@WISCONSINPUBLICSERVICE.COM

WDNR LIAISON

DNR NORTHEAST REGIONAL HQ
MATT SCHAEVE
2984 SHAWANO AVENUE
GREEN BAY, WI 54313
(920) 366-1544
MATTHEW.SCHAEVE@WISCONSIN.GOV

WISDOT SURVEY COORDINATOR

MICHAEL ANDRASCHKO, RLS
944 VANDERPERREN WAY
GREEN BAY, WI 54304
(920) 492-4166
MICHAEL.ANDRASCHKO@DOT.WI.GOV

COUNTY HIGHWAY COMMISSIONER

THAD ASH
DOOR COUNTY
1001 SOUTH DULUTH
STURGEON BAY, WI 54235-3812
(920) 746-2500
TASH@CO.DOOR.WI.US

WISDOT PROJECT MANAGER

PAUL BRAUER
944 VANDERPERREN WAY
GREEN BAY, WI 54304
(920) 366-1097
PAUL.BRAUER@DOT.WI.GOV

DESIGN CONSULTANT

raSmith
DOUG SENSO
100 WEST LAWRENCE STREET SUITE 412
APPLETON, WI 54911-5754
(920) 843-5731
DOUG.SENSO@RASMITH.COM

TOWN CHAIRPERSON

DAVID ELIOT
TOWN OF BAILEYS HARBOR
2392 COUNTY F
BAILEYS HARBOR, WI 54202
(920) 839-9509
CHAIR@BAILEYSHARBORWI.ORG

ORDER OF SECTION 2 SHEETS

GENERAL NOTES

1. NO TREES OR SHRUBS ARE TO BE REMOVED WITHOUT THE APPROVAL OF THE ENGINEER.
2. THERE ARE UTILITY FACILITIES WITHIN THE PROJECT LIMITS THAT ARE NOT SHOWN ON THE PLANS.
3. TRAFFIC CONTROL DEVICES SHALL BE ADJUSTED TO FIT FIELD CONDITIONS AS DIRECTED BY THE ENGINEER. NO WORK SHALL BEGIN UNTIL PROPER TRAFFIC CONTROL DEVICES ARE PLACED AND APPROVED BY THE ENGINEER.
4. EROSION CONTROL DEVICES SHALL BE PLACED IN SEQUENCE WITH CONSTRUCTION OPERATIONS OR AS DETERMINED BY THE ENGINEER.
5. RIGHT OF WAY DIMENSIONS ON THE TYPICAL SECTIONS ARE BASED ON AS-BUILT AND COUNTY GIS INFORMATION. THEY HAVE NOT BEEN VERIFIED.
6. SUPERELEVATION LISTED IN THE PLANS IS BASED ON FIELD SURVEY. MATCH EXISTING SUPERELEVATION.
7. VERIFY EXISTING PAVEMENT ELEVATIONS AT ALL TIE-INS TO EXISTING PAVEMENT PRIOR TO CONSTRUCTION. NOTIFY ENGINEER IF A DISCREPANCY IS FOUND BETWEEN PROPOSED PLAN ELEVATIONS AND EXISTING PAVEMENT ELEVATIONS.
8. BACKFILL OF REMOVALS BELOW SUBGRADE SHALL BE WITH NATIVE MATERIAL IN ACCORDANCE WITH SECTION 204 OF THE STANDARD SPECIFICATIONS. UNLESS SPECIFIED OTHERWISE.
9. ALL CURB AND GUTTER RADII ARE MEASURED TO THE FACE OF CURB UNLESS OTHERWISE NOTED.
10. ALL SIDEWALK ARCS ARE MEASURED TO THE INSIDE RADII.

BORING SUMMARY
(APPROXIMATE LOCATIONS)

BORING NUMBER	STATION & ALIGNMENT	OFFSET	DEPTH TO BEDROCK (FT)
B-01	771+60 (STH 57)	8.9' LT	1.00
B-02	771+60 (STH 57)	23.2' RT	6.00
B-03	201+24 (FROGTOWN RD)	11.8' RT	1.30
B-04	201+72 (FROGTOWN RD)	11.6' RT	4.50
B-05	202+47 (FROGTOWN RD)	11.6' RT	7.40

DIGGERS HOTLINE
Dial 811 or (800)242-8511
www.DiggersHotline.com

TOWN OF BAILEYS HARBOR

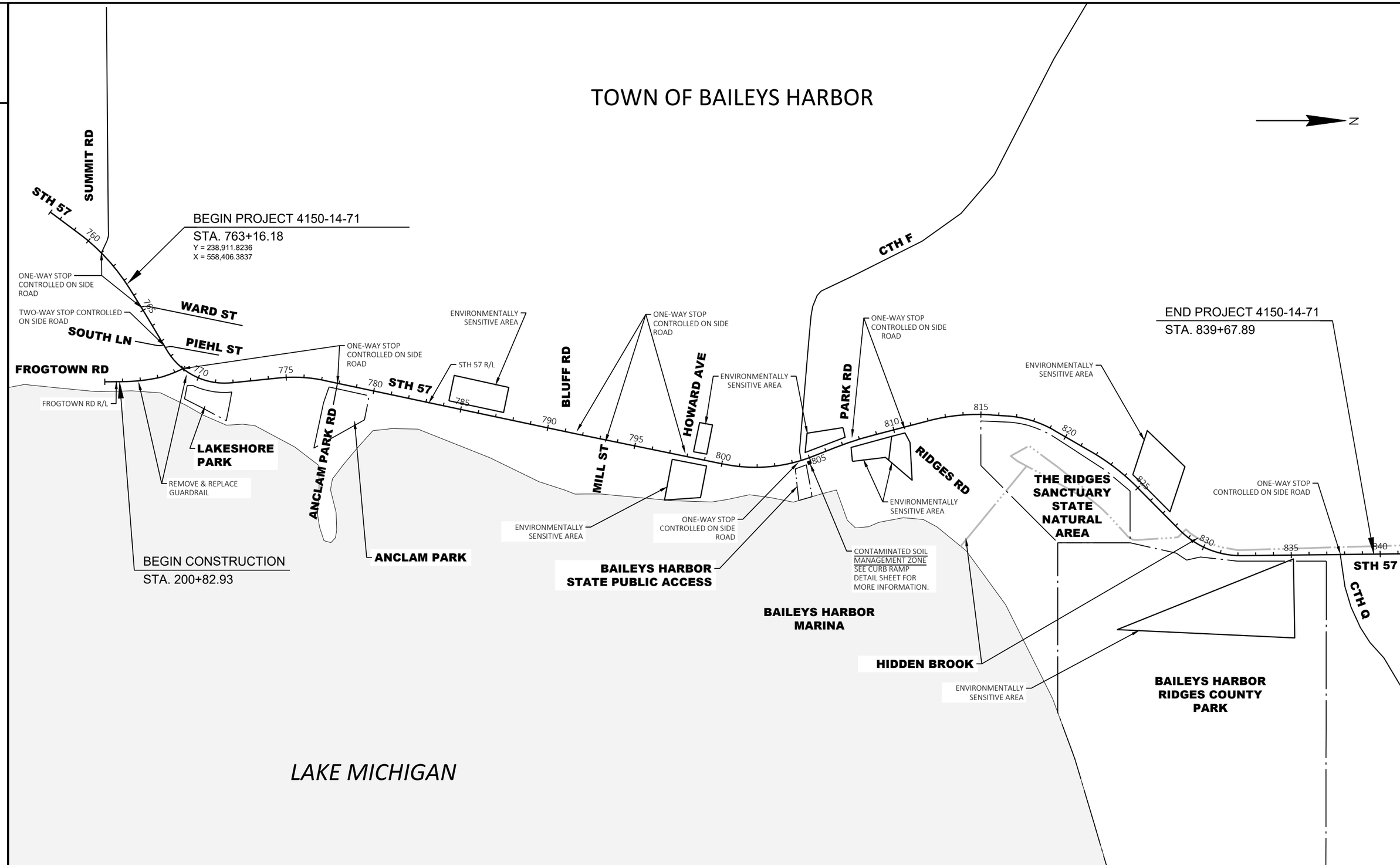

PROJECT NO: 4150-14-71	HWY: STH 57	COUNTY: DOOR	PROJECT OVERVIEW	SHEET 3	E

FILE NAME : K:\1202715.01\CIVIL3D\41501400\SHEETSPLAN\020201-PO.DWG
LAYOUT NAME - Plan 1 IN 500 FT
PLOT DATE : 8/19/2024 3:10 PM
PLOT BY : SIEBERT, LUKE
PLOT NAME :
PLOT SCALE : 1 IN:500 FT

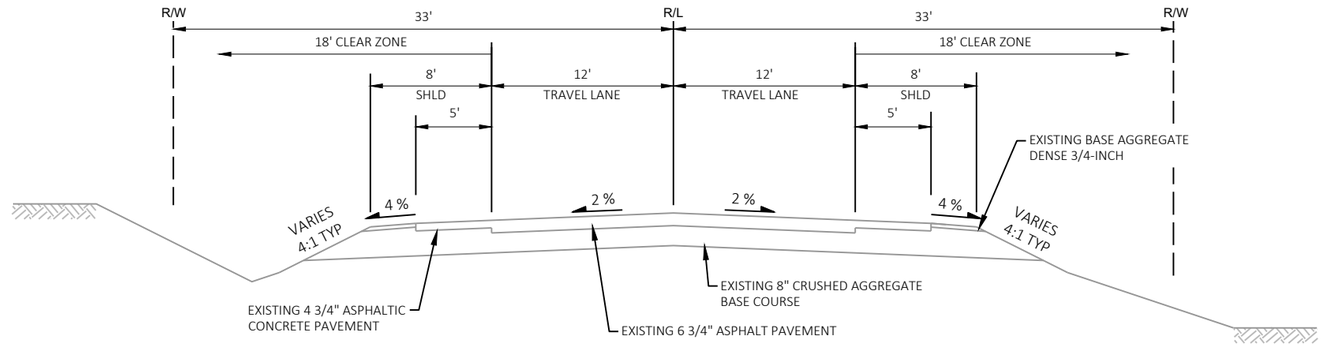

NOTES

(1) 6' WIDE PARKING LANE WITH CURB & GUTTER BEGINS AT STA 771+75.79 LT.

(2) 6' WIDE PARKING LANE WITH CURB & GUTTER BEGINS AT STA 771+65.33 RT.

(3) EXISTING CURB & GUTTER LT ENDS AT STA 813+27.44.

(4) SIDEWALK WIDTHS VARY FROM 5'-7.5', 5' IS TYPICAL.

(5) TERRACE WIDTHS VARY FROM 0'-5', 2.5' IS TYPICAL.

(6) EXISTING SIDEWALK LT BEGINS AT STA 776+48.69.

TYPICAL EXISTING SECTION
STH 57
STA 763+16.18 - STA 767+63.90

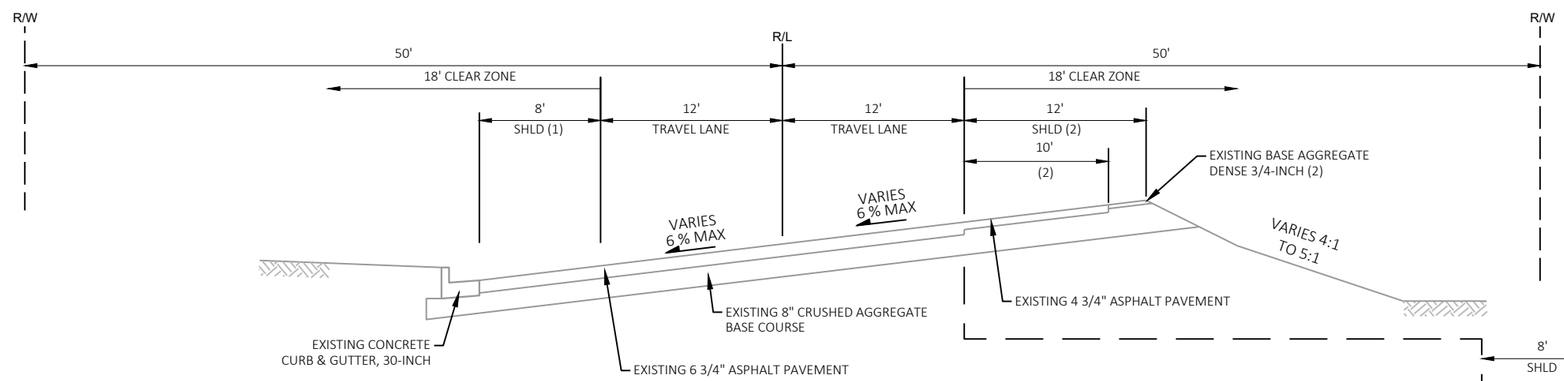

TYPICAL EXISTING SECTION
STH 57
STA 767+63.90 - STA 771+88.92

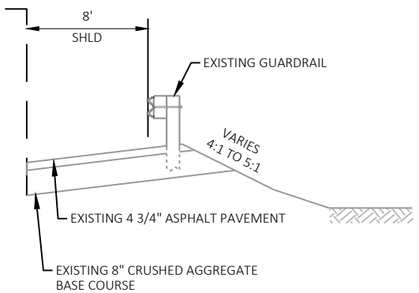

EXISTING GUARDRAIL SECTION
STA 769+36.50 - STA 770+93.81 RT

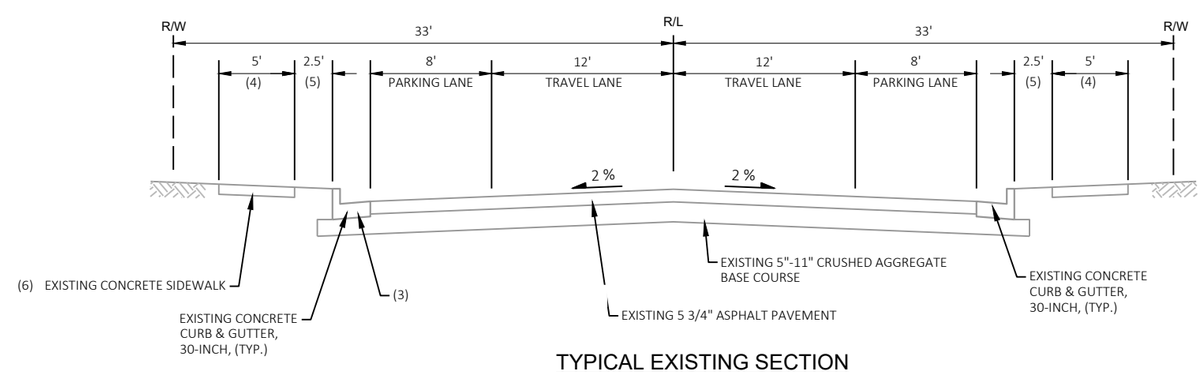

TYPICAL EXISTING SECTION
STH 57
STA 771+88.92 - STA 813+28.79

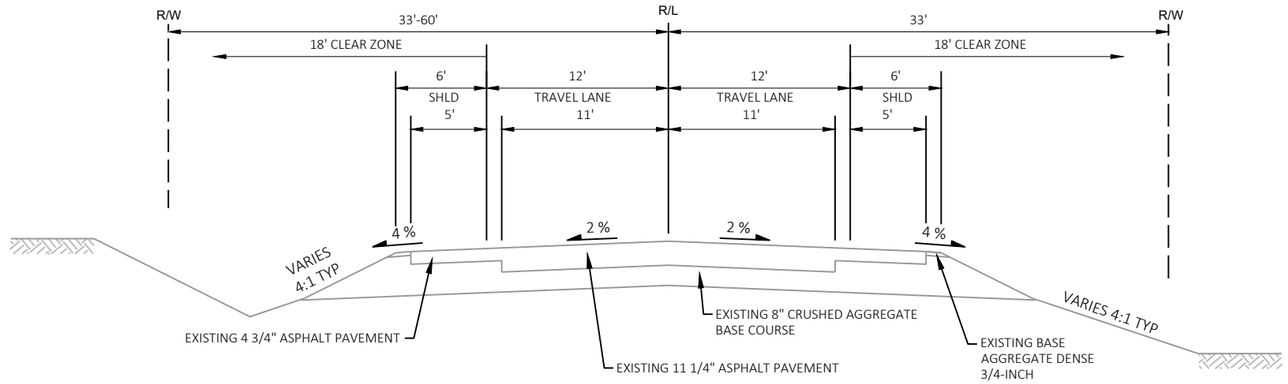

TYPICAL EXISTING SECTION
STH 57
STA 813+28.79 - STA 839+67.89

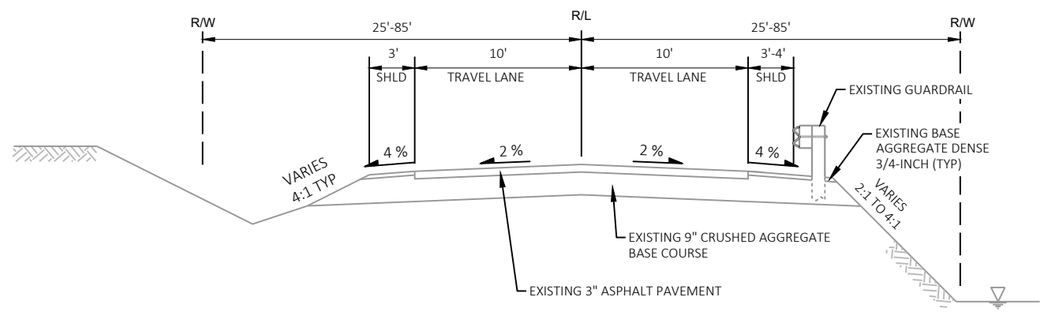

TYPICAL EXISTING SECTION
FROGTOWN ROAD
STA 200+82.93 - STA 204+00.00

NOTES

(1) NO LT SIDEWALK ON BLUFF RD OR PARK RD
NO SIDEWALK ON RIDGES RD

2

HMA PAVEMENT SHALL BE CONSTRUCTED WITH THE FOLLOWING LAYERS AND MIXES:

THICKNESS	LAYERS	MIX SPECIFICATIONS
4-INCH	ONE 1 3/4" UPPER LAYER ONE 2 1/4" LOWER LAYER	4 MT 58-28 S 3 MT 58-28 S
3-INCH*	ONE 3" LAYER	4 MT 58-28 S

*FOR USE ON FROGTOWN ROAD SHOULDER

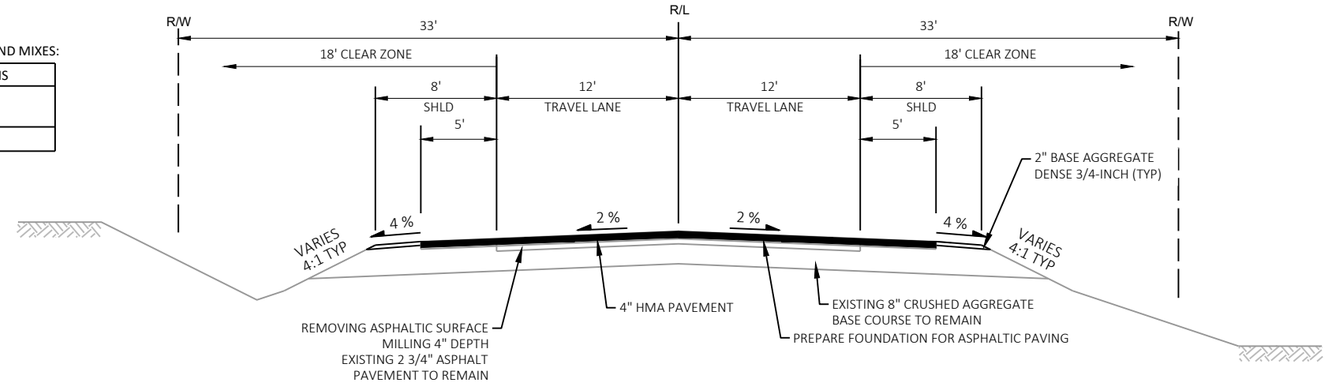

TYPICAL FINISHED SECTION
STH 57
STA 763+16.18 - STA 767+63.90
V = 35 MPH

NOTES

(1) 6' WIDE PARKING LANE WITH CURB & GUTTER BEGINS AT STA 771+75.79 LT.

(2) 6' WIDE PARKING LANE WITH CURB & GUTTER BEGINS AT STA 771+65.33 RT.

(3) EXISTING CURB & GUTTER LT ENDS AT STA 813+27.44.

(4) SIDEWALK WIDTHS VARY FROM 5'-7.5', 5' IS TYPICAL.

(5) TERRACE WIDTHS VARY FROM 0'-5', 2.5' IS TYPICAL.

(6) EXISTING SIDEWALK LT BEGINS AT STA 776+48.69.

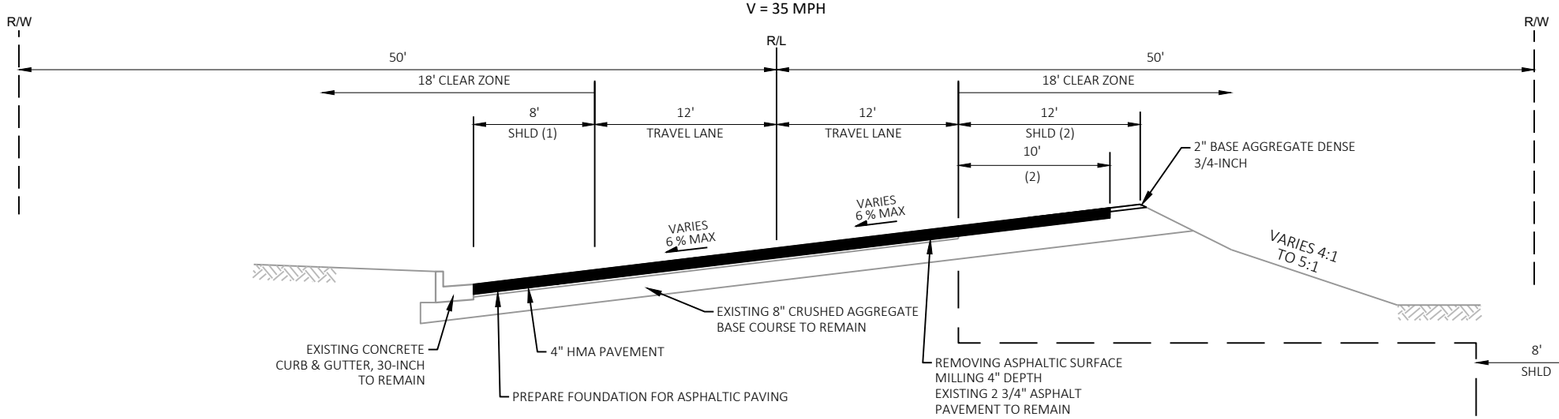

TYPICAL FINISHED SECTION
STH 57
STA 767+63.90 - STA 771+88.92
V = 35 MPH

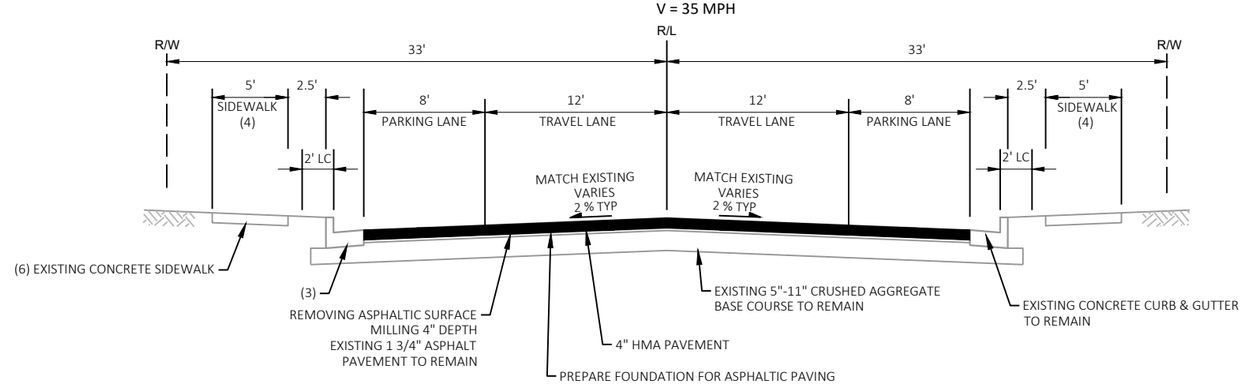

TYPICAL FINISHED SECTION
STH 57
STA 771+88.92 - STA 813+28.79
V = 35 MPH

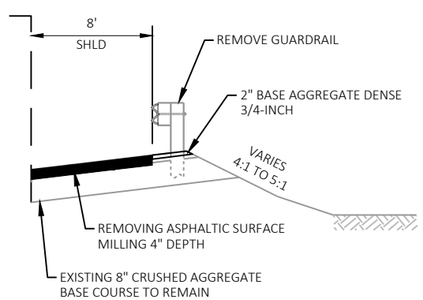

TYPICAL FINISHED SECTION
STA 769+36.50 - STA 770+93.81 RT

2

PROJECT NO: 4150-14-71	HWY: STH 57	COUNTY: DOOR	TYPICAL SECTIONS	SHEET 6	E

2

HMA PAVEMENT SHALL BE CONSTRUCTED WITH THE FOLLOWING LAYERS AND MIXES:

THICKNESS	LAYERS	MIX SPECIFICATIONS
4-INCH	ONE 1 3/4" UPPER LAYER ONE 2 1/4" LOWER LAYER	4 MT 58-28 S 3 MT 58-28 S
3-INCH*	ONE 3" LAYER	4 MT 58-28 S

*FOR USE ON FROGTOWN ROAD SHOULDER

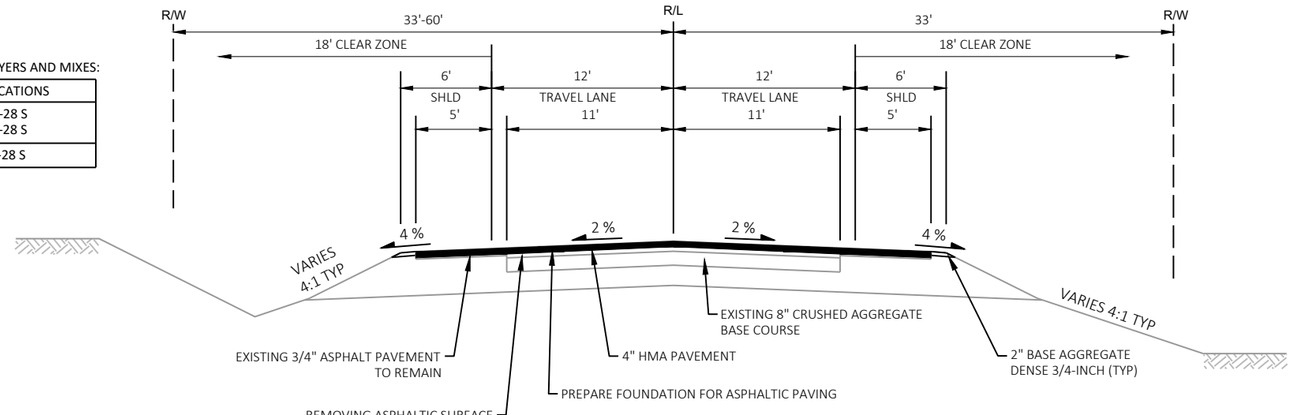

TYPICAL FINISHED SECTION
STH 57
STA 813+28.79 - STA 839+67.89
V = 40 MPH

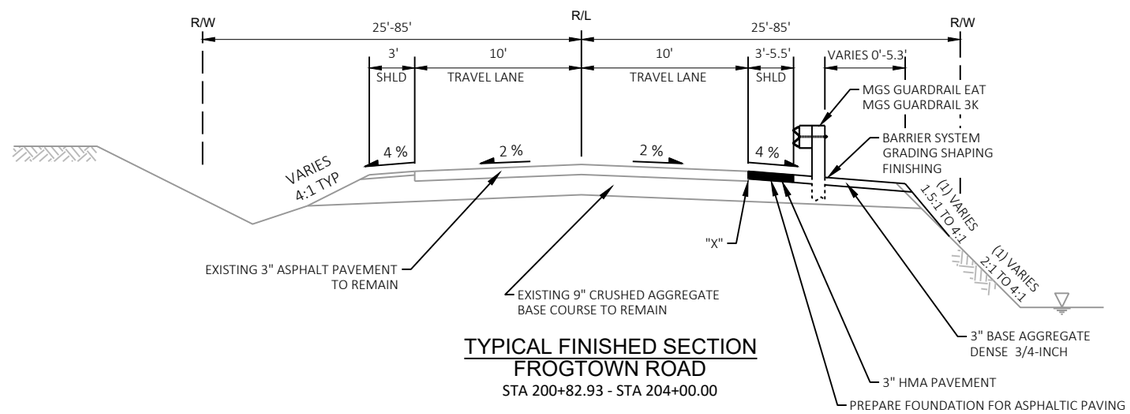

TYPICAL FINISHED SECTION
FROGTOWN ROAD
STA 200+82.93 - STA 204+00.00

NOTES

(1) SLOPES STEEPER THAN 3:1 REPRESENT THE BEDROCK LEDGE.

"X" = POINT REFERRED TO ON CROSS SECTIONS

URBAN SECTION

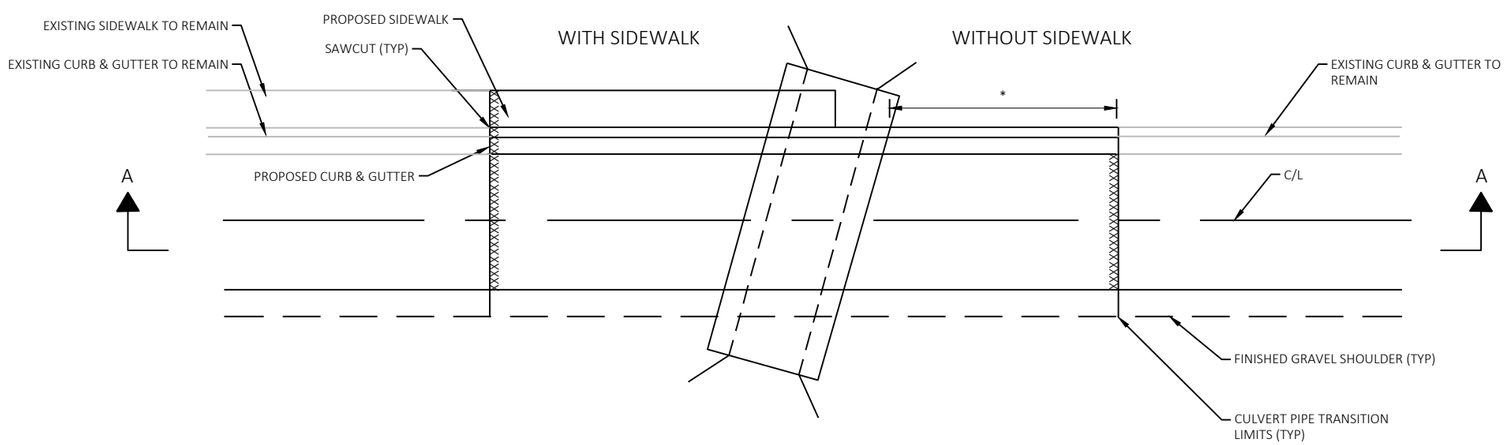

RURAL SECTION

* SEE PLAN DETAILS AND EARTHWORK SUMMARY IN MISCELLANEOUS QUANTITIES FOR CULVERT PIPE TRANSITION LIMITS.

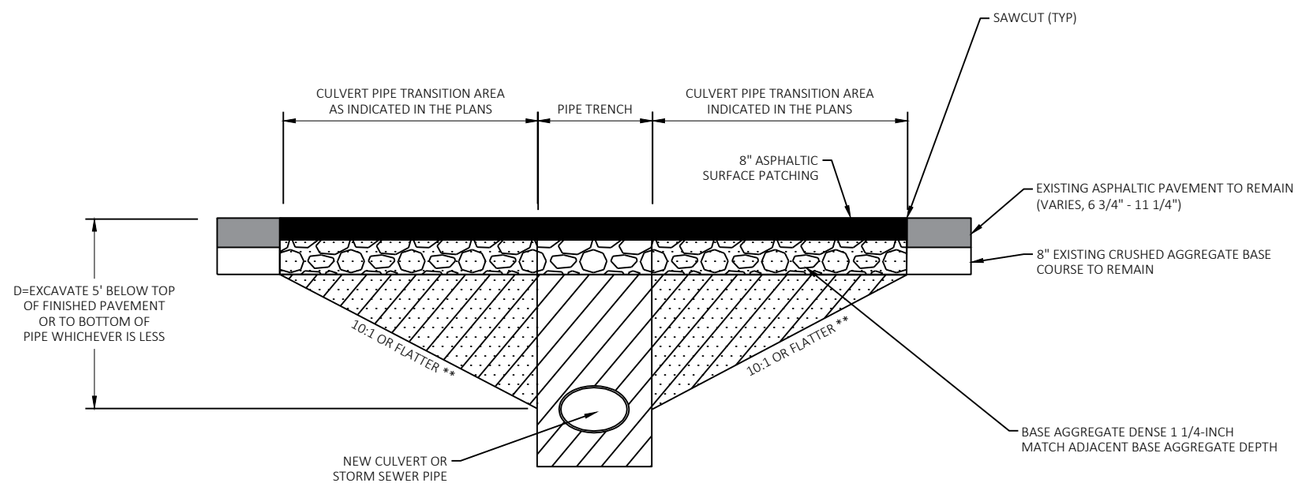

SECTION A-A

COMMON EXCAVATION

FOUNDATION BACKFILL

BASE AGGREGATE DENSE 1 1/4-INCH

NOTES:
1. PERFORM WORK IN ACCORDANCE WITH STANDARD SPEC 520.
2. CULVERT PIPE TRANSITION AREAS WILL BE PAID BY COMMON EXCAVATION & FOUNDATION BACKFILL.
3. FOUNDATION BACKFILL WITHIN THE PIPE TRENCH IS INCIDENTAL TO THE PIPE ITEMS.
4. PAVEMENT SAWCUT TO BE PERPENDICULAR TO ROADWAY PAVEMENT.
5. REPLACE SIDEWALK AND CURB & GUTTER WITHIN TRANSITION AREA AS SHOWN IN THE PLANS OR AS DIRECTED BY THE ENGINEER.
6. CONTINUE MILLING OPERATION THROUGH ASPHALTIC PATCH.

SUBGRADE TRANSITION DETAIL FOR PROPOSED CULVERTS OR STORM SEWER CROSSING STH 57

** MAY VARY IF ROCK IS ENCOUNTERED. ROCK TO REMAIN IN PLACE.

2

DIMENSIONS									
INCHES		MIN. THICK.		INCHES					SLOPE
SPAN	RISE	IN.	GAGE	A	H	W	TOTAL WIDTH	L	
38	24	0.079	14	12	9	44	68	56	4:1

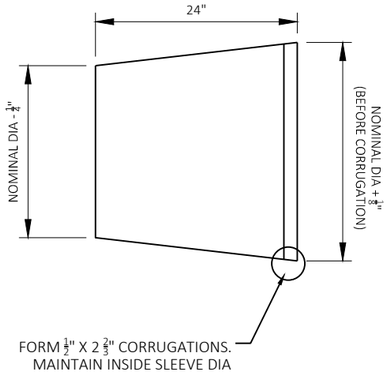

SMOOTH TAPERED SLEEVE DETAIL

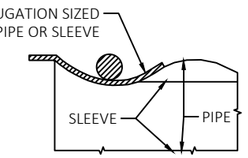

SECTION B-B

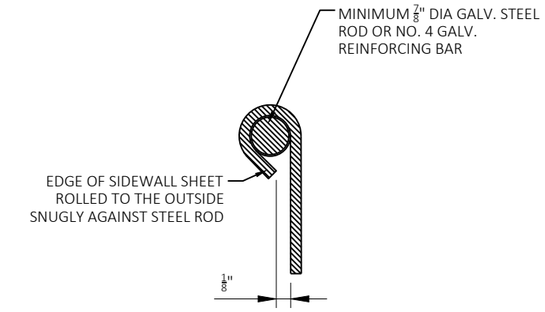

SECTION A-A

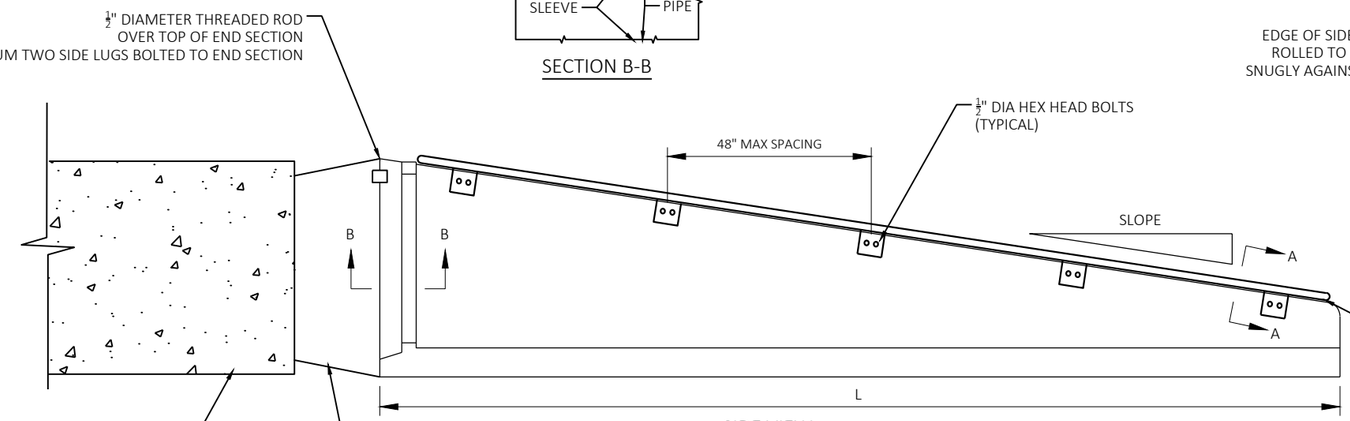

SIDE VIEW

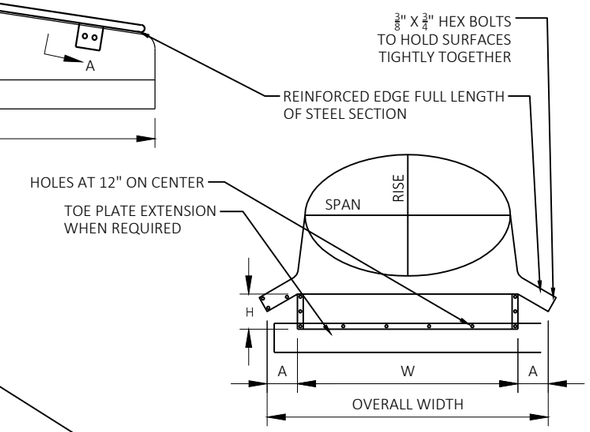

END VIEW

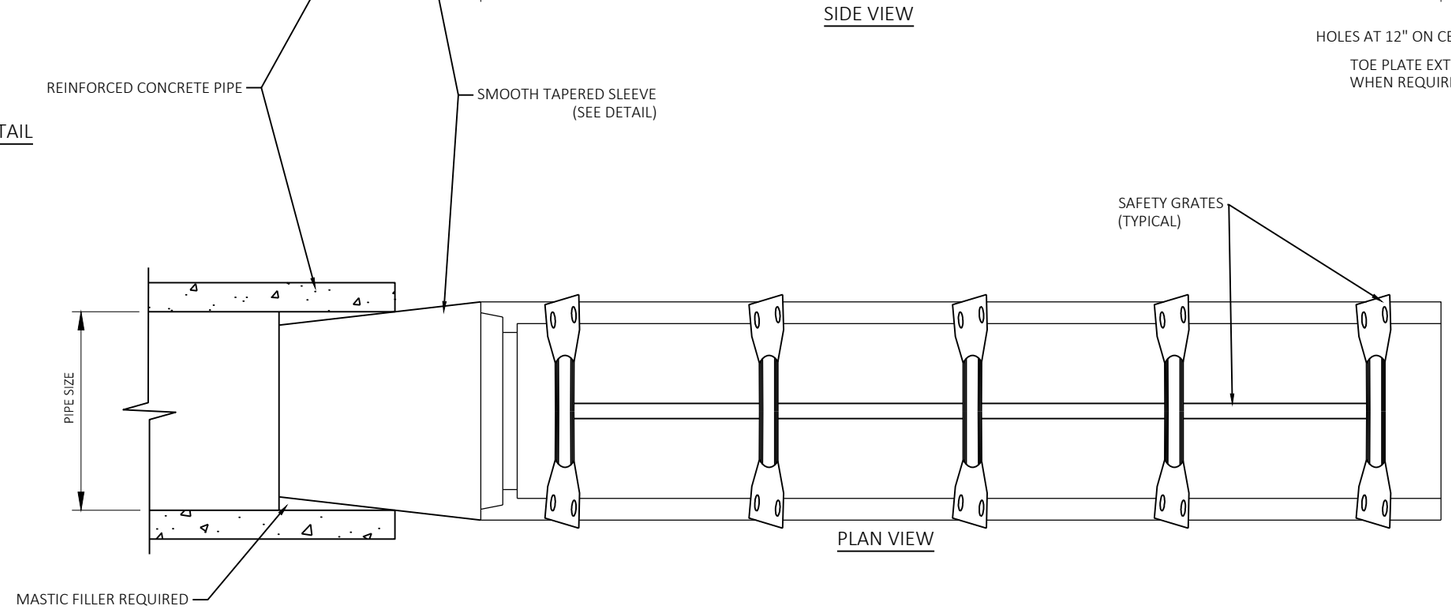

PLAN VIEW

NOTES:

1. SMOOTH TAPERED SLEEVE MADE OF 12 GAGE SMOOTH GALVANIZED STEEL IN ACCORDANCE WITH AASHTO M218.
2. STEEL SHALL MEET AASHTO SPECIFICATIONS.
3. SAFETY GRATES SHALL BE FABRICATED FROM 3-INCH DIAMETER GALVANIZED PIPE MEETING THE REQUIREMENTS OF ASTM A-53, GRADE B, SCHEDULE 40 OR APPROVED EQUAL. THE LONGITUDINAL BAR SHALL BE WELDED TO THE TRANSVERSE BARS WHERE THE BARS CROSS. THE NUMBER OF TRANSVERSE BARS REQUIRED WILL VARY DEPENDING ON THE LENGTH OF THE END SECTION.
4. TOE PLATE IS 8" HIGH.
5. TOE PLATE OVERLAP IS 2".
6. SEE SDD FOR STEEL APRON ENDWALLS FOR CULVERT PIPE ARCH SLOPED CROSS DRAINS FOR ADDITIONAL INFORMATION.

APRON ENDWALLS FOR CULVERT PIPE SLOPED CROSS DRAINS STEEL 24x38-INCH 4 TO 1

STA 815+09 LT
STA 815+10 RT

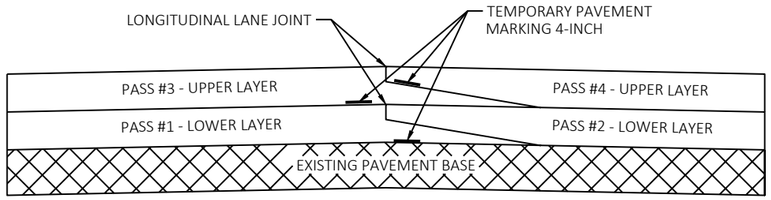

PAVEMENT MARKING DETAIL FOR TAPERED OVERLAPPING JOINTS IN HMA PAVEMENTS

SEE SDD HMA LONGITUDINAL JOINTS FOR TYPICAL NOTCHED WEDGE JOINT DETAILS.

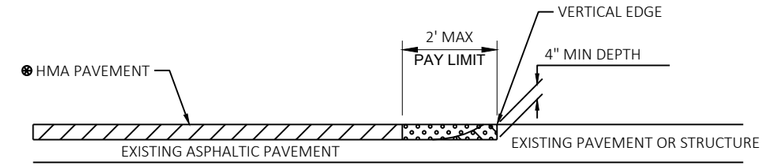

REMOVING ASPHALTIC SURFACE, MILLING

REMOVING ASPHALTIC SURFACE, BUTT JOINTS

REMOVE ASPHALTIC SURFACE WEDGE AT BUTT JOINT TO CREATE VERTICAL EDGE

⊛ SEE TYPICAL CROSS SECTION FOR PAVEMENT TYPE AND THICKNESS OF INDIVIDUAL LAYERS

BUTT JOINT DETAIL FOR ASPHALTIC PAVEMENTS (NO PROFILE CHANGE)

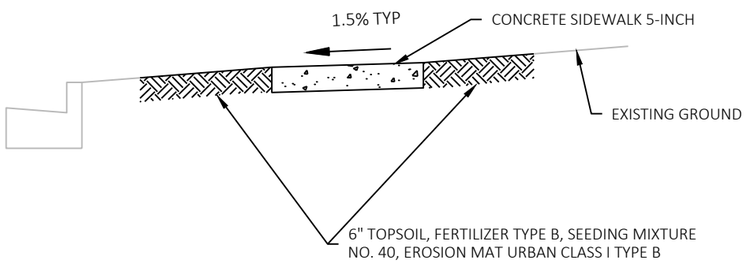

TYPICAL SIDEWALK SECTION

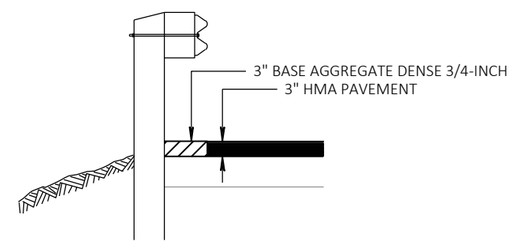

SECTION A-A

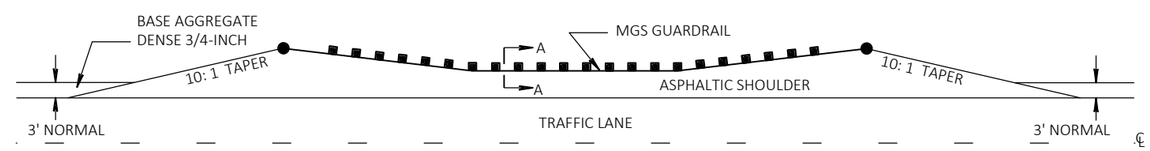

DETAIL FOR ASPHALTIC SHOULDER AT GUARDRAIL

FROGTOWN RD STA 200+82.93 - 204+27.00 RT

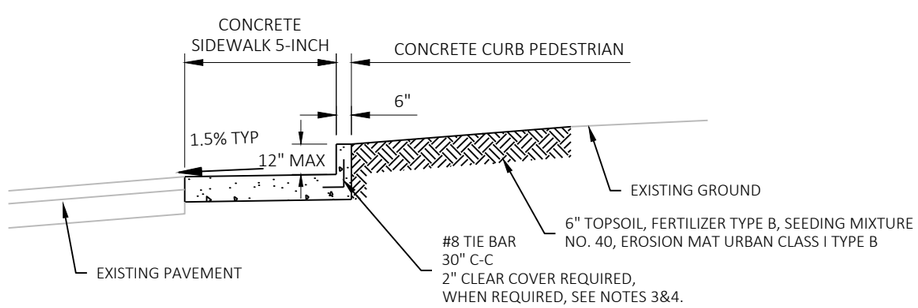

CONCRETE CURB PEDESTRIAN SECTION

NOTES:

1. PAYMENT FOR CONCRETE CURB PEDESTRIAN SHALL BE MADE USING THE BID ITEM CONCRETE CURB PEDESTRIAN
2. THE HEIGHT OF THE CURB SHALL VARY BETWEEN 0 INCHES AND 12 INCHES BASED ON THE GRADES SHOWN ON THE CURB RAMP DETAILS.
3. WHEN THE HEIGHT OF THE PEDESTRIAN CURB IS GREATER THAN 6 INCHES IN HEIGHT THE CURB SHALL BE POURED MONOLITHICALLY WITH THE CONCRETE SIDEWALK AND SHALL BE TIED TO THE SIDEWALK USING A #8 TIE BAR SPACED 30" CENTER TO CENTER. THE TIE BARS ARE INCIDENTAL TO THE CONCRETE CURB PEDESTRIAN.
4. WHEN THE HEIGHT OF THE PEDESTRIAN CURB IS 6 INCHES OR LESS IT MAY BE POURED MONOLITHICALLY WITH THE CONCRETE SIDEWALK OR POURED SEPARATELY. WHEN POURED SEPARATELY EXPANSION FELT IS REQUIRED BETWEEN THE CONCRETE SIDEWALK AND CONCRETE CURB PEDESTRIAN. TIE BARS ARE NOT REQUIRED WHEN THE HEIGHT OF THE PEDESTRIAN CURB IS 6 INCHES OR LESS.

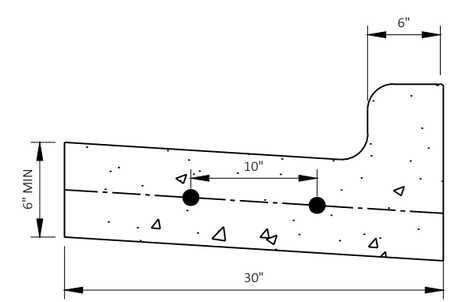

TYPE D 30-INCH

DRILLED TIE BAR DETAIL AT CURB & GUTTER MATCH POINT

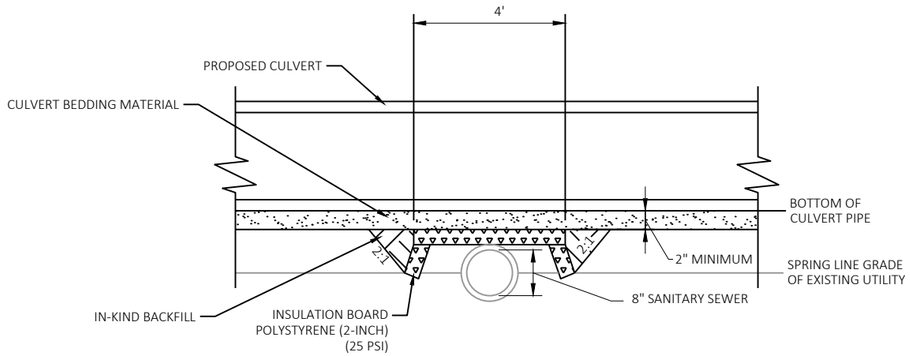

NOTES:
1. EXPOSE EXISTING UTILITY TO SPRING LINE.
2. PLACE SIDE INSULATION PER DETAIL.
3. EXTEND INSULATION 1.5' BEYOND OUTSIDE OF SANITARY SEWER.
4. BACKFILL WITH IN-KIND MATERIAL TO TOP INSULATION GRADE.
5. PLACE TOP INSULATION.
6. IF EXISTING UTILITY IS SCRATCHED OR DAMAGED DURING EXPOSURE, THEN IT MUST BE REPAIRED AT CONTRACTOR'S EXPENSE.

PIPE INSULATION FOR EXISTING UTILITY DETAIL

STA 828+14 - 828+28 LT

D = PIPE DIAMETER

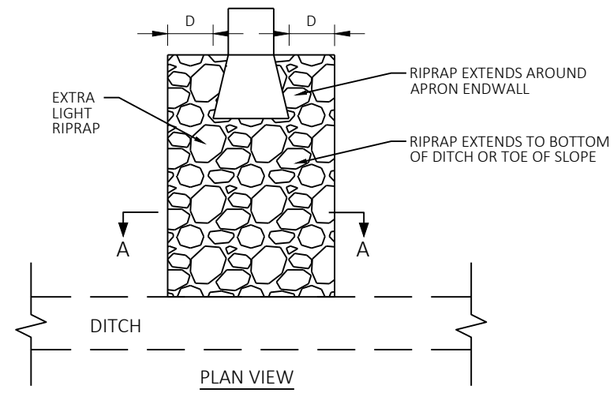

PLAN VIEW

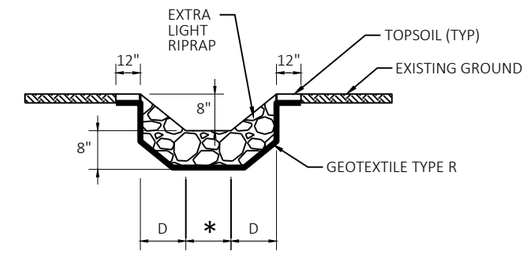

SECTION A-A

* APRON ENDWALL WIDTH

EXTRA-LIGHT RIPRAP TREATMENT AT PIPE OUTFALLS

SEE PLAN DETAILS FOR LOCATIONS.

RUNOFF COEFFICIENT TABLE

	HYDROLOGIC SOIL GROUP											
	A			B			C			D		
	SLOPE RANGE (PERCENT)			SLOPE RANGE (PERCENT)			SLOPE RANGE (PERCENT)			SLOPE RANGE (PERCENT)		
LAND USE:	0-2	2-6	6 & OVER	0-2	2-6	6 & OVER	0-2	2-6	6 & OVER	0-2	2-6	6 & OVER
ROW CROPS	.08 .22	.16 .30	.22 .38	.12 .26	.20 .34	.27 .44	.15 .30	.24 .37	.33 .50	.19 .34	.28 .41	.38 .56
MEDIAN STRIP-TURF	.19 .24	.20 .26	.24 .30	.19 .25	.22 .28	.26 .33	.20 .26	.23 .30	.30 .37	.20 .27	.25 .32	.30 .40
SIDE SLOPE-TURF			.25 .32			.27 .34			.28 .36			.30 .38
PAVEMENT:												
ASPHALT	.70 - .95											
CONCRETE	.80 - .95											
BRICK	.70 - .80											
DRIVES, WALKS	.75 - .85											
ROOFS	.75 - .95											
GRAVEL ROADS, SHOULDERS	.40 - .60											

TOTAL PROJECT AREA = 13.325 ACRES
TOTAL AREA EXPECTED TO BE DISTURBED BY CONSTRUCTION ACTIVITIES = 7.908 ACRES

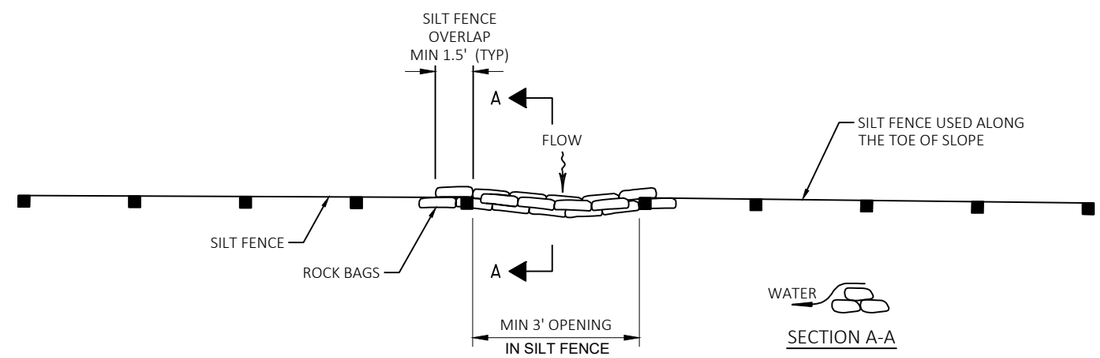

SECTION A-A

TOP VIEW

ROCK BAGS USED FOR SILT FENCE RELIEF DETAIL

PIPE SIZE	NUMBER OF BAGS REQUIRED
19" X 30"	6
24" X 38"	8

CULVERT PIPE CHECK REQUIREMENTS

2

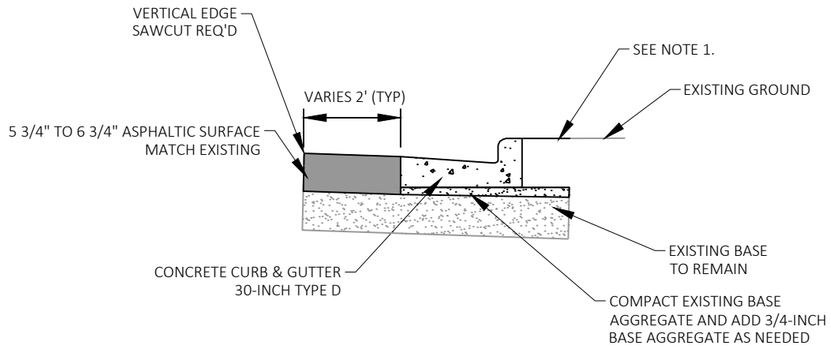

NOTES:

1. SEE CURB RAMP DETAILS FOR MATERIAL TYPE BEHIND CURB & GUTTER.
2. ASPHALT REMOVAL IN FRONT OF CURB PAID AS REMOVING ASPHALTIC SURFACE.
3. COMPLETE CURB & GUTTER REPLACEMENT AND PAVEMENT PATCHING PRIOR TO MILLING AND HMA PAVING.

DETAIL FOR CURB AND GUTTER REMOVAL/REPLACEMENT

SEE CURB RAMP DETAILS FOR LOCATIONS

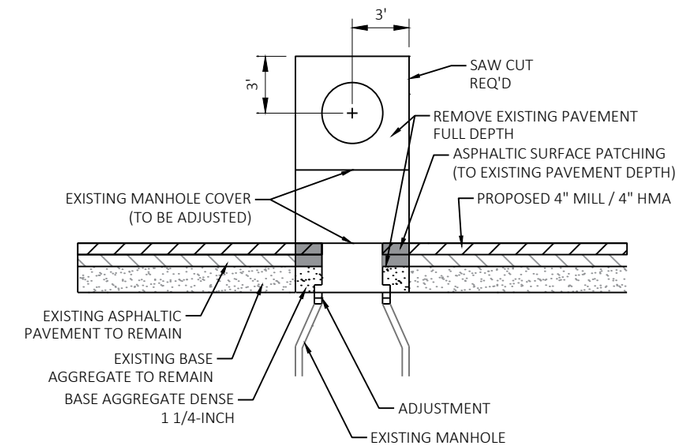

ADJUSTING MANHOLE COVERS

ADJUSTING TO TAKE PLACE PRIOR TO MILL AND PAVE.
MAINTAIN TWO WAY TRAFFIC OPERATIONS DURING ADJUSTMENTS. USE FLAGGING AS NECESSARY.

2

LEGEND

- SIGN ON TEMPORARY SUPPORT
- DIRECTION OF TRAFFIC
- TRAFFIC CONTROL DRUM
- TRAFFIC CONTROL CONE 42-INCH
- TEMPORARY PEDESTRIAN BARRICADE
- TEMPORARY MARKING CROSSWALK REMOVABLE TAPE 6-INCH
- WORK ZONE

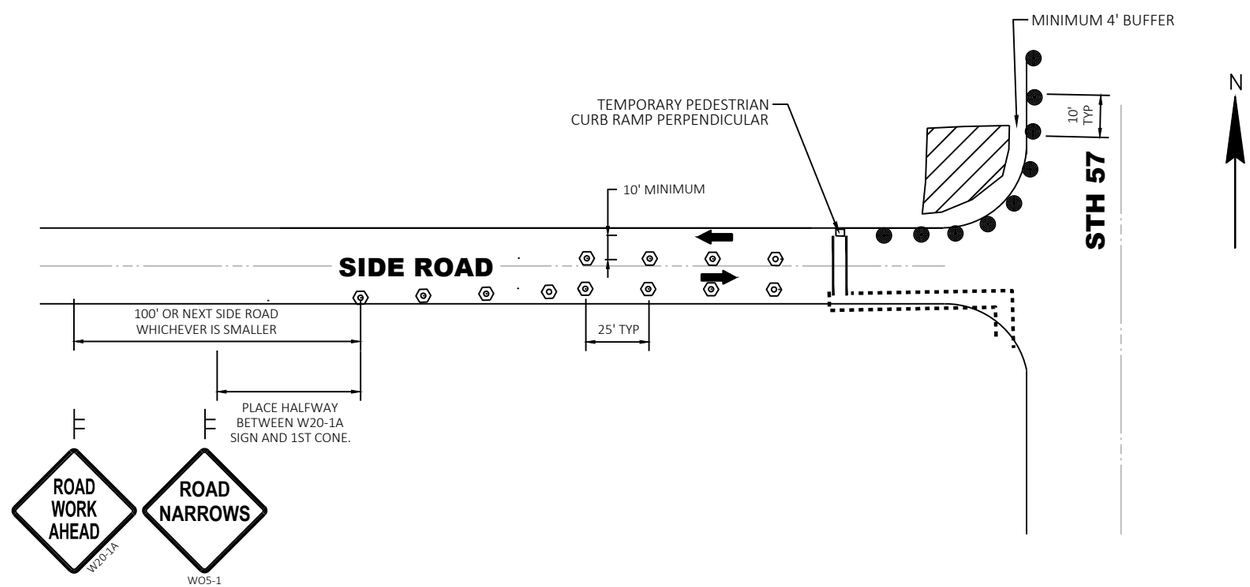

TRAFFIC SHIFT AT TEMPORARY PEDESTRIAN BARRICADES

NTS

PROJECT NO: 4150-14-71	HWY: STH 57	COUNTY: DOOR	CONSTRUCTION DETAILS	SHEET 12	E

2

LEGEND

- EROSION MAT CLASS II TYPE B (FOR INFORMATION ONLY)
- SILT FENCE
- ROCK BAGS AS SILT FENCE RELIEF
- SURFACE WATER FLOW
- SOIL BORING LOCATION
- B-XX SOIL BORING NUMBER

NOTE:
BEDROCK MAY BE ENCOUNTERED DURING GUARDRAIL INSTALLATION. IF ENCOUNTERED POSTS SHALL BE INSTALLED IN ACCORDANCE WITH SDD MIDWEST GUARDRAIL SYSTEM (MGS) GUARDRAIL.

GRUB ANY STUMPS LOCATED WITHIN THE RIGHT-OF-WAY OR TEMPORARY LIMITED EASEMENTS AT THE LOCATIONS INDICATED IN THE MISCELLANEOUS QUANTITIES.

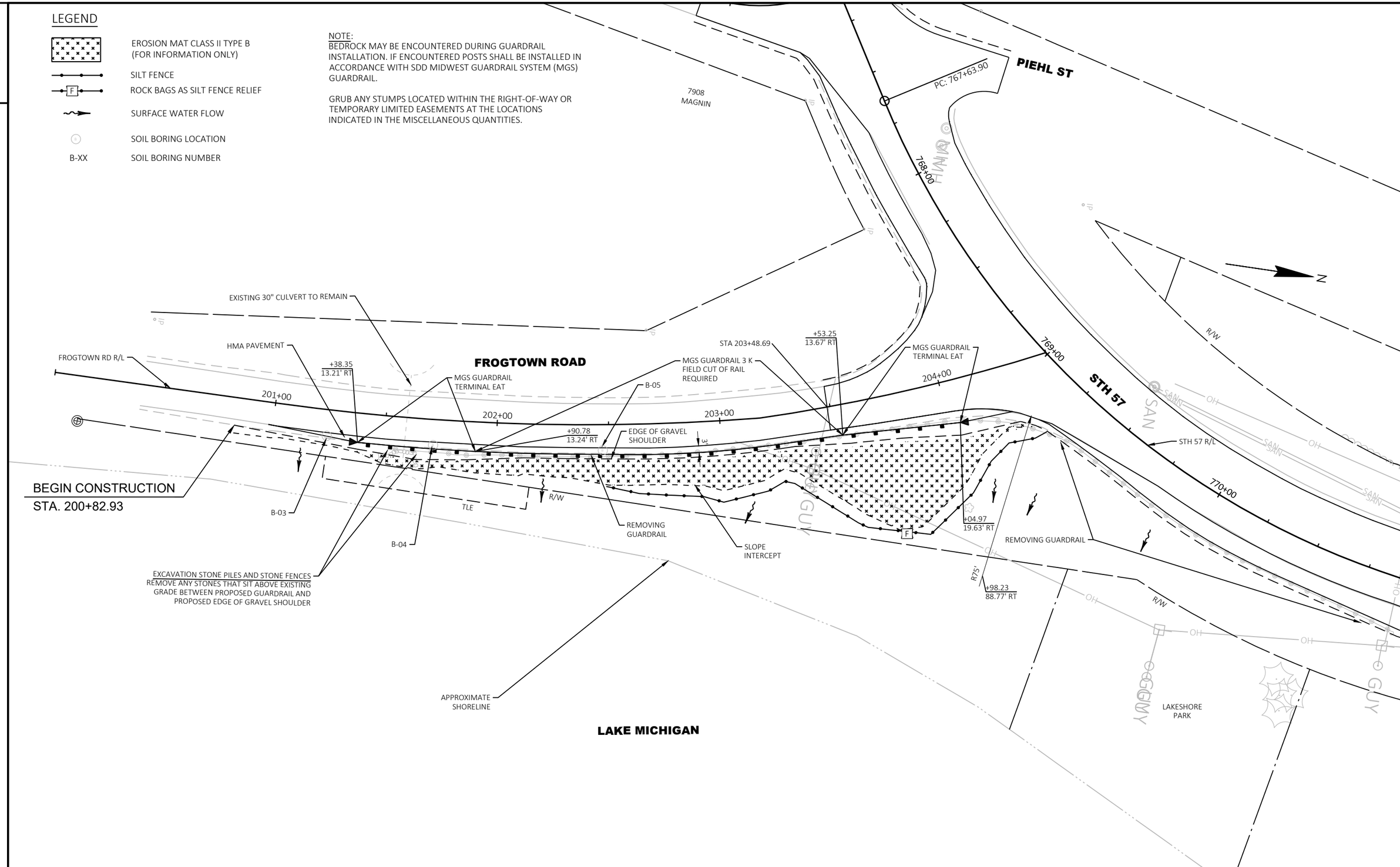

2

PROJECT NO: 4150-14-71	HWY: STH 57	COUNTY: DOOR	PLAN DETAILS - FROGTOWN ROAD GUARDRAIL	SHEET 13	E

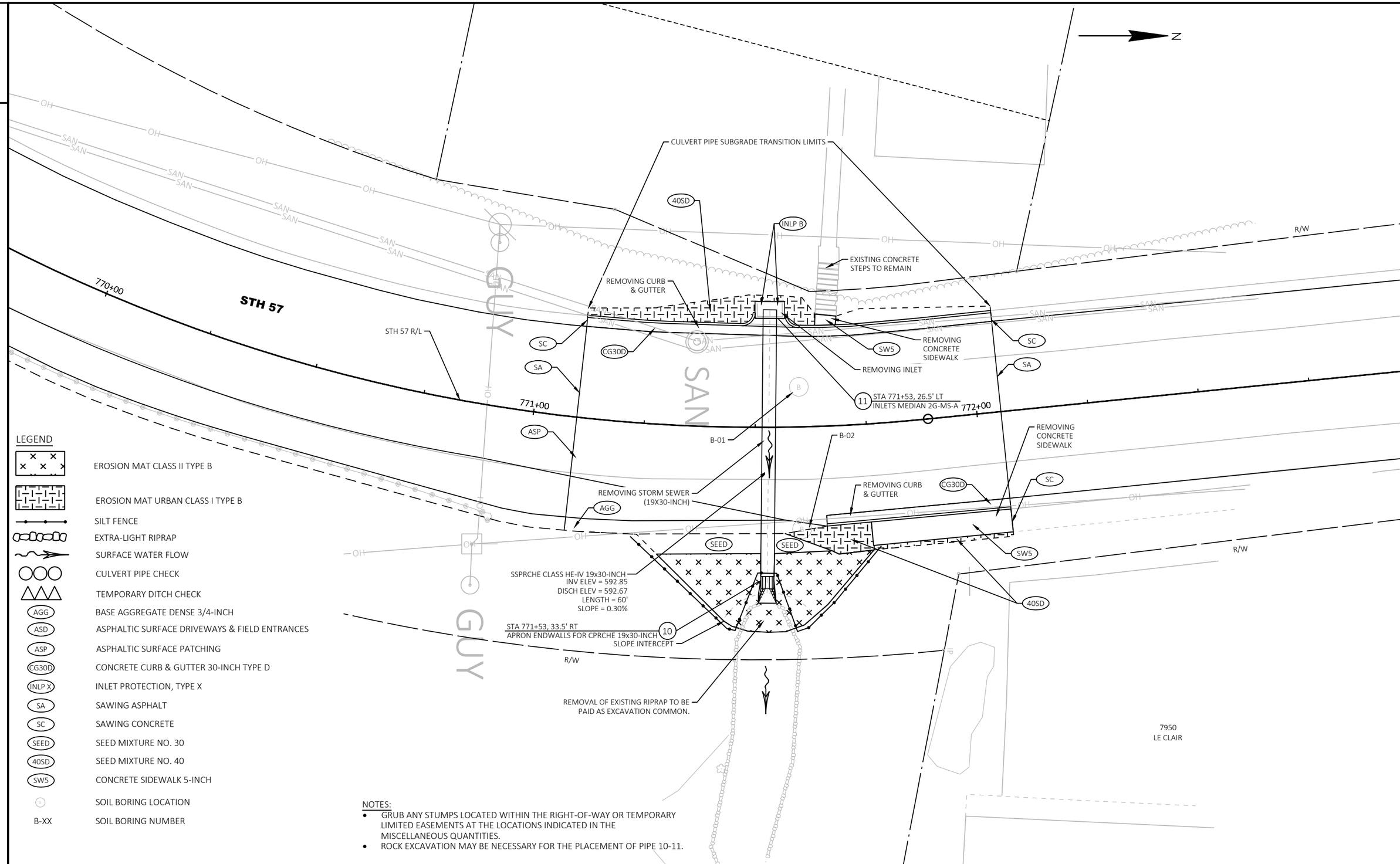

LEGEND

- EROSION MAT CLASS II TYPE B
- EROSION MAT URBAN CLASS I TYPE B
- SILT FENCE
- EXTRA-LIGHT RIPRAP
- SURFACE WATER FLOW
- CULVERT PIPE CHECK
- TEMPORARY DITCH CHECK
- AGG — BASE AGGREGATE DENSE 3/4-INCH
- ASD — ASPHALTIC SURFACE DRIVEWAYS & FIELD ENTRANCES
- ASP — ASPHALTIC SURFACE PATCHING
- CG30D — CONCRETE CURB & GUTTER 30-INCH TYPE D
- INLP X — INLET PROTECTION, TYPE X
- SA — SAWING ASPHALT
- SC — SAWING CONCRETE
- SEED — SEED MIXTURE NO. 30
- 40SD — SEED MIXTURE NO. 40
- SW5 — CONCRETE SIDEWALK 5-INCH
- SOIL BORING LOCATION
- B-XX — SOIL BORING NUMBER

NOTES:

- GRUB ANY STUMPS LOCATED WITHIN THE RIGHT-OF-WAY OR TEMPORARY LIMITED EASEMENTS AT THE LOCATIONS INDICATED IN THE MISCELLANEOUS QUANTITIES.
- ROCK EXCAVATION MAY BE NECESSARY FOR THE PLACEMENT OF PIPE 10-11.

2

NOTES:

- GRUB ANY STUMPS LOCATED WITHIN THE RIGHT-OF-WAY OR, TEMPORARY OR PERMANENT LIMITED EASEMENTS AT THE LOCATIONS INDICATED IN THE MISCELLANEOUS QUANTITIES.

LEGEND

	EROSION MAT URBAN CLASS I TYPE B
	SILT FENCE
	EXTRA-LIGHT RIPRAP
	SURFACE WATER FLOW
	CULVERT PIPE CHECK
	TEMPORARY DITCH CHECK
AGG	BASE AGGREGATE DENSE 3/4-INCH
ASD	ASPHALTIC SURFACE DRIVEWAYS & FIELD ENTRANCES
ASP	ASPHALTIC SURFACE PATCHING
CG30D	CONCRETE CURB & GUTTER 30-INCH TYPE D
INLP X	INLET PROTECTION, TYPE X
SA	SAWING ASPHALT
SC	SAWING CONCRETE
SEED	SEED MIXTURE NO. 30
40SD	SEED MIXTURE NO. 40
SW5	CONCRETE SIDEWALK 5-INCH
	SOIL BORING LOCATION
B-XX	SOIL BORING NUMBER

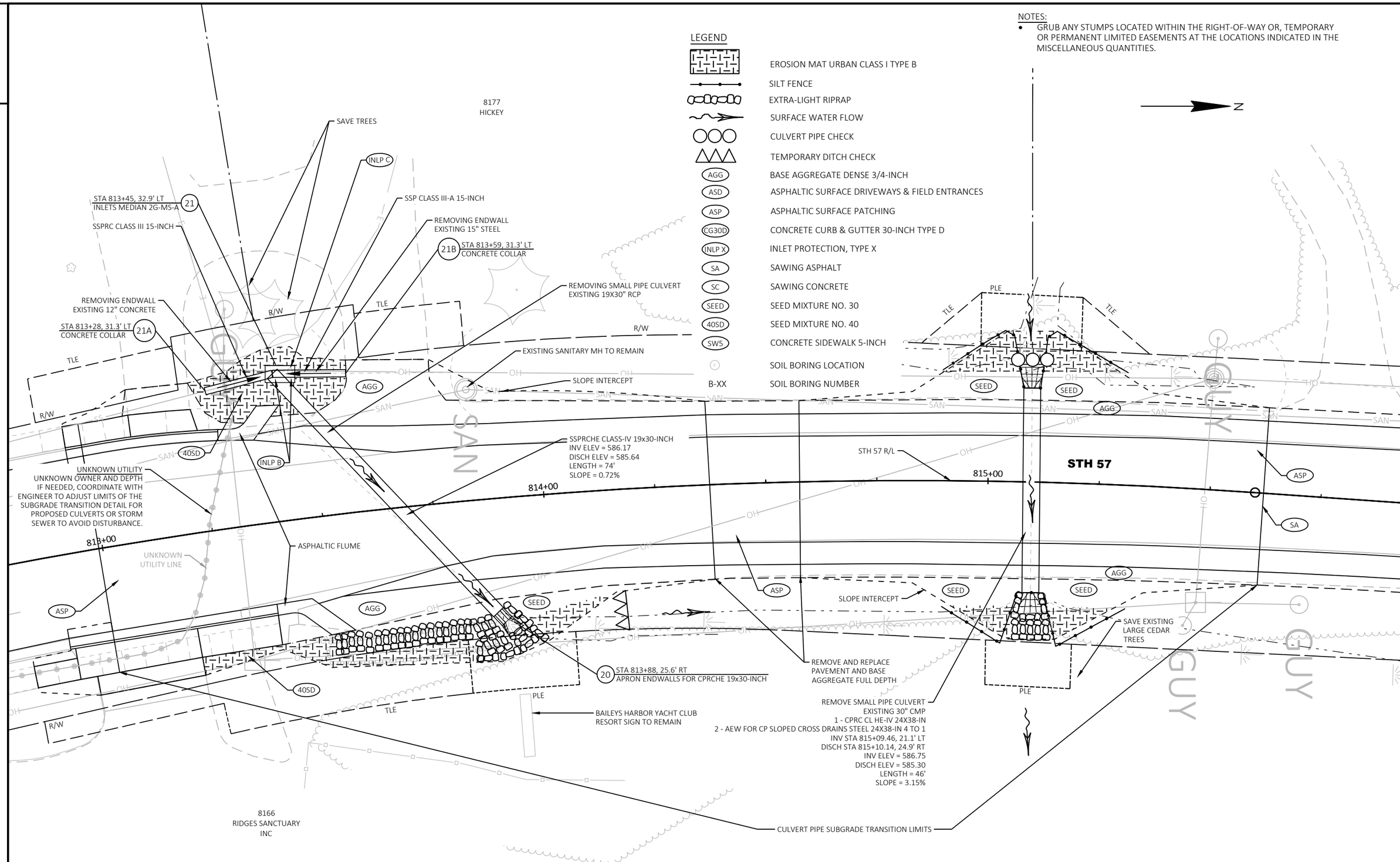

2

PROJECT NO: 4150-14-71	HWY: STH 57	COUNTY: DOOR	PLAN DETAILS - STORM SEWER AND CULVERT REPLACEMENTS STA 813+64, STA 815+10	SHEET 15	E

2

RELOCATED HIDDEN BROOK CROSS SECTION

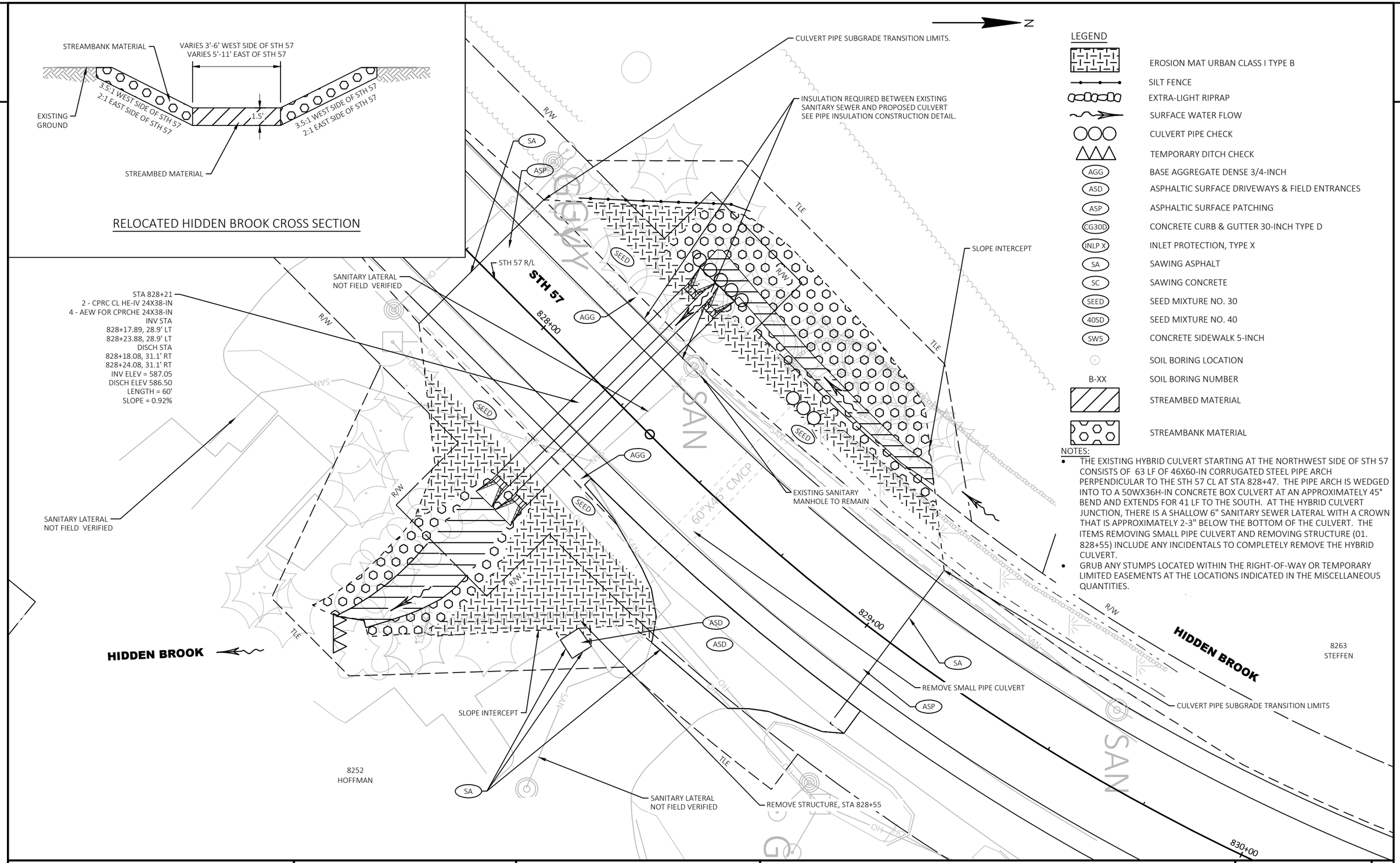

LEGEND

- EROSION MAT URBAN CLASS I TYPE B
- SILT FENCE
- EXTRA-LIGHT RIPRAP
- SURFACE WATER FLOW
- CULVERT PIPE CHECK
- TEMPORARY DITCH CHECK
- AGG — BASE AGGREGATE DENSE 3/4-INCH
- ASD — ASPHALTIC SURFACE DRIVEWAYS & FIELD ENTRANCES
- ASP — ASPHALTIC SURFACE PATCHING
- CG30D — CONCRETE CURB & GUTTER 30-INCH TYPE D
- INLP X — INLET PROTECTION, TYPE X
- SA — SAWING ASPHALT
- SC — SAWING CONCRETE
- SEED — SEED MIXTURE NO. 30
- 40SD — SEED MIXTURE NO. 40
- SW5 — CONCRETE SIDEWALK 5-INCH
- SOIL BORING LOCATION
- B-XX — SOIL BORING NUMBER
- STREAMBED MATERIAL
- STREAMBANK MATERIAL

NOTES:

- THE EXISTING HYBRID CULVERT STARTING AT THE NORTHWEST SIDE OF STH 57 CONSISTS OF 63 LF OF 46X60-IN CORRUGATED STEEL PIPE ARCH PERPENDICULAR TO THE STH 57 CL AT STA 828+47. THE PIPE ARCH IS WEDGED INTO TO A 50WX36H-IN CONCRETE BOX CULVERT AT AN APPROXIMATELY 45° BEND AND EXTENDS FOR 41 LF TO THE SOUTH. AT THE HYBRID CULVERT JUNCTION, THERE IS A SHALLOW 6" SANITARY SEWER LATERAL WITH A CROWN THAT IS APPROXIMATELY 2-3" BELOW THE BOTTOM OF THE CULVERT. THE ITEMS REMOVING SMALL PIPE CULVERT AND REMOVING STRUCTURE (01. 828+55) INCLUDE ANY INCIDENTALS TO COMPLETELY REMOVE THE HYBRID CULVERT.
- GRUB ANY STUMPS LOCATED WITHIN THE RIGHT-OF-WAY OR TEMPORARY LIMITED EASEMENTS AT THE LOCATIONS INDICATED IN THE MISCELLANEOUS QUANTITIES.

2

PROJECT NO: 4150-14-71	HWY: STH 57	COUNTY: DOOR	PLAN DETAILS - CULVERT REPLACEMENT STA 828+21 (1 OF 2)	SHEET 16	E

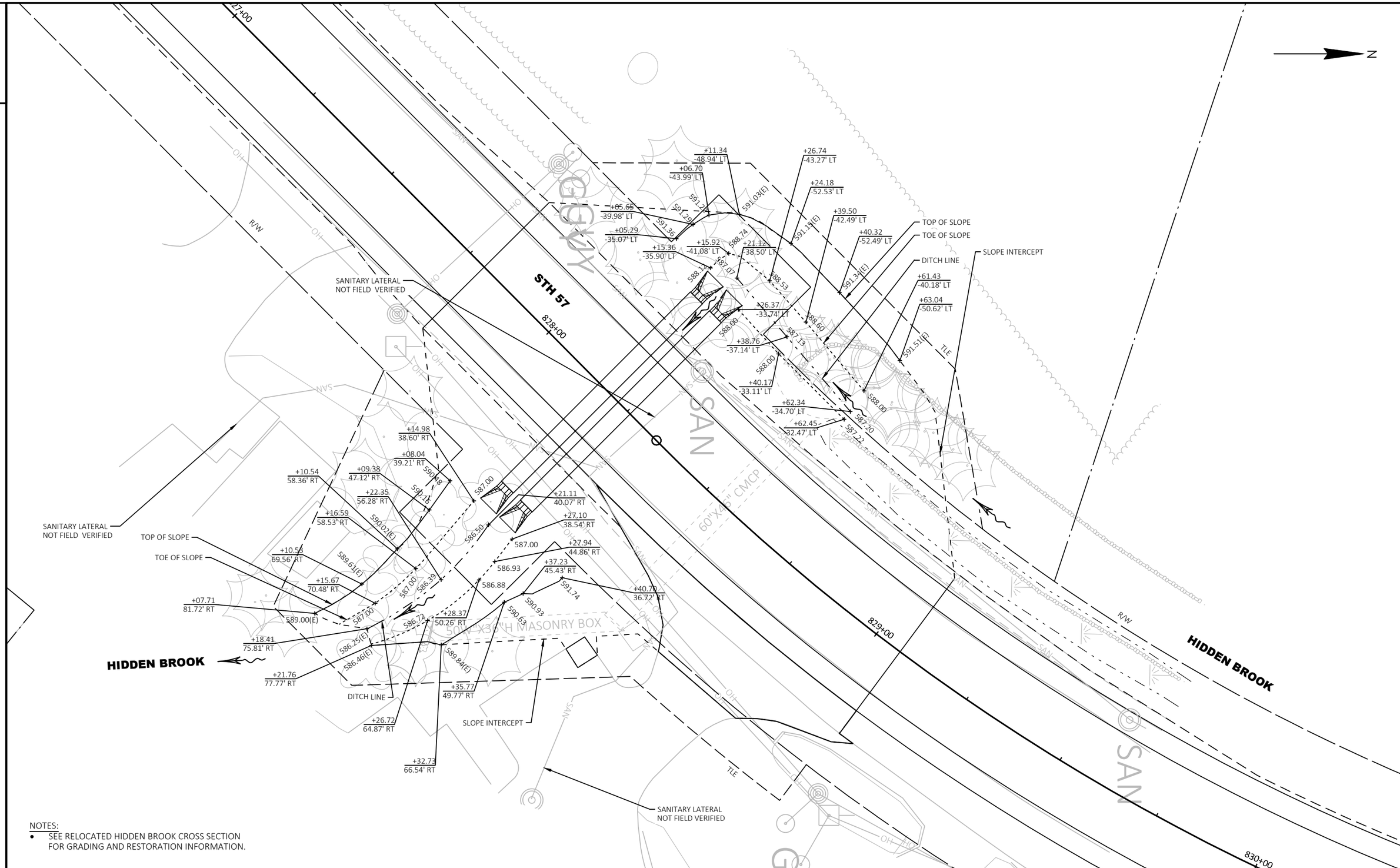

NOTES:

- SEE RELOCATED HIDDEN BROOK CROSS SECTION FOR GRADING AND RESTORATION INFORMATION.

PROJECT NO: 4150-14-71	HWY: STH 57	COUNTY: DOOR	PLAN DETAILS - CULVERT REPLACEMENT STA 828+21 (2 OF 2) GRADING DETAIL	SHEET 17	E

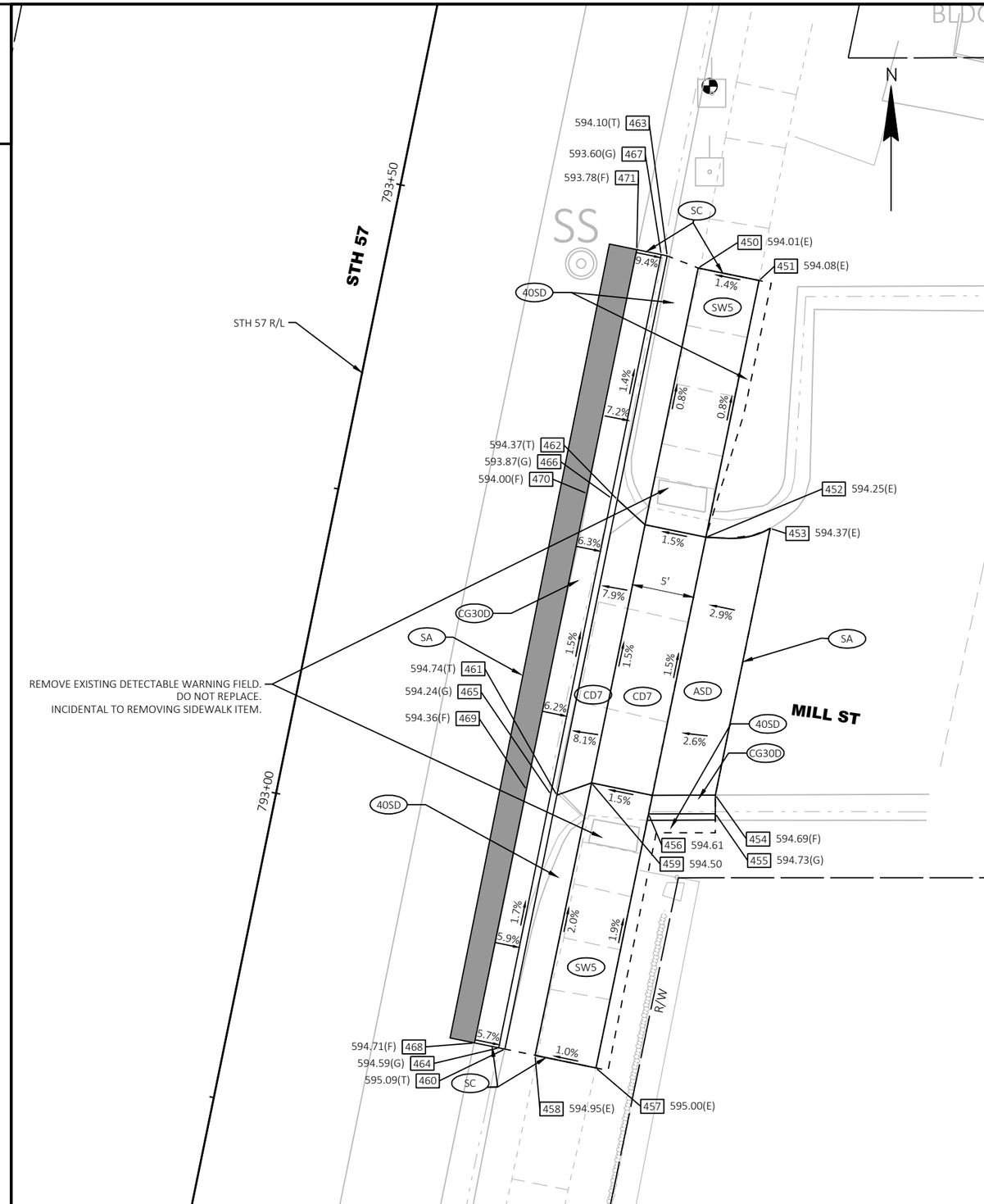

LEGEND

AGG	BASE AGGREGATE DENSE 3/4-INCH
ASD	ASPHALTIC SURFACE DRIVEWAYS AND FIELD ENTRANCES
	ASPHALTIC SURFACE PATCHING
CCP	CONCRETE CURB PEDESTRIAN
CD7	CONCRETE DRIVEWAY 7-INCH ON 6" BASE AGGREGATE DENSE 1 1/4-INCH
CG30D	CONCRETE CURB & GUTTER 30-INCH TYPE D
G	FLARE GRADED
P	FLARE PAVED
LL	LEVEL LANDING
MEF	MAXIMUM EXTENT FEASIBLE TECHNICAL INFEASABILITY PRESENT
RCR	REMOVE EXISTING CURB RAMP AND REPLACE WITH CONCRETE SIDEWALK OR EROSION MAT & SEED MIX NO. 40 AND CONCRETE CURB AND GUTTER
SA	SAWING ASPHALT
SC	SAWING CONCRETE
40SD	SEED MIX NO. 40, EROSION MAT CLASS 1, TYPE B, FERTILIZER TYPE B, TOPSOIL
SW5	CONCRETE SIDEWALK 5-INCH
	CURB RAMP DETECTABLE WARNING FIELD NATURAL PATINA
- - - -	SLOPE INTERCEPT

POINTS LEGEND

XXX.XX	SIDEWALK ELEVATION
XXX.XX(F)	CURB FLANGE ELEVATION
XXX.XX(G)	GUTTER FLOWLINE ELEVATION
XXX.XX(T)	TOP OF CURB ELEVATION
XXX.XX(E)	EXISTING ELEVATION
XXX	POINT NUMBER
A	CURB RADIUS POINT NUMBER

POINT TABLE

POINT NUMBER	Y	X	ELEVATION	STATION	OFFSET
450	241,620.88	559,318.12	594.01	793+48.24	24.83
451	241,619.86	559,323.02	594.08	793+48.23	29.83
452	241,599.21	559,318.74	594.25	793+27.13	29.78
453	241,599.93	559,323.93	594.37	793+28.88	34.72
454	241,578.46	559,319.51	594.69	793+06.96	34.70
455	241,576.96	559,319.51	594.73	793+05.49	35.00
456	241,576.93	559,314.12	594.61	793+04.38	29.73
457	241,556.49	559,309.88	595.00	792+83.51	29.67
458	241,557.51	559,304.99	594.95	792+83.52	24.67
459	241,579.43	559,309.53	594.50	793+05.91	24.73
460	241,558.00	559,302.55	595.09	792+83.52	22.19
461	241,578.45	559,306.74	594.74	793+04.39	22.19
462	241,602.24	559,311.61	594.37	793+28.68	22.19
463	241,621.87	559,315.63	594.10	793+48.71	22.19
464	241,558.10	559,302.06	594.59	792+83.52	21.69
465	241,578.53	559,306.24	594.24	793+04.37	21.69
466	241,602.36	559,311.12	593.87	793+28.70	21.69
467	241,621.97	559,315.14	593.60	793+48.71	21.69
468	241,558.51	559,300.10	594.71	792+83.52	19.69
469	241,578.91	559,304.28	594.36	793+04.35	19.69
470	241,602.73	559,309.16	594.00	793+28.67	19.69
471	241,622.37	559,313.18	593.78	793+48.71	19.69

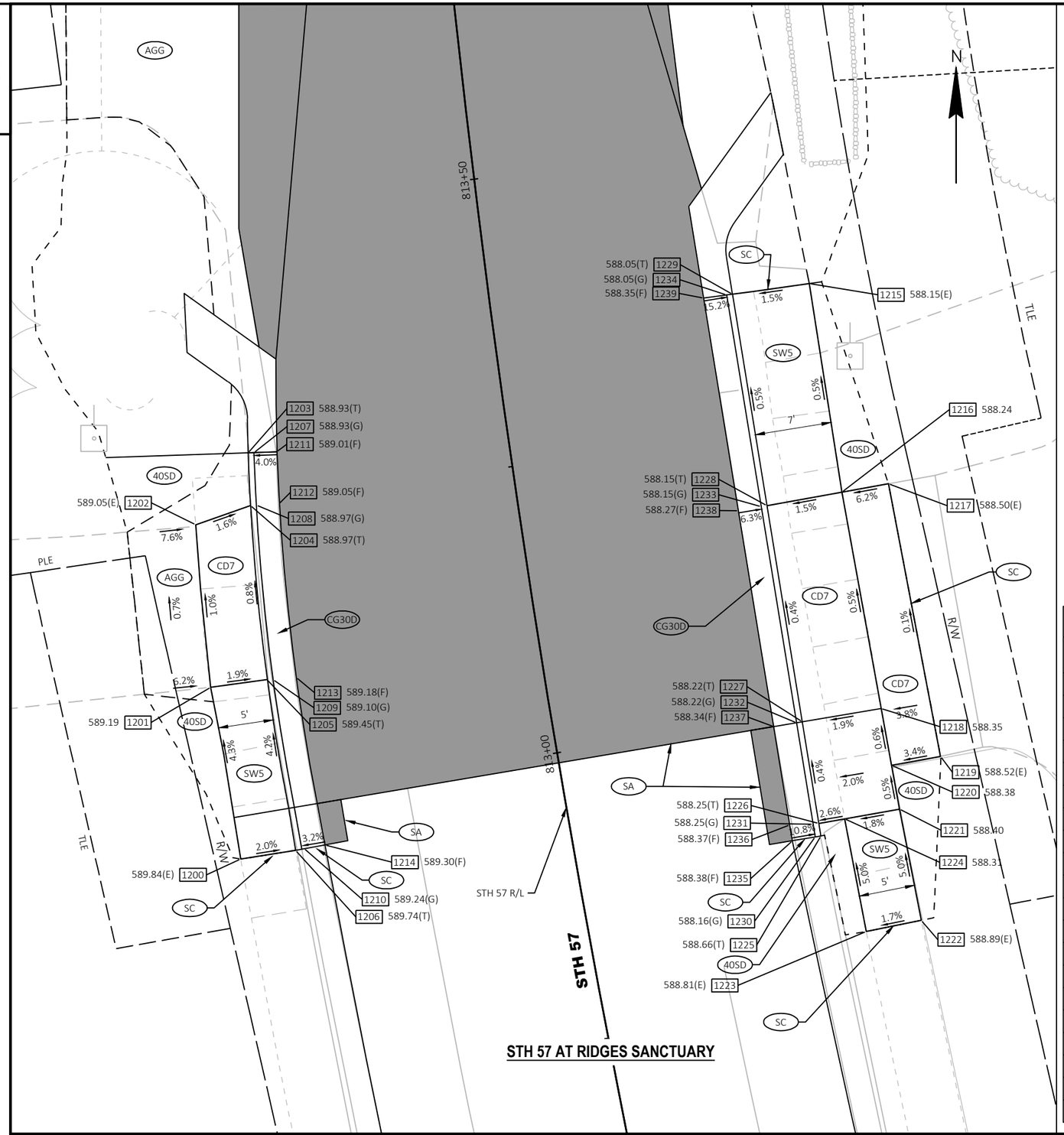

LEGEND

AGG	BASE AGGREGATE DENSE 3/4-INCH
ASD	ASPHALTIC SURFACE DRIVEWAYS AND FIELD ENTRANCES
	ASPHALTIC SURFACE PATCHING
CCP	CONCRETE CURB PEDESTRIAN
CD7	CONCRETE DRIVEWAY 7-INCH ON 6" BASE AGGREGATE DENSE 1 1/4-INCH
CG30D	CONCRETE CURB & GUTTER 30-INCH TYPE D
G	FLARE GRADED
P	FLARE PAVED
LL	LEVEL LANDING
MEF	MAXIMUM EXTENT FEASIBLE TECHNICAL INFEASABILITY PRESENT
RCR	REMOVE EXISTING CURB RAMP AND REPLACE WITH CONCRETE SIDEWALK OR EROSION MAT & SEED MIX NO. 40 AND CONCRETE CURB AND GUTTER
SA	SAWING ASPHALT
SC	SAWING CONCRETE
40SD	SEED MIX NO. 40, EROSION MAT CLASS 1, TYPE B, FERTILIZER TYPE B, TOPSOIL
SW5	CONCRETE SIDEWALK 5-INCH
	CURB RAMP DETECTABLE WARNING FIELD NATURAL PATINA
- - - -	SLOPE INTERCEPT

POINTS LEGEND

XXX.XX	SIDEWALK ELEVATION
XXX.XX(F)	CURB FLANGE ELEVATION
XXX.XX(G)	GUTTER FLOWLINE ELEVATION
XXX.XX(T)	TOP OF CURB ELEVATION
XXX.XX(E)	EXISTING ELEVATION
XXX	POINT NUMBER
A	CURB RADIUS POINT NUMBER

POINT TABLE

POINT NUMBER	Y	X	ELEVATION	STATION	OFFSET
1200	243,512.84	559,135.42	589.84	812+95.59	-28.43
1201	243,527.67	559,132.83	589.19	813+10.25	-28.58
1202	243,541.69	559,131.54	589.05	813+23.96	-27.75
1203	243,547.89	559,136.06	588.93	813+29.33	-22.39
1204	243,543.35	559,136.27	588.97	813+24.90	-22.83
1205	243,528.33	559,137.69	589.45	813+10.15	-23.67
1206	243,513.60	559,140.16	589.74	812+95.53	-23.64
1207	243,547.91	559,136.56	588.93	813+29.28	-21.89
1208	243,543.37	559,136.77	588.97	813+24.85	-22.33
1209	243,528.32	559,138.22	589.10	813+10.06	-23.15
1210	243,513.77	559,140.89	589.24	812+95.57	-22.89
1211	243,547.97	559,138.50	589.01	813+29.08	-19.97
1212	243,543.44	559,138.66	589.05	813+24.66	-20.44
1213	243,528.52	559,140.21	589.18	813+09.94	-21.15
1214	243,514.07	559,142.68	589.30	812+95.56	-21.07
1215	243,562.49	559,184.46	588.15	813+37.25	27.54
1216	243,544.50	559,187.28	588.24	813+18.58	27.81
1217	243,545.22	559,191.30	588.50	813+18.70	31.89
1218	243,525.84	559,190.65	588.35	812+99.12	28.20
1219	243,521.70	559,195.79	588.52	812+94.04	32.56

POINT TABLE

POINT NUMBER	Y	X	ELEVATION	STATION	OFFSET
1220	243,520.93	559,191.57	588.38	812+94.00	28.27
1221	243,517.16	559,192.25	588.40	812+90.06	28.29
1222	243,507.57	559,194.12	588.89	812+80.03	28.42
1223	243,506.60	559,189.38	588.81	812+79.95	23.58
1224	243,516.32	559,187.52	588.31	812+90.06	23.49
1225	243,514.83	559,185.47	588.66	812+88.93	21.21
1226	243,515.92	559,185.29	588.25	812+90.06	21.23
1227	243,524.69	559,183.86	588.22	812+99.12	21.31
1228	243,543.34	559,180.82	588.15	813+18.38	21.24
1229	243,561.57	559,177.84	588.05	813+37.22	20.86
1230	243,514.75	559,184.98	588.16	812+88.94	20.71
1231	243,515.85	559,184.80	588.25	812+90.07	20.73
1232	243,524.61	559,183.37	588.22	812+99.12	20.81
1233	243,543.25	559,180.32	588.15	813+18.37	20.74
1234	243,561.51	559,177.34	588.05	813+37.22	20.36
1235	243,514.43	559,183.00	588.38	812+88.97	18.71
1236	243,515.79	559,182.78	588.37	812+90.37	18.73
1237	243,524.27	559,181.40	588.34	812+99.12	18.81
1238	243,542.89	559,178.35	588.27	813+18.31	18.74
1239	243,561.24	559,175.36	588.35	813+37.22	18.35

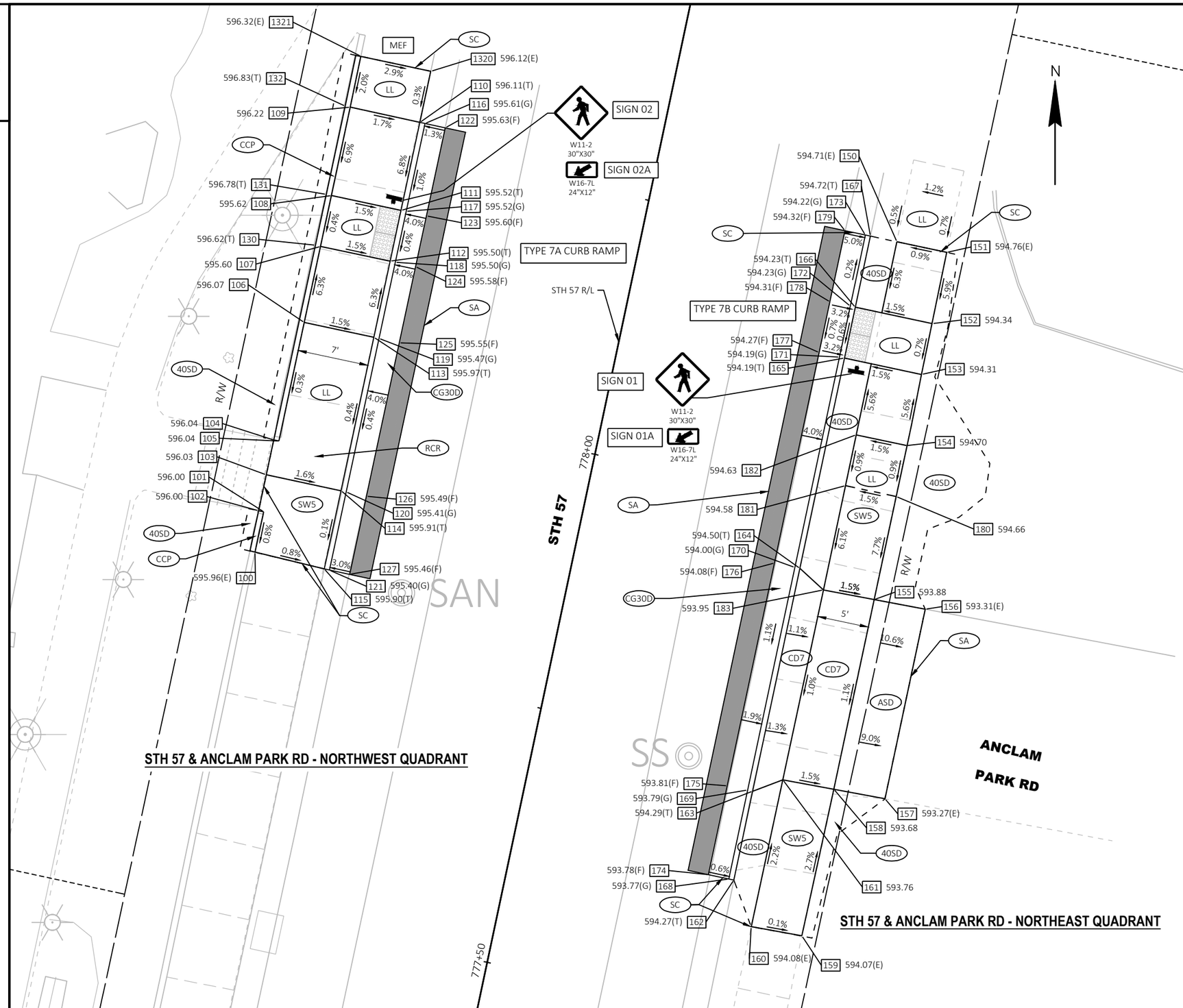

LEGEND

AGG	BASE AGGREGATE DENSE 3/4-INCH
ASD	ASPHALTIC SURFACE DRIVEWAYS AND FIELD ENTRANCES
	ASPHALTIC SURFACE PATCHING
CCP	CONCRETE CURB PEDESTRIAN
CD7	CONCRETE DRIVEWAY 7-INCH ON 6" BASE AGGREGATE DENSE 1 1/4-INCH
CG30D	CONCRETE CURB & GUTTER 30-INCH TYPE D
G	FLARE GRADED
P	FLARE PAVED
LL	LEVEL LANDING
MEF	MAXIMUM EXTENT FEASIBLE TECHNICAL INFEASABILITY PRESENT
RCR	REMOVE EXISTING CURB RAMP AND REPLACE WITH CONCRETE SIDEWALK OR EROSION MAT & SEED MIX NO. 40 AND CONCRETE CURB AND GUTTER
SA	SAWING ASPHALT
SC	SAWING CONCRETE
40SD	SEED MIX NO. 40, EROSION MAT CLASS 1, TYPE B, FERTILIZER TYPE B, TOPSOIL
SW5	CONCRETE SIDEWALK 5-INCH
	CURB RAMP DETECTABLE WARNING FIELD NATURAL PATINA
- - - -	SLOPE INTERCEPT

NOTES

1. CONTRACTOR TO FIELD VERIFY ELEVATIONS, GRADES, SLOPES, LENGTHS, AND MATCH POINTS PRIOR TO CURB RAMP CONSTRUCTION.
2. THE ENGINEER MAY ADJUST ELEVATIONS TO FIT FIELD CONDITIONS WITHIN THE CONDITIONS OF THE STANDARD DETAIL DRAWINGS.
3. DASHED LINES SHOWN FOR PROPOSED SIDEWALK ARE FOR INFORMATION ONLY AND DO NOT INDICATE EXACT JOINT LOCATIONS.
4. THE MAXIMUM GRADE BREAK BETWEEN THE GUTTER PAN AND CURB RAMP SHALL BE 11%
5. SIDEWALK AND CURB RAMP CROSS SLOPE SHALL NOT EXCEED 2%.
6. SIDEWALK AND CURB RAMP RUNNING SLOPE SHALL NOT EXCEED 8.33% (12H:1V).

POINTS LEGEND

XXX.XX	SIDEWALK ELEVATION
XXX.XX(F)	CURB FLANGE ELEVATION
XXX.XX(G)	GUTTER FLOWLINE ELEVATION
XXX.XX(T)	TOP OF CURB ELEVATION
XXX.XX(E)	EXISTING ELEVATION
XXX	POINT NUMBER
A	CURB RADIUS POINT NUMBER

MAXIMUM EXTENT FEASIBLE NOTES

	INTERSECTING ROAD--QUADRANT	REASON FOR TECHNICALLY INFEASIBLE
1.	ANCLAM PARK RD--WEST	LEVEL LANDING SLOPE EXCEEDS 2%. MATCHING EXISTING CROSS SLOPE EXCEEDS 2%.

SEE POINT TABLES ON NEXT SHEET.

2

POINT TABLE

POINT NUMBER	Y	X	ELEVATION	STATION	OFFSET
100	240,101.61	558,941.27	595.96	777+84.01	-30.06
101	240,105.48	558,942.10	596.00	777+87.97	-30.05
102	240,105.58	558,941.61	596.00	777+87.97	-30.55
103	240,109.05	558,942.35	596.03	777+91.52	-30.54
104	240,112.40	558,943.07	596.04	777+94.95	-30.53
105	240,112.30	558,943.55	596.04	777+94.95	-30.03
106	240,123.71	558,946.00	596.07	778+06.61	-30.01
107	240,131.04	558,947.58	595.60	778+14.11	-29.98
108	240,135.92	558,948.64	595.62	778+19.11	-29.96
109	240,144.44	558,950.43	596.22	778+27.81	-29.97
110	240,142.97	558,957.14	596.11	778+27.77	-23.11
111	240,134.50	558,955.33	595.52	778+19.10	-23.12
112	240,129.61	558,954.28	595.50	778+14.10	-23.14
113	240,122.28	558,952.71	595.97	778+06.60	-23.15
114	240,107.51	558,949.54	595.91	777+91.50	-23.18
115	240,099.98	558,947.93	595.90	777+83.80	-23.20
116	240,142.87	558,957.62	595.61	778+27.77	-22.61
117	240,134.40	558,955.81	595.52	778+19.10	-22.63
118	240,129.51	558,954.76	595.50	778+14.10	-22.64
119	240,122.17	558,953.19	595.47	778+06.60	-22.65
120	240,107.40	558,950.03	595.41	777+91.50	-22.68
121	240,099.88	558,948.42	595.40	777+83.80	-22.70
122	240,142.45	558,959.58	595.63	778+27.76	-20.61
123	240,133.98	558,957.77	595.60	778+19.10	-20.63
124	240,129.09	558,956.72	595.58	778+14.10	-20.64
125	240,121.76	558,955.15	595.55	778+06.60	-20.65
126	240,106.99	558,951.99	595.49	777+91.50	-20.68
127	240,099.46	558,950.38	595.46	777+83.80	-20.70

POINT TABLE

POINT NUMBER	Y	X	ELEVATION	STATION	OFFSET
128	240,123.80	558,945.50	596.60	778+06.60	-30.51
129	240,123.80	558,945.50	596.60	778+06.60	-30.51
130	240,131.15	558,947.08	596.62	778+14.12	-30.50
131	240,136.04	558,948.12	596.78	778+19.11	-30.49
132	240,144.54	558,949.94	596.83	778+27.81	-30.47

POINT TABLE

POINT NUMBER	Y	X	ELEVATION	STATION	OFFSET
150	240,131.48	559,003.05	594.71	778+26.05	24.19
151	240,130.46	559,007.86	594.76	778+26.05	29.11
152	240,123.60	559,006.47	594.34	778+19.05	29.17
153	240,118.71	559,005.43	594.31	778+14.05	29.17
154	240,111.86	559,003.97	594.70	778+07.05	29.16
155	240,097.03	559,000.87	593.88	777+91.90	29.20
156	240,096.10	559,005.79	593.31	777+92.01	34.20
157	240,077.85	559,001.91	593.27	777+73.35	34.20
158	240,078.77	558,996.99	593.68	777+73.22	29.20
159	240,064.66	558,993.91	594.07	777+58.78	29.10
160	240,065.54	558,989.04	594.08	777+58.64	24.15
161	240,079.68	558,992.08	593.76	777+73.09	24.20
162	240,070.03	558,987.36	594.27	777+62.68	21.58
163	240,078.58	558,989.17	594.29	777+71.42	21.58
164	240,100.03	558,993.72	594.50	777+93.35	21.59
165	240,120.29	558,998.02	594.19	778+14.05	21.59
166	240,125.18	558,999.06	594.23	778+19.05	21.60
167	240,132.02	559,000.51	594.72	778+26.05	21.59

POINT TABLE

POINT NUMBER	Y	X	ELEVATION	STATION	OFFSET
168	240,070.13	558,986.87	593.77	777+62.68	21.08
169	240,078.69	558,988.68	593.79	777+71.43	21.08
170	240,100.13	558,993.23	594.00	777+93.35	21.09
171	240,120.38	558,997.53	594.19	778+14.05	21.09
172	240,125.28	558,998.57	594.23	778+19.06	21.09
173	240,132.13	559,000.02	594.22	778+26.05	21.09
174	240,070.55	558,984.91	593.78	777+62.68	19.08
175	240,079.10	558,986.73	593.81	777+71.42	19.08
176	240,100.55	558,991.28	594.08	777+93.35	19.09
177	240,120.81	558,995.58	594.27	778+14.06	19.09
178	240,125.70	558,996.61	594.31	778+19.06	19.09
179	240,132.54	558,998.06	594.32	778+26.05	19.09
180	240,106.95	559,003.00	594.66	778+02.04	29.22
181	240,108.00	558,998.11	594.58	778+02.05	24.23
182	240,112.89	558,999.14	594.63	778+07.05	24.22
183	240,097.96	558,995.99	593.95	777+91.79	24.23
1320	240,147.90	558,958.19	596.12	778+32.81	-23.11
1321	240,149.33	558,951.45	596.32	778+32.81	-29.99

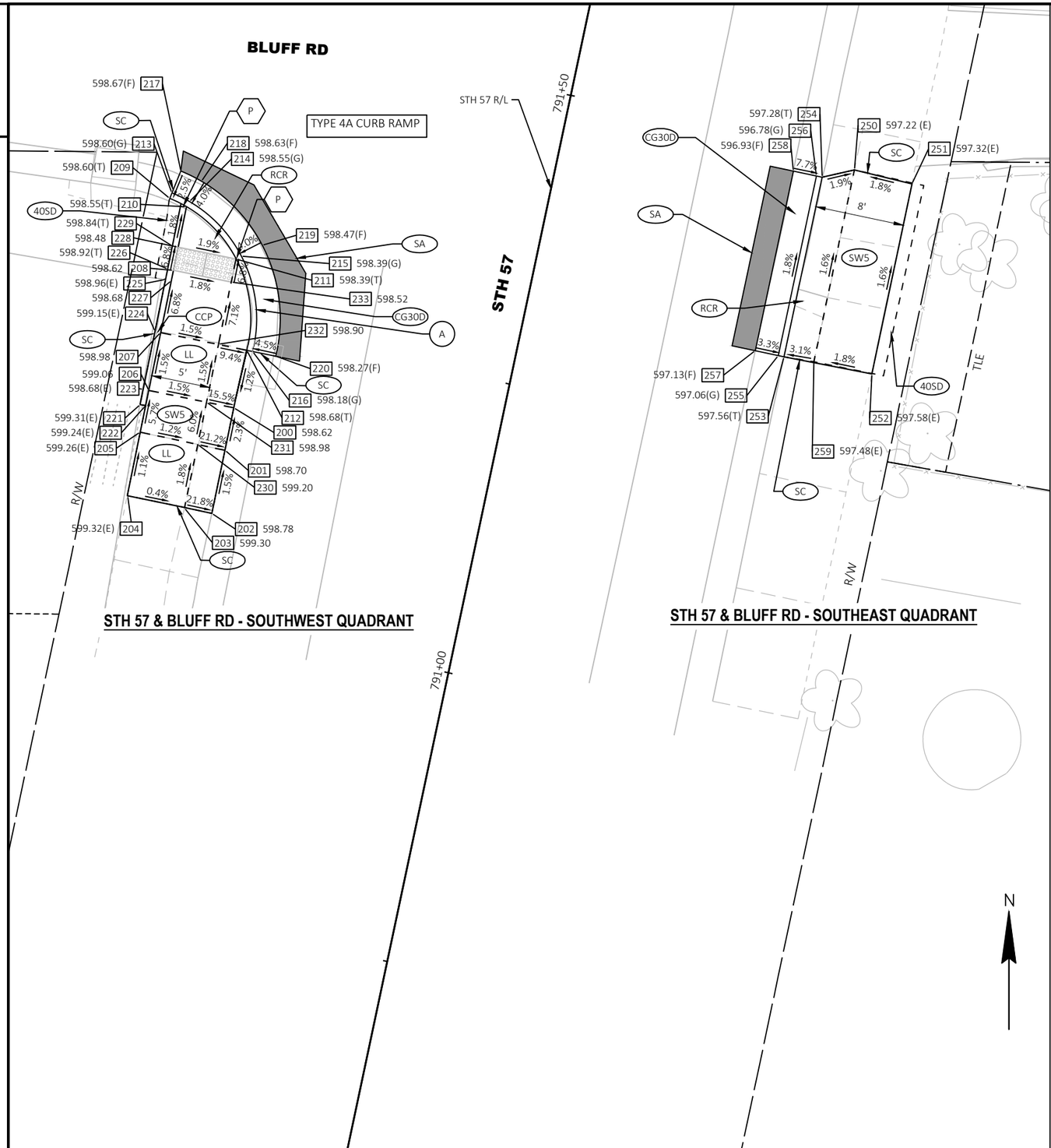

LEGEND

AGG	BASE AGGREGATE DENSE 3/4-INCH
ASD	ASPHALTIC SURFACE DRIVEWAYS AND FIELD ENTRANCES
	ASPHALTIC SURFACE PATCHING
CCP	CONCRETE CURB PEDESTRIAN
CD7	CONCRETE DRIVEWAY 7-INCH ON 6" BASE AGGREGATE DENSE 1 1/4-INCH
CG30D	CONCRETE CURB & GUTTER 30-INCH TYPE D
G	FLARE GRADED
P	FLARE PAVED
LL	LEVEL LANDING
MEF	MAXIMUM EXTENT FEASIBLE TECHNICAL INFEASABILITY PRESENT
RCR	REMOVE EXISTING CURB RAMP AND REPLACE WITH CONCRETE SIDEWALK OR EROSION MAT & SEED MIX NO. 40 AND CONCRETE CURB AND GUTTER
SA	SAWING ASPHALT
SC	SAWING CONCRETE
40SD	SEED MIX NO. 40, EROSION MAT CLASS 1, TYPE B, FERTILIZER TYPE B, TOPSOIL
SW5	CONCRETE SIDEWALK 5-INCH
	CURB RAMP DETECTABLE WARNING FIELD NATURAL PATINA
— — — —	SLOPE INTERCEPT

POINTS LEGEND

XXX.XX	SIDEWALK ELEVATION
XXX.XX(F)	CURB FLANGE ELEVATION
XXX.XX(G)	GUTTER FLOWLINE ELEVATION
XXX.XX(T)	TOP OF CURB ELEVATION
XXX.XX(E)	EXISTING ELEVATION
XXX	POINT NUMBER
A	CURB RADIUS POINT NUMBER

NOTES

1. CONTRACTOR TO FIELD VERIFY ELEVATIONS, GRADES, SLOPES, LENGTHS, AND MATCH POINTS PRIOR TO CURB RAMP CONSTRUCTION.
2. THE ENGINEER MAY ADJUST ELEVATIONS TO FIT FIELD CONDITIONS WITHIN THE CONDITIONS OF THE STANDARD DETAIL DRAWINGS.
3. DASHED LINES SHOWN FOR PROPOSED SIDEWALK ARE FOR INFORMATION ONLY AND DO NOT INDICATE EXACT JOINT LOCATIONS.
4. THE MAXIMUM GRADE BREAK BETWEEN THE GUTTER PAN AND CURB RAMP SHALL BE 11%
5. SIDEWALK AND CURB RAMP CROSS SLOPE SHALL NOT EXCEED 2%.
6. SIDEWALK AND CURB RAMP RUNNING SLOPE SHALL NOT EXCEED 8.33% (12H:1V).

POINT TABLE

POINT NUMBER	Y	X	ELEVATION	STATION	OFFSET
200	241,405.20	559,225.38	598.62	791+18.18	-22.45
201	241,401.60	559,224.64	598.70	791+14.51	-22.43
202	241,396.26	559,223.53	598.78	791+09.05	-22.41
203	241,396.73	559,221.21	599.30	791+09.03	-24.78
204	241,397.75	559,216.36	599.32	791+09.02	-29.74
205	241,403.14	559,217.46	599.26	791+14.52	-29.78
206	241,406.67	559,218.18	599.06	791+18.13	-29.80
207	241,411.57	559,219.19	598.98	791+23.13	-29.84
208	241,416.85	559,220.27	598.62	791+28.52	-29.87
209	241,422.93	559,219.95	598.60	791+34.40	-31.44
210	241,422.23	559,221.37	598.55	791+34.01	-29.91
211	241,417.81	559,225.57	598.39	791+30.56	-24.88
212	241,410.07	559,226.49	598.68	791+23.18	-22.38
213	241,423.39	559,220.14	598.60	791+34.89	-31.35
214	241,422.66	559,221.63	598.55	791+34.49	-29.75
215	241,418.04	559,226.02	598.39	791+30.88	-24.50
216	241,409.97	559,226.98	598.18	791+23.18	-21.88
217	241,425.24	559,220.90	598.67	791+36.86	-31.00
218	241,424.38	559,222.64	598.63	791+36.38	-29.12
219	241,418.96	559,227.79	598.47	791+32.15	-22.95
220	241,409.57	559,228.94	598.27	791+23.20	-19.88
221	241,405.48	559,217.45	599.31	791+16.81	-30.27
222	241,405.38	559,217.92	599.24	791+16.82	-29.79
223	241,406.76	559,217.71	598.68	791+18.12	-30.28
224	241,411.67	559,218.71	599.15	791+23.13	-30.32

POINT TABLE

POINT NUMBER	Y	X	ELEVATION	STATION	OFFSET
225	241,416.07	559,219.61	598.96	791+27.62	-30.36
226	241,416.95	559,219.79	598.92	791+28.52	-30.36
227	241,415.97	559,220.09	598.68	791+27.62	-29.86
228	241,418.81	559,220.67	598.48	791+30.52	-29.88
229	241,418.91	559,220.19	598.84	791+30.51	-30.38
230	241,402.09	559,222.33	599.20	791+14.51	-24.79
231	241,405.67	559,223.08	598.98	791+18.17	-24.80
232	241,410.58	559,224.09	598.90	791+23.18	-24.84
233	241,415.85	559,225.17	598.52	791+28.56	-24.87

POINT TABLE

POINT NUMBER	Y	X	ELEVATION	STATION	OFFSET
250	241,425.36	559,277.99	597.22	791+48.81	24.83
251	241,424.16	559,282.87	597.32	791+48.66	29.85
252	241,408.08	559,279.47	597.58	791+32.22	29.86
253	241,409.52	559,272.03	597.56	791+32.08	22.28
254	241,424.72	559,275.26	597.28	791+47.63	22.29
255	241,409.62	559,271.54	597.06	791+32.09	21.78
256	241,424.83	559,274.77	596.78	791+47.63	21.79
257	241,410.04	559,269.58	597.13	791+32.09	19.78
258	241,425.24	559,272.81	596.93	791+47.63	19.79
259	241,409.10	559,274.55	597.48	791+32.19	24.84

RADIUS TABLE

POINT NUMBER	Y	X	RADIUS	STATION	OFFSET
A	241,412.74	559,215.81	11.5'	791+23.57	-33.38

2

NOTES

1. CONTRACTOR TO FIELD VERIFY ELEVATIONS, GRADES, SLOPES, LENGTHS, AND MATCH POINTS PRIOR TO CURB RAMP CONSTRUCTION.
2. THE ENGINEER MAY ADJUST ELEVATIONS TO FIT FIELD CONDITIONS WITHIN THE CONDITIONS OF THE STANDARD DETAIL DRAWINGS.
3. DASHED LINES SHOWN FOR PROPOSED SIDEWALK ARE FOR INFORMATION ONLY AND DO NOT INDICATE EXACT JOINT LOCATIONS.
4. THE MAXIMUM GRADE BREAK BETWEEN THE GUTTER PAN AND CURB RAMP SHALL BE 11%
5. SIDEWALK AND CURB RAMP CROSS SLOPE SHALL NOT EXCEED 2%.
6. SIDEWALK AND CURB RAMP RUNNING SLOPE SHALL NOT EXCEED 8.33% (12H:1V).

LEGEND

AGG	BASE AGGREGATE DENSE 3/4-INCH
ASD	ASPHALTIC SURFACE DRIVEWAYS AND FIELD ENTRANCES
	ASPHALTIC SURFACE PATCHING
CCP	CONCRETE CURB PEDESTRIAN
CD7	CONCRETE DRIVEWAY 7-INCH ON 6" BASE AGGREGATE DENSE 1 1/4-INCH
CG30D	CONCRETE CURB & GUTTER 30-INCH TYPE D
G	FLARE GRADED
P	FLARE PAVED
LL	LEVEL LANDING
MEF	MAXIMUM EXTENT FEASIBLE TECHNICAL INFEASABILITY PRESENT
RCR	REMOVE EXISTING CURB RAMP AND REPLACE WITH CONCRETE SIDEWALK OR EROSION MAT & SEED MIX NO. 40 AND CONCRETE CURB AND GUTTER
SA	SAWING ASPHALT
SC	SAWING CONCRETE
40SD	SEED MIX NO. 40, EROSION MAT CLASS 1, TYPE B, FERTILIZER TYPE B, TOPSOIL
SW5	CONCRETE SIDEWALK 5-INCH
	CURB RAMP DETECTABLE WARNING FIELD NATURAL PATINA
- - - -	SLOPE INTERCEPT

POINTS LEGEND

XXX.XX	SIDEWALK ELEVATION
XXX.XX(F)	CURB FLANGE ELEVATION
XXX.XX(G)	GUTTER FLOWLINE ELEVATION
XXX.XX(T)	TOP OF CURB ELEVATION
XXX.XX(E)	EXISTING ELEVATION
XXX	POINT NUMBER
A	CURB RADIUS POINT NUMBER

MAXIMUM EXTENT FEASIBLE NOTES

	INTERSECTING ROAD--QUADRANT	REASON FOR TECHNICALLY INFEASIBLE
1.	BLUFF RD--NORTHWEST	NO LEVEL LANDING ADJACENT TO RUNNING SLOPE GREATER THAN 5%. MATCHING EXISTING CROSS SLOPE EXCEEDS 2%.
2.	BLUFF RD--NORTHEAST	MATCHING EXISTING CROSS SLOPE EXCEEDS 2%.

SEE POINT TABLES ON NEXT SHEET.

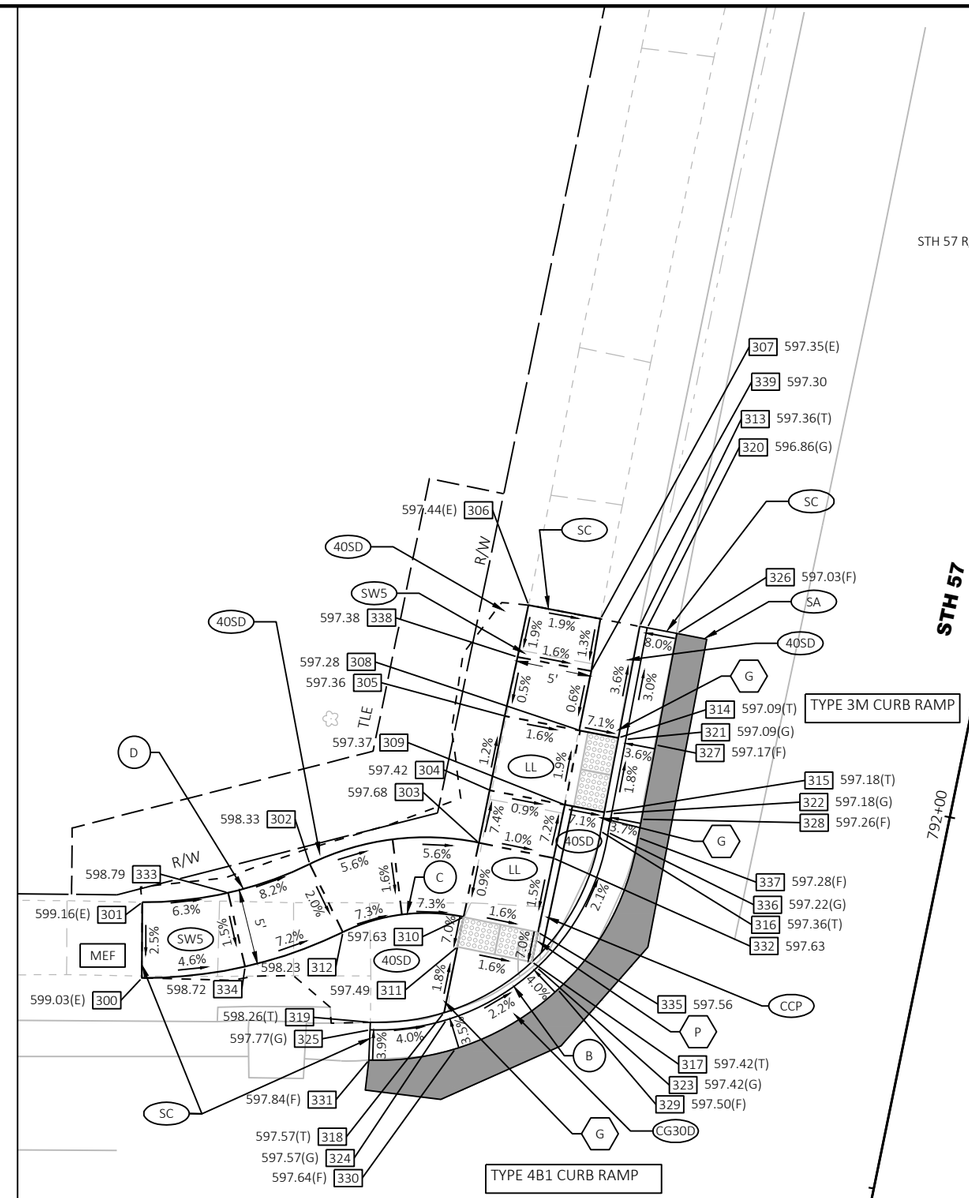

STH 57 & BLUFF RD - NORTHWEST QUADRANT

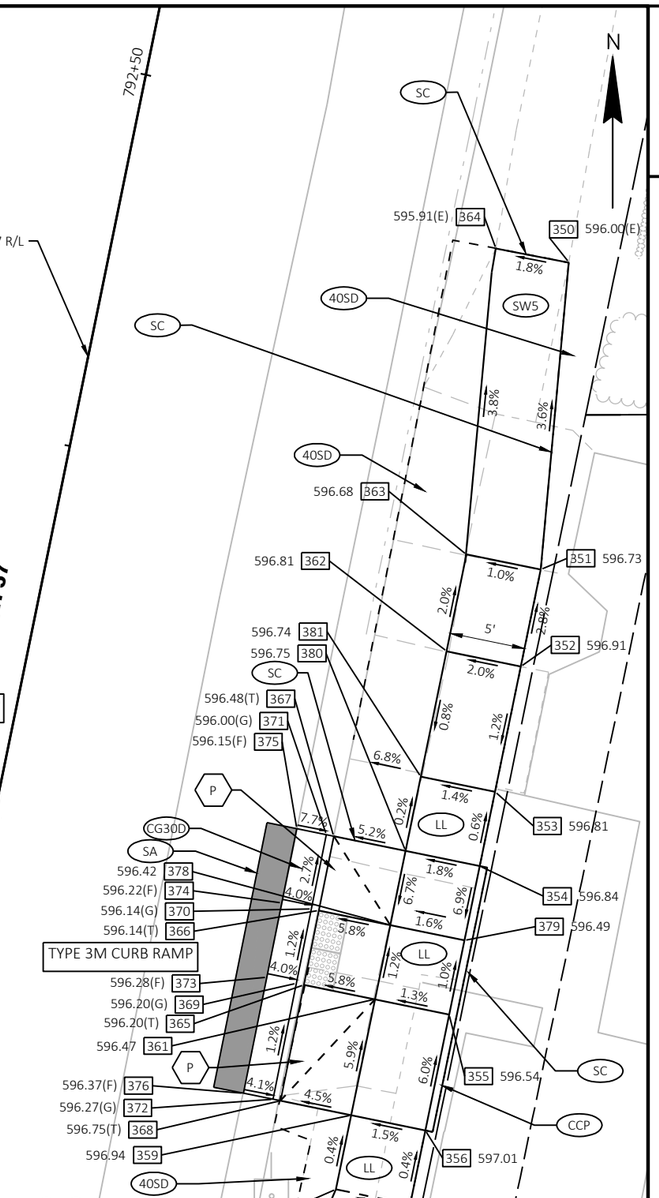

STH 57 & BLUFF RD - NORTHEAST QUADRANT

POINT TABLE					
POINT NUMBER	Y	X	ELEVATION	STATION	OFFSET
300	241,470.03	559,210.73	599.03	791+78.92	-50.11
301	241,475.03	559,210.76	599.16	791+83.82	-51.09
302	241,477.55	559,221.82	598.33	791+88.50	-40.76
303	241,478.95	559,232.97	597.68	791+92.12	-30.11
304	241,482.40	559,233.74	597.42	791+95.65	-30.05
305	241,487.30	559,234.75	597.36	792+00.65	-30.05
306	241,494.63	559,236.26	597.44	792+08.14	-30.05
307	241,493.73	559,241.00	597.35	792+08.20	-25.22
308	241,486.37	559,239.60	597.28	792+00.71	-25.12
309	241,481.46	559,238.64	597.37	791+95.71	-25.06
310	241,474.05	559,231.97	597.63	791+87.12	-30.11
311	241,472.09	559,231.57	597.49	791+85.12	-30.11
312	241,473.05	559,224.01	598.23	791+84.53	-37.72
313	241,493.23	559,243.59	597.36	792+08.23	-22.57
314	241,485.87	559,242.19	597.09	792+00.74	-22.48
315	241,480.96	559,241.25	597.18	791+95.75	-22.41
316	241,479.71	559,241.01	597.36	791+94.48	-22.40
317	241,471.09	559,236.47	597.42	791+85.12	-25.11
318	241,467.75	559,230.68	597.57	791+80.68	-30.11
319	241,467.11	559,225.81	598.26	791+79.08	-34.75
320	241,493.13	559,244.09	596.86	792+08.24	-22.07
321	241,485.78	559,242.68	597.09	792+00.75	-21.98
322	241,480.87	559,241.74	597.18	791+95.75	-21.91
323	241,470.72	559,236.81	597.42	791+84.83	-24.70
324	241,467.27	559,230.84	597.57	791+80.24	-29.86
325	241,466.61	559,225.79	597.77	791+78.58	-34.67
326	241,492.76	559,246.05	597.03	792+08.27	-20.07
327	241,485.40	559,244.64	597.17	792+00.78	-19.98
328	241,480.49	559,243.68	597.26	791+95.78	-19.93
329	241,469.26	559,238.18	597.50	791+83.67	-23.07
330	241,465.35	559,231.41	597.64	791+78.48	-28.92
331	241,464.61	559,225.72	597.84	791+76.61	-34.34
332	241,477.95	559,237.87	597.63	791+92.12	-25.11
333	241,475.65	559,216.44	598.79	791+85.57	-45.66
334	241,470.78	559,217.54	598.72	791+81.01	-43.59
335	241,473.05	559,236.87	597.56	791+87.12	-25.11
336	241,479.63	559,241.50	597.22	791+94.49	-21.90
337	241,479.29	559,243.47	597.28	791+94.56	-19.90
338	241,491.21	559,235.52	597.38	792+04.64	-30.08
339	241,490.28	559,240.39	597.30	792+04.70	-25.12

POINT TABLE					
POINT NUMBER	Y	X	ELEVATION	STATION	OFFSET
350	241,517.23	559,301.98	596.00	792+43.46	29.81
351	241,496.97	559,300.14	596.73	792+23.25	32.07
352	241,490.57	559,298.83	596.91	792+16.71	32.07
353	241,482.31	559,297.13	596.81	792+08.28	32.06
354	241,477.41	559,296.12	596.84	792+03.28	32.05
355	241,467.62	559,294.10	596.54	791+93.28	32.04
356	241,459.98	559,292.53	597.01	791+85.47	32.03
357	241,443.52	559,286.79	597.09	791+68.21	29.72
358	241,444.58	559,281.64	596.91	791+68.21	24.46
359	241,460.98	559,287.63	596.94	791+85.48	27.03
360	241,456.08	559,286.62	596.95	791+80.48	27.03
361	241,468.62	559,289.20	596.47	791+93.28	27.04
362	241,491.58	559,293.93	596.81	792+16.72	27.07
363	241,497.98	559,295.24	596.68	792+23.25	27.07
364	241,518.17	559,297.18	595.91	792+43.41	24.91
365	241,469.58	559,284.51	596.20	791+93.28	22.25
366	241,474.48	559,285.50	596.14	791+98.28	22.24
367	241,479.39	559,286.48	596.48	792+03.28	22.21
368	241,461.93	559,282.97	596.75	791+85.48	22.28
369	241,469.68	559,284.02	596.20	791+93.27	21.75
370	241,474.58	559,285.01	596.14	791+98.27	21.74
371	241,479.48	559,286.00	596.00	792+03.27	21.73
372	241,462.03	559,282.48	596.27	791+85.47	21.78
373	241,470.08	559,282.06	596.28	791+93.27	19.75
374	241,474.98	559,283.05	596.22	791+98.27	19.74
375	241,479.88	559,284.04	596.15	792+03.27	19.73
376	241,462.43	559,280.52	596.37	791+85.47	19.78
377	241,455.08	559,291.52	597.03	791+80.48	32.03
378	241,473.52	559,290.21	596.42	791+98.28	27.05
379	241,472.52	559,295.10	596.49	791+98.28	32.04
380	241,478.42	559,291.22	596.75	792+03.28	27.05
381	241,483.31	559,292.23	596.74	792+08.28	27.06

RADIUS TABLE					
POINT NUMBER	Y	X	RADIUS	STATION	OFFSET
B	241,481.92	559,226.35	15.32'	791+93.70	-37.20
C	241,461.81	559,229.47	12.5'	791+74.62	-30.11
D	241,500.03	559,210.90	25'	792+08.34	-55.97

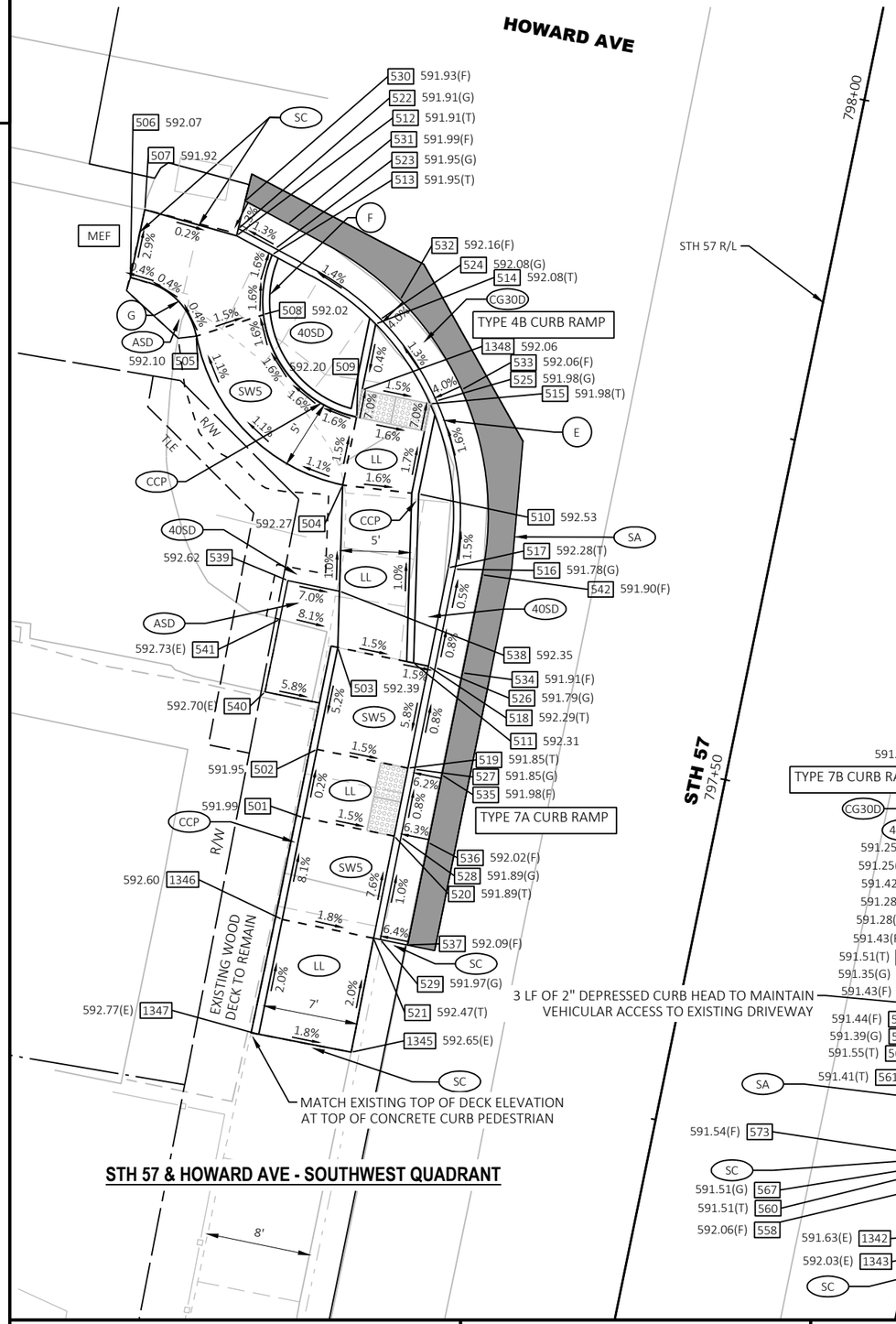

NOTES

1. CONTRACTOR TO FIELD VERIFY ELEVATIONS, GRADES, SLOPES, LENGTHS, AND MATCH POINTS PRIOR TO CURB RAMP CONSTRUCTION.
2. THE ENGINEER MAY ADJUST ELEVATIONS TO FIT FIELD CONDITIONS WITHIN THE CONDITIONS OF THE STANDARD DETAIL DRAWINGS.
3. DASHED LINES SHOWN FOR PROPOSED SIDEWALK ARE FOR INFORMATION ONLY AND DO NOT INDICATE EXACT JOINT LOCATIONS.
4. THE MAXIMUM GRADE BREAK BETWEEN THE GUTTER PAN AND CURB RAMP SHALL BE 11%
5. SIDEWALK AND CURB RAMP CROSS SLOPE SHALL NOT EXCEED 2%.
6. SIDEWALK AND CURB RAMP RUNNING SLOPE SHALL NOT EXCEED 8.33% (12H:1V).

POINTS LEGEND

XXX.XX	SIDEWALK ELEVATION
XXX.XX(F)	CURB FLANGE ELEVATION
XXX.XX(G)	GUTTER FLOWLINE ELEVATION
XXX.XX(T)	TOP OF CURB ELEVATION
XXX.XX(E)	EXISTING ELEVATION
[XXX]	POINT NUMBER
(A)	CURB RADIUS POINT NUMBER

MAXIMUM EXTENT FEASIBLE NOTES

	INTERSECTING ROAD--QUADRANT	REASON FOR TECHNICALLY INFEASIBLE
1.	HOWARD AV--SOUTHEAST	MATCHING CROSS SLOPE AT SOUTH END EXCEEDS 2.0%.
2.	HOWARD AV--SOUTHWEST	MATCHING EXISTING CROSS SLOPE AT WEST END EXCEEDS 2%.

LEGEND

AGG	BASE AGGREGATE DENSE 3/4-INCH
ASD	ASPHALTIC SURFACE DRIVEWAYS AND FIELD ENTRANCES
	ASPHALTIC SURFACE PATCHING
CCP	CONCRETE CURB PEDESTRIAN
CD7	CONCRETE DRIVEWAY 7-INCH ON 6" BASE AGGREGATE DENSE 1 1/4-INCH
CG30D	CONCRETE CURB & GUTTER 30-INCH TYPE D
G	FLARE GRADED
P	FLARE PAVED
LL	LEVEL LANDING
MEF	MAXIMUM EXTENT FEASIBLE TECHNICAL INFEASABILITY PRESENT
RCR	REMOVE EXISTING CURB RAMP AND REPLACE WITH CONCRETE SIDEWALK OR EROSION MAT & SEED MIX NO. 40 AND CONCRETE CURB AND GUTTER
SA	SAWING ASPHALT
SC	SAWING CONCRETE
40SD	SEED MIX NO. 40, EROSION MAT CLASS 1, TYPE B, FERTILIZER TYPE B, TOPSOIL
SW5	CONCRETE SIDEWALK 5-INCH
	CURB RAMP DETECTABLE WARNING FIELD NATURAL PATINA
- - - -	SLOPE INTERCEPT

SEE POINT TABLES ON NEXT SHEET.

2

POINT TABLE

POINT NUMBER	Y	X	ELEVATION	STATION	OFFSET
501	242,016.74	559,343.94	591.99	797+41.24	-29.29
502	242,021.64	559,344.94	591.95	797+46.24	-29.29
503	242,028.99	559,346.45	592.39	797+53.74	-29.29
504	242,040.69	559,346.80	592.27	797+65.27	-31.29
505	242,051.41	559,336.24	592.10	797+73.66	-43.79
506	242,055.60	559,331.49	592.07	797+76.80	-49.28
507	242,060.54	559,332.53	591.92	797+81.86	-49.25
508	242,052.96	559,341.06	592.02	797+76.14	-39.37
509	242,045.59	559,347.80	592.20	797+70.27	-31.29
510	242,040.05	559,352.28	592.53	797+65.74	-25.79
511	242,027.86	559,351.91	592.31	797+53.73	-23.71
512	242,058.66	559,339.15	591.91	797+81.34	-42.39
513	242,057.28	559,341.71	591.95	797+80.51	-39.61
514	242,052.29	559,349.18	592.08	797+77.11	-31.29
515	242,046.54	559,353.10	591.98	797+72.27	-26.29
516	242,034.63	559,354.90	591.78	797+60.96	-22.13
517	242,034.73	559,354.41	592.28	797+60.95	-22.63
518	242,027.64	559,352.98	592.29	797+53.73	-22.62
519	242,020.30	559,351.50	591.85	797+46.24	-22.60
520	242,015.40	559,350.51	591.89	797+41.24	-22.58
521	242,008.04	559,349.02	592.47	797+33.73	-22.56
522	242,059.16	559,339.27	591.91	797+81.86	-42.37
523	242,057.72	559,341.95	591.95	797+80.98	-39.46
524	242,052.64	559,349.53	592.08	797+77.53	-31.01
525	242,046.74	559,353.56	591.98	797+72.56	-25.88
526	242,027.54	559,353.47	591.79	797+53.73	-22.12

POINT TABLE

POINT NUMBER	Y	X	ELEVATION	STATION	OFFSET
527	242,020.20	559,351.99	591.85	797+46.24	-22.10
528	242,015.30	559,351.00	591.89	797+41.24	-22.08
529	242,007.94	559,349.51	591.97	797+33.73	-22.06
530	242,061.17	559,339.77	591.93	797+83.92	-42.29
531	242,059.50	559,342.86	591.99	797+82.91	-38.93
532	242,054.04	559,350.95	592.16	797+79.19	-29.90
533	242,047.56	559,355.39	592.06	797+73.72	-24.26
534	242,027.15	559,355.43	591.91	797+53.74	-20.12
535	242,019.80	559,353.95	591.98	797+46.24	-20.10
536	242,014.93	559,352.97	592.02	797+41.28	-20.08
537	242,007.55	559,351.47	592.09	797+33.74	-20.06
538	242,033.05	559,346.57	592.35	797+57.74	-29.98
539	242,033.81	559,342.84	592.62	797+57.74	-33.79
540	242,025.79	559,341.20	592.70	797+49.55	-33.79
541	242,031.01	559,342.27	592.73	797+54.88	-33.79
542	242,034.23	559,356.86	591.90	797+60.96	-20.13
1345	241,999.82	559,347.42	592.65	797+25.36	-22.49
1346	242,009.40	559,342.43	592.60	797+33.74	-29.29
1347	242,001.11	559,340.74	592.77	797+25.28	-29.29
1348	242,047.55	559,348.21	592.06	797+72.27	-31.29

RADIUS TABLE

POINT NUMBER	Y	X	RADIUS	STATION	OFFSET
E	242,038.59	559,335.30	20'	797+60.90	-42.13
F	242,053.91	559,349.51	8.5'	797+78.77	-31.29
G	242,050.49	559,331.33	5'	797+71.77	-48.41

POINT TABLE

POINT NUMBER	Y	X	ELEVATION	STATION	OFFSET
550	242,022.90	559,400.74	591.78	797+58.66	25.12
551	242,021.98	559,405.32	591.86	797+58.68	29.80
552	242,010.77	559,398.04	591.31	797+46.24	24.91
553	242,009.81	559,402.73	591.40	797+46.24	29.70
554	242,005.87	559,397.03	591.33	797+41.24	24.90
555	242,004.91	559,401.73	591.43	797+41.24	29.70
556	241,998.52	559,395.52	591.70	797+33.74	24.90
557	241,997.56	559,400.23	591.79	797+33.74	29.70
558	241,991.31	559,394.05	592.06	797+26.38	24.90
559	241,990.33	559,398.83	592.16	797+26.38	29.78
560	241,991.86	559,391.69	591.51	797+26.44	22.48
561	241,999.01	559,393.15	591.41	797+33.74	22.48
562	242,000.97	559,393.55	591.55	797+35.74	22.48
563	242,003.91	559,394.16	591.51	797+38.74	22.48
564	242,006.36	559,394.66	591.28	797+41.24	22.48
565	242,011.26	559,395.66	591.25	797+46.24	22.48
566	242,018.60	559,397.17	591.73	797+53.74	22.48
567	241,991.96	559,391.20	591.51	797+26.44	21.98
568	242,001.07	559,393.06	591.39	797+35.74	21.98
569	242,004.01	559,393.67	591.35	797+38.74	21.98
570	242,006.43	559,394.16	591.28	797+41.20	21.98
571	242,011.36	559,395.17	591.25	797+46.24	21.98
572	242,018.70	559,396.68	591.23	797+53.74	21.98
573	241,992.36	559,389.24	591.54	797+26.44	19.98
574	242,001.47	559,391.11	591.44	797+35.74	19.98
575	242,004.41	559,391.71	591.43	797+38.74	19.98
576	242,006.83	559,392.20	591.43	797+41.21	19.98
577	242,011.82	559,393.22	591.42	797+46.30	19.98
578	242,019.11	559,394.72	591.42	797+53.74	19.98
1324	242,017.16	559,404.24	591.88	797+53.74	29.70
1325	242,018.10	559,399.64	591.81	797+53.74	25.01
1342	241,986.70	559,390.43	591.63	797+21.13	22.28
1343	241,986.08	559,392.82	592.03	797+21.01	24.75
1344	241,985.09	559,397.82	592.19	797+21.03	29.85

LEGEND

- AGG — BASE AGGREGATE DENSE 3/4-INCH
- ASD — ASPHALTIC SURFACE DRIVEWAYS AND FIELD ENTRANCES
- ASPHALTIC SURFACE PATCHING
- CCP — CONCRETE CURB PEDESTRIAN
- CD7 — CONCRETE DRIVEWAY 7-INCH ON 6" BASE AGGREGATE DENSE 1 1/4-INCH
- CG30D — CONCRETE CURB & GUTTER 30-INCH TYPE D
- G — FLARE GRADED
- P — FLARE PAVED
- LL — LEVEL LANDING
- MEF — MAXIMUM EXTENT FEASIBLE TECHNICAL INFEASABILITY PRESENT
- RCR — REMOVE EXISTING CURB RAMP AND REPLACE WITH CONCRETE SIDEWALK OR EROSION MAT & SEED MIX NO. 40 AND CONCRETE CURB AND GUTTER
- SA — SAWING ASPHALT
- SC — SAWING CONCRETE
- 40SD — SEED MIX NO. 40, EROSION MAT CLASS 1, TYPE B, FERTILIZER TYPE B, TOPSOIL
- SW5 — CONCRETE SIDEWALK 5-INCH
- CURB RAMP DETECTABLE WARNING FIELD NATURAL PATINA
- SLOPE INTERCEPT

POINTS LEGEND

XXX.XX	SIDEWALK ELEVATION
XXX.XX(F)	CURB FLANGE ELEVATION
XXX.XX(G)	GUTTER FLOWLINE ELEVATION
XXX.XX(T)	TOP OF CURB ELEVATION
XXX.XX(E)	EXISTING ELEVATION
XXX	POINT NUMBER
A	CURB RADIUS POINT NUMBER

NOTES

1. CONTRACTOR TO FIELD VERIFY ELEVATIONS, GRADES, SLOPES, LENGTHS, AND MATCH POINTS PRIOR TO CURB RAMP CONSTRUCTION.
2. THE ENGINEER MAY ADJUST ELEVATIONS TO FIT FIELD CONDITIONS WITHIN THE CONDITIONS OF THE STANDARD DETAIL DRAWINGS.
3. DASHED LINES SHOWN FOR PROPOSED SIDEWALK ARE FOR INFORMATION ONLY AND DO NOT INDICATE EXACT JOINT LOCATIONS.
4. THE MAXIMUM GRADE BREAK BETWEEN THE GUTTER PAN AND CURB RAMP SHALL BE 11%
5. SIDEWALK AND CURB RAMP CROSS SLOPE SHALL NOT EXCEED 2%.
6. SIDEWALK AND CURB RAMP RUNNING SLOPE SHALL NOT EXCEED 8.33% (12H:1V).

MAXIMUM EXTENT FEASIBLE NOTES

	INTERSECTING ROAD--QUADRANT	REASON FOR TECHNICALLY INFEASIBLE
1.	HOWARD AV--NORTHWEST	MATCHING CROSS SLOPE AT NORTH AND WEST ENDS EXCEEDS 2.0%.
2.	HOWARD AV--NORTHEAST	MATCHING CROSS SLOPE AT NORTH AND SOUTH ENDS EXCEEDS 2.0%.

N

SEE POINT TABLES ON NEXT SHEET.

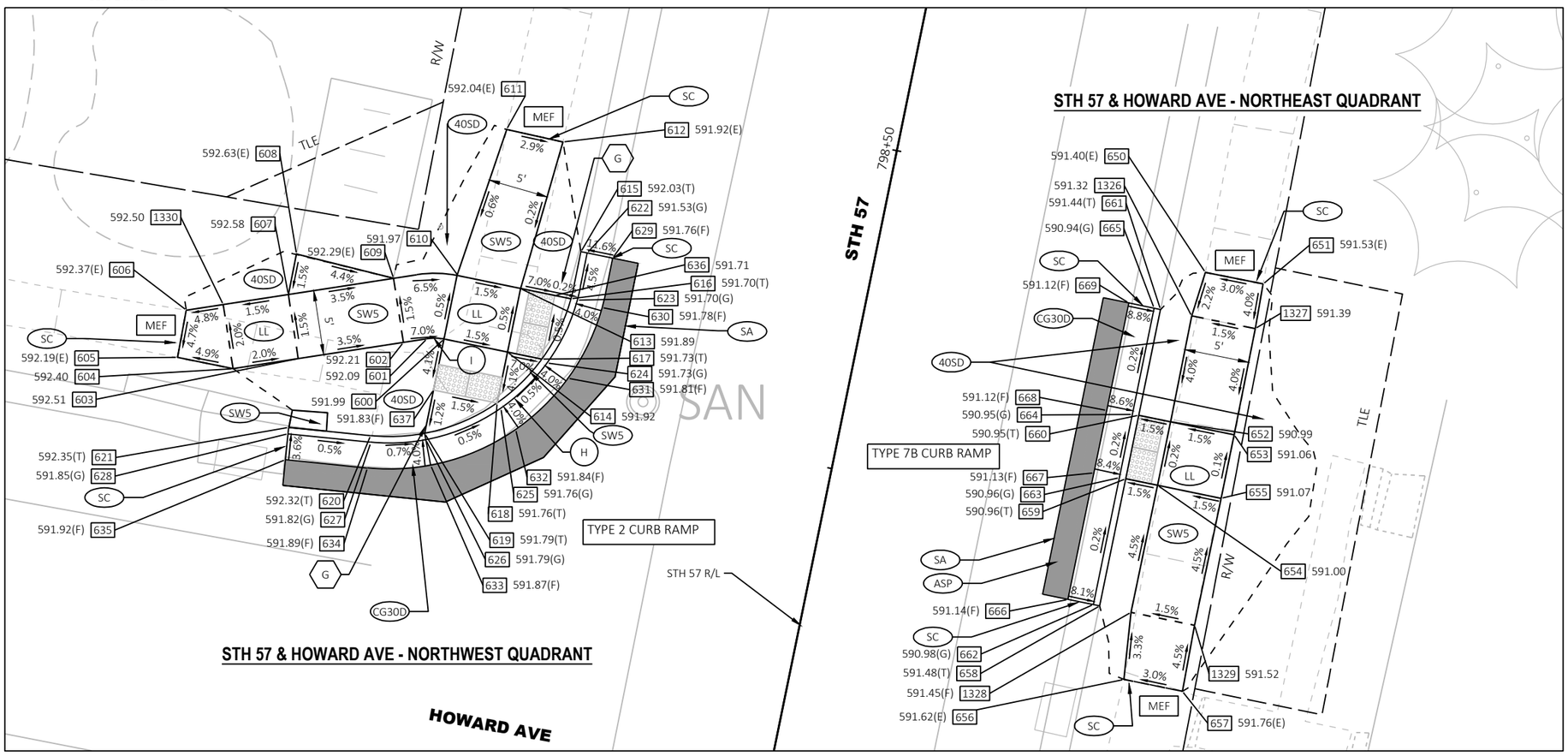

PROJECT NO: 4150-14-71	HWY: STH 57	COUNTY: DOOR	CURB RAMP DETAILS	SHEET 27	E

POINT TABLE					
POINT NUMBER	Y	X	ELEVATION	STATION	OFFSET
600	242,102.90	559,359.54	591.99	798+28.77	-31.29
601	242,102.92	559,358.22	592.09	798+28.52	-32.59
602	242,102.64	559,356.41	592.21	798+27.89	-34.30
603	242,101.39	559,348.31	592.51	798+25.04	-41.99
604	242,100.62	559,343.28	592.40	798+23.28	-46.76
605	242,101.48	559,339.00	592.19	798+23.26	-51.13
606	242,105.12	559,339.67	592.37	798+26.97	-51.20
607	242,106.34	559,347.55	592.58	798+29.73	-43.73
608	242,109.46	559,348.16	592.63	798+32.92	-43.75
609	242,107.58	559,355.65	592.29	798+32.58	-36.04
610	242,107.78	559,360.63	591.97	798+33.77	-31.20
611	242,119.05	559,364.38	592.04	798+45.56	-29.79
612	242,118.09	559,368.71	591.92	798+45.49	-25.35
613	242,106.80	559,365.44	591.89	798+33.77	-26.29
614	242,101.90	559,364.44	591.92	798+28.77	-26.29
615	242,109.63	559,370.10	592.03	798+37.48	-22.30
616	242,106.00	559,369.32	591.70	798+33.77	-22.33
617	242,101.36	559,367.08	591.73	798+28.77	-23.59
618	242,097.98	559,363.64	591.76	798+24.77	-26.29
619	242,095.63	559,358.05	591.79	798+21.35	-31.29

POINT TABLE					
POINT NUMBER	Y	X	ELEVATION	STATION	OFFSET
620	242,095.45	559,353.89	592.32	798+20.34	-35.34
621	242,096.10	559,347.57	592.35	798+19.70	-41.65
622	242,109.53	559,370.59	591.53	798+37.48	-21.80
623	242,105.90	559,369.81	591.70	798+33.77	-21.83
624	242,101.06	559,367.49	591.73	798+28.57	-23.14
625	242,097.57	559,363.92	591.76	798+24.43	-25.93
626	242,095.14	559,358.14	591.79	798+20.89	-31.10
627	242,094.90	559,353.89	591.82	798+19.80	-35.22
628	242,095.60	559,347.52	591.85	798+19.21	-41.60
629	242,109.13	559,372.55	591.76	798+37.49	-19.80
630	242,105.33	559,371.73	591.78	798+33.60	-19.83
631	242,099.89	559,369.10	591.81	798+27.74	-21.31
632	242,095.93	559,365.07	591.84	798+23.05	-24.48
633	242,093.18	559,358.51	591.87	798+19.04	-30.35
634	242,092.97	559,353.63	591.89	798+17.86	-35.08
635	242,093.61	559,347.32	591.92	798+17.22	-41.40
636	242,106.25	559,368.09	591.71	798+33.77	-23.59
637	242,098.98	559,358.74	591.83	798+24.77	-31.29
1330	242,105.56	559,342.52	592.50	798+27.97	-48.50

POINT TABLE					
POINT NUMBER	Y	X	ELEVATION	STATION	OFFSET
650	242,108.04	559,418.25	591.40	798+45.58	25.19
651	242,107.15	559,422.70	591.53	798+45.61	29.73
652	242,096.54	559,415.56	590.99	798+33.77	24.87
653	242,095.53	559,420.46	591.06	798+33.77	29.87
654	242,091.64	559,414.56	591.00	798+28.77	24.87
655	242,090.63	559,419.45	591.07	798+28.77	29.87
656	242,076.68	559,411.96	591.62	798+13.60	25.32
657	242,075.76	559,416.47	591.76	798+13.60	29.93
658	242,082.34	559,410.10	591.48	798+18.77	22.36
659	242,092.14	559,412.11	590.96	798+28.77	22.37
660	242,097.03	559,413.11	590.95	798+33.77	22.37
661	242,105.18	559,414.79	591.44	798+42.09	22.37
662	242,082.44	559,409.61	590.98	798+18.77	21.86
663	242,092.22	559,411.61	590.96	798+28.75	21.87
664	242,097.09	559,412.61	590.95	798+33.73	21.87
665	242,105.28	559,414.30	590.94	798+42.09	21.87
666	242,082.85	559,407.65	591.14	798+18.77	19.86
667	242,092.59	559,409.65	591.13	798+28.72	19.87
668	242,097.41	559,410.64	591.12	798+33.64	19.87
669	242,105.68	559,412.34	591.12	798+42.09	19.87

POINT TABLE					
POINT NUMBER	Y	X	ELEVATION	STATION	OFFSET
1326	242,104.68	559,417.19	591.32	798+42.08	24.83
1327	242,103.70	559,422.09	591.39	798+42.11	29.83
1328	242,081.85	559,412.50	591.45	798+18.77	24.82
1329	242,080.84	559,417.40	591.52	798+18.77	29.82

RADIUS TABLE					
POINT NUMBER	Y	X	RADIUS	STATION	OFFSET
H	242,109.88	559,355.35	15'	798+34.77	-36.79
I	242,098.96	559,358.82	4'	798+24.77	-31.20

2

LEGEND

- AGG — BASE AGGREGATE DENSE 3/4-INCH
- ASD — ASPHALTIC SURFACE DRIVEWAYS AND FIELD ENTRANCES
- ASPHALTIC SURFACE PATCHING
- CCP — CONCRETE CURB PEDESTRIAN
- CD7 — CONCRETE DRIVEWAY 7-INCH ON 6" BASE AGGREGATE DENSE 1 1/4-INCH
- CG30D — CONCRETE CURB & GUTTER 30-INCH TYPE D
- G — FLARE GRADED
- P — FLARE PAVED
- LL — LEVEL LANDING
- MEF — MAXIMUM EXTENT FEASIBLE TECHNICAL INFEASABILITY PRESENT
- RCR — REMOVE EXISTING CURB RAMP AND REPLACE WITH CONCRETE SIDEWALK OR EROSION MAT & SEED MIX NO. 40 AND CONCRETE CURB AND GUTTER
- SA — SAWING ASPHALT
- SC — SAWING CONCRETE
- 40SD — SEED MIX NO. 40, EROSION MAT CLASS 1, TYPE B, FERTILIZER TYPE B, TOPSOIL
- SW5 — CONCRETE SIDEWALK 5-INCH
- CURB RAMP DETECTABLE WARNING FIELD NATURAL PATINA
- SLOPE INTERCEPT

NOTES

1. CONTRACTOR TO FIELD VERIFY ELEVATIONS, GRADES, SLOPES, LENGTHS, AND MATCH POINTS PRIOR TO CURB RAMP CONSTRUCTION.
2. THE ENGINEER MAY ADJUST ELEVATIONS TO FIT FIELD CONDITIONS WITHIN THE CONDITIONS OF THE STANDARD DETAIL DRAWINGS.
3. DASHED LINES SHOWN FOR PROPOSED SIDEWALK ARE FOR INFORMATION ONLY AND DO NOT INDICATE EXACT JOINT LOCATIONS.
4. THE MAXIMUM GRADE BREAK BETWEEN THE GUTTER PAN AND CURB RAMP SHALL BE 11%
5. SIDEWALK AND CURB RAMP CROSS SLOPE SHALL NOT EXCEED 2%.
6. SIDEWALK AND CURB RAMP RUNNING SLOPE SHALL NOT EXCEED 8.33% (12H:1V).

MAXIMUM EXTENT FEASIBLE NOTES

	INTERSECTING ROAD--QUADRANT	REASON FOR TECHNICALLY INFEASIBLE
1.	CTH F--SOUTHWEST	MATCHING CROSS SLOPE AT WEST END EXCEEDS 2.0%. SIDEWALK TO CROSSWALK OFFSET GREATER THAN 10'.

POINTS LEGEND

- XXX.XX — SIDEWALK ELEVATION
- XXX.XX(F) — CURB FLANGE ELEVATION
- XXX.XX(G) — GUTTER FLOWLINE ELEVATION
- XXX.XX(T) — TOP OF CURB ELEVATION
- XXX.XX(E) — EXISTING ELEVATION
- XXX — POINT NUMBER
- A — CURB RADIUS POINT NUMBER

SEE POINT TABLES ON NEXT SHEET.

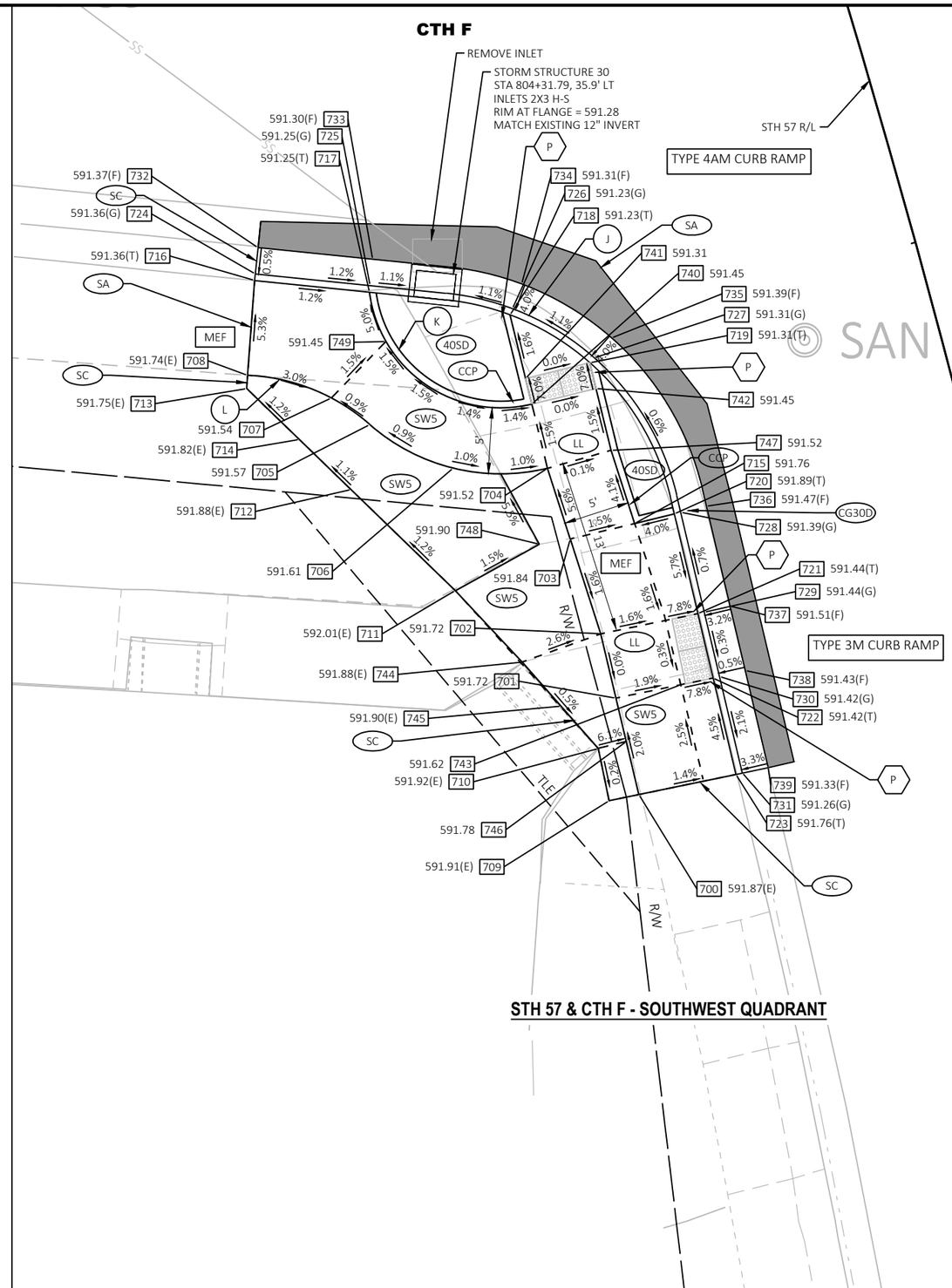

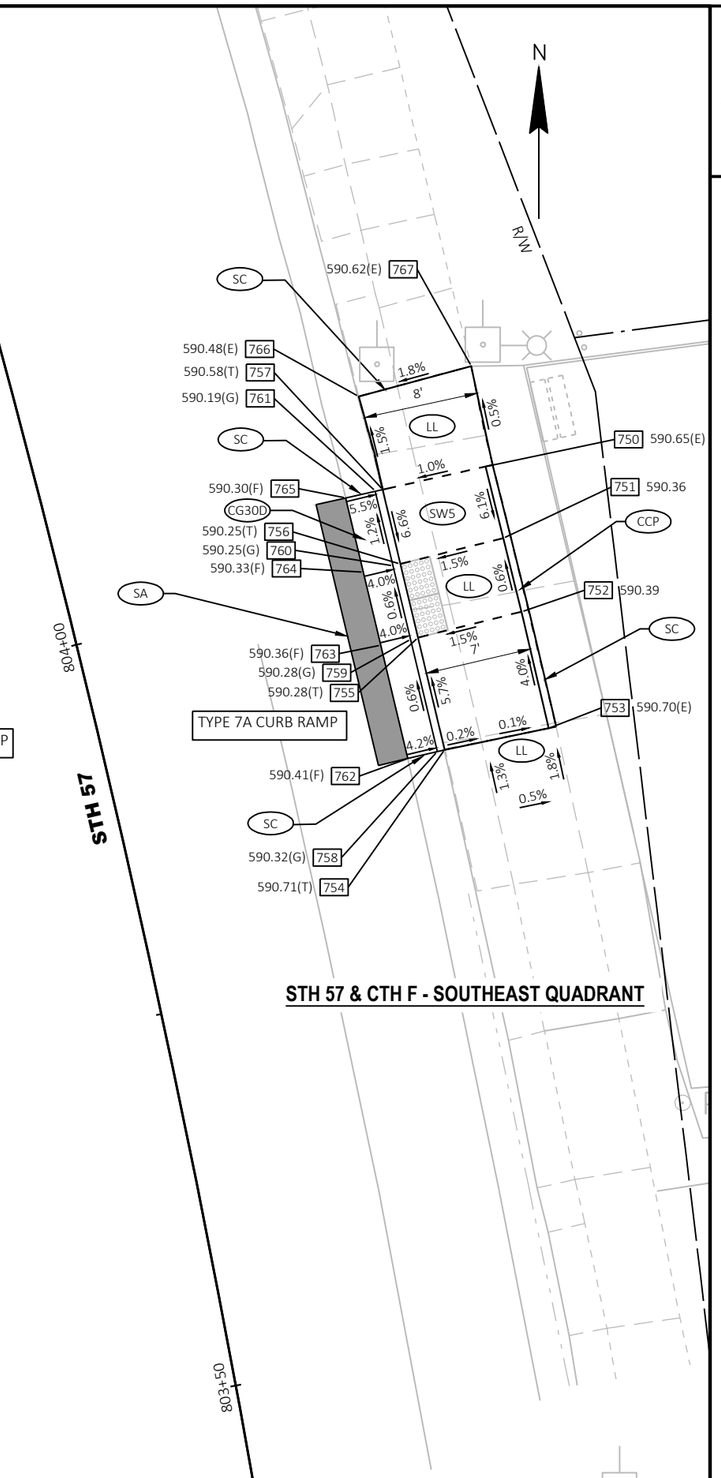

PROJECT NO: 4150-14-71	HWY: STH 57	COUNTY: DOOR	CURB RAMP DETAILS	SHEET 29	E

POINT TABLE					
POINT NUMBER	Y	X	ELEVATION	STATION	OFFSET
700	242,643.27	559,392.52	591.87	803+88.99	-30.58
701	242,650.57	559,390.79	591.72	803+96.77	-30.58
702	242,655.44	559,389.64	591.72	804+01.95	-30.54
703	242,662.63	559,387.33	591.84	804+09.75	-31.03
704	242,667.98	559,385.60	591.52	804+15.57	-31.35
705	242,671.28	559,372.14	591.57	804+22.56	-43.49
706	242,667.98	559,378.47	591.61	804+17.48	-38.24
707	242,673.29	559,369.23	591.54	804+25.41	-45.77
708	242,675.01	559,362.91	591.74	804+28.96	-51.40
709	242,642.81	559,390.27	591.91	803+89.05	-32.87
710	242,646.76	559,389.45	591.92	803+93.24	-32.77
711	242,658.71	559,378.63	592.01	804+08.05	-40.43
712	242,666.36	559,370.73	591.88	804+17.94	-46.14
713	242,674.01	559,362.83	591.75	804+27.96	-51.74
714	242,670.16	559,366.81	591.82	804+22.89	-48.93
715	242,663.79	559,392.20	591.76	804+09.67	-26.02
716	242,682.19	559,363.44	591.36	804+36.13	-48.92
717	242,681.31	559,372.12	591.25	804+32.71	-40.82
718	242,679.58	559,382.77	591.23	804+27.96	-31.04
719	242,675.96	559,388.80	591.31	804+22.69	-26.19
720	242,664.53	559,395.20	591.89	804+09.63	-22.93
721	242,656.97	559,396.98	591.44	804+01.66	-23.05
722	242,652.10	559,398.14	591.42	803+96.51	-23.08
723	242,644.80	559,399.86	591.76	803+88.81	-23.08
724	242,682.69	559,363.49	591.36	804+36.62	-48.73

POINT TABLE					
POINT NUMBER	Y	X	ELEVATION	STATION	OFFSET
725	242,681.81	559,372.18	591.25	804+33.20	-40.63
726	242,680.05	559,382.94	591.23	804+28.38	-30.75
727	242,676.34	559,389.13	591.31	804+22.98	-25.77
728	242,664.64	559,395.68	591.39	804+09.62	-22.43
729	242,657.08	559,397.47	591.44	804+01.65	-22.55
730	242,652.21	559,398.62	591.42	803+96.51	-22.58
731	242,644.91	559,400.35	591.26	803+88.81	-22.58
732	242,684.68	559,363.69	591.37	804+38.58	-47.98
733	242,683.80	559,372.38	591.30	804+35.14	-39.89
734	242,681.92	559,383.64	591.31	804+30.05	-29.57
735	242,677.84	559,390.45	591.39	804+24.11	-24.10
736	242,665.10	559,397.63	591.47	804+09.58	-20.43
737	242,657.55	559,399.42	591.51	804+01.63	-20.55
738	242,652.67	559,400.57	591.43	803+96.50	-20.58
739	242,645.37	559,402.30	591.33	803+88.82	-20.58
740	242,672.83	559,384.42	591.45	804+20.76	-31.24
741	242,674.78	559,383.94	591.31	804+22.83	-31.19
742	242,674.02	559,389.27	591.45	804+20.63	-26.24
743	242,651.59	559,395.69	591.62	803+96.60	-25.58
744	242,653.30	559,383.74	591.88	804+01.25	-36.79
745	242,649.97	559,386.64	591.90	803+97.17	-34.75
746	242,647.29	559,391.57	591.78	803+93.26	-30.59
747	242,669.34	559,390.42	591.52	804+15.66	-26.34
748	242,662.22	559,384.98	591.90	804+09.95	-33.40
749	242,677.57	559,373.37	591.45	804+28.58	-40.63

POINT TABLE					
POINT NUMBER	Y	X	ELEVATION	STATION	OFFSET
750	242,672.65	559,446.74	590.65	804+04.83	29.02
751	242,667.92	559,447.92	590.36	804+00.12	29.03
752	242,663.07	559,449.13	590.39	803+95.28	29.07
753	242,655.39	559,450.92	590.70	803+87.65	29.05
754	242,653.97	559,444.05	590.71	803+87.80	22.04
755	242,661.36	559,442.29	590.28	803+95.21	22.01
756	242,666.22	559,441.12	590.25	804+00.09	22.02
757	242,671.13	559,439.96	590.58	804+05.01	22.08
758	242,653.85	559,443.57	590.32	803+87.80	21.54
759	242,661.25	559,441.80	590.28	803+95.22	21.51
760	242,666.11	559,440.64	590.25	804+00.09	21.53
761	242,671.04	559,439.46	590.19	804+05.04	21.58
762	242,653.39	559,441.62	590.41	803+87.78	19.54
763	242,660.86	559,439.84	590.36	803+95.29	19.51
764	242,665.68	559,438.69	590.33	804+00.15	19.53
765	242,670.58	559,437.52	590.30	804+05.07	19.58
766	242,677.27	559,438.38	590.48	804+11.20	22.06
767	242,679.28	559,445.80	590.62	804+11.27	29.75

RADIUS TABLE					
POINT NUMBER	Y	X	RADIUS	STATION	OFFSET
J	242,661.33	559,375.92	20'	804+11.42	-42.40
K	242,682.55	559,382.04	9.5'	804+31.12	-30.93
L	242,660.02	559,362.23	15'	804+13.73	-55.97

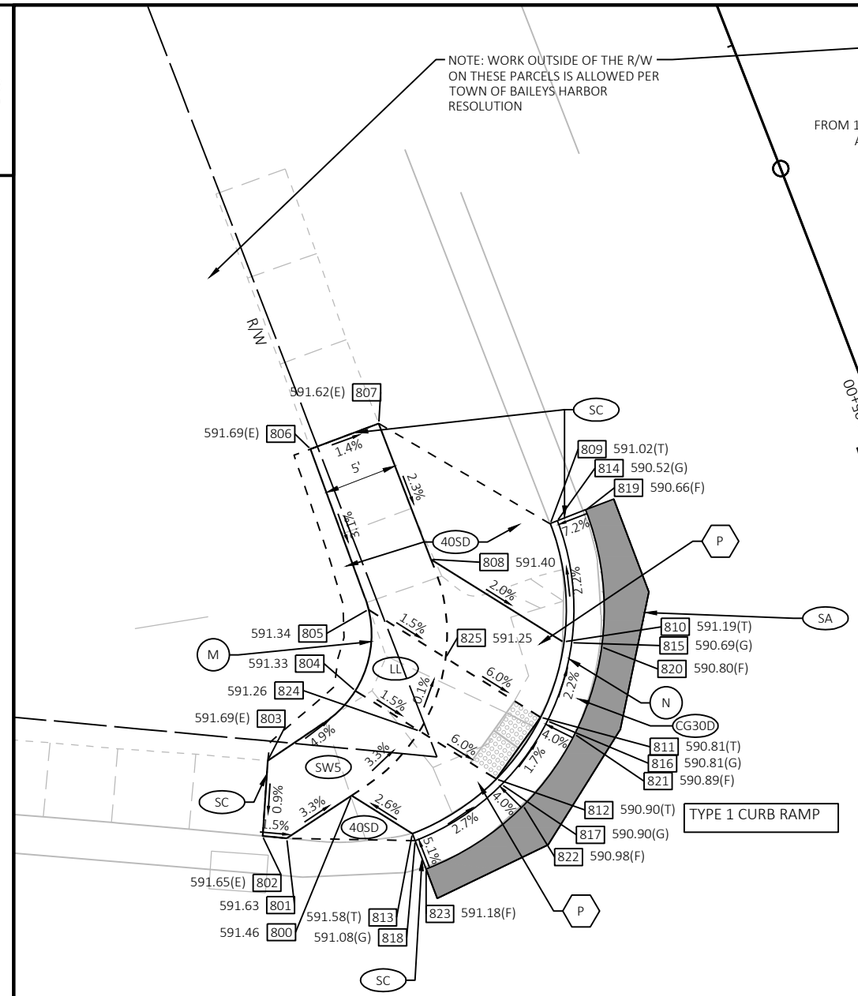

STH 57 & CTH F - NORTHWEST QUADRANT

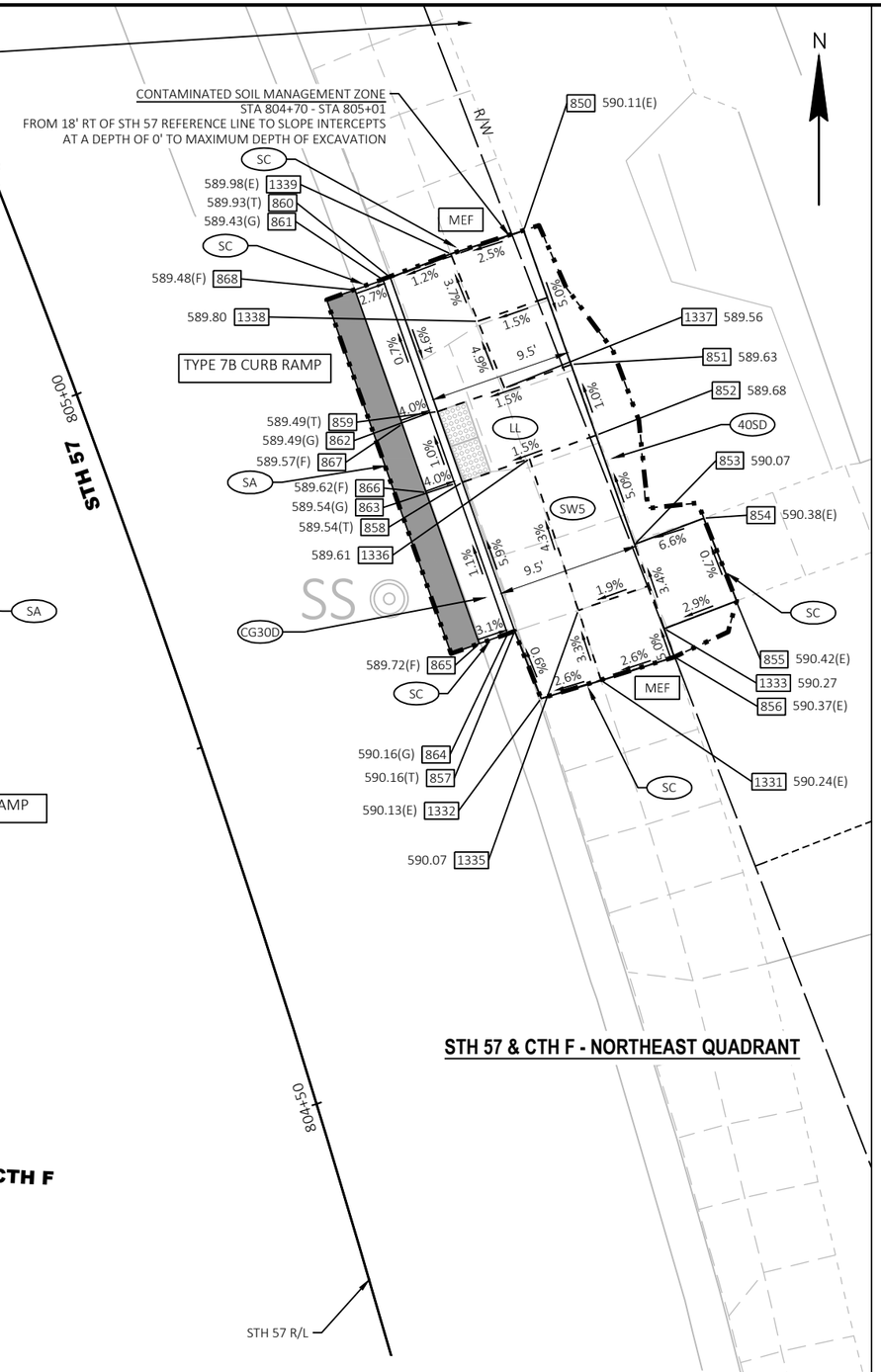

STH 57 & CTH F - NORTHEAST QUADRANT

CTH F

LEGEND

AGG	BASE AGGREGATE DENSE 3/4-INCH
ASD	ASPHALTIC SURFACE DRIVEWAYS AND FIELD ENTRANCES
	ASPHALTIC SURFACE PATCHING
CCP	CONCRETE CURB PEDESTRIAN
CD7	CONCRETE DRIVEWAY 7-INCH ON 6" BASE AGGREGATE DENSE 1 1/4-INCH
CG30D	CONCRETE CURB & GUTTER 30-INCH TYPE D
G	FLARE GRADED
P	FLARE PAVED
LL	LEVEL LANDING
MEF	MAXIMUM EXTENT FEASIBLE TECHNICAL INFEASABILITY PRESENT
RCR	REMOVE EXISTING CURB RAMP AND REPLACE WITH CONCRETE SIDEWALK OR EROSION MAT & SEED MIX NO. 40 AND CONCRETE CURB AND GUTTER
SA	SAWING ASPHALT
SC	SAWING CONCRETE
40SD	SEED MIX NO. 40, EROSION MAT CLASS 1, TYPE B, FERTILIZER TYPE B, TOPSOIL
SW5	CONCRETE SIDEWALK 5-INCH
	CURB RAMP DETECTABLE WARNING FIELD NATURAL PATINA
- - - -	SLOPE INTERCEPT

POINTS LEGEND

XXX.XX	SIDEWALK ELEVATION
XXX.XX(F)	CURB FLANGE ELEVATION
XXX.XX(G)	GUTTER FLOWLINE ELEVATION
XXX.XX(T)	TOP OF CURB ELEVATION
XXX.XX(E)	EXISTING ELEVATION
XXX	POINT NUMBER
A	CURB RADIUS POINT NUMBER

NOTES

1. CONTRACTOR TO FIELD VERIFY ELEVATIONS, GRADES, SLOPES, LENGTHS, AND MATCH POINTS PRIOR TO CURB RAMP CONSTRUCTION.
2. THE ENGINEER MAY ADJUST ELEVATIONS TO FIT FIELD CONDITIONS WITHIN THE CONDITIONS OF THE STANDARD DETAIL DRAWINGS.
3. DASHED LINES SHOWN FOR PROPOSED SIDEWALK ARE FOR INFORMATION ONLY AND DO NOT INDICATE EXACT JOINT LOCATIONS.
4. THE MAXIMUM GRADE BREAK BETWEEN THE GUTTER PAN AND CURB RAMP SHALL BE 11%
5. SIDEWALK AND CURB RAMP CROSS SLOPE SHALL NOT EXCEED 2%.
6. SIDEWALK AND CURB RAMP RUNNING SLOPE SHALL NOT EXCEED 8.33% (12H:1V).

MAXIMUM EXTENT FEASIBLE NOTES

	INTERSECTING ROAD--QUADRANT	REASON FOR TECHNICALLY INFEASIBLE
1.	CTH F--NORTHEAST	MATCHING CROSS SLOPE AT NORTH AND SOUTH ENDS EXCEEDS 2.0%.

SEE POINT TABLES ON NEXT SHEET.

2

POINT TABLE					
POINT NUMBER	Y	X	ELEVATION	STATION	OFFSET
800	242,730.28	559,356.34	591.46	804+86.69	-40.98
801	242,727.45	559,352.06	591.63	804+85.38	-45.95
802	242,727.61	559,350.47	591.65	804+86.09	-47.40
803	242,732.57	559,350.81	591.69	804+90.92	-45.42
804	242,737.19	559,356.59	591.33	804+93.42	-38.42
805	242,742.54	559,357.45	591.34	804+98.36	-35.77
806	242,753.14	559,353.63	591.69	805+10.10	-35.62
807	242,754.82	559,358.13	591.62	805+10.06	-30.82
808	242,745.86	559,361.58	591.40	805+00.11	-30.75
809	242,748.20	559,369.44	591.02	804+99.56	-22.56
810	242,740.42	559,370.35	591.19	804+91.73	-24.37
811	242,735.44	559,368.82	590.81	804+87.42	-27.50
812	242,731.37	559,365.89	590.90	804+84.46	-31.61
813	242,727.76	559,360.36	591.58	804+82.80	-38.02
814	242,748.38	559,369.91	590.52	804+99.57	-22.06
815	242,740.35	559,370.85	590.69	804+91.49	-23.93
816	242,735.20	559,369.26	590.81	804+87.04	-27.16
817	242,731.02	559,366.25	590.90	804+83.99	-31.39
818	242,727.29	559,360.54	591.08	804+82.28	-38.01
819	242,749.10	559,371.78	590.66	804+99.59	-20.06
820	242,740.09	559,372.83	590.80	804+90.54	-22.16
821	242,734.32	559,371.05	590.89	804+85.57	-25.76
822	242,729.61	559,367.66	590.98	804+82.13	-30.51
823	242,725.42	559,361.25	591.18	804+80.19	-37.94
824	242,734.54	559,360.82	591.26	804+89.32	-35.33
825	242,739.36	559,362.55	591.25	804+93.43	-32.07

POINT TABLE					
POINT NUMBER	Y	X	ELEVATION	STATION	OFFSET
850	242,767.37	559,420.29	590.11	804+99.89	31.77
851	242,758.44	559,423.49	589.63	804+90.73	31.73
852	242,753.72	559,425.15	589.68	804+85.91	31.71
853	242,746.44	559,427.71	590.07	804+78.46	31.74
854	242,748.17	559,432.31	590.38	804+78.60	36.66
855	242,742.67	559,434.45	590.42	804+72.94	36.92
856	242,738.91	559,430.34	590.37	804+70.76	31.83
857	242,740.63	559,419.68	590.16	804+75.64	22.27
858	242,750.57	559,416.19	589.54	804+85.91	22.21
859	242,755.29	559,414.53	589.49	804+90.79	22.23
860	242,764.24	559,411.39	589.93	805+00.04	22.34
861	242,764.07	559,410.91	589.43	805+00.05	21.84
862	242,755.22	559,414.03	589.49	804+90.89	21.73
863	242,750.48	559,415.69	589.54	804+85.99	21.71
864	242,740.47	559,419.23	590.16	804+75.63	21.78
865	242,739.80	559,417.33	589.72	804+75.61	19.77
866	242,749.89	559,413.78	589.62	804+86.06	19.71
867	242,754.46	559,412.17	589.57	804+90.80	19.73
868	242,763.41	559,409.03	589.48	805+00.08	19.84
1331	242,737.34	559,425.46	590.24	804+70.81	26.70
1332	242,736.14	559,421.45	590.13	804+70.94	22.52
1333	242,740.80	559,429.68	590.27	804+72.69	31.80
1335	242,742.02	559,423.94	590.07	804+75.59	26.74
1336	242,752.15	559,420.67	589.61	804+85.91	26.96
1337	242,756.86	559,419.01	589.56	804+90.76	26.98
1338	242,761.31	559,417.23	589.80	804+95.41	26.82
1339	242,765.81	559,415.42	589.98	805+00.11	26.67

RADIUS TABLE					
POINT NUMBER	Y	X	RADIUS	STATION	OFFSET
M	242,740.90	559,350.65	7'	804+99.21	-42.72
N	242,742.53	559,354.66	16.34'	804+99.36	-38.40

2

LEGEND

- AGG — BASE AGGREGATE DENSE 3/4-INCH
- ASD — ASPHALTIC SURFACE DRIVEWAYS AND FIELD ENTRANCES
- ASPHALTIC SURFACE PATCHING
- CCP — CONCRETE CURB PEDESTRIAN
- CD7 — CONCRETE DRIVEWAY 7-INCH ON 6" BASE AGGREGATE DENSE 1 1/4-INCH
- CG30D — CONCRETE CURB & GUTTER 30-INCH TYPE D
- G — FLARE GRADED
- P — FLARE PAVED
- LL — LEVEL LANDING
- MEF — MAXIMUM EXTENT FEASIBLE TECHNICAL INFEASABILITY PRESENT
- RCR — REMOVE EXISTING CURB RAMP AND REPLACE WITH CONCRETE SIDEWALK OR EROSION MAT & SEED MIX NO. 40 AND CONCRETE CURB AND GUTTER
- SA — SAWING ASPHALT
- SC — SAWING CONCRETE
- 40SD — SEED MIX NO. 40, EROSION MAT CLASS 1, TYPE B, FERTILIZER TYPE B, TOPSOIL
- SW5 — CONCRETE SIDEWALK 5-INCH
- CURB RAMP DETECTABLE WARNING FIELD NATURAL PATINA
- SLOPE INTERCEPT

NOTES

1. CONTRACTOR TO FIELD VERIFY ELEVATIONS, GRADES, SLOPES, LENGTHS, AND MATCH POINTS PRIOR TO CURB RAMP CONSTRUCTION.
2. THE ENGINEER MAY ADJUST ELEVATIONS TO FIT FIELD CONDITIONS WITHIN THE CONDITIONS OF THE STANDARD DETAIL DRAWINGS.
3. DASHED LINES SHOWN FOR PROPOSED SIDEWALK ARE FOR INFORMATION ONLY AND DO NOT INDICATE EXACT JOINT LOCATIONS.
4. THE MAXIMUM GRADE BREAK BETWEEN THE GUTTER PAN AND CURB RAMP SHALL BE 11%
5. SIDEWALK AND CURB RAMP CROSS SLOPE SHALL NOT EXCEED 2%.
6. SIDEWALK AND CURB RAMP RUNNING SLOPE SHALL NOT EXCEED 8.33% (12H:1V).

POINTS LEGEND

- XXX.XX — SIDEWALK ELEVATION
- XXX.XX(F) — CURB FLANGE ELEVATION
- XXX.XX(G) — GUTTER FLOWLINE ELEVATION
- XXX.XX(T) — TOP OF CURB ELEVATION
- XXX.XX(E) — EXISTING ELEVATION
- XXX — POINT NUMBER
- A — CURB RADIUS POINT NUMBER

MAXIMUM EXTENT FEASIBLE NOTES

	INTERSECTING ROAD--QUADRANT	REASON FOR TECHNICALLY INFEASIBLE
1.	PARK RD--SOUTHWEST	MATCHING CROSS SLOPE EXCEEDS 2.0%.

SEE POINT TABLES ON NEXT SHEET.

STH 57 & PARK RD - NORTHWEST QUADRANT

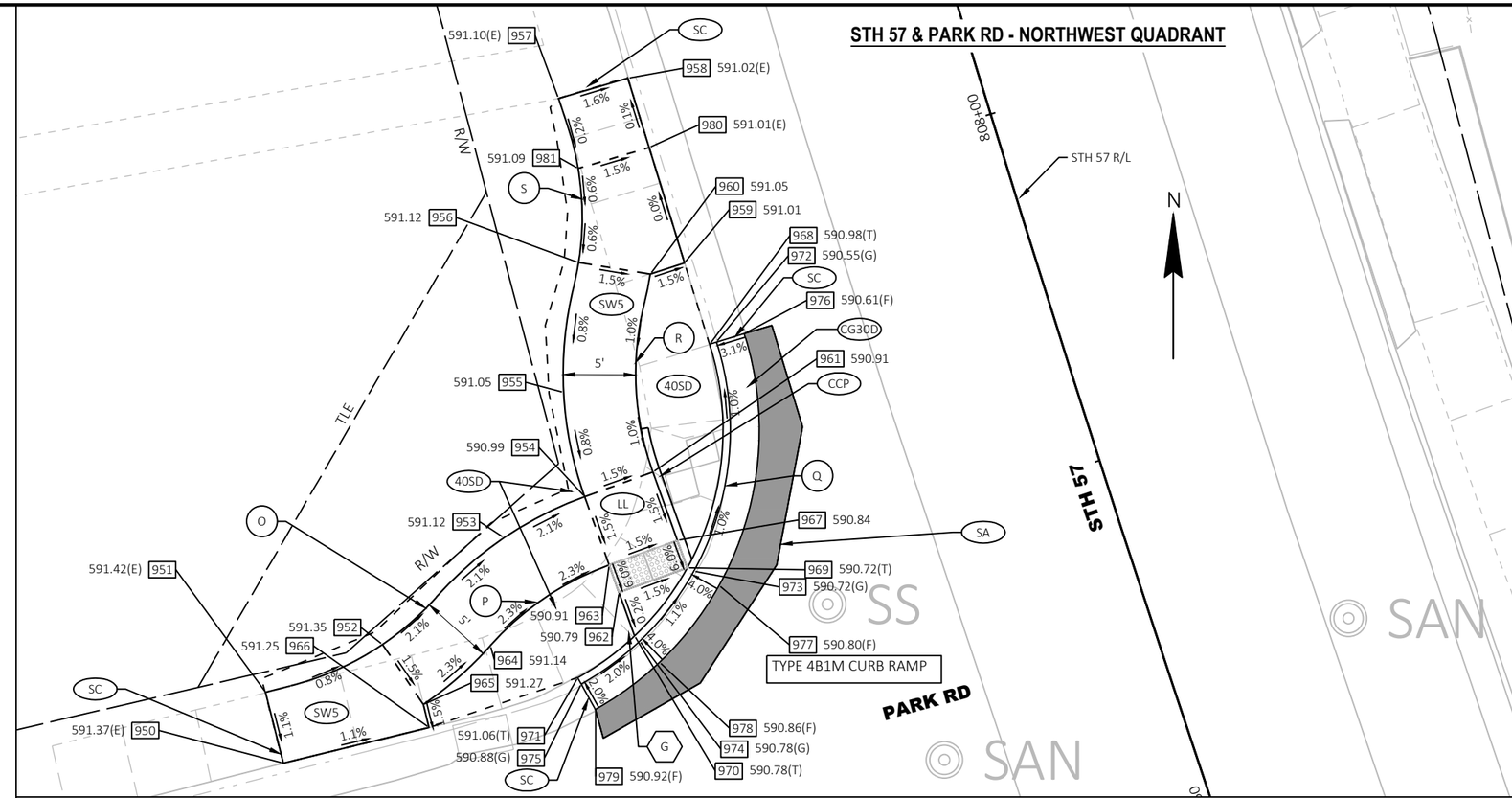

STH 57 & PARK RD - SOUTHWEST QUADRANT

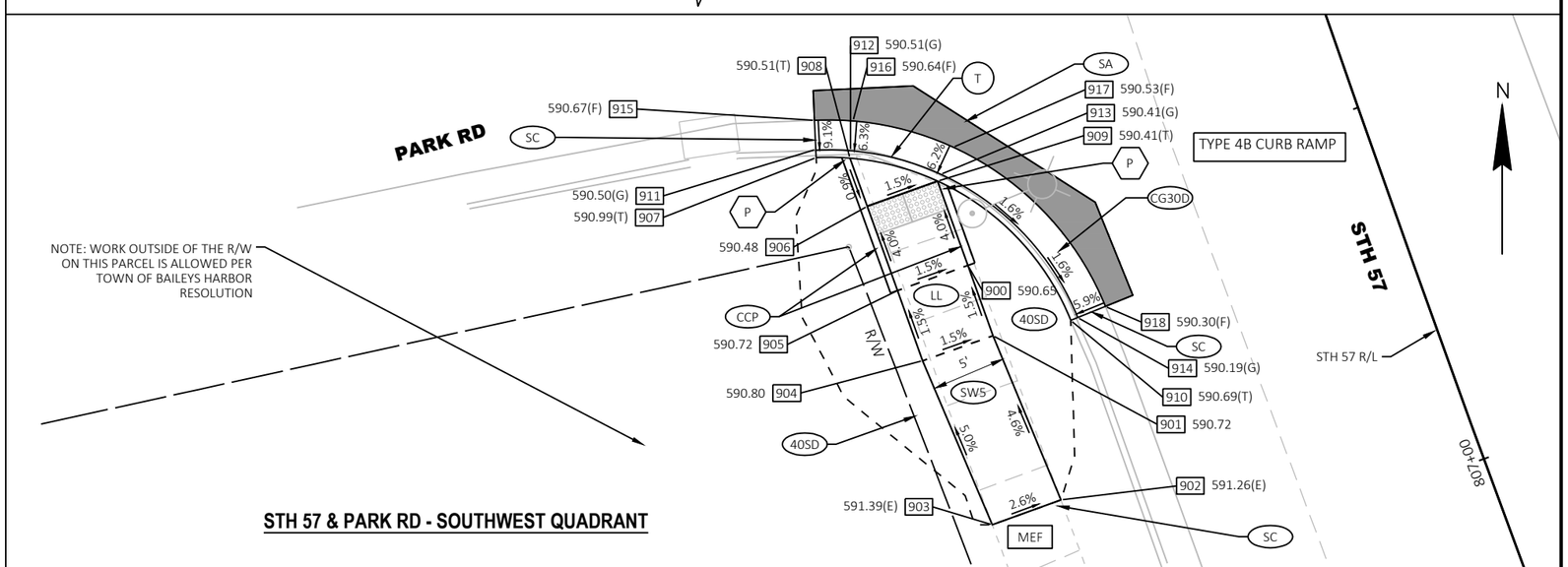

PROJECT NO: 4150-14-71	HWY: STH 57	COUNTY: DOOR	CURB RAMP DETAILS	SHEET 33	E

FILE NAME : K:\1202715.01\CIVIL3D\41501400\SHEETSPLAN\021301-CR.DWG
LAYOUT NAME - 09
PLOT DATE : 8/19/2024 3:14 PM
PLOT BY : SIEBERT, LUKE
PLOT NAME :
PLOT SCALE : 1 IN:10 FT
WISDOT/CADDS SHEET 42

2

POINT TABLE					
POINT NUMBER	Y	X	ELEVATION	STATION	OFFSET
900	242,955.85	559,283.53	590.65	807+23.70	-28.17
901	242,951.14	559,285.21	590.72	807+18.78	-28.15
902	242,940.14	559,289.77	591.26	807+07.05	-27.57
903	242,938.48	559,285.16	591.39	807+07.05	-32.46
904	242,949.47	559,280.50	590.80	807+18.77	-33.15
905	242,954.18	559,278.82	590.72	807+23.68	-33.17
906	242,959.82	559,276.79	590.48	807+29.58	-33.22
907	242,963.07	559,273.37	590.99	807+33.70	-35.38
908	242,963.03	559,275.63	590.51	807+32.94	-33.26
909	242,961.50	559,281.50	590.41	807+29.61	-28.22
910	242,952.17	559,290.41	590.69	807+18.01	-22.90
911	242,963.63	559,273.37	590.50	807+34.22	-35.20
912	242,963.53	559,275.67	590.51	807+33.39	-33.05
913	242,961.95	559,281.70	590.41	807+29.97	-27.87
914	242,952.36	559,290.88	590.19	807+18.03	-22.40
915	242,965.57	559,273.25	590.67	807+36.05	-34.67
916	242,965.53	559,275.83	590.64	807+35.19	-32.25
917	242,963.77	559,282.54	590.53	807+31.39	-26.49
918	242,953.11	559,292.73	590.30	807+18.12	-20.40

POINT TABLE					
POINT NUMBER	Y	X	ELEVATION	STATION	OFFSET
950	242,992.97	559,237.48	591.37	807+72.47	-59.93
951	242,997.86	559,236.25	591.42	807+77.35	-59.59
952	243,001.15	559,244.32	591.35	807+78.00	-50.91
953	243,008.50	559,252.70	591.12	807+82.36	-40.70
954	243,011.32	559,258.24	590.99	807+83.35	-34.56
955	243,018.50	559,256.80	591.05	807+90.50	-33.78
956	243,027.45	559,257.83	591.12	807+98.60	-30.14
957	243,038.74	559,256.45	591.10	808+09.64	-28.17
958	243,040.14	559,261.22	591.02	808+09.60	-23.19
959	243,027.42	559,265.12	591.01	807+96.45	-23.18
960	243,026.66	559,262.77	591.05	807+96.42	-25.65
961	243,013.02	559,262.95	590.91	807+83.54	-29.56
962	243,004.74	559,260.61	590.79	807+76.48	-34.30
963	243,006.62	559,259.94	590.91	807+78.44	-34.37
964	243,001.08	559,251.76	591.14	807+75.72	-43.85
965	242,997.02	559,247.13	591.27	807+73.33	-49.50
966	242,995.43	559,247.52	591.25	807+71.74	-49.61

POINT TABLE					
POINT NUMBER	Y	X	ELEVATION	STATION	OFFSET
967	243,008.31	559,264.64	590.84	807+78.62	-29.37
968	243,021.80	559,266.86	590.98	807+90.64	-23.19
969	243,006.43	559,265.32	590.72	807+76.65	-29.30
970	243,001.75	559,261.69	590.78	807+73.36	-34.19
971	242,998.87	559,257.78	591.06	807+71.85	-38.80
972	243,021.97	559,267.32	590.55	807+90.66	-22.70
973	243,006.19	559,265.76	590.72	807+76.29	-28.96
974	243,001.39	559,262.03	590.78	807+72.91	-33.97
975	242,998.43	559,258.02	590.88	807+71.37	-38.70
976	243,022.55	559,269.24	590.61	807+90.65	-20.70
977	243,005.22	559,267.50	590.80	807+74.85	-27.59
978	242,999.94	559,263.41	590.86	807+71.14	-33.11
979	242,996.69	559,259.00	590.92	807+69.45	-38.31
980	243,035.36	559,262.69	591.01	808+04.66	-23.18
981	243,033.93	559,257.80	591.09	808+04.71	-28.27

RADIUS TABLE					
POINT NUMBER	Y	X	RADIUS	STATION	OFFSET
O	243,017.68	559,233.06	20'	807+96.62	-56.68
P	242,987.80	559,266.71	20'	807+58.80	-33.75
Q	243,015.89	559,248.27	20'	807+90.56	-42.70
R	243,019.79	559,281.76	20'	807+84.31	-9.57
S	243,030.60	559,238.08	20'	808+07.21	-48.10
T	242,945.59	559,274.20	18'	807+17.26	-40.38

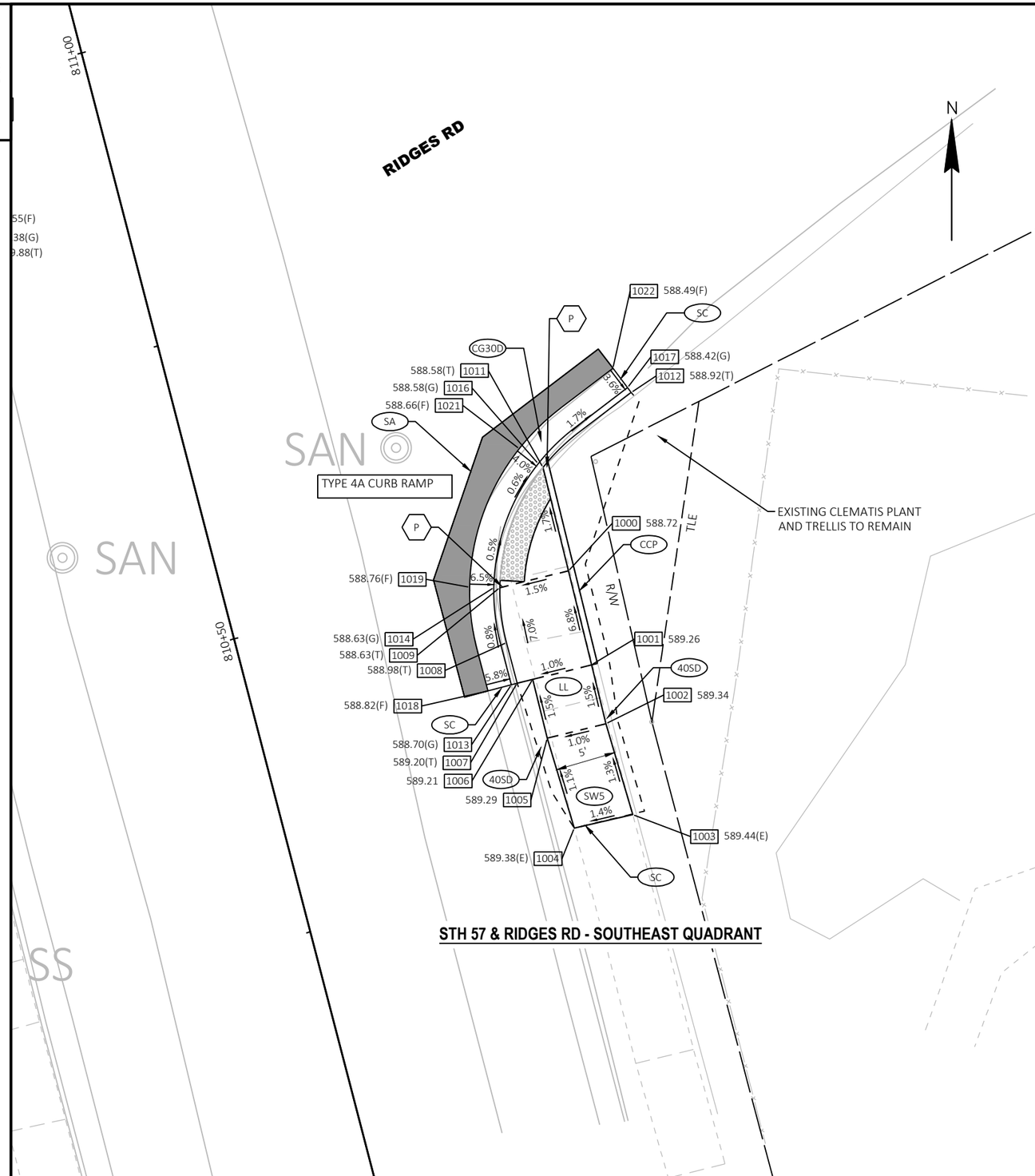

STH 57 & RIDGES RD - SOUTHEAST QUADRANT

LEGEND

- AGG — BASE AGGREGATE DENSE 3/4-INCH
- ASD — ASPHALTIC SURFACE DRIVEWAYS AND FIELD ENTRANCES
- ASPHALTIC SURFACE PATCHING
- CCP — CONCRETE CURB PEDESTRIAN
- CD7 — CONCRETE DRIVEWAY 7-INCH ON 6" BASE AGGREGATE DENSE 1 1/4-INCH
- CG30D — CONCRETE CURB & GUTTER 30-INCH TYPE D
- G — FLARE GRADED
- P — FLARE PAVED
- LL — LEVEL LANDING
- MEF — MAXIMUM EXTENT FEASIBLE TECHNICAL INFEASABILITY PRESENT
- RCR — REMOVE EXISTING CURB RAMP AND REPLACE WITH CONCRETE SIDEWALK OR EROSION MAT & SEED MIX NO. 40 AND CONCRETE CURB AND GUTTER
- SA — SAWING ASPHALT
- SC — SAWING CONCRETE
- 40SD — SEED MIX NO. 40, EROSION MAT CLASS 1, TYPE B, FERTILIZER TYPE B, TOPSOIL
- SW5 — CONCRETE SIDEWALK 5-INCH
- CURB RAMP DETECTABLE WARNING FIELD NATURAL PATINA
- SLOPE INTERCEPT

POINTS LEGEND

- XXX.XX — SIDEWALK ELEVATION
- XXX.XX(F) — CURB FLANGE ELEVATION
- XXX.XX(G) — GUTTER FLOWLINE ELEVATION
- XXX.XX(T) — TOP OF CURB ELEVATION
- XXX.XX(E) — EXISTING ELEVATION
- XXX — POINT NUMBER
- A — CURB RADIUS POINT NUMBER

NOTES

1. CONTRACTOR TO FIELD VERIFY ELEVATIONS, GRADES, SLOPES, LENGTHS, AND MATCH POINTS PRIOR TO CURB RAMP CONSTRUCTION.
2. THE ENGINEER MAY ADJUST ELEVATIONS TO FIT FIELD CONDITIONS WITHIN THE CONDITIONS OF THE STANDARD DETAIL DRAWINGS.
3. DASHED LINES SHOWN FOR PROPOSED SIDEWALK ARE FOR INFORMATION ONLY AND DO NOT INDICATE EXACT JOINT LOCATIONS.
4. THE MAXIMUM GRADE BREAK BETWEEN THE GUTTER PAN AND CURB RAMP SHALL BE 11%
5. SIDEWALK AND CURB RAMP CROSS SLOPE SHALL NOT EXCEED 2%.
6. SIDEWALK AND CURB RAMP RUNNING SLOPE SHALL NOT EXCEED 8.33% (12H:1V).

POINT TABLE

POINT NUMBER	Y	X	ELEVATION	STATION	OFFSET
1000	243,284.74	559,249.13	588.72	810+48.48	28.15
1001	243,276.97	559,251.04	589.26	810+40.48	28.05
1002	243,272.12	559,252.23	589.34	810+35.48	27.98
1003	243,264.61	559,254.45	589.44	810+27.66	28.23
1004	243,263.50	559,249.61	589.38	810+27.80	23.27
1005	243,270.92	559,247.38	589.29	810+35.55	22.98
1006	243,275.78	559,246.18	589.21	810+40.55	23.05
1007	243,275.46	559,244.90	589.20	810+40.56	21.72
1008	243,278.80	559,244.01	588.98	810+44.02	21.71
1009	243,283.35	559,243.46	588.63	810+48.56	22.32
1011	243,293.28	559,247.03	588.58	810+57.27	28.27
1012	243,299.48	559,254.32	588.92	810+61.43	36.89

POINT TABLE

POINT NUMBER	Y	X	ELEVATION	STATION	OFFSET
1013	243,275.33	559,244.41	588.70	810+40.56	21.22
1014	243,283.36	559,242.96	588.63	810+48.69	21.84
1016	243,293.59	559,246.63	588.58	810+57.67	27.97
1017	243,299.87	559,254.02	588.42	810+61.89	36.70
1018	243,274.82	559,242.48	588.82	810+40.55	19.22
1019	243,283.39	559,240.96	588.76	810+49.23	19.91
1021	243,294.83	559,245.07	588.66	810+59.27	26.77
1022	243,301.46	559,252.80	588.49	810+63.74	35.93

RADIUS TABLE

POINT NUMBER	Y	X	RADIUS	STATION	OFFSET
U	243,283.03	559,259.96	17'	810+44.10	38.21

RADIAL WARNING FIELD PANEL LAYOUT TABLE

QUADRANT	BACK OF CURB RADIUS (FT)	LANDING LENGTH 'XR'	RADIAL WARNING FIELD AREA (SF)	RADIAL LONG CHORD (FT)
SOUTHEAST	16.5	8.79'	17.4 SF	9.97'

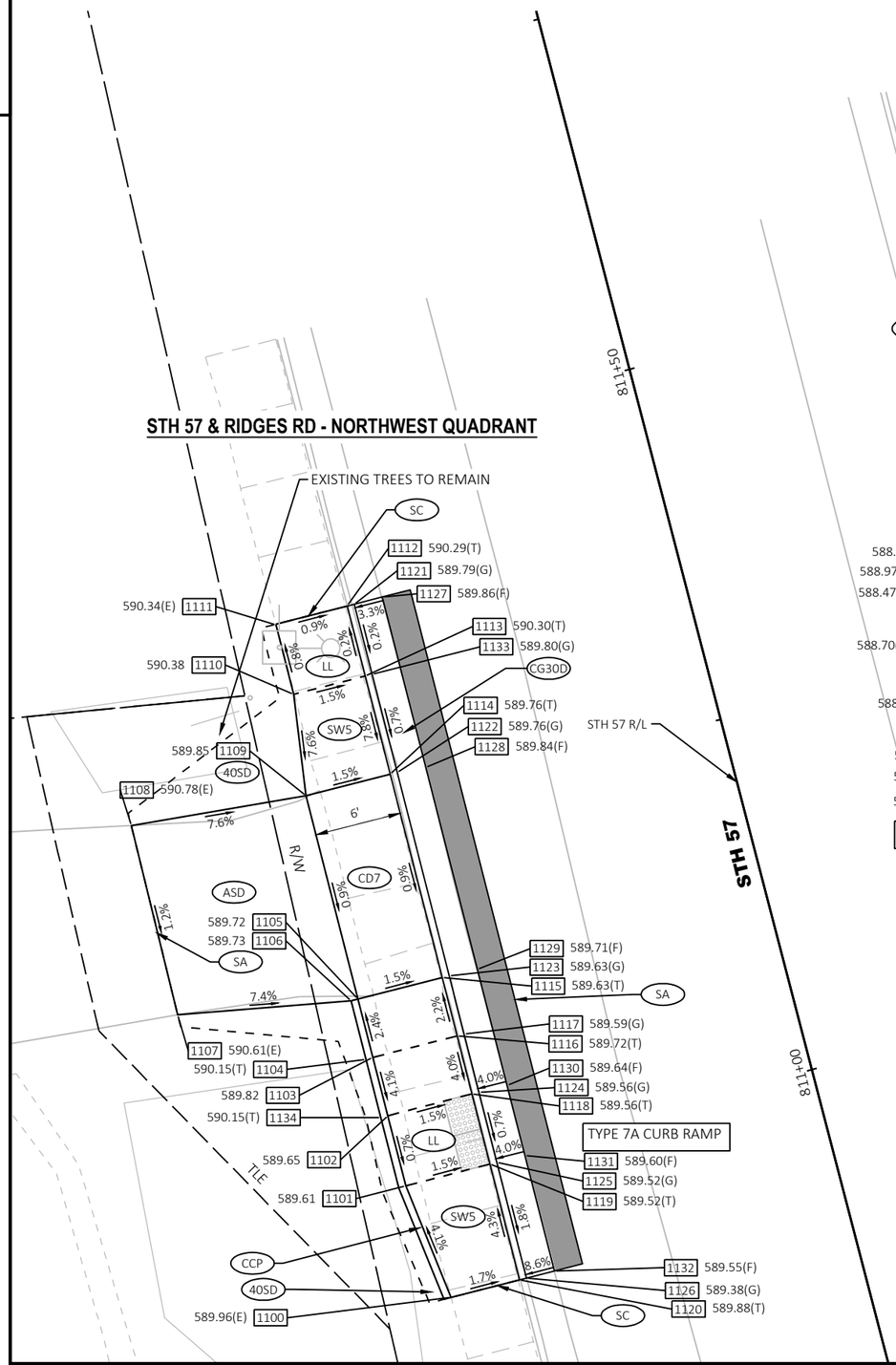

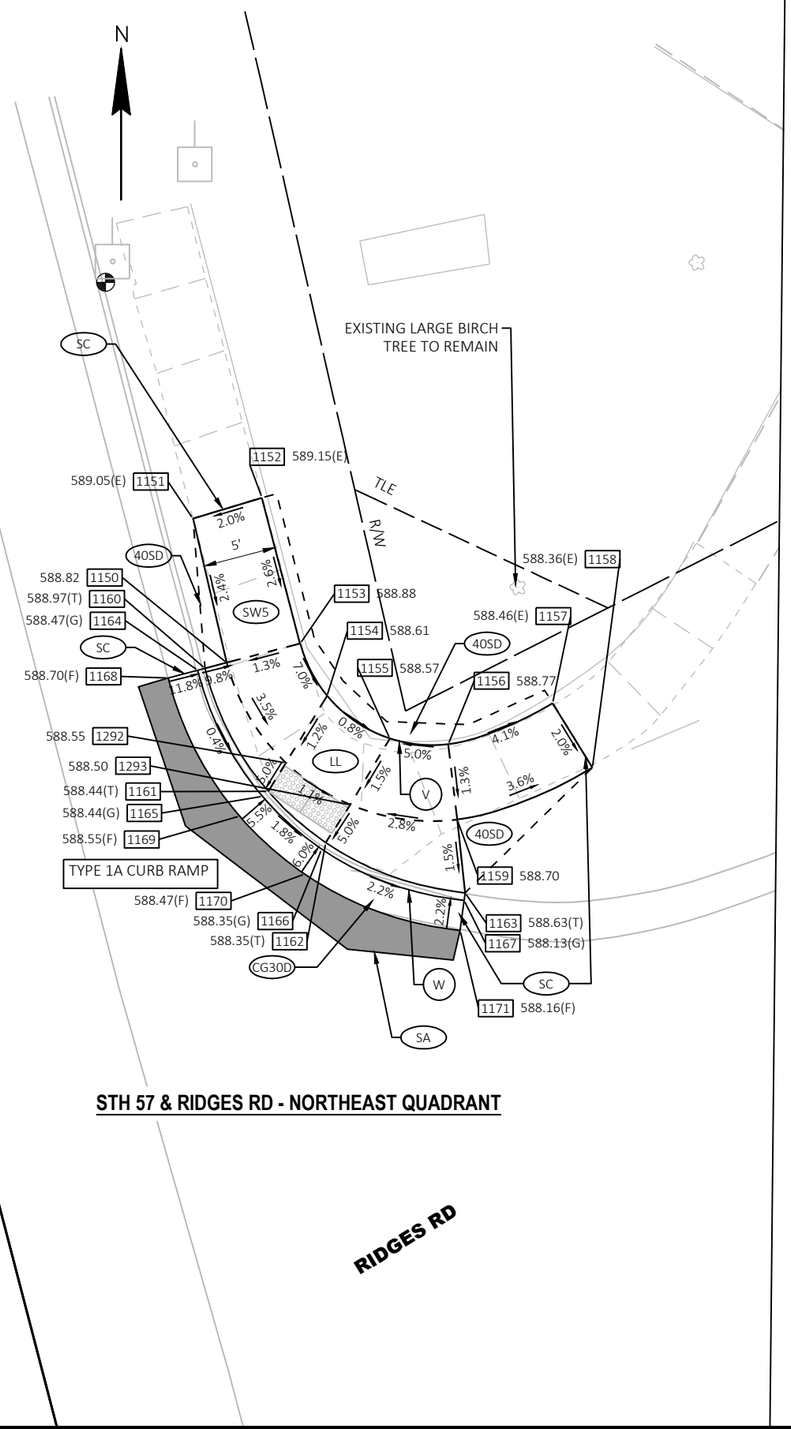

LEGEND

AGG	BASE AGGREGATE DENSE 3/4-INCH
ASD	ASPHALTIC SURFACE DRIVEWAYS AND FIELD ENTRANCES
	ASPHALTIC SURFACE PATCHING
CCP	CONCRETE CURB PEDESTRIAN
CD7	CONCRETE DRIVEWAY 7-INCH ON 6" BASE AGGREGATE DENSE 1 1/4-INCH
CG30D	CONCRETE CURB & GUTTER 30-INCH TYPE D
G	FLARE GRADED
P	FLARE PAVED
LL	LEVEL LANDING
MEF	MAXIMUM EXTENT FEASIBLE TECHNICAL INFEASABILITY PRESENT
RCR	REMOVE EXISTING CURB RAMP AND REPLACE WITH CONCRETE SIDEWALK OR EROSION MAT & SEED MIX NO. 40 AND CONCRETE CURB AND GUTTER
SA	SAWING ASPHALT
SC	SAWING CONCRETE
40SD	SEED MIX NO. 40, EROSION MAT CLASS 1, TYPE B, FERTILIZER TYPE B, TOPSOIL
SW5	CONCRETE SIDEWALK 5-INCH
	CURB RAMP DETECTABLE WARNING FIELD NATURAL PATINA
	SLOPE INTERCEPT

POINTS LEGEND

XXX.XX	SIDEWALK ELEVATION
XXX.XX(F)	CURB FLANGE ELEVATION
XXX.XX(G)	GUTTER FLOWLINE ELEVATION
XXX.XX(T)	TOP OF CURB ELEVATION
XXX.XX(E)	EXISTING ELEVATION
XXX	POINT NUMBER
A	CURB RADIUS POINT NUMBER

NOTES

1. CONTRACTOR TO FIELD VERIFY ELEVATIONS, GRADES, SLOPES, LENGTHS, AND MATCH POINTS PRIOR TO CURB RAMP CONSTRUCTION.
2. THE ENGINEER MAY ADJUST ELEVATIONS TO FIT FIELD CONDITIONS WITHIN THE CONDITIONS OF THE STANDARD DETAIL DRAWINGS.
3. DASHED LINES SHOWN FOR PROPOSED SIDEWALK ARE FOR INFORMATION ONLY AND DO NOT INDICATE EXACT JOINT LOCATIONS.
4. THE MAXIMUM GRADE BREAK BETWEEN THE GUTTER PAN AND CURB RAMP SHALL BE 11%
5. SIDEWALK AND CURB RAMP CROSS SLOPE SHALL NOT EXCEED 2%.
6. SIDEWALK AND CURB RAMP RUNNING SLOPE SHALL NOT EXCEED 8.33% (12H:1V).

SEE POINT TABLES ON NEXT SHEET.

POINT TABLE					
POINT NUMBER	Y	X	ELEVATION	STATION	OFFSET
1100	243,311.77	559,183.97	589.96	810+91.05	-28.09
1101	243,319.47	559,180.84	589.61	810+99.30	-29.18
1102	243,324.32	559,179.60	589.65	811+04.30	-29.16
1103	243,328.35	559,178.57	589.82	811+08.46	-29.14
1104	243,328.21	559,178.09	590.15	811+08.45	-29.64
1105	243,332.38	559,177.54	589.72	811+12.62	-29.12
1106	243,332.26	559,177.06	589.73	811+12.62	-29.62
1107	243,331.30	559,165.09	590.61	811+14.71	-41.44
1108	243,344.37	559,161.88	590.78	811+28.17	-41.26
1109	243,346.43	559,173.95	589.85	811+27.12	-29.05
1110	243,353.44	559,173.10	590.38	811+34.11	-28.11
1111	243,358.23	559,171.88	590.34	811+39.06	-28.09
1112	243,359.54	559,176.80	590.29	811+39.09	-23.00
1113	243,354.70	559,178.03	590.30	811+34.09	-23.02
1114	243,347.92	559,179.77	589.76	811+27.09	-23.05
1115	243,333.87	559,183.36	589.63	811+12.59	-23.12
1116	243,329.84	559,184.39	589.72	811+08.43	-23.14

POINT TABLE					
POINT NUMBER	Y	X	ELEVATION	STATION	OFFSET
1117	243,329.96	559,184.87	589.59	811+08.43	-22.64
1118	243,325.83	559,185.41	589.56	811+04.30	-23.16
1119	243,320.99	559,186.65	589.52	810+99.30	-23.18
1120	243,312.98	559,188.69	589.88	810+91.03	-23.22
1121	243,359.67	559,177.28	589.79	811+39.09	-22.50
1122	243,348.04	559,180.25	589.76	811+27.09	-22.55
1123	243,333.99	559,183.84	589.63	811+12.59	-22.62
1124	243,325.93	559,185.90	589.56	811+04.27	-22.66
1125	243,321.11	559,187.13	589.52	810+99.30	-22.68
1126	243,313.10	559,189.18	589.38	810+91.03	-22.72
1127	243,360.16	559,179.22	589.86	811+39.08	-20.50
1128	243,348.39	559,182.23	589.84	811+26.93	-20.55
1129	243,334.44	559,185.79	589.71	811+12.54	-20.62
1130	243,326.41	559,187.84	589.64	811+04.24	-20.66
1131	243,321.57	559,189.08	589.60	810+99.25	-20.68
1132	243,313.60	559,191.12	589.55	810+91.02	-20.72
1133	243,354.82	559,178.52	589.80	811+34.09	-22.52

POINT TABLE					
POINT NUMBER	Y	X	ELEVATION	STATION	OFFSET
1134	243,324.19	559,179.12	590.15	811+04.30	-29.66

RADIUS TABLE					
POINT NUMBER	Y	X	RADIUS	STATION	OFFSET
V	243,361.22	559,238.93	9'	811+25.06	37.55
W	243,361.91	559,242.90	20'	811+24.73	41.57

POINT TABLE					
POINT NUMBER	Y	X	ELEVATION	STATION	OFFSET
1150	243,357.68	559,225.39	588.82	811+25.05	23.55
1151	243,367.19	559,223.16	589.05	811+34.81	23.80
1152	243,368.56	559,227.71	589.15	811+34.99	28.54
1153	243,358.94	559,230.22	588.88	811+25.05	28.55
1154	243,355.47	559,232.00	588.61	811+21.24	29.40
1155	243,352.66	559,236.14	588.57	811+17.48	32.70
1156	243,352.28	559,240.00	588.77	811+16.14	36.34
1157	243,355.00	559,246.89	588.46	811+17.04	43.69
1158	243,350.75	559,249.52	588.36	811+12.26	45.16
1159	243,347.32	559,240.59	588.70	811+11.19	35.66
1160	243,357.30	559,223.95	588.97	811+25.04	22.07

POINT TABLE					
POINT NUMBER	Y	X	ELEVATION	STATION	OFFSET
1161	243,349.18	559,228.13	588.44	811+16.13	24.07
1162	243,345.80	559,231.92	588.35	811+11.90	26.88
1163	243,342.48	559,241.11	588.63	811+06.38	34.95
1164	243,357.18	559,223.46	588.47	811+25.04	21.57
1165	243,348.85	559,227.75	588.44	811+15.91	23.62
1166	243,345.37	559,231.65	588.35	811+11.56	26.52
1167	243,341.99	559,241.05	588.13	811+05.91	34.76
1168	243,356.67	559,221.53	588.70	811+25.04	19.57
1169	243,347.54	559,226.24	588.55	811+15.02	21.82
1170	243,343.72	559,230.53	588.47	811+10.24	25.01
1171	243,340.00	559,240.79	588.16	811+04.06	34.01

POINT TABLE					
POINT NUMBER	Y	X	ELEVATION	STATION	OFFSET
1292	243,351.06	559,229.29	588.55	811+17.66	25.67
1293	243,348.30	559,233.54	588.50	811+13.91	29.08

LEGEND

- 6W MARKING LINE EPOXY 6-INCH (WHITE)
- 6Y MARKING LINE SAME DAY EPOXY 6-INCH (YELLOW)
- C6 MARKING CROSSWALK EPOXY TRANSVERSE LINE 6-INCH
- S12 MARKING STOP LINE EPOXY 12-INCH

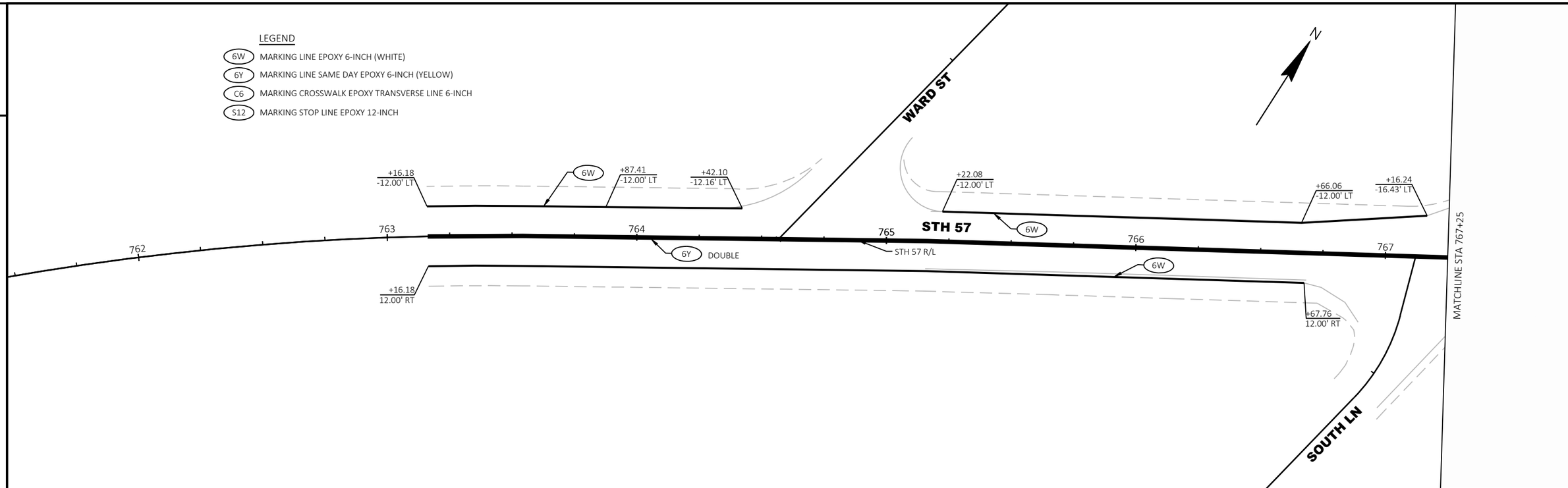

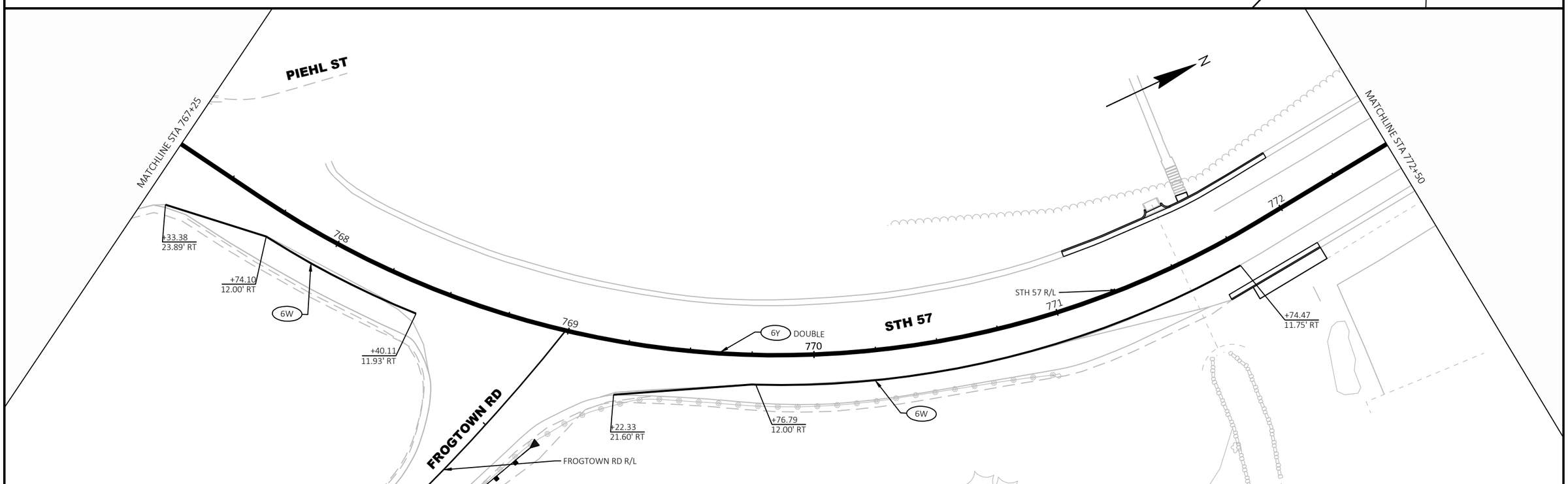

PROJECT NO: 4150-14-71	HWY: STH 57	COUNTY: DOOR	PAVEMENT MARKING	SHEET 38	E

LEGEND

- 6W MARKING LINE EPOXY 6-INCH (WHITE)
- 6Y MARKING LINE SAME DAY EPOXY 6-INCH (YELLOW)
- C6 MARKING CROSSWALK EPOXY TRANSVERSE LINE 6-INCH
- S12 MARKING STOP LINE EPOXY 12-INCH

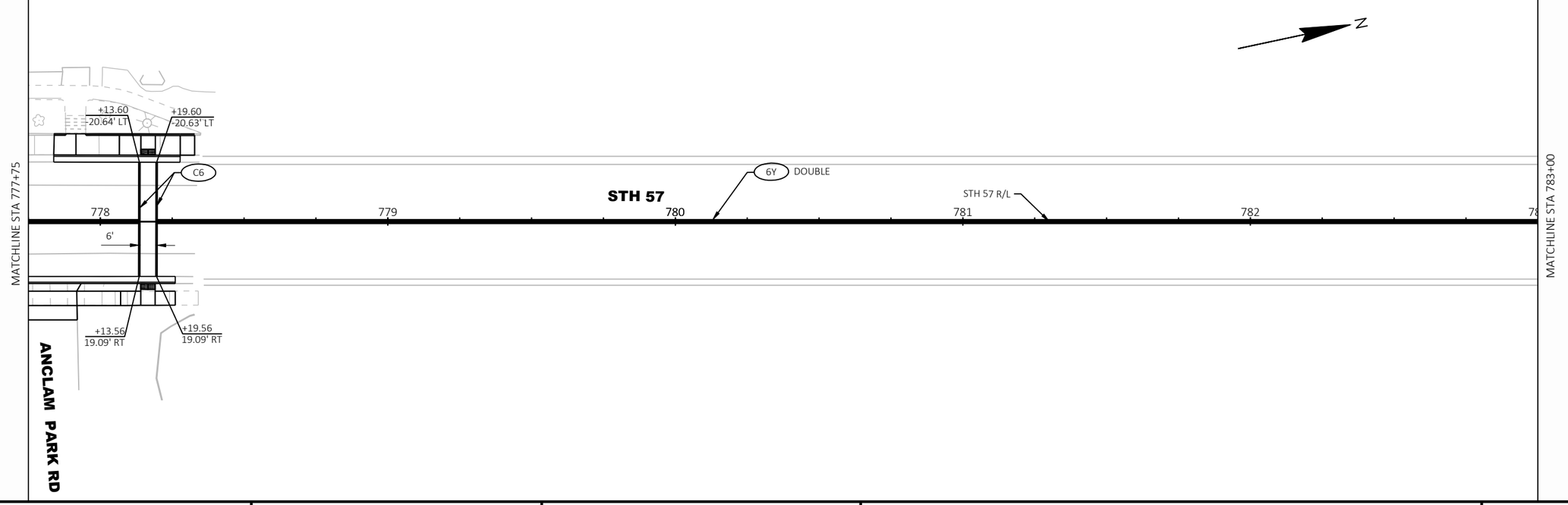

PROJECT NO: 4150-14-71	HWY: STH 57	COUNTY: DOOR	PAVEMENT MARKING	SHEET 39	E

2

LEGEND

- 6W MARKING LINE EPOXY 6-INCH (WHITE)
- 6Y MARKING LINE SAME DAY EPOXY 6-INCH (YELLOW)
- C6 MARKING CROSSWALK EPOXY TRANSVERSE LINE 6-INCH
- S12 MARKING STOP LINE EPOXY 12-INCH

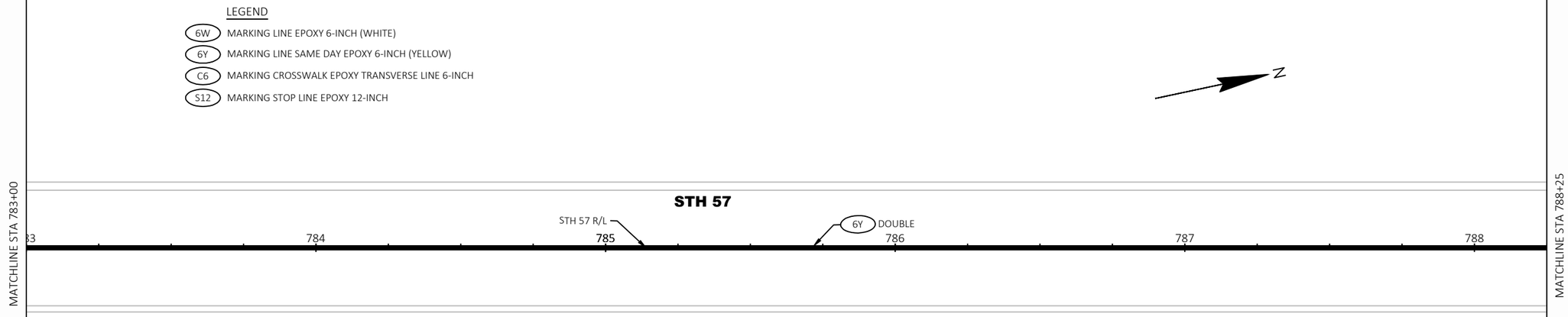

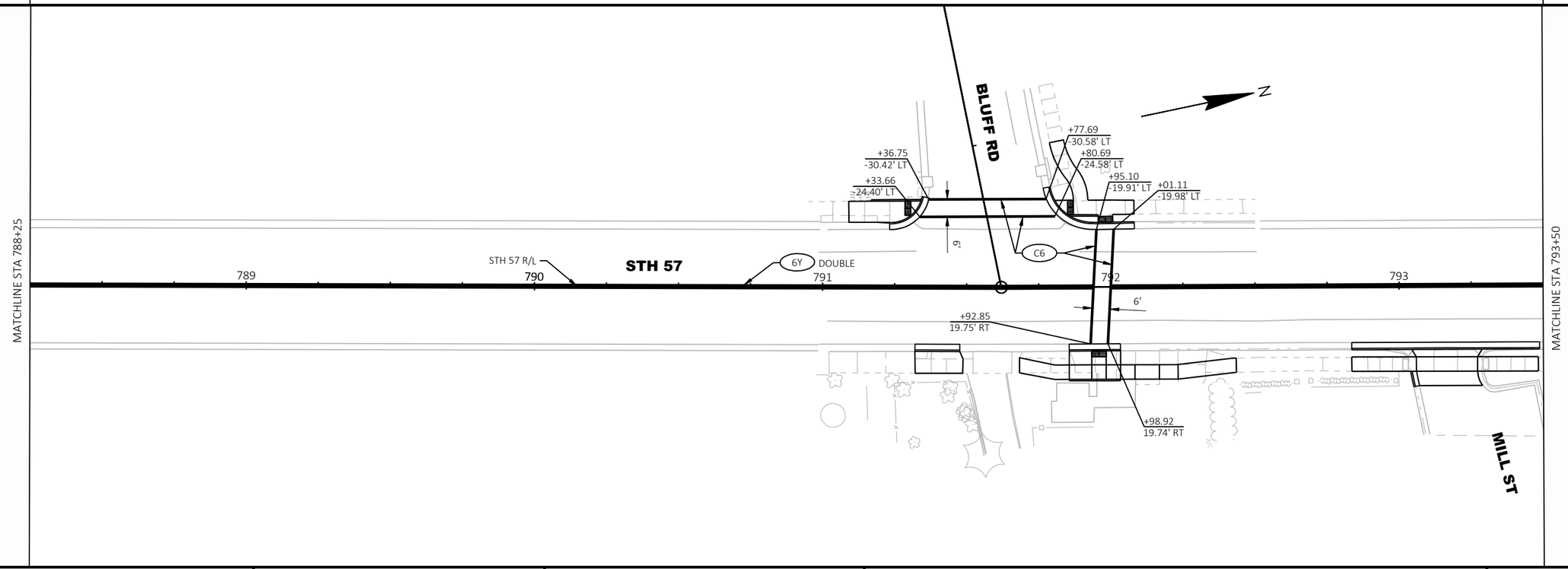

PROJECT NO: 4150-14-71	HWY: STH 57	COUNTY: DOOR	PAVEMENT MARKING	SHEET 40	E

FILE NAME : K:\1202715.01\CIVIL3D\41501400\SHEETSPLAN\024501-PM.DWG
LAYOUT NAME - 03
PLOT DATE : 8/19/2024 3:15 PM
PLOT BY : SIEBERT, LUKE
PLOT NAME :
PLOT SCALE : 1 IN:40 FT

2

LEGEND

- 6W MARKING LINE EPOXY 6-INCH (WHITE)
- 6Y MARKING LINE SAME DAY EPOXY 6-INCH (YELLOW)
- C6 MARKING CROSSWALK EPOXY TRANSVERSE LINE 6-INCH
- S12 MARKING STOP LINE EPOXY 12-INCH

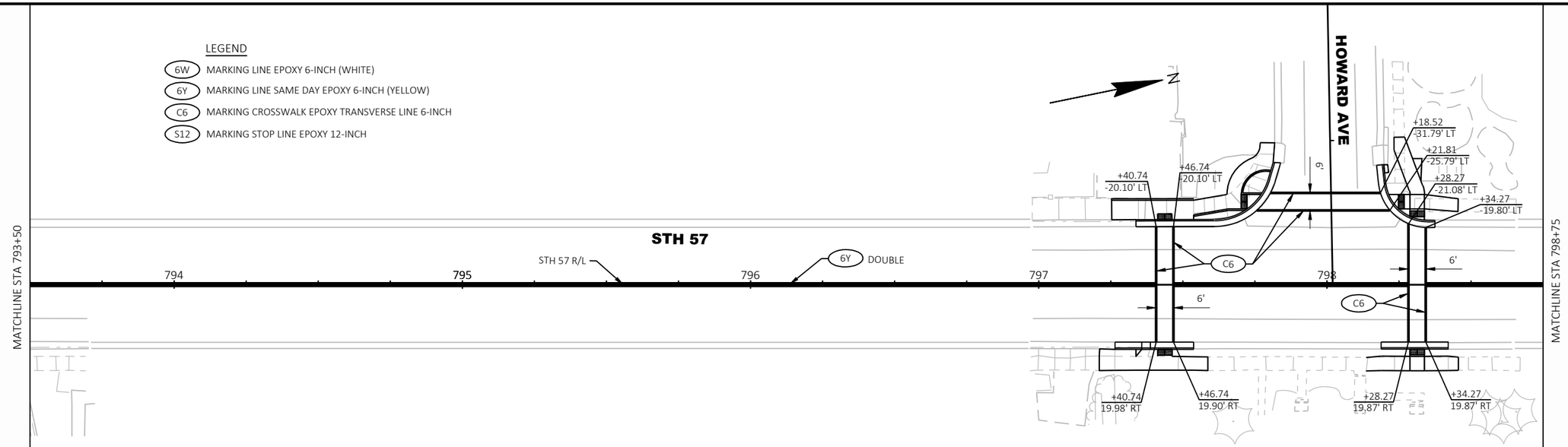

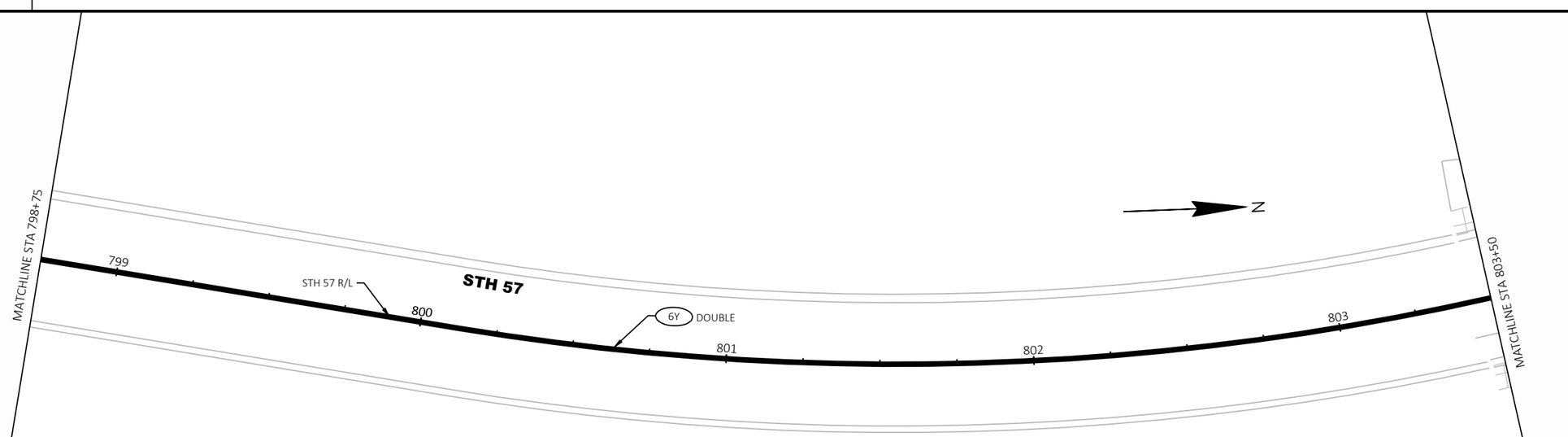

PROJECT NO: 4150-14-71	HWY: STH 57	COUNTY: DOOR	PAVEMENT MARKING	SHEET 41	E

FILE NAME : K:\1202715.01\CIVIL3D\41501400\SHEETSPLAN\024501-PM.DWG
LAYOUT NAME - 04
PLOT DATE : 8/19/2024 3:15 PM
PLOT BY : SIEBERT, LUKE
PLOT NAME :
PLOT SCALE : 1 IN:40 FT

2

LEGEND

- 6W MARKING LINE EPOXY 6-INCH (WHITE)
- 6Y MARKING LINE SAME DAY EPOXY 6-INCH (YELLOW)
- C6 MARKING CROSSWALK EPOXY TRANSVERSE LINE 6-INCH
- S12 MARKING STOP LINE EPOXY 12-INCH

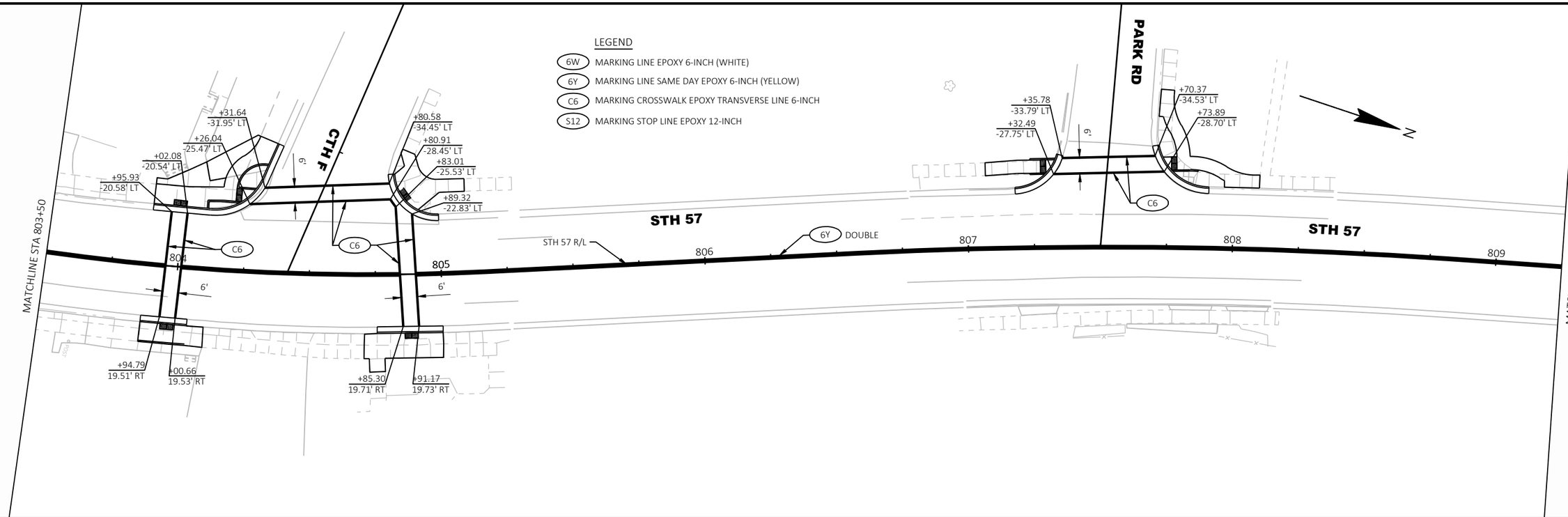

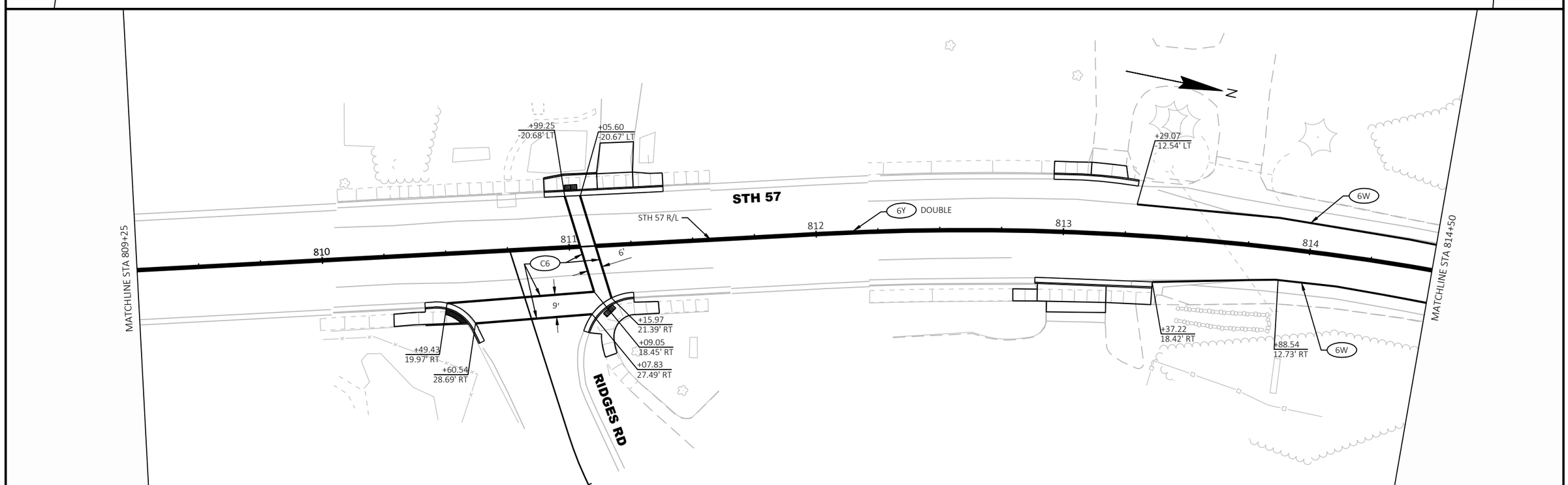

PROJECT NO: 4150-14-71	HWY: STH 57	COUNTY: DOOR	PAVEMENT MARKING	SHEET 42	E

FILE NAME : K:\1202715.01\CIVIL3D\41501400\SHEETSPLAN\024501-PM.DWG
LAYOUT NAME - 05
PLOT DATE : 8/19/2024 3:15 PM
PLOT BY : SIEBERT, LUKE
PLOT NAME :
PLOT SCALE : 1 IN:40 FT

2

LEGEND

- 6W MARKING LINE EPOXY 6-INCH (WHITE)
- 6Y MARKING LINE SAME DAY EPOXY 6-INCH (YELLOW)
- C6 MARKING CROSSWALK EPOXY TRANSVERSE LINE 6-INCH
- S12 MARKING STOP LINE EPOXY 12-INCH

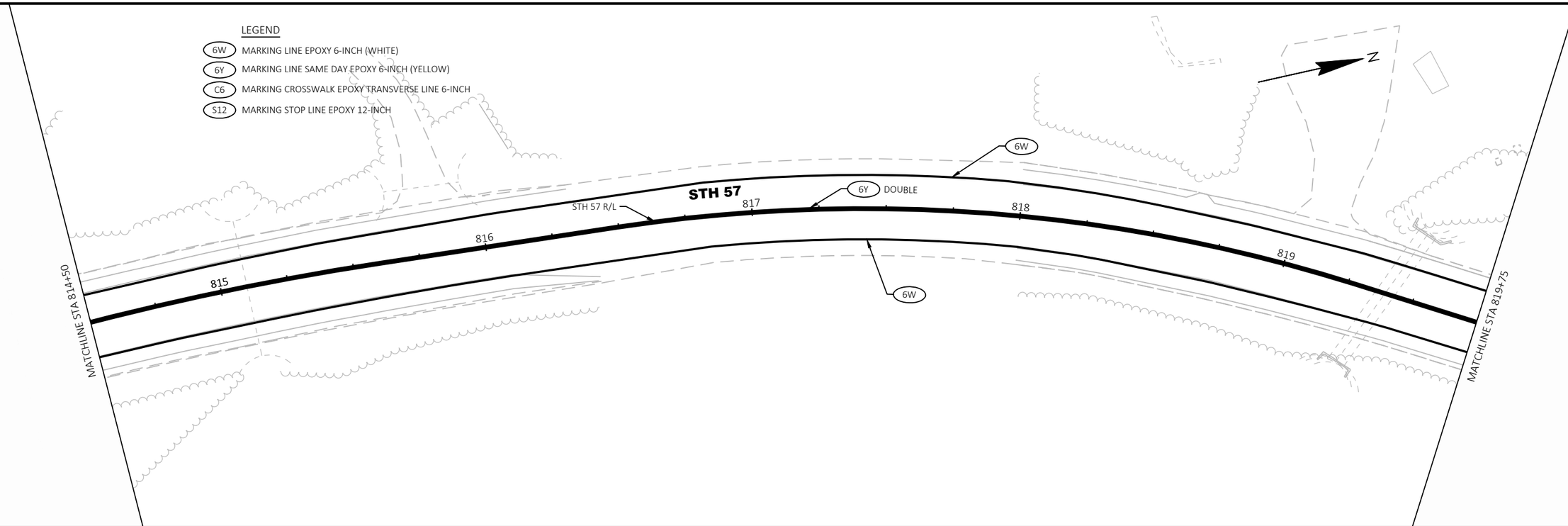

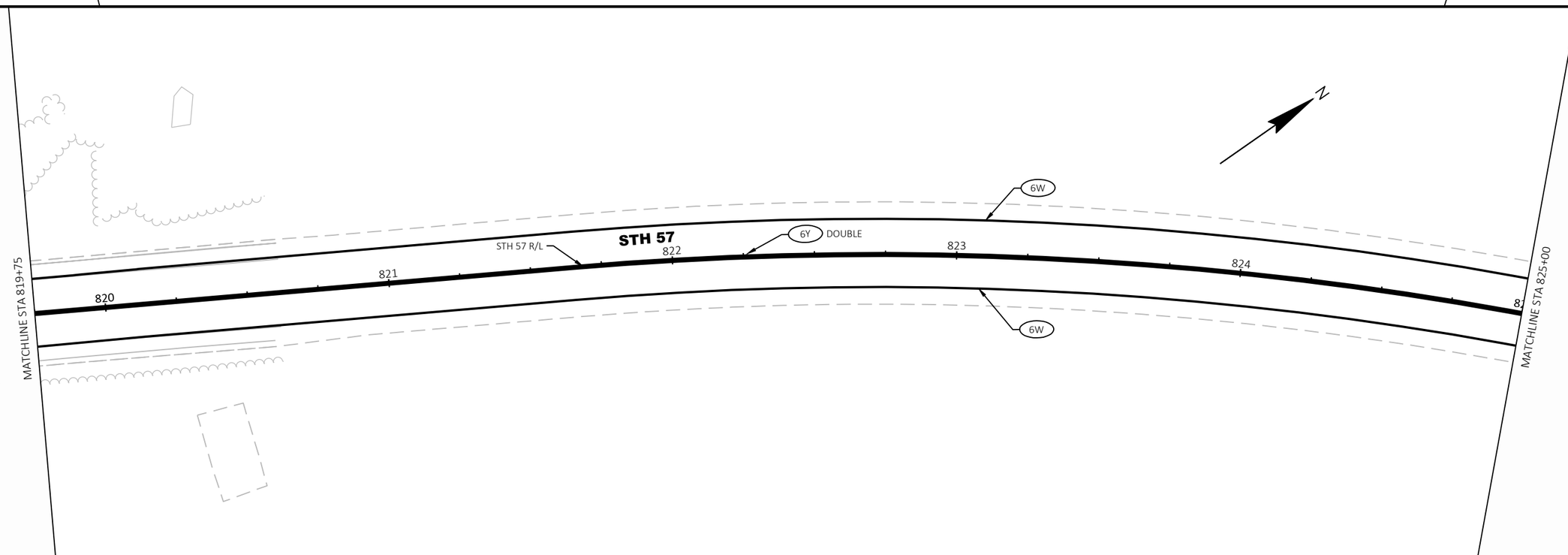

2

PROJECT NO: 4150-14-71	HWY: STH 57	COUNTY: DOOR	PAVEMENT MARKING	SHEET 43	E

FILE NAME : K:\1202715.01\CIVIL3D\41501400\SHEETSPLAN\024501-PM.DWG
LAYOUT NAME - 06
PLOT DATE : 8/19/2024 3:16 PM
PLOT BY : SIEBERT, LUKE
PLOT NAME :
PLOT SCALE : 1 IN:40 FT

2

LEGEND

- 6W MARKING LINE EPOXY 6-INCH (WHITE)
- 6Y MARKING LINE SAME DAY EPOXY 6-INCH (YELLOW)
- C6 MARKING CROSSWALK EPOXY TRANSVERSE LINE 6-INCH
- S12 MARKING STOP LINE EPOXY 12-INCH

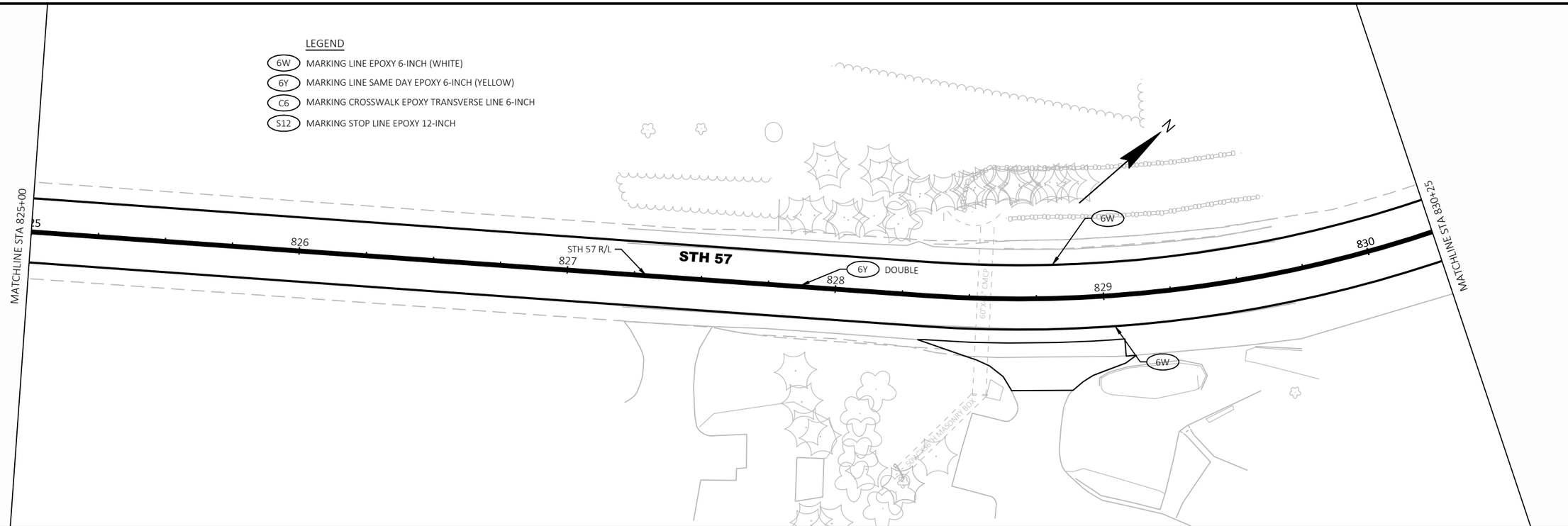

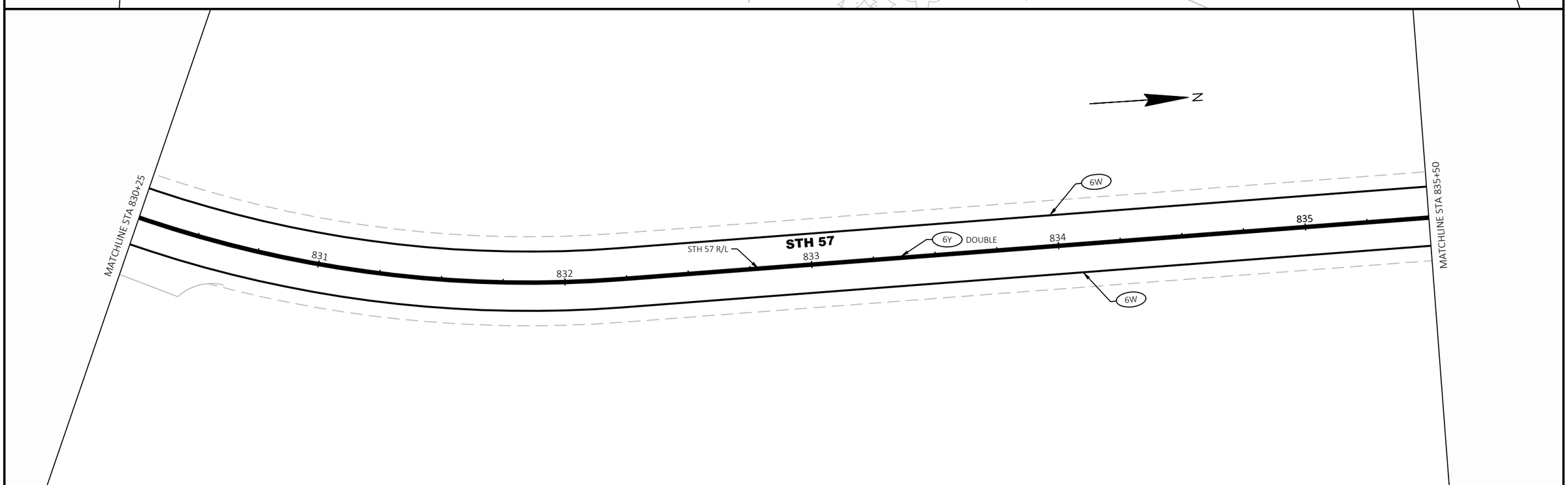

2

PROJECT NO: 4150-14-71	HWY: STH 57	COUNTY: DOOR	PAVEMENT MARKING	SHEET 44	E

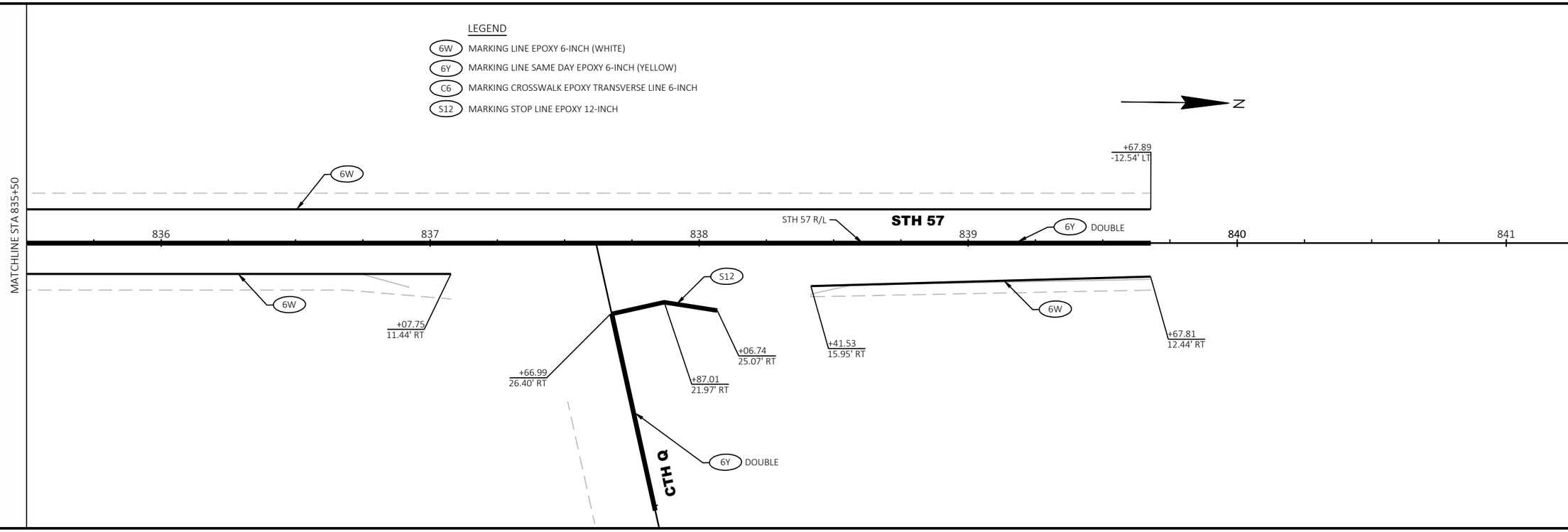
LEGEND
6W MARKING LINE EPOXY 6-INCH (WHITE)
6Y MARKING LINE SAME DAY EPOXY 6-INCH (YELLOW)
C6 MARKING CROSSWALK EPOXY TRANSVERSE LINE 6-INCH
S12 MARKING STOP LINE EPOXY 12-INCH
N
MATCHLINE STA 835+50
+67.89
-12.54' LT
6W
STH 57 R/L
STH 57
6Y DOUBLE
836
837
838
839
840
841
6W
+07.75
11.44' RT
S12
+66.99
26.40' RT
+87.01
21.97' RT
+06.74
25.07' RT
CTH Q
6Y DOUBLE
+41.53
15.95' RT
6W
+67.81
12.44' RT

NOTES

1. PLACE MESSAGE BOARDS WITH AN APPROVED PROJECT START UP MESSAGE SEVEN DAYS PRIOR TO CONSTRUCTION. CONTACT NE REGION TRAFFIC AT (920) 366-8033 FOR MESSAGE APPROVAL. PLACE FIVE TRAFFIC CONTROL DRUMS WITH TYPE C LIGHTS IN FRONT OF IT.
2. CONSTRUCTION SHALL BE COMPLETED UNDER TRAFFIC. MAINTAIN A MINIMUM OF ONE 12-FOOT TRAVEL LANE USING FLAGGING OPERATIONS AND ONLY WHEN ADJACENT TO ACTIVE CONSTRUCTION OPERATIONS.
3. MAXIMUM FLAGGING LENGTH SHALL BE ONE CITY BLOCK. TWO CONSECUTIVE SIDE STREETS INTERSECTING STH 57 SHALL NOT BE RESTRICTED CONCURRENTLY.
4. SEE CONSTRUCTION DETAILS AND TEMPORARY PEDESTRIAN ACCOMMODATION STAGING PLANS FOR ADDITIONAL TRAFFIC CONTROL REQUIREMENTS.

LEGEND

PCMS	TRAFFIC CONTROL SIGNS PCMS
1	PLACE ADVANCED WARNING SIGNING AND SIGN G20-2A PER SDD TRAFFIC CONTROL, ADVANCED WARNING SIGNS 40 MPH OR LESS, TWO-WAY UNDIVIDED ROAD OPEN TO TRAFFIC.
2	PLACE SIGN W20-1A FOR A TYPICAL SIDE ROAD APPROACH PER SDD TRAFFIC CONTROL, ADVANCED WARNING SIGNS 40 MPH OR LESS, TWO-WAY UNDIVIDED ROAD OPEN TO TRAFFIC.
3	SEE PARK ROAD CLOSURE DETAIL BELOW.
⊨	TRAFFIC CONTROL SIGN ON TEMPORARY SUPPORT

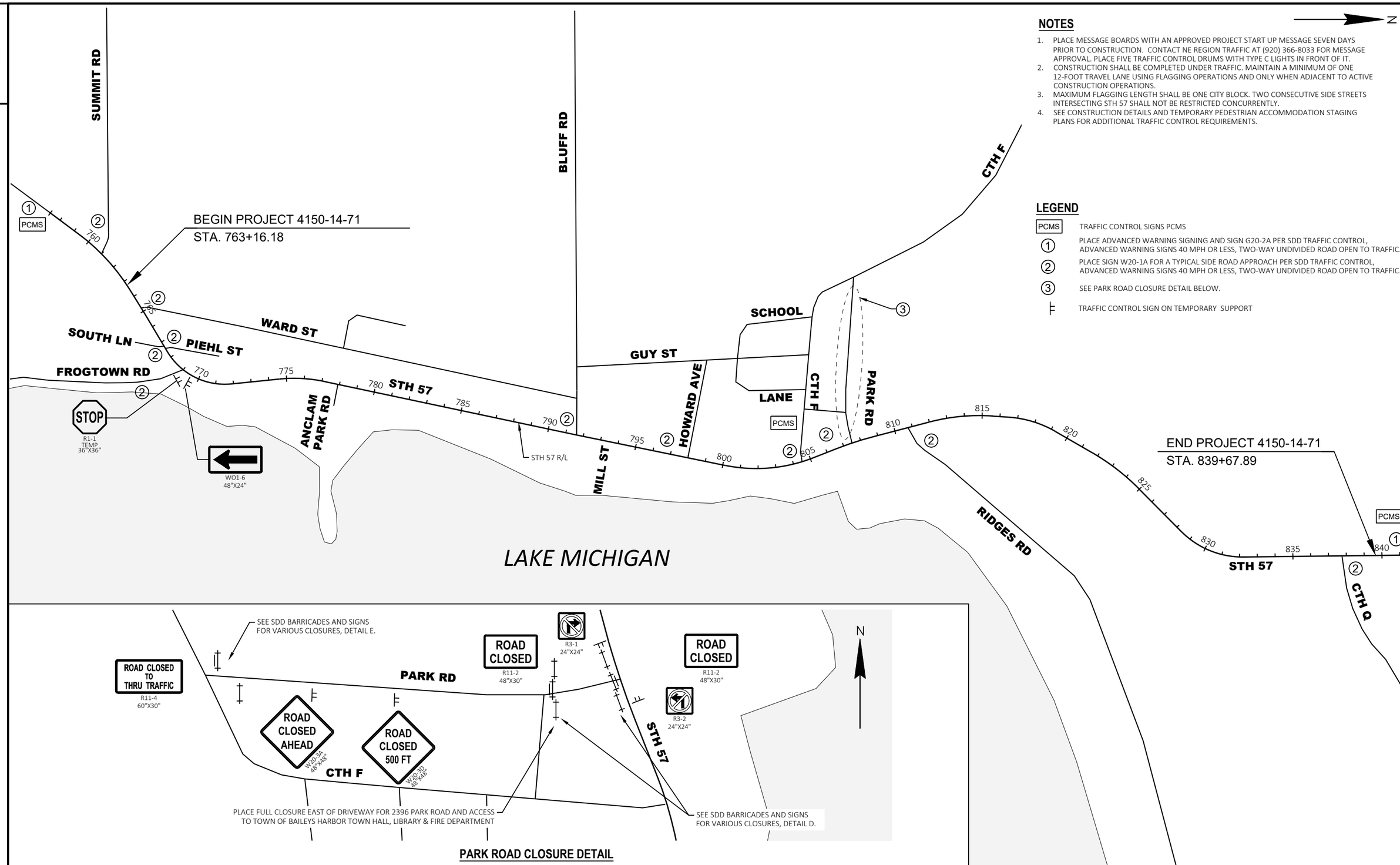

PARK ROAD CLOSURE DETAIL

PROJECT NO: 4150-14-71	HWY: STH 57	COUNTY: DOOR	TRAFFIC CONTROL	SHEET 46	E

FILE NAME : K:\1202715.01\CIVIL3D\41501400\SHEETSPLAN\025100-TC.DWG
LAYOUT NAME - Plan 1 IN 500 FT
PLOT DATE : 10/24/2024 10:59 AM PLOT BY : SIEBERT, LUKE PLOT NAME : PLOT SCALE : 1 IN:500 FT
WISDOT/CADDS SHEET 42

2

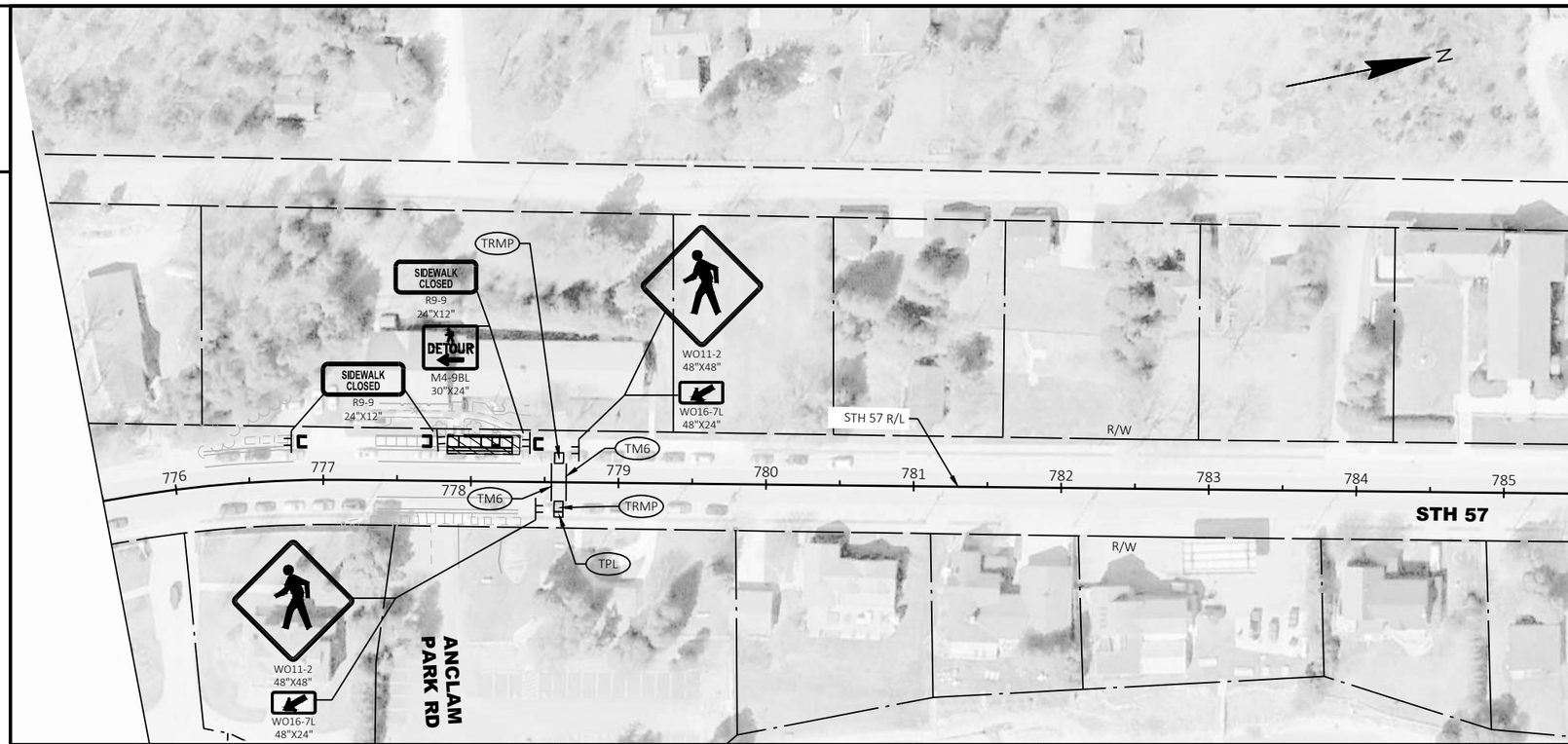

LEGEND

- RMPM — MARKING REMOVAL LINE 8-INCH
- TM6 — TEMPORARY MARKING LINE REMOVABLE TAPE 6-INCH
- TPL — TEMPORARY PEDESTRIAN SURFACE PLATE
- TRMP — TEMPORARY PEDESTRIAN CURB RAMP PERPENDICULAR
- TRAFFIC CONTROL SIGN ON TEMPORARY SUPPORT
- TEMPORARY PEDESTRIAN BARRICADE
- WORK AREA

NOTES:

1. DRUMS REQUIRED AT ALL CURB RAMPS DURING CONSTRUCTION AT 10' MAX SPACING TO DELINEATE THE WORK AREA.
2. BOTTOM 2' OF TEMPORARY PEDESTRIAN CURB RAMP REQUIRED TO BE COVERED BY TEMPORARY PEDESTRIAN DETECTABLE WARNING FIELD FOR THE FULL WIDTH OF THE RAMP.
3. PLACE TEMPORARY PEDESTRIAN BARRICADE PRIOR TO SIDEWALK CLOSURE PER SDD TRAFFIC CONTROL, PEDESTRIAN ACCOMMODATIONS - SIDEWALK DETOUR, SIDEWALK ON BOTH SIDES DETAIL.
4. WHEN COORDINATING TEMPORARY NO PARKING ZONES WITH THE TOWN, ENSURE TO EXTEND THE ZONES TO INCLUDE ANY TEMPORARY PEDESTRIAN ACCOMMODATIONS.

2

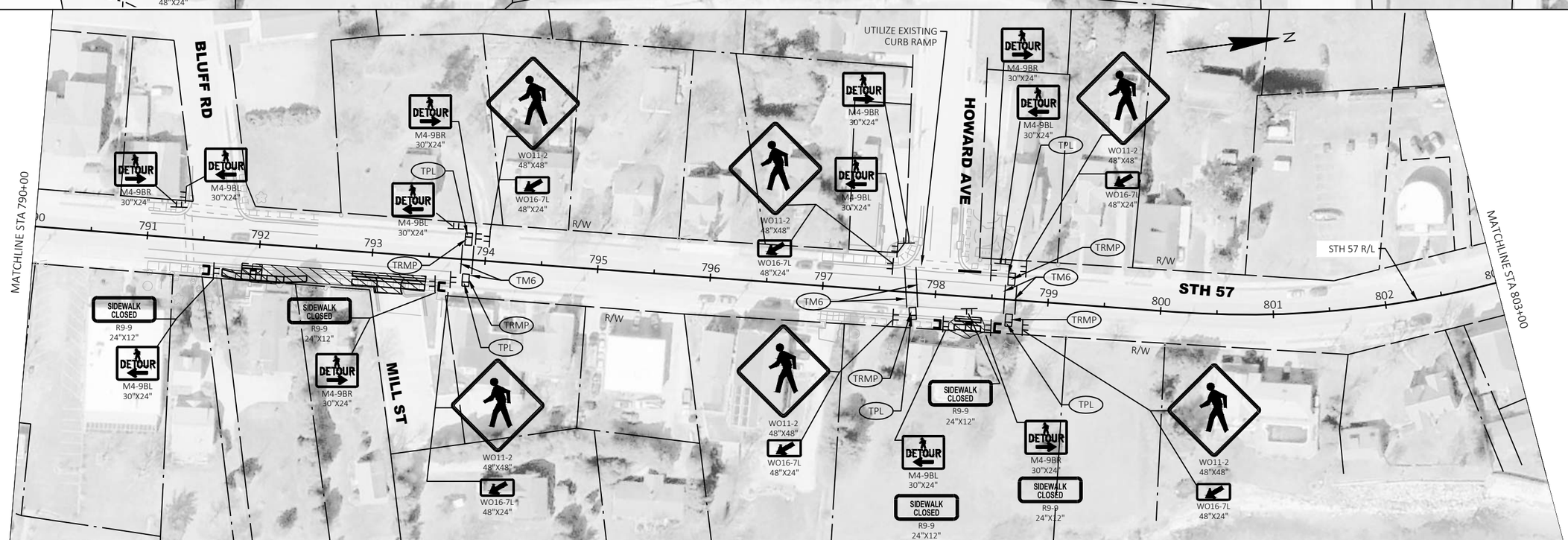

PROJECT NO: 4150-14-71	HWY: STH 57	COUNTY: DOOR	TEMPORARY PEDESTRIAN ACCOMMODATIONS - STAGE 1	SHEET 47	E

LEGEND

- RMPM — MARKING REMOVAL LINE 8-INCH
- TM6 — TEMPORARY MARKING LINE REMOVABLE TAPE 6-INCH
- TPL — TEMPORARY PEDESTRIAN SURFACE PLATE
- TRMP — TEMPORARY PEDESTRIAN CURB RAMP PERPENDICULAR
- TRAFFIC CONTROL SIGN ON TEMPORARY SUPPORT
- TEMPORARY PEDESTRIAN BARRICADE
- WORK AREA

NOTES:

1. DRUMS REQUIRED AT ALL CURB RAMPS DURING CONSTRUCTION AT 10' MAX SPACING TO DELINEATE THE WORK AREA.
2. BOTTOM 2' OF TEMPORARY PEDESTRIAN CURB RAMP REQUIRED TO BE COVERED BY TEMPORARY PEDESTRIAN DETECTABLE WARNING FIELD FOR THE FULL WIDTH OF THE RAMP.
3. PLACE TEMPORARY PEDESTRIAN BARRICADE PRIOR TO SIDEWALK CLOSURE PER SDD TRAFFIC CONTROL, PEDESTRIAN ACCOMMODATIONS - SIDEWALK DETOUR, SIDEWALK ON BOTH SIDES DETAIL.
4. WHEN COORDINATING TEMPORARY NO PARKING ZONES WITH THE TOWN, ENSURE TO EXTEND THE ZONES TO INCLUDE ANY TEMPORARY PEDESTRIAN ACCOMMODATIONS.

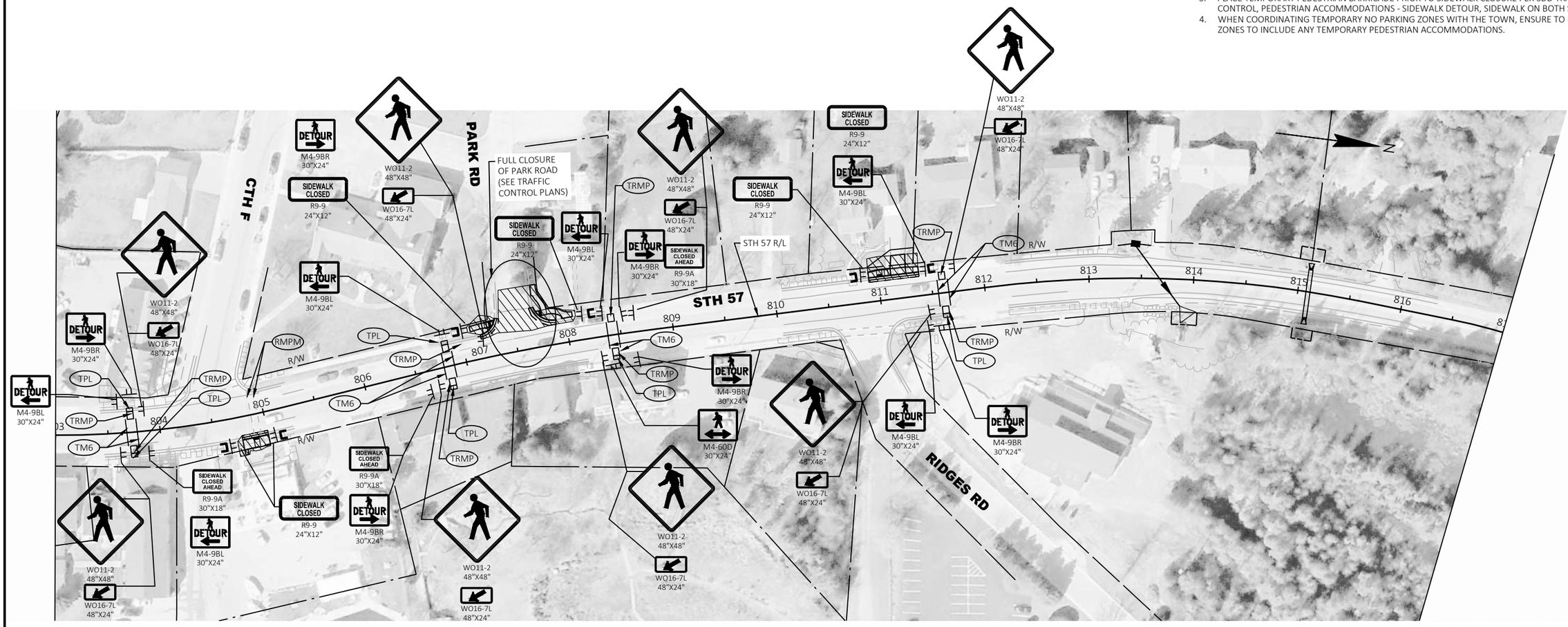

PROJECT NO: 4150-14-71	HWY: STH 57	COUNTY: DOOR	TEMPORARY PEDESTRIAN ACCOMMODATIONS - STAGE 1	SHEET 48	E

FILE NAME : K:\1202715.01\CIVIL3D\41501400\SHEETSPLAN\026202-S1.DWG
LAYOUT NAME - 02
PLOT DATE : 8/20/2024 11:08 AM
PLOT BY : SIEBERT, LUKE
PLOT NAME :
PLOT SCALE : 1 IN:100 FT

2

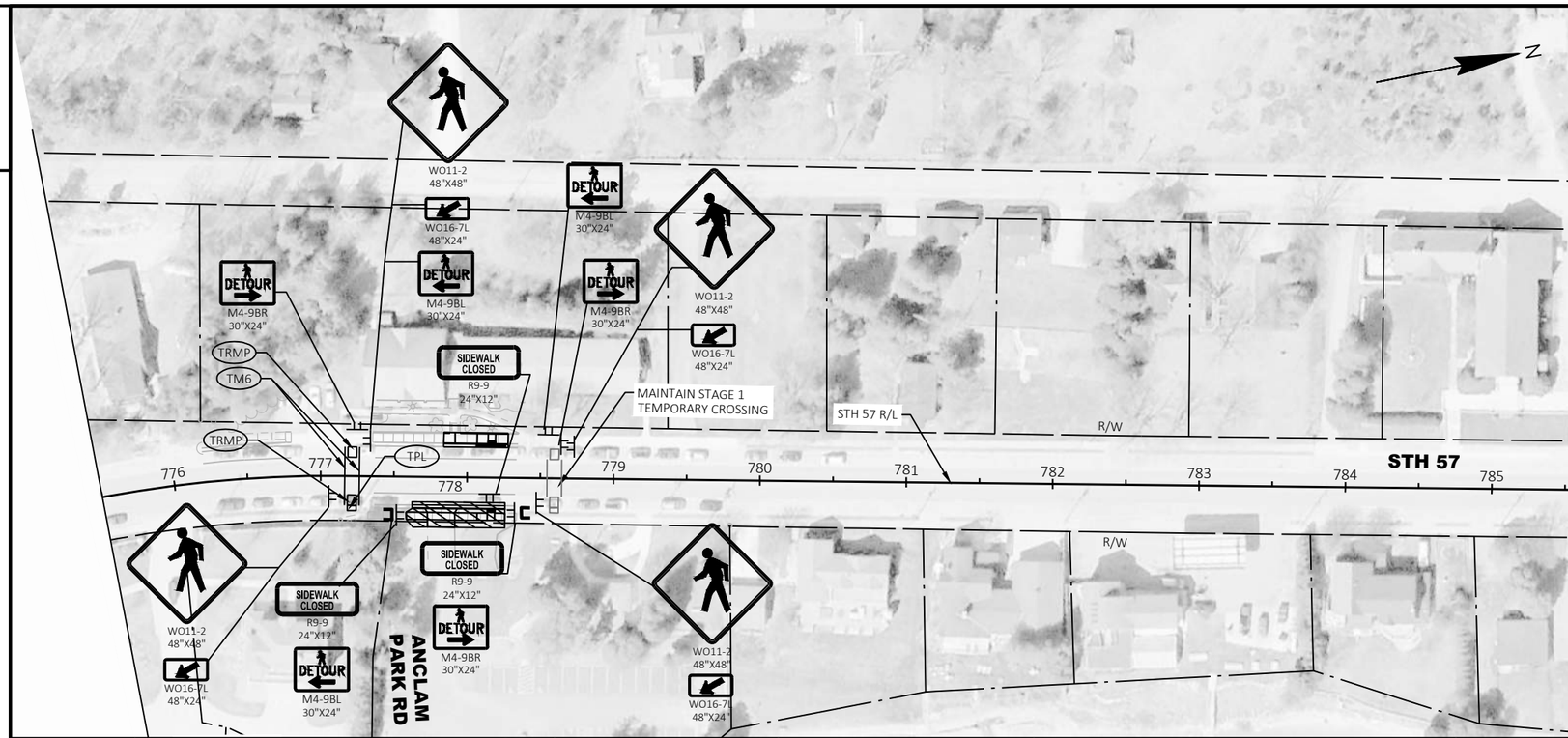

LEGEND

- RMPM — MARKING REMOVAL LINE 8-INCH
- TM6 — TEMPORARY MARKING LINE REMOVABLE TAPE 6-INCH
- TPL — TEMPORARY PEDESTRIAN SURFACE PLATE
- TRMP — TEMPORARY PEDESTRIAN CURB RAMP PERPENDICULAR
- TRAFFIC CONTROL SIGN ON TEMPORARY SUPPORT
- TEMPORARY PEDESTRIAN BARRICADE
- WORK AREA

NOTES:

1. DRUMS REQUIRED AT ALL CURB RAMPS DURING CONSTRUCTION AT 10' MAX SPACING TO DELINEATE THE WORK AREA.
2. BOTTOM 2' OF TEMPORARY PEDESTRIAN CURB RAMP REQUIRED TO BE COVERED BY TEMPORARY PEDESTRIAN DETECTABLE WARNING FIELD FOR THE FULL WIDTH OF THE RAMP.
3. PLACE TEMPORARY PEDESTRIAN BARRICADE PRIOR TO SIDEWALK CLOSURE PER SDD TRAFFIC CONTROL, PEDESTRIAN ACCOMMODATIONS - SIDEWALK DETOUR, SIDEWALK ON BOTH SIDES DETAIL.
4. WHEN COORDINATING TEMPORARY NO PARKING ZONES WITH THE TOWN, ENSURE TO EXTEND THE ZONES TO INCLUDE ANY TEMPORARY PEDESTRIAN ACCOMMODATIONS.

2

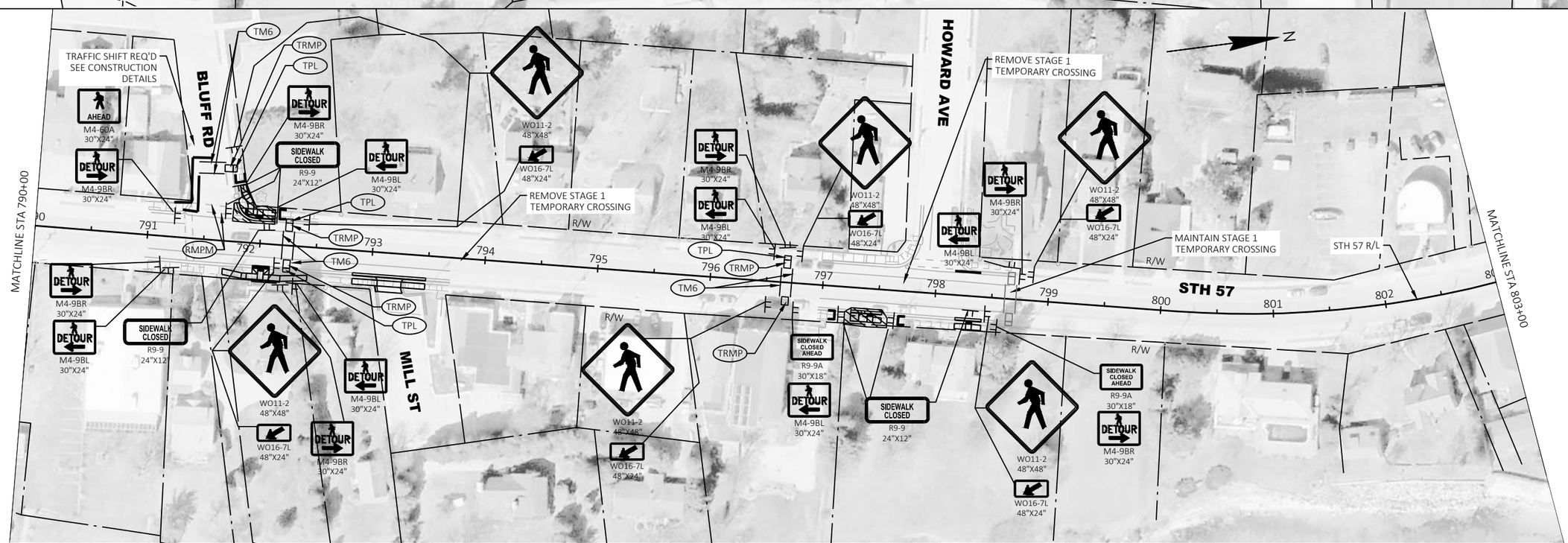

PROJECT NO: 4150-14-71	HWY: STH 57	COUNTY: DOOR	TEMPORARY PEDESTRIAN ACCOMMODATIONS - STAGE 2	SHEET 49	E

FILE NAME : K:\1202715.01\CIVIL3D\41501400\SHEETSPLAN\026202-S2.DWG
LAYOUT NAME - 01
PLOT DATE : 8/20/2024 11:08 AM
PLOT BY : SIEBERT, LUKE
PLOT NAME :
PLOT SCALE : 1 IN:100 FT

LEGEND

- RMPM — MARKING REMOVAL LINE 8-INCH
- TM6 — TEMPORARY MARKING LINE REMOVABLE TAPE 6-INCH
- TPL — TEMPORARY PEDESTRIAN SURFACE PLATE
- TRMP — TEMPORARY PEDESTRIAN CURB RAMP PERPENDICULAR
- TRAFFIC CONTROL SIGN ON TEMPORARY SUPPORT
- TEMPORARY PEDESTRIAN BARRICADE
- WORK AREA

NOTES:

1. DRUMS REQUIRED AT ALL CURB RAMPS DURING CONSTRUCTION AT 10' MAX SPACING TO DELINEATE THE WORK AREA.
2. BOTTOM 2' OF TEMPORARY PEDESTRIAN CURB RAMP REQUIRED TO BE COVERED BY TEMPORARY PEDESTRIAN DETECTABLE WARNING FIELD FOR THE FULL WIDTH OF THE RAMP.
3. PLACE TEMPORARY PEDESTRIAN BARRICADE PRIOR TO SIDEWALK CLOSURE PER SDD TRAFFIC CONTROL, PEDESTRIAN ACCOMMODATIONS - SIDEWALK DETOUR, SIDEWALK ON BOTH SIDES DETAIL.
4. WHEN COORDINATING TEMPORARY NO PARKING ZONES WITH THE TOWN, ENSURE TO EXTEND THE ZONES TO INCLUDE ANY TEMPORARY PEDESTRIAN ACCOMMODATIONS.

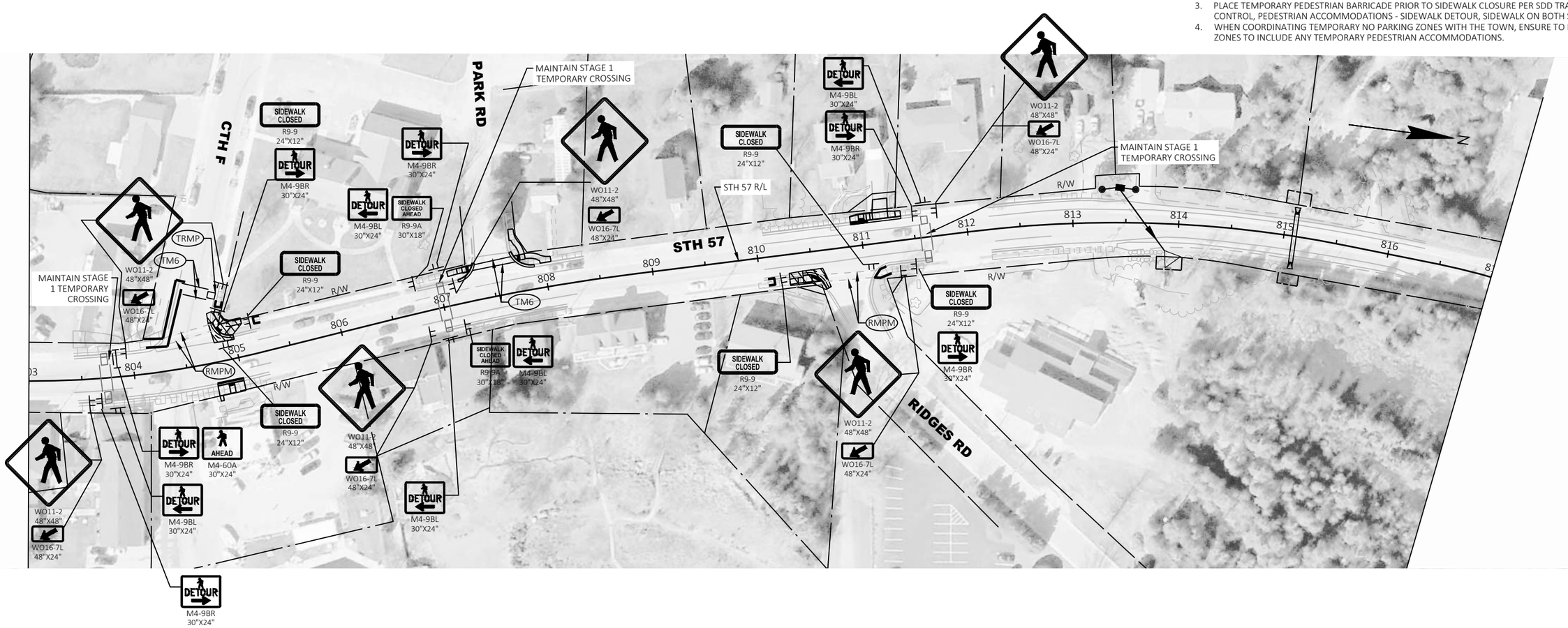

2

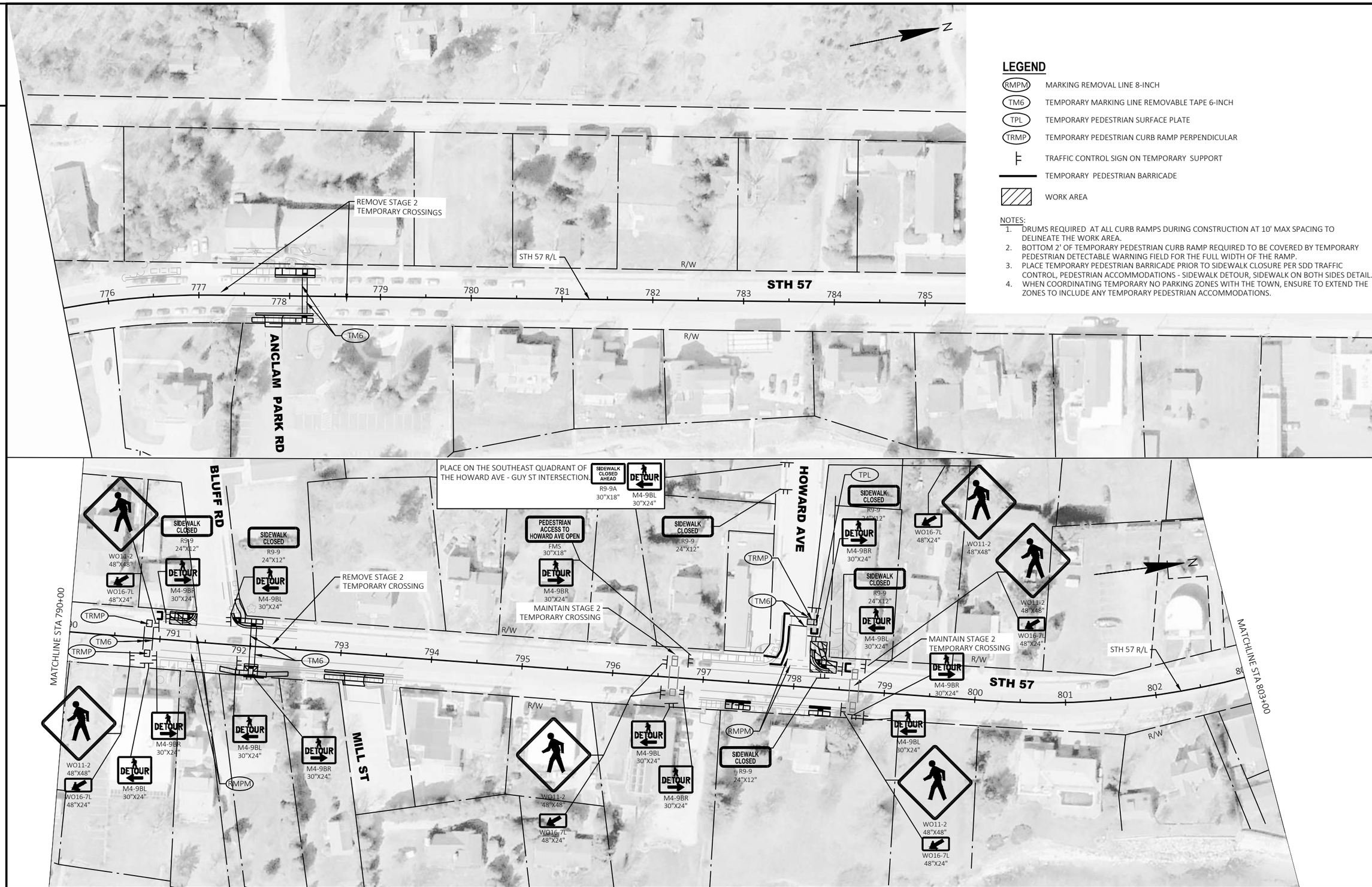

LEGEND

- RMPM — MARKING REMOVAL LINE 8-INCH
- TM6 — TEMPORARY MARKING LINE REMOVABLE TAPE 6-INCH
- TPL — TEMPORARY PEDESTRIAN SURFACE PLATE
- TRMP — TEMPORARY PEDESTRIAN CURB RAMP PERPENDICULAR
- TRAFFIC CONTROL SIGN ON TEMPORARY SUPPORT
- TEMPORARY PEDESTRIAN BARRICADE
- WORK AREA

NOTES:

1. DRUMS REQUIRED AT ALL CURB RAMPS DURING CONSTRUCTION AT 10' MAX SPACING TO DELINEATE THE WORK AREA.
2. BOTTOM 2' OF TEMPORARY PEDESTRIAN CURB RAMP REQUIRED TO BE COVERED BY TEMPORARY PEDESTRIAN DETECTABLE WARNING FIELD FOR THE FULL WIDTH OF THE RAMP.
3. PLACE TEMPORARY PEDESTRIAN BARRICADE PRIOR TO SIDEWALK CLOSURE PER SDD TRAFFIC CONTROL, PEDESTRIAN ACCOMMODATIONS - SIDEWALK DETOUR, SIDEWALK ON BOTH SIDES DETAIL.
4. WHEN COORDINATING TEMPORARY NO PARKING ZONES WITH THE TOWN, ENSURE TO EXTEND THE ZONES TO INCLUDE ANY TEMPORARY PEDESTRIAN ACCOMMODATIONS.

2

PROJECT NO: 4150-14-71	HWY: STH 57	COUNTY: DOOR	TEMPORARY PEDESTRIAN ACCOMMODATIONS - STAGE 3	SHEET 51	E

LEGEND

- RMPM — MARKING REMOVAL LINE 8-INCH
- TM6 — TEMPORARY MARKING LINE REMOVABLE TAPE 6-INCH
- TPL — TEMPORARY PEDESTRIAN SURFACE PLATE
- TRMP — TEMPORARY PEDESTRIAN CURB RAMP PERPENDICULAR
- TRAFFIC CONTROL SIGN ON TEMPORARY SUPPORT
- TEMPORARY PEDESTRIAN BARRICADE
- WORK AREA

NOTES:

1. DRUMS REQUIRED AT ALL CURB RAMPS DURING CONSTRUCTION AT 10' MAX SPACING TO DELINEATE THE WORK AREA.
2. BOTTOM 2' OF TEMPORARY PEDESTRIAN CURB RAMP REQUIRED TO BE COVERED BY TEMPORARY PEDESTRIAN DETECTABLE WARNING FIELD FOR THE FULL WIDTH OF THE RAMP.
3. PLACE TEMPORARY PEDESTRIAN BARRICADE PRIOR TO SIDEWALK CLOSURE PER SDD TRAFFIC CONTROL, PEDESTRIAN ACCOMMODATIONS - SIDEWALK DETOUR, SIDEWALK ON BOTH SIDES DETAIL.
4. WHEN COORDINATING TEMPORARY NO PARKING ZONES WITH THE TOWN, ENSURE TO EXTEND THE ZONES TO INCLUDE ANY TEMPORARY PEDESTRIAN ACCOMMODATIONS.

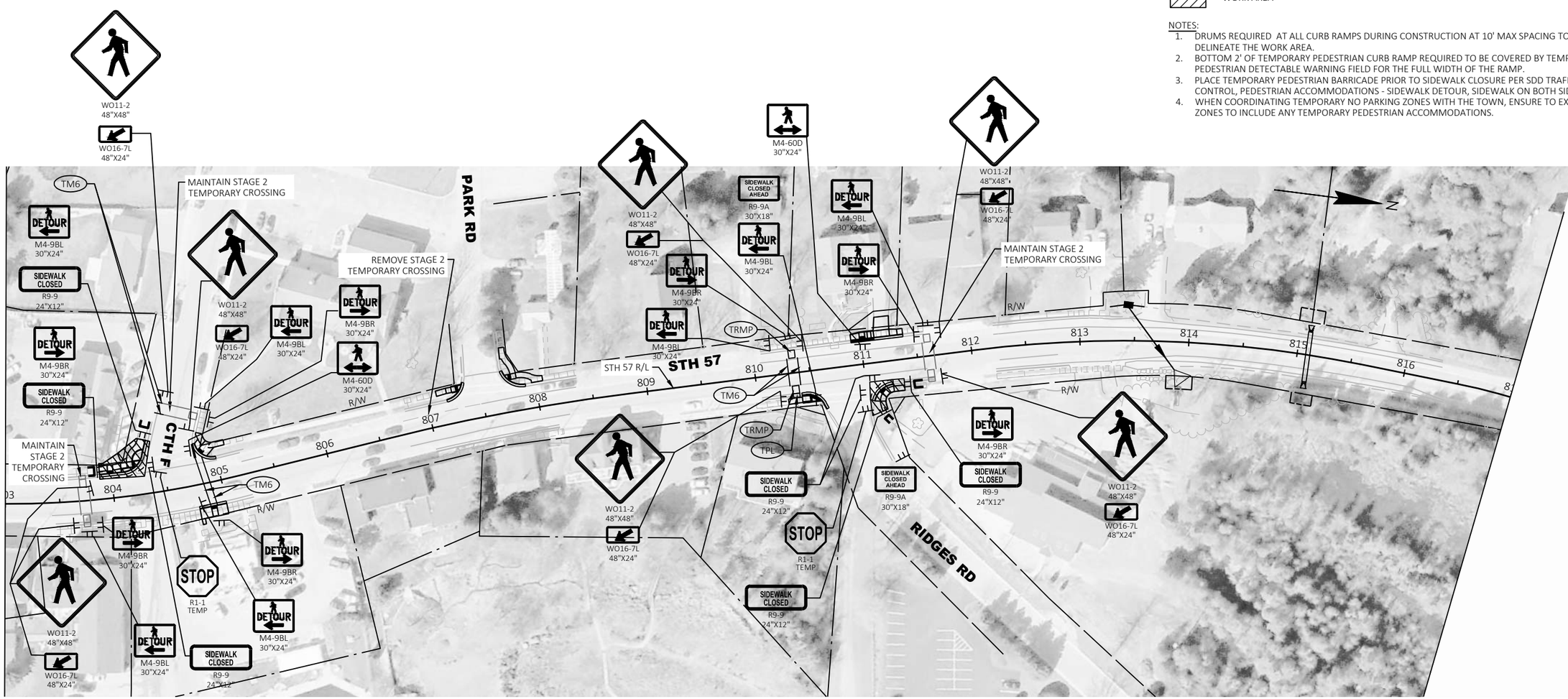

2

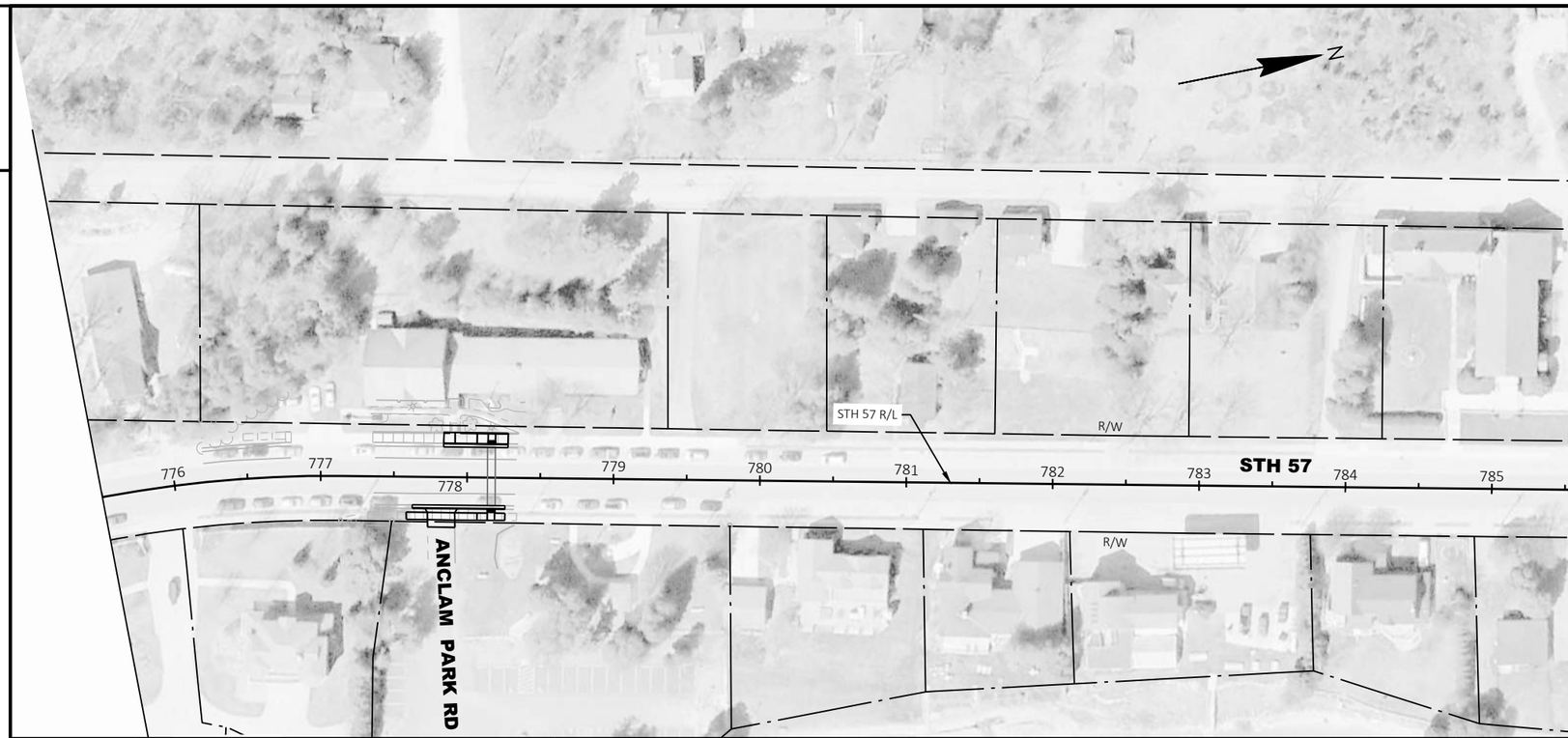

LEGEND

- RMPM — MARKING REMOVAL LINE 8-INCH
- TM6 — TEMPORARY MARKING LINE REMOVABLE TAPE 6-INCH
- TPL — TEMPORARY PEDESTRIAN SURFACE PLATE
- TRMP — TEMPORARY PEDESTRIAN CURB RAMP PERPENDICULAR
- TRAFFIC CONTROL SIGN ON TEMPORARY SUPPORT
- TEMPORARY PEDESTRIAN BARRICADE
- WORK AREA

NOTES:

1. DRUMS REQUIRED AT ALL CURB RAMPS DURING CONSTRUCTION AT 10' MAX SPACING TO DELINEATE THE WORK AREA.
2. BOTTOM 2' OF TEMPORARY PEDESTRIAN CURB RAMP REQUIRED TO BE COVERED BY TEMPORARY PEDESTRIAN DETECTABLE WARNING FIELD FOR THE FULL WIDTH OF THE RAMP.
3. PLACE TEMPORARY PEDESTRIAN BARRICADE PRIOR TO SIDEWALK CLOSURE PER SDD TRAFFIC CONTROL, PEDESTRIAN ACCOMMODATIONS - SIDEWALK DETOUR, SIDEWALK ON BOTH SIDES DETAIL.
4. WHEN COORDINATING TEMPORARY NO PARKING ZONES WITH THE TOWN, ENSURE TO EXTEND THE ZONES TO INCLUDE ANY TEMPORARY PEDESTRIAN ACCOMMODATIONS.

2

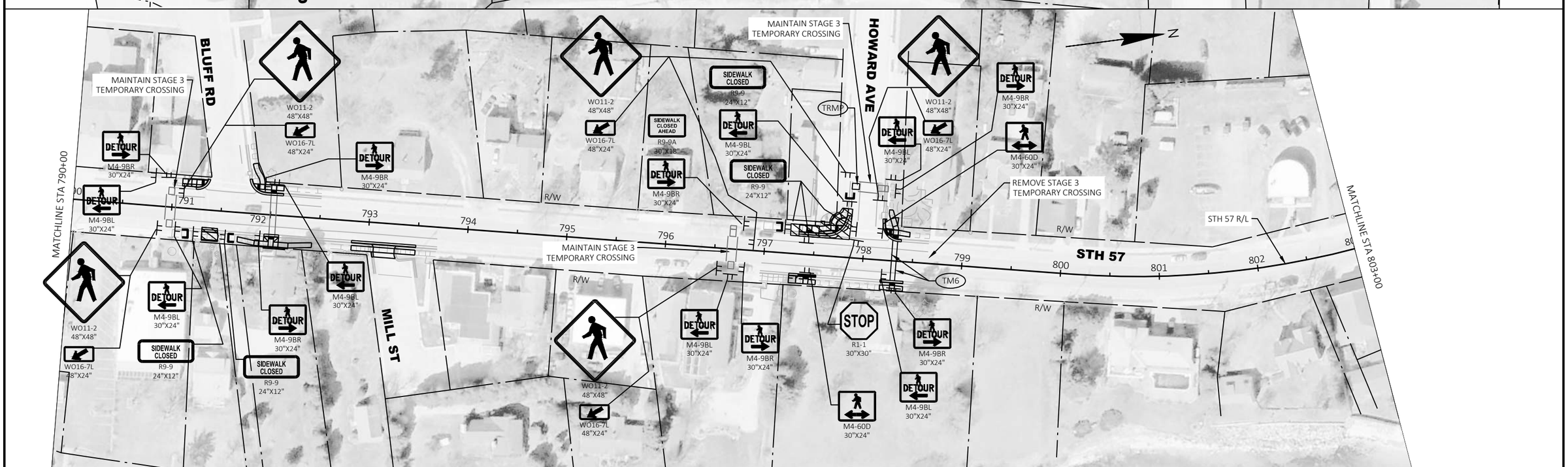

PROJECT NO: 4150-14-71	HWY: STH 57	COUNTY: DOOR	TEMPORARY PEDESTRIAN ACCOMMODATIONS - STAGE 4	SHEET 53	E

FILE NAME : K:\1202715.01\CIVIL3D\41501400\SHEETSPLAN\026202-S4.DWG
LAYOUT NAME - 01
PLOT DATE : 8/20/2024 11:09 AM
PLOT BY : SIEBERT, LUKE
PLOT NAME :
PLOT SCALE : 1 IN:100 FT

LEGEND

- RMPM — MARKING REMOVAL LINE 8-INCH
- TM6 — TEMPORARY MARKING LINE REMOVABLE TAPE 6-INCH
- TPL — TEMPORARY PEDESTRIAN SURFACE PLATE
- TRMP — TEMPORARY PEDESTRIAN CURB RAMP PERPENDICULAR
- TRAFFIC CONTROL SIGN ON TEMPORARY SUPPORT
- TEMPORARY PEDESTRIAN BARRICADE
- WORK AREA

NOTES:

1. DRUMS REQUIRED AT ALL CURB RAMPS DURING CONSTRUCTION AT 10' MAX SPACING TO DELINEATE THE WORK AREA.
2. BOTTOM 2' OF TEMPORARY PEDESTRIAN CURB RAMP REQUIRED TO BE COVERED BY TEMPORARY PEDESTRIAN DETECTABLE WARNING FIELD FOR THE FULL WIDTH OF THE RAMP.
3. PLACE TEMPORARY PEDESTRIAN BARRICADE PRIOR TO SIDEWALK CLOSURE PER SDD TRAFFIC CONTROL, PEDESTRIAN ACCOMMODATIONS - SIDEWALK DETOUR, SIDEWALK ON BOTH SIDES DETAIL.
4. WHEN COORDINATING TEMPORARY NO PARKING ZONES WITH THE TOWN, ENSURE TO EXTEND THE ZONES TO INCLUDE ANY TEMPORARY PEDESTRIAN ACCOMMODATIONS.

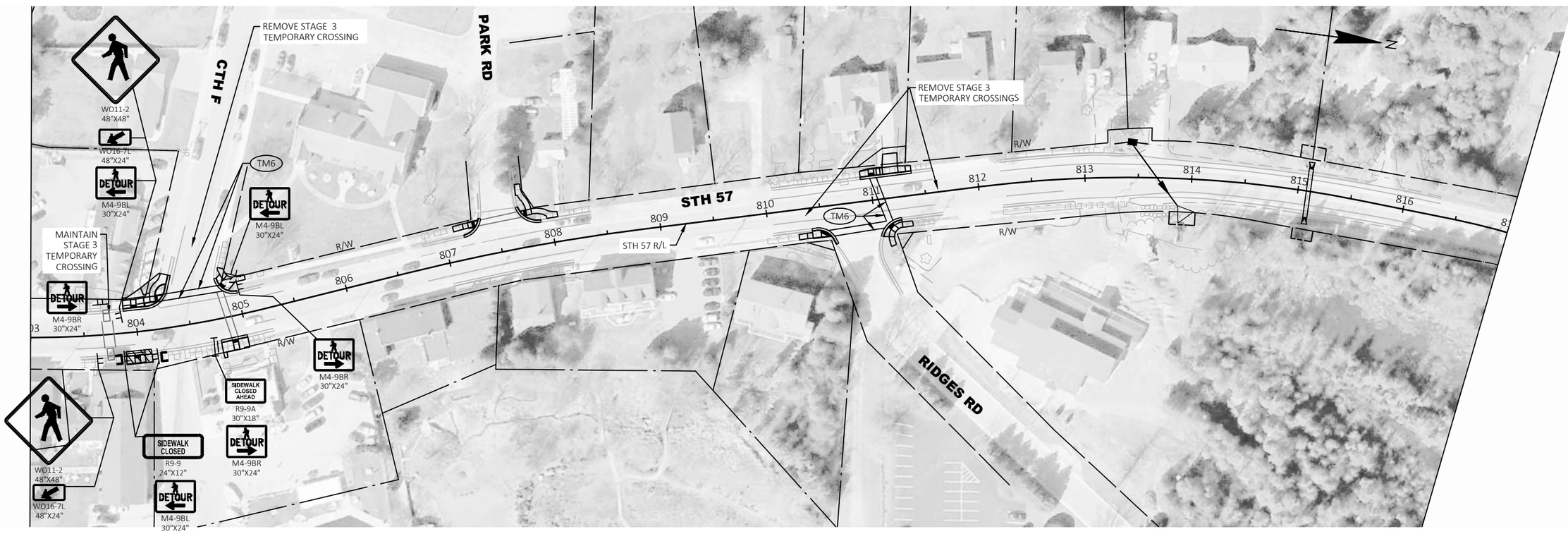

Estimate Of Quantities

4150-14-71

Line	Item	Item Description	Unit	Total	Qty
0002	201.0205	Grubbing	STA	6.000	6.000
0004	203.0100	Removing Small Pipe Culverts	EACH	3.000	3.000
0006	203.0220	Removing Structure (structure) 01. 828+55	EACH	1.000	1.000
0008	204.0110	Removing Asphaltic Surface	SY	273.000	273.000
0010	204.0115	Removing Asphaltic Surface Butt Joints	SY	77.000	77.000
0012	204.0120	Removing Asphaltic Surface Milling	SY	31,930.000	31,930.000
0014	204.0150	Removing Curb & Gutter	LF	903.000	903.000
0016	204.0155	Removing Concrete Sidewalk	SY	750.000	750.000
0018	204.0165	Removing Guardrail	LF	479.000	479.000
0020	204.0220	Removing Inlets	EACH	2.000	2.000
0022	204.0245	Removing Storm Sewer (size) 01. 19x30-Inch	LF	64.000	64.000
0024	205.0100	Excavation Common	CY	3,760.000	3,760.000
0026	205.0300	Excavation Stone Piles and Stone Fences	CY	5.000	5.000
0028	205.0501.S	Excavation, Hauling, and Disposal of Petroleum Contaminated Soil	TON	12.000	12.000
0030	211.0101	Prepare Foundation for Asphaltic Paving (project) 01. 4150-14-71	EACH	1.000	1.000
0032	213.0100	Finishing Roadway (project) 01. 4150-14-71	EACH	1.000	1.000
0034	305.0110	Base Aggregate Dense 3/4-Inch	TON	370.000	370.000
0036	305.0120	Base Aggregate Dense 1 1/4-Inch	TON	2,280.000	2,280.000
0038	416.0610	Drilled Tie Bars	EACH	88.000	88.000
0040	450.4000	HMA Cold Weather Paving	TON	1,740.000	1,740.000
0042	455.0605	Tack Coat	GAL	4,090.000	4,090.000
0044	460.2000	Incentive Density HMA Pavement	DOL	5,180.000	5,180.000
0046	460.6223	HMA Pavement 3 MT 58-28 S	TON	4,530.000	4,530.000
0048	460.6224	HMA Pavement 4 MT 58-28 S	TON	3,550.000	3,550.000
0050	465.0110	Asphaltic Surface Patching	TON	1,230.000	1,230.000
0052	465.0120	Asphaltic Surface Driveways and Field Entrances	TON	50.000	50.000
0054	465.0315	Asphaltic Flumes	SY	13.000	13.000
0056	520.8000	Concrete Collars for Pipe	EACH	2.000	2.000
0058	522.2424	Culvert Pipe Reinforced Concrete Horizontal Elliptical Class HE-IV 24x38-Inch	LF	166.000	166.000
0060	522.2619	Apron Endwalls for Culvert Pipe Reinforced Concrete Horizontal Elliptical 19x30-Inch	EACH	2.000	2.000
0062	522.2624	Apron Endwalls for Culvert Pipe Reinforced Concrete Horizontal Elliptical 24x38-Inch	EACH	4.000	4.000
0064	601.0411	Concrete Curb & Gutter 30-Inch Type D	LF	903.000	903.000
0066	601.0600	Concrete Curb Pedestrian	LF	274.000	274.000
0068	602.0410	Concrete Sidewalk 5-Inch	SF	5,658.000	5,658.000
0070	602.0515	Curb Ramp Detectable Warning Field Natural Patina	SF	210.000	210.000
0072	602.0615	Curb Ramp Detectable Warning Field Radial Natural Patina	SF	17.400	17.400
0074	602.0815	Concrete Driveway 7-Inch	SY	99.000	99.000
0076	606.0050	Riprap Extra-Light	CY	10.000	10.000
0078	608.0005	Storm Sewer Rock Excavation	CY	10.000	10.000
0080	608.0315	Storm Sewer Pipe Reinforced Concrete Class III 15-Inch	LF	16.000	16.000
0082	608.2419	Storm Sewer Pipe Reinforced Concrete Horizontal Elliptical Class HE-IV 19x30-Inch	LF	134.000	134.000
0084	608.3015	Storm Sewer Pipe Class III-A 15-Inch	LF	16.000	16.000
0086	611.0639	Inlet Covers Type H-S	EACH	1.000	1.000
0088	611.0642	Inlet Covers Type MS	EACH	4.000	4.000
0090	611.3230	Inlets 2x3-FT	EACH	1.000	1.000
0092	611.3902	Inlets Median 2 Grate	EACH	2.000	2.000
0094	611.8110	Adjusting Manhole Covers	EACH	9.000	9.000
0096	611.8115	Adjusting Inlet Covers	EACH	1.000	1.000
0098	612.0902.S	Insulation Board Polystyrene (inch) 01. 2-Inch	SY	10.000	10.000

Estimate Of Quantities

4150-14-71

Line	Item	Item Description	Unit	Total	Qty
0100	614.0010	Barrier System Grading Shaping Finishing	EACH	2.000	2.000
0102	614.2330	MGS Guardrail 3 K	LF	166.000	166.000
0104	614.2610	MGS Guardrail Terminal EAT	EACH	2.000	2.000
0106	618.0100	Maintenance and Repair of Haul Roads (project) 01. 4150-14-71	EACH	1.000	1.000
0108	619.1000	Mobilization	EACH	1.000	1.000
0110	624.0100	Water	MGAL	100.000	100.000
0112	625.0100	Topsoil	SY	1,027.000	1,027.000
0114	628.1504	Silt Fence	LF	630.000	630.000
0116	628.1520	Silt Fence Maintenance	LF	946.000	946.000
0118	628.1905	Mobilizations Erosion Control	EACH	6.000	6.000
0120	628.1910	Mobilizations Emergency Erosion Control	EACH	3.000	3.000
0122	628.2008	Erosion Mat Urban Class I Type B	SY	811.000	811.000
0124	628.2023	Erosion Mat Class II Type B	SY	80.000	80.000
0126	628.7010	Inlet Protection Type B	EACH	22.000	22.000
0128	628.7015	Inlet Protection Type C	EACH	34.000	34.000
0130	628.7504	Temporary Ditch Checks	LF	40.000	40.000
0132	628.7555	Culvert Pipe Checks	EACH	34.000	34.000
0134	628.7570	Rock Bags	EACH	30.000	30.000
0136	629.0210	Fertilizer Type B	CWT	1.400	1.400
0138	630.0130	Seeding Mixture No. 30	LB	39.000	39.000
0140	630.0140	Seeding Mixture No. 40	LB	22.000	22.000
0142	630.0200	Seeding Temporary	LB	93.000	93.000
0144	630.0500	Seed Water	MGAL	45.000	45.000
0146	633.5200	Markers Culvert End	EACH	6.000	6.000
0148	634.0616	Posts Wood 4x6-Inch X 16-FT	EACH	2.000	2.000
0150	637.2230	Signs Type II Reflective F	SF	16.500	16.500
0152	638.2102	Moving Signs Type II	EACH	10.000	10.000
0154	638.4000	Moving Small Sign Supports	EACH	2.000	2.000
0156	642.5001	Field Office Type B	EACH	1.000	1.000
0158	643.0300	Traffic Control Drums	DAY	6,377.000	6,377.000
0160	643.0420	Traffic Control Barricades Type III	DAY	55.000	55.000
0162	643.0705	Traffic Control Warning Lights Type A	DAY	110.000	110.000
0164	643.0715	Traffic Control Warning Lights Type C	DAY	77.000	77.000
0166	643.0900	Traffic Control Signs	DAY	9,961.000	9,961.000
0168	643.1000	Traffic Control Signs Fixed Message	SF	3.750	3.750
0170	643.1050	Traffic Control Signs PCMS	DAY	16.000	16.000
0172	643.1070	Traffic Control Cones 42-Inch	DAY	696.000	696.000
0174	643.3165	Temporary Marking Line Paint 6-Inch	LF	23,100.000	23,100.000
0176	643.3350	Temporary Marking Crosswalk Removable Tape 6-inch	LF	1,618.000	1,618.000
0178	643.5000	Traffic Control	EACH	1.000	1.000
0180	644.1430	Temporary Pedestrian Surface Plate	SF	306.000	306.000
0182	644.1601	Temporary Pedestrian Curb Ramp	DAY	996.000	996.000
0184	644.1605	Temporary Pedestrian Detectable Warning Field	SF	408.000	408.000
0186	644.1810	Temporary Pedestrian Barricade	LF	1,415.000	1,415.000
0188	645.0130	Geotextile Type R	SY	52.000	52.000
0190	646.2020	Marking Line Epoxy 6-Inch	LF	6,180.000	6,180.000
0192	646.4720	Marking Line Same Day Epoxy 6-Inch	LF	15,369.000	15,369.000
0194	646.6020	Marking Stop Line Epoxy 12-Inch	LF	38.000	38.000
0196	646.6466	Cold Weather Marking Epoxy 6-Inch	LF	21,549.000	21,549.000

4150-14-71

Line	Item	Item Description	Unit	Total	Qty
0198	646.7420	Marking Crosswalk Epoxy Transverse Line 6-Inch	LF	1,032.000	1,032.000
0200	646.9100	Marking Removal Line 8-Inch	LF	580.000	580.000
0202	650.4000	Construction Staking Storm Sewer	EACH	7.000	7.000
0204	650.5500	Construction Staking Curb Gutter and Curb & Gutter	LF	903.000	903.000
0206	650.6000	Construction Staking Pipe Culverts	EACH	3.000	3.000
0208	650.8000	Construction Staking Resurfacing Reference	LF	7,652.000	7,652.000
0210	650.9000	Construction Staking Curb Ramps	EACH	19.000	19.000
0212	650.9500	Construction Staking Sidewalk (project) 01. 4150-14-71	EACH	1.000	1.000
0214	650.9911	Construction Staking Supplemental Control (project) 01. 4150-14-71	EACH	1.000	1.000
0216	690.0150	Sawing Asphalt	LF	1,546.000	1,546.000
0218	690.0250	Sawing Concrete	LF	595.000	595.000
0220	740.0440	Incentive IRI Ride	DOL	11,600.000	11,600.000
0222	ASP.1T0A	On-the-Job Training Apprentice at $5.00/HR	HRS	1,200.000	1,200.000
0224	ASP.1T0G	On-the-Job Training Graduate at $5.00/HR	HRS	600.000	600.000
0226	SPV.0035	Special 01. Foundation Backfill	CY	1,267.000	1,267.000
0228	SPV.0035	Special 02. Streambed Material	CY	29.000	29.000
0230	SPV.0035	Special 03. Streambank Material	CY	74.000	74.000
0232	SPV.0060	Special 01. Apron Endwalls For Culvert Pipe Sloped Cross Drains Steel 24x38-Inch	EACH	2.000	2.000
0234	SPV.0075	Special 01. Street Sweeping	HRS	20.000	20.000

3

ALL ITEMS CATEOGRY 0010
UNLESS NOTED OTHERWISE.

GRUBBING

ROADWAY	STATION	TO	STATION	CATEGORY	201.0205 GRUBBING STA
STH 57					
	814+95	-	815+22	0010	2
	827+79	-	828+91	0010	2
				TOTAL 0010	4
FROGTOWN ROAD					
	201+40	-	202+11	0020	2
				TOTAL 0020	2
				PROJECT TOTAL	6

NOTE: CLEARING TO BE DONE BY OTHERS PRIOR TO CONSTRUCTION.

REMOVING CONCRETE ITEMS

ROADWAY	STATION	TO	STATION	LOCATION	204.0150 REMOVING CURB & GUTTER LF	204.0155 REMOVING CONCRETE SIDEWALK SY	REMARKS
STH 57							
	771+09	-	772+06	LT	91	3	---
	771+65	-	772+06	RT	42	19	---
	777+58	-	778+27	RT	64	46	ANCLAM RD - EAST
	777+83	-	778+32	LT	44	40	ANCLAM RD - WEST
	791+09	-	791+39	LT	17	20	BLUFF RD - SW
	791+32	-	791+49	RT	16	14	BLUFF RD - SE
	791+68	-	792+44	RT	18	74	BLUFF RD - NE
	791+75	-	792+12	LT	36	29	BLUFF RD - NW
	792+83	-	793+49	RT	71	43	MILL ST - EAST
	797+26	-	797+54	RT	28	25	HOWARD AVE - SE
	797+33	-	797+86	LT	60	55	HOWARD AVE - SW
	798+15	-	798+46	LT	32	25	HOWARD AVE - NW
	798+19	-	798+43	RT	24	17	HOWARD AVE - NE
	803+87	-	804+07	RT	18	21	CTH F - SE
	803+89	-	804+41	LT	62	74	CTH F - SW
	804+75	-	805+00	RT	26	34	CTH F - NE
	804+78	-	805+10	LT	26	31	CTH F - NW
	807+09	-	807+38	LT	23	13	PARK RD - SW
	807+67	-	808+07	LT	28	36	PARK RD - NW
	810+27	-	810+66	RT	30	15	RIDGES RD - SE
	810+91	-	811+40	LT	49	27	RIDGES RD - NW
	811+02	-	811+35	RT	25	23	RIDGES RD - NE
	812+80	-	813+38	RT	40	48	RIDGES SANCTUARY - EAST
	812+99	-	813+38	LT	33	18	RIDGES SANCTUARY - WEST
				TOTAL 0010	903	750	

REMOVING SMALL PIPE CULVERTS

ROADWAY	STATION	DESCRIPTION	203.0100 REMOVING SMALL PIPE CULVERTS EACH	REMARKS
STH57				
	813+64	19"X30" RCP, 71 LF	1	
	815+10	30" CMP, 51 LF	1	
	828+55	46"X60" CMP, 63 LF	1	SOUTHEAST END IS WEDGED INTO 50"X36" CONCRETE MASONRY BOX CULVERT
		TOTAL 0010	3	

REMOVING STRUCTURE

ROADWAY	STATION	DESCRIPTION	203.0220.01 36"X50" BOX CULVERT, STA 828+55 EACH
STH57			
	828+55	36"X50" CONC BOX CULVERT, 42 LF	1
		TOTAL 0010	1

REMOVING ASPHALTIC SURFACE

ROADWAY	STATION	TO	STATION	LOCATION	204.0110 REMOVING ASPHALTIC SURFACE SY	REMARKS
STH 57						
	777+53	-	778+32	RT	28	ANCLAM RD - EAST, ADJUSTING MH
	777+83	-	778+28	LT	10	ANCLAM RD - WEST
	785+76	-	785+81	RT	3	ADJUSTING MH
	791+09	-	791+39	LT	5	BLUFF RD - SW
	791+32	-	791+49	RT	4	BLUFF RD - SE
	791+68	-	792+44	RT	4	BLUFF RD - NE
	791+75	-	792+12	LT	12	BLUFF RD - NW
	792+83	-	793+49	RT	27	MILL ST - EAST
	794+12	-	794+18	RT	3	ADJUSTING MH
	797+10	-	797+54	RT	9	HOWARD AVE - SE, ADJUSTING MH
	797+33	-	797+97	LT	26	HOWARD AVE - SW, ADJUSTING MH
	798+15	-	798+46	LT	10	HOWARD AVE - NW
	798+19	-	798+43	RT	6	HOWARD AVE - NE
	803+87	-	804+07	RT	5	CTH F - SE
	803+89	-	804+41	LT	29	CTH F - SW
	804+75	-	805+00	RT	6	CTH F - NE
	804+63	-	805+10	LT	9	CTH F - NW, ADJUSTING MH
	806+27	-	806+33	RT	3	ADJUSTING MH
	807+09	-	807+38	LT	7	PARK RD - SW
	807+67	-	808+35	LT	15	PARK RD - NW, ADJUSTING MH
	810+27	-	810+66	RT	9	RIDGES RD - SE
	810+91	-	811+40	LT	32	RIDGES RD - NW
	811+02	-	811+35	RT	8	RIDGES RD - NE
	812+80	-	813+38	RT	3	RIDGES SANCTUARY - EAST
				TOTAL 0010	273	

3

3

ALL ITEMS CATEOGRY 0010
UNLESS NOTED OTHERWISE.

REMOVING GUARDRAIL

CATEGORY	ROADWAY	STATION	TO	STATION	LOCATION	204.0165 REMOVING GUARDRAIL LF
	STH 57					
0010		769+34	-	770+95	RT	169
	FROGTOWN ROAD					
0010		203+48.69	-	204+27	RT	110
					TOTAL 0010	279
	FROGTOWN ROAD					
0020		200+82.93	-	203+48.69	RT	200
					TOTAL 0020	200
					PROJECT TOTAL	479

REMOVING INLETS

ROADWAY	LOCATION	204.0220 REMOVING INLETS EACH
STH 57		
	771+53, 26' LT	1
	804+34, 35' LT	1
	TOTAL 0010	2

REMOVING STORM SEWER

ROADWAY	STATION	TO	STATION	204.0245.01 REMOVING STORM SEWER 19X30-INCH LF
STH 57				
	771+53, 26' LT	-	771+53, 38'RT	64
			TOTAL 0010	64

3

EXCAVATION STONE PILES AND STONE FENCES

ROADWAY	STATION	TO	STATION	LOCATION	205.0300 EXCAVATION STONE PILES AND STONE FENCES CY
FROGTOWN ROAD					
	201+51	-	201+65	RT	5
				TOTAL 0020	5

REMOVING ASPHALTIC SURFACE MILLING

ROADWAY	STATION	TO	STATION	CATEGORY	204.0115 REMOVING ASPHALTIC SURFACE BUTT JOINTS SY	204.0120 REMOVING ASPHALTIC SURFACE MILLING SY
STH 57						
	763+16.18	-	790+00	0010	20	9,220
	790+00	-	817+00	0010	38	8,850
	817+00	-	839+67.89	0010	15	8,570
FROGTOWN ROAD						
	203+49	-	204+27	0010	4	310
				TOTAL 0010	77	26,950
STH 57		-				
	772+05	-	790+00	0020	---	2,380
	790+00	-	812+99	0020	---	2,600
				TOTAL 0020	---	4,980
				PROJECT TOTAL	77	31,930

EXCAVATION, HAULING, AND DISPOSAL OF PETROLEUM CONTAMINATED SOIL

ROADWAY	STATION	TO	STATION	LOCATION	205.0501.S EXCAVATION, HAULING, AND DISPOSAL OF PETROLEUM CONTAMINATED SOIL TON
STH 57		-			
	804+76	-	805+01	18' RT TO SLOPE INTERCEPTS	12
				TOTAL 0010	12

ALL ITEMS CATEOGRY 0010
UNLESS NOTED OTHERWISE.

3

3

EARTHWORK SUMMARY

DIVISION	STATION - STATION	DESCRIPTION	205.0100 COMMON EXCAVATION (1) [CY]	* SALVAGED/UNUSABLE PAVEMENT MATERIAL (2) [CY]	* AVAILABLE MATERIAL (3) [CY]	608.0005 STORM SEWER ROCK EXCAVATION (4) [CY]	* UNEXPANDED FILL [CY]	* EXPANDED FILL EXPANSION FACTOR 1.25	SPV.0035.01 FOUNDATION BACKFILL (5) [CY] EXPANSION FACTOR 1.15	* MASS ORDINATE +/- (6) [CY]	* WASTE (7) [CY]
1	771+10 - 772+05	SHALLOW PIPE TRANSITION	540	20	520	10	---	---	390	530	530
	812+79 - 814+48	SHALLOW PIPE TRANSITION	1,160	370	790	---	---	---	305	790	790
	814+48 - 815+62	SHALLOW PIPE TRANSITION	760	240	520	---	---	---	226	520	520
	827+79 - 829+07	SHALLOW PIPE TRANSITION	1,300	240	1,060	---	---	---	346	1,060	1,060
		QUANTITY TOTALS	3,760	870	2,890	10	---	---	1,267	2,900	2,900

NOTES:
*INDICATES FOR INFORMATION ONLY (NOT A BID ITEM)
(1) COMMON EXCAVATION IS THE CUT. ITEM NUMBER 205.0100
(2) SALVAGED/UNSUABLE PAVEMENT MATERIAL IS INCLUDED IN CUT.
(3) AVAILABLE MATERIAL = CUT - SALVAGED/UNUSUABLE PAVEMENT MATERIAL
(4) STORM SEWER ROCK EXCAVATION IS INCLUDED IN THE SALVAGED/UNSUABLE PAVEMENT MATERIAL. ROCK EXCAVATION NECESSARY TO PLACE PIPES SHALL BE PAID AS STORM SEWER ROCK EXCAVATION.
STORM SEWER ROCK EXCAVATION TO BE BACKFILLED WITH FOUNDATION BACKFILL.
(5) SHALLOW PIPE TRANSITIONS BELOW THE PAVEMENT SECTION PER THE DETAIL ARE TO BE BACKFILLED WITH ITEM SPV.0035.01 FOUNDATION BACKFILL. FOUNDATION BACKFILL IN PIPE TRENCH IS INCIDENTAL TO THE PIPE ITEMS.
(6) MASS ORDINATE = AVAILABLE MATERIAL, (+) PLUS INDICATES AN EXCESS OF MATERIAL AT A LOCATION, (-) MINUS INDICATES A SHORTAGE OF MATERIAL AT A LOCATION
(7) WASTE = MASS ORDINATE
(8) FACTORS USED TO COMPUTE ANTICIPATED WASTE AND THE COMPUTED WASTE VOLUME ARE FOR GENERAL INFORMATION ONLY.

3

ALL ITEMS CATEOGRY 0010
UNLESS NOTED OTHERWISE.

BASE AGGREGATE DENSE

ROADWAY	STATION	TO	STATION	CATEGORY	305.0110 BASE AGGREGATE DENSE 3/4-INCH TON	305.0120 BASE AGGREGATE DENSE 1 1/4-INCH TON	624.0100 WATER AGGREGATE COMPACTION MGAL	624.0100 WATER DUST CONTROL MGAL
STH 57								
	763+16.18	-	790+00	0010	90	240	10	5
	790+00	-	817+00	0010	60	1,110	20	5
	817+00	-	839+67.89	0010	120	470	10	5
FROGTOWN ROAD								
	203+48.69	-	204+27	0010	10	---	15	5
UNDISTRIBUTED								
					70	460	15	10
				SUBTOTAL	350	2,280	70	30
				TOTAL 0010	350	2,280	100	
FROGTOWN ROAD								
	200+82.93	-	203+48.69	0020	20	---	---	---
				SUBTOTAL	20	---	---	---
				TOTAL 0020	20	---	---	
				PROJECT TOTAL	370	2,280	100	

HMA PAVEMENT ITEMS

ROADWAY	STATION	TO	STATION	CATEGORY	450.4000 HMA COLD WEATHER PAVING TON	455.0605 TACK COAT GAL	460.6223 HMA PAVEMENT 3 MT 58-28 S TON	460.6224 HMA PAVEMENT 4 MT 58-28 S TON	465.0110 ASPHALTIC SURFACE PATCHING TON
STH 57									
	763+16.18	-	790+00	0010	580	1,170	1,290	1,010	220
	790+00	-	817+00	0010	590	1,190	1,320	1,030	570
	817+00	-	839+67.89	0010	540	1,080	1,200	930	230
FROGTOWN ROAD									
	203+49	-	204+27	0010	30	40	50	40	---
* UNDISTRIBUTED									
				0010	---	---	---	---	210
				TOTAL 0010	1,740	3,480	3,860	3,010	1,230
STH 57									
	763+16.18	-	790+00	0020	---	290	320	250	---
	790+00	-	817+00	0020	---	320	350	270	---
FROGTOWN ROAD									
	200+82.93	-	203+48.69	0020	---	---	---	20	---
				TOTAL 0020	---	610	670	540	---
				PROJECT TOTAL	1,740	4,090	4,530	3,550	1,230

*UNDISTRIBUTED QUANTITY TO ACCOUNT FOR MINOR REPAIRS (PATCHING AND POPOUTS) AND FOR RAMPING AT MATCH POINTS AS DIRECTED BY THE ENGINEER.

ASPHALTIC FLUMES

ROADWAY	STATION	LOCATION	465.0315 ASPHALTIC FLUMES SY
STH 57			
	813+33	LT	6
	813+41	RT	7
		TOTAL 0010	13

3

PREPARE FOUNDATION FOR ASPHALTIC PAVING

LOCATION	211.0101.01 PREPARE FOUNDATION FOR ASPHALTIC PAVING 4150-14-71 EACH
PROJECT WIDE	1
TOTAL 0010	1

CULVERT ITEMS

ROADWAY	INLET STATION	OFFSET	ELEV	DISCHARGE STATION	OFFSET	ELEV	SLOPE FT/FT	522.2424 CULVERT PIPE REINFORCED CONCRETE HORIZONTAL ELLIPTICAL CLASS HE-IV 24X38-INCH LF	522.2624 APRON ENDWALLS FOR CULVERT PIPE REINFORCED CONCRETE HORIZONTAL ELLIPTICAL 24X38-INCH EACH	* 633.5200 MARKERS CULVERT END EACH	650.6000 CONSTRUCTION STAKING PIPE CULVERTS EACH	SPV.0060.01 APRON ENDWALLS FOR CULVERT PIPE SLOPED CROSS DRAINS STEEL 24X38-INCH EACH
STH 57												
	815+09.46	21.12' LT	586.75	815+10.14	24.88' RT	585.30	0.0315	46	---	2	1	2
	828+17.89	28.91' LT	587.05	828+18.08	31.09' RT	586.50	0.0092	60	2	2	1	---
	828+23.88	28.94' LT	587.05	828+24.08	31.06' RT	586.50	0.0092	60	2	---	1	---
						TOTALS		166	4	4	3	2

*ADDITIONAL QUANTITIES SHOWN ON THE STORM SEWER STRUCTURE TABLE.

ASPHALTIC SURFACE DRIVEWAYS AND FIELD ENTRANCES

ROADWAY	STATION	LOCATION	465.0120 ASPHALTIC SURFACE DRIVEWAYS AND FIELD ENTRANCES TON
STH 57			
	765+75	RT	3
	777+80	RT	3
	793+20	RT	3
	797+65	LT	3
	811+20	LT	5
	825+95	LT	3
	827+40	RT	3
	828+80	RT	27
		TOTAL 0010	50

NOTES:
1. ASSUME 4" THICKNESS.
2. SEE PLANS FOR LIMITS.

ALL ITEMS CATEOGRY 0010
UNLESS NOTED OTHERWISE.

3

CONCRETE ITEMS

ROADWAY	STATION	TO	STATION	LOCATION	416.0610 DRILLED TIE BARS EACH	601.0411 CONCRETE CURB & GUTTER 30-INCH TYPE D LF	601.0600 CONCRETE CURB PEDESTRIAN LF	602.0410 CONCRETE SIDEWALK 5-INCH SF	602.0515 CURB RAMP DETECTABLE WARNING FIELD NATURAL PATINA SF	602.0615 CURB RAMP DETECTABLE WARNING FIELD RADIAL NATURAL PATINA SF	602.0815 CONCRETE DRIVEWAY 7-INCH SY	REMARKS
STH 57												
	771+09	-	772+06	LT	4	91	---	8	---	---	---	---
	771+65	-	772+06	RT	2	42	---	165	---	---	---	---
	777+58	-	778+27	RT	4	64	---	254	10	---	17	ANCLAM RD - EAST
	777+83	-	778+32	LT	6	44	42	334	10	---	---	ANCLAM RD - WEST
	791+09	-	791+39	LT	4	16	18	164	10	---	---	BLUFF RD - SW
	791+32	-	791+49	RT	4	16	---	124	---	---	---	BLUFF RD - SE
	791+68	-	792+44	RT	4	18	18	462	10	---	---	BLUFF RD - NE
	791+75	-	792+12	LT	4	36	10	271	20	---	---	BLUFF RD - NW
	792+83	-	793+49	RT	6	71	---	218	---	---	19	MILL ST - EAST
	797+26	-	797+54	RT	4	28	---	198	10	---	11	HOWARD AVE - SE
	797+33	-	797+86	LT	2	59	67	421	20	---	---	HOWARD AVE - SW
	798+15	-	798+46	LT	2	31	---	247	20	---	---	HOWARD AVE - NW
	798+19	-	798+43	RT	4	24	---	169	10	---	---	HOWARD AVE - NE
	803+87	-	804+07	RT	4	18	18	173	10	---	---	CTH F - SE
	803+89	-	804+41	LT	4	61	36	623	20	---	---	CTH F - SW
	804+75	-	805+00	RT	4	25	---	309	10	---	---	CTH F - NE
	804+78	-	805+10	LT	4	26	---	253	10	---	---	CTH F - NW
	807+09	-	807+38	LT	4	23	16	123	10	---	---	PARK RD - SW
	807+67	-	808+07	LT	4	28	10	329	10	---	---	PARK RD - NW
	810+27	-	810+66	RT	2	30	17	150	---	17.4	---	RIDGES RD - SE
	810+91	-	811+40	LT	4	48	22	188	10	---	11	RIDGES RD - NW
	811+02	-	811+35	RT	4	25	---	234	10	---	---	RIDGES RD - NE
	812+80	-	813+38	RT	2	48	---	169	---	---	33	RIDGES SANCTUARY - EAST
	812+99	-	813+38	LT	2	31	---	72	---	---	8	RIDGES SANCTUARY - WEST
				TOTAL 0010	88	903	274	5,658	210	17.4	99	

RIPRAP

ROADWAY	STATION	TO	STATION	LOCATION	606.0050 RIPRAP EXTRA-LIGHT CY	645.0130 GEOTEXTILE TYPE R SY
STH 57						
	813+49	-	814+00	RT	8	42
	815+05	-	815+15	RT	2	10
				TOTAL 0010	10	52

ALL ITEMS CATEOGRY 0010
UNLESS NOTED OTHERWISE.

3

STORM SEWER STRUCTURES

STRUCTURE	STATION	OFFSET*	LOCATION	RIM ELEVATION	INVERT** ELEVATION	DEPTH** FT	520.8000 CONCRETE COLLARS FOR PIPE EACH	522.2619 APRON ENDWALLS FOR CULVERT PIPE REINFORCED CONCRETE HORIZONTAL ELLIPTICAL 19X30-INCH EACH	611.0639 INLET COVERS TYPE H-S EACH	611.0642 INLET COVERS TYPE MS EACH	611.3230 INLETS 2X3-FT EACH	611.3902 INLETS MEDIAN 2 GRATE EACH	**** 633.5200 MARKERS CULVERT END EACH	650.4000 CONSTRUCTION STAKING STORM SEWER EACH	REMARKS
10	771+52.62	33.54' RT	STH 57	---	592.67	---	---	1	---	---	---	---	1	1	---
11	771+53.46	26.46' LT	STH 57	595.89	592.85	3.31	---	---	---	2	---	1	---	1	NO SLOPE ON TYPE MS COVERS
20	813+87.58	25.57' RT	STH 57	---	585.64	---	---	1	---	---	---	---	1	1	---
21	813+44.50	32.91' LT	STH 57	588.50	586.17	2.60	---	---	---	2	---	1	---	1	TWO SLOPES ON TYPE MS COVERS
30	804+31.79	35.91' LT	STH 57	591.28	586.65***	3.79***	---	---	1	---	1	---	---	1	---
21A	813+27.78	31.33' LT	STH 57	---	---	---	1	---	---	---	---	---	---	1	---
21B	813+58.75	31.32' LT	STH 57	---	---	---	1	---	---	---	---	---	---	1	---
			TOTALS				2	2	1	4	1	2	2	7	

REMARKS
*STATIONS AND OFFSETS ARE TO CENTER OF STRUCTURE
**DEPTH = RIM ELEV - INVERT ELEV + PIPE THICKNESS
***DEPTH = RIM ELEV - INVERT - 6" CASTING - 6" ADJUSTMENT + PIPE THICKNESS, VERIFY EXISTING INVERT
****ADDITIONAL QUANTITIES SHOWN ON THE CULVERT ITEMS TABLE.

STORM SEWER PIPES

FROM STR		TO STR	INLET ELEV	DISCHARGE ELEV	SLOPE FT/FT	608.0315 STORM SEWER PIPE REINFORCED CONCRETE CLASS III 15-INCH LF	608.2419 STORM SEWER PIPE REINFORCED CONCRETE HORIZONTAL ELLIPTICAL CLASS HE-IV 19X30-INCH LF	608.3015 STORM SEWER PIPE CLASS III-A 15-INCH LF
11	-	10	592.85	592.67	0.0030	---	60	---
21	-	20	586.17	585.64	0.0072	---	74	---
15	-	21	586.30	586.21	0.0056	16	---	---
16	-	21	586.66	586.27	0.0244		---	16
					TOTALS	16	134	16

ADJUSTING STRUCTURE COVERS

ROADWAY	STATION, OFFSET	611.8110 ADJUSTING MANHOLE COVERS EACH	611.8115 ADJUSTING INLET COVERS EACH
STH 57			
	777+53, 15' RT	1	---
	785+79, 14' RT	1	---
	794+15, 16' RT	1	---
	797+10, 18' RT	1	---
	797+58, 21' LT	---	1
	797+97, 15' RT	1	---
	804+63, 57' LT	1	---
	806+30, 17' RT	1	---
	807+71, 21' LT	1	---
	808+35, 16' LT	1	---
	TOTAL 0010	9	1

MGS GUARDRAIL ITEMS

ROADWAY	STATION	TO	STATION	CATEGORY	614.0010 BARRIER SYSTEM GRADING SHAPING FINISHING EACH	614.2330 MGS GUARDRAIL 3 K LF	614.2610 MGS GUARDRAIL TERMINAL EAT EACH	* EXCAVATION COMMON CY	* BORROW CY	*FOR INFORMATION ONLY * SALVAGED TOPSOIL SY	* FERTILIZER TYPE B CWT	* SEEDING MIXTURE NO. 20 LB	* EROSION MAT CLASS II TYPE B SY	* SEED WATER MGAL
FROGTOWN ROAD														
	203+48.69	-	204+27	0010	1	---	1	3	57	240	0.1	1	240	8
				TOTAL 0010	1	---	1	3	57	240	0.1	1	240	8
FROGTOWN ROAD														
	200+82.93	-	203+48.69	0020	1	166	1	6	60	214	0.1	1	214	7
				TOTAL 0020	1	166	1	6	60	214	0.1	1	214	7
				PROJECT TOTAL	2	166	2	9	117	454	0.2	2	454	15

INSULATION BOARD POLYSTYRENE 2-INCH

ROADWAY	STATION	TO	STATION	LOCATION	612.0902.S.01 INSULATION BOARD POLYSTYRENE 2-INCH SY
STH 57					
	828+14	-	828+28	19' LT	10
				TOTAL 0010	10

3

ALL ITEMS CATEOGRY 0010
UNLESS NOTED OTHERWISE.

EROSION CONTROL ITEMS

ROADWAY	STATION	TO	STATION	LOCATION	628.1504 SILT FENCE LF	628.1520 SILT FENCE MAINTENANCE LF	628.1905 MOBILIZATIONS EROSION CONTROL EACH	628.1910 MOBILIZATIONS EMERGENCY EROSION CONTROL EACH	628.2008 EROSION MAT URBAN CLASS I TYPE B SY	628.2023 EROSION MAT CLASS II TYPE B SY	628.7010 INLET PROTECTION TYPE B EACH	628.7015 INLET PROTECTION TYPE C EACH	628.7504 TEMPORARY DITCH CHECKS LF	628.7555 CULVERT PIPE CHECKS EACH	628.7570 ROCK BAGS EACH
STH 57															
	771+09	-	772+06	LT	---	---	---	---	29	---	4	---	---	---	---
	771+65	-	772+06	RT	92	138	---	---	9	60	---	---	---	---	---
	772+06	-	778+32	LT+RT	---	---	---	---	34	---	---	2	---	---	---
	778+28	-	791+08	LT+RT	---	---	---	---	---	---	---	6	---	---	---
	791+09	-	791+39	LT	---	---	---	---	1	---	1	1	---	---	---
	791+32	-	793+48	RT	---	---	---	---	43	---	---	1	---	---	---
	791+75	-	792+12	LT	---	---	---	---	21	---	1	---	---	---	---
	793+49	-	798+42	RT	---	---	---	---	27	---	---	1	---	---	---
	797+33	-	797+86	LT	---	---	---	---	15	---	2	1	---	---	---
	798+15	-	798+46	LT	---	---	---	---	17	---	2	---	---	---	---
	798+19	-	798+43	RT	---	---	---	---	17	---	---	1	---	---	---
	798+43	-	803+87	LT+RT	---	---	---	---	---	---	---	4	---	---	---
	803+89	-	804+41	LT	---	---	---	---	9	---	---	1	---	---	---
	804+78	-	805+10	LT+RT	---	---	---	---	19	---	---	1	---	---	---
	805+10	-	807+09	LT+RT	---	---	---	---	---	---	---	2	---	---	---
	807+09	-	807+38	LT	---	---	---	---	19	---	---	1	---	---	---
	807+67	-	808+07	LT	---	---	---	---	23	---	---	1	---	---	---
	808+07	-	810+27	LT	---	---	---	---	---	---	---	1	---	---	---
	810+28	-	815+62	RT	62	93	---	---	55	---	---	---	15	---	---
	810+90	-	815+62	LT	78	117	---	---	84	---	2	---	---	8	---
	827+79	-	829+07	RT	---	---	---	---	145	---	---	---	15	---	---
	827+79	-	829+07	LT	40	60	---	---	74	---	---	---	---	16	---
FROGTOWN ROAD															
	203+48.69	-	204+27		115	173	---	---	---	---	---	---	---	---	15
UNDISTRIBUTED															
					100	150	6	3	170	20	10	10	10	10	15
				TOTAL 0010	487	731	6	3	811	80	22	34	40	34	30
FROGTOWN ROAD															
	200+82.93	-	203+48.69		113	170	---	---	---	---	---	---	---	---	
UNDISTRIBUTED															
					30	45	---	---	---	---	---	---	---	---	
				TOTAL 0020	143	215	---	---	---	---	---	---	---	---	---
				PROJECT TOTAL	630	946	6	3	811	80	22	34	40	34	30

ALL ITEMS CATEGORY 0010
UNLESS NOTED OTHERWISE.

3

RESTORATION ITEMS

ROADWAY	STATION	TO	STATION	LOCATION	625.0100 TOPSOIL SY	629.0210* FERTILIZER TYPE B CWT	630.0130 SEEDING MIXTURE NO. 30 LB	630.0140 SEEDING MIXTURE NO. 40 LB	630.0200 SEEDING TEMPORARY LB	630.0500 SEED WATER MGAL	REMARKS
STH 57											
	771+09	-	772+06	LT	29	---	---	---	---	---	---
	771+65	-	772+06	RT	80	---	5	---	8	4	---
	777+58	-	778+27	RT	30	---	---	---	---	---	ANCLAM RD - EAST
	777+83	-	778+32	LT	4	---	---	---	---	---	ANCLAM RD - WEST
	791+09	-	791+39	LT	1	---	---	---	---	---	BLUFF RD - SW
	791+32	-	791+49	RT	2	---	---	---	---	---	BLUFF RD - SE
	791+68	-	792+44	RT	25	---	---	---	---	---	BLUFF RD - NE
	791+75	-	792+12	LT	21	---	---	---	---	---	BLUFF RD - NW
	792+83	-	793+49	RT	17	---	---	---	---	---	MILL ST - EAST
	797+26	-	797+54	RT	10	---	---	---	---	---	HOWARD AVE - SE
	797+33	-	797+86	LT	15	---	---	---	---	---	HOWARD AVE - SW
	798+15	-	798+46	LT	17	---	---	---	---	---	HOWARD AVE - NW
	798+19	-	798+43	RT	17	---	---	---	---	---	HOWARD AVE - NE
	803+87	-	804+07	RT	---	---	---	---	---	---	CTH F - SE
	803+89	-	804+41	LT	9	---	---	---	---	---	CTH F - SW
	804+75	-	805+00	RT	6	---	---	---	---	---	CTH F - NE
	804+78	-	805+10	LT	14	---	---	---	---	---	CTH F - NW
	807+09	-	807+38	LT	19	---	---	---	---	---	PARK RD - SW
	807+67	-	808+07	LT	23	---	---	---	---	---	PARK RD - NW
	810+27	-	810+66	RT	10	---	---	---	---	---	RIDGES RD - SE
	810+91	-	811+40	LT	12	---	---	---	---	---	RIDGES RD - NW
	811+02	-	811+35	RT	7	---	---	---	---	---	RIDGES RD - NE
	812+80	-	815+62	RT	120	---	6	---	9	4	RIDGES SANCTUARY - EAST
	812+99	-	815+62	LT	114	---	4	---	6	3	RIDGES SANCTUARY - WEST
	827+79		829+07	RT	145	---	9	---	14	7	---
	827+79		829+07	LT	74	---	7	---	11	5	---
			CULVERT LOCATIONS		---	0.2	---	5	8	4	PROJECT WIDE
			CURB RAMP LOCATIONS		---	0.2	---	12	18	9	PROJECT WIDE
UNDISTRIBUTED											
					206	1.0	8	5	19	9	
				TOTAL 0010	1,027	1.4	39	22	93	45	

*FERTILIZER SHALL NOT BE USED WITHIN 20' OF WETLANDS OR WATERWAYS.

MOVING SIGNS

ROADWAY	STATION	LOCATION	638.2102 MOVING SIGNS TYPE II EACH	638.4000 MOVING SMALL SIGN SUPPORTS EACH	REMARKS
STH 57					
	797+81	LT	1	---	STOP SIGN (R1-1)
	804+28	LT	1	---	STOP SIGN (R1-1)
	805+00	LT	1	---	CTH EE/F (M1-5A), ARROWS (M3-X), ATV ROUTE (D11-10)
	807+25	LT	1	---	STOP SIGN (R1-1)
	811+10	RT	1	---	STOP SIGN (R1-1)
	813+25	RT	1	---	NO PARKING, 7AM - 7PM, NOV 1 - MAY 1 (R8-3hP), 35 MPH (R2-1)
	815+00	LT	1	---	30 MPH (R2-1)
	828+39	LT	1	2	BAILEYS HARBOR, UNINCORPORATED
FROGTOWN ROAD					
	204+05	RT	1	---	STOP SIGN (R1-1)
	204+20	RT	1	---	LEFT ARROW (W1-6L)
		TOTAL 0010	10	2	

NOTE: CONTACT TOWN OF BAILEYS HARBOR PUBLIC WORKS SUPERVISOR
RYAN WEISGERBER AT 920-421-0704 FOR THE MOVING OF THE FOLLOWING SIGNS:
-PARK ROAD STREET SIGN, 807+26 LT
-RIDGES ROAD STREET SIGN, 811+09 RT
-FROGTOWN ROAD, HWY 57 STREET SIGNS, 204+00 RT
-NO PARKING, 7AM - 7PM, NOV 1 - MAY 1 (R8-3hP)
771+75 LT
772+05 RT

PERMANENT SIGNING

ROADWAY	STATION	SIDE	SIGN NO.	SIGN CODE	SIGN SIZE	SIGN SIZE W IN	X	SIGN SIZE H IN	634.0616 POSTS WOOD 4X6-INCH X 16-FT EACH	637.2230 SIGNS TYPE II REFLECTIVE F SF
STH 57										
	778+13	RT	01	W11-2	2S	30	X	30	1	6.25
			01A	W16-7L	2S	24	X	12	---	2.00
	778+20	LT	02	W11-2	2S	30	X	30	1	6.25
			02A	W16-7L	2S	24	X	12	---	2.00
					TOTAL 0010				2	16.50

3

ALL ITEMS CATEOGRY 0010
UNLESS NOTED OTHERWISE.

3

TRAFFIC CONTROL

STAGE	* DURATION DAYS	LOCATION	** 643.0300 TRAFFIC CONTROL DRUMS *NO.	DAY	643.0420 TRAFFIC CONTROL BARRICADES TYPE III *NO.	DAY	643.0705 TRAFFIC CONTROL WARNING LIGHTS TYPE A *NO.	DAY	643.0715 TRAFFIC CONTROL WARNING LIGHTS TYPE C *NO.	DAY	** 643.0900 TRAFFIC CONTROL SIGNS *NO.	DAY	643.1050 TRAFFIC CONTROL SIGNS PCMS *NO.	DAY	643.5000 TRAFFIC CONTROL EACH
PRIOR TO CONSTUCTION	7	PROJECT WIDE	5	70	---	---	---	---	5	70		---	2	14	---
PARK ROAD CLOSURE	5	PROJECT WIDE	---	---	10	50	20	100	---	---	7	35	---	---	---
DURING CONSTRUCTION	130	PROJECT WIDE	---	---	---	---	---		---	---	22	2,860	---	---	---
UNDISTRIBUTED															
		PROJECT WIDE		7		5		10		7		290		2	1
		TOTAL 0010		77		55		110		77		3,185		16	1

*FOR INFORMATION ONLY
**ADDITIONAL QUANTITIES SHOW UP ELSEWHERE IN PLANS. SEE TEMPORARY PEDESTRIAN ACCOMMODATIONS TABLE.

TEMPORARY PEDESTRIAN ACCOMMODATIONS

STAGE	*DURATION DAYS	*NO	** 643.0300 TRAFFIC CONTROL DRUMS DAY	*NO	** 643.0900 TRAFFIC CONTROL SIGNS DAY	643.1000 TRAFFIC CONTROL SIGNS FIXED MESSAGE SF	*NO	643.1070 TRAFFIC CONTROL CONES 42-INCH DAY	643.3350 TEMPORARY MARKING CROSSWALK REMOVABLE TAPE 6-INCH LF	644.1430 TEMPORARY PEDESTRIAN SURFACE PLATE SF	*NO	644.1601 TEMPORARY PEDESTRIAN CURB RAMP DAY	644.1605 TEMPORARY PEDESTRIAN DETECTABLE WARNING FIELD SF	644.1810 TEMPORARY PEDESTRIAN BARRICADE LF	646.9100 MARKING REMOVAL LINE 8-INCH LF
1	24	95	2,280	74	1,776	---	12	288	433	180	13	312	104	270	95
2	18	75	1,350	88	1,584	---	12	288	358	90	18	324	144	590	295
3	18	55	990	79	1,422	3.75	---	---	419	36	13	234	104	400	190
4	18	35	630	48	864	---	---	---	408	---	7	126	56	155	---
UNDISTRIBUTED															
			1,050		1,130	---		120		---		---	---	---	---
	TOTAL 0010		6,300		6,776	3.75		696	1,618	306		996	408	1,415	580

*FOR INFORMATION ONLY
**ADDITIONAL QUANTITIES SHOW UP ELSEWHERE IN PLANS. SEE TRAFFIC CONTROL TABLE.
RESET EXISTING PERMANENT STOP SIGNS BEFORE MOVING ON TO NEXT STAGE.

ALL ITEMS CATEOGRY 0010
UNLESS NOTED OTHERWISE.

3

PAVEMENT MARKING

ROADWAY	STATION	TO	STATION	643.3165 TEMPORARY MARKING LINE PAINT 6-INCH (YELLOW) LF	646.2020 MARKING LINE EPOXY 6-INCH (WHITE) LF	646.4720 MARKING LINE SAME DAY EPOXY 6-INCH (YELLOW) LF	646.6020 MARKING STOP LINE EPOXY 12-INCH LF	646.6466 COLD WEATHER MARKING EPOXY 6-INCH LF	646.7420 MARKING CROSSWALK EPOXY TRANSVERSE LINE 6-INCH LF
STH 57									
	763+16.18	-	790+00	8,100	1,045	5,356	---	6,401	80
	790+00	-	817+00	8,100	734	5,328	---	6,062	952
	817+00	-	839+67.89	6,900	4,401	4,685	38	9,086	---
			TOTAL 0010	23,100	6,180	15,369	38	21,549	1,032

SAWING PAVEMENT

ROADWAY	STATION	TO	STATION	690.0150 SAWING ASPHALT LF	690.0250 SAWING CONCRETE LF
STH 57					
	763+16.18	-	790+00	242	65
	790+00	-	817+00	1202	530
	817+00	-	839+67.89	102	---
			TOTAL 0010	1,546	595

3

CONSTRUCTION STAKING

ROADWAY	STATION	TO	STATION	650.5500 CONSTRUCTION STAKING CURB GUTTER AND CURB & GUTTER LF	650.8000 CONSTRUCTION STAKING RESURFACING REFERENCE LF	650.9000 CONSTRUCTION STAKING CURB RAMPS EACH	650.9500.01 CONSTRUCTION STAKING SIDEWALK 4150-14-71 EACH	650.9911.01 CONSTRUCTION STAKING SUPPLEMENTAL CONTROL 4150-14-71 EACH
STH 57								
	763+16.18	-	771+09	---	793	---	---	---
	771+09.00		772+06	133	97	---	---	---
	772+06.00		790+00	108	1,794	2	---	---
	790+00	-	791+09	---	109	---	---	---
	791+09		792+43	86	134	3	---	---
	792+43		812+89	497	2,046	14	---	---
	812+89		813+37	---	48	---	---	---
	813+37		817+00	79	363	---	---	---
	817+00	-	839+67.89	---	2,268	---	---	---
PROJECT WIDE								
				---	---	---	1	1
			TOTAL 0010	903	7,652	19	1	1

FOR ITEM 650.4000 CONSTRUCTION STAKING STORM SEWER SYSTEM, SEE STORM SEWER STRUCTURE TABLE.
FOR ITEM 650.6000 CONSTRUCTION STAKING PIPE CULVERT, SEE CULVERT ITEMS TABLE.

STREET SWEEPING

ROADWAY	LOCATION	SPV.0075.01 STREET SWEEPING HRS
STH 57		
	PROJECT WIDE	20
	TOTAL 0010	20

STREAMBED & STREAM BANK MATERIAL

ROADWAY	STATION	TO	STATION	LOCATION	SPV.0035.02 STREAMBED MATERIAL CY	SPV.0035.03 STREAMBANK MATERIAL CY
STH 57						
	827+79	-	829+07	RT	17	13
	827+79	-	829+07	LT	12	61
				TOTAL 0010	29	74

STATE OF WISCONSIN
DEPARTMENT OF TRANSPORTATION
TRANSPORTATION PROJECT PLAT TITLE SHEET
4150-14-21

SUMMIT ROAD - BAILEYS HARBOR

SUMMIT ROAD TO CTH Q

STH 57
DOOR COUNTY

4

CONVENTIONAL SYMBOLS

SECTION LINE
QUARTER LINE
SIXTEENTH LINE
NEW REFERENCE LINE
NEW R/W LINE
EXISTING R/W LINE
PROPERTY LINE (P.L.)
LOT, TIE, AND OTHER MINOR LINES
SLOPE INTERCEPT
CORPORATE LIMITS
UNDERGROUND FACILITY (COMMUNICATIONS, ELECTRIC, ETC) (W (TYPE))
NEW R/W (FEE OR HE) (HATCHING VARIES BY OWNER)
TEMP. LIMITED EASEMENT AREA
EASEMENT AREA (PERMANENT LIMITED OR RESTRICTED DEVELOPMENT)
TRANSMISSION STRUCTURES
BUILDING — TO BE REMOVED
BRIDGE — CULVERT

SECTION CORNER SYMBOL (18, 23, 24, 26, 25, 9)
SECTION CORNER MONUMENT
GEODETIC SURVEY MONUMENT
SIXTEENTH CORNER MONUMENT
SIGN (SIGN)
R/W MONUMENT
NON-MONUMENTED R/W POINT
FOUND IRON PIN (1-INCH UNLESS NOTED) (P)
OFF-PREMISE SIGN (#1-25) (SIGN)

	COMPENSABLE	NON-COMPENSABLE
ELECTRIC POLE		
TELEPHONE POLE		
PEDESTAL (LABEL TYPE) (TV, TEL, ELEC, ETC.)		

ACCESS RESTRICTED BY ACQUISITION
NO ACCESS (BY STATUTORY AUTHORITY)
ACCESS RESTRICTED (BY PREVIOUS PROJECT OR CONTROL)
NO ACCESS (NEW HIGHWAY)
PARCEL NUMBER (25)
UTILITY NUMBER (40)
PARALLEL OFFSETS

CONVENTIONAL UTILITY SYMBOLS

W	WATER
G	GAS
T	TELEPHONE
OH	OVERHEAD TRANSMISSION LINES
E	ELECTRIC
TV	CABLE TELEVISION
FO	FIBER OPTIC
SAN	SANITARY SEWER
SS	STORM SEWER

CURVE DATA

LONG CHORD	LCH
LONG CHORD BEARING	LCB
RADIUS	R
DEGREE OF CURVE	D
CENTRAL ANGLE	Δ/DELTA
LENGTH OF CURVE	L
TANGENT	T
DIRECTION AHEAD	DA
DIRECTION BACK	DB

CONVENTIONAL ABBREVIATIONS

ACCESS RIGHTS	AR	OUTLOT	OL
ACRES	AC	PAGE	P
AHEAD	AH	POINT OF TANGENCY	PT
ALUMINUM	ALUM	PROPERTY LINE	PL
AND OTHERS	ET AL	RECORDED AS	(100')
BACK	BK	REEL / IMAGE	R/I
BLOCK	BLK	REFERENCE LINE	R/L
CENTERLINE	C/L	PERMANENT LIMITED EASEMENT	PLE
CERTIFIED SURVEY MAP	CSM	POINT OF BEGINNING	POB
CONCRETE	CONC	POINT OF CURVATURE	PC
COUNTY	CO	POINT OF COMPOUND CURVE	PCC
COUNTY TRUNK HIGHWAY	CTH	POINT OF INTERSECTION	PI
DISTANCE	DIST	REMAINING	REM
CORNER	COR	RESTRICTIVE DEVELOPMENT EASEMENT	RDE
DOCUMENT NUMBER	DOC	RIGHT	RT
EASEMENT	EASE	RIGHT OF WAY	R/W
EXISTING	EX	SECTION	SEC
GAS VALVE	GV	SEPTIC VENT	SEPV
GRID NORTH	GN	SQUARE FEET	SF
HIGHWAY EASEMENT	HE	STATE TRUNK HIGHWAY	STH
IDENTIFICATION	ID	STATION	STA
LAND CONTRACT	LC	TELEPHONE PEDESTAL	TP
LEFT	LT	TEMPORARY LIMITED EASEMENT	TLE
MONUMENT	MON	TRANSPORTATION PROJECT PLAT	TPP
NATIONAL GEODETIC SURVEY	NGS	UNITED STATES HIGHWAY	USH
NUMBER	NO	VOLUME	V

LOCATION MAP

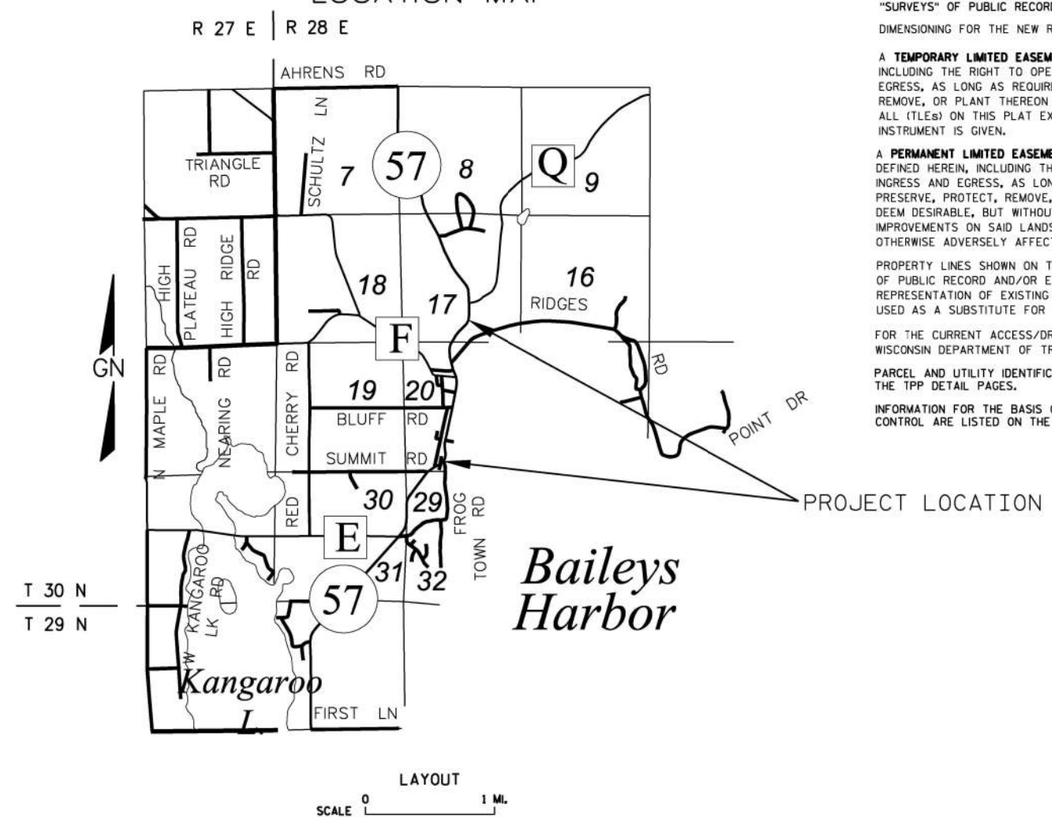

THE NOTES, CONVENTIONAL SIGNS, AND ABBREVIATIONS ARE ASSOCIATED WITH EACH TRANSPORTATION PROJECT PLAT FOR PROJECT 4150-14-21.

NOTES:

POSITIONS SHOWN ON THIS PLAT ARE WISCONSIN COORDINATE REFERENCE SYSTEM COORDINATES (WISCRS), DOOR COUNTY, NAD83 (2011) IN US SURVEY FEET. VALUES SHOWN ARE GRID COORDINATES, GRID BEARINGS, AND GRID DISTANCES. GRID DISTANCES MAY BE USED AS GROUND DISTANCES.

ALL NEW RIGHT-OF-WAY MONUMENTS WILL BE TYPE 2 (TYPICALLY 1" X 24" IRON PIPES), UNLESS OTHERWISE NOTED, AND WILL BE PLACED PRIOR TO THE COMPLETION OF THE PROJECT.

ALL RIGHT-OF-WAY LINES DEPICTED IN THE NON-ACQUISITION AREAS ARE INTENDED TO RE-ESTABLISH EXISTING RIGHT-OF-WAY LINES AS DETERMINED FROM PREVIOUS PROJECTS, OTHER RECORDED DOCUMENTS, OR FROM CENTERLINE OF EXISTING PAVEMENTS.

RIGHT-OF-WAY BOUNDARIES ARE DEFINED WITH COURSES OF THE PERIMETER OF THE HIGHWAY LANDS REFERENCED TO THE U.S. PUBLIC LAND SURVEY SYSTEM OR OTHER "SURVEYS" OF PUBLIC RECORD.

DIMENSIONING FOR THE NEW RIGHT-OF-WAY IS MEASURED ALONG AND PERPENDICULAR TO THE NEW REFERENCE LINES.

A **TEMPORARY LIMITED EASEMENT** (TLE) IS A RIGHT FOR CONSTRUCTION PURPOSES, AS DEFINED HEREIN, INCLUDING THE RIGHT TO OPERATE NECESSARY EQUIPMENT THEREON, THE RIGHT OF INGRESS AND EGRESS, AS LONG AS REQUIRED FOR SUCH PUBLIC PURPOSE, INCLUDING THE RIGHT TO PRESERVE, PROTECT, REMOVE, OR PLANT THEREON ANY VEGETATION THAT THE HIGHWAY AUTHORITIES MAY DEEM DESIRABLE. ALL (TLEs) ON THIS PLAT EXPIRE AT THE COMPLETION OF THE CONSTRUCTION PROJECT FOR WHICH THIS INSTRUMENT IS GIVEN.

A **PERMANENT LIMITED EASEMENT** (PLE) IS A RIGHT FOR CONSTRUCTION AND MAINTENANCE PURPOSES, AS DEFINED HEREIN, INCLUDING THE RIGHT TO OPERATE NECESSARY EQUIPMENT THEREON AND THE RIGHT OF INGRESS AND EGRESS, AS LONG AS REQUIRED FOR SUCH PUBLIC PURPOSE, INCLUDING THE RIGHT TO PRESERVE, PROTECT, REMOVE, OR PLANT THEREON ANY VEGETATION THAT THE HIGHWAY AUTHORITIES MAY DEEM DESIRABLE, BUT WITHOUT PREJUDICE TO THE OWNER'S RIGHTS TO MAKE OR CONSTRUCT IMPROVEMENTS ON SAID LANDS OR TO FLATTEN THE SLOPES, PROVIDING SAID ACTIVITIES WILL NOT IMPAIR OR OTHERWISE ADVERSELY AFFECT THE HIGHWAY FACILITIES.

PROPERTY LINES SHOWN ON THIS PLAT ARE DRAWN FROM DATA DERIVED FROM MAPS AND DOCUMENTS OF PUBLIC RECORD AND/OR EXISTING OCCUPATIONAL LINES. THIS PLAT MAY NOT BE A TRUE REPRESENTATION OF EXISTING PROPERTY LINES, EXCLUDING RIGHT-OF-WAY, AND SHOULD NOT BE USED AS A SUBSTITUTE FOR AN ACCURATE FIELD SURVEY.

FOR THE CURRENT ACCESS/DRIVEWAY INFORMATION, CONTACT THE PLANNING UNIT OF THE WISCONSIN DEPARTMENT OF TRANSPORTATION OFFICE IN GREEN BAY.

PARCEL AND UTILITY IDENTIFICATION NUMBERS MAY NOT POINT TO ALL AREAS OF ACQUISITION, AS NOTED ON THE TPP DETAIL PAGES.

INFORMATION FOR THE BASIS OF EXISTING HIGHWAY RIGHT-OF-WAY POINTS OF REFERENCE AND ACCESS CONTROL ARE LISTED ON THE TPP DETAIL PAGES.

4

ORIGINAL PLAT PREPARED BY
raSmith
CREATIVITY BEYOND ENGINEERING
10745 W. Bluemound Road, Brookfield WI 53005
262-781-1000 Fax 262-781-8480
www.rasmithnational.com

TPP PROJECT NUMBER 4150-14-21 - 4.01
SHEET 2 OF 2

APPRAISAL PLAT DATE: 10/06/2021

TRANSPORTATION PROJECT PLAT NO: 4150-14-21 - 4.01

PART OF LOT 1 OF CERTIFIED SURVEY MAP 2921, LOT 1, BLOCK 6, PLAT OF CITIZENS ADDITION TO VILLAGE PLAT OF BAILEYS HARBOR, BEING A PART OF GOVERNMENT LOT 2, ALSO PART OF LOT 1 OF CERTIFIED SURVEY MAP 2921 AND LOT 1, BLOCK 1, VILLAGE PLAT OF BAILEYS HARBOR BEING A PART OF GOVERNMENT LOT 3, ALL IN SECTION 20, TOWNSHIP 30 NORTH, RANGE 28 EAST, TOWN OF BAILEYS HARBOR, DOOR COUNTY, WISCONSIN.

RELOCATION ORDER STH 57 SUMMIT ROAD - BAILEYS HARBOR
(SUMMIT ROAD TO CTH Q), DOOR COUNTY

TO PROPERLY ESTABLISH, LAY OUT, WIDEN, ENLARGE, EXTEND, CONSTRUCT, RECONSTRUCT, IMPROVE, OR MAINTAIN A PORTION OF THE HIGHWAY DESIGNATED ABOVE, THE STATE OF WISCONSIN DEPARTMENT OF TRANSPORTATION DEEMS IT NECESSARY TO RELOCATE OR CHANGE SAID HIGHWAY AND ACQUIRE CERTAIN LANDS AND INTERESTS OR RIGHTS IN LANDS FOR THE ABOVE-NAMED PROJECT. TO EFFECT THIS CHANGE, PURSUANT TO AUTHORITY GRANTED UNDER SUBSECTIONS 84.02, (3), 84.09 AND 84.30, WISCONSIN STATUTES, THE DEPARTMENT OF TRANSPORTATION HEREBY ORDERS THAT:

1. THAT PORTION OF SAID HIGHWAY AS SHOWN ON THIS PLAT IS LAID OUT AND ESTABLISHED TO THE LINES AND WIDTHS AS SO SHOWN FOR THE ABOVE-NAMED PROJECT.
2. THE LANDS OR INTERESTS OR RIGHTS IN LANDS AS SHOWN ON THIS PLAT ARE REQUIRED BY THE DEPARTMENT FOR THE ABOVE PROJECT AND SHALL BE ACQUIRED IN THE NAME OF THE STATE OF WISCONSIN, PURSUANT TO THE PROVISIONS OF SUBSECTION 84.09 (1) OR (2), WISCONSIN STATUTES.

LOCATION MAP

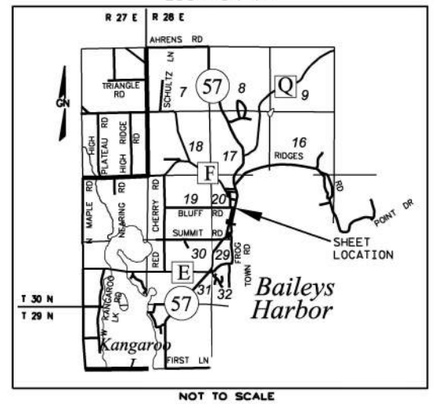

NOT TO SCALE

raSmith
CREATIVITY BEYOND ENGINEERING

I, SHANE M. ZODROW, PROFESSIONAL LAND SURVEYOR, HEREBY CERTIFY THAT IN FULL COMPLIANCE WITH THE PROVISIONS OF SECTION 84.095 OF THE WISCONSIN STATUTES AND UNDER THE DIRECTION OF THE DEPARTMENT OF TRANSPORTATION, I HAVE SURVEYED AND MAPPED THIS TRANSPORTATION PROJECT PLAT AND SUCH PLAT CORRECTLY REPRESENTS ALL EXTERIOR BOUNDARIES OF THE SURVEYED LAND.

WISCONSIN SHANE M. ZODROW S-2869 GREENDALE WI LAND SURVEYOR

Shane M Zodrow 10/06/2021
SHANE M. ZODROW — DATE
AGENT FOR R.A. SMITH
P.L.S. NUMBER 2869

THIS PLAT AND RELOCATION ORDER ARE APPROVED FOR THE WISCONSIN DEPARTMENT OF TRANSPORTATION.

CURT VAN EREM — Curt Van Erem — 10/07/2021
PRINTED NAME — SIGNATURE — DATE:

DOC #: 847152
RECORDED ON:
10/08/2021 11:56:46 AM
CAREY PETERSILKA
REGISTER OF DEEDS
DOOR COUNTY, WI
FEE AMOUNT PAID: 25.00
The above recoding information verifies that this document has been electronically recorded and returned to the submitter.

RESERVED FOR REGISTER OF DEEDS
PROJECT NUMBER 4150-14-21 - 4.01
AMENDMENT NO:
SHEET 1 OF 2

NOTES:

POSITIONS SHOWN ON THIS PLAT ARE WISCONSIN COORDINATE REFERENCE SYSTEM COORDINATES (WISCRS), DOOR COUNTY, NAD83 (2011) IN US SURVEY FEET. VALUES SHOWN ARE GRID COORDINATES, GRID BEARINGS, AND GRID DISTANCES. GRID DISTANCES MAY BE USED AS GROUND DISTANCES.

ALL NEW RIGHT-OF-WAY MONUMENTS WILL BE TYPE 2 (TYPICALLY 1" X 24" IRON PIPES), UNLESS OTHERWISE NOTED, AND WILL BE PLACED PRIOR TO THE COMPLETION OF THE PROJECT.

FOR THE CURRENT ACCESS/DRIVEWAY INFORMATION, CONTACT THE PLANNING UNIT OF THE WISCONSIN DEPARTMENT OF TRANSPORTATION OFFICE IN GREEN BAY.

FOR ADDITIONAL INFORMATION REFER TO THE TITLE SHEET, RECORDED AS SHEET 2 OF 2.

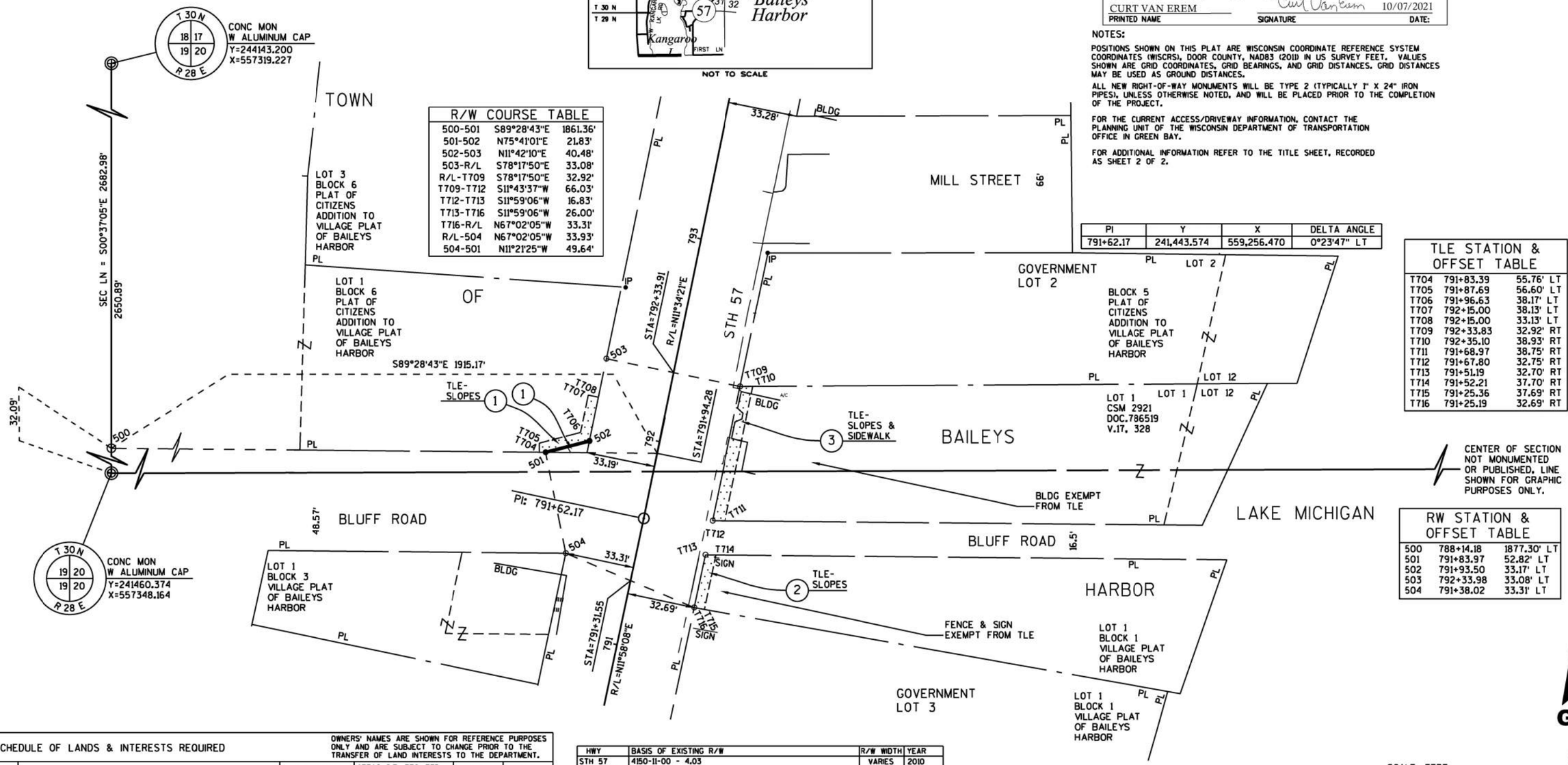

PI	Y	X	DELTA ANGLE
791+62.17	241,443.574	559,256.470	0°23'47" LT

R/W COURSE TABLE

500-501	S89°28'43"E	1861.36'
501-502	N75°41'01"E	21.83'
502-503	N11°42'10"E	40.48'
503-R/L	S78°17'50"E	33.08'
R/L-T709	S78°17'50"E	32.92'
T709-T712	S11°43'37"W	66.03'
T712-T713	S11°59'06"W	16.83'
T713-T716	S11°59'06"W	26.00'
T716-R/L	N67°02'05"W	33.31'
R/L-504	N67°02'05"W	33.93'
504-501	N11°21'25"W	49.64'

TLE STATION & OFFSET TABLE

T704	791+83.39	55.76' LT
T705	791+87.69	56.60' LT
T706	791+96.63	38.17' LT
T707	792+15.00	38.13' LT
T708	792+15.00	33.13' LT
T709	792+33.83	32.92' RT
T710	792+35.10	38.93' RT
T711	791+68.97	38.75' RT
T712	791+67.80	32.75' RT
T713	791+51.19	32.70' RT
T714	791+52.21	37.70' RT
T715	791+25.36	37.69' RT
T716	791+25.19	32.69' RT

RW STATION & OFFSET TABLE

500	788+14.18	1877.30' LT
501	791+83.97	52.82' LT
502	791+93.50	33.17' LT
503	792+33.98	33.08' LT
504	791+38.02	33.31' LT

SCHEDULE OF LANDS & INTERESTS REQUIRED

OWNERS' NAMES ARE SHOWN FOR REFERENCE PURPOSES ONLY AND ARE SUBJECT TO CHANGE PRIOR TO THE TRANSFER OF LAND INTERESTS TO THE DEPARTMENT.

PARCEL NUMBER	OWNER(S)	INTEREST(S) REQUIRED	AREAS S.F. REQUIRED NEW	EXISTING	TOTAL	TLE S.F.	PLE S.F.
1	CARL J. & JUDITH A. PRUSINSKI, JOINT REVOCABLE TRUST	FEE, TLE	56	-	56	212	-
2	ROBERT R. JR. & CAROLYN S. KIMBELL, JOINT REVOCABLE TRUST	TLE	-	-	-	132	-
3	PROPERTIES OF BAILEYS HARBOR, LLC.	TLE	-	-	-	396	-

HWY	BASIS OF EXISTING R/W	R/W WIDTH	YEAR
STH 57	4150-11-00 - 4.03	VARIES	2010
BLUFF ROAD	4150-11-00 - 4.03	48.57'	2010
BLUFF ROAD	CITIZENS ADDITION TO VILLAGE PLAT OF BAILEYS HARBOR	16.5'	UNKNOWN
BLUFF ROAD	CSM 2921	16.5'	2015
MILL STREET	4150-11-00 - 4.03	66'	2010
MILL STREET	CITIZENS ADDITION TO VILLAGE PLAT OF BAILEYS HARBOR	66'	UNKNOWN

FILE NAME:S:/5168412/DWG/41501400/PLAT/TPP100.DWG
APPRAISAL PLAT DATE: 10/06/2021

TRANSPORTATION PROJECT PLAT NO: 4150-14-21 - 4.02

PART OF LOTS 7 AND 10, BLOCK 6 AND LOT 7, BLOCK 5, PLAT OF CITIZENS ADDITION TO VILLAGE PLAT OF BAILEYS HARBOR, BEING A PART OF GOVERNMENT LOT 2, SECTION 20, TOWNSHIP 30 NORTH, RANGE 28 EAST, TOWN OF BAILEYS HARBOR, DOOR COUNTY, WISCONSIN.

RELOCATION ORDER STH 57 SUMMIT ROAD - BAILEYS HARBOR
(SUMMIT ROAD TO CTH O), DOOR COUNTY

TO PROPERLY ESTABLISH, LAY OUT, WIDEN, ENLARGE, EXTEND, CONSTRUCT, RECONSTRUCT, IMPROVE, OR MAINTAIN A PORTION OF THE HIGHWAY DESIGNATED ABOVE, THE STATE OF WISCONSIN DEPARTMENT OF TRANSPORTATION DEEMS IT NECESSARY TO RELOCATE OR CHANGE SAID HIGHWAY AND ACQUIRE CERTAIN LANDS AND INTERESTS OR RIGHTS IN LANDS FOR THE ABOVE-NAMED PROJECT. TO EFFECT THIS CHANGE, PURSUANT TO AUTHORITY GRANTED UNDER SUBSECTIONS 84.02. (3), 84.09 AND 84.30, WISCONSIN STATUTES, THE DEPARTMENT OF TRANSPORTATION HEREBY ORDERS THAT:

1. THAT PORTION OF SAID HIGHWAY AS SHOWN ON THIS PLAT IS LAID OUT AND ESTABLISHED TO THE LINES AND WIDTHS AS SO SHOWN FOR THE ABOVE-NAMED PROJECT.
2. THE LANDS OR INTERESTS OR RIGHTS IN LANDS AS SHOWN ON THIS PLAT ARE REQUIRED BY THE DEPARTMENT FOR THE ABOVE PROJECT AND SHALL BE ACQUIRED IN THE NAME OF THE STATE OF WISCONSIN, PURSUANT TO THE PROVISIONS OF SUBSECTION 84.09 (1) OR (2), WISCONSIN STATUTES.

LOCATION MAP

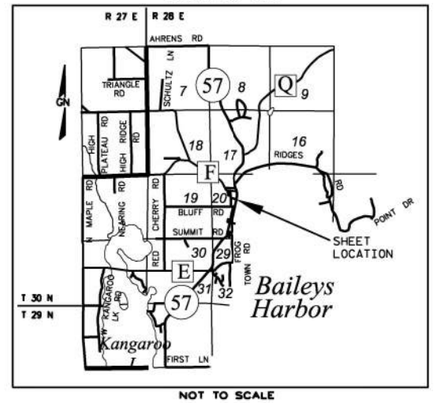

NOT TO SCALE

raSmith
CREATIVITY BEYOND ENGINEERING

I, SHANE M. ZODROW, PROFESSIONAL LAND SURVEYOR, HEREBY CERTIFY THAT IN FULL COMPLIANCE WITH THE PROVISIONS OF SECTION 84.095 OF THE WISCONSIN STATUTES AND UNDER THE DIRECTION OF THE DEPARTMENT OF TRANSPORTATION, I HAVE SURVEYED AND MAPPED THIS TRANSPORTATION PROJECT PLAT AND SUCH PLAT CORRECTLY REPRESENTS ALL EXTERIOR BOUNDARIES OF THE SURVEYED LAND.

WISCONSIN SHANE M. ZODROW S-2869 GREENDALE WI LAND SURVEYOR

Shane M Zodrow 10/14/2021
SHANE M. ZODROW — DATE
AGENT FOR R.A. SMITH
P.L.S. NUMBER 2869

THIS PLAT AND RELOCATION ORDER ARE APPROVED FOR THE WISCONSIN DEPARTMENT OF TRANSPORTATION.

CURT VAN EREM — Curt Van Erem — 10/15/2021
PRINTED NAME — SIGNATURE — DATE:

DOC #: 847383
RECORDED ON:
10/18/2021 08:16:38 AM
CAREY PETERSILKA
REGISTER OF DEEDS
DOOR COUNTY, WI
FEE AMOUNT PAID: 25.00
The above recording information verifies that this document has been electronically recorded and returned to the submitter.

RESERVED FOR REGISTER OF DEEDS
PROJECT NUMBER 4150-14-21 - 4.02
AMENDMENT NO:
SHEET 1 OF 1

NOTES:

POSITIONS SHOWN ON THIS PLAT ARE WISCONSIN COORDINATE REFERENCE SYSTEM COORDINATES (WISCRS), DOOR COUNTY, NAD83 (2011) IN US SURVEY FEET. VALUES SHOWN ARE GRID COORDINATES, GRID BEARINGS, AND GRID DISTANCES. GRID DISTANCES MAY BE USED AS GROUND DISTANCES.

ALL NEW RIGHT-OF-WAY MONUMENTS WILL BE TYPE 2 (TYPICALLY 1" X 24" IRON PIPES), UNLESS OTHERWISE NOTED, AND WILL BE PLACED PRIOR TO THE COMPLETION OF THE PROJECT.

FOR THE CURRENT ACCESS/DRIVEWAY INFORMATION, CONTACT THE PLANNING UNIT OF THE WISCONSIN DEPARTMENT OF TRANSPORTATION OFFICE IN GREEN BAY.

FOR ADDITIONAL INFORMATION REFER TO THE TITLE SHEET, RECORDED IN THE OFFICE OF REGISTER OF DEEDS, IN DOOR COUNTY AS SHEET 2 OF 2 OF DOCUMENT# 847152.

R/W COURSE TABLE		
506-507	N19°35'41"E	67.02'
507-T718	N11°00'57"E	10.00'
T718-R/L	S78°43'30"E	35.01'
R/L-T719	S78°43'30"E	30.41'
T719-T726	S10°50'02"W	124.01'
T726-R/L	N59°59'57"W	33.73'
R/L-T727	N59°59'57"W	35.86'
T727-508	N11°00'57"E	18.65'
508-506	N44°56'41"W	12.06'

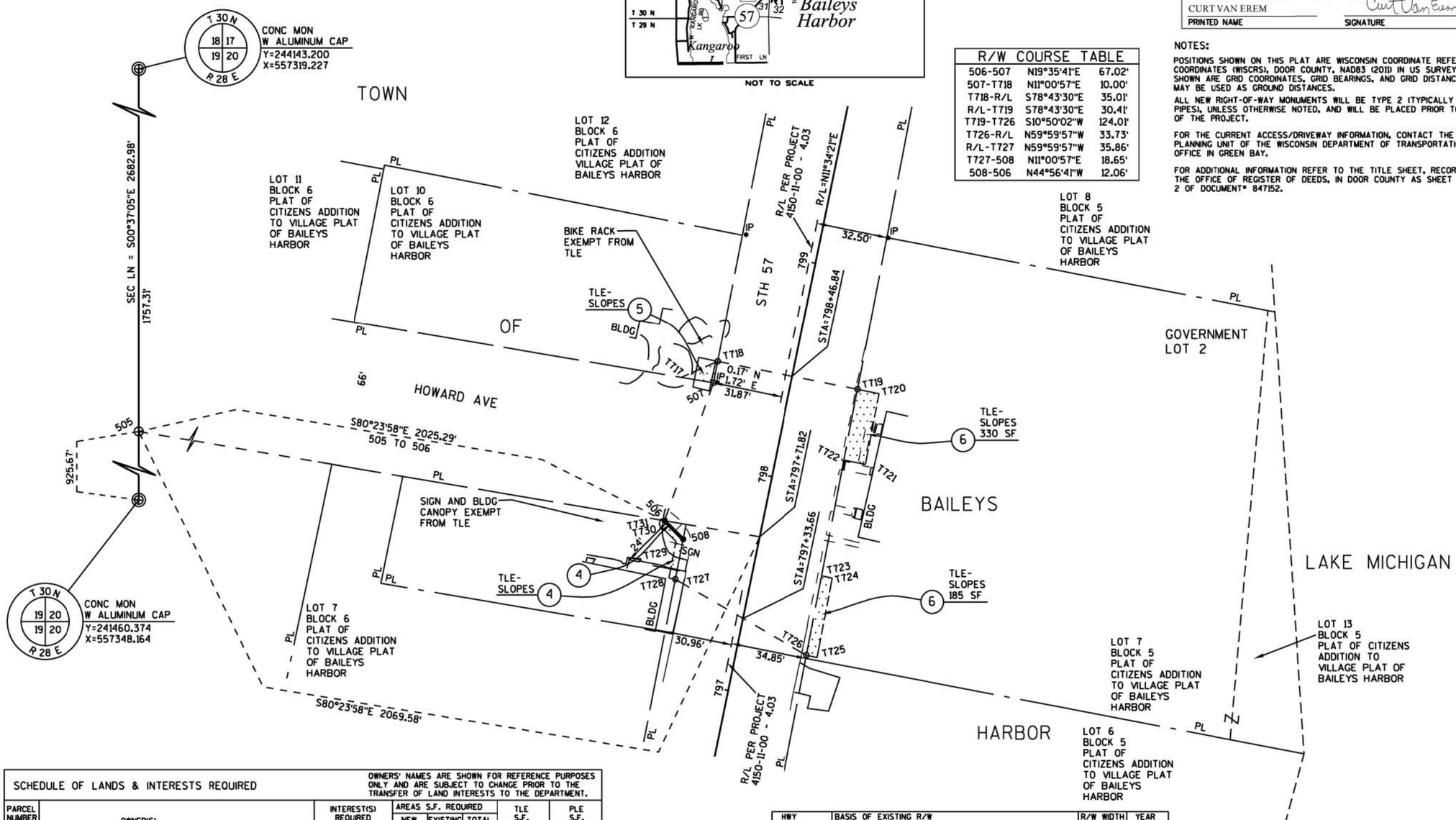

RW STATION & OFFSET TABLE		
505	807+75.73	2053.85' LT
506	797+70.30	44.26' LT
507	798+36.66	34.91' LT
508	797+63.64	34.20' LT

TLE STATION & OFFSET TABLE		
T717	798+36.14	49.90' LT
T718	798+46.66	35.01' LT
T719	798+47.00	30.41' RT
T720	798+47.00	40.41' RT
T721	798+14.00	40.83' RT
T722	798+14.00	30.83' RT
T723	797+60.00	31.53' RT
T724	797+60.00	36.53' RT
T725	797+23.00	37.01' RT
T726	797+23.00	32.00' RT
T727	797+45.00	34.02' LT
T728	797+45.00	37.02' LT
T729	797+62.02	37.19' LT
T730	797+67.97	46.18' LT
T731	797+70.23	46.26' LT

SCHEDULE OF LANDS & INTERESTS REQUIRED

OWNERS' NAMES ARE SHOWN FOR REFERENCE PURPOSES ONLY AND ARE SUBJECT TO CHANGE PRIOR TO THE TRANSFER OF LAND INTERESTS TO THE DEPARTMENT.

PARCEL NUMBER	OWNER(S)	INTEREST(S) REQUIRED	AREAS S.F. REQUIRED			TLE S.F.	PLE S.F.
			NEW	EXISTING	TOTAL		
4	RONALD C. JR. & CYNTHIA M. SCHOENFELD	FEE, TLE	35	-	35	90	-
5	HORTON PROPERTIES, LLC.	TLE	-	-	-	75	-
6	BARBARA K. BENSON, AS TO A LIFE ESTATE	TLE	-	-	-	515	-

HWY	BASIS OF EXISTING R/W	R/W WIDTH	YEAR
STH 57	4150-11-00 - 4.03	VARIES	2010
HOWARD AVE	4150-11-00 - 4.03	66'	2010
HOWARD AVE	CITIZENS ADDITION TO VILLAGE PLAT OF BAILEYS HARBOR	66'	UNKNOWN

FILE NAME:S:/5168412/DWG/41501400/PLAT/TPP100.DWG
APPRAISAL PLAT DATE: 10/14/2021

TRANSPORTATION PROJECT PLAT NO: 4150-14-21 - 4.03

PART OF LOT 1 OF CERTIFIED SURVEY MAP 3406, BEING A PART OF GOVERNMENT LOT 2, ALSO THAT PART OF LOT 3, BLOCK 7, PLAT OF CITIZENS ADDITION TO VILLAGE PLAT OF BAILEYS HARBOR, BEING A PART OF GOVERNMENT LOT 1, ALL IN SECTION 20, TOWNSHIP 30 NORTH, RANGE 28 EAST, TOWN OF BAILEYS HARBOR, DOOR COUNTY, WISCONSIN.

RELOCATION ORDER STH 57 SUMMIT ROAD - BAILEYS HARBOR
(SUMMIT ROAD TO CTH O), DOOR COUNTY

TO PROPERLY ESTABLISH, LAY OUT, WIDEN, ENLARGE, EXTEND, CONSTRUCT, RECONSTRUCT, IMPROVE, OR MAINTAIN A PORTION OF THE HIGHWAY DESIGNATED ABOVE, THE STATE OF WISCONSIN DEPARTMENT OF TRANSPORTATION DEEMS IT NECESSARY TO RELOCATE OR CHANGE SAID HIGHWAY AND ACQUIRE CERTAIN LANDS AND INTERESTS OR RIGHTS IN LANDS FOR THE ABOVE-NAMED PROJECT. TO EFFECT THIS CHANGE, PURSUANT TO AUTHORITY GRANTED UNDER SUBSECTIONS 84.02. (3), 84.09 AND 84.30, WISCONSIN STATUTES, THE DEPARTMENT OF TRANSPORTATION HEREBY ORDERS THAT:

1. THAT PORTION OF SAID HIGHWAY AS SHOWN ON THIS PLAT IS LAID OUT AND ESTABLISHED TO THE LINES AND WIDTHS AS SO SHOWN FOR THE ABOVE-NAMED PROJECT.
2. THE LANDS OR INTERESTS OR RIGHTS IN LANDS AS SHOWN ON THIS PLAT ARE REQUIRED BY THE DEPARTMENT FOR THE ABOVE PROJECT AND SHALL BE ACQUIRED IN THE NAME OF THE STATE OF WISCONSIN, PURSUANT TO THE PROVISIONS OF SUBSECTION 84.09 (1) OR (2), WISCONSIN STATUTES.

R/L STH 57
CURVE DATA
PI = 802+71.76
Y = 242,530.605
X = 559,479.060
PC = 800+12.91
DELTA = 32°57'34" LT
BACK = S11°34'21"W
AHEAD = N21°23'14"W
D = 06°32'53"
T = 258.85'
L = 503.35'
R = 875.00'

R/L STH 57
CURVE DATA
PI = 807+70.22
Y = 243008.111
X = 559292.051
DELTA = 06°47'42" RT
BACK = S21°23'14"E
AHEAD = N14°35'31"W
D = 03°00'56"
T = 112.80'
L = 225.34'
R = 1900.00'

raSmith
CREATIVITY BEYOND ENGINEERING

I, SHANE M. ZODROW, PROFESSIONAL LAND SURVEYOR, HEREBY CERTIFY THAT IN FULL COMPLIANCE WITH THE PROVISIONS OF SECTION 84.095 OF THE WISCONSIN STATUTES AND UNDER THE DIRECTION OF THE DEPARTMENT OF TRANSPORTATION, I HAVE SURVEYED AND MAPPED THIS TRANSPORTATION PROJECT PLAT AND SUCH PLAT CORRECTLY REPRESENTS ALL EXTERIOR BOUNDARIES OF THE SURVEYED LAND.

WISCONSIN SHANE M. ZODROW S-2869 GREENDALE WI LAND SURVEYOR

Shane M Zodrow 10/14/2021
SHANE M. ZODROW — DATE
AGENT FOR R.A. SMITH
P.L.S. NUMBER 2869

THIS PLAT AND RELOCATION ORDER ARE APPROVED FOR THE WISCONSIN DEPARTMENT OF TRANSPORTATION.

CURT VAN EREM — Curt Van Erem — 10/15/2021
PRINTED NAME — SIGNATURE — DATE:

DOC #: 847384
RECORDED ON:
10/18/2021 08:18:52 AM
CAREY PETERSILKA
REGISTER OF DEEDS
DOOR COUNTY, WI
FEE AMOUNT PAID: 25.00
The above recording information verifies that this document has been electronically recorded and returned to the submitter.

RESERVED FOR REGISTER OF DEEDS
PROJECT NUMBER 4150-14-21 - 4.03
AMENDMENT NO:
SHEET 1 OF 1

HWY	BASIS OF EXISTING R/W	R/W WIDTH	YEAR
STH 57	4150-11-00 - 4.03	66'	2010
STH 57	4150-11-00 - 4.04	66'	2010
CTH F	CSM 3406	66'	2020
CTH F	CITIZENS ADDITION TO VILLAGE PLAT OF BAILEYS HARBOR	66'	UNKNOWN
PARK ROAD	4150-11-00 - 4.04	VARIES	2010

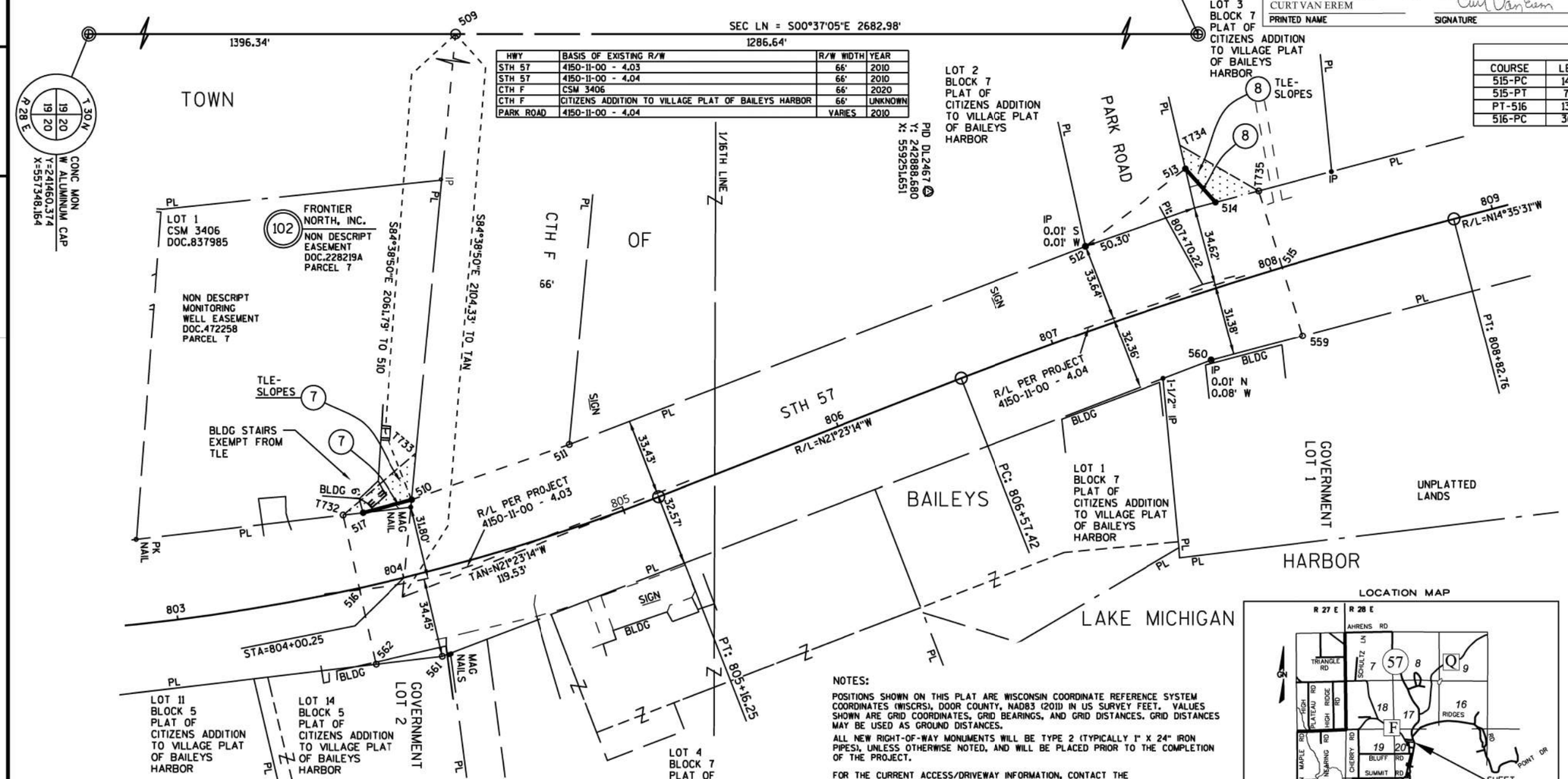

CURVE TABLE				
COURSE	LENGTH	RADIUS	CHORD BEARING	CHORD
515-PC	147.58'	1900.00'	S19°09'43"E	147.54'
515-PT	77.76'	1900.00'	N15°45'52"W	77.75'
PT-516	136.25'	875.00'	S16°55'34"E	136.12'
516-PC	367.10'	875.00'	S00°26'47"E	364.41'

RW STATION & OFFSET TABLE		
509	811+16.90	1933.92' LT
510	804+11.80	31.99' LT
511	804+87.24	34.81' LT
512	807+27.46	35.28' LT
513	807+78.21	53.48' LT
514	807+86.00	35.58' LT
515	808+05.00	0.00'
516	803+80.00	0.00'
517	803+89.00	31.53' LT
559	808+05.00	31.26' RT
560	807+63.19	29.33' RT
561	804+07.73	37.27' RT
562	803+80.00	33.93' RT

TLE STATION & OFFSET TABLE		
T732	803+80.00	32.45' LT
T733	804+19.12	51.00' LT
T734	807+79.02	63.92' LT
T735	808+05.00	34.79' LT

R/W COURSE TABLE		
510-511	N19°14'34"W	72.59'
511-512	N21°04'26"W	240.35'
512-513	N37°49'22"W	55.03'
513-514	N48°21'19"E	19.59'
514-T735	N14°52'40"W	19.37'
T735-515	N73°03'47"E	34.79'
515-559	N73°03'47"E	31.26'
559-560	S14°52'40"E	41.19'
560-561	S21°04'26"E	358.11'
561-562	S06°46'32"E	29.05'
562-516	S77°32'06"W	33.93'
516-T732	S77°32'06"W	32.45'
T732-517	N06°41'04"W	8.72'
517-510	N14°59'56"W	21.98'

LOCATION MAP

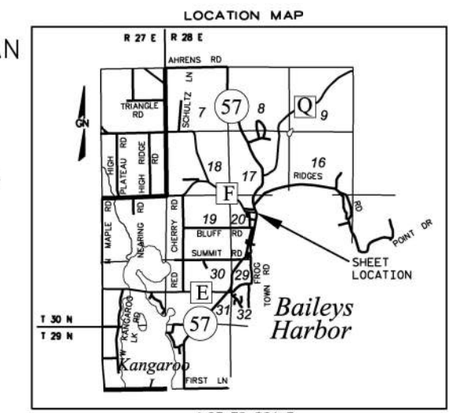

NOTES:

POSITIONS SHOWN ON THIS PLAT ARE WISCONSIN COORDINATE REFERENCE SYSTEM COORDINATES (WISCRS), DOOR COUNTY, NAD83 (2011) IN US SURVEY FEET. VALUES SHOWN ARE GRID COORDINATES, GRID BEARINGS, AND GRID DISTANCES. GRID DISTANCES MAY BE USED AS GROUND DISTANCES.

ALL NEW RIGHT-OF-WAY MONUMENTS WILL BE TYPE 2 (TYPICALLY 1" X 24" IRON PIPES), UNLESS OTHERWISE NOTED, AND WILL BE PLACED PRIOR TO THE COMPLETION OF THE PROJECT.

FOR THE CURRENT ACCESS/DRIVEWAY INFORMATION, CONTACT THE PLANNING UNIT OF THE WISCONSIN DEPARTMENT OF TRANSPORTATION OFFICE IN GREEN BAY.

FOR ADDITIONAL INFORMATION REFER TO THE TITLE SHEET, RECORDED IN THE OFFICE OF REGISTER OF DEEDS, IN DOOR COUNTY AS SHEET 2 OF 2 OF DOCUMENT# 847152.

UTILITY NUMBER	UTILITY OWNER	INTEREST REQUIRED
102	FRONTIER NORTH, INC.	RELEASE OF RIGHTS

SCHEDULE OF LANDS & INTERESTS REQUIRED

OWNERS' NAMES ARE SHOWN FOR REFERENCE PURPOSES ONLY AND ARE SUBJECT TO CHANGE PRIOR TO THE TRANSFER OF LAND INTERESTS TO THE DEPARTMENT.

PARCEL NUMBER	OWNER(S)	INTEREST(S) REQUIRED	AREAS S.F. REQUIRED			TLE S.F.	PLE S.F.
			NEW	EXISTING	TOTAL		
7	RPS III, LLC,	FEE, TLE	33	-	33	309	-
8	TOWN OF BAILEYS HARBOR	FEE, TLE	82	-	82	320	-

GN
SCALE, FEET
0 25 50

FILE NAME:S:/5168412/DWG/41501400/PLAT/TPP100.DWG
APPRAISAL PLAT DATE: 10/14/2021

TRANSPORTATION PROJECT PLAT NO: 4150-14-21 - 4.04

PART OF LOTS 1, 2 & 3, CSM 1497, IN AND INCLUDING PART OF GOVERNMENT LOT 1, SECTION 20, TOWNSHIP 30 NORTH, RANGE 28 EAST, TOWN OF BAILEYS HARBOR, DOOR COUNTY, WISCONSIN.

RELOCATION ORDER STH 57 SUMMIT ROAD - BAILEYS HARBOR
(SUMMIT ROAD TO CTH O), DOOR COUNTY

TO PROPERLY ESTABLISH, LAY OUT, WIDEN, ENLARGE, EXTEND, CONSTRUCT, RECONSTRUCT, IMPROVE, OR MAINTAIN A PORTION OF THE HIGHWAY DESIGNATED ABOVE, THE STATE OF WISCONSIN DEPARTMENT OF TRANSPORTATION DEEMS IT NECESSARY TO RELOCATE OR CHANGE SAID HIGHWAY AND ACQUIRE CERTAIN LANDS AND INTERESTS OR RIGHTS IN LANDS FOR THE ABOVE-NAMED PROJECT. TO EFFECT THIS CHANGE, PURSUANT TO AUTHORITY GRANTED UNDER SUBSECTIONS 84.02. (3), 84.09 AND 84.30, WISCONSIN STATUTES, THE DEPARTMENT OF TRANSPORTATION HEREBY ORDERS THAT:

1. THAT PORTION OF SAID HIGHWAY AS SHOWN ON THIS PLAT IS LAID OUT AND ESTABLISHED TO THE LINES AND WIDTHS AS SO SHOWN FOR THE ABOVE-NAMED PROJECT.
2. THE LANDS OR INTERESTS OR RIGHTS IN LANDS AS SHOWN ON THIS PLAT ARE REQUIRED BY THE DEPARTMENT FOR THE ABOVE PROJECT AND SHALL BE ACQUIRED IN THE NAME OF THE STATE OF WISCONSIN, PURSUANT TO THE PROVISIONS OF SUBSECTION 84.09 (1) OR (2), WISCONSIN STATUTES.

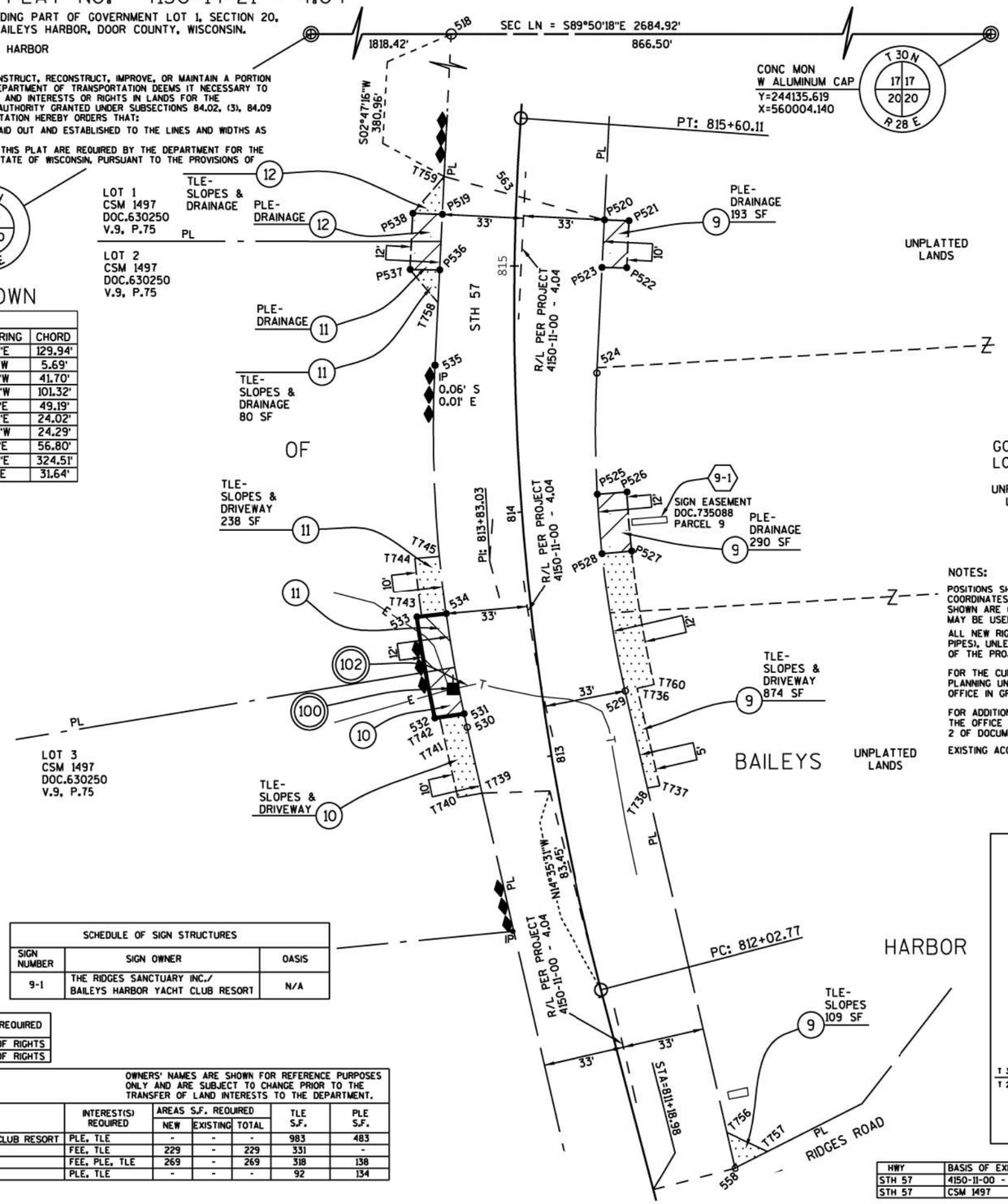

R/W CURVE TABLE

COURSE	LENGTH	RADIUS	CHORD BEARING	CHORD
524-529	130.35'	475.72'	S05°03'42"E	129.94'
530-531	5.69'	541.72'	N12°36'37"W	5.69'
532-533	41.71'	553.72'	N10°04'00"W	41.70'
534-535	101.47'	541.72'	N02°34'42"W	101.32'
524-P525	49.22'	475.72'	S00°10'33"E	49.19'
P526-P527	24.02'	463.72'	S04°35'59"E	24.02'
P528-P525	24.29'	475.72'	N04°36'09"W	24.29'
P528-529	56.84'	475.72'	S09°29'18"E	56.80'
563-PC	325.70'	1100.00'	S06°06'35"E	324.51'
563-PT	31.64'	1100.00'	N03°11'49"E	31.64'

R/W COURSE TABLE

T759-563	S74°53'20"E	30.41'
563-P520	S74°53'20"E	37.15'
P520-524	S02°47'16"W	62.38'
524-529	SEE CURVE DATA	
529-558	S12°54'40"E	198.75'
558-R/L	S75°24'29"W	34.16'
R/L-PC	N14°35'31"W	83.79'
PC-TAN	N14°35'31"W	83.45'
TAN-T739	S88°13'03"W	27.47'
T739-530	N12°54'40"W	27.29'
530-531	SEE CURVE DATA	
531-532	S81°37'06"W	12.03'
532-533	SEE CURVE DATA	
533-534	N83°42'07"E	12.00'
534-535	SEE CURVE DATA	
535-T759	N02°47'16"E	76.79'
P520-P521	S88°04'06"E	10.00'
P521-P522	S02°47'16"W	19.17'
P522-P523	N89°06'36"W	10.01'
P523-P520	N02°47'16"E	19.35'
P523-524	S02°47'16"W	43.03'
524-P525	SEE CURVE DATA	
P525-P526	N85°56'30"E	12.00'
P526-P527	SEE CURVE DATA	
P527-P528	S84°38'22"W	12.00'
P528-P525	SEE CURVE DATA	
P528-529	SEE CURVE DATA	
T759-P519	S02°47'16"W	15.40'
P519-P536	S02°47'16"W	22.61'
P536-P537	N89°12'51"W	12.01'
P537-P538	N02°47'16"E	22.85'
P538-P519	S88°04'06"E	12.00'
535-P536	N02°47'16"E	38.78'

SCHEDULE OF SIGN STRUCTURES

SIGN NUMBER	SIGN OWNER	OASIS
9-1	THE RIDGES SANCTUARY INC./ BAILEYS HARBOR YACHT CLUB RESORT	N/A

UTILITY NUMBER	UTILITY OWNER	INTEREST REQUIRED
100	WISCONSIN PUBLIC SERVICE - ELECTRIC	RELEASE OF RIGHTS
102	FRONTIER NORTH, INC.	RELEASE OF RIGHTS

SCHEDULE OF LANDS & INTERESTS REQUIRED

OWNERS' NAMES ARE SHOWN FOR REFERENCE PURPOSES ONLY AND ARE SUBJECT TO CHANGE PRIOR TO THE TRANSFER OF LAND INTERESTS TO THE DEPARTMENT.

PARCEL NUMBER	OWNER(S)	INTEREST(S) REQUIRED	AREAS S.F. REQUIRED			TLE S.F.	PLE S.F.
			NEW	EXISTING	TOTAL		
9	THE RIDGES SANCTUARY INC./BAILEYS HARBOR YACHT CLUB RESORT	PLE, TLE	-	-	-	983	483
10	KURT HICKEY & MEREDITH L. HEGGLAND	FEE, TLE	229	-	229	331	-
11	DENNIS W. & LYNNEA C. HICKEY REVOCABLE TRUST	FEE, PLE, TLE	269	-	269	318	138
12	JEFFERY D. & PATRICIA A. HICKEY REVOCABLE TRUST	PLE, TLE	-	-	-	92	134

raSmith
CREATIVITY BEYOND ENGINEERING

I, SHANE M. ZODROW, PROFESSIONAL LAND SURVEYOR, HEREBY CERTIFY THAT IN FULL COMPLIANCE WITH THE PROVISIONS OF SECTION 84.095 OF THE WISCONSIN STATUTES AND UNDER THE DIRECTION OF THE DEPARTMENT OF TRANSPORTATION, I HAVE SURVEYED AND MAPPED THIS TRANSPORTATION PROJECT PLAT AND SUCH PLAT CORRECTLY REPRESENTS ALL EXTERIOR BOUNDARIES OF THE SURVEYED LAND.

WISCONSIN SHANE M. ZODROW S-2869 GREENDALE WI LAND SURVEYOR

Shane M Zodrow 10/14/2021
SHANE M. ZODROW — DATE
AGENT FOR R.A. SMITH
P.L.S. NUMBER 2869

THIS PLAT AND RELOCATION ORDER ARE APPROVED FOR THE WISCONSIN DEPARTMENT OF TRANSPORTATION.

CURT VAN EREM — Curt Van Erem — 10/15/2021
PRINTED NAME — SIGNATURE — DATE:

DOC #: 847385
RECORDED ON:
10/18/2021 08:20:01 AM
CAREY PETERSILKA
REGISTER OF DEEDS
DOOR COUNTY, WI
FEE AMOUNT PAID: 25.00
The above recoding information verifies that this document has been electronically recorded and returned to the submitter.

RESERVED FOR REGISTER OF DEEDS
PROJECT NUMBER 4150-14-21 - 4.04
AMENDMENT NO:
SHEET 1 OF 1

100 WISCONSIN PUBLIC SERVICE - ELECTRIC
NO RECORD OF EASEMENT
PARCEL 10

102 FRONTIER NORTH, INC.
NO RECORD OF EASEMENT
PARCEL 10

R/L STH 57
CURVE DATA
PI = 813+83.03
Y = 243,601.407
X = 559,137.597
DELTA = 18°36'47" RT
BACK = S14°35'31"E
AHEAD = N04°01'16"E
D = 05°12'31"
T = 180.26'
L = 357.34'
R = 1100.00'

RW STATION & OFFSET TABLE

518	818+87.03	89.90' LT
P519	815+20.00	29.81' LT
P520	815+20.00	36.20' RT
P521	815+20.00	46.20' RT
P522	815+00.00	45.74' RT
P523	815+00.00	35.74' RT
524	814+55.64	33.45' RT
P525	814+05.00	31.24' RT
P526	814+05.00	43.25' RT
P527	813+80.00	43.20' RT
P528	813+80.00	31.20' RT
529	813+21.52	33.78' RT
530	813+16.49	32.03' LT
531	813+22.00	32.44' LT
532	813+22.00	44.46' LT
533	813+62.00	46.45' LT
534	813+62.00	34.44' LT
535	814+60.35	32.39' LT
P536	814+98.00	30.37' LT
P537	814+98.00	42.38' LT
P538	815+20.00	41.81' LT
558	811+18.98	34.16' RT
563	815+28.47	0.00'

NOTES:

POSITIONS SHOWN ON THIS PLAT ARE WISCONSIN COORDINATE REFERENCE SYSTEM COORDINATES (WISCRS), DOOR COUNTY, NAD83 (2011) IN US SURVEY FEET. VALUES SHOWN ARE GRID COORDINATES, GRID BEARINGS, AND GRID DISTANCES. GRID DISTANCES MAY BE USED AS GROUND DISTANCES.

ALL NEW RIGHT-OF-WAY MONUMENTS WILL BE TYPE 2 (TYPICALLY 1" X 24" IRON PIPES), UNLESS OTHERWISE NOTED, AND WILL BE PLACED PRIOR TO THE COMPLETION OF THE PROJECT.

FOR THE CURRENT ACCESS/DRIVEWAY INFORMATION, CONTACT THE PLANNING UNIT OF THE WISCONSIN DEPARTMENT OF TRANSPORTATION OFFICE IN GREEN BAY.

FOR ADDITIONAL INFORMATION REFER TO THE TITLE SHEET, RECORDED IN THE OFFICE OF REGISTER OF DEEDS, IN DOOR COUNTY AS SHEET 2 OF 2 OF DOCUMENT# 847152.

EXISTING ACCESS CONTROL ALONG STH 57 ESTABLISHED FROM CSM 1497.

LOCATION MAP

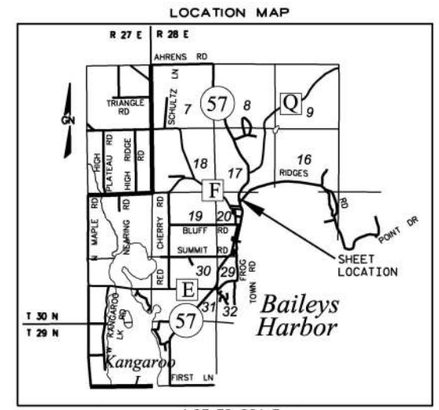

NOT TO SCALE

HWY	BASIS OF EXISTING R/W	R/W WIDTH	YEAR
STH 57	4150-11-00 - 4.04	66'	2010
STH 57	CSM 1497	66'	2002

TLE STATION & OFFSET TABLE

T760	813+22.50	45.74' RT
T736	813+21.93	38.77' RT
T737	812+80.00	41.19' RT
T738	812+80.00	36.19' RT
T756	811+33.98	34.60' RT
T757	811+22.20	48.81' RT
T739	812+90.00	30.34' LT
T740	812+90.00	40.35' LT
T741	813+15.78	42.00' LT
T742	813+22.00	42.46' LT
T743	813+62.00	44.45' LT
T744	813+85.00	44.85' LT
T745	813+85.00	34.85' LT
T758	814+85.00	30.92' LT
T759	815+35.00	29.68' LT

GN

SCALE, FEET
0 25 50

FILE NAME:S:/5168412/DWG/41501400/PLAT/TPP100.DWG
APPRAISAL PLAT DATE: 10/14/2021

TRANSPORTATION PROJECT PLAT NO: 4150-14-21 - 4.05

PART OF GOVERNMENT LOTS 2 AND 3, SECTION 17, TOWNSHIP 30 NORTH, RANGE 28 EAST, TOWN OF BAILEYS HARBOR, DOOR COUNTY, WISCONSIN.

RELOCATION ORDER STH 57 SUMMIT ROAD - BAILEYS HARBOR
(SUMMIT ROAD TO CTH O), DOOR COUNTY

TO PROPERLY ESTABLISH, LAY OUT, WIDEN, ENLARGE, EXTEND, CONSTRUCT, RECONSTRUCT, IMPROVE, OR MAINTAIN A PORTION OF THE HIGHWAY DESIGNATED ABOVE, THE STATE OF WISCONSIN DEPARTMENT OF TRANSPORTATION DEEMS IT NECESSARY TO RELOCATE OR CHANGE SAID HIGHWAY AND ACQUIRE CERTAIN LANDS AND INTERESTS OR RIGHTS IN LANDS FOR THE ABOVE-NAMED PROJECT. TO EFFECT THIS CHANGE, PURSUANT TO AUTHORITY GRANTED UNDER SUBSECTIONS 84.02, (3), 84.09 AND 84.30, WISCONSIN STATUTES, THE DEPARTMENT OF TRANSPORTATION HEREBY ORDERS THAT:

1. THAT PORTION OF SAID HIGHWAY AS SHOWN ON THIS PLAT IS LAID OUT AND ESTABLISHED TO THE LINES AND WIDTHS AS SO SHOWN FOR THE ABOVE-NAMED PROJECT.
2. THE LANDS OR INTERESTS OR RIGHTS IN LANDS AS SHOWN ON THIS PLAT ARE REQUIRED BY THE DEPARTMENT FOR THE ABOVE PROJECT AND SHALL BE ACQUIRED IN THE NAME OF THE STATE OF WISCONSIN, PURSUANT TO THE PROVISIONS OF SUBSECTION 84.09 (1) OR (2), WISCONSIN STATUTES.

R/L STH 57
CURVE DATA
PI = 830+39.33
Y = 244,983.640
X = 559,943.376
PT = 832+22.30
DELTA = 45°50'38" LT
BACK = S45°11'44"W
AHEAD = N00°38'54"W
D = 11°48'49"
T = 205.09'
L = 388.06'
R = 485.00'

COMPUTED FROM STATE CARTOGRAPHER'S OFFICE SURVEY CONTROL FINDER WEBSITE.
NAD 83/91 STATE PLANE COORDINATES TRANSLATED/ROTATED TO ADJACENT SECTION CORNER MONUMENTS
Y=246827.907
X=559667.524

raSmith
CREATIVITY BEYOND ENGINEERING

I, SHANE M. ZODROW, PROFESSIONAL LAND SURVEYOR, HEREBY CERTIFY THAT IN FULL COMPLIANCE WITH THE PROVISIONS OF SECTION 84.095 OF THE WISCONSIN STATUTES AND UNDER THE DIRECTION OF THE DEPARTMENT OF TRANSPORTATION, I HAVE SURVEYED AND MAPPED THIS TRANSPORTATION PROJECT PLAT AND SUCH PLAT CORRECTLY REPRESENTS ALL EXTERIOR BOUNDARIES OF THE SURVEYED LAND.

WISCONSIN SHANE M. ZODROW S-2869 GREENDALE WI LAND SURVEYOR

Shane M Zodrow 10/14/2021
SHANE M. ZODROW — DATE
AGENT FOR R.A. SMITH
P.L.S. NUMBER 2869

THIS PLAT AND RELOCATION ORDER ARE APPROVED FOR THE WISCONSIN DEPARTMENT OF TRANSPORTATION.
CURT VAN EREM — Curt Van Erem 10/15/2021
PRINTED NAME — SIGNATURE — DATE:

DOC #: 847386
RECORDED ON:
10/18/2021 08:21:09 AM
CAREY PETERSILKA
REGISTER OF DEEDS
DOOR COUNTY, WI
FEE AMOUNT PAID: 25.00
The above recoding information verifies that this document has been electronically recorded and returned to the submitter.

RESERVED FOR REGISTER OF DEEDS
PROJECT NUMBER 4150-14-21 - 4.05
AMENDMENT NO:
SHEET 1 OF 1

R/W CURVE TABLE				
COURSE	LENGTH	RADIUS	CHORD BEARING	CHORD
544-564	218.16'	442.26'	N31°00'23"E	215.95'
564-550	34.25'	442.26'	N14°39'23"E	34.24'
552-565	102.88'	508.26'	S24°25'40"W	102.71'
565-553	132.28'	508.26'	S37°40'56"W	131.90'
551-SEC LN	100.25'	485.00'	S18°22'46"W	100.07'
SEC LN-PC	176.87'	485.00'	S34°44'54"W	175.89'
551-PT	110.94'	485.00'	N05°54'16"E	110.70'

R/W COURSE TABLE		
540-541	N50°44'36"W	32.60'
541-542	N50°44'36"W	33.75'
542-545	N45°08'17"E	225.14'
545-546	N44°48'16"W	15.00'
546-547	N45°08'17"E	29.24'
547-548	S44°48'16"E	15.00'
548-544	N45°08'17"E	5.98'
544-564	SEE CURVE DATA	
564-550	SEE CURVE DATA	
550-551	S77°33'44"E	32.25'
551-552	S16°53'06"E	62.87'
552-565	SEE CURVE DATA	
565-553	SEE CURVE DATA	
553-554	S45°08'17"W	6.05'
554-555	S44°48'16"E	20.00'
555-556	S45°08'17"W	29.24'
556-557	N44°48'16"W	20.00'
557-540	S45°08'17"W	218.28'

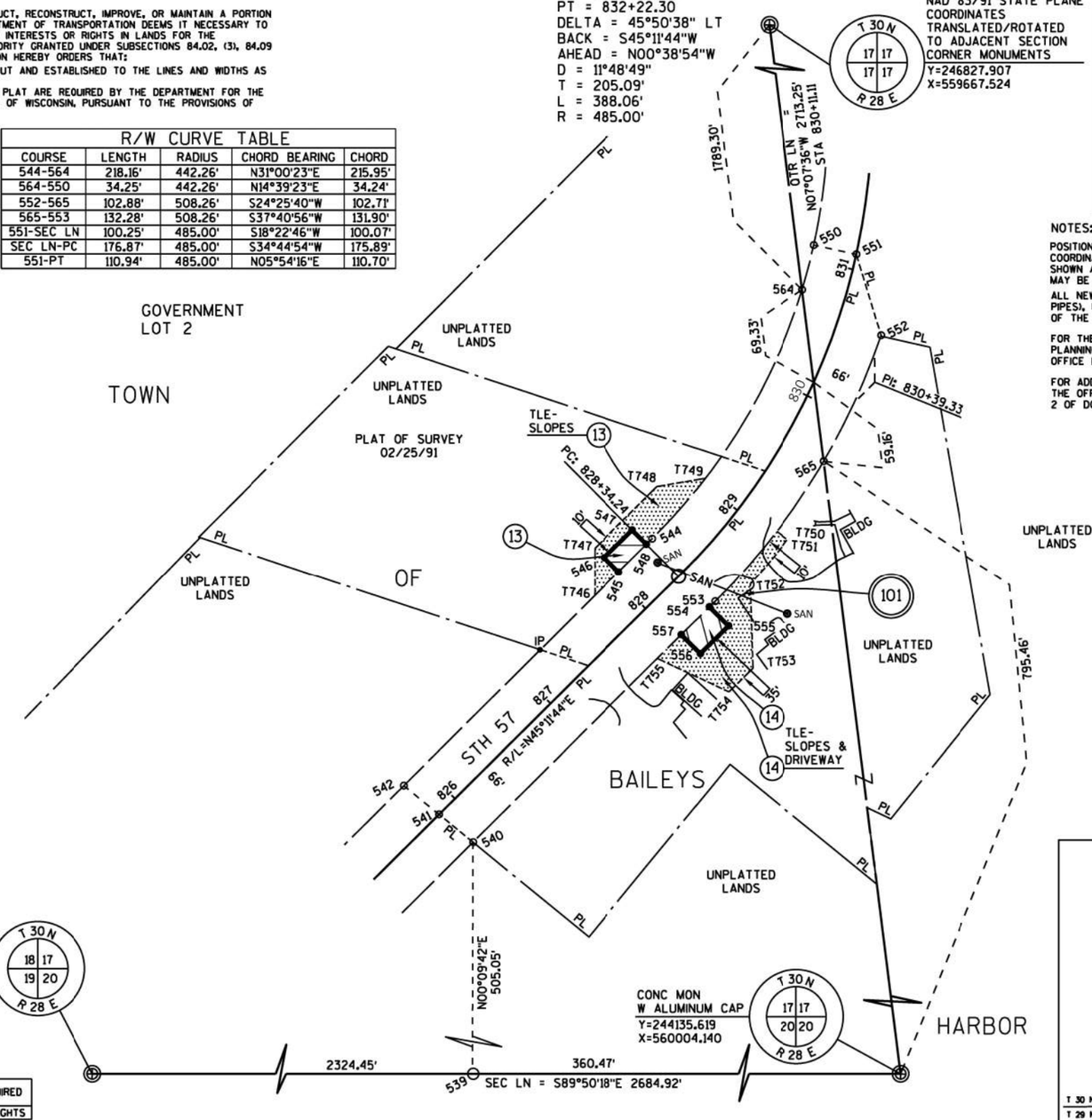

NOTES:

POSITIONS SHOWN ON THIS PLAT ARE WISCONSIN COORDINATE REFERENCE SYSTEM COORDINATES (WISCRS), DOOR COUNTY, NAD83 (2011) IN US SURVEY FEET. VALUES SHOWN ARE GRID COORDINATES, GRID BEARINGS, AND GRID DISTANCES. GRID DISTANCES MAY BE USED AS GROUND DISTANCES.

ALL NEW RIGHT-OF-WAY MONUMENTS WILL BE TYPE 2 (TYPICALLY 1" X 24" IRON PIPES), UNLESS OTHERWISE NOTED, AND WILL BE PLACED PRIOR TO THE COMPLETION OF THE PROJECT.

FOR THE CURRENT ACCESS/DRIVEWAY INFORMATION, CONTACT THE PLANNING UNIT OF THE WISCONSIN DEPARTMENT OF TRANSPORTATION OFFICE IN GREEN BAY.

FOR ADDITIONAL INFORMATION REFER TO THE TITLE SHEET, RECORDED IN THE OFFICE OF REGISTER OF DEEDS, IN DOOR COUNTY AS SHEET 2 OF 2 OF DOCUMENT# 847152.

RW STATION & OFFSET TABLE		
539	821+33.45	350.27' RT
540	825+86.72	32.43' RT
541	825+83.35	0.00'
542	825+79.86	33.57' LT
544	828+40.67	33.79' LT
564	830+74.66	32.27' LT
545	828+05.00	33.79' LT
546	828+05.00	48.79' LT
547	828+34.24	48.82' LT
548	828+34.24	33.82' LT
550	831+11.35	32.25' LT
551	831+11.36	0.00'
552	830+60.02	33.71' RT
565	829+63.80	33.31' RT
553	828+39.91	32.21' RT
554	828+34.24	32.18' RT
555	828+34.24	52.18' RT
556	828+05.00	52.21' RT
557	828+05.00	32.21' RT

TLE STATION & OFFSET TABLE		
T746	827+80.00	33.77' LT
T747	828+05.00	58.79' LT
T748	828+75.00	57.35' LT
T749	829+05.00	33.14' LT
T750	829+05.00	32.87' RT
T751	829+05.00	42.87' RT
T752	828+65.00	42.48' RT
T753	828+25.04	87.19' RT
T754	828+00.03	87.21' RT
T755	827+80.00	32.23' RT

LOCATION MAP

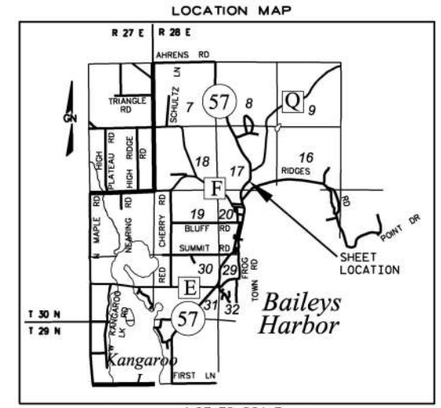

NOT TO SCALE

HWY	BASIS OF EXISTING R/W	R/W WIDTH	YEAR
STH 57	BY STATUTE	66'	

UTILITY NUMBER	UTILITY OWNER	INTEREST REQUIRED
101	TOWN OF BAILEYS HARBOR - SANITARY	RELEASE OF RIGHTS

SCHEDULE OF LANDS & INTERESTS REQUIRED

OWNERS' NAMES ARE SHOWN FOR REFERENCE PURPOSES ONLY AND ARE SUBJECT TO CHANGE PRIOR TO THE TRANSFER OF LAND INTERESTS TO THE DEPARTMENT.

PARCEL NUMBER	OWNER(S)	INTEREST(S) REQUIRED	AREAS S.F. REQUIRED NEW	EXISTING	TOTAL	TLE S.F.	PLE S.F.
13	KARLA JEAN WEISS ROTH	FEE, TLE	439	6,496	6,935	1,855	-
14	RICHARD W. & JEANNIE A. HOFFMAN REVOCABLE TRUST	FEE, TLE	585	16,734	17,319	3,146	-

SCALE, FEET
0 50 100

FILE NAME:S:/5168412/DWG/41501400/PLAT/TPP100.DWG
APPRAISAL PLAT DATE: 10/14/2021

R/W PROJECT NUMBER: 4150-14-21	EXHIBIT NUMBER:1

TLE ACQUISITION EXHIBIT
SUMMIT ROAD - BAILEYS HARBOR
SUMMIT ROAD TO CTH Q

STH 57 DOOR COUNTY

PART OF GOVERNMENT LOT 4, BEING A PART OF SECTION 20, T30N, R28E, TOWN OF BAILEYS HARBOR, DOOR COUNTY, WISCONSIN.

NOTES:
THIS EXHIBIT IS A GRAPHIC REPRESENTATION AND IS FOR REFERENCE PURPOSES ONLY. REFER TO THE CONVEYANCE DOCUMENT FOR PARCEL RELATED DETAILS.

PURPOSE FOR ALL TLEs IS FOR GRADING, UNLESS OTHERWISE NOTED.

4

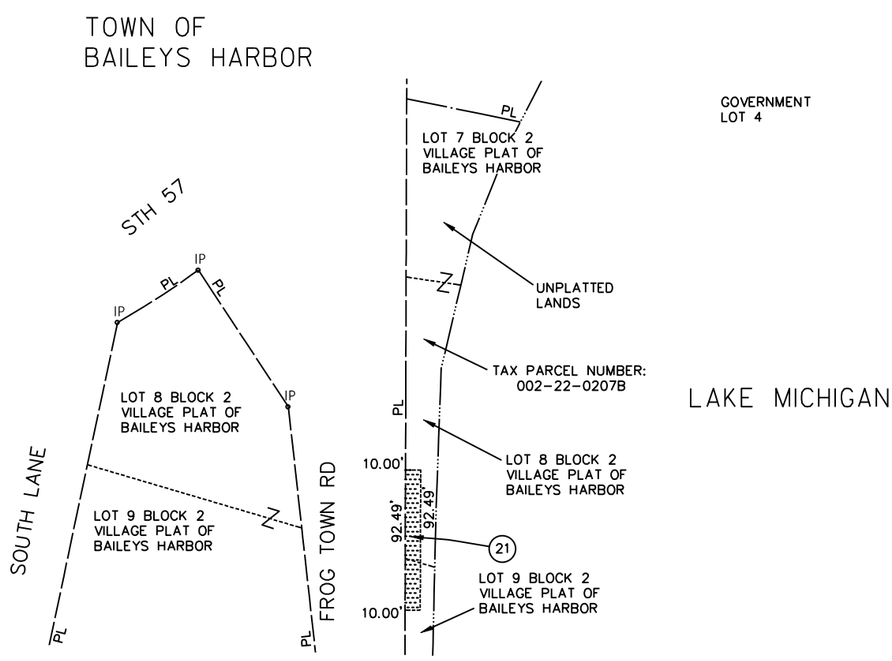

SCHEDULE OF LANDS & INTERESTS REQUIRED

OWNERS NAMES ARE SHOWN FOR REFERENCE PURPOSES ONLY AND ARE SUBJECT TO CHANGE PRIOR TO THE TRANSFER OF LAND INTERESTS TO THE DEPARTMENT

PARCEL NUMBER	OWNER(S)	INTEREST REQUIRED	TLE S.F.
21	TIMOTHY MAGNIN	TLE	925

UTILITY INTERESTS REQUIRED

UTILITY NUMBER	UTILITY OWNER(S)	INTEREST REQUIRED
N/A	N/A	N/A

GN

SCALE, FEET
0 50 100

THIS MAP IS APPROVED FOR THE DEPARTMENT OF TRANSPORTATION NORTHEAST REGION - GREEN BAY

SIGNATURE: Curt Van Erem DATE: 10/04/2021

PRINT NAME: CURT VAN EREM

FILE NAME : TLE EXHIBITS.DWG PLOT DATE : 9/30/2021 1:13 PM R/W PROJECT: 4150-14-21 -1

R/W PROJECT NUMBER: 4150-14-21	EXHIBIT NUMBER:2

TLE ACQUISITION EXHIBIT
SUMMIT ROAD - BAILEYS HARBOR
SUMMIT ROAD TO CTH Q

STH 57 — DOOR COUNTY

PART OF GOVERNMENT LOT 1, BEING A PART OF SECTION 20, T30N, R28E, TOWN OF BAILEYS HARBOR, DOOR COUNTY, WISCONSIN.

NOTES:
THIS EXHIBIT IS A GRAPHIC REPRESENTATION AND IS FOR REFERENCE PURPOSES ONLY. REFER TO THE CONVEYANCE DOCUMENT FOR PARCEL RELATED DETAILS.

PURPOSE FOR ALL TLEs IS FOR GRADING, UNLESS OTHERWISE NOTED.

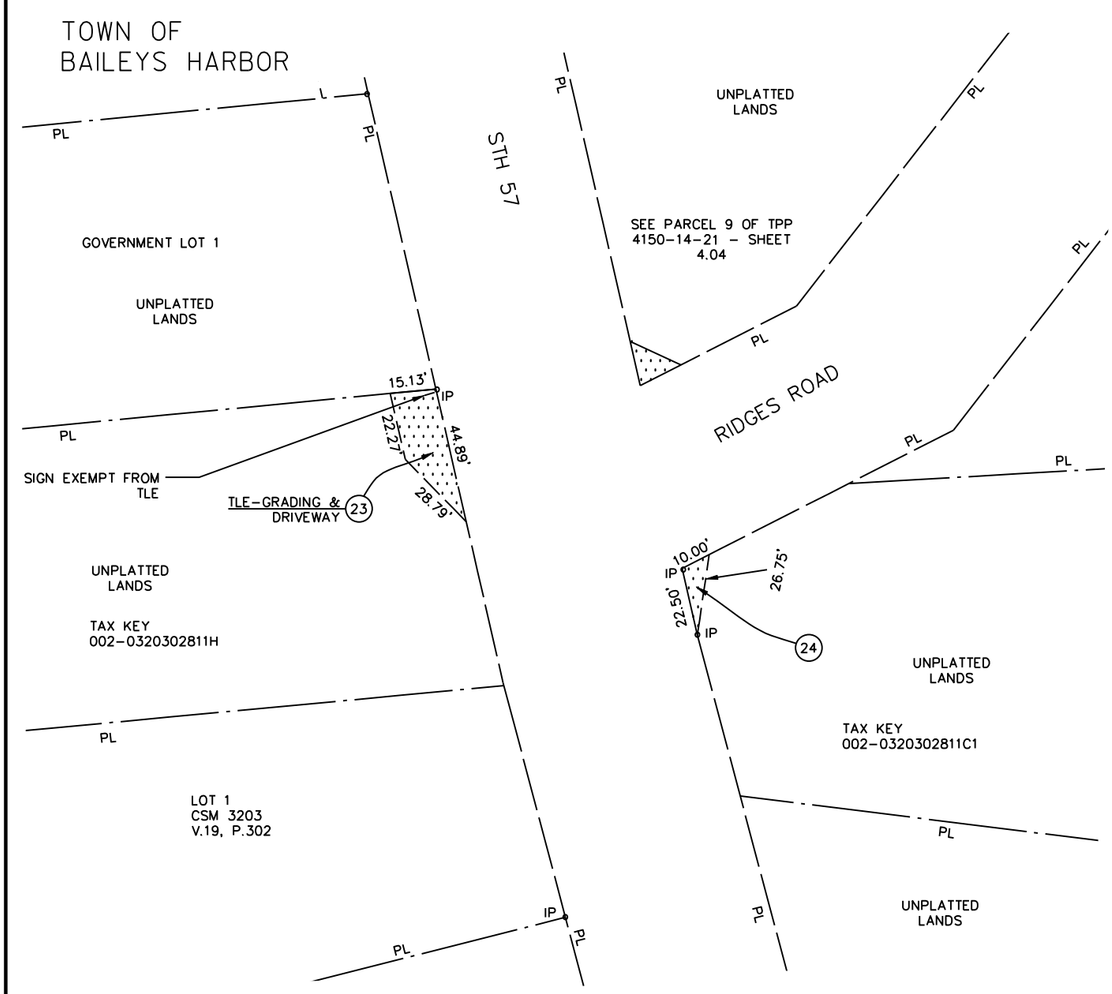

4

SCHEDULE OF LANDS & INTERESTS REQUIRED

OWNERS NAMES ARE SHOWN FOR REFERENCE PURPOSES ONLY AND ARE SUBJECT TO CHANGE PRIOR TO THE TRANSFER OF LAND INTERESTS TO THE DEPARTMENT

PARCEL NUMBER	OWNER(S)	INTEREST REQUIRED	TLE S.F.
23	MEREDITH L. COULSON - 90% & CHRISTOPHER A. KANTER - 10%, TENANTS IN COMMON	TLE	504
24	BLACKSMITH INN PARTNERS, LLC.	TLE	109

UTILITY INTERESTS REQUIRED

UTILITY NUMBER	UTILITY OWNER(S)	INTEREST REQUIRED
N/A	N/A	N/A

GN

SCALE, FEET
0 25 50

THIS MAP IS APPROVED FOR THE DEPARTMENT OF TRANSPORTATION NORTHEAST REGION - GREEN BAY

SIGNATURE: Curt VanEerem DATE: 10/04/2021

PRINT NAME: CURT VAN EREM

FILE NAME : TLE EXHIBITS.DWG PLOT DATE : 9/30/2021 1:16 PM R/W PROJECT: 4150-14-21 -2

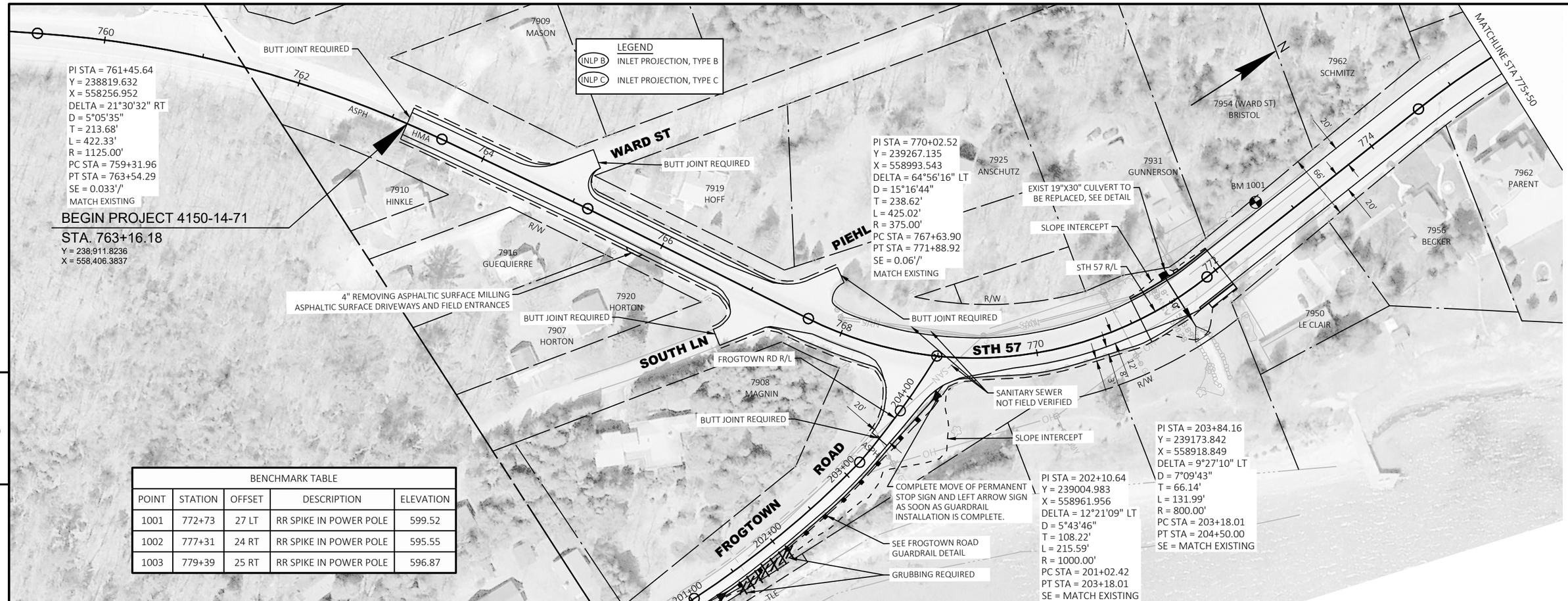

BENCHMARK TABLE				
POINT	STATION	OFFSET	DESCRIPTION	ELEVATION
1001	772+73	27 LT	RR SPIKE IN POWER POLE	599.52
1002	777+31	24 RT	RR SPIKE IN POWER POLE	595.55
1003	779+39	25 RT	RR SPIKE IN POWER POLE	596.87

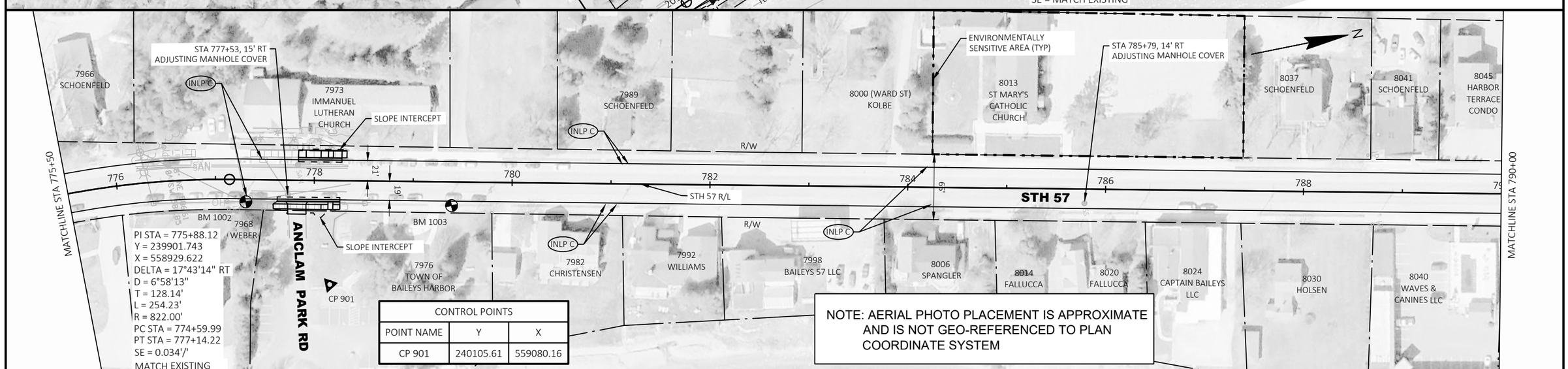

CONTROL POINTS		
POINT NAME	Y	X
CP 901	240105.61	559080.16

NOTE: AERIAL PHOTO PLACEMENT IS APPROXIMATE AND IS NOT GEO-REFERENCED TO PLAN COORDINATE SYSTEM

BENCHMARK TABLE				
POINT	STATION	OFFSET	DESCRIPTION	ELEVATION
1004	790+12	22 RT	RR SPIKE IN POWER POLE	599.67
1005	793+63	23 RT	RR SPIKE IN POWER POLE	595.44
1006	796+30	22 RT	RR SPIKE IN POWER POLE	594.05
1007	798+82	24 RT	RR SPIKE IN POWER POLE	593.61

CONTROL POINTS		
POINT NAME	Y	X
CP 900	242787.17	559614.59

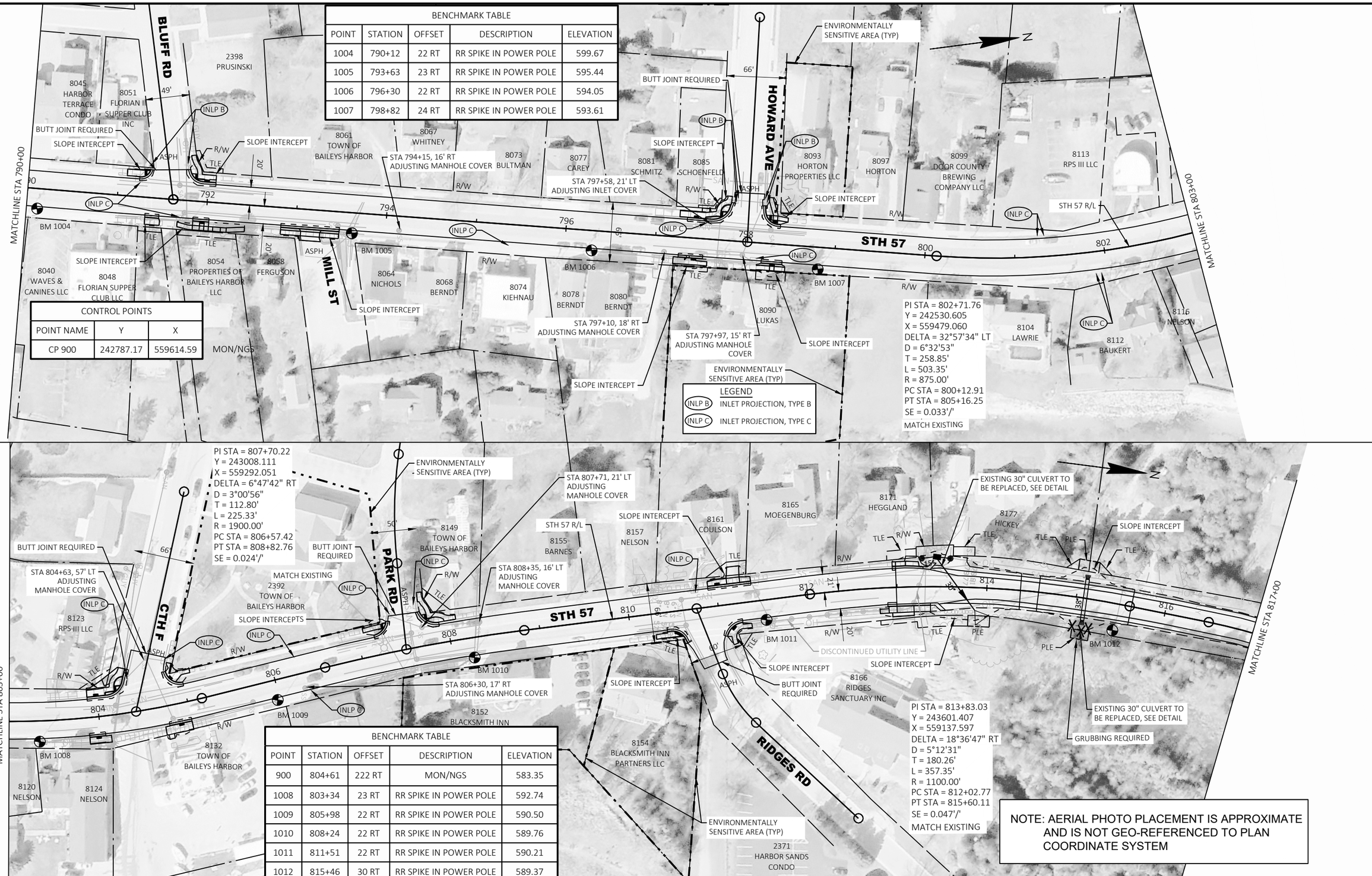

NOTE: AERIAL PHOTO PLACEMENT IS APPROXIMATE AND IS NOT GEO-REFERENCED TO PLAN COORDINATE SYSTEM

BENCHMARK TABLE				
POINT	STATION	OFFSET	DESCRIPTION	ELEVATION
900	804+61	222 RT	MON/NGS	583.35
1008	803+34	23 RT	RR SPIKE IN POWER POLE	592.74
1009	805+98	22 RT	RR SPIKE IN POWER POLE	590.50
1010	808+24	22 RT	RR SPIKE IN POWER POLE	589.76
1011	811+51	22 RT	RR SPIKE IN POWER POLE	590.21
1012	815+46	30 RT	RR SPIKE IN POWER POLE	589.37

5

5

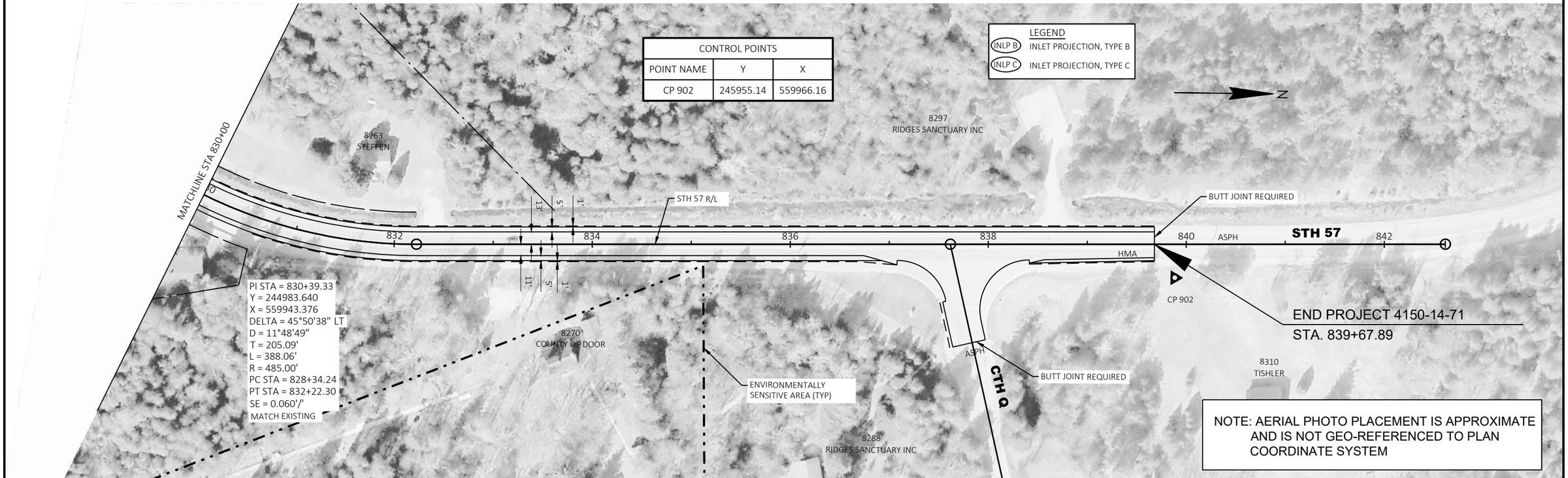

NOTE: AERIAL PHOTO PLACEMENT IS APPROXIMATE AND IS NOT GEO-REFERENCED TO PLAN COORDINATE SYSTEM

PROJECT NO: 4150-14-71	HWY: STH 57	COUNTY: DOOR	PLAN	SHEET 78	E

FILE NAME : K:\1202715.01\CIVIL3D\41501400\SHEETSPLAN\050201_PN.DWG
LAYOUT NAME - 03
PLOT DATE : 10/24/2024 11:07 AM PLOT BY : SIEBERT, LUKE PLOT NAME : PLOT SCALE : 1 IN:100 FT
WISDOT/CADDS SHEET 44

Standard Detail Drawing List

08A05-21A	INLET COVERS TYPE A, H, A-S, H-S & Z
08A05-21B	INLET COVERS TYPE B, B-A, C, MS, MS-A, & WM
08C07-03	INLETS 2X2-FT, 2X2.5-FT, 2X3-FT, 2.5X3-FT & 2X3.5-FT
08C08-03	INLETS MEDIAN 1 AND 2 GRATE
08D01-23A	CONCRETE CURB & GUTTER
08D01-23B	CONCRETE CURB, TIES AND CURB AND GUTTER APPLICATIONS
08D04-07	CONCRETE SURFACE DRAINS & ASPHALTIC FLUMES
08D05-21A	CURB RAMPS TYPES 1 AND 1-A
08D05-21B	CURB RAMPS TYPES 2 AND 3
08D05-21C	CURB RAMPS TYPES 4A AND 4A1
08D05-21D	CURB RAMPS TYPE 4B AND 4B1
08D05-21E	CURB RAMPS TYPES 5, 6, 7A, 7B & 8
08D05-21F	CURB RAMPS RADIAL DETECTABLE WARNING FIELD APPLICATIONS
08D05-21G	CURB RAMPS RECTANGULAR AND RADIAL DETECTABLE WARNING PLATES
08E08-03	TYPICAL INSTALLATIONS OF EROSION BALES / TEMPORARY DITCH CHECKS
08E09-06	SILT FENCE
08E10-02	INLET PROTECTION TYPE A, B, C AND D
08E15-01	CULVERT PIPE CHECK
08F02-01	APRON ENDWALLS FOR PIPE ARCH AND ELLIPTICAL PIPE
08F04-08	JOINT TIES FOR CONCRETE PIPE AND CONCRETE COLLAR DETAIL
13C19-03	HMA LONGITUDINAL JOINTS
14B42-07A	MIDWEST GUARDRAIL SYSTEM (MGS) GUARDRAIL
14B42-07B	MIDWEST GUARDRAIL SYSTEM (MGS) GUARDRAIL
14B42-07C	MIDWEST GUARDRAIL SYSTEM (MGS) GUARDRAIL
14B42-07D	MIDWEST GUARDRAIL SYSTEM (MGS) GUARDRAIL
14B44-04A	MIDWEST GUARDRAIL SYSTEM ENERGY ABSORBING TERMINAL (MGS)
14B44-04B	MIDWEST GUARDRAIL SYSTEM ENERGY ABSORBING TERMINAL (MGS)
14B44-04C	MIDWEST GUARDRAIL SYSTEM ENERGY ABSORBING TERMINAL (MGS)
15A03-02A	FLEXIBLE MARKER POST FOR CULVERT END
15A03-02B	FLEXIBLE MARKER POST FOR CULVERT END
15C02-09A	BARRICADES AND SIGNS FOR MAINLINE CLOSURES
15C02-09B	BARRICADES AND SIGNS FOR VARIOUS CLOSURES
15C05-05	TRAFFIC CONTROL, ADVANCE WARNING SIGNS 40 M.P.H. OR LESS
15C08-23A	PERMANENT LONGITUDINAL PAVEMENT MARKINGS
15C08-23B	TEMPORARY LONGITUDINAL PAVEMENT MARKING
15C11-10B	CHANNELIZING DEVICES DRUMS, CONES, BARRICADES AND VERTICAL PANELS
15C12-09A	TRAFFIC CONTROL FOR LANE CLOSURE WITH FLAGGING OPERATION
15C12-09B	TRAFFIC CONTROL, LANE CLOSURE WITH AUTOMATED FLAGGER ASSISTANCE DEVICE
15C19-09A	MOVING PAVEMENT MARKING OPERATION TWO-LANE TWO-WAY ROADWAY
15C33-05	STOP LINE AND CROSSWALK PAVEMENT MARKING
15D28-04	TRAFFIC CONTROL, WORK ON SHOULDER OR PARKING LANE, UNDIVIDED ROADWAY
15D30-09A	TRAFFIC CONTROL, PEDESTRIAN ACCOMMODATION
15D30-09B	TRAFFIC CONTROL, PEDESTRIAN ACCOMMODATION
15D30-09C	TRAFFIC CONTROL, PEDESTRIAN ACCOMMODATION
15D30-09K	TRAFFIC CONTROL, PEDESTRIAN ACCOMMODATION
15D39-02	TRAFFIC CONTROL, DROP-OFF SIGNING
15D44-02	TRAFFIC CONTROL, SIGNING ON ROADWAYS WITH MILLED SURFACES
15D45-03	TRAFFIC CONTROL, SIGNING ON ROADWAYS WITH LOOSE GRAVEL
15D51-01	TRAFFIC CONTROL, MOBILE OPERATIONS ON AN UNDIVIDED ROADWAY

6

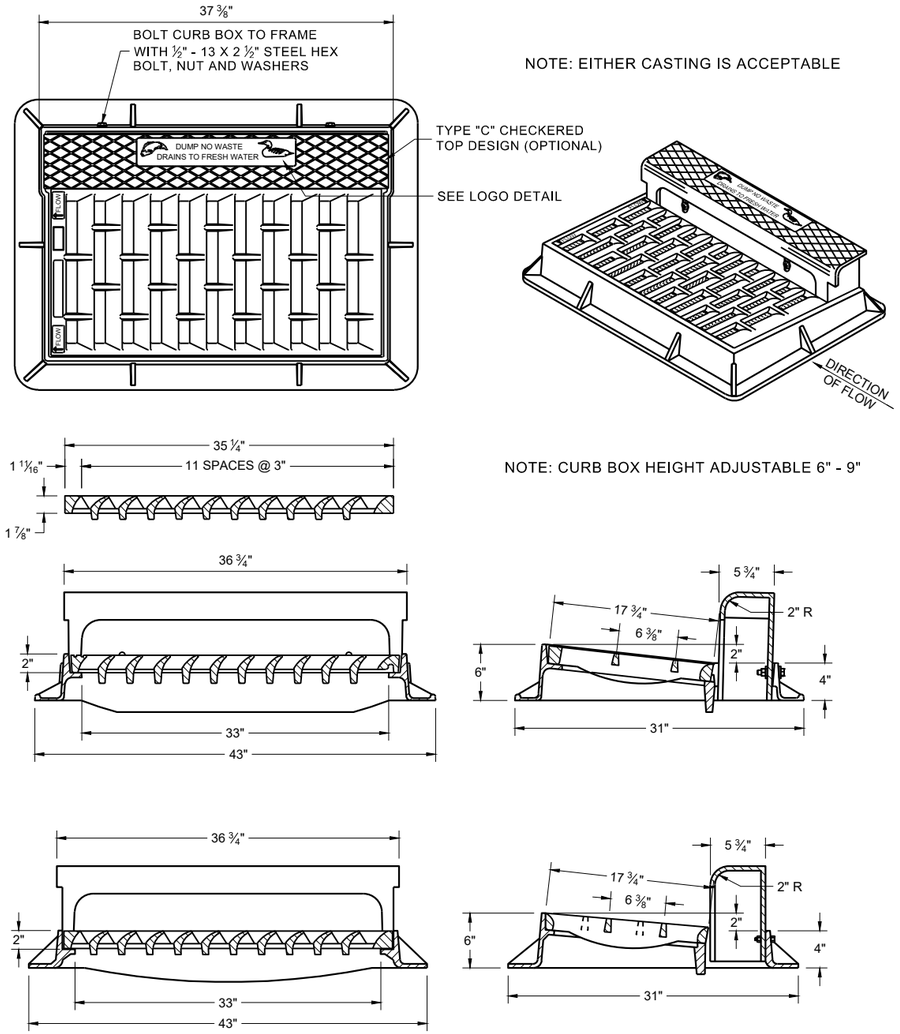

NOTE: EITHER CASTING IS ACCEPTABLE

NOTE: CURB BOX HEIGHT ADJUSTABLE 6" - 9"

TYPE "H"

NOTE: EITHER CASTING IS ACCEPTABLE

1 ⅛" DIAGONAL BARS WITH 1 ⅝" OPENINGS

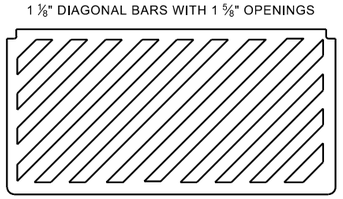

SPECIAL GRATE FOR TYPE "H" COVER

(MEASURES 35" X 17 ¾" X 2")

(NOTED AS TYPE H-S ON DRAINAGE TABLE)

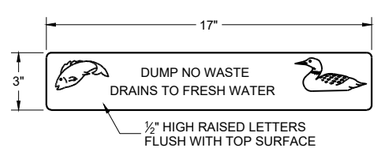

LOGO DETAIL

GENERAL NOTES

DETAILS OF CONSTRUCTION, MATERIALS AND WORKMANSHIP NOT SHOWN ON THIS DRAWING SHALL CONFORM TO THE PERTINENT REQUIREMENTS OF THE STANDARD SPECIFICATIONS AND THE APPLICABLE SPECIAL PROVISIONS.

DETAIL DRAWINGS FOR PROPOSED ALTERNATE DESIGNS FOR CATCH BASIN, MANHOLE AND INLET COVERS SHALL BE SUBMITTED TO THE ENGINEER FOR APPROVAL PROVIDING THAT SUCH ALTERNATE DESIGNS MAKE PROVISION FOR EQUIVALENT CAPACITY AND STRENGTH.

ROUND FRAMES AND COVERS SHALL HAVE CONTINUOUSLY MACHINED BEARING SURFACES TO PREVENT ROCKING AND RATTLING.

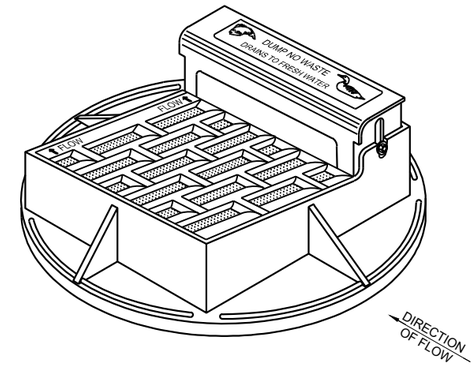

NOTE: CURB BOX HEIGHT ADJUSTABLE 6" - 9"

NOTE: EITHER CASTING IS ACCEPTABLE

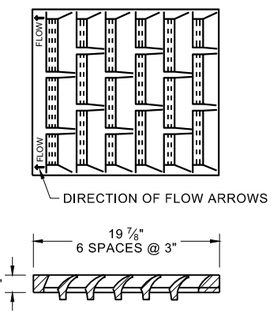

TYPE "A"

1" DIAGONAL BARS WITH 1 ½" OPENINGS

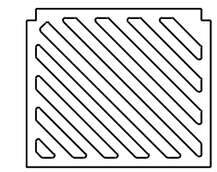

SPECIAL GRATE FOR TYPE "A" COVER

(MEASURES 19 ¾" X 17" X 1 ⅞")

(NOTED AS TYPE A-S ON DRAINAGE TABLE)

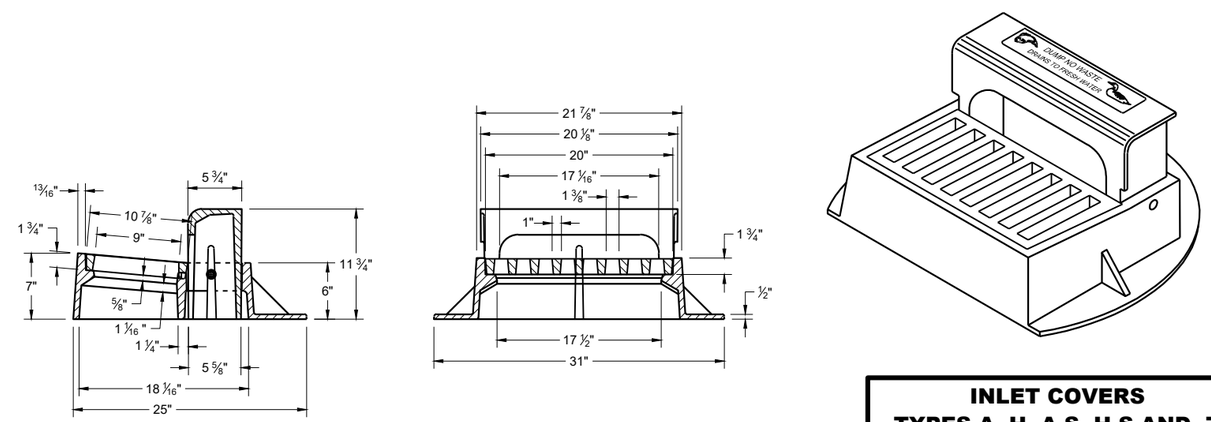

TYPE "Z"

INLET COVERS
TYPES A, H, A-S, H-S AND Z

STATE OF WISCONSIN
DEPARTMENT OF TRANSPORTATION

APPROVED
December 2023 — DATE
/S/ Rodney Taylor — ROADWAY STANDARDS DEVELOPMENT UNIT SUPERVISOR

FHWA

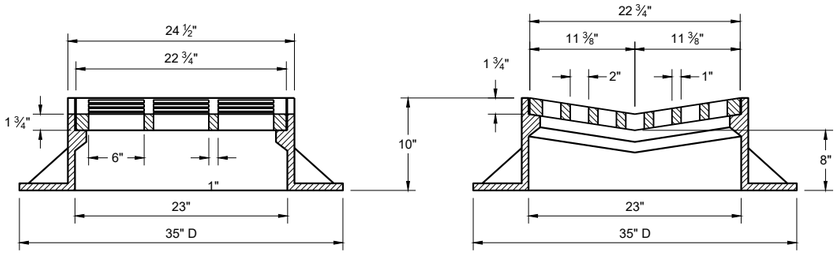

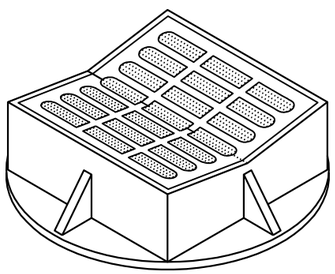

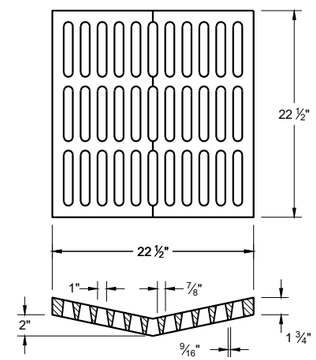

TYPE "B"

ALTERNATIVE GRATE FOR TYPE "B" COVER

USE WHERE PEDESTRIAN OF BICYCLE TRAFFIC IS POSSIBLE

NOTED AS TYPE B - A ON THE DRAINAGE TABLE

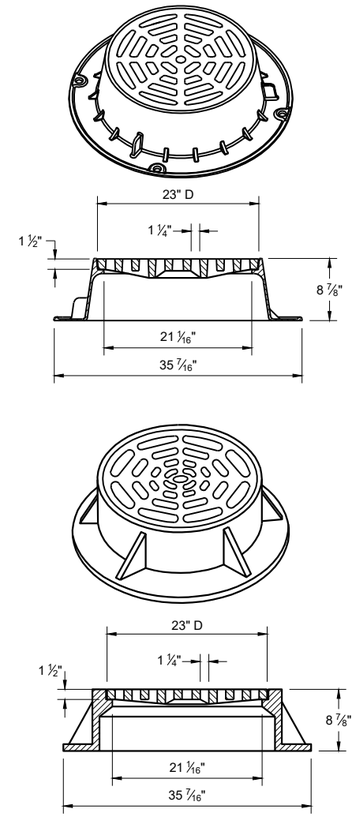

TYPE "C"

NOTE: EITHER CASTING IS ACCEPTABLE

GENERAL NOTES

DETAILS OF CONSTRUCTION, MATERIALS AND WORKMANSHIP NOT SHOWN ON THIS DRAWING SHALL CONFORM TO THE PERTINENT REQUIREMENTS OF THE STANDARD SPECIFICATIONS AND THE APPLICABLE SPECIAL PROVISIONS.

DETAIL DRAWINGS FOR PROPOSED ALTERNATE DESIGNS FOR CATCH BASIN, MANHOLE AND INLET COVERS SHALL BE SUBMITTED TO THE ENGINEER FOR APPROVAL PROVIDING THAT SUCH ALTERNATE DESIGNS MAKE PROVISION FOR EQUIVALENT CAPACITY AND STRENGTH.

ROUND FRAMES AND COVERS SHALL HAVE CONTINUOUSLY MACHINED BEARING SURFACES TO PREVENT ROCKING AND RATTLING.

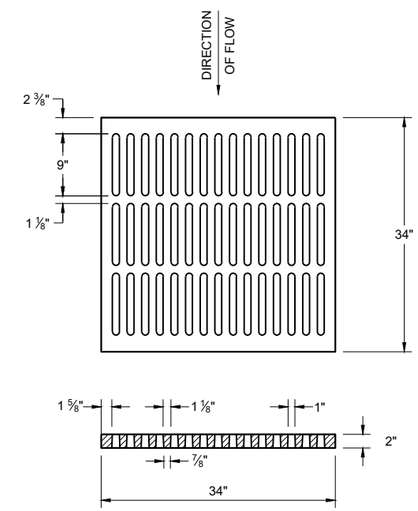

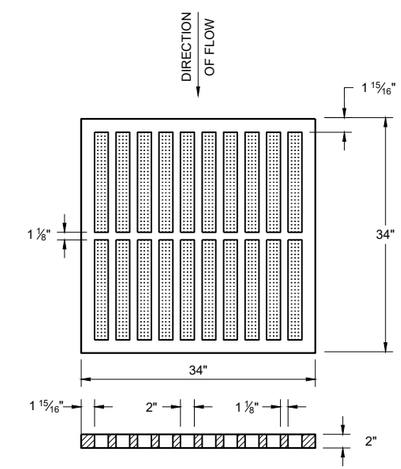

ALTERNATIVE TYPE "MS"

USE WHERE PEDESTRIAN OF BICYCLE TRAFFIC IS PERMITTED

NOTED AS TYPE MS-A ON THE DRAINAGE TABLE

TYPE "MS"

USE ON FREEWAYS AND EXPRESSWAYS

NOTED AS TYPE MS ON THE DRAINAGE TABLE

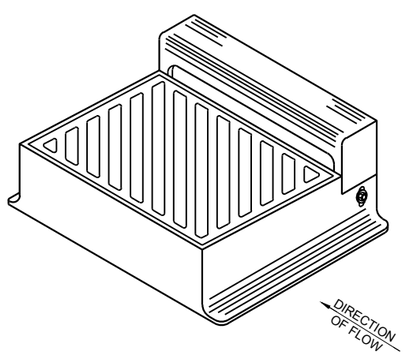

DIAGONAL SLOTS SHALL BE ORIENTEDTO THE DIRECTION OF FLOW AS ILLUSTRATED.
GRATES ARE MANUFACTURED TO BE REVERSIBLE.

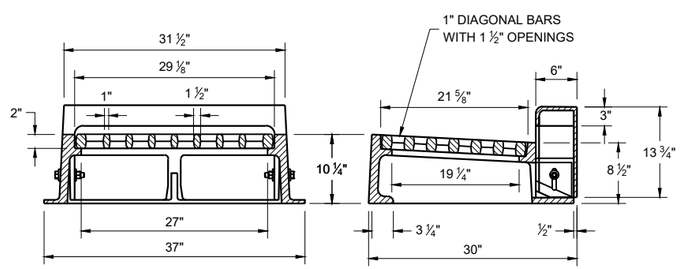

TYPE "WM"

NOTE: CURB BOX HEIGHT ADJUSTABLE 6" - 9"

INLET COVERS
TYPES B, B-A, C,
MS, MS-A AND WM

STATE OF WISCONSIN
DEPARTMENT OF TRANSPORTATION

APPROVED
December 2023 — DATE
/S/ Rodney Taylor — ROADWAY STANDARDS DEVELOPMENT UNIT SUPERVISOR
FHWA

6

SDD 08A05-21b

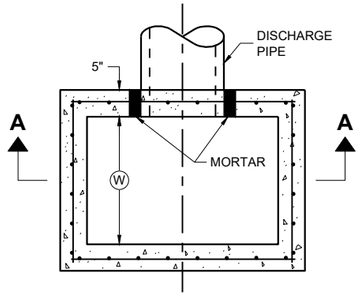

PLAN VIEW

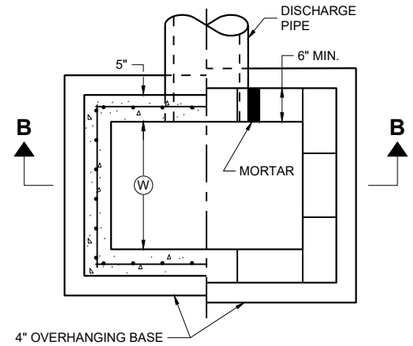

PLAN VIEW

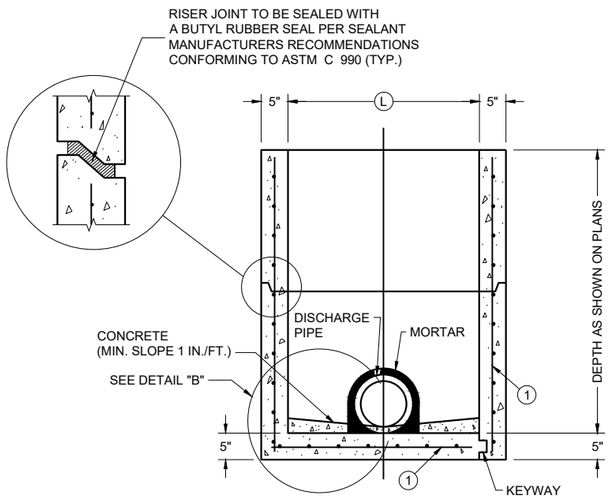

PRECAST REINFORCED CONCRETE WITH MONOLITHIC BASE

PRECAST REINFORCED CONCRETE WITH INTEGRAL BASE

SECTION A - A

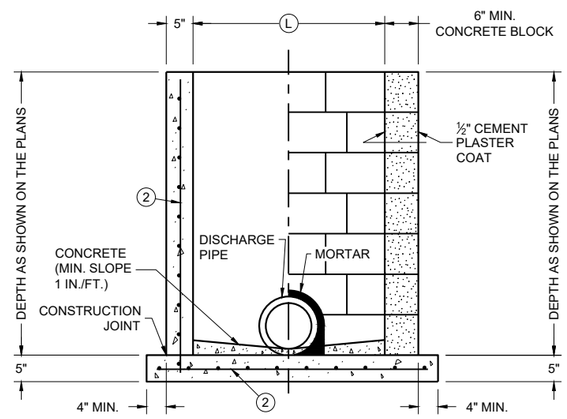

CAST IN PLACE REINFORCED CONCRETE

CONCRETE BLOCK WITH CAST IN PLACE OR PRECAST REINFORCED CONCRETE BASE (1)

SECTION B - B

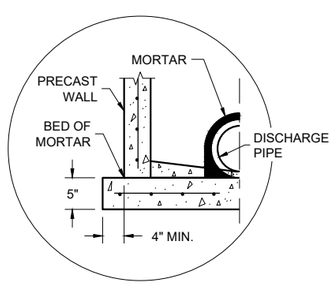

SEPARATE PRECAST REINFORCED CONCRETE BASE OPTION

DETAIL "B"

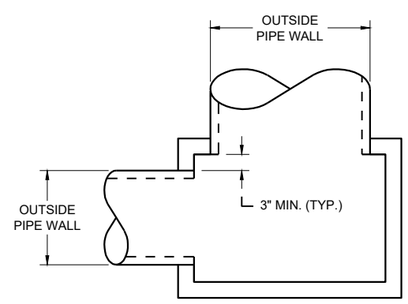

DETAIL "A"

GENERAL NOTES

DETAILS OF CONSTRUCTION, MATERIALS AND WORKMANSHIP N0T SHOWN ON THIS DRAWING SHALL CONFORM TO THE PERTINENT REQUIREMENTS OF THE STANDARD SPECIFICATIONS AND THE APPLICABLE SPECIAL PROVISIONS.

UNLESS OTHERWISE AUTHORIZED IN WRITING BY THE ENGINEER, THE CONTRACTOR SHALL NOT ORDER AND DELIVER PRECAST INLET UNITS REQUIRED FOR THE PROJECT UNTIL A LIST OF SIZES IS FURNISHED BY THE ENGINEER.

DETAILED DRAWINGS FOR PROPOSED ALTERNATE DESIGNS FOR UNDERGROUND DRAINAGE STRUCTURES SHALL BE SUBMITTED TO THE ENGINEER FOR APPROVAL PROVIDING THAT SUCH ALTERNATE DESIGNS MAKE PROVISION FOR EQUIVALENT CAPACITY AND STRENGTH.

ALL PRECAST INLET UNITS SHALL CONFORM TO THE PERTINENT REQUIREMENTS OF ASTM C 913.

ALL DRAINAGE STRUCTURES ARE DESIGNATED ON THE PLANS AS "MANHOLES 3X3-L", "CATCH BASINS 4-B", "INLETS 2X3-H", ETC. THE FIRST NUMBERS DESIGNATES THE SIZE OF THE STRUCTURE, AND THE FOLLOWING LETTER DESIGNATES THE TYPE OF COVER TO BE USED TO COMPRISE THE COMPLETE UNIT.

BASES SHALL BE PLACED ON A BED OF MATERIAL AT LEAST 6 INCHES IN DEPTH, WHICH MEETS THE REQUIREMENTS OF FOUNDATION BACKFILL. THIS BEDDING SHALL BE COMPACTED AND PROVIDE UNIFORM SUPPORT FOR THE ENTIRE AREA OF THE BASE.

ALL BAR STEEL REINFORCEMENT SHALL BE EMBEDDED 2 INCHES CLEAR UNLESS OTHERWISE SHOWN OR NOTED.

PRECAST REINFORCED RISERS SHALL HAVE A TONGUE AND GROOVE JOINT WITH TONGUE UP OR DOWN.

4" OVERHANGING BASES ARE REQUIRED FOR CAST-IN-PLACE REINFORCED CONCRETE AND CONCRETE BLOCK INSTALLATIONS. 4" OVERHANG IS REQUIRED WHEN SEPARATE PRECAST BASE IS PROVIDED. OVERHANG IS NOT REQUIRED ON PRECAST STRUCTURES WITH AN INTEGRAL OR MONOLITHIC BASE.

MAXIMUM INSIDE PIPE DIAMETER DETERMINED BY 3" CLEARANCE ON EACH SIDE OF THE OUTSIDE WALL OF THE PIPE. SEE DETAIL "A". ASSUMES PIPE ENTERS PERPENDICULAR TO THE STRUCTURE.

(1) FOR PRECAST INLETS AND REINFORCED CONCRETE BASES PROVIDE REINFORCING STEEL IN ACCORDANCE TO ASTM C 913

(2) CONTRACTOR TO PROVIDE DRAWING(S) STAMPED BY A PROFESSIONAL ENGINEER FOR STEEL REINFORCING DESIGN FOR CAST-IN-PLACE STRUCTURES.

CATCH BASIN COVER MATRIX

INLET SIZE	WIDTH (W) (FT.)	LENGTH (L) (FT.)	INLET COVER TYPE									
			ALL A'S	ALL B'S	BW	F	ALL H'S	S	T	V	WM	V V-B
2 X 2-FT	2	2	X	X				X				
2 X 2.5-FT	2	2.5			X			X	X	X	X	
2 X 3-FT	2	3					X					
2.5 X 3-FT	2.5	3				X						
2 X 3.5-FT	2	3.5										X

PIPE MATRIX

CATCH BASIN SIZE	MAXIMUM INSIDE PIPE DIAMETER FOR TWO PIPES	
	WIDTH (IN)	LENGTH (IN)
2 X 2-FT	12	12
2 X 2.5-FT	12	18
2 X 3-FT	12	24
2.5 X 3-FT	18	24
2 X 3.5-FT	12	30

INLETS 2 X 2-FT, 2 X 2.5-FT, 2 X 3-FT, 2.5 X 3-FT AND 2X3.5-FT

INLETS 2 X 2-FT, 2 X 2.5-FT, 2 X 3-FT, 2.5 X 3-FT AND 2 X 3.5-FT

STATE OF WISCONSIN
DEPARTMENT OF TRANSPORTATION

APPROVED
December 2023 — DATE
/S/ Rodney Taylor — ROADWAY STANDARDS DEVELOPMENT UNIT SUPERVISOR
FHWA

6

SDD 08C07-03

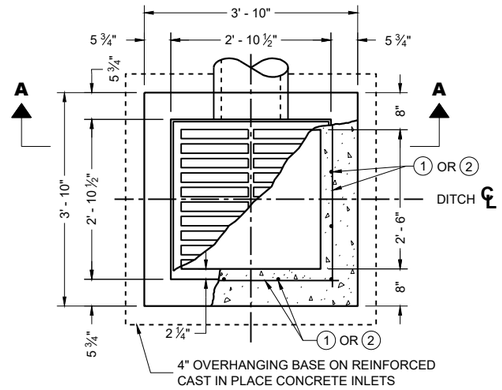

PLAN VIEW

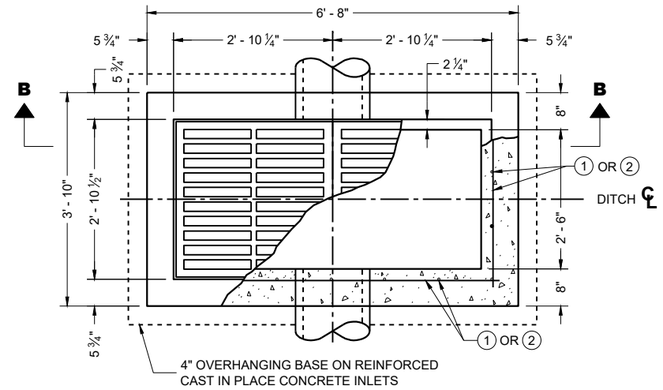

PLAN VIEW

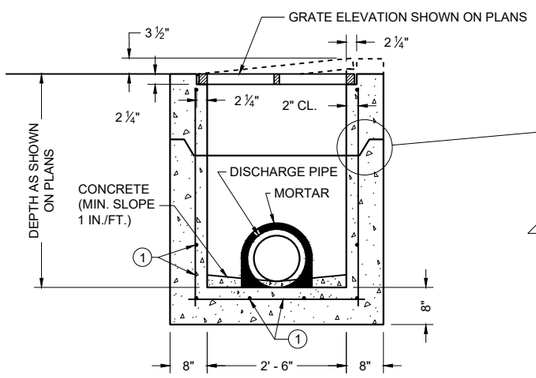

PRECAST REINFORCED CONCRETE SECTION A - A

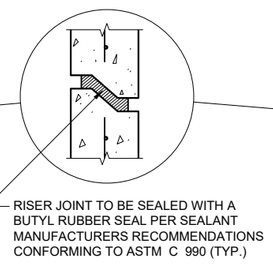

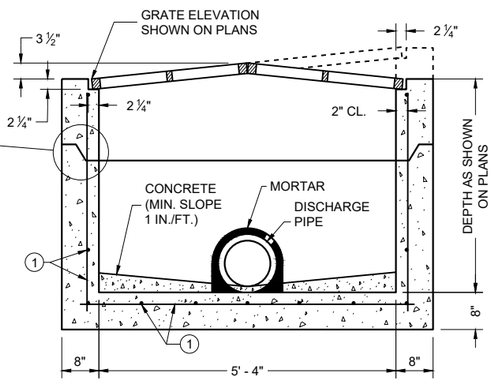

PRECAST REINFORCED CONCRETE SECTION B - B

GENERAL NOTES

DETAILS OF CONSTRUCTION, MATERIALS AND WORKMANSHIP N0T SHOWN ON THIS DRAWING SHALL CONFORM TO THE PERTINENT REQUIREMENTS OF THE STANDARD SPECIFICATIONS AND THE APPLICABLE SPECIAL PROVISIONS.

UNLESS OTHERWISE AUTHORIZED IN WRITING BY THE ENGINEER, THE CONTRACTOR SHALL NOT ORDER AND DELIVER PRECAST INLET UNITS REQUIRED FOR THE PROJECT UNTIL A LIST OF SIZES IS FURNISHED BY THE ENGINEER.

DETAILED DRAWINGS FOR PROPOSED ALTERNATE DESIGNS FOR INLETS WHICH MAY INCLUDE PRECAST REINFORCED CONCRETE INLETS, SHALL BE SUBMITTED TO THE ENGINEER FOR APPROVAL PROVIDING THAT SUCH ALTERNATE DESIGNS MAKE PROVISION FOR EQUIVALENT CAPACITY AND STRENGTH.

ALL MEDIAN INLETS ARE DESIGNATED ON THE PLANS AS "INLETS, 1G-MS", ETC. THE FIRST NUMBER AND LETTER DESIGNATE THE TYPE OF STRUCTURE, AND THE FOLLOWING LETTERS DESIGNATE THE TYPE OF COVER TO BE USED TO COMPRISE THE COMPLETE UNIT.

BASES SHALL BE PLACED ON A BED OF MATERIAL AT LEAST 6 INCHES IN DEPTH, WHICH MEETS THE REQUIREMENTS OF FOUNDATION BACKFILL. THIS BEDDING SHALL BE COMPACTED AND PROVIDE UNIFORM SUPPORT FOR THE ENTIRE AREA OF THE BASE.

ALL PRECAST INLET UNITS SHALL CONFORM TO THE PERTINENT REQUIREMENTS OF ASTM C 913.

ALL BAR STEEL REINFORCEMENT SHALL BE EMBEDDED 2 INCHES CLEAR UNLESS OTHERWISE SHOWN OR NOTED.

PRECAST REINFORCED RISERS SHALL HAVE A TONGUE AND GROOVE JOINT WITH TONGUE UP OR DOWN.

MAXIMUM INSIDE PIPE DIAMETER DETERMINED BY 3" CLEARANCE ON EACH SIDE OF THE OUTSIDE WALL OF THE PIPE. SEE DETAIL "A". ASSUMES PIPE ENTERS PERPENDICULAR TO THE STRUCTURE.

1 FOR PRECAST INLETS AND REINFORCED CONCRETE BASES PROVIDE REINFORCING STEEL IN ACCORDANCE TO ASTM C 913.

2 CONTRACTOR TO PROVIDE DRAWING(S) STAMPED BY A PROFESSIONAL ENGINEER FOR STEEL REINFORCING DESIGN FOR CAST-IN-PLACE STRUCTURES.

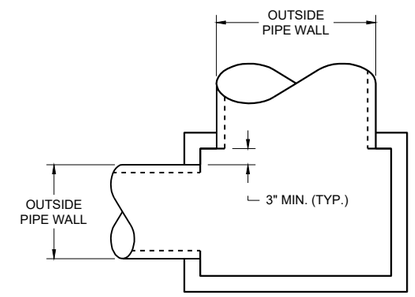

DETAIL "A"

PIPE MATRIX

INLET SIZE	MAXIMUM INSIDE PIPE DIAMETER	
	WIDTH (IN)	LENGTH (IN)
1 GRATE	18	18
2 GRATE	18	42

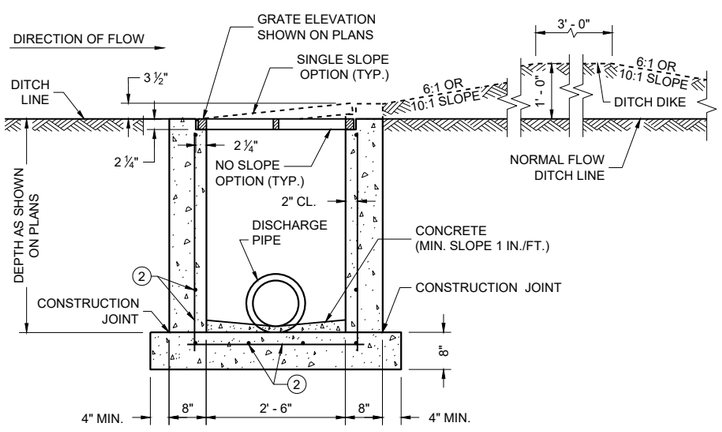

REINFORCED CAST IN PLACE CONCRETE SECTION A - A

INLETS MEDIAN 1 GRATE

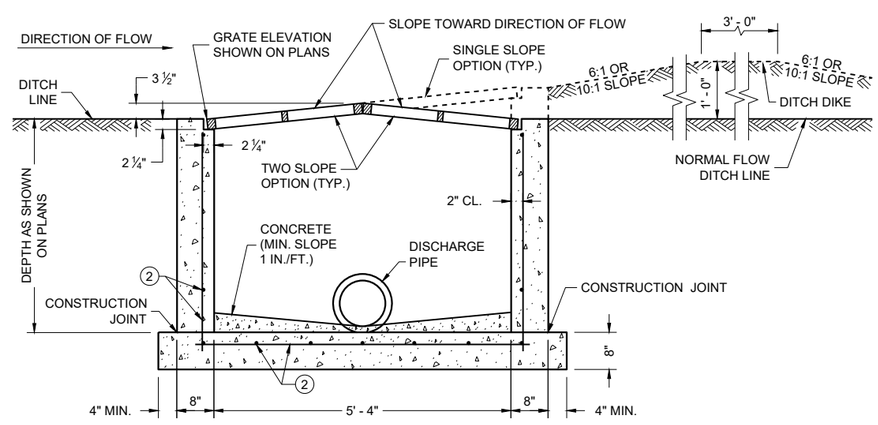

REINFORCED CAST IN PLACE CONCRETE SECTION B - B

INLETS MEDIAN 2 GRATE

INLETS
MEDIAN 1 AND 2 GRATE

STATE OF WISCONSIN
DEPARTMENT OF TRANSPORTATION

APPROVED
December 2023 — DATE
/S/ Rodney Taylor — ROADWAY STANDARDS DEVELOPMENT UNIT SUPERVISOR
FHWA

6
SDD 08C08-03

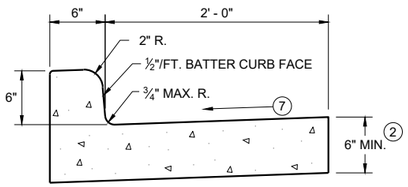

TYPES A (1) & D

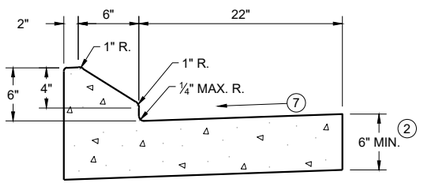

6" SLOPED CURB TYPES G (1) & J

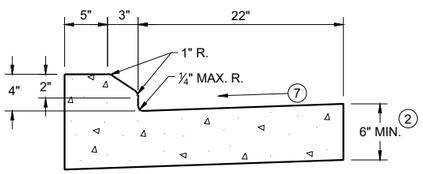

4" SLOPED CURB TYPES G (1) & J

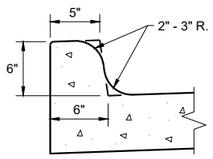

TYPES K (1) & L
(OPTIONAL CURB SHAPE)

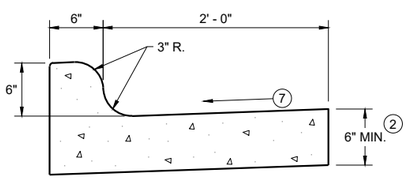

TYPES K (1) & L

CONCRETE CURB AND GUTTER 30"

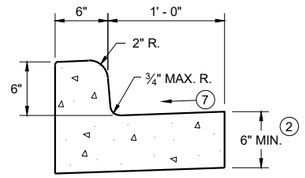

TYPES A (1) & D

CONCRETE CURB AND GUTTER 18"

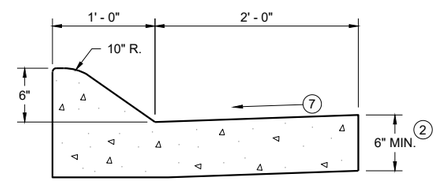

6" SLOPED CURB TYPES A (1) & D

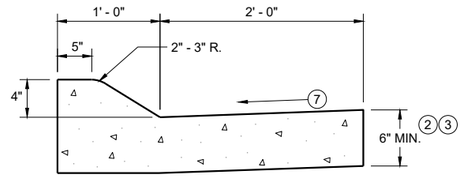

4" SLOPED CURB TYPES A (1) & D

CONCRETE CURB AND GUTTER 36"

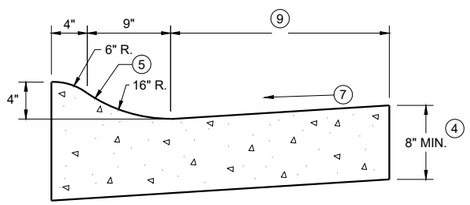

4" SLOPED CURB TYPES R (1) & T

TBT & TBTT	X
30"	22"
36"	28"

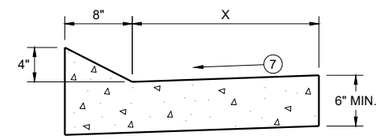

TYPES TBT & TBTT (1)

CONCRETE CURB AND GUTTER

PAVEMENT THICKNESS AND MAXIMUM CONCRETE PANEL WIDTH TABLE

PAVEMENT THICKNESS	MAXIMUM PANEL WIDTH
LESS THAN 10"	12'
10" & ABOVE	15'

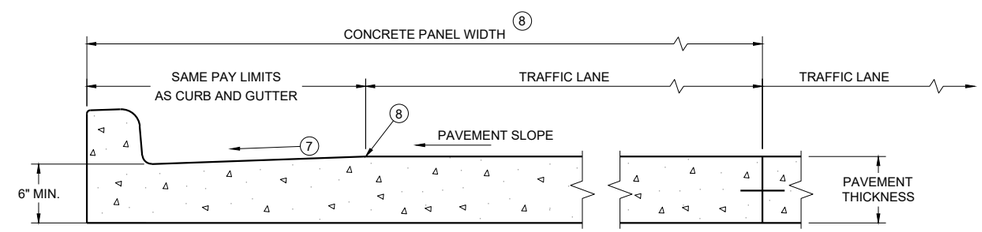

PARTIAL SECTION OF PAVEMENT * WITH INTEGRAL CURB AND GUTTER

* BIKE LANE IS NOT SHOWN

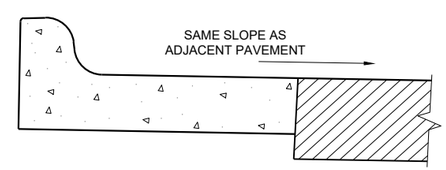

REVERSE SLOPE GUTTER (6)
(TYPICAL FOR ALL CURB & GUTTER TYPES)

GENERAL NOTES

DETAILS OF CONSTRUCTION AND WORKMANSHIP NOT SHOWN ON THIS DRAWING SHALL CONFORM TO THE PERTINENT REQUIREMENTS OF THE CONTRACT.

PAVEMENT TIES AND TIE BARS SHALL BE EPOXY COATED IN CONFORMANCE WITH SUBSECTION 505.2.6.2 OF THE STANDARD SPECIFICATIONS.

INTEGRAL CURB AND GUTTER SHALL CONFORM TO THE DETAILS SHOWN FOR CONCRETE CURB AND GUTTER INCLUDING THE TRANSVERSE GUTTER SLOPE.

UNLESS OTHERWISE SHOWN ON THE TYPICAL CROSS SECTIONS, THE BASE AGGREGATE AND COMMON EXCAVATION LIMITS ARE 2' - 0" BEHIND THE BACK OF CURBS.

(1) TIE BARS ARE REQUIRED FOR CURB AND GUTTERS TYPES A, G, K, R, AND TBTT.

(2) THE BOTTOM OF CURB AND GUTTER MAY BE CONSTRUCTED EITHER LEVEL OR PARALLEL TO THE SLOPE OF THE SUBGRADE OR BASE AGGREGATE PROVIDED A 6" MINIMUM GUTTER THICKNESS IS MAINTAINED.

(3) USE 8" MINIMUM GUTTER THICKNESS WHEN USED WITH AN ADJACENT CONCRETE TRUCK APRON PLACED BEHIND BACK OF CURB.

(4) THE BOTTOM OF CURB AND GUTTER MAY BE CONSTRUCTED EITHER LEVEL OR PARALLEL TO THE SLOPE OF THE SUBGRADE OR BASE AGGREGATE PROVIDED A 8" MINIMUM GUTTER THICKNESS IS MAINTAINED.

(5) UNLESS OTHERWISE NOTED, FOR STAKING PURPOSES THE FACE OF CURB IS 6" FROM THE BACK OF CURB.

(6) WHEN REVERSE SLOPE GUTTER IS REQUIRED, THE LOCATION(S) WILL BE SHOWN ELSEWHERE IN THE PLAN.

(7) USE 4% GUTTER CROSS SLOPE UNLESS OTHERWISE NOTED IN THE PLANS.

(8) INCLUDE LONGITUDINAL JOINT AND TIE BARS ALONG LANE EDGE WHEN CONCRETE PANEL WIDTH EXCEEDS THE MAXIMUM WIDTH PER TABLE BELOW. LONGITUDINAL JOINT(S) ARE NOT ALLOWED WITHIN TRAFFIC LANES AND BIKE LANES. LONGITUDINAL JOINT MAY BE SAWED.

(9) CONCRETE CURB AND GUTTER 4-INCH SLOPED 30-INCH TYPE "R" AND "T" = 17 INCHES
CONCRETE CURB AND GUTTER 4-INCH SLOPED 36-INCH TYPE "R" AND "T" = 23 INCHES

CONCRETE CURB AND GUTTER

STATE OF WISCONSIN
DEPARTMENT OF TRANSPORTATION

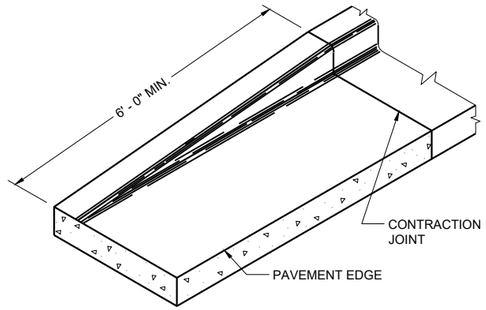

END SECTION CURB AND GUTTER

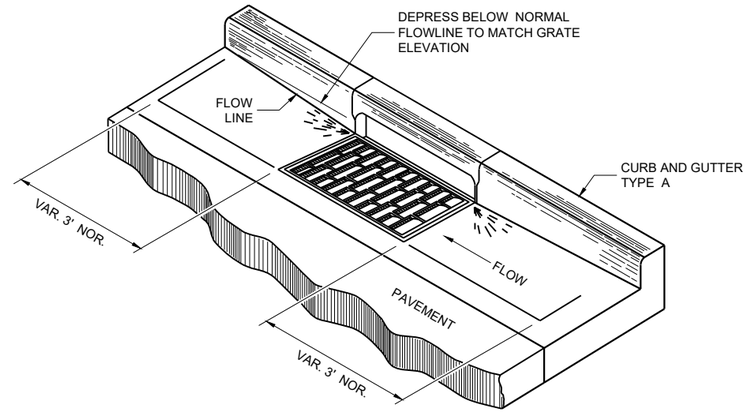

DETAIL OF CURB AND GUTTER AT INLETS

(TYPICAL H INLET COVER SHOWN)

GENERAL NOTES

DETAILS OF CONSTRUCTION AND WORKMANSHIP NOT SHOWN ON THIS DRAWING SHALL CONFORM TO THE PERTINENT REQUIREMENTS OF THE CONTRACT.

PAVEMENT TIES AND TIE BARS SHALL BE EPOXY COATED IN CONFORMANCE WITH SUBSECTION 505.2.6.2 OF THE STANDARD SPECIFICATIONS.

UNLESS OTHERWISE SHOWN ON THE TYPICAL CROSS SECTIONS, THE BASE AGGREGATE AND COMMON EXCAVATION LIMITS ARE 2' - 0" BEHIND THE BACK OF CURBS.

(1) TIE BARS ARE REQUIRED FOR CURB AND GUTTERS TYPES A, G, K, R, AND TBTT.

(2) THE BOTTOM OF CURB AND GUTTER MAY BE CONSTRUCTED EITHER LEVEL OR PARALLEL TO THE SLOPE OF THE SUBGRADE OR BASE AGGREGATE PROVIDED A 6" MINIMUM GUTTER THICKNESS IS MAINTAINED.

(10) REFER TO SDD 08D18 AND 08D19 FOR ADDITIONAL DRIVEWAY ENTRANCE CURB DETAILS.

(11) PLACE 1" THICK EXPANSION JOINT MATERIAL BETWEEN VERTICAL FACE CURB TYPES EXTENDING FROM THE TOP OF CURB TO 1 INCH BELOW THE ADJOINING CONCRETE SURFACE. RIGID CONCRETE STRUCTURES INCLUDE RAISED CONCRETE MEDIANS, CONCRETE SAFETY ISLANDS, SPLITTER ISLANDS, OR LOCATIONS IDENTIFIED ON THE PLANS.

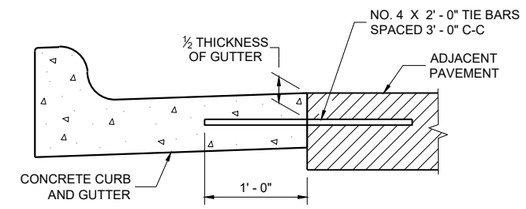

TYPICAL TIE BAR LOCATION (1)

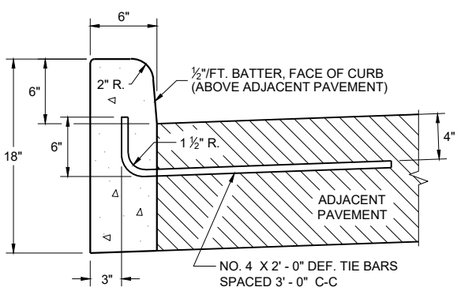

TYPES A (1) & D

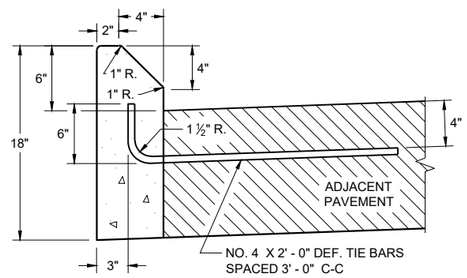

TYPES G (1) & J

CONCRETE CURB

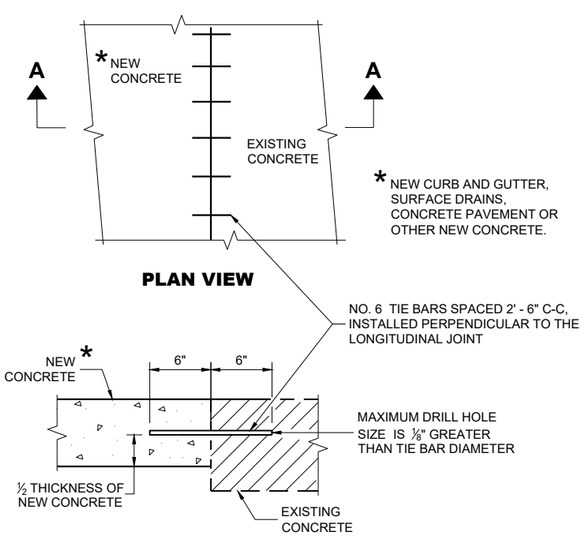

PLAN VIEW

SECTION A - A

TIE BARS DRILLED INTO EXISTING PAVEMENT

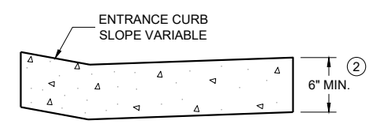

DRIVEWAY ENTRANCE CURB (10)

(WHEN DIRECTED BY THE ENGINEER)

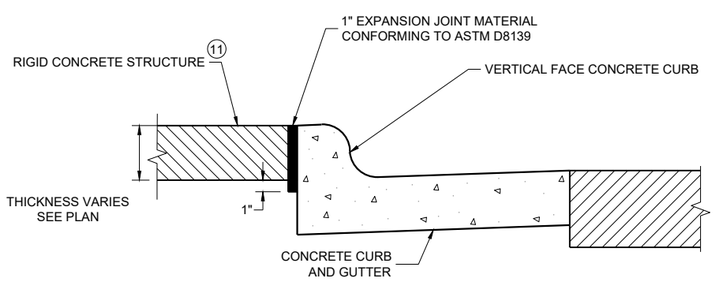

EXPANSION JOINT DETAIL FOR VERTICAL CURB ABUTTING A RIGID STRUCTURE (11)

CONCRETE CURB, TIES AND CURB AND GUTTER APPLICATIONS

STATE OF WISCONSIN
DEPARTMENT OF TRANSPORTATION

APPROVED
May 2023 — DATE
/S/ Rodnery Taylor — ROADWAY STANDARDS DEVELOPMENT UNIT SUPERVISOR

FHWA

NOTE: TAPER CURB ENDS TO GUTTER IN 1' - 0"

ASPHALTIC FLUME

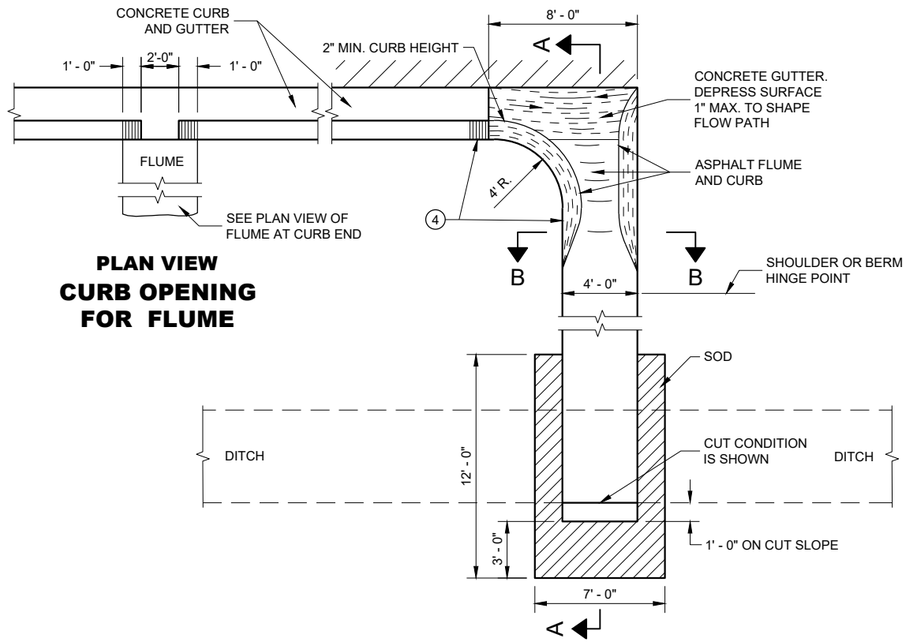

PLAN VIEW
CURB OPENING FOR FLUME

PLAN VIEW
FLUME AT CURB END

GENERAL NOTES

DETAILS OF CONSTRUCTION, MATERIALS AND WORKMANSHIP NOT SHOWN ON THIS DRAWING SHALL CONFORM TO PERTINENT REQUIREMENTS OF THE STANDARD SPECIFICATIONS AND APPLICABLE SPECIAL PROVISIONS.

4" X 4" - W3.0 X W3.0 CONCRETE REINFORCEMENT SHALL BE IN ACCORDANCE WITH AASHTO SPECIFICATION M55.

1. JOINTS SHALL BE ⅛" TO ¼" WIDE BY 1½" DEEP AND SPACED AT UNIFORM INTERVALS OF APPROXIMATELY 4 FEET.
2. GEOTEXTILE TYPE "R" SHALL UNDERLAY THE FULL LENGTH AND WIDTH OF THE CONCRETE SURFACE DRAIN AND RIPRAP.
3. CONCRETE SURFACE DRAIN WITHOUT CURB AND GUTTER MAY BE USED ON BACKSLOPES WHEN SPECIFIED.
4. ANGLE OF FLUME IN RELATION TO BACK OF CURB TO BE CONSTRUCTED PER THE PLAN DETAILS OR AS DIRECTED BY THE ENGINEER. ANGLE OF FLUME MAY BE OTHER THAN 90 DEGREES AS SHOWN.

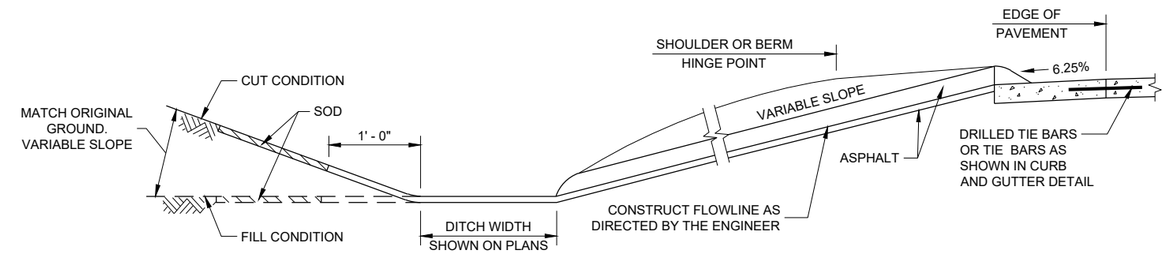

SECTION A - A

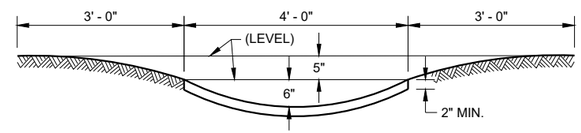

SECTION B - B

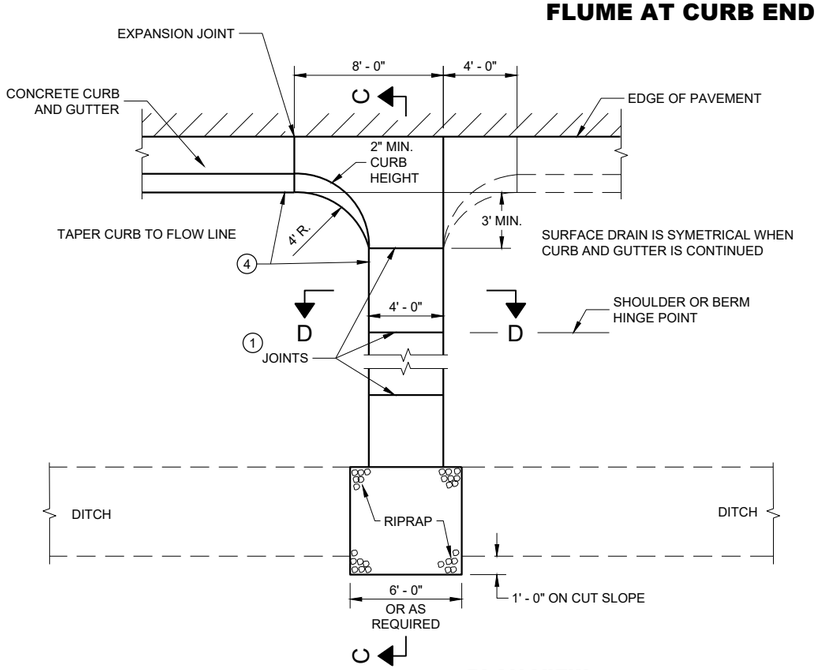

PLAN VIEW
CONCRETE SURFACE DRAIN

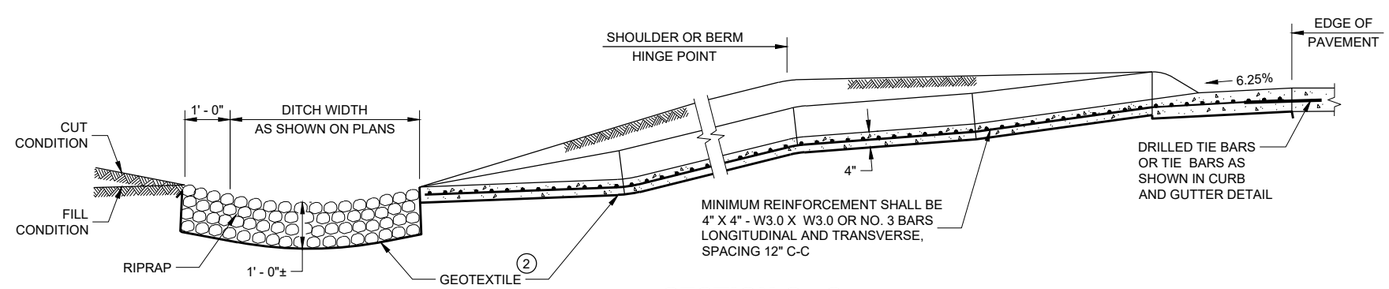

SECTION C - C

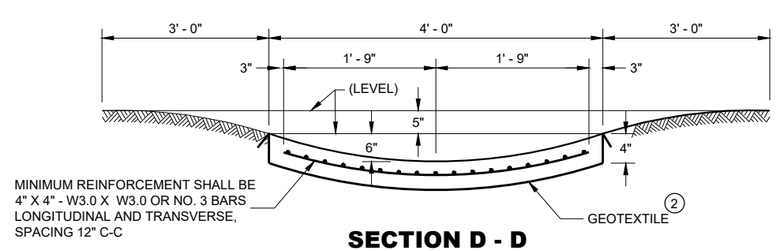

SECTION D - D

CONCRETE SURFACE DRAINS AND ASPHALTIC FLUMES

STATE OF WISCONSIN
DEPARTMENT OF TRANSPORTATION

APPROVED
May 2023 — DATE
/S/ Rodney Taylor — ROADWAY STANDARDS DEVE ENGINEER

FHWA

6

SDD 08D04 - 07

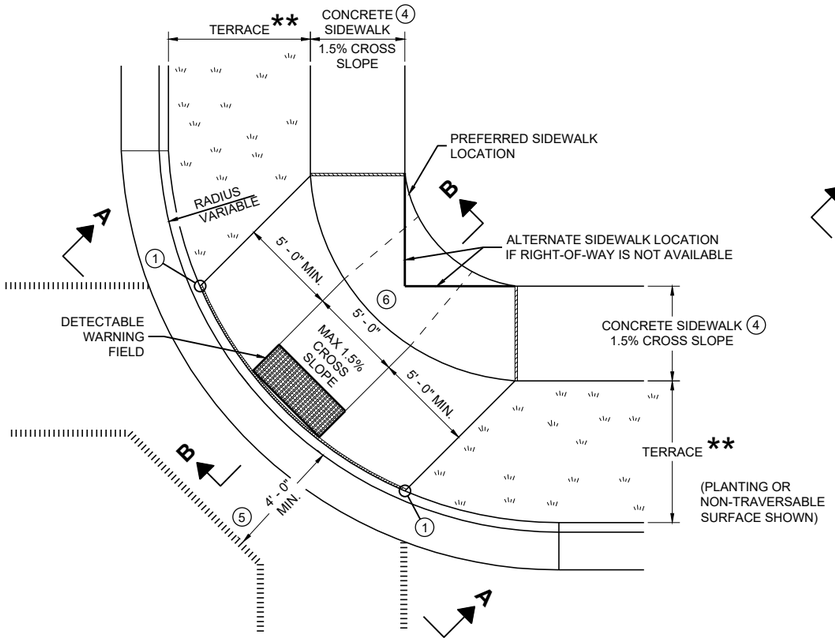

PLAN VIEW

CURB RAMP TYPE 1

(CENTER OF CORNER RADIUS)

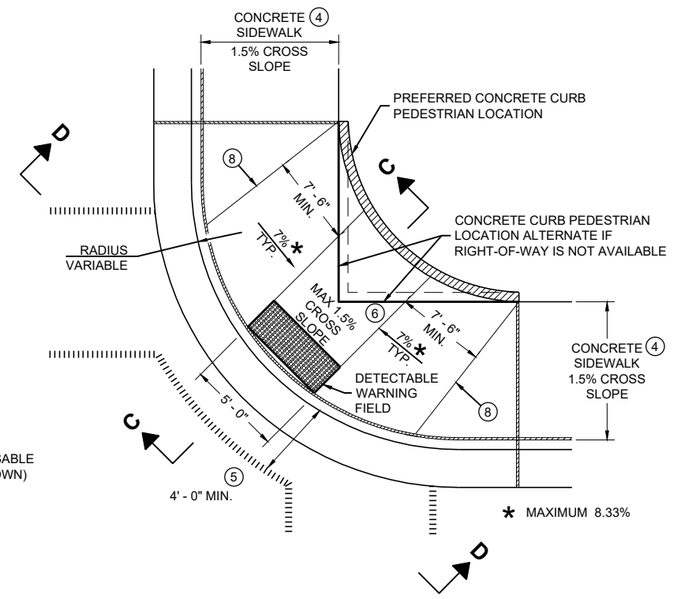

PLAN VIEW

CURB RAMP TYPE 1 - A

(NO TERRACE)

GENERAL NOTES

AVOID PLACING DRAINAGE STRUCTURES, JUNCTION BOXES OR OTHER OBSTRUCTIONS IN FRONT OF RAMP ACCESS AREAS.

DETAILS OF CONSTRUCTION, MATERIALS AND WORKMANSHIP NOT SHOWN ON THIS DRAWING SHALL CONFORM TO THE PERTINENT REQUIREMENTS OF THE STANDARD SPECIFICATIONS AND THE APPLICABLE SPECIAL PROVISIONS.

WHEN NECESSARY, THE SIDEWALK ELEVATION MAY BE LOWERED TO MEET THE HIGH POINT ON THE RAMP.

TYPE 1 CURB RAMPS SHALL HAVE A NORMAL SIDEWALK APRON AND CURB ON BOTH SIDES OF RAMP.

DETECTABLE WARNING FILED SHALL BE MEASURED AND PAID BY THE SQUARE FOOT AS "CURB RAMP DETECTABLE WARNING FIELD". THE CONCRETE PEDESTRIAN CURB, IF NEEDED, SHALL BE MEASURED AND PAID BY THE LINEAR FOOT AS "CONCRETE CURB PEDESTRIAN". CONCRETE SIDEWALK IN THE CURB RAMP AREA SHALL BE MEASURED AND PAID BY THE SQUARE FOOT AS CONCRETE SIDEWALK, INCLUDING THE AREA UNDER THE DETECTABLE WARNING FIELD.

SELECT CURB RAMP DETECTABLE WARNING FIELD MATERIALS AND DEVICES FROM THE DEPARTMENT'S APPROVED MATERIALS LIST. THE COLOR OF THE DETECTABLE WARNING FIELD IS SPECIFIED ELSEWHERE AND IS INCIDENTAL TO THE BID ITEM OF "CURB RAMP DETECTABLE WARNING FIELD"

DETECTABLE WARNING FIELDS THAT ARE INSTALLED AS A GROUP OR SIDE BY SIDE, SHALL BE FROM THE SAME MANUFACTURER.

SURFACE TEXTURE OF THE RAMP SHALL BE OBTAINED BY COARSE BROOMING TRANSVERSE TO THE SLOPE OF THE RAMP.

1. THIS POINT IS AN EXTENSION OF OUTSIDE EDGE OF APPROACHING SIDEWALK WHERE IT MEETS THE BACK OF CONCRETE CURB. POINT LOCATION MAY BE ADJUSTED TO ALIGN WITH BEGINNING OF FULL-HEIGHT CURB IF THIS DISTANCE IS SHORT.
2. GRADE CHANGE BETWEEN GUTTER FLAG SLOPE AND THE CURB RAMP SLOPE SHALL NOT EXCEED 11%. MAXIMUM GUTTER FLAG SLOPE IS 4%. PROVIDE LONGITUDINAL DRAINAGE AROUND CURB AND AWAY FROM CURB RAMP. NO VERTICAL LIPS OR DISCONTINUITIES GREATER THAN ¼ - INCH ARE ALLOWED. SLOPE OF CURB HEAD OPENING SHALL MATCH THE RAMP SLOPE, MINIMALLY 1.5% AND NOT TO EXCEED 7%. WHEN ADJACENT TO 1.5% LANDING, CONSTRUCT CURB HEAD OPENING AT 1.5% IN THE DIRECTION OF PEDESTRIAN TRAVEL.
3. MAXIMUM 8.33% CURB RAMP SLOPE IS ALLOWABLE WITH FLATTENED GUTTER FLAG SLOPE AND NOT TO EXCEED 11% GRADE CHANGE.
4. ±0.5% CONSTRUCTION TOLERANCE IN SIDEWALK CROSS SLOPE. THE SIDEWALK CROSS SLOPE SHALL NOT EXCEED 2% WITHOUT PRIOR APPROVAL FROM THE ENGINEER.
5. PROVIDE A LEVEL LANDING IN THE STREET AND GUTTER AREA (2% MAXIMUM SLOPE IN ANY DIRECTION). WHEN THE GUTTER SLOPE EXCEEDS 2%, CONSTRUCT THE LEVEL LANDING IN THE STREET AREA. 4 FOOT WIDTH IS MEASURED FROM THE FLANGE LINE
6. PROVIDE A LEVEL LANDING (MAXIMUM 2% SLOPE) IN ANY DIRECTION OF PEDESTRIAN TRAVEL. STANDARD LEVEL LANDING SIZE IS 5 FEET BY 5 FEET.
8. PROVIDE GRADE BREAK PERPENDICULAR TO DIRECTION OF WHEELCHAIR TRAVEL.

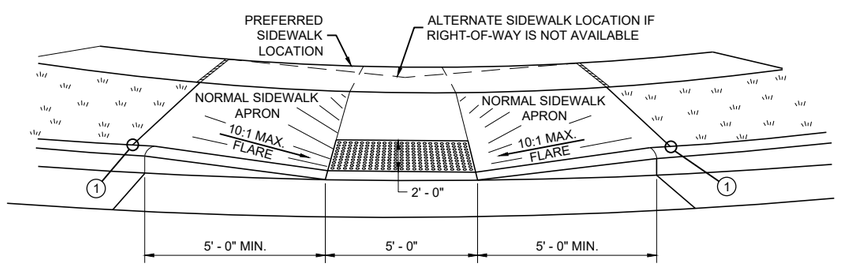

VIEW A - A FOR TYPE 1

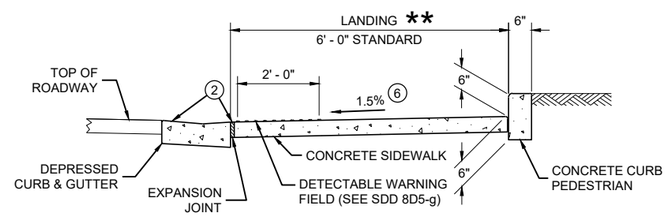

SECTION C - C FOR TYPE 1 - A

LEGEND

- ½" EXPANSION JOINT SIDEWALK
- CONTRACTION JOINT FIELD LOCATED
- PAVEMENT MARKING CROSSWALK (WHITE)

** WIDTH SHOWN ELSEWHERE IN THE PLANS

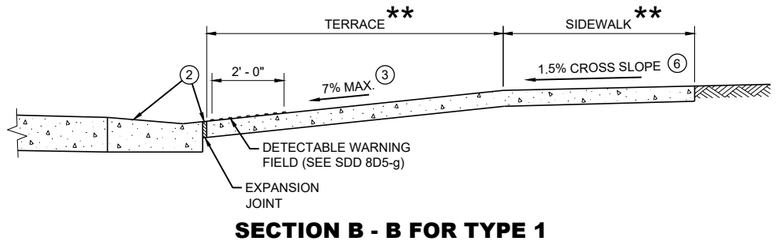

SECTION B - B FOR TYPE 1

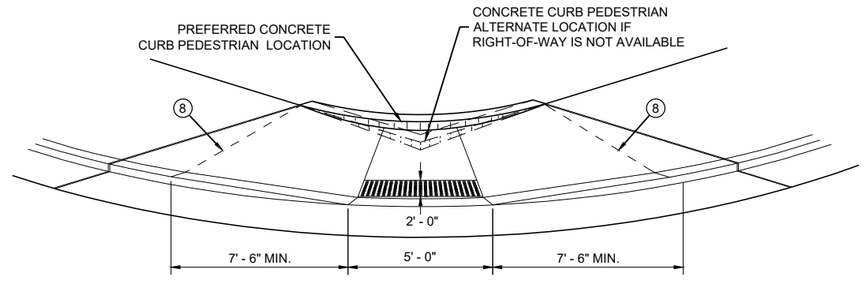

VIEW D - D FOR TYPE 1 - A

CURB RAMPS TYPE 1 AND 1-A

STATE OF WISCONSIN
DEPARTMENT OF TRANSPORTATION

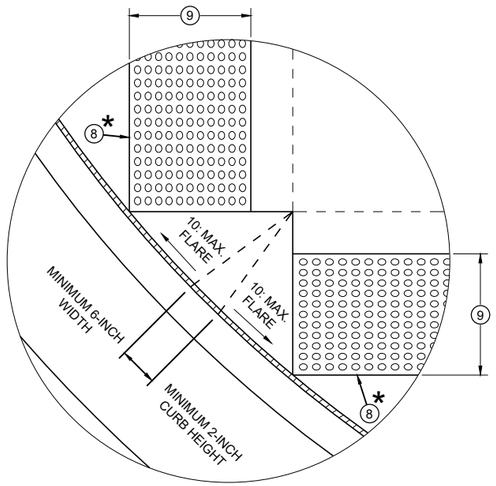

DETAIL A

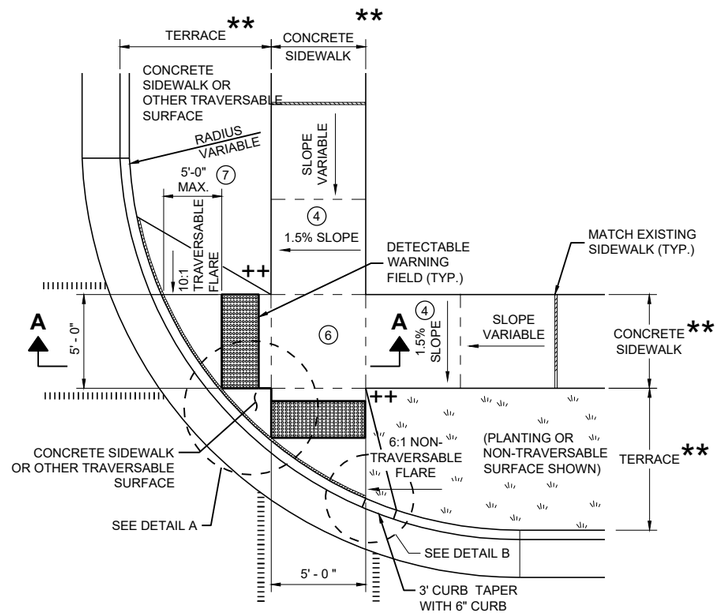

PLAN VIEW

CURB RAMP TYPE 2

(CENTER OF CORNER RADIUS)

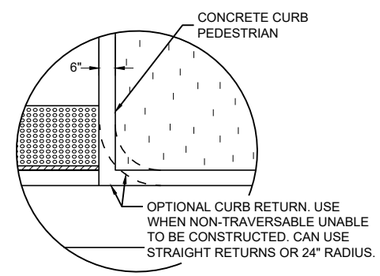

DETAIL B

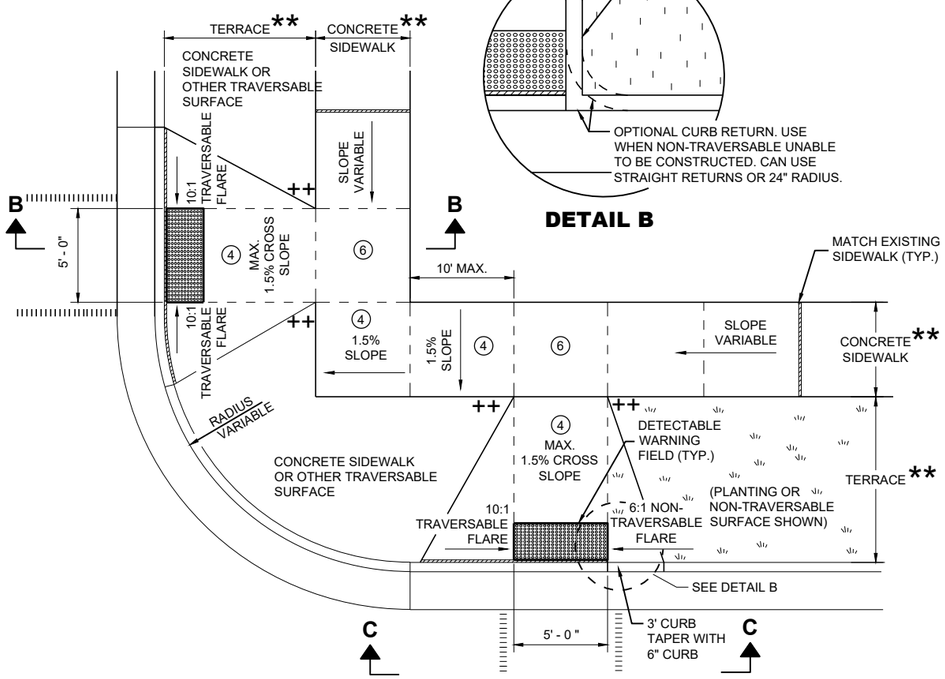

PLAN VIEW

CURB RAMP TYPE 3

(OUTSIDE OF CROSSWALK AREA)

GENERAL NOTES

AVOID PLACING DRAINAGE STRUCTURES, JUNCTION BOXES OR OTHER OBSTRUCTIONS IN FRONT OF RAMP ACCESS AREAS.

DETAILS OF CONSTRUCTION, MATERIALS AND WORKMANSHIP NOT SHOWN ON THIS DRAWING SHALL CONFORM TO THE PERTINENT REQUIREMENTS OF THE STANDARD SPECIFICATIONS AND THE APPLICABLE SPECIAL PROVISIONS.

DETECTABLE WARNING FIELDS THAT ARE INSTALLED AS A GROUP OR SIDE BY SIDE SHALL BE FROM THE SAME MANUFACTURER.

(2) GRADE CHANGE BETWEEN GUTTER FLAG SLOPE AND THE CURB RAMP SLOPE SHALL NOT EXCEED 11%. MAXIMUM GUTTER FLAG SLOPE IS 4%. PROVIDE LONGITUDINAL DRAINAGE AROUND CURB AND AWAY FROM CURB RAMP. NO VERTICAL LIPS OR DISCONTINUITIES GREATER THAN ¼ - INCH ARE ALLOWED. SLOPE OF CURB HEAD OPENING SHALL MATCH THE RAMP SLOPE, MINIMALLY 1.5% AND NOT TO EXCEED 7%. WHEN ADJACENT TO 1.5% LANDING, CONSTRUCT CURB HEAD OPENING AT 1.5% IN THE DIRECTION OF PEDESTRIAN TRAVEL.

(3) AN 8.33% CURB RAMP SLOPE IS ALLOWABLE WITH FLATTENED GUTTER FLAG SLOPE (2.67% OR LESS) AND NOT TO EXCEED 11% GRADE CHANGE.

(4) ±0.5% CONSTRUCTION TOLERANCE IN SIDEWALK CROSS SLOPE. THE SIDEWALK CROSS SLOPE SHALL NOT EXCEED 2% WITHOUT PRIOR APPROVAL FROM THE ENGINEER.

(6) PROVIDE A LEVEL LANDING (MAXIMUM 2% SLOPE) IN ANY DIRECTION OF PEDESTRIAN TRAVEL. STANDARD LEVEL LANDING SIZE IS 5 FEET X 5 FEET.

(7) WHEN GRADE BREAK DISTANCE EXCEEDS 5 FEET, USE RADIAL DETECTABLE WARNING FIELD PER SDD 8D5-f.

(8) PROVIDE GRADE BREAK PERPENDICULAR TO DIRECTION OF WHEELCHAIR TRAVEL.

(9) WHEN DISTANCE IS LESS THAN 6' - 0", IT MAY BE DIFFICULT TO ACHIEVE A 7% SLOPE OR FLATTER ALONG THE RAMP. REDUCE CURB HEIGHT IN TRIANGLE AREA TO ACHIEVE 7% SLOPE OR FLATTER ON RAMP. CONSTRUCT 2-INCH MINIMUM CURB HEIGHT BETWEEN 10:1 FLARES.

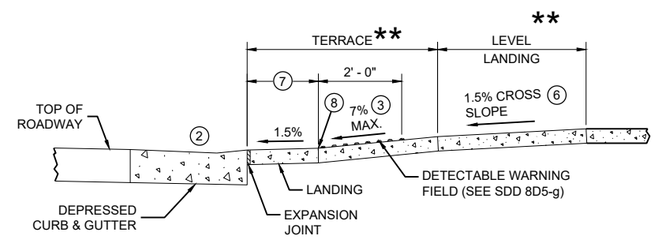

SECTION A - A FOR TYPE 2

* MAXIMUM 2.0% SLOPE IN ALL DIRECTIONS IN FRONT OF GRADE BREAK

** WIDTH SHOWN ELSEWHERE IN THE PLANS

++ CONSTRUCT 6" WEDGE TO AVOID CONCRETE BREAKAGE

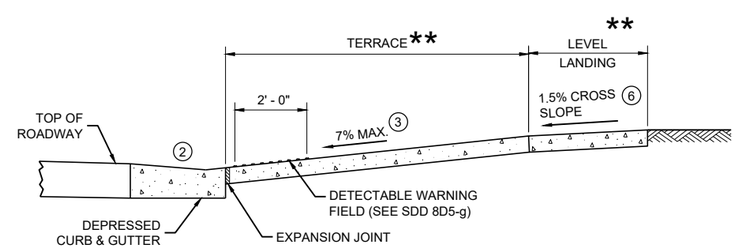

SECTION B - B FOR TYPE 3

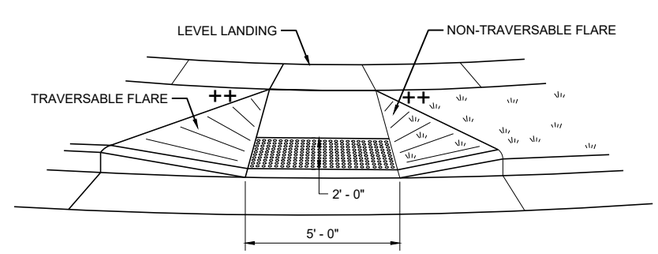

VIEW C - C FOR TYPE 3

LEGEND

- ½" EXPANSION JOINT SIDEWALK
- CONTRACTION JOINT SIDEWALK
- PAVEMENT MARKING CROSSWALK (WHITE)

CURB RAMPS TYPE 2 AND 3

STATE OF WISCONSIN
DEPARTMENT OF TRANSPORTATION

6

SDD 08D05-21b

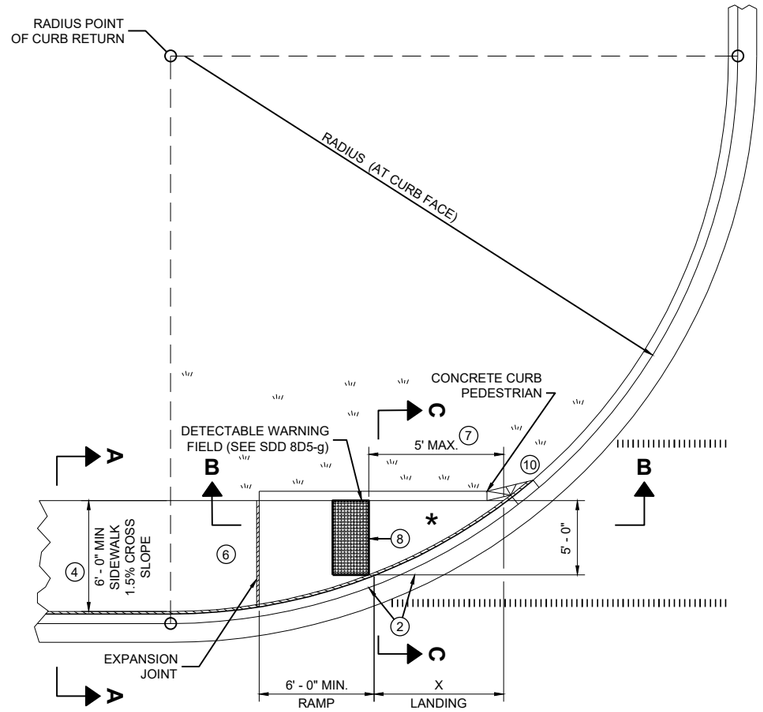

PLAN VIEW

CURB RAMP TYPE 4A

RADIUS (AT CURB FACE)	X
10 FEET	4' - 7"

INTERMEDIATE RADII CAN BE INTERPOLATED

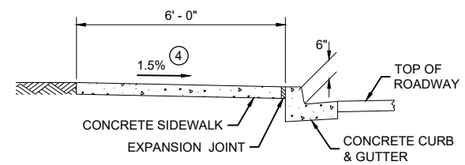

SECTION A - A FOR TYPE 4A

GENERAL NOTES

AVOID PLACING DRAINAGE STRUCTURES, JUNCTION BOXES OR OTHER OBSTRUCTIONS IN FRONT OF RAMP ACCESS AREAS.

DETAILS OF CONSTRUCTION, MATERIALS AND WORKMANSHIP NOT SHOWN ON THIS DRAWING SHALL CONFORM TO THE PERTINENT REQUIREMENTS OF THE STANDARD SPECIFICATIONS AND THE APPLICABLE SPECIAL PROVISIONS.

DETECTABLE WARNING FIELDS THAT ARE INSTALLED AS A GROUP OR SIDE BY SIDE, SHALL BE FROM THE SAME MANUFACTURER.

(2) GRADE CHANGE BETWEEN GUTTER FLAG SLOPE AND THE CURB RAMP SLOPE SHALL NOT EXCEED 11%. MAXIMUM GUTTER FLAG SLOPE IS 4%. PROVIDE LONGITUDINAL DRAINAGE AROUND CURB AND AWAY FROM CURB RAMP. NO VERTICAL LIPS OR DISCONTINUITIES GREATER THAN ¼ - INCH ARE ALLOWED. SLOPE OF CURB HEAD OPENING SHALL MATCH THE RAMP SLOPE, MINIMALLY 1.5% AND NOT TO EXCEED 7%. WHEN ADJACENT TO 1.5% LANDING, CONSTRUCT CURB HEAD OPENING AT 1.5% IN THE DIRECTION OF PEDESTRIAN TRAVEL.

(3) AN 8.33% CURB RAMP SLOPE IS ALLOWABLE WITH FLATTENED GUTTER FLAG SLOPE AND NOT TO EXCEED 11% GRADE CHANGE.

(4) ±0.5% CONSTRUCTION TOLERANCE IN SIDEWALK CROSS SLOPE. THE SIDEWALK CROSS SLOPE SHALL NOT EXCEED 2% WITHOUT PRIOR APPROVAL FROM THE ENGINEER.

(6) PROVIDE A LEVEL LANDING (MAXIMUM 2% SLOPE) IN ANY DIRECTION OF PEDESTRIAN TRAVEL. STANDARD LEVEL LANDING SIZE IS 5 FEET BY 5 FEET.

(7) WHEN THIS GRADE BREAK DISTANCE EXCEEDS 5 FEET, USE RADIAL DETECTABLE WARNING FIELD PER SDD 8D5-f.

(8) PROVIDE GRADE BREAK PERPENDICULAR TO DIRECTION OF WHEELCHAIR TRAVEL.

(10) INSTALL TRANSITION NOSE (INCIDENTAL TO OTHER PAY ITEMS). DO NOT MARK TRANSITION NOSE.

LEGEND

½" EXPANSION JOINT SIDEWALK

CONTRACTION JOINT SIDEWALK

PAVEMENT MARKING CROSSWALK (WHITE)

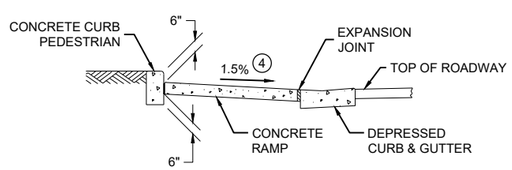

SECTION C - C FOR TYPE 4A

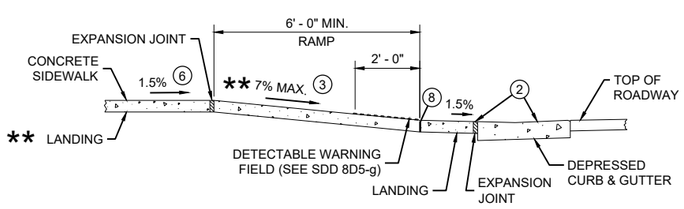

** IF RAMP SLOPE IS LESS THAN 5.0%, THEN NO ADJACENT UPHILL LANDING IS REQUIRED

SECTION B - B FOR TYPE 4A AND TYPE 4A1

* MAXIMUM 2.0% SLOPE IN ALL DIRECTIONS IF FRONT OF GRADE BREAK

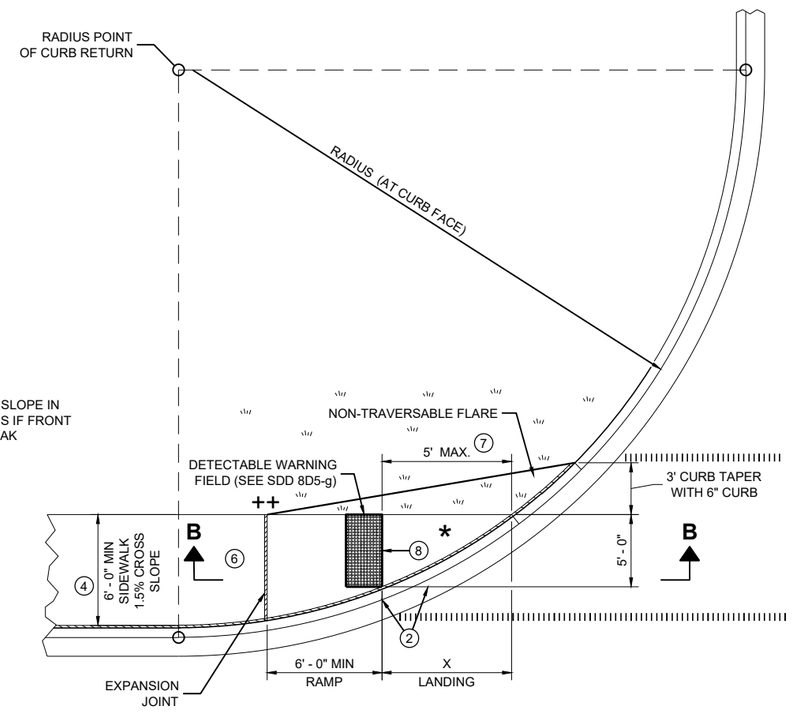

PLAN VIEW

CURB RAMP TYPE 4A1

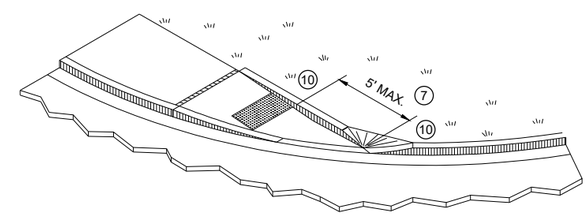

ISOMETRIC VIEW FOR TYPE 4A

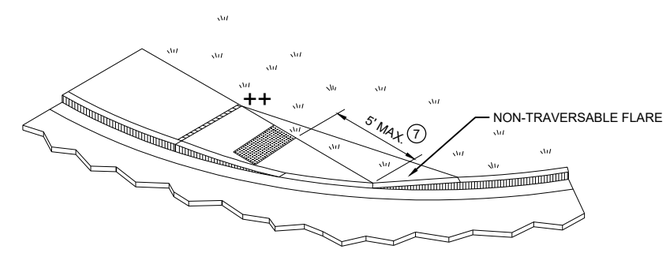

ISOMETRIC VIEW FOR TYPE 4A1

++ CONSTRUCT 6" WEDGE TO AVOID CONCRETE BREAKAGE

CURB RAMPS TYPE 4A AND 4A1

STATE OF WISCONSIN
DEPARTMENT OF TRANSPORTATION

6

6

SDD 08D05-21c

SDD 08D05-21c

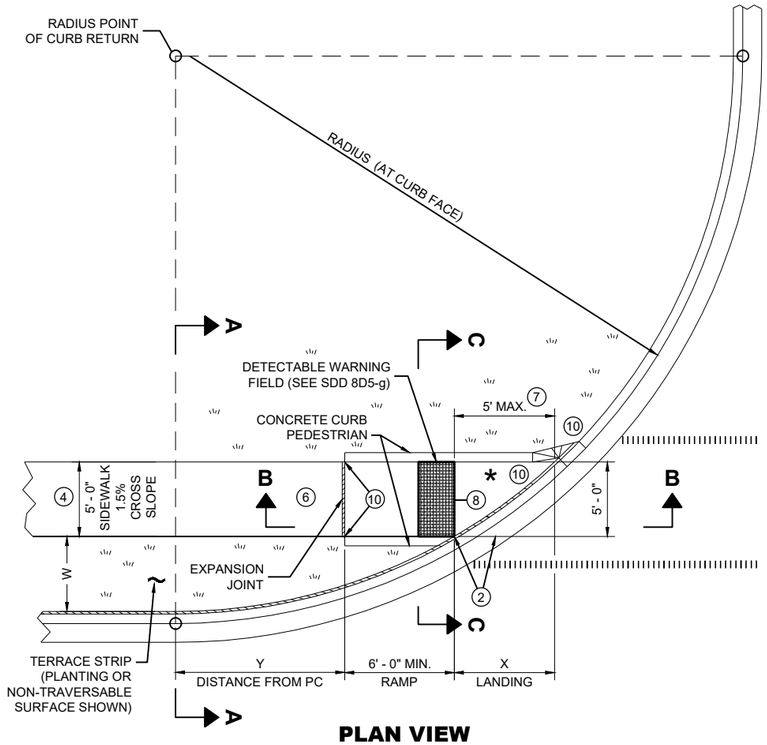

PLAN VIEW
CURB RAMP TYPE 4B

RADIUS (AT CURB FACE)	W = 3' - 0"		W = 4' - 0"		W = 5' - 0"		W = 6' - 0"		W = 7' - 0"		W = 8' - 0"		W = 9' - 0"		W = 10' - 0"	
	X	Y	X	Y	X	Y	X	Y	X	Y	X	Y	X	Y	X	Y
10 FEET	2' - 10 ¼"	0' - 5"	2' - 1"	1' - 4 ½"	1' - 5"	2' - 1"	0' - 10"	2' - 7 ½"	0' - 3 ¼"	3' - 0 ¼"						
15 FEET	4' - 6 ¾"	2' - 1 ¾"	3' - 9"	3' - 5 ¾"	3' - 1 ¼"	4' - 6"	2' - 6 ¾"	5' - 4 ½"	2' - 1"	6' - 1"	1' - 8"	6' - 8 ½"	1' - 3 ¼"	7' - 2 ½"	0' - 10 ¾"	7' - 7 ¼"
20 FEET			4' - 11 ½"	5' - 1 ¾"	4' - 3 ¼"	6' - 5 ½"	3' - 8 ¾"	7' - 7"	3' - 3"	8' - 6 ½"	2' - 10"	9' - 4 ½"	2' - 5 ½"	10' - 1 ¼"	2' - 1 ¼"	10' - 9"
30 FEET									4' - 10 ¾"	12' - 5 ¾"	4' - 5 ½"	13' - 7 ¾"	4' - 0 ¾"	14' - 8 ½"	3' - 8 ½"	15' - 8 ¼"
40 FEET															4' - 10 ¾"	19' - 8 ¼"

INTERMEDIATE RADII CAN BE INTERPOLATED
DIMENSION "Y" IS CALCULATED BASED ON 6'-0" RAMP LENGTH
DIMENSION "X" IS CALCULATED BASED ON 5'-0" SIDEWALK WIDTH

LEGEND

- ½" EXPANSION JOINT SIDEWALK
- CONTRACTION JOINT SIDEWALK
- PAVEMENT MARKING CROSSWALK (WHITE)

GENERAL NOTES

AVOID PLACING DRAINAGE STRUCTURES, JUNCTION BOXES OR OTHER OBSTRUCTIONS IN FRONT OF RAMP ACCESS AREAS.

DETAILS OF CONSTRUCTION, MATERIALS AND WORKMANSHIP NOT SHOWN ON THIS DRAWING SHALL CONFORM TO THE PERTINENT REQUIREMENTS OF THE STANDARD SPECIFICATIONS AND THE APPLICABLE SPECIAL PROVISIONS.

DETECTABLE WARNING FIELDS THAT ARE INSTALLED AS A GROUP OR SIDE BY SIDE, SHALL BE FROM THE SAME MANUFACTURER.

(2) GRADE CHANGE BETWEEN GUTTER FLAG SLOPE AND THE CURB RAMP SLOPE SHALL NOT EXCEED 11%. MAXIMUM GUTTER FLAG SLOPE IS 4%. PROVIDE LONGITUDINAL DRAINAGE AROUND CURB AND AWAY FROM CURB RAMP. NO VERTICAL LIPS OR DISCONTINUITIES GREATER THAN ¼ - INCH ARE ALLOWED. SLOPE OF CURB HEAD OPENING SHALL MATCH THE RAMP SLOPE, MINIMALLY 1.5% AND NOT TO EXCEED 7%. WHEN ADJACENT TO 1.5% LANDING, CONSTRUCT CURB HEAD OPENING AT 1.5% IN THE DIRECTION OF PEDESTRIAN TRAVEL.

(3) AN 8.33% CURB RAMP SLOPE IS ALLOWABLE WITH FLATTENED GUTTER FLAG SLOPE AND NOT TO EXCEED 11% GRADE CHANGE.

(4) ±0.5% CONSTRUCTION TOLERANCE IN SIDEWALK CROSS SLOPE. THE SIDEWALK CROSS SLOPE SHALL NOT EXCEED 2% WITHOUT PRIOR APPROVAL FROM THE ENGINEER.

(6) PROVIDE A LEVEL LANDING (MAXIMUM 2% SLOPE) IN ANY DIRECTION OF PEDESTRIAN TRAVEL. STANDARD LEVEL LANDING SIZE IS 5 FEET BY 5 FEET.

(7) WHEN THIS GRADE BREAK DISTANCE EXCEEDS 5 FEET, USE RADIAL DETECTABLE WARNING FIELD PER SDD 8D5-f.

(8) PROVIDE GRADE BREAK PERPENDICULAR TO DIRECTION OF WHEELCHAIR TRAVEL.

(10) INSTALL TRANSITION NOSE (INCIDENTAL TO OTHER PAY ITEMS). DO NOT MARK TRANSITION NOSE.

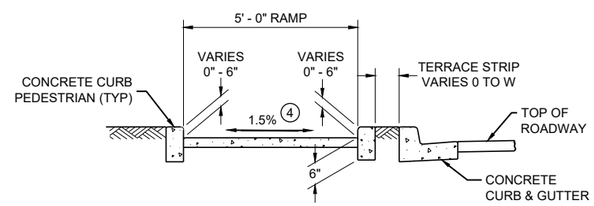

SECTION C - C FOR TYPE 4B

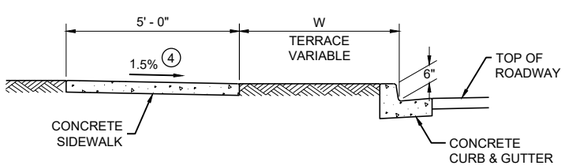

SECTION A - A FOR TYPE 4B

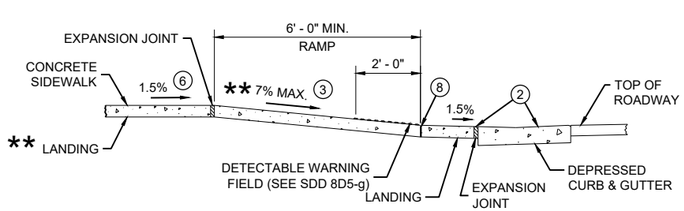

** IF RAMP SLOPE IS LESS THAN 5.0%, THEN NO ADJACENT UPHILL LANDING IS REQUIRED

SECTION B - B FOR TYPE 4B AND TYPE 4B1

* MAXIMUM 2.0% SLOPE IN ALL DIRECTIONS IF FRONT OF GRADE BREAK

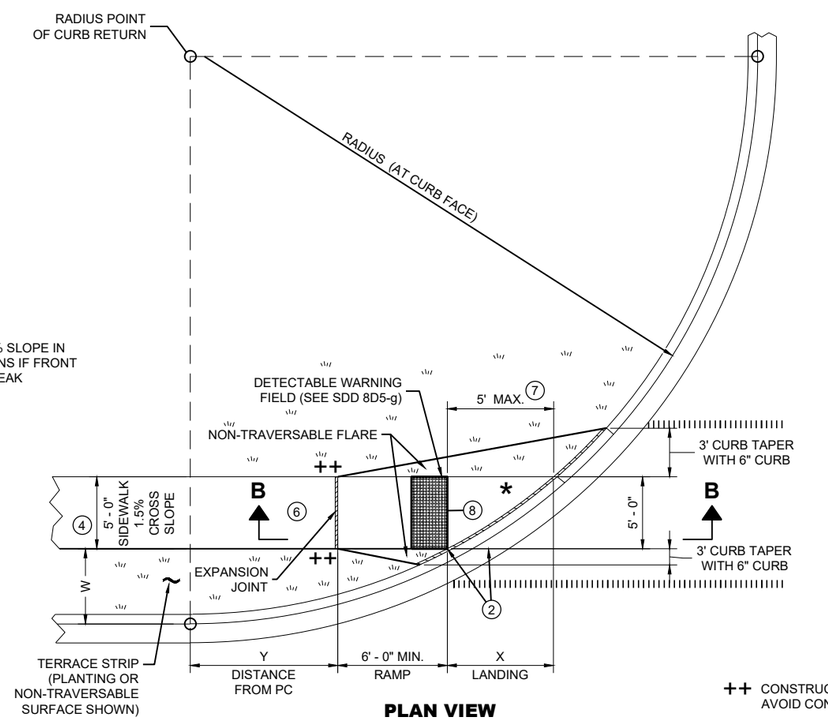

PLAN VIEW
CURB RAMP TYPE 4B1

++ CONSTRUCT 6" WEDGE TO AVOID CONCRETE BREAKAGE

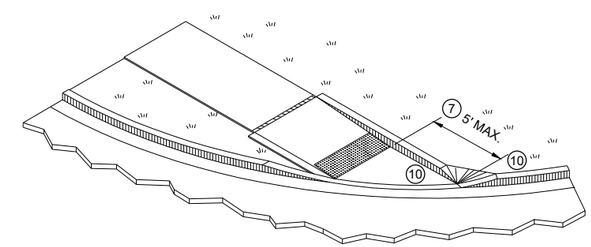

ISOMETRIC VIEW FOR TYPE 4B

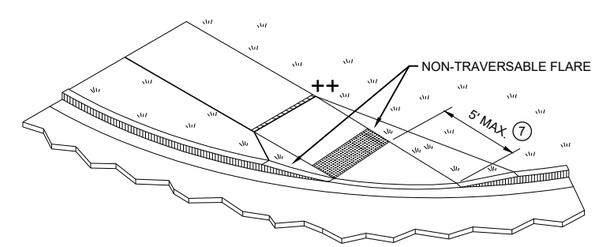

ISOMETRIC VIEW FOR TYPE 4B1

CURB RAMPS TYPE 4B AND 4B1

STATE OF WISCONSIN
DEPARTMENT OF TRANSPORTATION

6

SDD 08D05-21d

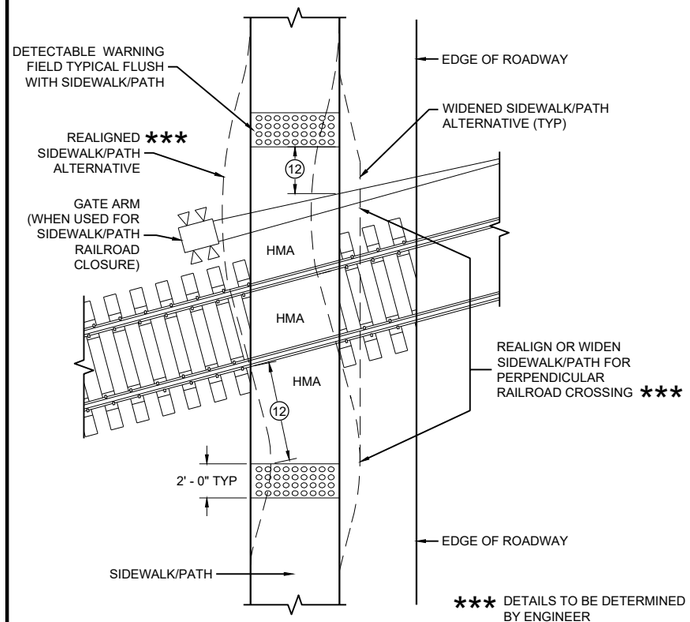

CURB RAMP TYPE 8

DETECTABLE WARNINGS FOR SIDEWALKS OR SHARED USE PATHS AT RAILROAD CROSSINGS

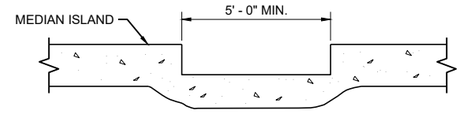

SECTION A - A FOR TYPE 5

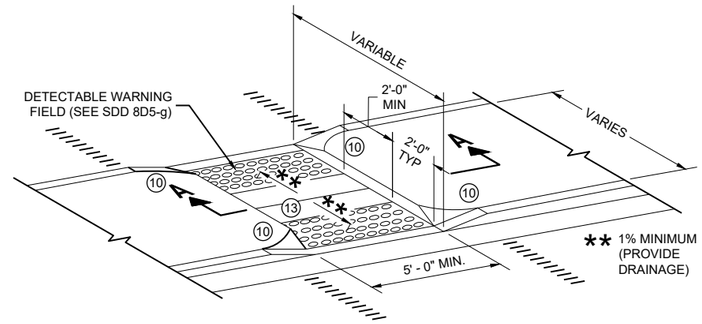

CURB RAMP TYPE 5

MEDIAN ISLAND NON-ELEVATED PEDESTRIAN CROSSING

GENERAL NOTES

AVOID PLACING DRAINAGE STRUCTURES, JUNCTION BOXES OR OTHER OBSTRUCTIONS IN FRONT OF RAMP ACCESS AREAS.

DETAILS OF CONSTRUCTION, MATERIALS AND WORKMANSHIP NOT SHOWN ON THIS DRAWING SHALL CONFORM TO THE PERTINENT REQUIREMENTS OF THE STANDARD SPECIFICATIONS AND THE APPLICABLE SPECIAL PROVISIONS.

SIDEWALK CROSS SLOPE SHALL NOT EXCEED 2%.

DETECTABLE WARNING FIELDS THAT ARE INSTALLED AS A GROUP OR SIDE BY SIDE, SHALL BE FROM THE SAME MANUFACTURER.

(2) GRADE CHANGE BETWEEN GUTTER FLAG SLOPE AND THE CURB RAMP SLOPE SHALL NOT EXCEED 11%. MAXIMUM GUTTER FLAG SLOPE IS 4%. PROVIDE LONGITUDINAL DRAINAGE AROUND CURB AND AWAY FROM CURB RAMP. NO VERTICAL LIPS OR DISCONTINUITIES GREATER THAN ¼ - INCH ARE ALLOWED. SLOPE OF CURB HEAD OPENING SHALL MATCH THE RAMP SLOPE, MINIMALLY 1.5% AND NOT TO EXCEED 7%. WHEN ADJACENT TO 1.5% LANDING, CONSTRUCT CURB HEAD OPENING AT 1.5% IN THE DIRECTION OF PEDESTRIAN TRAVEL.

(3) AN 8.33% CURB RAMP SLOPE IS ALLOWABLE WITH FLATTENED GUTTER FLAG SLOPE AND NOT TO EXCEED 11% GRADE CHANGE.

(4) ±0.5% CONSTRUCTION TOLERANCE IN SIDEWALK CROSS SLOPE. THE SIDEWALK CROSS SLOPE SHALL NOT EXCEED 2% WITHOUT PRIOR APPROVAL FROM THE ENGINEER.

(6) PROVIDE A LEVEL LANDING (MAXIMUM 2% SLOPE) IN ANY DIRECTION OF PEDESTRIAN TRAVEL. STANDARD LEVEL LANDING SIZE IS 5 FEET BY 5 FEET.

(10) INSTALL TRANSITION NOSE (INCIDENTAL TO OTHER PAY ITEMS). DO NOT MARK TRANSITION NOSE.

(11) SLOPE SIDEWALK TOWARD LANDING AS SHOWN WHERE THERE IS NO TERRACE OR WHERE THE TERRACE WIDTH IS LESS THAN 6 FEET WIDE.

(12) THE EDGE OF THE DETECTABLE WARNING FIELD NEAREST TO A RAILROAD CROSSING SHALL BE 1.5 FEET ±0.1' FROM THE FACE OF THE GATE ARM IF THE GATE ARM EXTENDS ACROSS THE SIDEWALK/PATH. WHERE THERE IS NO PEDESTRIAN GATE, THE EDGE OF THE DETECTABLE WARNING FIELD NEAREST TO THE RAILROAD TRACK IS 15 FEET MAXIMUM AND 12 FEET MINIMUM, 15 FEET TYPICAL FROM THE NEAREST RAIL.

(13) DO NOT INSTALL DETECTABLE WARNING FIELDS AT THE EDGES OF STEET-LEVEL PEDESTRIAN REFUGE ISLANDS IF A MINIMUM 2 FOOT CONCRETE SURFACE WITHOUT DETECTABLE WARNINGS (MEASURED IN THE DIRECTION OF PEDESTRIAN TRAVEL) CANNOT BE ACHIEVED.

LEGEND

- ½" EXPANSION JOINT SIDEWALK
- CONTRACTION JOINT FIELD LOCATED
- PAVEMENT MARKING CROSSWALK (WHITE)

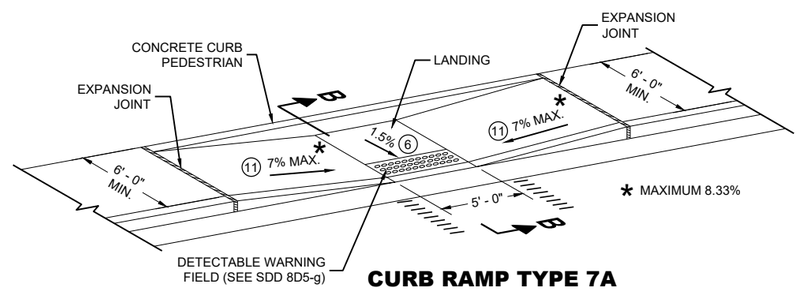

CURB RAMP TYPE 7A

FOR INTERSECTIONS AND MID BLOCK CROSSINGS

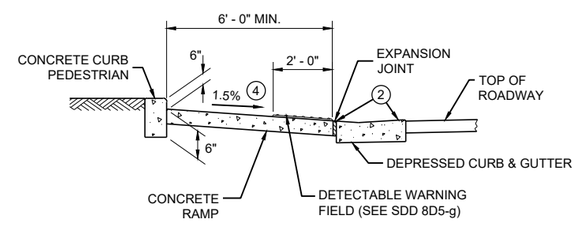

SECTION B - B FOR TYPE 7A

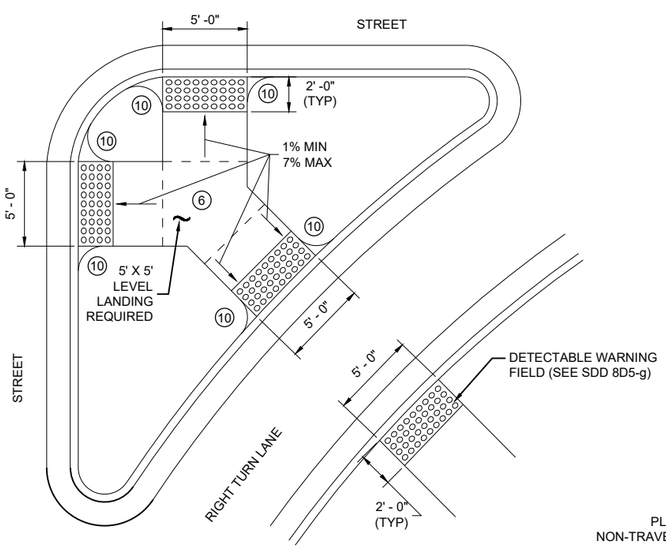

CURB RAMP TYPE 6

DETECTABLE WARNING AT ISLANDS

REFER TO GENERAL NOTES (2) AND (3) FOR ALL ISLAND CURB RAMPS

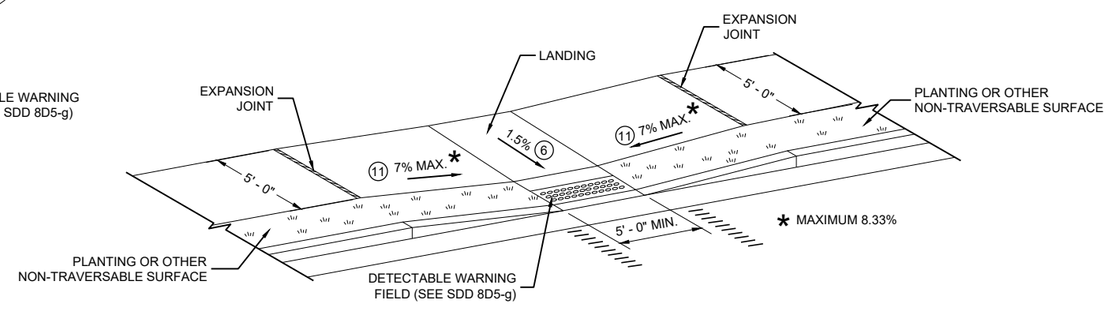

CURB RAMP TYPE 7B

FOR INTERSECTIONS AND MID BLOCK CROSSINGS

CURB RAMPS TYPE 5, 6, 7A, 7B & 8

STATE OF WISCONSIN
DEPARTMENT OF TRANSPORTATION

6

6

SDD 08D05-21e

SDD 08D05-21e

RADIAL DETECTABLE WARNING FIELD PLACEMENT WHEN 5 FOOT GRADE BREAK DISTANCE PER SDD 8D5-c IS EXCEEDED

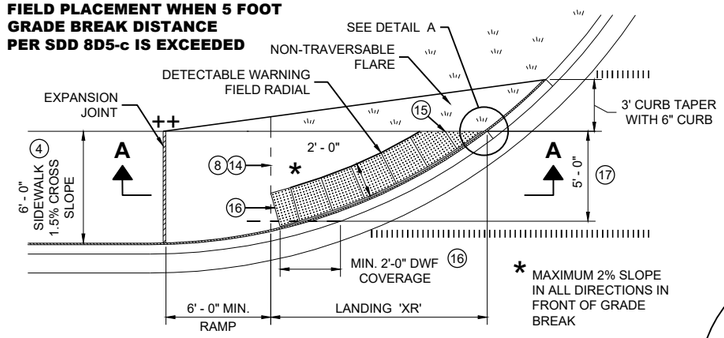

PLAN VIEW

CURB RAMP TYPE 4A1

(GRADE BREAK DISTANCE GREATER THAN 5 FEET)

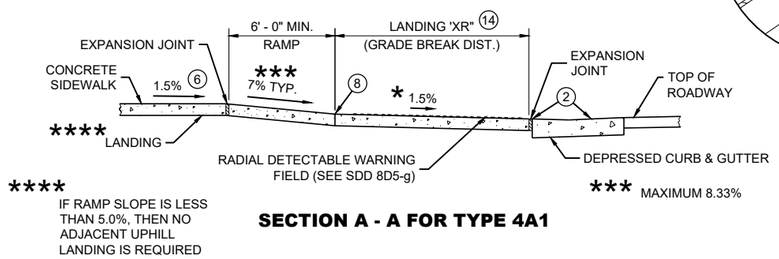

SECTION A - A FOR TYPE 4A1

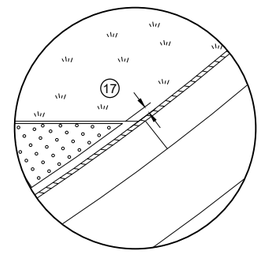

DETAIL A

LEGEND

- ½" EXPANSION JOINT SIDEWALK
- CONTRACTION JOINT SIDEWALK
- PAVEMENT MARKING CROSSWALK (WHITE)

GENERAL NOTES

AVOID PLACING DRAINAGE STRUCTURES, JUNCTION BOXES OR OTHER OBSTRUCTIONS IN FRONT OF RAMP ACCESS AREAS.

DETAILS OF CONSTRUCTION, MATERIALS AND WORKMANSHIP NOT SHOWN ON THIS DRAWING SHALL CONFORM TO THE PERTINENT REQUIREMENTS OF THE STANDARD SPECIFICATIONS AND THE APPLICABLE SPECIAL PROVISIONS.

DETECTABLE WARNING FIELDS THAT ARE INSTALLED AS A GROUP OR SIDE BY SIDE, SHALL BE FROM THE SAME MANUFACTURER.

APPLY RADIAL DETECTABLE WARNING PLACEMENT SIMILARLY FOR TYPE 4A AND 4A1 CURB RAMPS AND SIMILARLY FOR TYPE 4B AND 4B1 CURB RAMPS. TYPE 4A AND 4B CURB RAMPS ARE NOT SHOWN.

REFER TO SDD 8D5-g FOR ADDITIONAL RADIAL PLATE REQUIREMENTS.

FIELD CUTS AT INTERMEDIATE JOINTS WITHIN THE RADIAL DETECTABLE WARNING FILED ARE PROHIBITED.

DETERMINE FINAL RADIAL WARNING FIELD CONFIGURATION AD ITS INDIVIDUAL PLATE LOCATIONS. PERFORM PRE-LAYOUT PRIOR TO PLACEMENT IN PLASTIC CONCRETE. FOLLOW MANUFACTURER'S PRODUCT LIST AND INSTALLATION RECOMMENDATIONS.

(2) GRADE CHANGE BETWEEN GUTTER FLAG SLOPE AND THE CURB RAMP SLOPE SHALL NOT EXCEED 11%. MAXIMUM GUTTER FLAG SLOPE IS 4%. PROVIDE LONGITUDINAL DRAINAGE AROUND CURB AND AWAY FROM CURB RAMP. NO VERTICAL LIPS OR DISCONTINUITIES GREATER THAN ¼ - INCH ARE ALLOWED. SLOPE OF CURB HEAD OPENING SHALL MATCH THE RAMP SLOPE, MINIMALLY 1.5% AND NOT TO EXCEED 7%. WHEN ADJACENT TO 1.5% LANDING, CONSTRUCT CURB HEAD OPENING AT 1.5% IN THE DIRECTION OF PEDESTRIAN TRAVEL.

(3) AN 8.33% CURB RAMP SLOPE IS ALLOWABLE WITH FLATTENED GUTTER FLAG SLOPE AND NOT TO EXCEED 11% GRADE CHANGE.

(4) ±0.5% CONSTRUCTION TOLERANCE IN SIDEWALK CROSS SLOPE. THE SIDEWALK CROSS SLOPE SHALL NOT EXCEED 2% WITHOUT PRIOR APPROVAL FROM THE ENGINEER.

(6) PROVIDE A LEVEL LANDING (MAXIMUM 2% SLOPE) IN ANY DIRECTION OF PEDESTRIAN TRAVEL. STANDARD LANDING SIZE IS 5 FEET BY 5 FEET.

(8) PROVIDE GRADE BREAK PERPENDICULAR TO DIRECTION OF WHEELCHAIR TRAVEL.

(14) CONSULT ENGINEER IF GRADE BREAK LOCATION (END OF LANDING DIMENSION "XR") REQUIRES FIELD ADJUSTMENT WHEN ESTABLISHING FINAL RADIAL DETECTABLE WARNING FIELD LOCATION.

(15) FIELD SAW CUTS ALONG RADIAL DETECTABLE WARNING PLATES WILL BE NECESSARY TO MATCH EACH CURB RAMP EDGE. AVOID CUTTING THROUGH DOMES WHENEVER POSSIBLE. MAKE FIELD CUTS TRUE TO LINE AND WITHIN ⅛" DEVIATION. SMOOTH EDGES OF FIELD CUT PLATES.

(16) USE 1' X 2" RECTANGULAR END PLATE AT END OF TYPE 4A1 RAMP AND PROVIDE MINIMUM 2' - 0" DETECTABLE WARNING FIELD COVERAGE (IN DIRECTION OF PEDESTRIAN TRAVEL) ALONG THE ENTIRE CURB RAMP WIDTH.

(17) A MAXIMUM 3 INCH CONCRETE BORDER WIDTH IS ALLOWABLE IN FRONT OF RADIAL DETECTABLE WARNING FIELD FOR CONSTRUCTABILITY PURPOSES. CONCRETE BORDER WIDTH MAY VARY UP TO 1 INCH.

RADIAL DETECTABLE WARNING FIELD PLACEMENT WHEN 5 FOOT GRADE BREAK DISTANCE PER SDD 8D5-d IS EXCEEDED

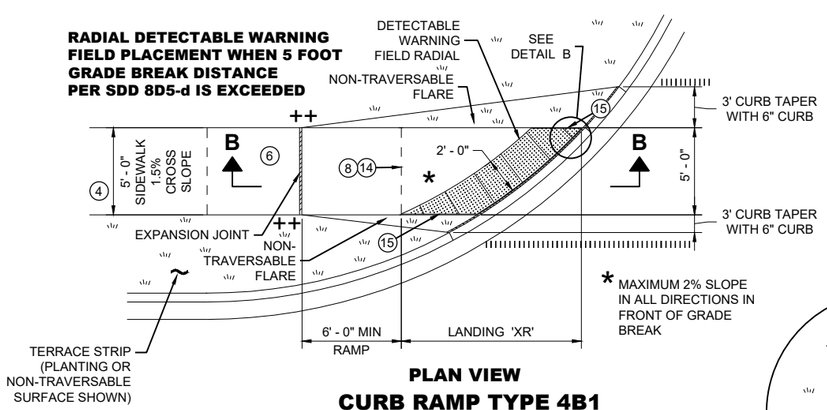

PLAN VIEW

CURB RAMP TYPE 4B1

(GRADE BREAK DISTANCE GREATER THAN 5 FEET)

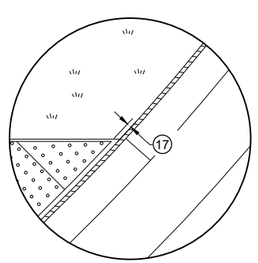

DETAIL B

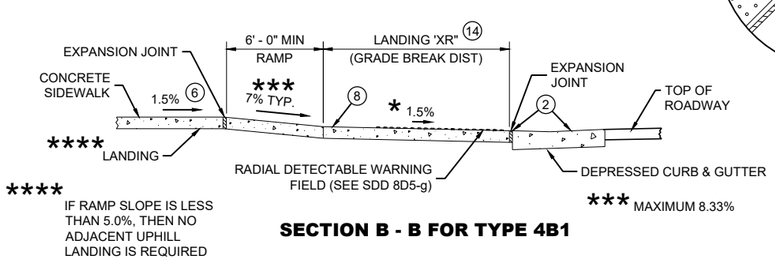

SECTION B - B FOR TYPE 4B1

RADIAL DETECTABLE WARNING FIELD PLACEMENT WHEN 5 FOOT GRADE BREAK DISTANCE PER SDD 8D5-b IS EXCEEDED

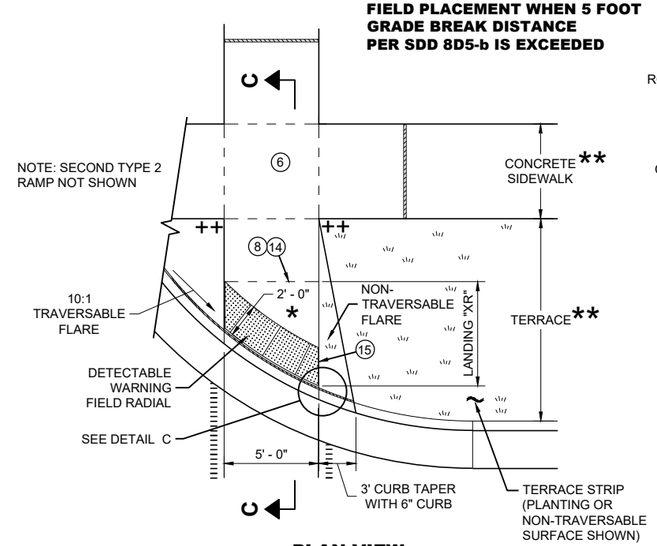

PLAN VIEW

CURB RAMP TYPE 2

(GRADE BREAK DISTANCE GREATER THAN 5 FEET)

(ON LINE WITH SIDEWALK)

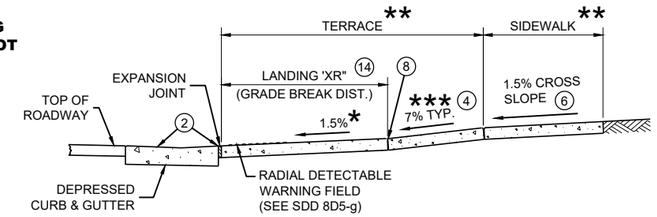

SECTION C - C FOR TYPE 2

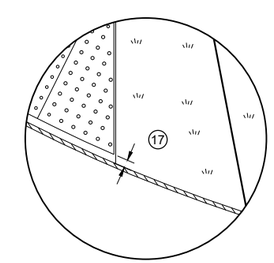

DETAIL C

* MAXIMUM 2% SLOPE IN ALL DIRECTIONS IN FRONT OF GRADE BREAK

** WIDTH SHOWN ELSEWHERE IN THE PLANS

*** MAXIMUM 8.33%

++ CONSTRUCT 6" WEDGE TO AVOID CONCRETE BREAKAGE

CURB RAMPS
RADIAL DETECTABLE WARNING

STATE OF WISCONSIN
DEPARTMENT OF TRANSPORTATION

6

6

SDD 08D05-21f

SDD 08D05-21f

	MIN.	MAX.
A	1.6"	2.4"
B	0.65"	1.5"
C	*	*
D	0.9"	1.4"

* THE C DIMENSION IS 50% TO 65% OF THE D DIMENSION.

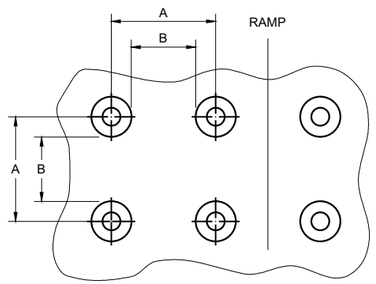

PLAN VIEW

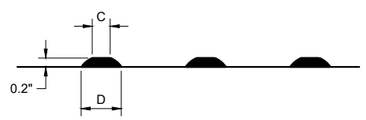

ELEVATION VIEW

TRUNCATED DOMES
DETECTABLE WARNING PATTERN DETAIL

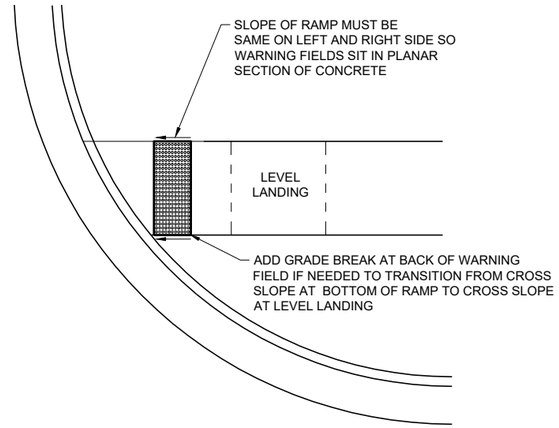

DETECTABLE WARNING FIELD
PLANAR INSTALLATION

GENERAL NOTES

DETECTABLE WARNING FIELDS THAT ARE INSTALLED AT A CURB RAMP SHALL BE FROM THE SAME MANUFACTURER.

PLACE ALL DETECTABLE WARNING FIELD SYSTEMS IN ACCORDANCE TO THE MANUFACTURER'S RECOMMENDATION.

FIELD CUTS AT INTERMEDIATE JOINTS WITHIN THE RADIAL DETECTABLE WARNING FILED ARE PROHIBITED.

DETERMINE FINAL RADIAL WARNING FIELD CONFIGURATION AND ITS INDIVIDUAL PLATE LOCATIONS. PERFORM PRE-LAYOUT PRIOR TO PLACEMENT IN PLASTIC CONCRETE. FOLLOW MANUFACTURER'S PRODUCT LIST AND INSTALLATION RECOMMENDATIONS.

FOR RADIAL DETECTABLE WARNING FIELD APPLICATIONS WHERE STANDARD RADIAL PLATES ARE NOT AVAILABLE AT AN INTERSECTION CURB RADIUS, A COMBINATION OF SQUARE OR RECTANGULAR PLATES AND RADIAL PLATES MAY BE USED TO FORM RADIAL CONFIGURATION. RADIAL WEDGE PLATES IN COMBINATION WITH SQUARE PLATES ARE ALSO ACCEPTABLE. FOLLOW MANUFACTURER'S RECOMMENDATIONS.

REFER TO CONTRACT AND STANDARD SPECIFICATIONS FOR FIELD CUTTING REQUIREMENTS.

DO NOT EMBED IN CONCRETE ANY FIELD-CUT PLATES WITH CUT EDGES SHORTER THAN 6 INCHES. CONSULT WITH MANUFACTURER FOR RE-DRILLING AND ANCHORING REQUIREMENTS OF FIELD-CUT PLATES.

(15) FIELD SAW CUTS ALONG RADIAL DETECTABLE WARNING PLATES WILL BE NECESSARY TO MATCH EACH CURB RAMP EDGE. AVOID CUTTING THROUGH DOMES WHENEVER POSSIBLE. MAKE FIELD CUTS TRUE TO LINE AND WITHIN ⅛" DEVIATION. SMOOTH EDGES OF FIELD CUT PLATES.

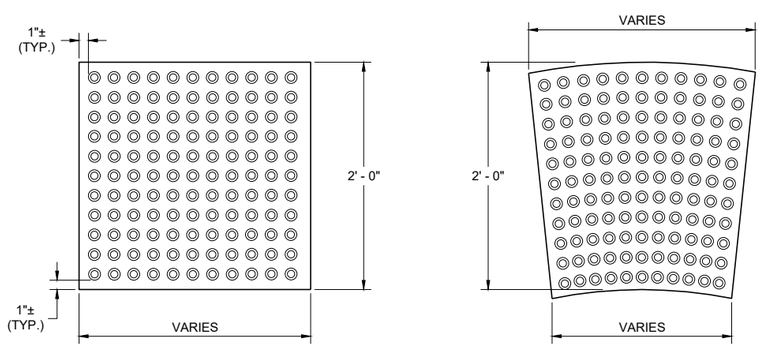

RECTANGULAR PLATES **RADIAL PLATES**

PLAN VIEW
DETECTABLE WARNING FIELDS (TYPICAL)

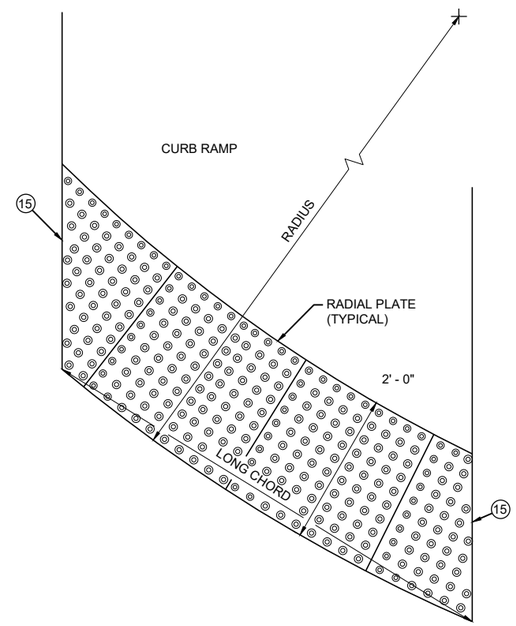

PLAN VIEW
RADIAL DETECTABLE WARNING FIELD ATTRIBUTES

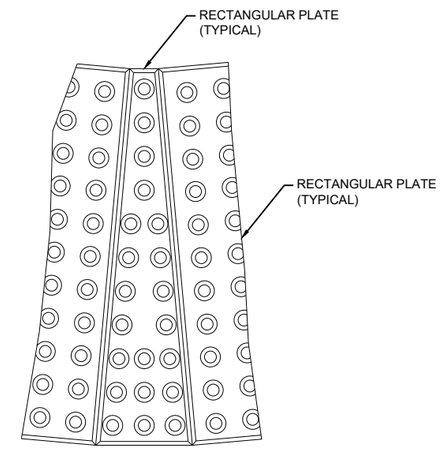

PLAN VIEW
RADIAL WEDGE PLATE CONNECTION DETAIL

6

6

SDD 08D05-21g

SDD 08D05-21g

CURB RAMPS
RECTANGULAR AND RADIAL DETECTABLE WARNING PLATES

STATE OF WISCONSIN
DEPARTMENT OF TRANSPORTATION

APPROVED
July 2023 — DATE
/S/ Rodney Taylor — ROADWAY STANDARDS DEVELOPMENT UNIT SUPERVISOR
FHWA

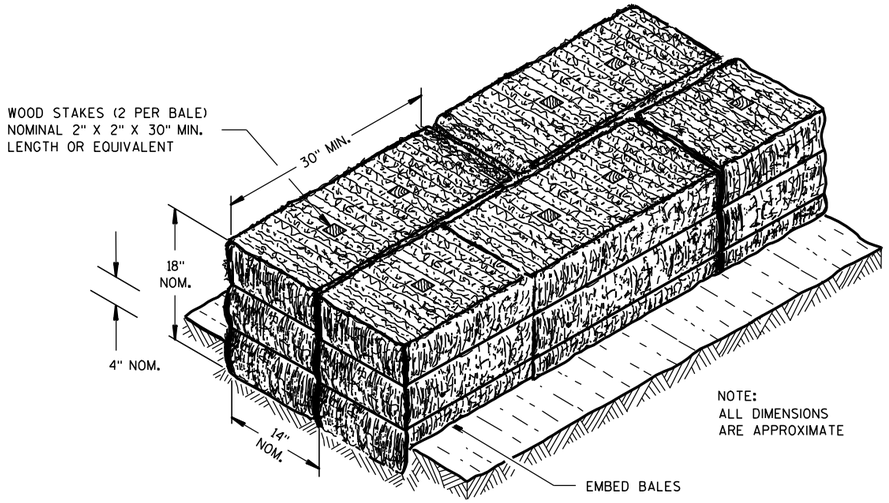

SECTION A-A

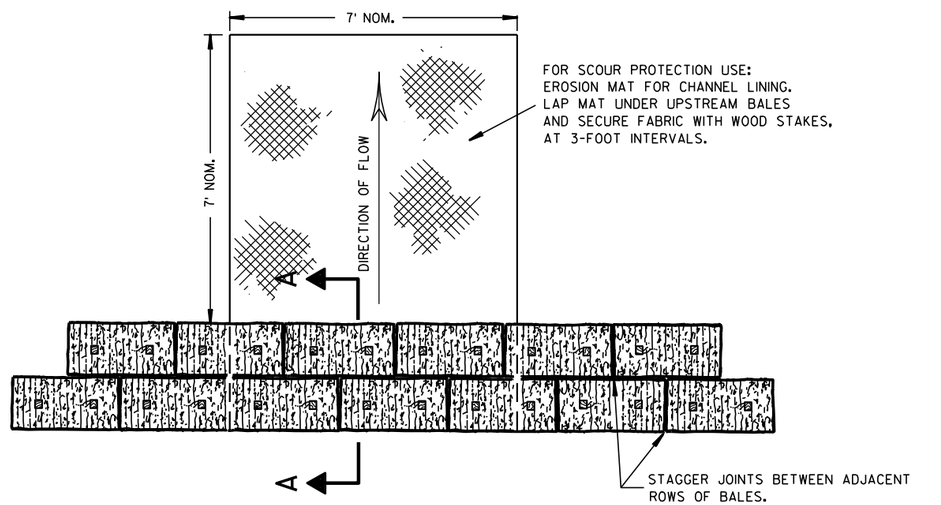

PLAN VIEW

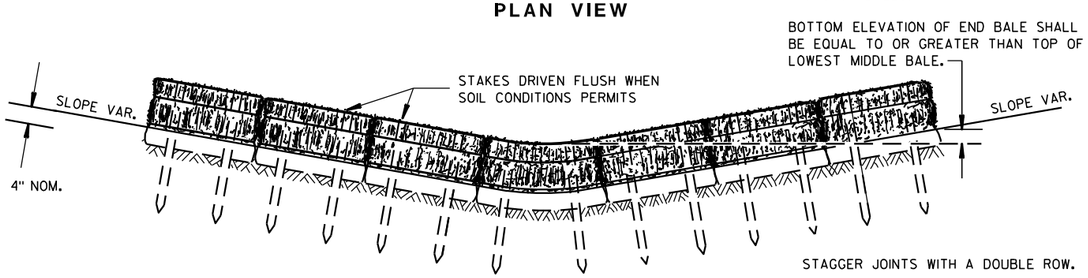

FRONT ELEVATION

TEMPORARY DITCH CHECK USING EROSION BALES ①

GENERAL NOTES

DETAILS OF CONSTRUCTION, MATERIALS AND WORKMANSHIP NOT SHOWN ON THIS DRAWING SHALL CONFORM TO THE PERTINENT REQUIREMENTS OF THE STANDARD SPECIFICATIONS AND THE APPLICABLE SPECIAL PROVISIONS.

① TEMPORARY DITCH CHECKS EITHER EROSION BALES OR MANUFACTURED SHALL BE PAID FOR UNDER THE BID ITEM OF TEMPORARY DITCH CHECK. THE DEPARTMENT WILL NOT PAY FOR TEMPORARY DITCH CHECKS CONSTRUCTED OF A SINGLE ROW OF EROSION BALES.

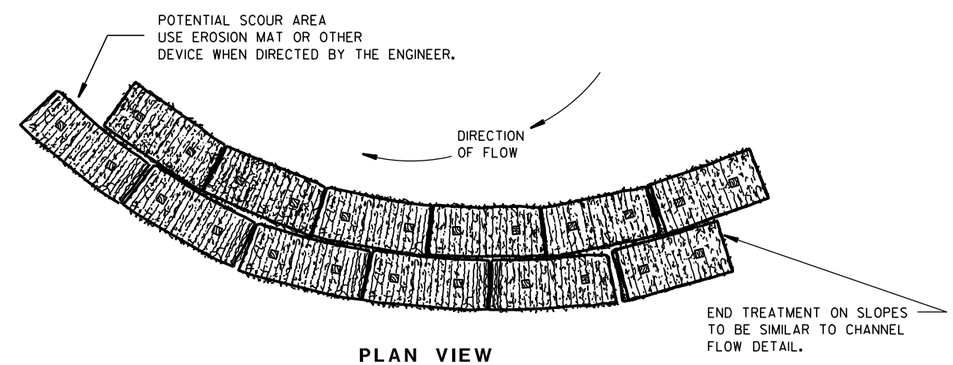

PLAN VIEW

WHEN ALTERING THE DIRECTION OF FLOW

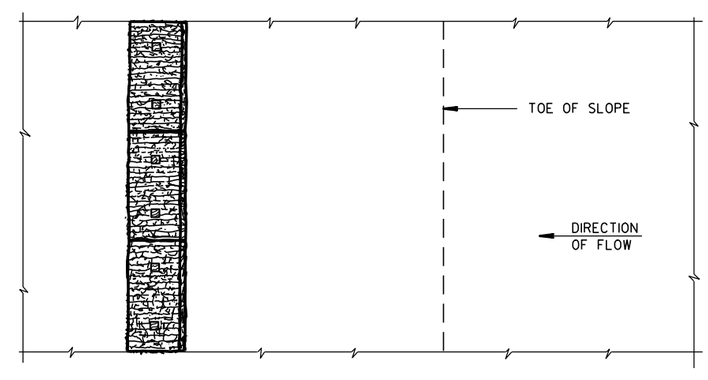

PLAN VIEW

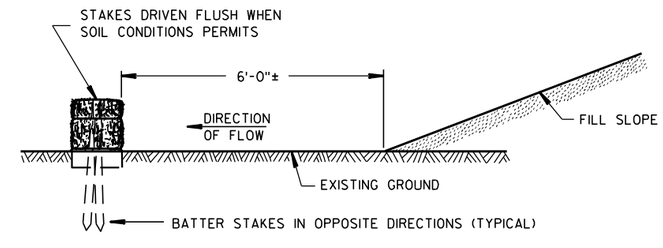

FRONT ELEVATION

WHEN EXISTING GROUND SLOPES AWAY FROM FILL SLOPE

EROSION BALES FOR SHEET FLOW

TYPICAL INSTALLATIONS OF EROSION BALES / TEMPORARY DITCH CHECKS

STATE OF WISCONSIN
DEPARTMENT OF TRANSPORTATION

APPROVED
6/04/02 — DATE
/S/ Beth Cann — CHIEF ROADWAY DEVELOPMENT ENGINEER
FHWA

6

6

S.D.D. 8 E 8-3

S.D.D. 8 E 8-3

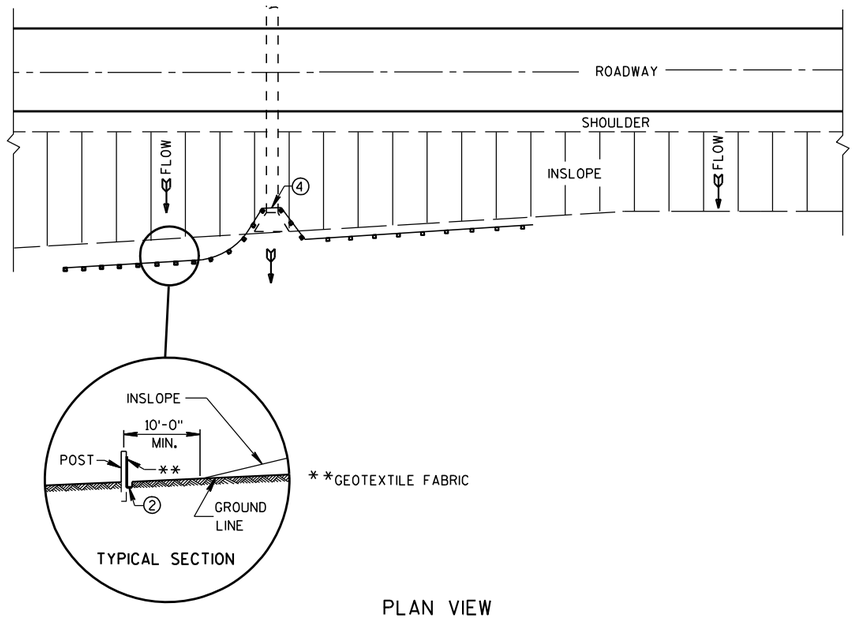

PLAN VIEW

TYPICAL APPLICATION OF SILT FENCE

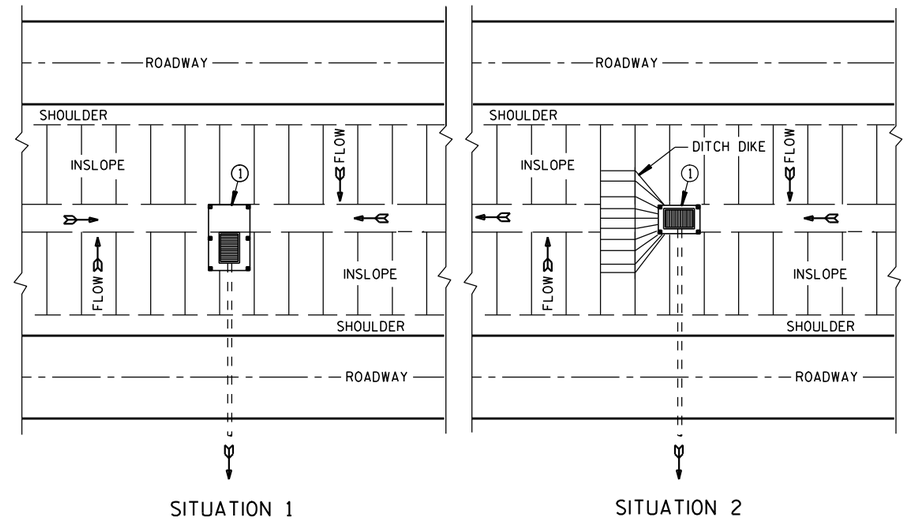

PLAN VIEW

SILT FENCE AT MEDIAN SURFACE DRAINS

GENERAL NOTES

DETAILS OF CONSTRUCTION NOT SHOWN ON THIS DRAWING SHALL CONFORM TO THE PERTINENT REQUIREMENTS OF THE STANDARD SPECIFICATIONS AND APPLICABLE SPECIAL PROVISIONS.

① HORIZONTAL BRACE REQUIRED WITH 2" X 4" WOODEN FRAME OR EQUIVALENT AT TOP OF POSTS.

② FOR MANUAL INSTALLATIONS THE TRENCH SHALL BE A MINIMUM OF 4" WIDE & 6" DEEP TO BURY AND ANCHOR THE GEOTEXTILE FABRIC. FOLD MATERIAL TO FIT TRENCH AND BACKFILL & COMPACT TRENCH WITH EXCAVATED SOIL.

③ WOOD POSTS SHALL BE A MINIMUM SIZE OF 1⅛" X 1⅛" OF OAK OR HICKORY.

④ SILT FENCE TO EXTEND ACROSS THE TOP OF THE PIPE.

⑤ CONSTRUCT SILT FENCE FROM A CONTINUOUS ROLL IF POSSIBLE BY CUTTING LENGTHS TO AVOID JOINTS. IF A JOINT IS NECESSARY USE ONE OF THE FOLLOWING TWO METHODS; A) OVERLAP THE END POSTS AND TWIST, OR ROTATE, AT LEAST 180 DEGREES. B) HOOK THE END OF EACH SILT FENCE LENGTH.

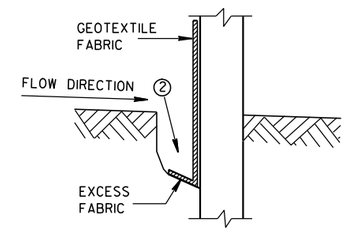

TRENCH DETAIL

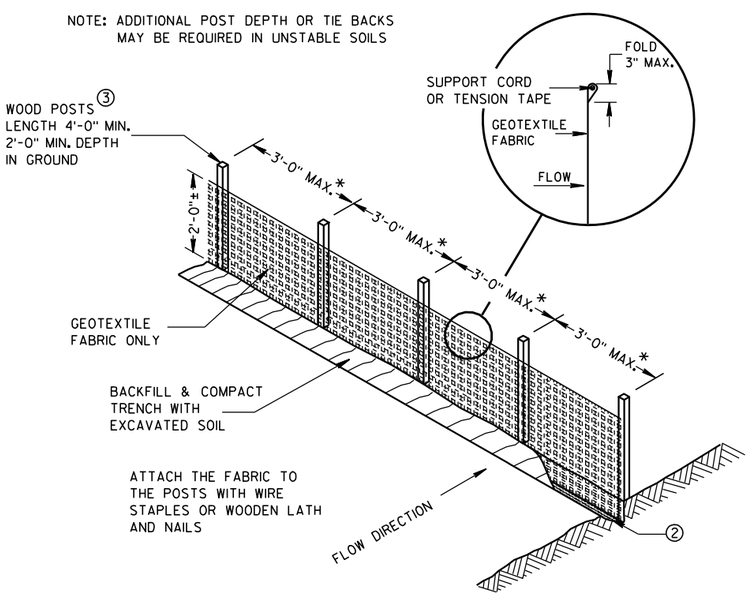

*NOTE: 8'-0" POST SPACING ALLOWED IF A WOVEN GEOTEXTILE FABRIC IS USED.

SILT FENCE

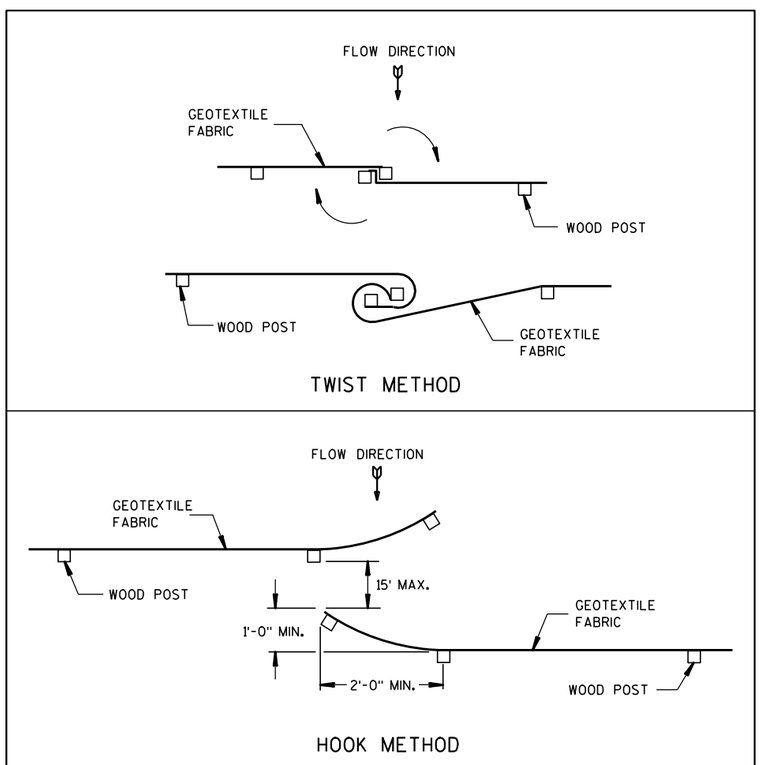

JOINING TWO LENGTHS OF SILT FENCE ⑤

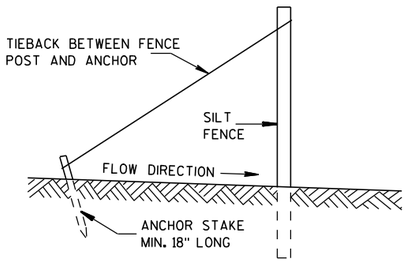

SILT FENCE TIE BACK

(WHEN REQUIRED BY THE ENGINEER)

SILT FENCE
STATE OF WISCONSIN DEPARTMENT OF TRANSPORTATION
APPROVED 4-29-05 /S/ Beth Cann----- DATE CHIEF ROADWAY DEVELOP ENGINEER FHWA

6

6

S.D.D. 8 E 9-6

S.D.D. 8 E 9-6

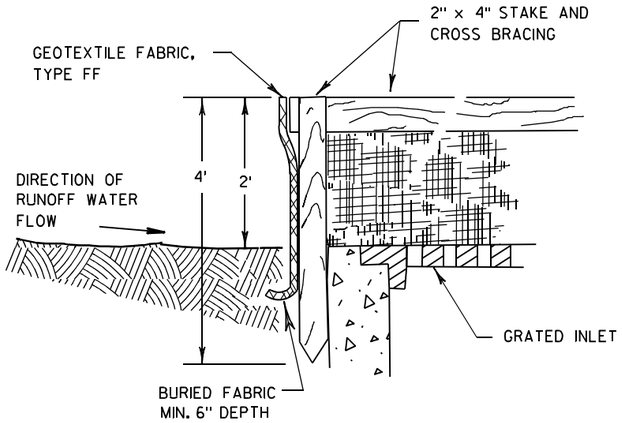

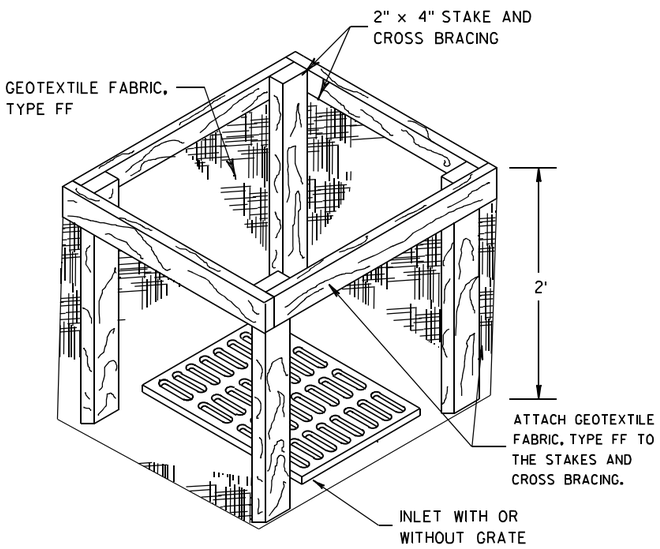

INLET PROTECTION, TYPE A

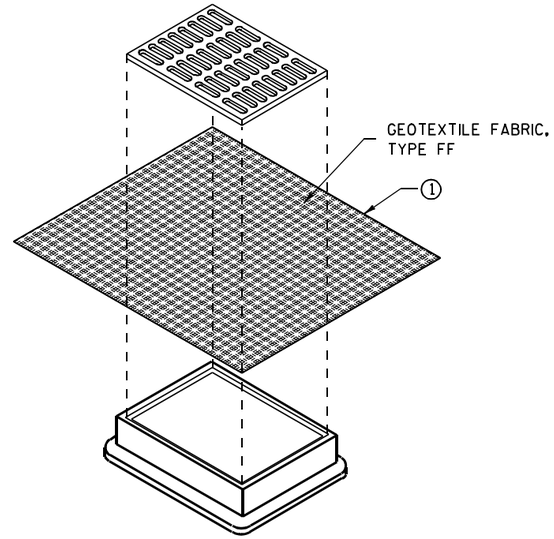

INLET PROTECTION, TYPE B
(WITHOUT CURB BOX)

(CAN BE INSTALLED IN ANY INLET WITHOUT A CURB BOX)

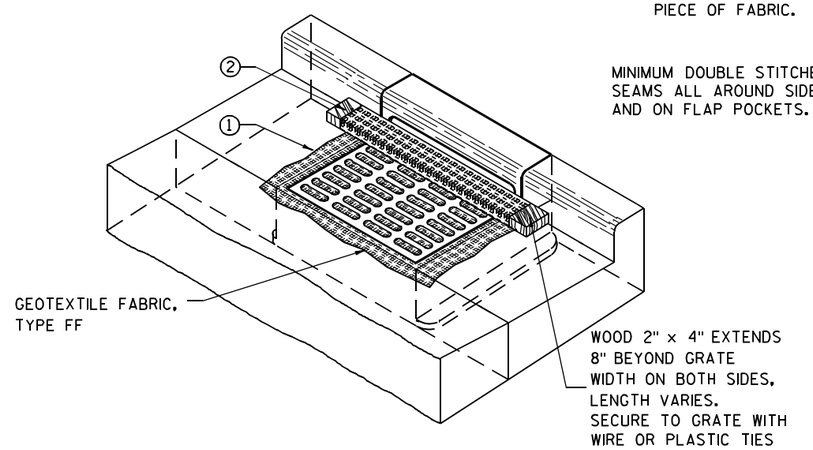

INLET PROTECTION, TYPE C (WITH CURB BOX)

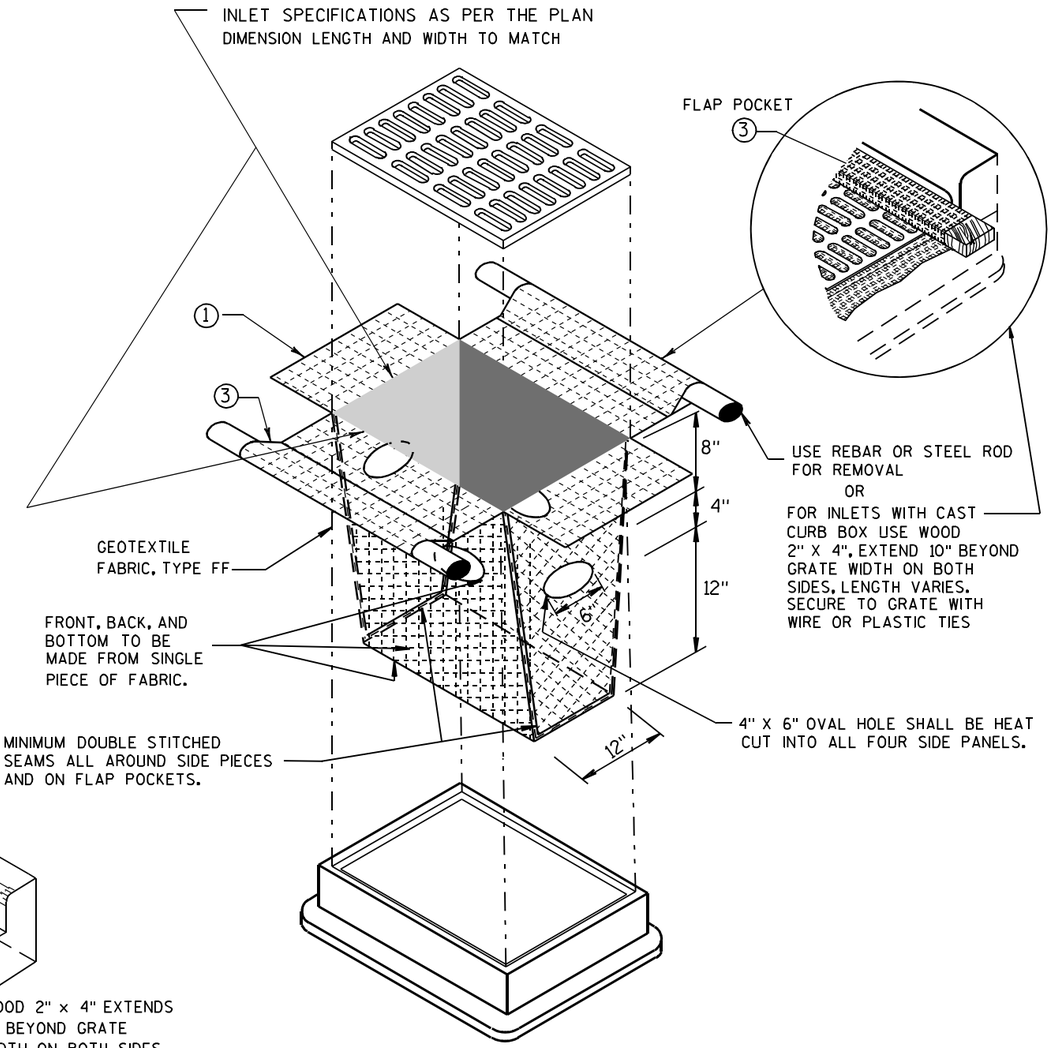

INLET PROTECTION, TYPE D

(CAN BE INSTALLED IN ANY INLET TYPE WITH
OR WITHOUT A CURB BOX AS PER NOTE ②)

GENERAL NOTES

INLET PROTECTION DEVICES SHALL BE MAINTAINED OR REPLACED AT THE DIRECTION OF THE ENGINEER.

MANUFACTURED ALTERNATIVES APPROVED AND LISTED ON THE DEPARTMENT'S EROSION CONTROL PRODUCT ACCEPTABILITY LIST MAY BE SUBSTITUTED.

WHEN REMOVING OR MAINTAINING INLET PROTECTION, CARE SHALL BE TAKEN SO THAT THE SEDIMENT TRAPPED ON THE GEOTEXTILE FABRIC DOES NOT FALL INTO THE INLET. ANY MATERIAL FALLING INTO THE INLET SHALL BE REMOVED IMMEDIATELY.

① FINISHED SIZE, INCLUDING FLAP POCKETS WHERE REQUIRED, SHALL EXTEND A MINIMUM OF 10" AROUND THE PERIMETER TO FACILITATE MAINTENANCE OR REMOVAL.

② FOR INLET PROTECTION, TYPE C (WITH CURB BOX), AN ADDITIONAL 18" OF FABRIC IS WRAPPED AROUND THE WOOD AND SECURED WITH STAPLES. THE WOOD SHALL NOT BLOCK THE ENTIRE HEIGHT OF THE CURB BOX OPENING.

③ FLAP POCKETS SHALL BE LARGE ENOUGH TO ACCEPT WOOD 2X4.

INSTALLATION NOTES

TYPE B & C

TRIM EXCESS FABRIC IN THE FLOW LINE TO WITHIN 3" OF THE GRATE.

THE CONTRACTOR SHALL DEMONSTRATE A METHOD OF MAINTENANCE, USING A SEWN FLAP, HAND HOLDS OR OTHER METHOD TO PREVENT ACCUMULATED SEDIMENT FROM ENTERING THE INLET.

TYPE D

DO NOT INSTALL INLET PROTECTION TYPE D IN INLETS SHALLOWER THAN 30", MEASURED FROM THE BOTTOM OF THE INLET TO THE TOP OF THE GRATE.

TRIM EXCESS FABRIC IN THE FLOW LINE TO WITHIN 3" OF THE GRATE.

THE INSTALLED BAG SHALL HAVE A MINIMUM SIDE CLEARANCE, BETWEEN THE INLET WALLS AND THE BAG, MEASURED AT THE BOTTOM OF THE OVERFLOW HOLES, OF 3". WHERE NECESSARY THE CONTRACTOR SHALL CINCH THE BAG, USING PLASTIC ZIP TIES, TO ACHIEVE THE 3" CLEARANCE. THE TIES SHALL BE PLACED AT A MAXIMUM OF 4" FROM THE BOTTOM OF THE BAG.

INLET PROTECTION
TYPE A, B, C, AND D

STATE OF WISCONSIN
DEPARTMENT OF TRANSPORTATION

APPROVED
10/16/02 — DATE
/S/ Beth Cannestra
CHIEF ROADWAY DEVELOPMENT ENGINEER
FHWA

6

S.D.D. 8 E 10-2

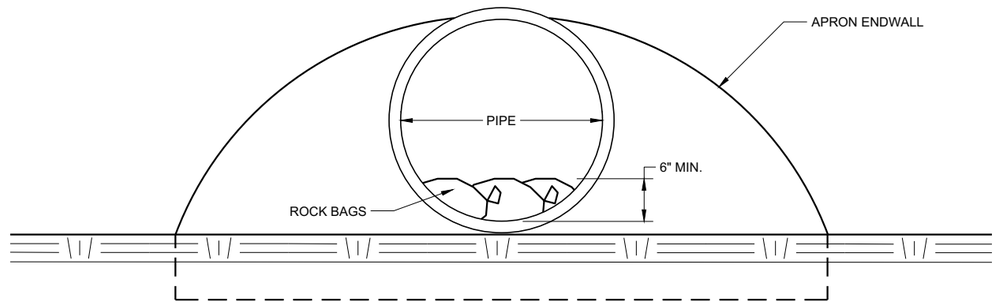

END VIEW

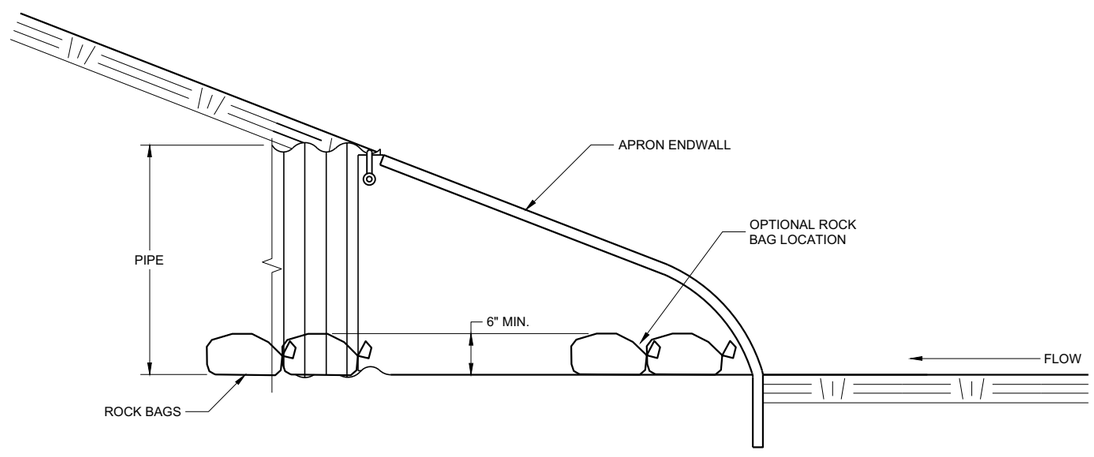

SIDE VIEW

CULVERT PIPE CHECK

(INSTALL ON INLET END ONLY)

CULVERT PIPE CHECK

STATE OF WISCONSIN
DEPARTMENT OF TRANSPORTATION

APPROVED
May 2019 — DATE
/S/ Daniel Schave — EROSION CONTROL ENGI
FHWA

6

6

SDD 08E15 - 01

SDD 08E15 - 01

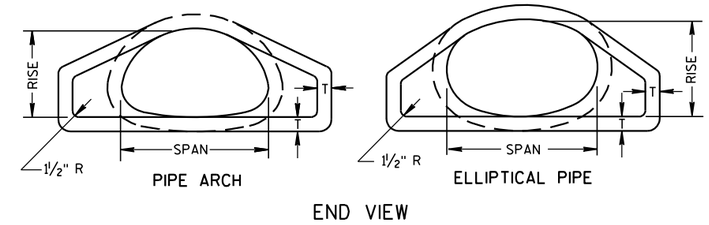

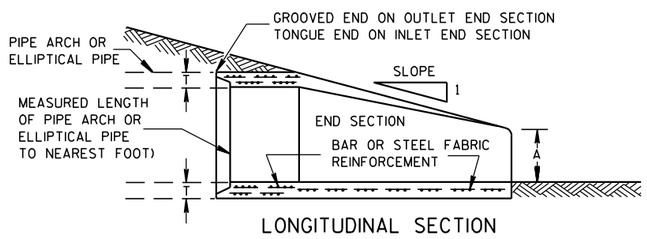

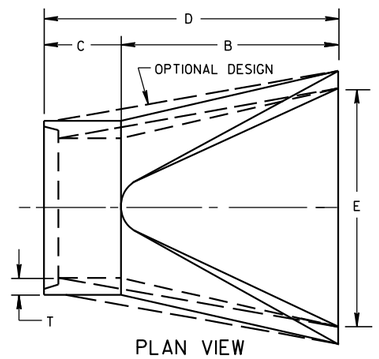

CONCRETE ENDWALLS

2- ⅔" X ½" CORRUGATIONS														
EQUIV. DIA. (Inches)	(Inches)		MIN. THICK. (Inches)		DIMENSIONS (Inches)							APPROX. SLOPE	BODY
	SPAN	RISE	STEEL	ALUM.	A (±1")	B (MAX.)	H (±1")	L (±1½")	L1 ①	L2 ①	W (±2")		
15	17	13	.064	.060	7	9	6	19	14	16	30	2½ to 1	1 Pc.
18	21	15	.064	.060	7	10	6	23	14	19⅜	36	2½ to 1	1 Pc.
21	24	18	.064	.060	8	12	6	28	18	21¾	42	2½ to 1	1 Pc.
24	28	20	.064	.060	9	14	6	32	18	27½	48	2½ to 1	1 Pc.
30	35	24	.079	.075	10	16	6	39	18	37⅝	60	2½ to 1	1 Pc.
36	42	29	.079	.075	12	18	8	46	24	45⅜	75	2½ to 1	1 Pc.
42	49	33	.109	.105	13	21	9	53	24	54¾	85	2½ to 1	2 Pc.
48	57	38	.109	.105	18	26	12	63	24	68	90	2½ to 1	3 Pc.
54	64	43	.109	.105	18	30	12	70	24	72¾	102	2¼ to 1	3 Pc.
60	71	47	.109*	.105*	18	33	12	77	30	82¼	114	2¼ to 1	3 Pc.
66	77	52	.109*	.105*	18	36	12	77	—	—	126	2 to 1	3 Pc.
72	83	57	.109*	.105*	18	39	12	77	—	—	138	2 to 1	3 Pc.

3" X 1" CORRUGATIONS														
EQUIV. DIA. (Inches)	(Inches)		MIN. THICK. (Inches)		DIMENSIONS (Inches)							APPROX. SLOPE	BODY
	SPAN	RISE	STEEL	ALUM.	A (±1")	B (MAX.)	H (±1")	L (±1½")	L1 ①	L2 ①	W (±2")		
48	53	41	.109	.105	18	26	12	63	24	72¾	90	2½ to 1	2 Pc.
54	60	46	.109	.105	18	30	12	70	30	82¼	102	2 to 1	2 Pc.
60	66	51	.109*	.105*	18	33	12	77	—	—	114	1½ to 1	3 Pc.
66	73	55	.109*	.105*	18	36	12	77	—	—	126	1½ to 1	3 Pc.
72	81	59	.109*	.105*	18	39	12	77	—	—	138	2 to 1	3 Pc.
78	87	63	.109*	.105*	22	38	12	77	—	—	148	1½ to 1	3 Pc.
84	95	67	.109*	.105*	22	34	12	77	—	—	162	1½ to 1	3 Pc.
90	103	71	.109*	.105*	22	38	12	77	—	—	174	1½ to 1	3 Pc.
96	112	75	.109*	.105*	24	40	12	77	—	—	174	1½ to 1	3 Pc.

NOTE: ALL SPLICES TO BE LAP RIVETED OR BOLTED.

* EXCEPT CENTER PANEL SEE GENERAL NOTES

REINFORCED CONCRETE PIPE ARCH									
EQUIV. DIA. (Inches)	DIMENSIONS (Inches)								APPROX. SLOPE
	** SPAN	** RISE	T	A	B	C	D	E	
24	29	18	3	8½	39	33	72	48	3 to 1
30	36	22	3½	9½	50	46	96	60	3 to 1
36	44	27	4	11⅛	60	36	96	72	3 to 1
42	51	31	4½	15 13/16	60	36	96	78	3 to 1
48	58	36	5	21	60	36	96	84	3 to 1
54	65	40	5½	25½	60	36	96	90	3 to 1
60	73	45	6	31	60	36	96	96	3 to 1
72	88	54	7	31	60	39	99	120	2 to 1
84	102	62	8	28½	83	19	102	144	2 to 1

REINFORCED CONCRETE ELLIPTICAL PIPE									
EQUIV. DIA. (Inches)	DIMENSIONS (Inches)								APPROX. SLOPE
	** SPAN	** RISE	T	A	B	C	D	E	
24	30	19	3¼	8½	39	33	72	48	3 to 1
30	38	24	3¾	9½	54	18	72	60	3 to 1
36	45	29	4½	11⅛	60	24	84	72	2½ to 1
42	53	34	5	15¾	60	36	96	78	2½ to 1
48	60	38	5½	21	60	36	96	84	2½ to 1
54	68	43	6	25½	60	36	96	90	2½ to 1
60	76	48	6½	30	60	36	96	96	2½ to 1

**NOMINAL SIZE

GENERAL NOTES

DETAILS OF CONSTRUCTION, MATERIALS AND WORKMANSHIP NOT SHOWN ON THIS DRAWING SHALL CONFORM TO THE PERTINENT REQUIREMENTS OF THE STANDARD SPECIFICATIONS AND THE APPLICABLE SPECIAL PROVISIONS.

CONCRETE APRON ENDWALLS MAY NOT BE USED WITH GALVANIZED STEEL OR ALUMINUM CULVERT PIPE OR VISE VERSA. GALVANIZED STEEL OR ALUMINUM APRON ENDWALLS SHALL NORMALLY BE INSTALLED ON CULVERT PIPE OF THE SAME METAL.

ALL THREE PIECE STEEL APRON ENDWALLS FOR 66" X 51" PIPE ARCH AND LARGER SHALL HAVE 0.109" SIDES AND 0.138" CENTER PANELS. ALL THREE PIECE ALUMINUM APRON ENDWALLS FOR 66" X 51" PIPE ARCH AND LARGER SHALL HAVE 0.105" SIDES AND 0.134" CENTER PANELS. THE WIDTH OF CENTER PANELS SHALL BE GREATER THAN 20 PERCENT OF THE PIPE ARCH PERIMETER.

LAP SEAMS SHALL BE TIGHTLY JOINED BY GALVANIZED RIVETS OR BOLTS FOR STEEL UNITS AND ALUMINUM RIVETS AND BOLTS FOR ALUMINUM UNITS. FOR THE 77" X 52" THROUGH 112" X 75" APRON ENDWALL SIZES, THE REINFORCED EDGES AND CENTER PANEL SEAMS SHALL BE FURTHER REINFORCED WITH GALVANIZED STEEL OR ALUMINUM STIFFENER ANGLES. THE ANGLES SHALL BE ATTACHED BY GALVANIZED NUTS AND BOLTS FOR STEEL UNITS AND ALUMINUM NUTS AND BOLTS FOR ALUMINUM UNITS.

WHERE TWO OR MORE PIPES WITH APRON ENDWALLS ARE LAID ADJACENT TO EACH OTHER, THEY SHALL BE SEPARATED BY A DISTANCE SUFFICIENT TO PROVIDE A MINIMUM CLEARANCE OF 6 INCHES BETWEEN APRON ENDWALLS.

① FOR PIPE ARCH SIZES UP TO 73" X 55" A 180° ROLLED EDGE MAY BE USED INSTEAD OF STEEL ROD REINFORCEMENT. SEE SECTION A-A.

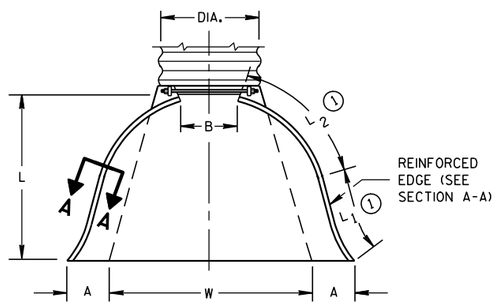

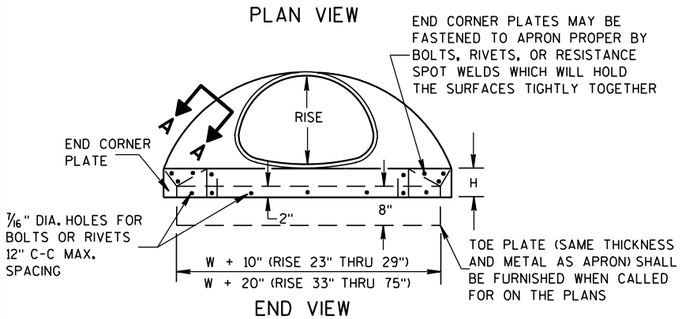

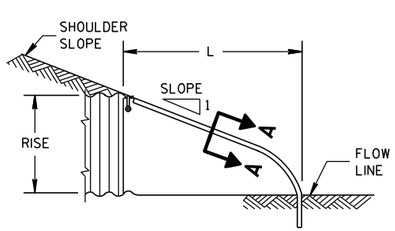

SIDE ELEVATION

METAL ENDWALLS

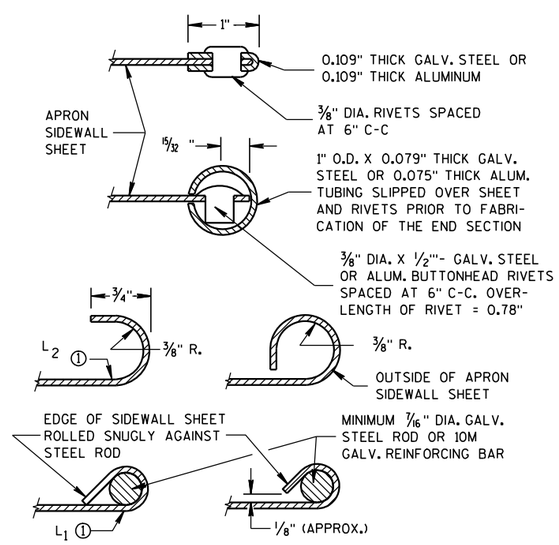

SECTION A-A

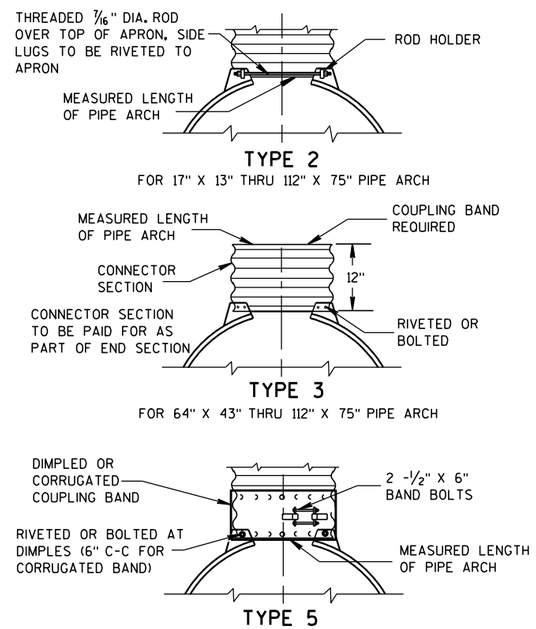

NOTE: DIMPLED BAND FITS OVER OUTSIDE OF ENDWALL, AND CORRUGATED BAND FITS INSIDE ENDWALL.

CONNECTION DETAILS

APRON ENDWALLS FOR PIPE ARCH AND ELLIPTICAL PIPE

STATE OF WISCONSIN
DEPARTMENT OF TRANSPORTATION

APPROVED

11/30/94 — DATE

/S/ Rory L. Rhinesmith — CHIEF ROADWAY DEVELOPMENT ENGINEER

FHWA

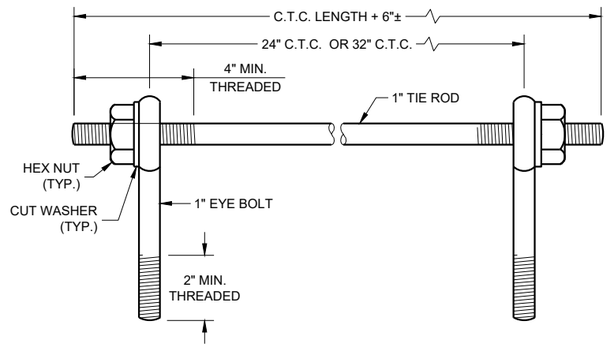

EYE BOLTS AND TIE ROD

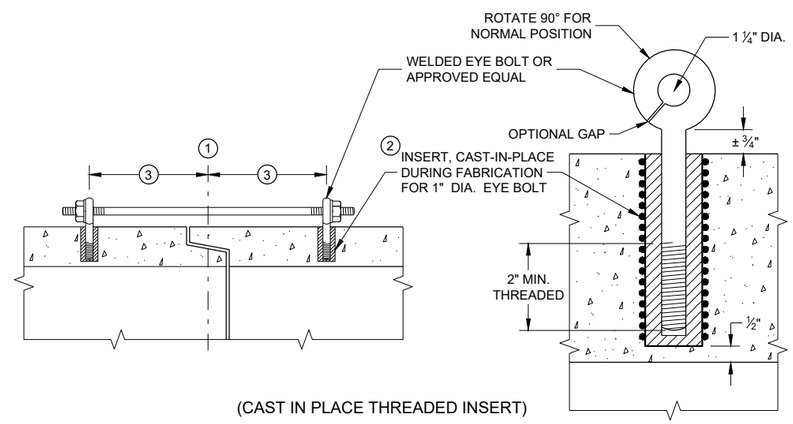

(CAST IN PLACE THREADED INSERT)

LONGITUDINAL SECTIONS

EYE BOLT AND TIE ROD ASSEMBLY (ALTERNATE NO. 1)

GENERAL NOTES

DETAILS OF CONSTRUCTION, MATERIALS, AND WORKMANSHIP NOT SHOWN ON THIS DRAWING SHALL CONFORM TO THE PERTINENT REQUIREMENTS OF THE STANDARD SPECIFICATIONS AND APPLICABLE SPECIAL PROVISIONS.

CONCRETE CULVERT AND STORM SEWER PIPE SHALL BE TIED TOGETHER IN THE MANNER ILLUSTRATED BY THIS DETAIL AT LOCATIONS DESIGNATED IN THE STANDARD SPECIFICATIONS AND THE PLAN. THE CONTRACTOR MAY USE EITHER ALTERNATE 1, 2 OR 3 FOR DRAINAGE STRUCTURES. ONLY ALTERNATE 1 AND 3 MAY BE USED FOR CATTLE PASSES, UNLESS OTHERWISE STATED IN THE CONTRACT. THE MATERIALS, FABRICATION AND WORK NECESSARY TO TIE THE PIPE BY THIS DETAIL WILL BE CONSIDERED INCIDENTAL TO THE PIPE AND APRON ENDWALLS IF REQUIRED.

DETAILED DRAWINGS FOR PROPOSED ALTERNATE DESIGNS FOR JOINT TIES SHALL BE SUBMITTED TO THE ENGINEER FOR APPROVAL.

JOINT TIES TO BE HOT-DIP GALVANIZED PER ASTM A 153.

1. CENTER LINE OF TONGUE AND GROOVE OR BELL AND SPIGOT JOINTS.
2. THE INSIDE OF THE THREADED INSERTS SHALL BE CLEAN TO ALLOW THE INSERTION OF THREADED EYE BOLTS.
3. HOLES SHALL BE CAST-IN-PLACE OR DRILLED PER THE APPLICABLE DETAIL, AND EQUAL DISTANCE FROM THE CENTERLINE OF THE JOINT.
4. BOLT PROJECTION INSIDE OF PIPE SHALL NOT EXCEED 2 INCHES.
5. OPENING TO BE ROD DIAMETER PLUS 1 INCH.
6. LENGTH ADEQUATE TO EXTEND TO WITHIN ½ INCH OF THE INNER SURFACE OF THE PIPE.
7. EYE BOLT LENGTH DETERMINED BY WALL THICKNESS, BELL THICKNESS AND BOLT PROJECTION INSIDE PIPE.

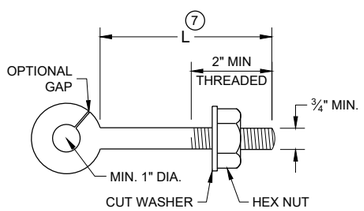

EYE BOLT 7

NOTE: TWO EYE BOLTS MAY BE USED WITH A 30" OR 38" LONG THREADED ROD IN LIEU OF THE 90° BENT TIE ROD.

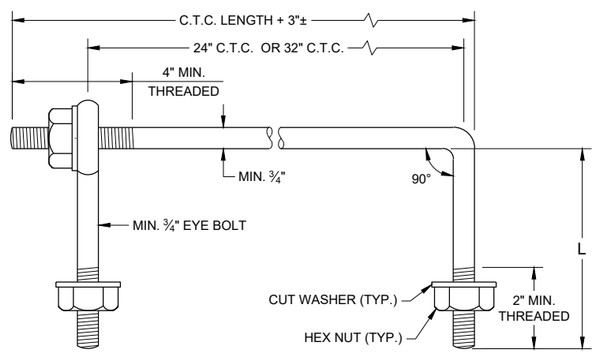

EYE BOLT AND TIE ROD

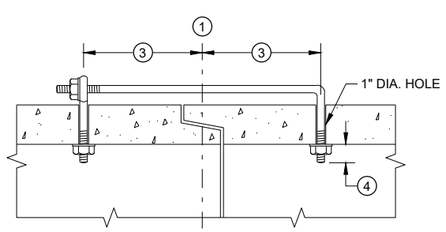

(TONGUE AND GROOVE PIPE)

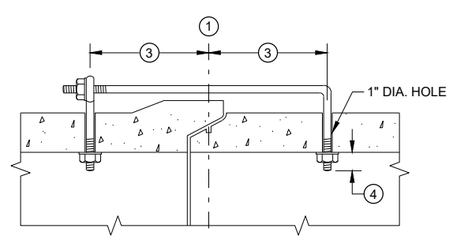

(MODIFIED BELL PIPE)

LONGITUDINAL SECTION

(JOINT TIES FOR 18" TO 66" DIA. CONCRETE PIPE)

EYE BOLT AND TIE ROD ASSEMBLY (ALTERNATE NO. 2)

ADJUSTABLE TIE ROD TABLE

PIPE DIAMETER	TIE ROD DIAMETER	D	L_1	N
12 - 60	⅝	⅝	5	½
66 - 84	¾	¾	5	½
90 - 144	1	1	7	1 7/16

DIMENSIONS SHOWN ARE IN INCHES

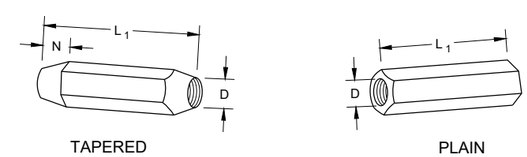

TAPERED PLAIN

RIGHT AND LEFT THREADS

SLEEVE NUTS

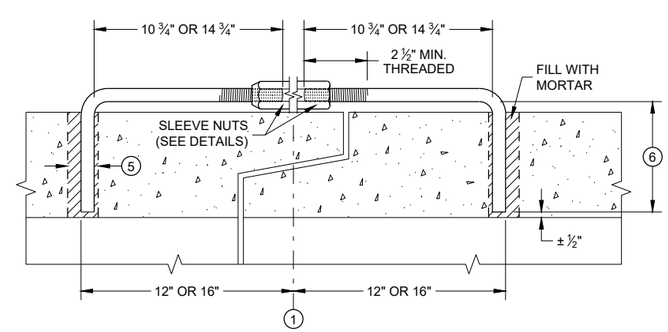

LONGITUDINAL SECTION

ADJUSTABLE TIE ROD (ALTERNATE NO. 3)

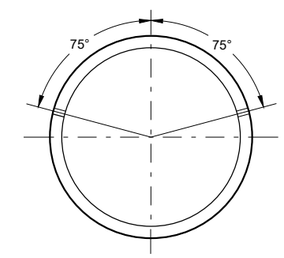

PLACEMENT OF (2) CAST-IN-PLACE INSERTS OR HOLES DURING FABRICATION FOR PIPE SECTIONS REQUIRING TIE RODS

TRANSVERSE SECTION

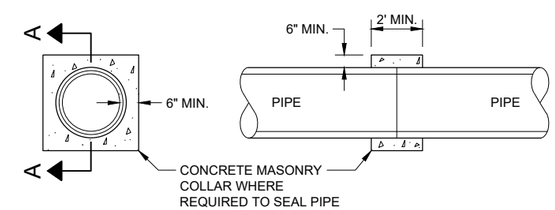

SECTION A - A

CONCRETE COLLAR DETAIL

JOINT TIES FOR CONCRETE PIPE AND CONCRETE COLLAR DETAIL

STATE OF WISCONSIN
DEPARTMENT OF TRANSPORTATION

APPROVED
November 2021 — DATE
/S/ Rodney Taylor — ROADWAY STANDARDS DEVE ENGINEER
FHWA

6

SDD 08F04 - 08

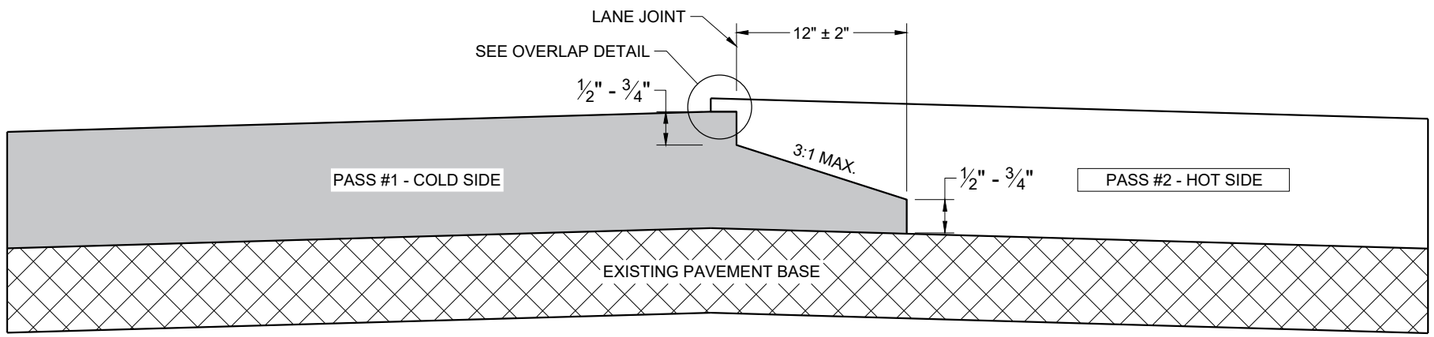

TYPICAL PAVEMENT CROSS SECTION
NOTCHED WEDGE JOINT

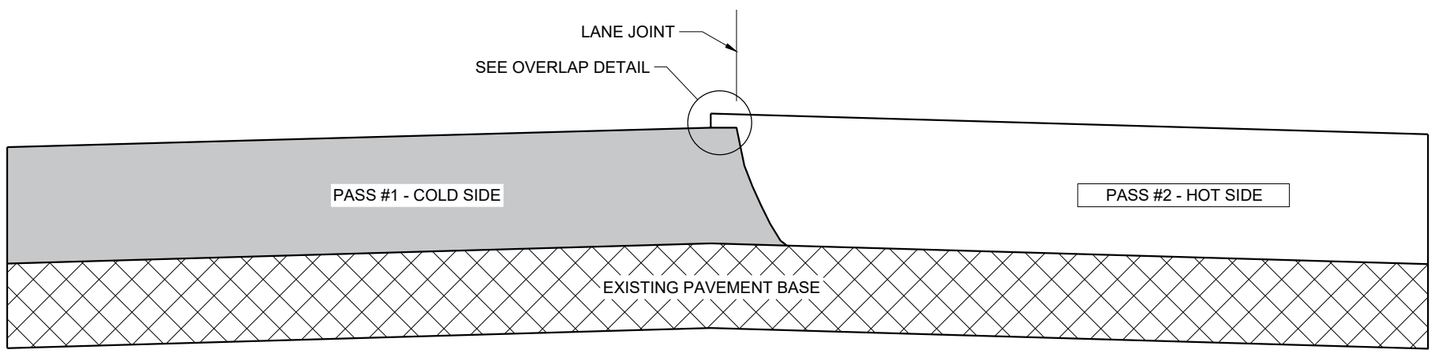

TYPICAL PAVEMENT CROSS SECTION
VERTICAL JOINT

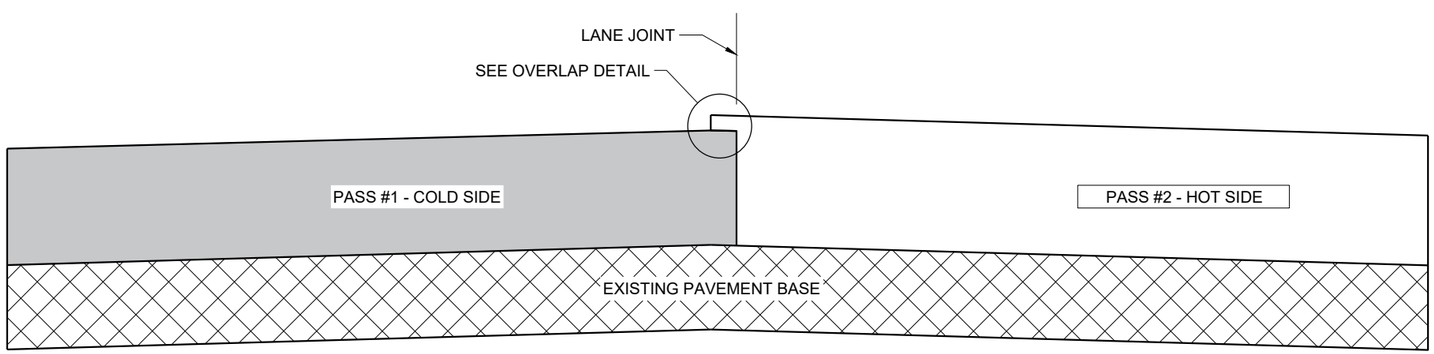

TYPICAL PAVEMENT CROSS SECTION
VERTICAL JOINT (MILLED)

GENERAL NOTES

IN ADDITION TO THE DETAILS PROVIDED IN THIS DRAWING, CONFORM TO STANDARD SPECIFICATION 450.3.2.8 FOR WHEN A NOTCHED WEDGE JOINT IS REQUIRED AND FOR GENERAL JOINT CONSTRUCTION REQUIREMENTS.

FOR ALL LONGITUDINAL JOINTS, ENSURE THE PAVER SCREED OVERLAPS THE PREVIOUSLY PLACED PAVEMENT BY 1" ± 0.5" AND THE HOT SIDE OF THE JOINT REMAINS HIGHER THAN THE COLD SIDE BY APPROXIMATELY 0.1" AFTER FINAL COMPACTION. (IT WILL BE FLUSH WHEN PAVING IN ECHELON.)

ONLY REMOVE THE LONGITUDINAL NOTCHED WEDGE JOINT FOR SMA PAVEMENT OR AS DIRECTED BY THE ENGINEER TO ADDRESS SPECIFIC LENGTHS OF JOINT DAMAGED BY TRAFFIC.

WHEN MILLING BACK OR REMOVING ANY LONGITUDINAL JOINT, LIMIT THE MATERIAL REMOVED TO 2" FROM THE TOP NOTCH OR FROM THE VERTICAL JOINT EDGE ON THE COLD SIDE OF THE JOINT.

USE LONGITUDINAL MILLED JOINT AS PLANS SHOW OR THE AS THE ENGINEER DIRECTS.

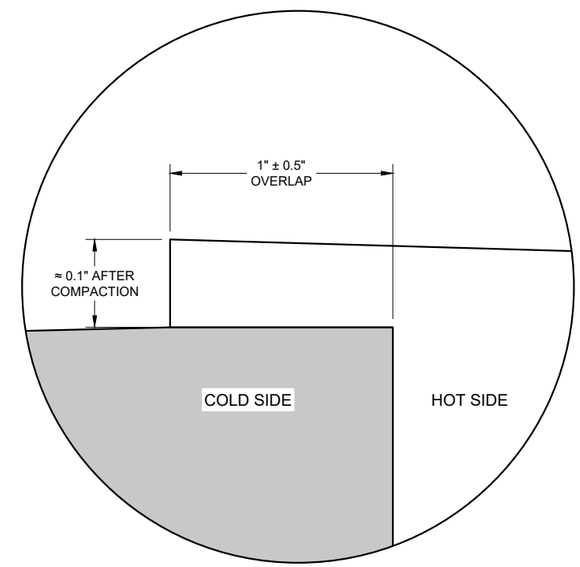

OVERLAP DETAIL (TYPICAL)

6

6

SDD 13C19 - 03

SDD 13C19 - 03

HMA LONGITUDINAL JOINTS

STATE OF WISCONSIN
DEPARTMENT OF TRANSPORTATION

APPROVED
November 2020 /S/ Steven Hefel
DATE HMA PAVEMENT ENGIN

FHWA

1. WOOD OR STEEL POSTS (w6X9 OR w6X8.5) MAY BE USED. DO NOT INTERMIX WOOD AND STEEL POSTS. INSTALL STEEL POSTS WITH HOLES ON APPROACHING TRAFFIC SIDE.
2. USE WOOD OR APPROVED PLASTIC BLOCKOUTS. WOOD BLOCKOUTS MAY BE CONSTRUCTED OUT OF TWO OR MORE WOOD BLOCKOUTS. SEE ALTERNATE WOOD BLOCKOUT DETAIL. DIMENSIONS OF APPROVED PLASTIC BLOCKOUTS MAY VARY.
3. IF ROCK IS ENCOUNTERED DURING EXCAVATION, PROVIDE A HOLE 12 INCHES IN DIAMETER EXTENDING 20 INCHES DEEP INTO THE ROCK. PLACE APPROXIMATELY 2 1/2" INCHES OF GRANULAR MATERIAL IN THE BOTTOM OF THE HOLE. CUT THE POSTS THE TO LENGTH AMD INSTALL. BACKFILL WITH EXCAVATED MATERIAL AND COMPACT. BACKFILL IS TO BE FREE OF LARGE ROCKS.
4. WHEN THE DISTANCE FROM BACK OF POST TO SHOULDER HINGE POINT IS LESS THAN 2 FEET INSTALL LONGER POST AT HALF POST SPACING (K).
5. FOR NEW MGS INSTALLATION TOP OF W-BEAM RAIL TOLERANCE IS ±1". FOR EXISTING MGS INSTALLATION TOP OF W-BEAM IS BETWEEN 27 ¾" TO 32".
6. WHEN USING STEEL POST AND WOOD BLOCKOUTS INSTALL FOUR 16D GALVANIZED NAILS. INSTALL NAILS AT THE BACK CORNERS OF THE BLOCK AND BEND THE NAILS OVER THE FLANGE OF THE STEEL POST.
7. TOTAL POST LENGTH FOR TYPE K IS 7' - 0". TOTAL POST LENGTH FOR OTHER MGS TYPES IS 6' - 0".

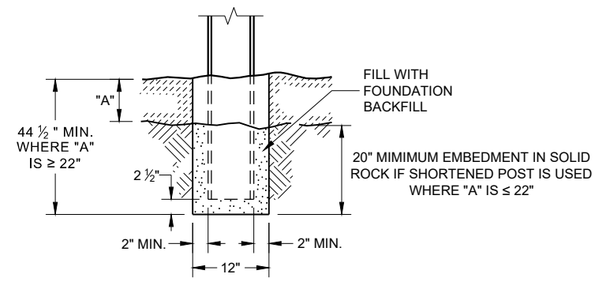

END VIEW
SETTING STEEL OR WOOD POST IN ROCK (3)

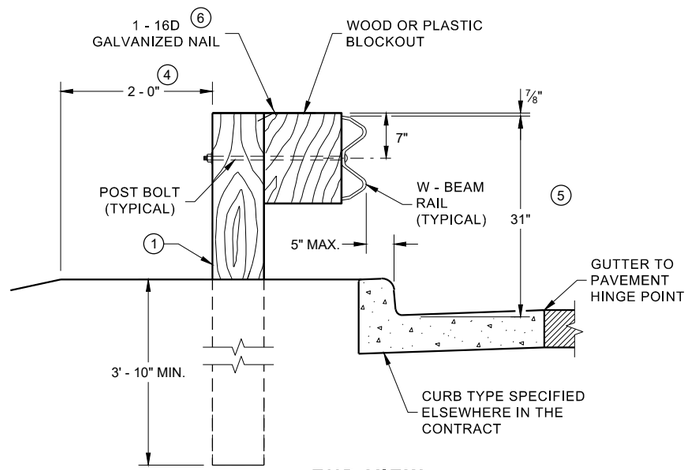

END VIEW
LOCATED ALONG A CURBED ROADWAY

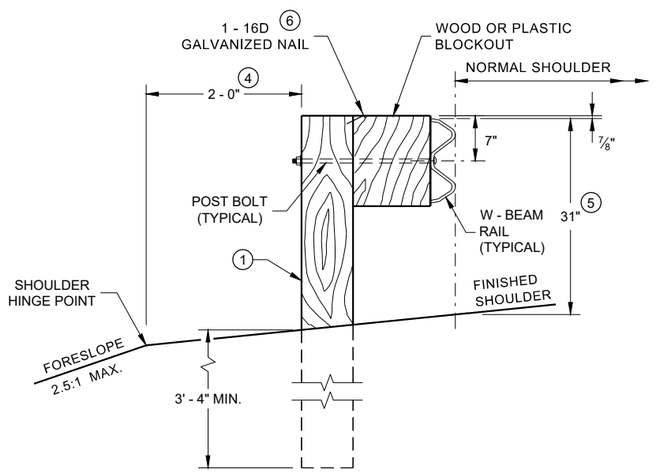

END VIEW
LOCATED ALONG A ROADWAY SHOULDER STANDARD INSTALLATION

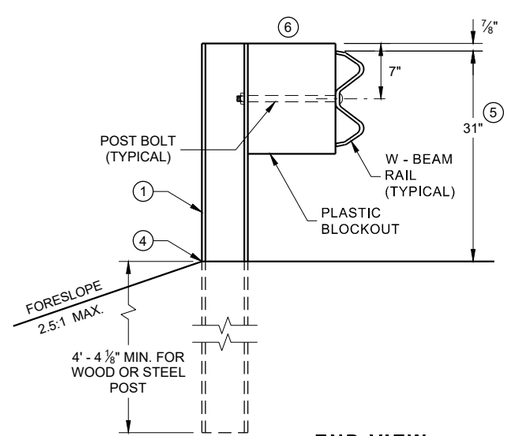

END VIEW
MGS LONGER POST AT HALFPOST SPACING W BEAM (K)

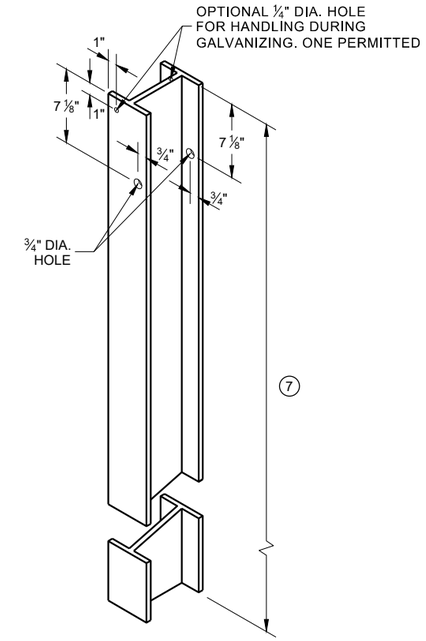

STEEL POST & HOLE PUNCHING DETAIL (W 6 X 9) (1)

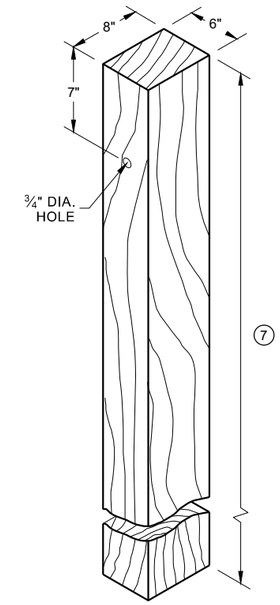

WOOD POST (6" X 8") NOMINAL (1)

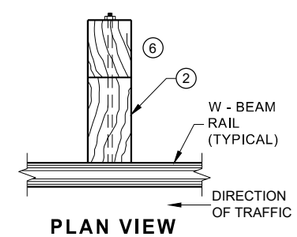

PLAN VIEW WOOD POST, BLOCKOUT & BEAM

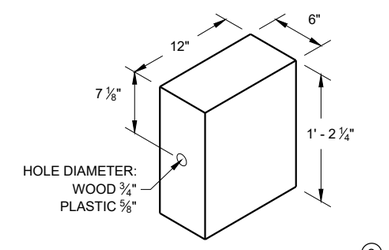

WOOD OR PLASTIC BLOCKOUT (2)

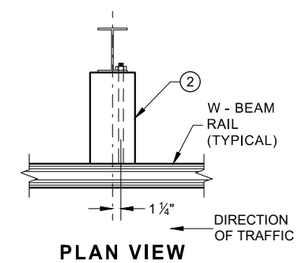

PLAN VIEW STEEL POST, PLASTIC BLOCKOUT & BEAM

MIDWEST GUARDRAIL SYSTEM (MGS) GUARDRAIL

STATE OF WISCONSIN
DEPARTMENT OF TRANSPORTA

6

SDD 14B42 - 07a

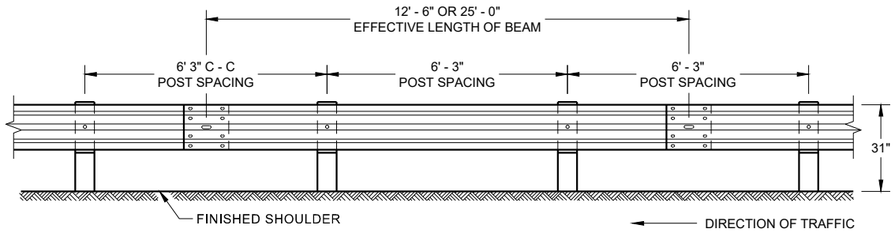

FRONT VIEW
POST SPACING STANDARD INSTALLATION

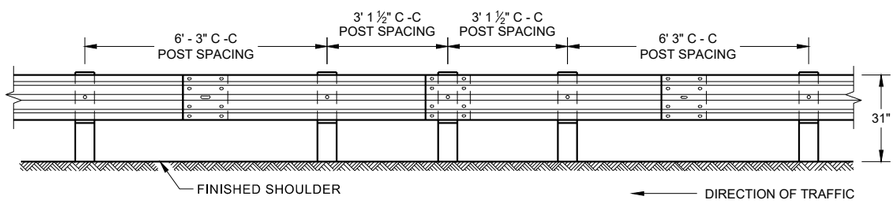

FRONT VIEW
HALF POST SPACING (HS) AND HALF POST SPACING WITH LONGER POSTS (K)

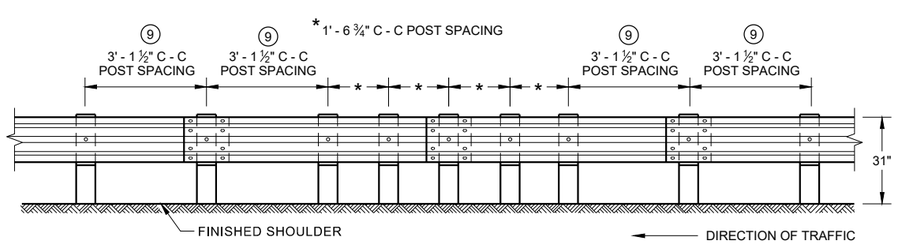

FRONT VIEW
QUARTER POST SPACING (QS)

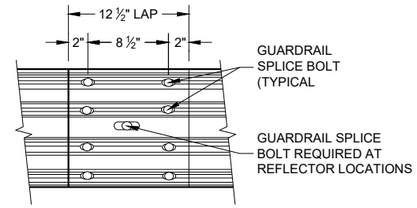

FRONT VIEW
MID-SPAN BEAM SPLICE

GENERAL NOTES

8 DO NOT INSTALL REFLECTORS ON THE FIRST 50 FEET OF THE APPROACH END OF THE ENERGY ABSORBING TERMINAL.

9 25 FEET OF HALF POST SPACING IS REQUIRED ON APPROACH AND DEPARTURE ENDS OF QUARTER POST SPACING.

POST BOLTS ARE A ⅝" DIAMETER ASTM A307 GUARDRAIL BOLT. A POST BOLT REQUIRES ⅝" DIAMETER A563A DOUBLE RECESSED (DR) HEAVY HEX NUT AND ⅝" DIAMETER F844 FLAT WASHER. POST BOLTS MAY BE LONGER IF MULTIPLE BLOCKOUTS ARE BEING USED.

GUARD RAIL SPLICE BOLTS ARE A ⅝" DIAMETER ASTM A307 GUARDRAIL HEAD BOLT. A GUARDRAIL SPLICE BOLT REQUIRES ⅝" DIAMETER A563A DOUBLE RECESSED (DR) HEAVY HEX NUT.

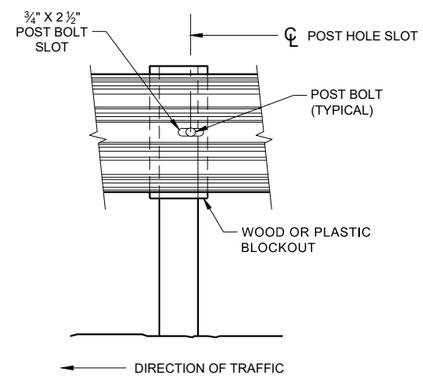

FRONT VIEW AT STEEL POST

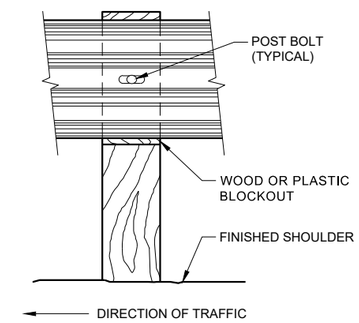

FRONT VIEW AT WOOD POST

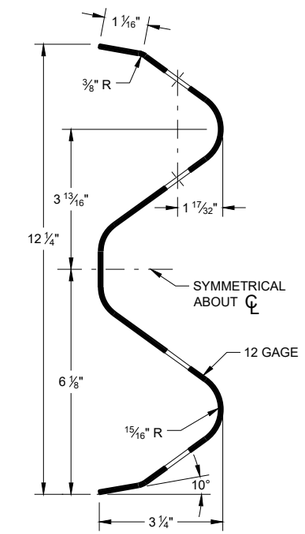

SECTION THRU W-BEAM RAIL

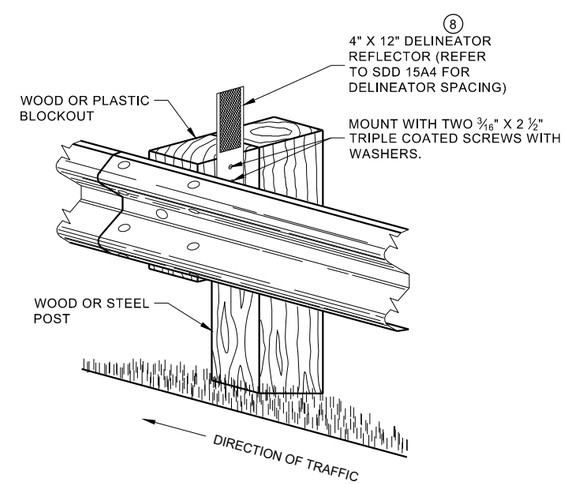

ONE SIDED REFLECTOR DETAIL AND TYPICAL INSTALLATION

MIDWEST GUARDRAIL SYSTEM (MGS) GUARDRAIL

STATE OF WISCONSIN
DEPARTMENT OF TRANSPORTA

6

6

SDD 14B42 - 07b

SDD 14B42 - 07b

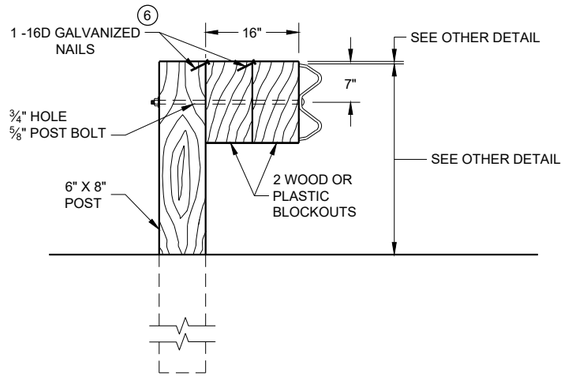

DETAIL FOR 16" BLOCKOUT DEPTH

IT IS ACCEPTABLE TO USE BLOCKOUTS UP TO 16" DEEP TO INCREASE THE POST OFFSET TO AVOID UNDERGROUND OBSTACLES. THERE IS NO LIMIT TO THE NUMBER OF POSTS THAT CAN HAVE ADDITIONAL BLOCKOUTS UP TO 16" DEEP.

NOTE:

1. ALL FILLETS SHALL HAVE A MINIMUM RADIUS OF 3/16".
2. IF THE BOLT EXTENDS MORE THAN ¼" FROM THE NUT THE BOLT SHOULD BE TRIMMED BACK.

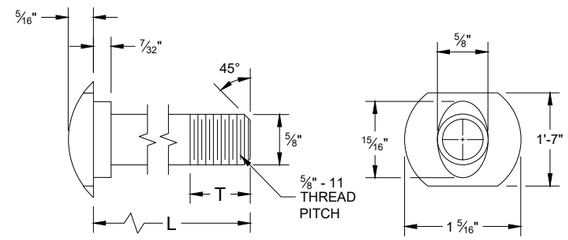

POST BOLT TABLE

L	T (MIN.)
1 ¼"	1 ⅛"
2"	1 ¾"
10"	4"
14"	4 1/16"
18"	4"
21"	4 1/16"
25"	4"

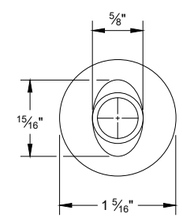

ALTERNATE BOLT HEAD

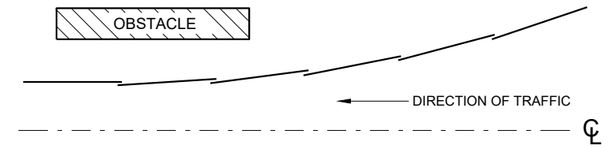

PLAN VIEW
BEAM LAPPING DETAIL

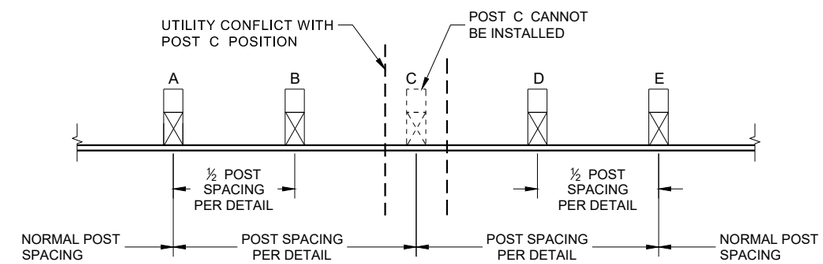

POST DRIVING FOR CONTINUOUS UNDERGROUND OBSTRUCTION

6

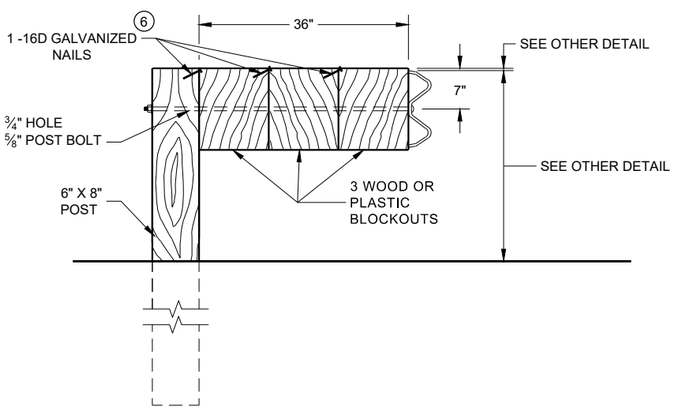

DETAIL FOR 36" BLOCKOUT DEPTH

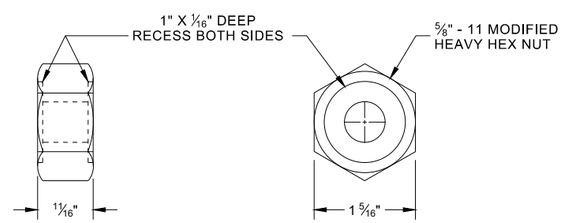

POST BOLT, SPLICE BOLT AND RECESS NUT

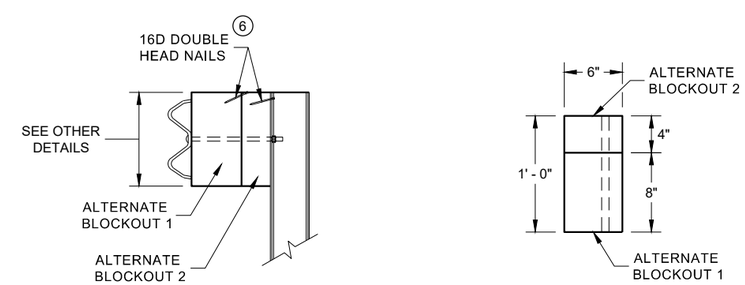

SIDE VIEW

PLAN VIEW

ALTERNATE WOOD BLOCKOUT DETAIL

NOTES: UNDER SPECIAL CIRCUMSTANCES, SUCH AS AVOIDING OBSTACLES THAT ARE NOT RELOCATED, IT IS ACCEPTABLE TO INSTALL ADDITIONAL BLOCKOUTS TO OBTAIN UP TO 36" DEPTH FOR ONE OR TWO POSTS IN A SECTION OF GUARDRAIL.

DO NOT USE 16" OR 36" BLOCKOUTS IF IT CAUSES THE POST TO BE DRIVEN BEYOND SHOULDER HINGE POINT OR CAUSES A FIXED OBJECT TO BE WITHIN THE DEFLECTION DISTANCE OF THE BARRIER.

(6) WHEN USING STEEL POST AD WOOD BLOCKOUTS, INSTALL FOUR 16D GALVANIZED NAILS. INSTALL NAILS AT THE BACK CORNERS OF THE BLOCK AND BEND THE NAILS OVER THE FLANGE OF THE STEEL POST.

MIDWEST GUARDRAIL SYSTEM (MGS) GUARDRAIL

STATE OF WISCONSIN
DEPARTMENT OF TRANSPORTA

SDD 14B42 - 07c

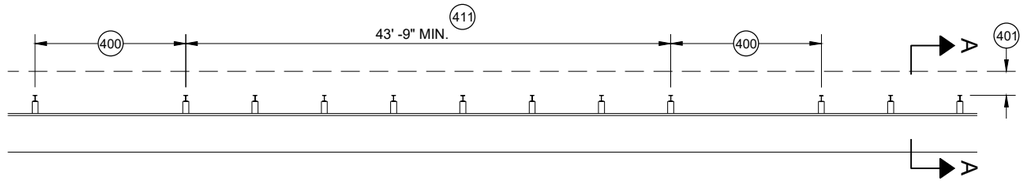

MISSING POST IN MGS GUARDRAIL

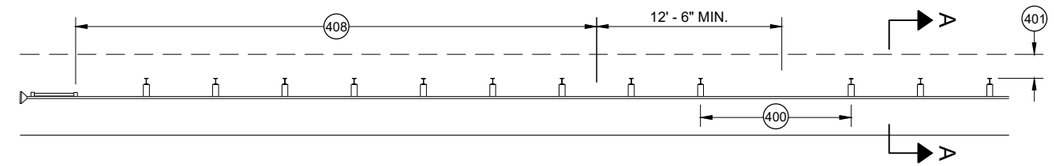

MISSING POST IN MGS GUARDRAIL NEAR EAT

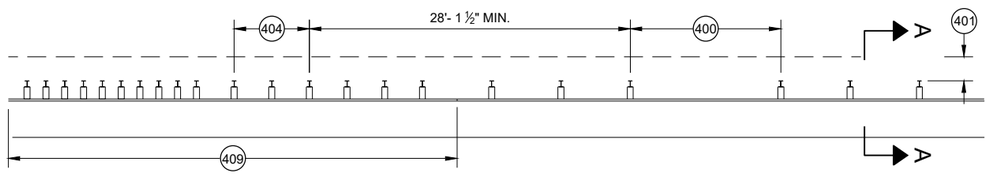

MISSING POST IN MGS GUARDRAIL NEAR AN APPROACH TRANSITION

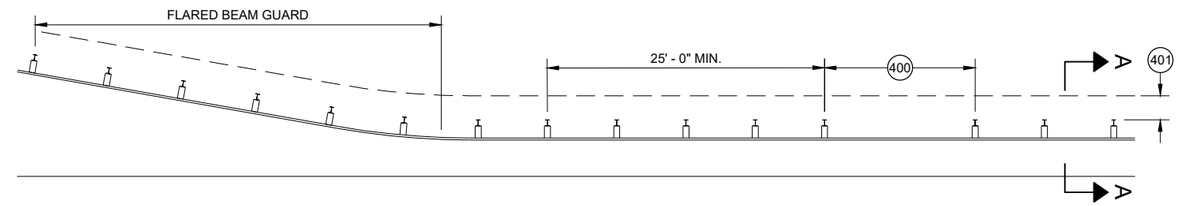

MISSING POST IN MGS GUARDRAIL NEAR FLARED BEAM GUARD

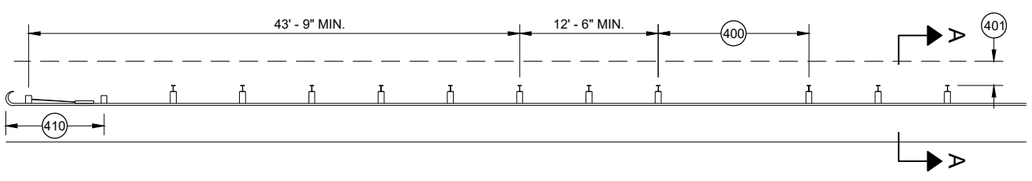

MISSING POST IN MGS GUARDRAIL NEAR A TYPE 2 END TERMINAL

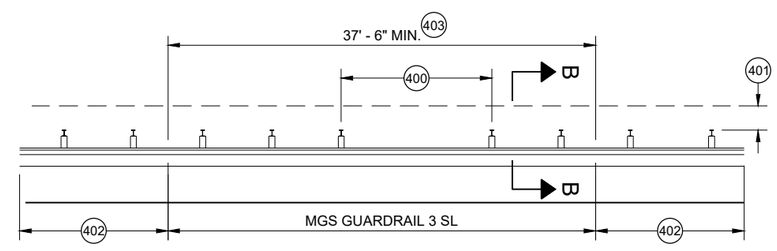

MISSING POST IN SHORT SPAN MGS GUARDRAIL NEAR CURB (SL) 407

400 MAX SPAN 12' - 6"
401 2' MIN.
402 MGS GUARDRAIL 3
403 NESTING BEAM GUARD
404 ASYMMETRIC TRANSITION
405 SOIL WELL DRAINED AND COMPACTED
406 SEE OTHER DRAWINGS IN THIS SDD
407 SEE OTHER DRAWINGS FOR MIN. SPACING BETWEEN SPANS
408 SEE SDD 14B44
409 SEE SDD 14B45
410 SEE SDD 14B47
411 MINIMUM DISTANCE BETWEEN MISSING POST SPANS.

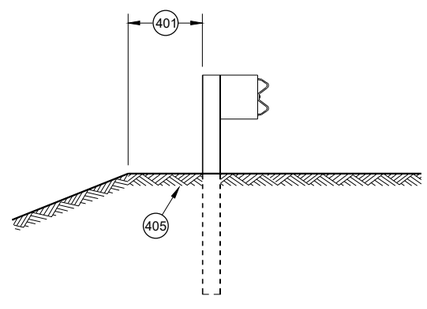

SECTION A - A 406

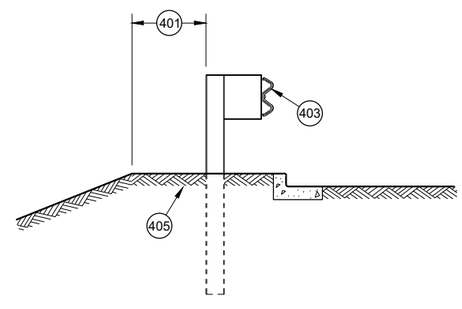

SECTION B - B 406

MIDWEST GUARDRAIL SYSTEM (MGS) GUARDRAIL

STATE OF WISCONSIN
DEPARTMENT OF TRANSPORTATION

APPROVED
May 2021 — DATE
/S/ Rodney Taylor — ROADWAY STANDARDS DEVE UNIT SUPERVISOR
FHWA

6

SDD 14B42 - 07d

GENERAL NOTES

(A) THE SLOPE IN THE AREA BOUNDED BY THE GRADELINE, THE HINGE POINT LINE (HPL) AND THE CLEAR ZONE LIMITS (CZL) SHALL BE 4:1 OR FLATTER.

(B) AFTER FINAL ASSEMBLY, RECHECK CABLE TO BE SURE IT IS TAUT AND HAS NOT RELAXED

(C) DIFFERENT MANUFACTURERS REQUIRE DIFFERENT PERFORATED W - BEAM RAIL END PANELS. SEE MANUFACTURER'S INFORMATION.

(D) ATTACH ALUMINUM SHEET TO E.A.T. HEAD USING 4 STAINLESS STEEL SELF - TAPPING SCREWS. ONE SCREW PER CORNER.

(E) HARDWARE MAY VARY BETWEEN MANUFACTURER. SEE MANUFACTURER'S DRAWING FOR INFORMATION.

DIMENSIONS MAY VARY, MANUFACTURER'S INFORMATION.

SEE SDD 14B42 FOR MORE INFORMATION.

* DO NOT ATTACH BLOCKOUTS TO POST 1 AND 2.

DO NOT INSTALL REFLECTORS ON THE FIRST 50 FEET OF THE APPROACH END OF THE ENERGY ABSORBING TERMINAL.

SEE MANUFACTURER'S DRAWING FOR SPLICE LOCATION, HARDWARE DIMENSIONS AND INSTALLATION INSTRUCTIONS.

THE CENTER OF THE UPPER 3 ½" DIAMETER HOLE ON POST NUMBER 3 THROUGH POST 9 IS TO BE FLUSH WITH THE GROUND LINE UP TO A MAXIMUM OF 2" ABOVE GROUND LINE. WOOD BLOCKS ON POSTS NUMBERED 3 THROUGH 9 MAY BE ADJUSTED UP TO 3" ABOVE THE TOP OF POST.

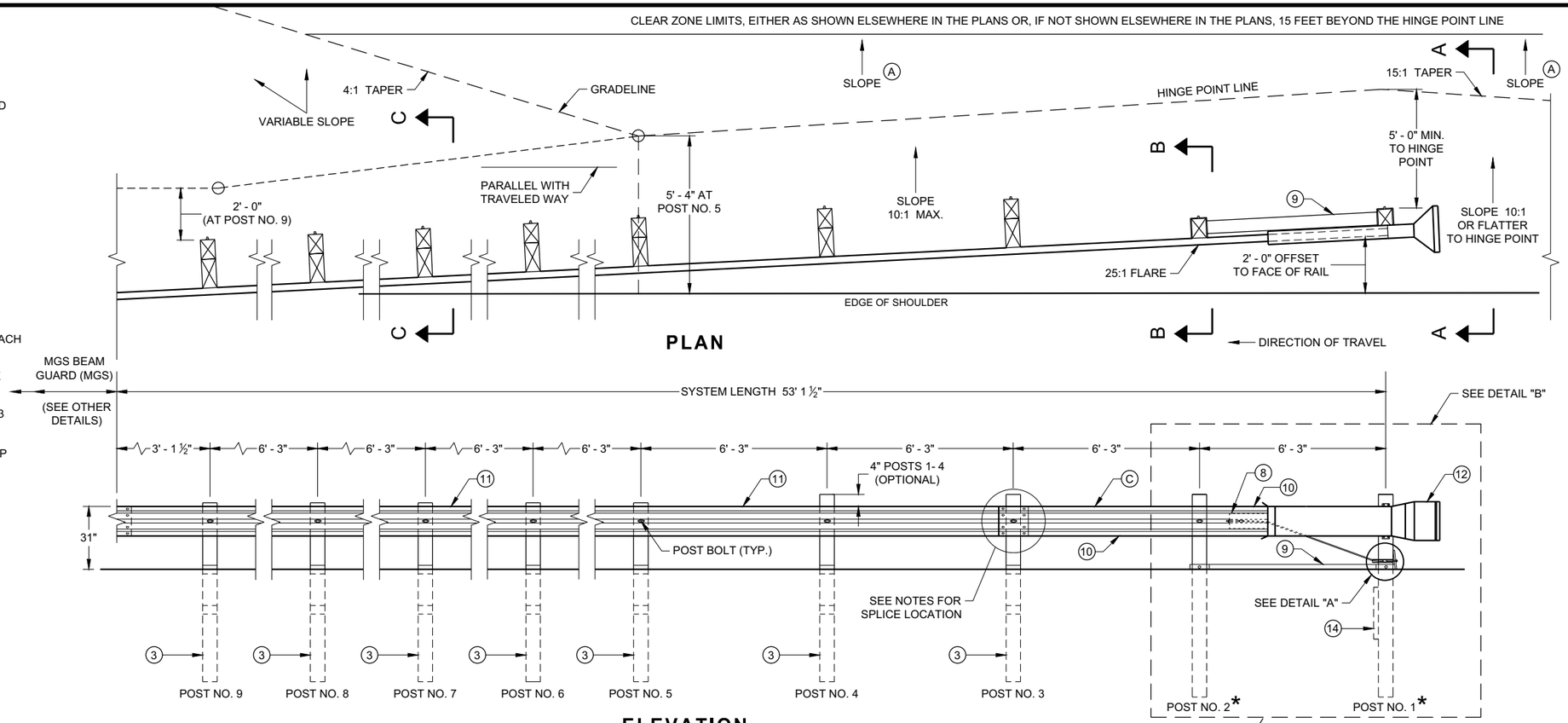

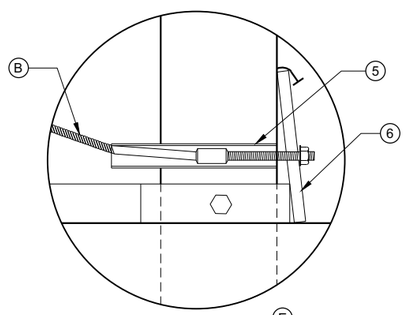

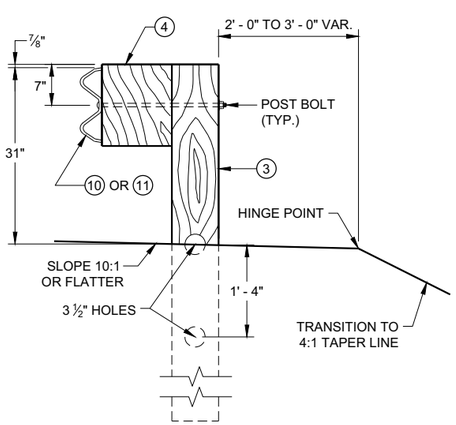

SECTION C - C
TYPICAL AT POST NOS. 3 - 9

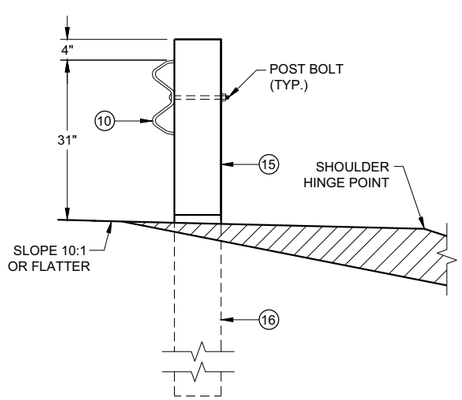

SECTION B - B
TYPICAL AT POST NO. 2*

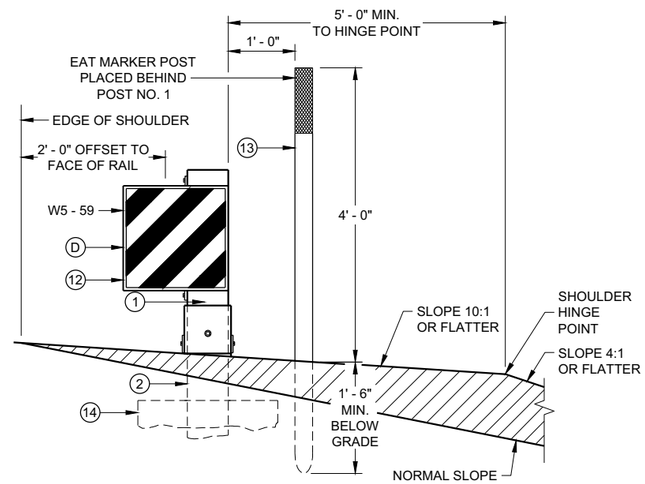

SECTION A - A
TYPICAL AT POST NO. 1*

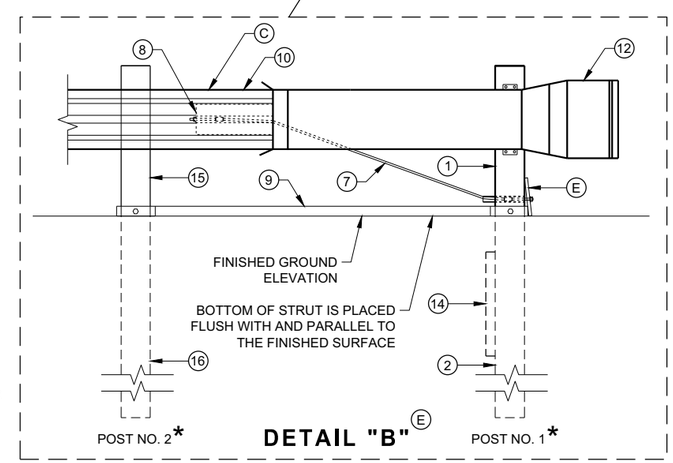

MIDWEST GUARDRAIL SYSTEM ENERGY ABSORBING TERMINAL (MGS)

STATE OF WISCONSIN
DEPARTMENT OF TRANSPORTATION

6

6

SDD 14B44 - 04a

SDD 14B44 - 04a

BILL OF MATERIALS

PART NO.	DESCRIPTION MATERIALS PROVIDED BY MGS EAT MANUFACTURER. SEE MANUGACTURER'S DETAILS FOR MORE INFORMATION.
1	UPPER POST NO. 1 6" X 6" TUBE
2	LOWER POST NO. 1
3	WOOD CRT
4	WOOD BLOCKOUT
5	PIPE SLEEVE
6	BEARING PLATE
7	BCT CABLE ASSEMBLY
8	ANCHOR CABLE BOX
9	GROUND STRUT
10	PERFORATED W-BEAM RAIL END PANEL, 12'-6" LONG.
11	STANDARD W-BEAM RAIL. MULTIPLE SECTIONS REQUIRED. SECTIONS VARY IN LENGTH.
12	IMPACT HEAD
13	EAT MARKER POST - YELLOW (SEE APPROVED PRODUCTS LIST)
14	SOIL PLATE
15	UPPER POST NO. 2
16	LOWER POST NO. 2

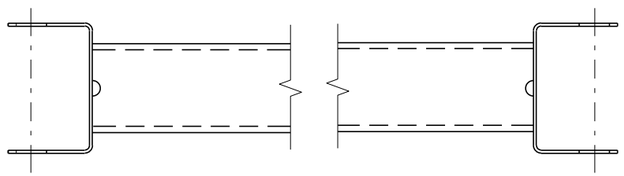

GENERIC GROUND STRUT 9 E

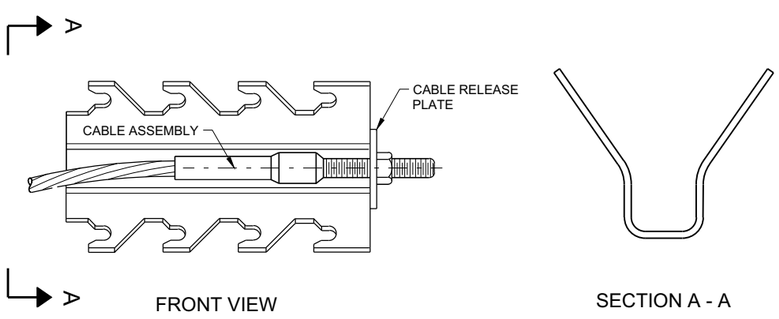

GENERIC ANCHOR CABLE BOX 9 E

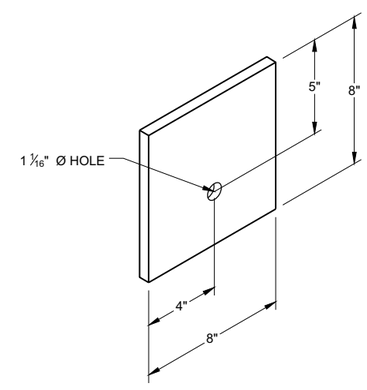

BEARING PLATE 6 E

6

6

SDD 14B44 - 04b

SDD 14B44 - 04b

MIDWEST GUARDRAIL SYSTEM ENERGY ABSORBING TERMINAL (MGS)

STATE OF WISCONSIN
DEPARTMENT OF TRANSPORTAT

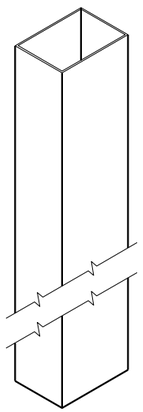

UPPER POST NO. 1 (1) (E)

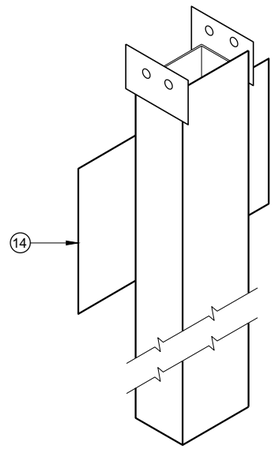

LOWER POST NO. 1 (2) (E)

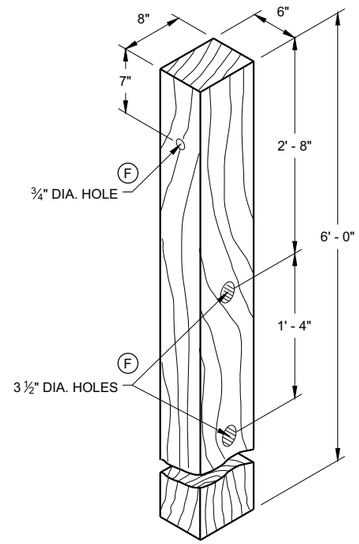

WOOD CRT POST (3) (E)
POSTS NUMBER 3-9

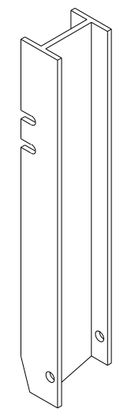

UPPER POST NO. 2 (15) (E)

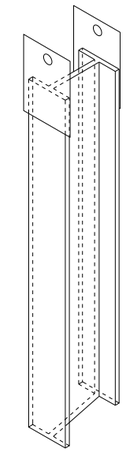

LOWER POST NO. 2 (16) (E)

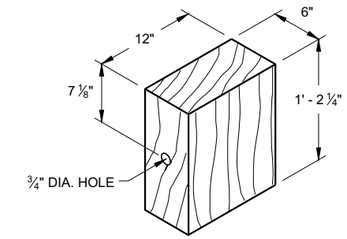

WOOD BLOCKOUT (4)
REQ'D. AT ALL POSTS EXCEPT POST NO'S 1 & 2

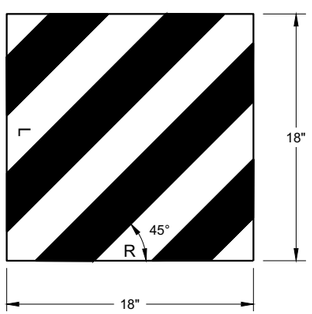

W5 - 59

REFLECTIVE SHEETING DETAIL (E)

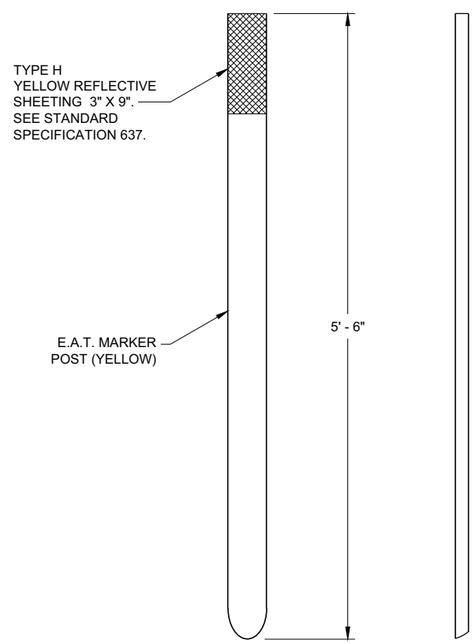

FRONT VIEW SIDE VIEW

E.A.T. MARKER POST (13)

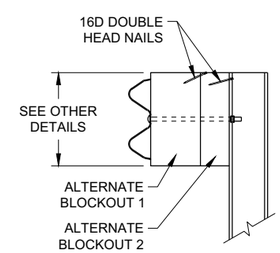

SIDE VIEW

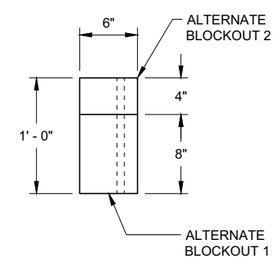

TOP VIEW

ALTERNATE WOOD BLOCKOUT DETAIL

MIDWEST GUARDRAIL SYSTEM ENERGY ABSORBING TERMINAL (MGS)

STATE OF WISCONSIN
DEPARTMENT OF TRANSPORTATION

APPROVED
7/2018 — DATE
/S/ Rodney Taylor — ROADWAY STANDARDS DEVE UNIT SUPERVISOR
FHWA

6

6

SDD 14B44 - 04c

SDD 14B44 - 04c

GENERAL NOTES

DETAILS OF CONSTRUCTION, MATERIALS AND WORKMANSHIP NOT SHOWN ON THIS DRAWING SHALL CONFORM TO THE PERTINENT REQUIREMENTS OF THE STANDARD SPECIFICATIONS AND THE APPLICABLE SPECIAL PROVISIONS.

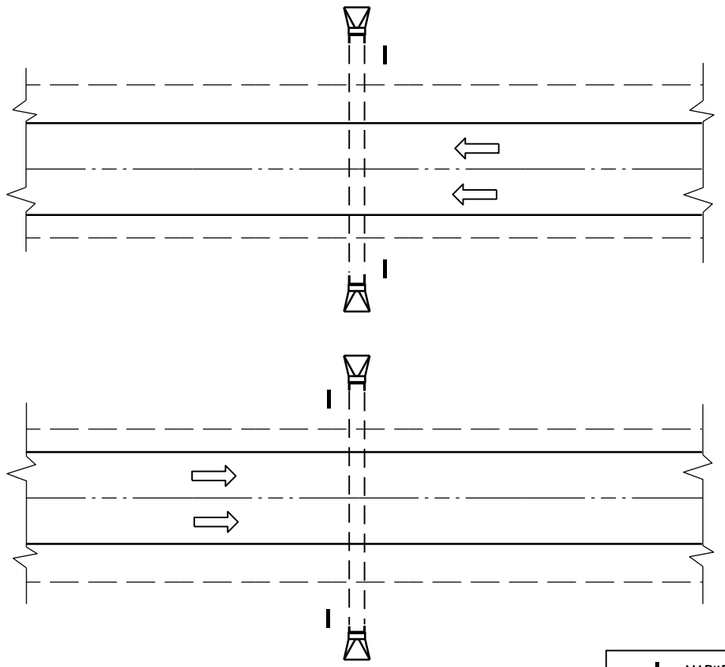

PLAN VIEW

DIVIDED HIGHWAY

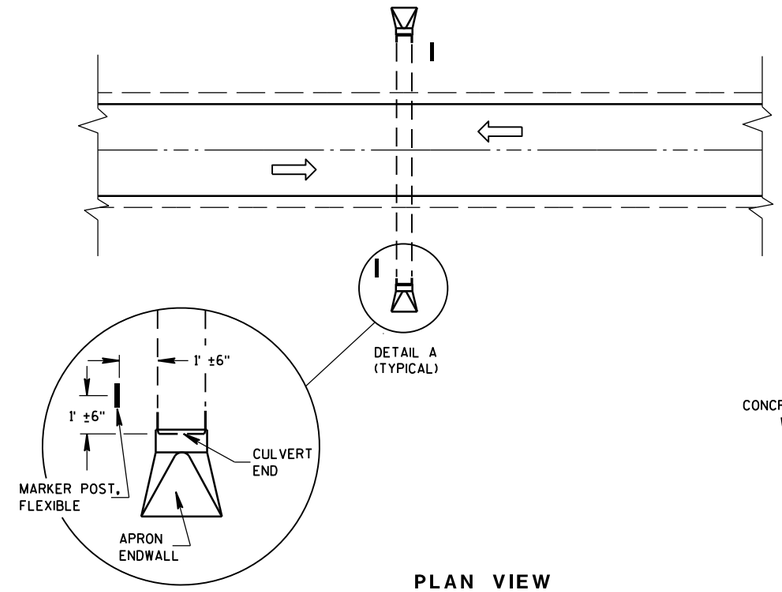

DETAIL A
(TYPICAL)

PLAN VIEW

UNDIVIDED HIGHWAY

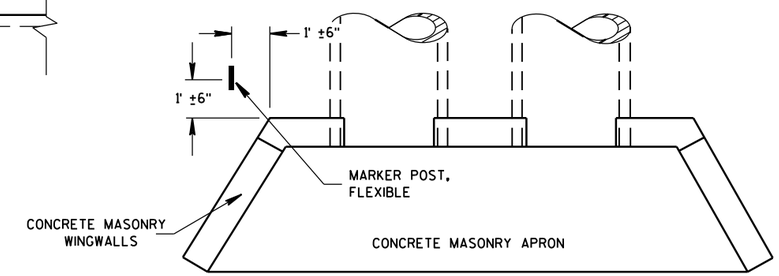

PLAN VIEW

CONCRETE MASONRY ENDWALLS FOR CULVERT PIPE AND PIPE ARCH

MARKER POST, FLEXIBLE

DIRECTION OF TRAFFIC FLOW

FLEXIBLE MARKER POST LOCATION

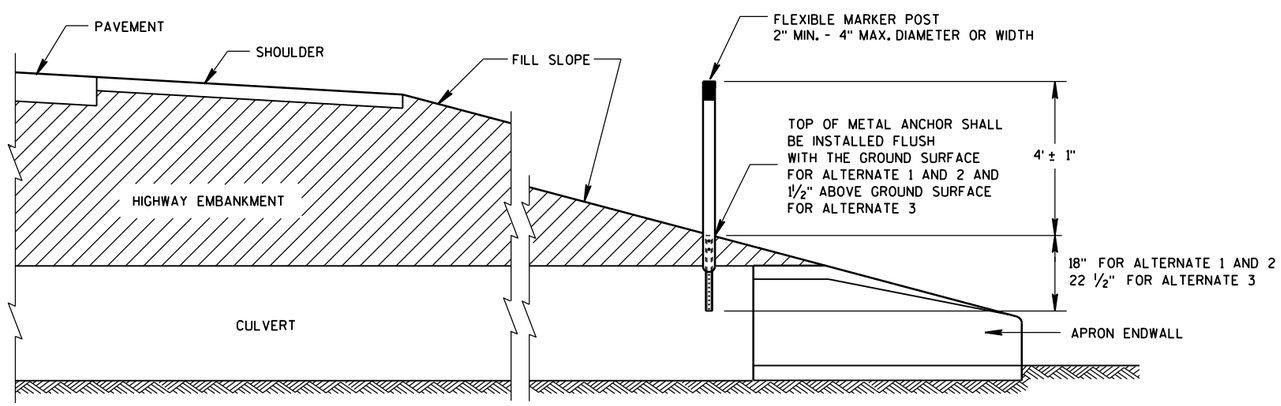

CROSS SECTION

FLEXIBLE MARKER POST

FLEXIBLE MARKER POST FOR CULVERT END

STATE OF WISCONSIN
DEPARTMENT OF TRANSPOR

6

6

S.D.D. 15 A 3-2a

S.D.D. 15 A 3-2a

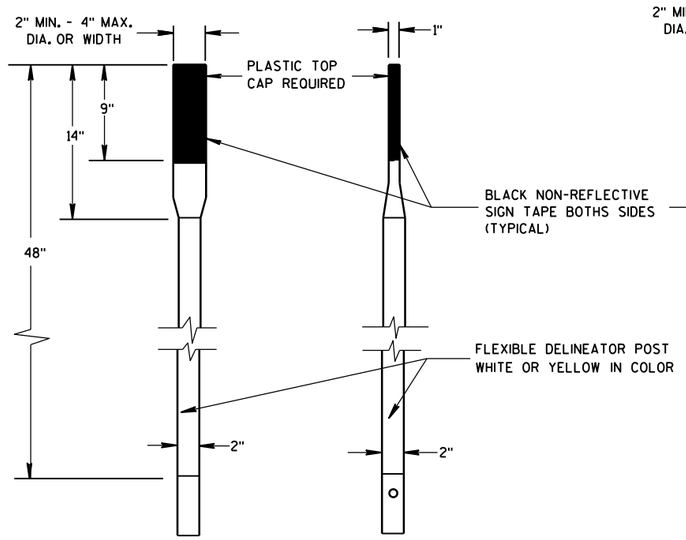

FRONT VIEW SIDE VIEW

ALTERNATE 1

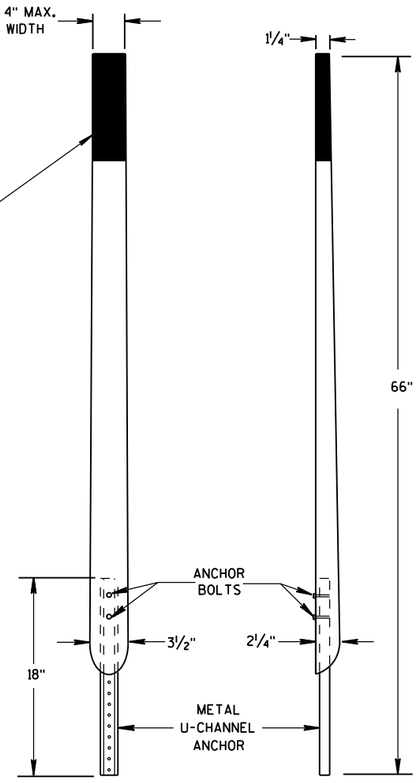

FRONT VIEW SIDE VIEW

ALTERNATE 2

FLEXIBLE MARKER POSTS

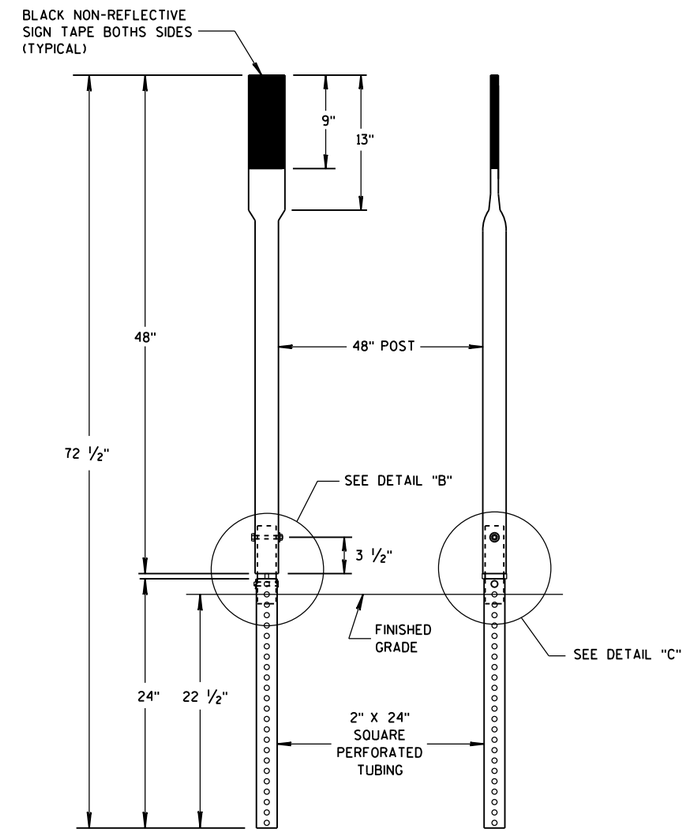

FRONT VIEW SIDE VIEW

ALTERNATE 3

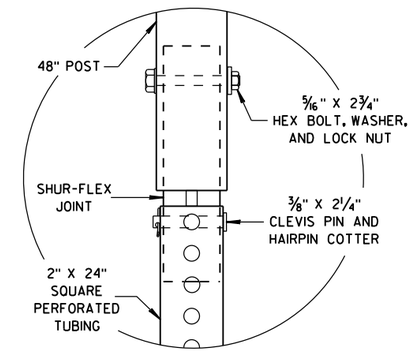

DETAIL B

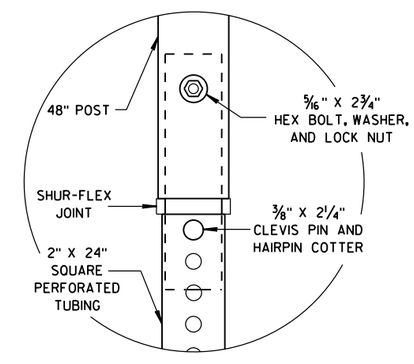

DETAIL C

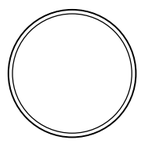

SECTION A-A

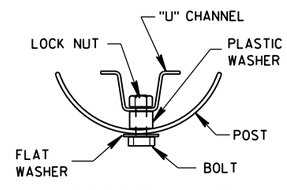

SECTION B-B

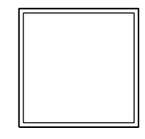

SECTION C-C

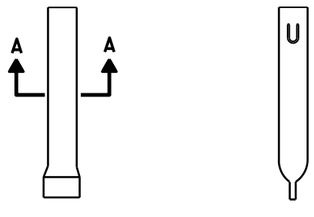

FRONT VIEW SIDE VIEW

ALTERNATE 1

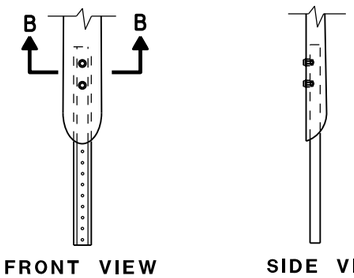

FRONT VIEW SIDE VIEW

ALTERNATE 2

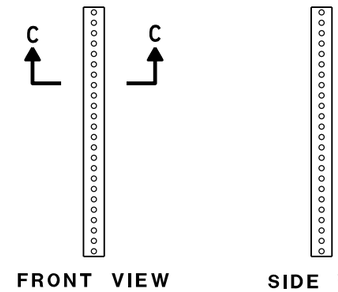

FRONT VIEW SIDE VIEW

ALTERNATE 3

FLEXIBLE MARKER POST ANCHORS

FLEXIBLE MARKER POST
FOR CULVERT END

STATE OF WISCONSIN
DEPARTMENT OF TRANSPORTATION

APPROVED
10/1/2012 /S/ Travis Feltes
DATE STATE TRAFFIC ENGINEER
FHWA

6

6

S.D.D. 15 A 3-2b

S.D.D. 15 A 3-2b

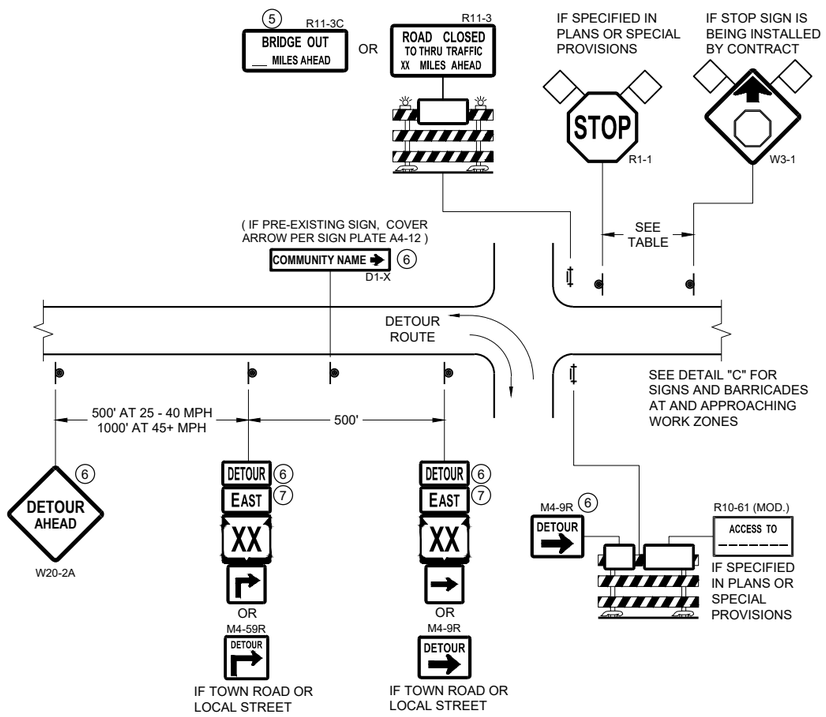

DETAIL A
MAINLINE CLOSURE WITH POSTED DETOUR
WORK ZONE GREATER THAN OR EQUAL TO ½ MILE FROM DETOUR ROUTE (1000 FEET IF URBAN)

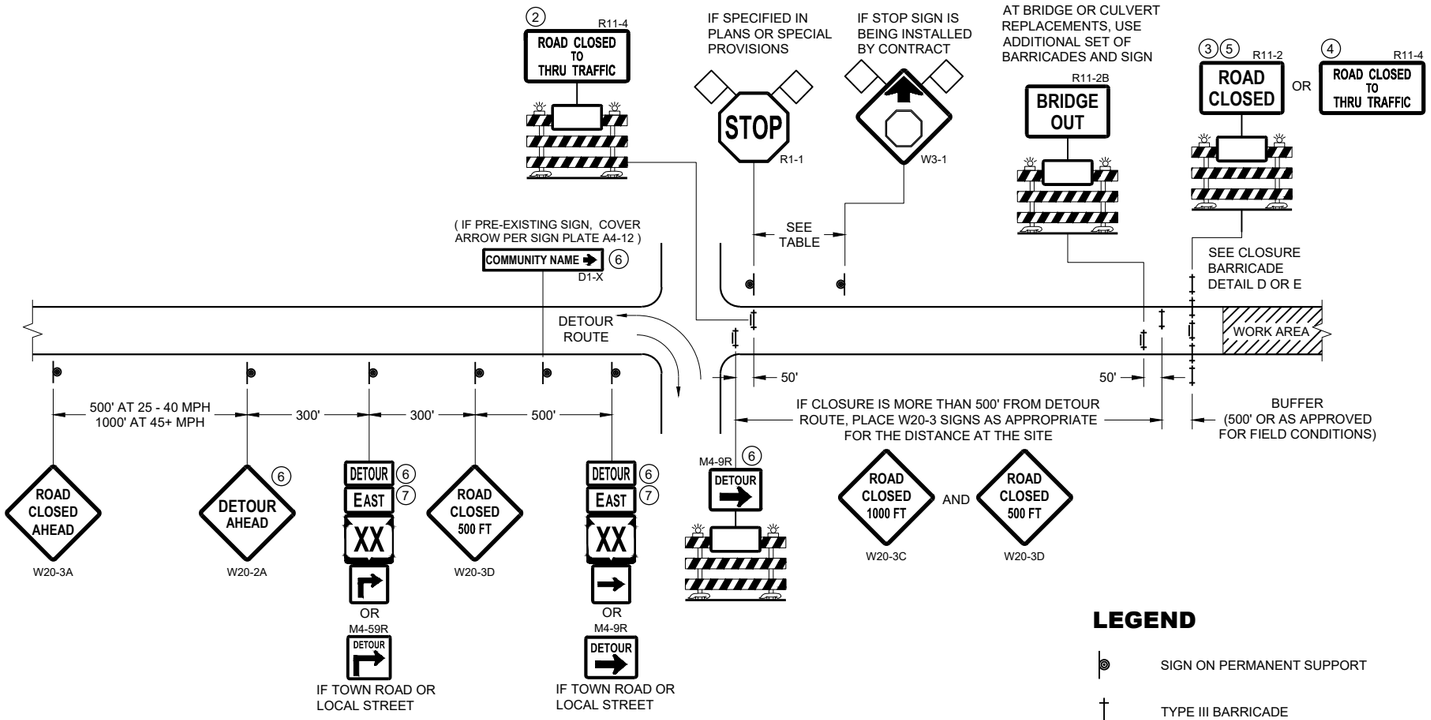

DETAIL B
MAINLINE CLOSURE WITH POSTED DETOUR
WORK ZONE LESS THAN ½ MILE FROM DETOUR ROUTE (1000 FEET IF URBAN)

LEGEND

- SIGN ON PERMANENT SUPPORT
- TYPE III BARRICADE
- TYPE III BARRICADE WITH ATTACHED SIGN
- TYPE "A" WARNING LIGHT (FLASHING)
- WORK AREA
- FLAGS, 16" X 16" MIN. (ORANGE)
- DETOUR M4 - 8
- EAST M3 - X
- XX M1 - 4 OR XX M1 - 6 OR COUNTY X M1 - 5A
- M05 - 1 OR M06 - 1

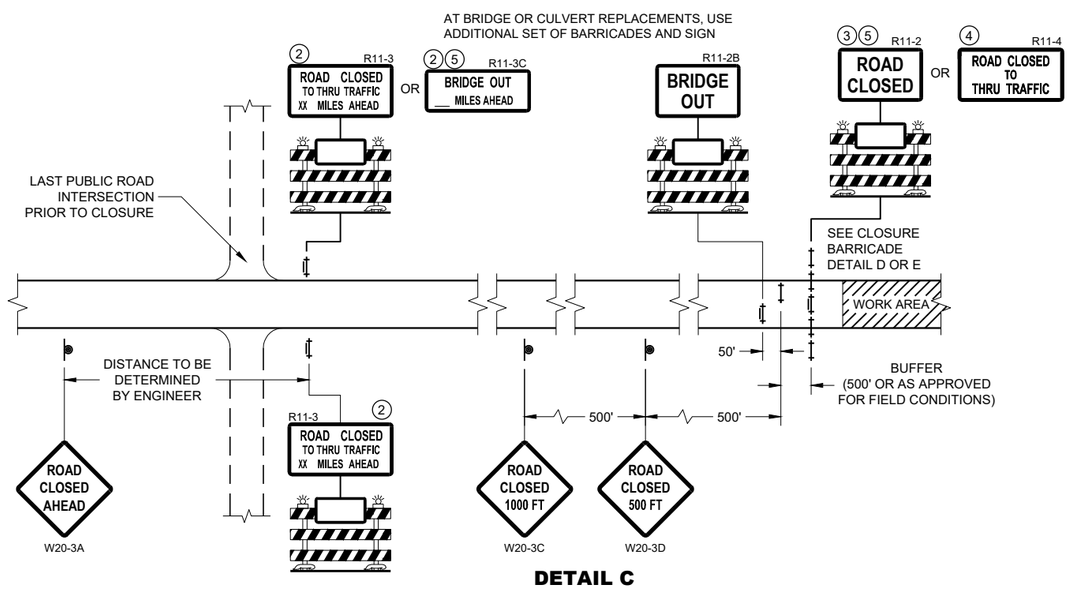

DETAIL C
MAINLINE CLOSURE, NO POSTED DETOUR

SPEED LIMIT (MPH)	"STOP AHEAD" ADVANCE WARNING DISTANCE (FT)
25	200
30	200
35	350
40	350
45	500
50	550
55	750

SEE SDD 15C2-SHEET "b" FOR GENERAL NOTES AND FOOTNOTES 1 THROUGH 7

BARRICADES AND SIGNS FOR MAINLINE CLOSURES

STATE OF WISCONSIN
DEPARTMENT OF TRANSPORTATION

APPROVED
May 2023 — DATE
/S/ Andrew Heidtke — WORK ZONE ENGINEER
FHWA

6

SDD 15C02 - 09a

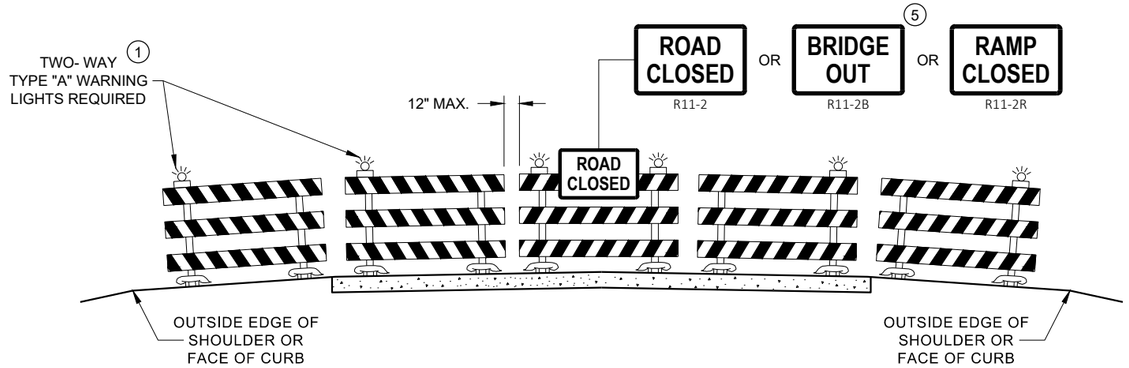

DETAIL D
ROAD CLOSURE BARRICADE DETAIL
APPROACH VIEW

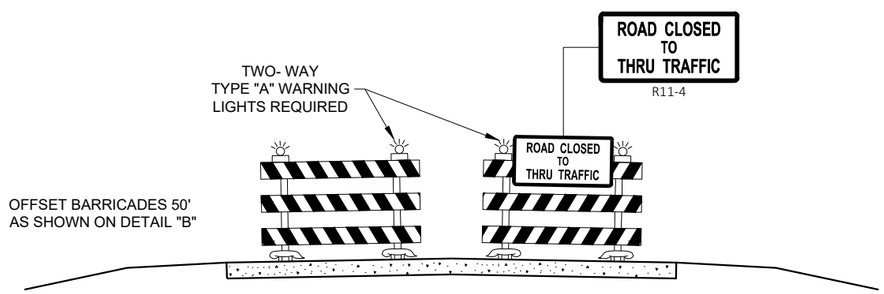

DETAIL E
LANE CLOSURE BARRICADE DETAIL
APPROACH VIEW

SEE SDD 15C2 - SHEET "a" FOR LEGEND

GENERAL NOTES

THE EXACT NUMBER, LOCATION, AND SPACING OF ALL SIGNS AND BARRICADES SHALL BE ADJUSTED TO FIT FIELD CONDITIONS AS APPROVED BY THE ENGINEER.

ANY SIGNS TEMPORARY OR EXISTING, WHICH CONFLICT WITH TRAFFIC CONTROL "IN USE", SHALL BE REMOVED OR COVERED AS NEEDED AND AS APPROVED BY THE ENGINEER.

THE SPACING BETWEEN TRAFFIC CONTROL SIGNS SHOULD BE ADJUSTED TO NOT CONFLICT WITH AND SHOULD PROVIDE A DESIRABLE MINIMUM OF 200 FEET CLEARANCE TO EXISTING SIGNS THAT WILL REMAIN IN PLACE.

BARRICADES THAT MUST BE MOVED FOR A WORK OPERATION SHALL BE IMMEDIATELY RE-ESTABLISHED UPON COMPLETION OF THE OPERATION, OR FOR CONTINUING OPERATIONS, AT THE END OF EACH WORKING DAY.

SIGNS THAT WILL BE IN PLACE LESS THAN 7 CONTINUOUS DAYS AND NIGHTS MAY BE MOUNTED ON PORTABLE SUPPORTS.

ALL TYPE III BARRICADES SHALL HAVE RAILS REFLECTORIZED ON BOTH FACES. STRIPES SHALL BE PROPERLY SLOPED DOWN TOWARD THE TRAFFIC SIDE OR AS SHOWN IN THE ROAD CLOSURE BARRICADE DETAIL "D" FOR FULL ROAD CLOSURES.

TYPE "A" LOW - INTENSITY FLASHING WARNING LIGHTS SHALL BE VISIBLE ON BOTH SIDES OF THE BARRICADE.

THE R11 - 2, R11 - 3, M4 - 9, R11 - 4, AND R10 - 61 SIGNS PLACED ON THE BARRICADES SHALL COVER NO MORE THAN THE TOP RAIL. THE SIGNS SHALL NOT COVER ANY PORTION OF THE MIDDLE RAIL OR BOTTOM RAILS.

"WO" AND "MO" SIGNS ARE THE SAME AS "W" AND "M" SIGNS EXCEPT THE BACKGROUND IS ORANGE.

ALL SIGNS SHALL BE 48" X 48" UNLESS OTHERWISE NOTED BELOW:
- R11 - 2 SHALL BE 48" X 30"
- R11 - 3 SHALL, R11 - 4 AND R10 - 61 SHALL BE 60 " X 30"
- M4 - 9 SHALL BE 30" X 24"
- M3 - X SHALL BE 24" X 12" (36" X 18" IF NEEDED TO MATCH EXISTING SIGNS)
- M4 - 8 SHALL BE 24" X 12" (36" X 18" IF NEEDED TO MATCH EXISTING SIGNS)
- M1 - 4, M1 - 5A AND M1 - 6 SHALL BE 24" X 24" (36" X 36" IF NEEDED TO MATCH EXISTING SIGNS)
- MO5 - 1 AND MO6 - 1 SHALL BE 21" X 21" (30" X 30" IF NEEDED TO MATCH EXISTING SIGNS)
- D1 - X SHALL BE AS SHOWN ON SPECIFIC PROJECT SIGNING DETAIL SHEETS.
- R1 - 1 SHALL BE 36" X 36"

1. TWO WARNING LIGHTS SHALL BE PROVIDED ON THE CENTER BARRICADE AND A MINIMUM OF ONE WARNING LIGHT SHALL BE PROVIDED ON EACH OF THE OTHER BARRICADES WITHIN THE ROADWAY LIMITS. SPACING OF THE WARNING LIGHTS SHALL BE UNIFORM TO THE EDGE OF ROADWAY AS SHOWN (APPROX. 8 FOOT LIGHT SPACING.
2. THESE SIGNS AND BARRICADES ARE NOT REQUIRED IF ROAD CLOSURE BEGINS AT AN INTERSECTION.
3. FOR ROAD CLOSURE WITHOUT LOCAL ACCESS TO PROJECT, SEE ROAD CLOSURE BARRICADE DETAIL "D".
4. FOR ROAD CLOSURE WITH LOCAL ACCESS TO PROJECT, SEE ROAD CLOSURE BARRICADE DETAIL "E".
5. FOR BRIDGE OR CULVERT REPLACEMENTS, SUBSTITUTE "BRIDGE OUT" INSTEAD OF "ROAD CLOSED" ON R11 - 2 AND R11 - 3 SIGNS.
6. INSTALL DETOUR AND COMMUNITY GUIDE SIGNS AND ARROWS ONLY IF SPECIFIED IN THE CONTRACT. IF THERE ARE EXISTING ROUTE MARKER ASSEMBLIES THAT WILL REMAIN IN PLACE, ADJUST THE LOCATION OF THE DETOUR ROUTE SIGNS TO CORRESPOND WITH THE EXISTING ASSEMBLIES. MODIFY EXISTING SIGNS WHERE POSSIBLE. SEE SPECIFIC PROJECT DETOUR SIGNING DETAIL SHEETS. IF DETOUR SIGNS ARE BEING INSTALLED BY OTHERS, PLACE THE CONTRACTED TRAFFIC CONTROL SIGNS TO ALLOW FOR PLACEMENT OF ALL WARNING, DETOUR AND GUIDE SIGNS AS SHOWN.
7. "EAST" CARDINAL DIRECTION MARKERS AND RIGHT TURN ARROWS ARE SHOWN. USE OTHER CARDINAL DIRECTIONS AND ARROWS AS APPROPRIATE.

BARRICADES AND SIGNS FOR VARIOUS CLOSURES

STATE OF WISCONSIN
DEPARTMENT OF TRANSPORTATION

APPROVED
May 2023 — DATE
/S/ Andrew Heidtke — WORK ZONE ENGINEE
FHWA

GENERAL NOTES

THE EXACT NUMBER, LOCATION, AND SPACING OF ALL SIGNS AND DEVICES SHALL BE ADJUSTED TO FIT FIELD CONDITIONS.

THE SPACING BETWEEN TRAFFIC CONTROL SIGNS SHOULD BE ADJUSTED TO NOT CONFLICT WITH AND SHOULD PROVIDE A MINIMUM OF 200 FEET (500 FEET DESIRABLE) CLEARANCE TO EXISTING SIGNS THAT WILL REMAIN IN PLACE.

ALL SIGNS ARE 48" X 48" UNLESS OTHERWISE NOTED. IF NECESSARY DUE TO SPACE CONSTRAINTS, 36"X36" SIGNS MAY BE USED INSTEAD OF 48" X 48" SIGNS.

SIGNS THAT WILL BE IN PLACE LESS THAN SEVEN CONTINUOUS DAYS AND NIGHTS MAY BE MOUNTED ON PORTABLE SUPPORTS.

IF A "STOP" SIGN MUST BE REMOVED FOR A WORK OPERATION, A TEMPORARY "STOP" SIGN SHALL BE PLACED PRIOR TO THE SIGN REMOVAL, OR A FLAGGER SHALL BE PROVIDED UNTIL THE SIGN IS REESTABLISHED.

* THE THIRD W20-1 SIGN IS REQUIRED ONLY IF THERE IS AN INTERSECTION BETWEEN THE "ROAD WORK 500 FEET" SIGN AND THE WORK ZONE. ADJUST THE PLACEMENT OF THIS SIGN BASED ON INTERSECTION LOCATION AND OTHER FIELD CONDITIONS.

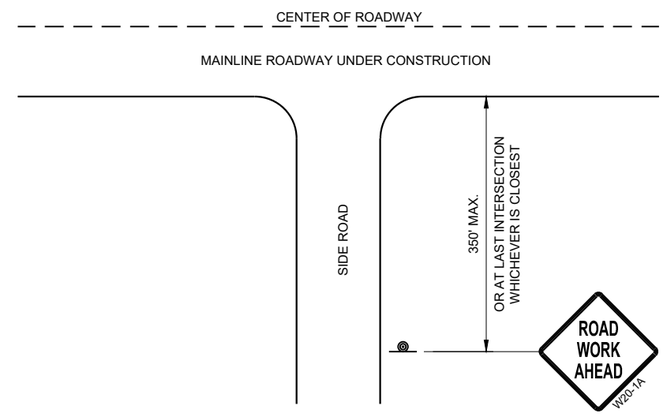

TYPICAL SIDE ROAD APPROACH WARNING SIGN DETAIL

LEGEND

- SIGN ON PERMANENT SUPPORT
- DIRECTION OF TRAFFIC
- WORK AREA

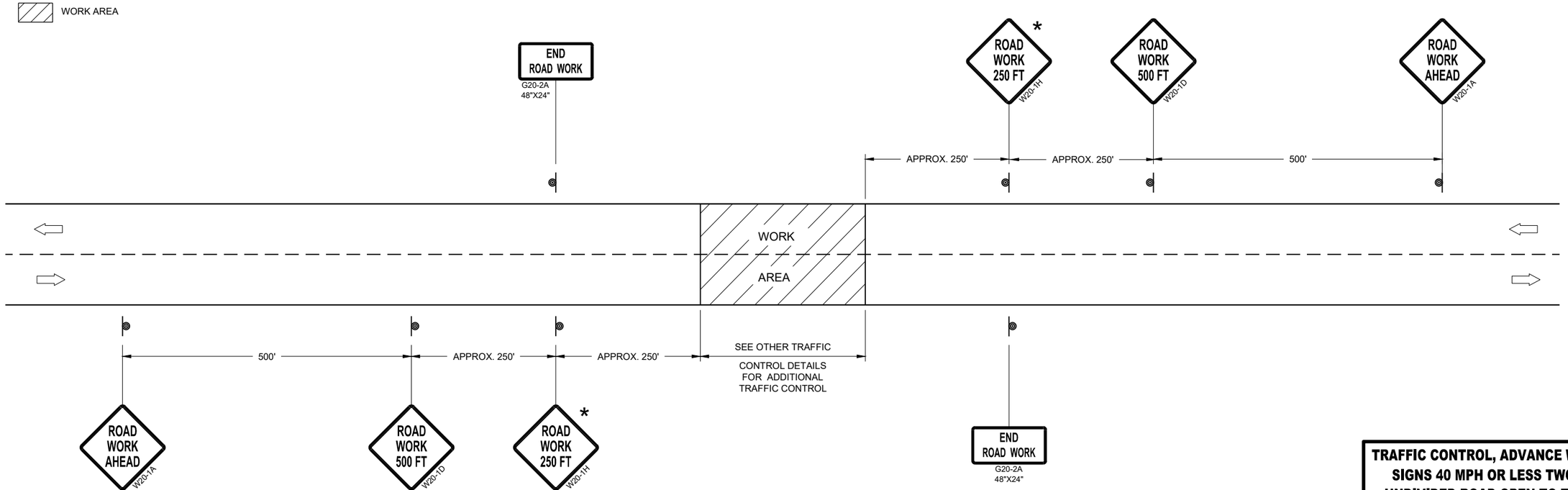

TRAFFIC CONTROL, ADVANCE WARNING SIGNS 40MPH OR LESS

TRAFFIC CONTROL, ADVANCE WARNING SIGNS 40 MPH OR LESS TWO-WAY UNDIVIDED ROAD OPEN TO TRAFFIC

STATE OF WISCONSIN
DEPARTMENT OF TRANSPORTATION

APPROVED
July 2018 — DATE
/S/ Andrew Heidtke — WORK ZONE ENGINEE
FHWA

6
SDD 15C05 - 05

*CONFIRM MARKING LINE WIDTH WITH THE MISCELLANEOUS QUANTITIES

GENERAL NOTES

DETAILS OF CONSTRUCTION NOT SHOWN ON THIS DRAWING SHALL CONFORM TO STANDARD SPECIFICATIONS AND SPECIAL PROVISIONS.

1. LOCATE THE NO PASSING ZONE W14-3 SIGN WITHIN 50 FEET OF THE "T" MARKING
2. MEASURE FROM EDGE OF MARKING TO JOINT LINE. THIS DOES NOT INCLUDE SPACE NEEDED FOR GROOVING OPERATIONS.

LEGEND

"T" MARKING

SIGN ON PERMANENT SUPPORT

DIRECTION OF TRAFFIC

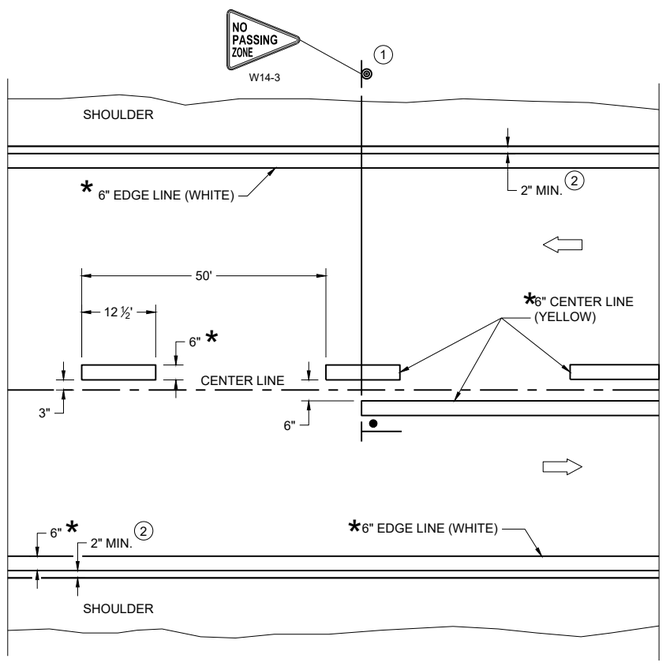

TWO WAY TRAFFIC

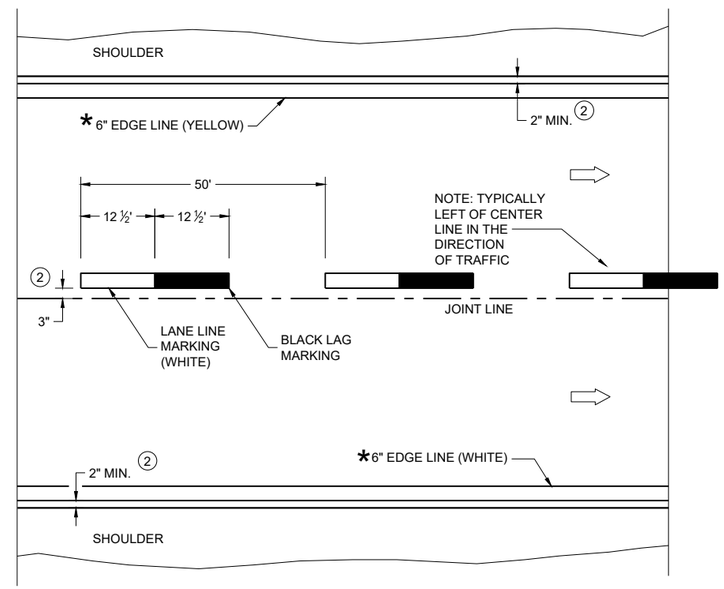

ONE WAY TRAFFIC

PERMANENT PAVEMENT MARKING

6

SDD 15C08-23a

PERMANENT LONGITUDINAL PAVEMENT MARKINGS

STATE OF WISCONSIN
DEPARTMENT OF TRANSPORTATION

APPROVED
May 2023 — DATE
/S/ Jeannie Silver — Statewide Pavement Marking Engineer
FHWA

6

SDD 15C08-23a

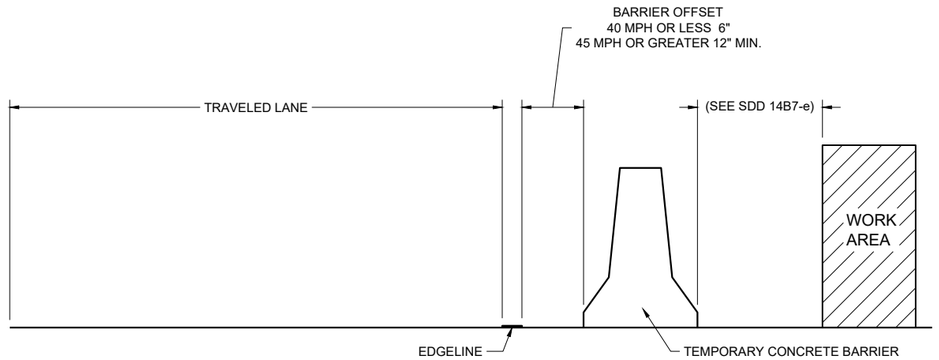

TEMPORARY BARRIER OFFSET FROM EDGELINE

GENERAL NOTES

DETAILS OF CONSTRUCTION NOT SHOWN ON THIS DRAWING SHALL CONFORM TO STANDARD SPECIFICATIONS AND SPECIAL PROVISIONS.

LEGEND

DIRECTION OF TRAFFIC

*CONFIRM MARKING LINE WIDTH WITH THE MISCELLANEOUS QUANTITIES

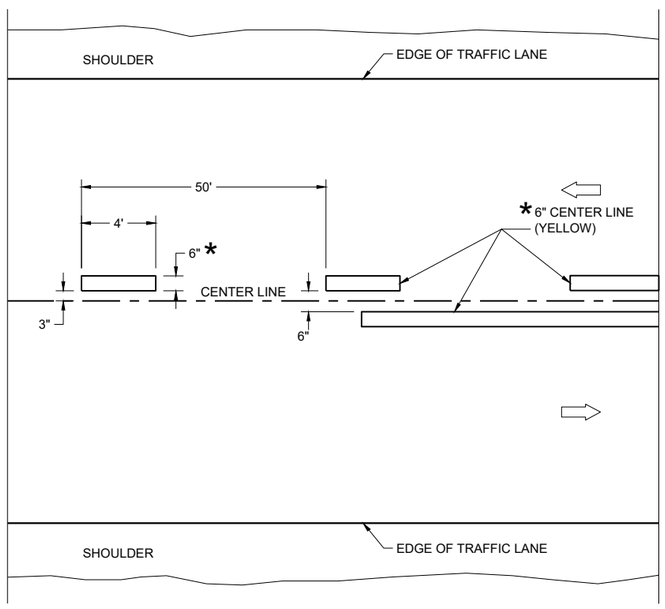

TWO WAY TRAFFIC

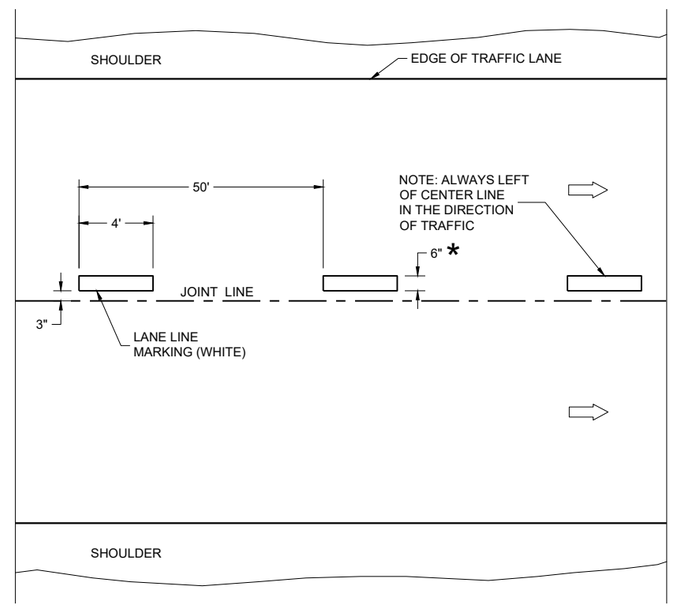

ONE WAY TRAFFIC

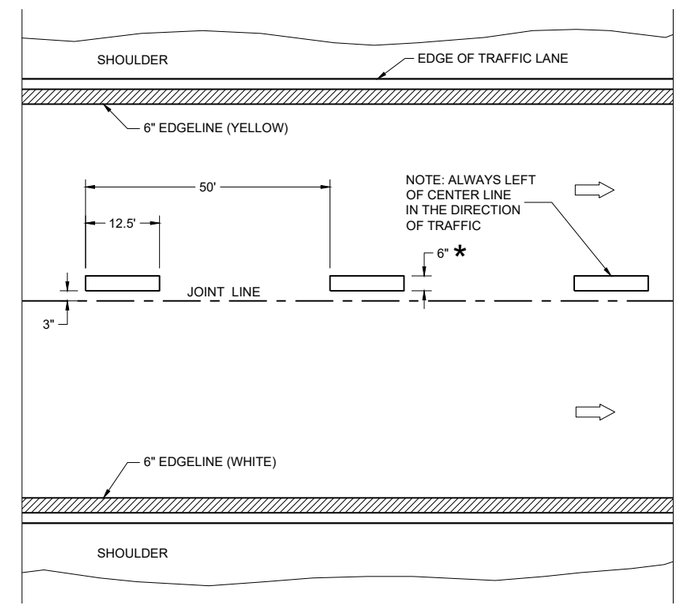

FREEWAYS AND EXPRESSWAYS

TEMPORARY PAVEMENT MARKING

TEMPORARY LONGITUDINAL PAVEMENT MARKING	
STATE OF WISCONSIN DEPARTMENT OF TRANSPORTATION	
APPROVED May 2023 DATE	/S/ Jeannie Silver Statewide Pavement Marking Engineer
FHWA	

6

SDD 15C08-23b

6

SDD 15C08-23b

GENERAL NOTES

1. REFLECTIVE SHEETING SHALL FOLLOW THE REQUIREMENTS IN THE APPROVED PRODUCTS LISTING FOR SIGN SHEETING.
2. LOCATION OF WARNING LIGHTS WHEN SHOWN ON THE PLAN.

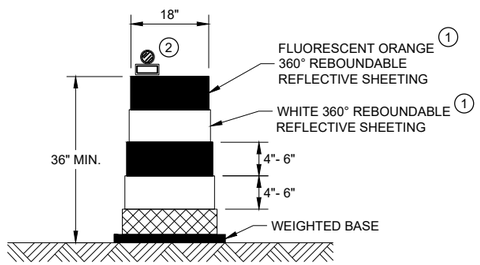

DRUM

BALLAST WIDTHS
RANGE FROM 24"-36"

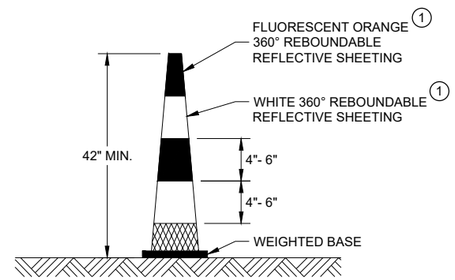

42" CONE

DO NOT USE IN TAPERS
½ SPACING OF DRUMS

BALLAST WIDTHS
RANGE FROM 14"-20"

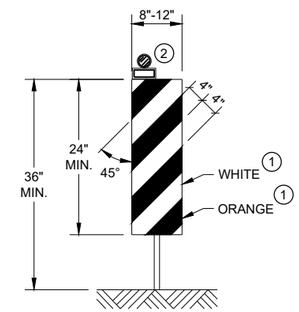

VERTICAL PANEL

THE STRIPES SHALL SLOPE DOWNWARD TO
THE TRAFFIC SIDE FOR CHANNELIZATION.

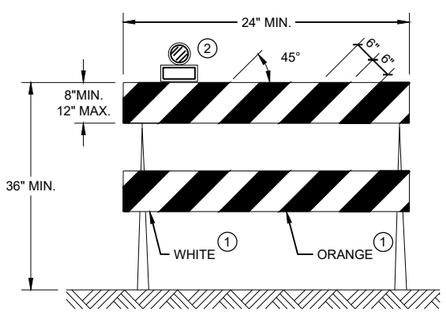

TYPE II BARRICADE

FOR RAILS LESS THAN 36" LONG, 4" WIDE STRIPES
MAY BE USED. ALL STRIPES SHALL SLOPE DOWNWARD
TO THE TRAFFIC SIDE FOR CHANNELIZATION.

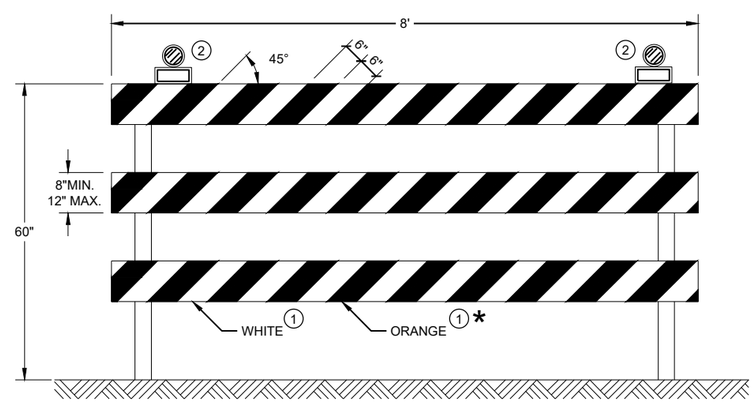

TYPE III BARRICADE

IF SIGN MOUNTED, DO NOT COVER MORE THAN 50% OF THE TOP
TWO RAILS OR 33% OF THE TOTAL AREA OF THE THREE RAILS.

* IF USED FOR A PERMANENT APPLICATION USE RED SHEETING.

CHANNELIZING DEVICES
DRUMS, CONES, BARRICADES
AND VERTICAL PANELS

STATE OF WISCONSIN
DEPARTMENT OF TRANSPORTATION

APPROVED
November 2022 /S/ Andrew Heidtke
DATE WORK ZONE ENGINEE
FHWA

6

6

SDD 15C11 - 10b

SDD 15C11 - 10b

LEGEND

SIGN ON PORTABLE OR PERMANENT SUPPORT

TEMPORARY PORTABLE RUMBLE STRIP ARRAY

DIRECTION OF TRAFFIC

WORK AREA

FLAGGER, EQUIPPED WITH STOP/SLOW PADDLE FASTENED ON SUPPORT STAFF

GENERAL NOTES

DETAILS OF TRAFFIC CONTROL DEVICES AND INSTALLATION NOT SHOWN ON THIS DRAWING SHALL CONFORM TO THE PERTINENT REQUIREMENTS OF THE STANDARD SPECIFICATIONS, THE SPECIAL PROVISIONS, AND THE MANUAL ON UNIFORM TRAFFIC CONTROL DEVICES.

ALL SIGNS ARE 48" X 48" UNLESS OTHERWISE NOTED.

"WO" SIGNS ARE THE SAME AS "W" SIGNS EXCEPT THE BACKGROUND IS ORANGE.

THE EXACT NUMBER, LOCATION AND SPACING OF ALL SIGNS, DEVICES, AND LOCATION OF ALL FLAGGERS SHALL BE ADJUSTED TO FIT FIELD CONDITIONS AS APPROVED BY THE ENGINEER.

THE FIRST ADVANCE WARNING SIGN SHOULD TYPICALLY BE LOCATED IN ADVANCE OF THE ANTICIPATED TRAFFIC BACKUP OR QUEUE.

WHEN A SIDE ROAD OR RAMP INTERSECTS THE FACILITY ON WHICH THE WORK IS BEING PERFORMED, ADDITIONAL TRAFFIC CONTROLS SHALL BE PROVIDED AS SPECIFIED IN THE PLANS AND/OR THE SPECIAL PROVISIONS OR AS APPROVED BY THE ENGINEER.

FLAGGING

FLAGGERS SHALL BE IN SIGHT OF EACH OTHER OR IN DIRECT COMMUNICATION AT ALL TIMES. THEY SHALL BE EQUIPPED WITH STOP/SLOW PADDLES FASTENED ON SUPPORT STAFFS. WHEN THE FLAGGING OPERATION IS NOT IN EFFECT REMOVE TEMPORARY PORTABLE RUMBLE STRIPS PRIOR TO COVERING OR REMOVING ALL ADVANCE SIGNING.

(1) FOR MOVING WORK OPERATIONS, POST ADDITIONAL W20-7A FLAGGER SIGNS AT APPROXIMATELY 3,500' INTERVALS IN THE MOVING WORK OPERATION OR AS APPROVED BY THE ENGINEER.

(2) SIGN NOT REQUIRED IF FLAGGING OPERATION OCCURS WITHIN A SIGNED ROAD WORK ZONE AREA.

WHEN THE DISTANCE BETWEEN FLAGGERS EXCEEDS 2 MILES, A PILOT CAR IS REQUIRED. WHEN CURVES REDUCE SIGHT DISTANCE BELOW 400', A PILOT CAR IS REQUIRED.

TEMPORARY PORTABLE RUMBLE STRIPS

UTILIZE TEMPORARY PORTABLE RUMBLE STRIPS ON ALL FLAGGING OPERATIONS.

(3) EACH TEMPORARY PORTABLE RUMBLE STRIP ARRAY CONSISTS OF THREE RUMBLE STRIPS PLACED TRANSVERSE ACROSS THE LANE AT THE LOCATIONS SHOWN. WITHIN EACH ARRAY, SPACING BETWEEN RUMBLE STRIPS SHALL BE 15 FEET ON CENTER

ONLY USE TEMPORARY PORTABLE RUMBLE STRIPS FROM THE APPROVED PRODUCTS LIST.

INSTALL TEMPORARY RUMBLE STRIPS PER MANUFACTURER'S RECOMMENDATIONS.

PLACE ADVANCE SIGNING PRIOR TO INSTALLING TEMPORARY RUMBLE STRIPS.

DO NOT INSTALL TEMPORARY PORTABLE RUMBLE STRIPS ON GRAVEL, MILLED SURFACES, OR ASPHALT THAT HAS BEEN PAVED LESS THAN 12 HOURS.

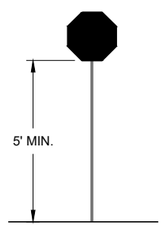

STOP/SLOW PADDLE ON SUPPORT STAFF

SIGN AND TEMPORARY RUMBLE STRIP ARRAY SPACING TABLE

SPEED LIMIT	SPACING "A"
25-30 MPH	200'
35-40 MPH	350'
45-55 MPH	500'

USE OF WO3-4 SIGN IS OPTIONAL. WHEN USED, THIS SIGN SHALL BE LOCATED BETWEEN THE W20-7A AND W20-4A SIGNS, USING SPACING "A".

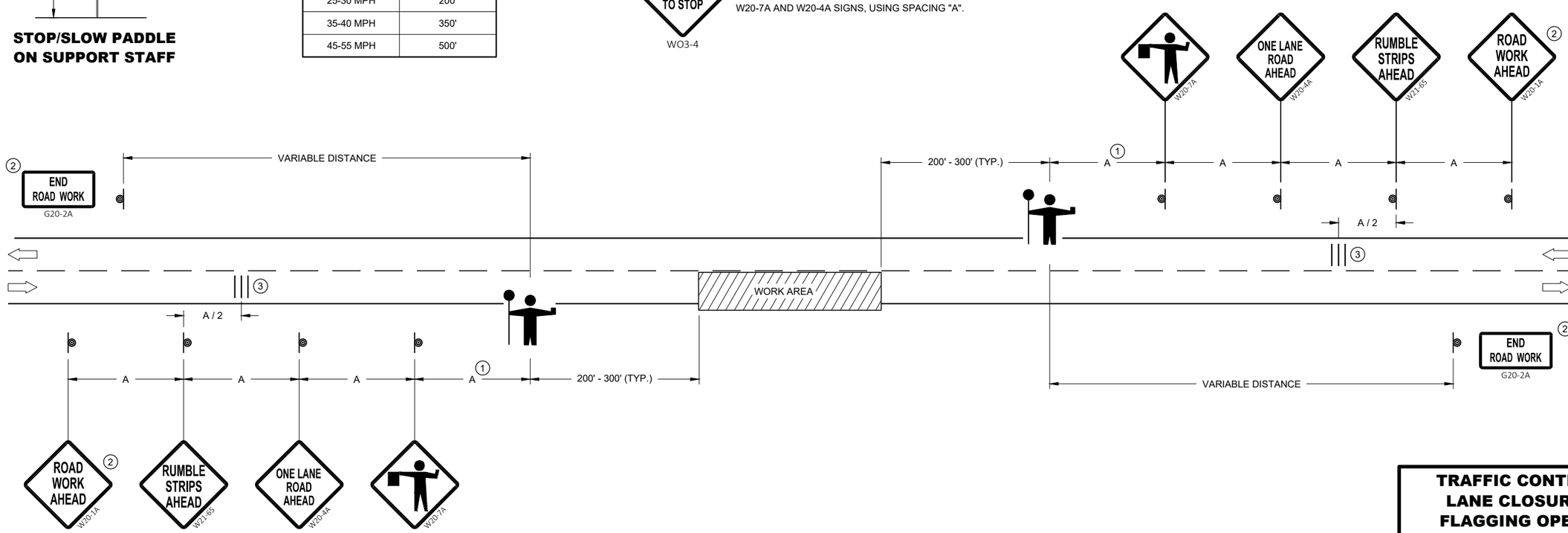

TRAFFIC CONTROL FOR LANE CLOSURE WITH FLAGGING OPERATION

STATE OF WISCONSIN
DEPARTMENT OF TRANSPORTATION

APPROVED
May 2022 — DATE
/S/ Andrew Heidtke — WORK ZONE ENGINEE
FHWA

6

SDD 15C12 - 09a

GENERAL NOTES

- SIGN ON PERMANENT SUPPORT
- TRAFFIC CONTROL CONE 42-INCH
- TRAFFIC CONTROL DRUM
- TEMPORARY PORTABLE RUMBLE STRIP ARRAY
- DIRECTION OF TRAFFIC
- WORK AREA
- AFAD — AUTOMATED FLAGGER ASSISTANCE DEVICE (AFAD)

GENERAL NOTES

DETAILS OF TRAFFIC CONTROL DEVICES AND INSTALLATION NOT SHOWN ON THIS DRAWING SHALL CONFORM TO THE PERTINENT REQUIREMENTS OF THE STANDARD SPECIFICATIONS, THE SPECIAL PROVISIONS, AND THE MANUAL ON UNIFORM TRAFFIC CONTROL DEVICES.

ALL SIGNS ARE 48" X 48" UNLESS OTHERWISE NOTED.

"WO" SIGNS ARE THE SAME AS "W" SIGNS EXCEPT THE BACKGROUND IS ORANGE.

THE EXACT NUMBER, LOCATION AND SPACING OF ALL SIGNS, DEVICES, AND LOCATION OF ALL FLAGGERS SHALL BE ADJUSTED TO FIT FIELD CONDITIONS AS APPROVED BY THE ENGINEER.

THE FIRST ADVANCE WARNING SIGN SHOULD TYPICALLY BE LOCATED IN ADVANCE OF THE ANTICIPATED TRAFFIC BACKUP OR QUEUE.

WHEN A SIDE ROAD OR RAMP INTERSECTS THE FACILITY ON WHICH THE WORK IS BEING PERFORMED, ADDITIONAL TRAFFIC CONTROLS SHALL BE PROVIDED AS SPECIFIED IN THE PLANS AND/OR THE SPECIAL PROVISIONS OR AS APPROVED BY THE ENGINEER.

FLAGGING

IF THE AUTOMATED FLAGGER ASSISTANCE DEVICE (AFAD) STOPS WORKING, FLAGGERS SHALL BE IN SIGHT OF EACH OTHER OR IN DIRECT COMMUNICATION AT ALL TIMES. THEY SHALL BE EQUIPPED WITH STOP/SLOW PADDLES FASTENED ON SUPPORT STAFFS. WHEN THE FLAGGING OPERATION IS NOT IN EFFECT REMOVE TEMPORARY PORTABLE RUMBLE STRIPS PRIOR TO COVERING OR REMOVING ALL ADVANCE SIGNING.

WHEN THE DISTANCE BETWEEN FLAGGERS EXCEEDS 2 MILES, A PILOT CAR IS REQUIRED. WHEN CURVES REDUCE SIGHT DISTANCE BELOW 400', A PILOT CAR IS REQUIRED.

(1) SIGN NOT REQUIRED IF FLAGGING OPERATION OCCURS WITHIN A SIGNED ROAD WORK ZONE AREA.

(2) IF FLAGGERS ARE PHYSICALLY NEEDED TO FLAG, REPLACE WO3-4 SIGNS WITH W20-7A SIGNS.

TEMPORARY PORTABLE RUMBLE STRIPS

UTILIZE TEMPORARY PORTABLE RUMBLE STRIPS ON ALL FLAGGING OPERATIONS.

ONLY USE TEMPORARY PORTABLE RUMBLE STRIPS FROM THE APPROVED PRODUCTS LIST.

PLACE ADVANCE SIGNING PRIOR TO INSTALLING TEMPORARY RUMBLE STRIPS.

DO NOT INSTALL TEMPORARY PORTABLE RUMBLE STRIPS ON GRAVEL, MILLED SURFACES, OR ASPHALT THAT HAS BEEN PAVED LESS THAN 12 HOURS.

(3) EACH TEMPORARY PORTABLE RUMBLE STRIP ARRAY CONSISTS OF THREE RUMBLE STRIPS PLACED TRANSVERSELY AT THE LOCATIONS SHOWN. WITHIN EACH ARRAY, SPACING BETWEEN RUMBLE STRIPS SHALL BE 15 FEET ON CENTER.

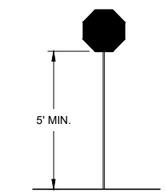

STOP/SLOW PADDLE ON SUPPORT STAFF

SIGN AND TEMPORARY RUMBLE STRIP ARRAY SPACING TABLE

SPEED LIMIT	SPACING "A"
25-30 MPH	200'
35-40 MPH	350'
45-55 MPH	500'

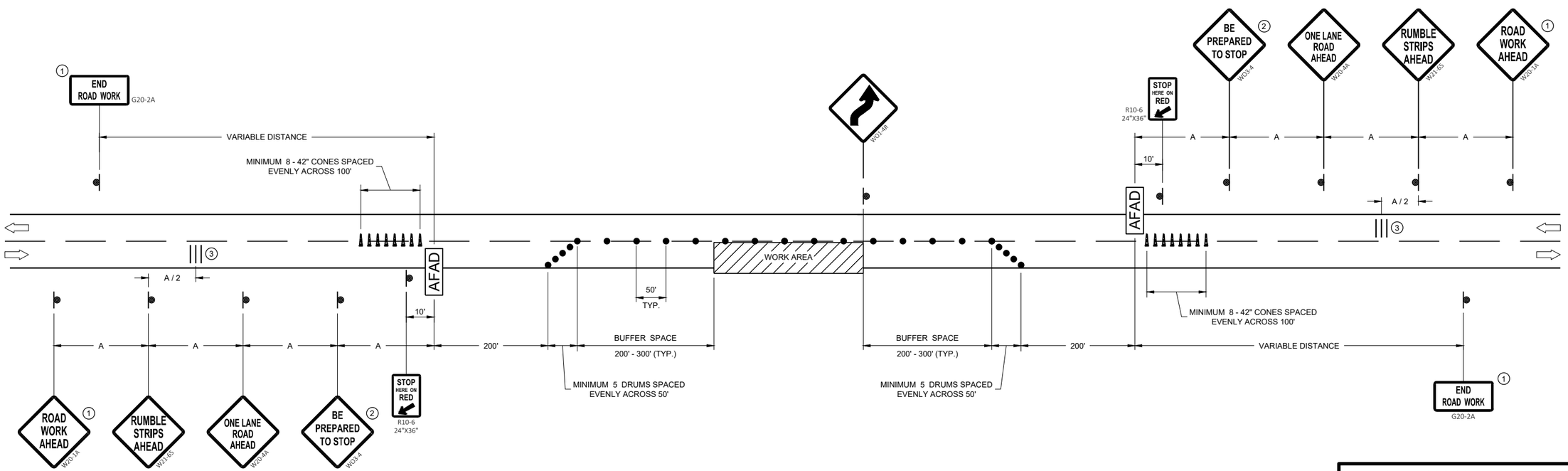

TRAFFIC CONTROL, LANE CLOSURE WITH AUTOMATED FLAGGER ASSISTANCE DEVICE

STATE OF WISCONSIN
DEPARTMENT OF TRANSPORTATION

APPROVED
May 2022 — DATE
/S/ Andrew Heidtke — WORK ZONE ENGINEER
FHWA

6
SDD 15C12 - 09b

LEGEND

V1 LEAD VEHICLE

V2 MARKING VEHICLE

V3 SHADOW VEHICLE

TRUCK MOUNTED ATTENUATOR (TMA)

SIGN ON TEMPORARY SUPPORT

DIRECTION OF TRAFFIC

GENERAL NOTES

ALL VEHICLES SHALL BE EQUIPPED WITH TWO 360 DEGREE HIGH INTENSITY YELLOW FLASHING LIGHTS OR STROBE LIGHTS AND OPERATED WITH HEADLIGHTS TURNED ON.

ALL VEHICLES SHALL BE EQUIPPED WITH REAR FACING TYPE B OR C FLASHING ARROW PANEL OPERATING IN CAUTION MODE. SIGNS PLACED ON VEHICLES MUST NOT OBSCURE THE ARROW PANEL.

ALL SIGNS ARE 48" X 48" UNLESS OTHERWISE SPECIFIED.

DISTANCE BETWEEN VEHICLES MAY VARY ACCORDING TO TERRAIN, SIGHT DISTANCE, PAINT DRYING TIME, AND OTHER FACTORS. WHENEVER ADEQUATE STOPPING SIGHT DISTANCE EXISTS TO THE REAR, SHADOW VEHICLES SHOULD MAINTAIN THE MINIMUM DISTANCE FROM THE WORK VEHICLE AND PROCEED AT THE SAME SPEED AS THE WORK VEHICLE. SHADOW VEHICLES SHOULD SLOW DOWN IN ADVANCE OF VERTICAL AND HORIZONTAL CURVES THAT RESTRICT SIGHT DISTANCE.

THE WORK AND SHADOW VEHICLES SHOULD PULL OVER PERIODICALLY TO ALLOW TRAFFIC TO PASS.

WHEN NO WORK ACTIVITY IS TAKING PLACE, REMOVE OR LAY STATIONARY SIGNS AND SUPPORTS FLAT ON THE GRADE WITH UPRIGHTS ORIENTED PARALLEL TO AND DOWNSTREAM FROM TRAFFIC.

CONES SHOULD BE USED BETWEEN THE MARKING AND SHADOW VEHICLE AT 100 FOOT SPACING. CONES MAY BE OMITTED ON PAINTED LINE IF APPROVED BY THE ENGINEER. CONSIDER PAVEMENT MARKING DRY OR CURE TIMES AND TRAFFIC VOLUME.

CONES SHALL BE A MINIMUM OF 28" FOR WET PAVEMENT MARKING .

1. SIGNS SHALL BE REPEATED APPROXIMATELY EVERY THREE MILES AND AFTER EVERY MAJOR INTERSECTION.
2. IF CONSTRUCTION WORK ZONE SIGNS ARE IN PLACE, W20-1A OR W21-63 ARE NOT REQUIRED.
3. V1 AND V2 CAN BE SWITCHED SO THAT THE MARKER IS THE LEAD VEHICLE.

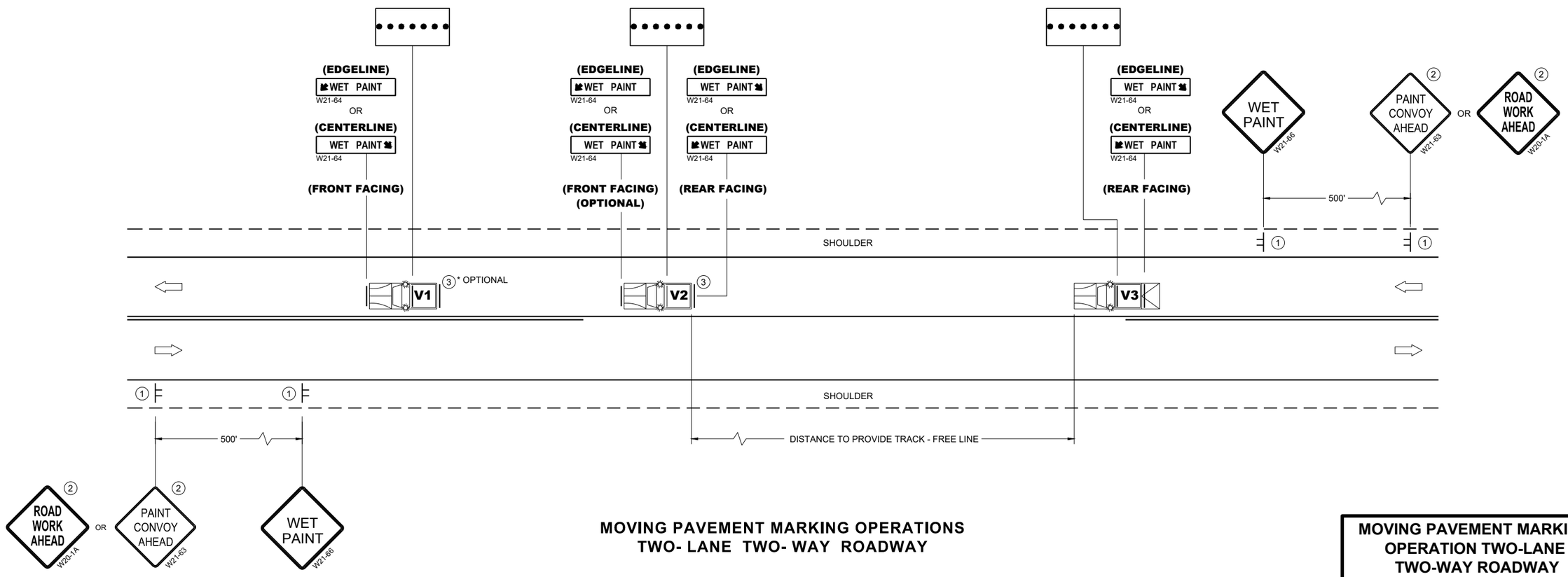

MOVING PAVEMENT MARKING OPERATIONS
TWO- LANE TWO- WAY ROADWAY

MOVING PAVEMENT MARKING OPERATION TWO-LANE TWO-WAY ROADWAY

STATE OF WISCONSIN
DEPARTMENT OF TRANSPORTATION

APPROVED
March 2024 — DATE
/S/ Andrew Heidtke — WORK ZONE ENGINEER
FHWA

6

SDD 15C19-9a

GENERAL NOTES

STOP SIGN SHALL BE PLACED A MINIMUM OF 6 FEET TO A MAXIMUM OF 50 FEET FROM THE EDGELINE LOCATION.

1. 18-INCH STOP LINES MAY BE DELETED OR ADDED BY THE REGION MARKING ENGINEER BASED ON VISIBILITY AND SIGHT LINES.
2. NO STOP LINE IS REQUIRED IF STOP SIGN IS LESS THAN OR EQUAL TO 40 FEET FROM THE EDGELINE.
3. NO STOP LINE IS REQUIRED IF STOP SIGN IS LESS THAN OR EQUAL TO 30 FEET FROM THE FLANGE LINE EXTENSION.
4. MOVE CLOSER TO THE EDGE OF TRAVEL LINE AS NEEDED FOR VISIBILITY AND SIGHT LINES (NO CLOSER THAN 4 FEET).
5. LADDER BAR CROSSWALKS SHOULD ONLY BE USED FOR MID BLOCK CROSSINGS. USE 2 - 6" TRANSVERSE LINES.
6. POSTED SPEED LIMITS OF 40 MPH OR GREATER USE A MINIMUM WIDTH OF 8' FOR MIDBLOCK CROSSWALKS

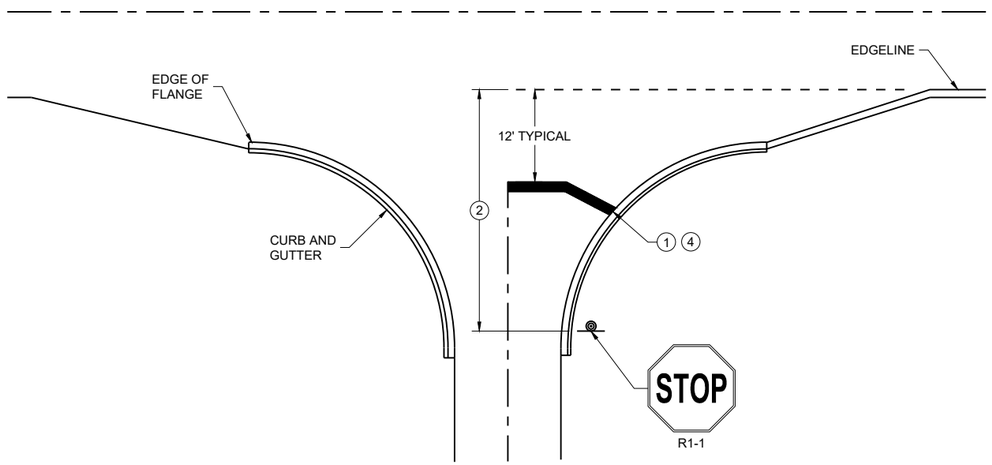

TYPICAL STOP LINE PAVEMENT MARKING WITH CURB AND GUTTER

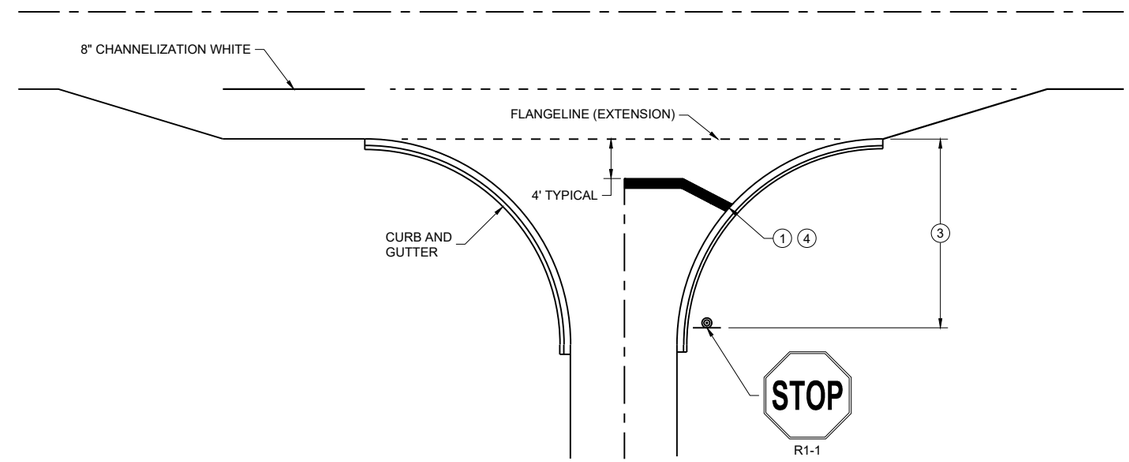

TYPICAL STOP LINE PAVEMENT MARKING FOR SIDE ROADS WITH RIGHT TURN LANE

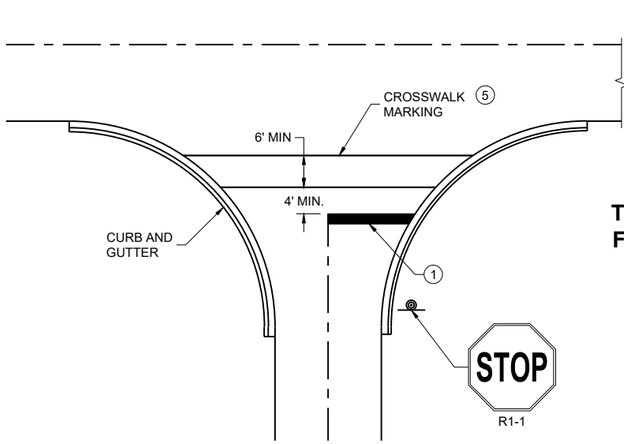

TYPICAL STOP LINE PAVEMENT MARKING FOR SIDE ROADS WITH CROSSWALK MARKING

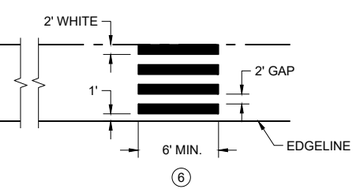

TYPICAL PAVEMENT MARKING FOR MID-BLOCK CROSSWALK 5

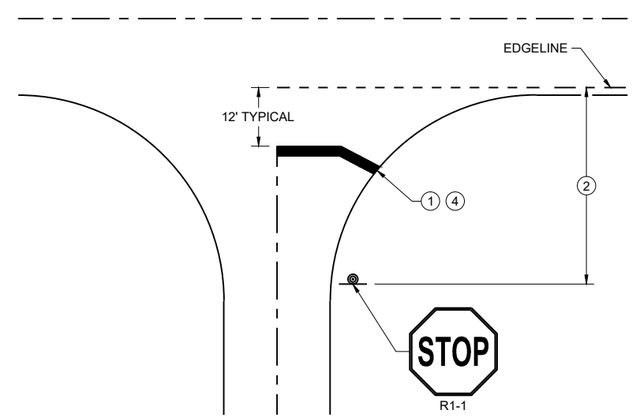

TYPICAL STOP LINE PAVEMENT MARKING WITHOUT CURB AND GUTTER

STOP LINE AND CROSSWALK PAVEMENT MARKING

STATE OF WISCONSIN
DEPARTMENT OF TRANSPORTATION

APPROVED
March 2024 — DATE
/S/ Matthew Rauch — STATE SIGNING AND MARKING ENGINEER

FHWA

LEGEND

SIGN ON PERMANENT SUPPORT

TRAFFIC CONTROL DRUM

DIRECTION OF TRAFFIC

WORK ZONE

GENERAL NOTES

ALL SIGNS ARE 48"X48" UNLESS OTHERWISE NOTED. IF NECESSARY DUE TO SPACE CONSTRAINTS IN URBAN AREAS, 36" X 36" SIGNS MAY BE USED IF APPROVED BY THE REGIONAL TRAFFIC UNIT.

"WO" SIGN IS THE SAME AS "W" SIGN EXCEPT THE BACKGROUND IS ORANGE.

ANY SIGNS TEMPORARY OR EXISTING, WHICH CONFLICT WITH THE TRAFFIC CONTROL "IN USE" SHALL BE REMOVED OR COVERED AS NEEDED AND AS APPROVED BY THE ENGINEER.

THE EXACT NUMBER, LOCATION, AND SPACING OF ALL SIGNS AND DEVICES SHALL BE ADJUSTED TO FIT FIELD CONDITIONS AS APPROVED BY THE ENGINEER.

CHANNELIZING DEVICES PLACED ADJACENT TO WORK AREA SHALL BE PULLED BACK FROM THE TRAVEL LANE WHEN WORK IS NOT IN PROGRESS.

SIGNS THAT WILL BE IN PLACE LESS THAN 7 CONTINUOUS DAYS AND NIGHTS MAY BE MOUNTED ON PORTABLE SUPPORTS.

W20-1A AND G20-2A SIGNS ARE NOT REQUIRED IF THE WORK AREA IS WITHIN A LARGER WORK ZONE WHERE THESE SIGNS ARE ALREADY PRESENT. G20-2A SIGNS MAY ALSO BE OMITTED IF DURATION OF WORK IS LESS THAN 7 CONTINUOUS DAYS AND NIGHTS.

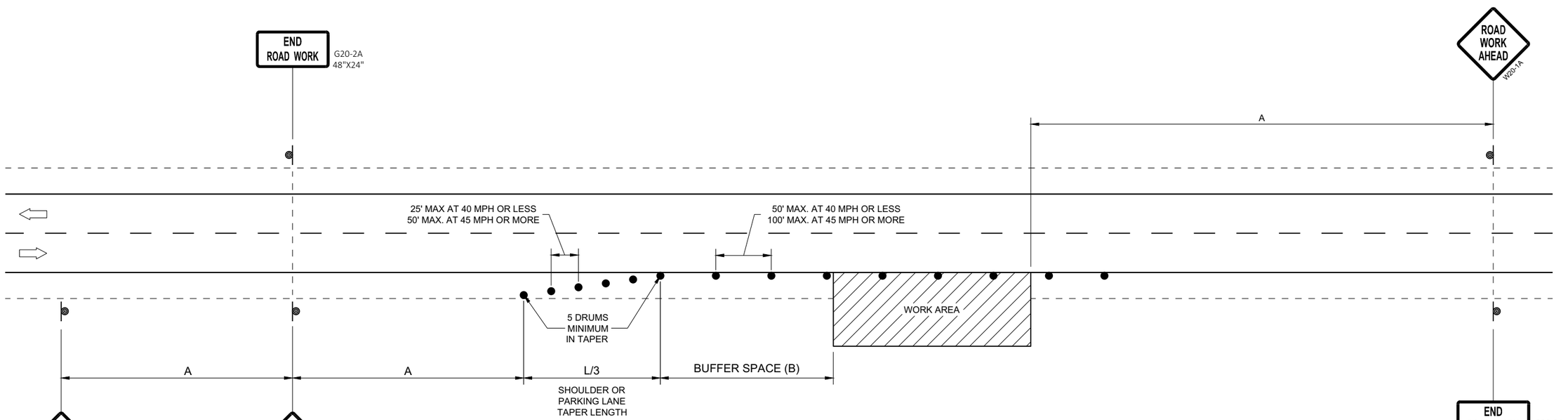

OR
IF TRAFFIC CONTROL DEVICES
ENCROACH ONTO TRAVELED WAY, USE

POSTED SPEED LIMIT PRIOR TO WORK STARTING (MPH)	ADVANCE WARNING SIGN SPACING (A) FEET	SHOULDER TAPER L / 3 W, LATERAL OFFSET (FT)						BUFFER SPACE (B) FEET
		3	4	5	6	7	8	
25	200'	10	14	17	21	24	28	55
30	200'	15	20	25	30	35	40	85
35	350'	20	27	34	40	47	54	120
40	350'	26	35	44	53	62	70	170
45	500'	45	59	74	89	104	119	220
50	500'	50	66	83	99	116	132	280
55	500'	54	73	91	109	127	145	335'

TRAFFIC CONTROL, WORK ON SHOULDER OR PARKING LANE, UNDIVIDED ROADWAY

STATE OF WISCONSIN
DEPARTMENT OF TRANSPORTATION

APPROVED
May 2020 — DATE
/S/ Andrew Heidtke — STATEWIDE WORK ZONE T SAFETY ENGINEER
FHWA

6

SDD 15D28 - 04

GENERAL NOTES

BARRICADE DEVICE SELECTED FROM APPROVED PRODUCT LIST

1. REFLECTIVE SHEETING SHALL FOLLOW THE REQUIREMENTS IN THE APPROVED PRODUCTS LISTING FOR SIGN SHEETING.
2. SHEETING REQUIRED ON MORE THAN 50% OF BARRICADE WIDTH.
3. PLACE SHEETING ON BOTH SIDES OF THE BARRICADE.

* USE THIS DETAIL FOR SHEETING PLACEMENT REFERENCE.

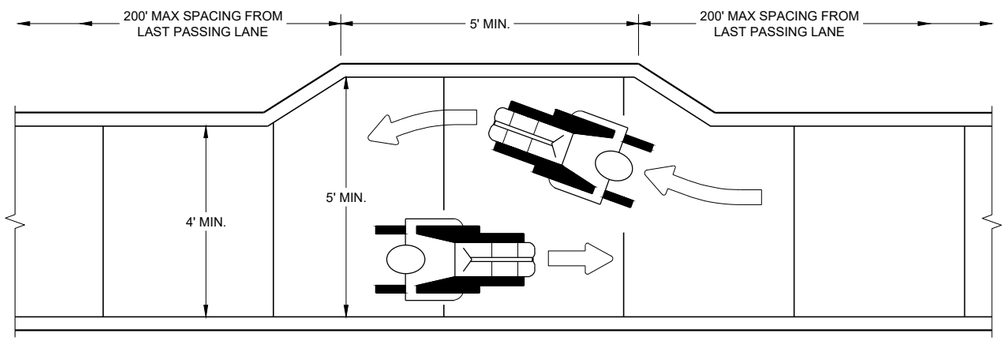

NARROW SIDEWALK PASSING DETAIL

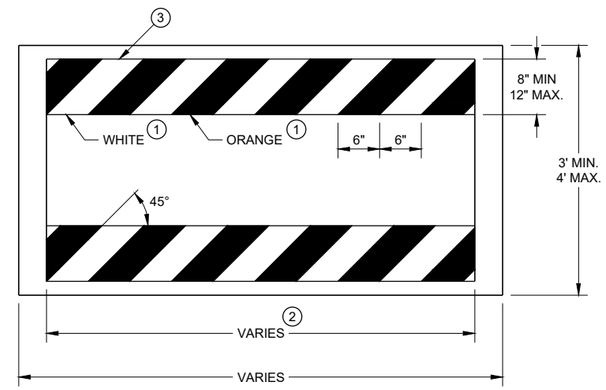

TEMPORARY PEDESTRIAN BARRICADE*

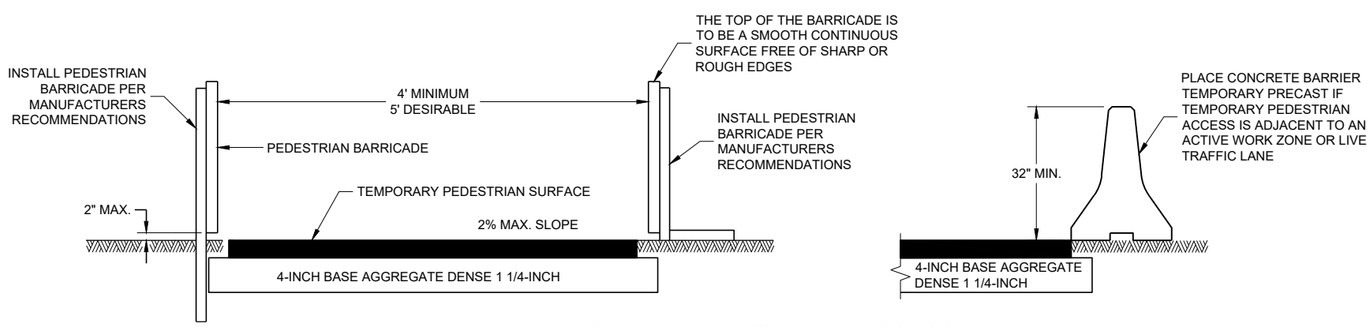

TEMPORARY PEDESTRIAN ACCESS

6

6

SDD 15D30 - 09a

SDD 15D30 - 09a

TRAFFIC CONTROL, PEDESTRIAN ACCOMMODATION

STATE OF WISCONSIN
DEPARTMENT OF TRANSPORTA

GENERAL NOTES

CURB RAMPS SHALL BE 48" MIN. WIDTH WITH A FIRM, STABLE AND SLIP RESISTANT SURFACE.

CURB RAMPS AND LANDINGS SHALL HAVE A 1:50 (2%) MAX. CROSS-SLOPE.

CLEAR SPACE OF 48" X 48" SHALL BE PROVIDED ABOVE AND BELOW THE CURB RAMP.
LATERAL JOINTS OR GAPS BETWEEN SURFACES SHALL BE LESS THAN ½" WIDTH.

CHANGES BETWEEN SURFACE HEIGHTS SHALL NOT EXCEED ½". LATERAL EDGES MAY BE VERTICAL UP TO ¼" HIGH AND SHALL BE BEVELED AT 1:2 BETWEEN ¼" AND ½".

1. INSTALL CONTRASTING TEMPORARY DETECTABLE WARNING FIELD AT PEDESTRIAN STREET CROSSINGS, AS SHOWN IN THE PLANS.
2. PROTECTIVE EDGING WITH A 2" MIN. HEIGHT SHALL BE INSTALLED WHEN A CURB RAMP OR LANDING PLATFORM HAS A VERTICAL DROP OF 6" OR GREATER OR HAS A SIDE APRON SLOPE STEEPER THAN 1:3 (33%). PROTECTIVE EDGING SHOULD BE CONSIDERED WHEN CURB RAMPS OR LANDING PLATFORMS HAVE A VERTICAL DROP OF 3" OR MORE.
3. DETECTABLE EDGING WITH 6" MIN. HEIGHT AND CONTRASTING COLOR SHALL BE INSTALLED ON ALL CURB RAMP LANDINGS WHERE THE WALKWAY CHANGES DIRECTION (TURNS).
4. DO NOT RESTRICT WATER FLOW IN THE GUTTER SYSTEM.
5. ENSURE CURB RAMP IS OUT OF THE GUTTER PAN.
6. IF ONLY PART OF THE END PANEL OF TEMPORARY PEDESTRIAN BARRICADE PANEL IS NEEDED, EXTEND EXCESS PORTION OF TEMPORARY PEDESTRIAN BARRICADE PANEL HERE.

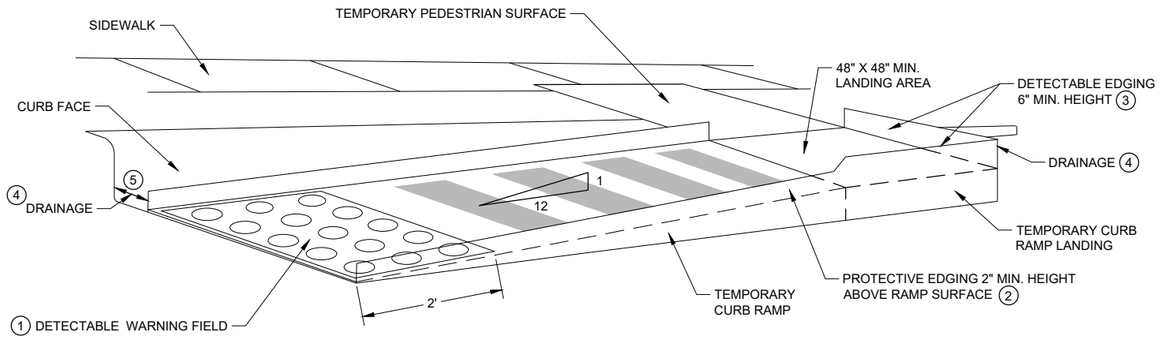

PERSPECTIVE VIEW

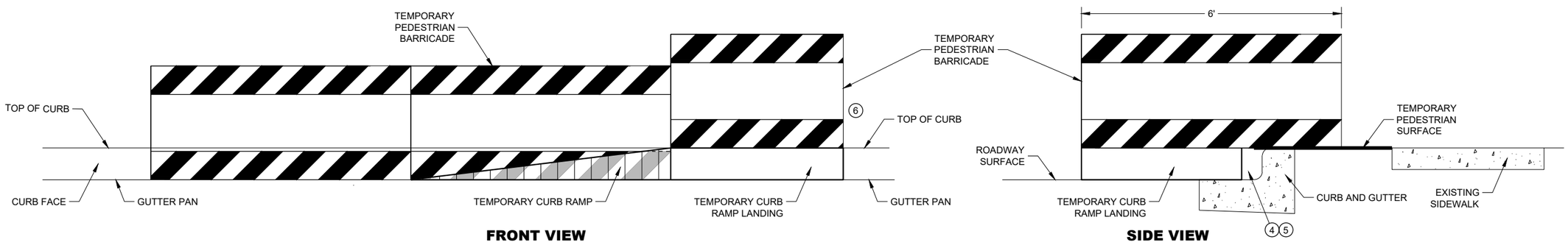

FRONT VIEW **SIDE VIEW**

TEMPORARY CURB RAMP PARALLEL TO CURB

6

6

SDD 15D30 - 09b

SDD 15D30 - 09b

TRAFFIC CONTROL, PEDESTRIAN ACCOMMODATION

STATE OF WISCONSIN
DEPARTMENT OF TRANSPORTAT

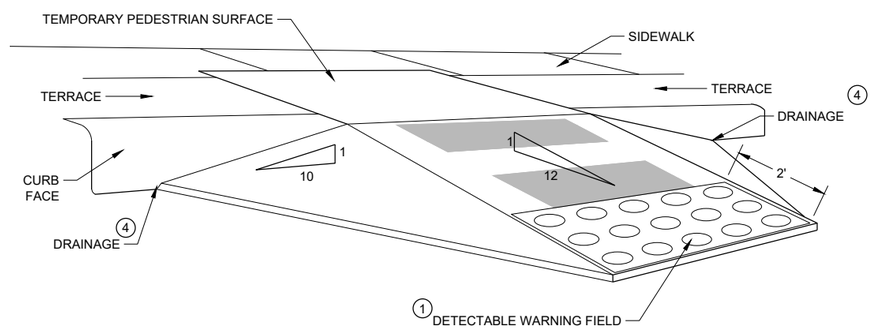

WITH SIDE APRON 5

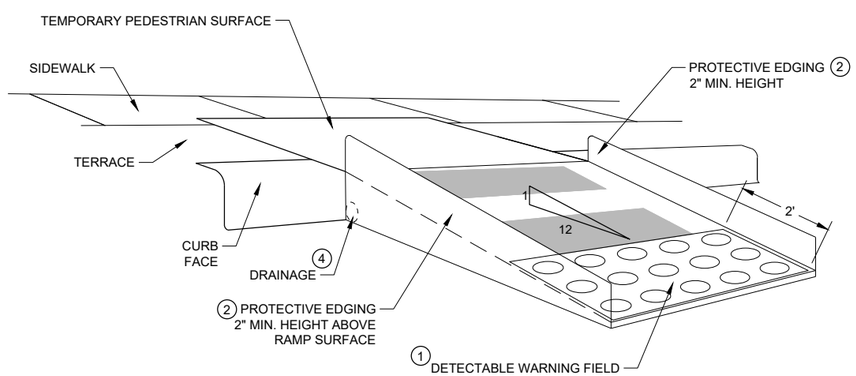

WITH PROTECTIVE EDGE

TEMPORARY CURB RAMP PERPENDICULAR TO CURB

GENERAL NOTES

CURB RAMPS SHALL BE 48" MINIMUM WIDTH WITH A FIRM, STABLE AND SLIP RESISTANT SURFACE.

ALTERNATE SIDEWALK WORK BETWEEN LEFT AND RIGHT SIDE OF ROADWAY TO MAINTAIN PEDESTRIAN ACCESS.

CURB RAMPS AND LANDINGS SHALL HAVE A 1:50 (2%) MAX. CROSS-SLOPE.

CLEAR SPACE OF 48" X 48" SHALL BE PROVIDED ABOVE AND BELOW THE CURB RAMP.

LATERAL JOINTS OR GAPS BETWEEN SURFACES SHALL BE LESS THAN ½" WIDTH.

CHANGES BETWEEN SURFACE HEIGHTS SHALL NOT EXCEED ½". LATERAL EDGES MAY BE VERTICAL UP TO ¼" HIGH AND SHALL BE BEVELED AT 1:2 BETWEEN ¼" AND ½".

1. INSTALL CONTRASTING TEMPORARY DETECTABLE WARNING FIELD AT PEDESTRIAN STREET CROSSINGS, AS SHOWN IN THE PLANS
2. PROTECTIVE EDGING WITH A 2" MIN. HEIGHT SHALL BE INSTALLED WHEN A CURB RAMP OR LANDING PLATFORM HAS A VERTICAL DROP OF 6" OR GREATER OR HAS A SIDE APRON SLOPE STEEPER THAN 1:3 (33%). PROTECTIVE EDGING SHOULD BE CONSIDERED WHEN CURB RAMPS OR LANDING PLATFORMS HAVE A VERTICAL DROP OF 3" OR MORE.
3. DETECTABLE EDGING WITH 6" MIN. HEIGHT AND CONTRASTING COLOR SHALL BE INSTALLED ON ALL CURB RAMP LANDINGS WHERE THE WALKWAY CHANGES DIRECTION (TURNS).
4. DO NOT RESTRICT WATER FLOW IN THE GUTTER SYSTEM.
5. CAN ONLY BE USED FOR RAMPS WITH 6" OR LESS OF VERTICAL CHANGE.

6

SDD 15D30 - 09c

TRAFFIC CONTROL, PEDESTRIAN ACCOMMODATION

STATE OF WISCONSIN
DEPARTMENT OF TRANSPORTAT

LEGEND

- SIGN ON PERMANENT SUPPORT
- SIGN ON TEMPORARY SUPPORT
- UNDER PEDESTRIAN TRAFFIC
- WORK AREA
- TEMPORARY PEDESTRIAN BARRICADE
- DIRECTION OF TRAFFIC

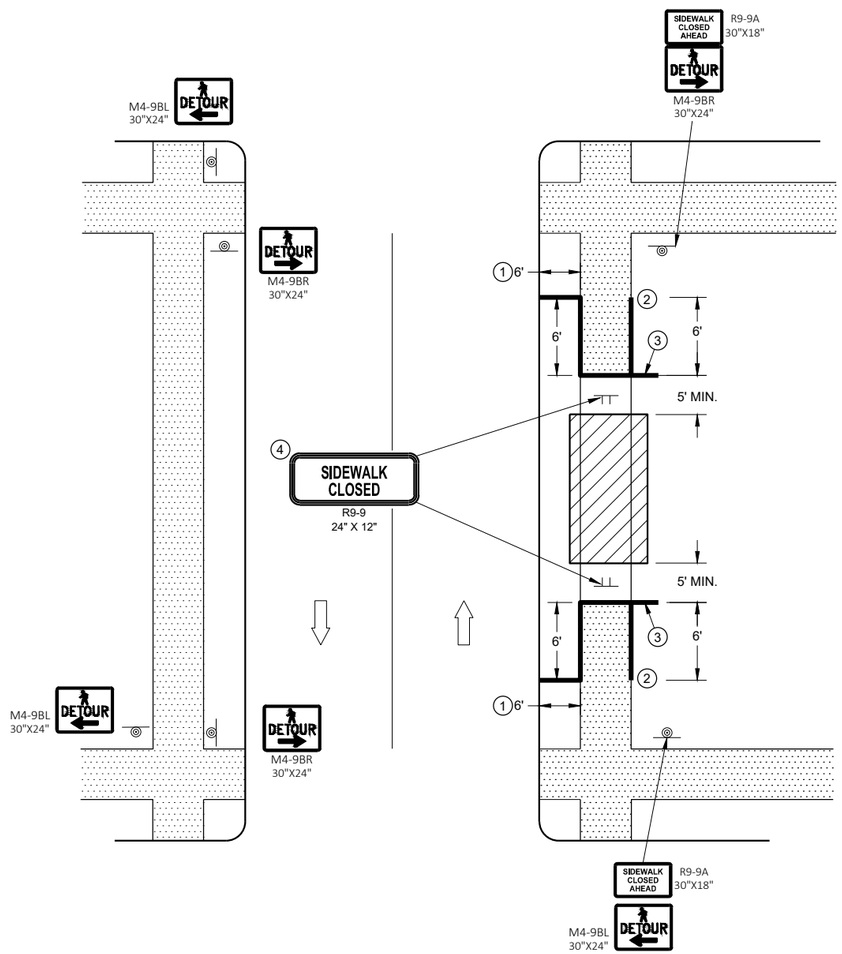

SIDEWALK DETOUR, SIDEWALK ON BOTH SIDES

GENERAL NOTES

SIGN LAYOUTS SHALL BE IN ACCORDANCE WITH THE WISCONSIN STANDARD SIGN PLATES.

WHERE TEMPORARY BARRICADE RUNS PARALLEL ALONG SIDEWALK, PLACE THE FACE OF THE BARRICADE AT THE EDGE OF THE SIDEWALK.

SIGNS THAT REMAIN IN PLACE LESS THAN SEVEN CONTINUOUS DAYS AND NIGHTS MAY BE MOUNTED ON PORTABLE SUPPORTS.

PLACE TEMPORARY PEDESTRIAN BARRICADE TO FIT FIELD CONDITIONS, AVOIDING CONFLICT WITH DRIVEWAYS AND OTHER EXISTING FEATURES.

1. IF TERRACE IS LESS THAN 6 FEET WIDE, OMIT TEMPORARY PEDESTRIAN BARRICADE FROM THE SIDEWALK TO THE CURB.
2. PLACE BARRICADE CLOSURE SO THAT THE TEMPORARY PEDESTRIAN BARRICADE END IS AT THE LAST OPEN SIDEWALK ACCESS TO RESIDENCES OR BUSINESSES BEFORE THE SIDEWALK CLOSURE.
3. IF TEMPORARY PEDESTRIAN BARRICADE PANEL IS WIDER THAN THE SIDEWALK WIDTH, THE PORTION OF EXCESS PANEL SHOULD EXTEND INTO THE TERRACE.
4. MOUNTING HEIGHT OF 5 FEET FROM THE SURFACE TO THE BOTTOM OF SIGN.

TRAFFIC CONTROL, PEDESTRIAN ACCOMMODATION

STATE OF WISCONSIN
DEPARTMENT OF TRANSPORTAT

6

SDD 15D30 - 09k

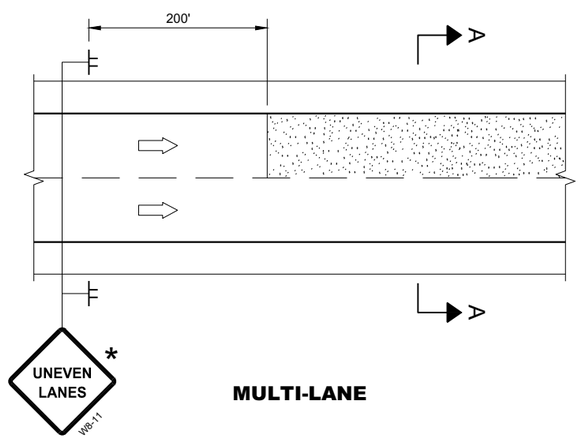

MULTI-LANE

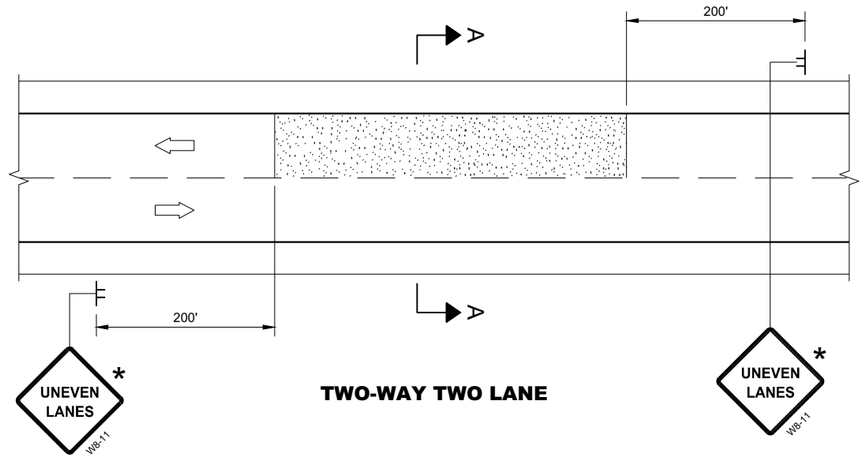

TWO-WAY TWO LANE

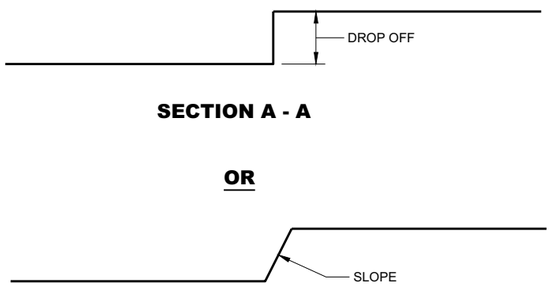

SECTION A - A

SECTION A - A

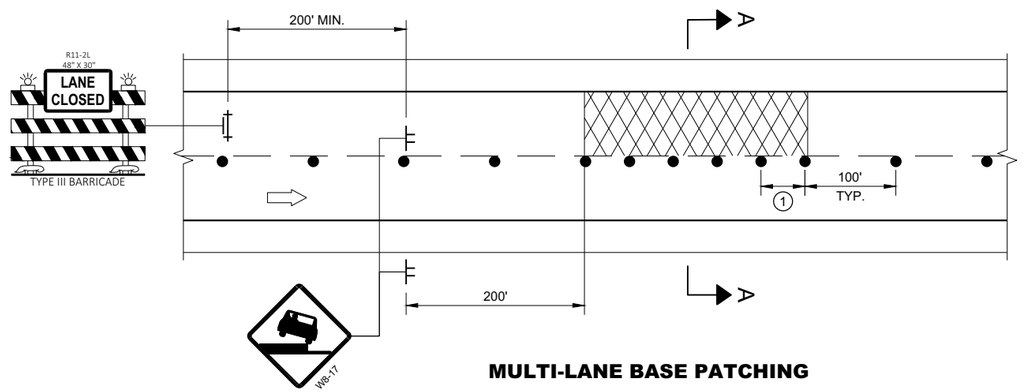

MULTI-LANE BASE PATCHING

ADJACENT LANE DROP-OFFS

GENERAL NOTES

FOR SPOT LOCATIONS USE ENGINEERING JUDGEMENT WHEN PLACING ADDITIONAL SIGNS.

ALL SIGNS ARE 48" X 48" UNLESS OTHERWISE NOTED.

"WO" SIGNS ARE THE SAME AS "W" SIGNS EXCEPT THE BACKGROUND IS ORANGE.

WARNING LIGHTS ARE NOT REQUIRED IF THE LANE CLOSURE IS A DAYTIME ONLY OPERATION.

* IF THE DROP-OFF IS CONTINUOUS ALONG THE PROJECT, PLACE ADDITIONAL SIGNS EVERY 1 MILE AND AFTER EVERY ENTRANCE RAMP.

(1) USE CLOSER SPACING WHEN DELINEATING DROP-OFF.

LEGEND

- SIGN ON TEMPORARY SUPPORT
- TRAFFIC CONTROL DRUM
- TYPE III BARRICADE WITH ATTACHED SIGN
- TYPE "A" WARNING LIGHT (FLASHING)
- DIRECTION OF TRAFFIC
- WORK AREA WITH DROP-OFF
- MILLED SURFACE

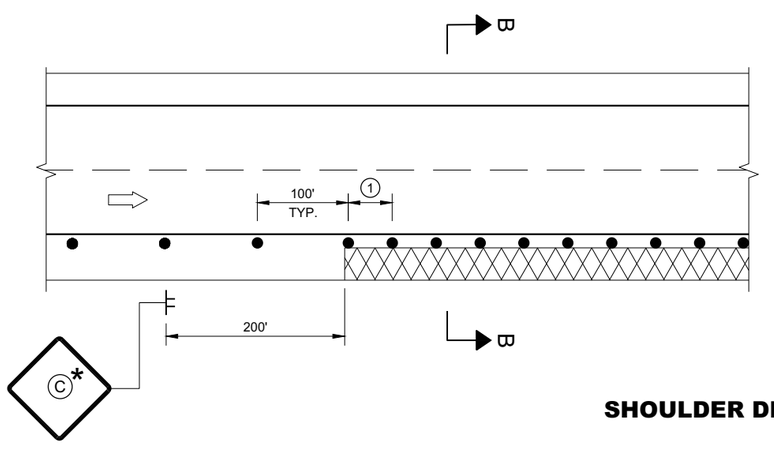

SHOULDER DROP-OFFS

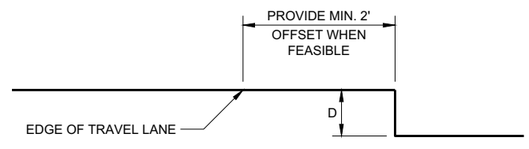

SECTION B - B

D	SIGN (C)
< 2" WITH A SLOPE STEEPER THAN 3:1	LOW SHOULDER WO8-9
2" < 6" WITH A SLOPE STEEPER THAN 3:1	SHOULDER DROP - OFF W8-9A PROVIDE A 3:1 OR FLATTER SLOPE OF MATERIAL ADJACENT TO THE PAVEMENT

TRAFFIC CONTROL, DROP-OFF SIGNING

STATE OF WISCONSIN
DEPARTMENT OF TRANSPORTATION

APPROVED
March 2018 — DATE
/S/ Andrew Heidtke — WORK ZONE ENGINEE
FHWA

GENERAL NOTES

DRAWING NOT TO SCALE. ALL SIGNS AND POSTS ON THIS SHEET SHALL BE PAID FOR WITH 'TRAFFIC CONTROL SIGNS' BID ITEM. ALL SIDE ROADS WHICH ARE UNDER CONSTRUCTION OF CURB AND GUTTER AND/OR GRADING SHALL BE ADEQUATELY SIGNED.

ALL SIGNS AND DEVICES SHALL BE IN CONFORMANCE WITH THE WISCONSIN MANUAL OF UNIFORM TRAFFIC CONTROL DEVICES (WMUTCD). SIGN LAYOUTS SHALL BE IN ACCORDANCE WITH THE WISDOT STANDARD SIGN PLATES.

"WO" SIGNS ARE THE SAME AS "W" SIGNS EXCEPT THAT THE BACKGROUND IS ORANGE.

ALL SIGNS ARE 48" X 48" UNLESS OTHERWISE NOTED.

THE EXACT NUMBER, LOCATION AND SPACING OF ALL SIGNS AND DEVICES SHALL BE ADJUSTED TO FIT FIELD CONDITIONS AS DIRECTED BY THE ENGINEER.

ALL SIGNS INAPPROPRIATE TO THE STATUS OF THE CONTROL ZONE, INCLUDING PRE-EXISTING SIGNS IN THE VICINITY, SHALL BE COVERED OR REMOVED AS DIRECTED BY THE ENGINEER.

SEE 15C34 FOR ADDITIONAL TRAFFIC CONTROL SIGNING WHEN CENTERLINE PAVEMENT MAKINGS ARE MISSING. 'DO NOT PASS' SIGNS MUST BE INSTALLED ON THE SAME DAY AS MILLING OPERATIONS.

(1) PLACE SIGNS 350' IN ADVANCE OF MILLED SURFACES AND AT 1 MILE INTERVALS, OR AS DIRECTED BY THE ENGINEER.

(2) PLACE SIGN 200' MIN. FROM INTERSECTION AND 200' MIN. AFTER ADVANCE WARNING SIGN SHOWN IN SDD 15C04.

LEGEND

SIGN ON TEMPORARY SUPPORT

DIRECTION OF TRAFFIC

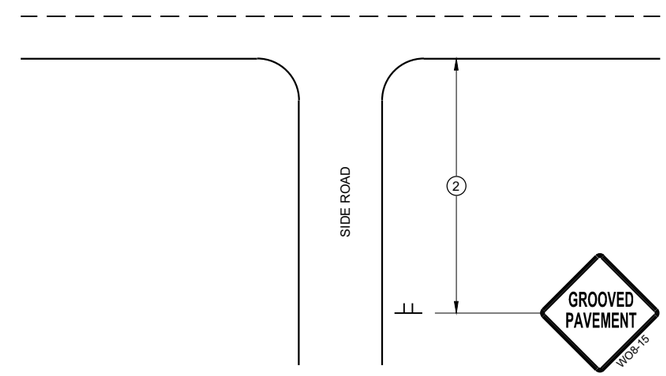

TYPICAL SIDE ROAD APPROACH SIGN DETAIL

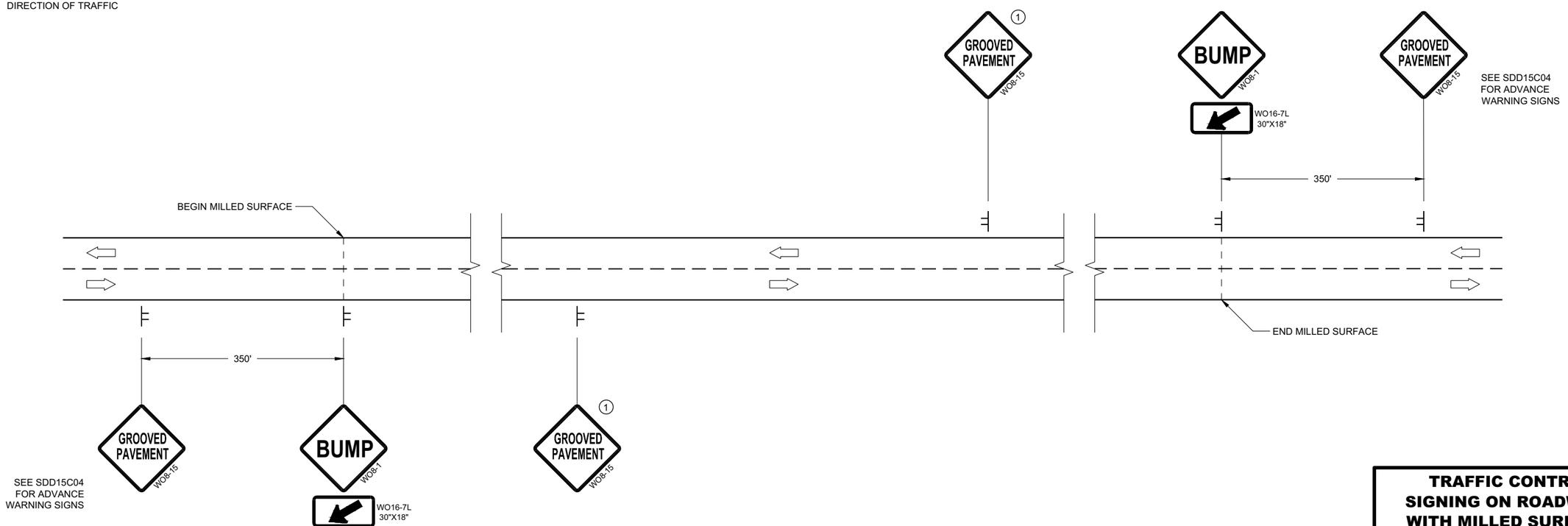

DETAIL FOR SIGNING ON MILLED SURFACES

TRAFFIC CONTROL, SIGNING ON ROADWAYS WITH MILLED SURFACES

STATE OF WISCONSIN
DEPARTMENT OF TRANSPORTATION

APPROVED
February 2020 — DATE
/S/ Andrew Heidtke — WORK ZONE ENGINEE
FHWA

6

SDD 15D44 - 02

6

SDD 15D44 - 02

GENERAL NOTES

DRAWING NOT TO SCALE. ALL SIGNS AND POSTS ON THIS SHEET SHALL BE PAID FOR WITH 'TRAFFIC CONTROL SIGNS' BID ITEM. ALL SIDE ROADS WHICH ARE UNDER CONSTRUCTION OF CURB AND GUTTER AND/OR GRADING SHALL BE ADEQUATELY SIGNED.

ALL SIGNS AND DEVICES SHALL BE IN CONFORMANCE WITH THE WISCONSIN MANUAL OF UNIFORM TRAFFIC CONTROL DEVICES (WMUTCD). SIGN LAYOUTS SHALL BE IN ACCORDANCE WITH THE WISDOT STANDARD SIGN PLATES.

"WO" SIGNS ARE THE SAME AS "W" SIGNS EXCEPT THAT THE BACKGROUND IS ORANGE.

ALL SIGNS ARE 48" X 48" UNLESS OTHERWISE NOTED.

THE EXACT NUMBER, LOCATION AND SPACING OF ALL SIGNS AND DEVICES SHALL BE ADJUSTED TO FIT FIELD CONDITIONS AS DIRECTED BY THE ENGINEER.

ALL SIGNS INAPPROPRIATE TO THE STATUS OF THE CONTROL ZONE, INCLUDING PRE-EXISTING SIGNS IN THE VICINITY, SHALL BE COVERED OR REMOVED AS DIRECTED BY THE ENGINEER.

SEE 15C34 FOR ADDITIONAL TRAFFIC CONTROL SIGNING WHEN CENTERLINE PAVEMENT MAKINGS ARE MISSING. 'DO NOT PASS' SIGNS MUST BE INSTALLED ON THE SAME DAY AS MILLING OPERATIONS.

1. PLACE SIGNS 350' IN ADVANCE OF CHIP SEALED OR LOOSE GRAVEL SURFACES AND AT 1 MILE INTERVALS, OR AS DIRECTED BY THE ENGINEER.
2. PLACE SIGN 200' MIN. FROM INTERSECTION AND 200' MIN. AFTER ADVANCE WARNING SIGN SHOWN IN SDD 15C04.
3. ADD WO8-1 OR WO8-2 SIGN WHEN THE CONDITION IS PRESENT.

LEGEND

SIGN ON TEMPORARY SUPPORT

DIRECTION OF TRAFFIC

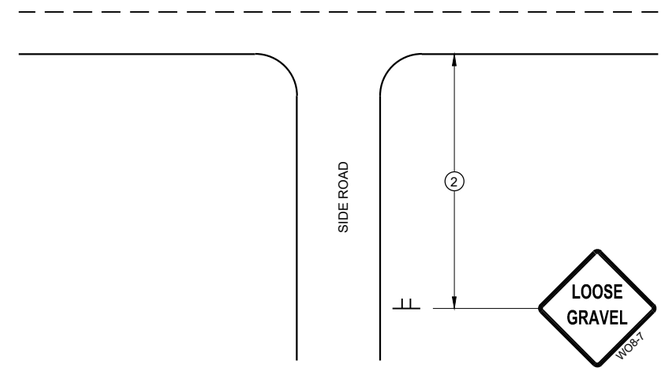

TYPICAL SIDE ROAD APPROACH SIGN DETAIL

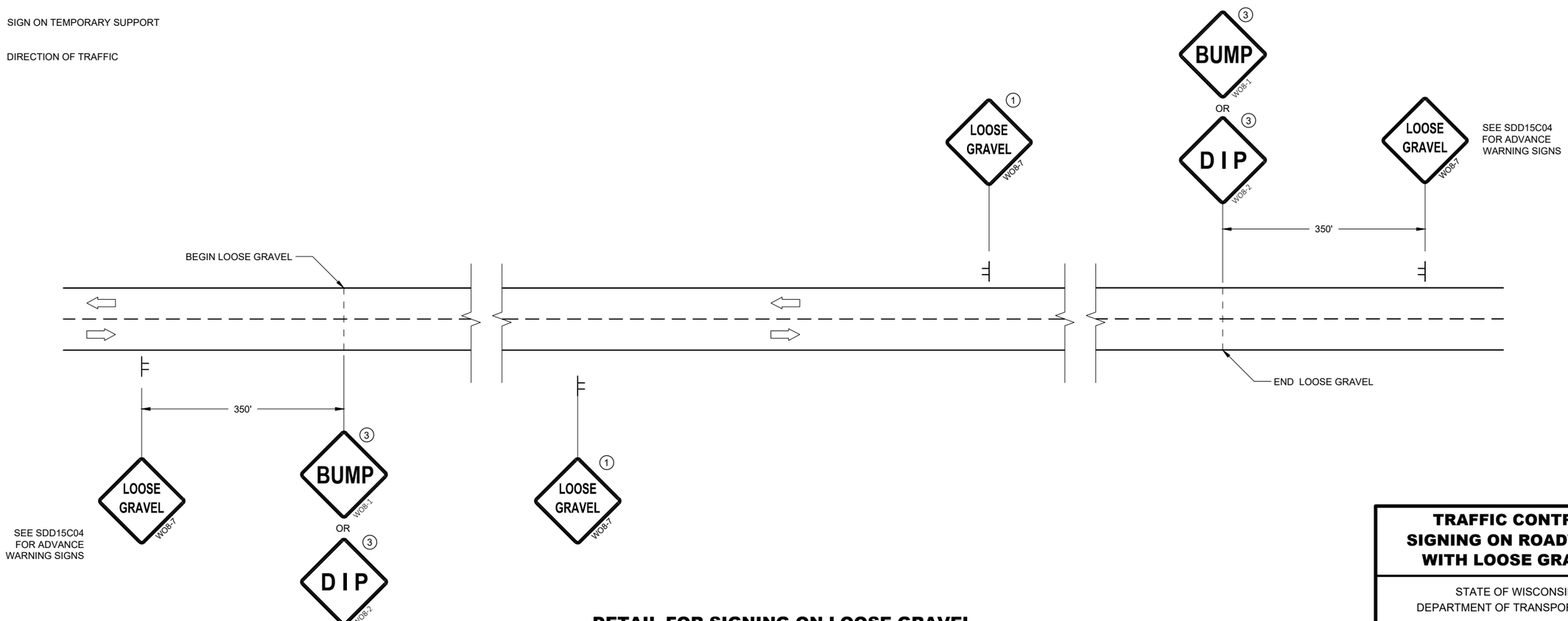

DETAIL FOR SIGNING ON LOOSE GRAVEL OR CHIP SEALED SURFACES

TRAFFIC CONTROL SIGNING ON ROADWAYS WITH LOOSE GRAVEL

STATE OF WISCONSIN
DEPARTMENT OF TRANSPORTATION

APPROVED
February 2021 /S/ Andrew Heidtke
DATE WORK ZONE ENGINEE
FHWA

6

SDD 15D45 - 03

LEGEND

V1 WORK VEHICLE

V2 SHADOW VEHICLE

TRUCK MOUNTED ATTENUATOR (TMA)

FLASHING ARROW PANEL (CAUTION)

WORK AREA

DIRECTION OF TRAFFIC

POSTED SPEED PRIOR TO WORK STARTING (MPH)	DECISION SIGHT DISTANCE (D)
0 - 25	550'
30	550'
35	700'
40	700'
45	900'
50	900'
55	1200'

GENERAL NOTES

ALL SIGNS ARE 48"X48" UNLESS OTHERWISE NOTED.

MOBILE IS WORK THAT MOVES CONTINUOUSLY OR MOVES AT LEAST THE DECISION SIGHT DISTANCE EVERY 15 MINUTES.

ALL VEHICLES SHALL BE EQUIPPED WITH TWO 360 DEGREE HIGH INTENSITY YELLOW FLASHING LIGHTS OR STROBE LIGHTS AND OPERATED WITH HEADLIGHTS TURNED ON.

ALL ARROW PANELS SHALL BE REAR FACING, TYPE "B" OR "C", AND DISPLAYING THE FLASHING CAUTION MODE. SIGNS PLACED ON VEHICLES MUST NOT OBSCURE THE ARROW PANEL.

USE AN ATTENUATOR ON THE REARMOST VEHICLE THAT BLOCKS ALL OR PART OF THE TRAFFIC LANE.

1 DISTANCE BETWEEN VEHICLES MAY INCREASE FROM THE ATTENUATOR'S ROLL AHEAD BASED ON TERRAIN, SIGHT DISTANCE, AND OTHER FACTORS. WHENEVER ADEQUATE STOPPING SIGHT DISTANCE EXISTS TO THE REAR, SHADOW VEHICLES SHOULD MAINTAIN THE MINIMUM DISTANCE FROM THE WORK VEHICLE AND PROCEED AT THE SAME SPEED AS THE WORK VEHICLE. SHADOW VEHICLES SHOULD SLOW DOWN IN ADVANCE OF VERTICAL OR HORIZONTAL CURVES THAT RESTRICT SIGHT DISTANCE.

2 ALIGN LEFT SIDE OF SHADOW VEHICLE WITH EDGE OF WORK AREA.

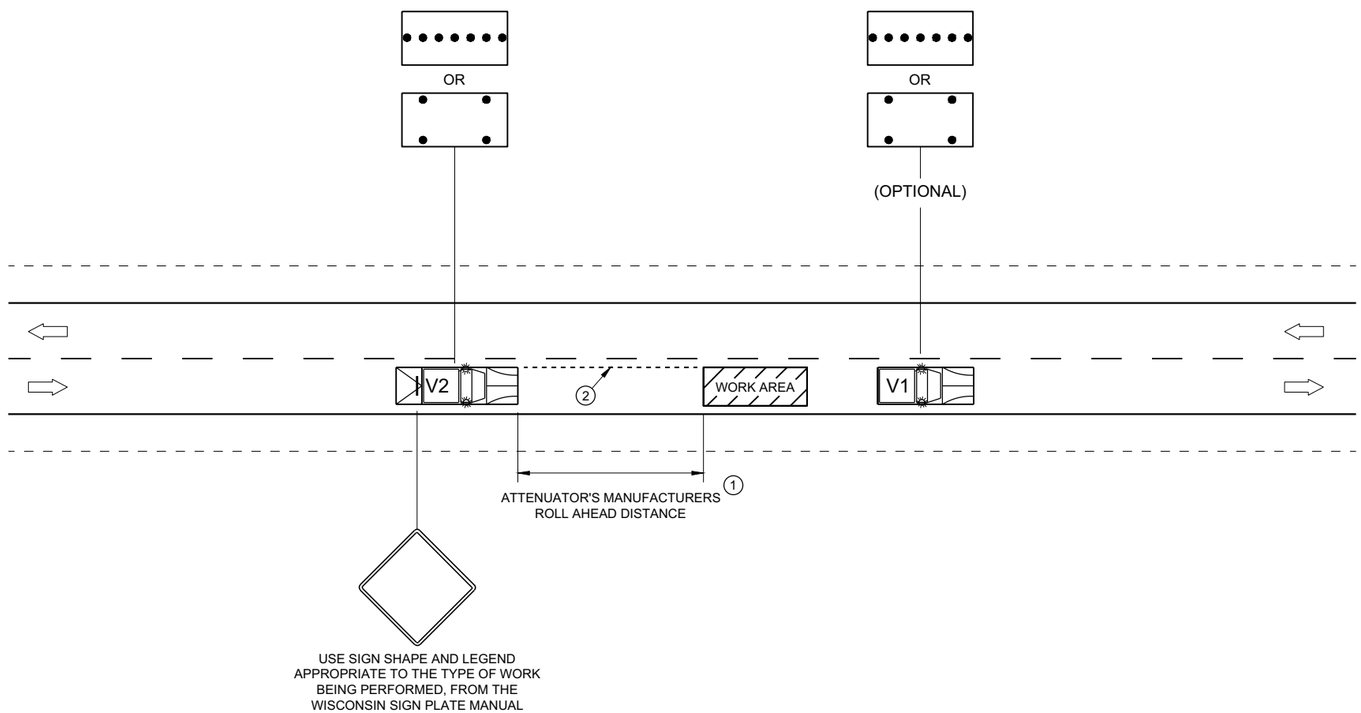

TRAFFIC CONTROL, MOBILE OPERATIONS ON AN UNDIVIDED ROADWAY

STATE OF WISCONSIN
DEPARTMENT OF TRANSPORTATION

APPROVED
February 2021 — DATE
/S/ Andrew Heidtke — STATEWIDE WORK ZONE T SAFETY ENGINEER
FHWA

NOTES

1. Fixed Message Signs Type II - Type F Reflective
2. Color:
   Background - Orange
   Message - Black
3. Message Series - B

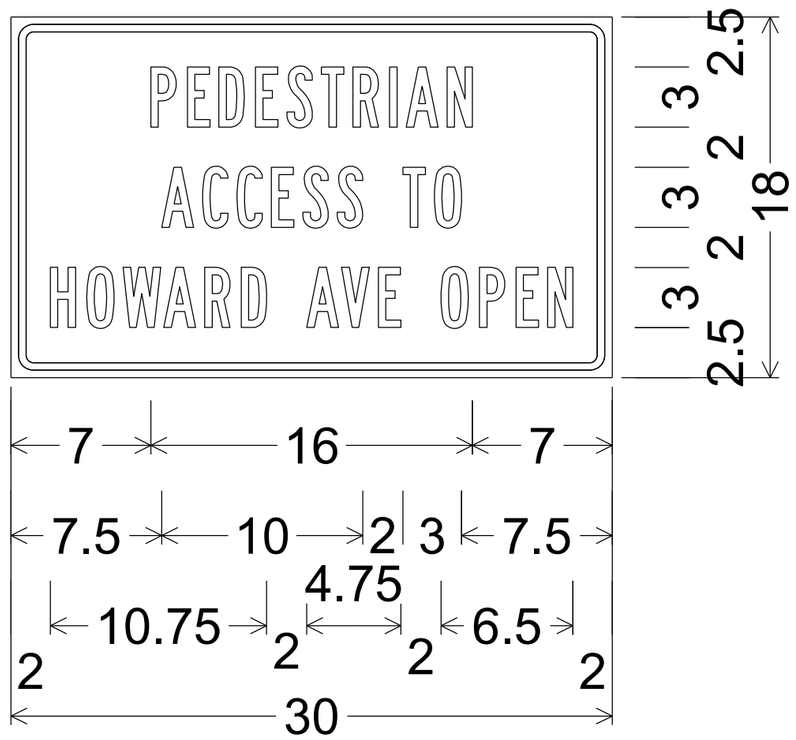

1.125" Radius, 0.375" Border, 0.375" Indent

URBAN AREA

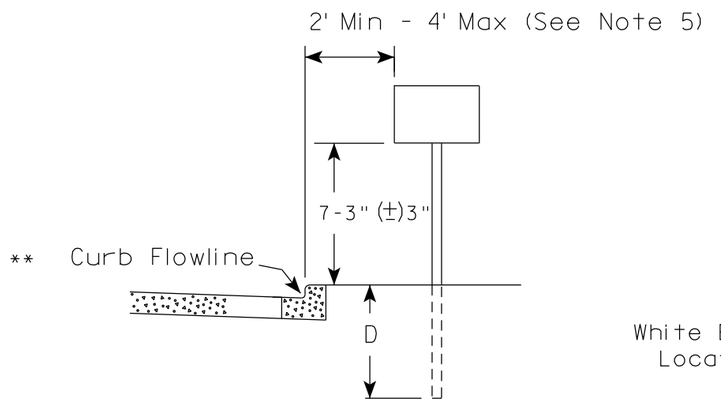

RURAL AREA (See Note 2)

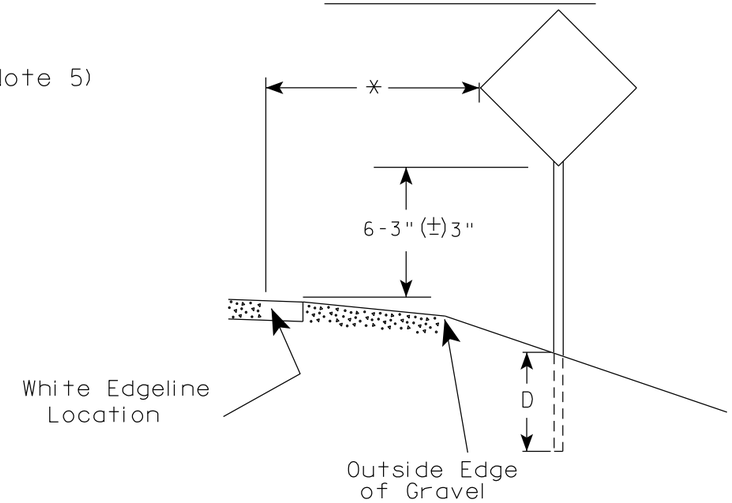

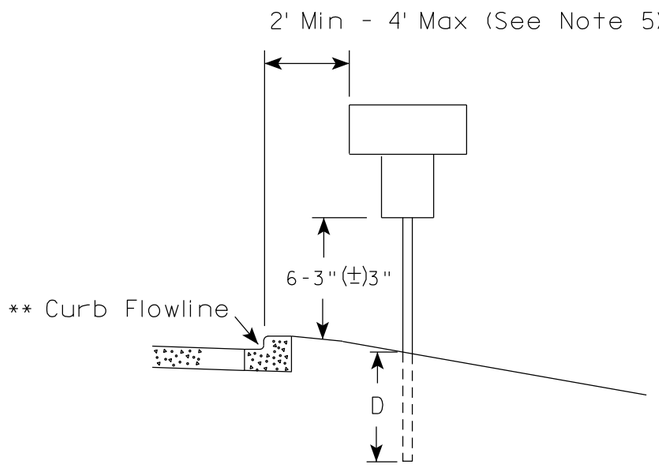

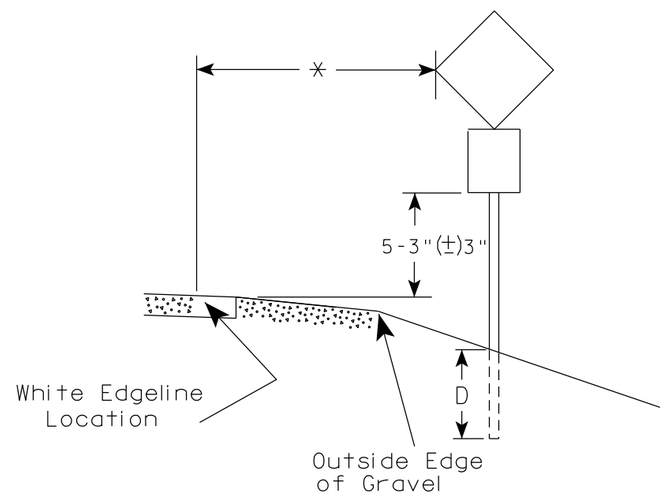

** The existence of curb and gutter does not in itself mandate the vertical clearance illustrated. That height is typically measured where there is sidewalk adjacent to the roadway or parking is permitted. In the absence of sidewalk vertical clearance is measured from the top of the curb. Offset of signs is measured from the flow line.

* 6 feet from edge of a paved shoulder or 12 feet from the edge of pavement (edge line location) or 2 feet from outside edge of gravel, whichever is greater unless directed by project engineer.

GENERAL NOTES

1. Signs wider than 4 feet or 20 sq.ft or larger, shall be mounted on multiple posts. Refer to plate A4-4.
2. If signs are mounted on or behind barrier wall, see A4-10 sign plate.
   The Double Arrow sign (W12-1D) shall be mounted at a height of 2'-3" (±) 3". The Chevron sign (W1-8), Roundabout Chevron panel (R6-4B), Enhanced Reference Markers, Clearance Markers (W5-52), Mile Markers (D10 series), In Road Object Markers (W5-54) & End of Road Markers (W5-56) shall be mounted at a height of 4'-3" (±) 3".
3. For expressways and freeways, mounting height is 7'- 3" (±) 3" or 6'-3" (±) 3" depending upon existence of a sub-sign.
4. Minimum mounting height for signs mounted on traffic signal poles is 5'- 3" (±) 3".
5. Offset distance shall be consistent with existing signs or consistent throughout length of project.
6. Folding signs shall be mounted at a height of 5'-3" (±) 3" or as directd by the Engineer.

POST EMBEDMENT DEPTH

Area of Sign Installation (Sq. Ft.)	D (Min)
20 or Less	4'
Greater than 20	5'

TYPICAL INSTALLATION OF PERMANENT TYPE II SIGNS ON SINGLE POSTS

WISCONSIN DEPT OF TRANSPORTATION

APPROVED Matthew R Rauch
for State Traffic Engineer

DATE 12/6/23 PLATE NO. A4-3.23

7 7

PROJECT NO:	HWY:	COUNTY:		SHEET NO: 130	E

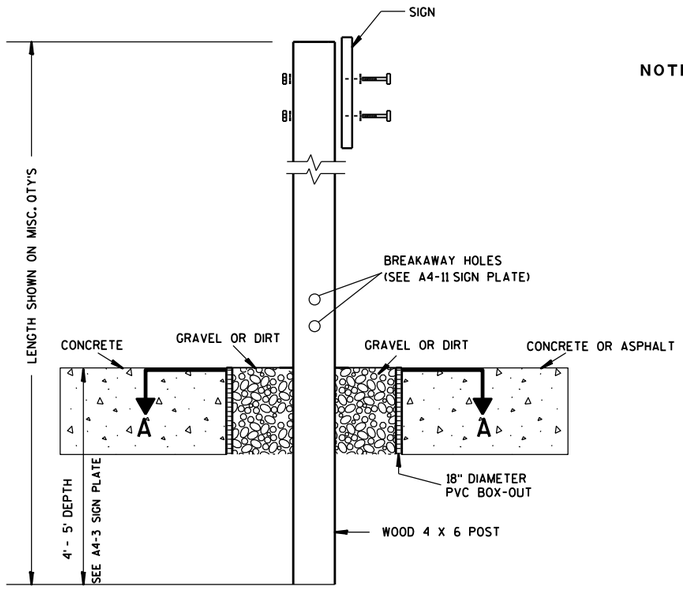

ELEVATION VIEW

DETAIL OF WOOD 4 X 6 SIGN POST IN BOX-OUT

NOTES:
1. ALL MATERIAL TO BE APPROVED BY ENGINEER PRIOR TO INSTALLATION
2. SEE SIGN PLATE A4-8 FOR SIGN HARDWARE REQUIREMENTS
3. 18 INCH X 18 INCH SQUARE BOX-OUTS MAY BE USED FOR INSTALLATIONS IN EXISTING CONCRETE OR ASPHALT LOCATIONS.

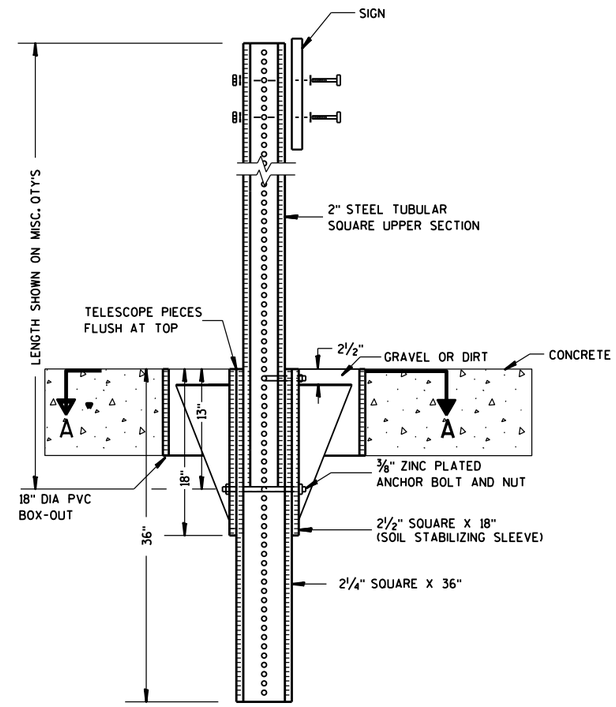

ELEVATION VIEW

DETAIL OF STEEL 2 X 2 SIGN POST IN BOX-OUT

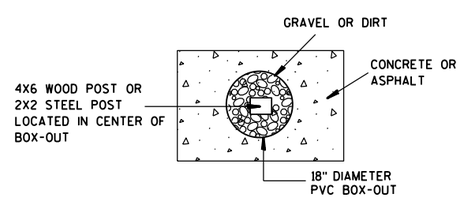

PLAN VIEW

FOR NEW CONCRETE/ASPHALT INSTALLATIONS

SIGN POST
BOX-OUTS
A4-3B

WISCONSIN DEPT OF TRANSPORTATION

APPROVED Matthew R Rauch
for State Traffic Engineer

DATE 1/27/14 PLATE NO. A4-3B.1

PROJECT NO:	HWY:	COUNTY:		SHEET NO:	E

URBAN AREA

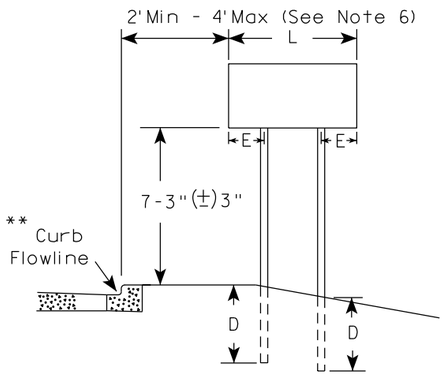

RURAL AREA (See Note 3)

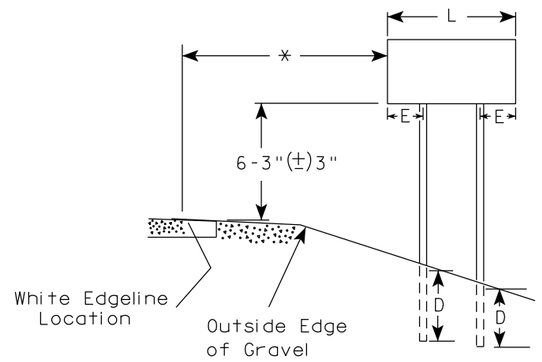

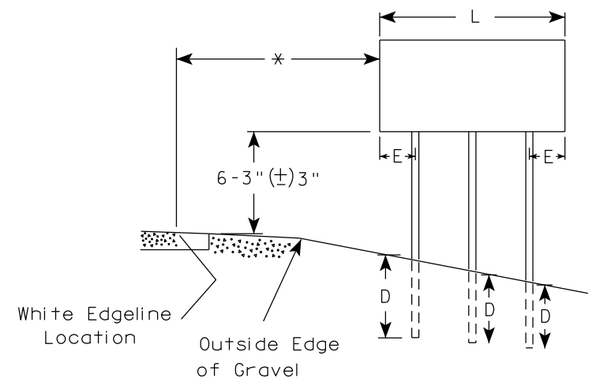

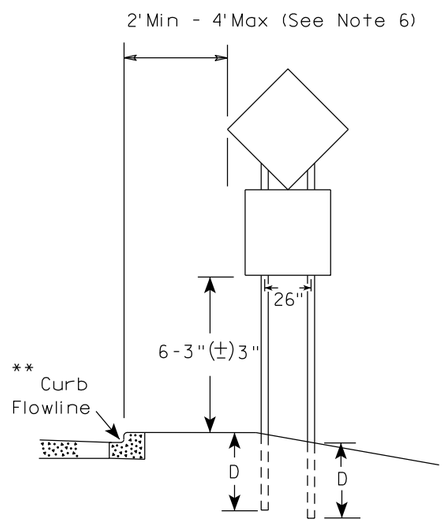

48" DIAMOND WARNING SIGN

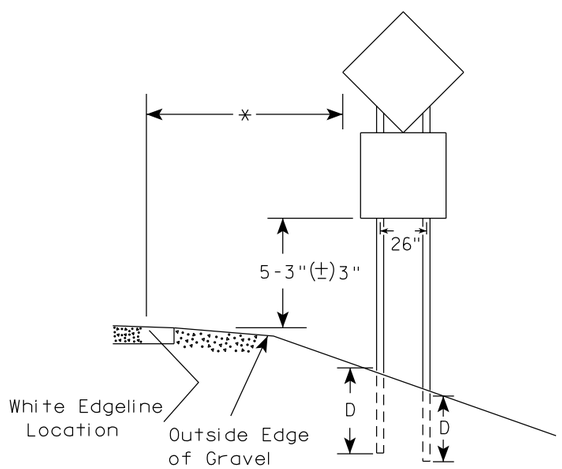

48" DIAMOND WARNING SIGN

GENERAL NOTES

1. For 3 or 4 post installations, individual post spacing shall be greater than 3'-6".
2. See tables below for required number of posts.
3. For expressways and freeways, mounting height is 7'-3" (±) 3" or 6'-3" (±) 3" depending upon existence of sub-sign.
4. The (±) tolerance for mounting height is 3 inches.
5. J-Assemblies are considered to be one sign for mounting height.
6. Offset distance shall be consistent with existing signs or consistent throughout length of project.
7. Folding signs shall be mounted at a height of 5'-3" (±) 3" or as directed by the engineer.
8. The Double Arrow sign (W12-1) shall be mounted at a height of 2'-3" (±) 3". The Chevron sign (W1-8), Roundabout Chevron panel (R6-4B), Clearance Markers (W5-52), Mile Markers (D10 series), In Road Object Markers (W5-54) & End of Road Markers (W5-56) shall be mounted at a height of 4"-3" (±) 3".

* 6 feet from edge of a paved shoulder or 12 feet from the edge of pavement (edge line location) or 2 feet from outside edge of gravel, whichever is greater unless directed by project engineer.

** The existence of curb and gutter does not in itself mandate the vertical clearance illustrated. That height is typically measured where there is sidewalk adjacent to the roadway or parking is permitted. In the absence of sidewalk vertical clearance is measured from the top of the curb. Offset of signs is measured from the flow line.

*** See A4-3 sign plate for signs 4' or less in width and less than 20 S.F. in area.

SIGN SHAPE OTHER THAN DIAMOND (TWO POSTS REQUIRED)	
L	E
*** Greater than 48" Less than 60"	12"
60" to 108"	L/5

SIGN SHAPE OTHER THAN DIAMOND (THREE POSTS REQUIRED)	
L	E
Greater than 108" to 144"	12"

POST EMBEDMENT DEPTH

Area of Sign Installation (Sq. Ft.)	D (Min)
20 or Less	4'
Greater than 20	5'

TYPICAL INSTALLATION OF TYPE II SIGNS ON MULTIPLE POSTS

WISCONSIN DEPT OF TRANSPORTATION

APPROVED Matthew R Rauch
for State Traffic Engineer

DATE 12/6/23 PLATE NO. A4-4.16

PROJECT NO:	HWY:	COUNTY:		SHEET NO: 132	E

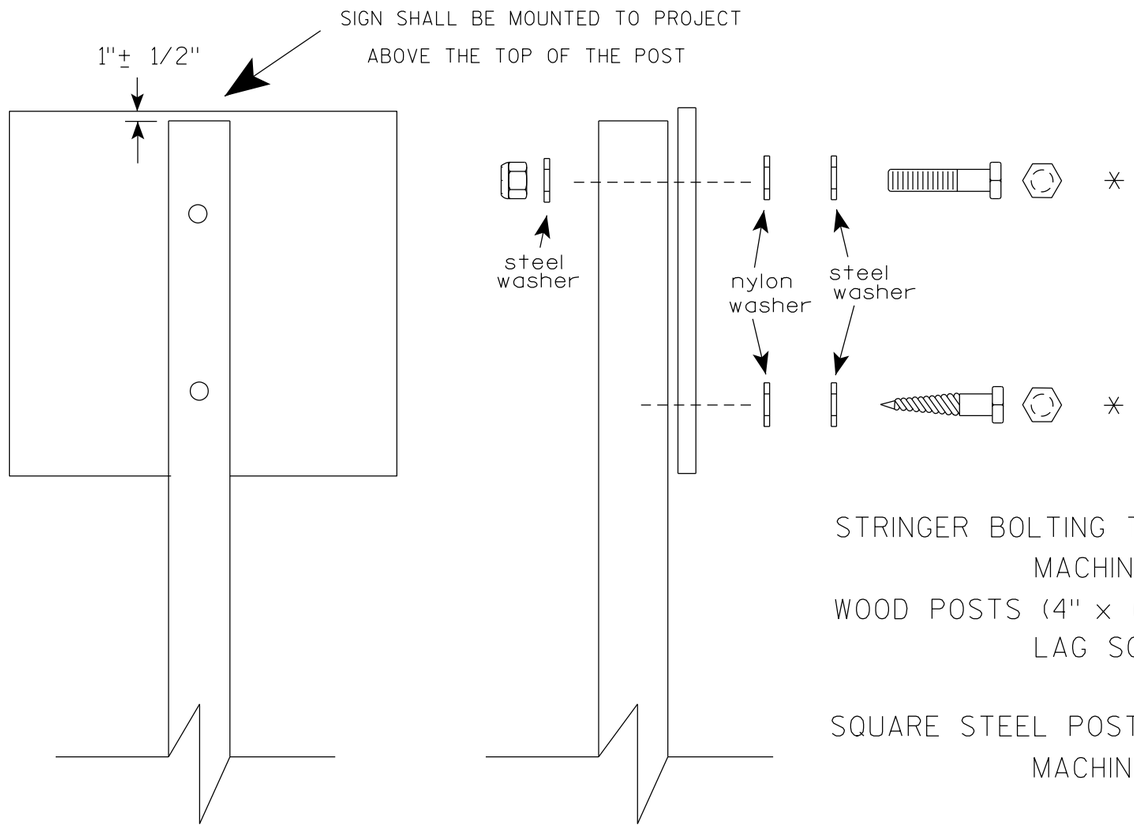

Nuts, bolts and lags used for mounting signs shall have hexagonal heads and shall be either :

a. Hot dip galvanized in accordance with ASTM Designation: A 153, Class D, or SC 3

b. Electro-galvanized in accordance with ASTM Designation : B 633, TYPE III, SC 3.

Threads on bolts and nuts shall be manufactured with sufficient allowance for the cadmium plate or galvanized coating to permit the nuts to run freely on the bolts.

STRINGER BOLTING TO ALUMINUM SIGNS (SEE SIGN PLATE A4-18)

MACHINE BOLTS - 5/16" X 1-3/4" Length w/ lock nuts

WOOD POSTS (4" x 6")

LAG SCREWS - 3/8" X 3" (NO STRINGERS ON BACK OF SIGN)

3/8" X 4" (STRINGERS ON BACK OF SIGN)

SQUARE STEEL POSTS (2" x 2")

MACHINE BOLTS - 3/8" X 3-1/4" Length w/ nuts (NO STRINGER ON BACK OF SIGN)

3/8" X 5" Length w/ nuts (STRINGERS ON BACK OF SIGN)

RIVETS - 9/32 " (6605-9-6) BULB-TITE, TRI-FOLD, ALUMINUM BODY/MANDREL

O.D. FLANGE .720-.765 INCH, GRIP RANGE .042-.375 INCH

WASHERS (ALL POSTS) -

1-1/4" O.D. X 3/8" I.D. X 1/16" STEEL

1-1/4" O.D. X 3/8" I.D. X .080 NYLON

* Two different fastening systems are shown for illustration purposes. On any individual sign, either one or the other system shall be used. Actual number of fasteners per sign varies with the sign area, but normally there are two. For a single post installation, all signs greater than 9 sq. ft. require the use of 3 fasteners.

ATTACHMENT OF SIGNS TO POSTS

WISCONSIN DEPT OF TRANSPORTATION

APPROVED Matthew R Rauch
for State Traffic Engineer

DATE 4/1/2020 PLATE NO. A4-8.9

TELESCOPIC TUBING ANCHORS
TWO PIECE SYSTEM

2 1/4 " SQUARE
12 GAUGE
PERFORATED
GALVANIZED FINISH

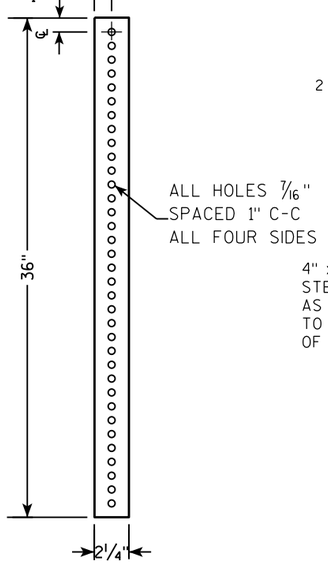

2 1/2 " SQUARE
12 GAUGE
OMNI-DIRECTIONAL
PERFORATED
SOIL STABILIZING SLEEVE
GALVANIZED FINISH

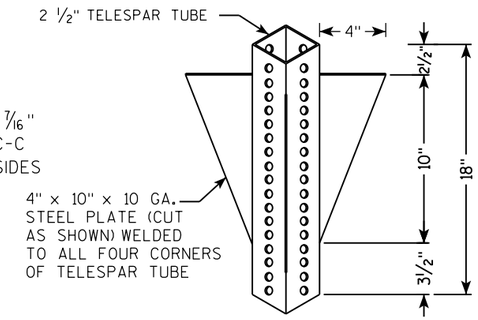

DETAIL OF TUBULAR STEEL SIGN POST
(IN POURED CONCRETE OR ASPHALT)

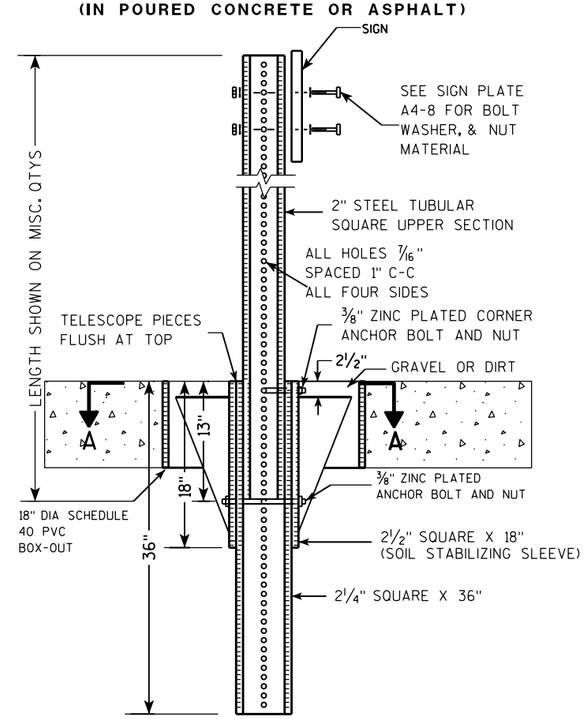

DETAIL OF TUBULAR STEEL SIGN POST
(IN LOCATIONS OTHER THAN POURED CONCRETE OR ASPHALT)

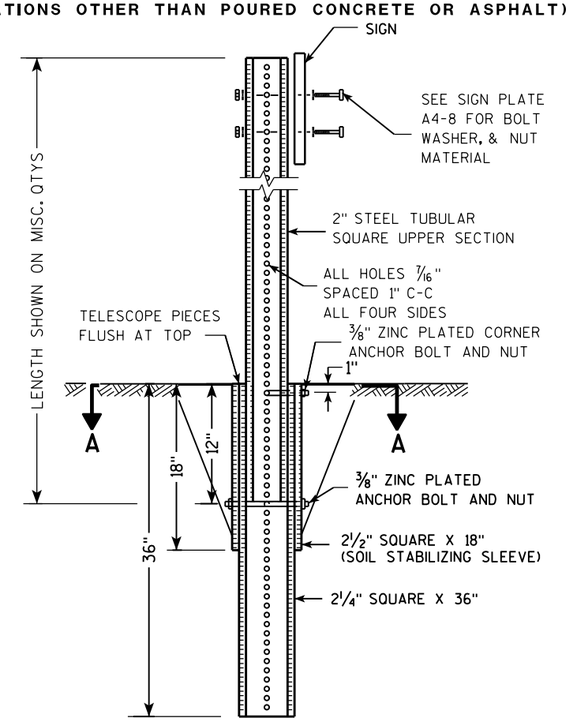

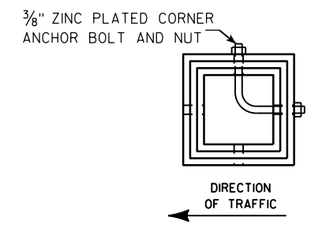

SECTION A-A

Area of Sign Installation (Sq. Ft.)	Number of Required Posts
9 or less	1
Greater than 9 less than or equal to 18	2
Greater than 18 less than or equal to 27	3

Signs wider than 3 feet or larger than 9 sq. ft shall be mounted on multiple posts (see above table).

TUBULAR STEEL
SIGN POST
A4-9

WISCONSIN DEPT OF TRANSPORTATION

APPROVED Matthew R Rauch
for State Traffic Engineer

DATE 2/05/15 PLATE A4-9.9

PROJECT NO:	HWY:	COUNTY:		SHEET NO:	E

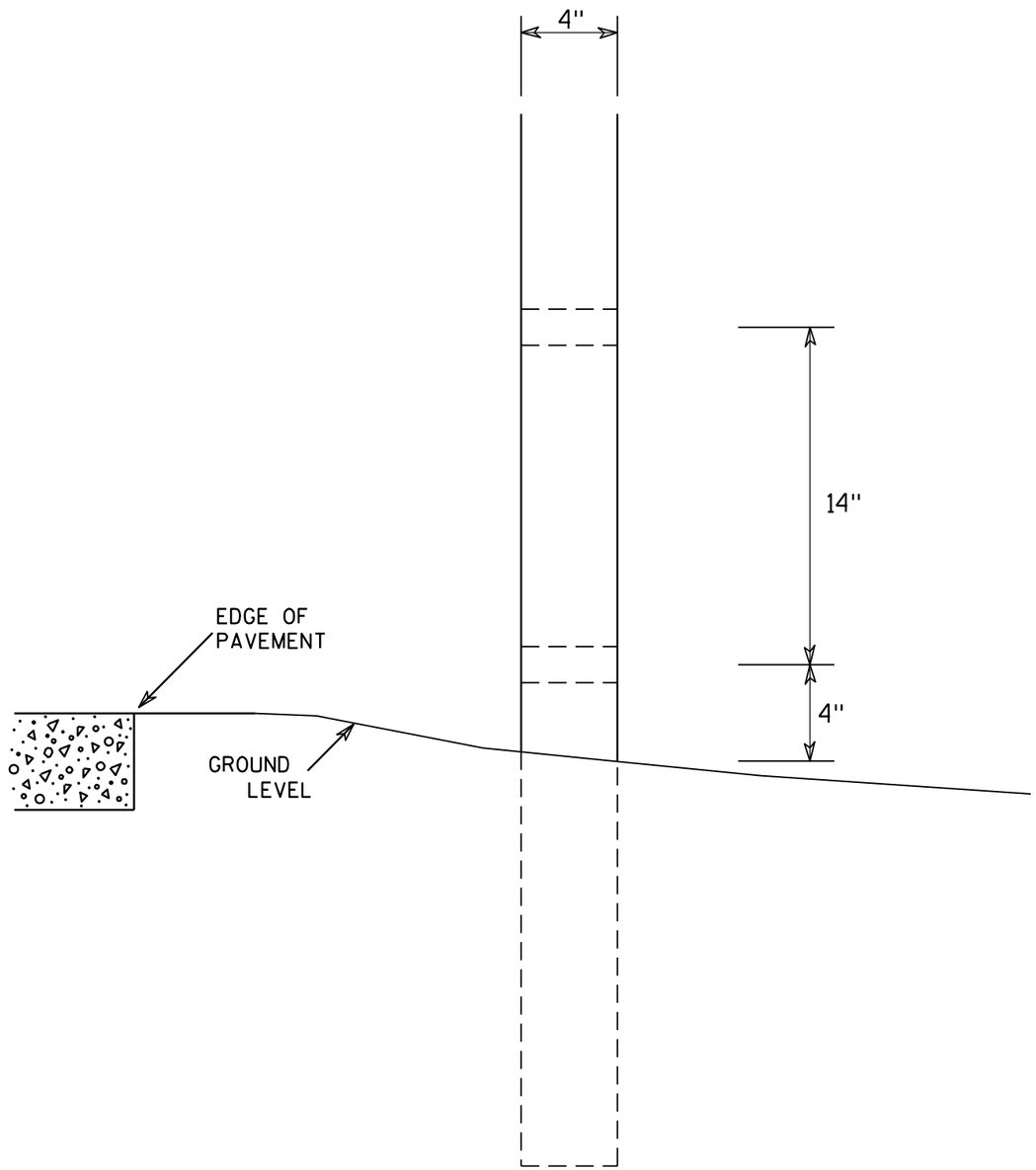

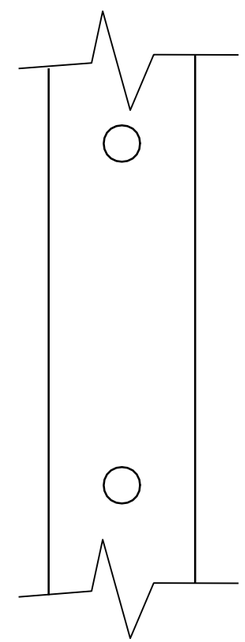

SIDE VIEW

GENERAL NOTES

1. All 4 x 6 Wood Posts shall be modified by having two 1½" diameter holes drilled perpendicular to the roadway centerline.

4 X 6 WOOD POST MODIFICATIONS

WISCONSIN DEPT OF TRANSPORTATION

APPROVED Chester J Spang for State Traffic Engineer

DATE 3/27/97 PLATE NO. A4-11.2

PROJECT NO:	HWY:	COUNTY:		SHEET NO: 135	E

BANDING

SINGLE SIGN

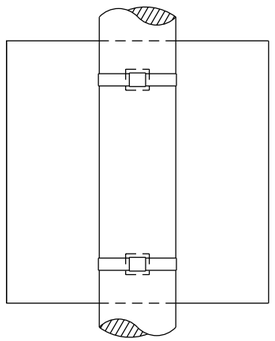

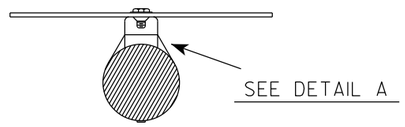

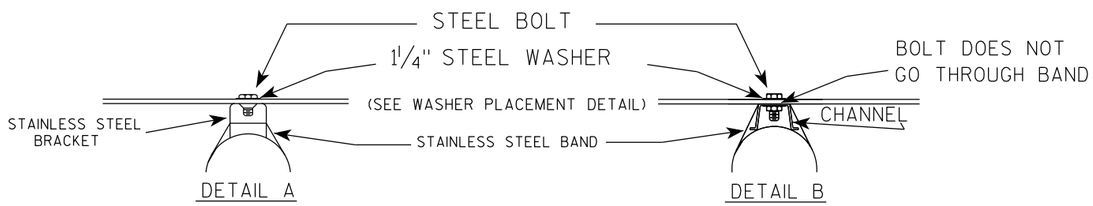

WASHER PLACEMENT

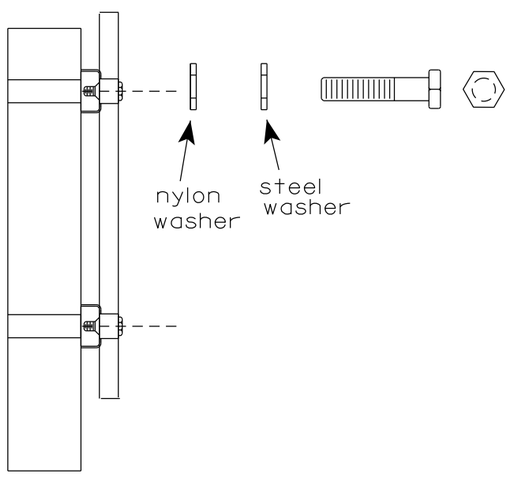

WASHERS (ALL POSTS) -
1-1/4" O.D. X 3/8" I.D. X 1/16" STEEL
1-1/4" O.D. X 3/8" I.D. X .080 NYLON
FOR ALL TYPE H SIGNS

GENERAL NOTES

1. Any sign over 3 feet in width shall use the V-Block banding method. See A5-10 standard plate.
2. Signs 3 feet or greater in height shall have three bracket bands installed. Signs less than 3 feet in height shall have two bracket bands installed.
3. Banding and assembly bracket shall be stainless steel. All bands shall be ¾" in width and 0.025" thickness.
4. ALL SIGN MOUNTING BOLTS AND WASHERS SHALL BE EITHER:
   a. Hot dip or mechanically galvanized in accordance with ASTM Designation: A 153, Class D
   b. Electro-galvanized in accordance with ASTM designation: B 633, Type III, SC 3

"J" ASSEMBLY

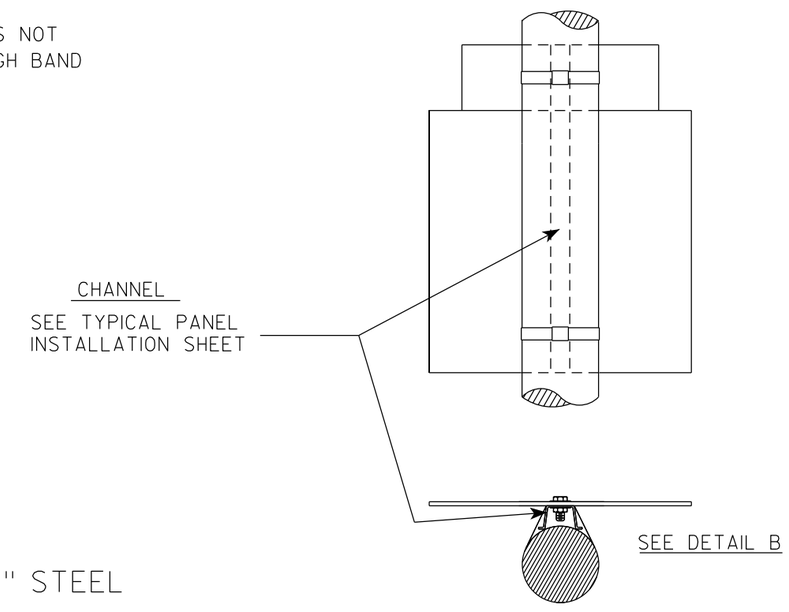

STANDARD SIGN
SIGN BANDING DETAILS

WISCONSIN DEPT OF TRANSPORTATION

APPROVED Matthew R Rauch for State Traffic Engineer

DATE 6/10/19 PLATE NO. A5-9.4

PROJECT NO:	HWY:	COUNTY:		SHEET NO: 136	E

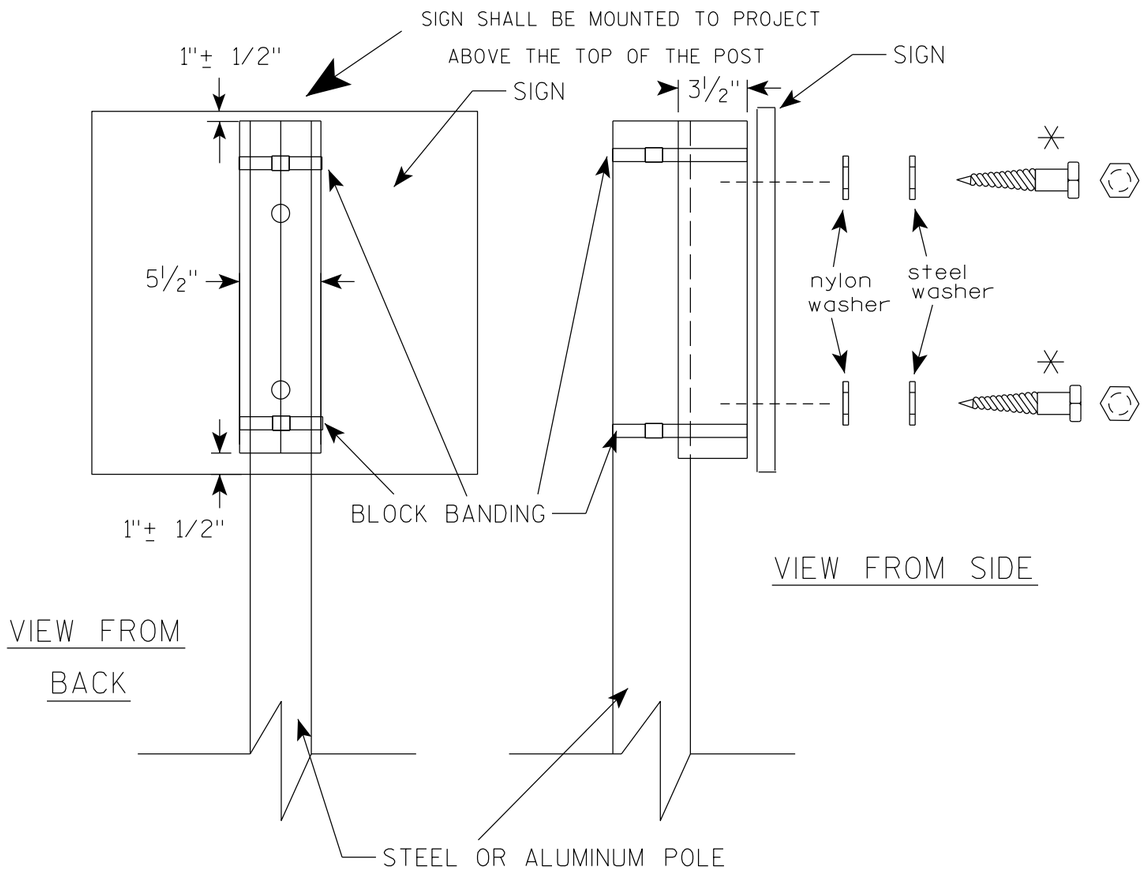

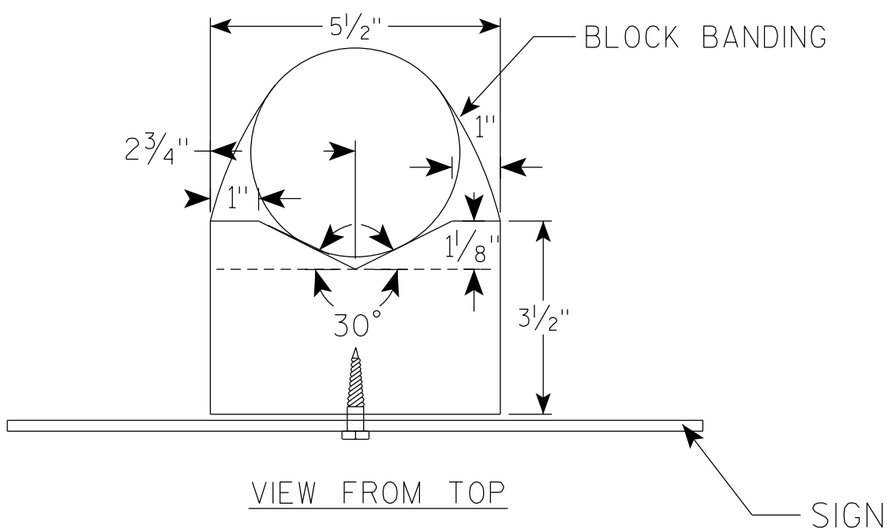

GENERAL NOTES

1. WOOD 4"X6" POST MATERIAL SHALL CONFORM TO 507.2.2 OF THE WisDOT STANDARD SPECIFICATIONS
2. BLOCK BANDING AND CLIPS SHALL BE STAINLESS STEEL, 3/4" WIDTH AND 0.025" THICKNESS
3. SIGNS 3' OR GREATER IN HEIGHT SHALL UTILIZE 3 BLOCK BANDS. SIGNS UNDER 3' IN HEIGHT SHALL UTILIZE 2 BLOCK BANDS
4. ACTUAL NUMBER OF FASTENERS PER SIGN VARIES WITH THE SIGN AREA, BUT NORNALLY THERE ARE TWO. FOR SIGNS GREATER THAN 9 S.F. 3 FASTENERS SHALL BE USED.
5. ALL SIGN MOUNTING BOLTS AND WASHERS SHALL BE EITHER:
   a. Hot dip or mechanically galvanized in accordance with ASTM Designation: A 153, Class D
   b. Electro-galvanized in accordance with ASTM Designation : B 633, TYPE III, SC 3
6. ALL BOLTS SHALL HAVE HEXAGONAL HEADS.
7. STEEL WASHERS SHALL BE 1 1/4" O.D. X 3/8" I.D. X 1/16"
8. NYLON WASHERS SHALL BE 1 1/4" O.D. X 3/8" I.D. X .080 FOR TYPE H OR TYPE F FACE SIGN

✳ LAG BOLTS SHALL BE 3/8" X 2 1/2"

7

7

BLOCK BANDING DETAIL
(V-BLOCK OPTION)

WISCONSIN DEPT OF TRANSPORTATION

APPROVED Matthew R Rauch
for State Traffic Engineer

DATE 4/19/2022 PLATE NO. A5-10.3

PROJECT NO:				SHEET NO: 137	E

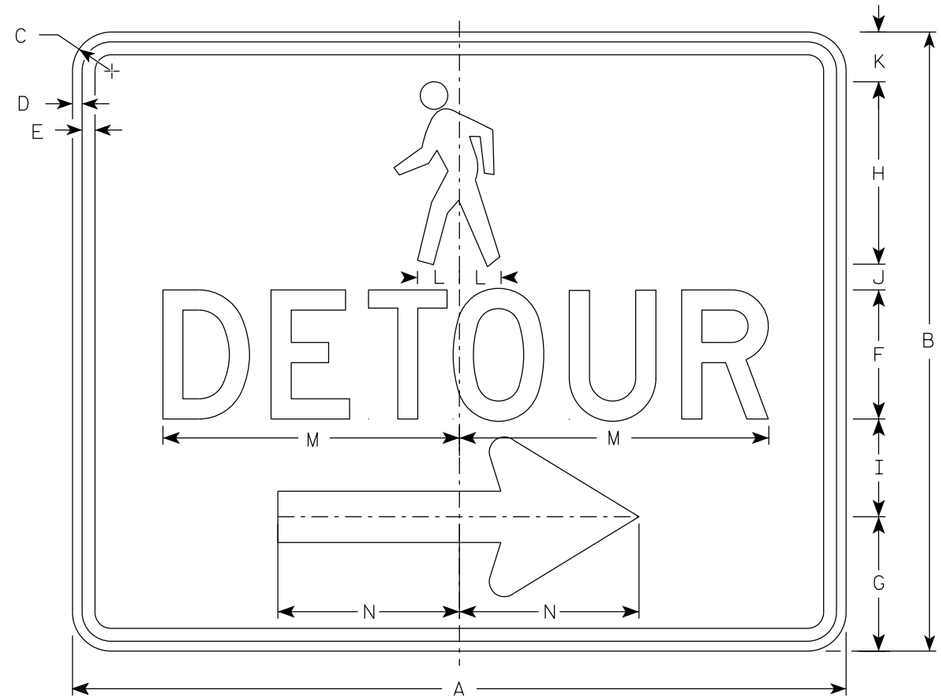

M4-9BR

NOTES

1. Sign is Type II-Type F Reflective
2. Color:
   Background - Orange
   Message - Black
3. Message Series - D
4. Corners may be square or rounded when base material is plywood but borders shall be rounded as shown. When base material is metal, the corners and borders shall be rounded.
5. M4-9BL is the same as M4-9BR except the arrow is reversed.

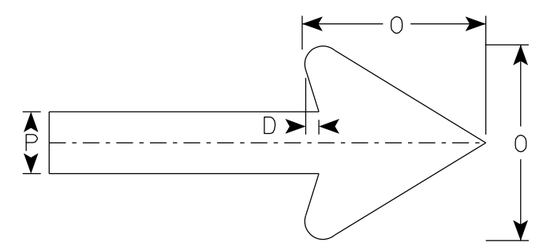

Arrow Detail

SIZE	A	B	C	D	E	F	G	H	I	J	K	L	M	N	O	P	Q	R	S	T	U	V	W	X	Y	Z	Area sq. ft.
1																											
2S	30	24	1 1/2	3/8	1/2	5	5 1/4	7 1/8	3 3/4	1	1 1/8	1 5/8	11 3/4	7	6	2											5.0
2M	30	24	1 1/2	3/8	1/2	5	5 1/4	7 1/8	3 3/4	1	1 1/8	1 5/8	11 3/4	7	6	2											5.0
3																											
4																											
5																											

STANDARD SIGN
M4-9B L&R

WISCONSIN DEPT OF TRANSPORTATION

APPROVED Matthew R Rauch
for State Traffic Engineer

DATE 2/9/2023 PLATE NO. M4-9B.4

PROJECT NO: | HWY: | COUNTY: | SHEET NO: 138 | E

NOTES

1. Sign is Type II- Type F Reflective
2. Color:
   Background - Orange
   Message - Black
3. Corners may be square or rounded when base material is plywood but borders shall be rounded as shown. When base material is metal, the corners and borders shall be rounded.

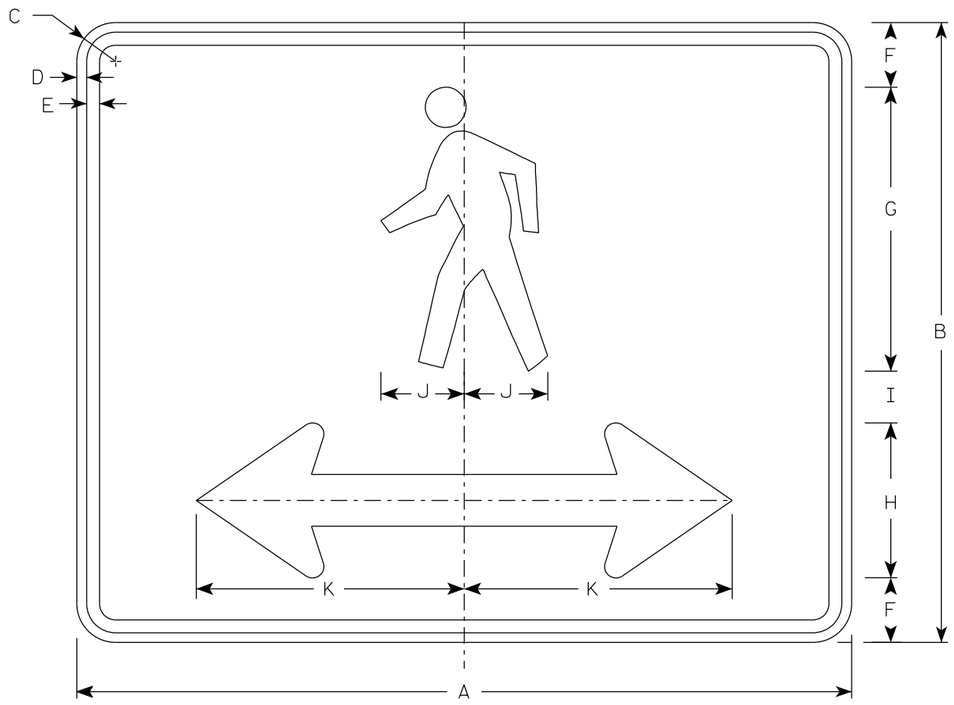

M4-60D

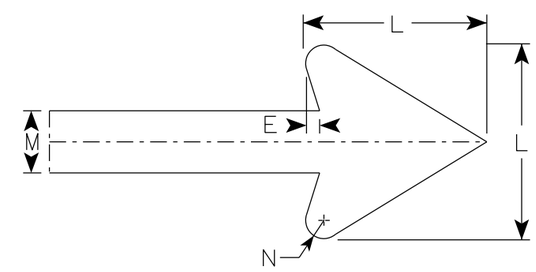

Arrow Detail

SIZE	A	B	C	D	E	F	G	H	I	J	K	L	M	N	O	P	Q	R	S	T	U	V	W	X	Y	Z	Area sq. ft.
1																											
2S	30	24	1 1/2	3/8	1/2	2 1/2	11	6	2	3 1/4	10 3/8	6	2	3/8													5.00
2M	30	24	1 1/2	3/8	1/2	2 1/2	11	6	2	3 1/4	10 3/8	6	2	3/8													5.00
3																											
4																											
5																											

STANDARD SIGN
M4-60D

WISCONSIN DEPT OF TRANSPORTATION

APPROVED Matthew R Rauch
for State Traffic Engineer

DATE 2/14/2023 PLATE NO. M4-60D.2

PROJECT NO: | HWY: | COUNTY: | SHEET NO: 139 | E

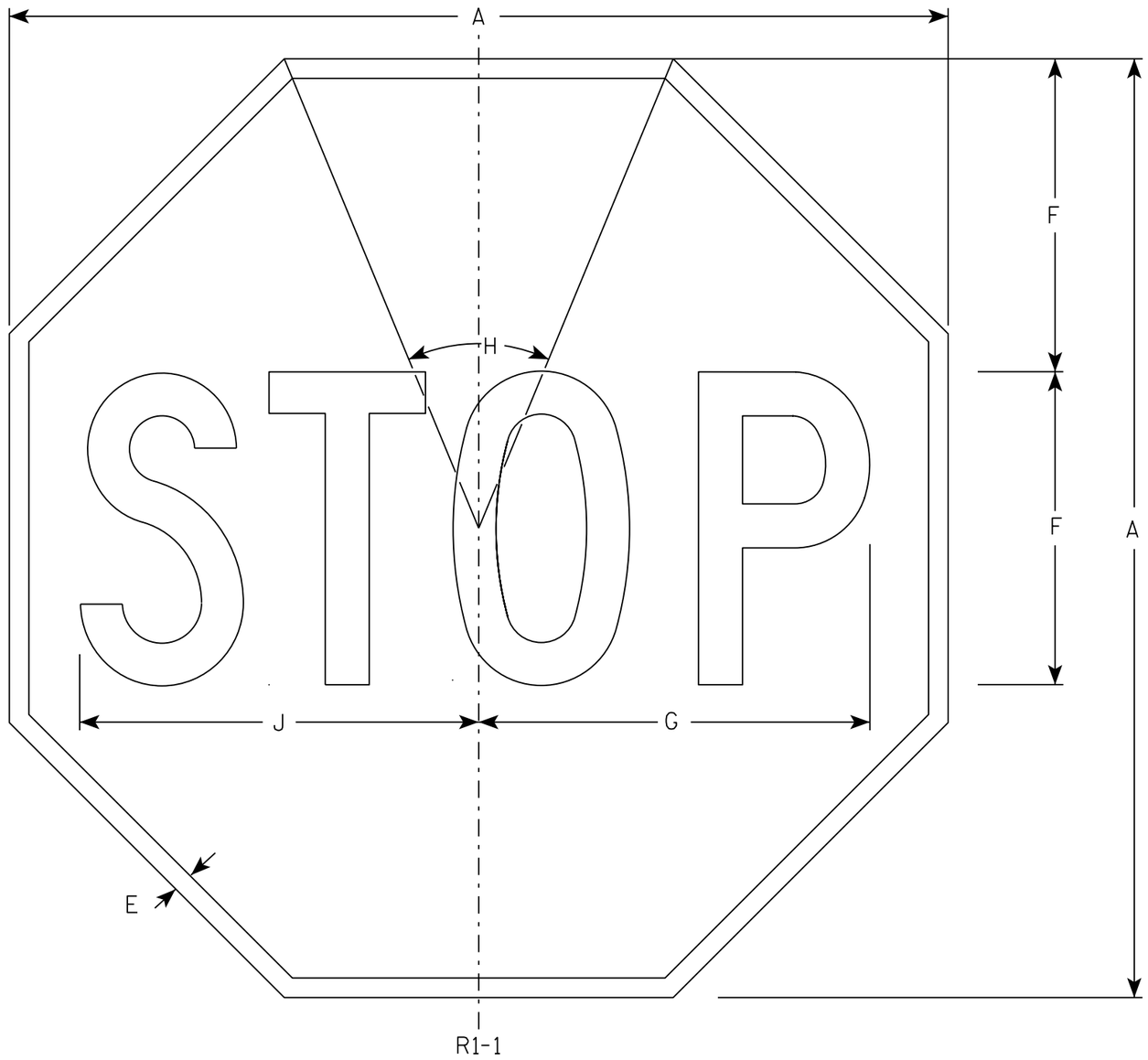

NOTES

1. Sign is Type II - Type H Reflective - reference WIS DOT Standard Specification for HIGHWAY and STRUCTURE CONSTRUCTION latest edition.
2. Color:
   Background - Red
   Message - White
3. Message Series - C

SIZE	A	B	C	D	E	F	G	H	I	J	K	L	M	N	O	P	Q	R	S	T	U	V	W	X	Y	Z	Area sq. ft.
1	30				5/8	10	12 1/2	45°		12 3/4																	5.18
2S	30				5/8	10	12 1/2	45°		12 3/4																	5.18
2M	36				3/4	12	15	45°		15 3/8																	7.46
3	36				3/4	12	15	45°		15 3/8																	7.46
4	48				1	16	20	45°		20 1/2																	13.25
5	48				1	16	20	45°		20 1/2																	13.25
6	18				3/8	6	7 3/4	45°		7 3/4																	1.86
7	12				1/4	4	5	45°		5 1/8																	0.78

STANDARD SIGN
R1-1

WISCONSIN DEPT OF TRANSPORTATION

APPROVED Matthew R Rauch
for State Traffic Engineer

DATE 11/12/15 PLATE NO. R1-1.13

PROJECT NO: | HWY: | COUNTY: | SHEET NO: 140 | E

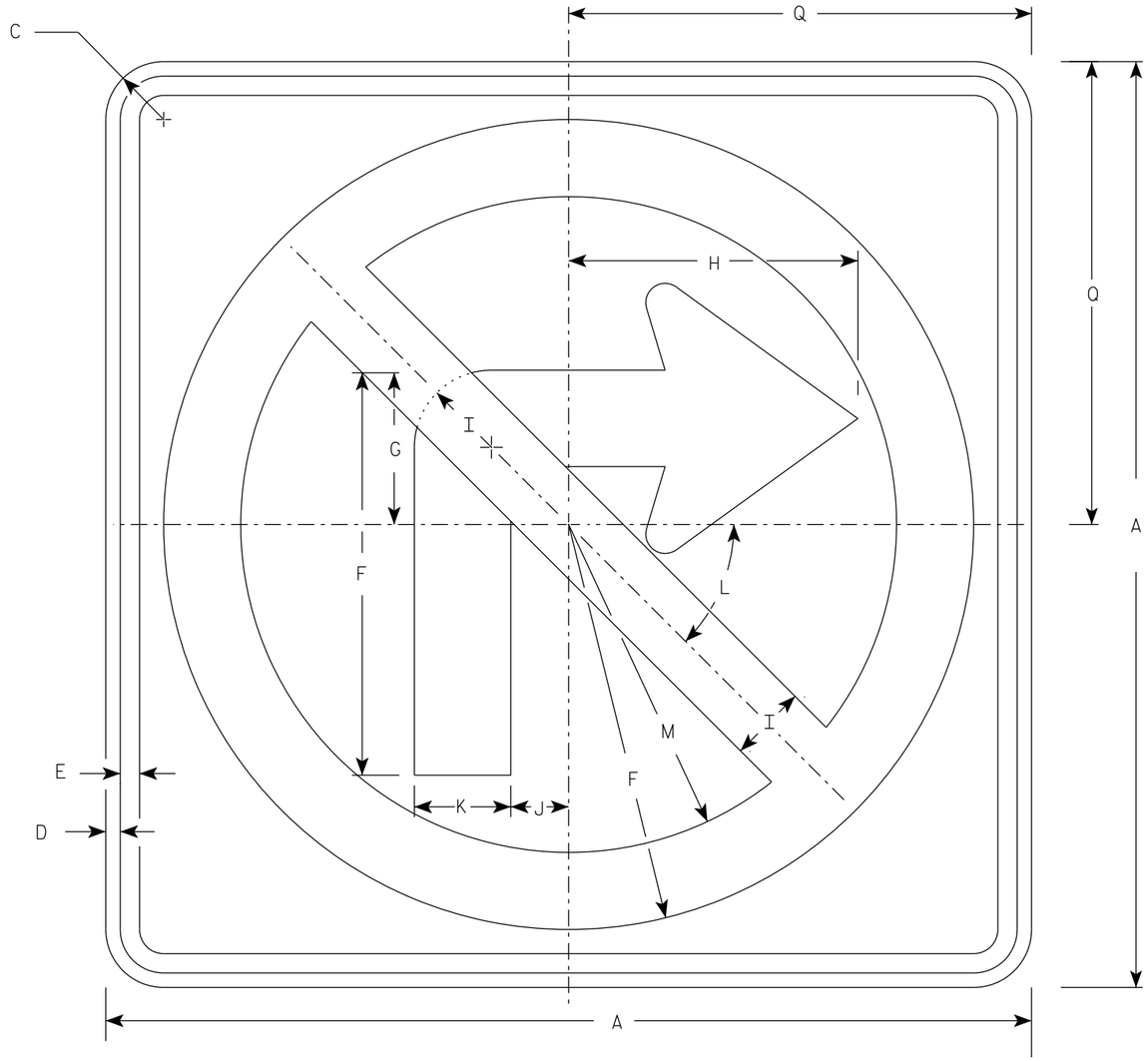

R3-1

NOTES

1. Sign is Type II - Type H Reflective
2. Color:
   Background - White
   Message - See note 3
3. Border & Arrow are non reflective black, the circle with diagonal bar is reflective red.

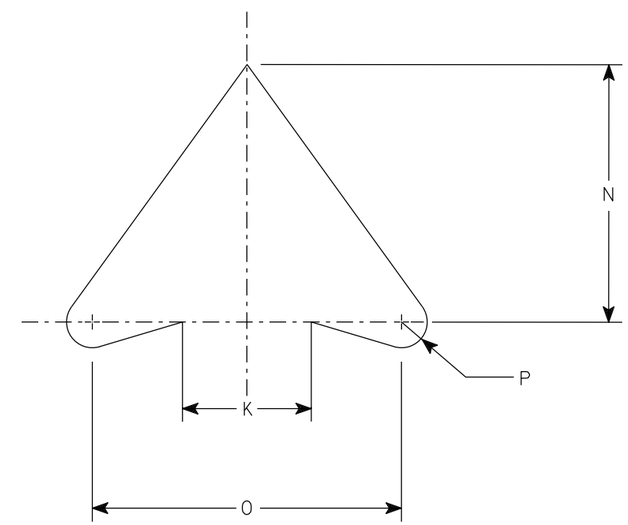

ARROW DETAIL

SIZE	A	B	C	D	E	F	G	H	I	J	K	L	M	N	O	P	Q	R	S	T	U	V	W	X	Y	Z	Area sq. ft.
1	24		1 1/2	3/8	1/2	10 1/2	4	7 1/2	2	1 1/2	2 1/2	45	8 1/2	5	6	1/2	12										4.0
2S	24		1 1/2	3/8	1/2	10 1/2	4	7 1/2	2	1 1/2	2 1/2	45°	8 1/2	5	6	1/2	12										4.0
2M	36		2 1/4	5/8	3/4	15 3/4	6	11 1/4	3	2 1/4	3 3/4	45	12 3/4	7 1/2	9	3/4	18										9.0
3	36		2 1/4	5/8	3/4	15 3/4	6	11 1/4	3	2 1/4	3 3/4	45	12 3/4	7 1/2	9	3/4	18										9.0
4	36		2 1/4	5/8	3/4	15 3/4	6	11 1/4	3	2 1/4	3 3/4	45°	12 3/4	7 1/2	9	3/4	18										9.0
5	48		2 1/4	3/4	1	21	8	15	4	3	5	45°	17	10	12	1	24										16.0

STANDARD SIGN

R3-1

WISCONSIN DEPT OF TRANSPORTATION

APPROVED Matthew R Rauch
for State Traffic Engineer

DATE 2/2/23 PLATE NO. R3-1.6

PROJECT NO: | HWY: | COUNTY: | SHEET NO: 141 | E

NOTES

1. Sign is Type II - Type H Reflective
2. Color:
   Background - White
   Message - See note 3
3. Border & Arrow are non reflective black, the circle with diagonal bar is reflective red.

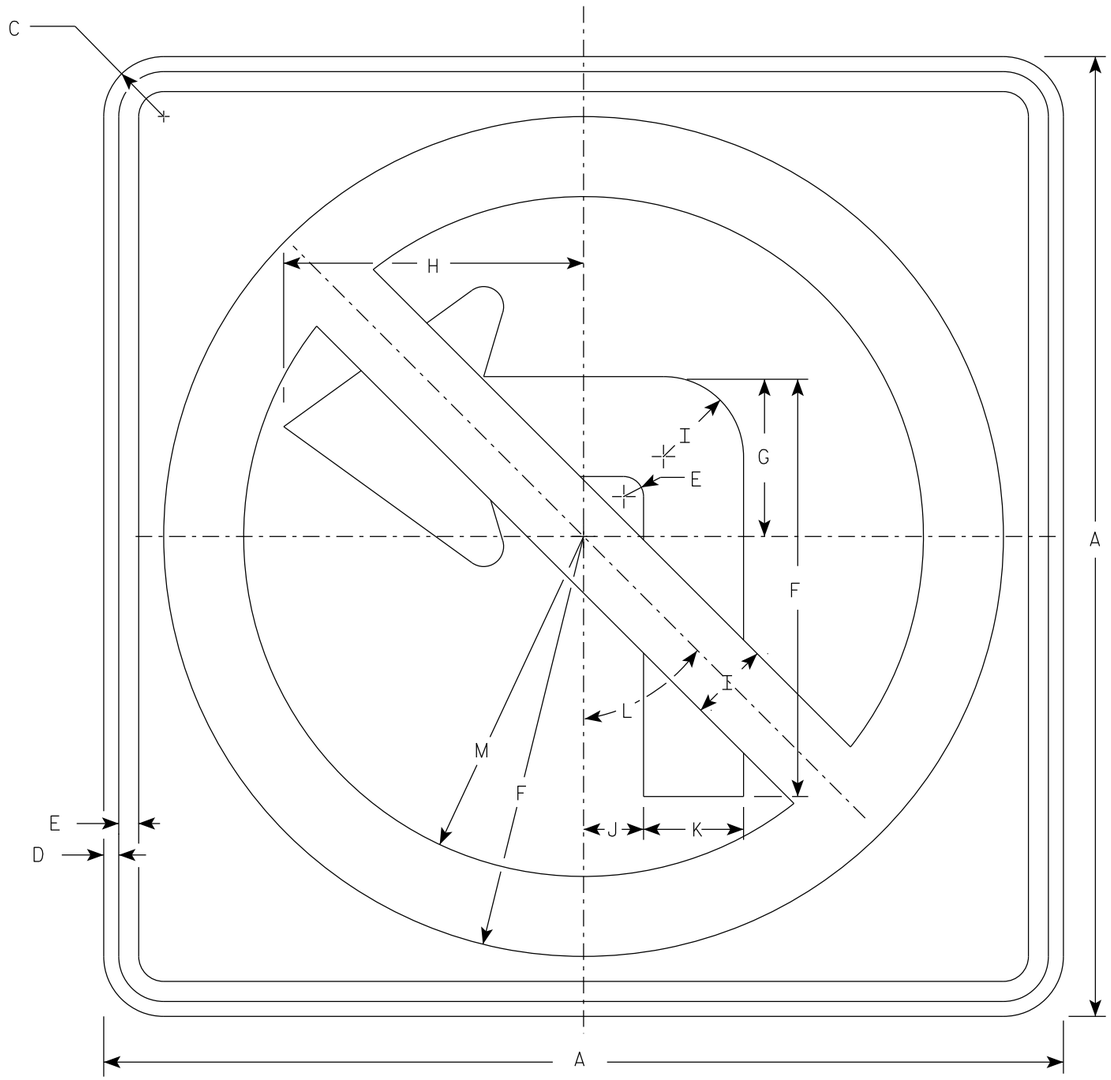

R3-2

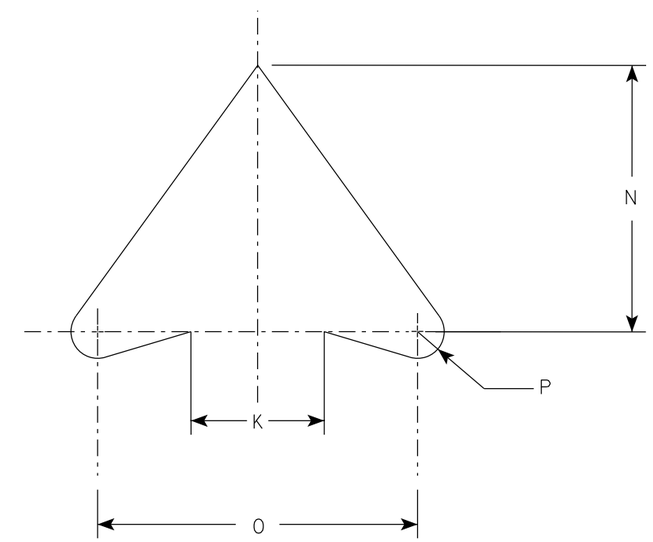

ARROW DETAIL

SIZE	A	B	C	D	E	F	G	H	I	J	K	L	M	N	O	P	Q	R	S	T	U	V	W	X	Y	Z	Area sq. ft.
1	24		1 1/2	3/8	1/2	10 1/2	4	7 1/2	2	1 1/2	2 1/2	45°	8 1/2	5	6	1/2											4.0
2S	24		1 1/2	3/8	1/2	10 1/2	4	7 1/2	2	1 1/2	2 1/2	45°	8 1/2	5	6	1/2											4.0
2M	36		2 1/4	5/8	3/4	15 3/4	6	11 1/4	3	2 1/4	3 3/4	45°	12 3/4	7 1/2	9	3/4											9.0
3	36		2 1/4	5/8	3/4	15 3/4	6	11 1/4	3	2 1/4	3 3/4	45°	12 3/4	7 1/2	9	3/4											9.0
4	36		2 1/4	5/8	3/4	15 3/4	6	11 1/4	3	2 1/4	3 3/4	45°	12 3/4	7 1/2	9	3/4											9.0
5	48		2 1/4	3/4	1	21	8	15	4	3	5	45°	17	10	12	1											16.0

STANDARD SIGN
R3-2

WISCONSIN DEPT OF TRANSPORTATION

APPROVED Matthew R Rauch
For State Traffic Engineer

DATE 2/2/23 PLATE NO. R3-2.11

PROJECT NO: | HWY: | COUNTY: | SHEET NO: 142 | E

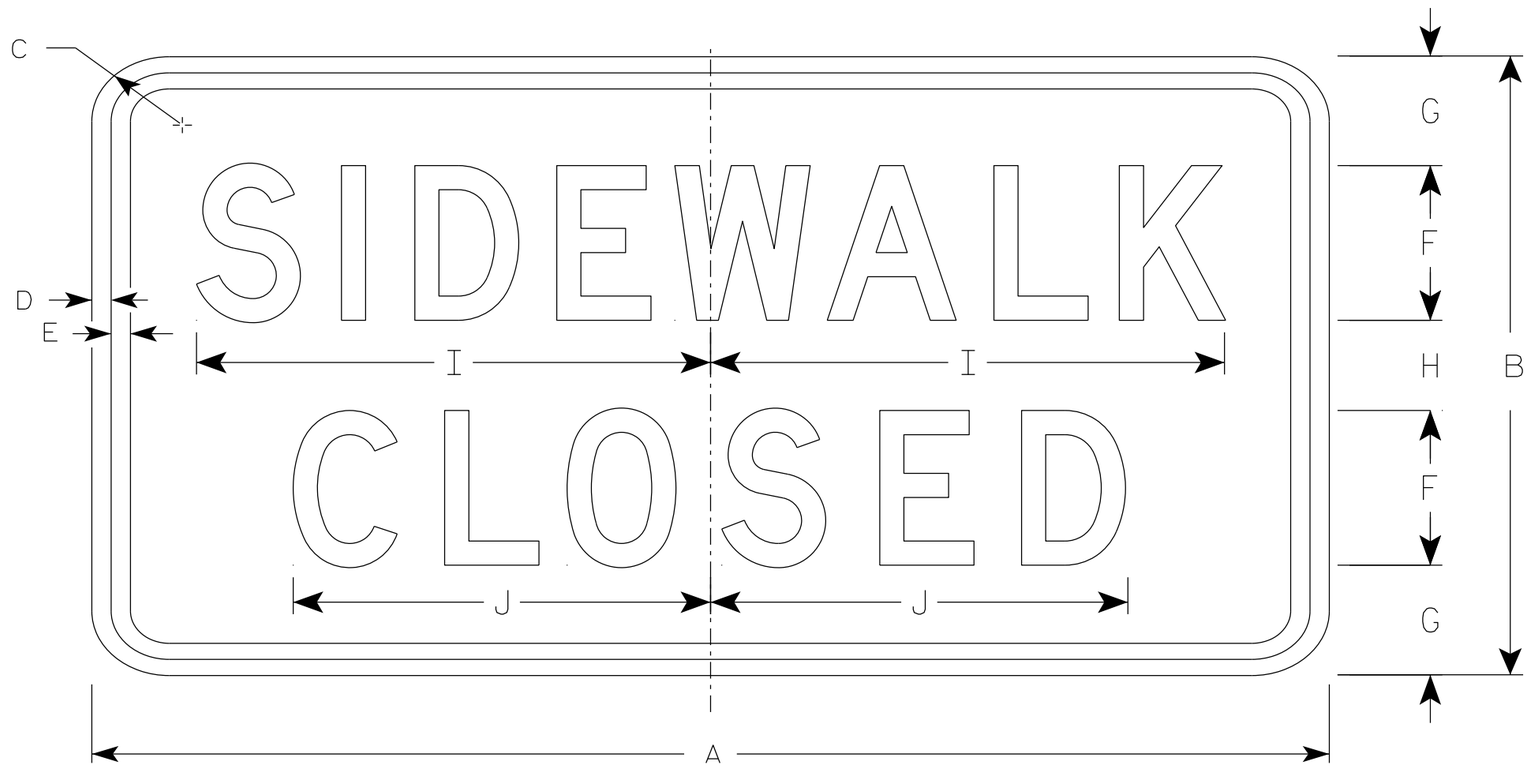

R9-9

NOTES

1. Sign is Type II - Type H Reflective
2. Color:
   Background - White
   Message - Black
3. Message Series - C
4. Use Size 2 for Sidewalks. Use Size 3 for Paths and Trails.

SIZE	A	B	C	D	E	F	G	H	I	J	K	L	M	N	O	P	Q	R	S	T	U	V	W	X	Y	Z	Area sq. ft.
1																											
2S	24	12	1 1/2	1/2	1/2	3	2 1/8	1 3/4	10	8 1/8																	2.0
2M	24	12	1 1/2	1/2	1/2	3	2 1/8	1 3/4	10	8 1/8																	2.0
3	30	18	1 1/2	1/2	1/2	4	3 1/2	3	12 1/2	10 1/4																	3.75
4																											
5																											

STANDARD SIGN
R9-9

WISCONSIN DEPT OF TRANSPORTATION

APPROVED Matthew R Rauch
for State Traffic Engineer

DATE 1/24/24 PLATE NO. R9-9.7

PROJECT NO: | HWY: | COUNTY: | SHEET NO: 143 | E

NOTES

1. Sign is Type II - Type H Reflective
2. Color:
   Background - White
   Message - Black
3. Message Series - D

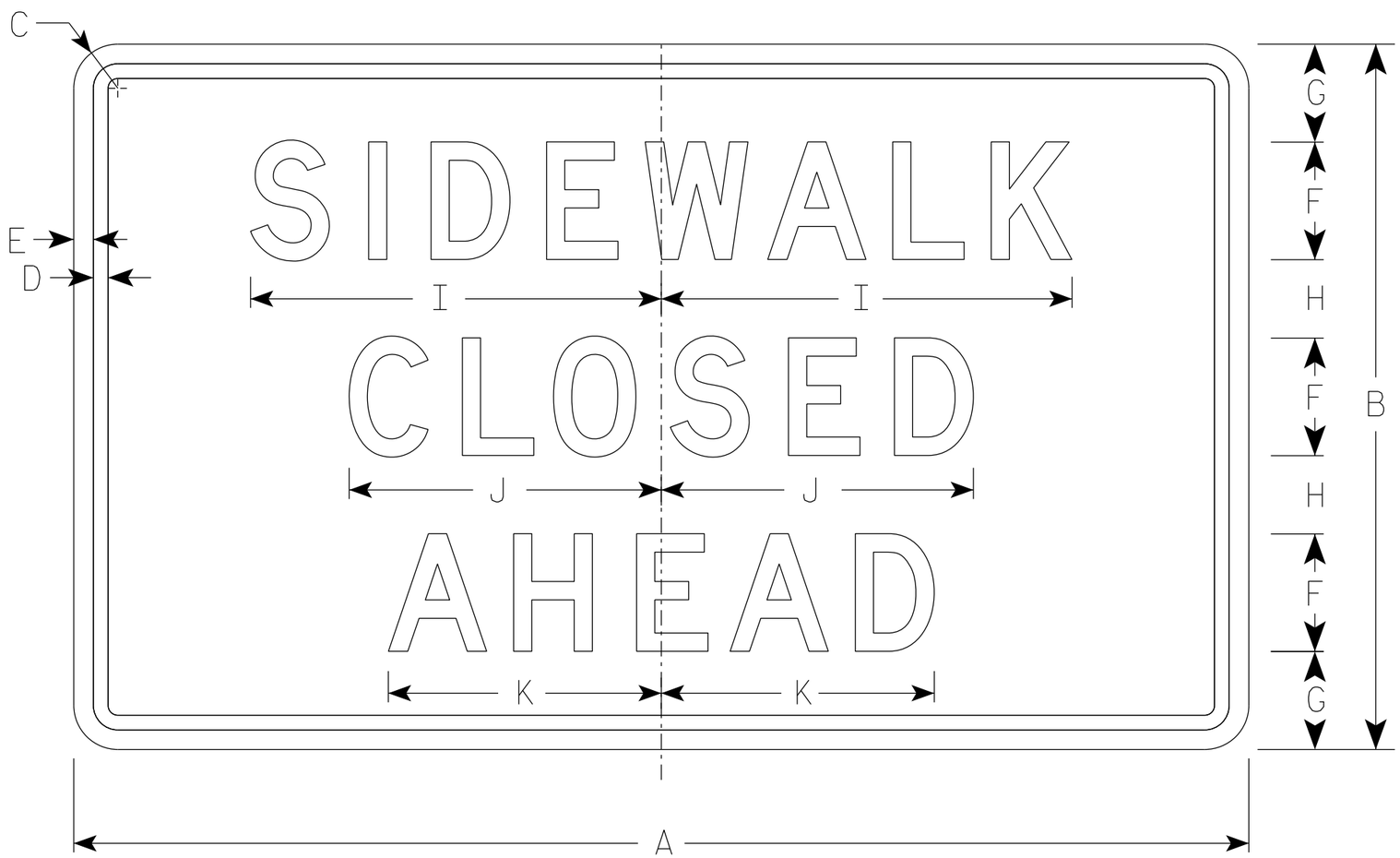

R9-9A

SIZE	A	B	C	D	E	F	G	H	I	J	K	L	M	N	O	P	Q	R	S	T	U	V	W	X	Y	Z	Area sq. ft.
1																											
2S	30	18	1 ½	⅜	½	3	2 ½	2	10 ½	8	7																3.75
2M	30	18	1 ½	⅜	½	3	2 ½	2	10 ½	8	7																3.75
3																											
4																											
5																											

STANDARD SIGN
R9-9A

WISCONSIN DEPT OF TRANSPORTATION

APPROVED Matthew R Rauch
for State Traffic Engineer

DATE 1/24/24 PLATE NO. R9-9A.2

PROJECT NO:	HWY:	COUNTY:		SHEET NO: 144	E

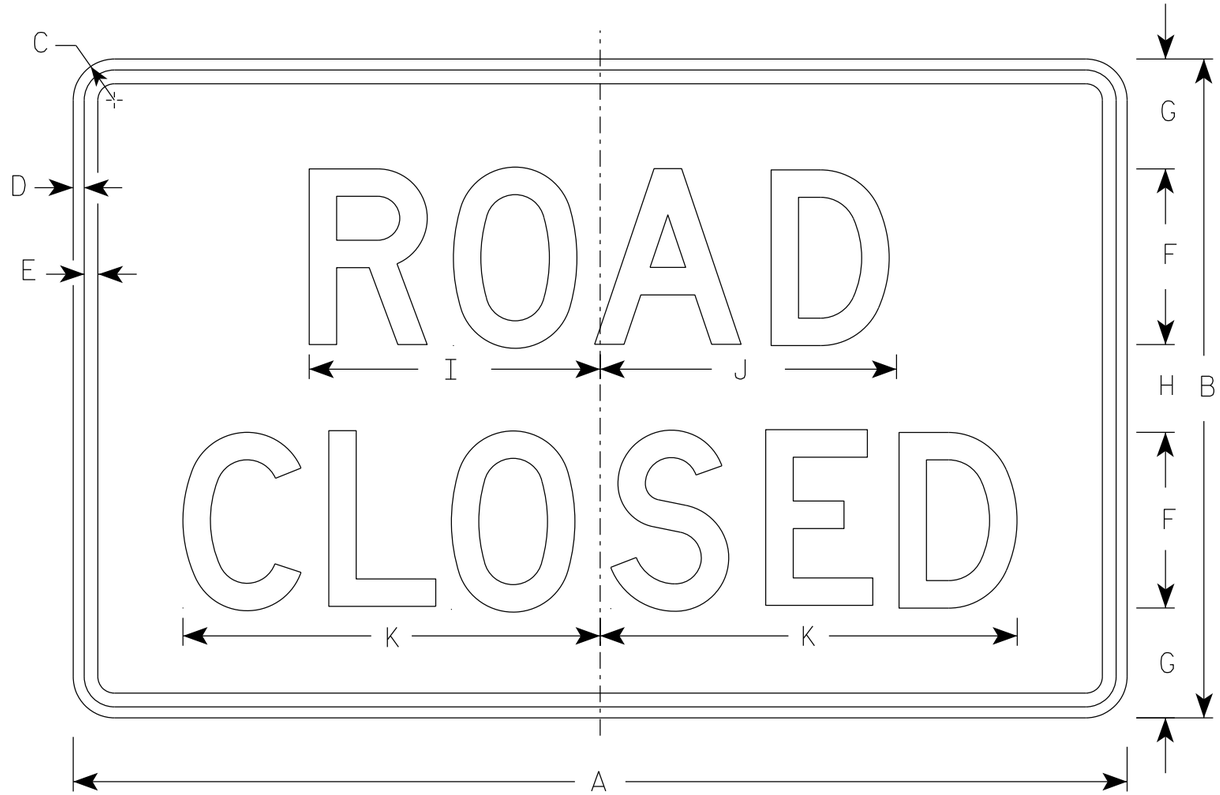

R11-2

NOTES

1. Sign is Type II - Type H Reflective
2. Color:
   Background - White
   Message - Black
3. Message Series - D
4. Corners may be square or rounded when base material is plywood but borders shall be rounded as shown. When base material is metal, the corners and borders shall be rounded.
5. Modify the message as required.

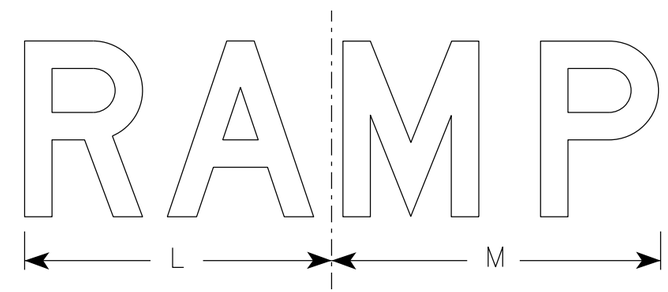

R11-2R

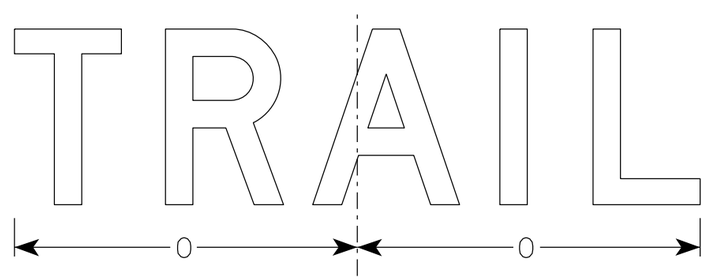

R11-2T

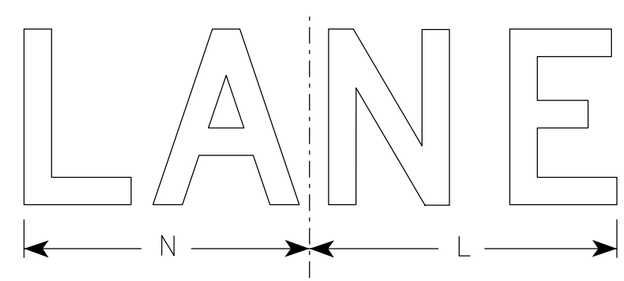

R11-2L

SIZE	A	B	C	D	E	F	G	H	I	J	K	L	M	N	O	P	Q	R	S	T	U	V	W	X	Y	Z	Area sq. ft.
1																											
2S	48	30	1 7/8	1/2	5/8	8	5	4	13 1/4	13 1/2	19	14	15	13	15 5/8												10.0
2M	48	30	1 7/8	1/2	5/8	8	5	4	13 1/4	13 1/2	19	14	15	13	15 5/8												10.0
3	48	30	1 7/8	1/2	5/8	8	5	4	13 1/4	13 1/2	19	14	15	13	15 5/8												10.0
4	48	30	1 7/8	1/2	5/8	8	5	4	13 1/4	13 1/2	19	14	15	13	15 5/8												10.0
5	48	30	1 7/8	1/2	5/8	8	5	4	13 1/4	13 1/2	19	14	15	13	15 5/8												10.0

STANDARD SIGN
R11-2

WISCONSIN DEPT OF TRANSPORTATION

APPROVED Matthew R Rauch
for State Traffic Engineer

DATE 2/5/24 PLATE NO. R11-2.12

PROJECT NO: | HWY: | COUNTY: | SHEET NO: E

7

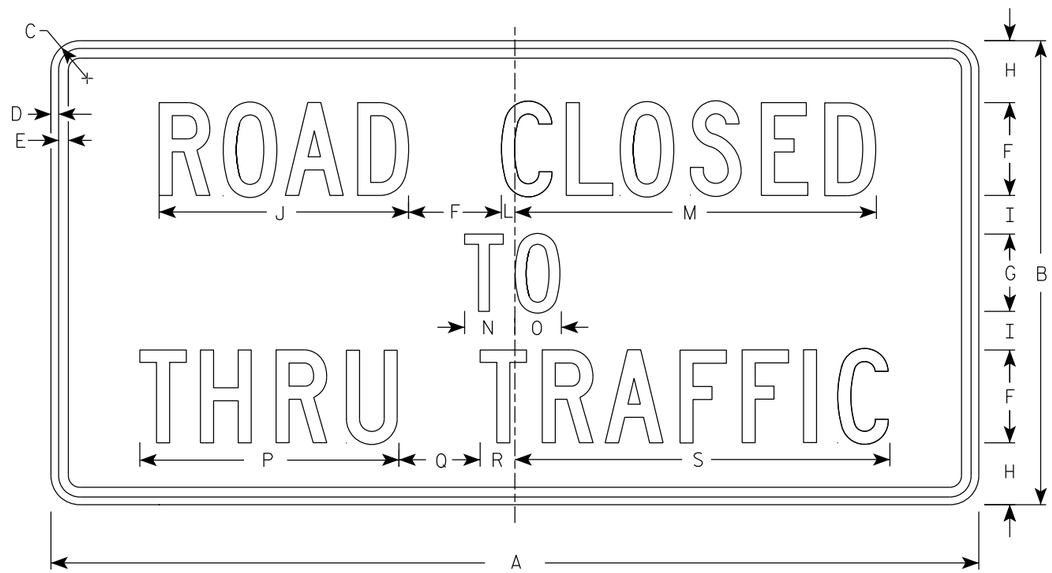

R11-4

NOTES

1. Sign is Type II - Type H Reflective
2. Color:
   Background - White
   Message - Black
3. Message Series - C
4. Corners may be square or rounded when base material is plywood but borders shall be rounded as shown. When base material is metal, the corners and borders shall be rounded.

SIZE	A	B	C	D	E	F	G	H	I	J	K	L	M	N	O	P	Q	R	S	T	U	V	W	X	Y	Z	Area sq. ft.
1																											
2S	60	30	1 7/8	1/2	5/8	6	5	4	2 1/2	16 1/8		7/8	23 3/8	3 1/4	3	16 3/4	5 1/4	2 1/4	24 1/4								12.5
2M	60	30	1 7/8	1/2	5/8	6	5	4	2 1/2	16 1/8		7/8	23 3/8	3 1/4	3	16 3/4	5 1/4	2 1/4	24 1/4								12.5
3																											
4																											
5																											

STANDARD SIGN
R11 - 4

WISCONSIN DEPT OF TRANSPORTATION

APPROVED Matthew R Rauch for State Traffic Engineer

DATE 2/5/24 PLATE NO. R11-4.4

PROJECT NO: | HWY: | COUNTY: | SHEET NO: 146 | E

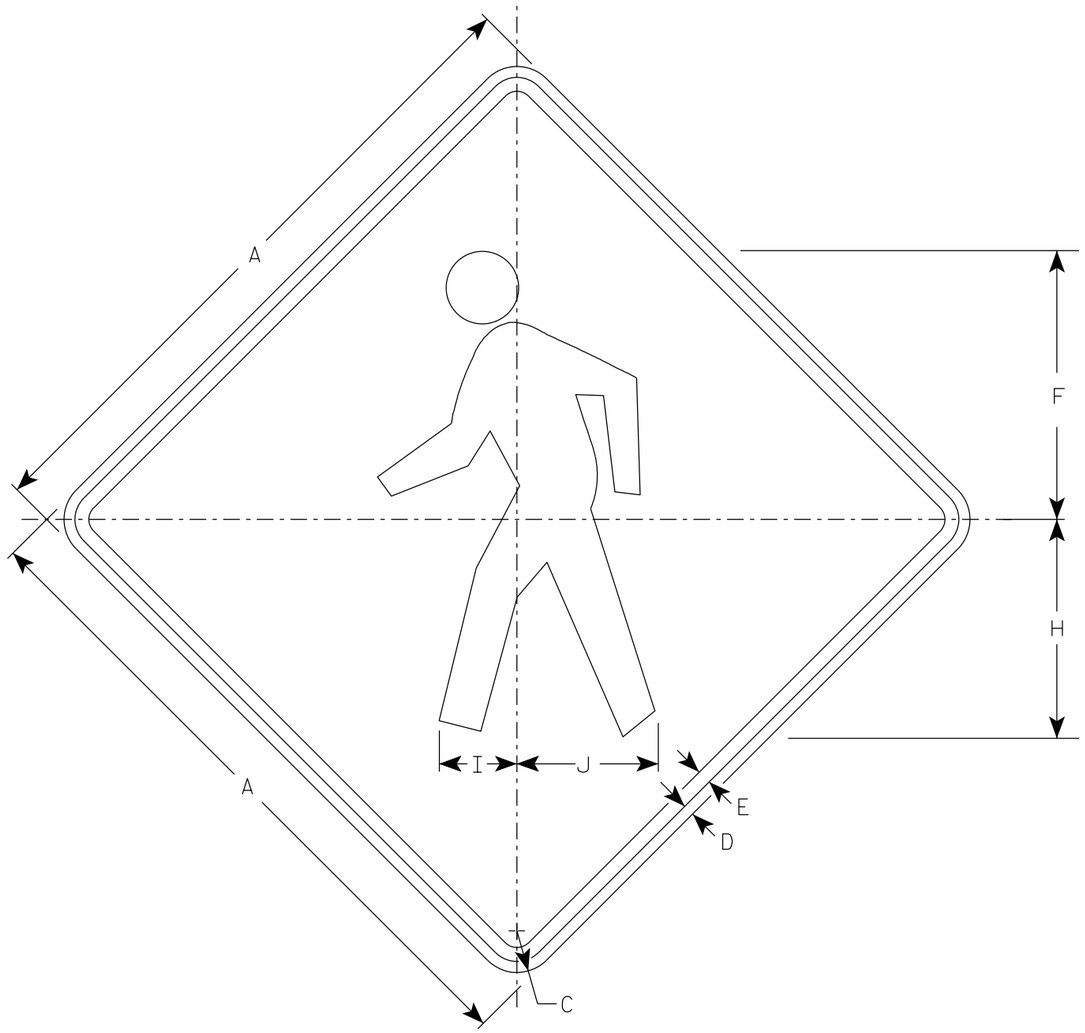

W11-2

NOTES

1. Sign is Type II - Type F Reflective
2. Color:
   Background - Yellow
   Message - Black

SIZE	A	B	C	D	E	F	G	H	I	J	K	L	M	N	O	P	Q	R	S	T	U	V	W	X	Y	Z	Area sq. ft.
1	24		1 1/2	3/8	1/2	9 3/4		7 7/8	2 7/8	5 1/8																	4.0
2S	30		1 7/8	1/2	5/8	12 1/8		9 7/8	3 1/2	6 3/8																	6.25
2M	36		2 1/4	5/8	3/4	14 1/2		11 7/8	4 1/4	7 5/8																	9.0
3	36		2 1/4	5/8	3/4	14 1/2		11 7/8	4 1/4	7 5/8																	9.0
4	48		3	3/4	1	19 3/8		15 3/4	5 5/8	10 1/4																	16.0
5																											

STANDARD SIGN

W11-2

WISCONSIN DEPT OF TRANSPORTATION

APPROVED Matthew R Rauch
for State Traffic Engineer

DATE 6/15/2023 PLATE NO. W11-2.9

PROJECT NO: | HWY: | COUNTY: | SHEET NO: 147 | E

NOTES

1. Sign is Type II - Type F Reflective
2. Color:
   Background - Yellow
   Message - Black
3. W16-7R is the same as W16-7L
   except the arrow is reversed along
   the vertical centerline.

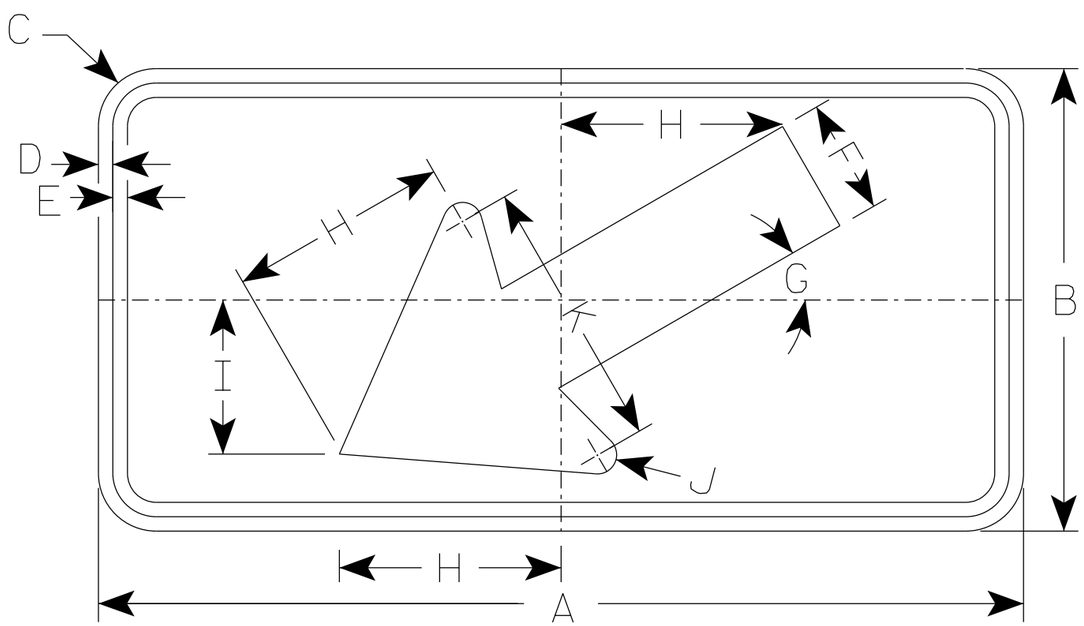

W16-7L

7

* For 36" x 36" Warning Signs, use 30" x 18" W16-7L signs.
* For 48" x 48" Warning Signs, use 48" x 24" W16-7L signs.

7

	SIZE	A	B	C	D	E	F	G	H	I	J	K	L	M	N	O	P	Q	R	S	T	U	V	W	X	Y	Z	Area sq. ft.
	1																											
	2S	24	12	1 1/2	3/8	3/8	3	30°	5 3/4	4	1/2	7																2.0
*	2M	30	18	1 1/2	3/8	1/2	4 1/2	30°	8 1/2	6	5/8	10 1/4																3.75
*	3	30	18	1 1/2	3/8	1/2	4 1/2	30°	8 1/2	6	5/8	10 1/4																3.75
*	4	48	24	1 7/8	1/2	5/8	6	30°	11 1/2	8	1	14																8.0
	5																											

STANDARD SIGN
W16-7

WISCONSIN DEPT OF TRANSPORTATION

APPROVED Matthew R Rauch
for State Traffic Engineer

DATE 1/9/2024 PLATE NO. W16-7.9

PROJECT NO:	HWY:	COUNTY:		SHEET NO: 148	E

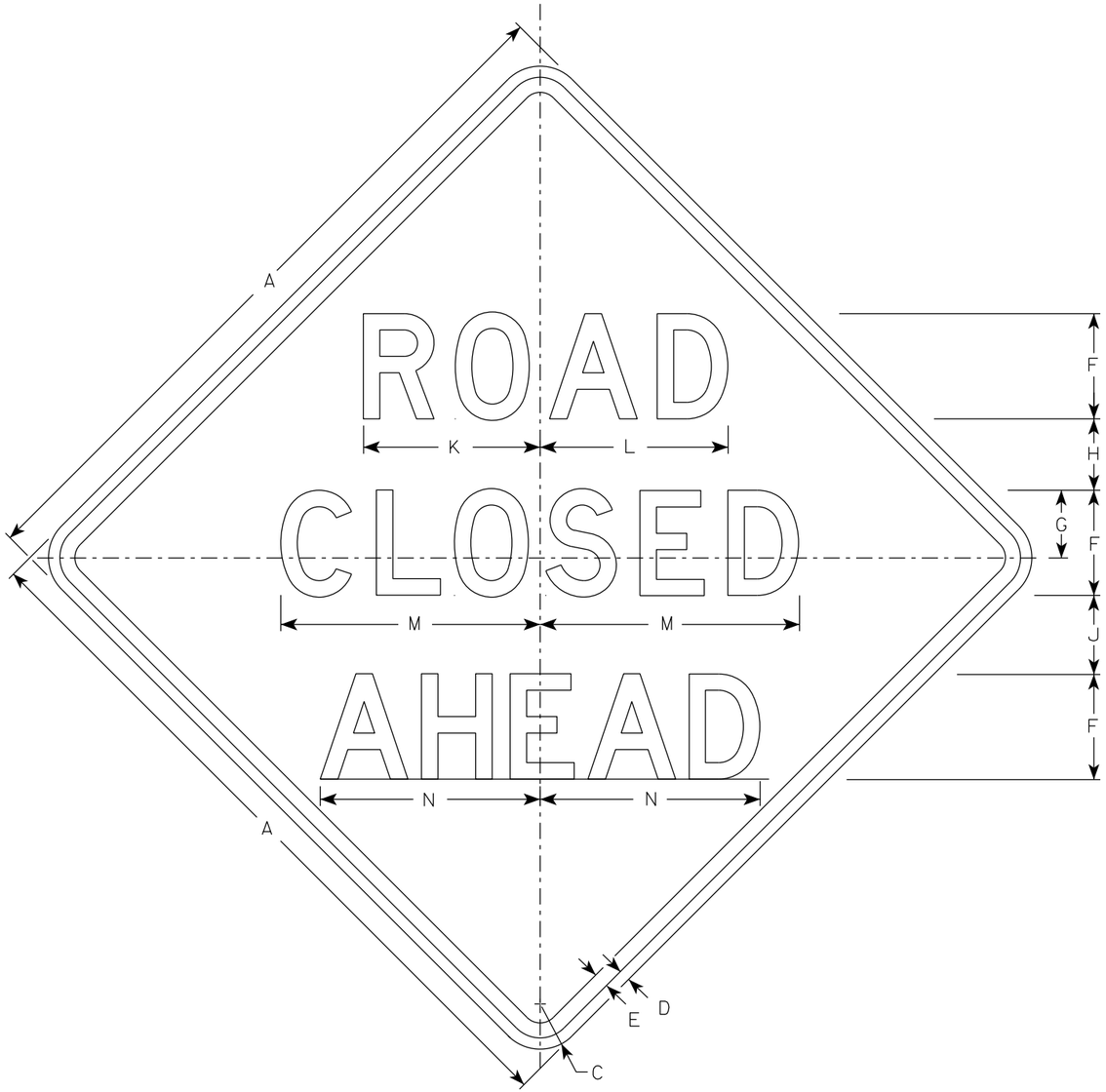

W20-3A

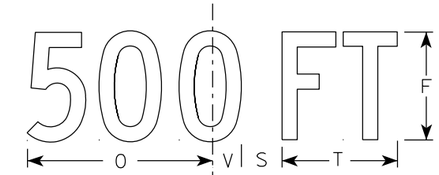

W20-3D

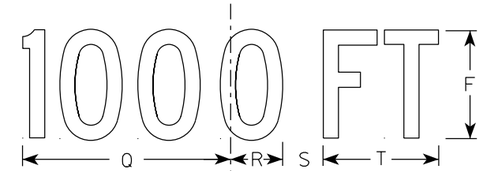

W20-3C

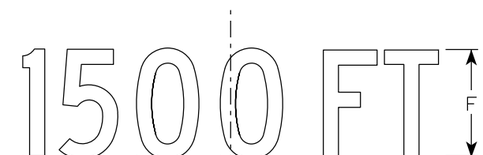

W20-3B

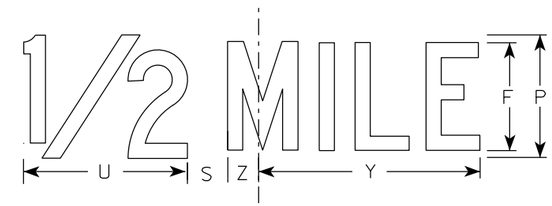

W20-3G

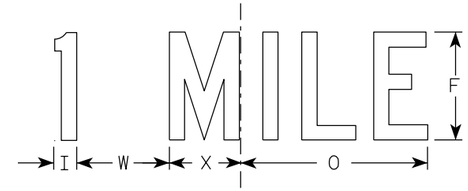

W20-3F

NOTES

1. Sign is Type II - Type F Reflective
2. Color:
   Background - Orange
   Message - Black
3. Message Series - see note 5
4. Corners may be square or rounded when base material is plywood but borders shall be rounded as shown. When base material is metal, the corners and borders shall be rounded.
5. Lines 1 and 2 are Series D.
   Line 3 is Series D for AHEAD and Series C for all other distances.

SIZE	A	B	C	D	E	F	G	H	I	J	K	L	M	N	O	P	Q	R	S	T	U	V	W	X	Y	Z	Area sq. ft.
1	36		2 1/4	5/8	3/4	5	3 3/8	3 1/2	1 1/8	4	8 3/8	8 7/8	12 1/2	11	9	6	10 1/8	2 1/2	1 7/8	5 5/8	8	1 3/8	4 1/2	3 1/2	10 3/4	1 3/4	9.0
2S	48		3	3/4	1	7	4 1/2	4 3/4	1 1/2	5 1/4	11 3/4	12 1/2	17 1/4	14 5/8	12	8	13 1/2	3 3/8	2 5/8	7 1/2	10 5/8	1 7/8	6	4 5/8	14 3/8	2 3/8	16.0
2M	48		3	3/4	1	7	4 1/2	4 3/4	1 1/2	5 1/4	11 3/4	12 1/2	17 1/4	14 5/8	12	8	13 1/2	3 3/8	2 5/8	7 1/2	10 5/8	1 7/8	6	4 5/8	14 3/8	2 3/8	16.0
3	48		3	3/4	1	7	4 1/2	4 3/4	1 1/2	5 1/4	11 3/4	12 1/2	17 1/4	14 5/8	12	8	13 1/2	3 3/8	2 5/8	7 1/2	10 5/8	1 7/8	6	4 5/8	14 3/8	2 3/8	16.0
4	48		3	3/4	1	7	4 1/2	4 3/4	1 1/2	5 1/4	11 3/4	12 1/2	17 1/4	14 5/8	12	8	13 1/2	3 3/8	2 5/8	7 1/2	10 5/8	1 7/8	6	4 5/8	14 3/8	2 3/8	16.0
5	48		3	3/4	1	7	4 1/2	4 3/4	1 1/2	5 1/4	11 3/4	12 1/2	17 1/4	14 5/8	12	8	13 1/2	3 3/8	2 5/8	7 1/2	10 5/8	1 7/8	6	4 5/8	14 3/8	2 3/8	16.0

STANDARD SIGN
W20-3A, B, C, D, F & G

WISCONSIN DEPT OF TRANSPORTATION

APPROVED Matthew R Rauch
for State Traffic Engineer

DATE 1/10/2024 PLATE NO. W20-3.8

PROJECT NO: | HWY: | COUNTY: | SHEET NO: E

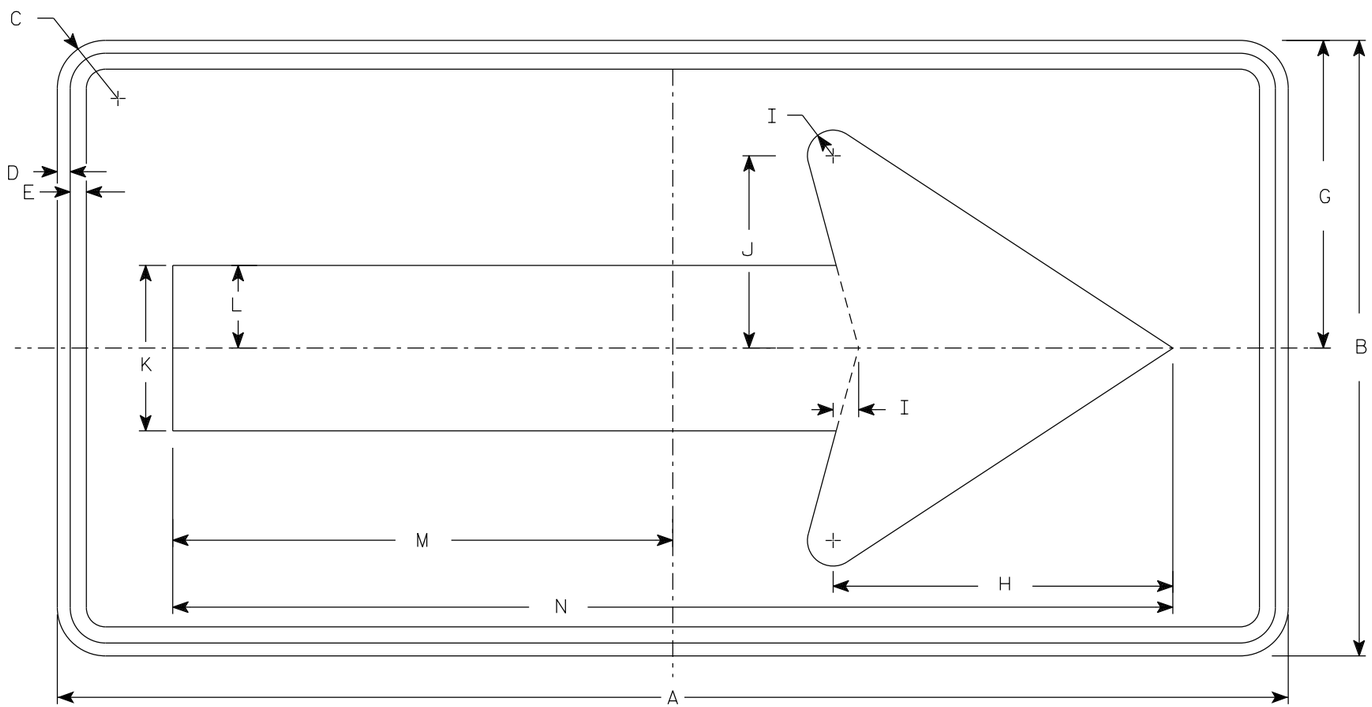

W01-6

NOTES

1. Sign is Type II - Type F Reflective
2. Color:
   Background - Orange
   Message - Black
3. Corners may be square or rounded when base material is plywood but borders shall be rounded as shown. When base material is metal, the corners and borders shall be rounded.

SIZE	A	B	C	D	E	F	G	H	I	J	K	L	M	N	O	P	Q	R	S	T	U	V	W	X	Y	Z	Area sq. ft.
1																											
2S	48	24	1 7/8	1/2	5/8		12	13 1/4	1	7 1/2	6 1/2	3 1/4	19 1/2	39													8.0
2M	48	24	1 7/8	1/2	5/8		12	13 1/4	1	7 1/2	6 1/2	3 1/4	19 1/2	39													8.0
3	60	30	1 7/8	1/2	5/8		15	16 1/4	1 1/4	9 1/4	8	4	24 3/8	48 3/4													12.5
4	60	30	1 7/8	1/2	5/8		15	16 1/4	1 1/4	9 1/4	8	4	24 3/8	48 3/4													12.5
5	60	30	1 7/8	1/2	5/8		15	16 1/4	1 1/4	9 1/4	8	4	24 3/8	48 3/4													12.5

STANDARD SIGN
W01-6

WISCONSIN DEPT OF TRANSPORTATION

APPROVED Matthew R Rauch
for State Traffic Engineer

DATE 1/24/2024 PLATE NO. W01-6.2

PROJECT NO: | HWY: | COUNTY: | SHEET NO: E

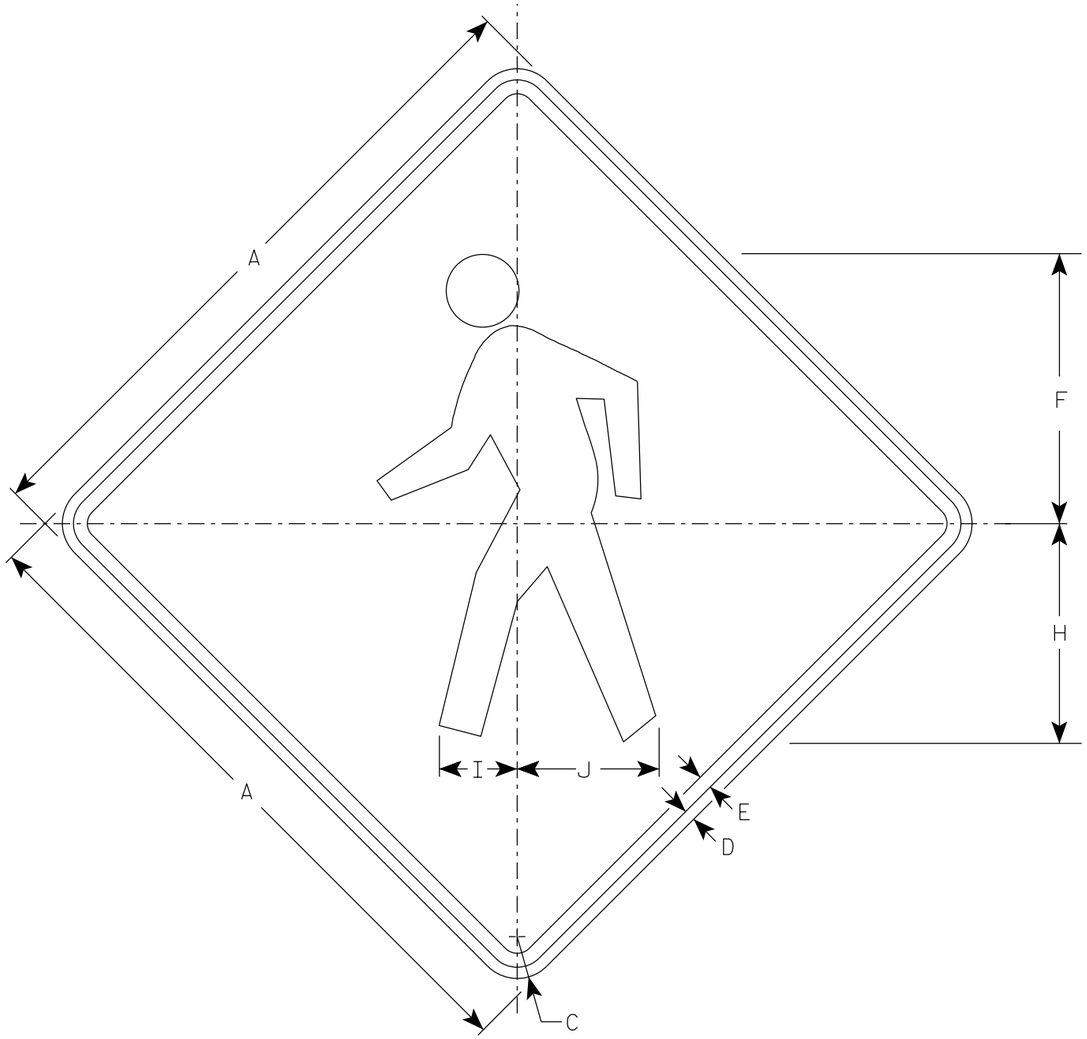

W011-2

NOTES

1. Sign is Type II - Type F Reflective
2. Color:
   Background - Orange
   Message - Black
3. Corners may be square or rounded when base material is plywood but borders shall be rounded as shown. When base material is metal, the corners and borders shall be rounded.

SIZE	A	B	C	D	E	F	G	H	I	J	K	L	M	N	O	P	Q	R	S	T	U	V	W	X	Y	Z	Area sq. ft.
1	36		2 1/4	5/8	3/4	14 1/2		11 7/8	4 1/4	7 5/8																	9.0
2S	48		3	3/4	1	19 3/8		15 3/4	5 5/8	10 1/4																	16.0
2M	48		3	3/4	1	19 3/8		15 3/4	5 5/8	10 1/4																	16.0
3	48		3	3/4	1	19 3/8		15 3/4	5 5/8	10 1/4																	16.0
4	48		3	3/4	1	19 3/8		15 3/4	5 5/8	10 1/4																	16.0
5																											

STANDARD SIGN

W011-2

WISCONSIN DEPT OF TRANSPORTATION

APPROVED Matthew R Rauch

For State Traffic Engineer

DATE 2/1/2024 PLATE NO. W011-2.2

PROJECT NO: | HWY: | COUNTY: | SHEET NO: 151 | E

NOTES

1. Sign is Type II - Type F Reflective
2. Color:
   Background - Orange
   Message - Black
3. Corners may be square or rounded but corners shall be rounded when base material is metal.
4. W016-7R is the same as W016-L except the arrow is reversed along the vertical centerline.

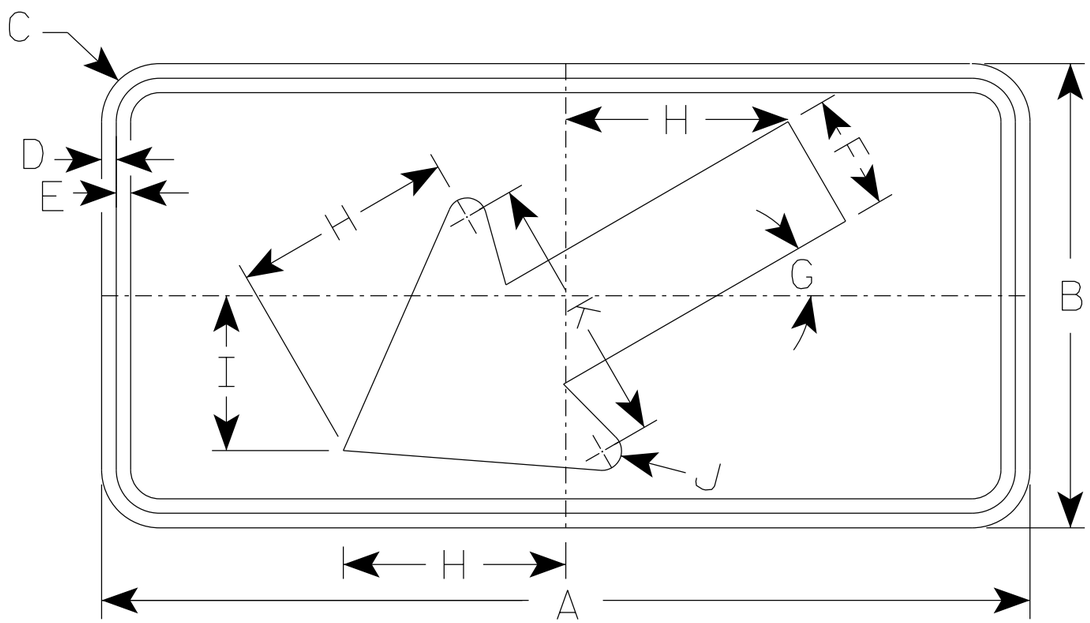

W016-7L

SIZE	A	B	C	D	E	F	G	H	I	J	K	L	M	N	O	P	Q	R	S	T	U	V	W	X	Y	Z	Area sq. ft.
1	30	18	1 1/2	3/8	1/2	4 1/2	30°	8 1/2	6	5/8	10 1/4																3.75
2S	48	24	1 7/8	1/2	5/8	6	30°	11 1/2	8	1	14																8.0
2M	48	24	1 7/8	1/2	5/8	6	30°	11 1/2	8	1	14																8.0
3	48	24	1 7/8	1/2	5/8	6	30°	11 1/2	8	1	14																8.0
4	48	24	1 7/8	1/2	5/8	6	30°	11 1/2	8	1	14																8.0
5	48	24	1 7/8	1/2	5/8	6	30°	11 1/2	8	1	14																8.0

STANDARD SIGN
W016-7

WISCONSIN DEPT OF TRANSPORTATION

APPROVED Matthew R Rauch
for State Traffic Engineer

DATE 2/1/2024 PLATE NO. W016-7.3

PROJECT NO: HWY: COUNTY: SHEET NO: 152 E

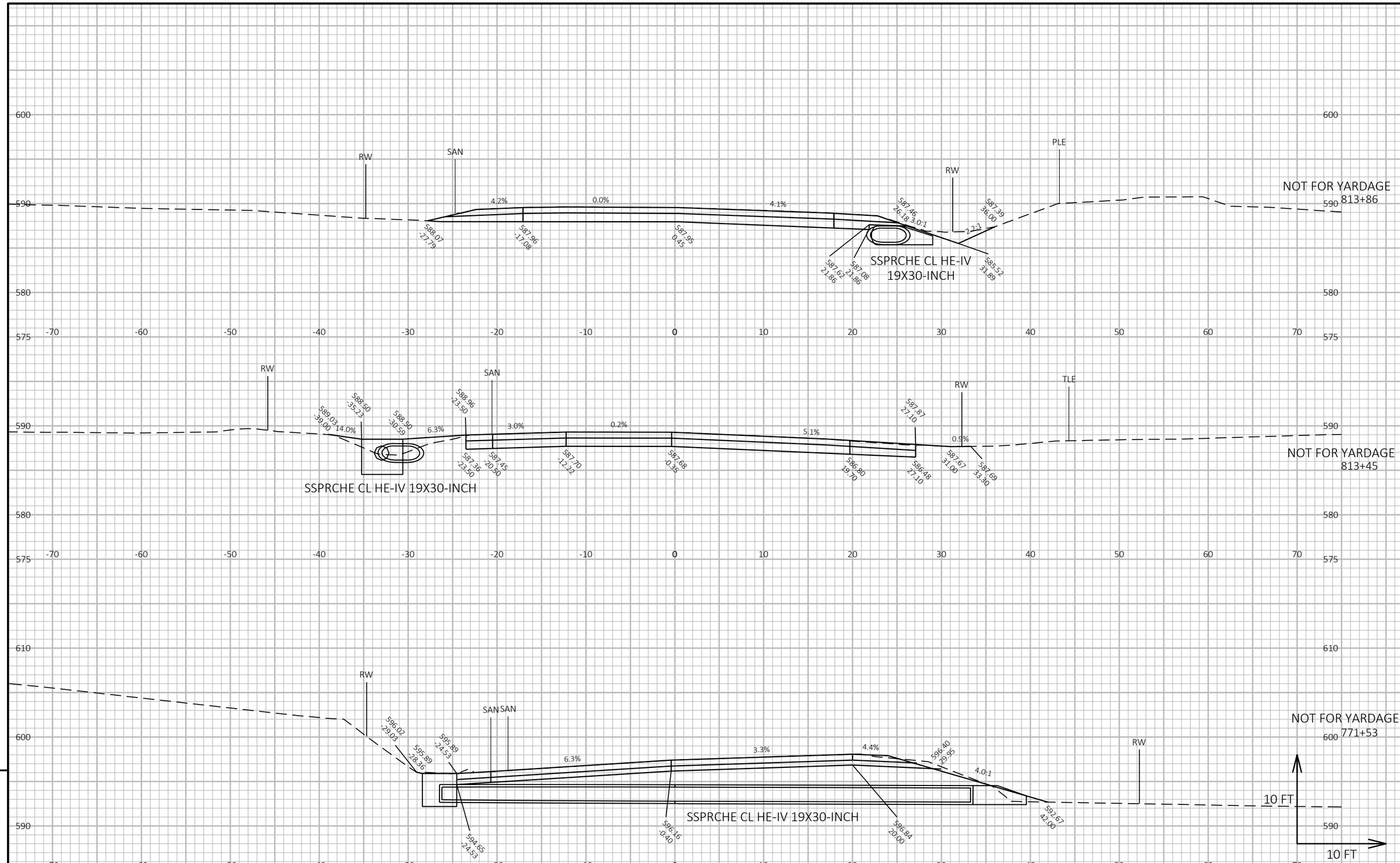

PROJECT NO: 4150-14-71	HWY: STH 57	COUNTY: DOOR	CROSS SECTIONS: STH 57 - CULVERTS	SHEET 153	E

FILE NAME : K:\1202715.01\CIVIL3D\41501400\SHEETSPLAN\090202-XS.DWG
LAYOUT NAME - Model
PLOT DATE : 5/8/2023 3:02 PM
PLOT BY : SIEBERT, LUKE
PLOT NAME :
PLOT SCALE : 1 IN:10 FT HORZ. / 1 IN:10 FT VERT.
WISDOT/CADDS SHEET 49

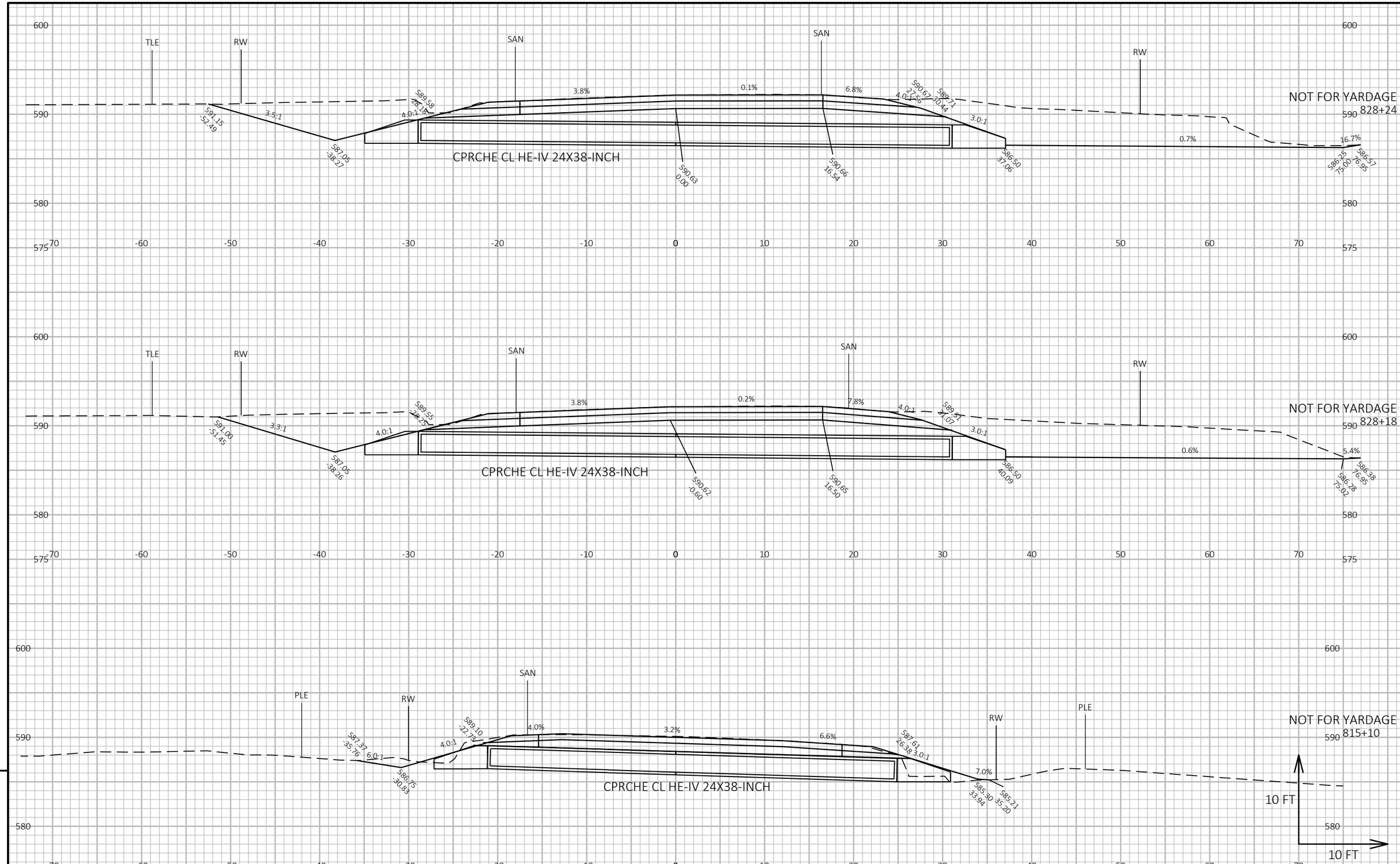

9

9

PROJECT NO: 4150-14-71	HWY: STH 57	COUNTY: DOOR	CROSS SECTIONS: STH 57 - CULVERTS	SHEET 154	E

FILE NAME : K:\1202715.01\CIVIL3D\41501400\SHEETSPLAN\090202-XS.DWG
LAYOUT NAME - Model
PLOT DATE : 5/8/2023 3:02 PM
PLOT BY : SIEBERT, LUKE
PLOT NAME :
PLOT SCALE : 1 IN:10 FT HORZ. / 1 IN:10 FT VERT.
WISDOT/CADDS SHEET 49

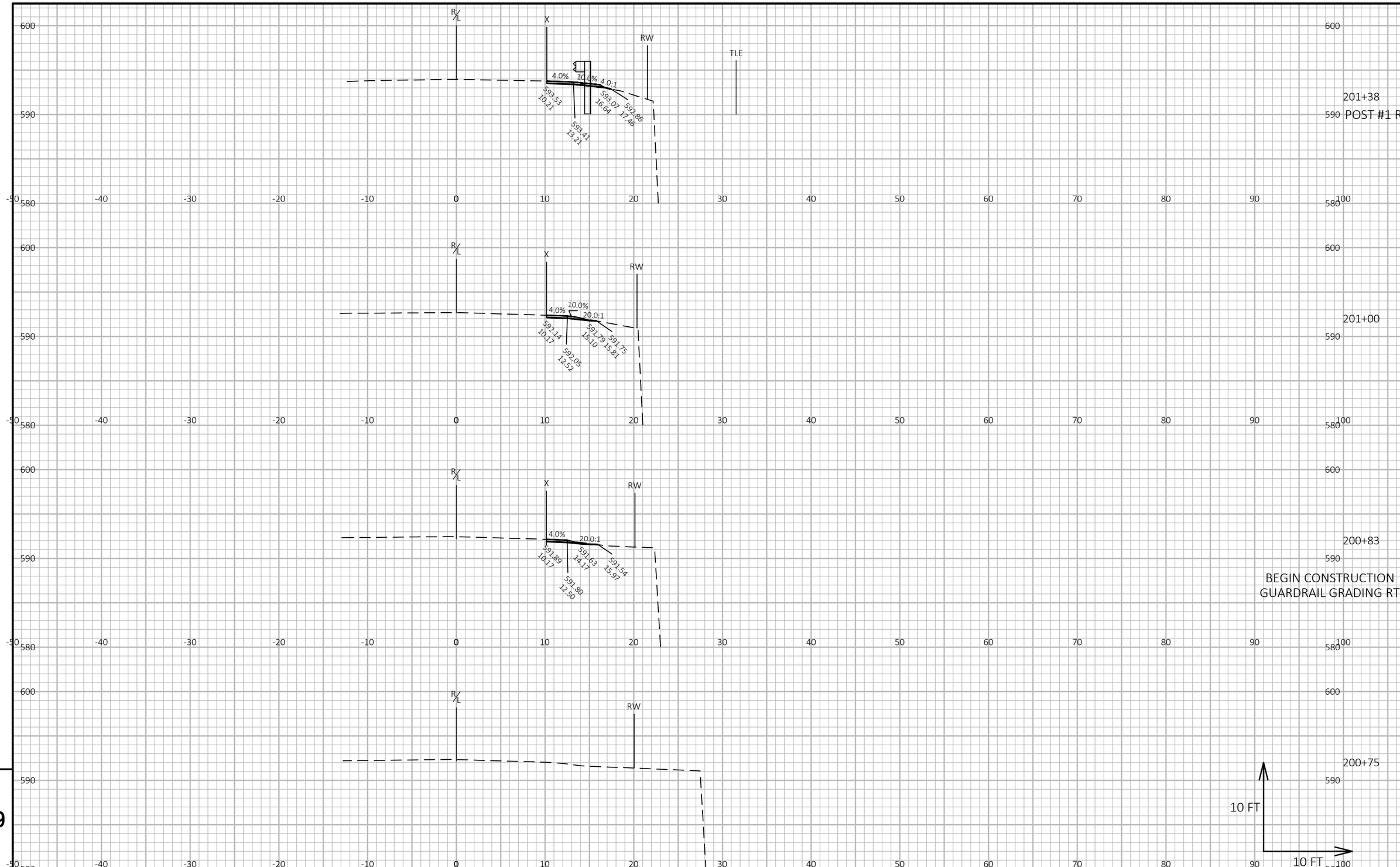

9

9

PROJECT NO: 4150-14-71	HWY: STH 57	COUNTY: DOOR	CROSS SECTIONS: FROGTOWN ROAD - GUARDRAIL	SHEET 155	E

FILE NAME : K:\1202715.01\CIVIL3D\41501400\SHEETSPLAN\090201-XS.DWG
LAYOUT NAME - Model
PLOT DATE : 7/5/2021 10:24 AM
PLOT BY : MAZARIEGOS, JAIRO
PLOT NAME :
PLOT SCALE : 1 IN:10 FT HORZ. / 1 IN:10 FT VERT.
WISDOT/CADDS SHEET 49

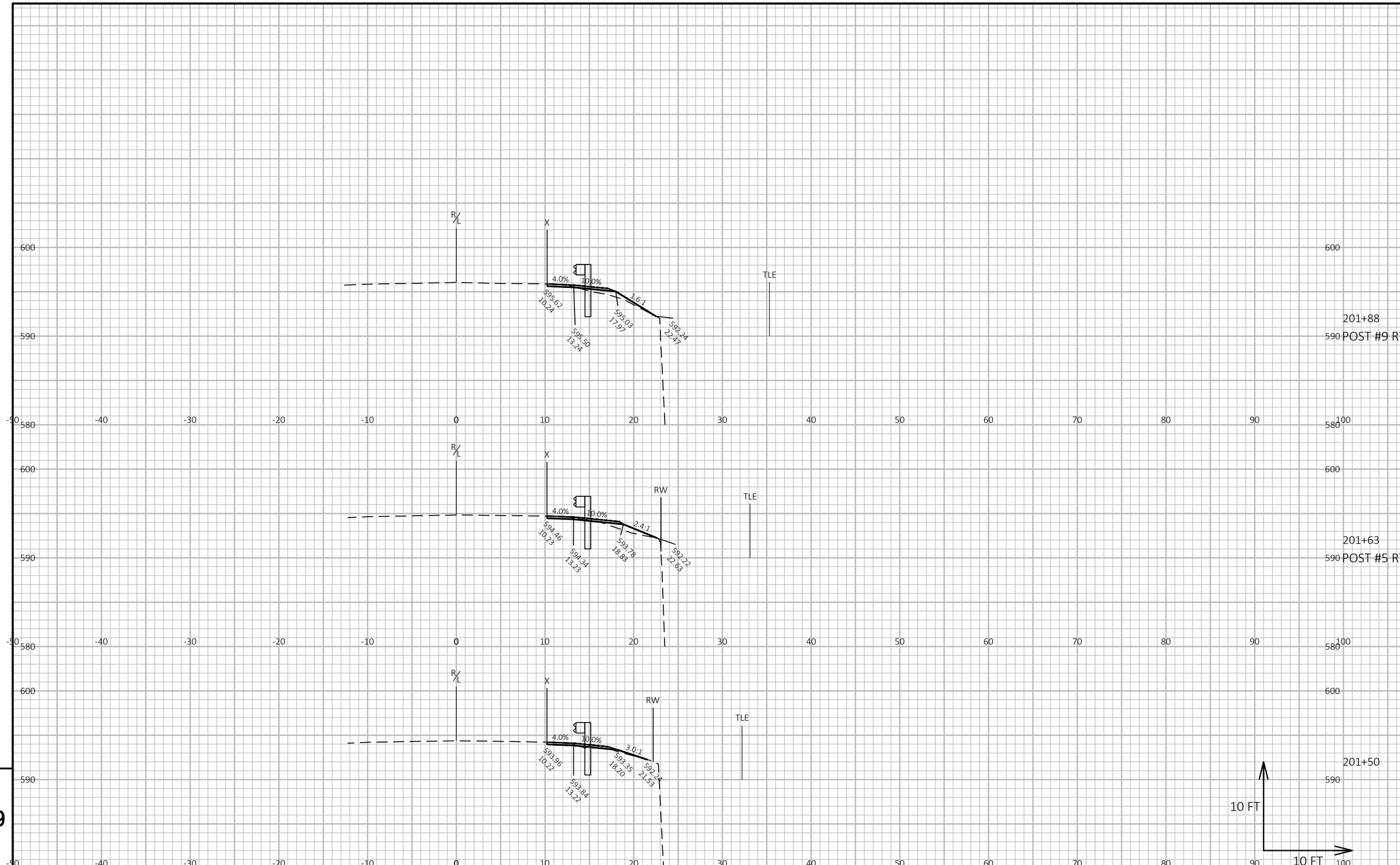

9

9

PROJECT NO: 4150-14-71	HWY: STH 57	COUNTY: DOOR	CROSS SECTIONS: FROGTOWN ROAD - GUARDRAIL	SHEET 156	E

FILE NAME : K:\1202715.01\CIVIL3D\41501400\SHEETSPLAN\090201-XS.DWG
LAYOUT NAME - Model
PLOT DATE : 7/5/2021 10:24 AM
PLOT BY : MAZARIEGOS, JAIRO
PLOT NAME :
PLOT SCALE : 1 IN:10 FT HORZ. / 1 IN:10 FT VERT.
WISDOT/CADDS SHEET 49

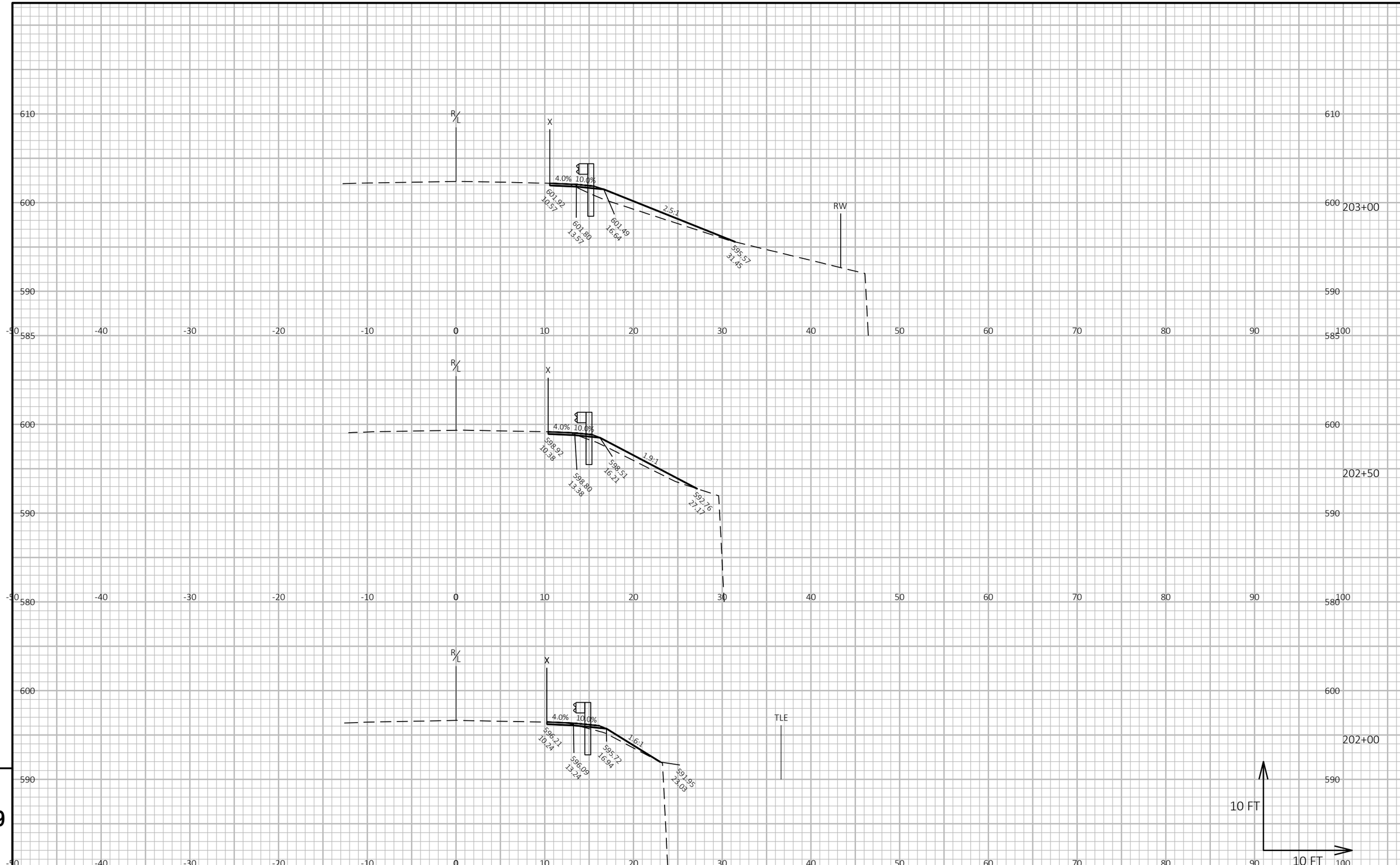

9

9

PROJECT NO: 4150-14-71	HWY: STH 57	COUNTY: DOOR	CROSS SECTIONS: FROGTOWN ROAD - GUARDRAIL	SHEET 157	E

FILE NAME : K:\1202715.01\CIVIL3D\41501400\SHEETSPLAN\090201-XS.DWG
LAYOUT NAME - Model
PLOT DATE : 7/5/2021 10:24 AM
PLOT BY : MAZARIEGOS, JAIRO
PLOT NAME :
PLOT SCALE : 1 IN:10 FT HORZ. / 1 IN:10 FT VERT.
WISDOT/CADDS SHEET 49

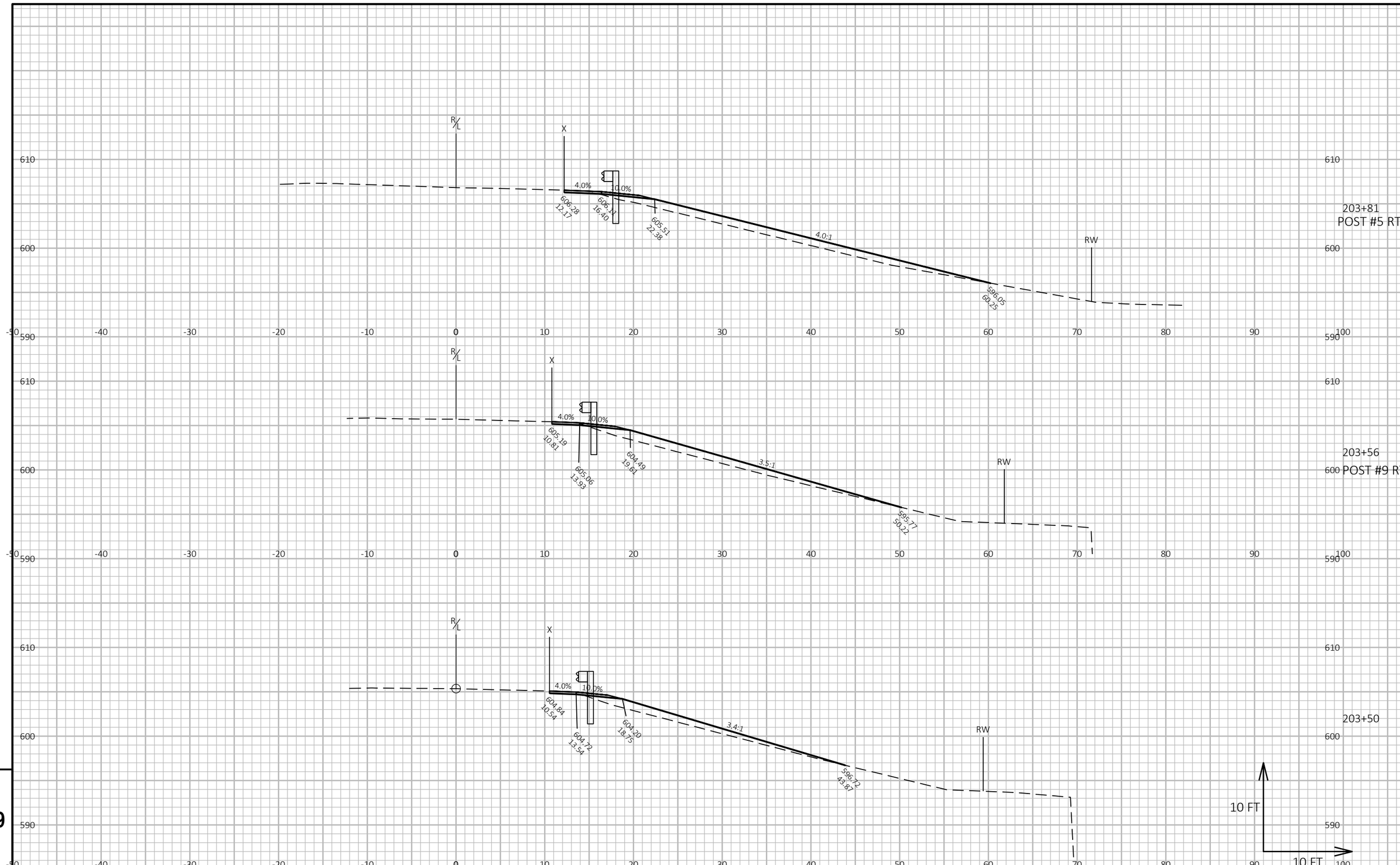

PROJECT NO: 4150-14-71	HWY: STH 57	COUNTY: DOOR	CROSS SECTIONS: FROGTOWN ROAD - GUARDRAIL	SHEET 158	E

FILE NAME : K:\1202715.01\CIVIL3D\41501400\SHEETSPLAN\090201-XS.DWG
LAYOUT NAME - Model
PLOT DATE : 7/5/2021 10:24 AM
PLOT BY : MAZARIEGOS, JAIRO
PLOT NAME :
PLOT SCALE : 1 IN:10 FT HORZ. / 1 IN:10 FT VERT.
WISDOT/CADDS SHEET 49

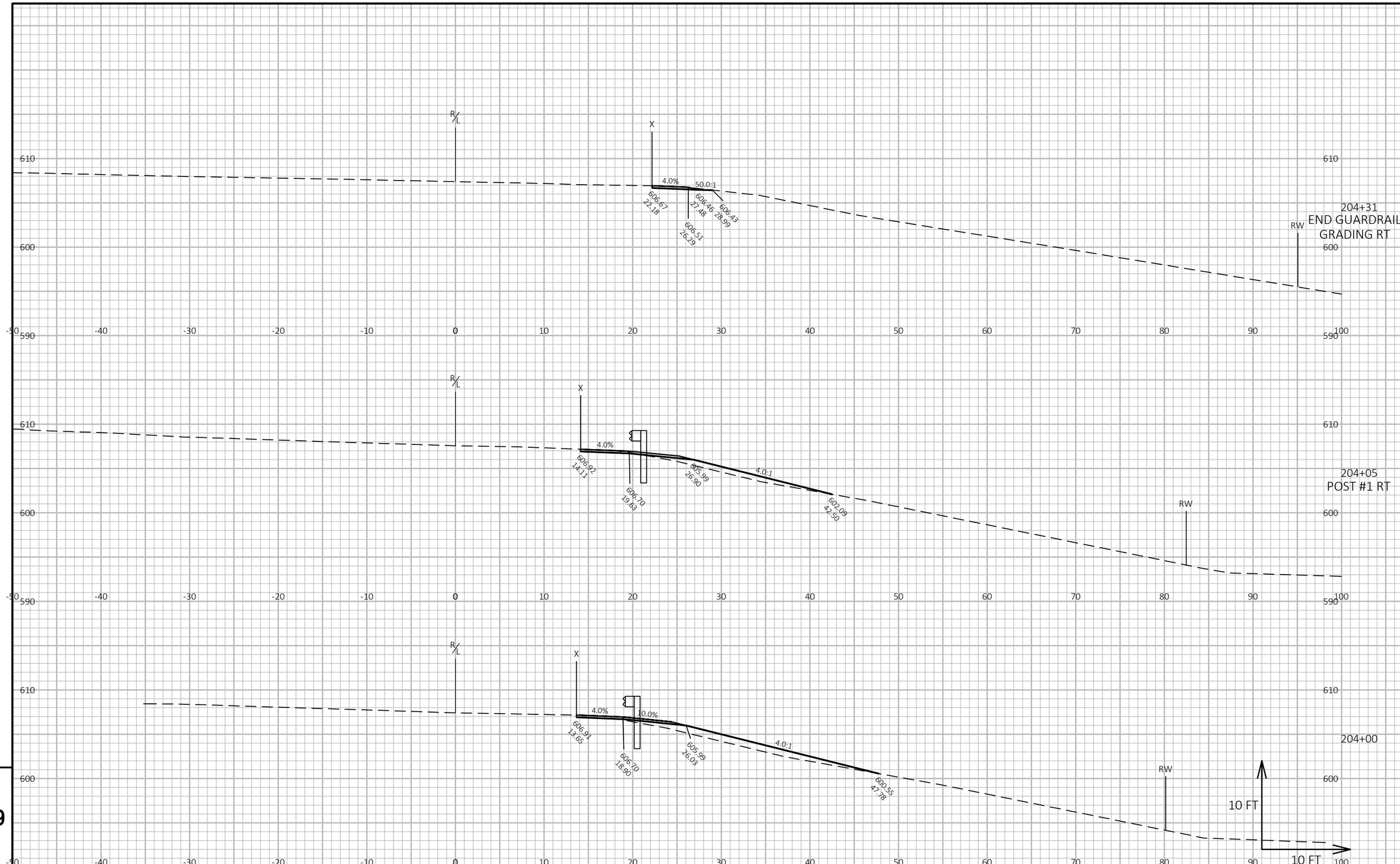

PROJECT NO: 4150-14-71	HWY: STH 57	COUNTY: DOOR	CROSS SECTIONS: FROGTOWN ROAD - GUARDRAIL	SHEET 159	E

FILE NAME : K:\1202715.01\CIVIL3D\41501400\SHEETSPLAN\090201-XS.DWG
LAYOUT NAME - Model
PLOT DATE : 7/5/2021 10:24 AM
PLOT BY : MAZARIEGOS, JAIRO
PLOT NAME :
PLOT SCALE : 1 IN:10 FT HORZ. / 1 IN:10 FT VERT.
WISDOT/CADDS SHEET 49

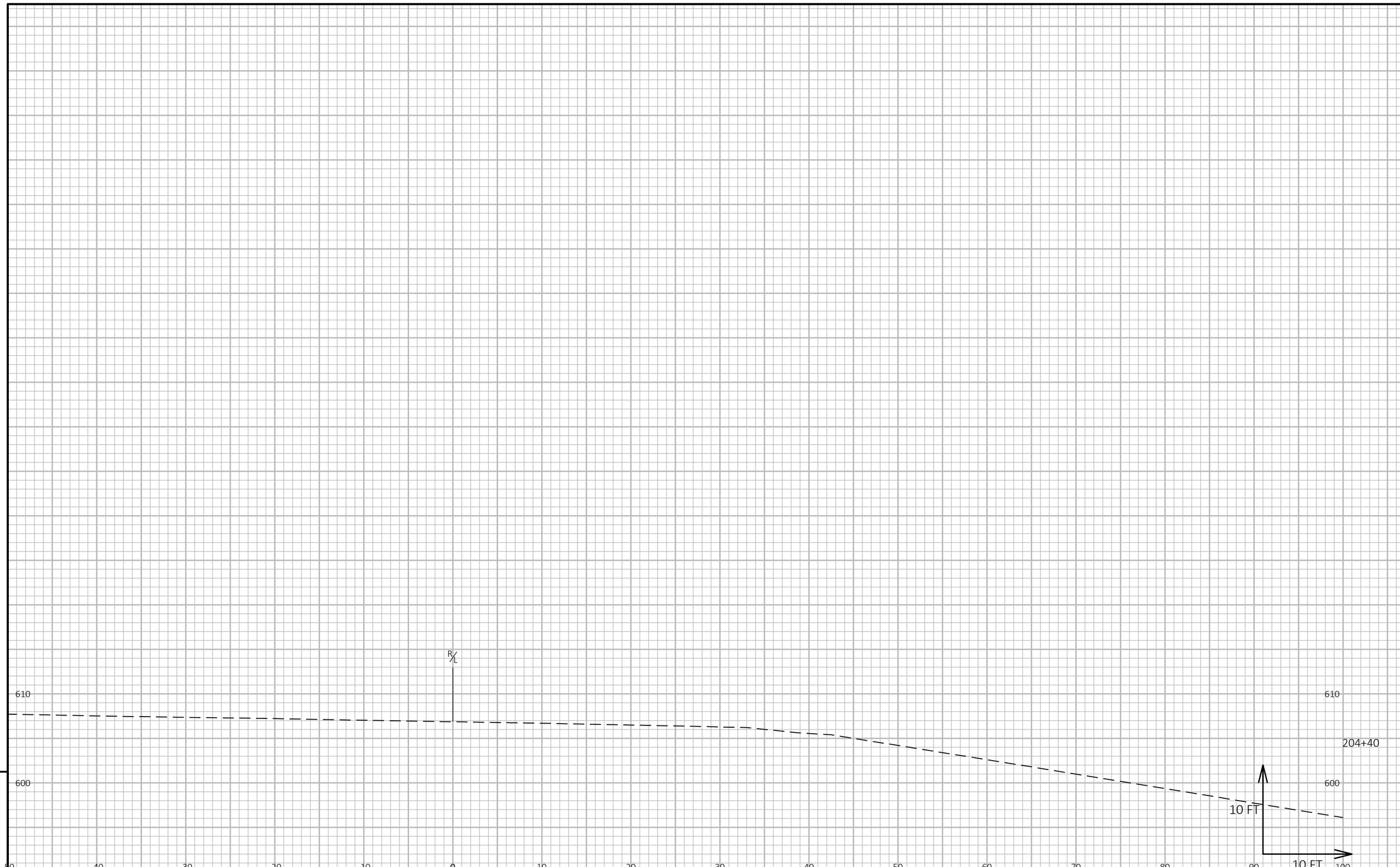

9

9

PROJECT NO: 4150-14-71	HWY: STH 57	COUNTY: DOOR	CROSS SECTIONS: FROGTOWN ROAD - GUARDRAIL	SHEET 160	E

FILE NAME : K:\1202715.01\CIVIL3D\41501400\SHEETSPLAN\090201-XS.DWG
LAYOUT NAME - Model
PLOT DATE : 7/5/2021 10:24 AM
PLOT BY : MAZARIEGOS, JAIRO
PLOT NAME :
PLOT SCALE : 1 IN:10 FT HORZ. / 1 IN:10 FT VERT.

Notes

Wisconsin Department of Transportation

Dedicated people creating transportation solutions through innovation and exceptional service.

http://www.dot.wisconsin.gov