HIGHWAY WORK PROPOSAL

Wisconsin Department of Transportation
DT1502 01/2020 s.66.0901(7) Wis. Stats

Proposal Number: 018

COUNTY	STATE PROJECT	FEDERAL	PROJECT DESCRIPTION	HIGHWAY
Sheboygan	4540-34-71	WISC 2025107	Cedar Grove - Sheboygan Falls; CTH D - STH 28	STH 032
Sheboygan	4540-36-71	WISC 2025108	Cedar Grove-Sheboygan Falls; CTH D-STH 28	STH 032

ADDENDUM REQUIRED

ATTACHED AT BACK

This proposal, submitted by the undersigned bidder to the Wisconsin Department of Transportation, is in accordance with the advertised request for proposals. The bidder is to furnish and deliver all materials, and to perform all work for the improvement of the designated project in the time specified, in accordance with the appended Proposal Requirements and Conditions.

Proposal Guaranty Required: $100,000.00 Payable to: Wisconsin Department of Transportation	Attach Proposal Guaranty on back of this PAGE.
Bid Submittal Date: December 10, 2024 Time (Local Time): 11:00 am	Firm Name, Address, City, State, Zip Code **SAMPLE** **NOT FOR BIDDING PURPOSES**
Contract Completion Time ~~October 03, 2025~~ October 31, 2025	
Assigned Disadvantaged Business Enterprise Goal 6%	This contract is exempt from federal oversight.

This certifies that the undersigned bidder, duly sworn, is an authorized representative of the firm named above; that the bidder has examined and carefully prepared the bid from the plans, Highway Work Proposal, and all addenda, and has checked the same in detail before submitting this proposal or bid; and that the bidder or agents, officer, or employees have not, either directly or indirectly, entered into any agreement, participated in any collusion, or otherwise taken any action in restraint of free competitive bidding in connection with this proposal bid.

Do not sign, notarize, or submit this Highway Work Proposal when submitting an electronic bid on the Internet.

Subscribed and sworn to before me this date _____

(Signature, Notary Public, State of Wisconsin)	(Bidder Signature)
(Print or Type Name, Notary Public, State Wisconsin)	(Print or Type Bidder Name)
(Date Commission Expires)	(Bidder Title)

Notary Seal

For Department Use Only

Type of Work:
Removals, Milling, Grading, Aggregate, Asphalt Pavement, Structure Replacement, Curb and Gutter, Concrete Sidewalk, Storm Sewer, Beam Guard, Erosion Control, Traffic Control, Pavement Marking, Restoration.

Notice of Award Dated	Date Guaranty Returned

PLEASE ATTACH
PROPOSAL GUARANTY HERE

PROPOSAL REQUIREMENTS AND CONDITIONS

The bidder, signing and submitting this proposal, agrees and declares as a condition thereof, to be bound by the following conditions and requirements.

If the bidder has a corporate relationship with the proposal design engineering company, the bidder declares that it did not obtain any facts, data, or other information related to this proposal from the design engineering company that was not available to all bidders.

The bidder declares that they have carefully examined the site of, and the proposal, plans, specifications and contract forms for the work contemplated, and it is assumed that the bidder has investigated and is satisfied as to the conditions to be encountered, as to the character, quality, and quantities of work to be performed and materials to be furnished, and as to the requirements of the specifications, special provisions and contract. It is mutually agreed that submission of a proposal shall be considered conclusive evidence that the bidder has made such examination.

The bidder submits herewith a proposal guaranty in proper form and amount payable to the party as designated in the advertisement inviting proposals, to be retained by and become the property of the owner of the work in the event the undersigned shall fail to execute the contract and contract bond and return the same to the office of the engineer within fourteen (14) days after having been notified in writing to do so; otherwise to be returned.

The bidder declares that they understand that the estimate of quantities in the attached schedule is approximate only and that the attached quantities may be greater or less in accordance with the specifications.

The bidder agrees to perform the said work, for and in consideration of the payment of the amount becoming due on account of work performed, according to the unit prices bid in the following schedule, and to accept such amounts in full payment of said work.

The bidder declares that all of the said work will be performed at their own proper cost and expense, that they will furnish all necessary materials, labor, tools, machinery, apparatus, and other means of construction in the manner provided in the applicable specifications and the approved plans for the work together with all standard and special designs that may be designed on such plans, and the special provisions in the contract of which this proposal will become a part, if and when accepted. The bidder further agrees that the applicable specifications and all plans and working drawings are made a part hereof, as fully and completely as if attached hereto.

The bidder, if awarded the contract, agrees to begin the work not later than ten (10) days after the date of written notification from the engineer to do so, unless otherwise stipulated in the special provisions.

The bidder declares that if they are awarded the contract, they will execute the contract agreement and begin and complete the work within the time named herein, and they will file a good and sufficient surety bond for the amount of the contract for performance and also for the full amount of the contract for payment.

The bidder, if awarded the contract, shall pay all claims as required by Section 779.14, Statutes of Wisconsin, and shall be subject to and discharge all liabilities for injuries pursuant to Chapter 102 of the Statutes of Wisconsin, and all acts amendatory thereto. They shall further be responsible for any damages to property or injury to persons occurring through their own negligence or that of their employees or agents, incident to the performance of work under this contract, pursuant to the Standard Specifications for Road and Bridge Construction applicable to this contract.

In connection with the performance of work under this contract, the contractor agrees to comply with all applicable state and federal statutes relating to non-discrimination in employment. No otherwise qualified person shall be excluded from employment or otherwise be subject to discrimination in employment in any manner on the basis of age, race, religion, color, gender, national origin or ancestry, disability, arrest or conviction record (in keeping with s.111.32), sexual orientation, marital status, membership in the military reserve, honesty testing, genetic testing, and outside use of lawful products. This provision shall include, but not be limited to the following: employment, upgrading, demotion or transfer; recruitment or recruitment advertising; layoff or termination; rates of pay or other forms of compensation, and selection for training, including apprenticeship. The contractor further agrees to ensure equal opportunity in employment to all applicants and employees and to take affirmative action to attain a representative workforce.

The contractor agrees to post notices and posters setting forth the provisions of the nondiscrimination clause, in a conspicuous and easily accessible place, available for employees and applicants for employment.

If a state public official (section 19.42, Stats.) or an organization in which a state public official holds at least a 10% interest is a party to this agreement, this contract is voidable by the state unless appropriate disclosure is made to the State of Wisconsin Ethics Board.

BID PREPARATION

Preparing the Proposal Schedule of Items

A. General

(1) Obtain bidding proposals as specified in section 102 of the standard specifications prior to 11:45 AM of the last business day preceding the letting. Submit bidding proposals using one of the following methods:

1. Electronic bid on the internet.
2. Electronic bid on a printout with accompanying diskette or CD ROM.
3. Paper bid under a waiver of the electronic submittal requirements.

(2) Bids submitted on a printout with accompanying diskette or CD ROM or paper bids submitted under a waiver of the electronic submittal requirements govern over bids submitted on the internet.

(3) The department will provide bidding information through the department's web site at:

https://wisconsindot.gov/Pages/doing-bus/contractors/hcci/bid-let.aspx

The contractor is responsible for reviewing this web site for general notices as well as information regarding proposals in each letting. The department will also post special notices of all addenda to each proposal through this web site no later than 4:00 PM local time on the Thursday before the letting. Check the department's web site after 5:00 PM local time on the Thursday before the letting to ensure all addenda have been accounted for before preparing the bid. When bidding using methods 1 and 2 above, check the Bid Express™ on-line bidding exchange at http://www.bidx.com/ after 5:00 PM local time on the Thursday before the letting to ensure that the latest schedule of items Expedite file (*.ebs or *.00x) is used to submit the final bid.

(4) Interested parties can subscribe to the Bid Express™ on-line bidding exchange by following the instructions provided at the www.bidx.com web site or by contacting:

Info Tech Inc.
5700 SW 34th Street, Suite 1235
Gainesville, FL 32608-5371
email: mailto:customer.support@bidx.com

(5) The department will address equipment and process failures, if the bidder can demonstrate that those failures were beyond their control.

(6) Contractors are responsible for checking on the issuance of addenda and for obtaining the addenda. Notice of issuance of addenda is posted on the department's web site at:

https://wisconsindot.gov/Pages/doing-bus/contractors/hcci/bid-let.aspx

or by calling the department at (608) 266-1631. Addenda can ONLY be obtained from the department's web site listed above or by picking up the addenda at the Bureau of Highway Construction, 4th floor, 4822 Madison Yards Way, Madison, WI, during regular business hours.

(7) Addenda posted after 5:00 PM on the Thursday before the letting will be emailed to the eligible bidders for that proposal. All eligible bidders shall acknowledge receipt of the addenda whether they are bidding on the proposal or not. Not acknowledging receipt may jeopardize the awarding of the project.

B. Submitting Electronic Bids

B.1 On the Internet

(1) Do the following before submitting the bid:

4. Have a properly executed annual bid bond on file with the department.
5. Have a digital ID on file with and enabled by Info Tech Inc. Using this digital ID will constitute the bidder's signature for proper execution of the bidding proposal.

(2) In lieu of preparing, delivering, and submitting the proposal as specified in 102.6 and 102.9 of the standard specifications, submit the proposal on the internet as follows:

1. Download the latest schedule of items reflecting all addenda from the Bid Express™ web site.
2. Use Expedite™ software to enter a unit price for every item in the schedule of items.
3. Submit the bid according to the requirements of Expedite™ software and the Bid Express™ web site. Do not submit a bid on a printout with accompanying diskette or CD ROM or a paper bid. If the bidder does submit a bid on a printout with accompanying diskette or a paper bid in addition to the internet submittal, the department will disregard the internet bid
4. Submit the bid before the hour and date the Notice to Contractors designates
5. Do not sign, notarize, and return the bidding proposal described in 102.2 of the standard specifications.

(3) The department will not consider the bid accepted until the hour and date the Notice to Contractors designates.

B.2 On a Printout with Accompanying Diskette or CD ROM

(1) Download the latest schedule of items from the Wisconsin pages of the Bid Express web site reflecting the latest addenda posted on the department's web site at:

https://wisconsindot.gov/Pages/doing-bus/contractors/hcci/bid-let.aspx

Use Expedite™ software to prepare and print the schedule of items. Provide a valid amount for all price fields. Follow instructions and review the help screens provided on the Bid Express™ web site to assure that the schedule of items is prepared properly.

(2) Staple an 8 1/2 by 11 inch printout of the Expedite□□ generated schedule of items to the other proposal documents submitted to the department as a part of the bidder's sealed bid. As a separate submittal, not in the sealed bid envelop but due at the same time and place as the sealed bid, also provide the Expedite™ generated schedule of items on a 3 1/2 inch computer diskette or CD ROM. Label each diskette or CD ROM with the bidder's name, the 4 character department-assigned bidder identification code from the top of the bidding proposal, and a list of the proposal numbers included on that diskette or CD ROM as indicated in the following example:

Bidder Name
BN00
Proposals: 1, 12, 14, & 22

(3) If bidding on more than one proposal in the letting, the bidder may include all proposals for that letting on one diskette or CD ROM. Include only submitted proposals with no incomplete or other files on the diskette or CD ROM.

(4) The bidder-submitted printout of the Expedite□□ generated schedule of items is the governing contract document and must conform to the requirements of section 102 of the standard specifications. If a printout needs to be altered, cross out the printed information with ink or typewriter and enter the new information and initial it in ink. If there is a discrepancy between the printout and the diskette or CD ROM, the department will analyze the bid using the printout information.

(5) In addition to the reasons specified in section 102 of the standard specifications, proposals are irregular and the department may reject them for one or more of the following:

1. The check code printed on the bottom of the printout of the Expedite™ generated schedule of items is not the same on each page.
2. The check code printed on the printout of the Expedite™ generated schedule of items is not the same as the check code for that proposal provided on the diskette or CD ROM.
3. The diskette or CD ROM is not submitted at the time and place the department designates.

B Waiver of Electronic Submittal

(1) The bidder may request a waiver of the electronic submittal requirements. Submit a written request for a waiver in lieu of bids submitted on the internet or on a printout with accompanying diskette or CD ROM. Use the waiver that was included with the paper bid document sent to the bidder or type up a waiver on the bidder's letterhead. The department will waive the electronic submittal requirements for a bidding entity (individual, partnership, joint venture, corporation, or limited liability company) for up to 4 individual proposals in a calendar year. The department may allow additional waivers for equipment malfunctions.

(2) Submit a schedule of items on paper conforming to section 102 of the standard specifications. The department charges the bidder a $75 administrative fee per proposal, payable at the time and place the department designates for receiving bids, to cover the costs of data entry. The department will accept a check or money order payable to: "Wisconsin, Dept. of Transportation."

(3) In addition to the reasons specified in section 102 of the standard specifications, proposals are irregular and the department may reject them for one or more of the following:

1. The bidder fails to provide the written request for waiver of the electronic submittal requirements.
2. The bidder fails to pay the $75 administrative fee before the time the department designates for the opening of bids unless the bidder requests on the waiver that they be billed for the $75.
3. The bidder exceeds 4 waivers of electronic submittal requirements within a calendar year.

(4) In addition to the reasons specified in section 102 of the standard specifications, the department may refuse to issue bidding proposals for future contracts to a bidding entity that owes the department administrative fees for a waiver of electronic submittal requirements.

PROPOSAL BID BOND

DT1303 1/2006

Wisconsin Department of Transportation

Proposal Number	Project Number	Letting Date
Name of Principal		
Name of Surety	State in Which Surety is Organized	

We, the above-named Principal and the above-named Surety, are held and firmly bound unto the State of Wisconsin in the sum equal to the Proposal Guaranty for the total bid submitted for the payment to be made; we jointly and severally bind ourselves, our heirs, executors, administrators, successors and assigns. The condition of this obligation is that the Principal has submitted a bid proposal to the State of Wisconsin acting through the Department of Transportation for the improvement designated by the Proposal Number and Letting Date indicated above.

If the Principal is awarded the contract and, within the time and manner required by law after the prescribed forms are presented for signature, enters into a written contract in accordance with the bid, and files the bond with the Department of Transportation to guarantee faithful performance and payment for labor and materials, as required by law, or if the Department of Transportation shall reject all bids for the work described, then this obligation shall be null and void; otherwise, it shall be and remain in full force and effect. In the event of failure of the Principal to enter into the contract or give the specified bond, the Principal shall pay to the Department of Transportation **within 10 business days of demand** a total equal to the Proposal Guaranty as liquidated damages; the liability of the Surety continues for the full amount of the obligation as stated until the obligation is paid in full.

The Surety, for value received, agrees that the obligations of it and its bond shall not be impaired or affected by any extension of time within which the Department of Transportation may accept the bid; and the Surety does waive notice of any such extension.

IN WITNESS, the Principal and Surety have agreed and have signed by their proper officers and have caused their corporate seals to be affixed this date: **(DATE MUST BE ENTERED)**

PRINCIPAL

(Company Name) **(Affix Corporate Seal)**

(Signature and Title)

(Company Name)

(Signature and Title)

(Company Name)

(Signature and Title)

(Company Name)

(Signature and Title)

(Name of Surety) **(Affix Seal)**

(Signature of Attorney-in-Fact)

NOTARY FOR PRINCIPAL

(Date)

State of Wisconsin)
) ss.
_____ County)

On the above date, this instrument was acknowledged before me by the named person(s).

(Signature, Notary Public, State of Wisconsin)

(Print or Type Name, Notary Public, State of Wisconsin)

(Date Commission Expires)

Notary Seal

NOTARY FOR SURETY

(Date)

State of Wisconsin)
) ss.
_____ County)

On the above date, this instrument was acknowledged before me by the named person(s).

(Signature, Notary Public, State of Wisconsin)

(Print or Type Name, Notary Public, State of Wisconsin)

(Date Commission Expires)

Notary Seal

IMPORTANT: A certified copy of Power of Attorney of the signatory agent must be attached to the bid bond.

CERTIFICATE OF ANNUAL BID BOND

DT1305 8/2003

Wisconsin Department of Transportation

Time Period Valid (From/To)
Name of Surety
Name of Contractor
Certificate Holder Wisconsin Department of Transportation

This is to certify that an annual bid bond issued by the above-named Surety is currently on file with the Wisconsin Department of Transportation.

This certificate is issued as a matter of information and conveys no rights upon the certificate holder and does not amend, extend or alter the coverage of the annual bid bond.

Cancellation: Should the above policy be cancelled before the expiration date, the issuing surety will give thirty (30) days written notice to the certificate holder indicated above.

(Signature of Authorized Contractor Representative) (Date)

LIST OF SUBCONTRACTORS

Section 66.0901(7), Wisconsin Statutes, provides that as a part of the proposal, the bidder also shall submit a list of the subcontractors the bidder proposes to contract with and the class of work to be performed by each. In order to qualify for inclusion in the bidder's list a subcontractor shall first submit a bid in writing, to the general contractor at least 48 hours prior to the time of the bid closing. The list may not be added to or altered without the written consent of the municipality. A proposal of a bidder is not invalid if any subcontractor and the class of work to be performed by the subcontractor has been omitted from a proposal; the omission shall be considered inadvertent or the bidder will perform the work personally.

No subcontract, whether listed herein or later proposed, may be entered into without the written consent of the Engineer as provided in Subsection 108.1 of the Standard Specifications.

Name of Subcontractor	Class of Work	Estimated Value

CERTIFICATION REGARDING DEBARMENT, SUSPENSION, AND OTHER RESPONSIBILITY MATTERS - PRIMARY COVERED TRANSACTIONS

Instructions for Certification

1. By signing and submitting this proposal, the prospective contractor is providing the certification set out below.

2. The inability of a person to provide the certification required below will not necessarily result in denial of participation in this covered transaction. The prospective contractor shall submit an explanation of why it cannot provide the certification set out below. The certification or explanation will be considered in connection with the department or agency's determination whether to enter into this transaction. However, failure of the prospective contractor to furnish a certification or an explanation shall disqualify such person from participation in this transaction.

3. The certification in this clause is a material representation of fact upon which reliance was placed when the department determined to enter into this transaction. If it is later determined that the contractor knowingly rendered an erroneous certification in addition to other remedies available to the Federal Government the department may terminate this transaction for cause or default.

4. The prospective contractor shall provide immediate written notice to the department to whom this proposal is submitted if at any time the prospective contractor learns that its certification was erroneous when submitted or has become erroneous by reason of changed circumstances.

5. The terms "covered transaction," "debarred," "suspended," "ineligible," "lower tier covered transaction," "participant," "person," "primary covered transaction," "principal," "proposal," and "voluntarily excluded," as used in this clause, have the meanings set out in the Definitions and Coverage sections of the rules implementing Executive Order 12549. You may contact the department to which this proposal is being submitted for assistance in obtaining a copy of those regulations.

6. The prospective contractor agrees by submitting this proposal that, should this contract be entered into, it shall not knowingly enter into any lower tier covered transaction with a person who is debarred, suspended, declared ineligible, or voluntarily excluded from participation in this covered transaction, unless authorized by the department entering into this transaction.

7. The prospective contractor further agrees by submitting this proposal that it will include the clause titled "Certification Regarding Debarment, Suspension, Ineligibility and Voluntary Exclusion-Lower Tier Covered Transaction," which is included as an addendum to PR- 1273 - "Required Contract Provisions Federal Aid Construction Contracts," without modification, in all lower tier covered transactions and in all solicitations for lower tier covered transactions.

8. The contractor may rely upon a certification of a prospective subcontractor/materials supplier that it is not debarred, suspended, ineligible, or voluntarily excluded from the covered transaction, unless it knows that the certification is erroneous. A contractor may decide the method and frequency by which it determines the eligibility of its principals. Each contractor may, but is not required to, check the Disapproval List (telephone # 608/266/1631).

9. Nothing contained in the foregoing shall be construed to require establishment of a system of records in order to render in good faith the certification required by this clause. The knowledge and information of a contractor is not required to exceed that which is normally possessed by a prudent person in the ordinary course of business dealings.

10. Except for transactions authorized under paragraph 6 of these instructions, if a contractor in a covered transaction knowingly enters into a lower tier covered transaction with a person who is suspended, debarred, ineligible or voluntarily excluded from participation in this transaction, in addition to other remedies available to the Federal Government, the department may terminate this transaction for cause or default.

Certification Regarding Debarment, Suspension, and Other Responsibility Matters - Primary Covered Transactions

1. The prospective contractor certifies to the best of its knowledge and belief, that it and its principals:

   (a) Are not presently debarred, suspended, proposed for debarment, declared ineligible, or voluntarily excluded from covered transactions by any Federal department or agency;

   (b) Have not within a three-year period preceding this proposal been convicted of or had a civil judgment rendered against them for commission of fraud or a criminal offense in connection with obtaining, attempting to obtain, or performing a public (Federal, State or local) transaction or contract under a public transaction; violation of Federal or State antitrust statutes or commission of embezzlement, theft, forgery, bribery, falsification or destruction of records, making false statements or receiving stolen property;

   (c) Are not presently indicted for or otherwise criminally or civilly charged by a governmental entity (Federal, State or local) with commission of any of the offense enumerated in paragraph (1)(b) of this certification; and

   (d) Have not within a three-year period preceding this proposal had one or more public transactions (Federal, State or local) terminated for cause or default.

2. Where the prospective contractor is unable to certify to any of the statements in this certification, such prospective contractor shall attach an explanation to this proposal.

Special Provisions

Table of Contents

Article	Description	Page #
1.	General.	3
2.	Scope of Work.	3
3.	Prosecution and Progress.	3
4.	Traffic.	5
5.	Holiday and Special Event Work Restrictions.	7
6.	Railroad Insurance and Coordination - Union Pacific Railroad Company.	7
7.	Utilities.	8
8.	Other Projects.	19
9.	Information to Bidders, U.S. Army Corps of Engineers Section 404 Permit.	20
10.	Information to Bidders, WPDES Transportation Construction General Permit (TCGP) for Storm Water Discharges.	20
11.	Construction Over or Adjacent to Navigable Waters.	20
12.	Erosion Control Structures.	20
13.	Notice to Contractor – Contamination Beyond Construction Limits.	21
14.	Archaeological Site.	21
15.	Salvaging Modular Concrete Block at Station 100+09.	21
16.	Abandoning Sewer, Item 204.0291.S.	21
17.	HMA Percent Within Limits (PWL) Test Strip Volumetrics, Item 460.0105.S; HMA Percent Within Limits (PWL) Test Strip Density, Item 460.0110.S.	22
18.	HMA Pavement Percent Within Limits (PWL) QMP.	27
19.	Appendix A.	34
20.	HMA Pavement Longitudinal Joint Density.	40
21.	Culvert Pipe Backfill.	43
22.	Survey Monument Coordination.	43
23.	Traffic Control.	43
24.	Installing and Maintaining Bird Deterrent System Station 100+09, Item 999.2000.S.01; Installing and Maintaining Bird Deterrent System Station 393+67, Item 999.2000.S.02.	44
25.	Foundation Backfill, Item SPV.0035.01.	46
26.	Temporary Water Diversion, C-59-117, Station 527+65.16, Item SPV.0060.01; Temporary Water Diversion, C-59-118, Station 393+66.22, Item SPV.0060.02; Temporary Water Diversion, C-59-119, Station 337+79.75, Item SPV.0060.03; Temporary Water Diversion, Culvert Pipe, Station 189+62, Item SPV.0060.04; Temporary Water Diversion, C-59-121, Station 100+09.05, Item SPV.0060.05.	47
27.	Chimney Seals, Item SPV.0060.06.	48
28.	Adjusting Water Valve Boxes, Item SPV.0060.07.	48
29.	Apron Endwalls for Culvert Pipe Reinforced Concrete Horizontal Elliptical 72x113-Inch, Item SPV.0060.08.	49
30.	Adjusting Sanitary Manhole Covers, Item SPV.0060.09.	49
31.	Culvert Pipe Reinforced Concrete Horizontal Elliptical Class HE-III 72x113-Inch, Item SPV.0090.01.	50
32.	Removing Distressed Pavement Milling, Item SPV.0180.01.	50

SPECIAL PROVISIONS

1. General.

Perform the work under this construction contract for Project 4540-34-71, Cedar Grove – Sheboygan Falls, CTH D – STH 28, STH 32, Sheboygan County Wisconsin and Project 4540-36-71, Cedar Grove – Sheboygan Falls, CTH D – STH 28, STH 32, Sheboygan County Wisconsin as the plans show and execute the work as specified in the State of Wisconsin, Department of Transportation, Standard Specifications for Highway and Structure Construction, 2025 Edition, as published by the department, and these special provisions.

If all or a portion of the plans and special provisions are developed in the SI metric system and the schedule of prices is developed in the US standard measure system, the department will pay for the work as bid in the US standard system.

100-005 (20240703)

2. Scope of Work.

The work under this contract shall consist of culvert replacements, milling, HMA pavement, base aggregate dense, curb and gutter, box culverts, beam guard, permanent signing, pavement marking, erosion control, restoration, and all incidental items necessary to complete the work as shown on the plans and included in the proposal and contract.

104-005 (20090901)

3. Prosecution and Progress.

Begin work within 10 calendar days after the engineer issues a written notice to do so.

Provide the start date to the engineer in writing within a month after executing the contract but at least 14 calendar days before the preconstruction conference. Upon approval, the engineer will issue the notice to proceed within 10 calendar days before the approved start date.

To revise the start date, submit a written request to the engineer at least two weeks before the intended start date. The engineer will approve or deny that request based on the conditions cited in the request and its effect on the department's scheduled resources.

Do not allow a milled surface open to through traffic to remain in place longer than 96 hours or during the periods included in the holidays and special events restrictions unless adverse weather prevents placement of the asphalt layer. Provide an even cross-sectional profile of each lane prior to reopening to traffic. An uneven profile within each lane is not allowed except within a flagging operation.

Migratory Birds

No evidence of swallow or other migratory bird nests have been observed on or under the following structures(s) during the preconstruction inspection. However, if nesting is later observed prior to or during construction, the contractor shall implement avoidance/deterrent measures or obtain a depredation permit. All active nests (when eggs or young are present) of migratory birds are protected under the federal Migratory Bird Treaty Act. The nesting season for swallows and other birds is from April 15 to August 31.

- C-59-117
- C-59-119
- Culvert at Station 189+62

Swallow or other migratory bird nests have been observed on or under the existing structure(s). All active nests (when eggs or young are present) of migratory birds are protected under the federal Migratory Bird Treaty Act. The nesting season for swallows and other birds is from April 15 to August 31.

See below for information on affected structure(s). As a last resort, apply for a depredation permit from the US Fish and Wildlife Service for work that may disturb or destroy active nests. The need for a permit may be avoided by removing the existing bridge structure prior to nest occupation by birds or clearing nests from all structures before the nests become active in early spring.

Either prevent active nests from becoming established or prevent birds from nesting by installing and/or maintaining one suitable deterrent device on the following structure(s) prior to nesting activity under the bid item Installing and Maintaining Bird Deterrent System:

- C-59-118
- C-59-121

Northern Long-eared Bat *(Myotis septentrionalis)*

Northern long-eared bats (NLEB) have the potential to inhabit the project limits because they roost in trees, bridges and culverts. Roosts may not have been observed on this project, but conditions to support the species exist. The species and all active roosts are protected by the federal Endangered Species Act. If an individual bat or active roost is encountered during construction operations, stop work and notify the engineer and the WisDOT Regional Environmental Coordinator (REC).

Ensure all operators, employees, and subcontractors working in areas of known or presumed bat habitat are aware of environmental commitments and avoidance and minimization measures (AMMs) to protect both bats and their habitat.

Direct temporary lighting, if used, away from wooded areas during the bat active season April 1 to October 31, both dates inclusive.

To avoid adverse impacts upon the NLEBs, no tree clearing is allowed between April 1 and October 31, both dates inclusive. If the required tree clearing is not completed by March 31, the department will suspend all tree clearing and associated work directly impacted by clearing.

Tree clearing is limited to that which is specified in the plans. Contractor means and methods to remove additional trees will not be allowed. If it is determined that additional trees with a 3-inch or greater diameter at breast height (dbh) need to be removed beyond contractor means and methods, notify the engineer to coordinate with the WisDOT REC to determine if consultation with United States Fish and Wildlife Service (USFWS) is required. The contractor must be aware that the WisDOT REC and/or USFWS may not permit modifications.

Submit a schedule and description of clearing operations with the ECIP 14 days prior to any clearing operations. The department will determine, based on schedule and scope of work, what additional erosion control measures shall be implemented prior to the start of clearing operations, and list those additional measures in the ECIP.

Upon approval from the engineer, working day assessments may be suspended once clearing operations are completed by March 31.

Interim Liquidated Damages – South Detour

If the contractor fails to complete all box culvert replacement work and the reconstruction of the roadway at these locations necessary to open STH 32 between the southernly road limits to CTH V within 85 calendar days after the roadway is closed, the department will assess the contractor $960 in interim liquidated damages for each calendar day contract work remains incomplete beyond 85 calendar days. An entire calendar day will be charged for any period of time within a calendar day that the road remains closed beyond 12:01 AM.

If contract time expires prior to completing all work specified in the contract, additional liquidated damages will be affixed according to standard spec 108.11.

Interim Liquidated Damages – North Detour

If the contractor fails to complete all box culvert replacement work and the reconstruction of the roadway at these locations necessary to open STH 32 between CTH V and the northernly road limits within 50 calendar days after the roadway is closed, the department will assess the contractor $2,400 in interim liquidated damages for each calendar day contract work remains incomplete beyond 50 calendar days.

An entire calendar day will be charged for any period of time within a calendar day that the road remains closed beyond 12:01 AM.

If contract time expires prior to completing all work specified in the contract, additional liquidated damages will be affixed according to standard spec 108.11.

4. Traffic.

STH 32 Closures and Detours

STH 32 will remain open to two-way traffic, except during the following detours:

- For box culvert replacements south of CTH V (Station 72+96 to Station 456+10) sign a detour using CTH V and I-43.
- For the box culvert replacement north of CTH V (Station 456+10 to Station 617+65) sign a detour using WIS 28, I-43, and CTH V.

Detours may not be concurrent. Maintain local access when STH 32 is detoured to through traffic.

For cross-culvert pipe installation during times STH 32 is detoured, the roadway can be fully closed with no requirement to maintain traffic through the closed section. The closure area can only be a maximum of 150 feet on either side of the culvert crossing. Access to properties must be maintained from one direction during the full roadway closure for culvert installations. Ramp the base aggregate dense down to future asphaltic surface elevation to maintain access across culvert crossing before placing the asphaltic surface.

Always maintain access to and from side roads within the project limits. All side roads may be reduced to one lane at the intersection with STH 32 during milling and paving operations within the limits of the intersection with the use of flagging operations during daylight hours.

Flagging Operations

STH 32 can be reduced to a single lane in the immediate area of restoration and other ancillary work as needed with use of flagging operations during daylight hours to complete the work. Maintain a minimum of one 11-foot travel lane unless otherwise allowed by the engineer. Restore the roadway to normal two-way traffic operations at the end of each day.

Concrete Curb and Gutter and Pedestrian Curb Ramps

Using shoulder closures for traffic control, construct curb & gutter and curb ramps/sidewalk as shown on the plan details and curb ramp staging sheets.

Construct curb & gutter, curb ramps, and sidewalk in a manner to maintain continuous pedestrian accommodation facilities along STH 32 on an American with Disabilities Act (ADA) compliant surface at all times. Pedestrians may be required to cross STH 32 or use sideroads to access existing/new curb ramps. Follow curb ramp staging sheets and pedestrian detour sheets for curb ramp closures and maintaining pedestrian access during the closures. Any changes to curb ramp staging or pedestrian access must be approved in writing by the construction engineer.

After installation of each section of the curb and gutter, place asphaltic surface patches to be even with curb flange and existing roadway (adjacent to curb work) within 3 days of when the concrete reaches opening strength. Asphaltic surface patches are required before opening curb ramp.

Restore landscaping around curb ramps and sidewalk before opening to pedestrians due to drop off hazard.

Property Access

Maintain access to all commercial, private, and field entrances at all times for local residents, businesses, and emergency vehicles unless otherwise approved by the engineer.

If temporary access closures are required to accommodate construction operations, contact property owners 48 hours prior to closing access to any existing entrance to coordinate temporary closures.

Restore private entrances, including gravel surface, within 12 hours of removal. If the contractor coordinates the closure of any access to a business or private property with the owner(s), the contractor shall provide written documentation of coordination with the owner(s) to the engineer 48 hours in advance of the closure.

Access to Town of Lima Recycling Center at W2599 Schneider Road should be maintained at all times. Notify the Town of Lima prior to any work that could restrict access to the Recycling Center.

Portable Changeable Message Signs - Message Prior Approval

After coordinating with department construction field staff, notify the Northeast Region Traffic Section at (920) 366-8033 (secondary contact number is (920) 360-3107) 3 business days before deploying or changing a message on a PCMS to obtain approval of the proposed message. The Northeast Region Traffic Unit will review the proposed message and either approve the message or make necessary changes.

PCMS boards must be deployed 7 days before the start of construction and before the installation of each detour of STH 32.

ner-643-035 (20151112)

Temporary Work Zone Clear Zone Working Restrictions

Park equipment and store materials, including stockpiles, a minimum of 15 feet from the edge of the traveled way unless protected by concrete barrier temporary precast.

If the contractor is unsure whether an individual work operation will meet the safety requirements for working within the clear zone, review the proposed work operation with the engineer before proceeding with the work.

ner-104-005 (20200227)

Wisconsin Lane Closure System Advance Notification

Provide the following advance notification to the engineer for incorporation into the Wisconsin Lane Closure System (LCS).

TABLE 108-1 CLOSURE TYPE AND REQUIRED MINIMUM ADVANCE NOTIFICATION

Closure type with height, weight, or width restrictions (available width, all lanes in one direction < 16 feet)	**MINIMUM NOTIFICATION**
Lane and shoulder closures	7 calendar days
Full roadway closures	7 calendar days
Ramp closures	7 calendar days
Detours	7 calendar days
Closure type without height, weight, or width restrictions (available width, all lanes in one direction ≥ 16 feet)	**MINIMUM NOTIFICATION**
Shoulder Closures	3 calendar days
Lane closures	3 business days
Ramp closures	3 business days
Modifying all closure types	3 business days

Discuss LCS completion dates and provide changes in the schedule to the engineer at weekly project meetings to manage closures nearing their completion date.

5. Holiday and Special Event Work Restrictions.

Do not perform work on, nor haul materials of any kind along or across any portion of the highway carrying STH 32 traffic, and entirely clear the traveled way and shoulders of such portions of the highway of equipment, barricades, signs, lights, and any other material that might impede the free flow of traffic during the following holiday and special event periods:

- From noon Friday, May 23, 2025 to 6:00 AM Tuesday, May 27, 2025 for Memorial Day;
- From noon Thursday, July 3, 2025 to 6:00 AM Monday, July 7, 2025 for Independence Day;
- From noon Friday, August 29, 2025 to 6:00 AM Tuesday, September 2, 2025 for Labor Day.

stp-107-005 (20210113)

6. Railroad Insurance and Coordination - Union Pacific Railroad Company.

A Description

Comply with standard spec 107.17 for all work affecting Union Pacific Railroad Company property and any existing tracks.

A.1 Railroad Insurance Requirements

In addition to standard spec 107.26, provide railroad protective liability insurance coverage as specified in standard spec 107.17.3 Insurance is filed in the name of Union Pacific Railroad Company.

Notify evidence of the required coverage, and duration to David C. LaPlante, Director -Real Estate-Special and Public Projects, 1400 Douglas St. STOP 1690, Omaha, NE 68179; Telephone: (402) 544-8563; E-mail: dclaplante@up.com.

Also send a copy to the following: Jared Kinziger, NE Region Railroad Coordinator; 944 Vanderperren Way, Green Bay, WI 54304; Telephone (920) 492-7713; E-mail: jared.kinziger@dot.wi.gov.

Include the following information on the insurance document:

- Project ID: 4540-34-71, 4540-36-71
- Project Location: Cedar Grove - Sheboygan
- Route Name: STH 32 Sheboygan County
- Work Performed on or within 50' of RR right-of-way: Detour signing and marking

#	Route Name	City/County	Crossing ID	RR Subdivision	RR Milepost
1	CTH V	Oostburg/Sheboygan	180193V	Shoreline	143.36
2	STH 32	Cedar Grove/Sheboygan	180176E	Shoreline	136.06

A.2 Train Operation

#	Passenger Train Volume	Passenger Train Speed	Freight Train Volume	Freight Train Speed	Frequency	Switch Train Comment*
1	NA		2	25	Daily	No switch trains
2	NA		2	25	Daily	No switch trains

* Switch trains are in addition to freight and passenger trains.

A.3 Names and Addresses of Railroad Representatives for Consultation and Coordination

Construction Contact

Chris T. Keckeisen, Manager Special Projects - Industry & Public Projects Engineering Department; 1400 Douglas, MS 0910, Omaha, NE, 68179; Telephone (402) 5445131; E-mail ctkeckei@up.com for consultation on railroad requirements during construction.

Amend standard spec 108.4 to include the railroad in the distribution of the initial bar chart, and monthly schedule updates. The bar chart shall specifically show work involving coordination with the railroad.

Flagging Contact

See Construction Contact. If more than 30 days of flagging is required contact UP 40 days prior to needing a flagger on site. Reference the Wisconsin Milepost and Subdivision located in A.1.

Cable Locate Contact

In addition to contacting Diggers Hotline, contact the UP Call Before You Dig line at (800) 336-9193 at least five working days before the locate is needed. Normal business hours are 6:30 AM to 6:30 PM, Central Time, Monday through Friday, except holidays and are subject to change. Calls will be routed at all times in case of an emergency. Reference the Wisconsin Milepost and Subdivision located in A.1.

UP will only locate railroad owned cable buried in the railroad right-of-way. The railroad does not locate any other utilities.

A.4 Work by Railroad

The railroad will perform the work described in this section, except for work described in other special provisions, and will be accomplished without cost to the contractor. None.

A.5 Temporary Grade Crossing

If a temporary grade crossing is desired, submit a written request to the railroad representative named in A.3 at least 40 days prior to the time needed. Approval is subject to the discretion of the railroad. The department has made no arrangements for a temporary grade crossing.

stp-107-026 (20240703)

7. Utilities.

This contract comes under the provision of Administrative Rule Trans 220.

The utility work plan includes additional detailed information regarding the location of known discontinued, relocated, or removed utility facilities. These can be requested from the department during the bid preparation process, or from the project engineer after the contract has been awarded and executed.

Some of the utility work described below is dependent on prior work being performed by the contractor at a specific site. In such situations, provide the engineer and the affected utility a good faith notice of when the utility is to start work at the site. Provide this notice 14 to 16 calendar days in advance of when the prior work will be completed, and the site will be available to the utility. Follow-up with a confirmation notice to the engineer and the utility not less than 3 working days before the site will be ready for the utility to begin its work.

stp-107-065 (20240703)

4540-34-71

AT&T Wisconsin (Communication) has overhead and underground communications facilities within the project limits. AT&T Wisconsin plans to relocate their facilities as follows:

Facility	Approximate Location	Anticipated Work
Overhead Fiber Line	Station 525+42, 30' RT – Station 528+30, 31' LT	Removal of existing overhead fiber line.
Underground Fiber and Copper Lines	Station 525+42, 36' LT – Station 525+42, 30' RT Station 525+42, 36' LT – Station 530+54, 36' LT	Installation of new underground fiber and copper lines crossing STH 32 at approximately Station 525+42 then continuing to the north along the west side of STH 32 located approximately within 5 feet of the westerly right-of-way line. Within the limits of new proposed Structure C-59-0117, the new fiber and copper lines will be bored underneath to a minimum elevation of 675. The depth will be a minimum of 48 inches elsewhere along the new fiber and copper lines.
Pedestal	Station 528+47, 29' LT	Removal of existing pedestal.
Pedestal and Guy/Anchor	Station 530+54, 36' LT	Installation of new pedestal and guy/anchor near existing utility pole.

AT&T Wisconsin has identified the following existing underground communications facility that will be left in place and discontinued:

Approximate Location	Type and Size of Facility
Station 525+42 LT – Station 530+54, 36' LT	Underground copper line.

Work prior to construction is anticipated to begin in October 2024 and is estimated to take 30 working days.

Frontier Communications of WI LLC (Communication) has overhead and underground communications facilities within the project limits.

Near proposed structure C-59-0121, Frontier Communications of WI LLC plans to relocate their facilities as follows:

Facility	Approximate Location	Anticipated Work
1.5-inch HDPE Conduit with Copper Cable	Station 98+33 LT – Station 101+78 LT	Installation of new 1.5-inch HDPE conduit with copper cable between existing pedestals. New conduit will be bored to a depth of 48 inches.
Pedestal	Station 99+64 RT	Installation of new pedestal.
Pedestal	Station 99+95 RT	Removal of existing pedestal.

Near proposed 72”x113” elliptical culvert pipe, Frontier Communications of WI LLC plans to relocate their facilities as follows:

Facility	Approximate Location	Anticipated Work
1.5-inch HDPE Conduit with Copper and Fiber Cables	Station 187+44 LT – Station 191+09 LT	Installation of new 1.5-inch HDPE conduit with copper and fiber cables between new pedestals. New conduit will be bored to a minimum depth of 48 inches approximately 3 feet inside of the westerly right-of-way. Within the limits of the new 72”x113” elliptical culvert, the new conduit will be bored underneath to an approximate depth of 3’ below the culvert. Removal of existing buried fiber cable.

Near proposed structure C-59-0119, Frontier Communications of WI LLC plans to relocate their facilities as follows:

Facility	Approximate Location	Anticipated Work
Underground Copper Cable	Station 335+91 LT – Station 335+96 LT	Installation of new underground copper cable between existing pedestal and new handhole at a depth of 36 inches.
Handhole	Station 335+96 LT	Installation of new handhole.
1.5-inch HDPE Conduit with Copper and Fiber Cables	Station 335+96 LT – Station 339+01 LT	Installation of new 1.5-inch HDPE conduit with copper and fiber cables between new handhole and new pedestal. New conduit will be bored to a minimum depth of 48 inches approximately 3 feet inside of the westerly right-of-way. Within the limits of new proposed Structure C-59-0119, the new conduit will be bored underneath to an approximate depth of 20’ below existing ground. Removal of existing buried fiber cable.
Pedestal	Station 339+01 LT	Installation of new pedestal.
1.5-inch HDPE Conduit with Fiber Cable	Station 339+01 LT – Station 345+69 LT	Installation of new 1.5-inch HDPE conduit with fiber cable between new pedestal and existing pedestal. New conduit will be bored to a minimum depth of 48 inches approximately 3 feet inside of the westerly right-of-way. Removal of existing buried fiber cable.

Near proposed Structure C-59-0118, Frontier Communications of WI LLC plans to relocate their facilities as follows:

Facility	Approximate Location	Anticipated Work
1.5-inch HDPE Conduit with Copper Cable	Station 390+61 LT – Station 395+85 LT	Installation of new 1.5-inch HDPE conduit with copper cable between existing pedestals. New conduit will be bored to a minimum depth of 48 inches approximately 3 feet inside of the westerly right-of-way. Within the limits of new proposed Structure C-59-0118, the new conduit will be bored underneath to an approximate depth of 20' below existing ground.
Pedestal	Station 394+29 LT	Removal of existing pedestal.

Frontier Communications of WI LLC has identified the following existing underground communications facility that will be left in place and discontinued:

Near proposed Structure C-59-0121

Approximate Location	Type and Size of Facility
Station 98+33 LT – Station 101+78 LT	Buried copper cable.
Station 99+64 RT – Station 99+95 RT	Buried copper cable.

Near proposed 72"x113" elliptical culvert pipe

Approximate Location	Type and Size of Facility
Station 187+44 LT – Station 191+09 LT	Buried copper cable.

Near proposed structure C-59-0119

Approximate Location	Type and Size of Facility
Station 335+96 LT – Station 339+01 LT	Buried copper cable.

Near proposed structure C-59-0118

Approximate Location	Type and Size of Facility
Station 390+61 LT – Station 395+85 LT	Buried copper cable.

Work prior to construction which includes work described under Project 4540-36-71 is anticipated to begin in August 2024 and is estimated to take 60 working days.

Gibbsville Sanitary District (Sewer) has underground sanitary sewer facilities within the project limits. Gibbsville Sanitary District plans to relocate their facilities as follows:

Facility	Approximate Location	Anticipated Work
2-inch low-pressure (force) Sanitary Sewer	Station 393+00, 52' RT – 395+00, 52' RT	Installation of approximately 800 feet of new 2-inch force main 75 feet to the east of the existing 2-inch force main.

This work will require approximately 800 feet of directional boring, several pit excavations, air release devices, cleanouts, new schedule-80 PVC pressure pipe, reconnection to customer laterals, private property easements, and new construction drawings and as-builts. The Sanitary District inspector will be onsite during relocation work and assist in notifying private users during cutover.

Work prior to construction was finished in October 2024. The existing 2-inch PVC force main will be left in place and discontinued. After relocation, the discontinued force main will be flushed.

Spectrum has overhead and underground communications facilities within the project limits.

Near proposed Structure C-59-0121, Spectrum plans to relocate their facilities as follows:

Facility	Approximate Location	Anticipated Work
Pedestal and underground line	Station 100+00	Installation of a new underground line and pedestal to parallel new WE Energies Underground electric line SW of the new culvert.

Work prior to construction is anticipated to begin in November 2024 and is estimated to take 10 working days for removal and 30 working days for installation.

WE Energies (Electric) has overhead and underground electric facilities within the project limits.

Near proposed Structure C-59-0121, WE Energies plans to relocate their facilities as follows:

Facility	Approximate Location	Anticipated Work
Electric Pole	Station 99+70, 24.5’ RT	Removal of existing pole.
Electric Pole	Station 99+64, 24.5’ RT	Installation of new pole.
Underground Electric Line	Station 99+64, 24.5’ RT – 100+03, 70’ RT	Installation of new underground electric line southeast of the existing line, with a new splice at Station 100+03, 70’ RT.

Near proposed Structure C-59-0117, WE Energies plans to relocate their facilities as follows:

Facility	Approximate Location	Anticipated Work
Anchor	Station 525+42, 30’ RT	Installation of new anchor.
Electric Pole and Anchor	Station 527+00, 34.5’ LT and Station 526+99, 41.5’ LT	Installation of new pole and anchor.
Anchor	Station 527+12, 45.6’ RT	Installation of new anchor.
Electric Pole	Station 528+30, 30’ LT	Removal of existing pole.
Electric Pole	Station 528+61, 33’ LT	Installation of new pole.
Electric Pole and Anchor	Station 528+61, 43’ RT and Station 528+61, 50’ RT	Installation of new pole and anchor.
Overhead Electric Line	Station 525+42, 30’ RT – 528+30, 30’ LT Station 527+12, 45.6’ RT – 528+30, 30’ LT	Removal of existing overhead electric lines.

Facility	Approximate Location	Anticipated Work
Overhead Electric Line	Station 525+42. 30' RT – 527+00, 34.5' LT Station 527+00, 34.5' LT – 527+12, 45.6' RT Station 527+00, 34.5' LT – 528+61, 33' LT Station 528+61, 33' LT – 528+61, 43' RT	Installation of new overhead electric lines.

Work prior to construction which includes work described under Project 4540-36-71 is anticipated to begin in November 2024 and is estimated to take 10 working days for removal and 30 working days for installation.

WE Energies (Gas) has underground gas facilities within the project limits. WE Energies (Gas) plans to relocate their facilities as follows:

Facility	Approximate Location	Anticipated Work
4-inch Gas Main	Station 99+25, 32' LT – 100+75, 32' LT	Installation of a new 4-inch plastic gas main will be bored under the existing culvert and moved to be 32 feet left of the centerline of the roadway.
4-Inch Gas Main	Station 337+25, 21' LT – 338+75, 21' LT	Installation of a new 4-inch plastic gas main will be bored under the existing culvert and moved to be 21 feet left of the centerline of the roadway.

WE Energies (Gas) has identified the following existing underground gas facilities that will be left in place and discontinued:

Approximate Location	Type and Size of Facility
Station 99+25, 26' RT – 100+75, 26' RT	2-inch plastic gas main

Work prior to construction which includes work described under Project 4540-36-71 is anticipated to begin in November 2024 and is estimated to take 40 working days.

Wisconsin Public Service (Gas) has underground gas facilities within the project limits. Wisconsin Public Service plans to relocate their facilities as follows:

Facility	Approximate Location	Anticipated Work
2-inch Gas Main	Station 526+00, 24' LT – 529+00, 25' LT	Installation of a new 2-inch plastic gas main at least 9.5 feet deep from existing grade, with two tie overs to existing services, LT & RT.

Wisconsin Public Service (Gas) has identified the following existing underground gas facilities that will be left in place and discontinued:

Approximate Location	Type and Size of Facility
Station 526+00, 24' LT – Station 529+00, 25' LT	2-inch plastic gas main

Work prior to construction which includes work described under Project 4540-36-71 was completed in August 2024.

The following utility owners have facilities within the project area; however, no adjustments are anticipated:

- ATC (Electric)
- PaeTec Communications (Communication)
- Village of Cedar Grove (Sanitary Sewer)
- Village of Cedar Grove (Water)

4540-36-71

City of Sheboygan Falls (Sanitary) has underground facilities within the project limits. The sanitary sewer manhole at Station 608+28, 35.3' RT will be adjusted to finished grade by the village as part of the contract work. If adjustments are necessary, they will be done by the village during construction. Contact City of Sheboygan Falls Sanitary to make adjustments. Adjustments will require one working day to complete.

City of Sheboygan Falls (Water) has underground facilities within the project limits. The water main valve at Station 608+15, 44.5' RT will be adjusted to finished grade by the village as part of the contract work. If adjustments are necessary, they will be done by the village during construction. Contact City of Sheboygan Falls water to make adjustments. Adjustments will require one working day to complete.

Frontier Communications of WI LLC (Communication) has overhead and underground communications facilities within the project limits. Frontier Communications of WI LLC plans to relocate their facilities as follows:

Facility	Approximate Location	Anticipated Work
Overhead Cable	Station 76+79 LT	WE Energies will be moving their power pole. Frontier will move their under build to the new pole once that work is completed.
Pedestal	Station 139+60 RT	Installation of new pedestal.
Underground Copper Cable	Station 139+60 RT – Station 139+65 RT	Installation of new underground copper cable between new pedestal and new handhole at a depth of 36 inches.
Handhole	Station 139+65 RT	Installation of new handhole.
1.5-inch HDPE Conduit with Copper and Fiber Cables	Station 139+65 RT – Station 140+85 RT	Installation of new 1.5-inch HDPE conduit with copper and fiber cables between new handholes. New conduit will be bored to a minimum depth of 60 inches approximately 3 feet inside of the easterly right-of-way. Removal of existing buried fiber cable.
Handhole	Station 140+85 RT	Installation of new handhole.
Underground Copper Cable	Station 140+85 RT – Station 140+90 RT	Installation of new underground copper cable between new handhole and new pedestal at a depth of 36 inches.
Pedestal	Station 140+90 RT	Installation of new pedestal.
Underground Copper Cable	Station 178+31 LT – Station 178+36 LT	Installation of new underground copper cable between existing pedestal and new handhole at a depth of 36 inches.
Handhole	Station 178+36 LT	Installation of new handhole.

Facility	Approximate Location	Anticipated Work
1.5-inch HDPE Conduit with Copper and Fiber Cables	Station 178+36 LT – Station 182+08 LT	Installation of new 1.5-inch HDPE conduit with copper and fiber cables between new handhole and new pedestal. New conduit will be bored to a minimum depth of 60 inches approximately 3 feet inside of the westerly right-of-way. Removal of existing buried fiber cable.
Pedestal	Station 182+08 LT	Installation of new pedestal.
1.5-inch HDPE Conduit with Fiber Cable	Station 182+08 LT – Station 187+44 LT	Installation of new 1.5-inch HDPE conduit with fiber cable between new pedestals. New conduit will be bored to a minimum depth of 48 inches approximately 3 feet inside of the westerly right-of-way. Removal of existing buried fiber cable.
Pedestal	Station 187+44 LT	Installation of new pedestal.
Pedestal	Station 191+09 LT	Installation of new pedestal.
1.5-inch HDPE Conduit with Fiber Cable	Station 191+09 LT – Station 193+32 LT	Installation of new 1.5-inch HDPE conduit with fiber cable between new pedestal and existing handhole. New conduit will be bored to a minimum depth of 48 inches approximately 3 feet inside of the westerly right-of-way. Removal of existing buried fiber cable.
1.5-inch HDPE Conduit with Fiber Cable	Station 193+32 LT – Station 195+77 LT	Installation of new 1.5-inch HDPE conduit with fiber cable between existing handhole and new handhole. New conduit will be bored to a minimum depth of 48 inches approximately 3 feet inside of the westerly right-of-way. Removal of existing buried fiber cable.
Handhole	Station 195+77 LT	Installation of new handhole.
1.5-inch HDPE Conduit with Fiber Cable	Station 195+77 LT – Station 198+36 LT	Installation of new 1.5-inch HDPE conduit with fiber cable between new handhole and existing handhole. New conduit will be bored to a minimum depth of 48 inches approximately 3 feet inside of the westerly right-of-way. Removal of existing buried fiber cable.
Handhole	Station 196+50 LT	Removal of existing handhole.
1.5-inch HDPE Conduit with Fiber Cable	Station 198+36 LT – Station 204+92 LT	Installation of new 1.5-inch HDPE conduit with fiber cable between existing handhole and new pedestal. New conduit will be bored to a minimum depth of 48 inches approximately 3 feet inside of the westerly right-of-way. Removal of existing buried fiber cable.
Pedestal	Station 204+92 LT	Installation of new pedestal.
1.5-inch HDPE Conduit with Copper and Fiber Cables	Station 204+92 LT – Station 205+99 LT	Installation of new 1.5-inch HDPE conduit with copper and fiber cables between new pedestal and new handhole. New conduit will be bored to a minimum depth of 48 inches approximately 3 feet inside of the westerly right-of-way. Removal of existing buried fiber cable.

Facility	Approximate Location	Anticipated Work
Handhole	Station 205+99 LT	Installation of new handhole.
Underground Copper Cable	Station 205+99 LT – Station 206+04 LT	Installation of new underground copper cable between new handhole and new pedestal at a depth of 36 inches.
Pedestal	Station 206+04 LT	Installation of new pedestal.
1.5-inch HDPE Conduit with Fiber Cable	Station 237+89 LT – Station 239+12 LT	Installation of new 1.5-inch HDPE conduit with fiber cable between existing handhole and existing pedestal. New conduit will be bored to a minimum depth of 48 inches approximately 3 feet inside of the westerly right-of-way. Removal of existing buried fiber cable.
1.5-inch HDPE Conduit with Copper and Fiber Cables	Station 239+12 LT – Station 242+70 LT	Installation of new 1.5-inch HDPE conduit with copper and fiber cables between existing pedestal and new pedestal. New conduit will be bored to a minimum depth of 48 inches approximately 3 feet inside of the westerly right-of-way. Removal of existing buried fiber cable.
Pedestal	Station 239+15 RT	Removal of existing pedestal.
Pedestal	Station 242+70 LT	Installation of new pedestal.
1.5-inch HDPE Conduit with Fiber Cable	Station 242+70 LT – Station 246+43 LT	Installation of new 1.5-inch HDPE conduit with fiber cable between new pedestal and conduit bend. New conduit will be bored to a minimum depth of 48 inches approximately 3 to 4 feet inside of the westerly right-of-way. Removal of existing buried fiber cable.
1.5-inch HDPE Conduit with Fiber Cable	Station 246+43 LT – Station 246+43 RT	Installation of new 1.5-inch HDPE conduit with fiber cable between conduit bend and existing handhole. New conduit will be bored to a minimum depth of 48 inches underneath STH 32. Removal of existing buried fiber cable.
1.5-inch HDPE Conduit with Fiber Cable	Station 252+37 RT – Station 258+29 RT	Installation of new 1.5-inch HDPE conduit with fiber cable between existing handhole and new pedestal. New conduit will be bored to a minimum depth of 48 inches approximately 3 feet inside of the easterly right-of-way. Removal of existing buried fiber cable.
Pedestal	Station 258+29 RT	Installation of new pedestal.
1.5-inch HDPE Conduit with Copper and Fiber Cables	Station 258+29 RT – Station 260+63 RT	Installation of new 1.5-inch HDPE conduit with fiber cable between new pedestals. New conduit will be bored to a minimum depth of 60 inches approximately 3 feet inside of the easterly right-of-way. Removal of existing buried fiber cable.
Pedestal	Station 260+63 RT	Installation of new pedestal.

Facility	Approximate Location	Anticipated Work
1.5-inch HDPE Conduit with Fiber Cable	Station 260+63 RT – Approximately 80’ East of STH 32 Centerline Along the South Side of CTH A	Installation of new 1.5-inch HDPE conduit with fiber cable between new pedestal and new handhole. New conduit will be bored to a minimum depth of 48 inches approximately 3 feet inside of the easterly right-of-way. Removal of existing buried fiber cable.
Handhole	Approximately 80’ East of STH 32 Centerline Along the South Side of CTH A	Installation of new handhole.
1.5-inch HDPE Conduit with Fiber Cable	Approximately 80’ East of STH 32 Centerline Along the South Side of CTH A – Approximately 252’ East of STH 32 Centerline Along the South Side of CTH A	Installation of new 1.5-inch HDPE conduit with fiber cable between new handhole and existing handhole. New conduit will be bored to a minimum depth of 48 inches approximately 3 feet inside of the southerly right-of-way of CTH A. Removal of existing buried fiber cable.
Pedestal	Station 339+01 LT	Installation of new pedestal.
1.5-inch HDPE Conduit with Fiber Cable	Station 339+01 LT – Station 345+69 LT	Installation of new 1.5-inch HDPE conduit with fiber cable between new pedestal and existing pedestal. New conduit will be bored to a minimum depth of 48 inches approximately 3 feet inside of the westerly right-of-way. Removal of existing buried fiber cable.
1.5-inch HDPE Conduit with Copper and Fiber Cables	Station 345+69 LT – Station 346+71 LT	Installation of new 1.5-inch HDPE conduit with copper and fiber cables between existing pedestal and existing handhole. New conduit will be bored to a minimum depth of 60 inches underneath Wilson-Lima Road. Removal of existing buried fiber cable.
Underground Copper Cable	Station 345+71 LT – Station 346+66 LT	Installation of new underground copper cable between new handhole and new pedestal at a depth of 36 inches.
1.5-inch HDPE Conduit with Copper Cable	Station 390+61 LT – Station 395+85 LT	Installation of new 1.5-inch HDPE conduit with copper cable between existing pedestals. New conduit will be bored to a minimum depth of 48 inches approximately 3 feet inside of the westerly right-of-way. Within the limits of new proposed structure C-59-0118, the new conduit will be bored underneath to an approximate depth of 20’ below existing ground.
1.5-inch HDPE Conduit with Copper Cable	Station 403+25 LT – Station 406+34 LT	Installation of new 1.5-inch HDPE conduit with fiber cable between existing handhole and new pedestal. New conduit will be bored to a minimum depth of 48 inches approximately 3 feet inside of the westerly right-of-way.
Pedestal	Station 406+34 LT	Installation of new pedestal.

Frontier Communications of WI LLC has identified the following existing underground communications facility that will be left in place and discontinued:

Approximate Location	Type and Size of Facility
Station 139+65 RT – Station 140+85 RT	Buried copper cable.
Station 178+31 LT – Station 182+08 LT	Buried copper cable.
Station 204+92 LT – Station 206+04 LT	Buried copper cable.
Station 239+12 LT – Station 242+70 LT	Buried copper cable.
Station 239+15 RT – Station 246+43 RT	Buried copper cable.
Station 258+29 RT – Station 260+63 RT	Buried copper cable.
Station 345+69 LT – Station 346+53 LT	Buried copper cable.
Station 390+61 LT – Station 395+85 LT	Buried copper cable.
Station 403+25 LT – Station 406+34 LT	Buried copper cable.

Work prior to construction which includes work described under Project 4540-34-71 is anticipated to begin in August 2024 and is estimated to take 60 working days.

WE Energies (Electric) has overhead and underground electric facilities within the project limits. WE Energies plans to relocate their facilities as follows:

Facility	Approximate Location	Anticipated Work
Electric Pole	Station 76+78.5, 26.5’ LT	Removal of existing pole.
Electric Pole	Station 76+79, 24’ LT	Installation of new pole.

Work prior to construction which includes work described under Project 4540-34-71 is anticipated to begin in November 2024 and is estimated to take 10 working days for removal and 30 working days for installation.

Contact WE Energies before removing any electrical cables, to verify that they have been discontinued and carry no electrical current. Do not assume that unmarked facilities have been discontinued. At no time is it acceptable to push, pull, cut, or drill an unmarked facility without explicit consent from WE Energies. Call WE Energies 24-hour Dispatch line 1 (800) 662-4797 to arrange for verification.

WE Energies (Gas) has underground gas facilities within the project limits. WE Energies (Gas) plans to relocate their facilities as follows:

Facility	Approximate Location	Anticipated Work
2-inch and 4-inch Gas Valves	Intersection of Main and Union (STH 32 and CTH D)	Conflicts of existing valves exist in SW, NW, and NE corners of the intersection. These will be relocated from the sidewalk into the roadway at the SW and NW corner. At the NE corner the valves will be moved to not conflict with the curb ramp or new curb line.
4-Inch Gas Main	Station 347+00, 21’ LT – 348+40, 21’ LT	Installation of a new 4-inch plastic gas main will be bored underground and moved to be 26 feet left of the centerline of the roadway.

Work prior to construction which includes work described under Project 4540-34-71 is anticipated to begin in November 2024 and is estimated to take 40 working days.

Wisconsin Public Service (Gas) has underground gas facilities within the project limits. WPS will adjust the following facilities prior to construction:

Facility	Approximate Location	Anticipated Work
2-inch Gas Main	Station 584+17, 53' LT – Station 585+61, 25' RT	Installation of a new 2-inch plastic gas main at least 4 feet deep from existing grade at existing culvert. New gas main will tie into existing beginning at Station 584+17, 53' LT and run northeasterly to approximately Station 585+61, 33' LT then crossing STH 32 perpendicular where it will tie into existing at Station 585+61, 25' RT.

Wisconsin Public Service (Gas) has identified the following existing underground gas facilities that will be left in place and discontinued:

Approximate Location	Type and Size of Facility
Station 546+00 LT – Station 590+00 LT	2-inch plastic gas main
Station 584+66, 31' RT – Station 585+61, 25' RT	2-inch plastic gas main

Work prior to construction which includes work described under Project 4540-34-71 was completed in August 2024.

Village of Cedar Grove (Sanitary Sewer) has underground sanitary sewer facilities within the project limits. Adjust sanitary manhole covers as needed. Perform this work in accordance with the requirements of Adjusting Sanitary Manhole Covers. Install internal chimney seals as indicated in the plans. Perform this work in accordance with the requirements of Chimney Seals.

Village of Cedar Grove (Water) has underground water facilities within the project limits. Adjust water valve boxes as indicated in the plans. Perform this work in accordance with the requirements of Adjusting Water Valve Boxes.

There is a water valve in the curb line in the northeast quadrant of the intersection of STH 32 and Baden Avenue. This water valve is to remain in place and the proposed curb and gutter is to be poured around the water valve.

The following utility owners have facilities within the project area; however, no adjustments are anticipated:

- **AT&T Wisconsin (Communication)**
- **ATC (Electric)**
- **City of Sheboygan Falls (Electric)**
- **Gibbsville Sanitary District (Sewer)**
- **PaeTec Communications (Communication)**
- **Spectrum (Communication)**

8. Other Projects.

Work may be occurring concurrently by the Village of Cedar Grove.

Work includes reconstruction of streets south of the Main Street and Union Street (STH 32 and CTH D) Intersection. Construction will occur in the summer 2025.

Contact Jan Hoitink, Public Works Manager at (920) 334-0163 or jhoitink@cedargrovewi.com for mor information.

Project 4010-21-71, Kewaskum – Waldo, SCL- STH 57, STH 28 resurfacing in Sheboygan County, will be performed in 2025. Proactively coordinate traffic control with this project. The project contact is Sarah Ericson, sarah.ericson@dot.wi.gov, (920) 492-3511.

Project 4010-26-71, Village of Cascade, North Branch Milwaukee River, STH 28 bridge replacement, will be performed in 2025. Proactively coordinate traffic control with this project. The project contact is Sarah Ericson, sarah.ericson@dot.wi.gov, (920) 492-3511.

9. Information to Bidders, U.S. Army Corps of Engineers Section 404 Permit.

The department has received written verification of coverage under the Section 404 Transportation Regional General Permit from the U.S. Army Corps of Engineers. Comply with the requirements of the permit in addition to requirements of the special provisions.

A copy of the permit is available from the regional office by contacting Kimberly Slezak at (920) 492-4131.

If the contractor requires work outside the proposed slope intercepts, based on their method of operation to construct the project, it is the contractor's responsibility to determine whether a U.S. Army Corps of Engineers Section 404 permit modification is required. If a Section 404 permit modification is necessary, obtain the permit modification prior to beginning construction operations requiring the permit. No time extensions as discussed in standard spec 108.10 will be granted for the time required to apply for and obtain the permit modification. The contractor must be aware that the U.S. Army Corps of Engineers may not grant the permit modification request.

stp-107-054 (20230629)

10. Information to Bidders, WPDES Transportation Construction General Permit (TCGP) for Storm Water Discharges.

The department has obtained permit coverage through the Wisconsin Department of Natural Resources to discharge storm water associated with land disturbing construction activities under this contract. Conform to all permit requirements for the project.

This permit is the Wisconsin Pollutant Discharge Elimination System, Transportation Construction General Permit, (WPDES Permit No. WI-S066796-2). The permit can be found at:

https://widnr.widen.net/s/s5mwp2gd7s/finalsignedwisdotcsgp

A certificate of permit coverage is available from the regional office by contacting Kimberly Slezak at (920) 492-4131. Post the permit certificate in a conspicuous place at the construction site.

stp-107-056 (20230629)

11. Construction Over or Adjacent to Navigable Waters.

The unnamed creeks at Stations 100+10, 189+62, 337+83, 393+86, 530+84 are classified as a state navigable waterway under standard spec 107.19.

stp-107-060 (20171130)

12. Erosion Control Structures.

Within three calendar days after completing the excavation for a substructure unit, place riprap or other permanent erosion control items required by the contract or deemed necessary by the engineer around the unit at a minimum to a height equivalent to the calculated water elevation resulting from a storm that occurs on the average of once every two years (Q2) as shown on the plan, or as the engineer directs.

If construction activity does not disturb the existing ground below the Q2 elevation, the above timing requirements for permanent erosion control shall be waived.

stp-107-070 (20191121)

13. Notice to Contractor – Contamination Beyond Construction Limits.

The department completed testing for soil and ground water contamination for locations within this project where excavation is required. Testing indicated that petroleum-contaminated soil is present at the following sites:

1. Station 9+57 to 9+79 from 16.5 feet RT of centerline to 42.8 feet RT of centerline.
2. Station 75+97 to 77+00 from 18.25 feet RT of centerline to 35 feet RT of centerline.
3. Station 127+50 to 130+25 from 16 feet RT of centerline to 33 feet RT of centerline.

The contaminated soils at the above sites are expected to be beyond the excavation limits necessary to complete the work under this project. Control construction operations at these locations to ensure that they do not extend beyond the excavation limits indicated in the plans. If contaminated soils are encountered at these sites or elsewhere on the project during excavation, terminate excavation in the area and notify the engineer.

The Hazardous Materials Report is available by contacting: Kimberly Slezak, 944 Vanderperren Way, Green Bay, WI 54304, Kimberly.Slezak@dot.wi.gov.

stp-107-100 (20230113)

14. Archaeological Site.

BSB0024 site is located approximately station 76+68 to 76+90, LT within the limits shown on the plans.

Notify the Bureau of Technical Services – Environmental Process and Document Section (BTS-EPDS) at (608) 266-0099 at least two weeks before commencement of any ground disturbing activities beyond the existing right-of-way limits. BTS-EPDS will determine if a qualified archaeologist will need to be on site during construction of this area.

Do not use the site for borrow or waste disposal. Do not use the site area not currently capped by asphalt/concrete for the staging of personnel, equipment and/or supplies.

stp-107-220 (20180628)

15. Salvaging Modular Concrete Block at Station 100+09.

The owner of the parcel adjacent to the existing structure at Station 100+09 has requested salvaging the modular block wall that was privately built within the public right-of-way. Contact the property owner directly prior to removing the existing structure and the modular block wall within the right-of-way to coordinate a suitable location for the salvaged blocks. These blocks will not be stored within the public right-of-way or any temporary limited easements acquired for this project.

Payment for Salvaging Modular Concrete Block at Station 100+09 will be incidental to Item 203.0220.02 Removing Structure M-59.5.

16. Abandoning Sewer, Item 204.0291.S.

A Description

This special provision describes abandoning existing sewer by filling it with cellular concrete as the plans show and conforming to standard spec 204 and standard spec 501 as modified in this special provision.

B Materials

Provide cellular concrete meeting the following specifications: 1 part cement, 1 part fly ash, 8 parts sand, or an approved equal, and water. Provide cement meeting the requirements of standard spec 501.2.4.1. Provide sand meeting the requirements of standard spec 501.2.7.2. Provide water meeting the requirements of standard spec 501.2.6.

C Construction

Fill the abandoned sewer pipe with cellular concrete as the engineer directs. In the event that the sewer cannot be completely filled from existing manholes, tap the sewer where necessary and fill from these locations.

D Measurement

The department will measure Abandoning Sewer in volume by the cubic yard as specified in standard spec 109.1.3.

E Payment

The department will pay for measured quantities at the contract unit price under the following bid item:

ITEM NUMBER	DESCRIPTION	UNIT
204.0291.S	Abandoning Sewer	CY

Payment is full compensation for furnishing all materials and excavating and backfilling where necessary.

stp-204-050 (20210708)

17. HMA Percent Within Limits (PWL) Test Strip Volumetrics, Item 460.0105.S; HMA Percent Within Limits (PWL) Test Strip Density, Item 460.0110.S.

A Description

This special provision describes the Hot Mix Asphalt (HMA) density and volumetric testing tolerances required for an HMA test strip. An HMA test strip is required for contracts constructed under HMA Percent Within Limits (PWL) QMP. A density test strip is required for each pavement layer placed over a specific, uniform underlying material, unless specified otherwise in the plans. Each contract is restricted to a single mix design per mix type per layer (e.g., upper layer and lower layer may have different mix type specified or may have the same mix type with different mix designs). Each mix design requires a separate test strip. Density and volumetrics testing will be conducted on the same test strip whenever possible.

Perform work according to standard spec 460 and as follows.

B Materials

Use materials conforming to HMA Pavement Percent Within Limits (PWL) QMP special provision.

C Construction

C.1 Test Strip

Submit the test strip start time and date to the department in writing at least 5 calendar days in advance of construction of the test strip. If the contractor fails to begin paving within 2 hours of the submitted start time, the test strip is delayed, and the department will assess the contractor $2,000 for each instance according to Section E of this document. Alterations to the start time and date must be submitted to the department in writing a minimum of 24 hours prior to the start time. The contractor will not be liable for changes in start time related to adverse weather days as defined by standard spec 101.3 or equipment breakdown verified by the department.

On the first day of production for a test strip, produce approximately 750 tons of HMA. (Note: adjust tonnage to accommodate natural break points in the project.) Locate test strips in a section of the roadway to allow a representative rolling pattern (i.e., not a ramp or shoulder, etc.).

C.1.1 Sampling and Testing Intervals

C.1.1.1 Volumetrics

Laboratory testing will be conducted from a split sample yielding three components, with portions designated for QC (quality control), QV (quality verification), and retained.

During production for the test strip, obtain sufficient HMA mixture for three-part split samples from trucks prior to departure from the plant. Collect three split samples during the production of test strip material. Perform sampling from the truck box and three-part splitting of HMA according to WTM R47. These three samples will be randomly selected by the engineer from each *third* of the test strip tonnage (T), excluding the first 50 tons:

Sample Number	Production Interval (tons)
1	50 to 1/3 T
2	1/3 T to 2/3 T
3	2/3 T to T

C.1.1.2 Density

Required field tests include contractor QC and department QV nuclear density gauge tests and pavement coring at ten individual locations (five in each half of the test strip length) according to Appendix A: *Test Methods and Sampling for HMA PWL QMP Projects*. Both QV and QC teams shall have two nuclear density gauges present for correlation at the time the test strip is constructed. QC and QV teams may wish to scan with additional gauges at the locations detailed in Appendix A, as only gauges used during the test strip correlation phase will be allowed.

C.1.2 Field Tests

C.1.2.1 Density

For contracts that include STSP 460-020 QMP Density in addition to PWL, a gauge comparison according to WTM T355 shall be completed prior to the day of test strip construction. Daily standardization of gauges on reference blocks and a project reference site shall be performed according to WTM T355. A standard count shall be performed for each gauge on the material placed for the test strip, prior to any additional data collection. Nuclear gauge readings and pavement cores shall be used to determine nuclear gauge correlation according to Appendix A. The two to three readings for the five locations across the mat for each of two zones shall be provided to the engineer. The engineer will analyze the readings of each gauge relative to the densities of the cores taken at each location. The engineer will determine the average difference between the nuclear gauge density readings and the measured core densities to be used as a constant offset value. This offset will be used to adjust raw density readings of the specific gauge and shall appear on the density data sheet along with gauge and project identification. An offset is specific to the mix and layer; therefore, a separate value shall be determined for each layer of each mix placed over a differing underlying material for the contract. This constitutes correlation of that individual gauge for the given layer. Two gauges per team are not required to be onsite daily after completion of the test strip. Any data collected without a correlated gauge will not be accepted.

The contractor is responsible for coring the pavement from the footprint of the density tests and filling core holes according to Appendix A. Coring and filling of pavement core holes must be approved by the engineer. The QV team is responsible for the labeling and safe transport of the cores from the field to the QC laboratory. Testing of cores shall be conducted by the contractor and witnessed by department personnel. The contractor is responsible for drying the cores following testing. The department will take possession of cores following laboratory testing and will be responsible for any verification testing at the discretion of the engineer.

The target maximum density to be used in determining core density is the average of the three volumetric/mix Gmm values from the test strip multiplied by 62.24 lb/ft^3. In the event mix and density portions of the test strip procedure are separated, or if an additional density test strip is required, the mix portion must be conducted prior to density determination. The target maximum density to determine core densities shall then be the Gmm four-test running average (or three-test average from a PWL volumetric-only test strip) from the end of the previous day's production multiplied by 62.24 lb/ft^3. If no PWL production QV volumetric test is to be taken in a density-only test strip, a non-random QV test will be taken according to 460.2.8.3.1.4 as modified in HMA Pavement Percent Within Limits (PWL) QMP and if non-conforming to C.2.1 herein, follow corrective action outlined in 460.2.8.2.1.7(4) as modified in HMA Pavement Percent Within Limits (PWL) QMP.

Exclusions such as shoulders and appurtenances shall be tested and reported according to CMM 815. However, all acceptance testing of shoulders and appurtenances will be conducted by the department, and average lot (daily) densities must conform to standard spec Table 460-3. No density incentive or disincentive will be applied to shoulders or appurtenances. However, unacceptable shoulder material will be handled according to standard spec 460.3.3.1 and CMM 815.11.

C.1.3 Laboratory Tests

C.1.3.1 Volumetrics

Obtain random samples according to C.1.1.1 and Appendix A. Perform tests the same day as taking the sample.

Theoretical maximum specific gravities of each mixture sample will be obtained. Bulk specific gravities of both gyratory compacted samples and field cores shall be determined. The bulk specific gravity values determined from field cores shall be used to calculate a correction factor (i.e., offset) for each QC and QV nuclear density gauge. The correction factor will be used throughout the remainder of the layer.

C.2 Acceptance

C.2.1 Volumetrics

Produce mix conforming to the following limits based on individual QC and QV test results (tolerances based on most recent JMF):

ITEM	ACCEPTANCE LIMITS
Percent passing given sieve:	
37.5-mm	+/- 8.0
25.0-mm	+/- 8.0
19.0-mm	+/- 7.5
12.5-mm	+/- 7.5
9.5-mm	+/- 7.5
2.36-mm	+/- 7.0
75-µm	+/- 3.0
Asphaltic content in percent[1]	- 0.5
Air Voids	-1.5 & +2.0
VMA in percent[2]	- 1.0
Maximum specific gravity	+/- 0.024

[1] Asphalt content more than -0.5% below the JMF will be referee tested by the department's AASHTO accredited laboratory and HTCP certified personnel using automated extraction.

[2] VMA limits based on minimum requirement for mix design nominal maximum aggregate size in table 460-1.

QV samples will be tested for Gmm, Gmb, and AC. Air voids and VMA will then be calculated using these test results.

Calculation of air voids shall use either the QC, QV, or retained split sample test results, as identified by conducting the paired t-test with the WisDOT PWL Test Strip Spreadsheet.

If QC and QV test results do not correlate as determined by the split sample comparison, the retained split sample will be tested by the department's AASHTO accredited laboratory and HTCP certified personnel as a referee test. Additional investigation shall be conducted to identify the source of the difference between QC and QV data. Referee data will be used to determine material conformance and pay.

C.2.2 Density

Compact all layers of test strip HMA mixture according to Table 460-3.

Nuclear density gauges are acceptable for use on the project only if correlation is completed for that gauge during the time of the test strip and the department issues documentation of acceptance stating the correlation offset value specific to the gauge and mix design. The offset is not to be entered into any nuclear density gauge as it will be applied by the department-furnished Field Density Worksheet.

C.2.3 Test Strip Approval and Material Conformance

All applicable laboratory and field testing associated with a test strip shall be completed prior to any additional mainline placement of the mix. All test reports shall be submitted to the department upon completion and approved before paving resumes. The department will notify the contractor within 24 hours from start of test strip regarding approval to proceed with paving unless an alternate time frame is agreed upon in writing with the department. The 24-hour approval time includes only working days as defined in standard spec 101.3.

The department will evaluate material conformance and make pay adjustments based on the PWL value of air voids and density for the test strip. The QC core densities and QC and QV mix results will be used to determine the PWL values as calculated according to Appendix A.

The PWL values for air voids and density shall be calculated after determining core densities. An approved test strip is defined as the individual PWL values for air voids and density both being equal to or greater than 75, mixture volumetric properties conforming to the limits specified in C.2.1, and an acceptable gauge-to-core correlation. Further clarification on PWL test strip approval and appropriate post-test strip actions are shown in the following table:

PWL TEST STRIP APPROVAL AND MATERIAL CONFORMANCE CRITERIA

PWL VALUE FOR AIR VOIDS AND DENSITY	TEST STRIP APPROVAL	MATERIAL CONFORMANCE	POST-TEST STRIP ACTION
Both PWL $\geq$ 75	Approved[1]	Material paid for according to Section E	Proceed with Production
50 $\leq$ Either PWL < 75	Not Approved	Material paid for according to Section E	Consult BTS to determine need for additional test strip
Either PWL < 50	Not Approved	Unacceptable material removed and replaced or paid for at 50% of the contract unit price according to Section E	Construct additional Volumetrics or Density test strip as necessary

[1] In addition to these PWL criteria, mixture volumetric properties must conform to the limits specified in C.2.1, split sample comparison must have a passing result and an acceptable gauge-to-core correlation must be completed.

A maximum of two test strips will be allowed to remain in place per pavement layer per contract. If material is removed, a new test strip shall replace the previous one at no additional cost to the department. If the contractor changes the mix design for a given mix type during a contract, no additional compensation will be paid by the department for the required additional test strip and the department will assess the contractor $2,000 for the additional test strip according to Section E of this special provision. For simultaneously conducted density and volumetric test strip components, the following must be achieved:

i. Passing/Resolution of Split Sample Comparison
ii. Volumetrics/mix PWL value $\geq$ 75
iii. Density PWL value $\geq$ 75
iv. Acceptable correlation

If not conducted simultaneously, the mix portion of a test strip must accomplish (i) & (ii), while density must accomplish (iii) & (iv). If any applicable criteria are not achieved for a given test strip, the engineer, with authorization from the department's Bureau of Technical Services, will direct an additional test strip (or alternate plan approved by the department) be conducted to prove the criteria can be met prior to additional paving of that mix. For a density-only test strip, determination of mix conformance will be according to main production, i.e., HMA Pavement Percent Within Limits (PWL) QMP special provision.

D Measurement

The department will measure HMA Percent Within Limits (PWL) Test Strip as each unit of work, acceptably completed as passing the required air void, VMA, asphalt content, gradation, and density correlation for a Test Strip. Material quantities shall be determined according to standard spec 450.4 and detailed here within.

E Payment

The department will pay for measured quantities at the contract unit price under the following bid item:

ITEM NUMBER	DESCRIPTION	UNIT
460.0105.S	HMA Percent Within Limits (PWL) Test Strip Volumetrics	EACH
460.0110.S	HMA Percent Within Limits (PWL) Test Strip Density	EACH

These items are intended to compensate the contractor for the construction of the test strip for contracts paved under the HMA Pavement Percent Within Limits QMP article.

Payment for HMA Percent Within Limits (PWL) Test Strip Volumetrics is full compensation for volumetric sampling, splitting, and testing, and for the proper labeling, handling, and retention of the split samples.

Payment for HMA Percent Within Limits (PWL) Test Strip Density is full compensation for collecting and measuring of pavement cores, acceptably filling core holes, providing of nuclear gauges and operator(s), and all other work associated with completion of a core-to-gauge correlation, as directed by the engineer.

Acceptable HMA mixture placed on the project as part of a volumetric or density test strip will be compensated by the appropriate HMA Pavement bid item with any applicable pay adjustments. If a test strip is delayed as defined in C.1 of this document, the department will assess the contractor $2,000 for each instance, under the HMA Delayed Test Strip administrative item. If an additional test strip is required because the initial test strip is not approved by the department or the mix design is changed by the contractor, the department will assess the contractor $2,000 for each additional test strip (i.e., $2,000 for each individual volumetrics or density test strip) under the HMA Additional Test Strip administrative item.

Pay adjustment will be calculated using 65 dollars per ton of HMA pavement. The department will pay for measured quantities of mix based on $65/ton multiplied by the following pay adjustment:

PAY ADJUSTMENT FOR HMA PAVEMENT AIR VOIDS & DENSITY

PERCENT WITHIN LIMITS (PWL)	*PAYMENT FACTOR, PF (percent of $65/ton)*
≥ 90 to 100	PF = ((PWL – 90) * 0.4) + 100
≥ 50 to < 90	(PWL * 0.5) + 55
<50	50%[1]

where, PF is calculated per air voids and density, denoted $PF_{air\ voids}$ & $PF_{density}$

[1] Material resulting in PWL value less than 50 shall be removed and replaced, unless the engineer allows for such material to remain in place. In the event the material remains in place, it will be paid at 50% of the contract unit price of HMA pavement.

For air voids, PWL values will be calculated using lower and upper specification limits of 2.0 and 4.3 percent, respectively. Lower specification limits for density will be according to Table 460-3. Pay adjustment will be determined for an acceptably completed test strip and will be computed as shown in the following equation:

Pay Adjustment = (PF-100)/100 x (WP) x (tonnage) x ($65/ton)*

*Note: If Pay Factor = 50, the contract unit price will be used in lieu of $65/ton and the weighted percentage (WP) will equal 1.0.

The following weighted percentage (WP) values will be used for the corresponding parameter:

Parameter	WP
Air Voids	0.5
Density	0.5

Individual Pay Factors for each air voids ($PF_{air\ voids}$) and density ($PF_{density}$) will be determined. $PF_{air\ voids}$ will be multiplied by the total tonnage produced (i.e., from truck tickets), and $PF_{density}$ will be multiplied by the calculated tonnage used to pave the mainline only (i.e., traffic lane excluding shoulder) as determined according to Appendix A.

The department will pay incentive for air voids under the following bid item:

ITEM NUMBER	DESCRIPTION	UNIT
460.2005	Incentive Density PWL HMA Pavement	DOL
460.2010	Incentive Air Voids HMA Pavement	DOL

The department will administer disincentives under the Disincentive Density HMA Pavement and the Disincentive Air Voids HMA Pavement administrative items.

stp-460-040 (20230629)

18. HMA Pavement Percent Within Limits (PWL) QMP.

A Description

This special provision describes percent within limits (PWL) pay determination, providing and maintaining a contractor Quality Control (QC) Program, department Quality Verification (QV) Program, required sampling and testing, dispute resolution, corrective action, pavement density, and payment for HMA pavements. Pay is determined by statistical analysis performed on contractor and department test results conducted according to the Quality Management Program (QMP) as specified in standard spec 460, except as modified below.

B Materials

Conform to the requirements of standard spec 450, 455, and 460 except where superseded by this special provision. The department will allow only one mix design for each HMA mixture type per layer required for the contract, unless approved by the engineer. The use of more than one mix design for each HMA pavement layer will require the contractor to construct a new test strip according to HMA Pavement Percent Within Limits (PWL) QMP Test Strip Volumetrics and HMA Pavement Percent Within Limits (PWL) QMP Test Strip Density articles at no additional cost to the department.

Replace standard spec 460.2.8.2.1.3.1 Contracts with 5000 Tons of Mixture or Greater with the following:

460.2.8.2.1.3.1 Contracts under Percent within Limits

(1) Furnish and maintain a laboratory at the plant site fully equipped for performing contractor QC testing. Have the laboratory on-site and operational before beginning mixture production.

(2) Obtain random samples and perform tests according to this special provision and further defined in Appendix A: *Test Methods & Sampling for HMA PWL QMP Projects*. Obtain HMA mixture samples from trucks at the plant. For the sublot in which a QV sample is collected, discard the QC sample and test a split of the QV sample.

(3) Perform sampling from the truck box according to WTM R97 and four-part splitting of HMA samples according to WTM R47. Sample size must be adequate to run the appropriate required tests in addition to one set of duplicate tests that may be required for dispute resolution (i.e., retained). This requires sample sizes which yield four splits for all random sampling per sublot. All QC samples shall provide the following: QC, QV, Retained, and Extra. Take possession of the QC and Extra split samples intended for QC testing. The department will observe the splitting and take possession of the QV and Retained split samples intended for QV testing. Additional sampling details are found in Appendix A. Label samples according to WTM R97.

(4) Test the QC split sample using the test methods identified below at a frequency greater than or equal to that indicated. The Extra split sample shall be tested only when the Gmm and/or Gmb replicate tolerances are exceeded according to WTM T166 section 13.1.4 and WTM T209 section 14.1.1. When testing the Extra split sample, only the results from the test from which the tolerances were exceeded may replace the results from the QC split sample. The Rule of Retained according to CMM 836.1.2 applies.

- Blended aggregate gradations according to WTM T30.
- Asphalt content (AC) in percent.

  Determine AC using one of the following methods:

  - AC by ignition oven according to WTM T308. If the department is using an ignition oven to determine AC, conform to WTP H-003. If the department is not using an ignition oven to determine AC, IOCFs must still be reverified for any of the reasons listed in WTP H-003 Table 2 and conform to WTP H-003 section 3.
  - AC by chemical extraction according to AASHTO T 164 Method A or B.
  - AC by automated extraction according to WTM D8159.
- Bulk specific gravity (Gmb) of the compacted mixture according to WTM T166.
- Maximum specific gravity (Gmm) according to WTM T209.
- Air voids (V_a) by calculation according to WTM T269.
- Voids in Mineral Aggregate (VMA) by calculation according to WTM R35 section 9.2.

(5) Lot size shall consist of 3,750 tons with sublots of 750 tons. Test each design mixture at a frequency of 1 test per 750 tons of mixture type produced and placed as part of the contract. Add a random sample for any fraction of 750 tons at the end of production for a specific mixture design. Partial lots with less than three sublot tests will be included into the previous lot for data analysis and pay adjustment. Volumetric lots will include all tonnage of mixture type under specified bid item unless otherwise specified in the plan.

(6) Conduct field tensile strength ratio tests according to WTM T283 on each qualifying mixture according to CMM 836.6.14. Test each full 50,000-ton production increment, or fraction of an increment, after the first 5,000 tons of production. Perform required increment testing in the first week of production of that increment. If field tensile strength ratio values are below the spec limit, notify the engineer. The engineer and contractor will jointly determine a corrective action.

Delete standard spec 460.2.8.2.1.5 and 460.2.8.2.1.6.

Replace standard spec 460.2.8.2.1.7 Corrective Action with the following:

460.2.8.2.1.7 Corrective Action

(1) Material must conform to the following action and acceptance limits based on individual QC and QV test results (tolerances relative to the JMF used on the PWL Test Strip):

ITEM	ACTION LIMITS	ACCEPTANCE LIMITS
Percent passing given sieve:		
37.5-mm	+/- 8.0	
25.0-mm	+/- 8.0	
19.0-mm	+/- 7.5	
12.5-mm	+/- 7.5	
9.5-mm	+/- 7.5	
2.36-mm	+/- 7.0	
75-µm	+/- 3.0	
AC in percent	-0.3	-0.5
Va		- 1.5 & +2.0
VMA in percent[1]	- 0.5	-1.0

[1] VMA limits based on minimum requirement for mix design nominal maximum aggregate size in table 460-1.

(2) QV samples will be tested for Gmm, Gmb, and AC. Air voids and VMA will then be calculated using these test results.

(3) Notify the engineer if any individual test result falls outside the action limits, investigate the cause and take corrective action to return to within action limits. If two consecutive test results fall outside the action limits, stop production. Production may not resume until approved by the engineer. Additional QV samples may be collected upon resuming production, at the discretion of the engineer.

(4) For any additional non-random tests outside the random number testing conducted for volumetrics, the data collected will not be entered into PWL calculations. Additional QV tests must meet acceptance limits or be subject to production stop. If the department's non-random test does not conform to the acceptance limits, the retained sample will be tested by the BTS lab. If the BTS results also do not meet the acceptance limits, the material will be considered unacceptable as described in (5) below.

(5) Remove and replace unacceptable material at no additional expense to the department. Unacceptable material is defined as any individual QC or QV tests results outside the acceptance limits or a PWL value < 50. For AC in percent, unacceptable material is defined as any individual QV test result outside of the acceptance limit. The engineer may allow such material to remain in place with a price reduction. The department will pay for such HMA Pavement allowed to remain in place at 50 percent of the contract unit price.

Replace standard spec 460.2.8.3.1.2 Personnel Requirements with the following:

460.2.8.3.1.2 Personnel Requirements

(1) The department will provide at least one HTCP-certified Transportation Materials Sampling (TMS) Technician, to observe QV sampling of HMA mixtures.

(2) Under departmental observation, a contractor TMS technician shall collect and split samples.

(3) A department HTCP-certified Hot Mix Asphalt, Technician I, Production Tester (HMA-IPT) technician will ensure that all sampling is performed correctly and conduct testing, analyze test results, and report resulting data.

(4) The department will make an organizational chart available to the contractor before mixture production begins. The organizational chart will include names, telephone numbers, and current certifications of all QV testing personnel. The department will update the chart with appropriate changes, as they become effective.

Replace standard spec 460.2.8.3.1.4 Department Verification Testing Requirements with the following:

460.2.8.3.1.4 Department Verification Testing Requirements

(1) HTCP-certified department personnel will obtain QV random samples by directly supervising HTCP-certified contractor personnel sampling from trucks at the plant. Sample size must be adequate to run the appropriate required tests in addition to one set of duplicate tests that may be required for dispute resolution (i.e., retained). This requires sample sizes which yield four splits for all random sampling per sublot. All QV samples shall furnish the following: QC, QV, Retained, and Extra. The department will observe the splitting and take possession of the QV, Retained, and Extra split samples intended for QV testing. The department will take possession of retained samples accumulated to date each day QV samples are collected. The department will retain samples until surpassing the analysis window of up to 5 lots, as defined in standard spec 460.2.8.3.1.7(2) of this special provision. Additional sampling details are found in Appendix A.

(2) The department will verify product quality using the test methods specified here in standard spec 460.2.8.3.1.4(3). The department will identify test methods before construction starts and use only those methods during production of that material unless the engineer and contractor mutually agree otherwise.

(3) The department will test the QV split sample using the test methods identified below at the frequency indicated. The Extra split sample will be tested only when the Gmm and/or Gmb replicate tolerances are exceeded according to WTM T166 section 13.1.4 and WTM T209 section 14.1.1. When testing the Extra split sample, only the results from the test from which the tolerances were exceeded may replace the results from the QV split sample. The Rule of Retained according to CMM 836.1.2 applies. In the event that both the department and contractor's replicate tolerances are exceeded, perform dispute resolution according to 460.2.8.3.1.7(2).

- Bulk specific gravity (Gmb) of the compacted mixture according to WTM T166.
- Maximum specific gravity (Gmm) according to WTM T209.
- Air voids (Va) by calculation according to WTM T269.
- Voids in Mineral Aggregate (VMA) by calculation according to WTM R35 section 9.2.
- Asphalt Content (AC) in percent determined by ignition oven method according to WTM T308 and conforming to WTP H-003, chemical extraction according to AASHTO T 164 Method A or B, or automated extraction according to WTM D8159.

(4) The department will randomly test each design mixture at the minimum frequency of one test for each lot.

Delete standard spec 460.2.8.3.1.6.

Replace standard spec 460.2.8.3.1.7 Dispute Resolution with the following:

460.2.8.3.1.7 Data Analysis for Volumetrics

(1) Analysis of test data for pay determination will be contingent upon QC and QV test results. Statistical analysis will be conducted on Gmm and Gmb test results for calculation of Va. If either Gmm or Gmb analysis results in non-comparable data as described in 460.2.8.3.1.7(2), subsequent testing will be performed for both parameters as detailed in the following paragraph.

(2) The engineer, upon completion of the first 3 lots, will compare the variances (F-test) and the means (t-test) of the QV test results with the QC test results. Additional comparisons incorporating the first 3 lots of data will be performed following completion of the 4th and 5th lots (i.e., lots 1-3, 1-4, and 1-5). A rolling window of 5 lots will be used to conduct F & t comparison for the remainder of the contract (i.e., lots 2-6, then lots 3-7, etc.), reporting comparison results for each individual lot. Analysis will use a set alpha value of 0.025. If the F- and t-tests report comparable data, the QC and QV data sets are determined to be statistically similar and QC data will be used to calculate the Va used in PWL and pay adjustment calculations. If the F- and t-tests result in non-comparable data, proceed to the *dispute resolution* steps found below. Note: if both QC and QV Va PWL result in a pay adjustment of 102% or greater, dispute resolution testing will not be conducted. Dispute resolution via further investigation is as follows:

[1] The Retained portion of the split from the lot in the analysis window with a QV test result furthest from the QV mean (not necessarily the sublot identifying that variances or means do not compare) will be referee tested for Gmm, Gmb, and Asphalt Content by the bureau's AASHTO accredited laboratory and certified personnel. All previous lots within the analysis window are subject to referee testing and regional lab testing as deemed necessary. Referee test results will replace the QV data of the sublot(s).

[2] Statistical analysis will be conducted with referee test results replacing QV results.

i. If the F- and t-tests indicate variances and means compare, no further testing is required for the lot and QC data will be used for PWL and pay factor/adjustment calculations.

ii. If the F- and t-tests indicate non-comparable variances or means, the Retained portion of the random QC sample will be tested for Gmm, Gmb, and Asphalt Content by the department’s regional lab for the remaining 4 sublots of the lot which the F- and t-tests indicate non-comparable datasets. The department’s regional lab and the referee test results will be used for PWL and pay factor/adjustment calculations. Upon the second instance of non-comparable variance or means and for every instance thereafter, the department will assess a pay reduction for the additional testing of the remaining 4 sublots at $2,000/lot under the HMA Regional Lab Testing administrative item.

[3] The contractor may choose to dispute the regional test results on a lot basis within 7 days after receiving the results from the region. In this event, the retained portion of each sublot will be referee tested by the department's AASHTO accredited laboratory and certified personnel. The referee Gmm and Gmb test results will supersede the regional lab results for the disputed lot.

i. If referee testing results in an increased calculated pay factor, the department will pay for the cost of the additional referee testing.

ii. If referee testing of a disputed lot results in an equal or lower calculated pay factor, the department will assess a pay reduction for the additional referee testing at $2,000/lot under the Referee Testing administrative item.

(3) The department will notify the contractor of the referee test results within 3 working days after receipt of the samples by the department's AASHTO accredited laboratory. The intent is to provide referee test results within 7 calendar days from completion of the lot.

(4) The department will determine mixture conformance and acceptability by analyzing referee test results, reviewing mixture data, and inspecting the completed pavement according to the standard spec, this special provision, and accompanying Appendix A.

(5) Unacceptable material (i.e., resulting in a PWL value less than 50 or individual QC or QV test results not meeting the Acceptance Requirements of 460.2.8.2.1.7 as modified herein) will be referee tested by the bureau's AASHTO accredited laboratory and certified personnel and those test results used for analysis. Such material may be subject to remove and replace, at the discretion of the engineer. If the engineer allows the material to remain in place, it will be paid at 50% of the HMA Pavement contract unit price. Replacement or pay adjustment will be conducted on a sublot basis. If an entire PWL sublot is removed and replaced, the test results of the newly placed material will replace the original data for the sublot. Any remove and replace shall be performed at no additional cost to the department. Testing of replaced material must include a minimum of one QV result. [Note: If the removed and replaced material does not result in replacement of original QV data, an additional QV test will be conducted and under such circumstances will be entered into the HMA PWL Production spreadsheet for data analysis and pay determination.] The quantity of material paid at 50% the contract unit price will be deducted from PWL pay adjustments, along with accompanying data of this material.

Delete standard spec 460.2.8.3.1.8 Corrective Action.

C Construction

Replace standard spec 460.3.3.2 Pavement Density Determination with the following:

460.3.3.2 Pavement Density Determination

(1) The engineer will determine the target maximum density using department procedures described in WTM T355 and CMM 815. The engineer will determine density as soon as practicable after compaction and before placement of subsequent layers or before opening to traffic.

(2) Do not re-roll compacted mixtures with deficient density test results. Do not operate continuously below the specified minimum density. Stop production, identify the source of the problem, and make corrections to produce work meeting the specification requirements.

(3) A lot is defined as 7,500 lane feet with sublots of 1,500 lane feet (excluding shoulder, even if paved integrally) and placed within a single layer for each location and target maximum density category indicated in table 460-3. Complete three tests randomly per sublot and the department will randomly conduct one QV test per sublot. A partial quantity less than 750 lane feet will be included with the previous sublot. Partial lots with less than three sublots will be included in the previous lot for data analysis/acceptance and pay, by the engineer. If density lots/sublots are determined prior to construction of the test strip, any random locations within the test strip shall be omitted. Exclusions such as shoulders and appurtenances shall be tested and recorded according to WTM T355 and CMM 815. However, all acceptance testing of shoulders and appurtenances will be conducted by the department, and average lot (daily) densities must conform to standard spec Table 460-3 or else be subject to disincentives according to 460.5.2.2(5) herein. No density incentive will be applied to shoulders or appurtenances. Offsets will not be applied to nuclear density gauge readings for shoulders or appurtenances. Unacceptable shoulder material will be handled according to standard spec 460.3.3.1 and CMM 815.11.

(4) The three QC locations per sublot represent the outside, middle, and inside of the paving lane. The QC density testing procedures are detailed in Appendix A.

(5) QV nuclear testing will consist of one randomly selected location per sublot. The QV density testing procedures will be the same as the QC procedure at each testing location and are also detailed in Appendix A.

(6) An HTCP-certified nuclear density technician (NUCDENSITYTEC-I) shall identify random locations and perform the testing for both the contractor and department. The responsible certified technician shall ensure that sample location and testing is performed correctly, analyze test results, and provide density results to the contractor weekly, or at the completion of each lot.

(7) For any additional tests outside the random number testing conducted for density, the data collected will not be entered into PWL calculations. However, additional QV testing must meet the tolerances for material conformance as specified in the standard specification and this special provision. If additional density data identifies unacceptable material, proceed as specified in CMM 815.11.

Replace standard spec 460.3.3.3 Waiving Density Testing with Acceptance of Density Data with the following:

460.3.3.3 Analysis of Density Data

(1) Analysis of test data for pay determination will be contingent upon test results from both the contractor (QC) and the department (QV).

(2) As random density locations are paved, the data will be recorded in the HMA PWL Production Spreadsheet for analysis in chronological order. The engineer, upon completion of the first 3 lots, will compare the variances (F-test) and the means (t-test) of the QV test results with the QC test results. A rolling window of 3 lots will be used to conduct F & t comparison for the remainder of the contract (i.e., lots 2-4, then lots 3-5, etc.), reporting comparison results for each individual lot. Analysis will use a set alpha value of 0.025.

   i. If the F- and t-tests indicate variances and means compare, the QC and QV data sets are determined to be statistically similar and QC data will be used for PWL and pay adjustment calculations.

   ii. If the F- and t-tests indicate variances or means do not compare, the QV data will be used for subsequent calculations.

(3) The department will determine mixture density conformance and acceptability by analyzing test results, reviewing mixture data, and inspecting the completed pavement according to standard spec, this special provision, and accompanying Appendix A.

(4) Density resulting in a PWL value less than 50 or not meeting the requirements of 460.3.3.1 (any individual density test result falling more than 3.0 percent below the minimum required target maximum density as specified in standard spec Table 460-3) is unacceptable and may be subject to remove and replace at no additional cost to the department, at the discretion of the engineer.

   i. Replacement may be conducted on a sublot basis. If an entire PWL sublot is removed and replaced, the test results of the newly placed material will replace the original data for the sublot.

   ii. Testing of replaced material must include a minimum of one QV result. [Note: If the removed and replaced material does not result in replacement of original QV data, an additional QV test must be conducted and under such circumstances will be entered into the data analysis and pay determination.]

   iii. If the engineer allows such material to remain in place, it will be paid for at 50% of the HMA Pavement contract unit price. The extent of unacceptable material will be addressed as specified in CMM 815.11. The quantity of material paid at 50% the contract unit price will be deducted from PWL pay adjustments, along with accompanying data of this material.

D Measurement

The department will measure the HMA Pavement bid items acceptably completed by the ton, as specified in standard spec 450.4 and as follows in standard spec 460.5, as modified in this special provision.

E Payment

Replace standard spec 460.5.2 HMA Pavement with the following:

460.5.2 HMA Pavement

460.5.2.1 General

(1) Payment for HMA Pavement Type LT, MT, and HT mixes is full compensation for providing HMA mixture designs; for preparing foundation; for furnishing, preparing, hauling, mixing, placing, and compacting mixture; for HMA PWL QMP testing and aggregate source testing; for warm mix asphalt additives or processes; for stabilizer, hydrated lime and liquid antistripping agent, if required; and for all materials including asphaltic materials.

(2) If provided for in the plan quantities, the department will pay for a leveling layer, placed to correct irregularities in an existing paved surface before overlaying, under the pertinent paving bid item. Absent a plan quantity, the department will pay for a leveling layer as extra work.

460.5.2.2 Calculation of Pay Adjustment for HMA Pavement using PWL

(1) Pay adjustments will be calculated using 65 dollars per ton of HMA pavement. The HMA PWL Production Spreadsheet, including data, will be made available to the contractor by the department as soon as practicable upon completion of each lot. The department will pay for measured quantities of mix based on this price multiplied by the following pay adjustment calculated according to the HMA PWL Production Spreadsheet:

PAY FACTOR FOR HMA PAVEMENT AIR VOIDS & DENSITY

PERCENT WITHIN LIMITS (PWL)	*PAYMENT FACTOR, PF (percent of $65/ton)*
≥ 90 to 100	PF = ((PWL – 90) * 0.4) + 100
≥ 50 to < 90	(PWL * 0.5) + 55
<50	50%[1]

where PF is calculated per air voids and density, denoted $PF_{air\ voids}$ & $PF_{density}$.

[1] Any material resulting in PWL value less than 50 shall be removed and replaced unless the engineer allows such material to remain in place. In the event the material remains in place, it will be paid at 50% of the contract unit price of HMA pavement.

(2) For air voids, PWL values will be calculated using lower and upper specification limits of 2.0 and 4.3 percent, respectively. Lower specification limits for density shall be according to standard spec Table 460-3.

(3) Pay adjustment will be determined on a lot basis and will be computed as shown in the following equation:

Pay Adjustment = (PF-100)/100 x (WP) x (tonnage) x ($65/ton)*

*Note: If Pay Factor = 50%, the contract unit price will be used in lieu of $65/ton and the weighted percentage (WP) will equal 1.0.

The following weighted percentage (WP) values will be used for the corresponding parameter:

Parameter	WP
Air Voids	0.5
Density	0.5

(4) Individual Pay Factors for each air voids ($PF_{air\ voids}$) and density ($PF_{density}$) will be determined. $PF_{air\ voids}$ will be multiplied by the total tonnage placed (i.e., from truck tickets), and $PF_{density}$ will be multiplied by the calculated tonnage used to pave the mainline only (i.e., travel lane excluding shoulder) as determined according to Appendix A.

(5) Pay adjustment for shoulders and appurtenances accepted by department testing will be determined on a lot basis. If the lot density is less than the specified minimum in table 460-3, the department will reduce pay based on the contract unit price for the HMA pavement bid item for that lot as follows:

DISINCENTIVE PAY REDUCTION FOR HMA PAVEMENT DENSITY

PERCENT LOT DENSITY BELOW SPECIFIED MINIMUM	PAYMENT FACTOR (percent of contract price)
From 0.5 to 1.0 inclusive	98
From 1.1 to 1.5 inclusive	95
From 1.6 to 2.0 inclusive	91
From 2.1 to 2.5 inclusive	85
From 2.6 to 3.0 inclusive	70
More than 3.0[1]	___

[1] Remove and replace the lot with a mixture at the specified density. When acceptably replaced, the department will pay for the replaced work at the contract unit price. Alternatively, the engineer may allow the nonconforming material to remain in place with a 50 percent payment factor.

(6) The department will pay incentive for air voids and density under the following bid items:

ITEM NUMBER	DESCRIPTION	UNIT
460.2005	Incentive Density PWL HMA Pavement	DOL
460.2010	Incentive Air Voids HMA Pavement	DOL

The department will administer disincentives under the Disincentive Density HMA Pavement and the Disincentive Air Voids HMA Pavement administrative items.

The department will administer a disincentive under the Disincentive HMA Binder Content administrative item for each individual QV test result indicating asphalt binder content below the Action Limit in 460.2.8.2.1.7 presented herein. The department will adjust pay per sublot of mix at 65 dollars per ton of HMA pavement multiplied by the following pay adjustment calculated according to the HMA PWL Production Spreadsheet:

AC Binder Relative to JMF	Pay Adjustment / Sublot
-0.4% to -0.5%	75%[1]
More than -0.5%	50%[1] [2]

[1] Any material resulting in an asphalt binder content more than 0.3% below the JMF AC content will be referee tested by the department's AASHTO accredited laboratory and HTCP certified personnel using automated extraction according to automated extraction according to WTM D8159.

[2] Any material resulting in an asphalt binder content more than 0.5% below the JMF AC content shall be removed and replaced unless the engineer allows such material to remain in place. In the event the material remains in place, it will be paid at 50% of the contract unit price of HMA pavement.

Note: PWL value determination is further detailed in the PWL Production Spreadsheet Instructions located in the *Project Info & Instructions* tab of the HMA PWL Production spreadsheet.

stp-460-050 (20240105)

19. Appendix A.

Test Methods & Sampling for HMA PWL QMP Projects

The following procedures are included with the HMA Pavement Percent Within Limits (PWL) Quality Management Program (QMP) special provision:

- WisDOT Procedure for Nuclear Gauge/Core Correlation – Test Strip
- WisDOT Test Method for HMA PWL QMP Density Measurements for Main Production
- Sampling for WisDOT HMA PWL QMP
- Calculation of PWL Mainline Tonnage Example

WisDOT Procedure for Nuclear Gauge/Core Correlation – Test Strip

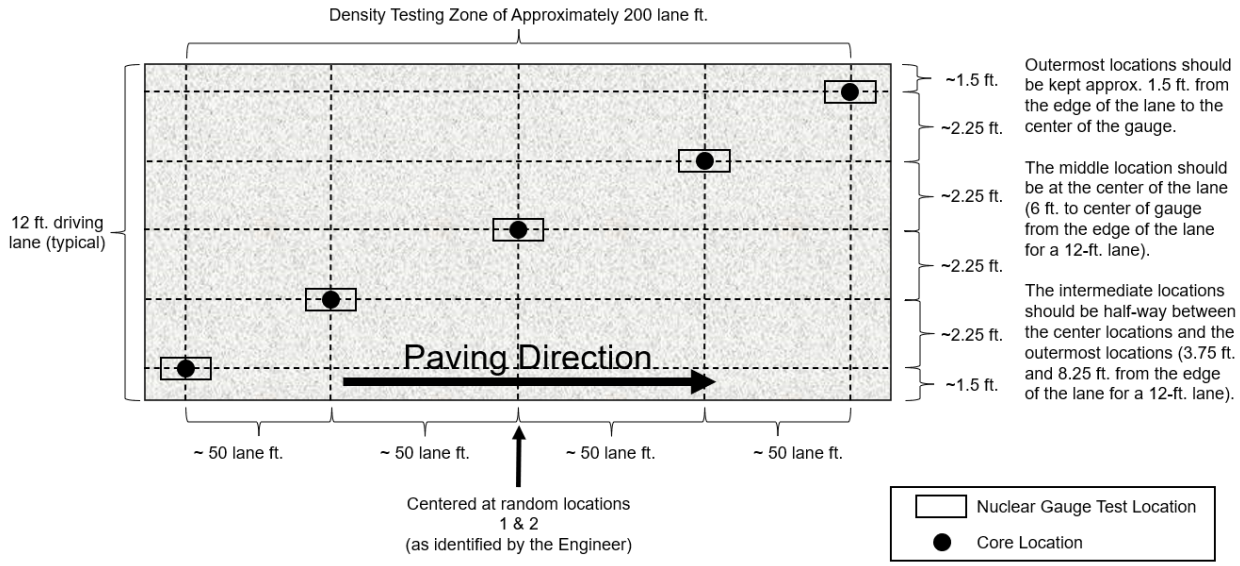

Figure 1: Nuclear/Core Correlation Location Layout

The engineer will identify two zones in which gauge/core correlation is to be performed. These two zones will be randomly selected within each *half* of the test strip length. (Note: Density zones shall not overlap and must have a minimum of 100 feet between the two zones; therefore, random numbers may be shifted (evenly) in order to meet these criteria.) Each zone shall consist of five locations across the mat as identified in Figure 1. The following shall be determined at each of the five locations within both zones:

- two one-minute nuclear density gauge readings for QC team*
- two one-minute nuclear density gauge readings for QV team*
- pavement core sample

*If the two readings exceed 1.0 pcf of one another, a third reading is conducted in the same orientation as the first reading. In this event, all three readings are averaged, the individual test reading of the three which falls farthest from the average value is discarded, and the average of the remaining two values is used to represent the location for the gauge.

The zones are supposed to be undisclosed to the contractor/roller operators. The engineer will not lay out density/core test sites until rolling is completed and the cold/finish roller is beyond the entirety of the zone. Sites are staggered across the 12-foot travel lane, and do not include shoulders. The outermost locations shall be 1.5-feet from the center of the gauge to the edge of the lane. [NOTE: This staggered layout is only applicable to the test strip. All mainline density locations after test strip shall have a longitudinal and transverse random number to determine the location as detailed in the *WisDOT Test Method for HMA PWL QMP Density Measurements for Main Production* section of this document.]

The nuclear site is the same for QC and QV readings for the test strip, i.e., the QC and QV teams are to take nuclear density gauge readings in the same footprint. Each of the QC and QV teams are to take a minimum of two one-minute readings per nuclear site, with the gauge rotated 180 degrees between readings, as seen here:

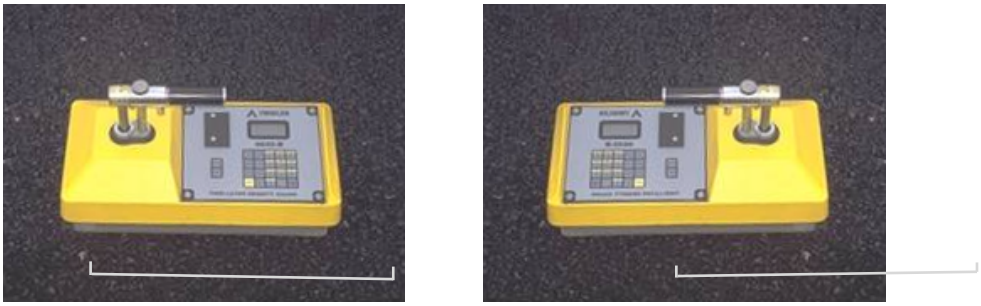

(a) (b)

Figure 2: Nuclear Gauge Orientation for (a) 1st One-Minute Reading and (b) 2nd One-Minute Reading

Take photos of each of the 10 core/gauge locations of the test strip. Include gauge readings (pcf) and a labelled core within the gauge footprint. If a third reading is needed, record and document all three readings. Only raw readings in pcf shall be written on the pavement during the test strip, with a corresponding gauge ID/SN (generalized as QC-1 through QV-2 in the following Figure) in the following format:

Figure 3: Layout of Raw Gauge Readings as Recorded on the Pavement

Take each core from the center of the gauge footprint and correlate each gauge with the laboratory-measured bulk specific gravities of the pavement cores. One core in good condition must be obtained from each of the 10 locations. If a core is damaged at the time of extracting from the pavement, a replacement core should be taken immediately adjacent to the damaged core, i.e., from the same footprint. If a core is damaged during transport, it shall be recorded as damaged and excluded from the correlation. Coring after traffic is on the pavement shall be avoided. The contractor shall be responsible for coring of the pavement. Coring and filling of core holes must be approved by the engineer. The QV team is responsible for the labeling and safe transport of the cores from the field to the QC laboratory. Conduct core density testing with a witness by department personnel. Dry the cores following testing. The department will take possession of cores following initial testing and is responsible for any verification testing.

Each core 100 or 150 mm (4 or 6 inches) in diameter will be taken at locations as identified in Figure 1. Each random core will be full thickness of the layer being placed. Thoroughly dry cores obtained from the mat according to WTM R79 prior to using specimens for in-place density determination according to WTM T166.

Cut cores by the next day after completion of the test strip, except if the next day is not a working day, then cut within 48 hours of placement. Cores are cut under department/project staff observation. Relabel each core immediately after extruding or ensure that labels applied to pavement prior to cutting remain legible. The layer interface should also be marked immediately following extrusion. Cores should be cut at this interface, using a wet saw, to allow for density measurement of only the most recently placed layer. Cores should be protected from excessive temperatures such as direct sunlight. Also, there should be department custody (both in transport and storage) for the cores until they are tested whether that be immediately after the test strip or the subsequent day if agreed upon between department and contractor. Use of concrete cylinder molds works well to transport cores. Cores should be placed upside down (flat surface to bottom of cylinder mold) in the molds, one core per mold, cylinder molds stored upright, and ideally transported in a cooler. Avoid any stacking of pavement cores.

Fill all core holes with non-shrink rapid-hardening grout, mortar, or concrete, or with HMA. When using grout, mortar, or concrete, remove all water from the core holes prior to filling. Mix the mortar or concrete in a separate container prior to placement in the hole. If HMA is used, fill all core holes with hot-mix matching the same day's production mix type at same day compaction temperature +/- 20 F. Dry the core holes and coat with tack before filling, filled with a top layer no thicker than 2.25 inches, lower layers not to exceed 4 inches, and compacted with a Marshall hammer or similar tamping device using approximately 50 blows per layer. The finished surface shall be flush with the pavement surface. Any deviation in the surface of the filled core holes greater than ¼ inch at the time of final inspection will require removal of the fill material to the depth of the layer thickness and replacement.

WisDOT Test Method for HMA PWL QMP Density Measurements for Main Production

For nuclear density testing of the pavement beyond the test strip, QC tests shall be completed at three locations per sublot, with a sublot defined as 1,500 lane feet. The three locations shall represent the outside, middle, and inside of the paving lane (i.e., the lane width will be divided into thirds as shown by the dashed longitudinal lines in Figure 3 and random numbers shall be used to identify the specific transverse location within each third determined by WTM D3665). Longitudinal locations within each sublot shall be determined with 3 independent random numbers determined by WTM D3665. The PWL

Density measurements do not include the shoulder and other appurtenances. Such areas are tested by the department and are not eligible for density incentive but are subject to disincentive according to 460.5.2.2(5) of the HMA PWL QMP article. Measure each location with two one-minute gauge readings oriented 180 degrees from one another, in the same footprint as detailed in Figure 2 above. Each location requires a minimum of two readings per gauge. The density gauge orientation for the first test shall be with the source rod towards the direction of paving. QV nuclear testing will consist of one randomly selected location per sublot. The QV is also comprised of two one-minute readings oriented 180 degrees from one another. For both QC and QV test locations, if the two readings exceed 1.0 pcf of one another, a third reading shall be conducted in the same orientation as the first reading. In this event, all three readings are averaged, the individual test reading of the three which falls farthest from the average value is discarded, and the average of the remaining two values is used to represent the location for the gauge. The sublot density testing layout is depicted in Figure 4, with QC test locations shown as solid black boxes and QV test locations shown as dashed red boxes.

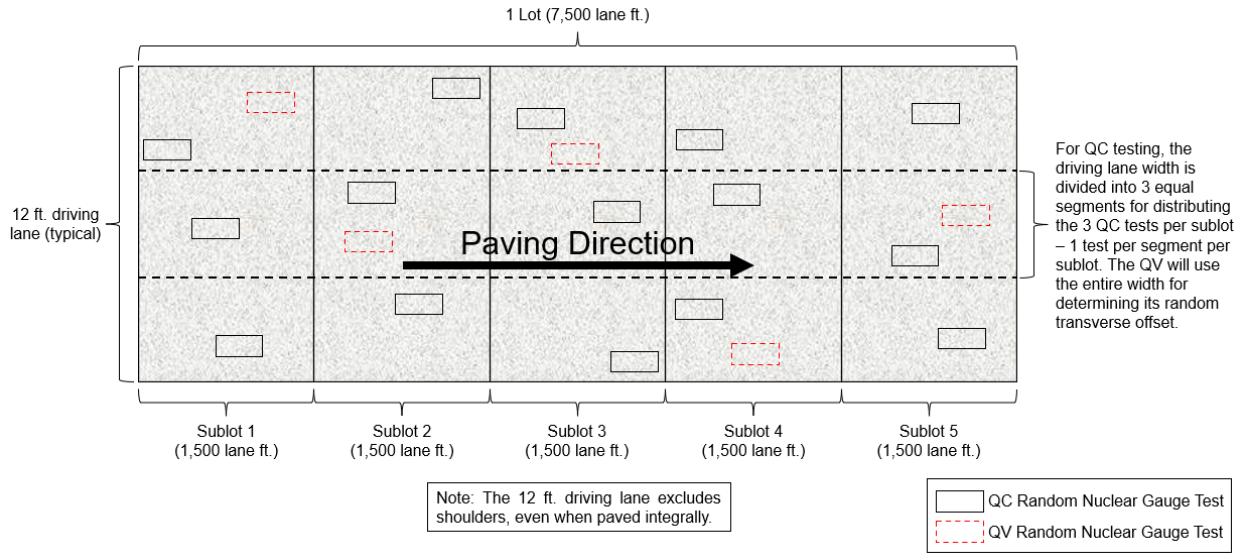

Figure 4: Example Layout of Mainline HMA Nuclear Density Tests

Raw nuclear density data must be shared by both parties at the end of each shift. Paving may be delayed if the raw data is not shared in a timely manner. QC and QV nuclear density gauge readings will be statistically analyzed according to Section 460.3.3.3 of the HMA PWL QMP article. (Note: For density data, if F- and t-tests compare, QC data will be used for the subsequent calculations of PWL value and pay determination. However, if an F- or t-test does not compare, the QV data will be used in subsequent calculations.)

Investigative cores will be allowed on the approaching side of traffic outside of the footprint locations. Results shall be shared with the department.

The QV density technician is expected to be onsite within 1 hour of the start of paving operations and should remain on-site until all paving is completed. Perform footprint testing as soon as both the QC and QV nuclear density technician are onsite and a minimum of once per day to ensure the gauges are not drifting apart during a project. Footprint testing compares the density readings of two gauges at the same testing location and can be done at any randomly selected location on the project. Both teams are encouraged to conduct footprint testing as often as they feel necessary. Footprint testing does not need to be performed at the same time. At project start-up, the QV should footprint the first 10 QC locations. Individual density tests less than 0.5% above the lower limit should be communicated to the other party and be footprint tested. Each gauge conducts 2 to 3 1-minute tests according to WTM T355 and the final results from each gauge are compared for the location. If the difference between the QC and QV gauges exceeds 1.0 pcf (0.7 percent) for an average of 10 locations, investigate the cause, check gauge moisture and density standards and perform additional footprint testing. If the cause of the difference between gauge readings cannot be identified, the regional HMA Coordinator will consult the RSO, the regional PWL representative and the BTS HMA unit to determine necessary actions. If it is agreed that there is a gauge comparison issue, perform one of the following two options:

New Gauge Combination

- All 4 gauges used on the test strip must footprint 10 locations on the pavement. Pavement placed on a previous day may be used.
- The results of the footprint testing will be analyzed to see if a better combination of acceptable gauges is available.
- If a better combination is found, those gauges should be used moving forward.
- If a better combination cannot be found, a new gauge correlation must be performed. (see below)

Re-correlation of Gauges

- Follow all test strip procedures regarding correlating gauges except the following:
- The 10 locations can be QC or QV random locations.
- The locations used may have been paved on a previous day.
- Retesting with gauges must be done immediately prior to coring.
- New gauge offsets will be used for that day's paving and subsequent paving days. New gauge offsets will not be used to recalculate density results from prior days.

Density Dispute Resolution Procedure

Density results may be disputed by the contractor on a lot-by-lot basis if one of the following criteria is met:

- The lot average for either QC or QV is below the lower specification limit.
- The lot average for QC is different from the lot average for QV by more than 0.5%.
- The lot is in disincentive.

In lieu of using density gauges for acceptance of the lot, the lot will be cored in the QV locations. The results of the cores from the entire lot will be entered in the spreadsheet and used for payment. If the pay factor increases, the contractor will only receive the additional difference in payment for the disputed lot. If the pay factor does not increase, the department will assess the contractor $2,000 for the costs of additional testing.

Notify the engineer in writing before dispute resolution coring. Immediately prior to coring, QC and QV will test the locations with nuclear density gauges.

Under the direct observation of the engineer, cut 100 or 150 mm (4 or 6 inch) diameter cores. Cut cores by the next day after completion of the lot, except if the next day is not a working day, then cut within 48 hours of placement. Prepare cores and determine density according to WTM T166. Dry cores after testing. Fill core holes according to Appendix A and obtain engineer approval before opening to traffic. The department will maintain custody of cores throughout the entire sampling and testing process. The department will label cores, transport cores to testing facilities, witness testing, store dried cores, and provide subsequent verification testing. If a core is damaged at the time of coring, immediately take a replacement core 1 ft ahead of the existing testing location in the direction of traffic at the same offset as the damaged core. If a core is damaged during transport, record it as damaged and notify the engineer immediately.

Sampling for WisDOT HMA PWL QMP Production

Sampling of HMA mix for QC, QV, Retained, and Extra split samples shall conform to WTM R97 and WTM R47.

Sampling Hot Mix Asphalt

At the beginning of the contract, determine the anticipated tonnage to be produced. The frequency of sampling is 1 per 750 tons (sublot) for QC and Retained Samples and 1 per 3,750 tons (lot or 5 sublots) for QV as defined by the HMA PWL QMP article. A test sample is obtained randomly from each sublot. Each random sample shall be collected at the plant according to WTM R97. Submit the random numbers for all mix sampling to the department before production begins.

Example 1

Expected production for a contract is 12,400 tons. The number of required samples is determined based on this expected production (per HMA PWL QMP SPV) and is determined by the random sample calculation.

Sample 1 – from 50 to 750 tons
Sample 2 – from 751 to 1500 tons
Sample 3 – from 1501 to 2250 tons
Sample 4 – from 2251 to 3000 tons
Sample X – ……
Sample 16 – from 11,251 to 12,000 tons
Sample 17 – from 12,001 to 12,400 tons

The approximate location of each sample within the prescribed sublots is determined by selecting random numbers using WTM D3665. The random numbers selected are used in determining when a sample is to be taken and will be multiplied by the sublot tonnage. This number will then be added to the final tonnage of the previous sublot to yield the approximate cumulative tonnage of when each sample is to be taken.

To allow for plant start-up variability, the procedure calls for the first random sample to be taken at 50 tons or greater per production day (not intended to be taken in the first two truckloads). Random samples calculated for 0-50 ton shall be taken in the next truck (51-75 ton).

This procedure is to be used for any number of samples per contract.

If the production is less than the final randomly generated sample tonnage, then the random sample is to be collected from the remaining portion of that sublot of production. If the randomly generated sample is calculated to be within the first 0-50 tons of the subsequent day of production, it shall be taken in the next truck. Add a random sample for any fraction of 750 tons at the end of the contract. Lot size will consist of 3750 tons with sublots of 750 tons. Partial lots with less than three sublot tests will be included into the previous lot, by the engineer.

It is intended that the plant operator is not advised ahead of time when samples are to be taken.

If belt samples are used during troubleshooting, the blended aggregate will be obtained when the mixture production tonnage reaches approximately the sample tonnage. For plants with storage silos, this could be up to 60 minutes in advance of the mixture sample that's taken when the required tonnage is shipped from the plant.

Collect QC, QV, Retained, and Extra split samples for all test strip and production mixture testing using a four-part splitting procedure according to WTM R47.

Calculation of PWL Mainline Tonnage Example

A mill and overlay project in being constructed with a 12-foot travel lane and an integrally paved 3-foot shoulder. The layer thickness is 2 inches for the full width of paving. Calculate the tonnage in each sublot eligible for density incentive or disincentive.

Solution:

$$\frac{1500\ ft\ \times\ 12\ ft}{9\ sf/sy} \times \frac{2\ in\ \times 112\ lb/sy/in}{2000\ lb/ton} = 224\ tons$$

stp-460-055 (20240105)

20. HMA Pavement Longitudinal Joint Density.

A Description

This special provision incorporates longitudinal joint density requirements into the contract and describes the data collection, acceptance, and procedure used for determination of pay adjustments for HMA pavement longitudinal joint density. Pay adjustments will be made on a linear foot basis, as applicable per pavement layer and paving lane. Applicable longitudinal joints are defined as those between any two or more traffic lanes including full-width passing lanes, turn lanes, or auxiliary lanes more than 1,500 lane feet, and those lanes must also include the 460.2005 Incentive Density PWL HMA Pavement bid item. This excludes any joint with one side defined as a shoulder and ramp lanes of any length. If echelon paving is required in the contract, the longitudinal joint density specification shall not apply for those joints. Longitudinal joints placed during a test strip will be tested for information only to help ensure the roller pattern will provide adequate longitudinal joint density during production. Longitudinal joint density test results collected during a test strip are not eligible for pay adjustment.

Pay is determined according to standard spec 460, HMA Pavement Percent Within Limits QMP special provisions, and as modified within.

B Materials

Compact all applicable HMA longitudinal joints to the appropriate density based on the layer, confinement, and mixture type shown in Table B-1.

TABLE B-1 MINIMUM REQUIRED LONGITUDINAL JOINT DENSITY

Layer	Percent of Target Maximum Density			
	Unconfined		Confined	
	LT and MT	HT	LT and MT	HT
Lower (on crushed/recycled base)	88	89	89.5	90.5
Lower (on Concrete/HMA)	90[1]	90[1]	91.5[1]	91.5[1]
Upper	90	90	91.5	91.5

[1] Minimum reduced by 1.0 percent for a 1.25-inch-thick No. 5 mix lower layer constructed on a paved or milled surface.

C Construction

Add the following to standard spec 460.3.3.2:

(5) Establish companion QC and QV density locations for each applicable joint. Each companion location shares longitudinal stationing with the respective QC or QV mainline density location within each sublot and is located transversely with the center of the gauge 6-inches from the final joint edge of the paving area. Sublot and lot numbering remains the same as mainline densities, however, in addition to conventional naming, joint identification must clearly indicate “M” for inside/median side of lane or “O” for outside shoulder side of lane, as well as “U” for an unconfined joint or “C” for a confined joint (e.g., XXXXX-MC or XXXXX-OU).

(6) Each joint shall be measured, reported, and accepted under methods, testing times, and procedures consistent with the program employed for mainline density, i.e., PWL.

(7) For single nuclear density test results greater than 3.0% below specified minimums per Table B-1 herein, perform the following:

a) Testing at 50-foot increments both ahead and behind the unacceptable site.

b) Continued 50-foot incremental testing until test values indicate higher than or equal to -3.0 percent from target joint density.

c) Materials within the incremental testing indicating lower than -3.0 percent from target joint density are defined as unacceptable and will be handled with remedial action as defined in the payment section of this document.

d) The remaining sublot average (exclusive of unacceptable material) will be determined by the first forward and backward 50-foot incremental tests that reach the criteria of higher than or equal to -3.0 percent from target joint density.

Note: If the 50-foot testing extends into a previously accepted sublot, remedial action is required up to and inclusive of such material; however, the results of remedial action must not be used to recalculate the previously accepted sublot density. When this occurs, the lane feet of any unacceptable material will be deducted from the sublot in which it is located, and the previously accepted sublot density will be used to calculate pay for the remainder of the sublot.

(8) Joint density measurements shall be kept separate from all other density measurements and entered as an individual data set into Atwood Systems.

(9) Placement and removal of excess material outside of the final joint edge, to increase joint density at the longitudinal joint nuclear testing location, shall be done at the contractor's discretion and cost. This excess material and related labor will be considered waste and will not be paid for by the department. Joints with excess material placed outside of the final joint edge to increase joint density or where a notched wedge is used will be considered unconfined joints.

(10) When not required by the contract, echelon paving may be performed at the contractor's discretion to increase longitudinal joint density and still remain eligible to earn incentive. The additional costs incurred related to echelon paving will not be paid for by the department. If lanes are paved in echelon, the contractor may choose to use a longitudinal vertical joint or notched wedge longitudinal joint as described in SDD 13c19. Lanes paved in echelon shall be considered confined on both sides of the joint regardless of the selected joint design. The joint between echelon paved lanes shall be placed at the centerline or along lane lines.

(11) When performing inlay paving below the elevation of the adjacent lane, the longitudinal joint along the adjacent lane to be paved shall be considered unconfined.

D Measurement

(1) The department will measure each side of applicable longitudinal joints, as defined in Section A of this special provision, by the linear foot of pavement, acceptably placed. Measurement will be conducted independently for the inside or median side and for the outside or shoulder side of paving lanes with two applicable longitudinal joints. Each paving layer will be measured independently at the time the mat is placed.

E Payment

Add the following as 460.5.2.4 Pay Adjustment for HMA Pavement Longitudinal Joint Density:

(1) The department will administer longitudinal joint density adjustments under the Incentive Density HMA Pavement Longitudinal Joints and Disincentive Density HMA Pavement Longitudinal Joints items. The department will adjust pay based on density relative to the specified targets in Section B of this special provision, and linear foot of the HMA Pavement bid item for that sublot as follows:

PAY ADJUSTMENT FOR HMA PAVEMENT LONGITUDINAL JOINT DENSITY

PERCENT SUBLOT DENSITY ABOVE/BELOW SPECIFIED MINIMUM	PAY ADJUSTMENT PER LINEAR FOOT
Equal to or greater than +1.0 confined, +2.0 unconfined	$0.20
From 0.0 to +0.9 confined, 0.0 to +1.9 unconfined	$0
From -0.1 to -1.0	$(0.20)
From -1.1 to -2.0	$(0.40)
From -2.1 to -3.0	$(0.80)
More than -3.0	*REMEDIAL ACTION* [1]

[1] Remedial action must be approved by the engineer and agreed upon at the time of the pre-pave meeting and may include partial sublots as determined and defined in 460.3.3.2(7) of this document. If unacceptable material is removed and replaced per guidance by the engineer, the removal and replacement will be for the full lane width of the side of which the joint was constructed with unacceptable material.

(2) The department will not assess joint density disincentives for pavement placed in cold weather because of a department-caused delay as specified in standard spec 450.5.2(3).

(3) The department will not pay incentive on the longitudinal joint density if the traffic lane is in disincentive A disincentive may be applied for each mainline lane and all joint densities if both qualify for a pay reduction.

(4) Inlay paving operations will limit payment for additional material to 2 inches wider than the final paving lane width at the centerline.

The department will pay incentive for longitudinal joint density under the following bid items:

ITEM NUMBER	DESCRIPTION	UNIT
460.2007	Incentive Density HMA Pavement Longitudinal Joints	DOL

The department will administer disincentives under the Disincentive Density HMA Pavement Longitudinal Joints administrative item.

Appendix

WisDOT Longitudinal Joint – Nuclear Gauge Density Layout

Each QC and QV density location must have a companion density location at any applicable joint. This companion location must share longitudinal stationing with each QC or QV density location and be located transversely with the center of the gauge 6-inches from the final joint edge of the paving area.

For HMA Pavement Percent Within Limits QMP projects, this appears as follows:

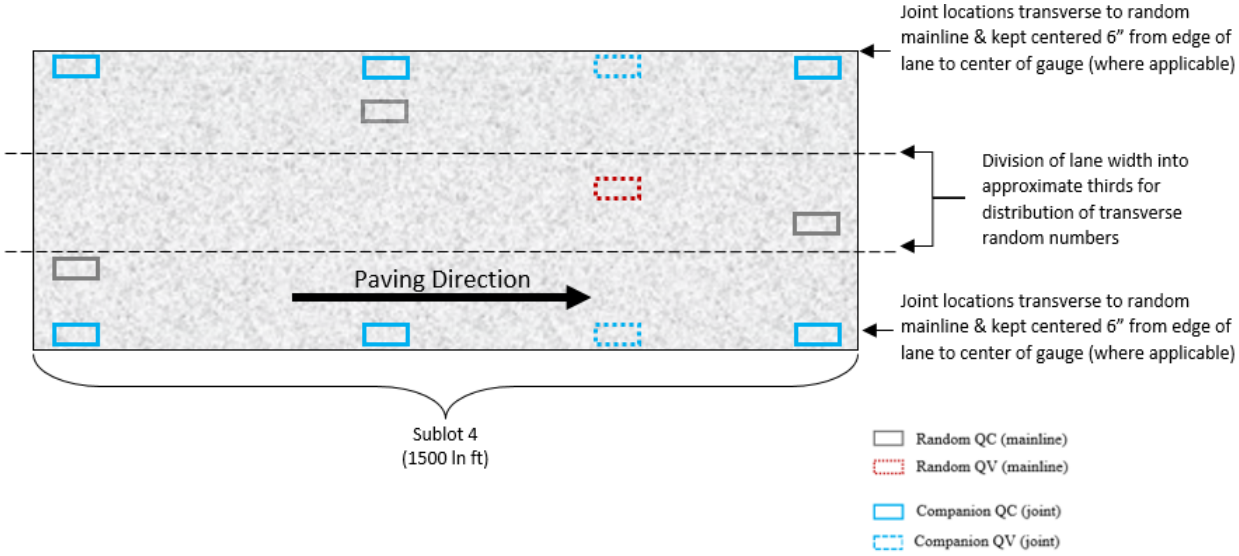

Further Explanation of *PAY ADJUSTMENT FOR HMA PAVEMENT LONGITUDINAL JOINT DENSITY* Table

	Confined				
	Lower Layer (On Base)		Upper Layer		
	LT/MT	HT	LT/MT	HT	Pay Adjust
Mainline Target (SS 460-3)	91.0	92.0	93.0	93.0	-
Confined Target (mainline - 1.5)	89.5	90.5	91.5	91.5	-
Equal to or greater than +1.0	≥ 90.5	≥ 91.5	≥ 92.5	≥ 92.5	$0.20
From 0.0 to +0.9	90.4 - 89.5	91.4 - 90.5	92.4 - 91.5	92.4 - 91.5	$0
From -0.1 to -1.0	89.4 - 88.5	90.4 - 89.5	91.4 - 90.5	91.4 - 90.5	($0.20)
From -1.1 to -2.0	88.4 - 87.5	89.4 - 88.5	90.4 - 89.5	90.4 - 89.5	($0.40)
From -2.1 to -3.0	87.4 - 86.5	88.4 - 87.5	89.4 - 88.5	89.4 - 88.5	($0.80)
More than -3.0	< 86.5	< 87.5	< 88.5	< 88.5	REMEDIAL ACTION

	Unconfined				
	Lower Layer (On Base)		Upper Layer		
	LT/MT	HT	LT/MT	HT	Pay Adjust
Mainline Target (SS 460-3)	91.0	92.0	93.0	93.0	-
Unconfined Target (Mainline -3.0)	88.0	89.0	90.0	90.0	-
Equal to or greater than +2.0	≥ 90.0	≥ 91.0	≥ 92.0	≥ 92.0	$0.20
From 0.0 to +1.9	89.9 - 88.0	90.9 - 89.0	91.9 - 90.0	91.9 - 90.0	$0
From -0.1 to -1.0	87.9 - 87.0	88.9 - 88.0	89.9 - 89.0	89.9 - 89.0	($0.20)
From -1.1 to -2.0	86.9 - 86.0	87.9 - 87.0	88.9 - 88.0	88.9 - 88.0	($0.40)
From -2.1 to -3.0	85.9 - 85.0	86.9 - 86.0	87.9 - 87.0	87.9 - 87.0	($0.80)
More than -3.0	< 85.0	< 86.0	< 87.0	< 87.0	REMEDIAL ACTION

stp-460-075 (20240105)

21. Culvert Pipe Backfill.

For culvert pipes where depth from top of pipe to top of final pavement is 4.0-ft or less the entire backfill area will conform and be classified as standard spec 520.2.5.2 foundation backfill.

Remove standard spec 520.5.2(2) for culvert pipes described above. No extra pay items will be added for the substitution of foundation backfill for trench backfill.

Ner-520-010 (202300519)

22. Survey Monument Coordination.

The contractor is to notify the Northeast Regional Survey Coordinator, Michael Andraschko, (920) 492-4166, at least 30 days before the beginning of construction activities. The Regional Survey Coordinator will then make the arrangements to have the Public Land Survey Monument and Landmark Reference Monuments tied out.

After the majority of construction is complete (before restoration) the contractor is again to notify the survey coordinator that the site is ready for the replacement of the monuments. the survey coordinator will then make arrangements to have the Public Land Survey Monument and Landmark Reference Monuments reset.

ner-621-010 (20171213)

23. Traffic Control.

Perform this work conforming to standard spec 643, and as the plans show, or as the engineer approves, except as follows.

Submit to engineer for approval a detailed traffic control plan for any changes to the proposed traffic control detail as the plans show. Submit this plan 10 days before the preconstruction conference.

The turning of traffic control devices when not in use to obscure the message will not be allowed under this contract.

Obtain prior approval from the engineer for the location of egress and ingress for construction vehicles to prosecute the work.

Conduct operations in such a manner that causes the least interference and inconvenience to the free flow of vehicles on the roadways. This includes the following:

Do not park or store any vehicle, piece of equipment, or construction materials on the right-of-way, unless otherwise specified in the traffic control article or without approval of the engineer.

All construction vehicles and equipment entering or leaving live traffic lanes shall yield to through traffic.

Equip all vehicles and equipment entering or leaving the live traffic lanes with a hazard identification beam (flashing yellow signal) capable of being visible on a sunny day when viewed without the sun directly on or behind the device from a distance of 1000 feet. Activate the beam when merging into or exiting a live traffic lane.

Do not disturb, remove, or obliterate any traffic control signs, advisory signs, shoulder delineators or beam guard in place along the traveled roadways without the approval of the engineer. Immediately repair or replace any damage done to the above during the construction operations at contractor expense.

The traffic requirements are subject to change at the direction of the engineer in the event of an emergency.

ner-643-065 (20190410)

24. Installing and Maintaining Bird Deterrent System Station 100+09, Item 999.2000.S.01; Installing and Maintaining Bird Deterrent System Station 393+67, Item 999.2000.S.02.

A Description

This special provision describes inspecting, installing and/or maintaining approved deterrents that prevent migratory bird nesting on bridges and culverts. Swallows or other migratory birds' nests have been observed on or under the existing culvert or bridge at the station identified. All active nests (when eggs or young are present) of migratory birds are protected under the federal Migratory Bird Treaty Act. One deterrent system shall be installed and/or maintained for each applicable structure. Deterrent methods selected shall be appropriate for structure type, size and/or site-specific constraints.

B Materials

B.1 Hardware and Lumber

Lumber, hardware, and fastening devices shall be durable enough to last through the length of the nesting season. Fastening devices and deterrence system must be approved by the engineer prior to installation on culverts and bridges that will remain in service after removal of deterrent systems. The method of fastening should not compromise the culvert or bridge concrete surfaces or steel protection systems. The attachment locations must be restored and repaired as needed by use of engineer approved fillers, sealers and paint systems.

B.2 Netting Materials

Exclusion netting is material either wrapped around or draped and fastened to bridge decks/abutments and culvert corners to prevent bird entry.

Furnish exclusionary netting to deter nesting in bridge decks and abutments and corners of box culverts, consisting of either:

a. 1/2" x 1/2" or 3/4" x 3/4" knotless, flame resistant, U.V. stabilized polyethylene or polypropylene netting with minimum 40-pound breaking strength per strand, or engineer approved equal.

b. Galvanized wire mesh (hardware cloth) with a wire diameter of .040 inches (19-gauge) and opening width of 1/2-inch.

At a minimum, use either 1" x 2" (nominal) lumber or 3/4" x 2" pressure treated plywood strips and of equal length as the netting.

B.3 Plastic Strip Curtain

Plastic strip curtains are strips of plastic attached to vertical surfaces in areas suitable for nesting.

Furnish 3-foot wide lengths of 6 mil minimum plastic sheeting with the lower 2 feet cut into vertical strips 2 inches wide.

At a minimum, use either 1" x 2" (nominal) lumber or 3/4" x 2" pressure treated plywood strips and staples to attach plastic strips to wood to fabricate the strip curtain.

Furnish concrete screws to attach strip curtain to structure.

B.4 Corner Slope Materials

Corner slopes are pieces of curved plastic placed in corners suitable for nesting. They are particularly effective in preventing nesting in top corners of box culverts.

Furnish U.V. stabilized pre-fabricated PVC or polycarbonate corner slopes from commercial bird-deterrent manufacturers or an approved equal.

C Construction

C.1 General

If active nests are observed after construction starts, or if a trapped bird or an active nest is found, stop work that may affect birds or their nests, and notify the engineer to consult with the Wisconsin Department of Natural Resources transportation liaison, Jay Schiefelbein at (920) 360-3784, or the department regional environmental coordinator, Mae Sommerfeld at (920) 492-5705.

Efforts should be made to release trapped birds, unharmed.

C.2 Nest Removal

Remove unoccupied nests prior to the beginning of the nesting season as designated in Prosecution and Progress. Nest removal involves the removal and disposal of unoccupied or partially constructed nests without eggs or nestlings. Removing all evidence of nesting (e.g., cleaning droppings from structures) eliminates a visual cue for a potential breeding location, especially for first-time breeders. Nest removal is not a type of deterrent and does not prevent nest establishment but can delay the process. As such, it should only be used in conjunction with other methods. It cannot be used on its own to ensure compliance. Nest removal is not required if deterrents are installed before the start of the avoidance window unless nests interfere with successful installation of the deterrent.

Remove nests on the structure by scraping or pressure washing prior to established avoidance windows to deter nesting. Remove only unoccupied or partially constructed nests without eggs or nestlings. Remove newly built nests every two days before eggs are laid. Nest removal is intended to be used prior to and in conjunction with other nesting deterrents.

C.3 Exclusion Netting

C.3.1 Installation

Using concrete screws, anchor lumber to bridge or culvert along perimeter of intended netting. Fasten netting to lumber until netting is held taut. Use the minimum length of lumber and netting necessary to avoid sections of netting that are not flush to the bridge or culvert. Eliminate any loose pockets or wrinkles that could trap and entangle birds or other wildlife. Ensure the net is pulled taut in order to prevent flapping in the wind, which results in tangles or breakage at mounting points.

For culverts, attach netting at a 45-degree angle at the culvert corner so it extends at least 12” below the corner.

C.4 Plastic Curtains

C.4.1 Installation

Attach plastic curtains along the entire length of vertical surface or corner on which nest building is to be deterred. Affix plastic curtain strips to treated lumber with staples spaced a minimum of 1 foot O.C. Wrap plastic curtains around lumber prior to attaching it to the structure to reduce the likelihood of it tearing out at the staples. Screw lumber into the underside of the bridge deck or top of box culvert with concrete screws placed 24-inches O.C. minimum.

C.5 Corner Slopes

C.5.1 Installation

Attach corner slopes to the structure per the manufacturer’s recommendations. Use urethane-based adhesives if manufacturer supplied hardware or adhesives are not available or no recommendations are provided. Install end caps or seal ends of corner slopes to prevent entry of birds or other animals.

C.6 Inspection and Maintenance

Inspect bird deterrent devices every two weeks both during and prior to construction when deterrents have been installed to exclude birds prior to nesting windows, and after large storm events or high winds. Ensure that netting is taut, that no gaps or holes have formed, and that the nets are functioning properly. Ensure that corner slopes are not cracked or otherwise damaged and are functioning properly. Ensure

that curtains are undamaged, with no tears, holes, or creases. Repair any damaged or loose deterrent devices. Inspect, maintain, and repair nesting deterrents whether installed by the contractor or others. Repair, replace, supplement deterrents as necessary with materials meeting the requirements of this specification.

Remove any unoccupied or partially constructed nests without eggs or nestlings.

Repair deterrents to prevent birds from attempting to nest again.

Record all inspection, removal, and maintenance activities. Provide inspection, removal and maintenance records to the engineer upon request.

C.7 Removal and Structure Repair

Maintain the deterrent until the engineer determines that the deterrent is deemed no longer necessary. Upon completion of the project, remove any remaining migratory bird deterrent from the project site. If the existing bridge or culvert is to remain after construction, restore and repair as needed by use of engineer approved fillers, sealers and paint systems.

D Measurement

The department will measure Installing and Maintaining Bird Deterrent System (Station) as a single unit at each structure, acceptably completed.

The department will measure Maintaining Bird Deterrent System (Station) as a single unit at each structure, acceptably completed.

E Payment

The department will pay for measured quantities at the contract unit price under the following bid item:

ITEM NUMBER	DESCRIPTION	UNIT
999.2000.S.01	Installing and Maintaining Bird Deterrent System Station 100+09	EACH
999.2000.S.02	Installing and Maintaining Bird Deterrent System Station 393+67	EACH

Payment for Installing and Maintaining Bird Deterrent System is full compensation for providing and installing deterrents that prevent migratory bird nesting; removing and disposing of unoccupied or partially constructed nests without eggs or nestlings; maintaining, repairing, replacing, supplementing, existing deterrent materials; repairing damage to structures resulting from installation of deterrents; removal and disposal of materials.

stp-999-200 (20240105)

25. Foundation Backfill, Item SPV.0035.01.

A Description

This special provision describes providing foundation backfill that conforms to standard spec 520.

B Materials

Furnish Foundation Backfill in accordance with standard spec 520.2.5.2.

C Construction

Place foundation backfill in layers no more than 8 inches thick after compaction to the top of the subgrade. Mechanically compact the entire length of each layer to the same degree as the material abutting the trench.

D Measurement

The department will measure Foundation Backfill by the cubic yard, acceptably completed.

E Payment

The department will pay for measured quantities at the contract unit price under the following bid item:

ITEM NUMBER	DESCRIPTION	UNIT
SPV.0035.01	Foundation Backfill	CY

Payment is full compensation for placing, shaping, and compacting.

ner-520-025 (20190409)

26. Temporary Water Diversion, C-59-117, Station 527+65.16, Item SPV.0060.01; Temporary Water Diversion, C-59-118, Station 393+66.22, Item SPV.0060.02; Temporary Water Diversion, C-59-119, Station 337+79.75, Item SPV.0060.03; Temporary Water Diversion, Culvert Pipe, Station 189+62, Item SPV.0060.04; Temporary Water Diversion, C-59-121, Station 100+09.05, Item SPV.0060.05.

A Description

This special provision describes providing temporary water diversion for Temporary Water Diversion C-59-117, Station 527+65.16; Temporary Water Diversion C-59-118, Station 393+66.22; Temporary Water Diversion C-59-119, Station 337+79.75; Temporary Water Diversion Culvert Pipe, Station 189+62; Temporary Water Diversion C-59-121, Station 100+09.05 during all stages of construction. Conform to the required standard specifications and plan. The methods used must be approved in the Erosion Control Implementation Plan (ECIP).

B Materials

Furnish materials conforming to the necessary Standard Specifications based on the method of construction.

C Construction

General

Maintain channel flow at all times and minimize erosion into the existing stream using appropriate erosion control measures. Inspect Temporary Water Diversion(s) daily to ensure proper functioning and no erosion is occurring.

Ensure all portions of Temporary Water Diversion(s) accommodate the 2-year recurrence interval stream discharge. Provide overflow through the work zone for storms that exceed the 2-year flow. The 2-year recurrence interval stream discharges are as follows:

Structure	Station	Q2 Flow (cfs)
C-59-117	527+65.16	60
C-59-118	393+66.22	65
C-59-119	337+79.75	90
Culvert Pipe	189+62	45
C-59-121	100+09.05	44

Provide hydraulic calculations and temporary water diversion plan details at each required location. Include a summary of the Temporary Water Diversion duration at each required location. All methods of diversion, calculations and plans are subject to approval as part of the ECIP.

By-Pass Pumping

If by-pass pumping is used for Temporary Water Diversion, submit the means and methods proposed for to be used during construction for approval as part of the ECIP for each location it is required. Include the following in the ECIP: how the intake will be managed to not cause an increase in the background level turbidity during pumping, equipment pumping rate capabilities, discharge energy dissipation, and erosion controls. For by-pass pumping that will extend beyond one working day, the ECIP should also include how the work zone will be managed and protected, should the pump fail, be shut down due to unacceptable water quality, or storm water flows exceed the pumping rate of equipment. After the installation of the approved by-pass pumping operation, the contractor shall demonstrate that the means and methods will pump the water at an acceptable water quality prior to starting work that necessitates the by-pass pumping.

Temporary Channel

If a temporary channel is used for Temporary Water Diversion, submit the means and methods proposed to be used during construction for approval as part of the ECIP. Properly size pipes and channels to maintain channel flow. At a minimum, line the channel with select crushed material or other means approved by the engineer to stabilize the excavated channel at each end of the temporary bypass structure. Install an impervious barrier to isolate the connection of the temporary bypass channel from the existing channel and to isolate the new culvert work area from the temporary and existing channel to prevent the 2-year storm interval from back flowing in the work area.

Restoration

Once water flow has been restored to the final location, grade, shape and finish all disturbed areas to their original existing contours or what is shown in the plan.

D Measurement

The department will measure Temporary Water Diversion C-59-117, Station 527+65.16; C-59-118, Station 393+66.22; C-59-119, Station 337+79.75; Culvert Pipe, Station 189+62; C-59-121, Station 100+09.05 by the EACH item, acceptably completed.

E Payment

The department will pay for measured quantities at the contract unit price under the following bid item:

ITEM NUMBER	DESCRIPTION	UNIT
SPV.0060.01	Temporary Water Diversion C-59-117, Station 527+65.16	EACH
SPV.0060.02	Temporary Water Diversion C-59-118, Station 393+66.22	EACH
SPV.0060.03	Temporary Water Diversion C-59-119, Station 337+79.75	EACH
SPV.0060.04	Temporary Water Diversion Culvert Pipe, Station 189+62	EACH
SPV.0060.05	Temporary Water Diversion C-59-121, Station 100+09.05	EACH

Payment is full compensation for providing hydraulic calculations, plans, installation, daily inspections, any necessary modifications to the Temporary Water Diversion operation and removal when Temporary Water Diversion operation is no longer needed and excavation, backfilling, and grading to finished grade. Any excavation, backfilling, and grading will conform to Standard Spec 205.

The department will pay separately for topsoil, seeding, fertilizer, e-mat, mulch, and any other items needed for permanent restoration.

27. Chimney Seals, Item SPV.0060.06.

A Description

The work under this item consists of furnishing and installing internal manhole chimney seals for each sanitary manhole identified on the plans.

B Material

Furnish frame-to-chimney seals as specified in the Standard Specification for Sewer and Water Construction in Wisconsin (Sixth Edition with addendum) Chapter 8.42.0.

C Construction

Install internal chimney seals according to the manufacturer's instructions.

D Measurement

The department will measure Chimney Seals by each unit, acceptably completed.

E Payment

The department will pay for measured quantities at the contract unit price under the following bid items:

ITEM NUMBER	DESCRIPTION	UNIT
SPV.0060.06	Chimney Seals	EACH

Payment is full compensation for the furnishing and installing internal rubber chimney seals.

28. Adjusting Water Valve Boxes, Item SPV.0060.07.

A Description

This special provision describes adjusting water valve boxes to final pavement elevations the plans show.

B Materials

Utilize existing valve boxes where the required extent of adjustment allows. If additional sections are necessary, coordinate with Village of Cedar Grove (Jan Hoitink, (920) 334-0163) or Town of Sheboygan Falls (Jerome Benzschawel, (920) 467-7901) to obtain required materials.

C Construction

Before completion of paving operations, adjust the water valve boxes to match the final proposed grade. Excavate and expose the existing water main valve box to the depth needed to adjust the valve box to grade, add or remove extension(s) as needed, and backfill with base aggregate material conforming to the requirements for the adjacent roadway base course construction.

Complete adjustments in such a manner to avoid any damage to the water valve boxes. Provide the Village of Cedar Grove and Town of Sheboygan Falls two working days advance notice before adjusting the valve boxes to finished grade.

D Measurement

The department will measure Adjusting Water Valve Boxes as a unit of work for each valve box, acceptably adjusted.

E Payment

The department will pay for measured quantities at the contract unit price under the following bid item:

ITEM NUMBER	DESCRIPTION	UNIT
SPV.0060.07	Adjusting Water Valve Boxes	EACH

Payment is full compensation for adjusting each valve box; excavating as necessary to access the valve box; backfilling; repairing any damage done to the valve box during adjustment; and for adding new sections if necessary.

29. Apron Endwalls for Culvert Pipe Reinforced Concrete Horizontal Elliptical 72x113-Inch, Item SPV.0060.08.

A Description

This special provision describes providing apron endwalls for culvert pipe reinforced concrete horizontal elliptical pipe sized at 72x113-Inch.

Conform to standard spec 522 as modified in this special provision.

B Materials

Furnish apron endwalls as specified in standard spec 522.

C Construction

Construct as specified in standard spec 522.

D Measurement

The department will measure Apron Endwalls for Culvert Pipe Reinforced Concrete Horizontal Elliptical 72x113-Inch by the Each, acceptably completed.

E Payment

The department will pay for measured quantities at the contract unit price under the following bid item:

ITEM NUMBER	DESCRIPTION	UNIT
SPV.0060.08	Apron Endwalls for Culvert Pipe Reinforced Concrete Horizontal Elliptical 72x113-Inch	EACH

Payment is full compensation for furnishing, excavating, constructing the foundation, installing, and backfilling the Apron Endwalls.

30. Adjusting Sanitary Manhole Covers, Item SPV.0060.09.

A Description

This special provision describes the adjustment of existing sanitary manhole covers.

B Materials

Furnish materials conforming to standard spec 611.2 and as herein provided.

Reuse the existing manhole frame and cover. If the frame or cover is damaged due to contractor operations, the contractor is to provide a new frame and cover matching the same dimensions as the existing frame and cover.

C Construction

Complete construction according to standard spec 611.3 and conforming to the Wisconsin Water and Sewer Specifications and the following:

Compact base aggregate and patching around each manhole to prevent settling.

D Measurement

The department will measure Adjusting Sanitary Manhole Covers as each individual unit, acceptably completed.

E Payment

The department will pay for measured quantities at the contract unit price under the following bid item:

ITEM NUMBER	DESCRIPTION	UNIT
SPV.0060.09	Adjusting Sanitary Manhole Covers	EACH

Payment is full compensation for providing all required materials, exclusive of frames, grates, or covers; for removing, reinstalling, and adjusting the covers and adjusting rings; notifying the local municipality; for excavating, backfilling and compaction.

Furnishing and installing internal rubber chimney seals, if required, will be paid for SEPARATELY under the Chimney Seals bid item.

31. Culvert Pipe Reinforced Concrete Horizontal Elliptical Class HE-III 72x113-Inch, Item SPV.0090.01.

A Description

This special provision describes providing culvert pipe reinforced concrete horizontal elliptical pipe sized at 72x113-Inch.

Conform to standard spec 522 as modified in this special provision.

B Materials

Furnish culvert pipe reinforced concrete horizontal elliptical as specified in standard spec 522.

C Construction

Construct as specified in standard spec 522.

D Measurement

The department will measure culvert pipe reinforced concrete horizontal elliptical pipe class HE-III 72x113-Inch by the linear foot, acceptably completed.

E Payment

The department will pay for measured quantities at the contract unit price under the following bid item:

ITEM NUMBER	DESCRIPTION	UNIT
SPV.0090.01	Culvert Pipe Reinforced Concrete Horizontal Elliptical Class HE-III 72x113-Inch	LF

Payment is full compensation for providing pipe; for joint seals, wraps, and couplers; for concrete collars not required under standard spec 520.3.1(5) or 608.3.3(10); for excavating and backfilling; and for constructing the foundation.

32. Removing Distressed Pavement Milling, Item SPV.0180.01.

A Description

This special provision describes the removal and disposal of additional 2-inches of asphaltic pavement by milling in areas of distressed pavement. This will be completed in spot locations throughout the project as directed by the engineer and as shown in the construction detail.

B (Vacant)

C Construction

C.1 Milling

Use a milling machine designed and constructed for milling pavements without tearing or gouging the underlying surface. Space the teeth on the drum to mill a surface finish that is acceptable to the engineer. Shroud the machine to prevent discharge of any loosened material into adjacent work areas or live traffic lanes. Equip the machine with electronic devices that provide accurate depth, grade, and slope control, and an acceptable dust control system.

The milling operation is to be done in a manner to prevent damage to the remaining pavement. It should result in a reasonably uniform plane surface free of excessively large scarification marks, and with the uniform transverse slope required on the plans or directed by the engineer.

Any milled surface will not be allowed during nonworking hours. Windrowing or storing of the removed milled asphaltic pavement on the road is only permitted in connection with the continuous removal and pick-up operation. During nonworking hours, clear the road of waste materials and equipment.

The removed material shall become the property of the contractor. Properly dispose of it according to standard spec 204.

C.2 Cleaning

Clean the milled surface by removing all dust, dirt, debris, or other foreign or loose material.

C.3 Pavement Prep

The cleaned milled surface will have Tack Coat applied and be filled with Asphaltic Surface.

D Measurement

The department will measure Removing Distressed Pavement Milling by the square yard, acceptably completed.

E Payment

The department will pay for measured quantities at the contract unit price under the following bid item:

ITEM NUMBER	DESCRIPTION	UNIT
SPV.0180.01	Removing Distressed Pavement Milling	SY

Payment is full compensation for removing the asphaltic surface; cleaning the milled surface; and for disposing of waste material. Tack Coat and Asphaltic Surface will be paid for separately.

BTS-204-006 (20231016)

ADDITIONAL SPECIAL PROVISION 1 (ASP 1) FOR TRANSPORTATION ALLIANCE FOR NEW SOLUTIONS (TrANS) PROGRAM EMPLOYMENT PLACEMENTS AND APPRENTICESHIPS

The Safe, Accountable, Flexible, Efficient Transportation Equity Act: A Legacy for Users (SAFETEA-LU), Section 5204(e) – Surface Transportation Workforce Development Training and Education, provides for 100 percent Federal funding if the core program funds are used for training, education, or workforce development purposes, including "pipeline" activities. The core programs includes: Congestion Mitigation and Air Quality Improvement (CMAQ) Program, Highway Bridge Program (HBP), Interstate Maintenance (IM), National Highway System (NHS), and Surface Transportation Program (STP). These workforce development activities cover surface transportation workers, including OJT/SS programs for women and minorities as authorized in 23 U.S.C. §140(b).

TrANS is an employment program originally established in 1995 in Southeastern Wisconsin. Currently TrANS has expanded to include TrANS program locations to serve contractors in Southeast (Milwaukee and surrounding counties), Southcentral (Dane County and surrounding counties including Rock County), and most Northeastern Wisconsin counties from locations in Keshena, Rhinelander and surrounding far Northern areas. TrANS attempts to meet contractor's needs in other geographic locations as possible. It is an industry driven plan of services to address the outreach, preparation, placement and retention of women, minorities and non-minorities as laborers and apprentices in the highway skilled trades. These candidate preparation and contractor coordination services are provided by community based organizations. For a list of the TrANS Coordinators contact the Disadvantaged Business Enterprise Office at (414) 438-4583 in Milwaukee or (608) 266-6961 in Madison. These services are provided to you at no cost.

I. BASIC CONCEPTS

Training reimbursements to employing contractors for new placements, rehires or promotions to apprentice of TrANS Program graduates will be made as follows:

1) **On-the-Job Training, Item ASP.1T0G, ASP 1 Graduate.** At the rate of $5.00 per hour on federal aid projects when TrANS graduates are initially hired, or seasonally rehired, as unskilled laborers or the equivalent.
   Eligibility and Duration: To the employing contractor, for up to 2000 hours from the point of initial hire as a TrANS program placement.
   Contract Goal: To maintain the intent of the Equal Employment Opportunity program, it is a goal that __6____ *(number)* TrANS Graduate(s) be utilized on this contract.

2) **On-the-Job Training, Item ASP.1T0A, ASP 1 Apprentice.** At the rate of $5.00 per hour on federal aid projects at the point when an employee who came out of the TrANS Program is subsequently entered into an apprenticeship contract in an underutilized skilled trade (this will include the Skilled Laborer Apprenticeship when that standard is implemented).
   Eligibility and Duration: To the employing contractor, for the length of time the TrANS graduate is in apprentice status.
   Contract Goal: To maintain the intent of the Equal Employment Opportunity program, it is a goal that __3____ *(number)* TrANS Apprentice(s) be utilized on this contract.

3) The maximum duration of reimbursement is two years as a TrANS graduate plus time in apprentice status.

4) If a TrANS program is not available in the contractor's area and another training program is utilized, payment of On-the-Job Training hours may be approved by the Wisconsin Department of Transportation (WisDOT) if the training program meets the established acceptance criteria. Only On-the-Job Training Hours accumulated after WisDOT approval will be reimbursed as specified under Items ASP.1T0G and ASP.1T0A. For more information, contact the Disadvantaged Business Enterprise Office at the phone numbers listed above.

5) WisDOT reserves the right to deny payments under items ASP.1T0G and ASP.1T0A if the contractor either fails to provide training or there is evidence of a lack of good faith in meeting the requirements of this training special provision.

II. RATIONALE AND SPECIAL NOTE

The $5.00 per hour now being paid for TrANS placements is intended to cover the duration of two years to allow for reaching entry-level laborer status. An additional incentive, the $5.00 rate, would promote movement into the underutilized skilled trades' apprenticeships and applies until the individual completes their apprenticeship. These incentives benefit TrANS candidates by giving them a better opportunity to enter a skilled trade; benefits contractors who will be assisted in meeting their EEO profiles and goals; and benefits the public who will see the program reinforce larger public-private employment reform in Wisconsin. The pool of TrANS graduates was created for the purpose of addressing underutilization in the skilled trades, an objective that is further reinforced by a parallel retention pilot program, known as the Companywide Reporting. *Whether or not reimbursement is involved, the WisDOT reassures contractors who are in the Companywide Program that TrANS placements still contribute toward fulfilling the new hire goal of 50% women and minorities.* Based on data administered by United States Department of Labor (US DOL), the highway skilled trades remain underutilized for women statewide (less than 6.9%); and for minorities in all counties (% varies by county).

<u>NOTE</u>: *Unless using other advancement strategies, contractors are encouraged to use some or all of this monetary incentive to offset the cut in hourly wages an individual may incur when entering an apprenticeship if the full general laborer hourly rate has been previously paid. No special accounting measures are required.*

III. IMPLEMENTATION

The implementation of ASP 1 is intended to cover only the amount of time it takes for underutilization to be resolved across the trades. This will be measured annually at the county and/or state levels using data administered by WisDWD in relation to goals set by the USDOL-OFCCP. With appropriate state and federal approvals, we may also do some measurement at the company level.

It is the contractor's responsibility to note on their Certified Payrolls if their employee is a TrANS graduate or a TrANS apprentice. The District EEO Coordinators utilize the information on the Certified Payrolls to track the hours accumulated by TrANS Graduates and TrANS apprentices on WisDOT contracts. Payment under this ASP 1 is made based on the hours recorded off of the Certified Payrolls. Tracking may eventually include improved linkages with the WisDWD apprentice database, information from company and committee level sources.

TrANS is nondiscriminatory by regulation, and is a tool for optional use by contractors to address the underutilization of women and minorities as laborers and apprentices in our industry's skilled trades.

IV. TRANS TRAINING

As part of the contractor's equal employment opportunity affirmative action program, training shall be provided to employees enrolled in apprenticeship and on-the-job training programs as follows:

The contractor shall provide on-the-job training aimed at developing full journey workers in the type of trade or job classifications involved. In the event the contractor subcontracts a portion of the contract work, the contractor shall determine how many, if any, of the trainees are to be trained by the subcontractor provided, however, that the contractor shall retain the primary responsibility for meeting the training requirements imposed by this special provision. The contractor shall also insure that this training special provision is made applicable to such subcontract.

Training and upgrading of minorities and women toward journey workers status is a primary objective of this training special provision. Accordingly, the contractor shall make every effort to enroll minority trainees and women (e.g., by conducting systematic and direct recruitment through public and private sources likely to yield minority trainees and women trainees); to the extent such persons are available within a reasonable area of recruitment. The contractor will be given an opportunity and will be responsible for demonstrating the steps that they have taken in pursuance thereof, prior to determination as to whether the contractor is in compliance with this training special provision. This training commitment is not intended, and shall not be used, to discriminate against any applicant for training, whether a member of a minority group or not.

No employee shall be employed as a trainee in any classification in which they have successfully completed a training course leading to journey workers status or in which they have been employed as a journey worker. The contractor should satisfy this requirement by including appropriate questions in the employee application or by other suitable means. Regardless of the method used, the contractor's records should document the findings in each case.

V. APPRENTICESHIP TRAINING

The Federal Highway Administration's (FHWA) policy is to require full use of all available training and skill improvement opportunities to assure increased participation of minority groups,

disadvantaged persons and women in all phases of the highway construction industry. The FHWA On-the-Job Training (OJT) Program requires the State transportation agencies (STAs) to establish apprenticeships and training programs targeted to move women, minorities, and disadvantaged individuals into journey-level positions to ensure that a competent workforce is available to meet highway construction hiring needs, and to address the historical under-representation of members of these groups in highway construction skilled crafts.

The OJT Supportive Services (OJT/SS) Program was established in Title 23 Code of Federal

Regulations (CFR), Part 230) to supplement the OJT program and support STA training programs by providing services to highway construction contractors and assistance to highway construction apprentices and trainees. The primary objectives of OJT/SS are:

(1) To increase the overall effectiveness of the State highway agencies' approved training programs.

(2) To seek other ways to increase the training opportunities for women, minorities, and disadvantaged individuals.

The STAs are responsible for establishing procedures, subject to the availability of Surface Transportation and Bridge Funds under 23 U.S.C. §140(b*)* (Nondiscrimination), for the provision of supportive services with respect to training programs approved under 23 CFR, Part 230(a*)* (Equal Employment Opportunity on Federal and Federal-aid Construction Contracts – including Supportive Services).

The contractor and subcontractor shall maintain records to demonstrate compliance with these apprenticeship requirements. Reasonable exemptions and modifications to and from any or all of these requirements will be determined by the Wisconsin Department of Transportation-Civil Rights Office. A request for an exemption or modification, with justification, shall be made in writing, addressed to WisDOT Civil Rights Office, 4802 Sheboygan Avenue, P.O. Box 7965, Rm. 451, Madison, WI 53707.

ADDITIONAL SPECIAL PROVISION 3

DISADVANTAGED BUSINESS ENTERPRISE (DBE) PROGRAM IMPLEMENTATION

Authority

Wisconsin Department of Transportation (WisDOT) is a recipient of funds from the US Department of Transportation's Federal Highway Administration. The DBE program is a federal program applicable on all contracts administered by WisDOT that include federal-aid highway funds. The authority for the DBE program is the Transportation Bill as approved by Congress periodically. DBE program guidance and requirements are outlined in the Code of Federal Regulations at 49 CFR Part 26. This contract is subject to DBE provisions because it is financed with federal-aid-highway funds. Additionally, this contract is subject to the *State of Wisconsin Standard Specifications for Highway and Structure Construction* and all applicable contract documents.

Requirements

Pursuant to the federal DBE program regulation at 49 CFR Part 26, a contractor's failure to comply with any provision of the DBE program regulatory provisions will be considered a material breach of contract. This is nonnegotiable.

If a contractor fails to carry out the DBE program requirements and/or the Required Contract Provisions for Federal Aid Contracts (FHWA 1273) referenced in this document, sanctions will be assessed depending upon the facts, reasoning, severity, and remedial efforts of the contractor that may include: termination of contract, withholding payment, assessment of monetary sanctions, and/or suspension/debarment proceedings that could result in the disqualification of the contractor from bidding for a designated period of time.

(1) The Commitment to Subcontract to DBE (Form DT1506 or digital submittal), Attachments A, and Good Faith Effort Documentation (Form DT1202) will be submitted as described in Section 2.
(2) Any change to DBE Commitments thereafter must follow modification of DBE subcontracting commitment as described in Section 9.
(3) The Department requires this list of DBE subcontractors from all bidders at time of bid to ensure the lowest possible cost to taxpayers and fairness to other bidders and subcontractors. Bid shopping is prohibited.
(4) The contractor must utilize the specific DBE firms listed in the approved DBE Commitment to perform the work and/or supply the materials for which the DBE firm is listed unless the contractor obtains written consent in advance from WisDOT. The contractor will not be entitled to payment for any work or materials on the approved DBE Commitment that is not performed or supplied by the listed DBE without WisDOT's written consent.

Description

The Wisconsin Department of Transportation is committed to the compliant administration of the DBE Program. The DBE provisions work in tandem with FHWA 1273 and WisDOT's *Standard Specifications for Highway and Structure Construction* and *Construction and Materials Manual*. The WisDOT Secretary is signatory to assurances of department-wide compliance.

The Department assigns the contract DBE goal as a percentage of work items that could be performed by certified DBE firms on the contract. The assigned DBE goal is expressed on the bid proposal as a percentage applicable to the total contract bid amount.

(1) WisDOT identifies the assigned DBE goal in its contract advertisements and posts the contract DBE goal on the cover of the bidding proposal. The contractor can meet the assigned contract DBE goal by subcontracting work to a DBE firm or by procuring services or materials from a DBE firm.

(2) Under the contract, the prime contractor should inform, advise, and develop participating DBE firms to be more knowledgeable contractors who are prepared to successfully complete their contractual agreement through the proactive provision of assistance in the following areas:

- Produce accurate and complete quotes
- Understand highway plans applicable to their work
- Understand specifications and contract requirements applicable to their work
- Understand contracting reporting requirements

(3) The Department encourages contractors to assist DBE subcontractors more formally by participating in WisDOT's Business Development program as a mentor, coach, or resource. For comprehensive information on the Disadvantaged Business Enterprise Program, visit the Department's Civil Rights and Compliance Section website at: http://wisconsindot.gov/Pages/doing-bus/civil-rights/dbe/default.aspx

1. Definitions

Interpret these terms, used throughout this additional special provision, as follows:

a. **Assigned DBE Contract Goal:** The percentage shown on the cover of the Highway Work Proposal that represents the feasible level of DBE participation for each contract. The goal is calculated using the Engineer's Estimate and DBE Interest Report. Goal assignment includes review of FHWA funds, analyzes bid items for subcontract opportunity and compatibility with DBE certified firm work codes. Additional factors considered include proximity, proportion, and regulations.

b. **Bid Shopping:** In construction law, bid shopping is the practice of divulging a subcontractor's bid to another prospective contractor(s) before or after the award of a contract to secure a lower bid.

c. **DBE:** Disadvantaged Business Enterprise – A for-profit small business concern where socially and economically disadvantaged individuals own at least a 51% interest and control management and daily business operations.

d. **DBE Commitment:** The DBE Commitment is identified in the Commitment to Subcontract to DBE (Form DT1506) and is expressed as the amount of DBE participation the prime contractor has secured. The DT1506, a contract document completed by the bidder, is required to be considered a responsive bidder on an FHWA-funded contract that has an assigned DBE goal. The prime contractor will have the option to submit the DT1506 digitally, as an entry with the bid in Bid Express, or as an attachment to the bid.

e. **DBE Utilization:** The actual participation of a DBE subcontractor on a project. WisDOT verifies DBE utilization through review of the DBE Commitment, payments to subcontractors, and contract documentation. The Prime Contractor receives DBE credit for payments made to the DBE firms performing the work listed on the approved DBE Commitment, and those submitted after approved commitment with Attachment A.

f. **Good Faith Effort:** Legal term describing a diligent and honest effort taken by a reasonable person under the same set of facts or circumstances. For DBE subcontracting, the bidder must show that it took all necessary and reasonable steps to achieve the assigned DBE goal by the scope, intensity, and appropriateness of effort that could reasonably be expected for a contractor to obtain sufficient DBE participation.

g. **Manufacturer:** A firm that operates or maintains a factory or establishment that produces, on the premises, the materials, supplies, articles, or equipment required under the contract.

h. **Reasonable Price:** Contractors are expected to assess reasonable price by analyzing the contract scope for DBE subcontract feasibility and comparing common line items in DBE and non-DBE subcontract quotes for the same work. Per federal regulation, reasonable price is not necessarily the lowest price.

i. **Supplier:** A firm that owns, operates, or maintains a store, warehouse, or other establishment in which the materials, supplies, articles, or equipment required under the contract are bought, kept in stock, and regularly sold or leased to the public.

j. **Tied quote:** Subcontractor quote that groups multiple bid/line items at a bundled/package price with a notation that the items within the quote will not be separated.

2. WisDOT DBE Program Compliance

a. Documentation Submittal

- The Commitment to Subcontract to DBE (Form DT1506 or digital submittal) must be submitted at the time of bid (Tuesday) by all prime contractors.
- Attachments A OR quotes from all DBEs included in the Commitment must be submitted at bid (Tuesday) **OR**
- Within one-hour following bid submittal by ALL prime contractors via eSubmit (Tuesday).
- If only DBE quotes were submitted, all remaining signed Attachments A must be submitted within 24-hours of bid closing via eSubmit (Wednesday).
- If the assigned DBE contract goal is not met, Documentation of Good Faith Effort (Form DT1202) and supporting documentation must be submitted within 24-hours of bid closing (Wednesday) via eSubmit. Instructions for eSubmit.

**Bidders have the option of submitting the DBE Commitment at the time of bid via direct entry through Bid Express OR with attachment of Form DT1506 (Commitment to Subcontract to DBE). The DBE Commitment entered with bid is the digital form of the DT1506. Separate submission of Form DT1506 is not required if the DBE Commitment is entered in Bid Express. Form DT1202, if applicable, is no longer required to be submitted at time of bid; submit DT1202 within the 24-hour supplemental time frame following bid closing.

The DBE Office will not certify Good Faith Effort and the Bureau of Project Development will consider the bid nonresponsive if the contractor fails to furnish the DBE Commitment (digitally entered into the bid OR Form DT1506 as an attachment), Attachments A, and Form DT1202 if applicable, as required. See sample forms in the Appendix.

b. Verification of DBE Commitment

The documentation related to DBE subcontract commitment submitted prior to contract award is evaluated as follows:

(1) DBE Goal Met

If the bidder indicates that the contract DBE goal is met, the Department will evaluate the DBE Commitment submitted with bid OR Form DT1506, and Attachments A to verify the actual DBE percentage calculation. If the DBE Commitment is verified, the contract is eligible for award with respect to the DBE Commitment.

(2) DBE Goal Not Met

a) If the bidder indicates a bid percentage on the DBE Commitment that does not meet the assigned DBE contract goal, the bidder must request alternative evaluation of good faith effort through submission of Form DT1202 (Documentation of Good Faith Effort) within 24-hours of bid including narrative description. Supplementary documentation of good faith effort that supports the DT1202 submission is also due within 24-hours of bid submission and prior to bid posting. The Department will review the bidder's DBE Commitment and evaluate the bidder's good faith efforts submission.

b) Following evaluation of the bidder's Good Faith Effort documentation the bidder will be notified that the Department intends to:

1. *Approve* the request (adequate documentation of GFE has been submitted) - no conditions placed on the contract with respect to the DBE Commitment;
2. *Deny* the request (inadequate documentation of GFE has been submitted) - the contract is viewed as non-responsive per Wisconsin Standard Specifications for Highway and Structure Construction and will not be executed.

c) If the Department denies the bidder's request, the contract is ineligible for award. The Department will provide a written explanation for denying the request to the bidder. The bidder may appeal the Department's denial (see Section 4).

Supplemental good faith effort documentation must be submitted through eSubmit.

3. Department's Criteria for Good Faith Effort Documentation

The Federal-aid Construction Contract Provision, referenced as FHWA-1273, explicitly states that the prime contractor shall be responsible for all work performed on the contract by piecework, station work, or subcontract.

The contractor shall take all necessary and reasonable steps to ensure nondiscrimination in the administration of the contract including assurances of equal employment opportunity laws, DBE regulations, and affirmative action. Compliance encompasses responsible and responsive action, documentation, and good faith effort.

Contractually, all contractors, subcontractors, and service providers on the contract are bound by FHWA 1273 and DBE program provisions. **Prime contractors should encourage subcontractors to utilize DBE firms whenever possible to contribute to the assigned DBE contract goal.**

Bidders are required to document good faith effort. Per 49 CFR Part 26.53, good faith effort is demonstrated in one of two ways. The bidder:

(1) Documents that it has obtained enough DBE participation to meet the goal; OR

(2) Documents that it made adequate good faith efforts to meet the goal, even though it did not succeed

Appendix A of 49 CFR Part 26 provides guidance concerning good faith efforts. WisDOT evaluates good faith effort on a contract basis just as each contract award is evaluated individually.

The efforts employed by the bidder should be those that WisDOT can reasonably expect a bidder to take to actively and aggressively obtain DBE participation sufficient to meet the DBE contract goal. The Department will only approve demonstration of good faith effort if the bidder documents the quality, quantity, and intensity of the variety of activities undertaken that are commensurate with expected efforts to meet the stated goal.

The Department, in conjunction with industry stakeholders, has developed the following guidance for contractor good faith effort activity. The guidance and the attached appendices provide a framework for the actions required by all parties in the processing and evaluation of bidder's total efforts to achieve the project specific DBE goal prior to the bid letting date.

a. Solicitation Guidance for Prime Contractors:

(1) Document all efforts and decisions made toward achieving the DBE goal on the contract. The bidder should use WisDOT-approved DBE outreach tools, including the UCP DBE Directory and the Bid Express Small Business Network to foster DBE participation on all applicable contracts.

(2) As needed, request assistance with DBE outreach and follow-up by contacting the Department's DBE Support Services Office by phone or email request at least 14 days prior to the bid letting date. Phone numbers are (414) 438-4584 and/or (608) 267-3849; Fax: (414) 438-5392; E-mail: DBE_Alert@dot.wi.gov

(3) Participate in and document a substantive conversation with at least one DBE firm per Let, to discuss questions, concerns, and any other contract related matters that may be applicable to the DBE firm. Guidelines for this conversation are provided in Appendix A of ASP-3.

(4) Request quotes by identifying potential items to subcontract and solicit. In their initial contacts, contractors are strongly encouraged to include a single page, detailed list of items for which they are accepting quotes, by project, within a letting. *See attached sample entitled "Sample Contractor Solicitation Letter" in* Appendix B. Prime contractors should also indicate a willingness to accept quotes in areas they are planning to perform themselves, as required by federal rules. In some cases, it might be appropriate to use DBE firms to do work in a prime contractor's area of specialization.

i. Solicit quotes from certified DBE firms who match possible items to subcontract using all reasonable and available means. Additionally, forward copies of solicitations highlighting the work areas for which quotes are being sought to DBE_Alert@dot.wi.gov

ii. Acceptable outreach tools include SBN (Small Business Network, see Appendix C): https://www.bidx.com/wi/main, postal mail, email, fax, and phone.

a. Contractors must ask DBE firms for a response in their solicitations. See *Sample Contractor Solicitation Letter,* Appendix B. This letter may be included as an attachment to the sub-quote request.

b. Solicit quotes at least 10 calendar days prior to the letting date to allow DBE firms sufficient time to respond. Prime contractors should contact DBE firms early, asking if they need help organizing their quote, assistance confirming equipment needs, or other assistance supporting their submission of a competitive quote for their services.

c. A follow up solicitation should take place within 5 calendar days of the letting date. Email and/or SBN are the preferred method for the solicitation.

iii. Upon request, provide interested DBE firms with adequate information about plans, specifications, and the requirements of the contract by letter, information session, email, phone call, and/or referral.

iv. When potential exists, the contractor should advise interested DBE firms on how to obtain bonding, line of credit, or insurance if requested.

v. Document DBE firm's interest in quoting by taking appropriate steps to follow up initial solicitation with:

a. Email to all prospective DBE firms in relevant work areas

b. Phone call log to DBE firms who express interest via written response or call

c. Fax/letter confirmation

d. Signed copy of record of subcontractor outreach effort

b. Guidance for Evaluating DBE quotes

(1) Quote evaluation practices required to evaluate DBE quotes:

i. Reasonable Price**:** Contractors are expected to assess reasonable price by analyzing the contract scope for DBE subcontract feasibility and comparing common line items in DBE and non-DBE subcontract quotes for the same work. Per federal regulation, reasonable price is not necessarily the lowest price. See 49 CFR Part 26, Appendix A. IV.D(2).

(2) Documentation submitted by the prime of the following evaluation is required to evaluate DBE quotes by contractors:

i. Evaluation of DBE firm's ability to perform "possible items to subcontract" using legitimate reasons, including but not limited to, ***a discussion*** between the prime and DBE firm regarding its capabilities prior to the bid letting. If lack of capacity is the reason for not utilizing the DBE firm's quote, the prime is required to contact the DBE by phone and email regarding their ability to perform the work indicated in the UCP directory listed as their work area by NAICS code. Only the work area indicated by the NAICS code(s) listed in the UCP directory can be counted toward DBE credit. Documentation of the conversation is required.

a In striving to meet an assigned DBE contract goal, contractors are expected to use DBE quotes that are responsive and reasonable. This includes DBE quotes that are not the low quote.

b Additional evaluation - Evaluation of DBE quotes with tied bid items. Typically, this type of quoting represents a cost saving but is not clearly stated as a discount. Tied quotes are usually presented as an 'all or none' quote. When non-DBE subcontractors submit tied bid items in their quotes, the DBE firm's quote may not appear competitive. In such a case, the following steps are taken in comparing the relevant quotes. These are qualitative examples:

i Compare bid items common to both quotes, noting the reasonableness in the price comparison.

ii Review quotes from other firms for the bid items not quoted by the DBE firm to see if combining both can provide the same competitive advantage that the tied bid items offered.

See Appendix D – *Good Faith Effort Evaluation Measures* and Appendix E - *Good Faith Effort Best Practices.*

c. Requesting Good Faith Effort Evaluation At the time of bid- if the DBE goal is not met in full, the prime contractor must indicate they will file form DT1202- Documentation of Good Faith Effort within 24-hours of bid submission. Supplementary documentation of good faith effort that supports the DT1202 submission is also due within 24-hours of bid submission and prior to bid posting. Supporting documentation for the DT1202 is to include the following:

(1) Solicitation Documentation: The names, addresses, email addresses, and telephone numbers of DBE firms contacted along with the dates of both initial and follow-up contact; electronic copies of all written solicitations to DBE firms. A printed copy of SBN solicitation is acceptable.

(2) Selected Work Items Documentation: Identify economically feasible work units to be performed by DBEs to include activities such as: list of work items to be performed; breaking up of large work items into smaller tasks or quantities; flexible time frames for performance and delivery schedules.

(3) Documentation of Project Information provided to interested DBEs: A description of information provided to the DBE firms regarding the plans, specifications, and estimated quantities for portions of the work to be performed by that DBE firm.

(4) Documentation of Negotiation with Interested DBEs: Provide sufficient evidence to demonstrate that good faith negotiations took place. Merely sending out solicitations requesting bids from DBEs does not constitute sufficient good faith efforts.

(5) Documentation of Sound Reasoning for Rejecting DBEs and copies of each quote received from a DBE firm and, if rejected, copies of quotes from non-DBEs for same items.

(6) Documentation of Assistance to Interested DBEs- Bonding, Credit, Insurance, Equipment, Supplies/Materials

(7) Documentation of outreach to Minority, Women, and Community Organizations and other DBE Business Development Support: Contact organizations and agencies for assistance in contacting, recruiting, and providing support to DBE subcontractors, suppliers, manufacturers, and truckers at least 14 days before bid opening. Participate in or host activities such as networking events, mentor-protégé programs, small business development workshops, and others consistent with DBE support.

If the Good Faith Effort documentation is deemed adequate, the request will be approved and the DBE office will promptly notify the Prime Contractor and Bureau of Project Development.

If the DBE Office denies the request, the Prime Contractor will receive written correspondence outlining the reasons. The Department encourages the Prime Contractor to communicate with DBE staff to clarify any questions related to meeting goals and/or contractor demonstration of good faith efforts.

If the contract is awarded, the Prime Contractor must obtain written consent from the DBE Office to change or replace any DBE firm listed on the approved DBE Commitment. No contractor, prime or subsequent tier, shall be paid for completing work assigned to a DBE subcontractor on an approved DBE Commitment unless WisDOT has granted permission for the reduction, replacement, or termination of the assigned DBE in writing. If a prime contractor or a subcontractor on any tier uses its own forces to perform work assigned to a DBE on an approved DBE Commitment, **they will not be paid for the work**. Any changes to DBE Commitment after the approval of the DBE Commitment must be reviewed and approved by the DBE Office prior to the change (see Section 9).

Additional resources for demonstrating and tracking good faith effort can be found on the “Contracting with a DBE” webpage in the ASP-3 and Good Faith Effort Guidance section.

4. Bidder's Documentation of Good Faith Effort Evaluation Request Appeal Process

A bidder can appeal the Department's decision to deny the bidder's demonstration of Good Faith Effort through Administrative Reconsideration. The bidder must provide a written justification refuting the specific reasons for denial as stated in the Department's denial notice. The bidder may meet in person with the Department if so requested. Failure to appeal within 5 business days after receiving the Department's written notice denying the request constitutes a forfeiture of the bidder's right of appeal. Receipt of appeal is confirmed by email date stamp or certified mail signed by WisDOT staff. A contract will not be executed without documentation that the DBE provisions have been fulfilled.

The Department will appoint a representative who did not participate in the original good faith effort determination, to assess the bidder's appeal. The Department will issue a written decision within 5 business days after the bidder presents all written and oral information. In that written decision, the Department will explain the basis for finding that the bidder did or did not demonstrate an adequate good faith effort to meet the contract DBE goal. The Department's decision is final.

5. Determining DBE Eligibility

Directory of DBE firms

a. The only resource for DBE firms certified in the State of Wisconsin is the Wisconsin Unified Certification Program (UCP) DBE Directory. WisDOT maintains a current list of certified DBE firms at: http://wisconsindot.gov/Documents/doing-bus/civil-rights/dbe/dbe-ucp-directory.xlsx

b. The DBE Program office is available to assist with contracting DBE firms:(608) 267-3849.

c. DBE firms are certified based on various factors including the federal standards from the Small Business Administration that assigns a North American Industrial Classification (NAICS) Codes. DBE firms are only eligible for credit when performing work in their assigned NAICS code(s). If a DBE subcontractor performs work that is not with its assigned NAICS code, the prime contractor should contact the DBE Office to inquire about compatibility with the Business Development Program.

6. Counting DBE Participation

Assessing DBE Work

The Department will only count the DBE usage towards the contract DBE goal if the DBE firm is certified as a DBE by one of the UCP agencies. The Department only counts the value of the work a DBE actually performs towards the DBE goal. The Department assesses the DBE work as follows:

a. The Department counts work performed by the DBE firm's own resources. The Department includes the cost of materials and supplies the DBE firm obtains for the work. The Department also includes the cost of equipment the DBE firm leases for the work. The Department will not include the cost of materials, supplies, or equipment the DBE firm purchases or leases from the prime contractor or its affiliate, with the exception of non-project specific leases the DBE has in place before the work is advertised.

b. The Department counts fees and commissions the DBE subcontractor charges for providing bona fide professional, technical, consultant, or managerial services. The Department also counts fees and commissions the DBE charges for providing bonds or insurance. The Department will only count costs the program engineer deems reasonable based on experience or prevailing market rates.

c. If a DBE firm subcontracts work, the Department counts the value of the work subcontracted to a DBE subcontractor.

d. The contractor will maintain records and may be required to furnish periodic reports documenting its performance under this item.

e. It is the Prime Contractor's responsibility to determine whether the work that is committed and/or contracted to a DBE firm can be counted for DBE credit by referencing the work type and NAICS code listed for the DBE firm on the Wisconsin UCP DBE Directory.

f. It is the Prime Contractor's responsibility to assess the DBE firm's ability to perform the work for which it is committing/contracting the DBE to do. Note that the Department encourages the Prime Contractor to assist and develop DBE firms to become fully knowledgeable contractors to successfully perform on its contracts.

g. The Prime Contractor will inform the DBE office via email of all DBE subcontractors added to the project following execution of the contract. The Prime Contractor may omit submission of another form DT1506, but must submit signed Attachment A forms for additional DBE firms.

h. See Section 7 for DBE credit evaluation for Trucking and Section 8 for DBE credit evaluation for Manufacturers, Suppliers, and Brokers

Naming conventions: When emailing files, please use the following language to identify your submission- "Project #, Proposal #, Let date, Business Name, Attachment A" Email: DBE_Alert@dot.wi.gov

*Note: A sublet request is required for DBE work, regardless of subcontract tier, and also for reporting materials or supplies furnished by a DBE.

- Sublet Requests via form DT1925 or WS1925 are required for 1st Tier DBEs
- For all 2nd Tier and below notification of DBE sublet is indicated by the contractor entering them in CRCS

7. Credit Evaluation for Trucking

All bidders are expected to adhere to the Department's current trucking policy posted on the HCCI website at: http://wisconsindot.gov/Documents/doing-bus/civil-rights/dbe/trucking-utilization-policy.pdf

The prime contractor is responsible for ensuring that all subcontractors including trucking firms, receive Form FHWA 1273: https://www.fhwa.dot.gov/programadmin/contracts/1273/1273.pdf

See Section 8 for Broker credit.

8. Credit Evaluation for Manufacturers, Suppliers, Brokers

The Department will calculate the amount of DBE credit awarded to a prime using a DBE firm for the provisions of materials and supplies on a contract-by-contract basis. The Department will count the material and supplies that a DBE firm provides under the contract for DBE credit based on whether the DBE firm is a manufacturer, supplier, or broker. Generally, DBE credit is determined through evaluation of the DBE owner's role, responsibility, and contribution to the transaction. Maximum DBE credit is awarded when the DBE firm manufactures materials or supplies. DBE credit decreases when the DBE firm solely supplies materials, and minimal credit is allotted when the DBE firm's role is administrative or transactional. It is the bidder's responsibility to confirm that the DBE firm is considered a supplier or a manufacturer before listing them on Commitment to Subcontract to DBE form DT1506 or DBE Commitment submitted with the bid.

a. Manufacturers

(1) A manufacturer is a firm that operates or maintains a factory or establishment that produces, on the premises, the materials, supplies, articles, or equipment required under the contract and of the general character described by the specifications.

(2) If the materials or supplies are obtained from a DBE manufacturer, **100%** percent of the cost of the materials or supplies counts toward DBE goals.

b. Regular Dealers of Material and/or Supplies

(1) A regular dealer is a firm that owns, operates, or maintains a store, warehouse, or other establishment in which the materials, supplies, articles or equipment of the general character described by the specifications

and required under the contract are bought, kept in stock, and regularly sold or leased to the public in the usual course of business.

(2) If the materials or supplies are purchased from a DBE regular dealer, count **60%** percent of the cost of the materials or supplies toward DBE goals.

(3) At a minimum, a regular dealer must meet the following criteria to be counted for DBE credit:

i. The DBE firm must be an established, regular business that engages, as its principal business and under its own name, in the purchase and sale or lease of the products in question.

ii. The DBE firm must both own and operate distribution equipment for the product--bulk items such as petroleum products, steel, cement, gravel, stone, or asphalt. If some of the distribution equipment is leased, the lease agreement must accompany the DBE Commitment form for evaluation of the dealer's control before the DBE office approves the DBE credit.

(4) When DBE suppliers are contracted, additional documentation must accompany the DBE Commitment and Attachment A forms. An invoice or bill-of-sale that includes names of the bidder and the DBE supplier, along with documentation of the calculations used as the basis for the purchase agreement, subcontract, or invoice. WisDOT recognizes that the amount on the Attachment A form may be more or less than the amount on the invoice per b.(1) above.

i. The bidder should respond to the following questions and include with submission of form DT1506 or the DBE Commitment entered with bid:

a. What is the product or material?

b. Is this item in the prime's inventory or was the item purchased when contract was awarded?

c. Which contract line items were referenced to develop this quote?

d. What is the amount of material or product used on the project?

(5) Supplies purchased in **bulk** from DBE firms at the beginning of the season may be credited to current contracts if submitted with appropriate documentation to the DBE office.

i. To ensure that the appropriate credit is assigned, follow the procedure below:

a. When DBE suppliers are contracted for bulk supply or commodity purchases, an invoice or bill-of-sale that includes names of the contractor and the DBE supplier should be submitted to the DBE Office via eSubmit (preferred during letting) or the DBE_Alert email box. The supply/commodity credit may be applied during the federal fiscal year (October- September) in which the purchase was made.

b. When the contractor intends to apply the credit to a particular project, submit a copy of the original invoice, documentation of the calculations for supplies/commodities to be used on the project, and an Attachment A. Indicate on the Attachment A:

c. This supply/commodity is in the prime's inventory or pre-paid in case of commodities

d. The full value of the original invoice submitted to the DBE Office, above in (1)

e. The amount of material or product used on this project

f. Fuel estimate listed on Attachment A will be recorded as a deduction from the full fuel purchase amount shown on the invoice

ii. DBE Office Process (Applies only to bulk purchases)

a. Supply/Commodity commitment is received

b. Engineer verifies amount listed on invoice and enters the full amount into spreadsheet

c. The amount of credit applied for each project is updated on the spreadsheet until the bulk purchase is exhausted

d. Engineer informs contractor when full amount of bulk purchase has been applied

c. Brokers, Transaction Expediters, Packagers, Manufacturers' Representatives

(1) No portion of the cost of the materials, supplies, services themselves will count for DBE credit. However, WisDOT will evaluate the fees or commissions charged when a prime purchases materials, supplies, or services from a DBE certified firm which is neither a manufacturer nor a regular dealer, namely: brokers, packagers, manufacturers' representatives, or other persons who arrange or expedite transactions.

(2) Brokerage fees are calculated as **10%** of the purchase amount.

(3) WisDOT may count the amount of fees or commissions charged for assistance in the procurement of the materials and supplies, fees, or transportation charges for the delivery of materials or supplies required on a job site.

(4) Evaluation of DBE credit includes review of the contract need for the item/service, the sub-contract or invoice for the item/service, and a comparison of the fees customarily allowed for similar services to determine whether they are reasonable.

9. DBE Commitment Modification Policy (Formerly "DBE Replacement Policy")

a. Issuing a Contract Change Order

Any changes or modifications to the contract once executed are considered contract modifications and as such require a change order. In addition, the DBE office must provide consent for reduction, termination, or replacement of subcontractors approved on the DBE Commitment *in advance* of the modification for the prime contractor to receive payment for work or supplies. Additions to the DBE Commitment do not require advance notification of the DBE office. (see below e. DBE Utilization beyond the approved DBE Commitment)

b. Contractor Considerations

(1) A prime contractor cannot modify the DBE Commitment through reduction in participation, termination, or replacement of a DBE subcontractor listed on the approved DBE Commitment without prior written consent from the DBE Office. This includes, but is not limited to, instances in which a prime contractor seeks to perform work originally designated for a DBE subcontractor with its own forces or those of an affiliate, a non-DBE firm, or with another DBE firm.

(2) If a prime contractor reduces participation, replaces, or terminates a DBE subcontractor who has been approved for DBE credit toward its contract, the prime is required to provide documentation supporting its inability to fulfill the contractual commitment made to the Department regarding the DBE utilization.

(3) The Prime Contractor is required to demonstrate efforts to find another DBE subcontractor to perform at least the same amount of work under the contract as the DBE subcontractor that was terminated, to the extent needed to meet the assigned DBE contract goal. When additional opportunity is available by contract modifications, the Prime Contractor must utilize DBE subcontractors that were committed to equal work items, in the original contract.

(4) In circumstances when a DBE subcontractor fails to complete its work on the contract for any reason, or is terminated from a contract, the Prime Contractor must undertake efforts to maintain its commitment to the assigned DBE goal.

(5) The DBE subcontractor should communicate with the Prime Contractor regarding its schedule and capacity in the context of the contract. If the DBE firm anticipates that it cannot fulfill its subcontract, they will advise the Prime Contractor and suggest a DBE subcontractor that may replace their services and provide written consent to be released from its subcontract.

i. Before the Prime Contractor can request modification to the approved DBE Commitment, the Prime Contractor must:

a. Make every effort to fulfill the DBE Commitment by working with the listed DBE subcontractor to ensure that the firm is fully knowledgeable of the Prime Contractor's expectations for successful performance on the contract. Document these efforts in writing.

b. If those efforts fail, provide written notice to the DBE subcontractor of the Prime Contractor's intent to request to modify the Commitment through reduction in participation, termination, and/or replacement of the subcontractor including the reason(s) for pursuing this action.

c. Copy the DBE Office on all correspondence related to changing a DBE subcontractor who has been approved for DBE credit on a contract, including preparation and coordination efforts.

d. Clearly state the amount of time the DBE firm has to remedy and/or respond to the notice of intent to replace/terminate. The DBE must be allowed five days from the date notice was received as indicated by email time stamp or signed certified mail, to respond, in writing. EXCEPTION: The Prime Contractor must provide a verifiable reason for a response period shorter than five days. For example, a WisDOT project engineer or project manager confirms that WisDOT has eliminated an item the DBE subcontractor was contracted for.

e. The DBE subcontractor must acknowledge the contract modification with written response to the Prime Contractor and the DBE Office. If objecting to the subcontract modification, the DBE subcontractor must outline the basis for objection to the proposed modification, providing sound reasoning for WisDOT to reject the prime's request.

c. Request to Modify DBE Subcontracting Commitment

The written request referenced above may be delivered by email or fax. The request must contain the following:

(1) Project ID number

(2) WisDOT Contract Project Engineer's name and contact information

(3) DBE subcontractor name and work type and/or NAICS code

(4) Contract's progress schedule

(5) Reason(s) for requesting that the DBE subcontractor be replaced or terminated

(6) Attach/include all communication with the DBE subcontractor to deploy/address/resolve work completion

Naming conventions: When emailing files, please use the following language to identify your submission- "Project #, Proposal #, Let date, Business Name, MODIFICATION" Email: DBE_Alert@dot.wi.gov + Project Engineer

WisDOT will review the request and any supporting documentation submitted to evaluate if the circumstance and the reasons constitute good cause for replacing or terminating the approved DBE subcontractor.

Good Causes to Replace a DBE subcontractor according to the federal DBE program guidelines {49 CFR part 26.53}

- The listed DBE subcontractor fails or refuses to execute a written contract
- The listed DBE subcontractor fails or refuses to perform the work of its subcontract in a way consistent with normal industry standards. Provided, however, that good cause does not exist if the failure or refusal of the DBE subcontractor to perform its work on the subcontract results from the bad faith or discriminatory action of the prime contractor
- The listed DBE subcontractor fails or refuses to meet the prime contractor's reasonable, nondiscriminatory bond requirements
- The listed DBE subcontractor becomes bankrupt, insolvent, or exhibits credit unworthiness
- The listed DBE subcontractor is ineligible to work on public works projects because of suspension and debarment proceedings pursuant 2 CFR Parts 180, 215, and 1,200 or applicable state law
- The prime has determined that the listed DBE subcontractor is not a responsible contractor
- The listed DBE subcontractor voluntarily withdraws from the project and provides written notice of its withdrawal
- The listed DBE subcontractor is ineligible to receive DBE credit for the type of work required

- A DBE firm owner dies or becomes disabled with the result that the listed DBE subcontractor is unable to complete its work on the contract.

d. Evaluation and Response to the Request

WisDOT's timely response to the Prime Contractor's request for modification of the approved DBE Commitment will be provided to the prime and the WisDOT project engineer via email.

If WisDOT determines that the Prime Contractor's basis for reduction in participation, replacement, or termination of the DBE subcontractor is not consistent with the good cause guidelines, the DBE office will provide a response via email within 48-hours of receipt of request from the Prime Contractor as indicated by email time stamp. The communication will include: the requirement to utilize the committed DBE, actions to support the completion of the contractual commitment, a list of available WisDOT support services, and administrative remedies, including withholding payment to the prime, that may be invoked for failure to comply with federal DBE guidelines for DBE replacement.

The WisDOT contact for all actions related to modification of the approved DBE Commitment is the DBE Program Engineer who can be reached at DBE_Alert@dot.wi.gov or (414) 335-0413.

e. DBE Utilization beyond the approved DBE Commitment

When the prime or a subcontractor increases the scope of work for an approved DBE subcontractor or adds a DBE subcontractor who was not on the approved form DT1506 or DBE Commitment submitted with bid at any time after contract execution, this is referred to as voluntary DBE contract goal achievement. The contractor must follow these steps to ensure that the participation is accurately credited toward the DBE goal:

(1) Forward a complete, signed Attachment A form to the DBE Office. A complete Attachment A includes DBE subcontractor contact information, signatures, subcontract value, and description of the work areas to be performed by the DBE. The DBE Office will verify the DBE participation and revise the DBE Commitment based on the email/discussion and the new Attachment A.

(2) When adding to an existing DBE Commitment, submit a new Attachment A to the DBE Alert mailbox

(3) OR Submit a final Attachment A to DBE Alert during the Finals Process when Compliance receives notice of "Substantially Complete"

Naming conventions: When emailing files, please use the following language to identify your submission- "Project #, Proposal #, Let date, Business Name, New Attachment A" Email: DBE_Alert@dot.wi.gov

Special note on trucking

- DBE truckers added to the sublets in CRCS *will* be approved without DBE credit (You will see a "N" in CRCS instead of "Y")
- Prime Contractors may enter a "place holder" e.g. $1000.00, for DBE Trucking in CRCS if the full amount of trucking is unknown for sublet purposes only
- The hiring contractor may obtain the Attachment A with DBE signature included but the **Prime Contractor** must sign the Attachment A before submitting
- DBE truckers need to be added to the DBE commitment once. If the DBE trucker is on the initial commitment (DT1506/E1506) there is no requirement to submit another Attachment A for that trucker for that contract.

10. Commercially Useful Function

a. Commercially Useful Function (CUF) is evaluated after the contract has been executed, while the DBE certified firm is performing contracted work items.

b. The Department uses Form DT1011, DBE Commercially Useful Function Review and Certification to evaluate if the DBE is performing a commercially useful function. WisDOT counts expenditures of a DBE toward the DBE goal only if the DBE is performing a commercially useful function on that contract.

c. A DBE firm is performing a commercially useful function if the following conditions are met:

(1) For contract work, the DBE is responsible for executing a distinct portion of the work and is carrying out its responsibilities by actually performing, managing, and supervising that work.

(2) For materials and supplies, the DBE is responsible for negotiating price, determining quality and quantity, ordering, and paying for those materials and supplies.

d. Offsite Hauling – when DBE truck will haul between a pit and plant or location other than the construction site associated with the commitment

(1) Indicate Offsite Hauling on Attachment A

(2) Discuss offsite hauling at weekly progress meetings with Project Engineer (PE)

(3) PE conducts spot checks of pits/plants to verify DBE truck is hauling and/or verifying hauling log

(4) Prime should be prepared to submit haul tickets, plant/pit tickets, timecards, and other pertinent documentation if requested by PE or DBE Office

11. Credit Evaluation for DBE Primes

WisDOT calculates DBE credit based on the amount and type of work performed by DBE certified firms for work submitted with required documentation. If the prime contractor is a DBE certified firm, the Department will only count the work that the DBE prime performs with its own forces for DBE neutral credit. The Department will also calculate DBE credit for work performed by any other DBE certified subcontractor, DBE certified supplier, and DBE certified manufacturer on the contract in each firm's approved NAICS code/work areas that are submitted with required documentation. Crediting for manufacturers and suppliers is calculated consistent with Section 8 of this document and 49 CFR Part 26.

12. Joint Venture

A joint venture is an association of a DBE firm and one or more other firms to carry out a single, for-profit business enterprise, for which the parties combine their property, capital, efforts, skills and knowledge, and in which the DBE is responsible for a distinct, clearly defined portion of the work of the contract and whose share in the capital contribution, control, management, risks, and profits of the joint venture are commensurate with its ownership interest. If a DBE performs as a participant in a joint venture, the Department will only credit the portion of the total dollar value of the contract equal to the portion of the work that the DBE performs with its own forces.

13. Mentor-Protégé

a. If a DBE performs as a participant in a mentor-protégé agreement, the Department will credit the portion of the work performed by the DBE protégé firm.

b. DBE credit is evaluated and confirmed by the DBE Office for any contracts on which the mentor-protégé team identifies itself to the DBE Office as a current participant of the Mentor-Protégé Program.

(1) DBE credit may only be awarded to a non-DBE mentor firm for using its own protégé firm for less than one half of its goal on any contract; and

(2) Not award DBE credit to a non-DBE mentor firm for using its own protégé firm for more than every other contract performed by the protégé firm.

c. A DBE protégé firm may be eligible for conditional NAICS code extension for training with the mentor. Request permission from the DBE Office- Certification area.

d. Refer to WisDOT's Mentor-Protégé guidelines for guidance on the number of contracts and amount of DBE credit allowed on WisDOT projects.

14. Use of Joint Checks

The use of joint checks is allowable if it is a commonly recognized business practice in the material industry. A joint check is defined as a two-party check between a DBE subcontractor, a prime contractor, and the regular dealer or materials supplier who is neither the prime nor an affiliate of the prime. Typically, the prime contractor issues one check as payor to the DBE subcontractor and to the supplier jointly (to guarantee payment to the supplier) as payment for the material/supplies used by the DBE firm in cases where the DBE subcontractor and materials have been approved for DBE credit. The DBE subcontractor gains the opportunity to establish a direct contracting relationship with the supplier to potentially facilitate a business rapport that results in a line of credit or increased partnering opportunities.

The cost of material and supplies purchased by the DBE firm is part of the value of work performed by the DBE to be counted toward the goal. To receive credit, the DBE firm must be responsible for negotiating price, determining quality and quantity, ordering the materials, and installing (where applicable) and "paying for the material itself." See 49 CFR 26.55(c)(1).

The approval to use joint checks constitutes a commitment to provide further information to WisDOT, upon request by staff. WisDOT will allow the use of joint checks when the following conditions are met:

a. The Prime Contractor must request permission to use joint checks from the DBE Office by submitting the Application to Use Joint Checks.

- **(1)** Request should be made when the DBE Commitment or the Request to Sublet is submitted; the request will not be considered if submitted after the DBE Subcontractor starts its work.
- **(2)** Approval/Permission must be granted prior to the issuance of any joint checks.
- **(3)** The payment schedule for the supplier must be presented to the DBE office before the first check is issued.
- **(4)** The joint check for supplies must be strictly for the cost of approved supplies.

b. The DBE subcontractor is responsible for furnishing and/or installing the material/work item and is not an ‘extra participant’ in the transaction. The DBE firm’s role in the transaction cannot be limited solely to signing the check(s) to release payment to the material supplier. At a minimum, the DBE subcontractor’s tasks should include the following:

- **(1)** The DBE subcontractor (not the prime/payor) negotiates the quantities, price, and delivery of materials.
- **(2)** The DBE subcontractor consents to sign/release the check to the supplier by signing the Application to Use Joint Checks after establishing the conditions and documentation of payment within the subcontract terms or in a separate written document.

c. The Prime contractor/payor acts solely as a guarantor.

- **(1)** The Prime Contractor agrees to furnish the check used for the payment of materials/supplies under the contract.
- **(2)** The prime contractor/payor cannot require the subcontractor to use a specific supplier or the prime contractor’s negotiated unit price.

15. Payment

Costs for conforming to this Additional Special Provision (ASP) and any associated DBE requirements are incidental to the contract.

Appendix A
Substantive Conversation Guidelines

The substantive conversation is critical to all bidders' demonstration of good faith effort to meet the DBE goal prior to bid opening. Relationship building between primes and subcontractors is crucial to DBE goal attainment. Responsible bidders seek to build rapport with potential DBE subcontractors to understand capacity, areas of expertise, and assess contracting feasibility. Bidders who compete for WisDOT contracts are specialty contractors responding to a growing and changing contract environment. Just as these specialists are responsible for care of the roads, they are likewise responsible for contributing to the health of the industry. The substantive conversation drives collaboration that will build industry health and capacity. The following is intended to provide guidance for such discussions but is not an exhaustive list. Contractors are encouraged to incorporate their existing strategies for cultivating business relationships as well.

<u>Prior to Bid Opening- this discussion should happen as early as possible (WisDOT advertisements are released weeks prior to each Let)</u>

1. Determine DBE subcontractor's interest in quoting
2. If response indicates inexperience with quoting- offer support/assistance to the DBE in understanding the industry including fundamentals a subcontractor needs to know, required reading and/or resources.
3. Assess their interest and experience in the road construction industry by asking questions such as:
    - Have you competed for other WisDOT contracts? Ratio of competed/to wins
    - Have you performed on any transportation industry contracts (locally or with other states)?
    - What the largest contract you've completed?
    - Have you worked in the industry: apprentice, journeyman, safety, inspection etc.?
    - Does this project fit into your schedule? Are you working on any contracts now?
    - Have you reviewed a copy of the plans? Are you comfortable performing within the scope and quantity considerations of this contract?
    - What region do you work in? Home base?
    - Which line items are you considering?
    - Have you read/are you familiar with WisDOT Standard Specifications? Construction Material Manual?
    - Do you understand where your work fits in the project schedule, project phases?

<u>Following Bid Opening- this discussion can happen at any time</u>

1. After reviewing their quote, note the following in your discussion:
    - Does the quote look complete? Irregular?
    - Are there errors in the quote? Are items very high or very low?
    - In general, does the quote look competitive?
2. Questions and Advice for the bidder to share with the potential DBE subcontractor:
    - What line items would typically be in a competitive quote for a subcontractor of their specialty?
    - How many employees and what is their role/experience/expertise in your firm?
    - Do you have resources for labor (union member, family-based, community-resourced) and capital (banking relationship, bond agent, CPA)?
    - Where have you worked: cities, states, government, commercial, residential/private sector, etc. Explain similarities or differences.
    - Refer them to reliable, trusted, industry resources that can educate or connect them to relevant resources, education/certification resources, more appropriate contract opportunities.
    - Discussion about prime contract and subcontract liability, critical path items, contract quantities, schedule risks, and potential profit/loss (for upcoming known projects or in general).
    - Discussion of bonding, insurance, and overall business risk considerations.

Appendix B

Sample Contractor Solicitation Letter Page 1

(This sample is provided as a guide, not a formatting requirement)

DBE Solicitation - [Month] [Day], [Year] WisDOT Bid Letting

Attention all DBEs. [Prime Contractor] is actively seeking your quote for the [Month][Day], [Year] Bid Letting. [Prime Contractor] is considering bidding on the projects listed on page 2 as a prime contractor. Please see page 2 for instructions and the sub-contractable opportunities for each proposal.

Does [Prime Contractor] accept quotes in areas we might self-perform? Yes, we do! We support this federal rule and (if needed) we consider areas we might self-perform an opportunity to provide in the field assistance and training if we award your quote.

Where can DBEs find the plans, specifications & addenda? Please visit [Prime Contractor's] plan room [LINK] or on WisDOT's Highway Construction Contract Information HCCI website: Wisconsin Department of Transportation Highway Construction Contract Information (wisconsindot.gov). This same website can be checked for the contract status.

What should your quote include? All the costs required to complete the items you propose to perform including labor, equipment, material, and related bonding or insurance. The quote should also note items that you are DBE certified to perform, tied items, and any special terms. Please use page 2 as your cover sheet for your quote.

Do you have a question regarding bonding, credit, insurance, equipment, or supplies/materials? We welcome all DBE questions! Please call [Prime Contractor] and ask to speak with [Contact]. [Prime Contractor] can provide basic information as well as a referral to a trusted industry partner for insurance and bonding needs.

When are quotes due?

[Month] [Day], [Year] at [Time]. We accept quotes via SBN, email, or fax. Please make every effort to have your quotes in by this time or earlier. Quality check your quote so it includes the correct letting date, project ID, proposal number, unit price and extension.

Who can DBEs contact for questions, information, clarification or for a quote evaluation? [Project Manager Name] [Phone] [Email]. If you are quoting [Prime Contractor] for the first time, we encourage you to come meet with us in person to discuss the project. Our office hours are 7:30 a.m. – 5:00 p.m. On bid day, we are in the office by 6:30 a.m.

Why partner with [Prime Contractor]?

DBE partnership is a core part of [Prime Contractor's] mission. Including DBEs at the beginning of each project is essential in the success of each project. We consider DBEs to be important industry partners who bring dedication and knowledge at various stages during construction. We are proud to be an industry leader with our DBE partnership. Your success as a DBE is our success.

Sample Contractor Solicitation Letter Page 2

(This sample is provided as a guide, not a formatting requirement)

REQUEST FOR QUOTE

[Prime Contractor]
Letting Date: [Month] [Day], [Year]
Project IDs: 1234-56-00 (Proposal #1) & 1234-01-78 (Proposal #6)

Please check all that apply:
____Yes, we will be quoting the projects & items listed below
____ No, we are not interested in quoting on the letting or its items referenced below
____ Please take our name off your monthly DBE contact list
____ We have questions about quoting this letting. Please have someone contact me at this number:

Prime Contractor Contact:_____ DBE:_____
Phone:_____ Fax:_____
Email:_____

Please circle the proposals and items you will be quoting below and contact us with any questions

Proposal **County**	**1** **Dane County**	**6** **Crawford County**
Clearing & Grubbing	**X**	**X**
Dump Truck Hauling	**X**	**X**
Curb/Gutter/Sidewalk	**X**	
Erosion Control Items		**X**
Excavation	**X**	**X**
Pavement Marking		**X**
Traffic Control	**X**	
Sawing	**X**	**X**
QMP, Base		**X**
Pipe Underdrain	**X**	
Landscape		**X**
Beam Guard	**X**	
Electrical	**X**	
Signs/Posts/Markers		**X**
Survey/Staking		**X**

Again, please make every effort to have your quotes into our office by time deadline prior to the letting date.

Sample Contractor Solicitation Email - Simplified

(This sample is provided as a guide, not a formatting requirement)

ATTENTION DBEs

- **[Prime Contractor] specializes in municipal projects in the XX Region(s)**
- **We have successfully competed for *and* completed XX WisDOT projects over the past XX years**
- **Consider [Prime Contractor] your partner on WisDOT Projects**

[Prime Contractor] is seeking *your* subcontractor quote for the XX/XX/20XX WisDOT bid letting on the below projects:

Project	Proposal	County	Region
1234-56-00	**2**	**Dane**	**SW**
1234-01-78	**6**	**Crawford**	**SW**

- Please review the attachments **[attach Solicitation Letter]** and respond with your intent to quote (or not) along with the work items you are interested in performing and respond via fax or email by ***date***. The quote should note items that you are DBE certified to perform, tied items, and any special terms. Please include labor, equipment, material, and related bonding or insurance.

- If you have any questions regarding bonding, credit, insurance, equipment and/or materials/supplies, please feel free to call [Prime Contractor] and ask for [Contact]. **(Include if your company is willing to answer these types of DBE questions)**

- Plans and Specifications can be found: **WisDOT HCCI Website: List webpage where plans are located**

- If you do choose to quote, please make every effort to have your quote into our office by ***time and date.*** Make sure the correct letting date, project number, unit price and extension are included in your quote.

- Should you have questions regarding the mentioned project, please call our office at (414) 555-5555 and we will direct you to the correct estimator/project manager.
  Our office hours are 7:30 a.m. - 5:00 p.m.

Thank you – we look forward to working with your company on this project!

Prime Contractor
Project Manager
Direct: 414-555-5555
Cell: 414-555-5556

Sample Contractor Solicitation Email to non-DBE WisDOT Subcontractors - Simplified

(This sample is provided as a guide, not a formatting requirement)

ATTENTION WisDOT SUBCONTRACTORS

[Prime Contractor] is considering bidding on the below projects for the XX/XX/20XX WisDOT Bid Letting:

Project	Proposal	County	Region	DBE Goal
1234-56-00	2	Dodge	SW	6.00%
1234-01-78	11	Adams	NC	3.00%
1234-00-99	20	Buffalo	NW	5.00%
1234-00-98	33	Portage	NC	6.00%

The above projects have DBE goals and [Prime Contractor] is committed to DBE inclusion with every project. As such, we are requesting:

- All WisDOT Subcontractors to **solicit and utilize** DBEs in your quotes.
- DBE participation can be achieved through purchasing materials from DBE suppliers, using DBE subcontractors and/or DBE trucking firms or any combination of these.
- If there is an opportunity to untie an item in your quote so a DBE can be utilized, please look for those opportunities as well.
- Your quote will be evaluated based on the amount of DBE participation your company is able to provide when compared to other quotes for the same work.

If you do choose to quote, please make every effort to have your quote into our office by **time and date.** Please submit all quotes to [Email]. Make sure the correct letting date, project number, unit price and extension are included in your quote.

Should you have questions regarding the mentioned project, the Project Manager contact is: [Name] [Phone Number] [Email]

Thank you for utilizing DBEs who are trusted industry partners with WisDOT projects.

Prime Contractor
Project Manager
Direct: 414-555-5555
Cell: 414-555-5556

Appendix C
Small Business Network (SBN) Overview

The Small Business Network is a part of the Bid Express® service that was created to ensure that prime bidders have a centralized online location to find subs - including small and disadvantaged business enterprises (DBEs). It is available for prime bidders to use as part of their Basic Service subscription. Within the Small Business Network, **Prime Contractors** can:

1. Easily select proposals, work types and items:
    a. After adding applicable work types, select items that you wish to quote. Enter the sub-quote quantities and add comments, if desired. Adding or removing items and work types can be done quickly. If needed, you can save the sub-quote for later completion.
2. Create sub-quotes for the subcontracting community:
    a. Create sub-quotes with ease using the intuitive sub-quote creator. In seven short steps, you can rapidly create a custom sub-quote directed to all subcontractors that bid on the applicable work types. Steps include: provide contact information and sub-quote expiration date, select letting and proposal, add work types and items, specify terms and conditions, upload attachments, and select vendors.
    b. Create a sub-quote to send to subcontractors or suppliers that lists the items in a proposal that you want quoted
    c. Create an unlimited number of sub-quotes for items you want quoted, and optionally mark them as a DBE preferred request.
    d. Add attachments to sub-quotes.
3. View sub-quote requests & responses:
    a. After logging into the Bid Express service, you can quickly review all of your sub-quote requests and all unsolicited sub-quote requests from subcontractors. To simplify the Small Business Network home screen, sub-quote requests can be hidden with one click if they are not applicable.
    b. View or receive unsolicited sub-quotes that subcontractors have posted, complete with terms, conditions and pricing.
4. View Record of Subcontractor Outreach Effort:
    a. For each sub-quote produced, a *Record of Subcontractor Outreach Effort* is generated that shows the response statistics for a particular sub-quote. If accepted by the letting agency, this report may serve as proof of a “Good Faith” effort in reaching out to the DBE community.
    b. Easily locate pre-qualified and certified small and disadvantaged businesses.
    c. Advertise to small and disadvantaged businesses more efficiently and cost effectively.
    d. Document your interactions with subs/DBEs by producing an Outreach Report (may be accepted as proof of DBE outreach at the discretion of each agency).

The Small Business Network help small businesses learn more about opportunities, compete more effectively, network with other contractors and subcontractors, and win more jobs. The DBE will provide free SBN accounts to DBEs when requested. Use DBE_Alert@dot.wi.gov to request an account. **DBE firms can:**

1. View and reply to sub-quote requests from primes:
    a. After logging into the Bid Express service, you can quickly review all incoming sub-quote requests and all unsolicited sub-quotes created by your company. Receive notifications by selected work type. To simplify on the Small Business Network home screen, sub-quote requests can be filtered by work types relevant to your interests or hidden with one click if they are not applicable.
2. Select items when responding to sub-quote requests from primes:
    a. You have the freedom to choose and price any number of items when responding to a sub-quote request. Quantities can be modified, and per-item comments are also available.
    b. View requests for sub-quotes for work that primes have posted for projects they are bidding, add your pricing, terms, and conditions, and submit completed sub-quotes to the requesting primes. c. Add attachments to a sub-quote.
3. Create and send unsolicited sub-quotes to specific contractors:
    a. Create unsolicited sub-quotes with ease using the intuitive sub-quote creator. In eight short steps, you can rapidly create a custom sub-quote directed at any number of specific vendors of your choosing. Steps include: provide contact information and sub-quote expiration date, select letting and proposal, add work types and items, specify terms and conditions, upload attachments, and select vendors.
4. Easily select and price items for unsolicited sub-quotes:
    a. After adding applicable work types, select items that you wish to quote. The extended price calculates automatically, cutting out costly calculation errors. Comments can be provided on a per-item basis as well.
    b. Create an unsolicited sub-quote that lists the items from a proposal that you want to quote, include pricing, terms and conditions, and send it to selected prime/plan holder.
    c. Add attachments to a sub-quote.
    d. Add unsolicited work items to sub-quotes that you are responding to.
5. Easy Access to Valuable Information
    a. Receive a confirmation that your sub-quote was opened by a prime.
    b. View Bid Tab Analysis data from past bids, including the high, average and low prices of items.
    c. View important notices and publications from DOT targeted to small and disadvantaged businesses.
6. Accessing Small Business Network for WisDOT contracting opportunities
    a. If you are a contractor not yet subscribing to the Bid Express service, go to **www.bidx.com** and select “Order Bid Express.” The Small Business Network is a part of the Bid Express Basic Service.

Appendix D

Good Faith Effort Evaluation Measures *by categories referenced in DBE regulations*

Bidders must demonstrate that they took all necessary and reasonable steps to achieve the assigned DBE contract goal. For each contract, all bidders must submit documentation indicating the goal has been met or if falling short of meeting the assigned goal, must request a DBE Goal Waiver and document all efforts employed to secure DBE subcontractor participation on Form DT1202.

DBE staff analyze the bidder's documented good faith efforts to determine if action taken was sufficient to meet the goal. Sufficiency is measured contract-by-contract. WisDOT evaluates active and aggressive efforts, quality, quantity, scope, intensity, and appropriateness of the bidder's efforts as a scale of the principles of Good Faith outlined in 49 CFR Part 26, Appendix A. Additional emphasis is placed on the bidder's demonstration of timely submission of documentation and communication with DBE subcontractors, and business development initiatives undertaken to support DBE firm growth.

The following is a sample of good faith effort activities that are rated according to the accompanying rubric. Contractors are encouraged to identify additional activities that align with their business type(s).

- Personal, tailored solicitation to firms that specialize in work types planned or desired for subcontracting
- Follow up to initial solicitation via email or phone
- Substantive conversation including topics such as contract liability, critical path work items, schedule risks, and potential profit/loss
- SBN utilization including posting quotes
- Review and response to DBE quotes including provision of information about plans, specifications,and requirements as applicable
- Documentation requesting subcontractors support DBE goal by solicitation and inclusion of DBE subcontractor quotes
- Responsive and timely submission of organized documentation
- Analysis of number of DBE firms who do work types that you typically subcontract
- Analysis of number of DBE firms who reside in geographical areas where prime seeks work
- Analysis of firms who express interest in bidding/quoting including the number of firms who declined your solicitation
- Reference check of DBE subcontractor work or training (documentation of questions and response required)
- Number of different efforts undertaken to meet the assigned DBE goal as documented in accompanying Form DT1202
- Submission of all DBE quotes received matched with a variety of work to be performed by DBEs
- Number and names of DBE firms provided written advice, or referral to industry-specific business development resources
- Overall pattern of DBE utilization on all WisDOT contracts which may include contracting with municipalities
- Documentation of resources expended to meet assigned DBE goal (#of hours, staff titles, average pay rate, actions taken)
- Analysis of subcontractable work items to be completed by prime beyond prime contractor's 30%
- Risk analysis of work items that are typically in tied quotes that could be unbundled
- List of contract work items in smallest economically feasible units, identifying schedule impact
- Submission of a Gap Analysis identifying DBE skillset and/or industry needs
- Staff training in EEO and Civil Rights laws as documented in training logs
- Written Capacity Assessment completed with DBE firm documenting its ability to perform the work quoted
- DBE engagement efforts beyond simple solicitation that include a substantive discussion, initiated as early in the acquisition process as possible (*points added for each day prior to letting*)
- Outreach and marketing efforts with minority, women, and veteran-focused organizations at least 10 days prior to bid opening
- Active involvement in WisDOT's Business Development Program, TrANS training, facilitated networking efforts, workshops
- Customized teaching/training efforts for future opportunities with DBE subcontractor, contract specific and/or annually
- Introduction and reference provided for DBE subcontractor to a prime who has not previously contracted with the DBE firm
- Prime utilization of a DBE subcontractor the prime has not contracted with previously
- Written referral/recommendation to bond/insurance agents, manufacturer, supplier
- Documented efforts fostering DBE participation through administrative and/or technical assistance
- Evidence of negotiation with the DBE firm about current and future Let opportunities
- Recommendation of local and state services that support small business and access to opportunity: DOA, SBA, WEDC, WPI, etc.
- Advice on bonding, lines of credit, or insurance as required to complete the items quoted and contract requirements

GFE Evaluation Rubric – Phase 1 – Initial Review

DT1202	Examples	Rating	OBOEC Feedback
Solicitation Documentation	Identify all reasonable and available activities performed to solicit the interest of all certified DBEs who have capacity and ability to perform work on the project. *Such as: Updated solicitation letter and email, timely solicitation, and follow-up, and/or utilized various methods to communicate solicitation (ex: letter, email, publication, posting and/or website)*		
Selected Work Items Documentation	All work items are broken out into economically feasible units to facilitate DBE participation. *Such as: Selected work items are specific to each proposal and clearly identified in all solicitation(s)*		
Documentation of Project Information provided to Interested DBEs	Provide interested DBEs with adequate information about the plans, specifications, and any other contractual requirements in a timely manner to assist DBEs in response to solicitation. *Such as: Project information is clearly identified in all solicitation(s)*		
Documentation of Negotiation with Interested DBEs	Provide sufficient evidence demonstrating that good faith negotiations took place during the bid letting. *Such as: Documented attempts with DBEs or on behalf of DBEs to increase DBE participation*		
Documentation of Sound Reason for Rejecting DBEs	Provide sufficient evidence demonstrating that DBEs are rejected for sound reasons. *Such as: Detailed and thoughtful analysis that considers both the percentage and dollar difference when rejecting a DBE including past performance, relevant business experience and stability, safety record, business ethic and integrity, technical capacity, and other tangible factors.*		
Documentation of Assistance to Interested DBEs- bonding, credit, insurance, equipment, supplies/materials	Documented assistance in both solicitation(s) and outreach to DBEs.		
Documentation of Outreach to Minority, Women, and Community organizations and other DBE Business Development Support	Effectively use the services of minority, women, and community organizations as well as contractors' groups, local, state, and federal business assistance offices and organization that provide assistance in recruiting and supporting DBEs, as well participation in activities that support DBE business development. *Such as: Variety of activities that translate into meaningful DBE participation*		
Documentation of other GFE activities	*Such as: Used DT1202 Excel Workbook, Diversity & Inclusion company policy, Mentor-Protégé participant, awarded neutral DBE after bid submission, included company GFE overview/strategy information and/or company website highlights DBE opportunities and participation*		
Overall Demonstration of GFE			

GFE EVALUATION RATING LEGEND – PHASE 1 – Initial Review

Documentation provided by bidder is evaluated and rated on the rubric. Bidders should include activities characterized by the following types of effort:

ACTIVE & AGGRESSIVE: Demonstrated through engaged and assertive activity
QUALITY: Demonstrated through essential character of conscientious and serious activity
QUANTITY: Demonstrated through a measurable number of activities
SCOPE & INTENSITY: Demonstrated through a rigorous approach to an appropriate and purposeful range of activities
TIMING: Demonstrated through engagement efforts beyond simple solicitation, initiated early in the process

GFE EVALUATION – PHASE 2 – Team Review

GFE Team completes:

- Review of activities included on the rubric
- Review of the intent to award and sound reasoning submitted by Prime
- Bid analysis to confirm if any bid submitted met the DBE goal
- Review average of other bidders DBE goal achievement
- Team review of combined efforts documented in Phase 1 and 2 constitute final GFE determination

Rating Scale:

- **GFE Approval:**
  Bona Fide = 6 or more categories color coded green.
  Genuine effort characterized by sincere and earnest activities – "Solicitation" and "Sound Reasoning" must be green

- **GFE Approval:**
  Sufficient = 5 or more categories color coded green or yellow
  Adequate effort documented with a variety of quality activities – "Solicitation" and "Sound Reasoning" must be green or yellow

- **GFE Denial:**
  Pro Forma efforts = 4 or less categories color coded green or yellow. Perfunctory effort characterized by routine or superficial activities

Green = Exceeds expectations
Yellow = Meets expectations
Red = Areas in need of attention and/or absence of documentation **See OBOEC Rubric Analysis_Feedback**

Excerpt from Appendix A to 49 CFR Part 26:
V. In determining whether a bidder has made good faith efforts, it is essential to scrutinize its documented efforts. At a minimum, you must review the performance of other bidders in meeting the contract goal. For example, when the apparent successful bidder fails to meet the contract goal, but others meet it, you may reasonably raise the question of whether, with additional efforts, the apparent successful bidder could have met the goal. If the apparent successful bidder fails to meet the goal but meets or exceeds the average DBE participation obtained by other bidders, you may view this, in conjunction with other factors, as evidence of the apparent successful bidder having made good faith efforts. As provided in §26.53(b)(2)((vi), you must also require the contractor to submit copies of each DBE and non-DBE subcontractor quote submitted to the bidder when a non-DBE subcontractor was selected over a DBE for work on the contract to review whether DBE prices were substantially higher; and contact the DBEs listed

GFE RUBRIC ANALYSIS	
OBOEC DECISION	APPROVAL OR DENIAL
Prime Contractor	
Proposal	
Project	
Bid Letting	
DBE Goal Amount	
DBE Goal Amount Achieved	
Bid Analysis	
Goal %	Achieved %
Apparent Low Bidder	%
Bidder B	
Bidder C	
Average of OTHER Bidders (Not including Apparent Low Bidder)	
DBE Quotes Received	
DBE Quotes Awarded	
DBE Quote(s) Rejected	**Rejected Quote Analysis**
DBE Quote(s) Awarded	**Awarded DBE Amount**

Appendix E
Good Faith Effort Best Practices

This list is not a set of requirements; it is a list of potential strategies

Primes

- Prime contractor open houses inviting DBE firms to see the bid "war room" or providing technical assistance.
- Participate in speed networking and mosaic exercises as arranged by DBE office.
- Host information sessions not directly associated with a bid letting.
- Participate in a formal mentor protégé or joint venture with a DBE firm.
- Participate in WisDOT advisory committees i.e. TRANSAC, or Mega Project committee meetings.
- Facilitate a small group DBE 'training session' clarifying how your firm prepares for bid letting, evaluates subcontractors, preferred qualifications, and communication methods.
- Encourage subcontractors to solicit and highlight DBE participation in their quotes to you.
- Quality of communication, not quantity creates the best results. Contractors should be thorough in communicating with DBE firms before the bid and provide any assistance requested to assure best possible bid.

DBE

- DBE firms should contact primes as soon as possible with questions regarding their quotes or bid; seven days prior is optimal.
- Continually check for contract addendums on the HCCI website through the Thursday prior to letting to stay abreast of changes.
- Review the status of contracts on the HCCI website reviewing the 'apparent low bidder' list and bid tabs at a minimum.
- Prepare a portfolio or list of related projects and prime and supplier references; be sure to note transportation related projects of similar size and scope, firm expertise and staffing.
- Participate in DBE office assessment programs.
- Participate on advisory and mega-project committees.
- Sign up to receive the DBE Contracting Update.
- Consider membership in relevant industry or contractor organizations.
- Active participation is a must. Quote as many projects as you can reasonably work on; quoting the primes and bidding as a prime with the Department are the only ways to get work.

Appendix F
Good Faith Effort Evaluation Guidance
Appendix A of 49 CFR Part 26

I. When, as a recipient, you establish a contract goal on a DOT-assisted contract for procuring construction, equipment, services, or any other purpose, a bidder must, in order to be responsible and/or responsive, make sufficient good faith efforts to meet the goal. The bidder can meet this requirement in either of two ways. First, the bidder can meet the goal, documenting commitments for participation by DBE firms sufficient for this purpose. Second, even if it doesn't meet the goal, the bidder can document adequate good faith efforts. This means that the bidder must show that it took all necessary and reasonable steps to achieve a DBE goal or other requirement of this part which, by their scope, intensity, and appropriateness to the objective, could reasonably be expected to obtain sufficient DBE participation, even if they were not fully successful.

II. In any situation in which you have established a contract goal, Part 26 requires you to use the good faith efforts mechanism of this part. As a recipient, you have the responsibility to make a fair and reasonable judgment whether a bidder that did not meet the goal made adequate good faith efforts. It is important for you to consider the quality, quantity, and intensity of the different kinds of efforts that the bidder has made, based on the regulations and the guidance in this Appendix.

The efforts employed by the bidder should be those that one could reasonably expect a bidder to take if the bidder were actively and aggressively trying to obtain DBE participation sufficient to meet the DBE contract goal. Mere pro forma efforts are not good faith efforts to meet the DBE contract requirements. We emphasize, however, that your determination concerning the sufficiency of the firm's good faith efforts is a judgment call. Determinations should not be made using quantitative formulas.

III. The Department also strongly cautions you against requiring that a bidder meet a contract goal (i.e., obtain a specified amount of DBE participation) in order to be awarded a contract, even though the bidder makes an adequate good faith efforts showing. This rule specifically prohibits you from ignoring bona fide good faith efforts.

IV. The following is a list of types of actions which you should consider as part of the bidder's good faith efforts to obtain DBE participation. It is not intended to be a mandatory checklist, nor is it intended to be exclusive or exhaustive. Other factors or types of efforts may be relevant in appropriate cases.

A. (1) Conducing market research to identify small business contractors and suppliers and soliciting through all reasonable and available means the interest of all certified DBEs that have the capability to perform the work of the contract. This may include attendance at pre-bid and business matchmaking meetings and events, advertising and/or written notices, posting of Notices of Sources Sought and/or Requests for Proposals, written notices or emails to all DBEs listed in the State's directory of transportation firms that specialize in the areas of work desired (as noted in the DBE directory) and which are located in the area or surrounding areas of the project.

(2) The bidder should solicit this interest as early in the acquisition process as practicable to allow the DBEs to respond to the solicitation and submit a timely offer for the subcontract. The bidder should determine with certainty if the DBEs are interested by taking appropriate steps to follow up initial solicitations.

B. Selecting portions of the work to be performed by DBEs in order to increase the likelihood that the DBE goals will be achieved. This includes, where appropriate, breaking out contract work items into economically feasible units (for example, smaller tasks or quantities) to facilitate DBE participation, even when the prime contractor might otherwise prefer to perform these work items with its own forces. This may include, where possible, establishing flexible timeframes for performance and delivery schedules in a manner that encourages and facilitates DBE participation.

C. Providing interested DBEs with adequate information about the plans, specifications, and requirements of the contract in a timely manner to assist them in responding to a solicitation with their offer for the subcontract.

D. (1) Negotiating in good faith with interested DBEs. It is the bidder's responsibility to make a portion of the work available to DBE subcontractors and suppliers and to select those portions of the work or material needs consistent with the available DBE subcontractors and suppliers, so as to facilitate DBE participation. Evidence of such negotiation includes the names, addresses, and telephone numbers of DBEs that were considered; a description of the information provided regarding the plans and specifications for the work selected for subcontracting; and evidence as to why additional Agreements could not be reached for DBEs to perform the work.

(2) A bidder using good business judgment would consider a number of factors in negotiating with subcontractors, including DBE subcontractors, and would take a firm's price and capabilities as well as contract goals into consideration. However, the fact that there may be some additional costs involved in finding and using DBEs is not in itself sufficient reason for a bidder's failure to meet the contract DBE goal, as long as such costs are reasonable. Also, the ability or desire of a prime contractor to perform the work of a contract with its own organization does not relieve the bidder of the responsibility to make good faith efforts. Prime contractors are not, however, required to accept higher quotes from DBEs if the price difference is excessive or unreasonable.

E. (1) Not rejecting DBEs as being unqualified without sound reasons based on a thorough investigation of their capabilities. The contractor's standing within its industry, membership in specific groups, organizations, or associations and political or social affiliations (for example union vs. non-union status) are not legitimate causes for the rejection or non-solicitation of bids in the contractor's efforts to meet the project goal. Another practice considered an insufficient good faith effort is the rejection of the DBE because its quotation for the work was not the lowest received. However, nothing in this paragraph shall be construed to require the bidder or prime contractor to accept unreasonable quotes in order to satisfy contract goals.

(2) A prime contractor's inability to find a replacement DBE at the original price is not alone sufficient to support a finding that good faith efforts have been made to replace the original DBE. The fact that the contractor has the ability and/or desire to perform the contract work with its own forces does not relieve the contractor of the obligation to make good faith efforts to find a replacement DBE, and it is not a sound basis for rejecting a prospective replacement DBE's reasonable quote.

F. Making efforts to assist interested DBEs in obtaining bonding, lines of credit, or insurance as required by the recipient or contractor.

G. Making efforts to assist interested DBEs in obtaining necessary equipment, supplies, materials, or related assistance or services.

H. Effectively using the services of available minority/women community organizations; minority/women contractors' groups; local, State, and Federal minority/women business assistance offices; and other organizations as allowed on a case-by-case basis to provide assistance in the recruitment and placement of DBEs.

V. In determining whether a bidder has made good faith efforts, it is essential to scrutinize its documented efforts. At a minimum, you must review the performance of other bidders in meeting the contract goal. For example, when the apparent successful bidder fails to meet the contract goal, but others meet it, you may reasonably raise the question of whether, with additional efforts, the apparent successful bidder could have met the goal. If the apparent successful bidder fails to meet the goal, but meets or exceeds the average DBE participation obtained by other bidders, you may view this, in conjunction with other factors, as evidence of the apparent successful bidder having made good faith efforts. As provided in §26.53(b)(2)((vi), you must also require the contractor to submit copies of each DBE and non-DBE subcontractor quote submitted to the bidder when a non-DBE subcontractor was selected over a DBE for work on the contract to review whether DBE prices were substantially higher; and contact the DBEs listed on a contractor's solicitation to inquire as to whether they were contacted by the prime. Pro forma mailings to DBEs requesting bids are not alone sufficient to satisfy good faith efforts under the rule.

VI. A promise to use DBEs after contract award is not considered to be responsive to the contract solicitation or to constitute good faith efforts.

[79 FR 59600, Oct. 2, 2014]

Appendix G

(SAMPLE) Forms DT1506 and DT1202

Official Form DT1506 can be found here: https://wisconsindot.gov/Documents/formdocs/dt1506.pdf

COMMITMENT TO SUBCONTRACT TO DBE

Clear

Wisconsin Department of Transportation

DT1506 12/2021 s.84.06(2) Wis. Stats.

☐ Non-Traditional Project

Project ID: _____

Proposal # _____

Prime Contractor: _____

County: _____

Letting Date: _____

Total $ Value of Prime Contract: $ _____

DBE Contract Goal: _____ %

DBE Goal Achieved: 0.00 %

This contract requires that a specified percentage of the work be subcontracted to a disadvantaged business enterprise and that this information be submitted as described in ASP-3. The submittal of this form with the bid proposal constitutes your DBE commitment. Include Attachment A for DBEs included on commitment.

This form must be completed and returned for this proposal. See page 2 for instructions.

1. DBE Firm	2. Work or Items to be subcontracted	3. Supplier Y/N	4. Trucking Only	5. DBE Full Subcontract $	6. DBE Amount for Credit $
			O# L#		
			O# L#		
			O# L#		
			O# L#		
			O# L#		
			O# L#		
			O# L#		
			O# L#		
			O# L#		
			O# L#		
			O# L#		
			O# L#		
			O# L#		
			O# L#		
			O# L#		
			O# L#		
			O# L#		
			O# L#		
			O# L#		
			O# L#		
			O# L#		
				$ 0.00	$ 0.00

Government Use Only Approved Amounts		
A =	$	%
V =	$	%
Total =	$	%

Signature:

Date:

Good faith effort approved: Yes ☐ No ☐

_____

Prime Representative Signature & Date

_____

DBE Office Signature & Date Approved

COMMITMENT TO SUBCONTRACT TO DBE
ATTACHMENT A

CONFIRMATION OF PARTICIPATION

Project I.D.:	Proposal Number:
Letting Date:	

Name of DBE Firm Participating in this Contract:	
Name of the Prime/Subcontractor who hired the DBE Firm: *(list all names of tiers if more than one)*	
Type of Work or Type of Material Supplied:	
Total Subcontract Value:	Total DBE Credit Value:

FOR PRIME CONTRACTORS ONLY: I certify that I made arrangements with the participating DBE firm to perform the type of work listed or supply the material indicated above for the subcontract value listed above.	Prime Contractor Representative's Signature
	Prime Contractor Representative's Name (Print Name)
	Prime Contractor (Print Company Name)
	Date

FOR PARTICIPATING DBE FIRMS ONLY: I certify that I made arrangements with the Prime Contractor or the Hiring Contractor to perform the type of work or supply the material indicated above for the subcontract value listed above. **FOR DBE TRUCKING FIRMS ONLY:** I certify that I will utilize, for DBE credit, only trucks listed on my WisDOT approved Schedule of Owned/Leased Vehicles for DBE Credit form and I will be utilizing the number of trucks as listed below.	Participating DBE Firm Representative's Signature	Date
	Participating DBE Firm Representative's Name (Print Name)	
	Participating DBE Firm (Print Company Name)	
	DBE Firm's Address:	

# Owned Trucks	# Leased Trucks	# DBE-Owned Leased Trucks	# Non-DBE-Owned Leased Trucks

☐ Off site Hauling

Official Form DT1506 can be found here: https://wisconsindot.gov/Documents/formdocs/dt1506.pdf

DOCUMENTATION·OF·GOOD·FAITH·EFFORT·

Wisconsin·Department·of·Transportation
DT1202·····3/2020

Project ID	Proposal No.	Letting
*****	*****	*****
Prime Contractor		County
*****		*****
Person Submitting Document		Telephone Number
*****		*****
Address		Email Address
*****		*****

All·bidders·must·undertake·necessary·and·reasonable·steps·to·achieve·the·assigned·DBE·contract·goal·per·federal·regulatory·guidance·at·49·CFR·Part·26.·Bidders·use·this·form·to·document·all·efforts·employed·to·meet·the·assigned·goal·as·a·record·of·contractor·good·faith·efforts·(GFE).·Refer·to·ASP3·or·49·CFR·Part·26·for·guidance·on·actions·that·demonstrate·good·faith·effort.·

It·is·critical·to·list·all·efforts,·attach·documentation,·and·follow·the·instructions·to·complete·this·submission.·Documentation·of·good·faith·effort·includes·copies·of·each·DBE·and·non-DBE·subcontractor·quote·submitted·to·the·bidder·for·the·same·line·items.·Utilize·the·sample·documentation·logs·to·document·and·organize·efforts.··

Submit·good·faith·effort·documentation·per·ASP-3·guidelines.

Instructions:·Provide·a·narrative·description·of·all·activities·pursued·to·demonstrate·good·faith·efforts,·any·corresponding·documentation,·and·applicable·explanation·on·separate·pages.·Include·the·following·items,·organized·in·the·order·listed·below.

1.→ **Solicitation·Documentation:**·
   a.→ **Purpose:**·To·identify·all·reasonable·and·available·activities·the·bidder·performed·to·solicit·the·interest·of·all·certified·DBEs·who·have·the·capacity·and·ability·to·perform·work·on·the·project.·All·solicitation·efforts·should·begin·as·early·as·possible·to·ensure·DBEs·have·ample·time·to·respond·and·ask·questions.

   b.→ **Action:**·Identify·and·list·all·activities·engaged·in·to·solicit·DBEs·using·all·reasonable·and·available·means·such·as·written·notice·and·follow-up·communications;·substantive·conversations;·pre-bid·meetings;·networking·events;·market·research;·advertising.

2.→ **Selected·Work·Items·Documentation:**·
   a.→ **Purpose:**·To·ensure·that·all·work·items·are·broken·out·into·economically·feasible·units·to·facilitate·DBE·participation.·This·must·occur·even·when·you·prefer·to·perform·the·work·yourself.

   b.→ **Action:**·Identify·economically·feasible·work·units·to·be·performed·by·DBEs·to·include·activities·such·as:·list·of·work·items·to·be·performed;·breaking·up·of·large·work·items·into·smaller·tasks·or·quantities;·flexible·time·frames·for·performance·and·delivery·schedules.

3.→ **Documentation·of·Project·Information·provided·to·Interested·DBEs:**·
   a.→ **Purpose:**·To·provide·interested·DBEs·with·adequate·information·about·the·plans,·specifications,·and·any·other·contractual·requirements·in·a·timely·manner·to·assist·DBEs·in·response·to·solicitation.

   b.→ **Action:**·Provide·DBEs·access·to·plans,·specifications,·and·other·contract·requirements.·Early·solicitation·allows·ample·opportunity·to·provide·project·information,·links·to·Let·advertisements,·and·substantive·engagement·with·DBEs.

4. **Documentation of Negotiation with Interested DBEs:**
   a. **Purpose:** To ensure that negotiations with interested DBEs were made in good faith providing evidence as to why agreements could not be reached for DBEs to perform work.

   b. **Action:** Provide sufficient evidence to demonstrate that good faith negotiations took place. Merely sending out solicitations requesting bids from DBEs does not constitute sufficient good faith efforts. A bidder using good business judgment considers a number of factors in negotiating with all subcontractors, and the firm's price and capabilities in addition to contract goals are taken into consideration. However, the fact that there may be some additional costs involved in finding and using DBEs is not in itself sufficient reason for failing to meet the DBE goal as long as costs are reasonable. (see 49 CFR Part 26 Appendix A)

5. **Documentation of Sound Reason for Rejecting DBEs:**
   a. **Purpose:** To ensure that bidders avoid rejecting DBEs as unqualified without sound reasons. Reasons for rejection must be based on thorough investigation of DBE capabilities.

   b. **Action:** Provide sufficient evidence to demonstrate that DBE was rejected for sound reasons such as past performance, relevant business experience and stability, safety record, business ethic and integrity, technical capacity, other tangible factors.

6. **Documentation of Assistance to Interested DBEs - Bonding, Credit, Insurance, Equipment, Supplies/Materials:**
   a. **Purpose:** To assist interested DBEs in obtaining bonds, lines of credit, insurance, equipment, supplies, materials, and other assistance or services.

   b. **Action:** Assist interested DBEs in obtaining bonding, lines of credit or insurance, and provide technical assistance or information related to plans, specifications, and project requirements. Assist DBEs in obtaining equipment, supplies, materials or other services related to meeting project requirements (excluding supplies or equipment the DBE purchases from the prime).

7. **Documentation of outreach to Minority, Women, and Community Organizations and other DBE Business Development Support:**
   a. **Purpose:** To effectively use the services of minority, women, and community organizations as well as contractors' groups, local, state, and federal business assistance offices and organization that provide assistance in recruiting and supporting DBEs, as well as participation in activities that support DBE business development.

   b. **Action:** Contact organizations and agencies for assistance in contacting, recruiting, and providing support to DBE subcontractors, suppliers, manufacturers, and truckers at least 14 days before bid opening. Participate in or host activities such as networking events, mentor-protégé programs, small business development workshops, and others consistent with DBE support.

Return to:
Wisconsin Department of Transportation
DBE Program Office
PO Box 7965
Madison, WI 53707-7965
DBE_Alert@dot.wi.gov

I certify that I have utilized comprehensive good faith efforts to solicit and utilize DBE firms to meet the DBE participation requirements of this contract proposal, as demonstrated by my responses and as specified in Additional Special Provision 3 (ASP-3).

I certify that the information given in the Documentation of Good Faith Efforts is true and correct to the best of my knowledge and belief.

I further understand that any willful falsification, fraudulent statement, or misrepresentation will result in appropriate sanctions, which may involve debarment and/or prosecution under applicable state (Trans 504) and Federal laws.

	(Bidder/Authorized Representative Signature)
	*****
	(Print Name)
	*****
	(Title)

Good Faith Effort - Sample Documentation Logs

The sample logs below are provided as guides rather than exhaustive list. See ASP3, Appendix A for additional examples of demonstrable good faith efforts. Attach documentation for each activity listed.

Acceptable forms of documentation include copies of solicitations sent to DBEs, notes from substantive conversations and negotiations with DBEs, copies of advertisements placed, email communications, all quotes received from DBEs and from all subcontractors who were considered alongside DBE quotes, proof of attendance at applicable networking events; flyers for events or workshops for DBEs offered by the prime, and other physical records of good faith efforts activities.

SOLICITATION LOG

Date	Activity	Name of DBE Solicited	Follow-up
4/1/2020	Sent May Let solicitation	Winterland Electric	Spoke with Mark Winterland on 4/15/20 to ask if he would quote

SELECTED WORK ITEMS SOLICITED LOG

Work Type	DBE Firm	Contact Person	Date	Contact Mode
Pavement Marking	ABC Marking	Leslie Lynch	4/1/2020	Email; phone
	#1 Marking Co.	Mark Smart	4/1/2020	Email; left VM
Electrical	Winterland Electric	Tabitha Tinker	4/3/2020	Email, left VM
	Superstar Wiring	Jose Huascar	4/3/2020	Email; phone

INFORMATION PROVIDED LOG

Request Date	DBE Firm	Information Requested & Provided	Response Date
4/1/2020	Winterland Electric	Requested info on electrical requirements; provided plan and link to specs	4/3/2020
4/21/2020	Absolute Construction	Wanted to know how and when supplies are paid for by WisDOT; referred to spec that covers stockpiling	4/21/2020

NEGOTIATIONS LOG

Date	DBE Firm	Contact Name	Work Type	Quotes Rec'd?	Considered for project?	If not selected, why?
4/12/2020	ABC Landscape	John Dean	Erosion Control	Yes	No	Cannot perform all items
4/17/2020	Wild Ferns	Sandy Lynn	Erosion Control	Yes	Yes	
4/20/2020	#1 Marking	Mark Smart	Electrical	Yes	Yes	

ASSISTANCE LOG

Date	DBE Firm	Contact Person	Assistance Provided
4/1/2020	ABC Sawing	Jackie Swiggle	Informed DBE on how to obtain bonding
4/17/2020	Supreme Construction	Winston Walters	Provided contact for wholesale supply purchase

OUTREACH & BUSINESS DEVELOPMENT LOG

Date	Agency/Organization Contacted	Contact Person	Assistance Requested
4/1/2020	Women in Construction	LaTonya Klein	Contact information for woman-owned suppliers
4/28/2020	WBIC	Sam Smith	Asked for information to provide to DBE regarding financing programs through WBIC

Official Form DT1202 can be found here: https://wisconsindot.gov/pages/global-footer/formdocs/default.aspx

ADDITIONAL SPECIAL PROVISION 4

This special provision does not limit the right of the department, prime contractor, or subcontractors at any tier to withhold payment for work not acceptably completed or work subject to an unresolved contract dispute.

Payment to First-Tier Subcontractors

Within 10 calendar days of receiving a progress payment for work completed by a subcontractor, pay the subcontractor for that work. The prime contractor may withhold payment to a subcontractor if, within 10 calendar days of receipt of that progress payment, the prime contractor provides written notification to the subcontractor and the department documenting "just cause" for withholding payment.

The prime contractor is not allowed to withhold retainage from payments due subcontractors.

Payment to Lower-Tier Subcontractors

Ensure that subcontracting agreements at all tiers provide prompt payment rights to lower-tier subcontractors that parallel those granted first-tier subcontractors in this provision.

Acceptance and Final Payment

Within 30 calendar days of receiving the semi-final estimate from the department, submit written certification that subcontractors at all tiers are paid in full for acceptably completed work.

Additional Special Provision 6 (ASP-6)
Modifications to the standard specifications

Make the following revisions to the standard specifications.

---

107 Legal Relations and Responsibility to the Public

Add subsection 107.27 effective with the November 2024 letting.

107.27 Drones or Unmanned Aircraft Systems (UAS)

107.27.1 Licensing and Compliance

(1) Obtain and possess the necessary Federal Aviation Administration (FAA) licenses and certifications to operate drones commercially (https://www.faa.gov/uas).

(2) Comply with all FAA regulations, airspace restrictions, and local laws. Operators of small drones that are less than 55 pounds for work or business must follow all requirements as listed in Title 14, Chapter 1, Subchapter F, Part 107 of the Code of Federal Regulations (14 CFR) and obtain a remote pilot certificate (https://www.faa.gov/uas/commercial_operators).

(3) Comply with Wisconsin State Statute 942.10. Limit operations to the specific approved purpose and employ reasonable precautions to avoid capturing images of the public except those that are incidental to the project.

(4) Provide copies of waivers required for specific project conditions to the engineer prior to any flight.

107.27.2 Flight Approval, Safety, and Incident Reporting

(1) Submit information in 107.27.2(2) to obtain written drone flight approval from the engineer at least 3 business days prior to operating a drone within the right-of-way. Do not operate a drone within the right-of-way unless approved by the engineer.

(2) Drone flight application for review and approval must include:

- UAS pilot information and qualifications, images of certification
- UAS drone information and FAA tail numbers
- Max/ Min allowable flight parameters (weather)
- Specifics of flight mission: capture scope
- Estimated flight duration
- Pre-flight checklist
- Site-specific parameters
- Notification protocols - Federal/Local/Agency/Owner/Responsible in Charge
- Confirmation and verification of approved operators and hardware
- Flight plan map diagram (including launch and landing location)
- FAA-Airspace flight map classification and confirmation with graphics
- UAS incident management protocol

(3) If contractor is requesting multiple types of the same flight, a simplified request can be submitted listing weekly flight plan.

(4) Safety measures must include but are not limited to:

- Regular training and updates on drone regulations are required and must be provided upon request.
- Drones must be operated in accordance with safety guidelines, including maintaining a safe distance from people, structures, vehicles, etc.
- Conduct a pre-flight safety assessment, considering weather conditions, airspace restrictions, and potential hazards.
- Emergency procedures (e.g., drone malfunction, loss of control) must be documented and followed.
- All incidents must be reported to the engineer.

(5) If the drone has an incident during flight, report the following to the engineer:

- Incident background and details.
- FAA (14 CFR 107.9) and NTSB (49 CFR 870) notification protocol.
- Contractor internal notification protocol.

107.27.3 Insurance Requirements

(1) Maintain drone liability insurance with the following limits.

1. For drones weighing 10 pounds or less, a liability policy with a minimum limit of $1,000,000.00 is required.

2. For drones weighing more than 10 pounds and less than or equal to 20 pounds, a liability policy with a minimum limit of $2,000,000.00 is required.
3. For drones weighing more than 20 pounds, notify engineer and department will determine appropriate liability policy coverage levels based on size, use, location, and other risk factors.

---

646 Pavement Markings

646.3.2.4 Black Epoxy

Replace paragraph (1) with the following effective with the November 2024 letting.

(1) Apply black epoxy in a grooved slot directly after the white marking. Apply epoxy at a wet mil thickness of 20. Apply black aggregate at or exceeding 25 pounds per gallon of epoxy. Do not apply glass beads to black epoxy.

ERRATA

204.3.1.3 Salvaging or Disposal of Materials

Replace paragraph (2) to correct link from 203.3.4 to 203.3.5 effective with the November 2024 letting.

(2) Dispose of concrete, stone, brick, and other material not designated for salvage as specified for disposing of materials under 203.3.5.

204.3.2.3 Removing Buildings

Replace paragraph (2) to correct link from 203.3.4 to 203.3.5 effective with the November 2024 letting.

(2) Buildings removed and materials resulting from building removal become the contractor's property unless the contract specifies otherwise. Dispose of unclaimed and removed material as specified for disposing of materials in 203.3.5.

335.3.2 Rubblizing

Replace paragraph (6) to correct link from 203.3.4 to 203.3.5 effective with the November 2024 letting.

(6) Remove reinforcing steel exposed at the surface by cutting below the surface and disposing of the steel as specified in 203.3.5. Do not remove unexposed reinforcing steel.

335.3.3 Compacting

Replace paragraph (2) to correct link from 203.3.4 to 203.3.5 effective with the November 2024 letting.

(2) Remove loose asphaltic patching material, joint fillers, expansion material, or other similar materials from the compacted surface. Also remove pavement or patches that have a maximum dimension greater than or equal to 6 inches that are either not well seated or projecting more than one inch. Dispose of removed material as specified in 203.3.5.

526.3.4 Construction, Backfilling, Inspection and Maintenance

Replace paragraph (3) to correct link from 203.3.4 to 203.3.5 effective with the November 2024 letting.

(3) Maintain temporary structures and approaches in place until no longer needed. Unless the engineer directs otherwise, completely remove and dispose of as specified in 203.3.5. Contractor-furnished materials remain the contractor's property upon removal.

602.3.6 Concrete Rumble Strips

Replace paragraph (5) to correct link from 203.3.4 to 203.3.5 effective with the November 2024 letting.

(5) At the end of each workday, move equipment and material out of the clear zone and sweep or vacuum the traveled way pavement and shoulder areas. Sweep away or vacuum up milling debris before opening adjacent lanes to traffic. Dispose of waste material as specified in 203.3.5; do not place on the finished shoulder surface.

604.2 Materials

Replace paragraph (1) with the following information to remove line and link for crushed aggregate effective with the November 2024 letting. The crushed aggregate gradation information for slope paving is now found in 604.2(3).

(1) Furnish materials conforming to the following:

Water	501.2
Select crushed material	312.2
Concrete	501
Reinforcement	505
Expansion joint filler	415.2.3
Asphaltic materials	455.2

ADDITIONAL SPECIAL PROVISION 7

A. Reporting 1st Tier and DBE Payments During Construction

1. Comply with reporting requirements specified in the department's Civil Rights Compliance, Contractor's User Manual, Sublets and Payments.
2. Report payments to all DBE firms within 10 calendar days of receipt of a progress payment by the department or a contractor for work performed, materials furnished, or materials stockpiled by a DBE firm. Report the payment as specified in A(1) for all work satisfactorily performed and for all materials furnished or stockpiled.
3. Report payments to all first tier subcontractor relationships within 10 calendar days of receipt of a progress payment by the department for work performed. Report the payment as specified in A(1) for all work satisfactorily performed.
4. All tiers shall report payments as necessary to comply with the DBE payment requirement as specified in A(2).
5. DBE firms must enter all payments to DBE and non-DBE firms regardless of tier.
6. Require all first tier relationships, DBE firms and all other tier relationships necessary to comply with the DBE payment requirement in receipt of a progress payment by contractor to acknowledge receipt of payment as specified in A(1), (2), (3) and (4).
7. All agreements made by a contractor shall include the provisions in A(1), (2), (3), (4), (5), and (6), and shall be binding on all first tier subcontractor relationships, all contractors and subcontractors utilizing DBE firms on the project, and all payments from DBE firms.

B. Costs for conforming to this special provision are incidental to the contract.

NOTE: CRCS Prime Contractor payment is currently not automated and will need to be manually loaded into the Civil Rights Compliance System. Copies of prime contractor payments received (check or ACH) will have to be forwarded to paul.ndon@dot.wi.gov within 5 days of payment receipt to be logged manually.

***Additionally, for information on Subcontractor Sublet assignments, Subcontractor Payments and Payment Tracking, please refer to the CRCS Payment and Sublets manual at:

https://wisconsindot.gov/Documents/doing-bus/civil-rights/labornwage/crcs-payments-sublets-manual.pdf

ADDITIONAL SPECIAL PROVISION 9

Electronic Certified Payroll or Labor Data Submittal

(1) Use the department's Civil Rights Compliance System (CRCS) to electronically submit certified payroll reports for contracts with federal funds and labor data for contracts with state funds only. Details are available online through the department's highway construction contractor information (HCCI) site on the Labor, Wages, and EEO Information page at:

https://wisconsindot.gov/Pages/doing-bus/civil-rights/labornwage/default.aspx

(2) Ensure that all tiers of subcontractors, including all trucking firms, either submit their weekly certified payroll reports (contracts with federal funds) or labor data (contracts with state funds only) electronically through CRCS. These payrolls or labor data are due within seven calendar days following the close of the payroll period. Every firm providing physical labor towards completing the project is a subcontractor under this special provision.

(3) Upon receipt of contract execution, promptly make all affected firms aware of the requirements under this special provision and arrange for them to receive CRCS training as they are about to begin their submittals. The department will provide training either in a classroom setting at one of our regional offices or by telephone. Contact Paul Ndon at (414) 438-4584 to schedule the training.

(4) The department will reject all paper submittals for information required under this special provision. All costs for conforming to this special provision are incidental to the contract.

(5) Firms wishing to export payroll/labor data from their computer system into CRCS should have their payroll coordinator contact Paul Ndon at paul.ndon@dot.wi.gov. Not every contractor's payroll system is capable of producing export files. For details, see Section 4.8 CPR Auto Submit (Data Mapping) on pages 49-50; 66-71 of the CRCS Payroll Manual at:

https://wisconsindot.gov/Documents/doing-bus/civil-rights/labornwage/crcs-payroll-manual.pdf

REQUIRED CONTRACT PROVISIONS
FEDERAL-AID CONSTRUCTION CONTRACTS

I. General
II. Nondiscrimination
III. Non-segregated Facilities
IV. Davis-Bacon and Related Act Provisions
V. Contract Work Hours and Safety Standards Act Provisions
VI. Subletting or Assigning the Contract
VII. Safety: Accident Prevention
VIII. False Statements Concerning Highway Projects
IX. Implementation of Clean Air Act and Federal Water Pollution Control Act
X. Certification Regarding Debarment, Suspension, Ineligibility and Voluntary Exclusion
XI. Certification Regarding Use of Contract Funds for Lobbying
XII. Use of United States-Flag Vessels:

ATTACHMENTS

A. Employment and Materials Preference for Appalachian Development Highway System or Appalachian Local Access Road Contracts (included in Appalachian contracts only)

I. GENERAL

1. Form FHWA-1273 must be physically incorporated in each construction contract funded under title 23, United States Code, as required in 23 CFR 633.102(b) (excluding emergency contracts solely intended for debris removal). The contractor (or subcontractor) must insert this form in each subcontract and further require its inclusion in all lower tier subcontracts (excluding purchase orders, rental agreements and other agreements for supplies or services). 23 CFR 633.102(e).

The applicable requirements of Form FHWA-1273 are incorporated by reference for work done under any purchase order, rental agreement or agreement for other services. The prime contractor shall be responsible for compliance by any subcontractor, lower-tier subcontractor or service provider. 23 CFR 633.102(e).

Form FHWA-1273 must be included in all Federal-aid design-build contracts, in all subcontracts and in lower tier subcontracts (excluding subcontracts for design services, purchase orders, rental agreements and other agreements for supplies or services) in accordance with 23 CFR 633.102. The design-builder shall be responsible for compliance by any subcontractor, lower-tier subcontractor or service provider.

Contracting agencies may reference Form FHWA-1273 in solicitation-for-bids or request-for-proposals documents, however, the Form FHWA-1273 must be physically incorporated (not referenced) in all contracts, subcontracts and lower-tier subcontracts (excluding purchase orders, rental agreements and other agreements for supplies or services related to a construction contract). 23 CFR 633.102(b).

2. Subject to the applicability criteria noted in the following sections, these contract provisions shall apply to all work performed on the contract by the contractor's own organization and with the assistance of workers under the contractor's immediate superintendence and to all work performed on the contract by piecework, station work, or by subcontract. 23 CFR 633.102(d).

3. A breach of any of the stipulations contained in these Required Contract Provisions may be sufficient grounds for withholding of progress payments, withholding of final payment, termination of the contract, suspension / debarment or any other action determined to be appropriate by the contracting agency and FHWA.

4. Selection of Labor: During the performance of this contract, the contractor shall not use convict labor for any purpose within the limits of a construction project on a Federal-aid highway unless it is labor performed by convicts who are on parole, supervised release, or probation. 23 U.S.C. 114(b). The term Federal-aid highway does not include roadways functionally classified as local roads or rural minor collectors. 23 U.S.C. 101(a).

II. NONDISCRIMINATION (23 CFR 230.107(a); 23 CFR Part 230, Subpart A, Appendix A; EO 11246)

The provisions of this section related to 23 CFR Part 230, Subpart A, Appendix A are applicable to all Federal-aid construction contracts and to all related construction subcontracts of $10,000 or more. The provisions of 23 CFR Part 230 are not applicable to material supply, engineering, or architectural service contracts.

In addition, the contractor and all subcontractors must comply with the following policies: Executive Order 11246, 41 CFR Part 60, 29 CFR Parts 1625-1627, 23 U.S.C. 140, Section 504 of the Rehabilitation Act of 1973, as amended (29 U.S.C. 794), Title VI of the Civil Rights Act of 1964, as amended (42 U.S.C. 2000d et seq.), and related regulations including 49 CFR Parts 21, 26, and 27; and 23 CFR Parts 200, 230, and 633.

The contractor and all subcontractors must comply with: the requirements of the Equal Opportunity Clause in 41 CFR 60-1.4(b) and, for all construction contracts exceeding $10,000, the Standard Federal Equal Employment Opportunity Construction Contract Specifications in 41 CFR 60-4.3.

Note: The U.S. Department of Labor has exclusive authority to determine compliance with Executive Order 11246 and the policies of the Secretary of Labor including 41 CFR Part 60, and 29 CFR Parts 1625-1627. The contracting agency and the FHWA have the authority and the responsibility to ensure compliance with 23 U.S.C. 140, Section 504 of the Rehabilitation Act of 1973, as amended (29 U.S.C. 794), and Title VI of the Civil Rights Act of 1964, as amended (42 U.S.C. 2000d et seq.), and related regulations including 49 CFR Parts 21, 26, and 27; and 23 CFR Parts 200, 230, and 633.

The following provision is adopted from 23 CFR Part 230, Subpart A, Appendix A, with appropriate revisions to conform to the U.S. Department of Labor (US DOL) and FHWA requirements.

1. Equal Employment Opportunity: Equal Employment Opportunity (EEO) requirements not to discriminate and to take affirmative action to assure equal opportunity as set forth under laws, executive orders, rules, regulations (*see* 28 CFR Part 35, 29 CFR Part 1630, 29 CFR Parts 1625-1627, 41 CFR Part 60 and 49 CFR Part 27) and orders of the Secretary of Labor as modified by the provisions prescribed herein, and imposed pursuant to 23 U.S.C. 140, shall constitute the EEO and specific affirmative action standards for the contractor's project activities under this contract. The provisions of the Americans with Disabilities Act of 1990 (42 U.S.C. 12101 et seq.) set forth under 28 CFR Part 35 and 29 CFR Part 1630 are incorporated by reference in this contract. In the execution of this contract, the contractor agrees to comply with the following minimum specific requirement activities of EEO:

a. The contractor will work with the contracting agency and the Federal Government to ensure that it has made every good faith effort to provide equal opportunity with respect to all of its terms and conditions of employment and in their review of activities under the contract. 23 CFR 230.409 (g)(4) & (5).

b. The contractor will accept as its operating policy the following statement:

> "It is the policy of this Company to assure that applicants are employed, and that employees are treated during employment, without regard to their race, religion, sex, sexual orientation, gender identity, color, national origin, age or disability. Such action shall include: employment, upgrading, demotion, or transfer; recruitment or recruitment advertising; layoff or termination; rates of pay or other forms of compensation; and selection for training, including apprenticeship, pre-apprenticeship, and/or on-the-job training."

2. EEO Officer: The contractor will designate and make known to the contracting officers an EEO Officer who will have the responsibility for and must be capable of effectively administering and promoting an active EEO program and who must be assigned adequate authority and responsibility to do so.

3. Dissemination of Policy: All members of the contractor's staff who are authorized to hire, supervise, promote, and discharge employees, or who recommend such action or are substantially involved in such action, will be made fully cognizant of and will implement the contractor's EEO policy and contractual responsibilities to provide EEO in each grade and classification of employment. To ensure that the above agreement will be met, the following actions will be taken as a minimum:

a. Periodic meetings of supervisory and personnel office employees will be conducted before the start of work and then not less often than once every six months, at which time the contractor's EEO policy and its implementation will be reviewed and explained. The meetings will be conducted by the EEO Officer or other knowledgeable company official.

b. All new supervisory or personnel office employees will be given a thorough indoctrination by the EEO Officer, covering all major aspects of the contractor's EEO obligations within thirty days following their reporting for duty with the contractor.

c. All personnel who are engaged in direct recruitment for the project will be instructed by the EEO Officer in the contractor's procedures for locating and hiring minorities and women.

d. Notices and posters setting forth the contractor's EEO policy will be placed in areas readily accessible to employees, applicants for employment and potential employees.

e. The contractor's EEO policy and the procedures to implement such policy will be brought to the attention of employees by means of meetings, employee handbooks, or other appropriate means.

4. Recruitment: When advertising for employees, the contractor will include in all advertisements for employees the notation: "An Equal Opportunity Employer." All such advertisements will be placed in publications having a large circulation among minorities and women in the area from which the project work force would normally be derived.

a. The contractor will, unless precluded by a valid bargaining agreement, conduct systematic and direct recruitment through public and private employee referral sources likely to yield qualified minorities and women. To meet this requirement, the contractor will identify sources of potential minority group employees and establish with such identified sources procedures whereby minority and women applicants may be referred to the contractor for employment consideration.

b. In the event the contractor has a valid bargaining agreement providing for exclusive hiring hall referrals, the contractor is expected to observe the provisions of that agreement to the extent that the system meets the contractor's compliance with EEO contract provisions. Where implementation of such an agreement has the effect of discriminating against minorities or women, or obligates the contractor to do the same, such implementation violates Federal nondiscrimination provisions.

c. The contractor will encourage its present employees to refer minorities and women as applicants for employment. Information and procedures with regard to referring such applicants will be discussed with employees.

5. Personnel Actions: Wages, working conditions, and employee benefits shall be established and administered, and personnel actions of every type, including hiring, upgrading, promotion, transfer, demotion, layoff, and termination, shall be taken without regard to race, color, religion, sex, sexual orientation, gender identity, national origin, age or disability. The following procedures shall be followed:

a. The contractor will conduct periodic inspections of project sites to ensure that working conditions and employee facilities do not indicate discriminatory treatment of project site personnel.

b. The contractor will periodically evaluate the spread of wages paid within each classification to determine any evidence of discriminatory wage practices.

c. The contractor will periodically review selected personnel actions in depth to determine whether there is evidence of discrimination. Where evidence is found, the contractor will promptly take corrective action. If the review indicates that the discrimination may extend beyond the actions reviewed, such corrective action shall include all affected persons.

d. The contractor will promptly investigate all complaints of alleged discrimination made to the contractor in connection with its obligations under this contract, will attempt to resolve such complaints, and will take appropriate corrective action

within a reasonable time. If the investigation indicates that the discrimination may affect persons other than the complainant, such corrective action shall include such other persons. Upon completion of each investigation, the contractor will inform every complainant of all of their avenues of appeal.

6. Training and Promotion:

a. The contractor will assist in locating, qualifying, and increasing the skills of minorities and women who are applicants for employment or current employees. Such efforts should be aimed at developing full journey level status employees in the type of trade or job classification involved.

b. Consistent with the contractor's work force requirements and as permissible under Federal and State regulations, the contractor shall make full use of training programs (i.e., apprenticeship and on-the-job training programs for the geographical area of contract performance). In the event a special provision for training is provided under this contract, this subparagraph will be superseded as indicated in the special provision. The contracting agency may reserve training positions for persons who receive welfare assistance in accordance with 23 U.S.C. 140(a).

c. The contractor will advise employees and applicants for employment of available training programs and entrance requirements for each.

d. The contractor will periodically review the training and promotion potential of employees who are minorities and women and will encourage eligible employees to apply for such training and promotion.

7. Unions: If the contractor relies in whole or in part upon unions as a source of employees, the contractor will use good faith efforts to obtain the cooperation of such unions to increase opportunities for minorities and women. 23 CFR 230.409. Actions by the contractor, either directly or through a contractor's association acting as agent, will include the procedures set forth below:

a. The contractor will use good faith efforts to develop, in cooperation with the unions, joint training programs aimed toward qualifying more minorities and women for membership in the unions and increasing the skills of minorities and women so that they may qualify for higher paying employment.

b. The contractor will use good faith efforts to incorporate an EEO clause into each union agreement to the end that such union will be contractually bound to refer applicants without regard to their race, color, religion, sex, sexual orientation, gender identity, national origin, age, or disability.

c. The contractor is to obtain information as to the referral practices and policies of the labor union except that to the extent such information is within the exclusive possession of the labor union and such labor union refuses to furnish such information to the contractor, the contractor shall so certify to the contracting agency and shall set forth what efforts have been made to obtain such information.

d. In the event the union is unable to provide the contractor with a reasonable flow of referrals within the time limit set forth in the collective bargaining agreement, the contractor will, through independent recruitment efforts, fill the employment vacancies without regard to race, color, religion, sex, sexual orientation, gender identity, national origin, age, or disability; making full efforts to obtain qualified and/or qualifiable minorities and women. The failure of a union to provide sufficient referrals (even though it is obligated to provide exclusive referrals under the terms of a collective bargaining agreement) does not relieve the contractor from the requirements of this paragraph. In the event the union referral practice prevents the contractor from meeting the obligations pursuant to Executive Order 11246, as amended, and these special provisions, such contractor shall immediately notify the contracting agency.

8. Reasonable Accommodation for Applicants / Employees with Disabilities: The contractor must be familiar with the requirements for and comply with the Americans with Disabilities Act and all rules and regulations established thereunder. Employers must provide reasonable accommodation in all employment activities unless to do so would cause an undue hardship.

9. Selection of Subcontractors, Procurement of Materials and Leasing of Equipment: The contractor shall not discriminate on the grounds of race, color, religion, sex, sexual orientation, gender identity, national origin, age, or disability in the selection and retention of subcontractors, including procurement of materials and leases of equipment. The contractor shall take all necessary and reasonable steps to ensure nondiscrimination in the administration of this contract.

a. The contractor shall notify all potential subcontractors, suppliers, and lessors of their EEO obligations under this contract.

b. The contractor will use good faith efforts to ensure subcontractor compliance with their EEO obligations.

10. Assurances Required:

a. The requirements of 49 CFR Part 26 and the State DOT's FHWA-approved Disadvantaged Business Enterprise (DBE) program are incorporated by reference.

b. The contractor, subrecipient or subcontractor shall not discriminate on the basis of race, color, national origin, or sex in the performance of this contract. The contractor shall carry out applicable requirements of 49 CFR part 26 in the award and administration of DOT-assisted contracts. Failure by the contractor to carry out these requirements is a material breach of this contract, which may result in the termination of this contract or such other remedy as the recipient deems appropriate, which may include, but is not limited to:
(1) Withholding monthly progress payments;
(2) Assessing sanctions;
(3) Liquidated damages; and/or
(4) Disqualifying the contractor from future bidding as non-responsible.

c. The Title VI and nondiscrimination provisions of U.S. DOT Order 1050.2A at Appendixes A and E are incorporated by reference. 49 CFR Part 21.

11. Records and Reports: The contractor shall keep such records as necessary to document compliance with the EEO requirements. Such records shall be retained for a period of three years following the date of the final payment to the contractor for all contract work and shall be available at reasonable times and places for inspection by authorized representatives of the contracting agency and the FHWA.

a. The records kept by the contractor shall document the following:

(1) The number and work hours of minority and non-minority group members and women employed in each work classification on the project;

(2) The progress and efforts being made in cooperation with unions, when applicable, to increase employment opportunities for minorities and women; and

(3) The progress and efforts being made in locating, hiring, training, qualifying, and upgrading minorities and women.

b. The contractors and subcontractors will submit an annual report to the contracting agency each July for the duration of the project indicating the number of minority, women, and non-minority group employees currently engaged in each work classification required by the contract work. This information is to be reported on Form FHWA-1391. The staffing data should represent the project work force on board in all or any part of the last payroll period preceding the end of July. If on-the-job training is being required by special provision, the contractor will be required to collect and report training data. The employment data should reflect the work force on board during all or any part of the last payroll period preceding the end of July.

III. NONSEGREGATED FACILITIES

This provision is applicable to all Federal-aid construction contracts and to all related construction subcontracts of more than $10,000. 41 CFR 60-1.5.

As prescribed by 41 CFR 60-1.8, the contractor must ensure that facilities provided for employees are provided in such a manner that segregation on the basis of race, color, religion, sex, sexual orientation, gender identity, or national origin cannot result. The contractor may neither require such segregated use by written or oral policies nor tolerate such use by employee custom. The contractor's obligation extends further to ensure that its employees are not assigned to perform their services at any location under the contractor's control where the facilities are segregated. The term "facilities" includes waiting rooms, work areas, restaurants and other eating areas, time clocks, restrooms, washrooms, locker rooms and other storage or dressing areas, parking lots, drinking fountains, recreation or entertainment areas, transportation, and housing provided for employees. The contractor shall provide separate or single-user restrooms and necessary dressing or sleeping areas to assure privacy between sexes.

IV. DAVIS-BACON AND RELATED ACT PROVISIONS

This section is applicable to all Federal-aid construction projects exceeding $2,000 and to all related subcontracts and lower-tier subcontracts (regardless of subcontract size), in accordance with 29 CFR 5.5. The requirements apply to all projects located within the right-of-way of a roadway that is functionally classified as Federal-aid highway. 23 U.S.C. 113. This excludes roadways functionally classified as local roads or rural minor collectors, which are exempt. 23 U.S.C. 101. Where applicable law requires that projects be treated as a project on a Federal-aid highway, the provisions of this subpart will apply regardless of the location of the project. Examples include: Surface Transportation Block Grant Program projects funded under 23 U.S.C. 133 [excluding recreational trails projects], the Nationally Significant Freight and Highway Projects funded under 23 U.S.C. 117, and National Highway Freight Program projects funded under 23 U.S.C. 167.

The following provisions are from the U.S. Department of Labor regulations in 29 CFR 5.5 “Contract provisions and related matters” with minor revisions to conform to the FHWA-1273 format and FHWA program requirements.

1. Minimum wages (29 CFR 5.5)

a. *Wage rates and fringe benefits.* All laborers and mechanics employed or working upon the site of the work (or otherwise working in construction or development of the project under a development statute), will be paid unconditionally and not less often than once a week, and without subsequent deduction or rebate on any account (except such payroll deductions as are permitted by regulations issued by the Secretary of Labor under the Copeland Act (29 CFR part 3)), the full amount of basic hourly wages and bona fide fringe benefits (or cash equivalents thereof) due at time of payment computed at rates not less than those contained in the wage determination of the Secretary of Labor which is attached hereto and made a part hereof, regardless of any contractual relationship which may be alleged to exist between the contractor and such laborers and mechanics. As provided in paragraphs (d) and (e) of 29 CFR 5.5, the appropriate wage determinations are effective by operation of law even if they have not been attached to the contract. Contributions made or costs reasonably anticipated for bona fide fringe benefits under the Davis-Bacon Act (40 U.S.C. 3141(2)(B)) on behalf of laborers or mechanics are considered wages paid to such laborers or mechanics, subject to the provisions of paragraph 1.e. of this section; also, regular contributions made or costs incurred for more than a weekly period (but not less often than quarterly) under plans, funds, or programs which cover the particular weekly period, are deemed to be constructively made or incurred during such weekly period. Such laborers and mechanics must be paid the appropriate wage rate and fringe benefits on the wage determination for the classification(s) of work actually performed, without regard to skill, except as provided in paragraph 4. of this section. Laborers or mechanics performing work in more than one classification may be compensated at the rate specified for each classification for the time actually worked therein: *Provided,* That the employer's payroll records accurately set forth the time spent in each classification in which work is performed. The wage determination (including any additional classifications and wage rates conformed under paragraph 1.c. of this section) and the Davis-Bacon poster (WH–1321) must be posted at all times by the contractor and its subcontractors at the site of the work in a prominent and accessible place where it can be easily seen by the workers.

b. *Frequently recurring classifications.* (1) In addition to wage and fringe benefit rates that have been determined to be prevailing under the procedures set forth in 29 CFR part 1, a wage determination may contain, pursuant to § 1.3(f), wage and fringe benefit rates for classifications of laborers and mechanics for which conformance requests are regularly submitted pursuant to paragraph 1.c. of this section, provided that:

(i) The work performed by the classification is not performed by a classification in the wage determination for which a prevailing wage rate has been determined;

(ii) The classification is used in the area by the construction industry; and

(iii) The wage rate for the classification bears a reasonable relationship to the prevailing wage rates contained in the wage determination.

(2) The Administrator will establish wage rates for such classifications in accordance with paragraph 1.c.(1)(iii) of this section. Work performed in such a classification must be paid at no less than the wage and fringe benefit rate listed on the wage determination for such classification.

c. *Conformance.* (1) The contracting officer must require that any class of laborers or mechanics, including helpers, which is not listed in the wage determination and which is to be employed under the contract be classified in conformance with the wage determination. Conformance of an additional classification and wage rate and fringe benefits is appropriate only when the following criteria have been met:

(i) The work to be performed by the classification requested is not performed by a classification in the wage determination; and

(ii) The classification is used in the area by the construction industry; and

(iii) The proposed wage rate, including any bona fide fringe benefits, bears a reasonable relationship to the wage rates contained in the wage determination.

(2) The conformance process may not be used to split, subdivide, or otherwise avoid application of classifications listed in the wage determination.

(3) If the contractor and the laborers and mechanics to be employed in the classification (if known), or their representatives, and the contracting officer agree on the classification and wage rate (including the amount designated for fringe benefits where appropriate), a report of the action taken will be sent by the contracting officer by email to *DBAconformance@dol.gov*. The Administrator, or an authorized representative, will approve, modify, or disapprove every additional classification action within 30 days of receipt and so advise the contracting officer or will notify the contracting officer within the 30–day period that additional time is necessary.

(4) In the event the contractor, the laborers or mechanics to be employed in the classification or their representatives, and the contracting officer do not agree on the proposed classification and wage rate (including the amount designated for fringe benefits, where appropriate), the contracting officer will, by email to *DBAconformance@dol.gov,* refer the questions, including the views of all interested parties and the recommendation of the contracting officer, to the Administrator for determination. The Administrator, or an authorized representative, will issue a determination within 30 days of receipt and so advise the contracting officer or will notify the contracting officer within the 30–day period that additional time is necessary.

(5) The contracting officer must promptly notify the contractor of the action taken by the Wage and Hour Division under paragraphs 1.c.(3) and (4) of this section. The contractor must furnish a written copy of such determination to each affected worker or it must be posted as a part of the wage determination. The wage rate (including fringe benefits where appropriate) determined pursuant to paragraph 1.c.(3) or (4) of this section must be paid to all workers performing work in the classification under this contract from the first day on which work is performed in the classification.

d. *Fringe benefits not expressed as an hourly rate.* Whenever the minimum wage rate prescribed in the contract for a class of laborers or mechanics includes a fringe benefit which is not expressed as an hourly rate, the contractor may either pay the benefit as stated in the wage determination or may pay another bona fide fringe benefit or an hourly cash equivalent thereof.

e. *Unfunded plans.* If the contractor does not make payments to a trustee or other third person, the contractor may consider as part of the wages of any laborer or mechanic the amount of any costs reasonably anticipated in providing bona fide fringe benefits under a plan or program, *Provided,* That the Secretary of Labor has found, upon the written request of the contractor, in accordance with the criteria set forth in § 5.28, that the applicable standards of the Davis-Bacon Act have been met. The Secretary of Labor may require the contractor to set aside in a separate account assets for the meeting of obligations under the plan or program.

f. *Interest.* In the event of a failure to pay all or part of the wages required by the contract, the contractor will be required to pay interest on any underpayment of wages.

2. Withholding (29 CFR 5.5)

a. *Withholding requirements.* The contracting agency may, upon its own action, or must, upon written request of an authorized representative of the Department of Labor, withhold or cause to be withheld from the contractor so much of the accrued payments or advances as may be considered necessary to satisfy the liabilities of the prime contractor or any subcontractor for the full amount of wages and monetary relief, including interest, required by the clauses set forth in this section for violations of this contract, or to satisfy any such liabilities required by any other Federal contract, or federally assisted contract subject to Davis-Bacon labor standards, that is held by the same prime contractor (as defined in § 5.2). The necessary funds may be withheld from the contractor under this contract, any other Federal contract with the same prime contractor, or any other federally assisted contract that is subject to Davis-Bacon labor standards requirements and is held by the same prime contractor, regardless of whether the other contract was awarded or assisted by the same agency, and such funds may be used to satisfy the contractor liability for which the funds were withheld. In the event of a contractor's failure to pay any laborer or mechanic, including any apprentice or helper working on the site of the work all or part of the wages required by the contract, or upon the contractor's failure to submit the required records as discussed in paragraph 3.d. of this section, the contracting agency may on its own initiative and after written notice to the contractor, take such action as may be necessary to cause the suspension of any further payment, advance, or guarantee of funds until such violations have ceased.

b. *Priority to withheld funds.* The Department has priority to funds withheld or to be withheld in accordance with paragraph

2.a. of this section or Section V, paragraph 3.a., or both, over claims to those funds by:

(1) A contractor's surety(ies), including without limitation performance bond sureties and payment bond sureties;

(2) A contracting agency for its reprocurement costs;

(3) A trustee(s) (either a court-appointed trustee or a U.S. trustee, or both) in bankruptcy of a contractor, or a contractor's bankruptcy estate;

(4) A contractor's assignee(s);

(5) A contractor's successor(s); or

(6) A claim asserted under the Prompt Payment Act, 31 U.S.C. 3901–3907.

3. Records and certified payrolls (29 CFR 5.5)

a. *Basic record requirements* (1) *Length of record retention.* All regular payrolls and other basic records must be maintained by the contractor and any subcontractor during the course of the work and preserved for all laborers and mechanics working at the site of the work (or otherwise working in construction or development of the project under a development statute) for a period of at least 3 years after all the work on the prime contract is completed.

(2) *Information required.* Such records must contain the name; Social Security number; last known address, telephone number, and email address of each such worker; each worker's correct classification(s) of work actually performed; hourly rates of wages paid (including rates of contributions or costs anticipated for bona fide fringe benefits or cash equivalents thereof of the types described in 40 U.S.C. 3141(2)(B) of the Davis-Bacon Act); daily and weekly number of hours actually worked in total and on each covered contract; deductions made; and actual wages paid.

(3) *Additional records relating to fringe benefits.* Whenever the Secretary of Labor has found under paragraph 1.e. of this section that the wages of any laborer or mechanic include the amount of any costs reasonably anticipated in providing benefits under a plan or program described in 40 U.S.C. 3141(2)(B) of the Davis-Bacon Act, the contractor must maintain records which show that the commitment to provide such benefits is enforceable, that the plan or program is financially responsible, and that the plan or program has been communicated in writing to the laborers or mechanics affected, and records which show the costs anticipated or the actual cost incurred in providing such benefits.

(4) *Additional records relating to apprenticeship.* Contractors with apprentices working under approved programs must maintain written evidence of the registration of apprenticeship programs, the registration of the apprentices, and the ratios and wage rates prescribed in the applicable programs.

b. *Certified payroll requirements* (1) *Frequency and method of submission.* The contractor or subcontractor must submit weekly, for each week in which any DBA- or Related Acts-covered work is performed, certified payrolls to the contracting agency. The prime contractor is responsible for the submission of all certified payrolls by all subcontractors. A contracting agency or prime contractor may permit or require contractors to submit certified payrolls through an electronic system, as long as the electronic system requires a legally valid electronic signature; the system allows the contractor, the contracting agency, and the Department of Labor to access the certified payrolls upon request for at least 3 years after the work on the prime contract has been completed; and the contracting agency or prime contractor permits other methods of submission in situations where the contractor is unable or limited in its ability to use or access the electronic system.

(2) *Information required.* The certified payrolls submitted must set out accurately and completely all of the information required to be maintained under paragraph 3.a.(2) of this section, except that full Social Security numbers and last known addresses, telephone numbers, and email addresses must not be included on weekly transmittals. Instead, the certified payrolls need only include an individually identifying number for each worker (*e.g.,* the last four digits of the worker's Social Security number). The required weekly certified payroll information may be submitted using Optional Form WH–347 or in any other format desired. Optional Form WH–347 is available for this purpose from the Wage and Hour Division website at *https://www.dol.gov/sites/dolgov/files/WHD/legacy/files/wh347/.pdf* or its successor website. It is not a violation of this section for a prime contractor to require a subcontractor to provide full Social Security numbers and last known addresses, telephone numbers, and email addresses to the prime contractor for its own records, without weekly submission by the subcontractor to the contracting agency.

(3) *Statement of Compliance.* Each certified payroll submitted must be accompanied by a “Statement of Compliance,” signed by the contractor or subcontractor, or the contractor's or subcontractor's agent who pays or supervises the payment of the persons working on the contract, and must certify the following:

(i) That the certified payroll for the payroll period contains the information required to be provided under paragraph 3.b. of this section, the appropriate information and basic records are being maintained under paragraph 3.a. of this section, and such information and records are correct and complete;

(ii) That each laborer or mechanic (including each helper and apprentice) working on the contract during the payroll period has been paid the full weekly wages earned, without rebate, either directly or indirectly, and that no deductions have been made either directly or indirectly from the full wages earned, other than permissible deductions as set forth in 29 CFR part 3; and

(iii) That each laborer or mechanic has been paid not less than the applicable wage rates and fringe benefits or cash equivalents for the classification(s) of work actually performed, as specified in the applicable wage determination incorporated into the contract.

(4) *Use of Optional Form WH–347.* The weekly submission of a properly executed certification set forth on the reverse side of Optional Form WH–347 will satisfy the requirement for submission of the “Statement of Compliance” required by paragraph 3.b.(3) of this section.

(5) *Signature.* The signature by the contractor, subcontractor, or the contractor's or subcontractor's agent must be an original handwritten signature or a legally valid electronic signature.

(6) *Falsification.* The falsification of any of the above certifications may subject the contractor or subcontractor to civil or criminal prosecution under 18 U.S.C. 1001 and 31 U.S.C. 3729.

(7) *Length of certified payroll retention.* The contractor or subcontractor must preserve all certified payrolls during the course of the work and for a period of 3 years after all the work on the prime contract is completed.

c. *Contracts, subcontracts, and related documents.* The contractor or subcontractor must maintain this contract or subcontract and related documents including, without limitation, bids, proposals, amendments, modifications, and extensions. The contractor or subcontractor must preserve these contracts, subcontracts, and related documents during the course of the work and for a period of 3 years after all the work on the prime contract is completed.

d. *Required disclosures and access* (1) *Required record disclosures and access to workers.* The contractor or subcontractor must make the records required under paragraphs 3.a. through 3.c. of this section, and any other documents that the contracting agency, the State DOT, the FHWA, or the Department of Labor deems necessary to determine compliance with the labor standards provisions of any of the applicable statutes referenced by § 5.1, available for inspection, copying, or transcription by authorized representatives of the contracting agency, the State DOT, the FHWA, or the Department of Labor, and must permit such representatives to interview workers during working hours on the job.

(2) *Sanctions for non-compliance with records and worker access requirements.* If the contractor or subcontractor fails to submit the required records or to make them available, or refuses to permit worker interviews during working hours on the job, the Federal agency may, after written notice to the contractor, sponsor, applicant, owner, or other entity, as the case may be, that maintains such records or that employs such workers, take such action as may be necessary to cause the suspension of any further payment, advance, or guarantee of funds. Furthermore, failure to submit the required records upon request or to make such records available, or to permit worker interviews during working hours on the job, may be grounds for debarment action pursuant to § 5.12. In addition, any contractor or other person that fails to submit the required records or make those records available to WHD within the time WHD requests that the records be produced will be precluded from introducing as evidence in an administrative proceeding under 29 CFR part 6 any of the required records that were not provided or made available to WHD. WHD will take into consideration a reasonable request from the contractor or person for an extension of the time for submission of records. WHD will determine the reasonableness of the request and may consider, among other things, the location of the records and the volume of production.

(3) *Required information disclosures.* Contractors and subcontractors must maintain the full Social Security number and last known address, telephone number, and email address of each covered worker, and must provide them upon request to the contracting agency, the State DOT, the FHWA, the contractor, or the Wage and Hour Division of the Department of Labor for purposes of an investigation or other compliance action.

4. Apprentices and equal employment opportunity (29 CFR 5.5)

a. *Apprentices* (1) *Rate of pay.* Apprentices will be permitted to work at less than the predetermined rate for the work they perform when they are employed pursuant to and individually registered in a bona fide apprenticeship program registered with the U.S. Department of Labor, Employment and Training Administration, Office of Apprenticeship (OA), or with a State Apprenticeship Agency recognized by the OA. A person who is not individually registered in the program, but who has been certified by the OA or a State Apprenticeship Agency (where appropriate) to be eligible for probationary employment as an apprentice, will be permitted to work at less than the predetermined rate for the work they perform in the first 90 days of probationary employment as an apprentice in such a program. In the event the OA or a State Apprenticeship Agency recognized by the OA withdraws approval of an apprenticeship program, the contractor will no longer be permitted to use apprentices at less than the applicable predetermined rate for the work performed until an acceptable program is approved.

(2) *Fringe benefits.* Apprentices must be paid fringe benefits in accordance with the provisions of the apprenticeship program. If the apprenticeship program does not specify fringe benefits, apprentices must be paid the full amount of fringe benefits listed on the wage determination for the applicable classification. If the Administrator determines that a different practice prevails for the applicable apprentice classification, fringe benefits must be paid in accordance with that determination.

(3) *Apprenticeship ratio.* The allowable ratio of apprentices to journeyworkers on the job site in any craft classification must not be greater than the ratio permitted to the contractor as to the entire work force under the registered program or the ratio applicable to the locality of the project pursuant to paragraph 4.a.(4) of this section. Any worker listed on a payroll at an apprentice wage rate, who is not registered or otherwise employed as stated in paragraph 4.a.(1) of this section, must be paid not less than the applicable wage rate on the wage determination for the classification of work actually performed. In addition, any apprentice performing work on the job site in excess of the ratio permitted under this section must be paid not less than the applicable wage rate on the wage determination for the work actually performed.

(4) *Reciprocity of ratios and wage rates.* Where a contractor is performing construction on a project in a locality other than the locality in which its program is registered, the ratios and wage rates (expressed in percentages of the journeyworker's hourly rate) applicable within the locality in which the construction is being performed must be observed. If there is no applicable ratio or wage rate for the locality of the project, the ratio and wage rate specified in the contractor's registered program must be observed.

b. *Equal employment opportunity.* The use of apprentices and journeyworkers under this part must be in conformity with

the equal employment opportunity requirements of Executive Order 11246, as amended, and 29 CFR part 30.

c. Apprentices and Trainees (programs of the U.S. DOT).

Apprentices and trainees working under apprenticeship and skill training programs which have been certified by the Secretary of Transportation as promoting EEO in connection with Federal-aid highway construction programs are not subject to the requirements of paragraph 4 of this Section IV. 23 CFR 230.111(e)(2). The straight time hourly wage rates for apprentices and trainees under such programs will be established by the particular programs. The ratio of apprentices and trainees to journeyworkers shall not be greater than permitted by the terms of the particular program.

5. Compliance with Copeland Act requirements. The contractor shall comply with the requirements of 29 CFR part 3, which are incorporated by reference in this contract as provided in 29 CFR 5.5.

6. Subcontracts. The contractor or subcontractor must insert FHWA-1273 in any subcontracts, along with the applicable wage determination(s) and such other clauses or contract modifications as the contracting agency may by appropriate instructions require, and a clause requiring the subcontractors to include these clauses and wage determination(s) in any lower tier subcontracts. The prime contractor is responsible for the compliance by any subcontractor or lower tier subcontractor with all the contract clauses in this section. In the event of any violations of these clauses, the prime contractor and any subcontractor(s) responsible will be liable for any unpaid wages and monetary relief, including interest from the date of the underpayment or loss, due to any workers of lower-tier subcontractors, and may be subject to debarment, as appropriate. 29 CFR 5.5.

7. Contract termination: debarment. A breach of the contract clauses in 29 CFR 5.5 may be grounds for termination of the contract, and for debarment as a contractor and a subcontractor as provided in 29 CFR 5.12.

8. Compliance with Davis-Bacon and Related Act requirements. All rulings and interpretations of the Davis-Bacon and Related Acts contained in 29 CFR parts 1, 3, and 5 are herein incorporated by reference in this contract as provided in 29 CFR 5.5.

9. Disputes concerning labor standards. As provided in 29 CFR 5.5, disputes arising out of the labor standards provisions of this contract shall not be subject to the general disputes clause of this contract. Such disputes shall be resolved in accordance with the procedures of the Department of Labor set forth in 29 CFR parts 5, 6, and 7. Disputes within the meaning of this clause include disputes between the contractor (or any of its subcontractors) and the contracting agency, the U.S. Department of Labor, or the employees or their representatives.

10. Certification of eligibility. a. By entering into this contract, the contractor certifies that neither it nor any person or firm who has an interest in the contractor's firm is a person or firm ineligible to be awarded Government contracts by virtue of 40 U.S.C. 3144(b) or § 5.12(a).

b. No part of this contract shall be subcontracted to any person or firm ineligible for award of a Government contract by virtue of 40 U.S.C. 3144(b) or § 5.12(a).

c. The penalty for making false statements is prescribed in the U.S. Code, Title 18 Crimes and Criminal Procedure, 18 U.S.C. 1001.

11. Anti-retaliation. It is unlawful for any person to discharge, demote, intimidate, threaten, restrain, coerce, blacklist, harass, or in any other manner discriminate against, or to cause any person to discharge, demote, intimidate, threaten, restrain, coerce, blacklist, harass, or in any other manner discriminate against, any worker or job applicant for:

a. Notifying any contractor of any conduct which the worker reasonably believes constitutes a violation of the DBA, Related Acts, this part, or 29 CFR part 1 or 3;

b. Filing any complaint, initiating or causing to be initiated any proceeding, or otherwise asserting or seeking to assert on behalf of themselves or others any right or protection under the DBA, Related Acts, this part, or 29 CFR part 1 or 3;

c. Cooperating in any investigation or other compliance action, or testifying in any proceeding under the DBA, Related Acts, this part, or 29 CFR part 1 or 3; or

d. Informing any other person about their rights under the DBA, Related Acts, this part, or 29 CFR part 1 or 3.

V. CONTRACT WORK HOURS AND SAFETY STANDARDS ACT

Pursuant to 29 CFR 5.5(b), the following clauses apply to any Federal-aid construction contract in an amount in excess of $100,000 and subject to the overtime provisions of the Contract Work Hours and Safety Standards Act. These clauses shall be inserted in addition to the clauses required by 29 CFR 5.5(a) or 29 CFR 4.6. As used in this paragraph, the terms laborers and mechanics include watchpersons and guards.

1. Overtime requirements. No contractor or subcontractor contracting for any part of the contract work which may require or involve the employment of laborers or mechanics shall require or permit any such laborer or mechanic in any workweek in which he or she is employed on such work to work in excess of forty hours in such workweek unless such laborer or mechanic receives compensation at a rate not less than one and one-half times the basic rate of pay for all hours worked in excess of forty hours in such workweek. 29 CFR 5.5.

2. Violation; liability for unpaid wages; liquidated damages. In the event of any violation of the clause set forth in paragraph 1. of this section the contractor and any subcontractor responsible therefor shall be liable for the unpaid wages and interest from the date of the underpayment. In addition, such contractor and subcontractor shall be liable to the United States (in the case of work done under contract for the District of Columbia or a territory, to such District or to such territory), for liquidated damages. Such liquidated damages shall be computed with respect to each individual laborer or

mechanic, including watchpersons and guards, employed in violation of the clause set forth in paragraph 1. of this section, in the sum currently provided in 29 CFR 5.5(b)(2)* for each calendar day on which such individual was required or permitted to work in excess of the standard workweek of forty hours without payment of the overtime wages required by the clause set forth in paragraph 1. of this section.

* $31 as of January 15, 2023 (See 88 FR 88 FR 2210) as may be adjusted annually by the Department of Labor, pursuant to the Federal Civil Penalties Inflation Adjustment Act of 1990.

3. Withholding for unpaid wages and liquidated damages

a. *Withholding process.* The FHWA or the contracting agency may, upon its own action, or must, upon written request of an authorized representative of the Department of Labor, withhold or cause to be withheld from the contractor so much of the accrued payments or advances as may be considered necessary to satisfy the liabilities of the prime contractor or any subcontractor for any unpaid wages; monetary relief, including interest; and liquidated damages required by the clauses set forth in this section on this contract, any other Federal contract with the same prime contractor, or any other federally assisted contract subject to the Contract Work Hours and Safety Standards Act that is held by the same prime contractor (as defined in § 5.2). The necessary funds may be withheld from the contractor under this contract, any other Federal contract with the same prime contractor, or any other federally assisted contract that is subject to the Contract Work Hours and Safety Standards Act and is held by the same prime contractor, regardless of whether the other contract was awarded or assisted by the same agency, and such funds may be used to satisfy the contractor liability for which the funds were withheld.

b. *Priority to withheld funds.* The Department has priority to funds withheld or to be withheld in accordance with Section IV paragraph 2.a. or paragraph 3.a. of this section, or both, over claims to those funds by:

(1) A contractor's surety(ies), including without limitation performance bond sureties and payment bond sureties;

(2) A contracting agency for its reprocurement costs;

(3) A trustee(s) (either a court-appointed trustee or a U.S. trustee, or both) in bankruptcy of a contractor, or a contractor's bankruptcy estate;

(4) A contractor's assignee(s);

(5) A contractor's successor(s); or

(6) A claim asserted under the Prompt Payment Act, 31 U.S.C. 3901–3907.

4. Subcontracts. The contractor or subcontractor must insert in any subcontracts the clauses set forth in paragraphs 1. through 5. of this section and a clause requiring the subcontractors to include these clauses in any lower tier subcontracts. The prime contractor is responsible for compliance by any subcontractor or lower tier subcontractor with the clauses set forth in paragraphs 1. through 5. In the event of any violations of these clauses, the prime contractor and any subcontractor(s) responsible will be liable for any unpaid wages and monetary relief, including interest from the date of the underpayment or loss, due to any workers of lower-tier subcontractors, and associated liquidated damages and may be subject to debarment, as appropriate.

5. Anti-retaliation. It is unlawful for any person to discharge, demote, intimidate, threaten, restrain, coerce, blacklist, harass, or in any other manner discriminate against, or to cause any person to discharge, demote, intimidate, threaten, restrain, coerce, blacklist, harass, or in any other manner discriminate against, any worker or job applicant for:

a. Notifying any contractor of any conduct which the worker reasonably believes constitutes a violation of the Contract Work Hours and Safety Standards Act (CWHSSA) or its implementing regulations in this part;

b. Filing any complaint, initiating or causing to be initiated any proceeding, or otherwise asserting or seeking to assert on behalf of themselves or others any right or protection under CWHSSA or this part;

c. Cooperating in any investigation or other compliance action, or testifying in any proceeding under CWHSSA or this part; or

d. Informing any other person about their rights under CWHSSA or this part.

VI. SUBLETTING OR ASSIGNING THE CONTRACT

This provision is applicable to all Federal-aid construction contracts on the National Highway System pursuant to 23 CFR 635.116.

1. The contractor shall perform with its own organization contract work amounting to not less than 30 percent (or a greater percentage if specified elsewhere in the contract) of the total original contract price, excluding any specialty items designated by the contracting agency. Specialty items may be performed by subcontract and the amount of any such specialty items performed may be deducted from the total original contract price before computing the amount of work required to be performed by the contractor's own organization (23 CFR 635.116).

a. The term “perform work with its own organization” in paragraph 1 of Section VI refers to workers employed or leased by the prime contractor, and equipment owned or rented by the prime contractor, with or without operators. Such term does not include employees or equipment of a subcontractor or lower tier subcontractor, agents of the prime contractor, or any other assignees. The term may include payments for the costs of hiring leased employees from an employee leasing firm meeting all relevant Federal and State regulatory requirements. Leased employees may only be included in this term if the prime contractor meets all of the following conditions: (based on longstanding interpretation)

(1) the prime contractor maintains control over the supervision of the day-to-day activities of the leased employees;

(2) the prime contractor remains responsible for the quality of the work of the leased employees;

(3) the prime contractor retains all power to accept or exclude individual employees from work on the project; and

(4) the prime contractor remains ultimately responsible for the payment of predetermined minimum wages, the submission of payrolls, statements of compliance and all other Federal regulatory requirements.

b. "Specialty Items" shall be construed to be limited to work that requires highly specialized knowledge, abilities, or equipment not ordinarily available in the type of contracting organizations qualified and expected to bid or propose on the contract as a whole and in general are to be limited to minor components of the overall contract. 23 CFR 635.102.

2. Pursuant to 23 CFR 635.116(a), the contract amount upon which the requirements set forth in paragraph (1) of Section VI is computed includes the cost of material and manufactured products which are to be purchased or produced by the contractor under the contract provisions.

3. Pursuant to 23 CFR 635.116(c), the contractor shall furnish (a) a competent superintendent or supervisor who is employed by the firm, has full authority to direct performance of the work in accordance with the contract requirements, and is in charge of all construction operations (regardless of who performs the work) and (b) such other of its own organizational resources (supervision, management, and engineering services) as the contracting officer determines is necessary to assure the performance of the contract.

4. No portion of the contract shall be sublet, assigned or otherwise disposed of except with the written consent of the contracting officer, or authorized representative, and such consent when given shall not be construed to relieve the contractor of any responsibility for the fulfillment of the contract. Written consent will be given only after the contracting agency has assured that each subcontract is evidenced in writing and that it contains all pertinent provisions and requirements of the prime contract. (based on long-standing interpretation of 23 CFR 635.116).

5. The 30-percent self-performance requirement of paragraph (1) is not applicable to design-build contracts; however, contracting agencies may establish their own self-performance requirements. 23 CFR 635.116(d).

VII. SAFETY: ACCIDENT PREVENTION

This provision is applicable to all Federal-aid construction contracts and to all related subcontracts.

1. In the performance of this contract the contractor shall comply with all applicable Federal, State, and local laws governing safety, health, and sanitation (23 CFR Part 635). The contractor shall provide all safeguards, safety devices and protective equipment and take any other needed actions as it determines, or as the contracting officer may determine, to be reasonably necessary to protect the life and health of employees on the job and the safety of the public and to protect property in connection with the performance of the work covered by the contract. 23 CFR 635.108.

2. It is a condition of this contract, and shall be made a condition of each subcontract, which the contractor enters into pursuant to this contract, that the contractor and any subcontractor shall not permit any employee, in performance of the contract, to work in surroundings or under conditions which are unsanitary, hazardous or dangerous to his/her health or safety, as determined under construction safety and health standards (29 CFR Part 1926) promulgated by the Secretary of Labor, in accordance with Section 107 of the Contract Work Hours and Safety Standards Act (40 U.S.C. 3704). 29 CFR 1926.10.

3. Pursuant to 29 CFR 1926.3, it is a condition of this contract that the Secretary of Labor or authorized representative thereof, shall have right of entry to any site of contract performance to inspect or investigate the matter of compliance with the construction safety and health standards and to carry out the duties of the Secretary under Section 107 of the Contract Work Hours and Safety Standards Act (40 U.S.C. 3704).

VIII. FALSE STATEMENTS CONCERNING HIGHWAY PROJECTS

This provision is applicable to all Federal-aid construction contracts and to all related subcontracts.

In order to assure high quality and durable construction in conformity with approved plans and specifications and a high degree of reliability on statements and representations made by engineers, contractors, suppliers, and workers on Federal-aid highway projects, it is essential that all persons concerned with the project perform their functions as carefully, thoroughly, and honestly as possible. Willful falsification, distortion, or misrepresentation with respect to any facts related to the project is a violation of Federal law. To prevent any misunderstanding regarding the seriousness of these and similar acts, Form FHWA-1022 shall be posted on each Federal-aid highway project (23 CFR Part 635) in one or more places where it is readily available to all persons concerned with the project:

18 U.S.C. 1020 reads as follows:

"Whoever, being an officer, agent, or employee of the United States, or of any State or Territory, or whoever, whether a person, association, firm, or corporation, knowingly makes any false statement, false representation, or false report as to the character, quality, quantity, or cost of the material used or to be used, or the quantity or quality of the work performed or to be performed, or the cost thereof in connection with the submission of plans, maps, specifications, contracts, or costs of construction on any highway or related project submitted for approval to the Secretary of Transportation; or

Whoever knowingly makes any false statement, false representation, false report or false claim with respect to the character, quality, quantity, or cost of any work performed or to be performed, or materials furnished or to be furnished, in connection with the construction of any highway or related project approved by the Secretary of Transportation; or

Whoever knowingly makes any false statement or false representation as to material fact in any statement, certificate, or report submitted pursuant to provisions of the Federal-aid Roads Act approved July 11, 1916, (39 Stat. 355), as amended and supplemented;

Shall be fined under this title or imprisoned not more than 5 years or both."

IX. IMPLEMENTATION OF CLEAN AIR ACT AND FEDERAL WATER POLLUTION CONTROL ACT (42 U.S.C. 7606; 2 CFR 200.88; EO 11738)

This provision is applicable to all Federal-aid construction contracts in excess of $150,000 and to all related subcontracts. 48 CFR 2.101; 2 CFR 200.327.

By submission of this bid/proposal or the execution of this contract or subcontract, as appropriate, the bidder, proposer, Federal-aid construction contractor, subcontractor, supplier, or vendor agrees to comply with all applicable standards, orders or regulations issued pursuant to the Clean Air Act (42 U.S.C. 7401-7671q) and the Federal Water Pollution Control Act, as amended (33 U.S.C. 1251-1387). Violations must be reported to the Federal Highway Administration and the Regional Office of the Environmental Protection Agency. 2 CFR Part 200, Appendix II.

The contractor agrees to include or cause to be included the requirements of this Section in every subcontract, and further agrees to take such action as the contracting agency may direct as a means of enforcing such requirements. 2 CFR 200.327.

X. CERTIFICATION REGARDING DEBARMENT, SUSPENSION, INELIGIBILITY AND VOLUNTARY EXCLUSION

This provision is applicable to all Federal-aid construction contracts, design-build contracts, subcontracts, lower-tier subcontracts, purchase orders, lease agreements, consultant contracts or any other covered transaction requiring FHWA approval or that is estimated to cost $25,000 or more – as defined in 2 CFR Parts 180 and 1200. 2 CFR 180.220 and 1200.220.

1**. Instructions for Certification – First Tier Participants:**

a. By signing and submitting this proposal, the prospective first tier participant is providing the certification set out below.

b. The inability of a person to provide the certification set out below will not necessarily result in denial of participation in this covered transaction. The prospective first tier participant shall submit an explanation of why it cannot provide the certification set out below. The certification or explanation will be considered in connection with the department or agency's determination whether to enter into this transaction. However, failure of the prospective first tier participant to furnish a certification or an explanation shall disqualify such a person from participation in this transaction. 2 CFR 180.320.

c. The certification in this clause is a material representation of fact upon which reliance was placed when the contracting agency determined to enter into this transaction. If it is later determined that the prospective participant knowingly rendered an erroneous certification, in addition to other remedies available to the Federal Government, the contracting agency may terminate this transaction for cause of default. 2 CFR 180.325.

d. The prospective first tier participant shall provide immediate written notice to the contracting agency to whom this proposal is submitted if any time the prospective first tier participant learns that its certification was erroneous when submitted or has become erroneous by reason of changed circumstances. 2 CFR 180.345 and 180.350.

e. The terms "covered transaction," "debarred," "suspended," "ineligible," "participant," "person," "principal," and "voluntarily excluded," as used in this clause, are defined in 2 CFR Parts 180, Subpart I, 180.900-180.1020, and 1200. “First Tier Covered Transactions” refers to any covered transaction between a recipient or subrecipient of Federal funds and a participant (such as the prime or general contract). “Lower Tier Covered Transactions” refers to any covered transaction under a First Tier Covered Transaction (such as subcontracts). “First Tier Participant” refers to the participant who has entered into a covered transaction with a recipient or subrecipient of Federal funds (such as the prime or general contractor). “Lower Tier Participant” refers any participant who has entered into a covered transaction with a First Tier Participant or other Lower Tier Participants (such as subcontractors and suppliers).

f. The prospective first tier participant agrees by submitting this proposal that, should the proposed covered transaction be entered into, it shall not knowingly enter into any lower tier covered transaction with a person who is debarred, suspended, declared ineligible, or voluntarily excluded from participation in this covered transaction, unless authorized by the department or agency entering into this transaction. 2 CFR 180.330.

g. The prospective first tier participant further agrees by submitting this proposal that it will include the clause titled "Certification Regarding Debarment, Suspension, Ineligibility and Voluntary Exclusion-Lower Tier Covered Transactions," provided by the department or contracting agency, entering into this covered transaction, without modification, in all lower tier covered transactions and in all solicitations for lower tier covered transactions exceeding the $25,000 threshold. 2 CFR 180.220 and 180.300.

h. A participant in a covered transaction may rely upon a certification of a prospective participant in a lower tier covered transaction that is not debarred, suspended, ineligible, or voluntarily excluded from the covered transaction, unless it knows that the certification is erroneous. 2 CFR 180.300; 180.320, and 180.325. A participant is responsible for ensuring that its principals are not suspended, debarred, or otherwise ineligible to participate in covered transactions. 2 CFR 180.335. To verify the eligibility of its principals, as well as the eligibility of any lower tier prospective participants, each participant may, but is not required to, check the System for Award Management website (https://www.sam.gov/). 2 CFR 180.300, 180.320, and 180.325.

i. Nothing contained in the foregoing shall be construed to require the establishment of a system of records in order to render in good faith the certification required by this clause. The knowledge and information of the prospective participant is not required to exceed that which is normally possessed by a prudent person in the ordinary course of business dealings.

j. Except for transactions authorized under paragraph (f) of these instructions, if a participant in a covered transaction knowingly enters into a lower tier covered transaction with a person who is suspended, debarred, ineligible, or voluntarily excluded from participation in this transaction, in addition to other remedies available to the Federal Government, the department or agency may terminate this transaction for cause or default. 2 CFR 180.325.

* * * * *

2. Certification Regarding Debarment, Suspension, Ineligibility and Voluntary Exclusion – First Tier Participants:

a. The prospective first tier participant certifies to the best of its knowledge and belief, that it and its principals:

(1) Are not presently debarred, suspended, proposed for debarment, declared ineligible, or voluntarily excluded from participating in covered transactions by any Federal department or agency, 2 CFR 180.335;.

(2) Have not within a three-year period preceding this proposal been convicted of or had a civil judgment rendered against them for commission of fraud or a criminal offense in connection with obtaining, attempting to obtain, or performing a public (Federal, State, or local) transaction or contract under a public transaction; violation of Federal or State antitrust statutes or commission of embezzlement, theft, forgery, bribery, falsification or destruction of records, making false statements, or receiving stolen property, 2 CFR 180.800;

(3) Are not presently indicted for or otherwise criminally or civilly charged by a governmental entity (Federal, State or local) with commission of any of the offenses enumerated in paragraph (a)(2) of this certification, 2 CFR 180.700 and 180.800; and

(4) Have not within a three-year period preceding this application/proposal had one or more public transactions (Federal, State or local) terminated for cause or default. 2 CFR 180.335(d).

(5) Are not a corporation that has been convicted of a felony violation under any Federal law within the two-year period preceding this proposal (USDOT Order 4200.6 implementing appropriations act requirements); and

(6) Are not a corporation with any unpaid Federal tax liability that has been assessed, for which all judicial and administrative remedies have been exhausted, or have lapsed, and that is not being paid in a timely manner pursuant to an agreement with the authority responsible for collecting the tax liability (USDOT Order 4200.6 implementing appropriations act requirements).

b. Where the prospective participant is unable to certify to any of the statements in this certification, such prospective participant should attach an explanation to this proposal. 2 CFR 180.335 and 180.340.

* * * * *

3. **Instructions for Certification - Lower Tier Participants:**

(Applicable to all subcontracts, purchase orders, and other lower tier transactions requiring prior FHWA approval or estimated to cost $25,000 or more - 2 CFR Parts 180 and 1200). 2 CFR 180.220 and 1200.220.

a. By signing and submitting this proposal, the prospective lower tier participant is providing the certification set out below.

b. The certification in this clause is a material representation of fact upon which reliance was placed when this transaction was entered into. If it is later determined that the prospective lower tier participant knowingly rendered an erroneous certification, in addition to other remedies available to the Federal Government, the department, or agency with which this transaction originated may pursue available remedies, including suspension and/or debarment.

c. The prospective lower tier participant shall provide immediate written notice to the person to which this proposal is submitted if at any time the prospective lower tier participant learns that its certification was erroneous by reason of changed circumstances. 2 CFR 180.365.

d. The terms "covered transaction," "debarred," "suspended," "ineligible," "participant," "person," "principal," and "voluntarily excluded," as used in this clause, are defined in 2 CFR Parts 180, Subpart I, 180.900 – 180.1020, and 1200. You may contact the person to which this proposal is submitted for assistance in obtaining a copy of those regulations. “First Tier Covered Transactions” refers to any covered transaction between a recipient or subrecipient of Federal funds and a participant (such as the prime or general contract). “Lower Tier Covered Transactions” refers to any covered transaction under a First Tier Covered Transaction (such as subcontracts). “First Tier Participant” refers to the participant who has entered into a covered transaction with a recipient or subrecipient of Federal funds (such as the prime or general contractor). “Lower Tier Participant” refers any participant who has entered into a covered transaction with a First Tier Participant or other Lower Tier Participants (such as subcontractors and suppliers).

e. The prospective lower tier participant agrees by submitting this proposal that, should the proposed covered transaction be entered into, it shall not knowingly enter into any lower tier covered transaction with a person who is debarred, suspended, declared ineligible, or voluntarily excluded from participation in this covered transaction, unless authorized by the department or agency with which this transaction originated. 2 CFR 1200.220 and 1200.332.

f. The prospective lower tier participant further agrees by submitting this proposal that it will include this clause titled "Certification Regarding Debarment, Suspension, Ineligibility and Voluntary Exclusion-Lower Tier Covered Transaction," without modification, in all lower tier covered transactions and in all solicitations for lower tier covered transactions exceeding the $25,000 threshold. 2 CFR 180.220 and 1200.220.

g. A participant in a covered transaction may rely upon a certification of a prospective participant in a lower tier covered transaction that is not debarred, suspended, ineligible, or voluntarily excluded from the covered transaction, unless it knows that the certification is erroneous. A participant is responsible for ensuring that its principals are not suspended, debarred, or otherwise ineligible to participate in covered transactions. To verify the eligibility of its principals, as well as the eligibility of any lower tier prospective participants, each participant may, but is not required to, check the System for Award Management website (https://www.sam.gov/), which is compiled by the General Services Administration. 2 CFR 180.300, 180.320, 180.330, and 180.335.

h. Nothing contained in the foregoing shall be construed to require establishment of a system of records in order to render in good faith the certification required by this clause. The knowledge and information of participant is not required to exceed that which is normally possessed by a prudent person in the ordinary course of business dealings.

i. Except for transactions authorized under paragraph e of these instructions, if a participant in a covered transaction knowingly enters into a lower tier covered transaction with a person who is suspended, debarred, ineligible, or voluntarily

excluded from participation in this transaction, in addition to other remedies available to the Federal Government, the department or agency with which this transaction originated may pursue available remedies, including suspension and/or debarment. 2 CFR 180.325.

* * * * *

4. Certification Regarding Debarment, Suspension, Ineligibility and Voluntary Exclusion--Lower Tier Participants:

a. The prospective lower tier participant certifies, by submission of this proposal, that neither it nor its principals:

(1) is presently debarred, suspended, proposed for debarment, declared ineligible, or voluntarily excluded from participating in covered transactions by any Federal department or agency, 2 CFR 180.355;

(2) is a corporation that has been convicted of a felony violation under any Federal law within the two-year period preceding this proposal (USDOT Order 4200.6 implementing appropriations act requirements); and

(3) is a corporation with any unpaid Federal tax liability that has been assessed, for which all judicial and administrative remedies have been exhausted, or have lapsed, and that is not being paid in a timely manner pursuant to an agreement with the authority responsible for collecting the tax liability. (USDOT Order 4200.6 implementing appropriations act requirements)

b. Where the prospective lower tier participant is unable to certify to any of the statements in this certification, such prospective participant should attach an explanation to this proposal.

* * * * *

XI. CERTIFICATION REGARDING USE OF CONTRACT FUNDS FOR LOBBYING

This provision is applicable to all Federal-aid construction contracts and to all related subcontracts which exceed $100,000. 49 CFR Part 20, App. A.

1. The prospective participant certifies, by signing and submitting this bid or proposal, to the best of his or her knowledge and belief, that:

a. No Federal appropriated funds have been paid or will be paid, by or on behalf of the undersigned, to any person for influencing or attempting to influence an officer or employee of any Federal agency, a Member of Congress, an officer or employee of Congress, or an employee of a Member of Congress in connection with the awarding of any Federal contract, the making of any Federal grant, the making of any Federal loan, the entering into of any cooperative agreement, and the extension, continuation, renewal, amendment, or modification of any Federal contract, grant, loan, or cooperative agreement.

b. If any funds other than Federal appropriated funds have been paid or will be paid to any person for influencing or attempting to influence an officer or employee of any Federal agency, a Member of Congress, an officer or employee of Congress, or an employee of a Member of Congress in connection with this Federal contract, grant, loan, or cooperative agreement, the undersigned shall complete and submit Standard Form-LLL, "Disclosure Form to Report Lobbying," in accordance with its instructions.

2. This certification is a material representation of fact upon which reliance was placed when this transaction was made or entered into. Submission of this certification is a prerequisite for making or entering into this transaction imposed by 31 U.S.C. 1352. Any person who fails to file the required certification shall be subject to a civil penalty of not less than $10,000 and not more than $100,000 for each such failure.

3. The prospective participant also agrees by submitting its bid or proposal that the participant shall require that the language of this certification be included in all lower tier subcontracts, which exceed $100,000 and that all such recipients shall certify and disclose accordingly.

XII. USE OF UNITED STATES-FLAG VESSELS:

This provision is applicable to all Federal-aid construction contracts, design-build contracts, subcontracts, lower-tier subcontracts, purchase orders, lease agreements, or any other covered transaction. 46 CFR Part 381.

This requirement applies to material or equipment that is acquired for a specific Federal-aid highway project. 46 CFR 381.7. It is not applicable to goods or materials that come into inventories independent of an FHWA funded-contract.

When oceanic shipments (or shipments across the Great Lakes) are necessary for materials or equipment acquired for a specific Federal-aid construction project, the bidder, proposer, contractor, subcontractor, or vendor agrees:

1. To utilize privately owned United States-flag commercial vessels to ship at least 50 percent of the gross tonnage (computed separately for dry bulk carriers, dry cargo liners, and tankers) involved, whenever shipping any equipment, material, or commodities pursuant to this contract, to the extent such vessels are available at fair and reasonable rates for United States-flag commercial vessels. 46 CFR 381.7.

2. To furnish within 20 days following the date of loading for shipments originating within the United States or within 30 working days following the date of loading for shipments originating outside the United States, a legible copy of a rated, ‘on-board’ commercial ocean bill-of-lading in English for each shipment of cargo described in paragraph (b)(1) of this section to both the Contracting Officer (through the prime contractor in the case of subcontractor bills-of-lading) and to the Office of Cargo and Commercial Sealift (MAR-620), Maritime Administration, Washington, DC 20590. (MARAD requires copies of the ocean carrier's (master) bills of lading, certified onboard, dated, with rates and charges. These bills of lading may contain business sensitive information and therefore may be submitted directly to MARAD by the Ocean Transportation Intermediary on behalf of the contractor). 46 CFR 381.7.

ATTACHMENT A - EMPLOYMENT AND MATERIALS PREFERENCE FOR APPALACHIAN DEVELOPMENT HIGHWAY SYSTEM OR APPALACHIAN LOCAL ACCESS ROAD CONTRACTS (23 CFR 633, Subpart B, Appendix B)
This provision is applicable to all Federal-aid projects funded under the Appalachian Regional Development Act of 1965.

1. During the performance of this contract, the contractor undertaking to do work which is, or reasonably may be, done as on-site work, shall give preference to qualified persons who regularly reside in the labor area as designated by the DOL wherein the contract work is situated, or the subregion, or the Appalachian counties of the State wherein the contract work is situated, except:

a. To the extent that qualified persons regularly residing in the area are not available.

b. For the reasonable needs of the contractor to employ supervisory or specially experienced personnel necessary to assure an efficient execution of the contract work.

c. For the obligation of the contractor to offer employment to present or former employees as the result of a lawful collective bargaining contract, provided that the number of nonresident persons employed under this subparagraph (1c) shall not exceed 20 percent of the total number of employees employed by the contractor on the contract work, except as provided in subparagraph (4) below.

2. The contractor shall place a job order with the State Employment Service indicating (a) the classifications of the laborers, mechanics and other employees required to perform the contract work, (b) the number of employees required in each classification, (c) the date on which the participant estimates such employees will be required, and (d) any other pertinent information required by the State Employment Service to complete the job order form. The job order may be placed with the State Employment Service in writing or by telephone. If during the course of the contract work, the information submitted by the contractor in the original job order is substantially modified, the participant shall promptly notify the State Employment Service.

3. The contractor shall give full consideration to all qualified job applicants referred to him by the State Employment Service. The contractor is not required to grant employment to any job applicants who, in his opinion, are not qualified to perform the classification of work required.

4. If, within one week following the placing of a job order by the contractor with the State Employment Service, the State Employment Service is unable to refer any qualified job applicants to the contractor, or less than the number requested, the State Employment Service will forward a certificate to the contractor indicating the unavailability of applicants. Such certificate shall be made a part of the contractor's permanent project records. Upon receipt of this certificate, the contractor may employ persons who do not normally reside in the labor area to fill positions covered by the certificate, notwithstanding the provisions of subparagraph (1c) above.

5. The provisions of 23 CFR 633.207(e) allow the contracting agency to provide a contractual preference for the use of mineral resource materials native to the Appalachian region.

6. The contractor shall include the provisions of Sections 1 through 4 of this Attachment A in every subcontract for work which is, or reasonably may be, done as on-site work.

NON-DISCRIMINATION PROVISIONS

During the performance of this contract, the contractor, for itself, its assignees, and successors in interest (hereinafter referred to as the "contractor") agrees as follows:

1. Compliance with Regulations: The contractor (hereinafter includes consultants) will comply with the Acts and the Regulations relative to Non-discrimination in Federally-assisted programs of the U.S. Department of Transportation, Federal Highway Administration, as they may be amended from time to time, which are herein incorporated by reference and made a part of this contract.

2. Non-discrimination: The contractor, with regard to the work performed by it during the contract, will not discriminate on the grounds of race, color, or national origin in the selection and retention of subcontractors, including procurements of materials and leases of equipment. The contractor will not participate directly or indirectly in the discrimination prohibited by the Acts and the Regulations, including employment practices when the contract covers any activity, project, or program set forth in Appendix B of 49 CFR Part 21.

3. Solicitations for Subcontracts, Including Procurements of Materials and Equipment: In all solicitations, either by competitive bidding, or negotiation made by the contractor for work to be performed under a subcontract, including procurements of materials, or leases of equipment, each potential subcontractor or supplier will be notified by the contractor of the contractor's obligations under this contract and the Acts and the Regulations relative to Non-discrimination on the grounds of race, color, or national origin.

4. Information and Reports: The contractor will provide all information and reports required by the Acts, the Regulations, and directives issued pursuant thereto and will permit access to its books, records, accounts, other sources of information, and its facilities as may be determined by the Recipient or the Federal Highway Administration to be pertinent to ascertain compliance with such Acts, Regulations, and instructions. Where any information required of a contractor is in the exclusive possession of another who fails or refuses to furnish the information, the contractor will so certify to the Recipient or the Federal Highway Administration, as appropriate, and will set forth what efforts it has made to obtain the information.

5. Sanctions for Noncompliance: In the event of a contractor's noncompliance with the Non-discrimination provisions of this contract, the Recipient will impose such contract sanctions as it or the Federal Highway Administration may determine to be appropriate, including, but not limited to:

a. Withholding payments to the contractor under the contract until the contractor complies; and/or
b. Cancelling, terminating, or suspending a contract, in whole or in part.

6. Incorporation of Provisions: The contractor will include the provisions of paragraphs one through six in every subcontract, including procurements of materials and leases of equipment, unless exempt by the Acts, the Regulations and directives issued pursuant thereto. The contractor will take action with respect to any subcontract or procurement as the Recipient or the Federal Highway Administration may direct as a means of enforcing such provisions including sanctions for noncompliance. Provided, that if the contractor becomes involved in, or is threatened with litigation by a subcontractor, or supplier because of such direction, the contractor may request the Recipient to enter into any litigation to protect the interests of the Recipient. In addition, the contractor may request the United States to enter into the litigation to protect the interests of the United States.

During the performance of this contract, the contractor, for itself, its assignees, and successors in interest (hereinafter referred to as the "contractor") agrees to comply with the following non-discrimination statutes and authorities; including but not limited to:

Pertinent Non-Discrimination Authorities:

- Title VI of the Civil Rights Act of 1964 (42 U.S.C. § 2000d et seq., 78 stat. 252), (prohibits discrimination on the basis of race, color, national origin); and 49 CFR Part 21.
- The Uniform Relocation Assistance and Real Property Acquisition Policies Act of 1970, (42 U.S.C. § 4601), (prohibits unfair treatment of persons displaced or whose property has been acquired because of Federal or Federal-aid programs and projects);
- Federal-Aid Highway Act of 1973, (23 U.S.C. § 324 et seq.), (prohibits discrimination on the basis of sex);
- Section 504 of the Rehabilitation Act of 1973, (29 U.S.C. § 794 et seq.), as amended, (prohibits discrimination on the basis of disability); and 49 CFR Part 27;
- The Age Discrimination Act of 1975, as amended, (42 U.S.C. § 6101 et seq.), (prohibits discrimination on the basis of age);
- Airport and Airway Improvement Act of 1982, (49 USC § 471, Section 47123), as amended, (prohibits discrimination based on race, creed, color, national origin, or sex);
- The Civil Rights Restoration Act of 1987, (PL 100-209), (Broadened the scope, coverage and applicability of Title VI of the Civil Rights Act of 1964, The Age Discrimination Act of 1975 and Section 504 of the Rehabilitation Act of 1973, by expanding the definition of the terms "programs or activities" to include all of the programs or activities of the Federal-aid recipients, sub-recipients and contractors, whether such programs or activities are Federally funded or not);
- Titles II and III of the Americans with Disabilities Act, which prohibit discrimination on the basis of disability in the operation of public entities, public and private transportation systems, places of public accommodation, and certain testing entities (42 U.S.C. §§ 12131-12189) as implemented by Department of Transportation regulations at 49 C.F.R. parts 37 and 38;
- The Federal Aviation Administration's Non-discrimination statute (49 U.S.C. § 47123) (prohibits discrimination on the basis of race, color, national origin, and sex);
- Executive Order 12898, Federal Actions to Address Environmental Justice in Minority Populations and Low-Income Populations, which ensures Non-discrimination against minority populations by discouraging programs, policies, and activities with disproportionately high and adverse human health or environmental effects on minority and low-income populations;
- Executive Order 13166, Improving Access to Services for Persons with Limited English Proficiency, and resulting agency guidance, national origin discrimination includes discrimination because of Limited English proficiency (LEP). To ensure compliance with Title VI, you must take reasonable steps to ensure that LEP persons have meaningful access to your programs (70 Fed. Reg. at 74087 to 74100);
- Title IX of the Education Amendments of 1972, as amended, which prohibits you from discriminating because of sex in education programs or activities (20 U.S.C. 1681 et seq).

NOTICE OF REQUIREMENT FOR AFFIRMATIVE ACTION TO ENSURE EQUAL EMPLOYMENT OPPORTUNITY (EXECUTIVE ORDER 11246)

1. The Offeror's or Bidder's attention is called to the "Employment Practices" and "Equal Opportunity Clause" set forth in the Required Contract Provisions, FHWA 1273.
2. The goals and timetables for minority and female participation expressed in percentage terms for the contractor's aggregate work force in each trade, on all construction work in the covered area, are as follows:

Goals for Minority Participation for Each Trade:

County	%	County	%	County	%
Adams	1.7	Iowa	1.7	Polk	2.2
Ashland	1.2	Iron	1.2	Portage	0.6
Barron	0.6	Jackson	0.6	Price	0.6
Bayfield	1.2	Jefferson	7.0	Racine	8.4
Brown	1.3	Juneau	0.6	Richland	1.7
Buffalo	0.6	Kenosha	3.0	Rock	3.1
Burnett	2.2	Kewaunee	1.0	Rusk	0.6
Calumet	0.9	La Crosse	0.9	St. Croix	2.9
Chippewa	0.5	Lafayette	0.5	Sauk	1.7
Clark	0.6	Langlade	0.6	Sawyer	0.6
Columbia	1.7	Lincoln	0.6	Shawano	1.0
Crawford	0.5	Manitowoc	1.0	Sheboygan	7.0
Dane	2.2	Marathon	0.6	Taylor	0.6
Dodge	7.0	Marinette	1.0	Trempealeau	0.6
Door	1.0	Marquette	1.7	Vernon	0.6
Douglas	1.0	Menominee	1.0	Vilas	0.6
Dunn	0.6	Milwaukee	8.0	Walworth	7.0
Eau Claire	0.5	Monroe	0.6	Washburn	0.6
Florence	1.0	Oconto	1.0	Washington	8.0
Fond du Lac	1.0	Oneida	0.6	Waukesha	8.0
Forest	1.0	Outagamie	0.9	Waupaca	1.0
Grant	0.5	Ozaukee	8.0	Waushara	1.0
Green	1.7	Pepin	0.6	Winnebago	0.9
Green Lake	1.0	Pierce	2.2	Wood	0.6

<u>Goals for female participation for each trade</u>: 6.9%

These goals are applicable to all the contractor's construction work, (whether or not it is federal or federally assisted), performed in the covered area. If the contractor performs construction work in the geographical area located outside of the covered area, it shall apply the goals established for such geographical area where the work is actually performed. With regard to this second area, the contractor also is subject to the goals for both its federally involved and nonfederally involved construction.

The contractor's compliance with the Executive Order and the Regulations in 41 CFR Part 60-4 shall be based on its implementation of the Equal Opportunity Clause, specific affirmative action obligations required by the specifications set forth in 41 CFR 60-4.3(a), and its efforts to meet the goals. The hours of minority and female employment and training must be substantially uniform throughout the length of the contract, and in each trade, and the contractor shall make a good faith effort to employ minorities and women evenly on each of its projects. The transfer of minority or female employees or trainees from contractor to contractor or from project to project for the sole purpose of meeting the contractor's goals shall be a violation of the contract, the Executive Order and the Regulations in 41 CFR Part 60-4. Compliance with the goals will be measured against the total work hours performed.

3. The contractor shall provide written notification to the Director of the Office of Federal Contract Compliance Programs within ten (10) working days of award of any construction subcontract in excess of $10,000.00 at any tier for construction work under the contract resulting from this solicitation. The notification shall list the name, address and telephone number of the subcontractor, employer identification number of the subcontractor; estimated dollar amount of the subcontract; estimated starting and completion dates of the subcontract; and the geographical area in which the subcontract is to be performed.

   As referred to in this section, the Director means:

   Director
   Office of Federal Contract Compliance Programs
   Ruess Federal Plaza
   310 W. Wisconsin Ave., Suite 1115
   Milwaukee, WI 53202

   The "Employer Identification Number" means the Federal Social Security number used on the Employer's Quarterly Federal Tax Return, U.S. Treasury Department Form 941.

4. As used in this notice, and in the contract resulting from solicitation, the "covered area" is the county(ies) in Wisconsin to which this proposal applies.

ADDITIONAL FEDERAL-AID PROVISIONS

NOTICE TO ALL BIDDERS

To report bid rigging activities call:

1-800-424-9071

The U.S. Department of Transportation (DOT) operates the above toll-free "hotline" Monday through Friday, 8:00 a.m. to 5:00 p.m., Eastern Time. Anyone with knowledge of possible bid rigging, bidding collusion, or other fraudulent activities should use the "hotline" to report such activities.

The "hotline" is part of the DOT's continuing effort to identify and investigate highway construction contract fraud and abuse and is operated under the direction of the DOT Inspector General. All information will be treated confidentially and caller anonymity will be respected.

BUY AMERICA PROVISION

Buy America (as documented in 88 FR 57750 (2 CFR part 184 and 200) from the Office of Management and Budget: Federal Register: Guidance for Grants and Agreements) shall be domestic products and permanently incorporated in this project as classified in the following three categories, and as noted in the Construction and Materials Manual (CMM):

1. Iron and Steel

   All iron and steel manufacturing and coating processes (from the initial melting stage through the application of coatings) must have occurred within the United States. Coating includes epoxy coating, galvanizing, painting and any other coating that protects or enhances the value of a material subject to the requirements of Buy America.

   The exemption of the iron and steel manufacturing and coating processes Buy America requirement is the minimal use of foreign materials if the total cost of such material permanently incorporated in the product does not exceed one-tenth of one percent (1/10 of 1%) of the total contract cost or $2,500.00, whichever is greater. For purposes of this paragraph, the cost is that shown to be the value of the subject products as they are delivered to the project.

2. Manufactured Product

   All manufactured products (as defined in CMM 228.5) are covered under a previous waiver from 1983 and are currently exempt from Buy America.

3. Construction Material

   All construction materials (as defined in 88 FR 57750 (2 CFR part 184 and 200) and as referenced in CMM 228.5) must comply with Buy America. All manufacturing process of construction materials must occur in the United States.

88 FR 55817 (DOT-OST-2022-0124) allows a limited waiver of Buy America requirements for de minimis costs and small grants.

- The Total value of the non-compliant products is no more than the lesser of $1,000,000 or 5% of total applicable costs for the project[1]; or
- The total amount of Federal financial assistance applied to the project, through awards or subaward, is below $500,000[2]

The contractor shall take actions and provide documentation conforming to CMM 228.5 to ensure compliance with this Buy America provision.

https://wisconsindot.gov/rdwy/cmm/cm-02-28.pdf

Upon completion of the project, certify to the engineer, in writing using department form DT4567 that all iron and steel, manufactured products, and construction materials conform to this Buy America provision.

Form DT4567 is available at: https://wisconsindot.gov/Documents/formdocs/dt4567.docx

Attach a list of iron or steel and construction material exemptions and their associated costs to the certification form using the Buy America Exemption Tracking Tool, available at:

https://wisconsindot.gov/hccidocs/contracting-info/buy-america-exemption-tracking-tool.xlsx

1 The de minimis public interest waiver does not apply to iron and steel subject to the requirements of 23 U.S.C. 313 on financial assistant administered by FHWA. The de minimis threshold in 23 CFR 635.410(b)(4) continues to apply for iron and steel.
2 The small grant portion of the waiver does not apply to iron, steel, and manufactured goods subject to the requirements of 49 U.S.C. 22905(a).

CARGO PREFERENCE ACT REQUIREMENT

All Federal-aid projects shall comply with 46 CFR 381.7 (a) – (b) as follows:

(a) *Agreement Clauses.* “Use of United States-flag vessels:“

(1) Pursuant to Pub. L. 664 (43 U.S.C. 1241(b)) at least 50 percent of any equipment, materials or commodities procured, contracted for or otherwise obtained with funds granted, guaranteed, loaned, or advanced by the U.S. Government under this agreement, and which may be transported by ocean vessel, shall be transported on privately owned United States-flag commercial vessels, if available.

(2) Within 20 days following the date of loading for shipments originating within the United States or within 30 working days following the date of loading for shipments originating outside the United States, a legible copy of a rated, ‘on-board’ commercial ocean bill-of-lading in English for each shipment of cargo described in paragraph (a)(1) of this section shall be furnished to both the Contracting Officer (through the prime contractor in the case of subcontractor bills-of-lading) and to the Division of National Cargo, Office of Market Development, Maritime Administration, Washington, DC 20590.”

(b) *Contractor and Subcontractor Clauses.* “Use of United States-flag vessels: The contractor agrees—“

(1) To utilize privately owned United States-flag commercial vessels to ship at least 50 percent of the gross tonnage (computed separately for dry bulk carriers, dry cargo liners, and tankers) involved, whenever shipping any equipment, material, or commodities pursuant to this contract, to the extent such vessels are available at fair and reasonable rates for United States-flag commercial vessels.

(2) To furnish within 20 days following the date of loading for shipments originating within the United States or within 30 working days following the date of loading for shipments originating outside the United States, a legible copy of a rated, ‘on-board’ commercial ocean bill-of-lading in English for each shipment of cargo described in paragraph (b) (1) of this section to both the Contracting Officer (through the prime contractor in the case of subcontractor bills-of-lading) and to the Division of National Cargo, Office of Market Development, Maritime Administration, Washington, DC 20590.

(3) To insert the substance of the provisions of this clause in all subcontracts issued pursuant to this contract.

WISCONSIN DEPARTMENT OF TRANSPORTATION
DIVISION OF TRANSPORTATION AND SYSTEM DEVELOPMENT

SUPPLEMENTAL REQUIRED CONTRACT PROVISIONS FOR PROJECTS WITH FEDERAL AID

I. PREVAILING WAGE RATES

The attached U.S. Department of Labor (Davis-Bacon Minimum Wage Rates) furnishes the minimum prevailing wage rates pursuant to the Davis-Bacon and Related Acts. The wage rates shown are the minimum rates required by the contract to be paid during its life, however this is not a representation that labor can be obtained at these rates. Itis the responsibility of bidders to inform themselves as to the local labor conditions and prospective changes or adjustments of wage rates. No increase in the contract price will be allowed or authorized on account of the payment of wage rates in excess of those listed herein.

II. COVERAGE OF TRUCK DRIVERS

Truck drivers are covered by Davis-Bacon Minimum Wage Rates in the following circumstances:

- Drivers of a contractor or subcontractor for time spent working on the site of the work.
- Drivers of a contractor or subcontractor for time spent loading and/or unloading materials and supplies on the site of the work, if such time is not de minimis. https://www.dol.gov/whd/FOH/FOH_Ch15.pdf
- Truck drivers transporting materials or supplies between a facility that is deemed part of the site of the work and the actual construction site.
- Truck drivers transporting portions of the building or work between a site established specifically for the performance of the contract where a significant portion of such building or work is constructed and the physical place where the building or work called for in the contract will remain.

Truck drivers are not covered by Davis-Bacon Minimum Wage Rates in the following circumstances:

- Material delivery truck drivers while off the site of the work.
- Drivers of a contractor or subcontractor traveling between a Davis-Bacon job and a commercial supply facility while they are off the site of the work."
- Truck drivers whose time spent on the site of the work is de minimis, such as only a few minutes at a time merely to pick up or drop off materials or supplies.

Details are available online at:

https://www.dol.gov/whd/recovery/pwrb/Tab9.pdf

https://wisconsindot.gov/Pages/doing-bus/civil-rights/labornwage/trckng.aspx

III. POSTINGS AT THE SITE OF THE WORK

In addition to the required postings furnished by the department, the contractor shall post the following in at least one conspicuous and accessible place at the site of work:

a. A copy of the contractor's Equal Employment Opportunity Policy.

All required documents shall be posted by the first day of work and be accurate and complete. Postings must be readable, in an area where they will be noticed, and maintained until the last day of work.

IV. RESOURCES

Required information regarding compliance with federal provisions is found in the following resources:

- FHWA-1273 included in this contract
- U.S. Department of Labor Prevailing Wage Resource Book
- U.S. Department of Labor Field Operations Handbook
- U.S. Code of Federal Regulations
- Any applicable law, Act, or Executive Order enacted by the federal government at the time of the letting of this contract

"General Decision Number: WI20240010 09/06/2024

Superseded General Decision Number: WI20230010

State: Wisconsin

Construction Type: Highway

Counties: Wisconsin Statewide.

HIGHWAY, AIRPORT RUNWAY & TAXIWAY CONSTRUCTION PROJECTS (does not include bridges over navigable waters; tunnels; buildings in highway rest areas; and railroad construction)

Note: Contracts subject to the Davis-Bacon Act are generally required to pay at least the applicable minimum wage rate required under Executive Order 14026 or Executive Order 13658. Please note that these Executive Orders apply to covered contracts entered into by the federal government that are subject to the Davis-Bacon Act itself, but do not apply to contracts subject only to the Davis-Bacon Related Acts, including those set forth at 29 CFR 5.1(a)(1).

If the contract is entered into on or after January 30, 2022, or the contract is renewed or extended (e.g., an option is exercised) on or after January 30, 2022:	. Executive Order 14026 generally applies to the contract. . The contractor must pay all covered workers at least $17.20 per hour (or the applicable wage rate listed on this wage determination, if it is higher) for all hours spent performing on the contract in 2024.
If the contract was awarded on or between January 1, 2015 and January 29, 2022, and the contract is not renewed or extended on or after January 30, 2022:	. Executive Order 13658 generally applies to the contract. . The contractor must pay all covered workers at least $12.90 per hour (or the applicable wage rate listed on this wage determination, if it is higher) for all hours spent performing on that contract in 2024.

|_____|_____|

The applicable Executive Order minimum wage rate will be adjusted annually. If this contract is covered by one of the Executive Orders and a classification considered necessary for performance of work on the contract does not appear on this wage determination, the contractor must still submit a conformance request.

Additional information on contractor requirements and worker protections under the Executive Orders is available at http://www.dol.gov/whd/govcontracts.

Modification Number	Publication Date
0	01/05/2024
1	01/26/2024
2	02/02/2024
3	02/16/2024
4	03/15/2024
5	05/24/2024
6	06/21/2024
7	06/28/2024
8	07/05/2024
9	08/02/2024
10	08/23/2024
11	09/06/2024

BRWI0001-002 06/01/2023

CRAWFORD, JACKSON, JUNEAU, LA CROSSE, MONROE, TREMPEALEAU, AND VERNON COUNTIES

	Rates	Fringes
BRICKLAYER	$ 40.18	25.88

BRWI0002-002 06/01/2023

ASHLAND, BAYFIELD, DOUGLAS, AND IRON COUNTIES

	Rates	Fringes
BRICKLAYER	$ 47.10	25.16

BRWI0002-005 06/01/2023

ADAMS, ASHLAND, BARRON, BROWN, BURNETT, CALUMET, CHIPPEWA,

CLARK, COLUMBIA, DODGE, DOOR, DUNN, FLORENCE, FOND DU LAC, FOREST, GREEN LAKE, IRON, JEFFERSON, KEWAUNEE, LANGLADE, LINCOLN, MANITOWOC, MARATHON, MARINETTE, MARQUETTE, MENOMINEE, OCONTO, ONEIDA, OUTAGAMIE, POLK, PORTAGE, RUSK, ST CROIX, SAUK, SHAWANO, SHEBOYGAN, TAYLOR, VILAS, WALWORTH, WAUPACA, WAUSHARA, WINNEBAGO, AND WOOD COUNTIES

	Rates	Fringes
CEMENT MASON/CONCRETE FINISHER	$ 39.97	25.02

BRWI0003-002 06/01/2023

BROWN, DOOR, FLORENCE, KEWAUNEE, MARINETTE, AND OCONTO COUNTIES

	Rates	Fringes
BRICKLAYER	$ 40.00	26.06

BRWI0004-002 06/01/2023

KENOSHA, RACINE, AND WALWORTH COUNTIES

	Rates	Fringes
BRICKLAYER	$ 44.50	26.96

BRWI0006-002 06/01/2023

ADAMS, CLARK, FOREST, LANGLADE, LINCOLN, MARATHON, MENOMINEE, ONEIDA, PORTAGE, PRICE, TAYLOR, VILAS AND WOOD COUNTIES

	Rates	Fringes
BRICKLAYER	$ 40.08	25.98

BRWI0007-002 06/01/2023

GREEN, LAFAYETTE, AND ROCK COUNTIES

	Rates	Fringes
BRICKLAYER	$ 40.95	26.80

BRWI0008-002 06/05/2023

MILWAUKEE, OZAUKEE, WASHINGTON, AND WAUKESHA COUNTIES

	Rates	Fringes
BRICKLAYER	$ 44.96	25.67

BRWI0011-002 06/01/2023

CALUMET, FOND DU LAC, MANITOWOC, AND SHEBOYGAN COUNTIES

	Rates	Fringes
BRICKLAYER	$ 40.00	26.06

BRWI0019-002 06/01/2023

BARRON, BUFFALO, BURNETT, CHIPPEWA, DUNN, EAU CLAIRE, PEPIN, PIERCE, POLK, RUSK, ST. CROIX, SAWYER AND WASHBURN COUNTIES

	Rates	Fringes
BRICKLAYER	$ 39.32	26.74

BRWI0034-002 06/01/2023

COLUMBIA AND SAUK COUNTIES

	Rates	Fringes
BRICKLAYER	$ 41.56	26.19

CARP0068-011 05/02/2022

BURNETT (W. of Hwy 48), PIERCE (W. of Hwy 29), POLK (W. of Hwys 35, 48 & 65), AND ST. CROIX (W. of Hwy 65) COUNTIES

	Rates	Fringes
Carpenter & Piledrivermen	$ 41.19	27.05

CARP0231-002 06/05/2023

KENOSHA, MILWAUKEE, OZAUKEE, RACINE, WASHINGTON, AND WAUKESHA COUNTIES

	Rates	Fringes

CARPENTER.....$ 41.91 29.72

CARP0310-002 06/03/2024

ADAMS, ASHLAND, BAYFIELD (Eastern 2/3), FOREST, IRON, JUNEAU, LANGLADE, LINCOLN, MARATHON, ONEIDA, PORTAGE, PRICE, SHAWANO (Western Portion of the County), TAYLOR, VILAS, AND WOOD COUNTIES

	Rates	Fringes
CARPENTER	$ 42.44	28.44
Piledriver	$ 42.44	28.44

CARP0314-001 06/05/2023

COLUMBIA, DANE, DODGE, GRANT, GREEN, IOWA, JEFFERSON, LAFAYETTE, RICHLAND, ROCK, SAUK, AND WALWORTH COUNTIES

	Rates	Fringes
CARPENTER	$ 38.86	27.06
Piledriver	$ 39.43	27.02

CARP0361-004 05/01/2018

BAYFIELD (West of Hwy 63) AND DOUGLAS COUNTIES

	Rates	Fringes
CARPENTER	$ 36.15	20.43

CARP0731-002 06/03/2024

CALUMET (Eastern Portion of the County), FOND DU LAC (Eastern Portion of the County), MANITOWOC, AND SHEBOYGAN COUNTIES

	Rates	Fringes
CARPENTER	$ 42.44	28.44
Piledriver	$ 42.44	28.44

CARP0955-002 06/03/2024

CALUMET (Western Portion of the County), FOND DU LAC (Western Portion of the County), GREEN LAKE, MARQUETTE, OUTAGAMIE,

WAUPACA, WAUSHARA, AND WINNEBAGO

	Rates	Fringes
CARPENTER	$ 42.44	28.44
PILEDRIVER	$ 42.44	28.44

CARP1056-002 06/01/2024

ADAMS, ASHLAND, BARRON, BAYFIELD , BROWN, BUFFALO, BURNETT ,CALUMET, CHIPPEWA, CLARK, COLUMBIA, CRAWFORD, DANE, DODGE, DOOR, DUNN, EAU CLAIRE, FLORENCE, FOND DU LAC, FOREST, GRANT, GREEN, GREEN LAKE, IOWA, IRON, JACKSON, JEFFERSON, JUNEAU, KEWAUNEE, LA CROSSE, LAFAYETTE, LANGLADE, LINCOLN, MANITOWOC, MARATHON, MARINETTE, MARQUETTE, MENOMINEE, MONROE, OCONTO, ONEIDA, OUTAGAMIE, PEPIN, PIERCE (E. of Hwy. 29 & 65), POLK (E. of Hwy. 35, 48 & 65), PORTAGE, PRICE, RICHLAND, ROCK, RUSK, SAUK, SAWYER, SHAWANO, SHEBOYGAN, ST. CROIX (E. of Hwy. 65), TAYLOR, TREMPEALEAU, VERNON, VILAS, WALWORTH, WASHBURN, WAUPACA, WAUSHARA, WINNEBAGO, AND WOOD COUNTIES

	Rates	Fringes
MILLWRIGHT	$ 42.00	28.85

CARP1074-002 06/03/2024

BARRON, BURNETT, CHIPPEWA, CLARK, DUNN, EAU CLAIRE, PEPIN, PIERCE (E. of Hwy. 29 & 65), POLK (E. of Hwy. 35, 48 & 65), RUSK, SAWYER, ST. CROIX (E. of Hwy. 65), AND WASHBURN

	Rates	Fringes
CARPENTER	$ 42.44	28.44
PILEDRIVER	$ 42.44	28.44

CARP1143-002 06/03/2024

BUFFALO, CRAWFORD, JACKSON, LA CROSSE, MONROE, TREMPEALEAU AND VERNON COUNTIES

	Rates	Fringes
CARPENTER	$ 42.44	28.44
PILEDRIVER	$ 42.44	28.44

CARP1146-002 06/03/2024

BROWN, DOOR, FLORENCE, KEWAUNEE, MARINETTE, MENOMINEE, OCONTO, AND SHAWANO (Western Portion of the County) COUNTIES

	Rates	Fringes
CARPENTER	$ 42.44	28.44
PILEDRIVER	$ 42.44	28.44

CARP2337-009 06/03/2024

KENOSHA, MILWAUKEE, OZAUKEE, RACINE, WASHINGTON, AND WAUKESHA

	Rates	Fringes
PILEDRIVERMAN	$ 42.21	34.07

ELEC0014-002 05/26/2024

ASHLAND, BARRON, BAYFIELD, BUFFALO, BURNETT, CHIPPEWA, CLARK (except Maryville, Colby, Unity, Sherman, Fremont, Lynn & Sherwood), CRAWFORD, DUNN, EAU CLAIRE, GRANT, IRON, JACKSON, LA CROSSE, MONROE, PEPIN, PIERCE, POLK, PRICE, RICHLAND, RUSK, ST CROIX, SAWYER, TAYLOR, TREMPEALEAU, VERNON, AND WASHBURN COUNTIES

	Rates	Fringes
Electricians:	$ 42.73	23.99

ELEC0014-007 05/26/2024

REMAINING COUNTIES

	Rates	Fringes
Teledata System Installer		
Installer/Technician	$ 30.27	19.11

Low voltage construction, installation, maintenance and removal of teledata facilities (voice, data, and video) including outside plant, telephone and data inside wire, interconnect, terminal equipment, central offices, PABX, fiber optic cable and equipment, micro waves, V-SAT, bypass, CATV, WAN (wide area networks), LAN (local area

networks), and ISDN (integrated systems digital network).

ELEC0127-002 06/01/2023

KENOSHA COUNTY

	Rates	Fringes
Electricians:.....	$ 46.05	30%+13.15

ELEC0158-002 05/30/2021

BROWN, DOOR, KEWAUNEE, MANITOWOC (except Schleswig), MARINETTE(Wausuakee and area South thereof), OCONTO, MENOMINEE (East of a ine 6 miles West of the West boundary of Oconto County), SHAWANO (Except Area North of Townships of Aniwa and Hutchins) COUNTIES

	Rates	Fringes
ELECTRICIAN.....	$ 36.14	29.75%+10.26

ELEC0159-003 05/26/2024

COLUMBIA, DANE, DODGE (Area West of Hwy 26, except Chester and Emmet Townships), GREEN, LAKE (except Townships of Berlin, Seneca, and St. Marie), IOWA, MARQUETTE (except Townships of Neshkoka, Crystal Lake, Newton, and Springfield), and SAUK COUNTIES

	Rates	Fringes
ELECTRICIAN.....	$ 48.55	25.91

ELEC0219-004 06/01/2019

FLORENCE COUNTY (Townships of Aurora, Commonwealth, Fern, Florence and Homestead) AND MARINETTE COUNTY (Township of Niagara)

	Rates	Fringes
Electricians:		
Electrical contracts over $180,000.....	$ 33.94	21.80

Electrical contracts under
$180,000.....$ 31.75 21.73

ELEC0242-005 06/02/2024

DOUGLAS COUNTY

	Rates	Fringes
Electricians:.....	$ 46.23	69.19%

ELEC0388-002 06/01/2023

ADAMS, CLARK (Colby, Freemont, Lynn, Mayville, Sherman, Sherwood, Unity), FOREST, JUNEAU, LANGLADE, LINCOLN, MARATHON, MARINETTE (Beecher, Dunbar, Goodman & Pembine), MENOMINEE (Area West of a line 6 miles West of the West boundary of Oconto County), ONEIDA, PORTAGE, SHAWANO (Aniwa and Hutchins), VILAS AND WOOD COUNTIES

	Rates	Fringes
Electricians:.....	$ 38.74	26%+11.76

ELEC0430-002 06/01/2023

RACINE COUNTY (Except Burlington Township)

	Rates	Fringes
Electricians:.....	$ 46.70	25.02

ELEC0494-005 05/26/2024

MILWAUKEE, OZAUKEE, WASHINGTON, AND WAUKESHA COUNTIES

	Rates	Fringes
Electricians:.....	$ 49.48	27.34

ELEC0494-006 05/26/2024

CALUMET (Township of New Holstein), DODGE (East of Hwy 26 including Chester Township), FOND DU LAC, MANITOWOC (Schleswig), and SHEBOYGAN COUNTIES

	Rates	Fringes

Electricians:.....$ 42.77 24.66

ELEC0494-013 05/26/2024

DODGE (East of Hwy 26 including Chester Twp, excluding Emmet Twp), FOND DU LAC (Except Waupuin), MILWAUKEE, OZAUKEE, MANITOWOC (Schleswig), WASHINGTON, AND WAUKESHA COUNTIES

	Rates	Fringes
Sound & Communications		
Installer	$ 36.03	18.87
Technician	$ 36.03	18.87

Installation, testing, maintenance, operation and servicing of all sound, intercom, telephone interconnect, closed circuit TV systems, radio systems, background music systems, language laboratories, electronic carillion, antenna distribution systems, clock and program systems and low-voltage systems such as visual nurse call, audio/visual nurse call systems, doctors entrance register systems. Includes all wire and cable carrying audio, visual, data, light and radio frequency signals. Includes the installation of conduit, wiremold, or raceways in existing structures that have been occupied for six months or more where required for the protection of the wire or cable, but does not mean a complete conduit or raceway system. work covered does not include the installation of conduit, wiremold or any raceways in any new construction, or the installation of power supply outlets by means of which external electric power is supplied to any of the foregoing equipment or products

---

* ELEC0577-003 05/26/2024

CALUMET (except Township of New Holstein), GREEN LAKE (N. part including Townships of Berlin, St Marie, and Seneca), MARQUETTE (N. part including Townships of Crystal Lake, Neshkoro, Newton, and Springfield), OUTAGAMIE, WAUPACA, WAUSHARA, AND WINNEBAGO COUNTIES

	Rates	Fringes
Electricians	$ 40.00	22.69

ELEC0890-003 06/01/2024

DODGE (Emmet Township only), GREEN, JEFFERSON, LAFAYETTE,
RACINE (Burlington Township), ROCK AND WALWORTH COUNTIES

	Rates	Fringes
Electricians:.....	$ 43.65	25.95%+12.26

ELEC0953-001 06/02/2019

	Rates	Fringes
Line Construction:		
(1) Lineman.....	$ 47.53	21.43
(2) Heavy Equipment Operator.....	$ 42.78	19.80
(3) Equipment Operator.....	$ 38.02	18.40
(4) Heavy Groundman Driver..	$ 33.27	16.88
(5) Light Groundman Driver..	$ 30.89	16.11
(6) Groundsman.....	$ 26.14	14.60

ENGI0139-005 06/01/2024

	Rates	Fringes
Power Equipment Operator		
Group 1.....	$ 46.37	28.80
Group 2.....	$ 45.87	28.80
Group 3.....	$ 44.77	28.80
Group 4.....	$ 44.51	28.80
Group 5.....	$ 44.22	28.80
Group 6.....	$ 38.32	28.80

HAZARDOUS WASTE PREMIUMS:
EPA Level ""A"" protection - $3.00 per hour
EPA Level ""B"" protection - $2.00 per hour
EPA Level ""C"" protection - $1.00 per hour

POWER EQUIPMENT OPERATORS CLASSIFICATIONS

GROUP 1: Cranes, tower cranes, and derricks with or without attachments with a lifting capacity of over 100 tons; or cranes, tower cranes, and derricks with boom, leads and/or jib lengths measuring 176 feet or longer.

GROUP 2: Cranes, tower cranes and derricks with or without attachments with a lifting capacity of 100 tons or less; or

cranes, tower cranes, and derricks with boom, leads, and/or jibs lengths measuring 175 feet or under and Backhoes (excavators) weighing 130,000 lbs and over; caisson rigs; pile driver; dredge operator; dredge engineer; Boat Pilot.

GROUP 3: Mechanic or welder - Heavy duty equipment; cranes with a lifting capacity of 25 tons or under; concrete breaker (manual or remote); vibratory/sonic concrete breaker; concrete laser screed; concrete slipform paver; concrete batch plant operator; concrete pvt. spreader - heavy duty (rubber tired); concrete spreader & distributor; automatic subgrader (concrete); concrete grinder & planing machine; concrete slipform curb & gutter machine; slipform concrete placer; tube finisher; hydro blaster (10,000 psi & over); bridge paver; concrete conveyor system; concrete pump; Rotec type Conveyor; stabilizing mixer (self-propelled); shoulder widener; asphalt plant engineer; bituminious paver; bump cutter & grooving machine; milling machine; screed (bituminous paver); asphalt heater, planer & scarifier; Backhoes (excavators) weighing under 130,000 lbs; grader or motor patrol; tractor (scraper, dozer, pusher, loader); scraper - rubber tired (single or twin engine); endloader; hydraulic backhoe (tractor type); trenching machine; skid rigs; tractor, side boom (heavy); drilling or boring machine (mechanical heavy); roller over 5 tons; percussion or rotary drilling machine; air track; blaster; loading machine (conveyor); tugger; boatmen; winches & A-frames; post driver; material hoist.

GROUP 4: Greaser, roller steel (5 tons or less); roller (pneumatic tired) - self propelled; tractor (mounted or towed compactors & light equipment); shouldering machine; self- propelled chip spreader; concrete spreader; finishing machine; mechanical float; curing machine; power subgrader; joint sawer (multiple blade) belting machine; burlap machine; texturing machine; tractor endloader (rubber tired) - light; jeep digger; forklift; mulcher; launch operator; fireman, environmental burner

GROUP 5: Air compressor; power pack; vibrator hammer and extractor; heavy equipment, leadman; tank car heaters; stump chipper; curb machine operator; Concrete proportioning plants; generators; mudjack operator; rock breaker; crusher or screening plant; screed (milling machine); automatic belt conveyor and surge bin; pug mill operator; Oiler, pump (over 3 inches); Drilling Machine Tender, day light machine

GROUP 6: Off-road material hauler with or without ejector.

IRON0008-002 06/02/2024

BROWN, CALUMET, DOOR, FOND DU LAC, KEWAUNEE, MANITOWOC, MARINETTE, OCONTO, OUTAGAMI, SHAWANO, SHEBOYGAN, AND WINNEBAGO COUNTIES:

	Rates	Fringes
IRONWORKER	$ 43.02	32.32

Paid Holidays: New Year's Day, Memorial Day, July 4th, Labor Day, Thanksgiving Day & Christmas Day.

IRON0008-003 06/02/2024

KENOSHA, MILWAUKEE, OZAUKEE, RACINE, WALWORTH (N.E. 2/3), WASHINGTON, AND WAUKESHA COUNTIES

	Rates	Fringes
IRONWORKER	$ 44.79	32.32

Paid Holidays: New Year's Day, Memorial Day, July 4th, Labor Day, Thanksgiving Day & Christmas Day.

IRON0383-001 06/02/2024

ADAMS, COLUMBIA, CRAWFORD, DANE, DODGE, FLORENCE, FOREST, GRANT, GREENE, (Excluding S.E. tip), GREEN LAKE, IOWA, JEFFERSON, JUNEAU, LA CROSSE, LAFAYETTE, LANGLADE, MARATHON, MARQUETTE, MENOMINEE, MONROE, PORTAGE, RICHLAND, ROCK (Northern area, vicinity of Edgerton and Milton), SAUK, VERNON, WAUPACA, WAUSHARA, AND WOOD COUNTIES

	Rates	Fringes
IRONWORKER	$ 42.00	31.93

IRON0498-005 06/01/2023

GREEN (S.E. 1/3), ROCK (South of Edgerton and Milton), and WALWORTH (S.W. 1/3) COUNTIES:

	Rates	Fringes
IRONWORKER	$ 45.18	47.08

IRON0512-008 04/30/2023

BARRON, BUFFALO, CHIPPEWA, CLARK, DUNN, EAU CLAIRE, JACKSON, PEPIN, PIERCE, POLK, RUSK, ST CROIX, TAYLOR, AND TREMPEALEAU COUNTIES

	Rates	Fringes
IRONWORKER	$ 43.00	34.11

IRON0512-021 04/30/2023

ASHLAND, BAYFIELD, BURNETT, DOUGLAS, IRON, LINCOLN, ONEIDA, PRICE, SAWYER, VILAS AND WASHBURN COUNTIES

	Rates	Fringes
IRONWORKER	$ 39.14	34.00

LABO0113-002 06/03/2024

MILWAUKEE AND WAUKESHA COUNTIES

	Rates	Fringes
LABORER		
Group 1	$ 35.61	25.01
Group 2	$ 35.76	25.01
Group 3	$ 35.96	25.01
Group 4	$ 36.11	25.01
Group 5	$ 36.26	25.01
Group 6	$ 32.10	25.01

LABORERS CLASSIFICATIONS

GROUP 1: General Laborer; Tree Trimmer; Conduit Layer; Demolition and Wrecking Laborer; Guard Rail, Fence, and Bridge Builder; Landscaper; Multiplate Culvert Assembler; Stone Handler; Bituminous Worker (Shoveler, Loader, and Utility Man); Batch Truck Dumper or Cement Handler; Bituminous Worker (Dumper, Ironer, Smoother, and Tamper);

Concrete Handler

GROUP 2: Air Tool Operator; Joint Sawer and Filler (Pavement); Vibrator or Tamper Operator (Mechanical Hand Operated); Chain Saw Operator; Demolition Burning Torch Laborer

GROUP 3: Bituminous Worker (Raker and Luteman); Formsetter (Curb, Sidewalk, and Pavement); Strike Off Man

GROUP 4: Line and Grade Specialist

GROUP 5: Blaster and Powderman

GROUP 6: Flagperson; traffic control person

LABO0113-003 06/03/2024

OZAUKEE AND WASHINGTON COUNTIES

	Rates	Fringes
LABORER		
Group 1	$ 34.86	25.01
Group 2	$ 34.96	25.01
Group 3	$ 35.01	25.01
Group 4	$ 35.21	25.01
Group 5	$ 35.06	25.01
Group 6	$ 31.95	25.01

LABORERS CLASSIFICATIONS

GROUP 1: General Laborer; Tree Trimmer; Conduit Layer; Demolition and Wrecking Laborer; Guard Rail, Fence, and Bridge Builder; Landscaper; Multiplate Culvert Assembler; Stone Handler; Bituminous Worker (Shoveler, Loader, and Utility Man); Batch Truck Dumper or Cement Handler; Bituminous Worker (Dumper, Ironer, Smoother, and Tamper); Concrete Handler

GROUP 2: Air Tool Operator; Joint Sawer and Filler (Pavement); Vibrator or Tamper Operator (Mechanical Hand Operated);

GROUP 3: Bituminous Worker (Raker and Luteman); Formsetter (Curb, Sidewalk, and Pavement); Strike Off Man

GROUP 4: Line and Grade Specialist

GROUP 5: Blaster; powderman

GROUP 6: Flagperson and Traffic Control Person

---

* LABO0113-011 06/03/2024

KENOSHA AND RACINE COUNTIES

	Rates	Fringes
LABORER		
Group 1	$ 34.67	25.01
Group 2	$ 34.82	25.01
Group 3	$ 35.02	25.01
Group 4	$ 34.99	25.01
Group 5	$ 35.32	25.01
Group 6	$ 31.81	25.01

LABORERS CLASSIFICATIONS:

GROUP 1: General laborer; Tree Trimmer; Conduit Layer; Demolition and Wrecking Laborer; Guard Rail, Fence, and Bridge Builder; Landscaper; Multiplate Culvert Assembler; Stone Handler; Bituminous Worker (Shoveler, Loader, and Utility Man); Batch Truck Dumper or Cement Handler; Bituminous worker (Dumper, Ironer, Smoother, and Tamper); Concrete Handler

GROUP 2: Air Tool Operator; Joint Sawer and Filler (Pavement); Vibrator or Tamper Operator (Mechanical Hand Operated); Chain Saw Operator; Demolition Burning Torch Laborer

GROUP 3: Bituminous Worker (Raker and Luteman); Formsetter (Curb, Sidewalk, and Pavement); Strike Off Man

GROUP 4: Line and Grade Specialist

GROUP 5: Blaster and Powderman

GROUP 6: Flagman; traffic control person

 LABO0140-002 06/03/2024

ADAMS, ASHLAND, BARRON, BAYFIELD, BROWN, BUFFALO, BURNETT, CALUMET, CHIPPEWA, CLARK, COLUMBIA, CRAWFORD, DODGE, DOOR,

DOUGLAS, DUNN, EAU CLAIRE, FLORENCE, FOND DU LAC, FOREST, GRANT, GREEN, GREEN LAKE, IRON, JACKSON, JUNEAU, IOWA, JEFFERSON, KEWAUNEE, LA CROSSE, LAFAYETTE, LANGLADE, LINCOLN, MANITOWOC, MARATHON, MARINETTE, MARQUETTE, MENOMINEE, MONROE, OCONTO, ONEIDA, OUTAGAMIE, PEPIN, PIERCE, POLK, PORTAGE, PRICE, RICHLAND, ROCK, RUSK, SAUK, SAWYER, SHAWANO, SHEBOYGAN, ST. CROIX, TAYLOR, TREMPEALEAU, VERNON, VILLAS, WALWORTH, WASHBURN, WAUPACA, WAUSHARA, WINNEBAGO, AND WOOD COUNTIES

	Rates	Fringes
LABORER		
Group 1	$ 40.57	19.45
Group 2	$ 40.67	19.45
Group 3	$ 40.72	19.45
Group 4	$ 40.92	19.45
Group 5	$ 40.77	19.45
Group 6	$ 37.20	19.45

LABORER CLASSIFICATIONS

GROUP 1: General Laborer; Tree Trimmer; Conduit Layer; Demolition and Wrecking Laborer; Guard Rail, Fence, and Bridge Builder; Landscaper; Multiplate Culvert Assembler; Stone Handler; Bitminous Worker (Shoveler, Loader, and Utility Man); Batch Truck Dumper or Cement Handler; Bituminous Worker (Dumper, Ironer, Smoother and Tamper); Concrete Handler

GROUP 2: Air Tool Operator; Joint Sawer and Filler (Pavement); Vibrator or Tamper Operator (Mechanical Hand Operated); Chain Saw Operator, Demolition Burning Torch Laborer

GROUP 3: Bituminous Worker (Raker and Luteman); Formsetter (Curb, Sidewalk and Pavement); Strike Off Man

GROUP 4: Line and Grade Secialist

GROUP 5: Blaster; powderman

GROUP 6: Flagperson; Traffic Control

LABO0464-003 06/03/2024

DANE COUNTY

	Rates	Fringes
LABORER		
Group 1	$ 40.85	19.45
Group 2	$ 40.95	19.45
Group 3	$ 41.00	19.45
Group 4	$ 41.20	19.45
Group 5	$ 41.05	19.45
Group 6	$ 37.20	19.45

LABORERS CLASSIFICATIONS:

GROUP 1: General Laborer; Tree Trimmer; Conduit Layer; Demolition and Wrecking Laborer; Guard Rail, Fence, and Bridge Builder; Landscaper; Multiplate Culvert Assembler; Stone Handler; Bituminous Worker (Shoveler, Loader, and Utility Man); Batch Truck Dumper or Cement Handler; Bituminious Worker (Dumper, Ironer, Smoother, and Tamper); Concrete Handler

GROUP 2: Air Tool Operator; Joint Sawer and Filler (Pavement); Vibrator or Tamper Operator (Mechanical Hand Operated); Chain Saw Operator; Demolition Burning Torch Laborer

GROUP 3: Bituminous Worker (Raker and Luteman); Formsetter (Curb, Sidewalk, and Pavement); Strike Off Man

GROUP 4: Line and Grade Specialist

GROUP 5: Blaster; Powderman

GROUP 6: Flagperson and Traffic Control Person

PAIN0106-008 05/06/2024

ASHLAND, BAYFIELD, BURNETT, AND DOUGLAS COUNTIES

	Rates	Fringes
Painters:		
New:		
Brush, Roller	$ 36.16	26.27
Spray, Sandblast, Steel	$ 36.76	26.27
Repaint:		
Brush, Roller	$ 34.66	26.27
Spray, Sandblast, Steel	$ 35.26	26.27

PAIN0108-002 06/01/2024

RACINE COUNTY

	Rates	Fringes
Painters:		
Brush, Roller	$ 42.04	22.95
Spray & Sandblast	$ 43.04	22.95

PAIN0259-002 05/01/2008

BARRON, CHIPPEWA, DUNN, EAU CLAIRE, PEPIN, PIERCE, POLK, RUSK, SAWYER, ST. CROIX, AND WASHBURN COUNTIES

	Rates	Fringes
PAINTER	$ 24.11	12.15

PAIN0259-004 05/01/2015

BUFFALO, CRAWFORD, JACKSON, LA CROSSE, MONROE, TREMPEALEAU, AND VERNON COUNTIES

	Rates	Fringes
PAINTER	$ 22.03	12.45

PAIN0781-002 06/01/2024

JEFFERSON, MILWAUKEE, OZAUKEE, WASHINGTON, AND WAUKESHA COUNTIES

	Rates	Fringes
Painters:		
Bridge	$ 41.39	24.92
Brush	$ 40.64	24.92
Spray & Sandblast	$ 41.39	24.92

PAIN0802-002 06/01/2024

COLUMBIA, DANE, DODGE, GRANT, GREEN, IOWA, LAFAYETTE, RICHLAND, ROCK, AND SAUK COUNTIES

	Rates	Fringes

PAINTER
Brush.....$ 36.35 20.87

PREMIUM PAY:
Structural Steel, Spray, Bridges = $1.00 additional per hour.

PAIN0802-003 06/01/2024

ADAMS, BROWN, CALUMET, CLARK, DOOR, FOND DU LAC, FOREST, GREEN LAKE, IRON, JUNEAU, KEWAUNEE, LANGLADE, LINCOLN, MANITOWOC, MARATHON, MARINETTE, MARQUETTE, MENOMINEE, OCONTO, ONEIDA, OUTAGAMIE, PORTAGE, PRICE, SHAWANO, SHEBOYGAN, TAYLOR, VILAS, WAUSHARA, WAUPACA, WINNEBAGO, AND WOOD COUNTIES

	Rates	Fringes
PAINTER	$ 36.35	20.87

PAIN0934-001 06/01/2024

KENOSHA AND WALWORTH COUNTIES

	Rates	Fringes
Painters:		
Brush	$ 38.67	26.32
Spray	$ 39.67	26.32
Structural Steel	$ 38.82	26.32

PAIN1011-002 06/02/2024

FLORENCE COUNTY

	Rates	Fringes
Painters:	$ 29.95	15.89

PLAS0599-002 06/01/2023

	Rates	Fringes
CEMENT MASON/CONCRETE FINISHER		
Area A	$ 45.17	27.27
Area B	$ 39.97	25.02
Area C	$ 40.40	25.25
Area D	$ 41.16	24.49

Area E.....$ 40.50 25.14
Area F.....$ 36.98 28.67

AREA DESCRIPTIONS

AREA A: ASHLAND, BURNETT, BAYFIELD, DOUGLAS, IRON, PRICE, SAWYER, AND WASHBURN COUNTIES

AREA B: ADAMS, BARRON, BROWN, CALUMET, CHIPPEWA, CLARK, COLUMBIA, DODGE, DOOR, DUNN, FLORENCE, FOND DU LAC, FOREST, GREEN LAKE, JEFFERSON, KEWAUNEE, LANGLADE, LINCOLN, MANITOWOC, MARATHON, MARINETTE, MARQUETTE, MENOMINEE, OCONTO, ONEIDA, OUTAGAMIE, POLK, PORTAGE, RUSK, ST. CROIX, SAUK, SHAWANO, SHEBOYGAN, TAYLOR, VILAS, WALWORTH, WAUPACA, WAUSHARA, WINNEBAGO, AND WOOD COUNTIES

AREA C: BUFFALO, CRAWFORD, EAU CLAIRE, JACKSON, JUNEAU, LA CROSSE, MONROE, PEPIN, PIERCE, RICHLAND, TREMPEALEAU, AND VERNON COUNTIES

AREA D: MILWAUKEE, OZAUKEE, WASHINGTON, AND WAUKESHA COUNTIES

AREA E: DANE, GRANT, GREEN, IOWA, LAFAYETTE, AND ROCK COUNTIES

AREA F: KENOSHA AND RACINE COUNTIES

TEAM0039-001 06/01/2024

	Rates	Fringes
TRUCK DRIVER		
1 & 2 Axles	$ 37.57	27.41
3 or more Axles; Euclids, Dumptor & Articulated, Truck Mechanic	$ 37.72	27.41

WELDERS - Receive rate prescribed for craft performing operation to which welding is incidental.

==========

Note: Executive Order (EO) 13706, Establishing Paid Sick Leave for Federal Contractors applies to all contracts subject to the Davis-Bacon Act for which the contract is awarded (and any solicitation was issued) on or after January 1, 2017. If this contract is covered by the EO, the contractor must provide

employees with 1 hour of paid sick leave for every 30 hours they work, up to 56 hours of paid sick leave each year. Employees must be permitted to use paid sick leave for their own illness, injury or other health-related needs, including preventive care; to assist a family member (or person who is like family to the employee) who is ill, injured, or has other health-related needs, including preventive care; or for reasons resulting from, or to assist a family member (or person who is like family to the employee) who is a victim of, domestic violence, sexual assault, or stalking. Additional information on contractor requirements and worker protections under the EO is available at https://www.dol.gov/agencies/whd/government-contracts.

Unlisted classifications needed for work not included within the scope of the classifications listed may be added after award only as provided in the labor standards contract clauses (29CFR 5.5 (a) (1) (iii)).

The body of each wage determination lists the classification and wage rates that have been found to be prevailing for the cited type(s) of construction in the area covered by the wage determination. The classifications are listed in alphabetical order of ""identifiers"" that indicate whether the particular rate is a union rate (current union negotiated rate for local), a survey rate (weighted average rate) or a union average rate (weighted union average rate).

Union Rate Identifiers

A four letter classification abbreviation identifier enclosed in dotted lines beginning with characters other than ""SU"" or ""UAVG"" denotes that the union classification and rate were prevailing for that classification in the survey. Example: PLUM0198-005 07/01/2014. PLUM is an abbreviation identifier of the union which prevailed in the survey for this classification, which in this example would be Plumbers. 0198 indicates the local union number or district council number where applicable, i.e., Plumbers Local 0198. The next number, 005 in the example, is an internal number used in processing the wage determination. 07/01/2014 is the effective date of the most current negotiated rate, which in this example is July 1, 2014.

Union prevailing wage rates are updated to reflect all rate

changes in the collective bargaining agreement (CBA) governing this classification and rate.

Survey Rate Identifiers

Classifications listed under the ""SU"" identifier indicate that no one rate prevailed for this classification in the survey and the published rate is derived by computing a weighted average rate based on all the rates reported in the survey for that classification. As this weighted average rate includes all rates reported in the survey, it may include both union and non-union rates. Example: SULA2012-007 5/13/2014. SU indicates the rates are survey rates based on a weighted average calculation of rates and are not majority rates. LA indicates the State of Louisiana. 2012 is the year of survey on which these classifications and rates are based. The next number, 007 in the example, is an internal number used in producing the wage determination. 5/13/2014 indicates the survey completion date for the classifications and rates under that identifier.

Survey wage rates are not updated and remain in effect until a new survey is conducted.

Union Average Rate Identifiers

Classification(s) listed under the UAVG identifier indicate that no single majority rate prevailed for those classifications; however, 100% of the data reported for the classifications was union data. EXAMPLE: UAVG-OH-0010 08/29/2014. UAVG indicates that the rate is a weighted union average rate. OH indicates the state. The next number, 0010 in the example, is an internal number used in producing the wage determination. 08/29/2014 indicates the survey completion date for the classifications and rates under that identifier.

A UAVG rate will be updated once a year, usually in January of each year, to reflect a weighted average of the current negotiated/CBA rate of the union locals from which the rate is based.

State Adopted Rate Identifiers

Classifications listed under the ""SA"" identifier indicate that the prevailing wage rate set by a state (or local) government was adopted under 29 C.F.R ⍰1.3(g)-(h). Example: SAME2023-007 01/03/2024. SA reflects that the rates are state adopted. ME refers to the State of Maine. 2023 is the year during which the state completed the survey on which the listed classifications and rates are based. The next number, 007 in the example, is an

internal number used in producing the wage determination. 01/03/2024 reflects the date on which the classifications and rates under the ?SA? identifier took effect under state law in the state from which the rates were adopted.

WAGE DETERMINATION APPEALS PROCESS

1.) Has there been an initial decision in the matter? This can be:

* an existing published wage determination
* a survey underlying a wage determination
* a Wage and Hour Division letter setting forth a position on a wage determination matter
* a conformance (additional classification and rate) ruling

On survey related matters, initial contact, including requests for summaries of surveys, should be with the Wage and Hour National Office because National Office has responsibility for the Davis-Bacon survey program. If the response from this initial contact is not satisfactory, then the process described in 2.) and 3.) should be followed.

With regard to any other matter not yet ripe for the formal process described here, initial contact should be with the Branch of Construction Wage Determinations. Write to:

Branch of Construction Wage Determinations
Wage and Hour Division
U.S. Department of Labor
200 Constitution Avenue, N.W.
Washington, DC 20210

2.) If the answer to the question in 1.) is yes, then an interested party (those affected by the action) can request review and reconsideration from the Wage and Hour Administrator (See 29 CFR Part 1.8 and 29 CFR Part 7). Write to:

Wage and Hour Administrator
U.S. Department of Labor
200 Constitution Avenue, N.W.
Washington, DC 20210

The request should be accompanied by a full statement of the interested party's position and by any information (wage payment data, project description, area practice material, etc.) that the requestor considers relevant to the issue.

3.) If the decision of the Administrator is not favorable, an interested party may appeal directly to the Administrative Review Board (formerly the Wage Appeals Board). Write to:

Administrative Review Board
U.S. Department of Labor
200 Constitution Avenue, N.W.
Washington, DC 20210

4.) All decisions by the Administrative Review Board are final.

==========

END OF GENERAL DECISION"

NOTICE TO BIDDERS
WAGE RATE DECISION

The wage rate decision of the Department of Labor which has been incorporated in these advertised specifications is incomplete in that the classifications may be omitted from the Department of Labor's decision.

Since the bidder is responsible, independently, for ascertaining area practice with respect to the necessity, or lack of necessity, for the use of these classifications in the prosecution of the work contemplated by this project, no inference may be drawn from the omission of these classifications concerning prevailing area practices relative to their use. Further, this omission will not, per se, be construed as establishing any governmental liability for increased labor cost if it is subsequently determined that such classifications are required.

There may be omissions and/or errors in the federal wage rates. The bidder is responsible for evaluating and determining the correct applicable rate.

If a project includes multiple types of construction (highway, bridge over navigable water, sanitary sewer and water main, building) and there is not a separate wage determination for this type of work included in the proposal, use the wage determination that is in the proposal.

If a project includes multiple types of construction, different wage rate determinations may be inserted into the contract (WI10/Highway = in all WisDOT highway contracts, WI15/Heavy = bridge over navigable water per USDOL and US Coast Guard designation, WI8/Heavy (Sewer & Water Line & Tunnel) = sanitary sewer and water main if the cost is more than 20% of the contract and/or at least $1,000,000, and Building). If multiple wage rate determinations are inserted into the contract, use the classification in the wage determination for the work being done. Use WI15 wage rates when working on the bridge and/or structure from bank to bank. Use WI8 wage rates when working on any sanitary sewer or water main work. Use Building wage rates for all work done within the footprint of the building. Use WI10 wage rates for all other highway work in the contract and approaches to structures. For example, if a laborer is working within the footprint of a building, use the Laborer rate in the Building wage determination inserted in the contract. If a laborer is working on a bridge/structure within the banks, use the Laborer rate in the WI15/Heavy wage determination if inserted in the contract. If the laborer is working on the highway, use the Laborer rate in the WI10/Highway wage determination.

Proposal ID: 20241210018 **Project(s):** 4540-34-71, 4540-36-71

Federal ID(s): WISC 2025107, WISC 2025108

SECTION: 0001 Contract Items

Alt Set ID: **Alt Mbr ID:**

Proposal Line Number	Item ID Description	Approximate Quantity and Units	Unit Price	Bid Amount
0002	201.0110 Clearing	1,926.000 SY	_____._____	_____._____
0004	201.0210 Grubbing	1,926.000 SY	_____._____	_____._____
0006	203.0220 Removing Structure (structure) 01. Culvert Pipe at STA 189+62	1.000 EACH	_____._____	_____._____
0008	203.0220 Removing Structure (structure) 02. Culvert at STA 100+09	1.000 EACH	_____._____	_____._____
0010	203.0220 Removing Structure (structure) 03. C-59-0080	1.000 EACH	_____._____	_____._____
0012	203.0220 Removing Structure (structure) 04. C-59-2916	1.000 EACH	_____._____	_____._____
0014	203.0220 Removing Structure (structure) 05. C-59-2650	1.000 EACH	_____._____	_____._____
0016	203.0220 Removing Structure (structure) 06. Station 140+34	1.000 EACH	_____._____	_____._____
0018	203.0220 Removing Structure (structure) 07. Station 180+82	1.000 EACH	_____._____	_____._____
0020	203.0220 Removing Structure (structure) 08. Station 189+62	1.000 EACH	_____._____	_____._____
0022	203.0220 Removing Structure (structure) 09. Station 205+41	1.000 EACH	_____._____	_____._____
0024	203.0220 Removing Structure (structure) 10. Station 242+23	1.000 EACH	_____._____	_____._____
0026	203.0220 Removing Structure (structure) 11. Station 259+80	1.000 EACH	_____._____	_____._____

Proposal ID: 20241210018 **Project(s):** 4540-34-71, 4540-36-71

Federal ID(s): WISC 2025107, WISC 2025108

SECTION: 0001 Contract Items

Alt Set ID: **Alt Mbr ID:**

Proposal Line Number	Item ID Description	Approximate Quantity and Units	Unit Price	Bid Amount
0028	203.0220 Removing Structure (structure) 12. Station 405+78	1.000 EACH	_____._____	_____._____
0030	203.0220 Removing Structure (structure) 13. Station 585+25	1.000 EACH	_____._____	_____._____
0032	204.0100 Removing Concrete Pavement	1,726.000 SY	_____._____	_____._____
0034	204.0115 Removing Asphaltic Surface Butt Joints	254.000 SY	_____._____	_____._____
0036	204.0120 Removing Asphaltic Surface Milling	186,073.000 SY	_____._____	_____._____
0038	204.0150 Removing Curb & Gutter	657.000 LF	_____._____	_____._____
0040	204.0155 Removing Concrete Sidewalk	364.000 SY	_____._____	_____._____
0042	204.0165 Removing Guardrail	3,495.000 LF	_____._____	_____._____
0044	204.0180 Removing Delineators and Markers	21.000 EACH	_____._____	_____._____
0046	204.0245 Removing Storm Sewer (size) 01. 18-Inch	48.000 LF	_____._____	_____._____
0048	204.0291.S Abandoning Sewer	8.000 CY	_____._____	_____._____
0050	205.0100 Excavation Common	3,702.000 CY	_____._____	_____._____
0052	206.2001 Excavation for Structures Culverts (structure) 02. C-59-0121	1.000 EACH	_____._____	_____._____
0054	206.2001 Excavation for Structures Culverts (structure) 03. C-59-0117	1.000 EACH	_____._____	_____._____

Proposal ID: 20241210018 **Project(s):** 4540-34-71, 4540-36-71

Federal ID(s): WISC 2025107, WISC 2025108

SECTION: 0001 Contract Items

Alt Set ID: **Alt Mbr ID:**

Proposal Line Number	Item ID Description	Approximate Quantity and Units	Unit Price	Bid Amount
0056	206.2001 Excavation for Structures Culverts (structure) 04. C-59-0118	1.000 EACH	_____._____	_____._____
0058	206.2001 Excavation for Structures Culverts (structure) 05. C-59-0119	1.000 EACH	_____._____	_____._____
0060	208.0100 Borrow	3,102.000 CY	_____._____	_____._____
0062	210.2500 Backfill Structure Type B	6,256.000 TON	_____._____	_____._____
0064	211.0101 Prepare Foundation for Asphaltic Paving (project) 01. 4540-36-71	1.000 EACH	_____._____	_____._____
0066	213.0100 Finishing Roadway (project) 01. 4540-36-71	1.000 EACH	_____._____	_____._____
0068	305.0110 Base Aggregate Dense 3/4-Inch	2,032.000 TON	_____._____	_____._____
0070	305.0120 Base Aggregate Dense 1 1/4-Inch	5,457.000 TON	_____._____	_____._____
0072	415.0080 Concrete Pavement 8-Inch	21.000 SY	_____._____	_____._____
0074	416.0610 Drilled Tie Bars	16.000 EACH	_____._____	_____._____
0076	450.4000 HMA Cold Weather Paving	5,591.000 TON	_____._____	_____._____
0078	455.0605 Tack Coat	11,797.000 GAL	_____._____	_____._____
0080	460.0105.S HMA Percent Within Limits (PWL) Test Strip Volumetrics	1.000 EACH	_____._____	_____._____
0082	460.0110.S HMA Percent Within Limits (PWL) Test Strip Density	1.000 EACH	_____._____	_____._____

Proposal ID: 20241210018 **Project(s):** 4540-34-71, 4540-36-71

Federal ID(s): WISC 2025107, WISC 2025108

SECTION: 0001 Contract Items

Alt Set ID: **Alt Mbr ID:**

Proposal Line Number	Item ID Description	Approximate Quantity and Units	Unit Price	Bid Amount
0084	460.2000 Incentive Density HMA Pavement	410.000 DOL	1.00000	410.00
0086	460.2005 Incentive Density PWL HMA Pavement	15,126.000 DOL	1.00000	15,126.00
0088	460.2007 Incentive Density HMA Pavement Longitudinal Joints	10,310.000 DOL	1.00000	10,310.00
0090	460.2010 Incentive Air Voids HMA Pavement	21,402.000 DOL	1.00000	21,402.00
0092	460.5223 HMA Pavement 3 LT 58-28 S	629.000 TON	_____._____	_____._____
0094	460.5224 HMA Pavement 4 LT 58-28 S	21,402.000 TON	_____._____	_____._____
0096	465.0105 Asphaltic Surface	333.000 TON	_____._____	_____._____
0098	465.0110 Asphaltic Surface Patching	873.000 TON	_____._____	_____._____
0100	465.0560 Asphaltic Rumble Strips, Centerline	33,515.000 LF	_____._____	_____._____
0102	504.0100 Concrete Masonry Culverts	581.000 CY	_____._____	_____._____
0104	505.0400 Bar Steel Reinforcement HS Structures	63,600.000 LB	_____._____	_____._____
0106	505.0600 Bar Steel Reinforcement HS Coated Structures	12,730.000 LB	_____._____	_____._____
0108	513.2001 Railing Pipe	58.000 LF	_____._____	_____._____
0110	516.0500 Rubberized Membrane Waterproofing	207.000 SY	_____._____	_____._____
0112	516.0600.S Sheet Membrane Waterproofing for Asphalt Overlays	84.000 SY	_____._____	_____._____

Proposal ID: 20241210018 **Project(s):** 4540-34-71, 4540-36-71

Federal ID(s): WISC 2025107, WISC 2025108

SECTION: 0001 Contract Items

Alt Set ID: **Alt Mbr ID:**

Proposal Line Number	Item ID Description	Approximate Quantity and Units	Unit Price	Bid Amount
0114	520.8700 Cleaning Culvert Pipes	15.000 EACH	_____._____	_____._____
0116	522.0530 Culvert Pipe Reinforced Concrete Class V 30-Inch	95.000 LF	_____._____	_____._____
0118	522.1030 Apron Endwalls for Culvert Pipe Reinforced Concrete 30-Inch	5.000 EACH	_____._____	_____._____
0120	522.2424 Culvert Pipe Reinforced Concrete Horizontal Elliptical Class HE-IV 24x38-Inch	208.000 LF	_____._____	_____._____
0122	522.2624 Apron Endwalls for Culvert Pipe Reinforced Concrete Horizontal Elliptical 24x38-Inch	10.000 EACH	_____._____	_____._____
0124	601.0409 Concrete Curb & Gutter 30-Inch Type A	53.000 LF	_____._____	_____._____
0126	601.0411 Concrete Curb & Gutter 30-Inch Type D	503.000 LF	_____._____	_____._____
0128	601.0600 Concrete Curb Pedestrian	154.000 LF	_____._____	_____._____
0130	602.0405 Concrete Sidewalk 4-Inch	3,470.000 SF	_____._____	_____._____
0132	606.0200 Riprap Medium	55.000 CY	_____._____	_____._____
0134	606.0300 Riprap Heavy	593.000 CY	_____._____	_____._____
0136	608.0118 Relaid Storm Sewer 18-Inch	32.000 LF	_____._____	_____._____
0138	608.0330 Storm Sewer Pipe Reinforced Concrete Class III 30-Inch	90.000 LF	_____._____	_____._____
0140	611.0430 Reconstructing Inlets	5.000 EACH	_____._____	_____._____

Proposal ID: 20241210018 **Project(s):** 4540-34-71, 4540-36-71

Federal ID(s): WISC 2025107, WISC 2025108

SECTION: 0001 Contract Items

Alt Set ID: **Alt Mbr ID:**

Proposal Line Number	Item ID Description	Approximate Quantity and Units	Unit Price	Bid Amount
0142	611.0639 Inlet Covers Type H-S	6.000 EACH	_____._____	_____._____
0144	611.3230 Inlets 2x3-FT	1.000 EACH	_____._____	_____._____
0146	614.2300 MGS Guardrail 3	575.000 LF	_____._____	_____._____
0148	614.2330 MGS Guardrail 3 K	1,075.000 LF	_____._____	_____._____
0150	614.2340 MGS Guardrail 3 L	112.500 LF	_____._____	_____._____
0152	614.2350 MGS Guardrail Short Radius	144.300 LF	_____._____	_____._____
0154	614.2500 MGS Thrie Beam Transition	78.800 LF	_____._____	_____._____
0156	614.2610 MGS Guardrail Terminal EAT	18.000 EACH	_____._____	_____._____
0158	618.0100 Maintenance and Repair of Haul Roads (project) 01. 4540-34-71	1.000 EACH	_____._____	_____._____
0160	618.0100 Maintenance and Repair of Haul Roads (project) 02. 4540-36-71	1.000 EACH	_____._____	_____._____
0162	619.1000 Mobilization	1.000 EACH	_____._____	_____._____
0164	624.0100 Water	77.500 MGAL	_____._____	_____._____
0166	625.0100 Topsoil	8,224.000 SY	_____._____	_____._____
0168	628.1504 Silt Fence	2,752.000 LF	_____._____	_____._____
0170	628.1520 Silt Fence Maintenance	2,752.000 LF	_____._____	_____._____

Proposal ID: 20241210018 **Project(s):** 4540-34-71, 4540-36-71

Federal ID(s): WISC 2025107, WISC 2025108

SECTION: 0001 Contract Items

Alt Set ID: **Alt Mbr ID:**

Proposal Line Number	Item ID Description	Approximate Quantity and Units	Unit Price	Bid Amount
0172	628.1905 Mobilizations Erosion Control	40.000 EACH	_____._____	_____._____
0174	628.1910 Mobilizations Emergency Erosion Control	11.000 EACH	_____._____	_____._____
0176	628.2006 Erosion Mat Urban Class I Type A	262.000 SY	_____._____	_____._____
0178	628.2008 Erosion Mat Urban Class I Type B	6,867.000 SY	_____._____	_____._____
0180	628.2027 Erosion Mat Class II Type C	1,058.000 SY	_____._____	_____._____
0182	628.7015 Inlet Protection Type C	38.000 EACH	_____._____	_____._____
0184	628.7504 Temporary Ditch Checks	64.000 LF	_____._____	_____._____
0186	628.7555 Culvert Pipe Checks	38.000 EACH	_____._____	_____._____
0188	628.7570 Rock Bags	153.000 EACH	_____._____	_____._____
0190	629.0210 Fertilizer Type B	5.150 CWT	_____._____	_____._____
0192	630.0130 Seeding Mixture No. 30	77.000 LB	_____._____	_____._____
0194	630.0140 Seeding Mixture No. 40	10.000 LB	_____._____	_____._____
0196	630.0170 Seeding Mixture No. 70	9.000 LB	_____._____	_____._____
0198	630.0200 Seeding Temporary	222.000 LB	_____._____	_____._____
0200	630.0500 Seed Water	147.700 MGAL	_____._____	_____._____
0202	633.5200 Markers Culvert End	31.000 EACH	_____._____	_____._____

Proposal ID: 20241210018 **Project(s):** 4540-34-71, 4540-36-71

Federal ID(s): WISC 2025107, WISC 2025108

SECTION: 0001 Contract Items

Alt Set ID: **Alt Mbr ID:**

Proposal Line Number	Item ID Description	Approximate Quantity and Units	Unit Price	Bid Amount
0204	642.5201 Field Office Type C	1.000 EACH	_____._____	_____._____
0206	643.0300 Traffic Control Drums	608.000 DAY	_____._____	_____._____
0208	643.0420 Traffic Control Barricades Type III	2,846.000 DAY	_____._____	_____._____
0210	643.0705 Traffic Control Warning Lights Type A	4,473.000 DAY	_____._____	_____._____
0212	643.0900 Traffic Control Signs	28,608.000 DAY	_____._____	_____._____
0214	643.0910 Traffic Control Covering Signs Type I	3.000 EACH	_____._____	_____._____
0216	643.0920 Traffic Control Covering Signs Type II	10.000 EACH	_____._____	_____._____
0218	643.1000 Traffic Control Signs Fixed Message	125.500 SF	_____._____	_____._____
0220	643.1050 Traffic Control Signs PCMS	28.000 DAY	_____._____	_____._____
0222	643.1070 Traffic Control Cones 42-Inch	18.000 DAY	_____._____	_____._____
0224	643.3165 Temporary Marking Line Paint 6-Inch	154,721.000 LF	_____._____	_____._____
0226	643.3265 Temporary Marking Line Paint 10-Inch	2,764.000 LF	_____._____	_____._____
0228	643.5000 Traffic Control	1.000 EACH	_____._____	_____._____
0230	644.1440 Temporary Pedestrian Surface Matting	490.000 SF	_____._____	_____._____
0232	644.1601 Temporary Pedestrian Curb Ramp	27.000 DAY	_____._____	_____._____
0234	644.1605 Temporary Pedestrian Detectable Warning Field	170.000 SF	_____._____	_____._____

Proposal ID: 20241210018 **Project(s):** 4540-34-71, 4540-36-71

Federal ID(s): WISC 2025107, WISC 2025108

SECTION: 0001 Contract Items

Alt Set ID: **Alt Mbr ID:**

Proposal Line Number	Item ID Description	Approximate Quantity and Units	Unit Price	Bid Amount
0236	644.1810 Temporary Pedestrian Barricade	1,441.000 LF	_____._____	_____._____
0238	645.0120 Geotextile Type HR	1,392.000 SY	_____._____	_____._____
0240	646.2020 Marking Line Epoxy 6-Inch	12,973.000 LF	_____._____	_____._____
0242	646.2040 Marking Line Grooved Wet Ref Epoxy 6-Inch	159,230.000 LF	_____._____	_____._____
0244	646.4020 Marking Line Epoxy 10-Inch	1,382.000 LF	_____._____	_____._____
0246	646.5020 Marking Arrow Epoxy	3.000 EACH	_____._____	_____._____
0248	646.5220 Marking Symbol Epoxy	22.000 EACH	_____._____	_____._____
0250	646.6466 Cold Weather Marking Epoxy 6-Inch	44,415.000 LF	_____._____	_____._____
0252	646.7120 Marking Diagonal Epoxy 12-Inch	74.000 LF	_____._____	_____._____
0254	646.7420 Marking Crosswalk Epoxy Transverse Line 6-Inch	1,077.000 LF	_____._____	_____._____
0256	648.0100 Locating No-Passing Zones	9.700 MI	_____._____	_____._____
0258	650.4000 Construction Staking Storm Sewer	3.000 EACH	_____._____	_____._____
0260	650.5500 Construction Staking Curb Gutter and Curb & Gutter	710.000 LF	_____._____	_____._____
0262	650.6000 Construction Staking Pipe Culverts	8.000 EACH	_____._____	_____._____
0264	650.6501 Construction Staking Structure Layout (structure) 02.C-59-0121	1.000 EACH	_____._____	_____._____

Proposal ID: 20241210018 **Project(s):** 4540-34-71, 4540-36-71

Federal ID(s): WISC 2025107, WISC 2025108

SECTION: 0001 Contract Items

Alt Set ID: **Alt Mbr ID:**

Proposal Line Number	Item ID Description	Approximate Quantity and Units	Unit Price	Bid Amount
0266	650.6501 Construction Staking Structure Layout (structure) 03. C-59-0117	1.000 EACH	_____._____	_____._____
0268	650.6501 Construction Staking Structure Layout (structure) 04. C-59-0118	1.000 EACH	_____._____	_____._____
0270	650.6501 Construction Staking Structure Layout (structure) 05. C-59-0119	1.000 EACH	_____._____	_____._____
0272	650.8000 Construction Staking Resurfacing Reference	51,404.000 LF	_____._____	_____._____
0274	650.9000 Construction Staking Curb Ramps	16.000 EACH	_____._____	_____._____
0276	650.9500 Construction Staking Sidewalk (project) 01. 4540-34-71	1.000 EACH	_____._____	_____._____
0278	650.9500 Construction Staking Sidewalk (project) 02. 4540-36-71	1.000 EACH	_____._____	_____._____
0280	650.9911 Construction Staking Supplemental Control (project) 01. 4540-34-71	1.000 EACH	_____._____	_____._____
0282	650.9911 Construction Staking Supplemental Control (project) 02. 4540-36-71	1.000 EACH	_____._____	_____._____
0284	650.9920 Construction Staking Slope Stakes	3,011.000 LF	_____._____	_____._____
0286	690.0150 Sawing Asphalt	1,070.000 LF	_____._____	_____._____
0288	690.0250 Sawing Concrete	948.000 LF	_____._____	_____._____
0290	715.0502 Incentive Strength Concrete Structures	3,774.000 DOL	1.00000	3,774.00
0292	740.0440 Incentive IRI Ride	77,877.000 DOL	1.00000	77,877.00

Proposal ID: 20241210018 **Project(s):** 4540-34-71, 4540-36-71

Federal ID(s): WISC 2025107, WISC 2025108

SECTION: 0001 Contract Items

Alt Set ID: **Alt Mbr ID:**

Proposal Line Number	Item ID Description	Approximate Quantity and Units	Unit Price	Bid Amount
0294	999.2000.S Installing and Maintaining Bird Deterrent System (station) 01. 100+09	1.000 EACH	_____._____	_____._____
0296	999.2000.S Installing and Maintaining Bird Deterrent System (station) 02. 393+67	1.000 EACH	_____._____	_____._____
0298	ASP.1T0A On-the-Job Training Apprentice at $5.00/HR	2,400.000 HRS	5.00000	12,000.00
0300	ASP.1T0G On-the-Job Training Graduate at $5.00/HR	2,100.000 HRS	5.00000	10,500.00
0302	SPV.0035 Special 01. Foundation Backfill	2,468.000 CY	_____._____	_____._____
0304	SPV.0060 Special 01. Temporary Water Diversion C-59-117, Sta 527+65.16	1.000 EACH	_____._____	_____._____
0306	SPV.0060 Special 02. Temporary Water Diversion C-59-118, Station 393+66.22	1.000 EACH	_____._____	_____._____
0308	SPV.0060 Special 03. Temporary Water Diversion C-59-119, Station 337+79.75	1.000 EACH	_____._____	_____._____
0310	SPV.0060 Special 04. Temporary Water Diversion Culvert Pipe, Sta 189+62	1.000 EACH	_____._____	_____._____
0312	SPV.0060 Special 05. Temporary Water Diversion C-59-121, Station 100+09.05	1.000 EACH	_____._____	_____._____
0314	SPV.0060 Special 06. Chimney Seals	12.000 EACH	_____._____	_____._____
0316	SPV.0060 Special 07. Adjusting Water Valve Box	24.000 EACH	_____._____	_____._____
0318	SPV.0060 Special 08. Apron Endwalls for Culvert Pipe Reinforced Concrete Horizontal Elliptical	2.000 EACH	_____._____	_____._____

Proposal ID: 20241210018 **Project(s):** 4540-34-71, 4540-36-71

Federal ID(s): WISC 2025107, WISC 2025108

SECTION: 0001 Contract Items

Alt Set ID: **Alt Mbr ID:**

Proposal Line Number	Item ID Description	Approximate Quantity and Units	Unit Price	Bid Amount
0320	SPV.0060 Special 09. Adjusting Sanitary Manhole Covers	4.000 EACH	_____._____	_____._____
0322	SPV.0090 Special 01. Culvert Pipe Reinforced Concrete Horizontal Elliptical 72x113-Inch	102.000 LF	_____._____	_____._____
0324	SPV.0180 Special 01. Removing Distressed Asphaltic Surface Milling	7,595.000 SY	_____._____	_____._____

Section: 0001 **Total:** _____._____

Total Bid: _____._____

PLEASE ATTACH ADDENDA HERE

Wisconsin Department of Transportation

Division of Transportation Systems Development
Bureau of Project Development
4822 Madison Yards Way, 4th Floor South
Madison, WI 53705

Telephone: (608) 266-1631
Facsimile (FAX): (608) 266-8459

December 3, 2024

NOTICE TO ALL CONTRACTORS:

Federal Wage Rate Addendum #01

Letting of December 10, 2024

Attached is a copy of the revised WI 10 Highway Davis Bacon Prevailing Wage Rates that are included in proposals 01 – 07, and 09 – 40; WI 8 Heavy (Sewer & Water Line & Tunnel) Davis Bacon Prevailing Wage Rates that are included in proposal 40. These wage rates are effective for all proposals they are included in in the December 10, 2024 letting. The updated wage rates are dated November 8, 2024 and are effective on or after November 18, 2024.

The responsibility for notifying potential subcontractors and suppliers of these changes remains with the prime contractors.

Sincerely,

Mike Coleman
Proposal Development Specialist
Proposal Management Section

"General Decision Number: WI20240010 11/08/2024

Superseded General Decision Number: WI20230010

State: Wisconsin

Construction Type: Highway

Counties: Wisconsin Statewide.

HIGHWAY, AIRPORT RUNWAY & TAXIWAY CONSTRUCTION PROJECTS (does not include bridges over navigable waters; tunnels; buildings in highway rest areas; and railroad construction)

Note: Contracts subject to the Davis-Bacon Act are generally required to pay at least the applicable minimum wage rate required under Executive Order 14026 or Executive Order 13658. Please note that these Executive Orders apply to covered contracts entered into by the federal government that are subject to the Davis-Bacon Act itself, but do not apply to contracts subject only to the Davis-Bacon Related Acts, including those set forth at 29 CFR 5.1(a)(1).

If the contract is entered into on or after January 30, 2022, or the contract is renewed or extended (e.g., an option is exercised) on or after January 30, 2022:	. Executive Order 14026 generally applies to the contract. . The contractor must pay all covered workers at least $17.20 per hour (or the applicable wage rate listed on this wage determination, if it is higher) for all hours spent performing on the contract in 2024.
If the contract was awarded on or between January 1, 2015 and January 29, 2022, and the contract is not renewed or extended on or after January 30, 2022:	. Executive Order 13658 generally applies to the contract. . The contractor must pay all covered workers at least $12.90 per hour (or the applicable wage rate listed on this wage determination, if it is higher) for all hours spent performing on that contract in 2024.

The applicable Executive Order minimum wage rate will be adjusted annually. If this contract is covered by one of the Executive Orders and a classification considered necessary for performance of work on the contract does not appear on this wage determination, the contractor must still submit a conformance request.

Additional information on contractor requirements and worker protections under the Executive Orders is available at http://www.dol.gov/whd/govcontracts.

Modification Number	Publication Date
0	01/05/2024

1	01/26/2024
2	02/02/2024
3	02/16/2024
4	03/15/2024
5	05/24/2024
6	06/21/2024
7	06/28/2024
8	07/05/2024
9	08/02/2024
10	08/23/2024
11	09/06/2024
12	11/08/2024

* BRWI0001-002 06/03/2024

CRAWFORD, JACKSON, JUNEAU, LA CROSSE, MONROE, TREMPEALEAU, AND VERNON COUNTIES

	Rates	Fringes
BRICKLAYER	$ 38.86	27.00

---

* BRWI0002-002 06/01/2024

ASHLAND, BAYFIELD, DOUGLAS, AND IRON COUNTIES

	Rates	Fringes
BRICKLAYER	$ 46.60	27.01

---

* BRWI0002-005 06/01/2024

ADAMS, ASHLAND, BARRON, BROWN, BURNETT, CALUMET, CHIPPEWA, CLARK, COLUMBIA, DODGE, DOOR, DUNN, FLORENCE, FOND DU LAC, FOREST, GREEN LAKE, IRON, JEFFERSON, KEWAUNEE, LANGLADE, LINCOLN, MANITOWOC, MARATHON, MARINETTE, MARQUETTE, MENOMINEE, OCONTO, ONEIDA, OUTAGAMIE, POLK, PORTAGE, RUSK, ST CROIX, SAUK, SHAWANO, SHEBOYGAN, TAYLOR, VILAS, WALWORTH, WAUPACA, WAUSHARA, WINNEBAGO, AND WOOD COUNTIES

	Rates	Fringes
CEMENT MASON/CONCRETE FINISHER	$ 41.62	27.03

---

* BRWI0003-002 06/01/2024

BROWN, DOOR, FLORENCE, KEWAUNEE, MARINETTE, AND OCONTO COUNTIES

	Rates	Fringes
BRICKLAYER	$ 38.45	27.41

---

* BRWI0004-002 06/01/2024

KENOSHA, RACINE, AND WALWORTH COUNTIES

	Rates	Fringes
BRICKLAYER	$ 43.21	27.90

---

* BRWI0006-002 06/01/2024

ADAMS, CLARK, FOREST, LANGLADE, LINCOLN, MARATHON, MENOMINEE,

ONEIDA, PORTAGE, PRICE, TAYLOR, VILAS AND WOOD COUNTIES

	Rates	Fringes
BRICKLAYER	$ 38.33	27.53

---

* BRWI0007-002 06/01/2024

GREEN, LAFAYETTE, AND ROCK COUNTIES

	Rates	Fringes
BRICKLAYER	$ 39.34	28.15

---

* BRWI0008-002 06/01/2024

MILWAUKEE, OZAUKEE, WASHINGTON, AND WAUKESHA COUNTIES

	Rates	Fringes
BRICKLAYER	$ 46.16	27.33

---

* BRWI0011-002 06/01/2024

CALUMET, FOND DU LAC, MANITOWOC, AND SHEBOYGAN COUNTIES

	Rates	Fringes
BRICKLAYER	$ 38.45	27.41

---

* BRWI0019-002 06/01/2024

BARRON, BUFFALO, BURNETT, CHIPPEWA, DUNN, EAU CLAIRE, PEPIN, PIERCE, POLK, RUSK, ST. CROIX, SAWYER AND WASHBURN COUNTIES

	Rates	Fringes
BRICKLAYER	$ 38.18	27.68

---

* BRWI0034-002 06/01/2024

COLUMBIA AND SAUK COUNTIES

	Rates	Fringes
BRICKLAYER	$ 40.17	27.32

CARP0068-011 05/02/2022

BURNETT (W. of Hwy 48), PIERCE (W. of Hwy 29), POLK (W. of Hwys 35, 48 & 65), AND ST. CROIX (W. of Hwy 65) COUNTIES

	Rates	Fringes
Carpenter & Piledrivermen	$ 41.19	27.05

CARP0231-002 06/05/2023

KENOSHA, MILWAUKEE, OZAUKEE, RACINE, WASHINGTON, AND WAUKESHA COUNTIES

	Rates	Fringes
CARPENTER	$ 41.91	29.72

CARP0310-002 06/03/2024

ADAMS, ASHLAND, BAYFIELD (Eastern 2/3), FOREST, IRON, JUNEAU, LANGLADE, LINCOLN, MARATHON, ONEIDA, PORTAGE, PRICE, SHAWANO (Western Portion of the County), TAYLOR, VILAS, AND WOOD COUNTIES

	Rates	Fringes
CARPENTER	$ 42.44	28.44
Piledriver	$ 42.44	28.44

CARP0314-001 06/05/2023

COLUMBIA, DANE, DODGE, GRANT, GREEN, IOWA, JEFFERSON, LAFAYETTE, RICHLAND, ROCK, SAUK, AND WALWORTH COUNTIES

	Rates	Fringes
CARPENTER	$ 38.86	27.06
Piledriver	$ 39.43	27.02

CARP0361-004 05/01/2018

BAYFIELD (West of Hwy 63) AND DOUGLAS COUNTIES

	Rates	Fringes
CARPENTER	$ 36.15	20.43

CARP0731-002 06/03/2024

CALUMET (Eastern Portion of the County), FOND DU LAC (Eastern Portion of the County), MANITOWOC, AND SHEBOYGAN COUNTIES

	Rates	Fringes
CARPENTER	$ 42.44	28.44
Piledriver	$ 42.44	28.44

CARP0955-002 06/03/2024

CALUMET (Western Portion of the County), FOND DU LAC (Western Portion of the County), GREEN LAKE, MARQUETTE, OUTAGAMIE, WAUPACA, WAUSHARA, AND WINNEBAGO

	Rates	Fringes
CARPENTER	$ 42.44	28.44
PILEDRIVER	$ 42.44	28.44

CARP1056-002 06/01/2024

ADAMS, ASHLAND, BARRON, BAYFIELD , BROWN, BUFFALO, BURNETT ,CALUMET, CHIPPEWA, CLARK, COLUMBIA, CRAWFORD, DANE, DODGE, DOOR, DUNN, EAU CLAIRE, FLORENCE, FOND DU LAC, FOREST, GRANT, GREEN, GREEN LAKE, IOWA, IRON, JACKSON, JEFFERSON, JUNEAU,

KEWAUNEE, LA CROSSE, LAFAYETTE, LANGLADE, LINCOLN, MANITOWOC, MARATHON, MARINETTE, MARQUETTE, MENOMINEE, MONROE, OCONTO, ONEIDA, OUTAGAMIE, PEPIN, PIERCE (E. of Hwy. 29 & 65), POLK (E. of Hwy. 35, 48 & 65), PORTAGE, PRICE, RICHLAND, ROCK, RUSK, SAUK, SAWYER, SHAWANO, SHEBOYGAN, ST. CROIX (E. of Hwy. 65), TAYLOR, TREMPEALEAU, VERNON, VILAS, WALWORTH, WASHBURN, WAUPACA, WAUSHARA, WINNEBAGO, AND WOOD COUNTIES

	Rates	Fringes
MILLWRIGHT	$ 42.00	28.85

CARP1074-002 06/03/2024

BARRON, BURNETT, CHIPPEWA, CLARK, DUNN, EAU CLAIRE, PEPIN, PIERCE (E. of Hwy. 29 & 65), POLK (E. of Hwy. 35, 48 & 65), RUSK, SAWYER, ST. CROIX (E. of Hwy. 65), AND WASHBURN

	Rates	Fringes
CARPENTER	$ 42.44	28.44
PILEDRIVER	$ 42.44	28.44

CARP1143-002 06/03/2024

BUFFALO, CRAWFORD, JACKSON, LA CROSSE, MONROE, TREMPEALEAU AND VERNON COUNTIES

	Rates	Fringes
CARPENTER	$ 42.44	28.44
PILEDRIVER	$ 42.44	28.44

CARP1146-002 06/03/2024

BROWN, DOOR, FLORENCE, KEWAUNEE, MARINETTE, MENOMINEE, OCONTO, AND SHAWANO (Western Portion of the County) COUNTIES

	Rates	Fringes
CARPENTER	$ 42.44	28.44
PILEDRIVER	$ 42.44	28.44

CARP2337-009 06/03/2024

KENOSHA, MILWAUKEE, OZAUKEE, RACINE, WASHINGTON, AND WAUKESHA

	Rates	Fringes
PILEDRIVERMAN	$ 42.21	34.07

ELEC0014-002 05/26/2024

ASHLAND, BARRON, BAYFIELD, BUFFALO, BURNETT, CHIPPEWA, CLARK (except Maryville, Colby, Unity, Sherman, Fremont, Lynn & Sherwood), CRAWFORD, DUNN, EAU CLAIRE, GRANT, IRON, JACKSON, LA CROSSE, MONROE, PEPIN, PIERCE, POLK, PRICE, RICHLAND, RUSK, ST CROIX, SAWYER, TAYLOR, TREMPEALEAU, VERNON, AND WASHBURN COUNTIES

```
                                   Rates          Fringes

Electricians:....................$ 42.73           23.99
----------------------------------------------------------------
 ELEC0014-007 05/26/2024

REMAINING COUNTIES

                                   Rates          Fringes

Teledata System Installer
     Installer/Technician........$ 30.27           19.11

  Low voltage construction, installation, maintenance and
  removal of teledata facilities (voice, data, and video)
  including outside plant, telephone and data inside wire,
  interconnect, terminal equipment, central offices, PABX,
  fiber optic cable and equipment, micro waves, V-SAT,
  bypass, CATV, WAN (wide area networks), LAN (local area
  networks), and ISDN (integrated systems digital network).

----------------------------------------------------------------
 ELEC0127-002 06/01/2023

KENOSHA COUNTY

                                   Rates          Fringes

Electricians:....................$ 46.05        30%+13.15
----------------------------------------------------------------
* ELEC0158-002 06/01/2024

BROWN, DOOR, KEWAUNEE, MANITOWOC (except Schleswig),
MARINETTE(Wausuakee and area South thereof), OCONTO, MENOMINEE
(East of a ine 6 miles West of the West boundary of Oconto
County), SHAWANO (Except Area North of Townships of Aniwa and
Hutchins) COUNTIES


                                   Rates          Fringes

ELECTRICIAN......................$ 40.25     29.75%+11.17
----------------------------------------------------------------
 ELEC0159-003 05/26/2024

COLUMBIA, DANE, DODGE (Area West of Hwy 26, except Chester and
Emmet Townships), GREEN, LAKE (except Townships of Berlin,
Seneca, and St. Marie), IOWA, MARQUETTE (except Townships of
Neshkoka, Crystal Lake, Newton, and Springfield), and SAUK
COUNTIES


                                   Rates          Fringes

ELECTRICIAN......................$ 48.55           25.91
----------------------------------------------------------------
 ELEC0219-004 06/01/2019

FLORENCE COUNTY (Townships of Aurora, Commonwealth, Fern,
Florence and Homestead) AND MARINETTE COUNTY (Township of
Niagara)


                                   Rates          Fringes
```

```
Electricians:
     Electrical contracts over
     $180,000...................$ 33.94           21.80
     Electrical contracts under
     $180,000...................$ 31.75           21.73
-----------------------------------------------------------------
 ELEC0242-005 06/02/2024

DOUGLAS COUNTY

                                  Rates          Fringes

Electricians:...................$ 46.23           69.19%
-----------------------------------------------------------------
 ELEC0388-002 06/01/2023

ADAMS, CLARK (Colby, Freemont, Lynn, Mayville, Sherman,
Sherwood, Unity),  FOREST, JUNEAU, LANGLADE, LINCOLN, MARATHON,
MARINETTE (Beecher, Dunbar, Goodman & Pembine), MENOMINEE (Area
West of a line 6 miles West of the West boundary of Oconto
County), ONEIDA, PORTAGE, SHAWANO (Aniwa and Hutchins), VILAS
AND WOOD COUNTIES


                                  Rates          Fringes

Electricians:...................$ 38.74        26%+11.76
-----------------------------------------------------------------
 ELEC0430-002 06/01/2023

RACINE COUNTY (Except Burlington Township)

                                  Rates          Fringes

Electricians:...................$ 46.70           25.02
-----------------------------------------------------------------
 ELEC0494-005 05/26/2024

MILWAUKEE, OZAUKEE, WASHINGTON, AND WAUKESHA COUNTIES

                                  Rates          Fringes

Electricians:...................$ 49.48           27.34
-----------------------------------------------------------------
 ELEC0494-006 05/26/2024

CALUMET (Township of New Holstein), DODGE (East of Hwy 26
including Chester Township), FOND DU LAC, MANITOWOC
(Schleswig), and SHEBOYGAN COUNTIES


                                  Rates          Fringes

Electricians:...................$ 42.77           24.66
-----------------------------------------------------------------
 ELEC0494-013 05/26/2024

DODGE (East of Hwy 26 including Chester Twp, excluding Emmet
Twp), FOND DU LAC (Except Waupuin), MILWAUKEE, OZAUKEE,
MANITOWOC (Schleswig), WASHINGTON, AND WAUKESHA COUNTIES


                                  Rates          Fringes

Sound & Communications
```

```
     Installer..................$ 36.03           18.87
     Technician.................$ 36.03           18.87

  Installation, testing, maintenance, operation and servicing
  of all sound, intercom, telephone interconnect, closed
  circuit TV systems, radio systems, background music
  systems, language laboratories, electronic carillion,
  antenna distribution systems, clock and program systems and
  low-voltage systems such as visual nurse call, audio/visual
  nurse call systems, doctors entrance register systems.
  Includes all wire and cable carrying audio, visual, data,
  light and radio frequency signals. Includes the
  installation of conduit, wiremold, or raceways in existing
  structures that have been occupied for six months or more
  where required for the protection of the wire or cable, but
  does not mean a complete conduit or raceway system.  work
  covered does not include the installation of conduit,
  wiremold or any raceways in any new construction, or the
  installation of power supply outlets by means of which
  external electric power is supplied to any of the foregoing
  equipment or products

-----------------------------------------------------------------
 ELEC0577-003 05/26/2024

CALUMET (except Township of New Holstein), GREEN LAKE (N. part
including Townships of Berlin, St Marie, and Seneca), MARQUETTE
(N. part including Townships of Crystal Lake, Neshkoro, Newton,
and Springfield), OUTAGAMIE, WAUPACA, WAUSHARA, AND WINNEBAGO
COUNTIES


                                  Rates          Fringes

Electricians:...................$ 40.00           22.69
-----------------------------------------------------------------
 ELEC0890-003 06/01/2024

DODGE (Emmet Township only), GREEN, JEFFERSON, LAFAYETTE,
RACINE (Burlington Township), ROCK AND WALWORTH COUNTIES


                                  Rates          Fringes

Electricians:...................$ 43.65     25.95%+12.26
-----------------------------------------------------------------
 ELEC0953-001 06/02/2019

                                  Rates          Fringes

Line Construction:
     (1) Lineman................$ 47.53           21.43
     (2) Heavy Equipment
     Operator...................$ 42.78           19.80
     (3) Equipment Operator.....$ 38.02           18.40
     (4) Heavy Groundman Driver..$ 33.27           16.88
     (5) Light Groundman Driver..$ 30.89           16.11
     (6) Groundsman.............$ 26.14           14.60
-----------------------------------------------------------------
 ENGI0139-005 06/01/2024

                                  Rates          Fringes

Power Equipment Operator
     Group 1....................$ 46.37           28.80
```

```
      Group 2.....................$ 45.87            28.80
      Group 3.....................$ 44.77            28.80
      Group 4.....................$ 44.51            28.80
      Group 5.....................$ 44.22            28.80
      Group 6.....................$ 38.32            28.80

  HAZARDOUS WASTE PREMIUMS:
  EPA Level ""A"" protection - $3.00 per hour
  EPA Level ""B"" protection  - $2.00 per hour
  EPA Level ""C"" protection - $1.00 per hour

  POWER EQUIPMENT OPERATORS CLASSIFICATIONS

    GROUP 1: Cranes, tower cranes, and derricks with or without
    attachments with a lifting capacity of over 100 tons; or
    cranes, tower cranes, and derricks with boom, leads and/or
    jib lengths measuring 176 feet or longer.

    GROUP 2: Cranes, tower cranes and derricks with or  without
    attachments with a lifting capacity of 100 tons or less; or
    cranes, tower cranes, and derricks with boom, leads, and/or
    jibs lengths measuring 175 feet or under and Backhoes
    (excavators) weighing 130,000 lbs and over; caisson rigs;
    pile driver; dredge operator; dredge engineer; Boat Pilot.

    GROUP 3: Mechanic or welder - Heavy duty equipment; cranes
    with a lifting capacity of 25 tons or under; concrete
    breaker (manual or remote); vibratory/sonic concrete
    breaker; concrete laser screed; concrete slipform paver;
    concrete batch plant operator; concrete pvt. spreader -
    heavy duty (rubber tired); concrete spreader & distributor;
    automatic subgrader (concrete); concrete grinder & planing
    machine; concrete slipform curb & gutter machine; slipform
    concrete placer; tube finisher; hydro blaster (10,000 psi &
    over); bridge paver; concrete conveyor system; concrete
    pump; Rotec type Conveyor; stabilizing mixer
    (self-propelled); shoulder widener; asphalt plant engineer;
    bituminious paver; bump cutter & grooving machine; milling
    machine; screed (bituminous paver); asphalt heater, planer
    & scarifier; Backhoes (excavators) weighing under 130,000
    lbs; grader or motor patrol; tractor (scraper, dozer,
    pusher, loader); scraper - rubber tired (single or twin
    engine); endloader; hydraulic backhoe (tractor type);
    trenching machine; skid rigs; tractor, side boom (heavy);
    drilling or boring machine (mechanical heavy); roller over
    5 tons; percussion or rotary drilling machine; air track;
    blaster; loading machine (conveyor); tugger; boatmen;
    winches & A-frames; post driver; material hoist.

    GROUP 4: Greaser, roller steel (5 tons or less); roller
    (pneumatic tired) - self propelled; tractor (mounted or
    towed compactors & light equipment); shouldering machine;
    self- propelled chip spreader; concrete spreader; finishing
    machine; mechanical float; curing machine; power subgrader;
    joint sawer (multiple blade) belting machine; burlap
    machine; texturing machine; tractor endloader (rubber
    tired) - light; jeep digger; forklift; mulcher; launch
    operator; fireman, environmental burner

    GROUP 5: Air compressor; power pack; vibrator hammer and
    extractor; heavy equipment, leadman; tank car heaters;
    stump chipper; curb machine operator; Concrete
    proportioning plants; generators; mudjack operator; rock
    breaker; crusher or screening plant; screed (milling
    machine); automatic belt conveyor and surge bin; pug mill
```

operator; Oiler, pump (over 3 inches); Drilling Machine Tender, day light machine

GROUP 6: Off-road material hauler with or without ejector.

IRON0008-002 06/02/2024

BROWN, CALUMET, DOOR, FOND DU LAC, KEWAUNEE, MANITOWOC, MARINETTE, OCONTO, OUTAGAMI, SHAWANO, SHEBOYGAN, AND WINNEBAGO COUNTIES:

	Rates	Fringes
IRONWORKER	$ 43.02	32.32

Paid Holidays: New Year's Day, Memorial Day, July 4th, Labor Day, Thanksgiving Day & Christmas Day.

IRON0008-003 06/02/2024

KENOSHA, MILWAUKEE, OZAUKEE, RACINE, WALWORTH (N.E. 2/3), WASHINGTON, AND WAUKESHA COUNTIES

	Rates	Fringes
IRONWORKER	$ 44.79	32.32

Paid Holidays: New Year's Day, Memorial Day, July 4th, Labor Day, Thanksgiving Day & Christmas Day.

IRON0383-001 06/02/2024

ADAMS, COLUMBIA, CRAWFORD, DANE, DODGE, FLORENCE, FOREST, GRANT, GREENE, (Excluding S.E. tip), GREEN LAKE, IOWA, JEFFERSON, JUNEAU, LA CROSSE, LAFAYETTE, LANGLADE, MARATHON, MARQUETTE, MENOMINEE, MONROE, PORTAGE, RICHLAND, ROCK (Northern area, vicinity of Edgerton and Milton), SAUK, VERNON, WAUPACA, WAUSHARA, AND WOOD COUNTIES

	Rates	Fringes
IRONWORKER	$ 42.00	31.93

---

* IRON0498-005 06/01/2024

GREEN (S.E. 1/3), ROCK (South of Edgerton and Milton), and WALWORTH (S.W. 1/3) COUNTIES:

	Rates	Fringes
IRONWORKER	$ 46.59	48.80

---

* IRON0512-008 04/28/2024

BARRON, BUFFALO, CHIPPEWA, CLARK, DUNN, EAU CLAIRE, JACKSON, PEPIN, PIERCE, POLK, RUSK, ST CROIX, TAYLOR, AND TREMPEALEAU COUNTIES

	Rates	Fringes
IRONWORKER	$ 44.85	35.22

---

* IRON0512-021 04/28/2024

ASHLAND, BAYFIELD, BURNETT, DOUGLAS, IRON, LINCOLN, ONEIDA, PRICE, SAWYER, VILAS AND WASHBURN COUNTIES

	Rates	Fringes
IRONWORKER	$ 41.19	34.68

LABO0113-002 06/03/2024

MILWAUKEE AND WAUKESHA COUNTIES

	Rates	Fringes
LABORER		
Group 1	$ 35.61	25.01
Group 2	$ 35.76	25.01
Group 3	$ 35.96	25.01
Group 4	$ 36.11	25.01
Group 5	$ 36.26	25.01
Group 6	$ 32.10	25.01

LABORERS CLASSIFICATIONS

GROUP 1: General Laborer; Tree Trimmer; Conduit Layer; Demolition and Wrecking Laborer; Guard Rail, Fence, and Bridge Builder; Landscaper; Multiplate Culvert Assembler; Stone Handler; Bituminous Worker (Shoveler, Loader, and Utility Man); Batch Truck Dumper or Cement Handler; Bituminous Worker (Dumper, Ironer, Smoother, and Tamper); Concrete Handler

GROUP 2: Air Tool Operator; Joint Sawer and Filler (Pavement); Vibrator or Tamper Operator (Mechanical Hand Operated); Chain Saw Operator; Demolition Burning Torch Laborer

GROUP 3: Bituminous Worker (Raker and Luteman); Formsetter (Curb, Sidewalk, and Pavement); Strike Off Man

GROUP 4: Line and Grade Specialist

GROUP 5: Blaster and Powderman

GROUP 6: Flagperson; traffic control person

LABO0113-003 06/03/2024

OZAUKEE AND WASHINGTON COUNTIES

	Rates	Fringes
LABORER		
Group 1	$ 34.86	25.01
Group 2	$ 34.96	25.01
Group 3	$ 35.01	25.01
Group 4	$ 35.21	25.01

Group 5.....$ 35.06 25.01
Group 6.....$ 31.95 25.01

LABORERS CLASSIFICATIONS

GROUP 1: General Laborer; Tree Trimmer; Conduit Layer; Demolition and Wrecking Laborer; Guard Rail, Fence, and Bridge Builder; Landscaper; Multiplate Culvert Assembler; Stone Handler; Bituminous Worker (Shoveler, Loader, and Utility Man); Batch Truck Dumper or Cement Handler; Bituminous Worker (Dumper, Ironer, Smoother, and Tamper); Concrete Handler

GROUP 2: Air Tool Operator; Joint Sawer and Filler (Pavement); Vibrator or Tamper Operator (Mechanical Hand Operated);

GROUP 3: Bituminous Worker (Raker and Luteman); Formsetter (Curb, Sidewalk, and Pavement); Strike Off Man

GROUP 4: Line and Grade Specialist

GROUP 5: Blaster; powderman

GROUP 6: Flagperson and Traffic Control Person

LABO0113-011 06/03/2024

KENOSHA AND RACINE COUNTIES

	Rates	Fringes
LABORER		
Group 1	$ 34.67	25.01
Group 2	$ 34.82	25.01
Group 3	$ 35.02	25.01
Group 4	$ 34.99	25.01
Group 5	$ 35.32	25.01
Group 6	$ 31.81	25.01

LABORERS CLASSIFICATIONS:

GROUP 1: General laborer; Tree Trimmer; Conduit Layer; Demolition and Wrecking Laborer; Guard Rail, Fence, and Bridge Builder; Landscaper; Multiplate Culvert Assembler; Stone Handler; Bituminous Worker (Shoveler, Loader, and Utility Man); Batch Truck Dumper or Cement Handler; Bituminous worker (Dumper, Ironer, Smoother, and Tamper); Concrete Handler

GROUP 2: Air Tool Operator; Joint Sawer and Filler (Pavement); Vibrator or Tamper Operator (Mechanical Hand Operated); Chain Saw Operator; Demolition Burning Torch Laborer

GROUP 3: Bituminous Worker (Raker and Luteman); Formsetter (Curb, Sidewalk, and Pavement); Strike Off Man

GROUP 4: Line and Grade Specialist

GROUP 5: Blaster and Powderman

GROUP 6: Flagman; traffic control person

LABO0140-002 06/03/2024

ADAMS, ASHLAND, BARRON, BAYFIELD, BROWN, BUFFALO, BURNETT, CALUMET, CHIPPEWA, CLARK, COLUMBIA, CRAWFORD, DODGE, DOOR, DOUGLAS, DUNN, EAU CLAIRE, FLORENCE, FOND DU LAC, FOREST, GRANT, GREEN, GREEN LAKE, IRON, JACKSON, JUNEAU, IOWA, JEFFERSON, KEWAUNEE, LA CROSSE, LAFAYETTE, LANGLADE, LINCOLN, MANITOWOC, MARATHON, MARINETTE, MARQUETTE, MENOMINEE, MONROE, OCONTO, ONEIDA, OUTAGAMIE, PEPIN, PIERCE, POLK, PORTAGE, PRICE, RICHLAND, ROCK, RUSK, SAUK, SAWYER, SHAWANO, SHEBOYGAN, ST. CROIX, TAYLOR, TREMPEALEAU, VERNON, VILLAS, WALWORTH, WASHBURN, WAUPACA, WAUSHARA, WINNEBAGO, AND WOOD COUNTIES

	Rates	Fringes
LABORER		
Group 1	$ 40.57	19.45
Group 2	$ 40.67	19.45
Group 3	$ 40.72	19.45
Group 4	$ 40.92	19.45
Group 5	$ 40.77	19.45
Group 6	$ 37.20	19.45

LABORER CLASSIFICATIONS

GROUP 1: General Laborer; Tree Trimmer; Conduit Layer; Demolition and Wrecking Laborer; Guard Rail, Fence, and Bridge Builder; Landscaper; Multiplate Culvert Assembler; Stone Handler; Bitminous Worker (Shoveler, Loader, and Utility Man); Batch Truck Dumper or Cement Handler; Bituminous Worker (Dumper, Ironer, Smoother and Tamper); Concrete Handler

GROUP 2: Air Tool Operator; Joint Sawer and Filler (Pavement); Vibrator or Tamper Operator (Mechanical Hand Operated); Chain Saw Operator, Demolition Burning Torch Laborer

GROUP 3: Bituminous Worker (Raker and Luteman); Formsetter (Curb, Sidewalk and Pavement); Strike Off Man

GROUP 4: Line and Grade Secialist

GROUP 5: Blaster; powderman

GROUP 6: Flagperson; Traffic Control

LABO0464-003 06/03/2024

DANE COUNTY

	Rates	Fringes
LABORER		
Group 1	$ 40.85	19.45
Group 2	$ 40.95	19.45
Group 3	$ 41.00	19.45
Group 4	$ 41.20	19.45
Group 5	$ 41.05	19.45
Group 6	$ 37.20	19.45

LABORERS CLASSIFICATIONS:

GROUP 1: General Laborer; Tree Trimmer; Conduit Layer; Demolition and Wrecking Laborer; Guard Rail, Fence, and Bridge Builder; Landscaper; Multiplate Culvert Assembler; Stone Handler; Bituminous Worker (Shoveler, Loader, and Utility Man); Batch Truck Dumper or Cement Handler; Bituminious Worker (Dumper, Ironer, Smoother, and Tamper); Concrete Handler

GROUP 2: Air Tool Operator; Joint Sawer and Filler (Pavement); Vibrator or Tamper Operator (Mechanical Hand Operated); Chain Saw Operator; Demolition Burning Torch Laborer

GROUP 3: Bituminous Worker (Raker and Luteman); Formsetter (Curb, Sidewalk, and Pavement); Strike Off Man

GROUP 4: Line and Grade Specialist

GROUP 5: Blaster; Powderman

GROUP 6: Flagperson and Traffic Control Person

PAIN0106-008 05/06/2024

ASHLAND, BAYFIELD, BURNETT, AND DOUGLAS COUNTIES

	Rates	Fringes
Painters:		
New:		
Brush, Roller	$ 36.16	26.27
Spray, Sandblast, Steel	$ 36.76	26.27
Repaint:		
Brush, Roller	$ 34.66	26.27
Spray, Sandblast, Steel	$ 35.26	26.27

PAIN0108-002 06/01/2024

RACINE COUNTY

	Rates	Fringes
Painters:		
Brush, Roller	$ 42.04	22.95
Spray & Sandblast	$ 43.04	22.95

PAIN0259-002 05/01/2008

BARRON, CHIPPEWA, DUNN, EAU CLAIRE, PEPIN, PIERCE, POLK, RUSK, SAWYER, ST. CROIX, AND WASHBURN COUNTIES

	Rates	Fringes
PAINTER	$ 24.11	12.15

PAIN0259-004 05/01/2015

BUFFALO, CRAWFORD, JACKSON, LA CROSSE, MONROE, TREMPEALEAU, AND VERNON COUNTIES

	Rates	Fringes

PAINTER.....$ 22.03 12.45

PAIN0781-002 06/01/2024

JEFFERSON, MILWAUKEE, OZAUKEE, WASHINGTON, AND WAUKESHA COUNTIES

	Rates	Fringes
Painters:		
Bridge	$ 41.39	24.92
Brush	$ 40.64	24.92
Spray & Sandblast	$ 41.39	24.92

PAIN0802-002 06/01/2024

COLUMBIA, DANE, DODGE, GRANT, GREEN, IOWA, LAFAYETTE, RICHLAND, ROCK, AND SAUK COUNTIES

	Rates	Fringes
PAINTER		
Brush	$ 36.35	20.87

PREMIUM PAY:
Structural Steel, Spray, Bridges = $1.00 additional per hour.

PAIN0802-003 06/01/2024

ADAMS, BROWN, CALUMET, CLARK, DOOR, FOND DU LAC, FOREST, GREEN LAKE, IRON, JUNEAU, KEWAUNEE, LANGLADE, LINCOLN, MANITOWOC, MARATHON, MARINETTE, MARQUETTE, MENOMINEE, OCONTO, ONEIDA, OUTAGAMIE, PORTAGE, PRICE, SHAWANO, SHEBOYGAN, TAYLOR, VILAS, WAUSHARA, WAUPACA, WINNEBAGO, AND WOOD COUNTIES

	Rates	Fringes
PAINTER	$ 36.35	20.87

PAIN0934-001 06/01/2024

KENOSHA AND WALWORTH COUNTIES

	Rates	Fringes
Painters:		
Brush	$ 38.67	26.32
Spray	$ 39.67	26.32
Structural Steel	$ 38.82	26.32

PAIN1011-002 06/02/2024

FLORENCE COUNTY

	Rates	Fringes
Painters:	$ 29.95	15.89

PLAS0599-002 06/01/2023

	Rates	Fringes

CEMENT MASON/CONCRETE FINISHER

Area A	$ 45.17	27.27
Area B	$ 39.97	25.02
Area C	$ 40.40	25.25
Area D	$ 41.16	24.49
Area E	$ 40.50	25.14
Area F	$ 36.98	28.67

AREA DESCRIPTIONS

AREA A: ASHLAND, BURNETT, BAYFIELD, DOUGLAS, IRON, PRICE, SAWYER, AND WASHBURN COUNTIES

AREA B: ADAMS, BARRON, BROWN, CALUMET, CHIPPEWA, CLARK, COLUMBIA, DODGE, DOOR, DUNN, FLORENCE, FOND DU LAC, FOREST, GREEN LAKE, JEFFERSON, KEWAUNEE, LANGLADE, LINCOLN, MANITOWOC, MARATHON, MARINETTE, MARQUETTE, MENOMINEE, OCONTO, ONEIDA, OUTAGAMIE, POLK, PORTAGE, RUSK, ST. CROIX, SAUK, SHAWANO, SHEBOYGAN, TAYLOR, VILAS, WALWORTH, WAUPACA, WAUSHARA, WINNEBAGO, AND WOOD COUNTIES

AREA C: BUFFALO, CRAWFORD, EAU CLAIRE, JACKSON, JUNEAU, LA CROSSE, MONROE, PEPIN, PIERCE, RICHLAND, TREMPEALEAU, AND VERNON COUNTIES

AREA D: MILWAUKEE, OZAUKEE, WASHINGTON, AND WAUKESHA COUNTIES

AREA E: DANE, GRANT, GREEN, IOWA, LAFAYETTE, AND ROCK COUNTIES

AREA F: KENOSHA AND RACINE COUNTIES

TEAM0039-001 06/01/2024

	Rates	Fringes
TRUCK DRIVER		
1 & 2 Axles	$ 37.57	27.41
3 or more Axles; Euclids, Dumptor & Articulated, Truck Mechanic	$ 37.72	27.41

WELDERS - Receive rate prescribed for craft performing operation to which welding is incidental.

==========

Note: Executive Order (EO) 13706, Establishing Paid Sick Leave for Federal Contractors applies to all contracts subject to the Davis-Bacon Act for which the contract is awarded (and any solicitation was issued) on or after January 1, 2017. If this contract is covered by the EO, the contractor must provide employees with 1 hour of paid sick leave for every 30 hours they work, up to 56 hours of paid sick leave each year. Employees must be permitted to use paid sick leave for their own illness, injury or other health-related needs, including preventive care; to assist a family member (or person who is like family to the employee) who is ill, injured, or has other health-related needs, including preventive care; or for reasons resulting from, or to assist a family member (or person who is like family to the employee) who is a victim of, domestic violence, sexual assault, or stalking. Additional information

on contractor requirements and worker protections under the EO is available at https://www.dol.gov/agencies/whd/government-contracts.

Unlisted classifications needed for work not included within the scope of the classifications listed may be added after award only as provided in the labor standards contract clauses (29CFR 5.5 (a) (1) (iii)).

The body of each wage determination lists the classification and wage rates that have been found to be prevailing for the cited type(s) of construction in the area covered by the wage determination. The classifications are listed in alphabetical order of ""identifiers"" that indicate whether the particular rate is a union rate (current union negotiated rate for local), a survey rate (weighted average rate) or a union average rate (weighted union average rate).

Union Rate Identifiers

A four letter classification abbreviation identifier enclosed in dotted lines beginning with characters other than ""SU"" or ""UAVG"" denotes that the union classification and rate were prevailing for that classification in the survey. Example: PLUM0198-005 07/01/2014. PLUM is an abbreviation identifier of the union which prevailed in the survey for this classification, which in this example would be Plumbers. 0198 indicates the local union number or district council number where applicable, i.e., Plumbers Local 0198. The next number, 005 in the example, is an internal number used in processing the wage determination. 07/01/2014 is the effective date of the most current negotiated rate, which in this example is July 1, 2014.

Union prevailing wage rates are updated to reflect all rate changes in the collective bargaining agreement (CBA) governing this classification and rate.

Survey Rate Identifiers

Classifications listed under the ""SU"" identifier indicate that no one rate prevailed for this classification in the survey and the published rate is derived by computing a weighted average rate based on all the rates reported in the survey for that classification. As this weighted average rate includes all rates reported in the survey, it may include both union and non-union rates. Example: SULA2012-007 5/13/2014. SU indicates the rates are survey rates based on a weighted average calculation of rates and are not majority rates. LA indicates the State of Louisiana. 2012 is the year of survey on which these classifications and rates are based. The next number, 007 in the example, is an internal number used in producing the wage determination. 5/13/2014 indicates the survey completion date for the classifications and rates under that identifier.

Survey wage rates are not updated and remain in effect until a new survey is conducted.

Union Average Rate Identifiers

Classification(s) listed under the UAVG identifier indicate

that no single majority rate prevailed for those classifications; however, 100% of the data reported for the classifications was union data. EXAMPLE: UAVG-OH-0010 08/29/2014. UAVG indicates that the rate is a weighted union average rate. OH indicates the state. The next number, 0010 in the example, is an internal number used in producing the wage determination. 08/29/2014 indicates the survey completion date for the classifications and rates under that identifier.

A UAVG rate will be updated once a year, usually in January of each year, to reflect a weighted average of the current negotiated/CBA rate of the union locals from which the rate is based.

State Adopted Rate Identifiers

Classifications listed under the ""SA"" identifier indicate that the prevailing wage rate set by a state (or local) government was adopted under 29 C.F.R ⁄1.3(g)-(h). Example: SAME2023-007 01/03/2024. SA reflects that the rates are state adopted. ME refers to the State of Maine. 2023 is the year during which the state completed the survey on which the listed classifications and rates are based. The next number, 007 in the example, is an internal number used in producing the wage determination. 01/03/2024 reflects the date on which the classifications and rates under the ?SA? identifier took effect under state law in the state from which the rates were adopted.

WAGE DETERMINATION APPEALS PROCESS

1.) Has there been an initial decision in the matter? This can be:

* an existing published wage determination
* a survey underlying a wage determination
* a Wage and Hour Division letter setting forth a position on a wage determination matter
* a conformance (additional classification and rate) ruling

On survey related matters, initial contact, including requests for summaries of surveys, should be with the Wage and Hour National Office because National Office has responsibility for the Davis-Bacon survey program. If the response from this initial contact is not satisfactory, then the process described in 2.) and 3.) should be followed.

With regard to any other matter not yet ripe for the formal process described here, initial contact should be with the Branch of Construction Wage Determinations. Write to:

Branch of Construction Wage Determinations
Wage and Hour Division
U.S. Department of Labor
200 Constitution Avenue, N.W.
Washington, DC 20210

2.) If the answer to the question in 1.) is yes, then an interested party (those affected by the action) can request review and reconsideration from the Wage and Hour Administrator (See 29 CFR Part 1.8 and 29 CFR Part 7). Write to:

Wage and Hour Administrator
U.S. Department of Labor

200 Constitution Avenue, N.W.
Washington, DC 20210

The request should be accompanied by a full statement of the interested party's position and by any information (wage payment data, project description, area practice material, etc.) that the requestor considers relevant to the issue.

3.) If the decision of the Administrator is not favorable, an interested party may appeal directly to the Administrative Review Board (formerly the Wage Appeals Board). Write to:

Administrative Review Board
U.S. Department of Labor
200 Constitution Avenue, N.W.
Washington, DC 20210

4.) All decisions by the Administrative Review Board are final.

==========

END OF GENERAL DECISION"

"General Decision Number: WI20240008 11/08/2024

Superseded General Decision Number: WI20230008

State: Wisconsin

Construction Types: Heavy (Sewer and Water Line and Tunnel)

Counties: Wisconsin Statewide.

TUNNEL, SEWER & WATER LINE CONSTRUCTION PROJECTS

Note: Contracts subject to the Davis-Bacon Act are generally required to pay at least the applicable minimum wage rate required under Executive Order 14026 or Executive Order 13658. Please note that these Executive Orders apply to covered contracts entered into by the federal government that are subject to the Davis-Bacon Act itself, but do not apply to contracts subject only to the Davis-Bacon Related Acts, including those set forth at 29 CFR 5.1(a)(1).

If the contract is entered into on or after January 30, 2022, or the contract is renewed or extended (e.g., an option is exercised) on or after January 30, 2022:	. Executive Order 14026 generally applies to the contract. . The contractor must pay all covered workers at least $17.20 per hour (or the applicable wage rate listed on this wage determination, if it is higher) for all hours spent performing on the contract in 2024.
If the contract was awarded on or between January 1, 2015 and January 29, 2022, and the contract is not renewed or extended on or after January 30, 2022:	. Executive Order 13658 generally applies to the contract. . The contractor must pay all covered workers at least $12.90 per hour (or the applicable wage rate listed on this wage determination, if it is higher) for all hours spent performing on that contract in 2024.

The applicable Executive Order minimum wage rate will be adjusted annually. If this contract is covered by one of the Executive Orders and a classification considered necessary for performance of work on the contract does not appear on this wage determination, the contractor must still submit a conformance request.

Additional information on contractor requirements and worker protections under the Executive Orders is available at http://www.dol.gov/whd/govcontracts.

Modification Number	Publication Date
0	01/05/2024
1	01/19/2024

2	02/02/2024
3	02/16/2024
4	03/15/2024
5	05/24/2024
6	06/14/2024
7	06/21/2024
8	06/28/2024
9	07/05/2024
10	07/26/2024
11	08/23/2024
12	09/06/2024
13	11/08/2024

* BRWI0001-002 06/03/2024

CRAWFORD, JACKSON, JUNEAU, LA CROSSE, MONROE, TREMPEALEAU, AND VERNON COUNTIES

	Rates	Fringes
BRICKLAYER	$ 38.86	27.00

---

* BRWI0002-002 06/01/2024

ASHLAND, BAYFIELD, DOUGLAS, AND IRON COUNTIES

	Rates	Fringes
BRICKLAYER	$ 46.60	27.01

---

* BRWI0002-005 06/01/2024

ADAMS, ASHLAND, BARRON, BROWN, BURNETT, CALUMET, CHIPPEWA, CLARK, COLUMBIA, DODGE, DOOR, DUNN, FLORENCE, FOND DU LAC, FOREST, GREEN LAKE, IRON, JEFFERSON, KEWAUNEE, LANGLADE, LINCOLN, MANITOWOC, MARATHON, MARINETTE, MARQUETTE, MENOMINEE, OCONTO, ONEIDA, OUTAGAMIE, POLK, PORTAGE, RUSK, ST CROIX, SAUK, SHAWANO, SHEBOYGAN, TAYLOR, VILAS, WALWORTH, WAUPACA, WAUSHARA, WINNEBAGO, AND WOOD COUNTIES

	Rates	Fringes
CEMENT MASON/CONCRETE FINISHER	$ 41.62	27.03

---

* BRWI0003-002 06/01/2024

BROWN, DOOR, FLORENCE, KEWAUNEE, MARINETTE, AND OCONTO COUNTIES

	Rates	Fringes
BRICKLAYER	$ 38.45	27.41

---

* BRWI0004-002 06/01/2024

KENOSHA, RACINE, AND WALWORTH COUNTIES

	Rates	Fringes
BRICKLAYER	$ 43.21	27.90

---

* BRWI0006-002 06/01/2024

ADAMS, CLARK, FOREST, LANGLADE, LINCOLN, MARATHON, MENOMINEE,

ONEIDA, PORTAGE, PRICE, TAYLOR, VILAS AND WOOD COUNTIES

	Rates	Fringes
BRICKLAYER	$ 38.33	27.53

---

* BRWI0007-002 06/01/2024

GREEN, LAFAYETTE, AND ROCK COUNTIES

	Rates	Fringes
BRICKLAYER	$ 39.34	28.15

---

* BRWI0008-002 06/01/2024

MILWAUKEE, OZAUKEE, WASHINGTON, AND WAUKESHA COUNTIES

	Rates	Fringes
BRICKLAYER	$ 46.16	27.33

---

* BRWI0009-001 06/01/2024

GREEN LAKE, MARQUETTE, OUTAGAMIE, SHAWANO, WAUPACA, WASHARA, AND WINNEBAGO COUNTIES

	Rates	Fringes
BRICKLAYER	$ 38.45	27.41

---

* BRWI0011-002 06/01/2024

CALUMET, FOND DU LAC, MANITOWOC, AND SHEBOYGAN COUNTIES

	Rates	Fringes
BRICKLAYER	$ 38.45	27.41

---

* BRWI0013-002 06/01/2024

DANE, GRANT, IOWA, AND RICHLAND COUNTIES

	Rates	Fringes
BRICKLAYER	$ 40.17	27.32

---

* BRWI0019-002 06/01/2024

BARRON, BUFFALO, BURNETT, CHIPPEWA, DUNN, EAU CLAIRE, PEPIN, PIERCE, POLK, RUSK, ST. CROIX, SAWYER AND WASHBURN COUNTIES

	Rates	Fringes
BRICKLAYER	$ 38.18	27.68

---

* BRWI0021-002 06/01/2024

DODGE AND JEFFERSON COUNTIES

	Rates	Fringes

BRICKLAYER.....$ 39.10 28.37

---

* BRWI0034-002 06/01/2024

COLUMBIA AND SAUK COUNTIES

	Rates	Fringes
BRICKLAYER.....	$ 40.17	27.32

CARP0068-011 05/02/2022

BURNETT (W. of Hwy 48), PIERCE (W. of Hwy 29), POLK (W. of Hwys 35, 48 & 65), AND ST. CROIX (W. of Hwy 65) COUNTIES

	Rates	Fringes
Carpenter & Piledrivermen.....	$ 41.19	27.05

CARP0231-002 06/05/2023

KENOSHA, MILWAUKEE, OZAUKEE, RACINE, WASHINGTON, AND WAUKESHA COUNTIES

	Rates	Fringes
CARPENTER.....	$ 41.91	29.72

CARP0310-002 06/03/2024

ADAMS, ASHLAND, BAYFIELD (Eastern 2/3), FOREST, IRON, JUNEAU, LANGLADE, LINCOLN, MARATHON, ONEIDA, PORTAGE, PRICE, SHAWANO (Western Portion of the County), TAYLOR, VILAS, AND WOOD COUNTIES

	Rates	Fringes
CARPENTER.....	$ 42.44	28.44
Piledriver.....	$ 42.44	28.44

CARP0314-001 06/05/2023

COLUMBIA, DANE, DODGE, GRANT, GREEN, IOWA, JEFFERSON, LAFAYETTE, RICHLAND, ROCK, SAUK, AND WALWORTH COUNTIES

	Rates	Fringes
CARPENTER.....	$ 38.86	27.06
Piledriver.....	$ 39.43	27.02

CARP0361-004 05/01/2018

BAYFIELD (West of Hwy 63) AND DOUGLAS COUNTIES

	Rates	Fringes
CARPENTER.....	$ 36.15	20.43

CARP0731-002 06/03/2024

CALUMET (Eastern Portion of the County), FOND DU LAC (Eastern

Portion of the County), MANITOWOC, AND SHEBOYGAN COUNTIES

	Rates	Fringes
CARPENTER	$ 42.44	28.44
Piledriver	$ 42.44	28.44

CARP0955-002 06/03/2024

CALUMET (Western Portion of the County), FOND DU LAC (Western Portion of the County), GREEN LAKE, MARQUETTE, OUTAGAMIE, WAUPACA, WAUSHARA, AND WINNEBAGO

	Rates	Fringes
CARPENTER	$ 42.44	28.44
PILEDRIVER	$ 42.44	28.44

CARP1056-002 06/01/2024

ADAMS, ASHLAND, BARRON, BAYFIELD , BROWN, BUFFALO, BURNETT ,CALUMET, CHIPPEWA, CLARK, COLUMBIA, CRAWFORD, DANE, DODGE, DOOR, DUNN, EAU CLAIRE, FLORENCE, FOND DU LAC, FOREST, GRANT, GREEN, GREEN LAKE, IOWA, IRON, JACKSON, JEFFERSON, JUNEAU, KEWAUNEE, LA CROSSE, LAFAYETTE, LANGLADE, LINCOLN, MANITOWOC, MARATHON, MARINETTE, MARQUETTE, MENOMINEE, MONROE, OCONTO, ONEIDA, OUTAGAMIE, PEPIN, PIERCE (E. of Hwy. 29 & 65), POLK (E. of Hwy. 35, 48 & 65), PORTAGE, PRICE, RICHLAND, ROCK, RUSK, SAUK, SAWYER, SHAWANO, SHEBOYGAN, ST. CROIX (E. of Hwy. 65), TAYLOR, TREMPEALEAU, VERNON, VILAS, WALWORTH, WASHBURN, WAUPACA, WAUSHARA, WINNEBAGO, AND WOOD COUNTIES

	Rates	Fringes
MILLWRIGHT	$ 42.00	28.85

CARP1074-002 06/03/2024

BARRON, BURNETT, CHIPPEWA, CLARK, DUNN, EAU CLAIRE, PEPIN, PIERCE (E. of Hwy. 29 & 65), POLK (E. of Hwy. 35, 48 & 65), RUSK, SAWYER, ST. CROIX (E. of Hwy. 65), AND WASHBURN

	Rates	Fringes
CARPENTER	$ 42.44	28.44
PILEDRIVER	$ 42.44	28.44

CARP1143-002 06/03/2024

BUFFALO, CRAWFORD, JACKSON, LA CROSSE, MONROE, TREMPEALEAU AND VERNON COUNTIES

	Rates	Fringes
CARPENTER	$ 42.44	28.44
PILEDRIVER	$ 42.44	28.44

CARP1146-002 06/03/2024

BROWN, DOOR, FLORENCE, KEWAUNEE, MARINETTE, MENOMINEE, OCONTO,

AND SHAWANO (Western Portion of the County) COUNTIES

	Rates	Fringes
CARPENTER	$ 42.44	28.44
PILEDRIVER	$ 42.44	28.44

CARP2337-009 06/03/2024

KENOSHA, MILWAUKEE, OZAUKEE, RACINE, WASHINGTON, AND WAUKESHA

	Rates	Fringes
PILEDRIVERMAN	$ 42.21	34.07

CARP2337-010 06/03/2024

KENOSHA, MILWAUKEE, OZAUKEE, RACINE, WASHINGTON, AND WAUKESHA

	Rates	Fringes
MILLWRIGHT	$ 42.31	32.21

ELEC0014-002 05/26/2024

ASHLAND, BARRON, BAYFIELD, BUFFALO, BURNETT, CHIPPEWA, CLARK (except Maryville, Colby, Unity, Sherman, Fremont, Lynn & Sherwood), CRAWFORD, DUNN, EAU CLAIRE, GRANT, IRON, JACKSON, LA CROSSE, MONROE, PEPIN, PIERCE, POLK, PRICE, RICHLAND, RUSK, ST CROIX, SAWYER, TAYLOR, TREMPEALEAU, VERNON, AND WASHBURN COUNTIES

	Rates	Fringes
Electricians:	$ 42.73	23.99

ELEC0127-002 06/01/2023

KENOSHA COUNTY

	Rates	Fringes
Electricians:	$ 46.05	30%+13.15

---

* ELEC0158-002 06/01/2024

BROWN, DOOR, KEWAUNEE, MANITOWOC (except Schleswig), MARINETTE(Wausuakee and area South thereof), OCONTO, MENOMINEE (East of a ine 6 miles West of the West boundary of Oconto County), SHAWANO (Except Area North of Townships of Aniwa and Hutchins) COUNTIES

	Rates	Fringes
ELECTRICIAN	$ 40.25	29.75%+11.17

ELEC0159-003 05/26/2024

COLUMBIA, DANE, DODGE (Area West of Hwy 26, except Chester and Emmet Townships), GREEN, LAKE (except Townships of Berlin, Seneca, and St. Marie), IOWA, MARQUETTE (except Townships of Neshkoka, Crystal Lake, Newton, and Springfield), and SAUK

COUNTIES

	Rates	Fringes
ELECTRICIAN.....	$ 48.55	25.91

ELEC0219-004 06/01/2019

FLORENCE COUNTY (Townships of Aurora, Commonwealth, Fern, Florence and Homestead) AND MARINETTE COUNTY (Township of Niagara)

	Rates	Fringes
Electricians:		
Electrical contracts over $180,000.....	$ 33.94	21.80
Electrical contracts under $180,000.....	$ 31.75	21.73

ELEC0242-005 06/02/2024

DOUGLAS COUNTY

	Rates	Fringes
Electricians:.....	$ 46.23	69.19%

ELEC0388-002 06/01/2023

ADAMS, CLARK (Colby, Freemont, Lynn, Mayville, Sherman, Sherwood, Unity), FOREST, JUNEAU, LANGLADE, LINCOLN, MARATHON, MARINETTE (Beecher, Dunbar, Goodman & Pembine), MENOMINEE (Area West of a line 6 miles West of the West boundary of Oconto County), ONEIDA, PORTAGE, SHAWANO (Aniwa and Hutchins), VILAS AND WOOD COUNTIES

	Rates	Fringes
Electricians:.....	$ 38.74	26%+11.76

ELEC0430-002 06/01/2023

RACINE COUNTY (Except Burlington Township)

	Rates	Fringes
Electricians:.....	$ 46.70	25.02

ELEC0494-005 05/26/2024

MILWAUKEE, OZAUKEE, WASHINGTON, AND WAUKESHA COUNTIES

	Rates	Fringes
Electricians:.....	$ 49.48	27.34

ELEC0494-006 05/26/2024

CALUMET (Township of New Holstein), DODGE (East of Hwy 26 including Chester Township), FOND DU LAC, MANITOWOC (Schleswig), and SHEBOYGAN COUNTIES

	Rates	Fringes
Electricians:.....	$ 42.77	24.66

ELEC0577-003 05/26/2024

CALUMET (except Township of New Holstein), GREEN LAKE (N. part including Townships of Berlin, St Marie, and Seneca), MARQUETTE (N. part including Townships of Crystal Lake, Neshkoro, Newton, and Springfield), OUTAGAMIE, WAUPACA, WAUSHARA, AND WINNEBAGO COUNTIES

	Rates	Fringes
Electricians:.....	$ 40.00	22.69

ELEC0890-003 06/01/2024

DODGE (Emmet Township only), GREEN, JEFFERSON, LAFAYETTE, RACINE (Burlington Township), ROCK AND WALWORTH COUNTIES

	Rates	Fringes
Electricians:.....	$ 43.65	25.95%+12.26

ENGI0139-003 06/03/2024

REMAINING COUNTIES

	Rates	Fringes
Power Equipment Operator		
Group 1.....	$ 48.78	27.14
Group 2.....	$ 47.53	27.14
Group 3.....	$ 44.23	27.14
Group 4.....	$ 43.70	27.14
Group 5.....	$ 41.63	27.14
Group 6.....	$ 40.10	27.14

HAZARDOUS WASTE PREMIUMS:
EPA Level ""A"" Protection: $3.00 per hour
EPA Level ""B"" Protection: $2.00 per hour
EPA Level ""C"" Protection: $1.00 per hour

POWER EQUIPMENT OPERATORS CLASSIFICATIONS

GROUP 1: Cranes, Tower Cranes and Derricks with or without attachments with a lifting capacity of over 100 tons; Cranes, Tower Cranes, and Derricks with boom, leads and/or jib lengths 176 ft or longer.

GROUP 2: Backhoes (Excavators) weighing 130,00 lbs and over; Cranes, Tower Cranes and Derricks with or without attachments with a lifting capacity of 100 tons or less; Cranes, Tower Cranes, and Derricks with boom, leads, and/or jib lengths 175 ft or less; Caisson Rigs; Pile Driver

GROUP 3: Backhoes (Excavators) weighing under 130,000 lbs; Travelling Crane (bridge type); Milling Machine; Concrete Paver over 27 E; Concrete Spreader and Distributor; Concrete Laser Screed; Concrete Grinder and Planing

Machine; Slipform Curb and Gutter Machine; Boring Machine (Directional); Dredge Operator; Skid Rigs; over 46 meter Concrete Pump.

GROUP 4: Hydraulic Backhoe (tractor or truck mounted); Hydraulic Crane, 10 tons or less; Tractor, Bulldozer, or End Loader (over 40 hp); Motor Patrol; Scraper Operator; Bituminous Plant and Paver Operator; Screed-Milling Machine; Roller over 5 tons; Concrete pumps 46 meter and under; Grout Pumps; Rotec type machine; Hydro Blaster, 10,000 psi and over; Rotary Drill Operator; Percussion Drilling Machine; Air Track Drill with or without integral hammer; Blaster; Boring Machine (vertical or horizontal); Side Boom; Trencher, wheel type or chain type having 8 inch or larger bucket; Rail Leveling Machine (Railroad); Tie Placer; Tie Extractor; Tie Tamper; Stone Leveler; Straddle Carrier; Material Hoists; Stack Hoist; Man Hoists; Mechanic and Welder; Off Road Material Haulers.

GROUP 5: Tractor, Bulldozer, or Endloader (under 40 hp); Tampers -Compactors, riding type; Stump Chipper, large; Roller, Rubber Tire; Backfiller; Trencher, chain type (bucket under 8 inch); Concrete Auto Breaker, large; Concrete Finishing Machine (road type); Concrete Batch Hopper; Concrete Conveyor Systems; Concrete Mixers, 14S or over; Pumps, Screw Type and Gypsum); Hydrohammers, small; Brooms and Sweeeprs; Lift Slab Machine; Roller under 5 tons; Industrial Locomotives; Fireman (Pile Drivers and Derricks); Pumps (well points); Hoists, automatic; A-Frames and Winch Trucks; Hoists (tuggers); Boats (Tug, Safety, Work Barges and Launches); Assistant Engineer

GROUP 6: Shouldering Machine Operator; Farm or Industrial Tractor mounted equipment; Post Hole Digger; Auger (vertical and horizontal); Skid Steer Loader with or without attachments; Robotic Tool Carrier with or without attachments; Power Pack Vibratory/Ultra Sound Driver and Extractor; Fireman (Asphalt Plants); Screed Operator; Stone Crushers and Screening Plants; Air, Electric, Hydraulic Jacks (Slip Form); Prestress Machines; Air Compressor, 400 CFM or over; Refrigeration Plant/Freese Machine; Boiler Operators (temporary heat); Forklifts; Welding Machines; Generators; Pumps over 3""; Heaters, Mechanical; Combination small equipment operator; Winches, small electric; Oiler; Greaser; Rotary Drill Tender; Conveyor; Elevator Operator

---

ENGI0139-007 06/03/2024

DODGE, FOND DU LAC, JEFFERSON, KENOSHA, MILWAUKEE, OZAUKEE, RACINE, SHEBOYGAN, WALWORTH, WASHINGTON, AND WAUKESHA COUNTIES

	Rates	Fringes
Power Equipment Operator		
Group 1	$ 45.04	26.80
Group 2	$ 44.26	26.80
Group 3	$ 43.31	26.80
Group 4	$ 42.26	26.80
Group 5	$ 40.86	26.80

HAZARDOUS WASTE PREMIUMS:
EPA Level ""A"" Protection: $3.00 per hour
EPA Level ""B"" Protection: $2.00 per hour

EPA Level ""C"" Protection: $1.00 per hour

POWER EQUIPMENT OPERATORS CLASSIFICATIONS

GROUP 1: Cranes, Tower Cranes, and Derricks with or without attachments, with a lifting capacity of over 100 tons; or Cranes, Tower Cranes, and Derricks with boom, leads, and/or jib lengths measuring 176 feet or longer; Backhoes (Excavators) 130,000 lbs and over; Caisson Rigs and Pile Drivers

GROUP 2: Cranes, Tower Cranes and Derricks with or without attachments with a lifting capacity of 100 tons or under; or Cranes, Tower Cranes, and Derricks with boom, lead, and\or jib lengths measuring 175 feet or under; Backhoes (Excavators) under 130,000 lbs; Skid Rigs; Dredge Operator: Traveling Crane (Bridge type); Concrete Paver over 27 E; Concrete Spreader and Distributor; Concrete Pumps and Boring Machines (directional)

GROUP 3: Material Hoists; Stack Hoists; Tractor or Truck mounted Hydraulic Backhoe; Tractor or Truck Mounted Hydraulic Crane, 5 tons or under; Manhoist; Tractor over 40 hp; Bulldozer over 40 hp; Endloader over 40 hp; Forklift, 25 ft and over; Motor Patrol; Scraper Operator; Sideboom; Straddle Carrier; Mechanic and Welder; Bituminous Plant and Paver Operator; Roller over 5 tons; Percussion Drill Operator; Rotary Drill Operator; Blaster; Air Track Drill; Trencher (wheel type or chain type having over 8 inch bucket); Elevator; Milling Machine and Boring Machine (horizontal or vertical); Backhoe Mounted Compactor

GROUP 4: Backfiller; Concrete Auto Breaker (large); Concrete Finishing Machine (road type); Roller, Rubber Tire; Concrete Batch Hopper; Concrete Conveyor System; Concrete Mixers (14S or over); Screw type Pumps and Gypsum Pumps; Grout Pumps; Tractor, Bulldozer, End Loader, under 40 hp; Pumps (well points); Trencher (chain type 8 inch or smaller bucket; Industrial Locomotives; Roller under 5 tons; Fireman (Piledrivers and Derricks); Robotic Tool Carrier with or without attachments.

GROUP 5: Hoists (Automatic); Forklift, 12 ft to 25 ft; Tamper-Compactors, riding type; A-Frame andWinch Trucks; Concrete Auto Breaker; Hydrohammer, small; Brooms and Sweepers; Hoist (Tuggers); Stump Chipper, large; Boats (Tug, Safety, Work Barges and Launch); Shouldering Machine Operator; Screed Operator; Farm or Industrial Tractor; Post Hole Digger; Stone Crushers and Screening Plants; Firemen (Asphalt Plants); Air Compressor (400 CFM or over); Augers (vertical and horizontal); Generators, 150 KW and over; Air, Electric Hydraulic Jacks (Slipform); Prestress Machines; Skid Steer Loader with or without attachments; Boiler operators (temporary heat); Forklift, 12 ft and under; Screed Operator Milling Machine; Refrigeration Plant/Freeze Machine; Power Pack Vibratory/Ultra Sound Driver and Extractor; Generators under 150 KW; Combination small equipment operator; Compressors under 400 CFM; Welding Machines; Heaters, Mechanical; Pumps; Winches, Small Electric; Oiler and Greaser; Conveyor; High pressure utility locating machine (daylighting machine).

IRON0008-002 06/02/2024

BROWN, CALUMET, DOOR, FOND DU LAC, KEWAUNEE, MANITOWOC, MARINETTE, OCONTO, OUTAGAMI, SHAWANO, SHEBOYGAN, AND WINNEBAGO COUNTIES:

	Rates	Fringes
IRONWORKER	$ 43.02	32.32

Paid Holidays: New Year's Day, Memorial Day, July 4th, Labor Day, Thanksgiving Day & Christmas Day.

IRON0008-003 06/02/2024

KENOSHA, MILWAUKEE, OZAUKEE, RACINE, WALWORTH (N.E. 2/3), WASHINGTON, AND WAUKESHA COUNTIES

	Rates	Fringes
IRONWORKER	$ 44.79	32.32

Paid Holidays: New Year's Day, Memorial Day, July 4th, Labor Day, Thanksgiving Day & Christmas Day.

IRON0383-001 06/02/2024

ADAMS, COLUMBIA, CRAWFORD, DANE, DODGE, FLORENCE, FOREST, GRANT, GREENE, (Excluding S.E. tip), GREEN LAKE, IOWA, JEFFERSON, JUNEAU, LA CROSSE, LAFAYETTE, LANGLADE, MARATHON, MARQUETTE, MENOMINEE, MONROE, PORTAGE, RICHLAND, ROCK (Northern area, vicinity of Edgerton and Milton), SAUK, VERNON, WAUPACA, WAUSHARA, AND WOOD COUNTIES

	Rates	Fringes
IRONWORKER	$ 42.00	31.93

---

* IRON0498-005 06/01/2024

GREEN (S.E. 1/3), ROCK (South of Edgerton and Milton), and WALWORTH (S.W. 1/3) COUNTIES:

	Rates	Fringes
IRONWORKER	$ 46.59	48.80

---

* IRON0512-008 04/28/2024

BARRON, BUFFALO, CHIPPEWA, CLARK, DUNN, EAU CLAIRE, JACKSON, PEPIN, PIERCE, POLK, RUSK, ST CROIX, TAYLOR, AND TREMPEALEAU COUNTIES

	Rates	Fringes
IRONWORKER	$ 44.85	35.22

---

* IRON0512-021 04/28/2024

ASHLAND, BAYFIELD, BURNETT, DOUGLAS, IRON, LINCOLN, ONEIDA,

PRICE, SAWYER, VILAS AND WASHBURN COUNTIES

	Rates	Fringes
IRONWORKER	$ 41.19	34.68

LABO0113-004 06/03/2024

MILWAUKEE, OZAUKEE, WASHINGTON, AND WAUKESHA COUNTIES

	Rates	Fringes
Laborers: (Open Cut)		
Group 1	$ 19.14	23.90
Group 2	$ 21.61	23.90
Group 3	$ 25.47	23.90
Group 4	$ 35.66	23.90
Group 5	$ 35.83	23.90
Group 6	$ 35.89	23.90
Group 7	$ 40.09	23.90
Group 8	$ 43.16	23.90
Group 9	$ 43.85	23.90

LABORERS CLASSIFICATIONS [OPEN CUT]

GROUP 1: Yard Laborer

GROUP 2: Landscaper

GROUP 3: Flag Person

GROUP 4: Paving Laborer

GROUP 5: General Laborer on Surface; Top Man

GROUP 6: Mud Mixer

GROUP 7: Mucker; Form Stripper; Bottom Digger and Misc; Bottom Man and Welder on Surface

GROUP 8: Concrete Manhole Builder; Caisson Worker; Miner; Pipe Layer; Rock Driller and Joint Man; Timber Man and Concrete Brusher; Bracer in Trench Behind Machine & Tight Sheeting; Concrete Formsetter and Shoveler; Jackhammer Operator

GROUP 9: Blaster

LABO0113-005 06/03/2024

SEWER, TUNNEL & UNDERGROUND

KENOSHA AND RACINE COUNTIES

	Rates	Fringes
Laborers:		
Group 1	$ 26.40	23.90
Group 2	$ 32.87	23.90
Group 3	$ 37.44	23.90
Group 4	$ 39.37	23.90

TUNNEL WORK UNDER COMPRESSED AIR: 0-15 lbs add $1.00, 15-30

lbs add $2.00, over 30 lbs add $3.00

LABORERS CLASSIFICATIONS

GROUP 1: Flagperson

GROUP 2: Top Man, General Laborer, Wellpoint Installation, Wire Mesh and Reinforcement, Concrete Worker, Form Stripper, Strike-off Work

GROUP 3: Machine and Equipment Operator, Sheeting, Form Setting, Patch Finisher, Bottom Man, Joint Sawer, Gunnite Man, Manhole Builder, Welder-Torchman, Blaster, Caulker, Bracer, Bull Float, Conduit Worker, Mucker and Car Pusher, Raker and Luteman, Hydraulic Jacking of Shields, Shield Drivers, Mining Machine, Lock Tenders, Mucking Machine Operator, Motor Men & Gauge Tenders and operation of incidental Mechanical Equipment and all Power Driven Tools

GROUP 4: Pipelayer, Miner and Laser Operator

LABO0113-008 06/03/2024

MILWAUKEE, OZAUKEE, WASHINGTON & WAUKESHA COUNTIES

	Rates	Fringes
Laborers: (Tunnel-Free Air)		
Group 1	$ 25.47	23.90
Group 2	$ 35.83	23.90
Group 3	$ 35.89	23.90
Group 4	$ 40.09	23.90
Group 5	$ 40.23	23.90
Group 6	$ 43.15	23.90
Group 7	$ 43.85	23.90

LABORERS CLASSIFICATIONS [TUNNEL - FREE AIR]:

GROUP 1: Flagperson

GROUP 2: General Laborer on surface; Tower Man

GROUP 3: Saw Man; Top Man

GROUP 4: Form Stripper; Car Pusher

GROUP 5: Mucker; Dinkey; Welder (rate on surface)

GROUP 6: Concrete Manhole Builder; Mucking Machine; Miner; Mining Machine; Welder; Rock Driller; Concrete Buster; Jack Hammer Operator; Caisson Worker; Pipelayer and Joint Man; Bracerman

GROUP 7: Blaster

---

* LABO0113-009 06/03/2024

MILWAUKEE, OZAUKEE, WASHINGTON & WAUKESHA COUNTIES

	Rates	Fringes
Laborers: (Tunnel -		

*COMPRESSED AIR 0 - 15 lbs.)

Group 1	$ 25.47	23.90
Group 2	$ 35.83	23.90
Group 3	$ 40.67	23.90
Group 4	$ 41.54	23.90
Group 5	$ 41.68	23.90
Group 6	$ 44.62	23.90
Group 7	$ 45.29	23.90

LABORERS CLASSIFICATIONS [TUNNEL - COMPRESSED AIR]:

*Compressed Air 15 - 30 lbs add $2.00 to all classifications
*Compressed Air over 30 lbs add $3.00 to all classifcations

GROUP 1: Flagperson

GROUP 2: General Laborer on surface

GROUP 3: Lock Tender on surface

GROUP 4: Form Stripper; Car Pusher

GROUP 5: Mucker; Dinkey

GROUP 6: Mucking Machine; Miner; Mining Machine; Welder & Rock Driller; Lock Tender in tunnel; Concrete Buster; Jack Hammer Operator; Caisson Worker; Pielayer and Joint Man; Bracerman; Nozzle Man on Gunite; Timber Man; Concrete Brusher

GROUP 7: Blaster

NOTE: Hazardous & Toxic Waste Removal: add $0.15 per hour.

LABO0140-005 06/03/2024

ADAMS, ASHLAND, BARRON, BROWN, BUFFALO, CALUMET, CHIPPEWA, CLARK, COLUMBIA, CRAWFORD, DODGE, DOOR, DUNN, EAU CLAIRE, FLORENCE,FOND DU LAC, FOREST, GRANT, GREEN, GREEN LAKE, IOWA, JACKSON, JEFFERSON, JUNEAU, KEWAUNEE, LACROSSE, LAFAYETTE, LANGLADE, LINCOLN, MANITOWOC, MARATHON, MARINETTE, MARQUETTE, MENOMINEE, MONROE, OCONTO, ONEIDA, OUTAGAMIE, PEPIN, PIERCE, POLK, PORTAGE, PRICE, RICHLAND, ROCK, RUSK, ST CROIX, SAUK, SAWYER, SHAWANO, SHEBOYGAN, TAYLOR, TREMMPEALEAU, VERNON, VILAS, WALWWORTH, WASHBURN, WAUPACA, WAUSHARA, WINNEBAGO, AND WOOD COUNTIES

	Rates	Fringes
LABORER (SEWER & WATER)		
Group 1	$ 35.63	19.45
Group 2	$ 37.48	19.45
Group 3	$ 37.68	19.45
Group 4	$ 38.43	19.45

FOR ALL TUNNEL WORK UNDER COMPRESSED AIR: 0-15 lbs add $1.00, 15-30 lbs add $2.00, over 30 lbs add $3.00

LABORER CLASSIFICATIONS:

GROUP 1: Flagperson

GROUP 2: General Laborer, Wellpoint Installation; Form Stripper; Strike Off worker

GROUP 3: Sheeting Formsetting; Patch Finisher; Bottom Man; Joint Sawer; Gunnite Man; Manhole Builder; Welder; Torchman; Blaster; Caulker Bracer; Bull Float; Mucker and Car Pusher; Raker and Luteman; Hydraulic jacking of shields, Shield Drivers; Mining Machine; Lock Tenders; Mucking Machine Operators; Motor Men and Gauge Tenders; Power Tool Operators

GROUP 4: Pipelayer, Miner, and Laser Operator

LABO0464-002 06/03/2024

DANE AND DOUGLAS COUNTIES

	Rates	Fringes
LABORER		
Group 1	$ 35.53	19.45
Group 2	$ 37.73	19.45
Group 3	$ 37.93	19.45
Group 4	$ 38.68	19.45

FOR ALL TUNNEL WORK UNDER COMPRESSED AIR: 0 - 15 lbs add $1.00, 15- 30 lbs add $2.00, over 30 lbs add $3.00

LABORERS CLASSIFICATIONS:

GROUP 1: Flagperson

GROUP 2: General Laborer; Wellpoint Installation; Concrete Worker; Form Stripper; Strike Off worker

GROUP 3: Sheeting Formsetting; Patch Finisher; Bottom Man; Joint Sawer; Gunnite Man; Manhole Builder; Welder; Torchman; Blaster; Caulker Bracer; Bull Float; Mucker and Car Pusher; Raker and Luteman; Hydraulic jacking of shields, Shield Dirvers; Mining Machine; Lock Tenders; Mucking Machine Operators; Motor Men and Gauge Tenders; Power Tool Operators

GROUP 4: Pipelayer, Miner, and Laser Operator

LABO1091-010 06/03/2024

BAYFIELD, BURNETT, IRON, SAWYER, AND WASHBURN COUNTIES

	Rates	Fringes
Laborers: (SEWER & WATER)		
Group 1	$ 35.32	19.45
Group 2	$ 37.38	19.45
Group 3	$ 37.58	19.45
Group 4	$ 38.33	19.45

FOR ALL TUNNEL WORK UNDER COMPRESSED AIR:
0 - 15 lbs add $1.00, 15-30 lbs add $2.00, over 30 lbs add $3.00

LABORERS CLASSIFICATIONS:

GROUP 1: Flagperson

GROUP 2: Laborers, Wellpoint Installation; Form Stripper; Strike Off worker

GROUP 3: Sheeting Formsetting; Patch Finisher; Bottom Man; Joint Sawer; Gunnite Man; Manhole Builder; Welder; Torchman; Blaster; Caulker Bracer; Bull Float; Mucker and Car Pusher; Raker and Luteman; Hydraulic jacking of shields, Shield Dirvers; Mining Machine; Lock Tenders; Mucking Machine Operators; Motor Men and Gauge Tenders; Power Tool Operators

GROUP 4: Pipelayer, Miner, and Laser Operator

PLAS0599-002 06/01/2023

	Rates	Fringes
CEMENT MASON/CONCRETE FINISHER		
Area A	$ 45.17	27.27
Area B	$ 39.97	25.02
Area C	$ 40.40	25.25
Area D	$ 41.16	24.49
Area E	$ 40.50	25.14
Area F	$ 36.98	28.67

AREA DESCRIPTIONS

AREA A: ASHLAND, BURNETT, BAYFIELD, DOUGLAS, IRON, PRICE, SAWYER, AND WASHBURN COUNTIES

AREA B: ADAMS, BARRON, BROWN, CALUMET, CHIPPEWA, CLARK, COLUMBIA, DODGE, DOOR, DUNN, FLORENCE, FOND DU LAC, FOREST, GREEN LAKE, JEFFERSON, KEWAUNEE, LANGLADE, LINCOLN, MANITOWOC, MARATHON, MARINETTE, MARQUETTE, MENOMINEE, OCONTO, ONEIDA, OUTAGAMIE, POLK, PORTAGE, RUSK, ST. CROIX, SAUK, SHAWANO, SHEBOYGAN, TAYLOR, VILAS, WALWORTH, WAUPACA, WAUSHARA, WINNEBAGO, AND WOOD COUNTIES

AREA C: BUFFALO, CRAWFORD, EAU CLAIRE, JACKSON, JUNEAU, LA CROSSE, MONROE, PEPIN, PIERCE, RICHLAND, TREMPEALEAU, AND VERNON COUNTIES

AREA D: MILWAUKEE, OZAUKEE, WASHINGTON, AND WAUKESHA COUNTIES

AREA E: DANE, GRANT, GREEN, IOWA, LAFAYETTE, AND ROCK COUNTIES

AREA F: KENOSHA AND RACINE COUNTIES

TEAM0039-001 06/01/2024

	Rates	Fringes
TRUCK DRIVER		
1 & 2 Axles	$ 37.57	27.41
3 or more Axles; Euclids, Dumptor & Articulated, Truck Mechanic	$ 37.72	27.41

WELDERS - Receive rate prescribed for craft performing operation to which welding is incidental.

==========

Note: Executive Order (EO) 13706, Establishing Paid Sick Leave for Federal Contractors applies to all contracts subject to the Davis-Bacon Act for which the contract is awarded (and any solicitation was issued) on or after January 1, 2017. If this contract is covered by the EO, the contractor must provide employees with 1 hour of paid sick leave for every 30 hours they work, up to 56 hours of paid sick leave each year. Employees must be permitted to use paid sick leave for their own illness, injury or other health-related needs, including preventive care; to assist a family member (or person who is like family to the employee) who is ill, injured, or has other health-related needs, including preventive care; or for reasons resulting from, or to assist a family member (or person who is like family to the employee) who is a victim of, domestic violence, sexual assault, or stalking. Additional information on contractor requirements and worker protections under the EO is available at https://www.dol.gov/agencies/whd/government-contracts.

Unlisted classifications needed for work not included within the scope of the classifications listed may be added after award only as provided in the labor standards contract clauses (29CFR 5.5 (a) (1) (iii)).

The body of each wage determination lists the classification and wage rates that have been found to be prevailing for the cited type(s) of construction in the area covered by the wage determination. The classifications are listed in alphabetical order of ""identifiers"" that indicate whether the particular rate is a union rate (current union negotiated rate for local), a survey rate (weighted average rate) or a union average rate (weighted union average rate).

Union Rate Identifiers

A four letter classification abbreviation identifier enclosed in dotted lines beginning with characters other than ""SU"" or ""UAVG"" denotes that the union classification and rate were prevailing for that classification in the survey. Example: PLUM0198-005 07/01/2014. PLUM is an abbreviation identifier of the union which prevailed in the survey for this classification, which in this example would be Plumbers. 0198 indicates the local union number or district council number where applicable, i.e., Plumbers Local 0198. The next number, 005 in the example, is an internal number used in processing the wage determination. 07/01/2014 is the effective date of the most current negotiated rate, which in this example is July 1, 2014.

Union prevailing wage rates are updated to reflect all rate changes in the collective bargaining agreement (CBA) governing this classification and rate.

Survey Rate Identifiers

Classifications listed under the ""SU"" identifier indicate that no one rate prevailed for this classification in the survey and the published rate is derived by computing a weighted average rate based on all the rates reported in the survey for that classification. As this weighted average rate includes all rates reported in the survey, it may include both union and non-union rates. Example: SULA2012-007 5/13/2014. SU indicates the rates are survey rates based on a weighted average calculation of rates and are not majority rates. LA indicates the State of Louisiana. 2012 is the year of survey on which these classifications and rates are based. The next number, 007 in the example, is an internal number used in producing the wage determination. 5/13/2014 indicates the survey completion date for the classifications and rates under that identifier.

Survey wage rates are not updated and remain in effect until a new survey is conducted.

Union Average Rate Identifiers

Classification(s) listed under the UAVG identifier indicate that no single majority rate prevailed for those classifications; however, 100% of the data reported for the classifications was union data. EXAMPLE: UAVG-OH-0010 08/29/2014. UAVG indicates that the rate is a weighted union average rate. OH indicates the state. The next number, 0010 in the example, is an internal number used in producing the wage determination. 08/29/2014 indicates the survey completion date for the classifications and rates under that identifier.

A UAVG rate will be updated once a year, usually in January of each year, to reflect a weighted average of the current negotiated/CBA rate of the union locals from which the rate is based.

State Adopted Rate Identifiers

Classifications listed under the ""SA"" identifier indicate that the prevailing wage rate set by a state (or local) government was adopted under 29 C.F.R ⧫1.3(g)-(h). Example: SAME2023-007 01/03/2024. SA reflects that the rates are state adopted. ME refers to the State of Maine. 2023 is the year during which the state completed the survey on which the listed classifications and rates are based. The next number, 007 in the example, is an internal number used in producing the wage determination. 01/03/2024 reflects the date on which the classifications and rates under the ?SA? identifier took effect under state law in the state from which the rates were adopted.

WAGE DETERMINATION APPEALS PROCESS

1.) Has there been an initial decision in the matter? This can be:

* an existing published wage determination
* a survey underlying a wage determination
* a Wage and Hour Division letter setting forth a position on a wage determination matter
* a conformance (additional classification and rate) ruling

On survey related matters, initial contact, including requests for summaries of surveys, should be with the Wage and Hour National Office because National Office has responsibility for

the Davis-Bacon survey program. If the response from this initial contact is not satisfactory, then the process described in 2.) and 3.) should be followed.

With regard to any other matter not yet ripe for the formal process described here, initial contact should be with the Branch of Construction Wage Determinations. Write to:

Branch of Construction Wage Determinations
Wage and Hour Division
U.S. Department of Labor
200 Constitution Avenue, N.W.
Washington, DC 20210

2.) If the answer to the question in 1.) is yes, then an interested party (those affected by the action) can request review and reconsideration from the Wage and Hour Administrator (See 29 CFR Part 1.8 and 29 CFR Part 7). Write to:

Wage and Hour Administrator
U.S. Department of Labor
200 Constitution Avenue, N.W.
Washington, DC 20210

The request should be accompanied by a full statement of the interested party's position and by any information (wage payment data, project description, area practice material, etc.) that the requestor considers relevant to the issue.

3.) If the decision of the Administrator is not favorable, an interested party may appeal directly to the Administrative Review Board (formerly the Wage Appeals Board). Write to:

Administrative Review Board
U.S. Department of Labor
200 Constitution Avenue, N.W.
Washington, DC 20210

4.) All decisions by the Administrative Review Board are final.

==========

END OF GENERAL DECISION"

Wisconsin Department of Transportation

Division of Transportation Systems Development
Bureau of Project Development
4822 Madison Yards Way, 4th Floor South
Madison, WI 53705

Telephone: (608) 266-1631
Facsimile (FAX): (608) 266-8459

November 19, 2024

NOTICE TO ALL CONTRACTORS:

Proposal #18:

4540-34-71, WISC 2025107
Cedar Grove – Sheboygan Falls
CTH D – STH 28
STH 32
Sheboygan County

4540-36-71, WISC 2025108
Cedar Grove – Sheboygan Falls
CTH D – STH 28
STH 32
Sheboygan County

Letting of December 10, 2024

This is Addendum No. 01, which provides for the following:

Plan Sheets:

Added Plan Sheets	
Plan Sheet	Plan Sheet Title (brief description of why sheet was added)
290A-290F	C-59-117
290G-290L	C-59-118
290M-290R	C-59-119
290S-290Y	C-59-121

The responsibility for notifying potential subcontractors and suppliers of these changes remains with the prime contractor.

Sincerely,

Mike Coleman

Proposal Development Specialist
Proposal Management Section

END OF ADDENDUM

STATE PROJECT NUMBER
4540-34-71

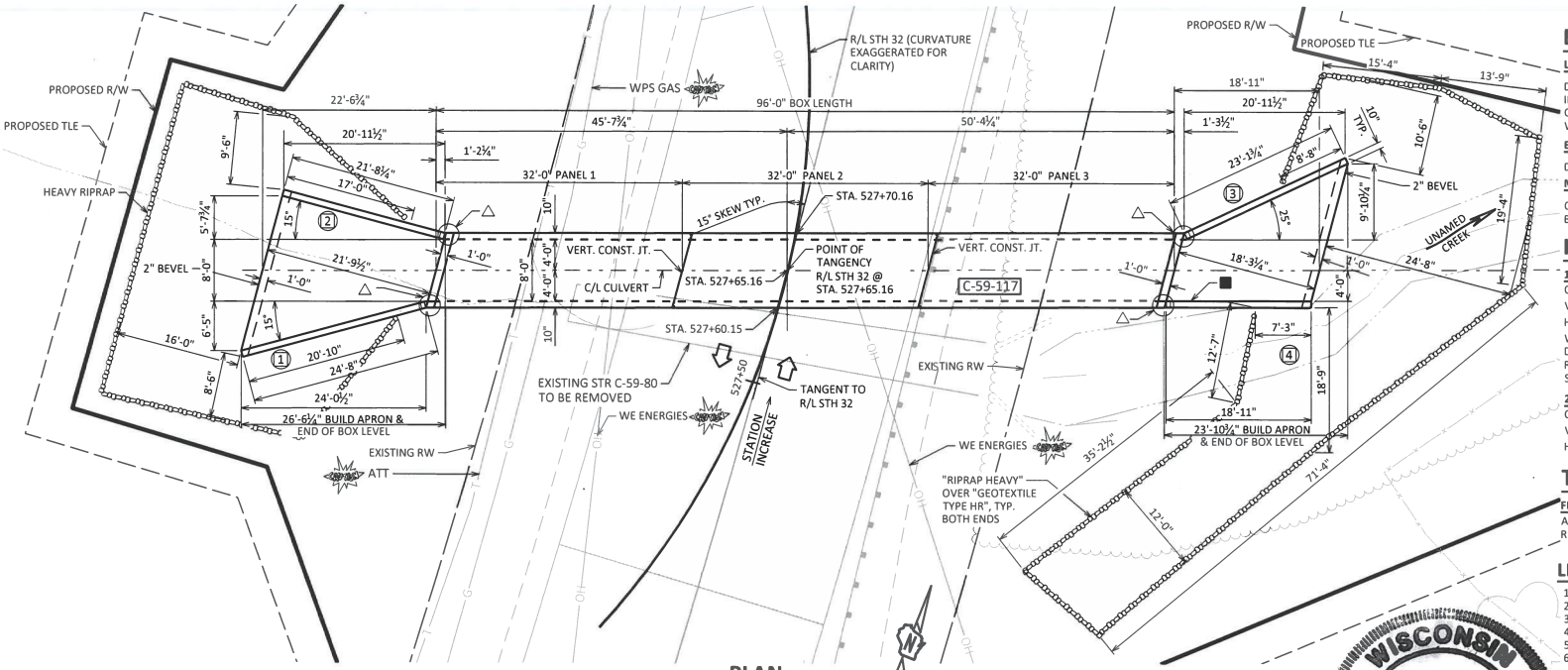

PLAN

SINGLE CELL CONCRETE CULVERT

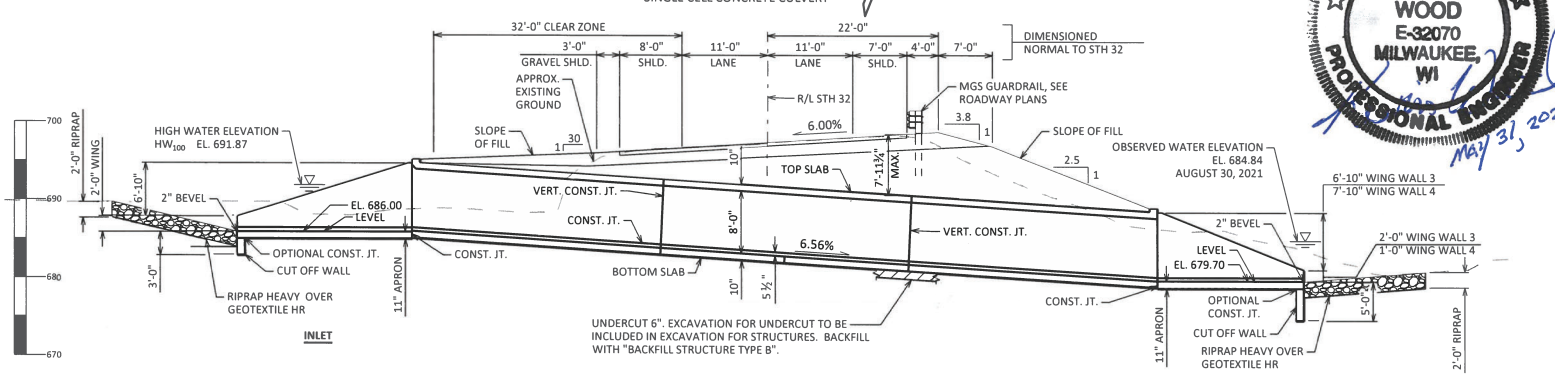

NOTE: INVERTS ARE SET APPROX. 1.5 FT. TO 2.5 FT BELOW EXISTING STREAMBED ELEVATION

ELEVATION

LOOKING NORTH

LEGEND

- △ SEE CORNER DETAILS ON "DETAILS" SHEET (5)
- ■ NAME PLATE LOCATION
- ◯ INDICATES WING NUMBER

BENCH MARK

NO.	STATION	DESCRIPTION	ELEV.
1010	528+31 (30' LT)	SPIKE IN PP	694.03

DESIGN DATA

LIVE LOAD:

DESIGN LOADING: HL-93
INVENTORY RATING: RF = 1.12
OPERATING RATING: RF = 1.45
WISCONSIN STANDARD PERMIT VEHICLE (WIS-SPV): 250 (KIPS)

EARTHLOAD:

DESIGNED FOR 2.5 TO 8.0 FT. OF FILL.

MATERIAL PROPERTIES:

CONCRETE MASONRY — f'_c = 3,500 PSI
BAR STEEL REINFORCEMENT — f_y = 60,000 PSI

HYDRAULIC DATA

100-YEAR FREQUENCY:

Q_{100}= 200 C.F.S.
V_{100}= 9.30 F.P.S.
HW_{100}= 691.87 EL.
WATERWAY AREA = 18.4 SQ. FT.
DRAINAGE AREA = 0.34 SQ. MI.
ROADWAY OVERTOPPING = N/A
SCOUR CRITICAL CODE = 8

2-YEAR FREQUENCY:

Q_2= 60 C.F.S.
V_2= 6.84 F.P.S.
HW_2= 690.55 EL.

TRAFFIC DATA

FEATURE ON: STH 32

ADT = 3450 (2046)
R.D.S. = 40 MPH

CURVE DATA

FEATURE ON

P.I. = 526+20.58
Δ = 27°56'11" LT
D = 4°00'00"
T = 356.29'
L = 698.41'
R = 1432.39'
P.C. = 522+64.29
P.T. = 529+62.69

LIST OF DRAWINGS

1. GENERAL PLAN
2. GENERAL NOTES & QUANTITIES
3. BOX DETAILS
4. APRON DETAILS
5. WINGWALL DETAILS
6. SUBSURFACE EXPLORATION

WISCONSIN KEVIN G. WOOD E-32070 MILWAUKEE, WI PROFESSIONAL ENGINEER

May 31, 2024

STRUCTURE DESIGN CONTACTS:

CONSULTANT CONTACT: KEVIN WOOD (414) 259-1500
BOS CONTACT: AARON BONK (608) 261-0261

NO.	DATE	REVISION	BY

GRAEF
116 S. Adams Street, Suite 201
Green Bay, WI 54301
920 / 592 9440
920 / 592 9445 fax
www.graef-usa.com

STATE OF WISCONSIN
DEPARTMENT OF TRANSPORATION

ACCEPTED SDR 08/05/24
CHIEF STRUCTURES DESIGN ENGINEER DATE

STRUCTURE C-59-117

STH 32 OVER UNNAMED CREEK

COUNTY	TOWN
SHEBOYGAN	LIMA

DESIGN SPEC. AASHTO LRFD BRIDGE DESIGN SPECIFICATION

DESIGNED BY	CWG	DESIGNED CK'D	WAR	DRAWN BY	CMW	PLANS CK'D	KGW

GENERAL PLAN

SHEET 1 OF 6

290A

I.D. 4540-34-00 DATE:

SCALE =

Addendum No. 01
ID 4540-34-71
Added Sheet 290A
November 19, 2024

8

8

STATE PROJECT NUMBER
4540-34-71

TOTAL ESTIMATED QUANTITIES

BID ITEM NUMBER	BID ITEMS	UNIT	TOTALS
203.0220	REMOVING STRUCTURE C-59-80	EACH	1
206.2001	EXCAVATION FOR STRUCTURES CULVERTS C-59-117	EACH	1
210.2500	BACKFILL STRUCTURE TYPE B	TON	1,952
504.0100	CONCRETE MASONRY CULVERTS	CY	148
505.0400	BAR STEEL REINFORCEMENT HS STRUCTURES	LB	15,530
505.0600	BAR STEEL REINFORCEMENT HS COATED STRUCTURES	LB	3,620
516.0500	RUBBERIZED MEMBRANE WATERPROOFING	SY	31
606.0300	RIPRAP HEAVY	CY	183
645.0120	GEOTEXTILE TYPE HR	SY	370
	NON-BID ITEMS		
	FILLER	SIZE	¾"
	NAME PLATE	EACH	1

GENERAL NOTES

DRAWINGS SHALL NOT BE SCALED.

BAR STEEL REINFORCEMENT SHALL BE EMBEDDED 2" CLEAR UNLESS OTHERWISE SHOWN OR NOTED.

THE FIRST OR FIRST TWO DIGITS OF THE BAR MARK SIGNIFIES THE BAR SIZE.

BEVEL EXPOSED EDGES OF CONCRETE 3/4" UNLESS OTHERWISE NOTED.

THE EXISTING STRUCTURE C-59-80 IS A THREE SIDED CULVERT, 5'-0" WIDE 5'-0" HIGH WITH A LENGTH OF 63'-0". THE ENTIRE STRUCTURE IS TO BE REMOVED.

THE UPPER LIMITS OF "EXCAVATION FOR STRUCTURES CULVERTS C-59-117" SHALL BE THE EXISTING GROUNDLINE.

ALL VOLUME WHICH CANNOT BE PLACED BEFORE CULVERT CONSTRUCTION AND NOT OCCUPIED BY THE NEW STRUCTURE SHALL BE BACKFILLED WITH STRUCTURE BACKFILL WITHIN THE LENGTH OF THE CULVERT INCLUDING THE APRON WING WALLS.

THE QUANTITY FOR BACKFILL STRUCTURE IS CALCULATED BASED ON THE DETAIL SHOWN IN THE PLANS.

THE CONCRETE IN THE CUTOFF WALLS MAY BE PLACED UNDERWATER IF THE EXCAVATION CANNOT BE DEWATERED.

PLACE 18" (MIN.) WIDE SHEET OF "RUBBERIZED MEMBRANE WATERPROOFING" ON TOP SLAB OVER ALL CONSTRUCTION JOINTS AND EXTEND DOWN TO BOTTOM OF OUTSIDE WALLS.

THE CONTRACTOR MAY FURNISH A PRECAST CONCRETE BOX CULVERT IN LIEU OF THE CAST-IN-PLACE BOX CULVERT WITH THE ACCEPTANCE OF THE SHOP DRAWINGS BY THE STRUCTURES DESIGN SECTION. THE PRECAST CONCRETE BOX CULVERT SHALL CONFORM TO PRECAST DETAILS ON CHAPTER 36 STANDARDS OF THE CURRENT WISC. DOT BRIDGE MANUAL. PAYMENT FOR THE PRECAST CULVERT SHALL BE BASED ON THE QUANTITIES AND PRICES BID FOR THE ITEMS LISTED IN THE "TOTAL ESTIMATED QUANTITIES".

IN LIEU OF CONSTRUCTION JOINTS IN THE BOTTOM SLAB, THE CONTRACTOR MAY PROVIDE 2" DEEP SAW CUTS WITHIN 12 HOURS AFTER POURING.

APRONS AND TOP OF BOTTOM SLAB OF BARREL SHALL BE TRANSVERSE TINED. THE TINES SHALL BE IN ACCORDANCE WITH WISDOT STANDARD SPECIFICATION 502.3.7.8.

Addendum No. 01
ID 4540-34-71
Added Sheet 290B
November 19, 2024

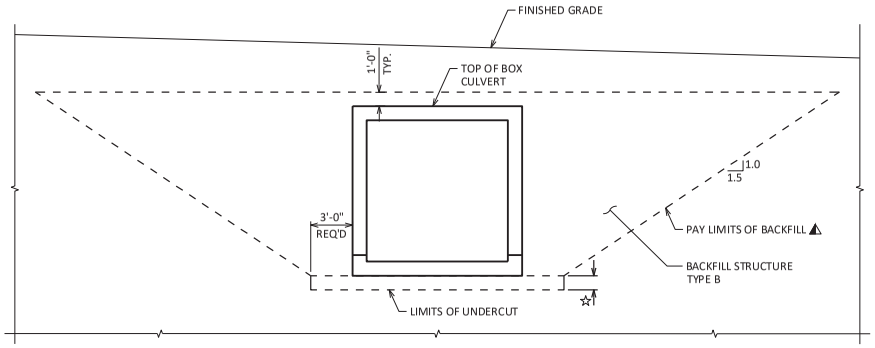

TYPICAL SECTION THRU BOX CULVERT

LEGENDS

▲ BACKFILL PAY LIMITS. BACKFILL BEYOND PAY LIMITS SHALL BE INCIDENTAL TO EXCAVATION FOR STRUCTURES. LIMITS OF EXCAVATION SHALL BE DETERMINED BY THE CONTRACTOR.

☆ UNDER CUT 6". EXCAVATION FOR UNDER CUT IS TO BE INCLUDED IN EXCAVATION FOR STRUCTURES. BACKFILL WITH "BACKFILL STRUCTURE TYPE B".

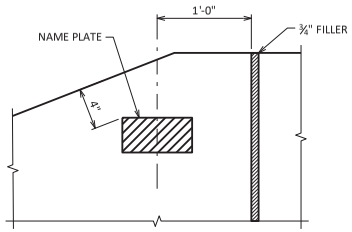

NAME PLATE DETAIL

WING 4

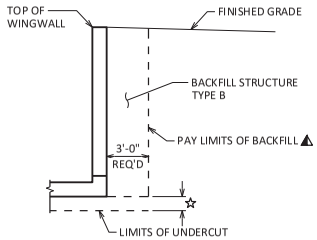

TYPICAL SECTION THRU BOX CULVERT WINGWALL

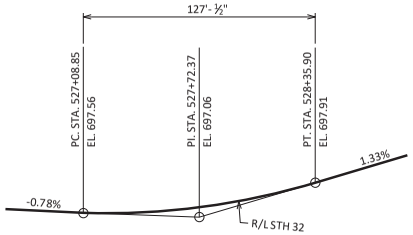

PROFILE GRADE LINE

(BEST FIT DEVELOPED FROM EXISTING TOPOGRAPHY SURVEY)

NO.	DATE	REVISION	BY

STATE OF WISCONSIN
DEPARTMENT OF TRANSPORTATION

STRUCTURE C-59-117

DRAWN BY CWG | PLANS CK'D KGW

GENERAL NOTES & QUANTITIES

SHEET 2 OF 6

290B

8

8

STATE PROJECT NUMBER
4540-34-71

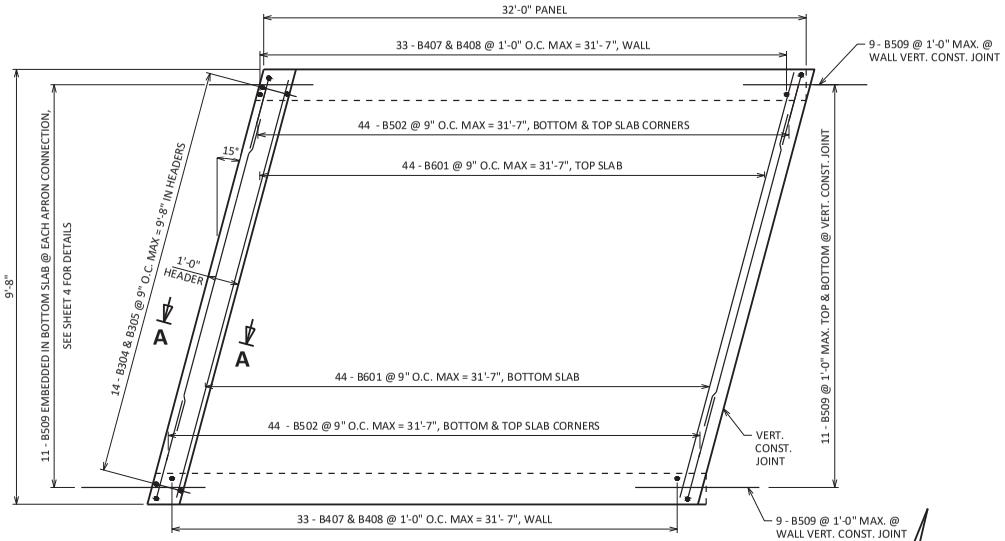

PLAN VIEW - PANEL 1

PANEL 2 SIMILAR, PANEL 3 SIMILAR OPP. HAND

Addendum No. 01
ID 4540-34-71
Added Sheet 290C
November 19, 2024

BILL OF BARS

NOTE: THE FIRST OR FIRST TWO DIGITS OF THE BAR MARK SIGNIFIES THE BAR SIZE.

BAR MARK	COAT	NO. REQ'D.	LENGTH	BENT	BAR SERIES	LOCATION
B601		264	9'-4"			TOP & BOTTOM TRANS. BARS
B502		528	11'-2"	X		TOP & BOTTOM CORNER
B403		129	31'-8"			LONG.
B304		14	2'-7"	X		INLET HEADER
B305		14	2'-11"	X		OUTLET HEADER
B406		4	9'-8"			HEADER TRANS.
B407		198	2'-4"			WALL BOTTOM SLAB VERT.
B408		198	8'-1"			INTERIOR WALL VERT.
B509		102	4'-0"			VERT. CONST. JT. & APRON DOWELS

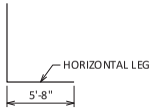

B502

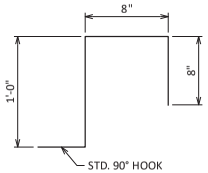

B304

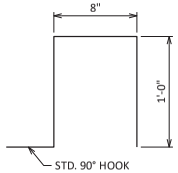

B305

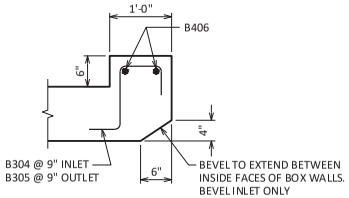

SECTION A-A THRU HEADER

INLET SHOWN , OUTLET SIMILAR

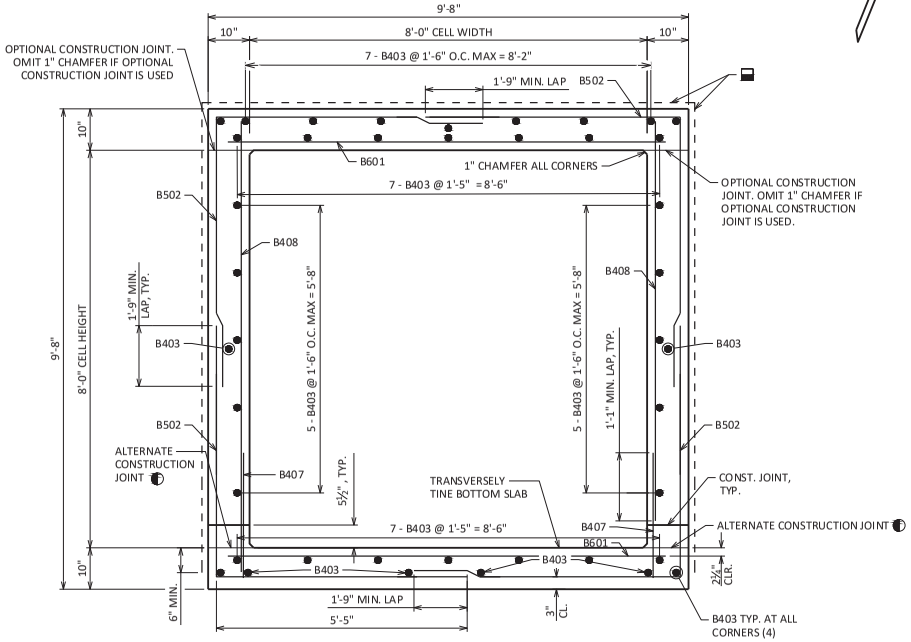

TYPICAL SECTION THRU BOX

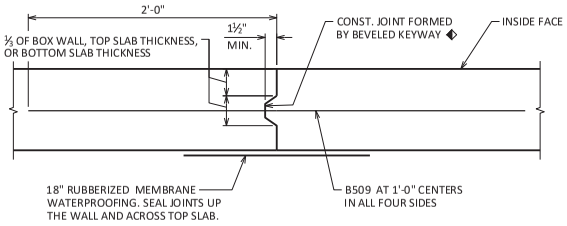

VERTICAL CONSTRUCTION JOINT

LEGEND

- ALTERNATE CONSTRUCTION JOINT. OMIT 1" CHAMFER IF ALTERNATE CONST. JOINT IS USED.
- IN LIEU OF CONSTRUCTION JOINTS IN THE BOTTOM SLAB, THE CONTRACTOR MAY USE 2" DEEP SAW CUTS WITHIN 12 HOURS AFTER POURING. #5 BARS 4'-0" AT 1'-0" CENTERS REQUIRED.
- 18" MIN. WIDTH RUBBERIZED MEMBRANE WATERPROOFING UP WALLS AND ACROSS TOP SLAB AT VERTICAL CONST. JOINTS. EXTEND 6" MIN. BELOW TOP OF BOTTOM SLAB.

NO.	DATE	REVISION	BY

STATE OF WISCONSIN
DEPARTMENT OF TRANSPORTATION

STRUCTURE C-59-117

DRAWN BY CWG | PLANS CK'D KGW

BOX DETAILS

SHEET 3 OF 6

290C

8

8

SCALE =

STATE PROJECT NUMBER

4540-34-71

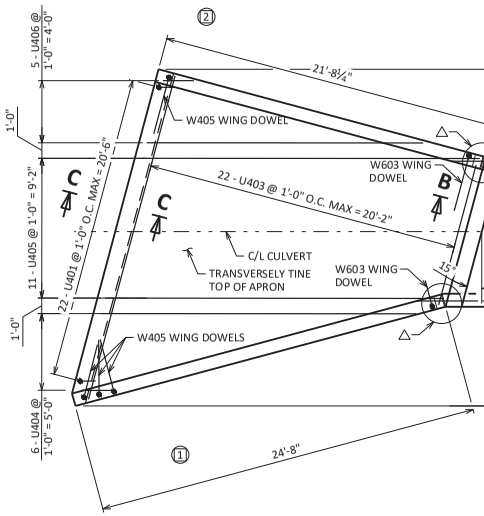

INLET APRON PLAN

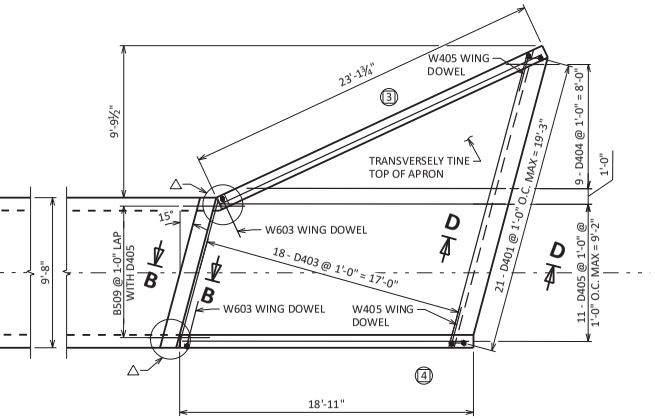

OUTLET APRON PLAN

APRON REINFORCING PLAN

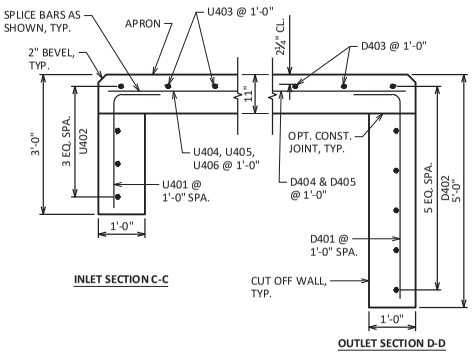

INLET SECTION C-C

OUTLET SECTION D-D

CUT OFF WALLS

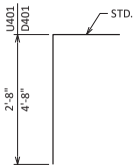

D401, U401

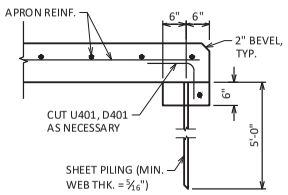

ALTERNATE CUT OFF WALLS

THE ABOVE ALTERNATIVE MAY BE USED IN LIEU OF CAST-IN-PLACE CONCRETE CUT OFF WALLS. PAYMENT WILL BE BASED ON THE CONCRETE CUT-OFF WALLS.

BILL OF BARS INLET

NOTE: THE FIRST OR FIRST TWO DIGITS OF THE BAR MARK SIGNIFIES THE BAR SIZE.

BAR MARK	COAT	NO. REQ'D.	LENGTH	BENT	BAR SERIES	LOCATION
U401		22	3'-3"	X		CUT OFF WALL VERT.
U402		4	21'-9"			CUT OFF WALL HORIZ.
U403		22	15'-5"		▲	TRANS. APRON BARS
U404		6	11'-1"		▲	LONG. APRON
U405		11	22'-2"			LONG. APRON
U406		5	10'-0"		▲	LONG. APRON

BILL OF BARS OUTLET

BAR MARK	COAT	NO. REQ'D.	LENGTH	BENT	BAR SERIES	LOCATION
D401		21	5'-3"	X		CUT OFF WALL VERT.
D402		6	19'-6"			CUT OFF WALL HORIZ.
D403		18	14'-6"		▲	TRANS. APRON BARS
D404		9	9'-9"		▲	LONG. APRON
D405		11	18'-7"			LONG. APRON

▲ LENGTH SHOWN FOR BAR IS AN AVERAGE AND SHOULD ONLY BE USED FOR BAR WEIGHT CALCULATIONS. SEE BAR SERIES TABLE FOR ACTUAL LENGTHS.

BAR SERIES TABLE

BUNDLE AND TAG EACH SERIES SEPARATELY.

BAR MARK	NO. REQ'D.	LENGTH
U403	1 SERIES OF 24	9'-8" TO 21'-2"
U404	1 SERIES OF 6	2'-0" TO 20'-2"
U406	1 SERIES OF 5	2'-0" TO 18'-0"

BAR SERIES TABLE

BUNDLE AND TAG EACH SERIES SEPARATELY.

BAR MARK	NO. REQ'D.	LENGTH
D403	1 SERIES OF 18	9'-8" TO 19'-4"
D404	1 SERIES OF 9	2'-6" TO 17'-0"

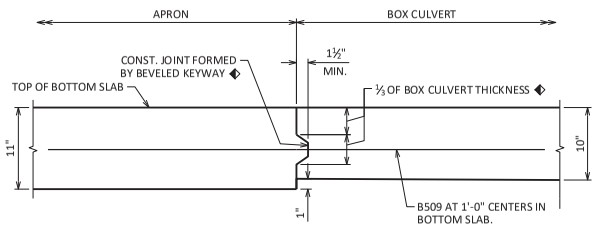

SECTION B-B APRON CONNECTION DETAIL

LEGEND

◆ IN LIEU OF CONSTRUCTION JOINTS IN THE BOTTOM SLAB, THE CONTRACTOR MAY USE 2" DEEP SAW CUTS WITHIN 12 HOURS AFTER POURING. #5 BARS 4'-0" AT 1'-0" CENTERS REQUIRED.

△ SEE CORNER DETAILS SHEET 5

Addendum No. 01
ID 4540-34-71
Added Sheet 290D
November 19, 2024

NO.	DATE	REVISION	BY

STATE OF WISCONSIN
DEPARTMENT OF TRANSPORTATION

STRUCTURE C-59-117

DRAWN BY CWG | PLANS CK'D KGW

APRON DETAILS

SHEET 4 OF 6

290D

SCALE =

8

8

STATE PROJECT NUMBER

4540-34-71

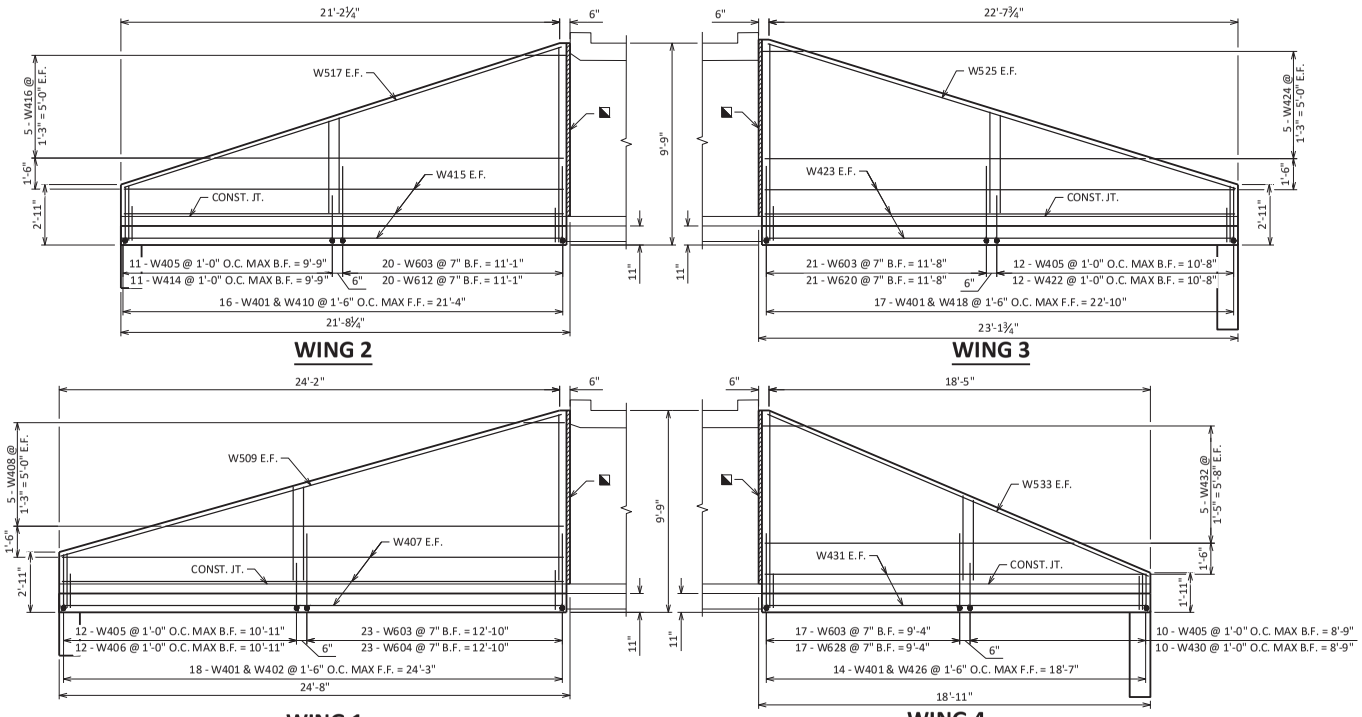

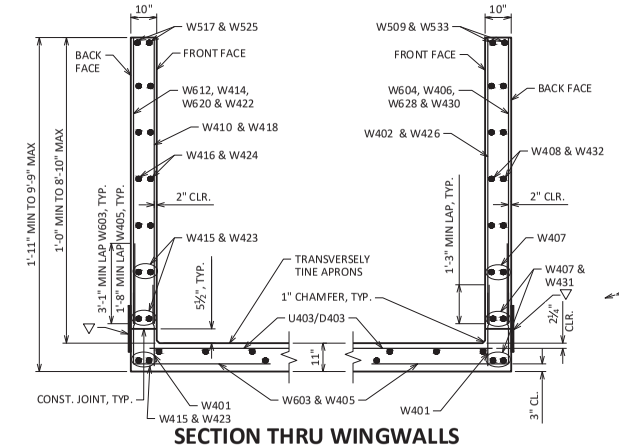

SECTION THRU WINGWALLS

LOOKING EAST

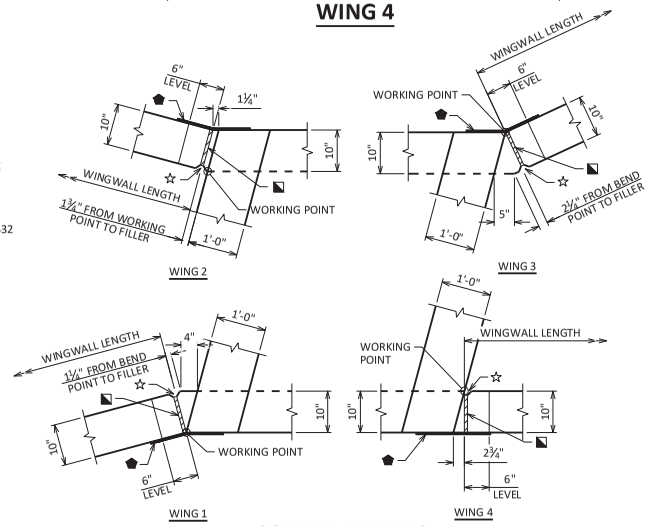

CORNER DETAILS

W603, W405 ✳

BILL OF BARS

NOTE: THE FIRST OR FIRST TWO DIGITS OF THE BAR MARK SIGNIFIES THE BAR SIZE.

	BAR MARK	COAT	NO. REQ'D.	LENGTH	BENT	BAR SERIES	LOCATION
✳	W401	X	65	2'-9"			WING F.F.
	W402	X	18	4'-8"		▲	WING 1 F.F. VERT.
	W603	X	81	11'-7"	X		WING B.F. DOWEL
	W604	X	23	6'-3"		▲	WING 1 B.F. VERT.
✳	W405	X	46	9'-10"	X		WING B.F. DOWEL
	W406	X	12	2'-9"		▲	WING 1 B.F. VERT.
	W407	X	6	24'-3"			WING 1 HORIZ.
	W408	X	10	10'-9"		▲	WING 1 HORIZ.
	W509	X	2	25'-1"			WING 1 TOP HORIZ.
	W410	X	16	4'-8"		▲	WING 2 F.F. VERT.
	W612	X	20	6'-5"		▲	WING 2 B.F. VERT.
	W414	X	11	2'-10"		▲	WING 2 B.F. VERT.
	W415	X	6	21'-4"			WING 2 HORIZ.
	W416	X	10	9'-5"		▲	WING 2 HORIZ.
	W517	X	2	22'-3"			WING 2 TOP HORIZ.
	W418	X	17	4'-8"		▲	WING 3 F.F. VERT.
	W620	X	21	6'-4"		▲	WING 3 B.F. VERT.
	W422	X	12	2'-11"		▲	WING 3 B.F. VERT.
	W423	X	6	22'-10"			WING 3 HORIZ.
	W424	X	10	10'-1"		▲	WING 3 HORIZ.
	W525	X	2	23'-8"			WING 3 TOP HORIZ.
	W426	X	14	4'-3"		▲	WING 4 F.F. VERT.
	W628	X	17	6'-1"		▲	WING 4 B.F. VERT.
	W430	X	10	2'-2"		▲	WING 4 B.F. VERT.
	W431	X	2	18'-5"			WING 4 HORIZ.
	W432	X	10	8'-5"		▲	WING 4 HORIZ.
	W533	X	2	19'-11"			WING 4 TOP HORIZ.

▲ LENGTH SHOWN FOR BARS IS AN AVERAGE AND SHOULD ONLY BE USED FOR BAR WEIGHT CALCULATIONS. SEE BAR SERIES ABLE FOR ACTUAL LENGTHS.

BAR SERIES TABLE

BUNDLE AND TAG EACH SERIES SEPARATELY.

BAR MARK	NO. REQ'D.	LENGTH
W402	1 SERIES OF 18	1'-2" TO 8'-2"
W604	1 SERIES OF 13	4'-4" TO 8'-2"
W406	1 SERIES OF 12	1'-2" TO 4'-4"
W408	2 SERIES OF 5	2'-0" TO 19'-6"
W410	1 SERIES OF 16	1'-2" TO 8'-2"
W612	1 SERIES OF 20	4'-8" TO 8'-2"
W414	1 SERIES OF 11	1'-3" TO 4'-5"
W416	2 SERIES OF 5	2'-0" TO 16'-10"
W418	1 SERIES OF 17	1'-2" TO 8'-2"
W620	1 SERIES OF 21	4'-6" TO 8'-2"
W422	1 SERIES OF 12	1'-3" TO 4'-7"
W424	2 SERIES OF 5	1'-11" TO 18'-3"
W426	1 SERIES OF 14	4" TO 8'-2"
W628	1 SERIES OF 17	4'-0" TO 8'-2"
W430	1 SERIES OF 10	4" TO 4'-0"
W432	2 SERIES OF 6	1'-6" TO 15'-4"

Addendum No. 01
ID 4540-34-71
Added Sheet 290E
November 19, 2024

LEGEND

- ◪ ¾" FILLER TO EXTEND FROM HORIZONTAL CONSTRUCTION JOINT TO TOP OF WING. FILLER INCLUDED IN WING LENGTH.
- ⬟ 18-INCH RUBBERIZED MEMBRANE WATERPROOFING EXTEND FROM HORIZ. CONST. JT. TO TOP OF WALL (FLUSH WITH FACE OF CONCRETE)
- ▽ 18" MIN. WIDTH RUBBERIZED MEMBRANE WATERPROOFING ALONG HORIZ. CONSTR. JT. IN WING
- ✳ FIELD TRIM VERTICAL LEG TO FIT NEAR WING TIP. TOUCH-UP CUT END WITH EPOXY.
- ☆ 1" BEVEL

NO.	DATE	REVISION	BY

STATE OF WISCONSIN
DEPARTMENT OF TRANSPORTATION

STRUCTURE C-59-117

DRAWN BY CWG PLANS CK'D KGW

WINGWALL DETAILS

SHEET 5 OF 6

290E

8

8

STATE PROJECT NUMBER

4540-34-71

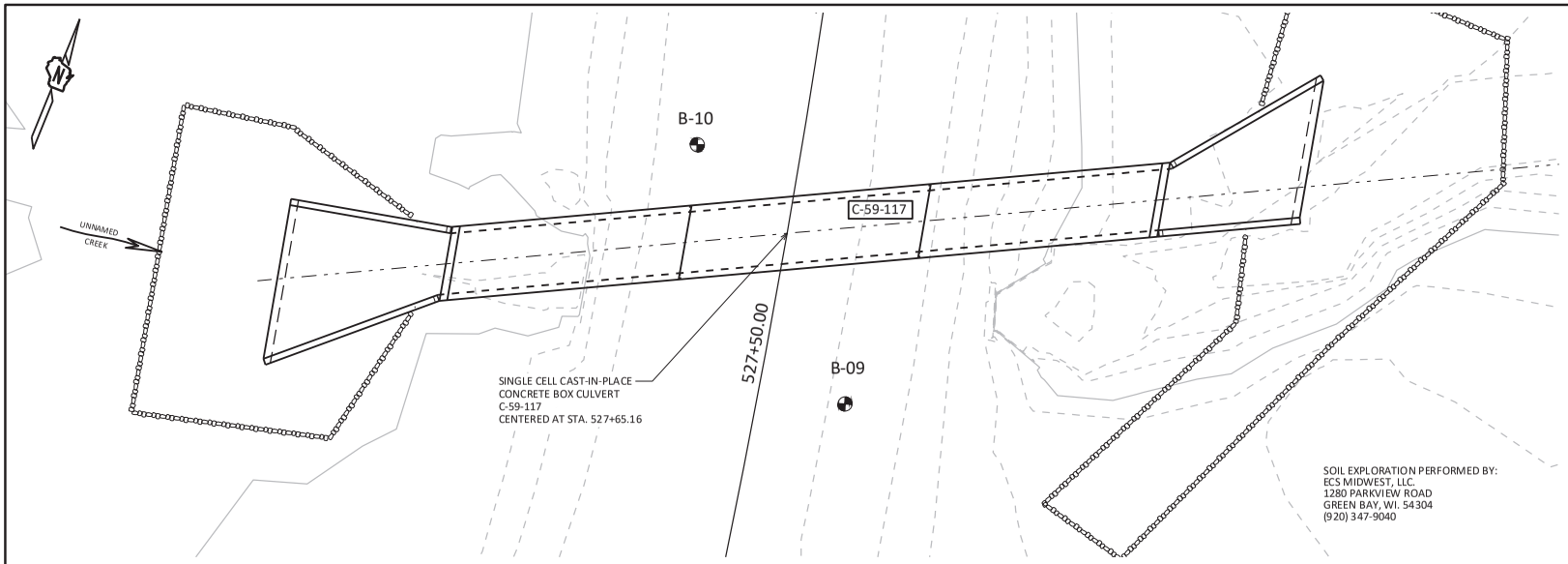

PLAN

BORING #	DATE COMPLETED	NORTHING (Y)	EASTING (X)
B-09	5/16/2022	155667.0	190395.1
B-10	5/16/2022	155687.0	190360.8
BORINGS COMPLETED BY: ECS59-CREW 1			
REPORT COMPLETED BY: ECS MIDWEST, LLC			
ALL COORDINATES REFERENCED TO WISCRS NAD 83(2011) SHEBOYGAN COUNTY			

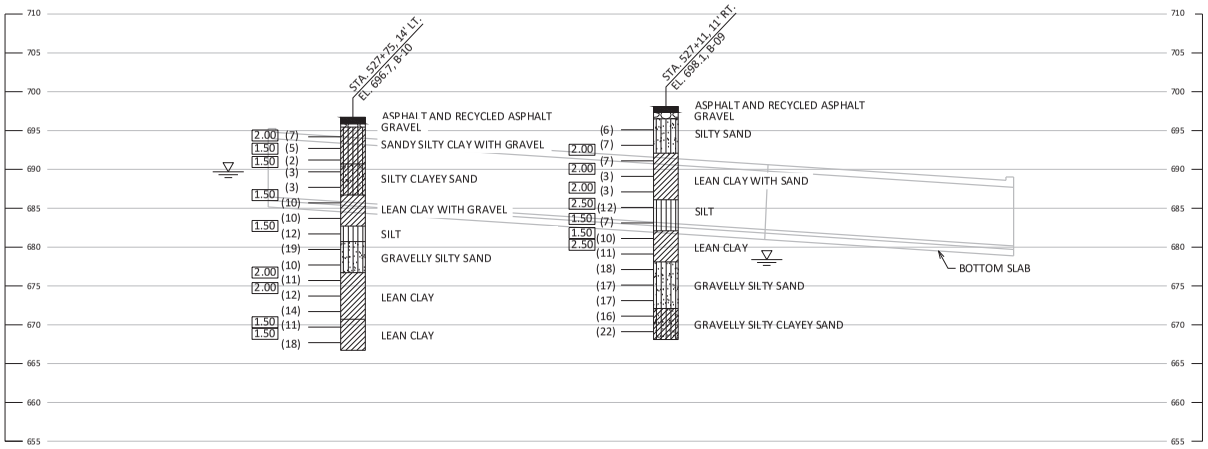

Addendum No. 01
ID 4540-34-71
Added Sheet 290F
November 19, 2024

MATERIAL SYMBOLS

ASPHALT, TOPSOIL, PEAT, CONCRETE, FILL, GRAVEL, SAND, CLAY, SILT, BOULDERS OR COBBLES, LIMESTONE, BEDROCK (UNKNOWN), SHALE, SANDSTONE, IGNEOUS/ META

LEGEND OF BORING

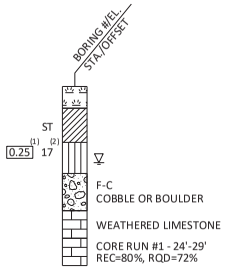

(1) UNCONFINED STRENGTH, AS DETERMINED BY A POCKET PENETROMETER (TSF)

(2) UNLESS OTHERWISE, SPECIFIED THE SPT 'N' VALUE IS BASED ON AASHTO T-206, STANDARD PENETRATION TEST. THE SPT 'N' VALUE PRESENTED HAS NOT BEEN CORRECTED FOR OVERBURDEN PRESSURE OR HAMMER EFFICIENCY.

GROUND WATER ELEVATION

AT TIME OF DRILLING
END OF DRILLING
AFTER DRILLING

ABBREVIATIONS

F-FINE M-MEDIUM C-COARSE ST-SHELBY TUBE

SUBSURFACE EXPLORATION FOR FOUNDATION DESIGN AND BIDDERS INFORMATION

BORINGS WERE COMPLETED AT POINTS APPROXIMATELY AS INDICATED ON THIS DRAWING TO OBTAIN INFORMATION CONCERNING THE CHARACTER OF SUBSURFACE MATERIALS FOUND AT THE SITE. BECAUSE THE INVESTIGATED DEPTHS ARE LIMITED AND THE AREA OF THE BORINGS IS VERY SMALL IN RELATION TO THE ENTIRE SITE, THE WISCONSIN DEPARTMENT OF TRANSPORTATION DOES NOT WARRANT SIMILAR SUBSURFACE CONDITIONS BELOW, BETWEEN, OR BEYOND THESE BORINGS. VARIATIONS IN SOIL CONDITIONS SHOULD BE EXPECTED AND FLUCTUATIONS IN GROUNDWATER LEVELS MAY OCCUR.

NO.	DATE	REVISION	BY

STATE OF WISCONSIN
DEPARTMENT OF TRANSPORTATION

STRUCTURE C-59-117

DRAWN BY CMW | PLANS CK'D KGW

SUBSURFACE EXPLORATION

SHEET 6 OF 6

290F

SCALE =

8

8

STATE PROJECT NUMBER
4540-34-71

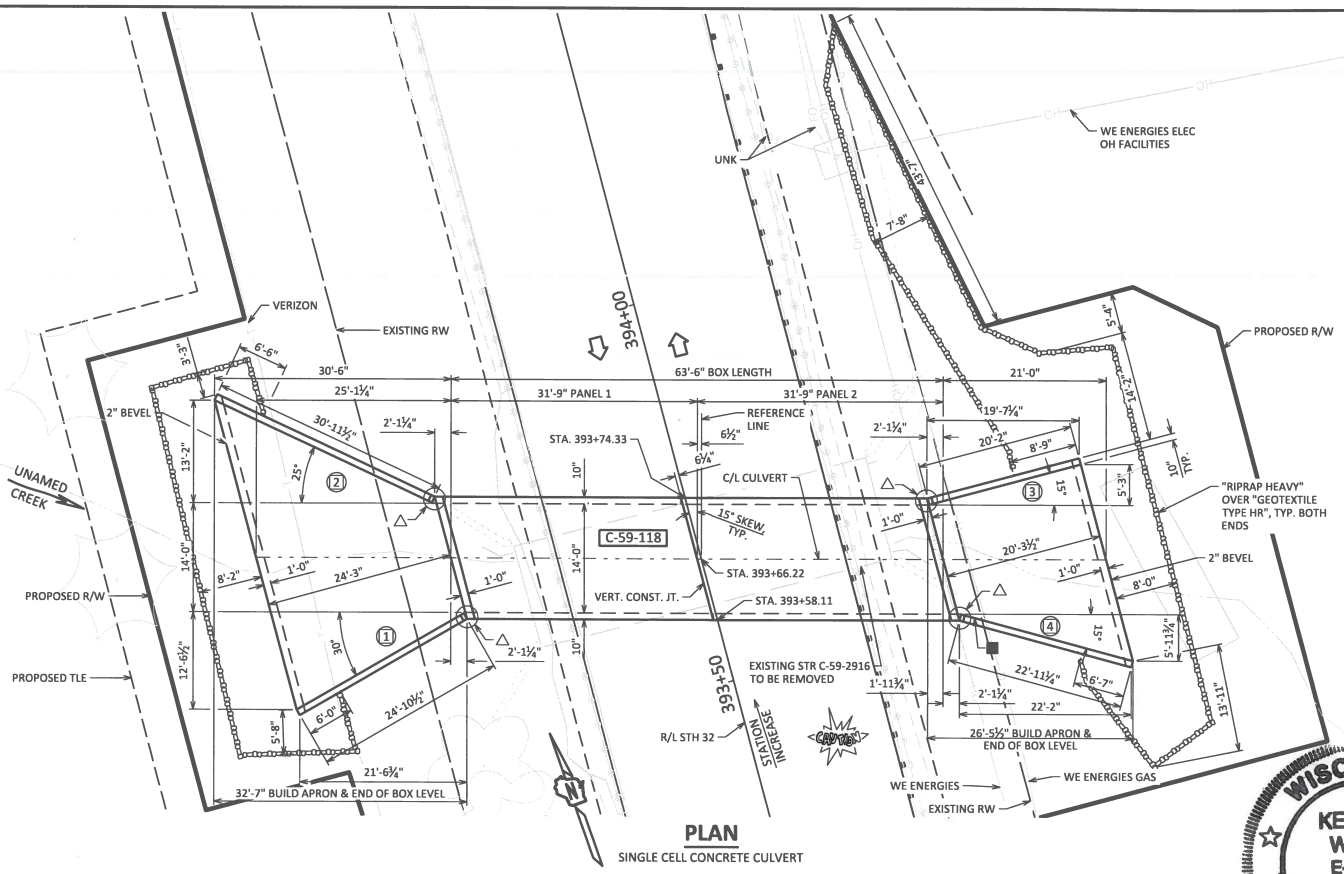

PLAN

SINGLE CELL CONCRETE CULVERT

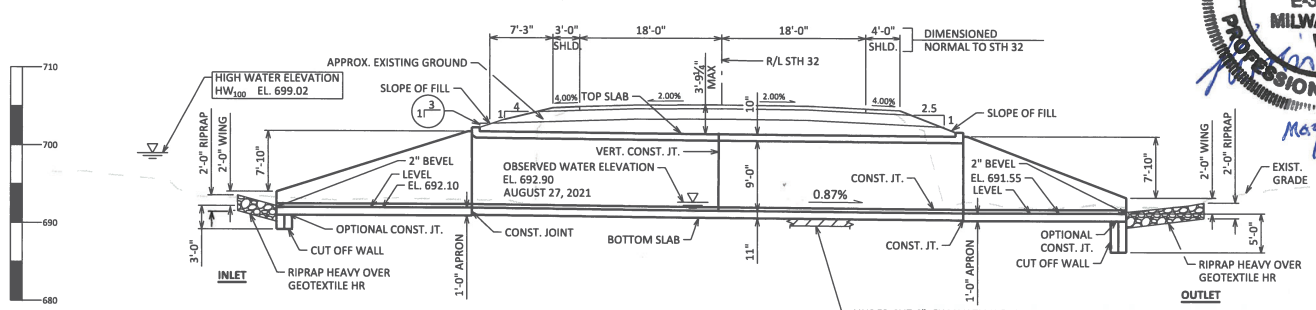

NOTE: INVERTS ARE SET APPROX. 1 FT. BELOW EXISTING STREAMBED ELEVATION

ELEVATION

LOOKING NORTH

DESIGN DATA

LIVE LOAD:

DESIGN LOADING: HL-93
INVENTORY RATING: RF = 1.20
OPERATING RATING: RF = 1.56
WISCONSIN STANDARD PERMIT VEHICLE (WIS-SPV): 200 (KIPS)

EARTHLOAD:

DESIGNED FOR FILL HEIGHT RANGE OF 3.0 TO 4.0 FEET.

MATERIAL PROPERTIES:

CONCRETE MASONRY — f'_c = 3,500 PSI
BAR STEEL REINFORCEMENT — f_y = 60,000 PSI

HYDRAULIC DATA

100-YEAR FREQUENCY:

Q_{100}= 250 C.F.S.
V_{100}= 2.85 F.P.S.
HW_{100}= 699.02 EL.
WATERWAY AREA = 94.3 SQ. FT.
DRAINAGE AREA = 1.32 SQ. MI.
ROADWAY OVERTOPPING = N/A
SCOUR CRITICAL CODE = 8

2-YEAR FREQUENCY:

Q_2= 65 C.F.S.
V_2= 1.57 F.P.S.
HW_2= 695.65 EL.

TRAFFIC DATA

FEATURE ON: STH 32

ADT = 3450 (2046)
R.D.S. = 40 MPH

Addendum No. 01
ID 4540-34-71
Added Sheet 290G
November 19, 2024

LIST OF DRAWINGS

1. GENERAL PLAN
2. GENERAL NOTES & QUANTITIES
3. BOX DETAILS
4. APRON DETAILS
5. WINGWALL DETAILS
6. SUBSURFACE EXPLORATION

WISCONSIN KEVIN G. WOOD E-32070 MILWAUKEE, WI PROFESSIONAL ENGINEER
May 31, 2024

STRUCTURE DESIGN CONTACTS:

CONSULTANT CONTACT: KEVIN WOOD (414) 259-1500
BOS CONTACT: AARON BONK (608) 261-0261

NO.	DATE	REVISION	BY

GRAEF
116 S. Adams Street, Suite 201
Green Bay, WI 54301
920 / 592 9440
920 / 592 9445 fax
www.graef-usa.com

STATE OF WISCONSIN
DEPARTMENT OF TRANSPORATION

ACCEPTED SDR 08/05/24
CHIEF STRUCTURES DESIGN ENGINEER DATE

STRUCTURE C-59-118

STH 32 OVER UNNAMED CREEK

COUNTY: SHEBOYGAN TOWN: LIMA

DESIGN SPEC.
AASHTO LRFD BRIDGE DESIGN SPECIFICATION

DESIGNED BY	CWG	DESIGNED CK'D	WAR	DRAWN BY	CMW	PLANS CK'D	KGW

GENERAL PLAN

SHEET 1 OF 6

290G

SCALE =

I.D. 4540-34-00 DATE:

LEGEND

- ■ SEE NAME PLATE LOCATION SHEET 2
- △ SEE CORNER DETAILS ON SHEET 5
- ⬡ INDICATES WING NUMBER

BENCH MARKS

NO.	STATION	DESCRIPTION	ELEV.
1007	392+38 (29' RT)	SPIKE IN PP 75-5468 50-4	700.96
1008	394+13 (29' RT)	SPIKE IN PP 75-5467 45-4	702.67

8

8

STATE PROJECT NUMBER
4540-34-71

TOTAL ESTIMATED QUANTITIES

BID ITEM NUMBER	BID ITEMS	UNIT	TOTALS
203.0220	REMOVING STRUCTURE C-59-2916	EACH	1
206.2001	EXCAVATION FOR STRUCTURES CULVERTS C-59-118	EACH	1
210.2500	BACKFILL STRUCTURE TYPE B	TON	1,639
504.0100	CONCRETE MASONRY CULVERTS	CY	169
505.0400	BAR STEEL REINFORCEMENT HS STRUCTURES	LB	20,690
505.0600	BAR STEEL REINFORCEMENT HS COATED STRUCTURES	LB	4,860
516.0500	RUBBERIZED MEMBRANE WATERPROOFING	SY	30
606.0300	RIPRAP HEAVY	CY	106
645.0120	GEOTEXTILE TYPE HR	SY	245
	NON-BID ITEMS		
	FILLER	SIZE	¾"
	NAME PLATE	EACH	1

GENERAL NOTES

DRAWINGS SHALL NOT BE SCALED.

BAR STEEL REINFORCEMENT SHALL BE EMBEDDED 2" CLEAR UNLESS OTHERWISE SHOWN OR NOTED.

THE FIRST OR FIRST TWO DIGITS OF THE BAR MARK SIGNIFIES THE BAR SIZE.

BEVEL EXPOSED EDGES OF CONCRETE 3/4" UNLESS OTHERWISE NOTED.

EXISTING STRUCTURE C-59-2916 IS A THREE SIDED CULVERT, 14'-0" WIDE X 6'-0" HIGH WITH A LENGTH OF 45'-0". THE ENTIRE STRUCTURE IS TO BE REMOVED.

THE UPPER LIMITS OF "EXCAVATION FOR STRUCTURES CULVERTS C-59-118" SHALL BE THE EXISTING GROUNDLINE.

ALL VOLUME WHICH CANNOT BE PLACED BEFORE CULVERT CONSTRUCTION AND NOT OCCUPIED BY THE NEW STRUCTURE SHALL BE BACKFILLED WITH STRUCTURE BACKFILL WITHIN THE LENGTH OF THE CULVERT INCLUDING THE APRON WING WALLS.

THE QUANTITY FOR BACKFILL STRUCTURE IS CALCULATED BASED ON THE DETAIL SHOWN IN THE PLANS.

THE CONCRETE IN THE CUTOFF WALLS MAY BE PLACED UNDERWATER IF THE EXCAVATION CANNOT BE DEWATERED.

PLACE 18" (MIN.) WIDE SHEET OF "RUBBERIZED MEMBRANE WATERPROOFING" ON TOP SLAB OVER ALL CONSTRUCTION JOINTS AND EXTEND DOWN TO BOTTOM OF OUTSIDE WALLS.

THE CONTRACTOR MAY FURNISH A PRECAST CONCRETE BOX CULVERT IN LIEU OF THE CAST-IN-PLACE BOX CULVERT WITH THE ACCEPTANCE OF THE SHOP DRAWINGS BY THE STRUCTURES DESIGN SECTION. THE PRECAST CONCRETE BOX CULVERT SHALL CONFORM TO PRECAST DETAILS ON CHAPTER 36 STANDARDS OF THE CURRENT WISC. DOT BRIDGE MANUAL. PAYMENT FOR THE PRECAST CULVERT SHALL BE BASED ON THE QUANTITIES AND PRICES BID FOR THE ITEMS LISTED IN THE "TOTAL ESTIMATED QUANTITIES".

IN LIEU OF CONSTRUCTION JOINTS IN THE BOTTOM SLAB, THE CONTRACTOR MAY PROVIDE 2" DEEP SAW CUTS WITHIN 12 HOURS AFTER POURING.

Addendum No. 01
ID 4540-34-71
Added Sheet 290H
November 19, 2024

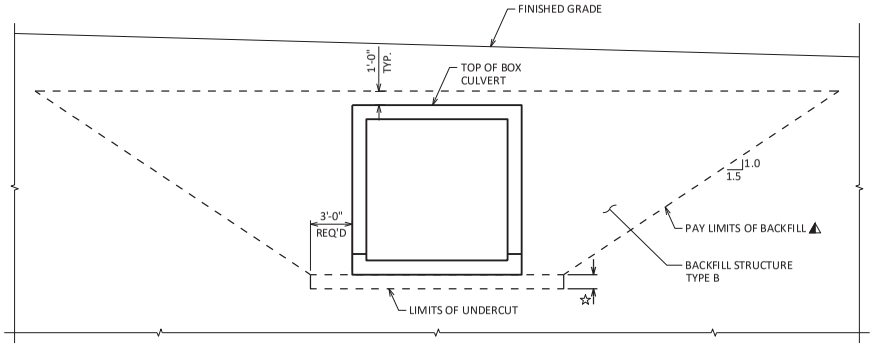

TYPICAL SECTION THRU BOX CULVERT

LEGENDS

▲ BACKFILL PAY LIMITS. BACKFILL BEYOND PAY LIMITS SHALL BE INCIDENTAL TO EXCAVATION FOR STRUCTURES. LIMITS OF EXCAVATION SHALL BE DETERMINED BY THE CONTRACTOR.

☆ UNDER CUT 6". EXCAVATION FOR UNDER CUT IS TO BE INCLUDED IN EXCAVATION FOR STRUCTURES. BACKFILL WITH "BACKFILL STRUCTURE TYPE B".

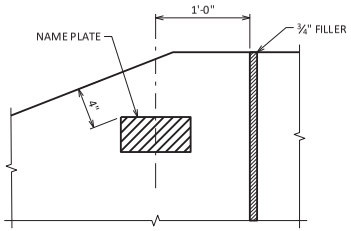

NAME PLATE DETAIL

WING 4

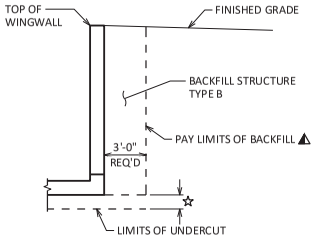

TYPICAL SECTION THRU BOX CULVERT WINGWALL

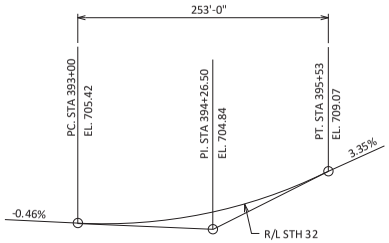

PROFILE GRADE LINE

(BEST FIT DEVELOPED FROM EXISTING TOPOGRAPHY SURVEY)

NO.	DATE	REVISION	BY

STATE OF WISCONSIN
DEPARTMENT OF TRANSPORTATION

STRUCTURE C-59-118

DRAWN BY CWG | PLANS CK'D KGW

GENERAL NOTES & QUANTITIES

SHEET 2 OF 6

290H

STATE PROJECT NUMBER

4540-34-71

Addendum No. 01
ID 4540-34-71
Added Sheet 290I
November 19, 2024

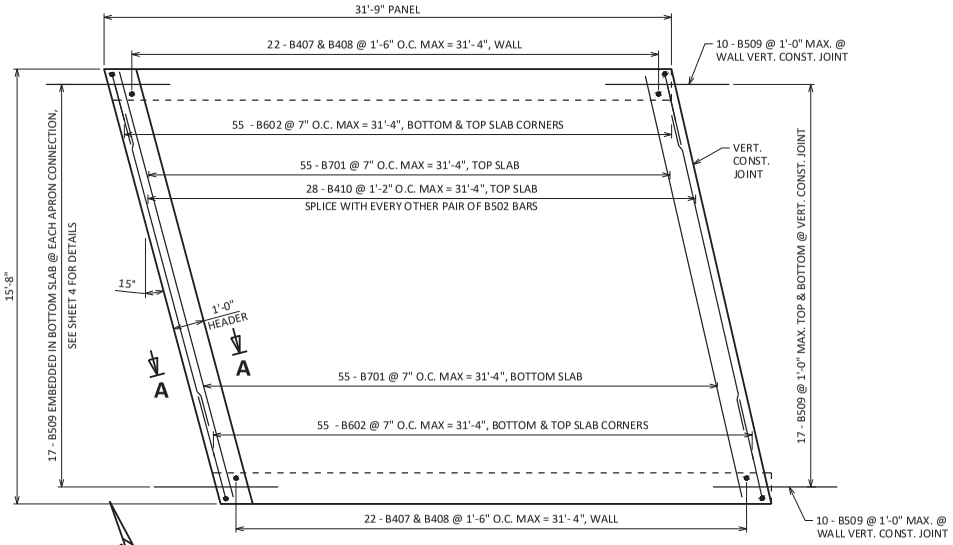

PLAN VIEW - PANEL 1

PANEL 2 SIMILAR OPP. HAND

BILL OF BARS

NOTE: THE FIRST OR FIRST TWO DIGITS OF THE BAR MARK SIGNIFIES THE BAR SIZE.

BAR MARK	COAT	NO. REQ'D.	LENGTH	BENT	BAR SERIES	LOCATION
B701		220	15'-10"			TOP & BOTTOM SLAB TRANS.
B602		440	11'-9"	X		TOP & BOTTOM SLAB CORNER
B403		110	31'-5"			LONG.
B304		23	3'-1"	X		INLET HEADER
B305		23	3'-4"	X		OUTLET HEADER
B406		4	15'-10"			HEADER
B407		88	2'-6"			WALL BOTTOM SLAB VERT.
B408		88	9'-2"			EXTERIOR WALL VERT.
B509		88	4'-0"			VERT. CONST. JT. & APRON DOWELS
B410		56	8'-10"			TOP SLAB TRANS.

B602

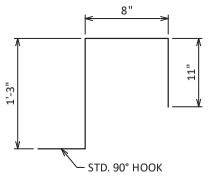

B304

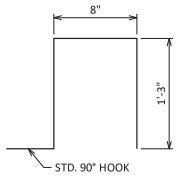

B305

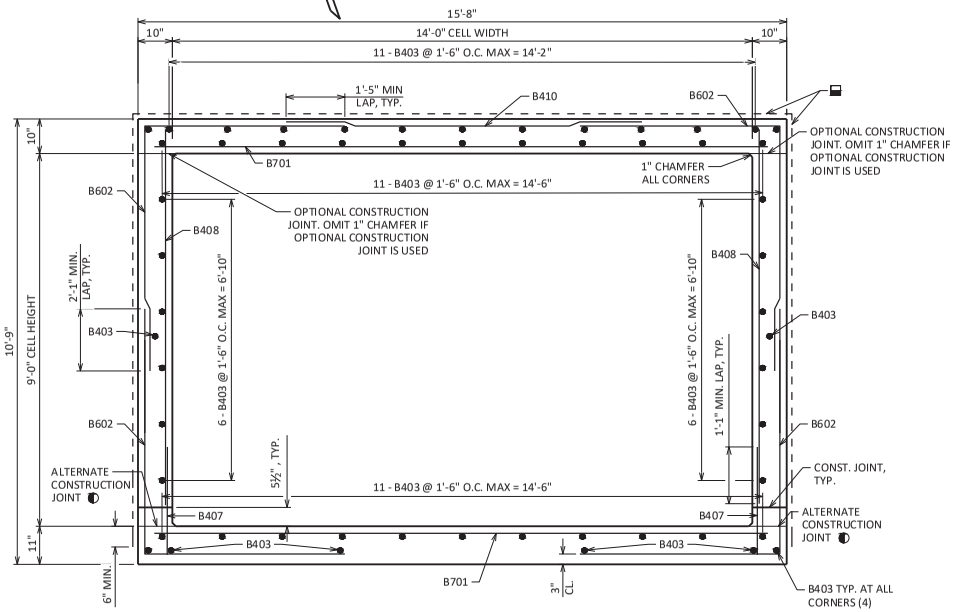

TYPICAL SECTION THRU BOX

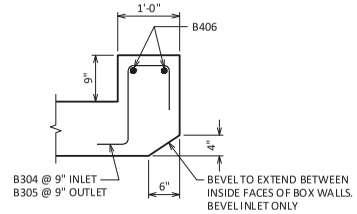

SECTION A-A THRU HEADER

INLET SHOWN , OUTLET SIMILAR

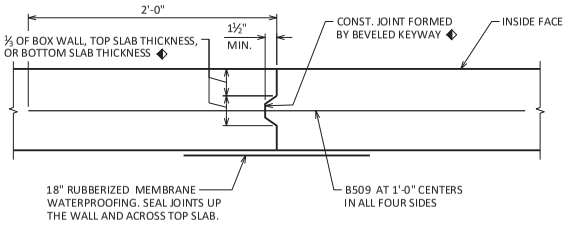

VERTICAL CONSTRUCTION JOINT

LEGEND

- ALTERNATE CONSTRUCTION JOINT. OMIT 1" CHAMFER IF ALTERNATE CONST. JOINT IS USED.
- IN LIEU OF CONSTRUCTION JOINTS IN THE BOTTOM SLAB, THE CONTRACTOR MAY USE 2" DEEP SAW CUTS WITHIN 12 HOURS AFTER POURING. #5 BARS 4'-0" AT 1'-0" CENTERS REQUIRED.
- 18" MIN. WIDTH RUBBERIZED MEMBRANE WATERPROOFING UP WALLS AND ACROSS TOP SLAB AT VERTICAL CONST. JOINTS. EXTEND 6" MIN. BELOW TOP OF BOTTOM SLAB.

NO.	DATE	REVISION	BY

STATE OF WISCONSIN
DEPARTMENT OF TRANSPORTATION

STRUCTURE C-59-118

DRAWN BY CWG | PLANS CK'D KGW

BOX DETAILS

SHEET 3 OF 6

290I

SCALE =

8

8

STATE PROJECT NUMBER

4540-34-71

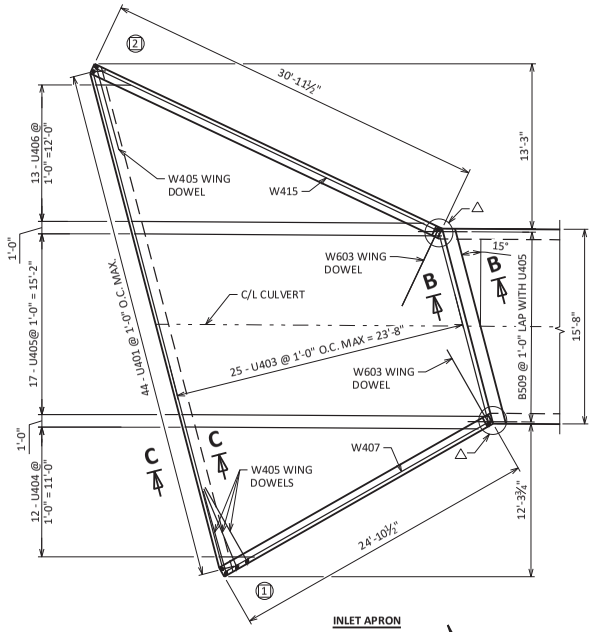

INLET APRON

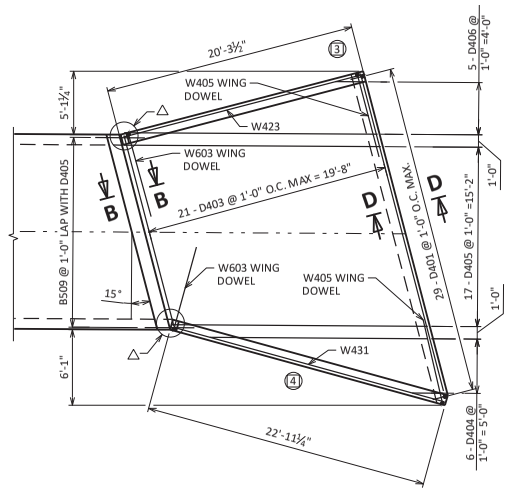

OUTLET APRON

APRON REINFORCING PLAN

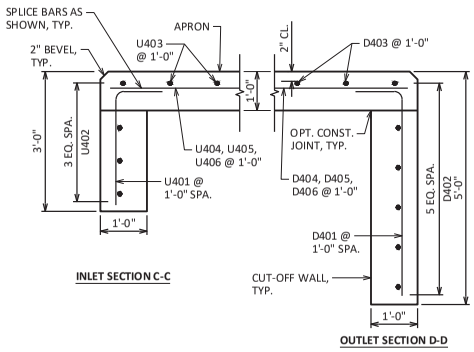

INLET SECTION C-C

OUTLET SECTION D-D

CUT-OFF WALLS

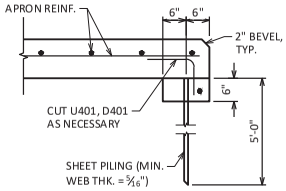

ALTERNATE CUT-OFF WALLS

THE ABOVE ALTERNATIVE MAY BE USED IN LIEU OF CAST-IN-PLACE CONCRETE CUT-OFF WALLS. PAYMENT WILL BE BASED ON THE CONCRETE CUT-OFF WALLS.

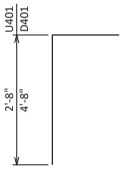

D401, U401

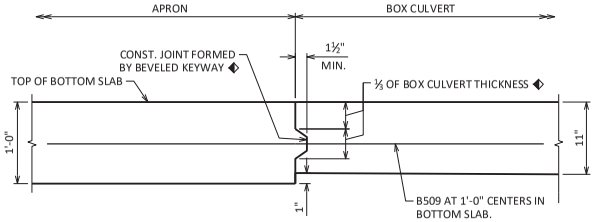

SECTION B-B APRON CONNECTION DETAIL

BILL OF BARS INLET

NOTE: THE FIRST OR FIRST TWO DIGITS OF THE BAR MARK SIGNIFIES THE BAR SIZE.

BAR MARK	COAT	NO. REQ'D.	LENGTH	BENT	BAR SERIES	LOCATION
U401		44	3'-6"	X		CUT-OFF WALL VERT.
U402		4	41'-2"			CUT-OFF WALL HORIZ.
U403		25	29'-0"		▲	TRANS. APRON BARS
U404		12	12'-7"		▲	LONG. APRON
U405		17	24'-9"			LONG. APRON
U406		13	12'-8"		▲	LONG. APRON

BILL OF BARS OUTLET

BAR MARK	COAT	NO. REQ'D.	LENGTH	BENT	BAR SERIES	LOCATION
D401		29	5'-6"	X		CUT-OFF WALL VERT.
D402		6	26'-4"			CUT-OFF WALL HORIZ.
D403		21	21'-7"		▲	TRANS. APRON BARS
D404		6	10'-0"		▲	LONG. APRON
D405		17	20'-8"			LONG. APRON
D406		6	9'-9"		▲	LONG. APRON

▲ LENGTH SHOWN FOR BAR IS AN AVERAGE AND SHOULD ONLY BE USED FOR BAR WEIGHT CALCULATIONS. SEE BAR SERIES TABLE FOR ACTUAL LENGTHS.

BAR SERIES TABLE

BUNDLE AND TAG EACH SERIES SEPARATELY.

BAR MARK	NO. REQ'D.	LENGTH
U403	1 SERIES OF 25	15'-10" TO 42'-2"
U404	1 SERIES OF 12	1'-11" TO 23'-3"
U406	1 SERIES OF 13	2'-0" TO 23'-4"

BAR SERIES TABLE

BUNDLE AND TAG EACH SERIES SEPARATELY.

BAR MARK	NO. REQ'D.	LENGTH
D403	1 SERIES OF 21	15'-10" TO 27'-4"
D404	1 SERIES OF 5	1'-11" TO 18'-1"
D406	1 SERIES OF 6	1'-11" TO 17'-7"

LEGEND

◆ IN LIEU OF CONSTRUCTION JOINTS IN THE BOTTOM SLAB, THE CONTRACTOR MAY USE 2" DEEP SAW CUTS WITHIN 12 HOURS AFTER POURING. #5 BARS 4'-0" AT 1'-0" CENTERS REQUIRED.

△ SEE CORNER DETAILS SHEET 5

Addendum No. 01
ID 4540-34-71
Added Sheet 290J
November 19, 2024

NO.	DATE	REVISION	BY

STATE OF WISCONSIN
DEPARTMENT OF TRANSPORTATION

STRUCTURE C-59-118

DRAWN BY CWG | PLANS CK'D KGW

APRON DETAILS

SHEET 4 OF 6

290J

SCALE =

8

8

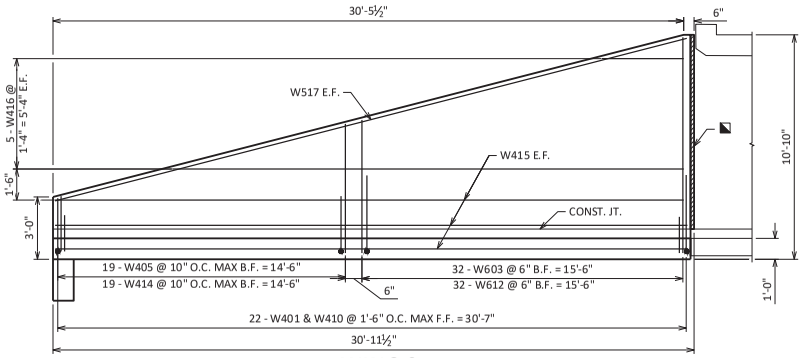

WING 2

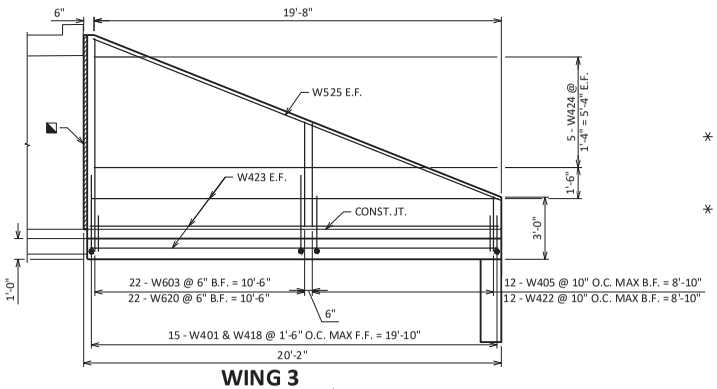

WING 3

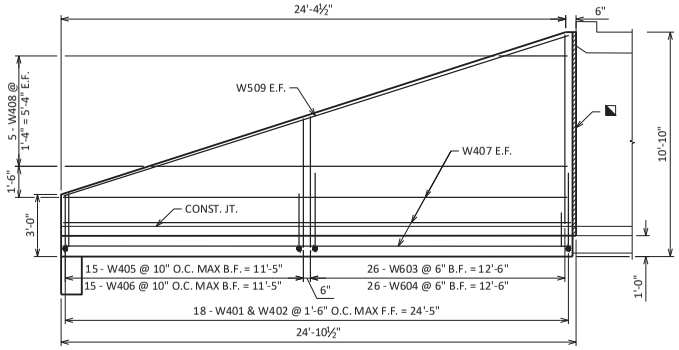

WING 1

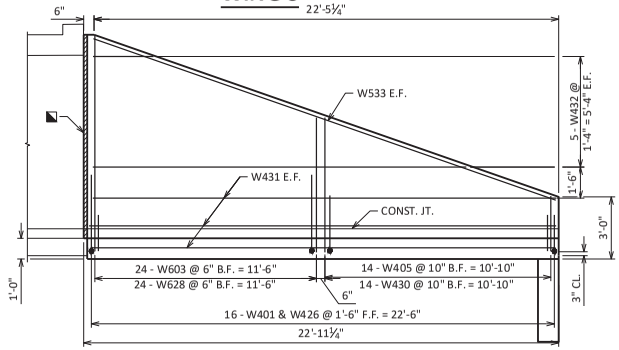

WING 4

BILL OF BARS

STATE PROJECT NUMBER

4540-34-71

NOTE: THE FIRST OR FIRST TWO DIGITS OF THE BAR MARK SIGNIFIES THE BAR SIZE.

BAR MARK	COAT	NO. REQ'D.	LENGTH	BENT	BAR SERIES	LOCATION
* W401	X	71	2'-9"			WING F.F. VERT. DOWEL
W402	X	18	5'-2"		▲	WING 1 F.F. VERT.
W603	X	104	11'-10"	X		WING DOWEL B.F.
W604	X	26	7'-2"		▲	WING 1 B.F. VERT.
* W405	X	60	10'-7"	X		WING DOWEL B.F.
W406	X	15	3'-2"		▲	WING 1 B.F. VERT.
W407	X	7	24'-5"			WING 1 HORIZ.
W408	X	10	11'-6"		▲	WING 1 HORIZ.
W509	X	2	25'-7"			WING 1 TOP HORIZ.
W410	X	22	5'-2"		▲	WING 2 F.F. VERT.
W612	X	32	7'-2"		▲	WING 2 B.F. VERT.
W414	X	19	3'-2"		▲	WING 2 B.F. VERT.
W415	X	7	30'-6"			WING 2 HORIZ.
W416	X	10	14'-3"		▲	WING 2 HORIZ.
W517	X	2	31'-6"			WING 2 TOP HORIZ.
W418	X	15	5'-2"		▲	WING 3 F.F. VERT.
W620	X	22	7'-1"		▲	WING 3 B.F. VERT.
W422	X	12	3'-0"		▲	WING 3 B.F. VERT.
W423	X	7	19'-10"			WING 3 HORIZ.
W424	X	10	9'-4"		▲	WING 3 HORIZ.
W525	X	2	21'-4"			WING 3 TOP HORIZ.
W426	X	16	5'-2"		▲	WING 4 F.F. VERT.
W628	X	24	7'-2"		▲	WING 4 B.F. VERT.
W430	X	14	3'-2"		▲	WING 4 B.F. VERT.
W431	X	7	22'-6"			WING 4 HORIZ.
W432	X	10	10'-7"		▲	WING 4 HORIZ.
W533	X	2	23'-10"			WING 4 TOP HORIZ.

▲ LENGTH SHOWN FOR BARS IS AN AVERAGE AND SHOULD ONLY BE USED FOR BAR WEIGHT CALCULATIONS. SEE BAR SERIES ABLE FOR ACTUAL LENGTHS.

BAR SERIES TABLE

BUNDLE AND TAG EACH SERIES SEPARATELY.

BAR MARK	NO. REQ'D.	LENGTH
W402	1 SERIES OF 18	1'-2" TO 9'-2"
W604	1 SERIES OF 26	5'-2" TO 9'-2"
W406	1 SERIES OF 15	1'-4" TO 5'-0"
W408	2 SERIES OF 5	3'-2" TO 19'-10"
W410	1 SERIES OF 22	1'-2" TO 9'-2"
W612	1 SERIES OF 32	5'-2" TO 9'-2"
W414	1 SERIES OF 19	1'-4" TO 5'-0"
W416	2 SERIES OF 5	4'-0" TO 24'-8"
W418	1 SERIES OF 15	1'-2" TO 9'-2"
W620	1 SERIES OF 22	5'-0" TO 9'-2"
W422	1 SERIES OF 12	1'-4" TO 4'-8"
W424	2 SERIES OF 5	2'-8" TO 16'-0"
W426	1 SERIES OF 16	1'-2" TO 9'-2"
W628	1 SERIES OF 24	5'-2" TO 9'-2"
W430	1 SERIES OF 14	1'-4" TO 5'-0"
W432	2 SERIES OF 5	2'-11" TO 18'-3"

Addendum No. 01
ID 4540-34-71
Added Sheet 290K
November 19, 2024

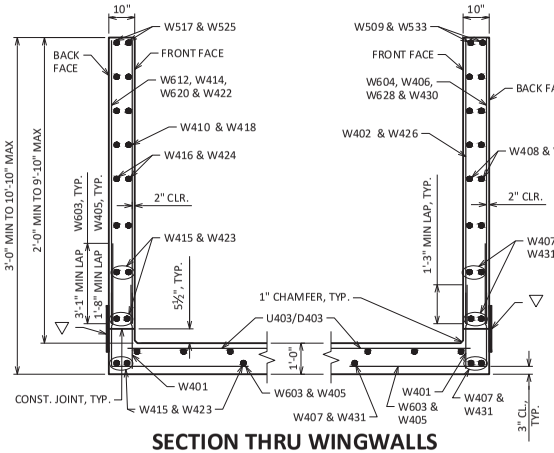

SECTION THRU WINGWALLS

LOOKING EAST

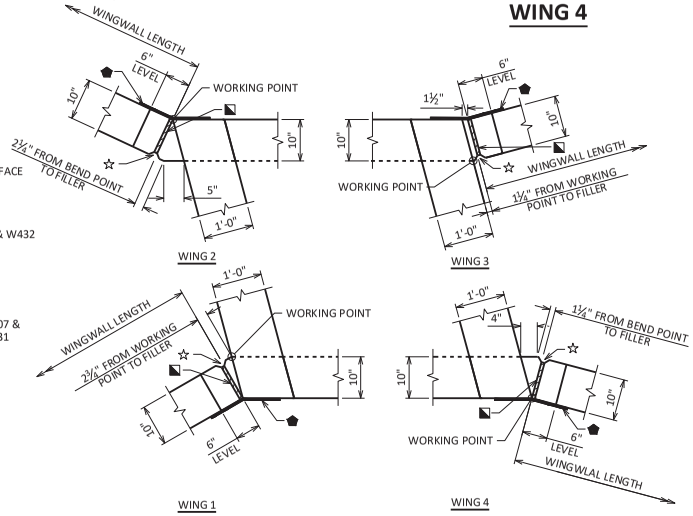

CORNER DETAILS

W603, W405 *

LEGEND

- ◪ ¾" FILLER TO EXTEND FROM HORIZONTAL CONSTRUCTION JOINT TO TOP OF WING. FILLER INCLUDED IN WING LENGTH.
- ⬟ 18-INCH RUBBERIZED MEMBRANE WATERPROOFING EXTEND FROM HORIZ. CONST. JT. TO TOP OF WALL (FLUSH WITH FACE OF CONCRETE)
- ▽ 18" MIN. WIDTH RUBBERIZED MEMBRANE WATERPROOFING ALONG HORIZ. CONSTR. JT. IN WING
- * FIELD TRIM VERTICAL LEG TO FIT NEAR WING TIP. TOUCH-UP CUT END WITH EPOXY.
- ☆ 1" BEVEL

NO.	DATE	REVISION	BY

STATE OF WISCONSIN
DEPARTMENT OF TRANSPORTATION

STRUCTURE C-59-118

DRAWN BY CWG | PLANS CK'D KGW

WINGWALL DETAILS

SHEET 5 OF 6

290K

8

8

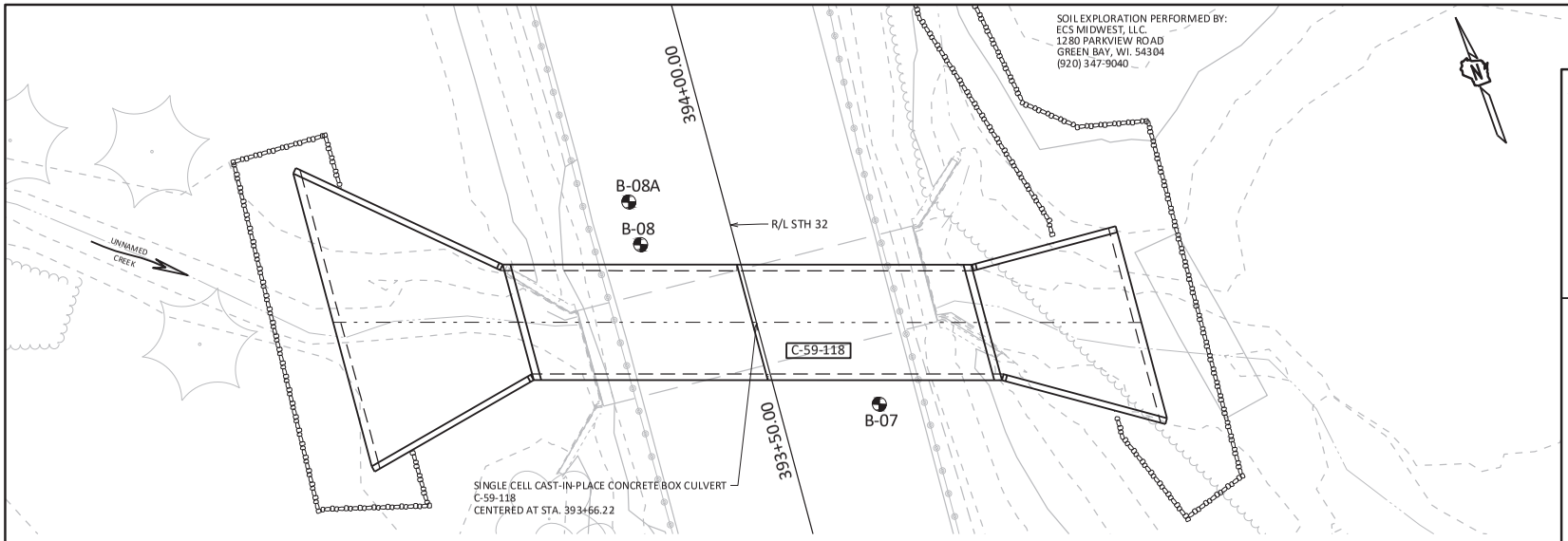

PLAN

BORING #	DATE COMPLETED	NORTHING (Y)	EASTING (X)
B-07	5/13/2022	142524.4	188818.7
B-08	5/16/2022	142555.5	188795.3
B-08A	5/16/2022	142561.5	188795.7
BORINGS COMPLETED BY: ECS59-CREW 1			
REPORT COMPLETED BY: ECS MIDWEST, LLC			
ALL COORDINATES REFERENCED TO WISCRS NAD 83(2011) SHEBOYGAN COUNTY			

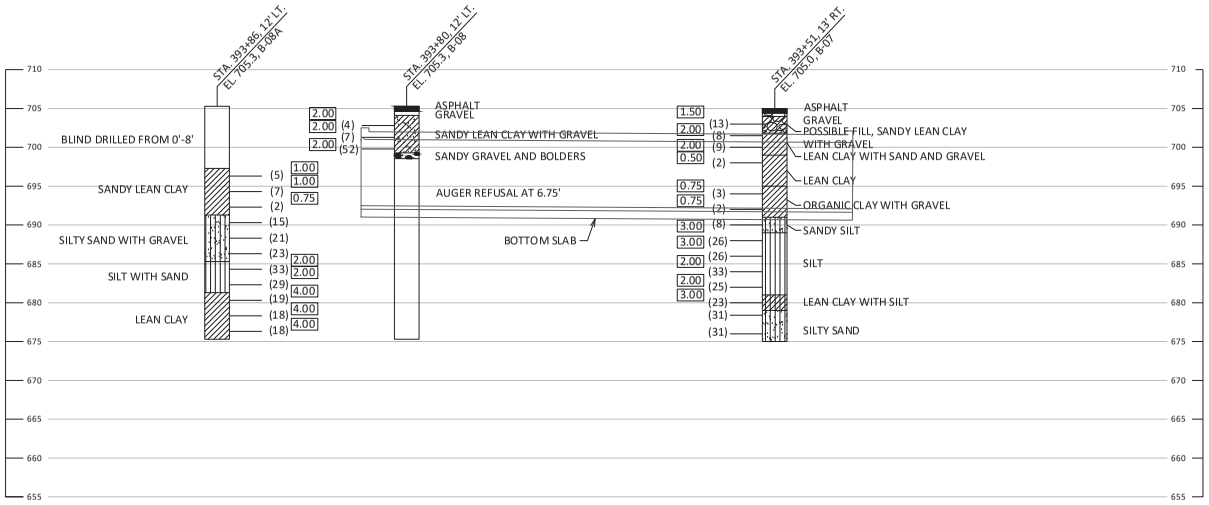

Addendum No. 01
ID 4540-34-71
Added Sheet 290L
November 19, 2024

STATE PROJECT NUMBER

4540-34-71

MATERIAL SYMBOLS

ASPHALT, TOPSOIL, PEAT, CONCRETE, FILL, GRAVEL, SAND, CLAY, SILT, BOULDERS OR COBBLES, LIMESTONE, BEDROCK (UNKNOWN), SHALE, SANDSTONE, IGNEOUS/ META

LEGEND OF BORING

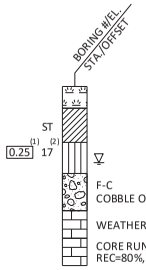

(1) UNCONFINED STRENGTH, AS DETERMINED BY A POCKET PENETROMETER (TSF)

(2) UNLESS OTHERWISE, SPECIFIED THE SPT 'N' VALUE IS BASED ON AASHTO T-206, STANDARD PENETRATION TEST. THE SPT 'N' VALUE PRESENTED HAS NOT BEEN CORRECTED FOR OVERBURDEN PRESSURE OR HAMMER EFFICIENCY.

GROUND WATER ELEVATION

AT TIME OF DRILLING
END OF DRILLING
AFTER DRILLING

ABBREVIATIONS

F-FINE M-MEDIUM C-COARSE ST-SHELBY TUBE

SUBSURFACE EXPLORATION FOR FOUNDATION DESIGN AND BIDDERS INFORMATION

BORINGS WERE COMPLETED AT POINTS APPROXIMATELY AS INDICATED ON THIS DRAWING TO OBTAIN INFORMATION CONCERNING THE CHARACTER OF SUBSURFACE MATERIALS FOUND AT THE SITE. BECAUSE THE INVESTIGATED DEPTHS ARE LIMITED AND THE AREA OF THE BORINGS IS VERY SMALL IN RELATION TO THE ENTIRE SITE, THE WISCONSIN DEPARTMENT OF TRANSPORTATION DOES NOT WARRANT SIMILAR SUBSURFACE CONDITIONS BELOW, BETWEEN, OR BEYOND THESE BORINGS. VARIATIONS IN SOIL CONDITIONS SHOULD BE EXPECTED AND FLUCTUATIONS IN GROUNDWATER LEVELS MAY OCCUR.

NO.	DATE	REVISION	BY

STATE OF WISCONSIN
DEPARTMENT OF TRANSPORTATION

STRUCTURE C-59-118

DRAWN BY CMW PLANS CK'D KGW

SUBSURFACE EXPLORATION

SHEET 6 OF 6

290L

SCALE =

8

8

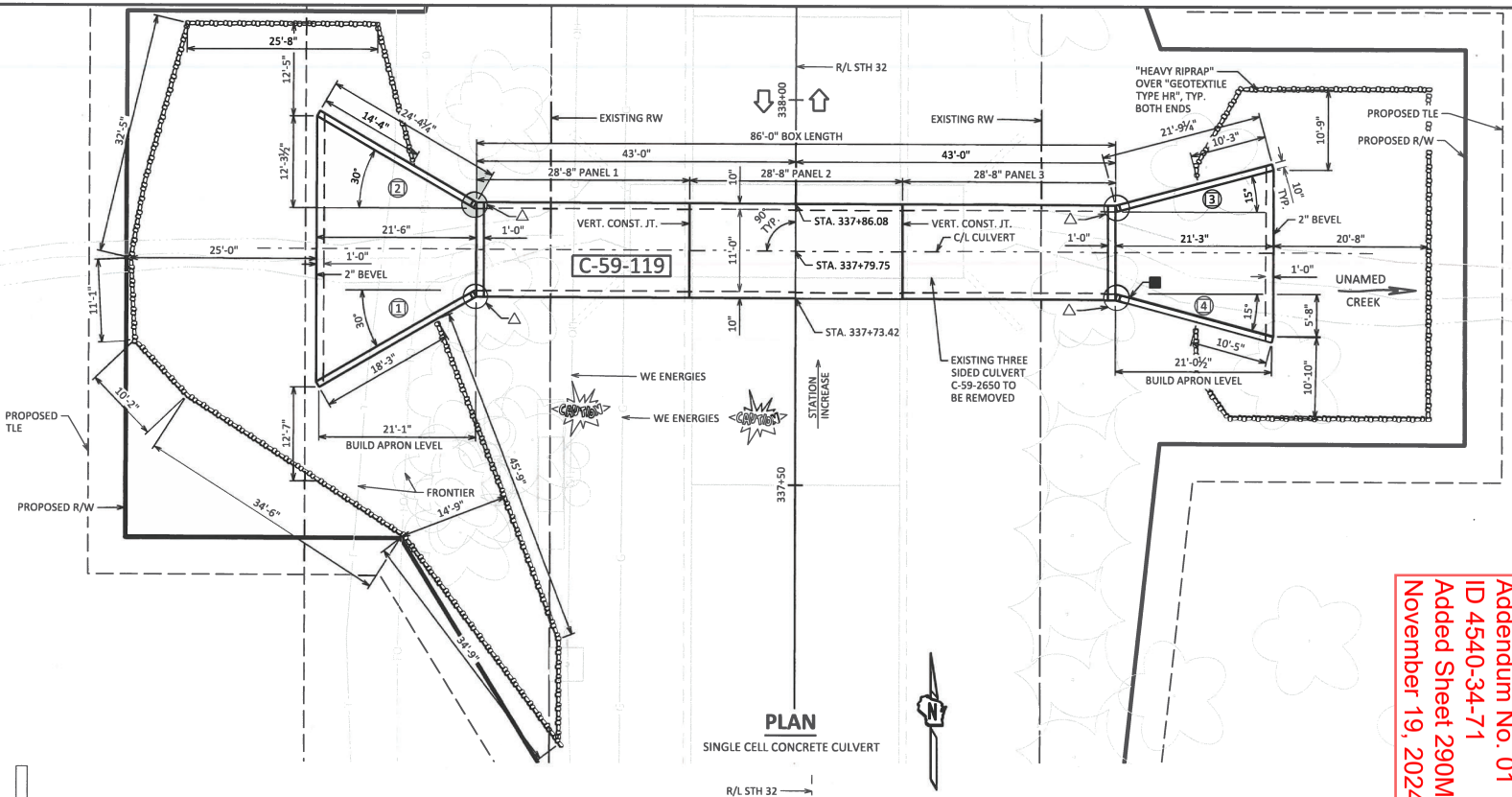

PLAN

SINGLE CELL CONCRETE CULVERT

Addendum No. 01
ID 4540-34-71
Added Sheet 290M
November 19, 2024

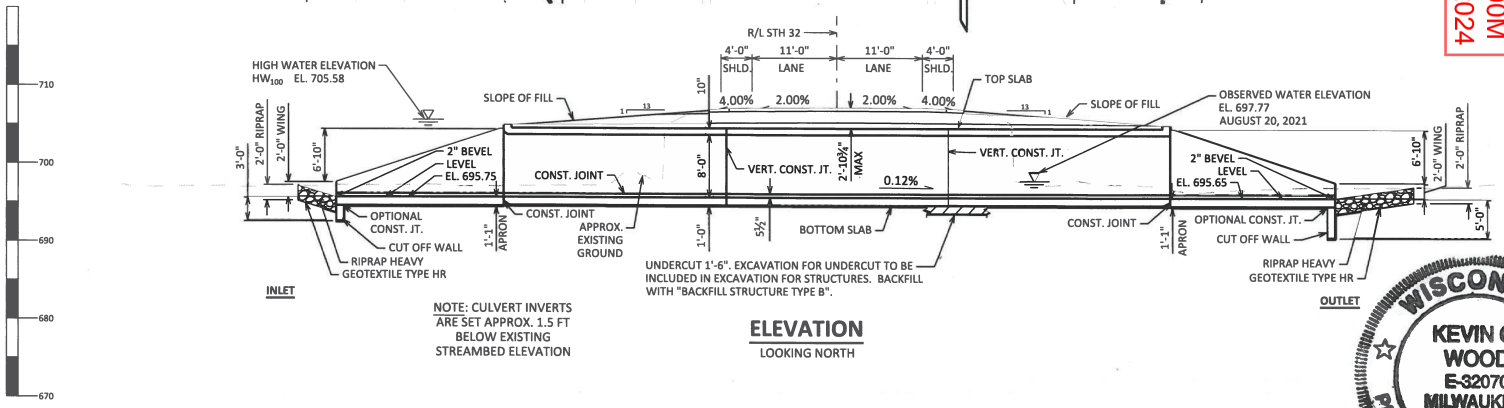

NOTE: CULVERT INVERTS ARE SET APPROX. 1.5 FT BELOW EXISTING STREAMBED ELEVATION

ELEVATION

LOOKING NORTH

LEGEND

- ■ SEE NAME PLATE LOCATION SHEET 2
- △ SEE CORNER DETAILS ON SHEET 5
- ◯ INDICATES WING NUMBER

BENCH MARK

NO.	STATION	DESCRIPTION	ELEV.
1005	337+25 (30' LT)	SPIKE IN PP	706.51

STATE PROJECT NUMBER

4540-34-71

DESIGN DATA

LIVE LOAD:

DESIGN LOADING: HL-93
INVENTORY RATING: RF = 1.21
OPERATING RATING: RF = 1.57
WISCONSIN STANDARD PERMIT VEHICLE (WIS-SPV): 250 (KIPS)

EARTHLOAD:

DESIGNED FOR 2.5 TO 3.0 FT. OF FILL.

MATERIAL PROPERTIES:

CONCRETE MASONRY——— f'_c = 3,500 PSI
BAR STEEL REINFORCEMENT——— f_y = 60,000 PSI

HYDRAULIC DATA

100-YEAR FREQUENCY:

Q_{100}= 350 C.F.S.
V_{100}= 4.9 F.P.S.
HW_{100}= 705.58 EL.
WATERWAY AREA = 71.4 SQ. FT.
DRAINAGE AREA = 1.28 SQ. MI.
ROADWAY OVERTOPPING = N/A
SCOUR CRITICAL CODE = 8

2-YEAR FREQUENCY:

Q_2= 90 C.F.S.
V_2= 2.47 F.P.S.
HW_2= 700.62 EL.

TRAFFIC DATA

FEATURE ON: STH 32

ADT = 3450 (2046)
R.D.S. = 60 MPH

LIST OF DRAWINGS

1. GENERAL PLAN
2. GENERAL NOTES & QUANTITIES
3. BOX DETAILS
4. APRON DETAILS
5. WINGWALL DETAILS
6. SUBSURFACE EXPLORATION

STRUCTURE DESIGN CONTACTS:

CONSULTANT CONTACT: KEVIN WOOD (414) 259-1500
BOS CONTACT: AARON BONK (608) 261-0261

NO.	DATE	REVISION	BY

GRAEF
116 S. Adams Street, Suite 201
Green Bay, WI 54301
920 / 592 9440
920 / 592 9445 fax
www.graef-usa.com

STATE OF WISCONSIN
DEPARTMENT OF TRANSPORATION

ACCEPTED SDR 08/05/24
CHIEF STRUCTURES DESIGN ENGINEER DATE

WISCONSIN KEVIN G. WOOD E-32070 MILWAUKEE, WI PROFESSIONAL ENGINEER
May 31, 2024

STRUCTURE C-59-119

STH 32 OVER UNNAMED CREEK

COUNTY SHEBOYGAN TOWN LIMA

DESIGN SPEC. AASHTO LRFD BRIDGE DESIGN SPECIFICATION

DESIGNED BY	WAR	DESIGNED CK'D	KGW	DRAWN BY	CMW	PLANS CK'D	KGW

GENERAL PLAN

SHEET 1 OF 6

290M

I.D. 4540-34-00 DATE:

SCALE =

8

8

STATE PROJECT NUMBER
4540-34-71

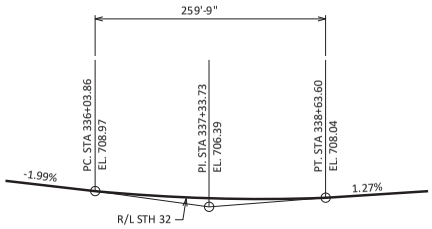

PROFILE GRADE LINE

(BEST FIT DEVELOPED FROM EXISTING TOPOGRAPHY SURVEY)

TOTAL ESTIMATED QUANTITIES

BID ITEM NUMBER	BID ITEMS	UNIT	TOTALS
203.0220	REMOVING STRUCTURE C-59-2650	EACH	1
206.2001	EXCAVATION FOR STRUCTURES CULVERTS C-59-119	EACH	1
210.2500	BACKFILL STRUCTURE TYPE B	TON	2,065
504.0100	CONCRETE MASONRY CULVERTS	CY	180
505.0400	BAR STEEL REINFORCEMENT HS STRUCTURES	LB	20,440
505.0600	BAR STEEL REINFORCEMENT HS COATED STRUCTURES	LB	3,460
516.0500	RUBBERIZED MEMBRANE WATERPROOFING	SY	32
606.0300	RIPRAP HEAVY	CY	240
645.0120	GEOTEXTILE TYPE HR	SY	463
	NON-BID ITEMS		
	FILLER	SIZE	¾"
	NAME PLATE	EACH	1

GENERAL NOTES

DRAWINGS SHALL NOT BE SCALED.

BAR STEEL REINFORCEMENT SHALL BE EMBEDDED 2" CLEAR UNLESS OTHERWISE SHOWN OR NOTED.

THE FIRST OR FIRST TWO DIGITS OF THE BAR MARK SIGNIFIES THE BAR SIZE.

BEVEL EXPOSED EDGES OF CONCRETE 3/4" UNLESS OTHERWISE NOTED.

EXISTING STRUCTURE C-59-2650 IS A THREE SIDED CULVERT, 10'-0" WIDE X 6'-6" HEIGHT WITH A LENGTH OF 44'-0". THE ENTIRE STRUCTURE IS TO BE REMOVED.

THE UPPER LIMITS OF "EXCAVATION FOR STRUCTURES CULVERTS C-59-119" SHALL BE THE EXISTING GROUNDLINE.

ALL VOLUME WHICH CANNOT BE PLACED BEFORE CULVERT CONSTRUCTION AND NOT OCCUPIED BY THE NEW STRUCTURE SHALL BE BACKFILLED WITH STRUCTURE BACKFILL WITHIN THE LENGTH OF THE CULVERT INCLUDING THE APRON WING WALLS.

THE QUANTITY FOR BACKFILL STRUCTURE IS CALCULATED BASED ON THE DETAIL SHOWN IN THE PLANS.

THE CONCRETE IN THE CUTOFF WALLS MAY BE PLACED UNDERWATER IF THE EXCAVATION CANNOT BE DEWATERED.

PLACE 18" (MIN.) WIDE SHEET OF "RUBBERIZED MEMBRANE WATERPROOFING" ON TOP SLAB OVER ALL CONSTRUCTION JOINTS AND EXTEND DOWN TO BOTTOM OF OUTSIDE WALLS.

THE CONTRACTOR MAY FURNISH A PRECAST CONCRETE BOX CULVERT IN LIEU OF THE CAST-IN-PLACE BOX CULVERT WITH THE ACCEPTANCE OF THE SHOP DRAWINGS BY THE STRUCTURES DESIGN SECTION. THE PRECAST CONCRETE BOX CULVERT SHALL CONFORM TO PRECAST DETAILS ON CHAPTER 36 STANDARDS OF THE CURRENT WISC. DOT BRIDGE MANUAL. PAYMENT FOR THE PRECAST CULVERT SHALL BE BASED ON THE QUANTITIES AND PRICES BID FOR THE ITEMS LISTED IN THE "TOTAL ESTIMATED QUANTITIES".

IN LIEU OF CONSTRUCTION JOINTS IN THE BOTTOM SLAB, THE CONTRACTOR MAY PROVIDE 2" DEEP SAW CUTS WITHIN 12 HOURS AFTER POURING.

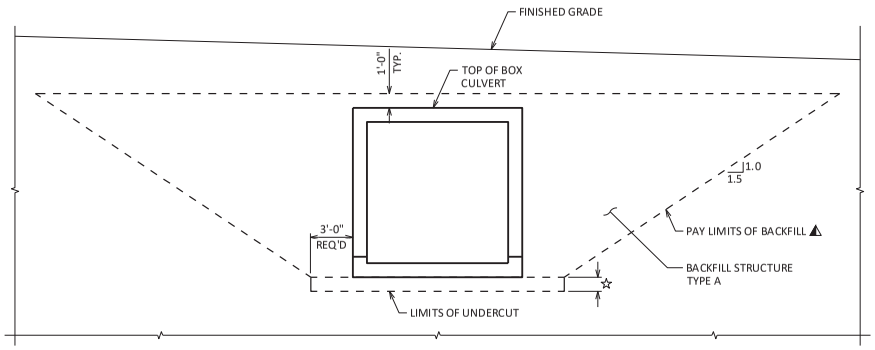

TYPICAL SECTION THRU BOX CULVERT

LEGENDS

⚠ BACKFILL PAY LIMITS. BACKFILL BEYOND PAY LIMITS SHALL BE INCIDENTAL TO EXCAVATION FOR STRUCTURES. LIMITS OF EXCAVATION SHALL BE DETERMINED BY THE CONTRACTOR.

☆ UNDERCUT 1'-6". EXCAVATION FOR UNDER CUT IS TO BE INCLUDED IN EXCAVATION FOR STRUCTURES. BACKFILL WITH "BACKFILL STRUCTURE TYPE B".

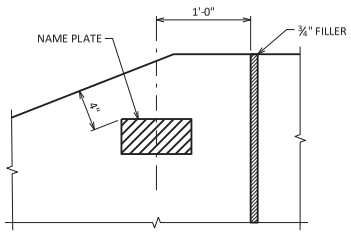

NAME PLATE DETAIL

WING 4

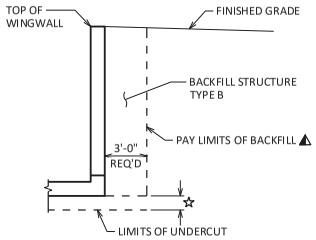

TYPICAL SECTION THRU BOX CULVERT WINGWALL

Addendum No. 01
ID 4540-34-71
Added Sheet 290N
November 19, 2024

NO.	DATE	REVISION	BY

STATE OF WISCONSIN
DEPARTMENT OF TRANSPORTATION

STRUCTURE C-59-119

DRAWN BY WAR | PLANS CK'D KGW

GENERAL NOTES & QUANTITIES

SHEET 2 OF 6

290N

SCALE =

8

8

STATE PROJECT NUMBER
4540-34-71

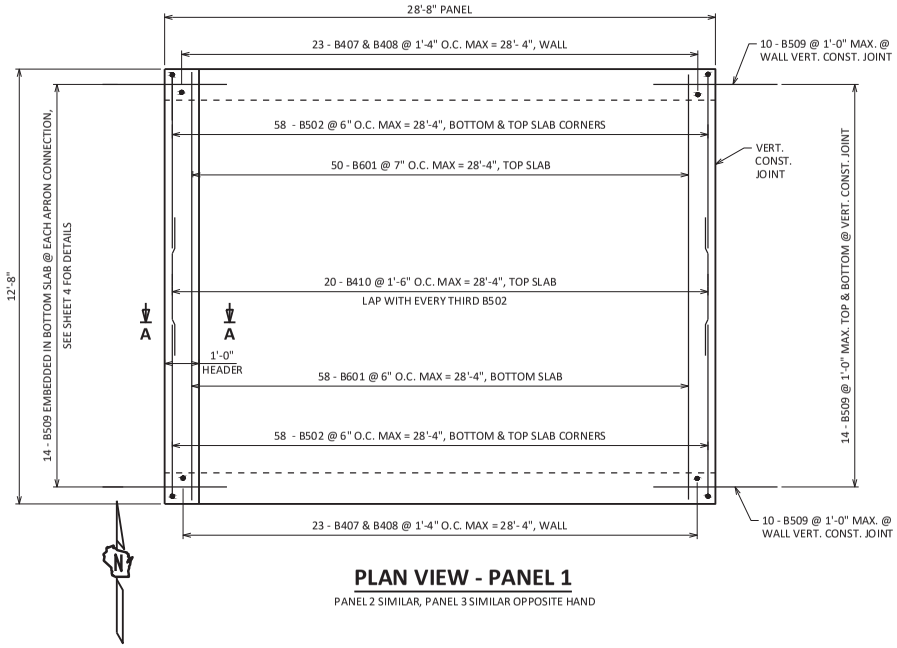

PLAN VIEW - PANEL 1

PANEL 2 SIMILAR, PANEL 3 SIMILAR OPPOSITE HAND

Addendum No. 01
ID 4540-34-71
Added Sheet 290O
November 19, 2024

BILL OF BARS

NOTE: THE FIRST OR FIRST TWO DIGITS OF THE BAR MARK SIGNIFIES THE BAR SIZE.

BAR MARK	COAT	NO. REQ'D.	LENGTH	BENT	BAR SERIES	LOCATION
B601		324	12'-4"			TOP & BOTTOM SLAB TRANS.
B502		696	11'-0"	X		TOP & BOTTOM CORNER
B403		141	28'-4"			LONG.
B304		18	2'-7"	X		INLET HEADER
B305		18	2'-10"	X		OUTLET HEADER
B406		4	12'-4"			HEADER
B407		138	2'-8"			WALL BOTTOM SLAB VERT.
B408		138	8'-0"			EXTERIOR WALL VERT.
B509		124	4'-0"			VERT. CONST. JT. & APRON DOWELS
B410		60	4'-10"			TOP SLAB TRANS.

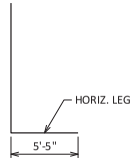

B502

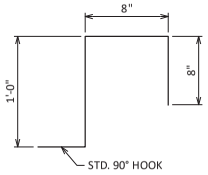

B304

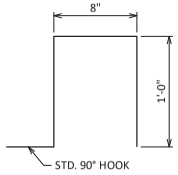

B305

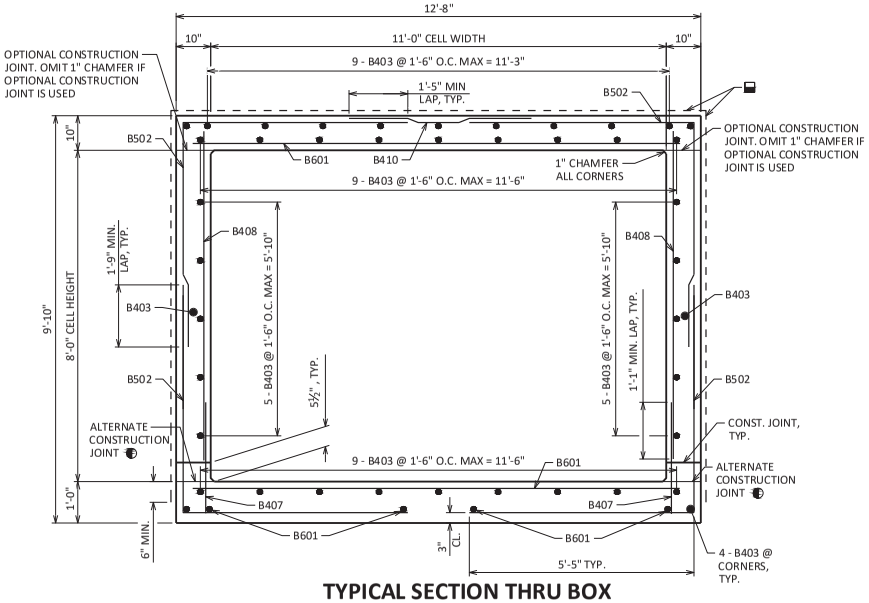

TYPICAL SECTION THRU BOX

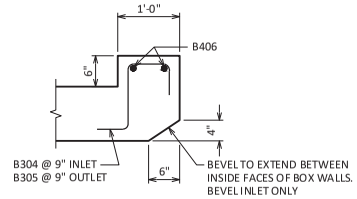

SECTION A-A THRU HEADER

INLET SHOWN , OUTLET SIMILAR

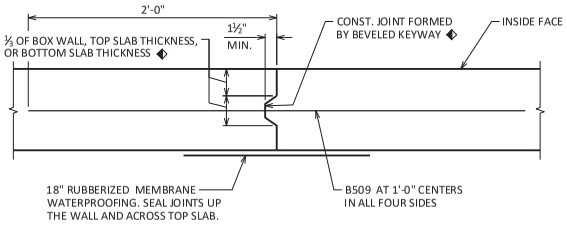

VERTICAL CONSTRUCTION JOINT

LEGEND

- ALTERNATE CONSTRUCTION JOINT. OMIT 1" CHAMFER IF ALTERNATE CONST. JOINT IS USED.
- IN LIEU OF CONSTRUCTION JOINTS IN THE BOTTOM SLAB, THE CONTRACTOR MAY USE 2" DEEP SAW CUTS WITHIN 12 HOURS AFTER POURING. #5 BARS 4'-0" AT 1'-0" CENTERS REQUIRED.
- 18" MIN. WIDTH RUBBERIZED MEMBRANE WATERPROOFING UP WALLS AND ACROSS TOP SLAB AT VERTICAL CONST. JOINTS. EXTEND 6" MIN. BELOW TOP OF BOTTOM SLAB.

NO.	DATE	REVISION	BY

STATE OF WISCONSIN
DEPARTMENT OF TRANSPORTATION

STRUCTURE C-59-119

DRAWN BY WAR PLANS CK'D KGW

BOX DETAILS

SHEET 3 OF 6

290O

SCALE =

8

8

STATE PROJECT NUMBER
4540-34-71

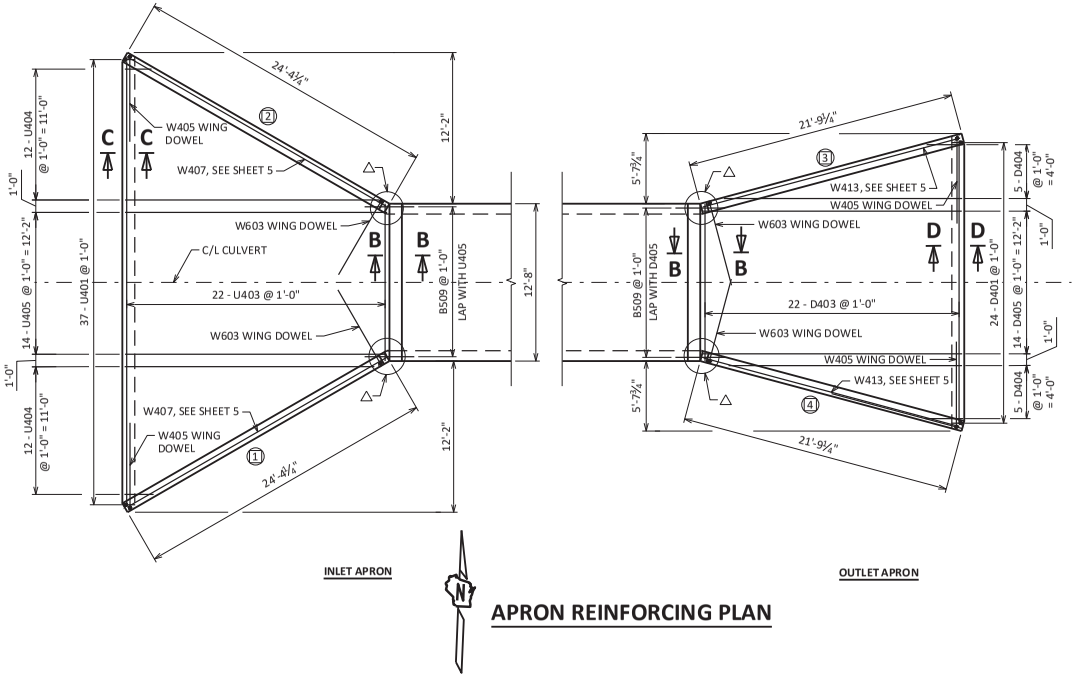

APRON REINFORCING PLAN

Addendum No. 01
ID 4540-34-71
Added Sheet 290P
November 19, 2024

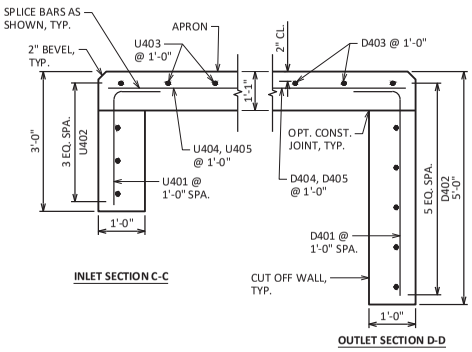

CUT OFF WALLS

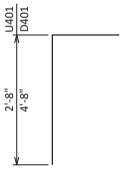

D401, U401

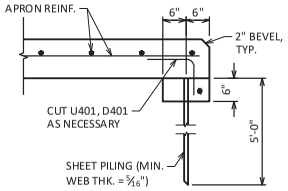

ALTERNATE CUT OFF WALLS

THE ABOVE ALTERNATIVE MAY BE USED IN LIEU OF CAST-IN-PLACE CONCRETE CUT OFF WALLS. PAYMENT WILL BE BASED ON THE CONCRETE CUT-OFF WALLS.

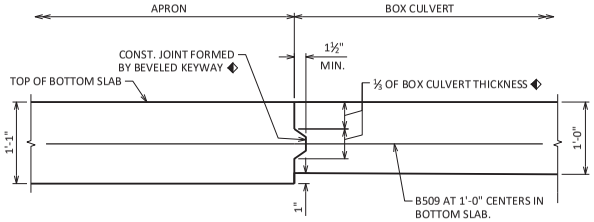

SECTION B-B APRON CONNECTION DETAIL

BILL OF BARS INLET

NOTE: THE FIRST OR FIRST TWO DIGITS OF THE BAR MARK SIGNIFIES THE BAR SIZE.

BAR MARK	COAT	NO. REQ'D.	LENGTH	BENT	BAR SERIES	LOCATION
U401		38	3'-6"	X		CUT OFF WALL VERT.
U402		4	36'-5"			CUT OFF WALL HORIZ.
U403		22	23'-10"		▲	TRANS. APRON BARS
U404		24	10'-10"		▲	LONG. APRON
U405		14	21'-2"			LONG. APRON

BILL OF BARS OUTLET

BAR MARK	COAT	NO. REQ'D.	LENGTH	BENT	BAR SERIES	LOCATION
D401		24	5'-6"	X		CUT OFF WALL VERT.
D402		6	23'-5"			CUT OFF WALL HORIZ.
D403		22	17'-3"		▲	TRANS. APRON BARS
D404		10	10'-3"		▲	LONG. APRON
D405		14	20'-11"			LONG. APRON

▲ LENGTH SHOWN FOR BAR IS AN AVERAGE AND SHOULD ONLY BE USED FOR BAR WEIGHT CALCULATIONS. SEE BAR SERIES TABLE FOR ACTUAL LENGTHS.

BAR SERIES TABLE

BUNDLE AND TAG EACH SERIES SEPARATELY.

BAR MARK	NO. REQ'D.	LENGTH
U403	1 SERIES OF 22	12'-2" TO 35'-6"
U404	2 SERIES OF 12	1'-3" TO 20'-5"

BAR SERIES TABLE

BUNDLE AND TAG EACH SERIES SEPARATELY.

BAR MARK	NO. REQ'D.	LENGTH
D403	1 SERIES OF 22	12'-2" TO 22'-4"
D404	2 SERIES OF 5	1'-3" TO 19'-3"

LEGEND

◆ IN LIEU OF CONSTRUCTION JOINTS IN THE BOTTOM SLAB, THE CONTRACTOR MAY USE 2" DEEP SAW CUTS WITHIN 12 HOURS AFTER POURING. #5 BARS 4'-0" AT 1'-0" CENTERS REQUIRED.

△ SEE CORNER DETAILS SHEET 5

NO.	DATE	REVISION	BY

STATE OF WISCONSIN
DEPARTMENT OF TRANSPORTATION

STRUCTURE C-59-119

DRAWN BY WAR | PLANS CK'D KGW

APRON DETAILS

SHEET 4 OF 6

290P

SCALE =

8

8

STATE PROJECT NUMBER

4540-34-71

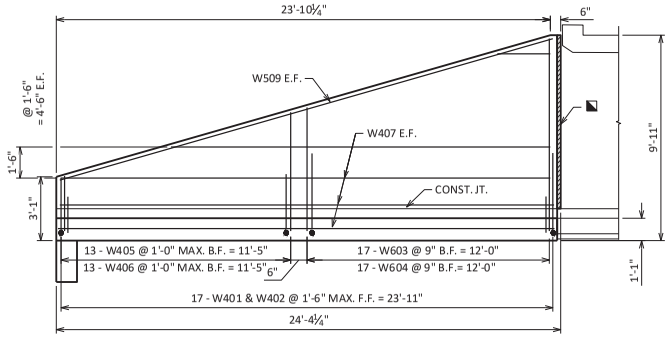

WINGS 1 & 2

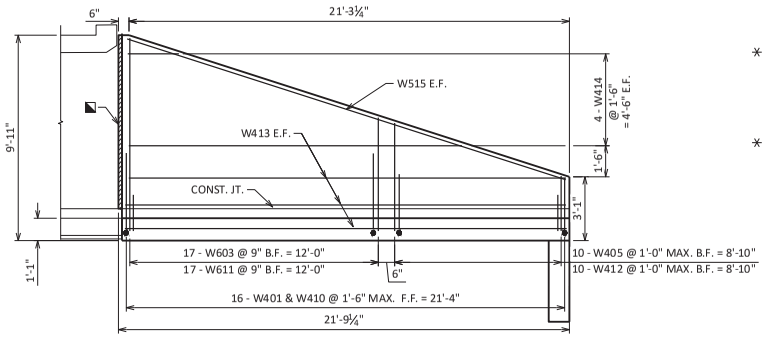

WING 3 & 4

BILL OF BARS

NOTE: THE FIRST OR FIRST TWO DIGITS OF THE BAR MARK SIGNIFIES THE BAR SIZE.

	BAR MARK	COAT	NO. REQ'D.	LENGTH	BENT	BAR SERIES	LOCATION
*	W401	X	66	2'-10"			WING F.F. VERT. DOWEL
	W402	X	34	4'-9"		▲	WING 1 & 2 - F.F. VERT.
	W603	X	68	12'-1"	X		WING B.F. VERT. DOWEL
	W604	X	34	6'-5"		▲	WING 1 & 2 - B.F. VERT.
*	W405	X	46	10'-9"	X		WING DOWEL B.F.
	W406	X	26	3'-0"		▲	WING 1 & 2 - B.F. VERT.
	W407	X	14	23'-11"			WING 1 & 2 - HORIZ.
	W408	X	16	10'-7"		▲	WING 1 & 2 - HORIZ.
	W509	X	4	24'-9"			WING 1 & 2 - TOP
*	W410	X	32	4'-9"		▲	WING 3 & 4 - F.F. VERT.
	W611	X	34	6'-2"		▲	WING 3 & 4 - B.F. VERT.
	W412	X	20	2'-7"		▲	WING 3 & 4 - B.F. VERT.
	W413	X	14	21'-4"			WING 3 & 4 - HORIZ.
	W414	X	16	9'-4"		▲	WING 3 & 4 - HORIZ.
	W515	X	4	23'-3"			WING 3 & 4 - TOP

▲ LENGTH SHOWN FOR BARS IS AN AVERAGE AND SHOULD ONLY BE USED FOR BAR WEIGHT CALCULATIONS. SEE BAR SERIES ABLE FOR ACTUAL LENGTHS.

BAR SERIES TABLE

BUNDLE AND TAG EACH SERIES SEPARATELY.

BAR MARK	NO. REQ'D.	LENGTH
W402	2 SERIES OF 17	1'-3" TO 8'-2"
W604	2 SERIES OF 17	4'-8" TO 8'-2"
W406	2 SERIES OF 13	1'-3" TO 4'-8"
W408	4 SERIES OF 4	2'-8" TO 18'-5"
W410	2 SERIES OF 16	1'-3" TO 8'-2"
W611	2 SERIES OF 17	4'-2" TO 8'-2"
W412	2 SERIES OF 10	1'-3" TO 3'-11"
W414	4 SERIES OF 4	2'-5" TO 16'-2"

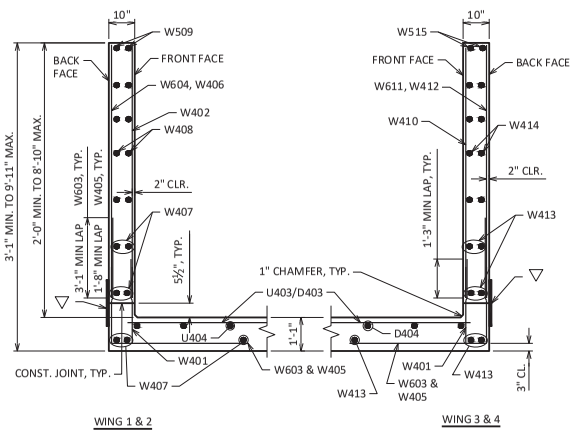

SECTION THRU WINGWALLS

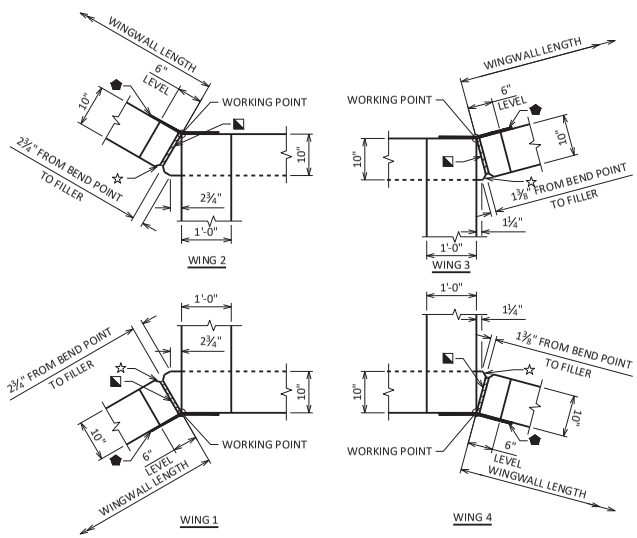

CORNER DETAILS

W603, W405 *

LEGEND

- ◪ ¾" FILLER TO EXTEND FROM HORIZONTAL CONSTRUCTION JOINT TO TOP OF WING. FILLER INCLUDED IN WING LENGTH.
- ⬟ 18-INCH RUBBERIZED MEMBRANE WATERPROOFING EXTEND FROM HORIZ. CONST. JT. TO TOP OF WALL (FLUSH WITH FACE OF CONCRETE)
- ▽ 18" MIN. WIDTH RUBBERIZED MEMBRANE WATERPROOFING ALONG HORIZ. CONSTR. JT. IN WING
- * FIELD TRIM VERTICAL LEG TO FIT NEAR WING TIP. TOUCH-UP CUT END WITH EPOXY.
- ☆ 1" BEVEL

Addendum No. 01
ID 4540-34-71
Added Sheet 290Q
November 19, 2024

NO.	DATE	REVISION	BY

STATE OF WISCONSIN
DEPARTMENT OF TRANSPORTATION

STRUCTURE C-59-119

DRAWN BY WAR PLANS CK'D KGW

WINGWALL DETAILS

SHEET 5 OF 6

290Q

8

8

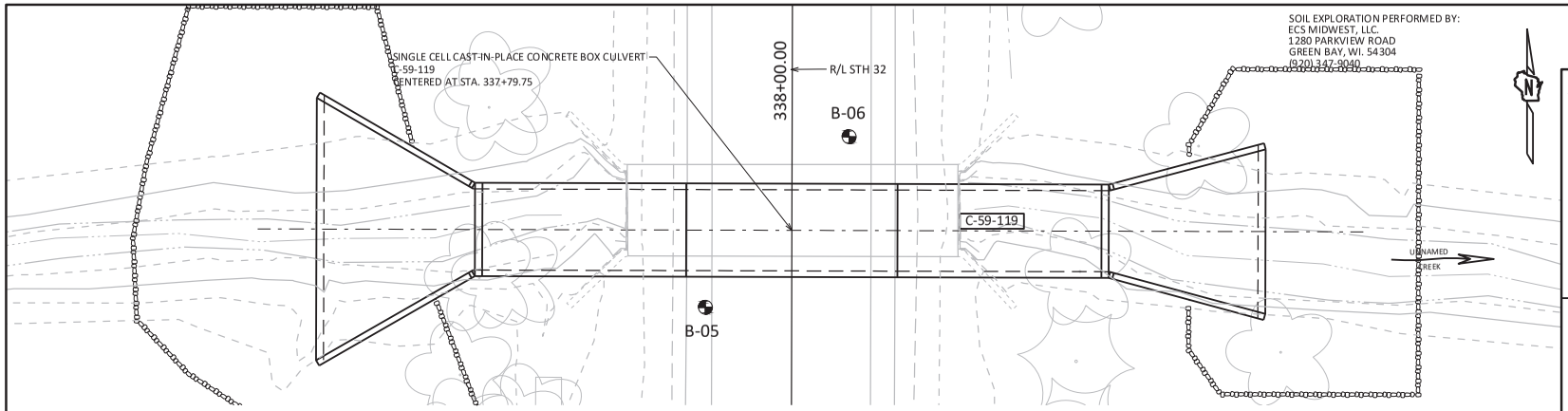

SOIL EXPLORATION PERFORMED BY:
ECS MIDWEST, LLC.
1280 PARKVIEW ROAD
GREEN BAY, WI. 54304
(920) 347-9040

PLAN

BORING #	DATE COMPLETED	NORTHING (Y)	EASTING (X)
B-05	5/12/2022	137129.7	187624.0
B-06	5/12/2022	137152.9	187643.4
BORINGS COMPLETED BY: ECS59-CREW 1			
REPORT COMPLETED BY: ECS MIDWEST, LLC			
ALL COORDINATES REFERENCED TO WISCR NAD 83(2011)		SHEBOYGAN COUNTY	

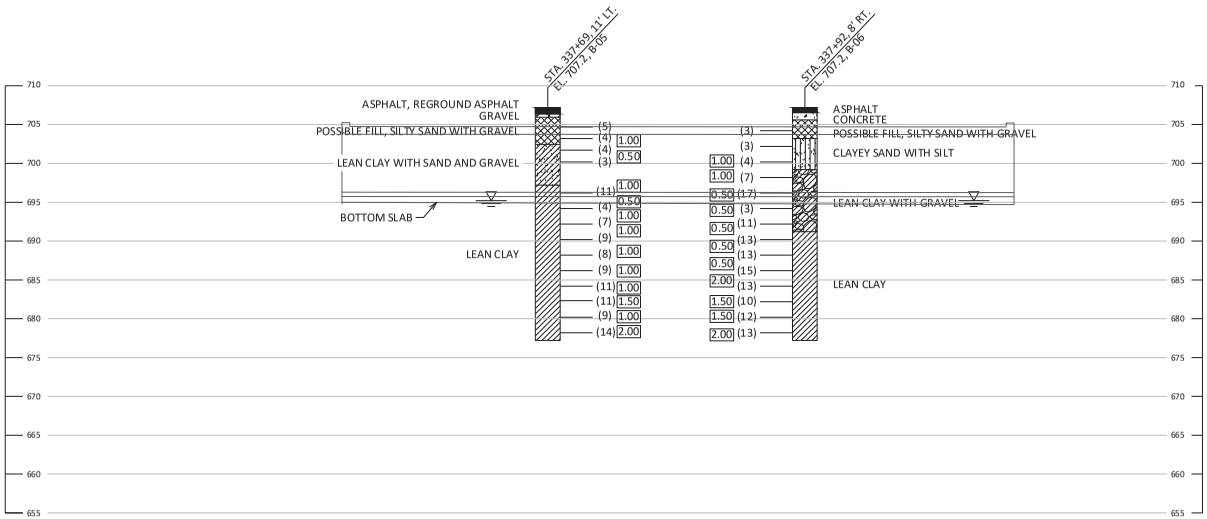

Addendum No. 01
ID 4540-34-71
Added Sheet 290R
November 19, 2024

STATE PROJECT NUMBER

4540-34-71

MATERIAL SYMBOLS

ASPHALT, TOPSOIL, PEAT, CONCRETE, FILL, GRAVEL, SAND, CLAY, SILT, BOULDERS OR COBBLES, LIMESTONE, BEDROCK (UNKNOWN), SHALE, SANDSTONE, IGNEOUS/ META

LEGEND OF BORING

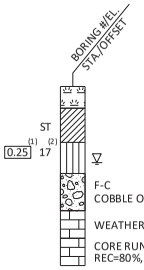

(1) UNCONFINED STRENGTH, AS DETERMINED BY A POCKET PENETROMETER (TSF)

(2) UNLESS OTHERWISE, SPECIFIED THE SPT 'N' VALUE IS BASED ON AASHTO T-206, STANDARD PENETRATION TEST. THE SPT 'N' VALUE PRESENTED HAS NOT BEEN CORRECTED FOR OVERBURDEN PRESSURE OR HAMMER EFFICIENCY.

GROUND WATER ELEVATION

- AT TIME OF DRILLING
- END OF DRILLING
- AFTER DRILLING

ABBREVIATIONS

F-FINE M-MEDIUM C-COARSE ST-SHELBY TUBE

SUBSURFACE EXPLORATION FOR FOUNDATION DESIGN AND BIDDERS INFORMATION

BORINGS WERE COMPLETED AT POINTS APPROXIMATELY AS INDICATED ON THIS DRAWING TO OBTAIN INFORMATION CONCERNING THE CHARACTER OF SUBSURFACE MATERIALS FOUND AT THE SITE. BECAUSE THE INVESTIGATED DEPTHS ARE LIMITED AND THE AREA OF THE BORINGS IS VERY SMALL IN RELATION TO THE ENTIRE SITE, THE WISCONSIN DEPARTMENT OF TRANSPORTATION DOES NOT WARRANT SIMILAR SUBSURFACE CONDITIONS BELOW, BETWEEN, OR BEYOND THESE BORINGS. VARIATIONS IN SOIL CONDITIONS SHOULD BE EXPECTED AND FLUCTUATIONS IN GROUNDWATER LEVELS MAY OCCUR.

NO.	DATE	REVISION	BY

STATE OF WISCONSIN
DEPARTMENT OF TRANSPORTATION

STRUCTURE C-59-119

DRAWN BY CMW PLANS CK'D KGW

SUBSURFACE EXPLORATION

SHEET 6 OF 6

290R

SCALE =

8

8

STATE PROJECT NUMBER
4540-34-71

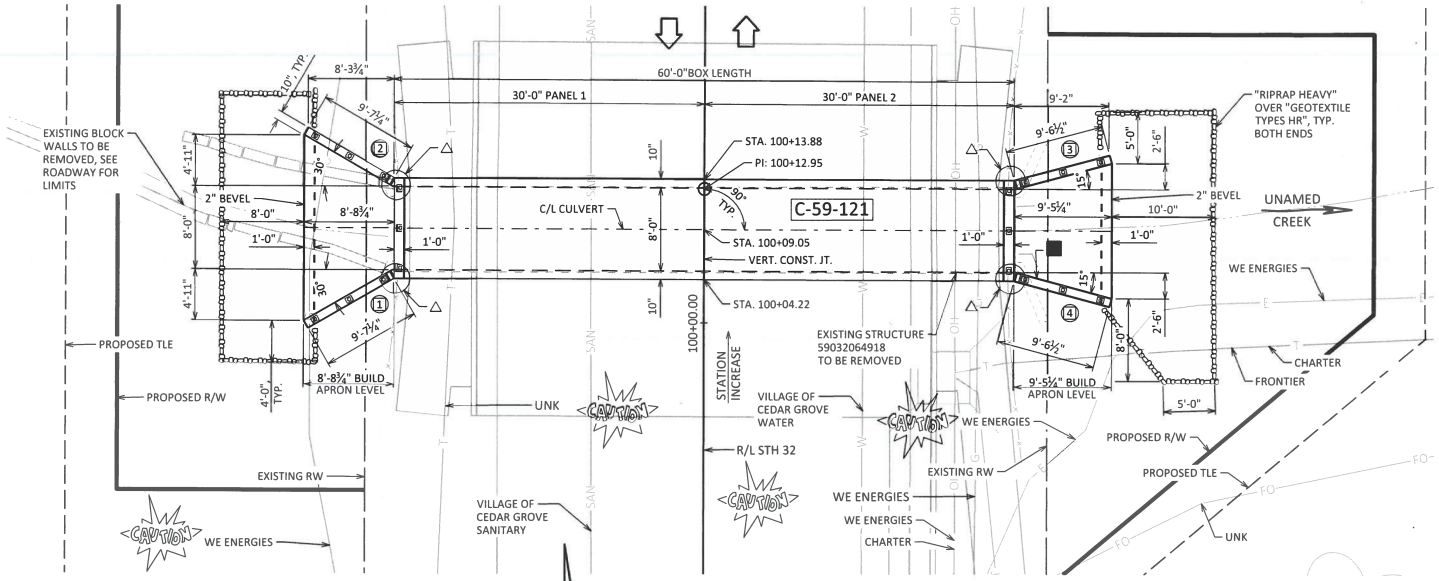

PLAN

SINGLE CELL CONCRETE CULVERT

DESIGN DATA

LIVE LOAD:

DESIGN LOADING: HL-93
INVENTORY RATING: RF = 1.14
OPERATING RATING: RF = 1.48
WISCONSIN STANDARD PERMIT VEHICLE (WIS-SPV): 230 (KIPS)

EARTHLOAD:

DESIGNED FOR 0.5 TO 1.0 FT. OF FILL.

MATERIAL PROPERTIES:

CONCRETE MASONRY — f'_c = 3,500 PSI
BAR STEEL REINFORCEMENT — f_y = 60,000 PSI

HYDRAULIC DATA

100-YEAR FREQUENCY:

Q_{100}= 234 C.F.S.
V_{100}= 9.8 F.P.S.
HW_{100}= 688.09 EL.
WATERWAY AREA = 17.5 SQ. FT.
DRAINAGE AREA = 0.48 SQ. MI.
ROADWAY OVERTOPPING = N/A
SCOUR CRITICAL CODE = 8

2-YEAR FREQUENCY:

Q_2= 43.7 C.F.S.
V_2= 4.3 F.P.S.
HW_2= 684.5 EL.

TRAFFIC DATA

FEATURE ON: STH 32

ADT = 3450 (2046)
R.D.S. = 40 MPH

LIST OF DRAWINGS

1. GENERAL PLAN
2. GENERAL NOTES & QUANTITIES
3. BOX DETAILS
4. APRON DETAILS
5. WINGWALL DETAILS
6. SUBSURFACE EXPLORATION
7. RAILING DETAILS

Addendum No. 01
ID 4540-34-71
Added Sheet 290S
November 19, 2024

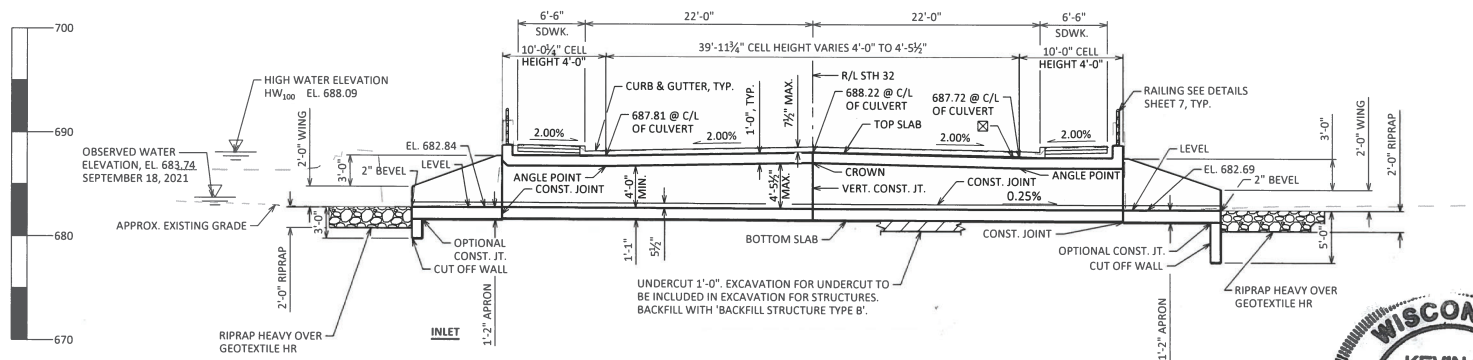

ELEVATION

LOOKING NORTH

LEGEND

- ■ NAME PLATE LOCATION SHEET 2
- △ SEE CORNER DETAILS ON "DETAILS" SHEET 5
- ◯ INDICATES WING NUMBER
- ⊠ SHEET MEMBRANE WATERPROOFING

BENCH MARK

NO.	STATION	DESCRIPTION	ELEV.
1002	102+57 (24' RT)	CHS 'X' NW FLANGE BOLT ON HYD.	691.50

STRUCTURE DESIGN CONTACTS:

CONSULTANT CONTACT: KEVIN WOOD (414) 259-1500
BOS CONTACT: AARON BONK (608) 261-0261

NO.	DATE	REVISION	BY

GRAEF
1150 Springhurst Drive, Suite 201
Green Bay, WI 54304-5947
920 / 592 9440
920 / 592 9445 fax
www.graef-usa.com

STATE OF WISCONSIN
DEPARTMENT OF TRANSPORATION

ACCEPTED SDR 08/05/24
CHIEF STRUCTURES DESIGN ENGINEER DATE

WISCONSIN KEVIN G. WOOD E-32070 MILWAUKEE, WI PROFESSIONAL ENGINEER
May 31, 2024

STRUCTURE C-59-121

STH 32 OVER UNNAMED CREEK

COUNTY	VILLAGE
SHEBOYGAN	CEDAR GROVE

DESIGN SPEC.
AASHTO LRFD BRIDGE DESIGN SPECIFICATION

DESIGNED BY	DESIGNED CK'D	DRAWN BY	PLANS CK'D
CWG	WAR	CMW	KGW

GENERAL PLAN

SHEET 1 OF 7

290S

I.D. 4540-34-00 DATE:

SCALE =

8

8

STATE PROJECT NUMBER
4540-34-71

TOTAL ESTIMATED QUANTITIES

BID ITEM NUMBER	BID ITEMS	UNIT	TOTALS
203.0220	REMOVING STRUCTURE 59032064918	EACH	1
206.2001	EXCAVATION FOR STRUCTURES CULVERTS C-59-121	EACH	1
210.2500	BACKFILL STRUCTURE TYPE B	TON	600
504.0100	CONCRETE MASONRY CULVERTS	CY	84
505.0400	BAR STEEL REINFORCEMENT HS STRUCTURES	LB	6,940
505.0600	BAR STEEL REINFORCEMENT HS COATED STRUCTURES	LB	790
513.2001	RAILING PIPE	LF	58
516.0500	RUBBERIZED MEMBRANE WATERPROOFING	SY	12
516.0600.S	SHEET MEMBRANE WATERPROOFING FOR ASPHALT OVERLAY	SY	84
606.0300	RIPRAP HEAVY	CY	37
645.0120	GEOTEXTILE TYPE HR	SY	88
	NON-BID ITEMS		
	FILLER	SIZE	¾"
	NAME PLATE	EACH	1

GENERAL NOTES

DRAWINGS SHALL NOT BE SCALED.

BAR STEEL REINFORCEMENT SHALL BE EMBEDDED 2" CLEAR UNLESS OTHERWISE SHOWN OR NOTED.

THE FIRST OR FIRST TWO DIGITS OF THE BAR MARK SIGNIFIES THE BAR SIZE.

BEVEL EXPOSED EDGES OF CONCRETE ¾" UNLESS OTHERWISE NOTED.

EXISTING STRUCTURE 59032064918 AT STATION 100+09 IS A FOUR SIDED CULVERT, 6'-0" WIDE X 4'-0" HEIGHT WITH A LENGTH OF 44'-0". THE ENTIRE STRUCTURE IS TO BE REMOVED.

THE UPPER LIMITS OF "EXCAVATION FOR STRUCTURES CULVERTS C-59-121" SHALL BE THE EXISTING GROUND LINE.

ALL VOLUME WHICH CANNOT BE PLACED BEFORE CULVERT CONSTRUCTION AND NOT OCCUPIED BY THE NEW STRUCTURE SHALL BE BACKFILLED WITH STRUCTURE BACKFILL WITHIN THE LENGTH OF THE CULVERT INCLUDING THE APRON WING WALLS.

THE QUANTITY FOR BACKFILL STRUCTURE IS CALCULATED BASED ON THE DETAIL SHOWN IN THE PLANS.

THE CONCRETE IN THE CUTOFF WALLS MAY BE PLACED UNDERWATER IF THE EXCAVATION CANNOT BE DEWATERED.

PLACE "SHEET MEMBRANE WATERPROOFING FOR ASPHALT OVERLAY" ON TOP SLAB AND EXTEND 6" BELOW TOP OF BOTTOM SLAB.

PLACE 18" (MIN.) WIDE SHEET OF "RUBBERIZED MEMBRANE WATERPROOFING" ON CONSTRUCTION JOINTS AND EXTEND DOWN TO BOTTOM OF OUTSIDE WALLS. OVERLAP WITH "SHEET MEMBRANE WATERPROOFING FOR ASPHALT OVERLAY" A MINIMUM OF 5".

IN LIEU OF CONSTRUCTION JOINTS I THE BOTTOM SLAB, THE CONTRACTOR MAY PROVIDE 2" DEEP SAW CUTS WITHIN 12 HOURS AFTER POURING.

PRECAST BARREL SECTIONS, WINGWALLS, HEADERS, CUTOFF WALLS, AND APRON ALTERNATIVES ARE NOT ALLOWED.

Addendum No. 01
ID 4540-34-71
Added Sheet 290T
November 19, 2024

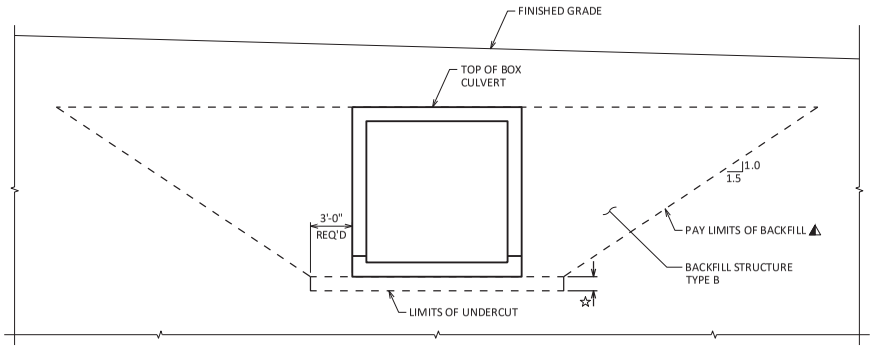

TYPICAL SECTION THRU BOX CULVERT

LEGENDS

⚠ BACKFILL PAY LIMITS. BACKFILL BEYOND PAY LIMITS SHALL BE INCIDENTAL TO EXCAVATION FOR STRUCTURES. LIMITS OF EXCAVATION SHALL BE DETERMINED BY THE CONTRACTOR.

☆ UNDER CUT 1-'0". EXCAVATION FOR UNDER CUT IS TO BE INCLUDED IN EXCAVATION FOR STRUCTURES. BACKFILL WITH "BACKFILL STRUCTURE TYPE B".

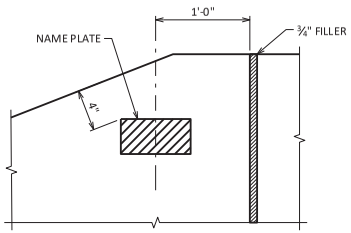

NAME PLATE DETAIL

WING 4

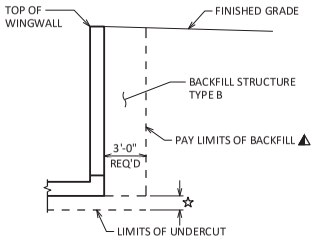

TYPICAL SECTION THRU BOX CULVERT WINGWALL

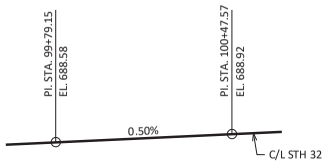

PROFILE GRADE LINE

(BEST FIT DEVELOPED FROM EXISTING TOPOGRAPHY SURVEY)

NO.	DATE	REVISION	BY

STATE OF WISCONSIN
DEPARTMENT OF TRANSPORTATION

STRUCTURE C-59-121

DRAWN BY CWG | PLANS CK'D KGW

GENERAL NOTES & QUANTITIES

SHEET 2 OF 7

290T

8

8

STATE PROJECT NUMBER
4540-34-71

Addendum No. 01
ID 4540-34-71
Added Sheet 290U
November 19, 2024

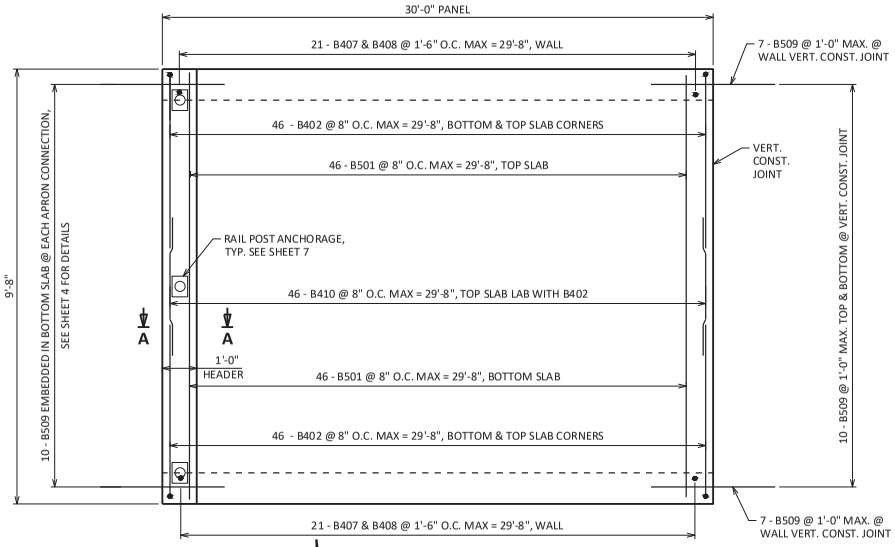

PLAN VIEW - PANEL 1

PANEL 2 SIMILAR OPP. HAND

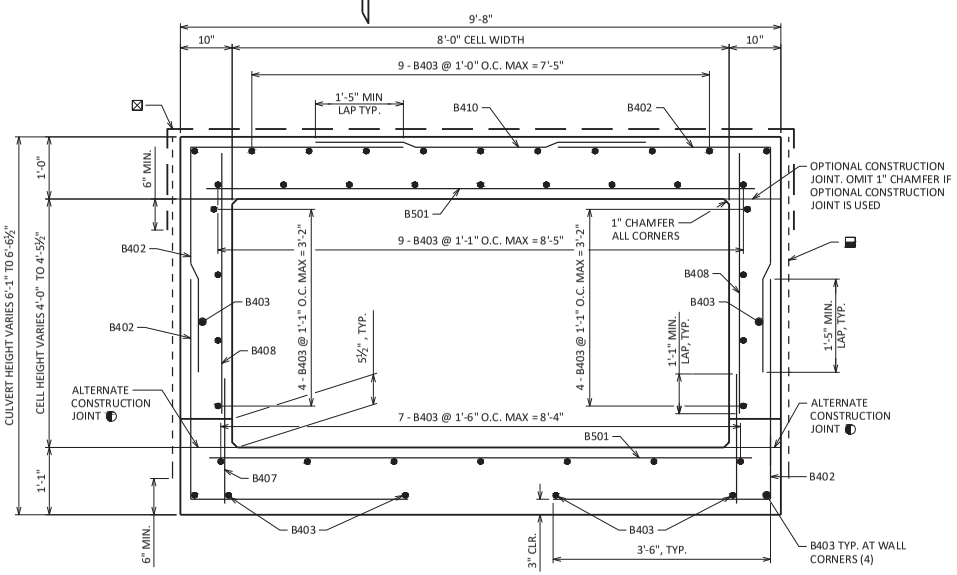

TYPICAL SECTION THRU BOX

BILL OF BARS

NOTE: THE FIRST OR FIRST TWO DIGITS OF THE BAR MARK SIGNIFIES THE BAR SIZE.

BAR MARK	COAT	NO. REQ'D.	LENGTH	BENT	BAR SERIES	LOCATION
B501		184	9'-4"			TOP & BOTTOM SLAB TRANS.
B402		368	7'-8"	X		TOP & BOTTOM CORNER
B403		86	29'-8"			LONG.
B304		14	3'-11"	X		INLET HEADER
B305		14	4'-9"	X		OUTLET HEADER
B406		4	9'-4"			HEADER
B407		84	2'-7"			WALL BOTTOM SLAB VERT.
B408		84	4'-8"			EXTERIOR WALL VERT.
B509		54	4'-0"			VERT. CONST. JT. & APRON DOWELS
B410		92	5'-5"			TOP SLAB TRANS.

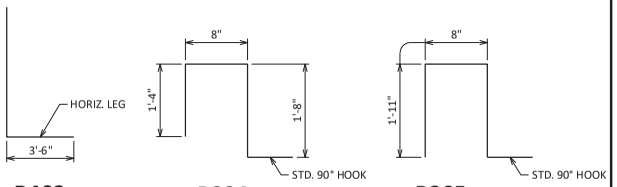

B402 **B304** **B305**

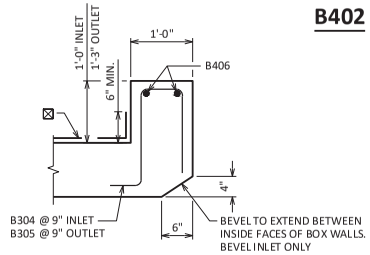

SECTION A-A THRU HEADER

INLET SHOWN , OUTLET SIMILAR

LEGEND

- ALTERNATE CONSTRUCTION JOINT. OMIT 1" CHAMFER IF ALTERNATE CONST. JOINT IS USED.
- IN LIEU OF CONSTRUCTION JOINTS IN THE BOTTOM SLAB, THE CONTRACTOR MAY USE 2" DEEP SAW CUTS WITHIN 12 HOURS AFTER POURING. #5 BARS 4'-0" AT 1'-0" CENTERS REQUIRED.
- 18" MIN. WIDTH RUBBERIZED MEMBRANE WATERPROOFING UP WALLS AND AT VERTICAL CONST. JOINTS. EXTEND 6" MIN. BELOW TOP OF BOTTOM SLAB.
- "SHEET MEMBRANE WATERPROOFING FOR ASPHALT OVERLAYS" ACROSS TOP SLAB. EXTEND 6" ALONG VERTICAL FACE OF HEADERS AND BELOW BOTTOM OF TOP SLAB.

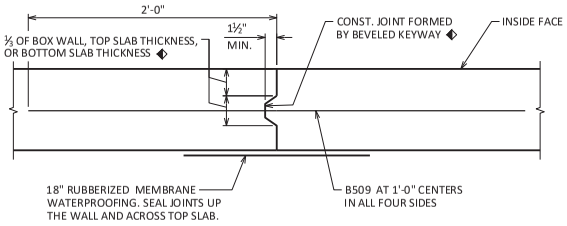

VERTICAL CONSTRUCTION JOINT

NO.	DATE	REVISION	BY

STATE OF WISCONSIN
DEPARTMENT OF TRANSPORTATION

STRUCTURE C-59-121

DRAWN BY CWG | PLANS CK'D KGW

BOX DETAILS

SHEET 3 OF 7

290U

SCALE =

8

8

STATE PROJECT NUMBER

4540-34-71

Addendum No. 01
ID 4540-34-71
Added Sheet 290V
November 19, 2024

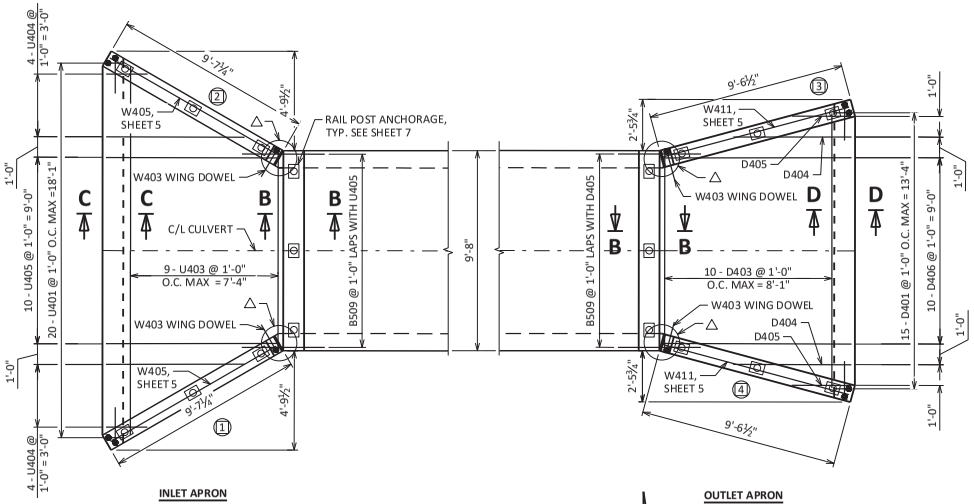

APRON REINFORCING PLAN

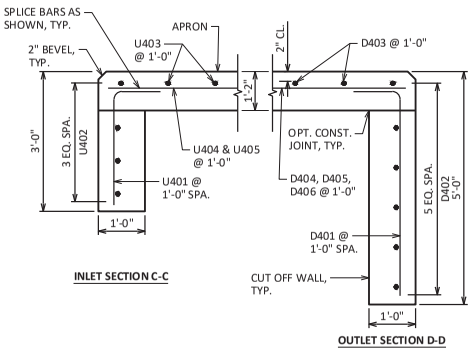

CUT OFF WALLS

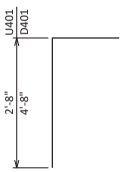

D401, U401

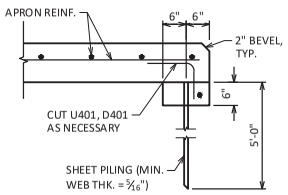

ALTERNATE CUT OFF WALLS

THE ABOVE ALTERNATIVE MAY BE USED IN LIEU OF CAST-IN-PLACE CONCRETE CUT OFF WALLS. PAYMENT WILL BE BASED ON THE CONCRETE CUT-OFF WALLS.

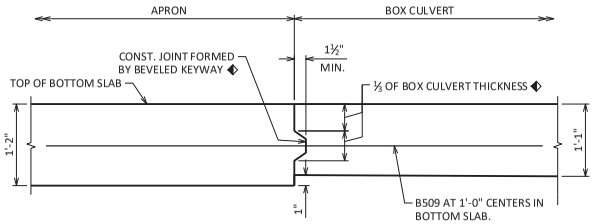

SECTION B-B APRON CONNECTION DETAIL

BILL OF BARS INLET

NOTE: THE FIRST OR FIRST TWO DIGITS OF THE BAR MARK SIGNIFIES THE BAR SIZE.

BAR MARK	COAT	NO. REQ'D.	LENGTH	BENT	BAR SERIES	LOCATION
U401		20	3'-6"	X		CUT OFF WALL VERT.
U402		4	18'-1"			CUT OFF WALL HORIZ.
U403		9	13'-7"		▲	TRANS. APRON BARS
U404		8	4'-7"		▲	LONG. APRON
U405		10	8'-4"			LONG. APRON

BILL OF BARS OUTLET

BAR MARK	COAT	NO. REQ'D.	LENGTH	BENT	BAR SERIES	LOCATION
D401		15	5'-6"	X		CUT OFF WALL VERT.
D402		6	13'-4"			CUT OFF WALL HORIZ.
D403		10	11'-2"		▲	TRANS. APRON BARS
D404		2	6'-7"			LONG. APRON
D405		2	2'-8"			LONG. APRON
D406		10	9'-1"			LONG. APRON

▲ LENGTH SHOWN FOR BAR IS AN AVERAGE AND SHOULD ONLY BE USED FOR BAR WEIGHT CALCULATIONS. SEE BAR SERIES TABLE FOR ACTUAL LENGTHS.

BAR SERIES TABLE

BUNDLE AND TAG EACH SERIES SEPARATELY.

BAR MARK	NO. REQ'D.	LENGTH
U403	1 SERIES OF 9	9'-3" TO 17'-11"
U404	2 SERIES OF 4	2'-0" TO 7'-2"

BAR SERIES TABLE

BUNDLE AND TAG EACH SERIES SEPARATELY.

BAR MARK	NO. REQ'D.	LENGTH
D403	1 SERIES OF 10	9'-4" TO 13'-0"

LEGEND

◆ IN LIEU OF CONSTRUCTION JOINTS IN THE BOTTOM SLAB, THE CONTRACTOR MAY USE 2" DEEP SAW CUTS WITHIN 12 HOURS AFTER POURING. #5 BARS 4'-0" AT 1'-0" CENTERS REQUIRED.

△ SEE CORNER DETAILS SHEET 5

NO.	DATE	REVISION	BY

STATE OF WISCONSIN
DEPARTMENT OF TRANSPORTATION

STRUCTURE C-59-121

DRAWN BY CWG | PLANS CK'D KGW

APRON DETAILS

SHEET 4 OF 7

290V

SCALE =

8

8

STATE PROJECT NUMBER
4540-34-71

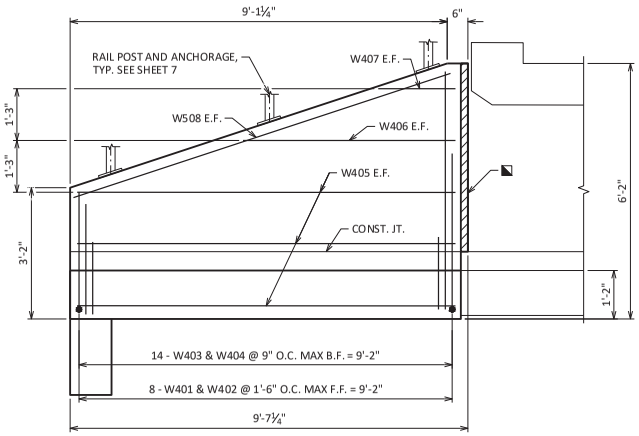

WINGS 1 & 2

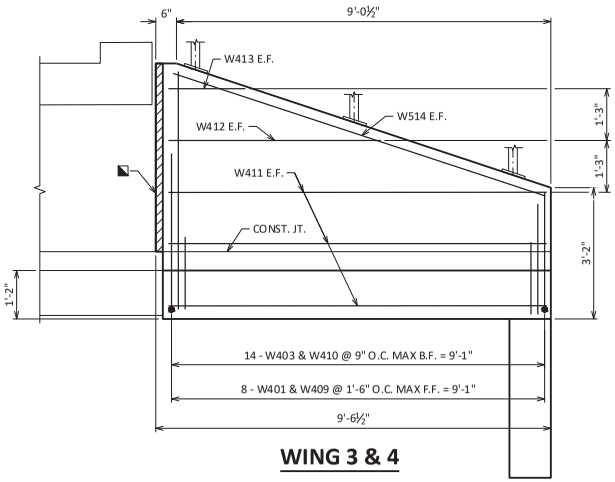

WING 3 & 4

BILL OF BARS

NOTE: THE FIRST OR FIRST TWO DIGITS OF THE BAR MARK SIGNIFIES THE BAR SIZE.

	BAR MARK	COAT	NO. REQ'D.	LENGTH	BENT	BAR SERIES	LOCATION
*	W401	X	32	3'-0"			WING F.F. VERT. DOWEL
	W402	X	16	2'-9"		▲	WING 1 & 2 - F.F. VERT.
*	W403	X	56	8'-0"	X		WING B.F. VERT. DOWEL
	W404	X	28	2'-9"		▲	WING 1 & 2 - B.F. VERT.
	W405	X	12	9'-2"			WING 1 & 2 - HORIZ.
	W406	X	4	5'-10"			WING 1 & 2 - HORIZ.
	W407	X	4	2'-0"			WING 1 & 2 - HORIZ.
	W508	X	4	9'-8"			WING 1 & 2 - TOP
	W409	X	16	2'-9"		▲	WING 3 & 4 - F.F. VERT.
	W410	X	28	2'-9"		▲	WING 3 & 4 - B.F. VERT.
	W411	X	12	9'-1"			WING 3 & 4 - HORIZ.
	W412	X	4	5'-9"			WING 3 & 4 - HORIZ.
	W413	X	4	2'-0"			WING 3 & 4 - HORIZ.
	W514	X	4	9'-6"			WING 3 & 4 - TOP

▲ LENGTH SHOWN FOR BARS IS AN AVERAGE AND SHOULD ONLY BE USED FOR BAR WEIGHT CALCULATIONS. SEE BAR SERIES ABLE FOR ACTUAL LENGTHS.

BAR SERIES TABLE

BUNDLE AND TAG EACH SERIES SEPARATELY.

BAR MARK	NO. REQ'D.	LENGTH
W402	2 SERIES OF 8	1'-3" TO 4'-3"
W404	2 SERIES OF 14	1'-3" TO 4'-3"
W409	2 SERIES OF 8	1'-3" TO 4'-3"
W410	2 SERIES OF 14	1'-3" TO 4'-3"

Addendum No. 01
ID 4540-34-71
Added Sheet 290W
November 19, 2024

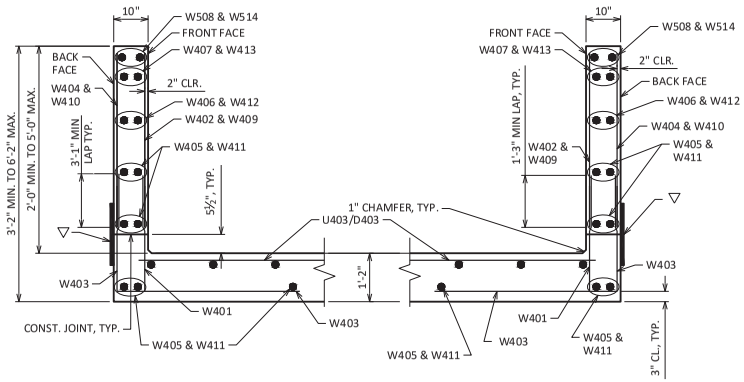

SECTION THRU WINGWALLS

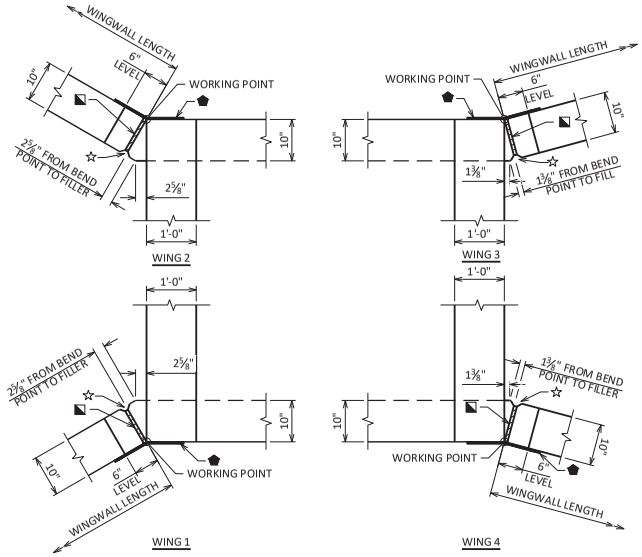

CORNER DETAILS

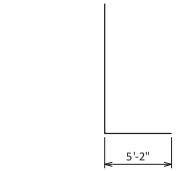

W403 *

LEGEND

- ◪ ¾" FILLER TO EXTEND FROM HORIZONTAL CONSTRUCTION JOINT TO TOP OF WING. FILLER INCLUDED IN WING LENGTH.
- ⬟ 18-INCH RUBBERIZED MEMBRANE WATERPROOFING EXTEND FROM HORIZ. CONST. JT. TO TOP OF WALL (FLUSH WITH FACE OF CONCRETE)
- ▽ 18" MIN. WIDTH RUBBERIZED MEMBRANE WATERPROOFING ALONG HORIZ. CONSTR. JT. IN WING
- * FIELD TRIM VERTICAL LEG TO FIT NEAR WING TIP. TOUCH-UP CUT END WITH EPOXY.
- ☆ 1" BEVEL

NO.	DATE	REVISION	BY

STATE OF WISCONSIN
DEPARTMENT OF TRANSPORTATION

STRUCTURE C-59-121

DRAWN BY CWG | PLANS CK'D KGW

WINGWALL DETAILS

SHEET 5 OF 7

290W

8

8

STATE PROJECT NUMBER

4540-34-71

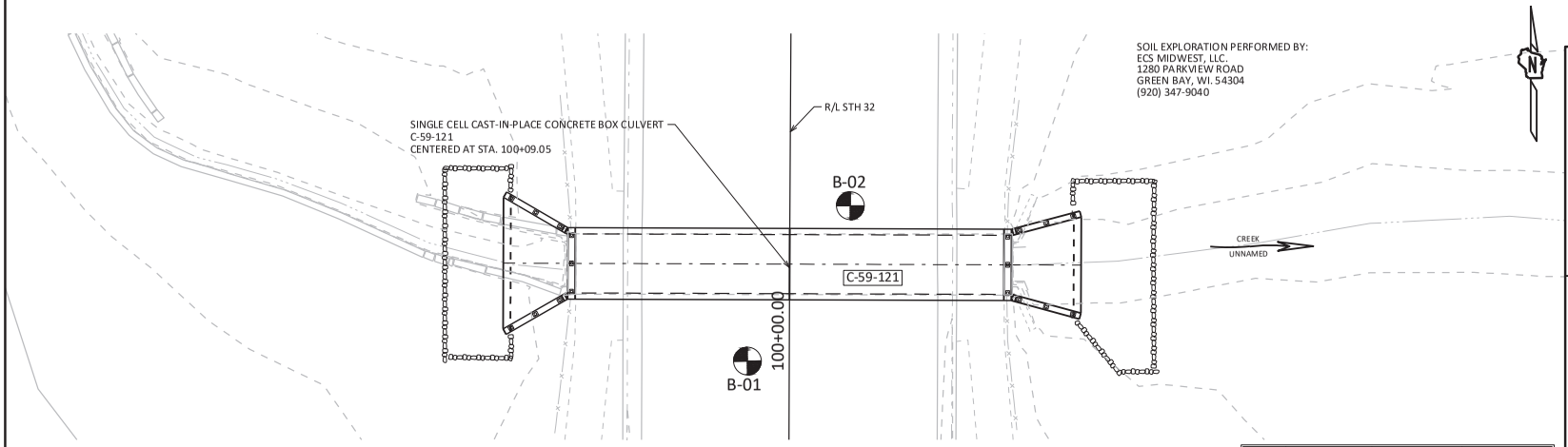

PLAN

BORING #	DATE COMPLETED	NORTHING (Y)	EASTING (X)
B-01	5/3/2022	113807.8	190361.2
B-02	5/3/2022	113828.9	190375.1
BORINGS COMPLETED BY: ECS59-CREW 1			
REPORT COMPLETED BY: ECS MIDWEST, LLC			
ALL COORDINATES REFERENCED TO WISCR NAD 83(2011) SHEBOYGAN COUNTY			

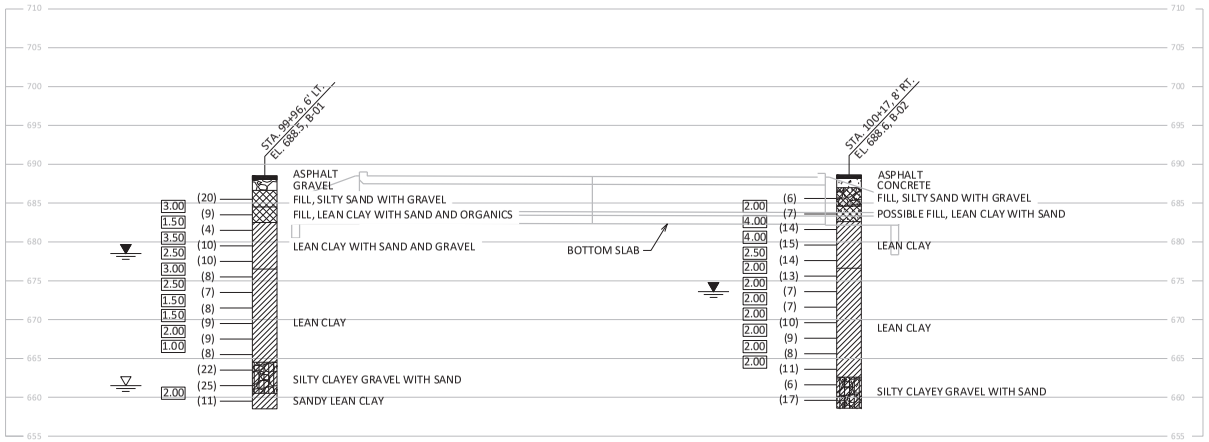

Addendum No. 01
ID 4540-34-71
Added Sheet 290X
November 19, 2024

MATERIAL SYMBOLS

ASPHALT, TOPSOIL, PEAT, CONCRETE, FILL, GRAVEL, SAND, CLAY, SILT, BOULDERS OR COBBLES, LIMESTONE, BEDROCK (UNKNOWN), SHALE, SANDSTONE, IGNEOUS/ META

LEGEND OF BORING

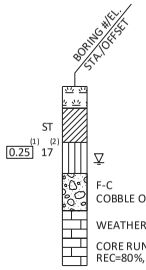

(1) UNCONFINED STRENGTH, AS DETERMINED BY A POCKET PENETROMETER (TSF)

(2) UNLESS OTHERWISE, SPECIFIED THE SPT 'N' VALUE IS BASED ON AASHTO T-206, STANDARD PENETRATION TEST. THE SPT 'N' VALUE PRESENTED HAS NOT BEEN CORRECTED FOR OVERBURDEN PRESSURE OR HAMMER EFFICIENCY.

GROUND WATER ELEVATION

AT TIME OF DRILLING
END OF DRILLING
AFTER DRILLING

ABBREVIATIONS

F-FINE M-MEDIUM C-COARSE ST-SHELBY TUBE

SUBSURFACE EXPLORATION FOR FOUNDATION DESIGN AND BIDDERS INFORMATION

BORINGS WERE COMPLETED AT POINTS APPROXIMATELY AS INDICATED ON THIS DRAWING TO OBTAIN INFORMATION CONCERNING THE CHARACTER OF SUBSURFACE MATERIALS FOUND AT THE SITE. BECAUSE THE INVESTIGATED DEPTHS ARE LIMITED AND THE AREA OF THE BORINGS IS VERY SMALL IN RELATION TO THE ENTIRE SITE, THE WISCONSIN DEPARTMENT OF TRANSPORTATION DOES NOT WARRANT SIMILAR SUBSURFACE CONDITIONS BELOW, BETWEEN, OR BEYOND THESE BORINGS. VARIATIONS IN SOIL CONDITIONS SHOULD BE EXPECTED AND FLUCTUATIONS IN GROUNDWATER LEVELS MAY OCCUR.

NO.	DATE	REVISION	BY

STATE OF WISCONSIN
DEPARTMENT OF TRANSPORTATION

STRUCTURE C-59-121

DRAWN BY CMW PLANS CK'D KGW

SUBSURFACE EXPLORATION

SHEET 6 OF 7

290X

SCALE =

8

8

STATE PROJECT NUMBER
4540-34-71

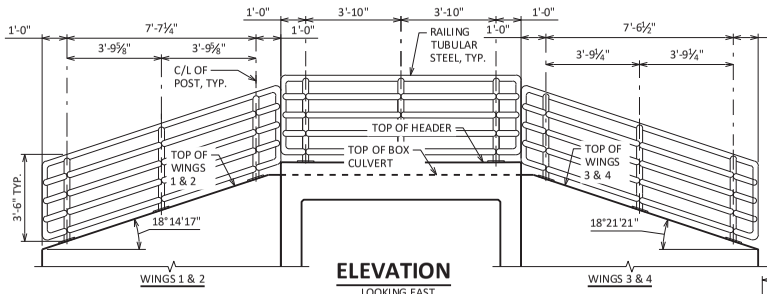

ELEVATION

LOOKING EAST

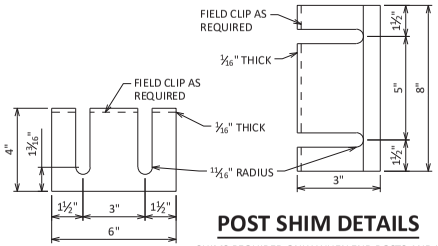

POST SHIM DETAILS

SHIMS REQUIRED ONLY WHEN END POSTS AND LINE POSTS ARE WELDED TO BASE PLATES. PROVIDE 2 SETS PER POST. USE WHERE REQUIRED FOR ALIGNMENT.

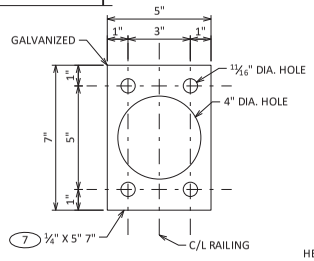

ANCHOR PLATE

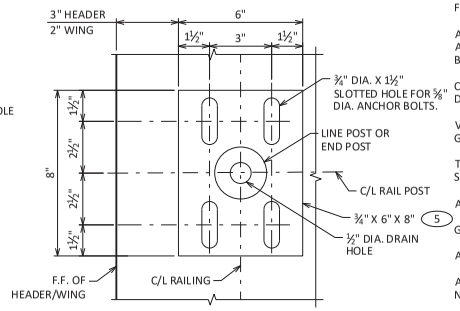

BASE PLATE

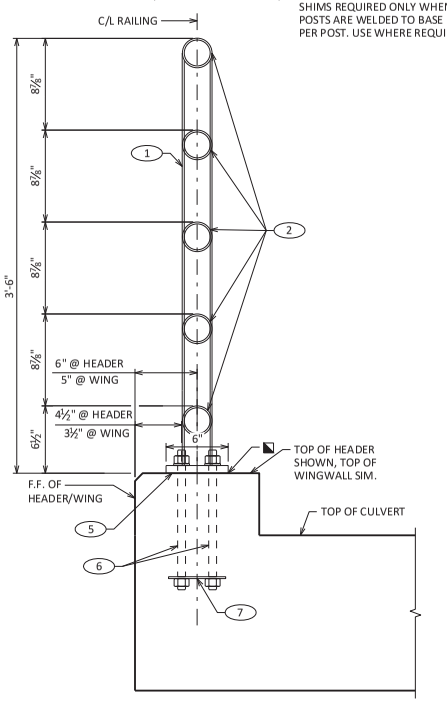

SECTION THRU RAILING

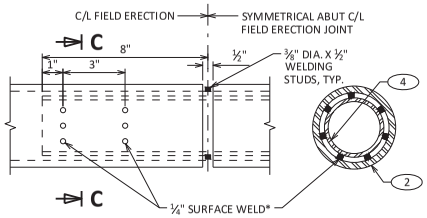

FIELD ERECTION JOINT DETAIL

*MIN ⅜" FLAT SURFACE DIA. PUNCHING OR STUDS MAY BE USED AS AN ALTERNATIVE.

SECTION C-C

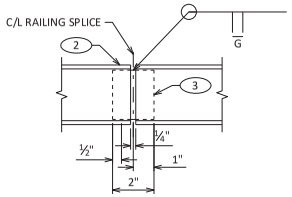

SHOP RAILING SPLICE DETAIL

(LOCATION MUST BE SHOWN ON SHOP DRAWINGS)

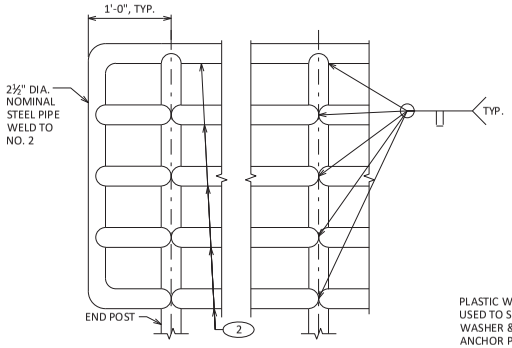

PART ELEVATION OF RAILING

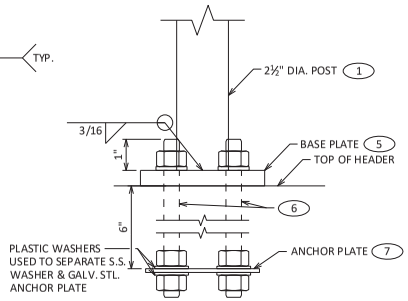

POST ATTACHMENT

UNIT SHALL BE GALVANIZED AFTER FABRICATION

NOTES

COMPLETE ANY REQUIRED WELDING OF COMPONENT BEFORE GALVANIZING.

BID ITEM SHALL BE "RAILING PIPE", WHICH INCLUDES ALL STEEL ITEMS SHOWN.

RAILING SHALL BE CONTINUOUS OVER A MINIMUM OF 3 POSTS WITHOUT SPLICES WHERE POSSIBLE UNLESS SHOWN OTHERWISE.

POST BASE PLATES SHALL BE FLAT WITH ALL SURFACES SMOOTH AND FREE FROM WARP AND ALL EDGES SMOOTH, STRAIGHT AND VERTICAL. ALL PLATE CUTS SHALL BE MACHINE OR MACHINE FLAME CUT.

ALL MATERIAL EXCEPT STAINLESS STEEL THREADED ROD ASSEMBLY (NO.6) SHALL BE GALVANIZED AFTER FABRICATION. PRIOR TO GALVANIZING, ALL STEEL RAILING POSTS AND STEEL TUBING SHALL BE GIVEN A NO. 6 BLAST CLEANING BY S.S.P.C. SPECIFICATIONS.

CUT BOTTOM OF POST TO MAKE POST VERTICAL IN BOTH TRANSVERSE AND LONGITUDINAL DIRECTION.

VENT HOLES SHALL BE DRILLED IN POST AND RAIL MEMBERS AS REQUIRED TO FACILITATE GALVANIZING AND DRAINAGE.

TOUCH-UP PAINTING, TO BE DONE AT COMPLETION OF STEEL RAILING INSTALLATION TO THE SATISFACTION OF THE ENGINEER AT NO EXTRA COST.

ALL POST SPACING ARE MEASURED HORIZONTALLY ALONG THE C/L OF THE POST.

GALVANIZED STEEL SHIMS MAY BE USED UNDER BASE PLATE NO. 5 WHERE REQ'D. FOR ALIGNMENT.

ALL RAILS, POSTS AND SLEEVES ARE STANDARD WEIGHT PIPE, SCHEDULE 40.

ANCHORAGES SHALL BE ACCURATELY PLACED TO PROVIDE CORRECT ALIGNMENT OF RAILING. SET NORMAL TO GRADE.

BASE PLATES, ANCHOR PLATES AND SHIMS TO BE ASTM A709, GRADE 36. ALL GALVANIZED AFTER FABRICATION.

THE NUT SECURING THE POST BASE PLATE TO THE CONCRETE SHALL BE TIGHTENED TO A SNUG FIT AND GIVEN AN ADDITIONAL 1/8 TURN.

PAINT OVER GALVANIZING (EXCEPT NO. 7) WITH AN APPROVED TIE COAT AND TOP COAT AS SPECIFIED IN THE CONTRACT DOCUMENTS. THE RAILING SHALL BE PAINTED AMS STD. COLOR NO. 27038 (BLACK).

INSIDE OF TUBES TO PAINTED AT ALL FIELD ERECTION AND EXPANSION JOINTS.

TOUCH-UP PAINTING TO BE DONE AT COMPLETION OF STEEL RAILING INSTALLATION TO THE SATISFACTION OF THE ENGINEER AT NO EXTRA COST.

LEGEND

1. STRUCTURAL TUBING 2 1/2" DIA. (STANDARD SIZE) (2.875" O.D.). PLACE VERTICAL. WELD TO NO. 2
2. STRUCTURAL TUBING 2 1/2" DIA. (STANDARD SIZE) (2.875" O.D.). WELD TO NO. 5 IF 4" DIA. PIPE SLEEVE IS NOT USED. INSIDE OF THE TUBE TO BE PAINTED AT ALL FIELD ERECTION JOINTS.
3. CIRCULAR SLEEVE FABRICATED FROM STRUCTURAL TUBING 2" DIA. (STANDARD SIZE) (2.375" O.D.)
4. CIRCULAR SLEEVE FABRICATED FROM STRUCTURAL TUBING 2" DIA. (STANDARD SIZE) (2.375" O.D.) (1'-4" @ FIELD ERECTION JTS.)
5. PLATE 3/4" X 6" X 8", WITH 3/4" DIA. X 1 1/2" SLOTTED HOLE FOR ANCHOR BOLTS NO. 6. WELD TO NO. 1 OR PIPE SLEEVE AS SHOWN.
6. 5/8" DIA. X 9" LONG, TYPE 316 STAINLESS STEEL THREADED ROD (MIN. TENSILE STRENGTH - 70 KSI WITH NUT AND WASHERS OF SAME ALLOY GROUP.
7. 1/4" X 5" X 7" ANCHOR PLATE, WITH 11/16" DIA. HOLES FOR ANCHOR BOLTS NO. 6.

◪ CAULK AROUND PERIMETER OF BASE PLATE AND FILL PORTION OF SLOTTED HOLE AROUND ANCHOR BOLT IN SHIM WITH NON-STAINING GRAY NON-BITUMINOUS JOINT SEALER.

Addendum No. 01
ID 4540-34-71
Added Sheet 290Y
November 19, 2024

NO.	DATE	REVISION	BY

STATE OF WISCONSIN
DEPARTMENT OF TRANSPORTATION

STRUCTURE C-59-121

DRAWN BY CWG | PLANS CK'D KGW

RAILING DETAILS

SHEET 7 OF 7

290Y

8

8

Wisconsin Department of Transportation

Division of Transportation Systems Development
Bureau of Project Development
4822 Madison Yards Way, 4th Floor South
Madison, WI 53705

Telephone: (608) 266-1631
Facsimile (FAX): (608) 266-8459

December 2, 2024

NOTICE TO ALL CONTRACTORS:

Proposal #18:

4540-34-71, WIS2025107
Cedar Grove–Sheboygan Falls
CTH D to STH 28
STH 32
Sheboygan County

4540-36-71, WIS2025108
Cedar Grove–Sheboygan Falls
CTH D to STH 28
STH 32
Sheboygan County

Letting of December 10, 2024

This is Addendum No. 02, which provides for the following:

Schedule of Items:

Added Bid Item Quantities					
Bid Item	Item Description	Unit	Proposal Total Prior to Addendum	Quantity Added	Proposal Total After Addendum
614.8010	Anchor Post Assembly Top Mount	EACH	0	3	3

Deleted Bid Item Quantities					
Bid Item	Item Description	Unit	Proposal Total Prior to Addendum	Proposal Quantity Change (-)	Proposal Total After Addendum
203.0220.08	Removing Structure (Station 189+62)	EACH	1	-1	0

Plan Sheets:

Revised Plan Sheets	
Plan Sheet	Plan Sheet Title (brief description of changes to sheet)
113	Miscellaneous Quantity Sheet – Removing Structures Table Revised
117	Miscellaneous Quantity Sheet – Guardrail Table Revised

Schedule of Items
Attached, dated December 2, 2024, are the revised Schedule of Items Pages 1 - 12.

Plan Sheets
The following 8½ x 11-inch sheets are attached and made part of the plans for this proposal:
Revised: 113 and 117.

The responsibility for notifying potential subcontractors and suppliers of these changes remains with the prime contractor.

Sincerely,

Mike Coleman

Proposal Development Specialist
Proposal Management Section

END OF ADDENDUM

3

CLEARING & GRUBBING

STATION TO STATION	201.0110 CLEARING SY	201.0210 GRUBBING SY
STH 32		
4540-34-71		
188+23 - 189+98 RT	191	191
336+99 - 338+54 LT & RT	103	103
391+00 - 392+00 RT	194	194
393+21 - 395+02 LT & RT	304	304
527+35 - 529+64 RT	883	883
529+91 - 530+59 RT	52	52
SUBTOTAL	1,727	1,727
4540-36-71		
205+11 - 205+71 RT	27	27
405+78 - 405+86 RT	28	28
482+65 - 482+98 RT	26	26
585+02 - 585+51 RT	118	118
SUBTOTAL	199	199
PROJECT TOTALS	1,926	1,926

REMOVING STRUCTURES

STATION TO STATION	203.0220* REMOVING STRUCTURES EACH
STH 32	
4540-36-71	
140+34	1
180+82	1
205+41	1
242+23	1
259+80	1
405+78	1
585+25	1
PROJECT TOTALS	7

* QUANTITIES LISTED ELSEWHERE

REMOVING CONCRETE PAVEMENT

STATION TO STATION	204.0100 REMOVING CONCRETE PAVEMENT SY
STH 32	
4540-34-71	
189+18 - 190+03	189
337+48 - 338+11	140
393+29 - 394+04	165
527+23 - 528+04	183
SUBTOTAL	677
4540-36-71	
73+20 - 73+25 LT RT	11
76+17 LT - 76+30 LT	15
9+57 RT - 9+78 RT	11
140+01 - 140+66	145
180+55 - 181+09	120
205+11 - 205+71	172
241+85 - 242+63	150
259+52 - 260+00	108
405+37 - 406+12	167
584+84 - 585+52	150
SUBTOTAL	1,049
PROJECT TOTALS	1,726

REMOVING ASPHALTIC SURFACE BUTT JOINTS

STATION TO STATION	204.0115 REMOVING ASPHALTIC SURFACE BUTT JOINTS SY
STH 32	
4540-36-71	
9+51	7
80+75 - 81+09	7
85+76 - 86+07	7
92+91 - 93+24	7
102+78 - 103+12	8
102+85 - 103+13	6
130+29 - 130+53	6
131+59 - 131+78	4
158+50 - 158+79	6
195+97 - 196+20	6
198+99 - 199+30	7
239+88 - 240+17	6
266+20 - 266+58	8
266+23 - 266+63	9
292+87 - 293+10	5
319+32 - 319+62	7
345+83 - 346+02	5
357+40 - 357+70	7
373+97 - 374+33	8
374+20 - 374+55	8
379+30 - 379+66	8
383+91 - 384+25	8
383+95 - 384+29	8
388+68 - 389+06	8
400+81 - 401+09	6
434+52 - 434+54	6
460+98 - 461+00	8
489+22 - 489+51	6
495+85 - 496+16	7
517+42 - 517+72	6
541+45 - 541+67	5
541+40 - 541+60	5
561+89 - 562+18	6
583+66 - 583+92	7
607+96 - 608+31	8
608+12 - 608+43	7
617+64 - 617+66	9
PROJECT TOTALS	254

REMOVING ASPHALTIC SURFACE MILLING

STATION TO STATION	204.0120 REMOVING ASPHALTIC SURFACE MILLING SY
STH 32	
4540-36-71	
CATEGORY 0010	
76+03 - 80+92	1,503
80+92 - 85+92	1,417
85+92 - 93+07	2,002
93+07 - 102+98	2,818
102+98 - 130+91	9,949
130+91 - 158+65	9,424
158+65 - 195+54	12,262
195+54 - 199+42	1,816
199+42 - 240+02	13,203
240+02 - 266+41	9,432
266+41 - 293+06	9,715
293+06 - 300+45	2,775
301+54 - 319+46	6,257
319+46 - 346+25	9,188
346+25 - 357+79	4,524
357+79 - 374+26	6,227
374+26 - 379+48	2,349
379+48 - 384+10	2,079
384+10 - 388+87	2,151
388+87 - 401+04	4,603
401+04 - 434+52	10,990
461+00 - 489+37	10,020
489+37 - 496+00	2,439
496+00 - 517+57	7,106
517+57 - 541+53	8,236
541+53 - 562+03	7,496
562+03 - 584+07	7,903
584+07 - 608+20	9,396
608+20 - 617+64	3,894
SUBTOTAL	181,174
CATEGORY 0020	
76+03 - 80+92	832
80+92 - 85+92	921
85+92 - 93+07	1309
93+07 - 102+98	1837
SUBTOTAL	4899
PROJECT TOTALS	186,073

REMOVING CURB & GUTTER

STATION TO STATION	204.0150 REMOVING CURB & GUTTER LF
STH 32	
4540-34-71	
99+91 - 100+27	72
SUBTOTALS	72
4540-36-71	
73+16 - 73+29 LT & RT	20
76+05 RT - 76+92 RT	38
76+17 LT - 76+30 LT	7
9+62 RT - 9+75 RT	11
76+61 LT - 76+80 LT	22
80+61 RT - 80+71 RT	17
81+07 LT - 81+25 LT	18
81+12 RT - 81+33 RT	24
85+48 LT - 85+75 LT	25
85+55 RT - 85+73 RT	18
86+10 LT - 86+25 LT	22
92+79 RT - 92+92 RT	24
92+66 LT - 92+92 LT	27
93+17 LT - 93+42 LT	25
93+22 RT - 93+42 RT	34
99+33 LT - 99+43 LT	10
99+69 RT - 99+90 RT	22
102+56 RT - 102+76 RT	24
102+55 LT - 102+76 LT	26
345+59 LT - 345+95 LT	70
346+26 LT - 346+92 LT	87
383+57 RT - 383+63 RT	7
388+11 RT - 388+19 RT	7
SUBTOTALS	585
PROJECT TOTALS	657

REMOVING CONCRETE SIDEWALK

STATION TO STATION	204.0155 REMOVING CONCRETE SIDEWALK SY
STH 32	
4540-34-71	
99+91 - 100+27 LT & RT	45
SUBTOTAL	45
4540-36-71	
73+20 - 73+25 LT & RT	1
75+99 RT - 77+00 RT	22
76+10 LT - 76+28 LT	40
9+57 RT - 9+76 RT	22
76+66 LT - 76+90 LT	25
80+42 RT - 80+71 RT	15
81+09 LT - 81+25 LT	9
81+15 RT - 81+39 RT	23
85+48 LT - 85+75 LT	34
85+55 RT - 85+75 RT	17
86+14 LT - 86+36 LT	11
92+64 RT - 92+86 RT	22
92+72 LT - 92+92 LT	11
93+22 LT - 93+42 LT	11
93+29 RT - 93+52 RT	19
99+75 RT - 99+90 RT	8
102+43 RT - 102+73 RT	16
102+46 LT - 102+75 LT	13
SUBTOTAL	319
PROJECT TOTALS	364

REMOVING GUARDRAIL

STATION TO STATION	204.0165 REMOVING GUARDRAIL LF
STH 32	
4540-34-71	
188+18 - 190+83 RT	268
188+50 - 190+91 LT	230
391+12 - 394+54 RT	342
391+58 - 395+25 LT	267
526+68 - 529+14 LT	242
527+14 - 529+17 RT	205
SUBTOTAL	1,554
4540-36-71	
299+09 - 300+44 RT	135
299+52 - 300+37 LT	85
344+24 - 346+32 RT	205
344+84 - 345+94 LT	191
346+14 - 347+42 LT	179
478+71 - 484+38 LT	567
478+71 - 484+50 RT	579
SUBTOTAL	1,941
PROJECT TOTALS	3,495

REMOVING DELINEATORS AND MARKERS

STATION	204.0180 REMOVING DELINEATORS AND MARKERS EACH
STH 32	
4540-34-71	
189+62 LT	1
337+83 LT & RT	2
393+86 LT & RT	2
527+49 LT & RT	2
SUBTOTAL	7
4540-36-71	
140+31 LT & RT	2
180+82 LT & RT	2
205+41 LT & RT	2
242+23 LT & RT	2
259+76 LT & RT	2
405+78 LT & RT	2
585+18 LT & RT	2
SUBTOTAL	14
PROJECT TOTALS	21

ABANDONING SEWER

STATION TO STATION	204.0291.S CY
STH 32	
4540-36-71	
99+36 - 100+06	8
PROJECT TOTALS	8

REMOVING STORM SEWER

STATION TO STATION	204.0245.01 18-INCH LF
STH 32	
4540-36-71	
388+27 LT	16
390+47 LT	16
456+80 LT	16
PROJECT TOTALS	48

IF REQUIRED DURING RELAID STORM SEWER OPERATIONS

Addendum No. 02
ID 4540-34-71/4540-36-71
Revised Sheet 113
December 2, 2024

NOTE: ALL ITEMS ON THIS SHEET ARE CATEGORY 0010 UNLESS OTHERWISE NOTED.

3

3

STATION - STATION	608.0330 STORM SEWER PIPE REINFORCED CONCRETE CL III 30-INCH	522.1030* APRON ENDWALLS FOR CULVERT PIPE REINFORCED CONCRETE 30-INCH	STORM SEWER 608.0118 RELAID STORM SEWER 18-INCH	611.0430 RECONSTRUCTING INLETS	611.0639 INLET COVERS TYPE H-S	611.3230 INLETS 2X3-FT	633.5200* MARKERS CULVERT ENDS	650.4000 CONSTRUCTION STAKING STORM SEWER
	LF	EA	EA	EA	EA	EA	EA	EA
STH 32								
4540-36-71								
73+20 RT & LT	-	-	-	2	2	-	-	-
73+25 RT	-	-	-	1	1	-	-	-
99+34 - 100+05	90	1	-	-	1	1	1	2
383+59 RT	-	-	-	1	1	-	-	-
388+15 RT	-	-	-	1	1	-	-	-
388+27 LT	-	-	16	-	-	-	-	-
390+47 LT	-	-	16	-	-	-	1	1
PROJECT TOTALS	90	1	32	5	6	1	2	3

* QUANTITIES LISTED ELSEWHERE

GUARDRAIL

STATION	TO	STATION	LOCATION	614.2300 MGS GUARDRAIL 3	614.2330 MGS GUARDRAIL 3K	614.2340 MGS GUARDRAIL 3L	614.2350 MGS GUARDRAIL SHORT RADIUS	614.2500 MGS THRIE BEAM TRANSITION	614.2610 MGS GUARDRAIL TERMINAL EAT	614.8010 ANCHOR POST ASSEMBLY TOP MOUNT
				LF	LF	LF	LF	LF	EA	EA
STH 32										
4540-34-71										
188+18	-	191+08	RT	187.5	---	---	---	---	2	---
391+00	-	394+74	RT	12.5	137.5	112.5	---	---	2	---
527+15	-	529+93	RT	175.0	---	---	---	---	2	---
			SUBTOTAL	375.0	137.5	112.5	0.0	0.0	6.0	0.0
4540-36-71										
298+89	-	300+44	RT	12.5	50	---	---	39.4	1	---
299+20	-	300+37	LT	12.5	12.5	---	---	39.4	1	---
343+85	-	346+32	RT	25.0	112.5	---	---	---	2	3
344+83	-	10+97	LT	50.0	---	---	64.0	---	2	---
11+10	-	347+69	LT	50.0	---	---	80.3	---	2	---
478+70	-	483+26	RT	25.0	325.0	---	---	---	2	---
478+70	-	484+39	LT	25.0	437.5	---	---	---	2	---
			SUBTOTAL	200.0	937.5	0.0	144.3	78.8	12.0	3.0
			PROJECT TOTALS	575.0	1,075.0	112.5	144.3	78.8	18.0	3.0

3

CULVERT PIPES

STATION	520.8700 CLEANING CULVERT PIPES	522.0530 CULVERT PIPE REINFORCED CONCRETE CLASS V 30-INCH	522.2424 CULVERT PIPE REINFORCED CONCRETE HORIZONTAL ELLIPTICAL CLASS HE-IV 24X38-INCH	522.1030* APRON ENDWALLS FOR CULVERT PIPE REINFORCED CONCRETE 30-INCH	522.2624 APRON ENDWALLS FOR CULVERT PIPE REINFORCED CONCRETE HORIZONTAL ELLIPTICAL 24X38-INCH	633.5200* MARKERS CULVERT END	650.6000* CONSTRUCTION STAKING PIPE CULVERT	INVERT ELEVATION	OUTFALL ELEVATION
	EA	LF	LF	EA	EA	EA	EA		
STH 32									
4540-36-71									
140+45	-	-	42	-	2	2	1	702.87	702.31
174+56	1	-	-	-	-	-	-	-	-
180+94	-	35	-	2	-	2	1	717.26	716.71
205+40	-	-	40	-	2	2	1	718.75	718.6
214+26	1	-	-	-	-	-	-	-	-
233+33	1	-	-	-	-	2	-	-	-
242+20	-	-	45	-	2	2	1	723.65	722.96
259+76	-	-	36	-	2	2	1	725.05	724.90
289+52	1	-	-	-	-	-	-	-	-
323+15	1	-	-	-	-	-	-	-	-
405+77	-	-	45	-	2	2	1	712.24	711.27
470+12	1	-	-	-	-	-	-	-	-
472+69	1	-	-	-	-	-	-	-	-
489+00	1	-	-	-	-	-	-	-	-
505+95	1	-	-	-	-	-	-	-	-
560+57	1	-	-	-	-	-	-	-	-
560+64	1	-	-	-	-	-	-	-	-
585+24	-	60	-	2	-	2	1	706.82	705.50
592+94	1	-	-	-	-	-	-	-	-
592+99	1	-	-	-	-	-	-	-	-
593+03	1	-	-	-	-	-	-	-	-
605+85	1	-	-	-	-	-	-	-	-
PROJECT TOTALS	15	95	208	4	10	16	7		

*QUANTITIES LISTED ELSEWHERE

Addendum No. 02
ID 4540-34-71/4540-36-71
Revised Sheet 117
December 2, 2024

NOTE: ALL ITEMS ON THIS SHEET ARE CATEGORY 0010 UNLESS OTHERWISE NOTED.

Proposal ID: 20241210018 **Project(s):** 4540-34-71, 4540-36-71

Federal ID(s): WISC 2025107, WISC 2025108

SECTION: 0001 Contract Items

Alt Set ID: **Alt Mbr ID:**

Proposal Line Number	Item ID Description	Approximate Quantity and Units	Unit Price	Bid Amount
0002	201.0110 Clearing	1,926.000 SY	_____._____	_____._____
0004	201.0210 Grubbing	1,926.000 SY	_____._____	_____._____
0006	203.0220 Removing Structure (structure) 01. Culvert Pipe at STA 189+62	1.000 EACH	_____._____	_____._____
0008	203.0220 Removing Structure (structure) 02. Culvert at STA 100+09	1.000 EACH	_____._____	_____._____
0010	203.0220 Removing Structure (structure) 03. C-59-0080	1.000 EACH	_____._____	_____._____
0012	203.0220 Removing Structure (structure) 04. C-59-2916	1.000 EACH	_____._____	_____._____
0014	203.0220 Removing Structure (structure) 05. C-59-2650	1.000 EACH	_____._____	_____._____
0016	203.0220 Removing Structure (structure) 06. Station 140+34	1.000 EACH	_____._____	_____._____
0018	203.0220 Removing Structure (structure) 07. Station 180+82	1.000 EACH	_____._____	_____._____
0022	203.0220 Removing Structure (structure) 09. Station 205+41	1.000 EACH	_____._____	_____._____
0024	203.0220 Removing Structure (structure) 10. Station 242+23	1.000 EACH	_____._____	_____._____
0026	203.0220 Removing Structure (structure) 11. Station 259+80	1.000 EACH	_____._____	_____._____
0028	203.0220 Removing Structure (structure) 12. Station 405+78	1.000 EACH	_____._____	_____._____

Proposal ID: 20241210018 **Project(s):** 4540-34-71, 4540-36-71

Federal ID(s): WISC 2025107, WISC 2025108

SECTION: 0001 Contract Items

Alt Set ID: **Alt Mbr ID:**

Proposal Line Number	Item ID Description	Approximate Quantity and Units	Unit Price	Bid Amount
0030	203.0220 Removing Structure (structure) 13. Station 585+25	1.000 EACH	_____._____	_____._____
0032	204.0100 Removing Concrete Pavement	1,726.000 SY	_____._____	_____._____
0034	204.0115 Removing Asphaltic Surface Butt Joints	254.000 SY	_____._____	_____._____
0036	204.0120 Removing Asphaltic Surface Milling	186,073.000 SY	_____._____	_____._____
0038	204.0150 Removing Curb & Gutter	657.000 LF	_____._____	_____._____
0040	204.0155 Removing Concrete Sidewalk	364.000 SY	_____._____	_____._____
0042	204.0165 Removing Guardrail	3,495.000 LF	_____._____	_____._____
0044	204.0180 Removing Delineators and Markers	21.000 EACH	_____._____	_____._____
0046	204.0245 Removing Storm Sewer (size) 01. 18-Inch	48.000 LF	_____._____	_____._____
0048	204.0291.S Abandoning Sewer	8.000 CY	_____._____	_____._____
0050	205.0100 Excavation Common	3,702.000 CY	_____._____	_____._____
0052	206.2001 Excavation for Structures Culverts (structure) 02. C-59-0121	1.000 EACH	_____._____	_____._____
0054	206.2001 Excavation for Structures Culverts (structure) 03. C-59-0117	1.000 EACH	_____._____	_____._____
0056	206.2001 Excavation for Structures Culverts (structure) 04. C-59-0118	1.000 EACH	_____._____	_____._____

Proposal ID: 20241210018 **Project(s):** 4540-34-71, 4540-36-71

Federal ID(s): WISC 2025107, WISC 2025108

SECTION: 0001 Contract Items

Alt Set ID: **Alt Mbr ID:**

Proposal Line Number	Item ID Description	Approximate Quantity and Units	Unit Price	Bid Amount
0058	206.2001 Excavation for Structures Culverts (structure) 05. C-59-0119	1.000 EACH	_____._____	_____._____
0060	208.0100 Borrow	3,102.000 CY	_____._____	_____._____
0062	210.2500 Backfill Structure Type B	6,256.000 TON	_____._____	_____._____
0064	211.0101 Prepare Foundation for Asphaltic Paving (project) 01. 4540-36-71	1.000 EACH	_____._____	_____._____
0066	213.0100 Finishing Roadway (project) 01. 4540-36-71	1.000 EACH	_____._____	_____._____
0068	305.0110 Base Aggregate Dense 3/4-Inch	2,032.000 TON	_____._____	_____._____
0070	305.0120 Base Aggregate Dense 1 1/4-Inch	5,457.000 TON	_____._____	_____._____
0072	415.0080 Concrete Pavement 8-Inch	21.000 SY	_____._____	_____._____
0074	416.0610 Drilled Tie Bars	16.000 EACH	_____._____	_____._____
0076	450.4000 HMA Cold Weather Paving	5,591.000 TON	_____._____	_____._____
0078	455.0605 Tack Coat	11,797.000 GAL	_____._____	_____._____
0080	460.0105.S HMA Percent Within Limits (PWL) Test Strip Volumetrics	1.000 EACH	_____._____	_____._____
0082	460.0110.S HMA Percent Within Limits (PWL) Test Strip Density	1.000 EACH	_____._____	_____._____
0084	460.2000 Incentive Density HMA Pavement	410.000 DOL	1.00000	410.00
0086	460.2005 Incentive Density PWL HMA Pavement	15,126.000 DOL	1.00000	15,126.00

Proposal ID: 20241210018 **Project(s):** 4540-34-71, 4540-36-71

Federal ID(s): WISC 2025107, WISC 2025108

SECTION: 0001 Contract Items

Alt Set ID: **Alt Mbr ID:**

Proposal Line Number	Item ID Description	Approximate Quantity and Units	Unit Price	Bid Amount
0088	460.2007 Incentive Density HMA Pavement Longitudinal Joints	10,310.000 DOL	1.00000	10,310.00
0090	460.2010 Incentive Air Voids HMA Pavement	21,402.000 DOL	1.00000	21,402.00
0092	460.5223 HMA Pavement 3 LT 58-28 S	629.000 TON	_____._____	_____._____
0094	460.5224 HMA Pavement 4 LT 58-28 S	21,402.000 TON	_____._____	_____._____
0096	465.0105 Asphaltic Surface	333.000 TON	_____._____	_____._____
0098	465.0110 Asphaltic Surface Patching	873.000 TON	_____._____	_____._____
0100	465.0560 Asphaltic Rumble Strips, Centerline	33,515.000 LF	_____._____	_____._____
0102	504.0100 Concrete Masonry Culverts	581.000 CY	_____._____	_____._____
0104	505.0400 Bar Steel Reinforcement HS Structures	63,600.000 LB	_____._____	_____._____
0106	505.0600 Bar Steel Reinforcement HS Coated Structures	12,730.000 LB	_____._____	_____._____
0108	513.2001 Railing Pipe	58.000 LF	_____._____	_____._____
0110	516.0500 Rubberized Membrane Waterproofing	207.000 SY	_____._____	_____._____
0112	516.0600.S Sheet Membrane Waterproofing for Asphalt Overlays	84.000 SY	_____._____	_____._____
0114	520.8700 Cleaning Culvert Pipes	15.000 EACH	_____._____	_____._____
0116	522.0530 Culvert Pipe Reinforced Concrete Class V 30-Inch	95.000 LF	_____._____	_____._____

Proposal ID: 20241210018 **Project(s):** 4540-34-71, 4540-36-71

Federal ID(s): WISC 2025107, WISC 2025108

SECTION: 0001 Contract Items

Alt Set ID: **Alt Mbr ID:**

Proposal Line Number	Item ID Description	Approximate Quantity and Units	Unit Price	Bid Amount
0118	522.1030 Apron Endwalls for Culvert Pipe Reinforced Concrete 30-Inch	5.000 EACH	_____._____	_____._____
0120	522.2424 Culvert Pipe Reinforced Concrete Horizontal Elliptical Class HE-IV 24x38-Inch	208.000 LF	_____._____	_____._____
0122	522.2624 Apron Endwalls for Culvert Pipe Reinforced Concrete Horizontal Elliptical 24x38-Inch	10.000 EACH	_____._____	_____._____
0124	601.0409 Concrete Curb & Gutter 30-Inch Type A	53.000 LF	_____._____	_____._____
0126	601.0411 Concrete Curb & Gutter 30-Inch Type D	503.000 LF	_____._____	_____._____
0128	601.0600 Concrete Curb Pedestrian	154.000 LF	_____._____	_____._____
0130	602.0405 Concrete Sidewalk 4-Inch	3,470.000 SF	_____._____	_____._____
0132	606.0200 Riprap Medium	55.000 CY	_____._____	_____._____
0134	606.0300 Riprap Heavy	593.000 CY	_____._____	_____._____
0136	608.0118 Relaid Storm Sewer 18-Inch	32.000 LF	_____._____	_____._____
0138	608.0330 Storm Sewer Pipe Reinforced Concrete Class III 30-Inch	90.000 LF	_____._____	_____._____
0140	611.0430 Reconstructing Inlets	5.000 EACH	_____._____	_____._____
0142	611.0639 Inlet Covers Type H-S	6.000 EACH	_____._____	_____._____
0144	611.3230 Inlets 2x3-FT	1.000 EACH	_____._____	_____._____

Proposal ID: 20241210018 **Project(s):** 4540-34-71, 4540-36-71

Federal ID(s): WISC 2025107, WISC 2025108

SECTION: 0001 Contract Items

Alt Set ID: **Alt Mbr ID:**

Proposal Line Number	Item ID Description	Approximate Quantity and Units	Unit Price	Bid Amount
0146	614.2300 MGS Guardrail 3	575.000 LF	_____._____	_____._____
0148	614.2330 MGS Guardrail 3 K	1,075.000 LF	_____._____	_____._____
0150	614.2340 MGS Guardrail 3 L	112.500 LF	_____._____	_____._____
0152	614.2350 MGS Guardrail Short Radius	144.300 LF	_____._____	_____._____
0154	614.2500 MGS Thrie Beam Transition	78.800 LF	_____._____	_____._____
0156	614.2610 MGS Guardrail Terminal EAT	18.000 EACH	_____._____	_____._____
0158	618.0100 Maintenance and Repair of Haul Roads (project) 01. 4540-34-71	1.000 EACH	_____._____	_____._____
0160	618.0100 Maintenance and Repair of Haul Roads (project) 02. 4540-36-71	1.000 EACH	_____._____	_____._____
0162	619.1000 Mobilization	1.000 EACH	_____._____	_____._____
0164	624.0100 Water	77.500 MGAL	_____._____	_____._____
0166	625.0100 Topsoil	8,224.000 SY	_____._____	_____._____
0168	628.1504 Silt Fence	2,752.000 LF	_____._____	_____._____
0170	628.1520 Silt Fence Maintenance	2,752.000 LF	_____._____	_____._____
0172	628.1905 Mobilizations Erosion Control	40.000 EACH	_____._____	_____._____
0174	628.1910 Mobilizations Emergency Erosion Control	11.000 EACH	_____._____	_____._____

Proposal ID: 20241210018 **Project(s):** 4540-34-71, 4540-36-71

Federal ID(s): WISC 2025107, WISC 2025108

SECTION: 0001 Contract Items

Alt Set ID: **Alt Mbr ID:**

Proposal Line Number	Item ID Description	Approximate Quantity and Units	Unit Price	Bid Amount
0176	628.2006 Erosion Mat Urban Class I Type A	262.000 SY	_____._____	_____._____
0178	628.2008 Erosion Mat Urban Class I Type B	6,867.000 SY	_____._____	_____._____
0180	628.2027 Erosion Mat Class II Type C	1,058.000 SY	_____._____	_____._____
0182	628.7015 Inlet Protection Type C	38.000 EACH	_____._____	_____._____
0184	628.7504 Temporary Ditch Checks	64.000 LF	_____._____	_____._____
0186	628.7555 Culvert Pipe Checks	38.000 EACH	_____._____	_____._____
0188	628.7570 Rock Bags	153.000 EACH	_____._____	_____._____
0190	629.0210 Fertilizer Type B	5.150 CWT	_____._____	_____._____
0192	630.0130 Seeding Mixture No. 30	77.000 LB	_____._____	_____._____
0194	630.0140 Seeding Mixture No. 40	10.000 LB	_____._____	_____._____
0196	630.0170 Seeding Mixture No. 70	9.000 LB	_____._____	_____._____
0198	630.0200 Seeding Temporary	222.000 LB	_____._____	_____._____
0200	630.0500 Seed Water	147.700 MGAL	_____._____	_____._____
0202	633.5200 Markers Culvert End	31.000 EACH	_____._____	_____._____
0204	642.5201 Field Office Type C	1.000 EACH	_____._____	_____._____
0206	643.0300 Traffic Control Drums	608.000 DAY	_____._____	_____._____

Proposal ID: 20241210018 **Project(s):** 4540-34-71, 4540-36-71

Federal ID(s): WISC 2025107, WISC 2025108

SECTION: 0001 Contract Items

Alt Set ID: **Alt Mbr ID:**

Proposal Line Number	Item ID Description	Approximate Quantity and Units	Unit Price	Bid Amount
0208	643.0420 Traffic Control Barricades Type III	2,846.000 DAY	_____._____	_____._____
0210	643.0705 Traffic Control Warning Lights Type A	4,473.000 DAY	_____._____	_____._____
0212	643.0900 Traffic Control Signs	28,608.000 DAY	_____._____	_____._____
0214	643.0910 Traffic Control Covering Signs Type I	3.000 EACH	_____._____	_____._____
0216	643.0920 Traffic Control Covering Signs Type II	10.000 EACH	_____._____	_____._____
0218	643.1000 Traffic Control Signs Fixed Message	125.500 SF	_____._____	_____._____
0220	643.1050 Traffic Control Signs PCMS	28.000 DAY	_____._____	_____._____
0222	643.1070 Traffic Control Cones 42-Inch	18.000 DAY	_____._____	_____._____
0224	643.3165 Temporary Marking Line Paint 6-Inch	154,721.000 LF	_____._____	_____._____
0226	643.3265 Temporary Marking Line Paint 10-Inch	2,764.000 LF	_____._____	_____._____
0228	643.5000 Traffic Control	1.000 EACH	_____._____	_____._____
0230	644.1440 Temporary Pedestrian Surface Matting	490.000 SF	_____._____	_____._____
0232	644.1601 Temporary Pedestrian Curb Ramp	27.000 DAY	_____._____	_____._____
0234	644.1605 Temporary Pedestrian Detectable Warning Field	170.000 SF	_____._____	_____._____
0236	644.1810 Temporary Pedestrian Barricade	1,441.000 LF	_____._____	_____._____
0238	645.0120 Geotextile Type HR	1,392.000 SY	_____._____	_____._____

Proposal ID: 20241210018 **Project(s):** 4540-34-71, 4540-36-71

Federal ID(s): WISC 2025107, WISC 2025108

SECTION: 0001 Contract Items

Alt Set ID: **Alt Mbr ID:**

Proposal Line Number	Item ID Description	Approximate Quantity and Units	Unit Price	Bid Amount
0240	646.2020 Marking Line Epoxy 6-Inch	12,973.000 LF	_____._____	_____._____
0242	646.2040 Marking Line Grooved Wet Ref Epoxy 6-Inch	159,230.000 LF	_____._____	_____._____
0244	646.4020 Marking Line Epoxy 10-Inch	1,382.000 LF	_____._____	_____._____
0246	646.5020 Marking Arrow Epoxy	3.000 EACH	_____._____	_____._____
0248	646.5220 Marking Symbol Epoxy	22.000 EACH	_____._____	_____._____
0250	646.6466 Cold Weather Marking Epoxy 6-Inch	44,415.000 LF	_____._____	_____._____
0252	646.7120 Marking Diagonal Epoxy 12-Inch	74.000 LF	_____._____	_____._____
0254	646.7420 Marking Crosswalk Epoxy Transverse Line 6-Inch	1,077.000 LF	_____._____	_____._____
0256	648.0100 Locating No-Passing Zones	9.700 MI	_____._____	_____._____
0258	650.4000 Construction Staking Storm Sewer	3.000 EACH	_____._____	_____._____
0260	650.5500 Construction Staking Curb Gutter and Curb & Gutter	710.000 LF	_____._____	_____._____
0262	650.6000 Construction Staking Pipe Culverts	8.000 EACH	_____._____	_____._____
0264	650.6501 Construction Staking Structure Layout (structure) 02.C-59-0121	1.000 EACH	_____._____	_____._____
0266	650.6501 Construction Staking Structure Layout (structure) 03. C-59-0117	1.000 EACH	_____._____	_____._____

Proposal ID: 20241210018 **Project(s):** 4540-34-71, 4540-36-71

Federal ID(s): WISC 2025107, WISC 2025108

SECTION: 0001 Contract Items

Alt Set ID: **Alt Mbr ID:**

Proposal Line Number	Item ID Description	Approximate Quantity and Units	Unit Price	Bid Amount
0268	650.6501 Construction Staking Structure Layout (structure) 04. C-59-0118	1.000 EACH	_____._____	_____._____
0270	650.6501 Construction Staking Structure Layout (structure) 05. C-59-0119	1.000 EACH	_____._____	_____._____
0272	650.8000 Construction Staking Resurfacing Reference	51,404.000 LF	_____._____	_____._____
0274	650.9000 Construction Staking Curb Ramps	16.000 EACH	_____._____	_____._____
0276	650.9500 Construction Staking Sidewalk (project) 01. 4540-34-71	1.000 EACH	_____._____	_____._____
0278	650.9500 Construction Staking Sidewalk (project) 02. 4540-36-71	1.000 EACH	_____._____	_____._____
0280	650.9911 Construction Staking Supplemental Control (project) 01. 4540-34-71	1.000 EACH	_____._____	_____._____
0282	650.9911 Construction Staking Supplemental Control (project) 02. 4540-36-71	1.000 EACH	_____._____	_____._____
0284	650.9920 Construction Staking Slope Stakes	3,011.000 LF	_____._____	_____._____
0286	690.0150 Sawing Asphalt	1,070.000 LF	_____._____	_____._____
0288	690.0250 Sawing Concrete	948.000 LF	_____._____	_____._____
0290	715.0502 Incentive Strength Concrete Structures	3,774.000 DOL	1.00000	3,774.00
0292	740.0440 Incentive IRI Ride	77,877.000 DOL	1.00000	77,877.00
0294	999.2000.S Installing and Maintaining Bird Deterrent System (station) 01. 100+09	1.000 EACH	_____._____	_____._____

Proposal ID: 20241210018 **Project(s):** 4540-34-71, 4540-36-71

Federal ID(s): WISC 2025107, WISC 2025108

SECTION: 0001 Contract Items

Alt Set ID: **Alt Mbr ID:**

Proposal Line Number	Item ID Description	Approximate Quantity and Units	Unit Price	Bid Amount
0296	999.2000.S Installing and Maintaining Bird Deterrent System (station) 02. 393+67	1.000 EACH	_____._____	_____._____
0298	ASP.1T0A On-the-Job Training Apprentice at $5.00/HR	2,400.000 HRS	5.00000	12,000.00
0300	ASP.1T0G On-the-Job Training Graduate at $5.00/HR	2,100.000 HRS	5.00000	10,500.00
0302	SPV.0035 Special 01. Foundation Backfill	2,468.000 CY	_____._____	_____._____
0304	SPV.0060 Special 01. Temporary Water Diversion C-59-117, Sta 527+65.16	1.000 EACH	_____._____	_____._____
0306	SPV.0060 Special 02. Temporary Water Diversion C-59-118, Station 393+66.22	1.000 EACH	_____._____	_____._____
0308	SPV.0060 Special 03. Temporary Water Diversion C-59-119, Station 337+79.75	1.000 EACH	_____._____	_____._____
0310	SPV.0060 Special 04. Temporary Water Diversion Culvert Pipe, Sta 189+62	1.000 EACH	_____._____	_____._____
0312	SPV.0060 Special 05. Temporary Water Diversion C-59-121, Station 100+09.05	1.000 EACH	_____._____	_____._____
0314	SPV.0060 Special 06. Chimney Seals	12.000 EACH	_____._____	_____._____
0316	SPV.0060 Special 07. Adjusting Water Valve Box	24.000 EACH	_____._____	_____._____
0318	SPV.0060 Special 08. Apron Endwalls for Culvert Pipe Reinforced Concrete Horizontal Elliptical	2.000 EACH	_____._____	_____._____
0320	SPV.0060 Special 09. Adjusting Sanitary Manhole Covers	4.000 EACH	_____._____	_____._____

Proposal ID: 20241210018 **Project(s):** 4540-34-71, 4540-36-71

Federal ID(s): WISC 2025107, WISC 2025108

SECTION: 0001 Contract Items

Alt Set ID: **Alt Mbr ID:**

Proposal Line Number	Item ID Description	Approximate Quantity and Units	Unit Price	Bid Amount
0322	SPV.0090 Special 01. Culvert Pipe Reinforced Concrete Horizontal Elliptical 72x113-Inch	102.000 LF	_____._____	_____._____
0324	SPV.0180 Special 01. Removing Distressed Asphaltic Surface Milling	7,595.000 SY	_____._____	_____._____
0326	614.8010 Anchor Post Assembly Top Mount	3.000 EACH	_____._____	_____._____

Section: 0001 **Total:** _____._____

Total Bid: _____._____

Wisconsin Department of Transportation

Division of Transportation Systems Development
Bureau of Project Development
4822 Madison Yards Way, 4th Floor South
Madison, WI 53705

Telephone: (608) 266-1631
Facsimile (FAX): (608) 266-8459

December 6, 2024

NOTICE TO ALL CONTRACTORS:

Proposal #18:

4540-34-71, WIS2025107
Cedar Grove–Sheboygan Falls
CTH D to STH 28
STH 32
Sheboygan County

4540-36-71, WIS2025108
Cedar Grove–Sheboygan Falls
CTH D to STH 28
STH 32
Sheboygan County

Letting of December 10, 2024

This is Addendum No. 03, which provides for the following:

Schedule of Items:

Added Bid Item Quantities					
Bid Item	Item Description	Unit	Proposal Total Prior to Addendum	Quantity Added	Proposal Total After Addendum
602.1500	Concrete Steps	SF	0	18	18

Plan Sheets:

Revised Plan Sheets	
Plan Sheet	Plan Sheet Title (brief description of changes to sheet)
43	Curb Ramp Detail Sheet – Revised Concrete Pavement Label
44	Curb Ramp Detail Sheet – Revised Concrete Pavement Label
46	Curb Ramp Detail Sheet – Revised Concrete Pavement Label
115	Miscellaneous Quantity Sheet – Added Concrete Steps MQ Table

Other

Revised the Contract Completion Time from October 3, 2025 to October 31, 2025.

Schedule of Items
Attached, dated December 6, 2024, are the revised Schedule of Items Page 12.

Plan Sheets
The following 8½ x 11-inch sheets are attached and made part of the plans for this proposal:
Revised: 43, 44, 46, and 115

The responsibility for notifying potential subcontractors and suppliers of these changes remains with the prime contractor.

Sincerely,

Mike Coleman

Proposal Development Specialist
Proposal Management Section

END OF ADDENDUM

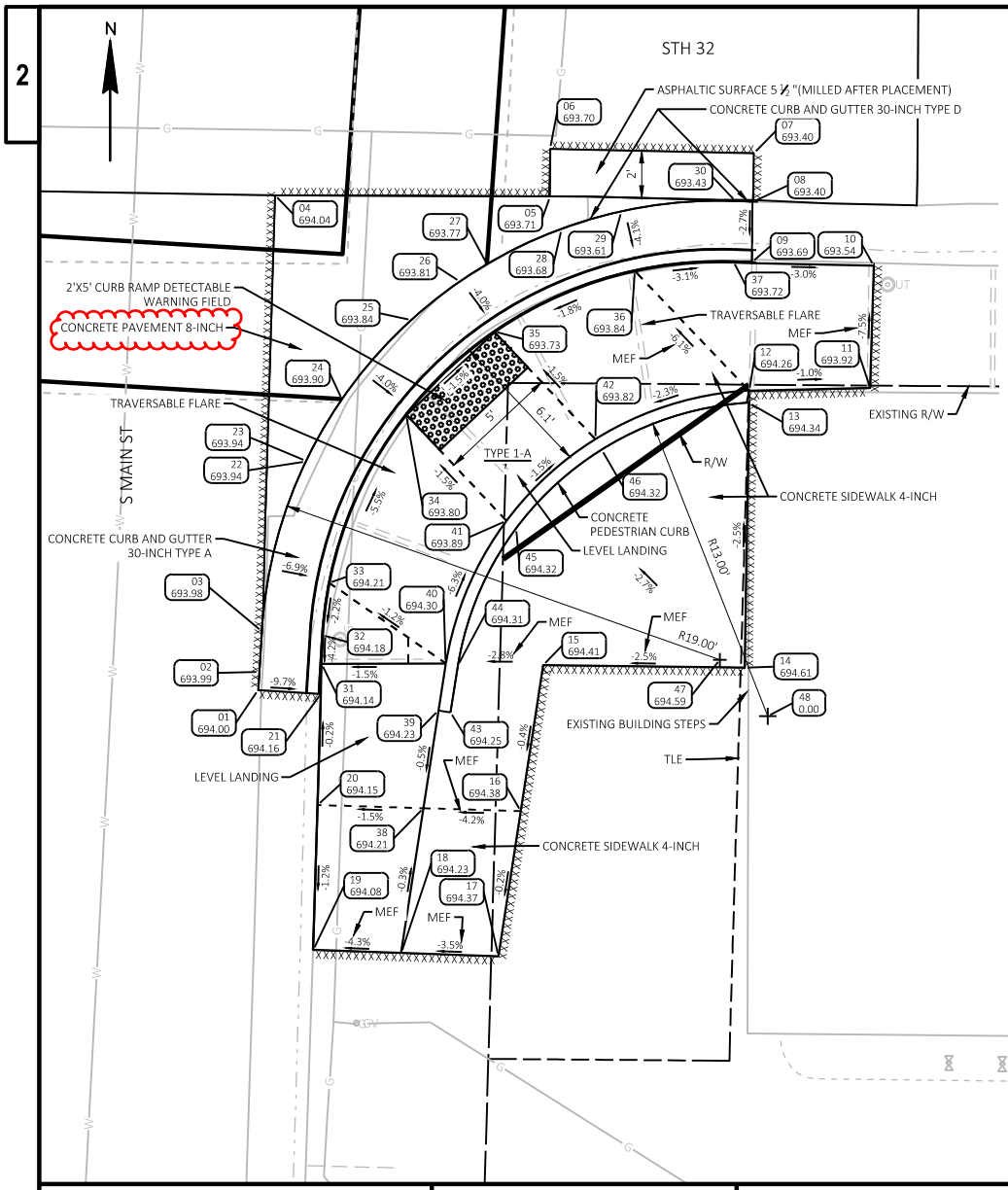

32-D INT SE CURB RAMP					
POINT NUMBER	STATION	OFFSET	ELEVATION	NORTHING	EASTING
01	76+30.66	40.50' LT	694.00	111421.12	190400.98
02	76+30.62	39.75' LT	693.99	111421.87	190401.03
03	76+30.53	38.06' LT	693.98	111423.56	190401.13
04	76+30.14	20.02' LT	694.04	111441.60	190401.68
05	76+18.75	19.96' LT	693.71	111441.56	190413.07
06	76+18.76	17.99' LT	693.70	111443.52	190413.07
07	76+10.34	18.11' LT	693.40	111443.34	190421.50
08	76+10.33	20.11' LT	693.40	111441.34	190421.49
09	76+10.37	22.61' LT	693.69	111438.84	190421.42
10	76+05.32	22.72' LT	693.54	111438.69	190426.47
11	76+05.44	27.77' LT	693.92	111433.64	190426.31
12	76+10.44	27.93' LT	694.26	111433.51	190421.31
13	76+10.45	28.44' LT	694.34	111433.01	190421.30
14	76+10.54	39.40' LT	694.61	111422.05	190421.11
15	76+18.87	39.36' LT	694.41	111422.16	190412.78
16	76+19.75	45.42' LT	694.38	111416.11	190411.85
17	76+20.63	51.43' LT	694.37	111410.10	190410.93
18	76+24.65	51.33' LT	694.23	111410.24	190406.90
19	76+28.30	51.23' LT	694.08	111410.37	190403.26
20	76+28.17	45.24' LT	694.15	111416.36	190403.44
21	76+28.07	40.63' LT	694.16	111420.96	190403.58
22	76+28.76	31.01' LT	693.94	111430.59	190402.97
23	76+28.75	31.00' LT	693.94	111430.60	190402.97
24	76+27.29	28.43' LT	693.90	111433.16	190404.46

32-D INT SE CURB RAMP					
POINT NUMBER	STATION	OFFSET	ELEVATION	NORTHING	EASTING
25	76+24.45	25.13' LT	693.84	111436.44	190407.32
26	76+22.46	23.52' LT	693.81	111438.03	190409.33
27	76+21.34	22.79' LT	693.77	111438.75	190410.46
28	76+18.26	21.30' LT	693.68	111440.21	190413.55
29	76+15.80	20.56' LT	693.61	111440.93	190416.02
30	76+11.08	20.09' LT	693.43	111441.37	190420.74
31	76+28.05	39.39' LT	694.14	111422.21	190403.60
32	76+28.03	38.20' LT	694.18	111423.40	190403.63
33	76+27.77	36.04' LT	694.21	111425.55	190403.91
34	76+24.64	29.03' LT	693.80	111432.54	190407.10
35	76+21.02	25.57' LT	693.73	111435.97	190410.75
36	76+15.21	22.99' LT	693.84	111438.50	190416.58
37	76+11.14	22.59' LT	693.72	111438.87	190420.65
38	76+23.78	45.33' LT	694.21	111416.23	190407.82
39	76+23.19	41.28' LT	694.23	111420.28	190408.44
40	76+22.91	39.33' LT	694.30	111422.23	190408.74
41	76+20.45	33.41' LT	693.89	111428.13	190411.26
42	76+16.79	29.99' LT	693.82	111431.51	190414.94
43	76+22.69	41.35' LT	694.25	111420.20	190408.95
44	76+22.41	39.41' LT	694.31	111422.14	190409.25
45	76+20.04	33.71' LT	694.32	111427.82	190411.67
46	76+16.52	30.43' LT	694.32	111431.07	190415.21
47	76+11.56	39.08' LT	694.59	111422.38	190420.10
48	76+09.56	41.41' LT	0.00	111420.04	190422.08

Addendum No. 03
ID 4540-36-71
Revised Sheet 43
December 6, 2024

NOTES:
1. CONTRACTOR TO FIELD VERIFY ELEVATION, GRADES, SLOPES, LENGTHS AND MATCH POINTS PRIOR TO CURB RAMP AND SIDEWALK CONSTRUCTION.
2. THE ENGINEER MAY ADJUST ELEVATIONS TO FIT FIELD CONDITIONS.
3. SEE STANDARD DETAIL DRAWINGS FOR COMPLETE CURB RAMP REQUIREMENTS
4. ALL STATION AND OFFSETS ARE REFERENCED TO STH 32 ALIGNMENT.

LEGEND

DETECTABLE WARNING FIELD

SAWCUT

PROJECT NO: 4540-36-71	HWY: STH 32	COUNTY: SHEBOYGAN	CURB RAMP DETAILS: STH 32-CTH D INTERSECTION SOUTHEAST CURB RAMP	SHEET 43	E

FILE NAME : X:\GB\2021\20210457\DESIGN\DESIGN FILES\45403600\SHEETSPLAN\021301-CR.DWG
LAYOUT NAME - 021301-cr
PLOT DATE : 12/6/2024 9:28 AM PLOT BY : WORECK, CHRIS PLOT NAME : PLOT SCALE : 1 IN:5 FT
WISDOT/CADDS SHEET 42

2

32-D INT SW CURB RAMP					
POINT NUMBER	STATION	OFFSET	ELEVATION	NORTHING	EASTING
51	9+63.04	21.06' RT	694.60	111441.03	190345.13
52	9+63.08	18.56' RT	694.36	111443.53	190345.19
53	9+63.10	16.56' RT	694.41	111445.53	190345.23
54	9+73.50	16.69' RT	694.41	111445.31	190355.62
55	9+73.47	18.92' RT	694.34	111443.09	190355.58
56	9+79.03	19.11' RT	694.40	111442.85	190361.13
57	9+79.02	32.86' RT	694.31	111429.10	190361.01
58	9+78.98	35.16' RT	694.30	111426.79	190360.95
59	9+78.92	38.43' RT	694.25	111423.53	190360.86
60	9+76.42	38.38' RT	694.45	111423.60	190358.36
61	9+76.30	42.82' RT	694.40	111419.15	190358.20
62	9+65.24	18.59' RT	694.35	111443.48	190347.35
63	9+70.59	19.74' RT	694.33	111442.28	190352.70
64	9+71.50	20.18' RT	694.32	111441.84	190353.60
65	9+72.44	20.70' RT	694.32	111441.31	190354.53
66	9+75.09	22.86' RT	694.34	111439.13	190357.17
67	9+76.77	24.97' RT	694.35	111437.00	190358.83
68	9+77.43	26.09' RT	694.35	111435.88	190359.47
69	9+78.05	27.47' RT	694.34	111434.50	190360.09
70	9+56.76	21.02' RT	694.72	111441.12	190338.85

32-D INT SW CURB RAMP					
POINT NUMBER	STATION	OFFSET	ELEVATION	NORTHING	EASTING
71	9+63.73	21.07' RT	694.57	111441.02	190345.82
72	9+71.08	22.86' RT	694.24	111439.16	190353.15
73	9+74.65	26.36' RT	694.27	111435.63	190356.69
74	9+76.48	35.11' RT	694.53	111426.86	190358.45
75	9+61.39	27.65' RT	694.67	111434.45	190343.42
76	9+66.39	27.63' RT	694.34	111434.43	190348.43
77	9+70.28	30.81' RT	694.37	111431.22	190352.29
78	9+70.34	41.22' RT	694.55	111420.81	190352.26
79	9+70.30	42.79' RT	694.56	111419.24	190352.20
80	9+57.03	28.23' RT	694.89	111433.91	190339.06
81	9+65.73	28.10' RT	694.79	111433.97	190347.77
82	9+70.02	32.42' RT	694.68	111429.62	190352.01
83	9+69.83	41.22' RT	694.61	111420.82	190351.75
84	9+72.76	42.79' RT	694.42	111419.22	190354.67
85	9+72.85	38.73' RT	694.54	111423.28	190354.79
86	9+65.80	32.32' RT	0.00	111429.74	190347.79
87	9+65.03	32.59' RT	0.00	111429.48	190347.02
88	9+76.52	32.81' RT	694.48	111429.17	190358.52
89	9+70.48	34.99' RT	694.59	111427.04	190352.45

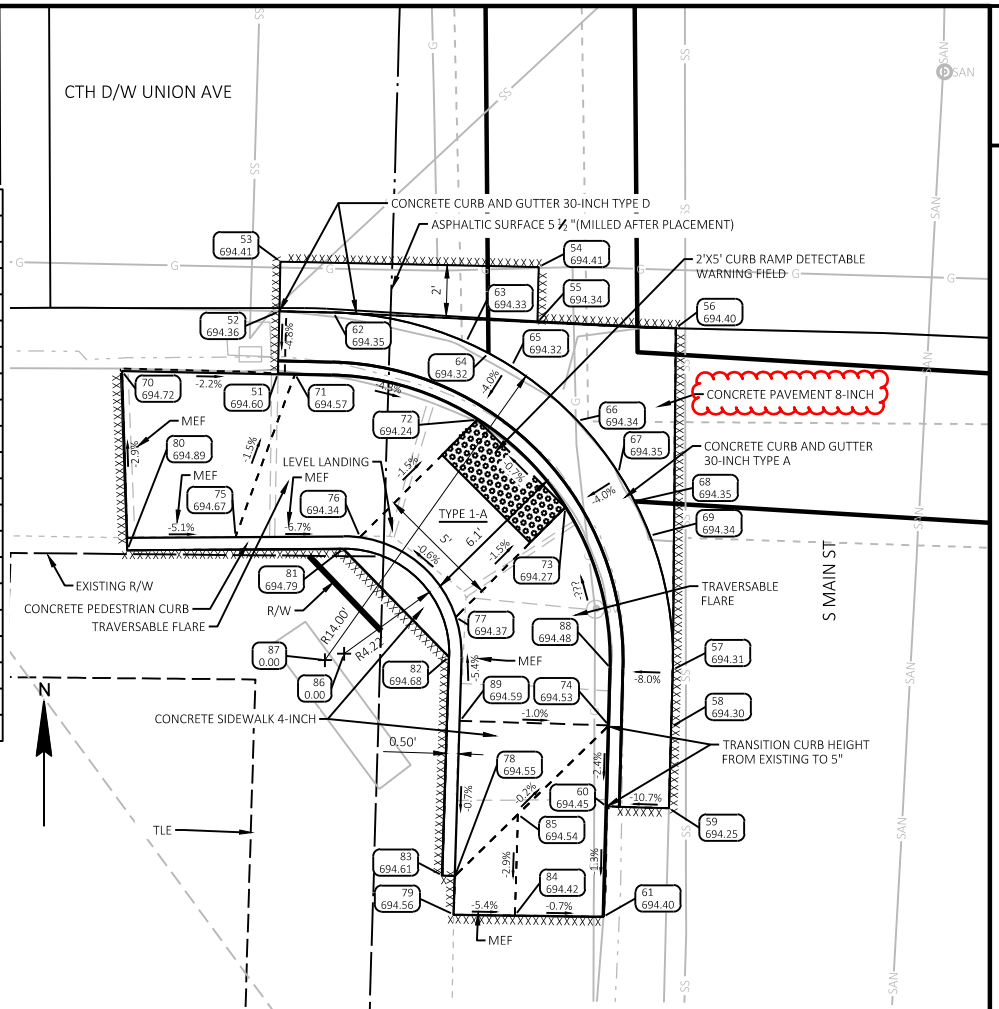

NOTES:
1. CONTRACTOR TO FIELD VERIFY ELEVATION, GRADES, SLOPES, LENGTHS AND MATCH POINTS PRIOR TO CURB RAMP AND SIDEWALK CONSTRUCTION.
2. THE ENGINEER MAY ADJUST ELEVATIONS TO FIT FIELD CONDITIONS.
3. SEE STANDARD DETAIL DRAWINGS FOR COMPLETE CURB RAMP REQUIREMENTS
4. ALL STATION AND OFFSETS ARE REFERENCED TO CTH D ALIGNMENT.

LEGEND

DETECTABLE WARNING FIELD

SAWCUT

Addendum No. 03
ID 4540-36-71
Revised Sheet 44
December 6, 2024

PROJECT NO: 4540-36-71	HWY: STH 32	COUNTY: SHEBOYGAN	CURB RAMP DETAILS: STH 32-CTH D INTERSECTION SOUTHWEST CURB RAMP	SHEET 44	E

FILE NAME : X:\GB\2021\20210457\DESIGN\DESIGN FILES\45403600\SHEETSPLAN\021301-CR.DWG
LAYOUT NAME - 021302-cr
PLOT DATE : 12/6/2024 9:27 AM PLOT BY : WORECK, CHRIS PLOT NAME : PLOT SCALE : 1 IN:5 FT
WISDOT/CADDS SHEET 42

Addendum No. 03
ID 4540-36-71
Revised Sheet 46
December 6, 2024

2

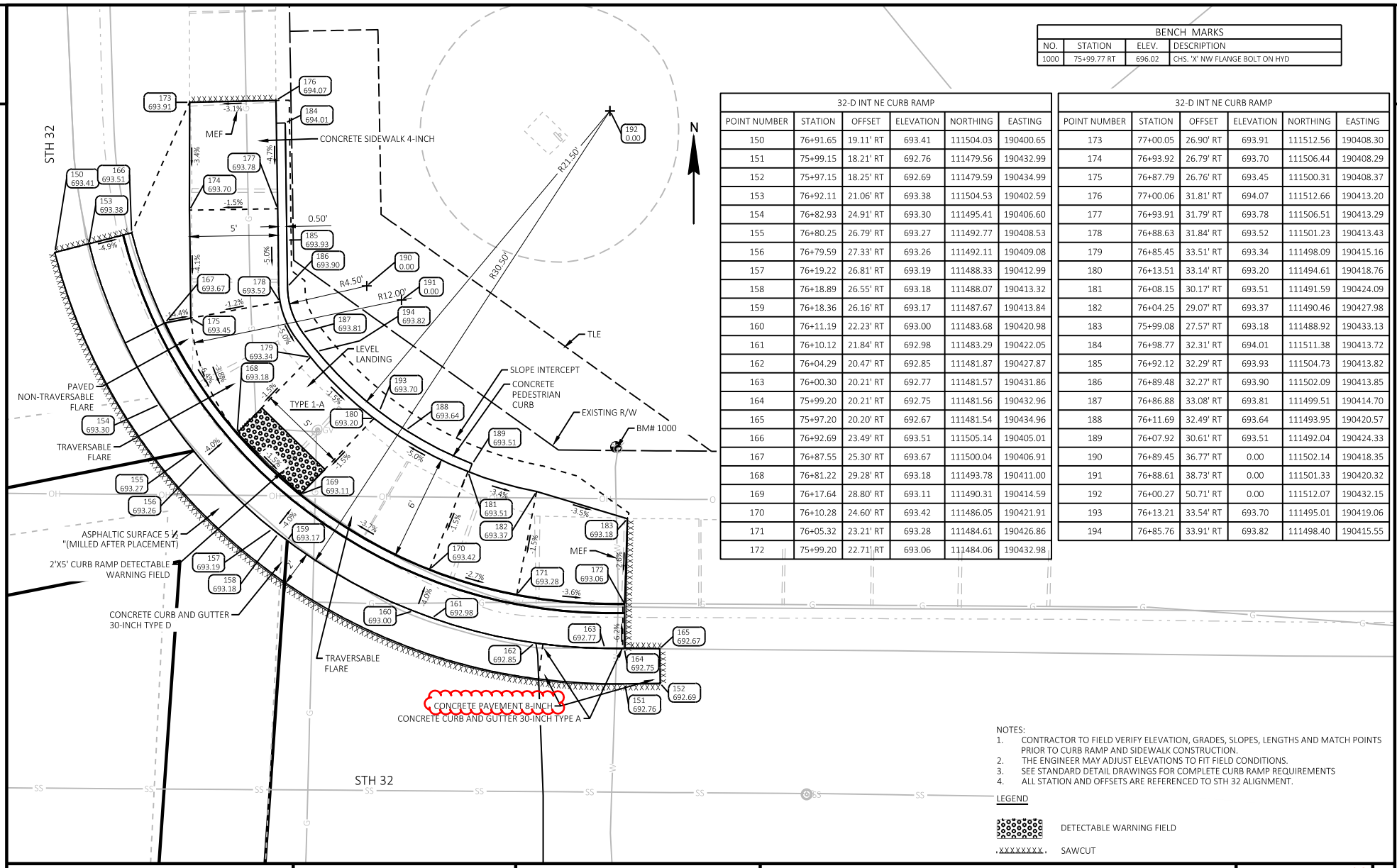

BENCH MARKS			
NO.	STATION	ELEV.	DESCRIPTION
1000	75+99.77 RT	696.02	CHS. 'X' NW FLANGE BOLT ON HYD

32-D INT NE CURB RAMP					
POINT NUMBER	STATION	OFFSET	ELEVATION	NORTHING	EASTING
150	76+91.65	19.11' RT	693.41	111504.03	190400.65
151	75+99.15	18.21' RT	692.76	111479.56	190432.99
152	75+97.15	18.25' RT	692.69	111479.59	190434.99
153	76+92.11	21.06' RT	693.38	111504.53	190402.59
154	76+82.93	24.91' RT	693.30	111495.41	190406.60
155	76+80.25	26.79' RT	693.27	111492.77	190408.53
156	76+79.59	27.33' RT	693.26	111492.11	190409.08
157	76+19.22	26.81' RT	693.19	111488.33	190412.99
158	76+18.89	26.55' RT	693.18	111488.07	190413.32
159	76+18.36	26.16' RT	693.17	111487.67	190413.84
160	76+11.19	22.23' RT	693.00	111483.68	190420.98
161	76+10.12	21.84' RT	692.98	111483.29	190422.05
162	76+04.29	20.47' RT	692.85	111481.87	190427.87
163	76+00.30	20.21' RT	692.77	111481.57	190431.86
164	75+99.20	20.21' RT	692.75	111481.56	190432.96
165	75+97.20	20.20' RT	692.67	111481.54	190434.96
166	76+92.69	23.49' RT	693.51	111505.14	190405.01
167	76+87.55	25.30' RT	693.67	111500.04	190406.91
168	76+81.22	29.28' RT	693.18	111493.78	190411.00
169	76+17.64	28.80' RT	693.11	111490.31	190414.59
170	76+10.28	24.60' RT	693.42	111486.05	190421.91
171	76+05.32	23.21' RT	693.28	111484.61	190426.86
172	75+99.20	22.71' RT	693.06	111484.06	190432.98

32-D INT NE CURB RAMP					
POINT NUMBER	STATION	OFFSET	ELEVATION	NORTHING	EASTING
173	77+00.05	26.90' RT	693.91	111512.56	190408.30
174	76+93.92	26.79' RT	693.70	111506.44	190408.29
175	76+87.79	26.76' RT	693.45	111500.31	190408.37
176	77+00.06	31.81' RT	694.07	111512.66	190413.20
177	76+93.91	31.79' RT	693.78	111506.51	190413.29
178	76+88.63	31.84' RT	693.52	111501.23	190413.43
179	76+85.45	33.51' RT	693.34	111498.09	190415.16
180	76+13.51	33.14' RT	693.20	111494.61	190418.76
181	76+08.15	30.17' RT	693.51	111491.59	190424.09
182	76+04.25	29.07' RT	693.37	111490.46	190427.98
183	75+99.08	27.57' RT	693.18	111488.92	190433.13
184	76+98.77	32.31' RT	694.01	111511.38	190413.72
185	76+92.12	32.29' RT	693.93	111504.73	190413.82
186	76+89.48	32.27' RT	693.90	111502.09	190413.85
187	76+86.88	33.08' RT	693.81	111499.51	190414.70
188	76+11.69	32.49' RT	693.64	111493.95	190420.57
189	76+07.92	30.61' RT	693.51	111492.04	190424.33
190	76+89.45	36.77' RT	0.00	111502.14	190418.35
191	76+88.61	38.73' RT	0.00	111501.33	190420.32
192	76+00.27	50.71' RT	0.00	111512.07	190432.15
193	76+13.21	33.54' RT	693.70	111495.01	190419.06
194	76+85.76	33.91' RT	693.82	111498.40	190415.55

NOTES:
1. CONTRACTOR TO FIELD VERIFY ELEVATION, GRADES, SLOPES, LENGTHS AND MATCH POINTS PRIOR TO CURB RAMP AND SIDEWALK CONSTRUCTION.
2. THE ENGINEER MAY ADJUST ELEVATIONS TO FIT FIELD CONDITIONS.
3. SEE STANDARD DETAIL DRAWINGS FOR COMPLETE CURB RAMP REQUIREMENTS
4. ALL STATION AND OFFSETS ARE REFERENCED TO STH 32 ALIGNMENT.

LEGEND

DETECTABLE WARNING FIELD

.XXXXXXXX. SAWCUT

PROJECT NO: 4540-36-71	HWY: STH 32	COUNTY: SHEBOYGAN	CURB RAMP DETAILS: STH 32-CTH D INTERSECTION NORTHEAST CURB RAMP	SHEET 46	E

FILE NAME : X:\GB\2021\20210457\DESIGN\DESIGN FILES\45403600\SHEETSPLAN\021301-CR.DWG
LAYOUT NAME - 021304-cr
PLOT DATE : 12/6/2024 10:14 AM PLOT BY : ENGLES, BRIAN PLOT NAME : PLOT SCALE : 1 IN:5 FT
WISDOT/CADDS SHEET 42

3

BASE AGGREGATE DENSE 3/4-INCH

STATION TO STATION	305.0110 BASE AGGREGATE DENSE 3/4-INCH TON
STH 32	
4540-34-71	
187+96 - 195+25	47
336+50 - 340+09	16
390+77 - 395+35	52
526+00 - 530+85	82
SUBTOTAL	197
4540-36-71	
103+33 - 130+49	92
131+31 - 158+65	99
158+65 - 187+96	104
192+25 - 195+43	13
199+50 - 240+02	142
240+02 - 265+74	91
267+01 - 293+13	89
293+13 - 300+48	47
301+51 -318+82	54
319+46 - 336+50	58
340+09 - 346+37	57
346+37 - 357+84	58
357+84 - 368+85	37
395+35 - 400+99	19
400+99 - 434+52	159
461+00 - 489+35	142
489+35 - 496+00	21
496+00 - 517+54	72
517+54 - 526+00	29
530+85 - 541+00	35
545+86 - 561+99	141
561+99 - 584+15	156
584+45 - 607+55	82
608+82 - 617+66	38
SUBTOTAL	1,835
PROJECT TOTALS	2,032

BASE AGGREGATE DENSE 1 1/4-INCH

STATION TO STATION	305.0120 BASE AGGREGATE DENSE 1 1/4-INCH TON
STH 32	
4540-34-71	
99+91 - 100+27	141
187+96 - 192+25	643
337+48 - 338+11	243
391+00 - 395+10	624
526+75 - 530+85	830
SUBTOTAL	2,481
4540-36-71	
73+15 - 73+29 LT & RT	3
76+10 - 76+31 LT	29
75+97 - 77+00 RT	28
9+57 - 9+79 RT	24
76+61 - 76+90 LT	21
80+42 - 80+75 RT	13
81+06 - 81+25 LT	14
81+11 - 81+39 RT	20
85+50 - 85+75 RT	16
85+48 - 85+72 LT	21
86+08 - 86+34 LT	15
92+66 - 92+93 LT	20
92+64 - 92+93 RT	20
93+17 - 93+42 LT	19
93+22 - 93+52 RT	26
99+36 - 99+91	43
102+48 - 102+78 RT	19
102+46 - 102+78 LT	18
140+01 - 140+66	252
180+55 - 181+09	208
205+11 - 205+71	230
241+85 - 242+63	300
259+52 - 260+00	188
297+95 - 299+70	235
344+45 - 348+40	282
383+60 RT	1
388+16 RT	1
405+37 - 406+12	291
478+73 - 479+50	105
482+45 - 484+50	189
584+84 - 585+52	325
SUBTOTAL	2,976
PROJECT TOTALS	5,457

Addendum No. 03
ID 4540-36-71
Revised Sheet 115
December 6, 2024

CONCRETE CURB & GUTTER SUMMARY

STATION TO STATION	601.0409 30-INCH TYPE A LF	601.0411 30-INCH TYPE D LF	601.0600 PEDESTRIAN LF	650.5500 CONSTRUCTION STAKING CURB GUTTER AND CURB & GUTTER LF
STH 32				
4540-34-71				
99+91 - 100+27	-	72	-	72
SUBTOTAL	0	72	0	72
4540-36-71				
73+16 - 73+29 LT & RT	21	-	-	21
75+97 RT - 76+86 RT	7	36	24	67
76+10 LT - 76+31 LT	2	31	41	74
9+63 RT - 9+79 RT	23	12	24	59
76+63 LT - 76+80 LT	-	25	-	25
80+61 RT - 80+73 RT	-	16	26	42
81+06 LT - 81+25 LT	-	18	-	18
81+12 RT - 81+33 RT	-	24	-	24
85+48 LT - 85+70 LT	-	25	35	60
85+55 RT - 85+73 RT	-	18	-	18
86+10 LT - 86+25 LT	-	21	-	21
92+66 LT - 92+93 LT	-	27	-	27
92+81 RT - 92+91 RT	-	24	4	28
93+17 LT - 93+42 LT	-	25	-	25
93+24 RT - 93+43 RT	-	34	-	34
99+33 LT - 99+91 LT & RT	-	33	-	33
102+55 - 102+76 LT & RT	-	50	-	50
383+60 RT	-	6	-	6
388+15 RT	-	6	-	6
SUBTOTAL	53	431	154	638
PROJECT TOTALS	53	503	154	710

3

CONCRETE SIDEWALK

STATION TO STATION	602.0405 4-INCH SF	650.9000 CONSTRUCTION STAKING CURB RAMP EA
STH 32		
4540-34-71		
99+91 - 100+27	440	-
SUBTOTAL	440	0
4540-36-71		
73+16 -73+25 LT & RT	11	-
75+99 RT - 77+00 RT	225	1
76+10 LT - 76+28 LT	328	1
76+65 LT - 76+90 LT	249	1
9+57 RT - 9+76 RT	196	1
80+42 RT - 80+71 RT	133	1
81+09 LT - 81+25 LT	100	1
81+15 RT - 81+39 RT	236	1
85+48 LT - 85+72 LT	220	1
85+55 RT - 85+75 RT	188	1
86+15 LT - 86+37 LT	93	1
92+64 RT - 92+87 RT	230	1
92+72 LT - 92+92 LT	122	1
93+22 LT - 93+42 LT	122	1
93+28 RT - 93+52 RT	241	1
99+75 - 99+91 RT	76	-
102+46 LT - 102+69 LT	136	1
102+48 RT - 102+69 RT	124	1
SUBTOTAL	3,030	16
PROJECT TOTALS	3,470	16

DRILLED TIE BARS

STATION TO STATION	416.0610 DRILLED TIE BARS EACH
STH 32	
4540-36-71	
73+15 -73+29 LT & RT	8
75+97 - 76+50 LT & RT	8
PROJECT TOTALS	16

CONCRETE PAVEMENT

STATION TO STATION	415.0080 8-INCH SY
STH 32	
4540-36-71	
73+15 - 73+29 LT & RT	5
75+97 - 76+50 LT & RT	16
PROJECT TOTALS	21

CONCRETE STEPS

STATION TO STATION	602.1500 CONCRETE STEPS SF
STH 32	
4540-36-71	
85+66 RT	18
PROJECT TOTALS	18

NOTE: ALL ITEMS ON THIS SHEET ARE CATEGORY 0010 UNLESS OTHERWISE NOTED.

Proposal ID: 20241210018 **Project(s):** 4540-34-71, 4540-36-71

Federal ID(s): WISC 2025107, WISC 2025108

SECTION: 0001 Contract Items

Alt Set ID: **Alt Mbr ID:**

Proposal Line Number	Item ID Description	Approximate Quantity and Units	Unit Price	Bid Amount
0322	SPV.0090 Special 01. Culvert Pipe Reinforced Concrete Horizontal Elliptical 72x113-Inch	102.000 LF	_____._____	_____._____
0324	SPV.0180 Special 01. Removing Distressed Asphaltic Surface Milling	7,595.000 SY	_____._____	_____._____
0326	614.8010 Anchor Post Assembly Top Mount	3.000 EACH	_____._____	_____._____
0328	602.1500 Concrete Steps	18.000 SF	_____._____	_____._____
	Section: 0001		**Total:**	_____._____

Total Bid: _____._____