WKE | APRIL 2025

PROJECT ID: 2814-03-70
WITH: N/A

COUNTY: RACINE

ORDER OF SHEETS

Section No.	1	Title
Section No.	2	Typical Sections and Details
Section No.	3	Estimate of Quantities
Section No.	3	Miscellaneous Quantities
Section No.	4	Right of Way Plat
Section No.	5	Plan and Profile
Section No.	6	Standard Detail Drawings
Section No.	7	Sign Plates
~~Section No.~~	~~8~~	~~Structure Plans~~
Section No.	9	Computer Earthwork Data
Section No.	9	Cross Sections

TOTAL SHEETS = 246

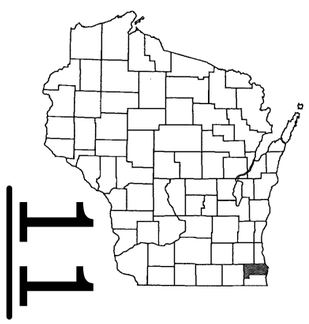

N

STATE OF WISCONSIN
DEPARTMENT OF TRANSPORTATION

PLAN OF PROPOSED IMPROVEMENT

V ROCHESTER CTH A

INTERSECTION WITH CTH J

CTH J

RACINE COUNTY

STATE PROJECT NUMBER
2814-03-70

STATE PROJECT	FEDERAL PROJECT	
	PROJECT	CONTRACT
2814-03-70	WISC 2025418	1

APPROVED FOR
RACINE COUNTY
DEPARTMENT OF PUBLIC WORKS

Date 10/30/24 _____ DIRECTOR

Date 10/30/2024 _____ ENGINEERING SERVICES MANAGER

emcs

1300 W. Canal Street, Suite 200
Milwaukee, WI 53233
414.347.1607 Fax 414.347.1347

WISCONSIN PROFESSIONAL ENGINEER
KATIE L. NAKLES
E-43985-6
MILWAUKEE
WI

10/30/24 _____ (Signature)

STATE OF WISCONSIN
DEPARTMENT OF TRANSPORTATION

PREPARED BY

Surveyor	EMCS, INC.
Designer	EMCS, INC.
Project Manager	MICHAEL BAIRD
Regional Examiner	REGIONAL EXAMINER
Regional Supervisor	AMY TAETSCH

APPROVED FOR THE DEPARTMENT

DATE: 10/30/2024 _____ (Signature)

E

DESIGN DESIGNATION

			CTH A	CTH J
A.A.D.T.	2020	=	2500	1045
A.A.D.T.	2044	=	3600	1505
D.H.V.		=	253	111
D.D.		=	53/47	57/43
T.		=	6.4%	17.4%
DESIGN SPEED		=	60 MPH	60 MPH
ESALS		=	660,000	...

CONVENTIONAL SYMBOLS

PLAN
- CORPORATE LIMITS
- PROPERTY LINE
- LOT LINE
- LIMITED HIGHWAY EASEMENT
- EXISTING RIGHT OF WAY
- PROPOSED OR NEW R/W LINE
- SLOPE INTERCEPT
- REFERENCE LINE (300' EB)
- EXISTING CULVERT
- PROPOSED CULVERT (Box or Pipe)
- COMBUSTIBLE FLUIDS (CAUTION)
- MARSH AREA
- WOODED OR SHRUB AREA

PROFILE
- GRADE LINE
- ORIGINAL GROUND
- MARSH OR ROCK PROFILE (To be noted as such) (ROCK)
- SPECIAL DITCH (LABEL)
- GRADE ELEVATION (95.36)
- CULVERT (Profile View)

UTILITIES
- ELECTRIC (E)
- FIBER OPTIC (FO)
- GAS (G)
- SANITARY SEWER (SAN)
- STORM SEWER (SS)
- TELEPHONE (T)
- WATER (W)
- UTILITY PEDESTAL
- POWER POLE
- TELEPHONE POLE

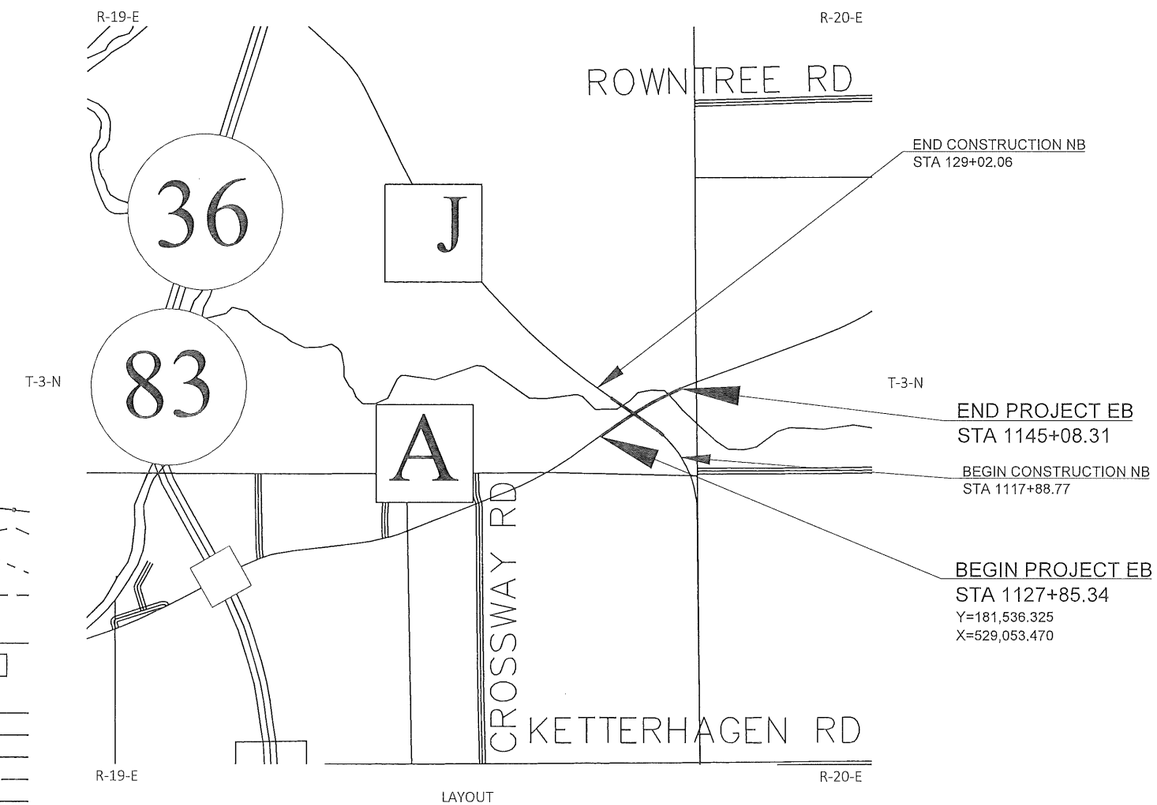

LAYOUT

SCALE 0 — 0.5 MI

TOTAL NET LENGTH OF CENTERLINE = 0.257 MILES

HORIZONTAL POSITIONS SHOWN ON THIS PLAN ARE WISCONSIN COORDINATE REFERENCE SYSTEM (WISCRS), RACINE COUNTY, NAD83 (2011), IN U.S. SURVEY FEET. POSITIONS SHOWN ARE GRID COORDINATES, GRID BEARINGS, AND GRID DISTANCES. GRID DISTANCES ARE THE SAME AS GROUND DISTANCES.

ELEVATIONS ARE REFERENCED TO NAVD 88 (2012). GPS DERIVED ELEVATIONS ARE BASED ON GEOID 18

GENERAL NOTES

1. NO TREES OR SHRUBS ARE TO BE REMOVED WITHOUT THE APPROVAL OF THE ENGINEER.
2. PRIOR TO ORDERING DRAINAGE PIPES, THE CONTRACTOR SHALL FIELD VERIFY RELATED DRAINAGE INFORMATION IN THE PLAN WITH THE ENGINEER.
3. CROSS DRAIN PIPE LOCATIONS AND ELEVATIONS AS SHOWN ON THE CROSS SECTION SHEETS ARE APPROXIMATE AND SHALL BE ADJUSTED TO FIT FIELD CONDITIONS.
4. EXCAVATION BELOW SUBGRADE (EBS) IS NOT USED TO BALANCE EARTHWORK, EBS IS MEASURED AND PAID FOR AS EXCAVATION COMMON. EXACT LOCATIONS OF EBS WILL BE DETERMINED BY THE ENGINEER.
5. A SAWED JOINT WILL BE REQUIRED WHERE NEW PAVEMENT IS TO MEET AN EXISTING PAVED SURFACE.
6. EXACT LOCATION OF ALL DRIVEWAY ENTRANCES TO BE REVIEWED AND APPROVED BY THE ENGINEER.
7. THE LOCATION OF EXISTING AND PROPOSED UTILITY INSTALLATIONS AS SHOWN ON THE PLANS ARE APPROXIMATE. THERE MAY BE OTHER UTILITY INSTALLATIONS WITHIN THE PROJECT AREA THAT ARE NOT SHOWN.
8. STATIONING, DISTANCES, AND OFFSETS FOR SIGNS SHOWN IN THE PLANS ARE APPROXIMATE AND THE FINAL LOCATION OF SIGNS ARE TO BE DETERMINED BY THE ENGINEER.
9. TRAFFIC CONTROL DEVICES SHALL BE ADJUSTED TO FIT FIELD CONDITIONS AS DIRECTED BY THE ENGINEER.
10. ALL STATIONS IN PLANS ARE BASED ON NORTHBOUND AND EASTBOUND ALIGNMENTS UNLESS OTHERWISE NOTED. ALL STATIONS REFERENCED IN THE QUANTITIES ARE BASED OFF OF THE REFERENCED ALIGNMENT

STANDARD ABBREVIATIONS

AP	ACCESS POINT
AC	ACRE
AGG	AGGREGATE
ASPH	ASPHALTIC
BL	BASELINE
BM	BENCH MARK
CB	CATCH BASIN
CL	CENTER LINE
CONC	CONCRETE
CO	COUNTY
CY	CUBIC YARD
CULV	CULVERT
CP	CULVERT PIPE
C&G	CURB AND GUTTER
DIA	DIAMETER
DWY	DRIVEWAY
EB	EASTBOUND
ELEV	ELEVATION
EW	ENDWALL
ENT	ENTRANCE
EXC	EXCAVATION
FP	FENCE POST
FERT	FERTILIZE
F	FILL
FG	FINISHED GRADE
FL	FLOW LINE
FO	FIBER OPTIC
FT	FOOT
HYD	HYDRANT
INL	INLET
INTERS	INTERSECTION
INV	INVERT
JT	JOINT
LT	LEFT
LF	LINEAR FOOT
MH	MANHOLE
MP	MARKER POST
MB	MESSAGE BOARD
NOM	NOMINAL
NB	NORTHBOUND
PAVT	PAVEMENT
PERM	PERMANENT
PU	PIPE UNDERDRAIN
PCC	PORTLAND CEMENT CONCRETE
PE	PRIVATE ENTRANCE
PROJ	PROJECT
PL	PROPERTY LINE
RL	REFERENCE LINE
RT	RIGHT
ERW	EXISTING RIGHT OF WAY
PRW	PROPOSED RIGHT OF WAY
RDWY	ROADWAY
SHLDR	SHOULDER
SB	SOUTHBOUND
SS	STORM SEWER
TEL	TELEPHONE
TEMP	TEMPORARY
TER	TERRACE
TV	TELEVISION
UG	UNDERGROUND
VOL	VOLUME
W	WATER
WB	WESTBOUND

DESIGN CONTACT

EMCS, INC.
KATIE NAKLES
PROJECT MANAGER
1300 W CANAL STREET, SUITE 200
MILWAUKEE, WI 53233
(414) 347-1607
KNAKLES@EMCSINC.COM

WDNR LIAISON

BENTON STELZEL
ENVIRONMENTAL ANALYST
& REVIEW SPECIALIST
141 NW BARSTOW ST. ROOM 180
WAUKESHA, WI, 53187
(262) 623-0194
BENTONSTELZEL@WISCONSIN.GOV

RACINE COUNTY

CHRIS GALLAGHER
PROJECT MANAGER
14200 WASHINGTON AVE
STURTEVANT, WI, 53177
(262)-886-8440
CHRISTOPHER.GALLAGHER@RACINECOUNTY.COM

VILLAGE OF ROCHESTER

SANDRA J. SWAN
VILLAGE CLERK
300 W. SPRING ST
ROCHESTER, WI, 53167
(262)-534-1181
SSWAN@ROCHESTERWI.GOV

UTILITIES

COMMUNICATIONS

TDS TELECOM - WATERFORD
BRETT CONNOR
OSP ENGINEERING
MADISON, WI
(608) 664-0974
BRETT.CONNOR@TDSTELECOM.COM

GAS UTILITIES

WE ENERGIES - GAS
NICK WAGNER
500 S 116TH ST
WEST ALLIS, WI, 53214
(414) 944-5662
NICHOLAS.WAGNER@WE-ENERGIES.COM

COMMUNICATIONS

WINDSTREAM
LORI KETTER
CONSTRUCTION MANAGER
OSP PROJECT ENGINEER
314 N DANZ AVE
GREEN BAY, WI 54302
(800) 289-1901
LORI.KETTER@WINDSTREAM.COM

ELECTRICITY

WE ENERGIES - ELEC
ERIK KICKHAVER
500 S 116TH ST
WEST ALLIS, WI, 53214
(262) 606-4271
ERIC.KICKHAVER1@WE-ENERGIES.COM

DIGGERS HOTLINE
Dial 811 or (800)242-8511
www.DiggersHotline.com

ORDER OF SECTION 2 SHEETS

PROJECT OVERVIEW
TYPICAL SECTIONS
CONSTRUCTION DETAILS
PLAN DETAILS
PAVING GRADES
EROSION CONTROL
STORM SEWER
PERMANENT SIGNING & PAVEMENT MARKING
LIGHTING PLAN
TRAFFIC CONTROL
DETOUR ROUTE
ALIGNMENT DETAILS

TOTAL LAYER PAVEMENT THICKNESS	LAYERS	HMA PAVEMENT ITEMS
5.5"	2" (UPPER) 3.5" (LOWER)	4 LT 58-28 S (UPPER) 3 LT 58-28 S (LOWER)
2"	2" (UPPER)	4 LT 58-28 S (UPPER)

2

2

PROJECT NO: 2814-03-70	HWY: CTH A	COUNTY: RACINE	PROJECT OVERVIEW	SHEET 3	E

FILE NAME : Y:\54XX\5486.DP22.CTH.A.RCN.INTRSCTN.CTH.J\CADDS\28140300\SHEETS\020201-PO.DWG
LAYOUT NAME - 020201-po
PLOT DATE : 10/17/2024 1:20 PM PLOT BY : CODY LABELLE PLOT NAME : PLOT SCALE : 1 IN:200 FT

WISDOT/CADDS SHEET 42

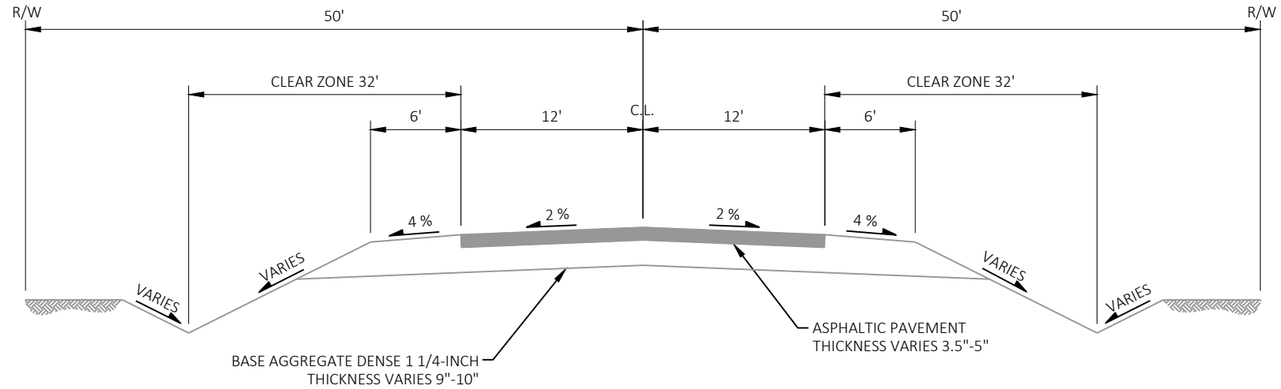

EXISTING TYPICAL SECTION

C.T.H. - A EASTBOUND
STA 1127+85.34 - 1141+27.83
STA 1141+43.37 - 1145+08.32

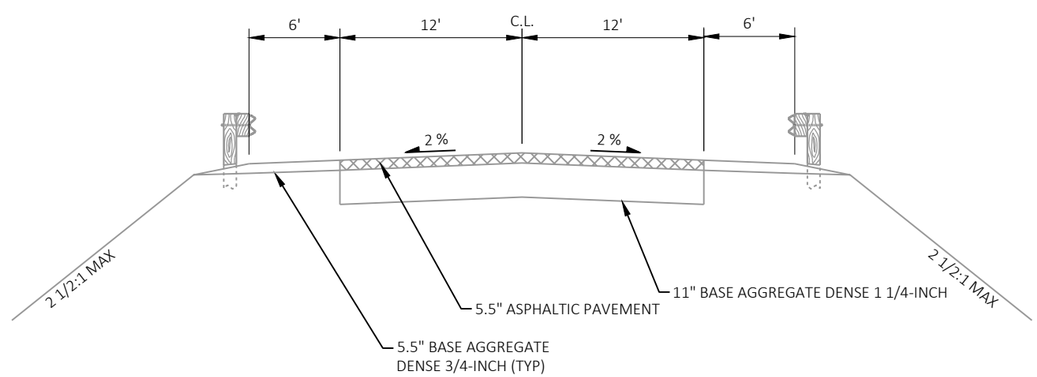

EXISTING TYPICAL SECTION CTH A BOX CULVERT

STA 1141+27.83 - 1141+43.37

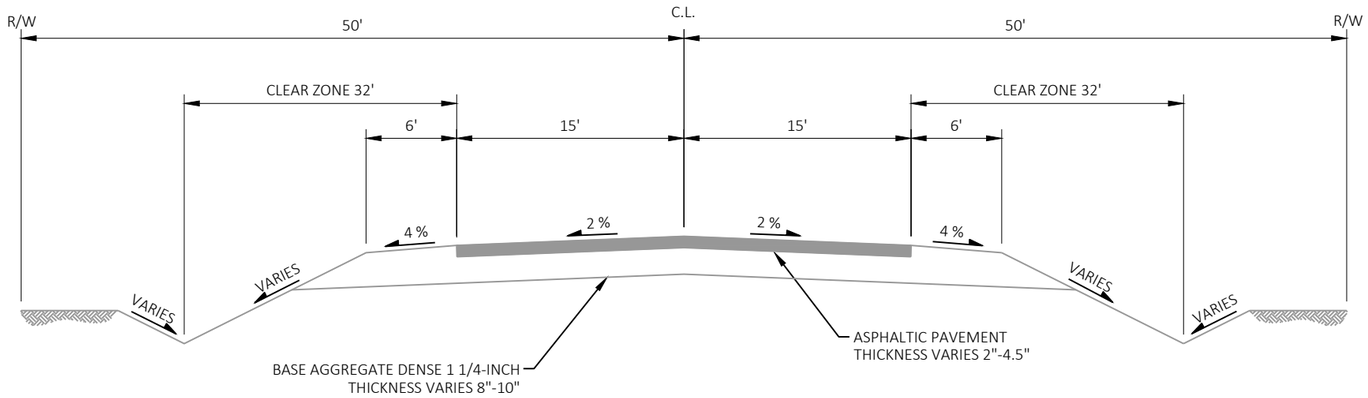

EXISTING TYPICAL SECTION

C.T.H. - J NORTHBOUND
STA 1123+50.47 - 1128+61
STA 120+25 - 122+27
STA 123+29.63 - 125+75.83

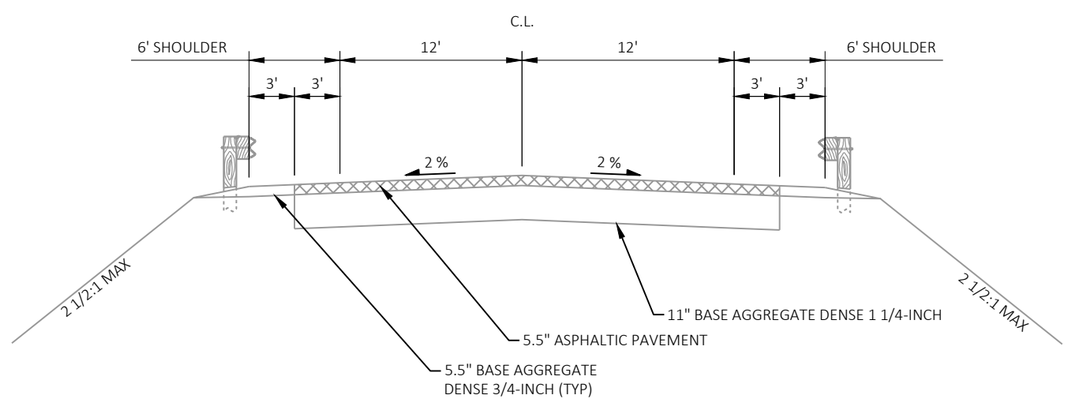

EXISTING TYPICAL SECTION CTH J BOX CULVERT

STA 122+77 - 123+29.63

PROJECT NO: 2814-03-70	HWY: CTH A	COUNTY: RACINE	TYPICAL SECTIONS	SHEET 5	E

FILE NAME : Y:\54XX\5486.DP22.CTH.A.RCN.INTRSCTN.CTH.J\CADDS\28140300\SHEETS\020301-TS.DWG
LAYOUT NAME - 020302-ts 1in-10ft
PLOT DATE : 2/19/2025 10:32 AM PLOT BY : NICHOLAS BECKER PLOT NAME : PLOT SCALE : 1 IN:10 FT
WISDOT/CADDS SHEET 42

NOTES
1. WHEN MEDIAN ISLAND IS GREATER THAN 10 FEET IN WIDTH FROM FLANGE TO FLANGE, PLACE 4" OF BASE AGGREGATE UNDER SIDEWALK AS SHOWN. WHEN MEDIAN ISLAND IS 10-FT WIDE OR LESS FROM FLANGE TO FLANGE, PLACE BASE AGGREGATE TO THE BOTTOM OF THE CURB AND GUTTER

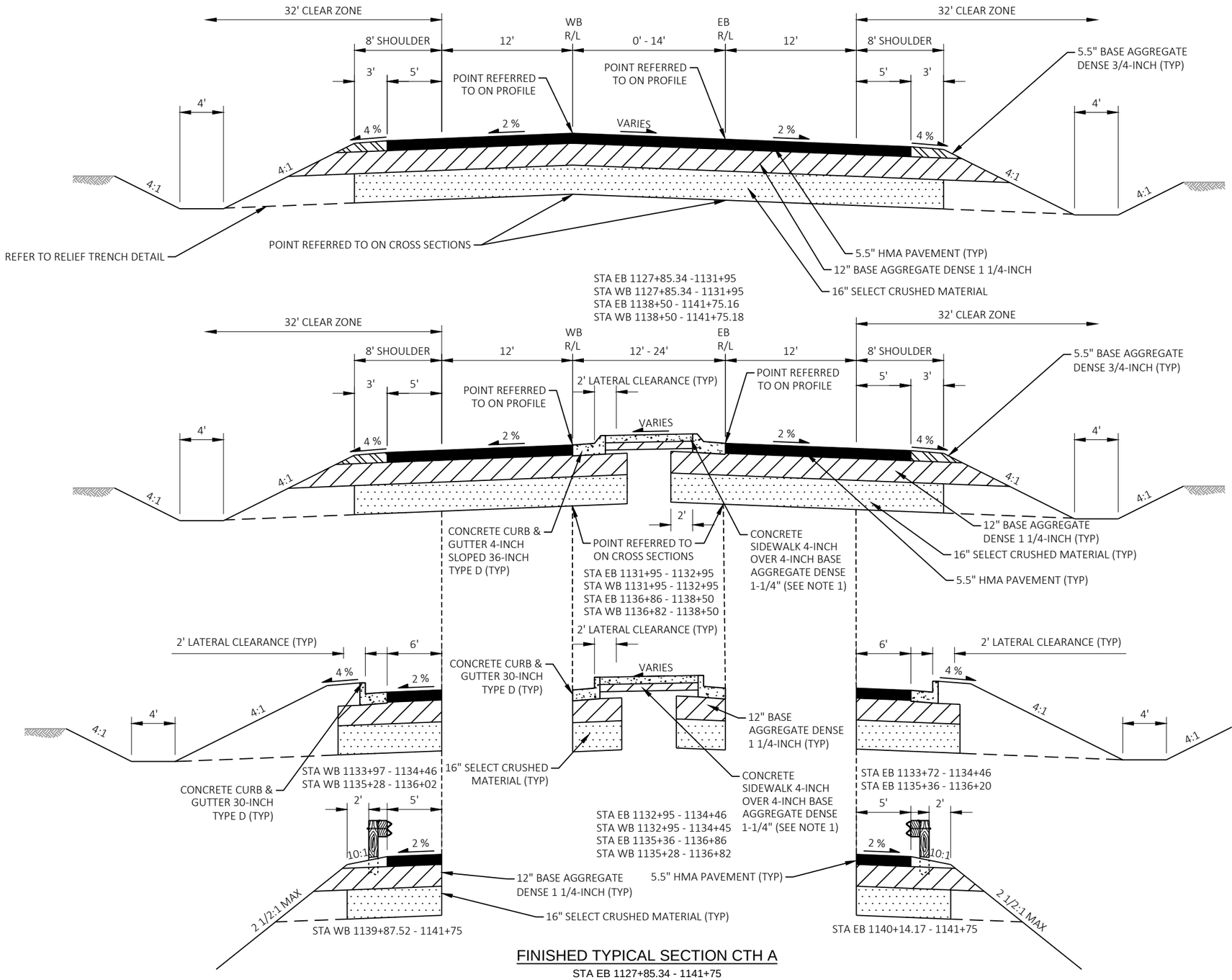

FINISHED TYPICAL SECTION CTH A

STA EB 1127+85.34 - 1141+75
STA WB 1127+85.34 - 1141+75

PROJECT NO: 2814-03-70	HWY: CTH A	COUNTY: RACINE	TYPICAL SECTIONS	SHEET 6	E

FILE NAME : Y:\54XX\5486.DP22.CTH.A.RCN.INTRSCTN.CTH.J\CADDS\28140300\SHEETS\020301-TS.DWG
LAYOUT NAME - 020303-ts 1in-10ft
PLOT DATE : 2/19/2025 10:32 AM PLOT BY : NICHOLAS BECKER PLOT NAME : PLOT SCALE : 1 IN:10 FT
WISDOT/CADDS SHEET 42

2

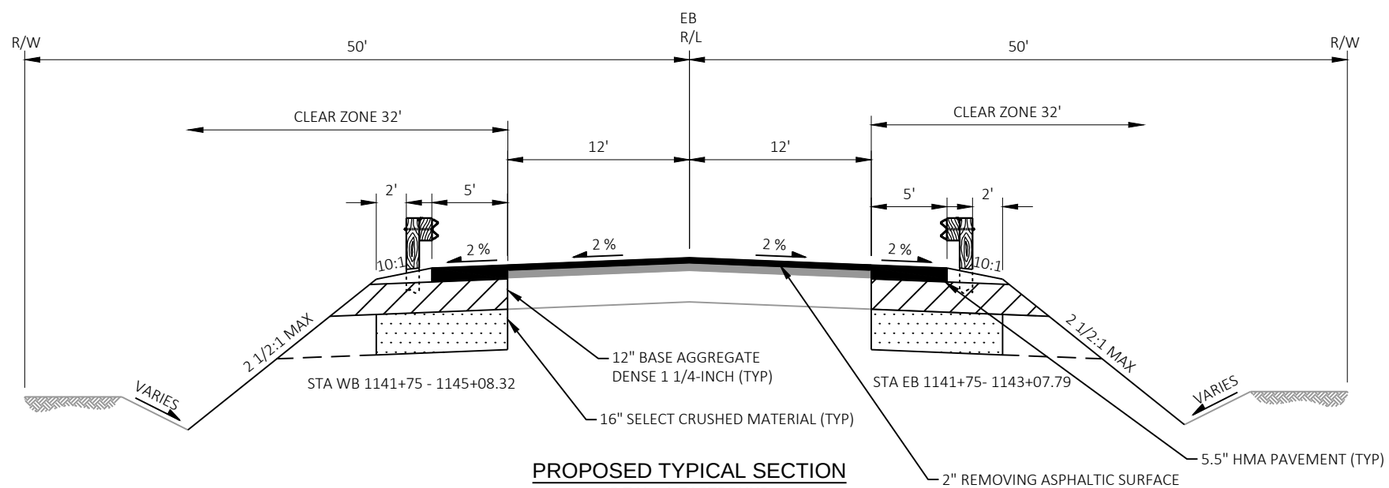

PROPOSED TYPICAL SECTION

C.T.H. - A EASTBOUND
STA 1141+75 - 1145+08.32

PROJECT NO: 2814-03-70	HWY: CTH A	COUNTY: RACINE	TYPICAL SECTIONS	SHEET 7	E

FILE NAME : Y:\54XX\5486.DP22.CTH.A.RCN.INTRSCTN.CTH.J\CADDS\28140300\SHEETS\020301-TS.DWG
LAYOUT NAME - 020304-ts 1in-10ft
PLOT DATE : 2/19/2025 10:32 AM PLOT BY : NICHOLAS BECKER PLOT NAME : PLOT SCALE : 1 IN:10 FT

2

NOTES
1. WHEN MEDIAN ISLAND IS GREATER THAN 10 FEET IN WIDTH FROM FLANGE TO FLANGE, PLACE 4" OF BASE AGGREGATE UNDER SIDEWALK AS SHOWN. WHEN MEDIAN ISLAND IS 10-FT WIDE OR LESS FROM FLANGE TO FLANGE, PLACE BASE AGGREGATE TO THE BOTTOM OF THE CURB AND GUTTER

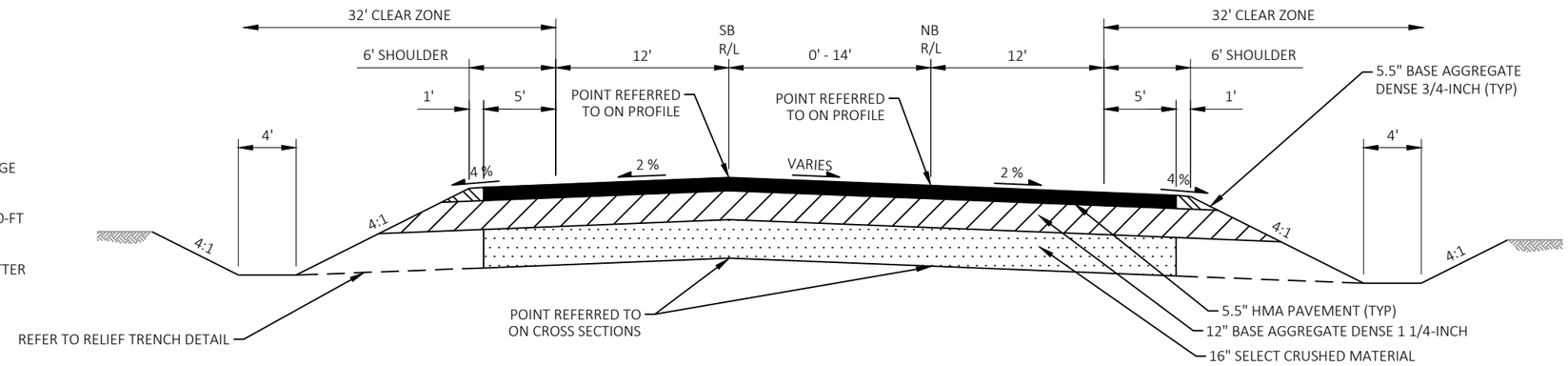

STA NB 1123+50.47 - 1124+97
STA SB 1123+50.47 - 1124+97
STA NB 1125+68 - 1126+02
STA SB 1125+68 - 1126+00

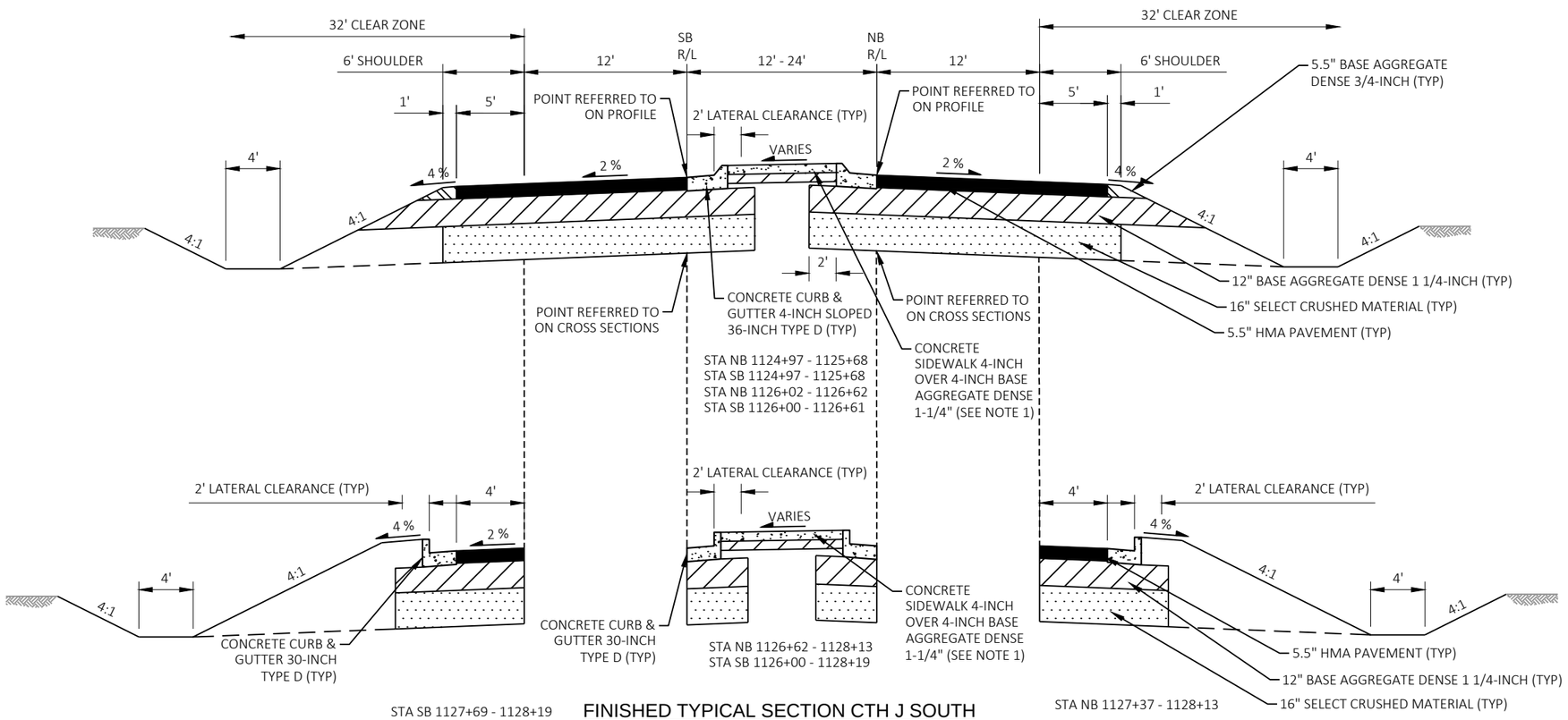

STA SB 1127+69 - 1128+19

FINISHED TYPICAL SECTION CTH J SOUTH

STA NB 1123+50.47 - 1128+13
STA SB 1123+50.47 - 1128+19

STA NB 1127+37 - 1128+13

2

PROJECT NO: 2814-03-70	HWY: CTH A	COUNTY: RACINE	TYPICAL SECTIONS	SHEET 8	E

NOTES
1. WHEN MEDIAN ISLAND IS GREATER THAN 10 FEET IN WIDTH FROM FLANGE TO FLANGE, PLACE 4" OF BASE AGGREGATE UNDER SIDEWALK AS SHOWN. WHEN MEDIAN ISLAND IS 10-FT WIDE OR LESS FROM FLANGE TO FLANGE, PLACE BASE AGGREGATE TO THE BOTTOM OF THE CURB AND GUTTER

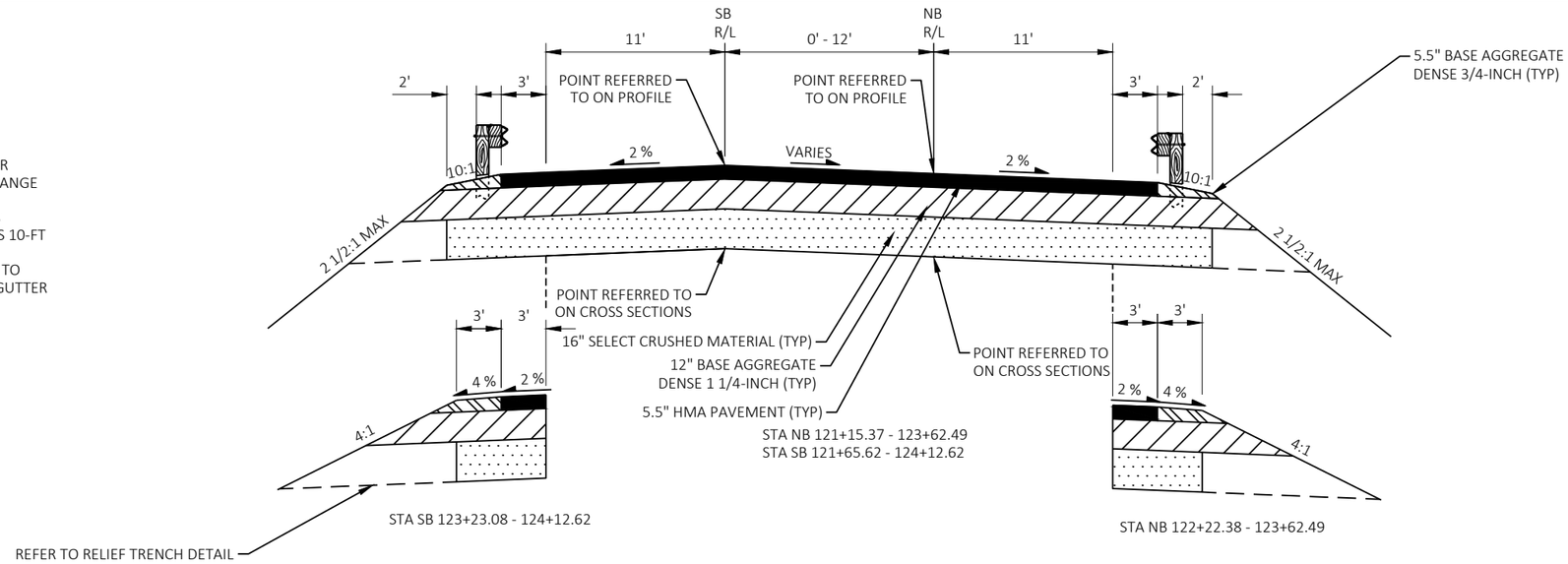

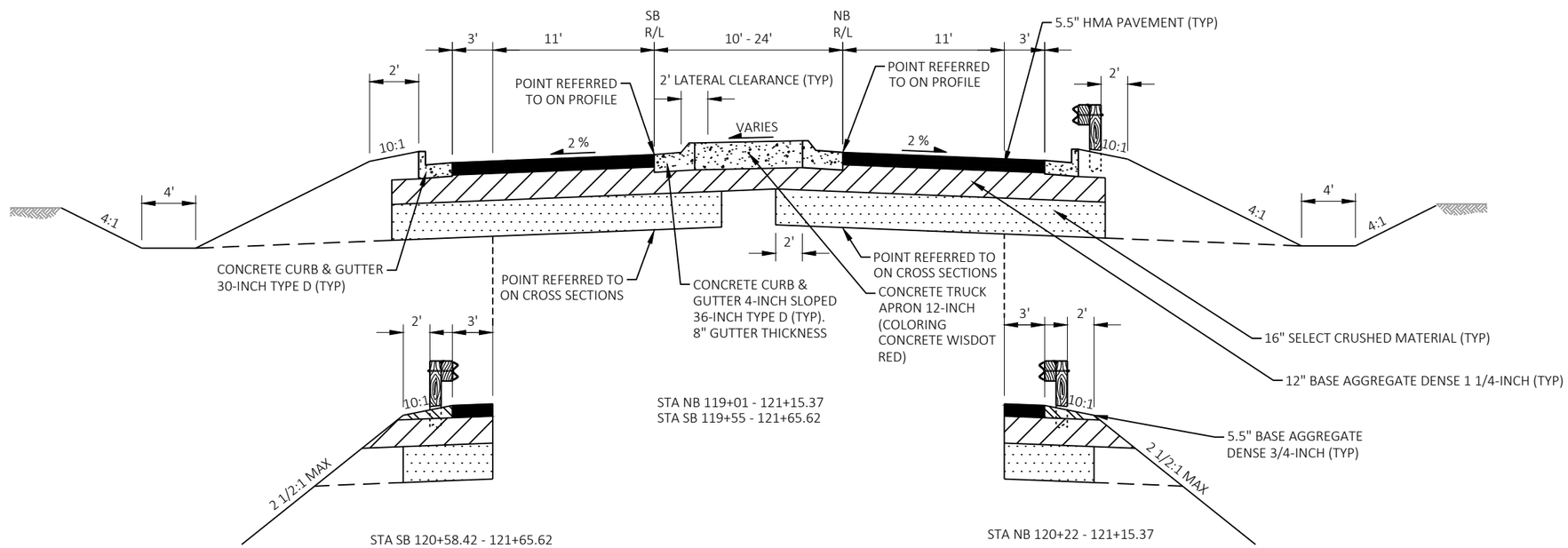

FINISHED TYPICAL SECTION CTH J NORTH

STA NB 119+01-123+62.49
STA SB 119+55 - 124+12.62

PROJECT NO: 2814-03-70	HWY: CTH A	COUNTY: RACINE	TYPICAL SECTIONS	SHEET 9	E

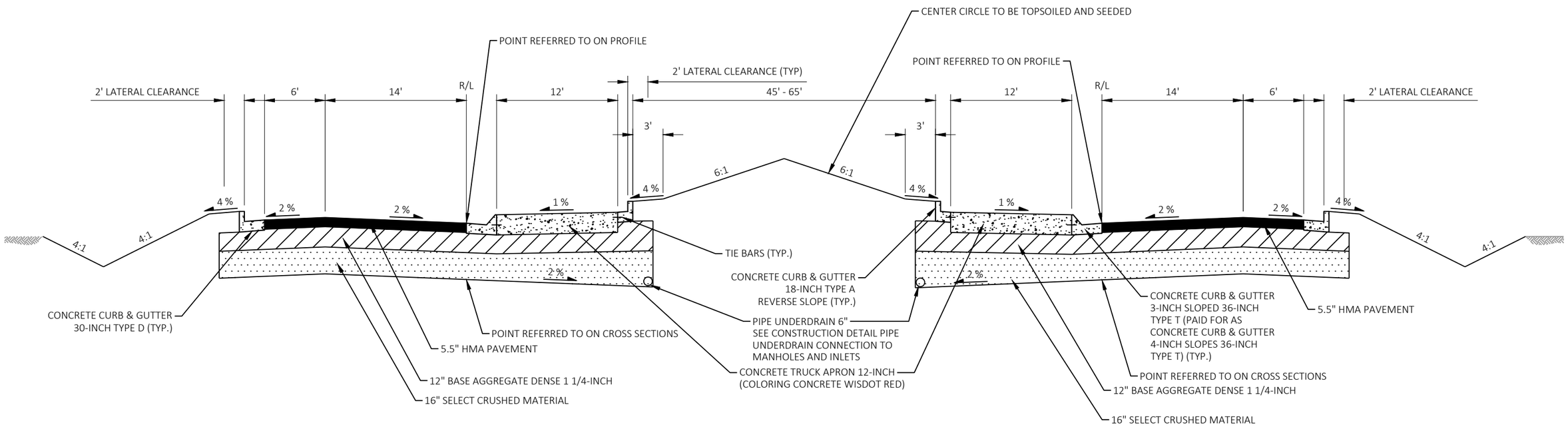

FINISHED TYPICAL SECTION ROUNDABOUT

STA 1+00-3+74.22

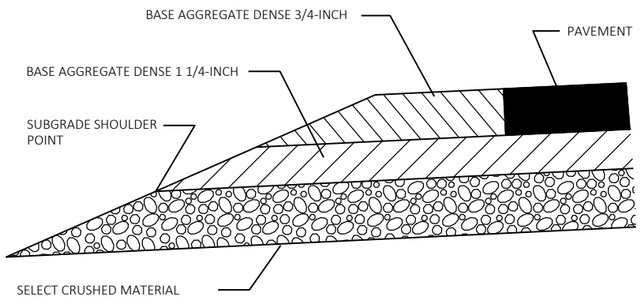

SECTION A-A

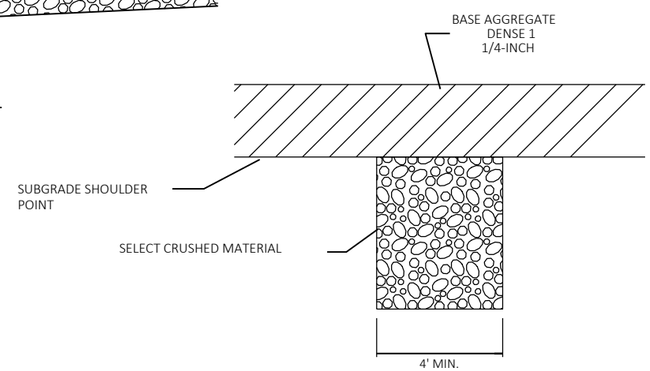

SECTION B-B

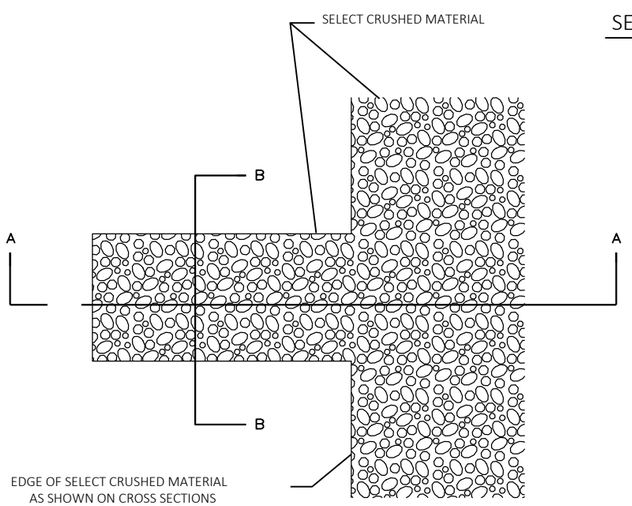

DETAIL FOR RELIEF TRENCH

CONSTRUCT DRAINS AT LEAST EVERY 250' AND AT EACH SAG VERTICAL CURVE IN THE PROFILE.

APPROXIMATE LOCATIONS FOR RELIEF TRENCHES:
CTH A: 1129+50 RT/LT, 1132+00 RT/LT, 1134+50 RT/LT, 1137+00 RT/LT, 1139+50, RT/LT, 1141+00, RT/LT
CTH J: 1124+50 RT/LT, 1127+00 RT/LT, 120+00 RT/LT, 122+50 RT/LT

EXCAVATION REQUIRED TO CONSTRUCT RELIEF TRENCH INCLUDED TO THE ITEM SELECT CRUSHED MATERIAL

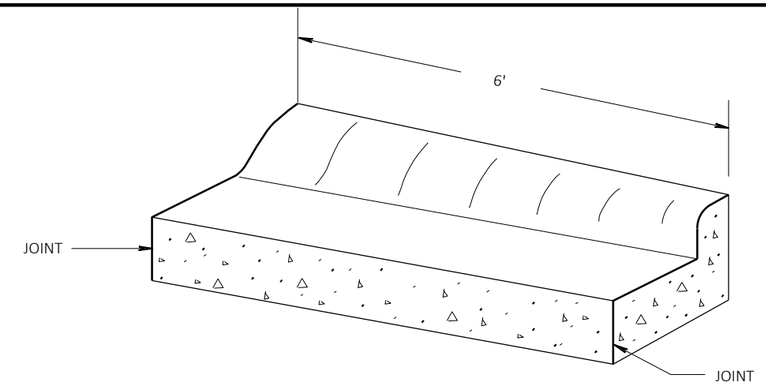

TRANSITION DETAIL

36" TYPE "D" CURB & GUTTER TO 30" TYPE "D" CURB & GUTTER
(TO BE MEASURED & PAID FOR AS 36" CONC. C&G)

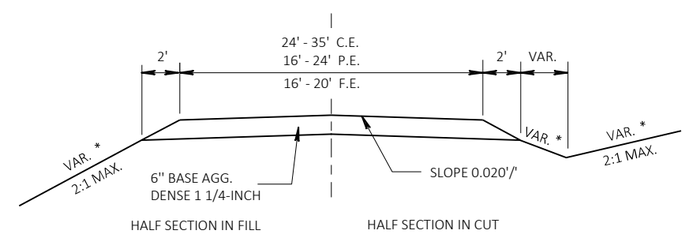

* 6:1 WITHIN CLEAR ZONE

TYPICAL SECTION FOR PRIVATE ENTRANCES

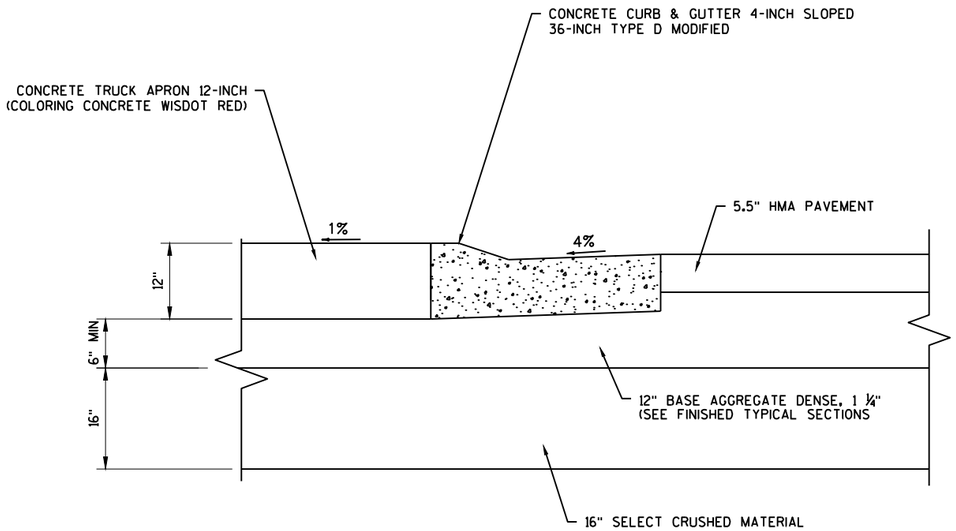

TRUCK OVERTRACKING PAD DETAIL
ALL FOUR QUADRANTS

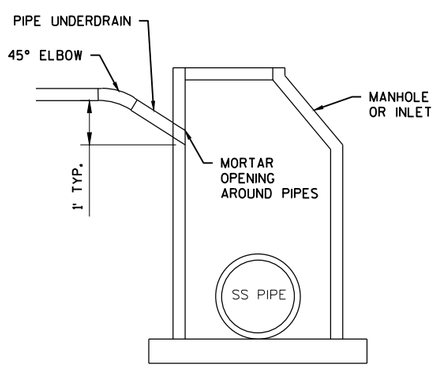

PIPE UNDERDRAIN CONNECTION
TO MANHOLES AND INLETS

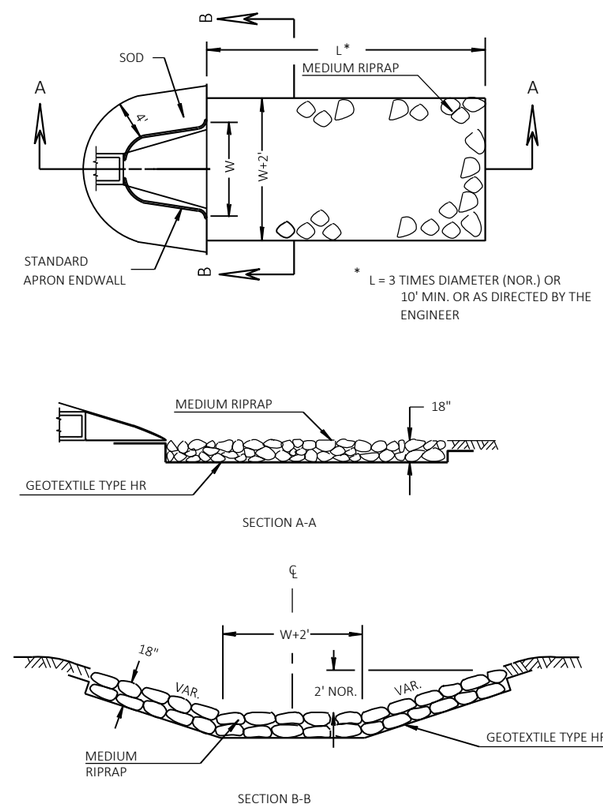

SOD, MEDIUM RIPRAP AND GEOTEXTILE FABRIC DETAIL
AT APRON ENDWALL

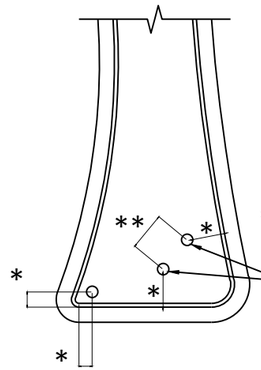

* DISTANCE TO BE LAID OUT IN THE FIELD BASED ON SIGN SIZE. THREE FOOT MINIMUM CLEARANCE BETWEEN THE EDGE OF SIGN AND THE FACE OF CURB.

SEE A4-3 SIGN PLATE FOR "TYPICAL INSTALLATION OF PERMANENT TYPE II SIGNS ON SINGLE POST"

SEE A4-3B SIGN PLATE "SIGN POST BOX-OUTS"

** SEE A4-4 SIGN PLATE "TYPICAL INSTALLATION OF TYPE II SIGNS ON MULTIPLE SUPPORTS"

USE A 18-INCH MINIMUM INSIDE DIAMETER PVC PIPE BOX OUT IN CONCRETE FOR SIGN POST (TYP). THE NUMBER OF BOX OUTS REQUIRED VARIES BY WIDTH OF THE SIGN AND SHALL BE VERIFIED BEFORE PLACING THE CONCRETE IN THE ISLAND.

ISLAND SIGN LOCATION DETAIL (TYP)

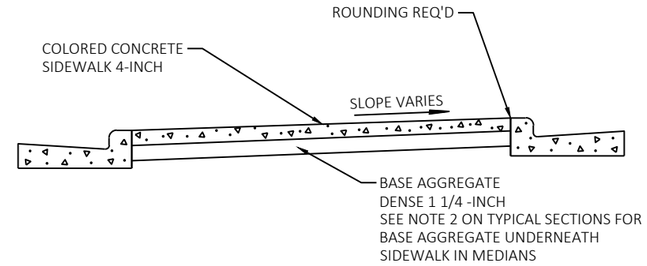

SECTION A-A

(1) EXPANSION MATERIAL TO BE 1" LONGER THAN ABUTTING MEDIAN CONCRETE THICKNESS. (i.e. 5" IN HEIGHT WHEN ADJACENT TO CONCRETE SIDEWALK 4-INCH)

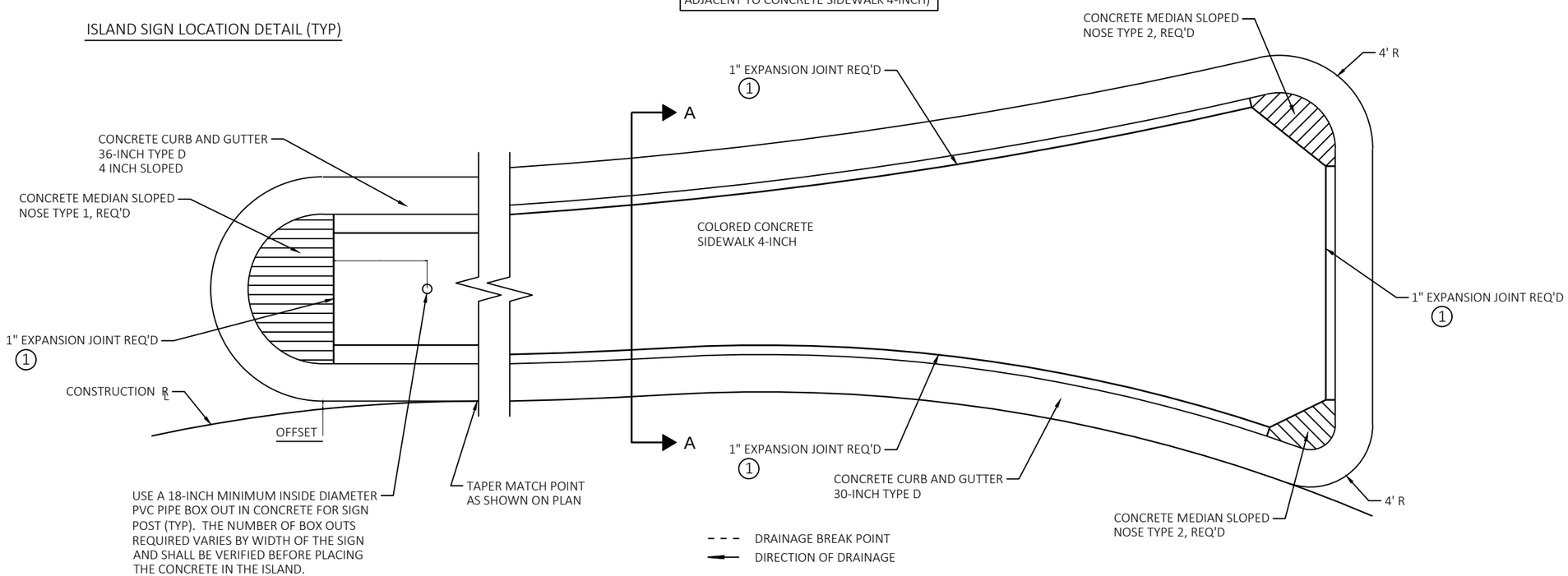

CONCRETE SPLITTER ISLAND DETAIL WITHOUT CROSSWALK

CURB & GUTTER SECTION

BASE AGGREGATE SHOULDER SECTION

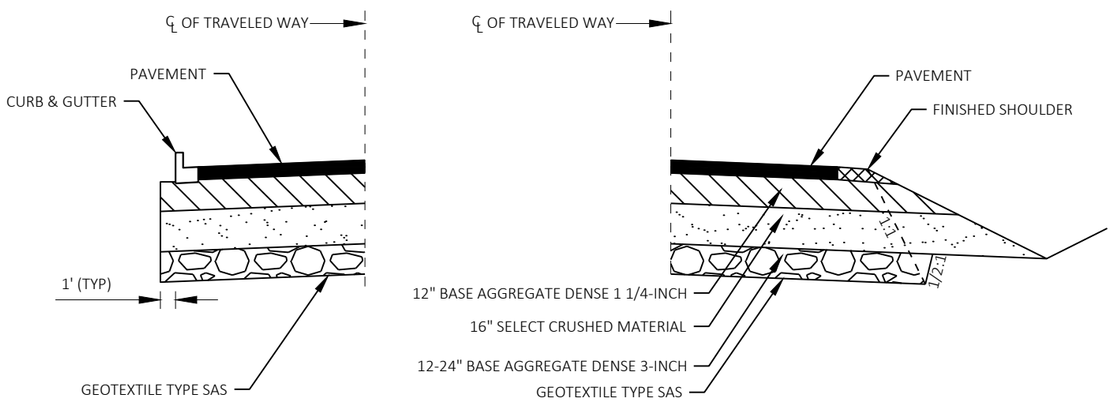

TYPICAL HALF-SECTION DETAIL FOR EBS & IMPROVED SUBGRADE

RUNOFF COEFFICIENT TABLE

	HYDROLOGIC SOIL GROUP											
	A			B			C			D		
	SLOPE RANGE (PERCENT)			SLOPE RANGE (PERCENT)			SLOPE RANGE (PERCENT)			SLOPE RANGE (PERCENT)		
LAND USE:	0-2	2-6	6 & OVER	0-2	2-6	6 & OVER	0-2	2-6	6 & OVER	0-2	2-6	6 & OVER
ROW CROPS	.08 .22	.16 .30	.22 .38	.12 .26	.20 .34	.27 .44	.15 .30	.24 .37	.33 .50	.19 .34	.28 .41	.38 .56
MEDIAN STRIP-TURF	.19 .24	.20 .26	.24 .30	.19 .25	.22 .28	.26 .33	.20 .26	.23 .30	.30 .37	.20 .27	.25 .32	.30 .40
SIDE SLOPE-TURF			.25 .32			.27 .34			.28 .36			.30 .38
PAVEMENT:												
ASPHALT	.70 - .95											
CONCRETE	.80 - .95											
BRICK	.70 - .80											
DRIVES, WALKS	.75 - .85											
ROOFS	.75 - .95											
GRAVEL ROADS, SHOULDERS	.40 - .60											

TOTAL PROJECT AREA = ___8.21___ ACRES
TOTAL AREA EXPECTED TO BE DISTURBED BY CONSTRUCTION ACTIVITIES = ___6.77___ACRES

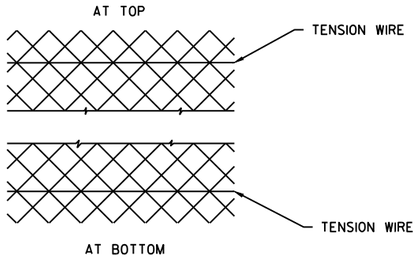

SELVAGES

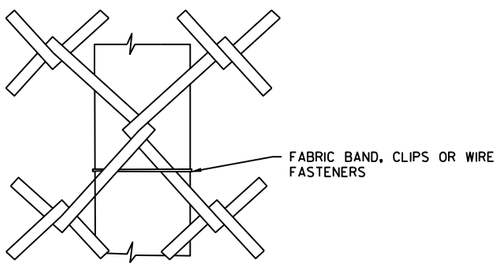

1) FABRIC FASTENERS:
MINIMUM $\frac{3}{16}$" X $\frac{3}{4}$" STRETCHER BAR BANDED TO TERMINAL POSTS, OR INDUSTRIAL FABRIC FITTINGS ON TERMINAL POSTS. ALL FASTENERS ARE NO. 6 ALUMINUM SPACED 14" MAX. VERTICALLY.

2) FENCE HEIGHT:
THE FABRIC HEIGHT IS THE NOMINAL FENCE HEIGHT.

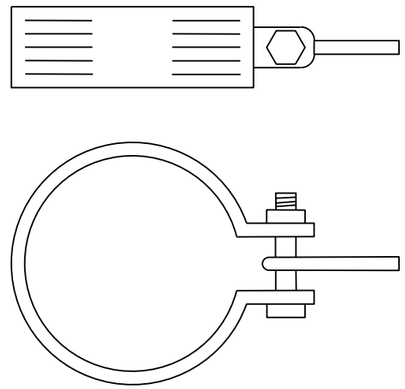

TENSION WIRE END CLAMP

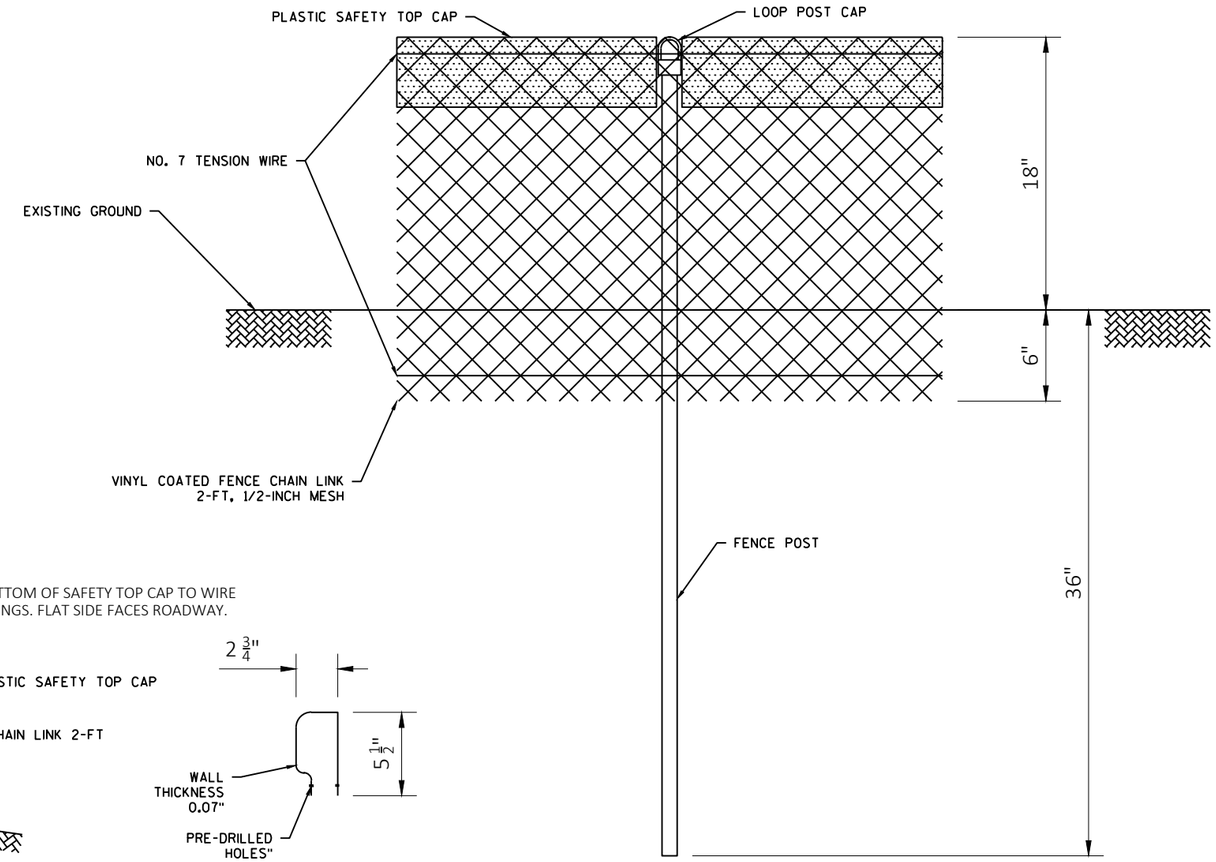

FENCING SMALL ANIMAL

NOTE: CONNECT BOTTOM OF SAFETY TOP CAP TO WIRE MESH WITH STEEL RINGS. FLAT SIDE FACES ROADWAY.

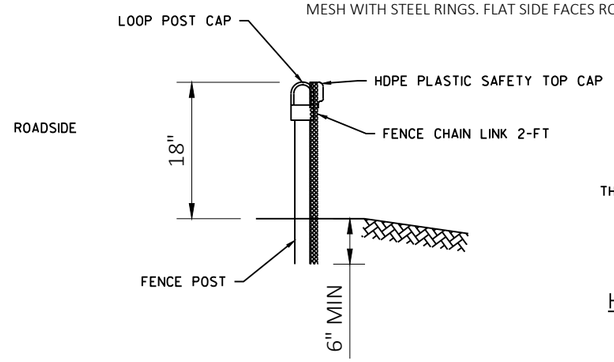

FENCING SMALL ANIMAL

HDPE PLASTIC SAFETY TOP CAP

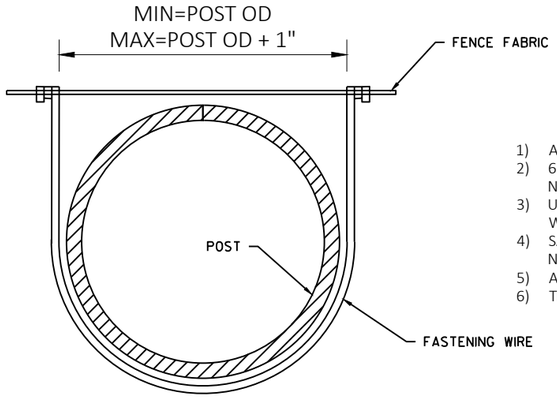

FABRIC FASTENING DETAIL

1) ALL FENCING SHALL MEET FEDERAL SPECIFICATION F-162 AND RR-F-00191.
2) 6" FLEXIBLE PLASTIC PIPE MAY BE USED IN PLACE OF HDPE PLASTIC SAFETY TOP CAP IN RURAL, NON-POPULATED AREAS WITH THE APPROVAL OF THE ENGINEER.
3) UNLESS OTHERWISE SPECIFIED, ATTACH CHAIN-LINK FABRIC TO POSTS AND RACES WITH STANDARD TIE WIRE MEETING SPECIFICATIONS.
4) SAFETY TOP CAP REQUIRED ON THE ENTIRE LENGTH OF FENCE CHAIN LINK, 2-FT, ANIMAL BARRIER. DO NOT PLACE SAFETY TOP CAP AROUND TURN-AROUND RADIUS.
5) ALL FENCE COMPONENTS SHALL BE PVC COATED, DARK GREEN IN COLOR.
6) TENSION WIRE SHALL HAVE NO VISIBLE SAG WHEN FULLY TENSIONED.

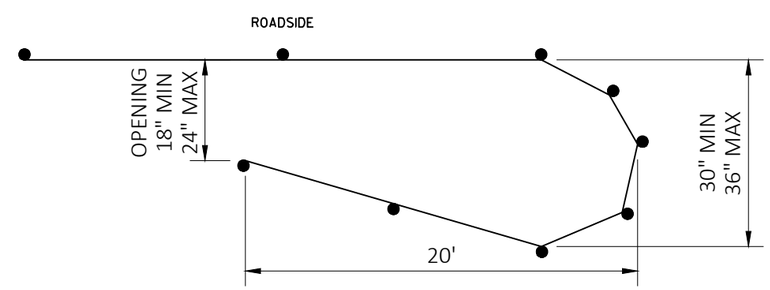

NOTES
THE PURPOSE OF THE SMALL ANIMAL TURN AROUNDS ARE TO REDIRECT THE TURTLES AWAY FROM THE ROADWAY. PLACE FENCE POSTS ON THE UPSLOPE SIDE OF FENCE. TURTLE BARRIER POSTS FOR THE TURN-AROUND SHOULD BE ON THE OUTSIDE OF THE TURN-AROUND. 5 POSTS MINIMUM WITHIN ARC OF TURN-AROUND.

FENCING SMALL ANIMAL TURN–AROUND DETAIL

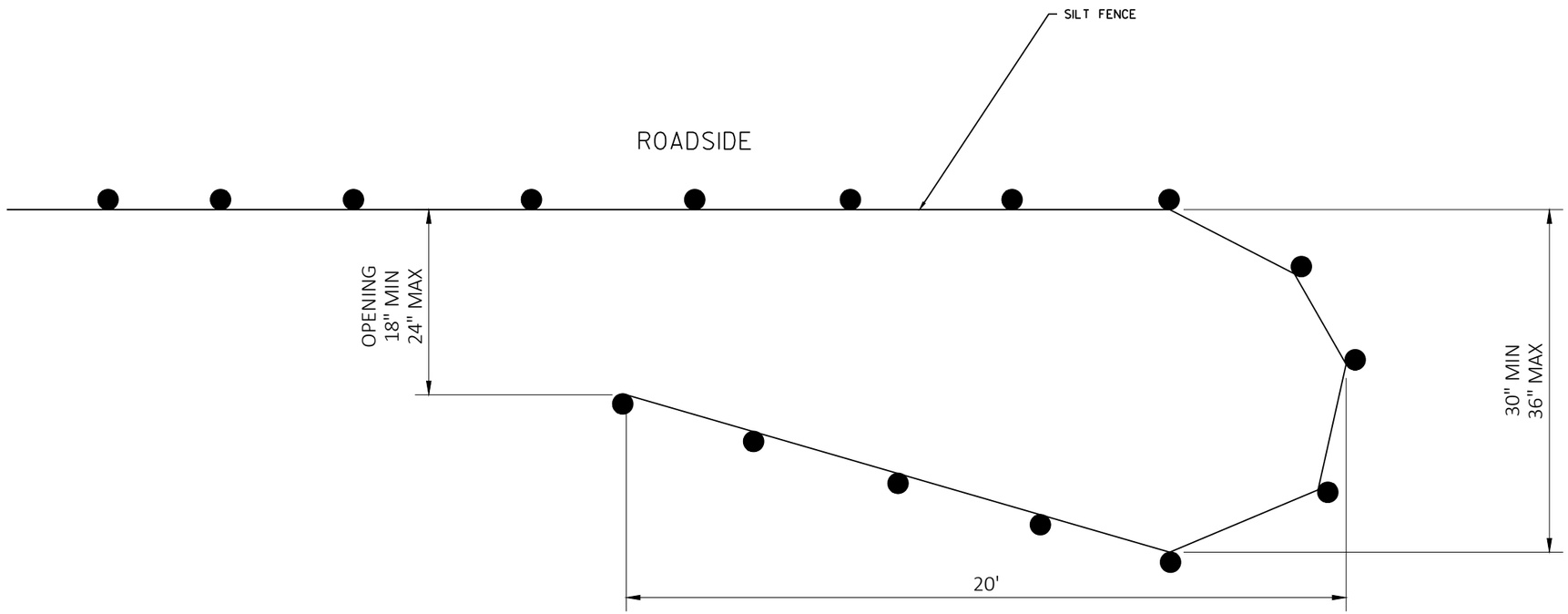

NOTES
THE PURPOSE OF THE TURTLE TURN-AROUNDS ARE TO REDIRECT THE TURTLES AWAY FROM THE CONSTRUCTION ZONE. DESIGN SHOULD ALSO INCLUDE TRENCHED SEDIMENT FENCING AND FENCING SUPPORTS ON UPSLOPE SIDE OF FENCE. SILT FENCE POSTS FOR THE TURN-AROUND SHOULD BE ON THE OUTSIDE OF THE TURN AROUND.

SILT FENCE TURTLE EXCLUSION BARRIER

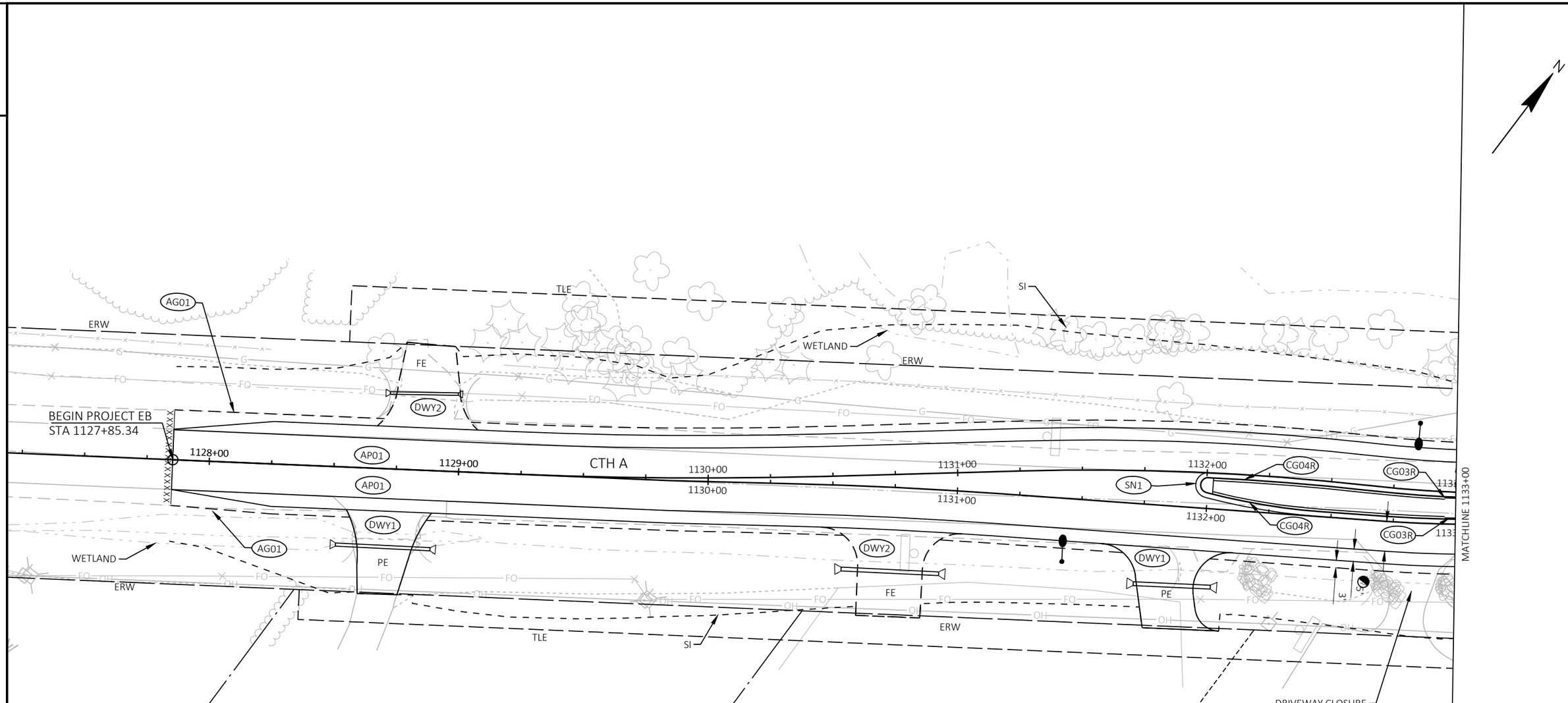

LEGEND

AP01	HMA PAVEMENT 4 LT 58-28 S 2" (UPPER LAYER) HMA PAVEMENT 3 LT 58-28 S 3.5" (LOWER LAYER)
AP02	HMA PAVEMENT 4 LT 58-28 S 2" (UPPER LAYER) REMOVING ASPHALTIC SURFACE MILLING
AG01	BASE AGGREGATE DENSE 3/4-INCH
CG01	CONCRETE CURB & GUTTER 18-INCH, TYPE A, REVERSE SLOPE
CG02	CONCRETE CURB & GUTTER 4-INCH SLOPED 36-INCH, TYPE T
CG03	CONCRETE CURB & GUTTER 30-INCH, TYPE D
CG03R	CONCRETE CURB & GUTTER 30-INCH, TYPE D, REVERSE SLOPE
CG04	CONCRETE CURB & GUTTER, 4-INCH SLOPED 36-INCH, TYPE D
CG04R	CONCRETE CURB & GUTTER, 4-INCH SLOPED 36-INCH, TYPE D REVERSE SLOPE
CG05	CONCRETE CURB & GUTTER 30-INCH, TYPE D DRIVEWAY CURB
CP01	CONCRETE TRUCK APRON 12-INCH (RED)
AFL	ASPHALTIC FLUME
DWY1	ASPHALTIC SURFACE DRIVEWAYS & FIELD ENTRANCES
DWY2	6" BASE AGGREGATE DENSE 1 1/4-INCH DRIVEWAY
GR01	MGS GUARDRAIL 3
GR02	MGS GUARDRAIL TERMINAL EAT
GR03	MGS GUARDRAIL SHORT RADIUS
GR04	MGS GUARDRAIL SHORT RADIUS TERMINAL
GR05	MGS GUARDRAIL TERMINAL TYPE 2
SN1	CONCRETE MEDIAN SLOPED NOSE TYPE 1
SN2	CONCRETE MEDIAN SLOPED NOSE TYPE 2
XXXX	SAWING ASPHALT

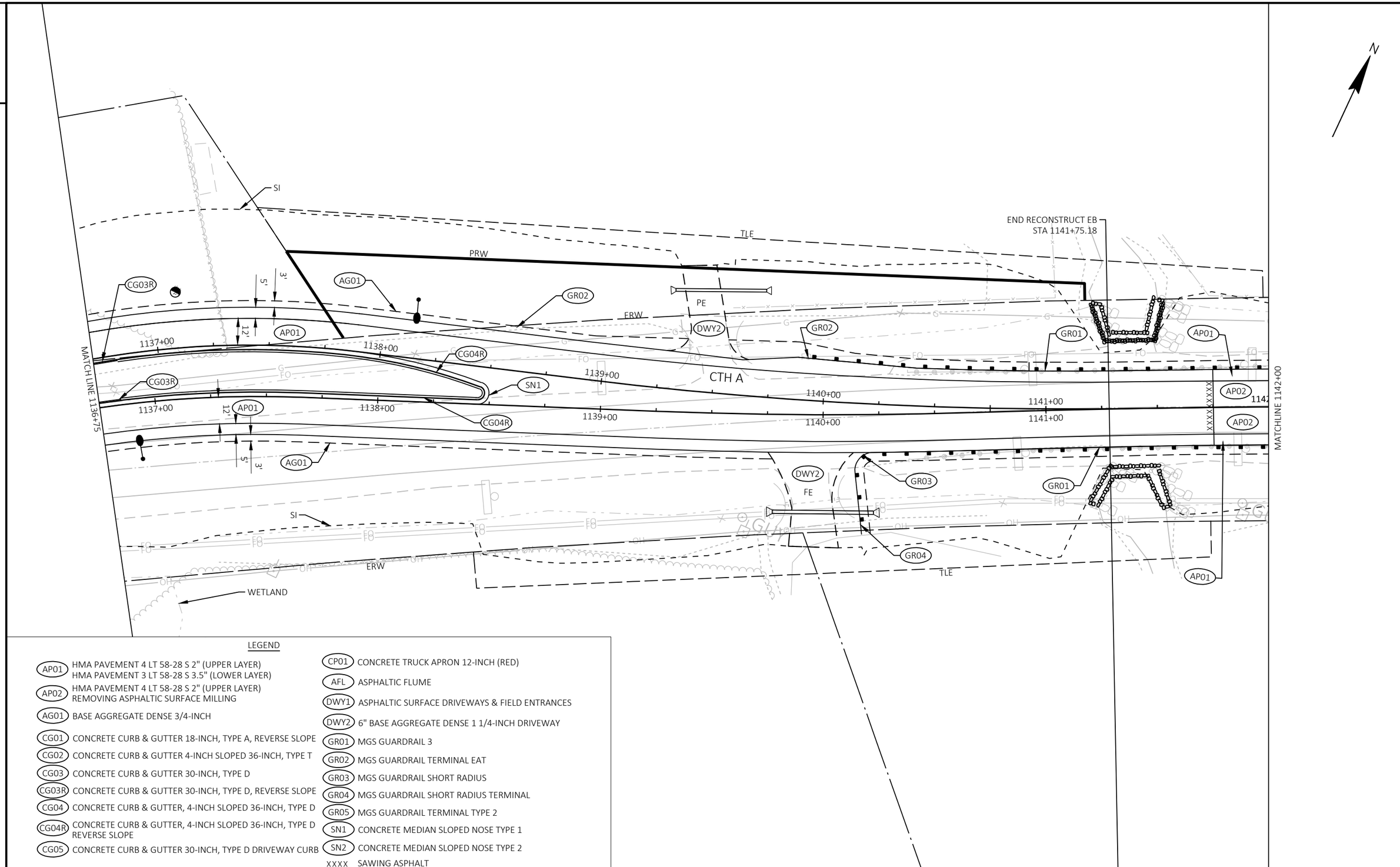

LEGEND

AP01	HMA PAVEMENT 4 LT 58-28 S 2" (UPPER LAYER) HMA PAVEMENT 3 LT 58-28 S 3.5" (LOWER LAYER)
AP02	HMA PAVEMENT 4 LT 58-28 S 2" (UPPER LAYER) REMOVING ASPHALTIC SURFACE MILLING
AG01	BASE AGGREGATE DENSE 3/4-INCH
CG01	CONCRETE CURB & GUTTER 18-INCH, TYPE A, REVERSE SLOPE
CG02	CONCRETE CURB & GUTTER 4-INCH SLOPED 36-INCH, TYPE T
CG03	CONCRETE CURB & GUTTER 30-INCH, TYPE D
CG03R	CONCRETE CURB & GUTTER 30-INCH, TYPE D, REVERSE SLOPE
CG04	CONCRETE CURB & GUTTER, 4-INCH SLOPED 36-INCH, TYPE D
CG04R	CONCRETE CURB & GUTTER, 4-INCH SLOPED 36-INCH, TYPE D REVERSE SLOPE
CG05	CONCRETE CURB & GUTTER 30-INCH, TYPE D DRIVEWAY CURB
CP01	CONCRETE TRUCK APRON 12-INCH (RED)
AFL	ASPHALTIC FLUME
DWY1	ASPHALTIC SURFACE DRIVEWAYS & FIELD ENTRANCES
DWY2	6" BASE AGGREGATE DENSE 1 1/4-INCH DRIVEWAY
GR01	MGS GUARDRAIL 3
GR02	MGS GUARDRAIL TERMINAL EAT
GR03	MGS GUARDRAIL SHORT RADIUS
GR04	MGS GUARDRAIL SHORT RADIUS TERMINAL
GR05	MGS GUARDRAIL TERMINAL TYPE 2
SN1	CONCRETE MEDIAN SLOPED NOSE TYPE 1
SN2	CONCRETE MEDIAN SLOPED NOSE TYPE 2
XXXX	SAWING ASPHALT

PROJECT NO: 2814-03-70	HWY: CTH A	COUNTY: RACINE	PLAN DETAILS - CTH A	SHEET 18	E

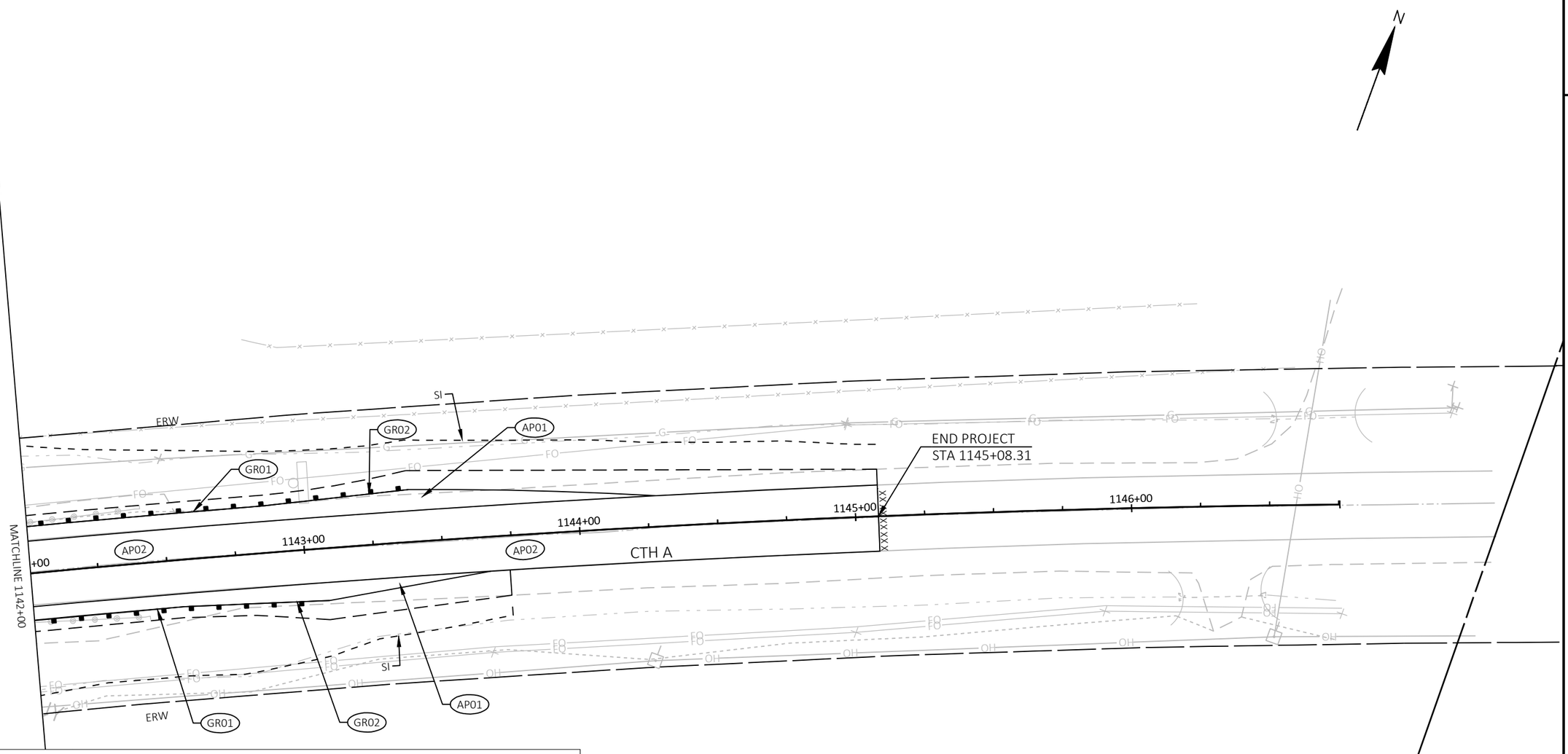

LEGEND

AP01	HMA PAVEMENT 4 LT 58-28 S 2" (UPPER LAYER) HMA PAVEMENT 3 LT 58-28 S 3.5" (LOWER LAYER)
AP02	HMA PAVEMENT 4 LT 58-28 S 2" (UPPER LAYER) REMOVING ASPHALTIC SURFACE MILLING
AG01	BASE AGGREGATE DENSE 3/4-INCH
CG01	CONCRETE CURB & GUTTER 18-INCH, TYPE A, REVERSE SLOPE
CG02	CONCRETE CURB & GUTTER 4-INCH SLOPED 36-INCH, TYPE T
CG03	CONCRETE CURB & GUTTER 30-INCH, TYPE D
CG03R	CONCRETE CURB & GUTTER 30-INCH, TYPE D, REVERSE SLOPE
CG04	CONCRETE CURB & GUTTER, 4-INCH SLOPED 36-INCH, TYPE D
CG04R	CONCRETE CURB & GUTTER, 4-INCH SLOPED 36-INCH, TYPE D REVERSE SLOPE
CG05	CONCRETE CURB & GUTTER 30-INCH, TYPE D DRIVEWAY CURB
CP01	CONCRETE TRUCK APRON 12-INCH (RED)
AFL	ASPHALTIC FLUME
DWY1	ASPHALTIC SURFACE DRIVEWAYS & FIELD ENTRANCES
DWY2	6" BASE AGGREGATE DENSE 1 1/4-INCH DRIVEWAY
GR01	MGS GUARDRAIL 3
GR02	MGS GUARDRAIL TERMINAL EAT
GR03	MGS GUARDRAIL SHORT RADIUS
GR04	MGS GUARDRAIL SHORT RADIUS TERMINAL
GR05	MGS GUARDRAIL TERMINAL TYPE 2
SN1	CONCRETE MEDIAN SLOPED NOSE TYPE 1
SN2	CONCRETE MEDIAN SLOPED NOSE TYPE 2
XXXX	SAWING ASPHALT

PROJECT NO: 2814-03-70	HWY: CTH A	COUNTY: RACINE	PLAN DETAILS - CTH A	SHEET 19	E

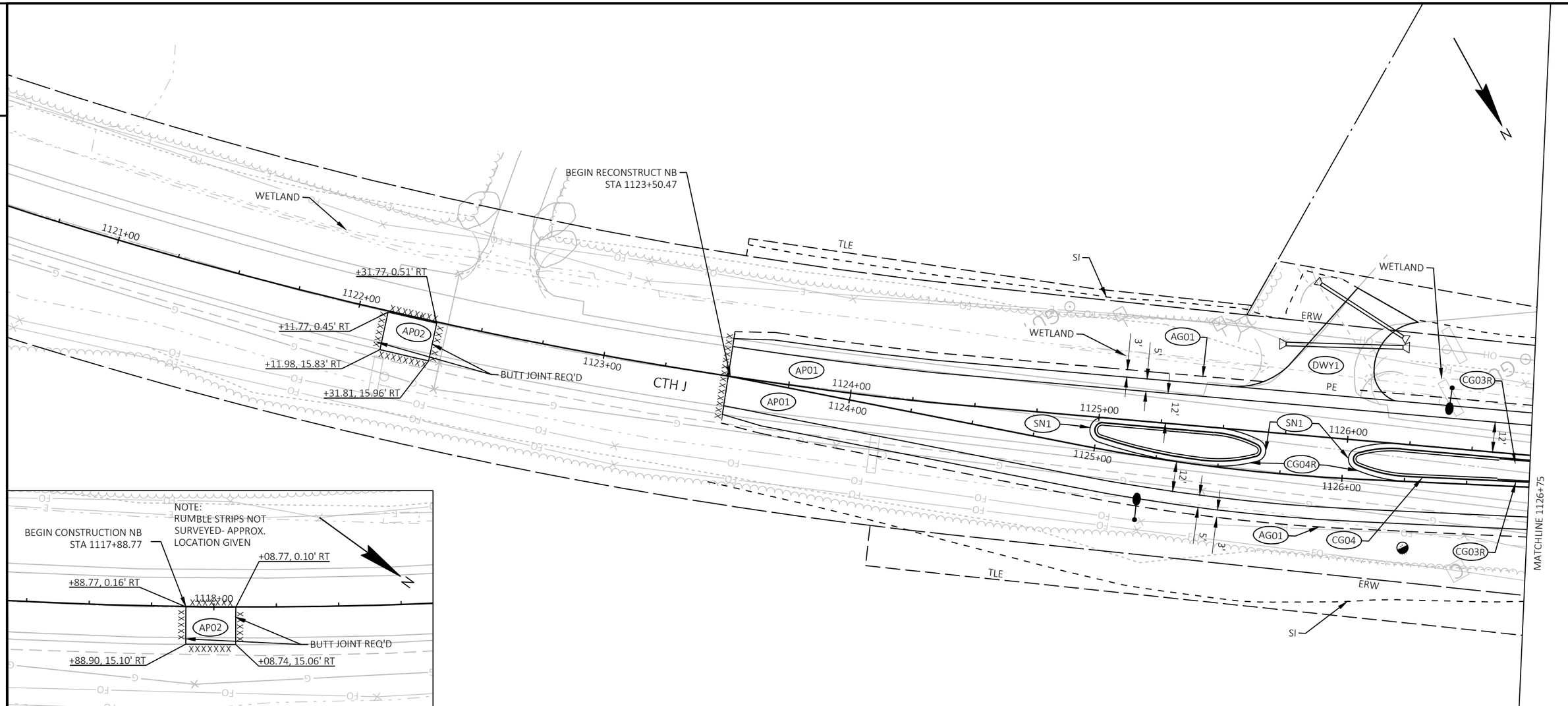

LEGEND

AP01	HMA PAVEMENT 4 LT 58-28 S 2" (UPPER LAYER) HMA PAVEMENT 3 LT 58-28 S 3.5" (LOWER LAYER)
AP02	HMA PAVEMENT 4 LT 58-28 S 2" (UPPER LAYER) REMOVING ASPHALTIC SURFACE MILLING
AG01	BASE AGGREGATE DENSE 3/4-INCH
CG01	CONCRETE CURB & GUTTER 18-INCH, TYPE A, REVERSE SLOPE
CG02	CONCRETE CURB & GUTTER 4-INCH SLOPED 36-INCH, TYPE T
CG03	CONCRETE CURB & GUTTER 30-INCH, TYPE D
CG03R	CONCRETE CURB & GUTTER 30-INCH, TYPE D, REVERSE SLOPE
CG04	CONCRETE CURB & GUTTER, 4-INCH SLOPED 36-INCH, TYPE D
CG04R	CONCRETE CURB & GUTTER, 4-INCH SLOPED 36-INCH, TYPE D REVERSE SLOPE
CG05	CONCRETE CURB & GUTTER 30-INCH, TYPE D DRIVEWAY CURB
CP01	CONCRETE TRUCK APRON 12-INCH (RED)
AFL	ASPHALTIC FLUME
DWY1	ASPHALTIC SURFACE DRIVEWAYS & FIELD ENTRANCES
DWY2	6" BASE AGGREGATE DENSE 1 1/4-INCH DRIVEWAY
GR01	MGS GUARDRAIL 3
GR02	MGS GUARDRAIL TERMINAL EAT
GR03	MGS GUARDRAIL SHORT RADIUS
GR04	MGS GUARDRAIL SHORT RADIUS TERMINAL
GR05	MGS GUARDRAIL TERMINAL TYPE 2
SN1	CONCRETE MEDIAN SLOPED NOSE TYPE 1
SN2	CONCRETE MEDIAN SLOPED NOSE TYPE 2
XXXX	SAWING ASPHALT

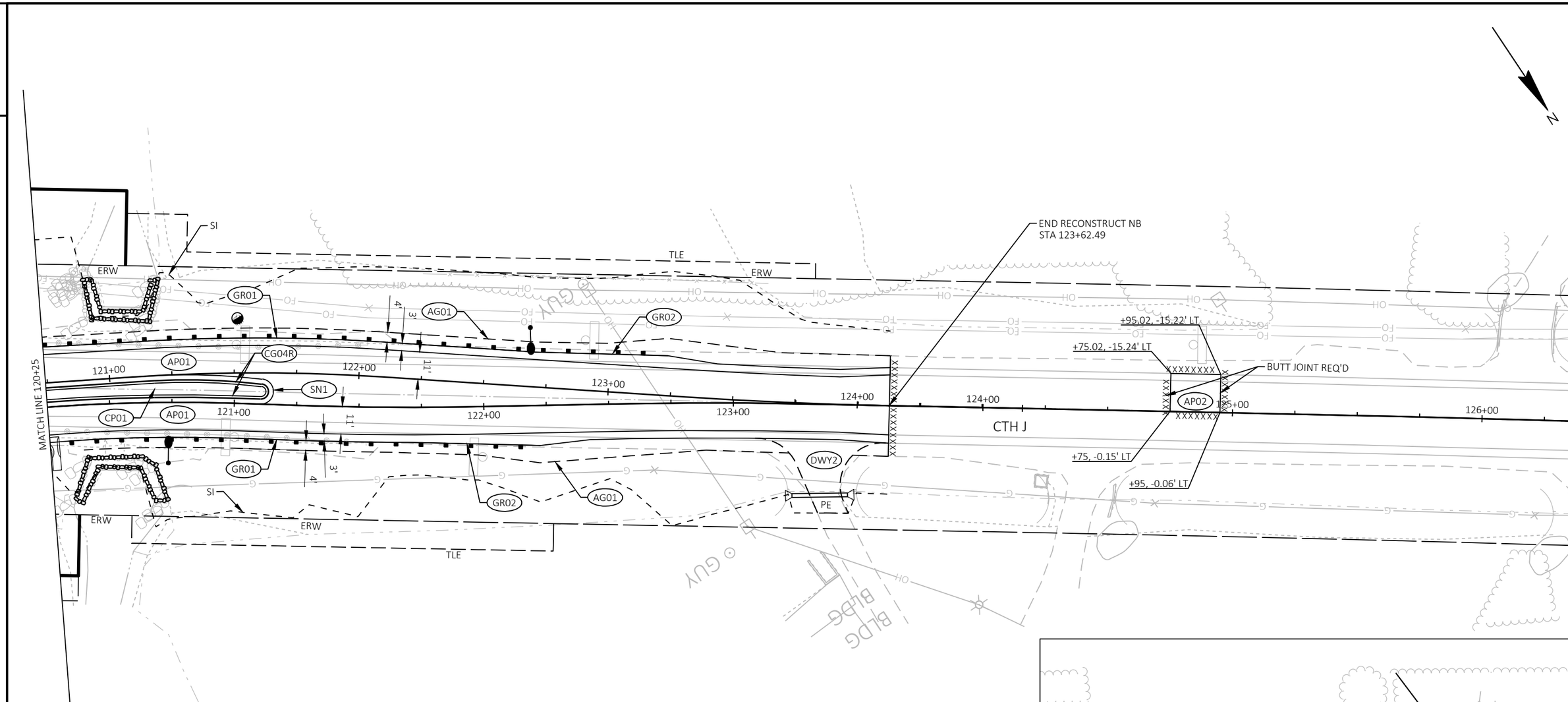

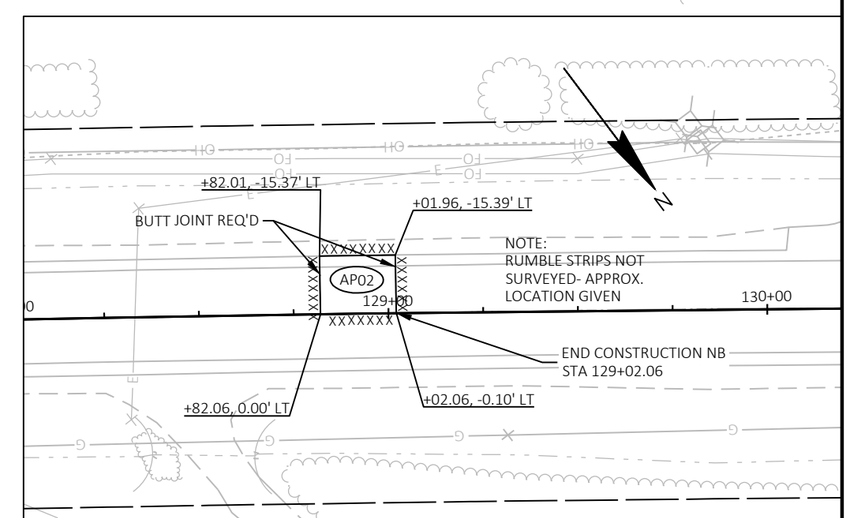

LEGEND

AP01	HMA PAVEMENT 4 LT 58-28 S 2" (UPPER LAYER) HMA PAVEMENT 3 LT 58-28 S 3.5" (LOWER LAYER)
AP02	HMA PAVEMENT 4 LT 58-28 S 2" (UPPER LAYER) REMOVING ASPHALTIC SURFACE MILLING
AG01	BASE AGGREGATE DENSE 3/4-INCH
CG01	CONCRETE CURB & GUTTER 18-INCH, TYPE A, REVERSE SLOPE
CG02	CONCRETE CURB & GUTTER 4-INCH SLOPED 36-INCH, TYPE T
CG03	CONCRETE CURB & GUTTER 30-INCH, TYPE D
CG03R	CONCRETE CURB & GUTTER 30-INCH, TYPE D, REVERSE SLOPE
CG04	CONCRETE CURB & GUTTER, 4-INCH SLOPED 36-INCH, TYPE D
CG04R	CONCRETE CURB & GUTTER, 4-INCH SLOPED 36-INCH, TYPE D REVERSE SLOPE
CG05	CONCRETE CURB & GUTTER 30-INCH, TYPE D DRIVEWAY CURB
CP01	CONCRETE TRUCK APRON 12-INCH (RED)
AFL	ASPHALTIC FLUME
DWY1	ASPHALTIC SURFACE DRIVEWAYS & FIELD ENTRANCES
DWY2	6" BASE AGGREGATE DENSE 1 1/4-INCH DRIVEWAY
GR01	MGS GUARDRAIL 3
GR02	MGS GUARDRAIL TERMINAL EAT
GR03	MGS GUARDRAIL SHORT RADIUS
GR04	MGS GUARDRAIL SHORT RADIUS TERMINAL
GR05	MGS GUARDRAIL TERMINAL TYPE 2
SN1	CONCRETE MEDIAN SLOPED NOSE TYPE 1
SN2	CONCRETE MEDIAN SLOPED NOSE TYPE 2
XXXX	SAWING ASPHALT

PROJECT NO: 2814-03-70	HWY: CTH A	COUNTY: RACINE	PLAN DETAILS - CTH J	SHEET 21	E

2

LEGEND

AP01	HMA PAVEMENT 4 LT 58-28 S 2" (UPPER LAYER) HMA PAVEMENT 3 LT 58-28 S 3.5" (LOWER LAYER)
AP02	HMA PAVEMENT 4 LT 58-28 S 2" (UPPER LAYER) REMOVING ASPHALTIC SURFACE MILLING
AG01	BASE AGGREGATE DENSE 3/4-INCH
CG01	CONCRETE CURB & GUTTER 18-INCH, TYPE A, REVERSE SLOPE
CG02	CONCRETE CURB & GUTTER 4-INCH SLOPED 36-INCH, TYPE T
CG03	CONCRETE CURB & GUTTER 30-INCH, TYPE D
CG03R	CONCRETE CURB & GUTTER 30-INCH, TYPE D, REVERSE SLOPE
CG04	CONCRETE CURB & GUTTER, 4-INCH SLOPED 36-INCH, TYPE D
CG04R	CONCRETE CURB & GUTTER, 4-INCH SLOPED 36-INCH, TYPE D REVERSE SLOPE
CG05	CONCRETE CURB & GUTTER 30-INCH, TYPE D DRIVEWAY CURB
CP01	CONCRETE TRUCK APRON 12-INCH (RED)
AFL	ASPHALTIC FLUME
DWY1	ASPHALTIC SURFACE DRIVEWAYS & FIELD ENTRANCE
DWY2	6" BASE AGGREGATE DENSE 1 1/4-INCH DRIVEWAY
GR01	MGS GUARDRAIL 3
GR02	MGS GUARDRAIL TERMINAL EAT
GR03	MGS GUARDRAIL SHORT RADIUS
GR04	MGS GUARDRAIL SHORT RADIUS TERMINAL
GR05	MGS GUARDRAIL TERMINAL TYPE 2
SN1	CONCRETE MEDIAN SLOPED NOSE TYPE 1
SN2	CONCRETE MEDIAN SLOPED NOSE TYPE 2
XXXX	SAWING ASPHALT

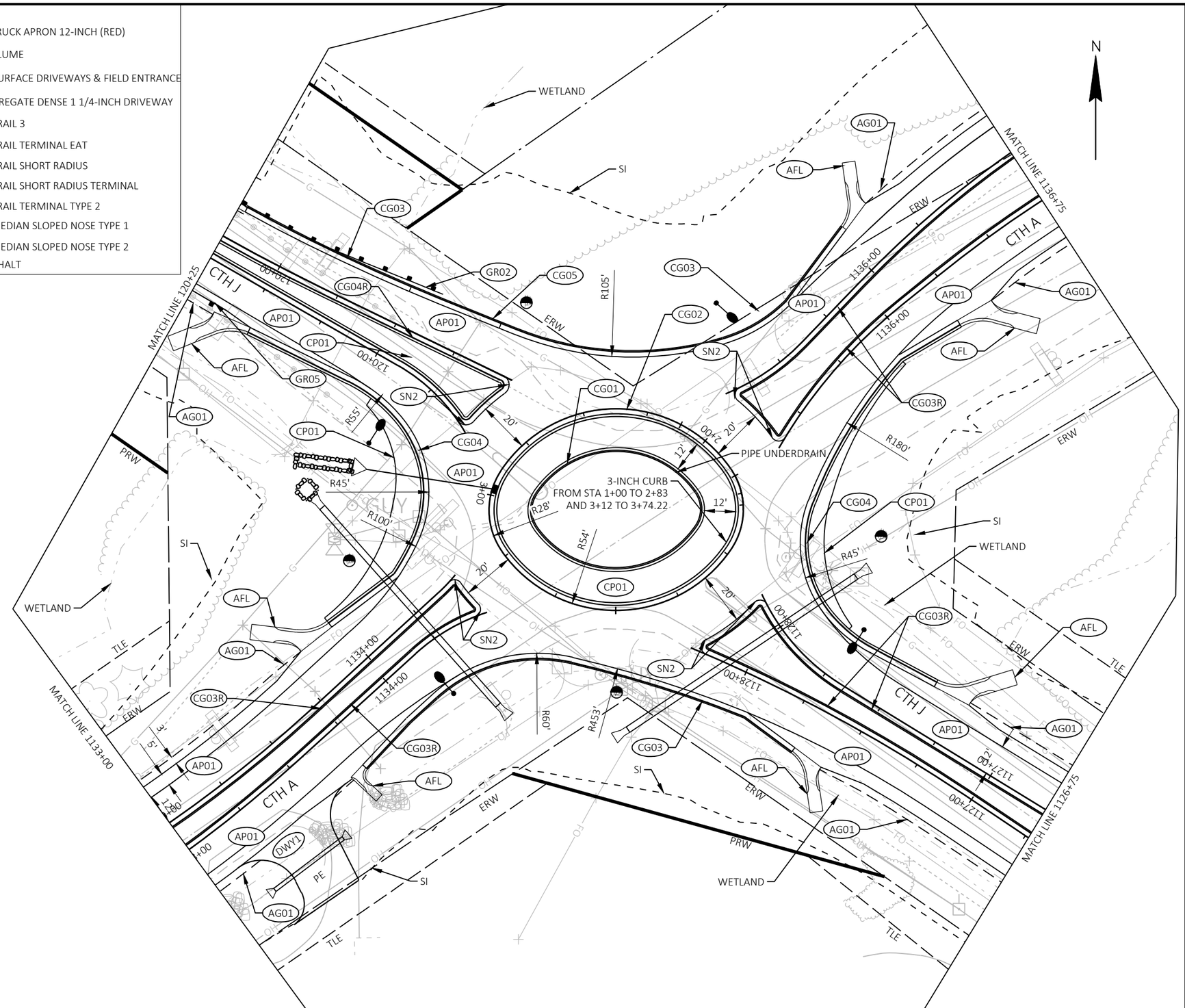

PROJECT NO: 2814-03-70	HWY: CTH A	COUNTY: RACINE	PLAN DETAILS - CTH A	SHEET 22	E

FILE NAME : Y:\54XX\5486.DP22.CTH.A.RCN.INTRSCTN.CTH.J\CADDS\28140300\SHEETS\021201-PD.DWG
LAYOUT NAME - 021202-pd
PLOT DATE : 10/17/2024 3:21 PM
PLOT BY : CODY LABELLE
PLOT NAME :
PLOT SCALE : 1 IN:40 FT
WISDOT/CADDS SHEET 42

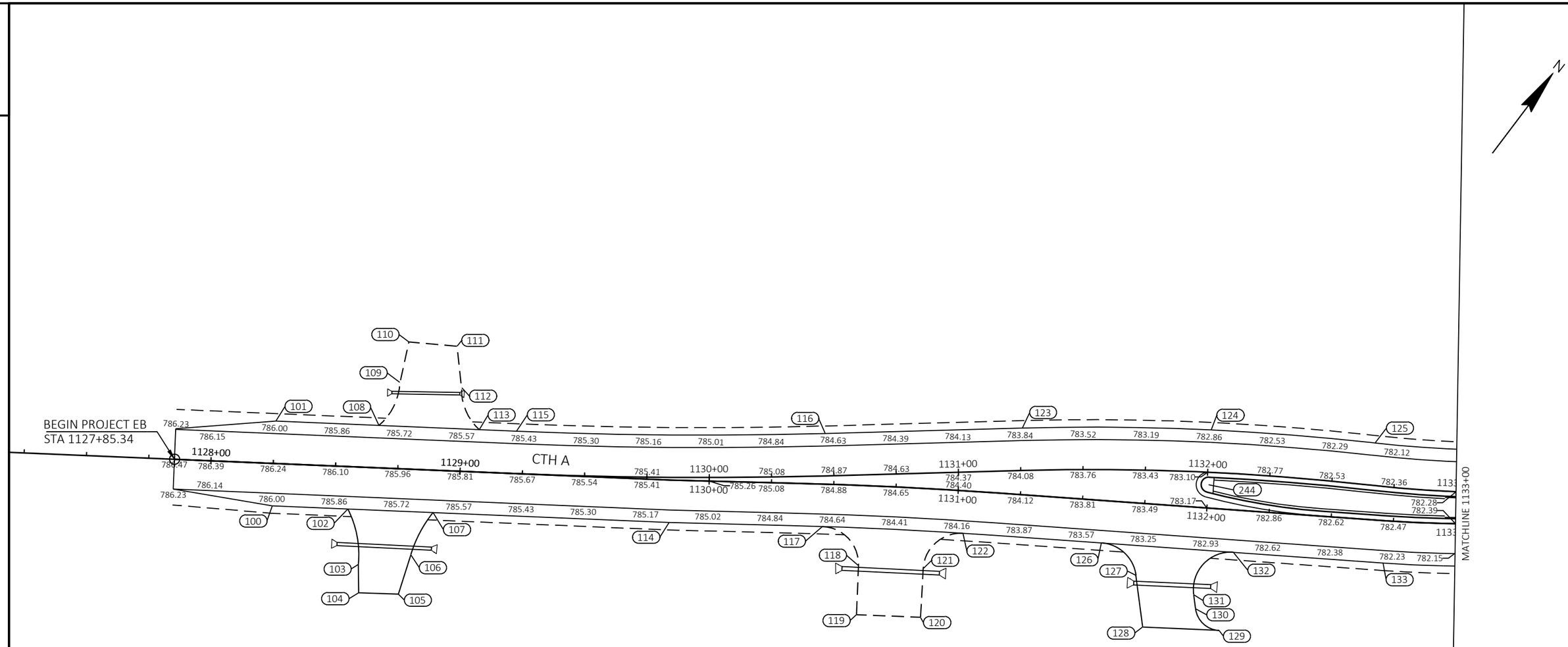

STA OS EB APPROACH					
POINT NUMBER	STATION	OFFSET	ELEVATION	NORTHING	EASTING
100	1128+25.34	17.00' RT	785.90	181545.16	529096.02
101	1128+25.34	17.00' LT	785.90	181573.10	529076.64
102	1128+55.67	17.00' RT	785.32	181562.46	529120.95
103	1128+60.82	39.04' RT	786.67	181547.29	529137.74
104	1128+61.39	50.39' RT	787.27	181538.29	529144.68
105	1128+77.31	50.24' RT	787.18	181547.49	529157.68
106	1128+81.65	34.33' RT	786.40	181563.03	529152.17
107	1128+89.89	17.00' RT	785.51	181581.96	529149.06
108	1128+66.69	17.00' LT	785.66	181596.67	529110.62
109	1128+74.41	34.52' LT	785.73	181615.47	529106.97
110	1128+77.31	50.91' LT	786.54	181630.59	529100.01
111	1128+96.69	50.03' LT	786.65	181640.91	529116.43

STA OS EB APPROACH					
POINT NUMBER	STATION	OFFSET	ELEVATION	NORTHING	EASTING
112	1128+99.20	33.52' LT	783.88	181628.78	529127.90
113	1129+07.03	17.00' LT	785.43	181619.67	529143.76
114	1129+84.49	17.00' RT	785.01	181635.98	529226.89
115	1129+21.94	17.00' LT	785.35	181628.17	529156.01
116	1130+45.91	20.30' LT	784.56	181702.26	529255.23
117	1130+45.97	17.05' RT	784.57	181671.83	529276.88
118	1130+61.23	32.12' RT	784.43	181668.15	529297.86
119	1130+61.23	51.85' RT	784.52	181651.96	529309.14
120	1130+87.70	51.74' RT	783.75	181666.59	529330.28
121	1130+87.70	32.12' RT	783.98	181682.85	529319.31
122	1131+02.97	17.06' RT	784.02	181703.74	529323.45
123	1131+23.92	26.69' LT	783.73	181751.80	529316.98

STA OS EB APPROACH					
POINT NUMBER	STATION	OFFSET	ELEVATION	NORTHING	EASTING
124	1131+99.50	31.33' LT	782.75	181796.95	529377.77
125	1132+65.46	30.78' LT	782.07	181832.50	529433.33
126	1131+58.79	17.00' RT	783.36	181734.24	529370.05
127	1131+73.48	28.99' RT	780.80	181732.22	529388.91
128	1131+77.69	49.48' RT	782.47	181717.34	529403.62
129	1132+08.40	48.63' RT	782.34	181734.83	529428.89
130	1131+98.33	40.64' RT	782.50	181736.02	529416.09
131	1131+97.18	35.01' RT	782.59	181740.11	529412.05
132	1132+11.87	17.00' RT	782.68	181763.22	529414.52
133	1132+72.05	17.00' RT	782.14	181796.08	529464.94
244	1132+00.03	9.34' LT	783.67	181778.82	529390.22

STA OS EB EXIT					
POINT NUMBER	STATION	OFFSET	ELEVATION	NORTHING	EASTING
134	1136+86.20	17.00' RT	783.01	182068.21	529826.19
135	1137+65.60	17.00' RT	782.50	182103.33	529894.29
136	1137+91.51	38.40' LT	782.37	182164.43	529896.78
137	1136+85.49	19.40' LT	783.84	182098.75	529806.37
138	1136+85.00	3.00' LT	783.78	182084.57	529814.62
139	1137+90.13	21.46' LT	782.71	182148.28	529902.06
140	1138+46.33	9.75' LT	783.04	182159.19	529958.41
141	1138+44.75	5.00' LT	783.00	182154.20	529958.80
142	1138+44.75	0.00'	782.54	182149.59	529960.73
143	1138+44.75	17.00' RT	782.20	182133.91	529967.30
144	1139+25.88	17.00' RT	782.20	182165.26	530042.13

STA OS EB EXIT					
POINT NUMBER	STATION	OFFSET	ELEVATION	NORTHING	EASTING
145	1139+75.50	17.00' RT	782.34	182185.16	530088.03
146	1139+86.34	42.11' RT	780.94	182166.81	530108.39
147	1139+85.03	59.08' RT	780.02	182150.81	530114.19
148	1140+06.76	59.74' RT	780.11	182159.56	530134.79
149	1140+03.95	39.47' RT	781.30	182176.72	530123.61
150	1140+13.58	17.00' RT	782.42	182201.21	530122.92
151	1138+94.17	29.94' LT	782.19	182196.30	529994.74
152	1139+28.88	27.43' LT	782.27	182207.38	530027.68
153	1139+39.31	40.20' LT	781.76	182223.14	530032.14
154	1139+34.30	65.60' LT	781.10	182244.60	530017.71
155	1139+50.52	66.48' LT	780.40	182251.59	530031.79

STA OS EB EXIT					
POINT NUMBER	STATION	OFFSET	ELEVATION	NORTHING	EASTING
155B	1139+56.97	33.06' LT	782.06	182223.46	530050.89
156	1139+66.15	24.38' LT	782.39	182219.17	530062.67
157	1139+88.72	25.71' LT	782.41	182229.51	530082.45
158	1140+22.03	17.00' RT	782.41	182204.86	530130.62
159	1140+42.21	20.57' LT	782.81	182247.46	530132.44
160	1140+67.00	17.00' RT	782.40	182224.83	530171.34
161	1140+92.92	17.95' LT	783.21	182267.69	530178.84
162	1141+43.37	17.00' LT	783.39	182289.22	530224.65
163	1141+75.28	17.00' RT	782.58	182272.53	530268.18
164	1141+75.09	16.99' LT	783.37	182303.08	530253.29
165	1143+07.79	18.99' RT	782.99	182326.55	530388.74

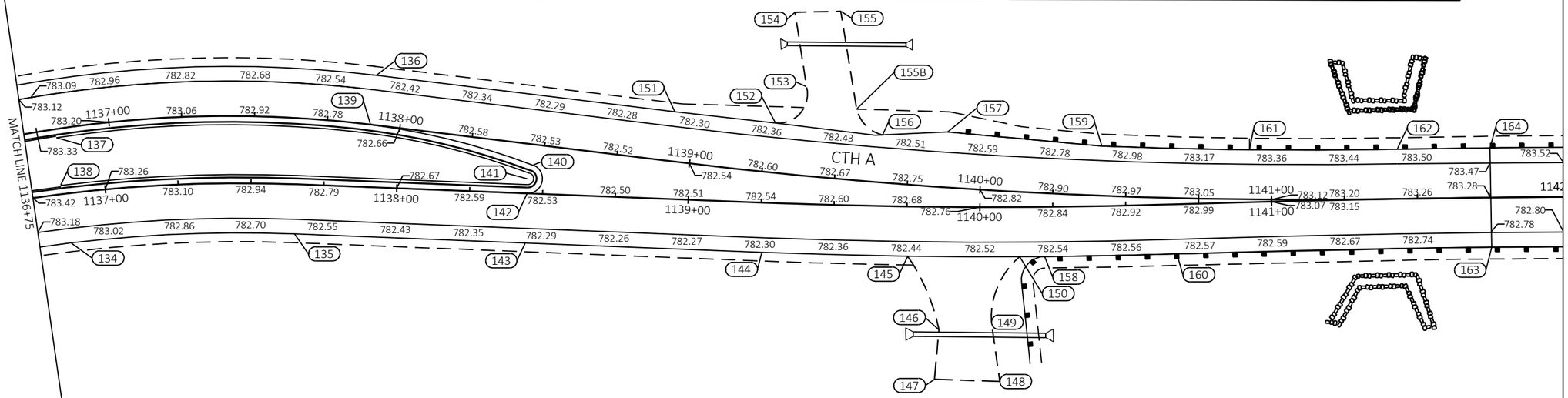

STA OS EB EXIT					
POINT NUMBER	STATION	OFFSET	ELEVATION	NORTHING	EASTING
166	1142+86.11	17.00' LT	783.70	182350.34	530354.11
167	1143+39.07	19.00' LT	783.81	182374.01	530401.72
168	1144+20.96	12.00' LT	784.47	182400.46	530479.77
169	1143+67.97	12.40' RT	783.58	182356.99	530440.87

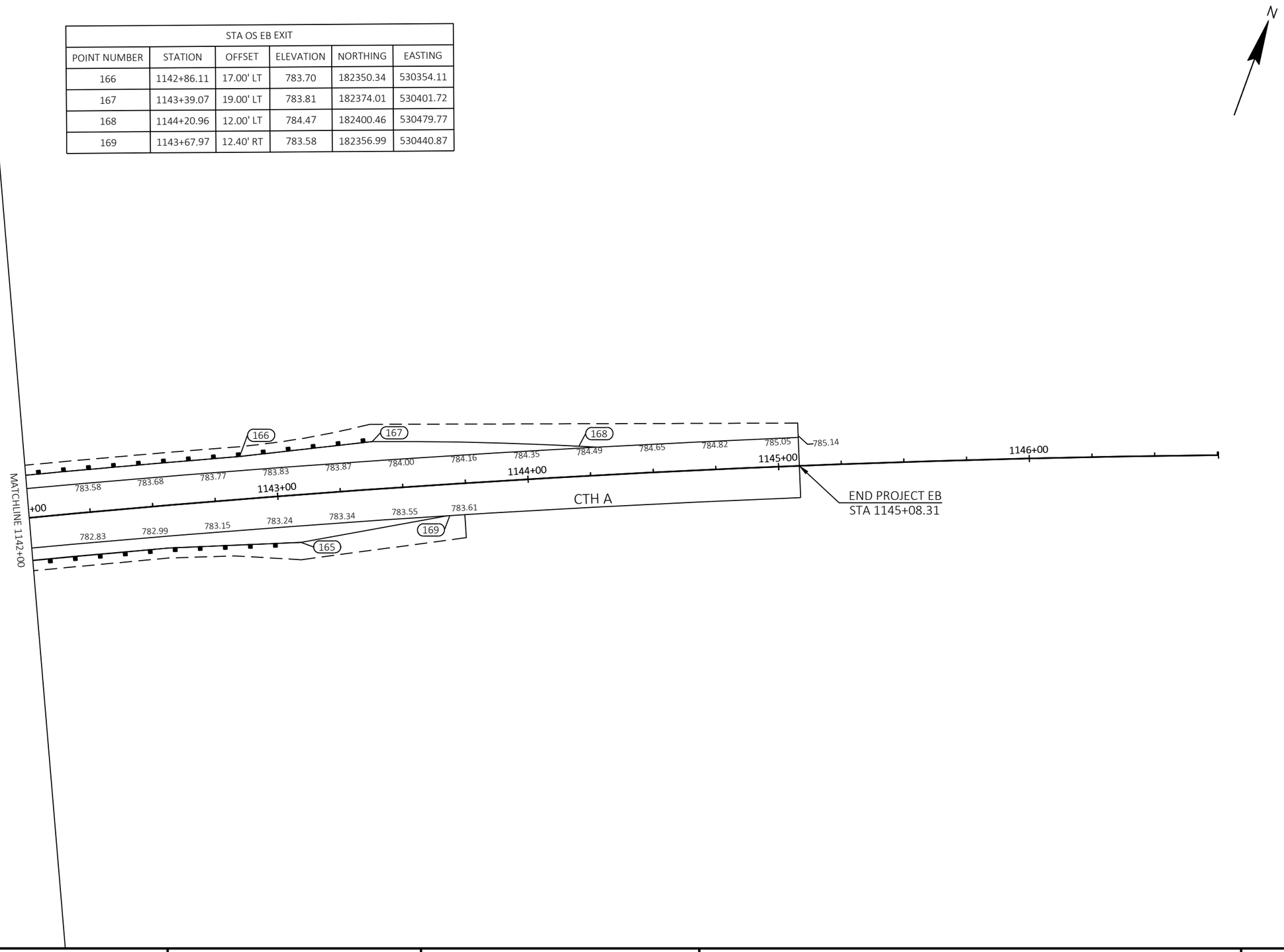

PROJECT NO: 2814-03-70	HWY: CTH A	COUNTY: RACINE	PAVING DETAILS	SHEET 25	E

FILE NAME : Y:\54XX\5486.DP22.CTH.A.RCN.INTRSCTN.CTH.J\CADDS\28140300\SHEETS\021201-PG.DWG
LAYOUT NAME - 021204-pg
PLOT DATE : 10/17/2024 4:10 PM
PLOT BY : CODY LABELLE
PLOT NAME :
PLOT SCALE : 1 IN:40 FT
WISDOT/CADDS SHEET 42

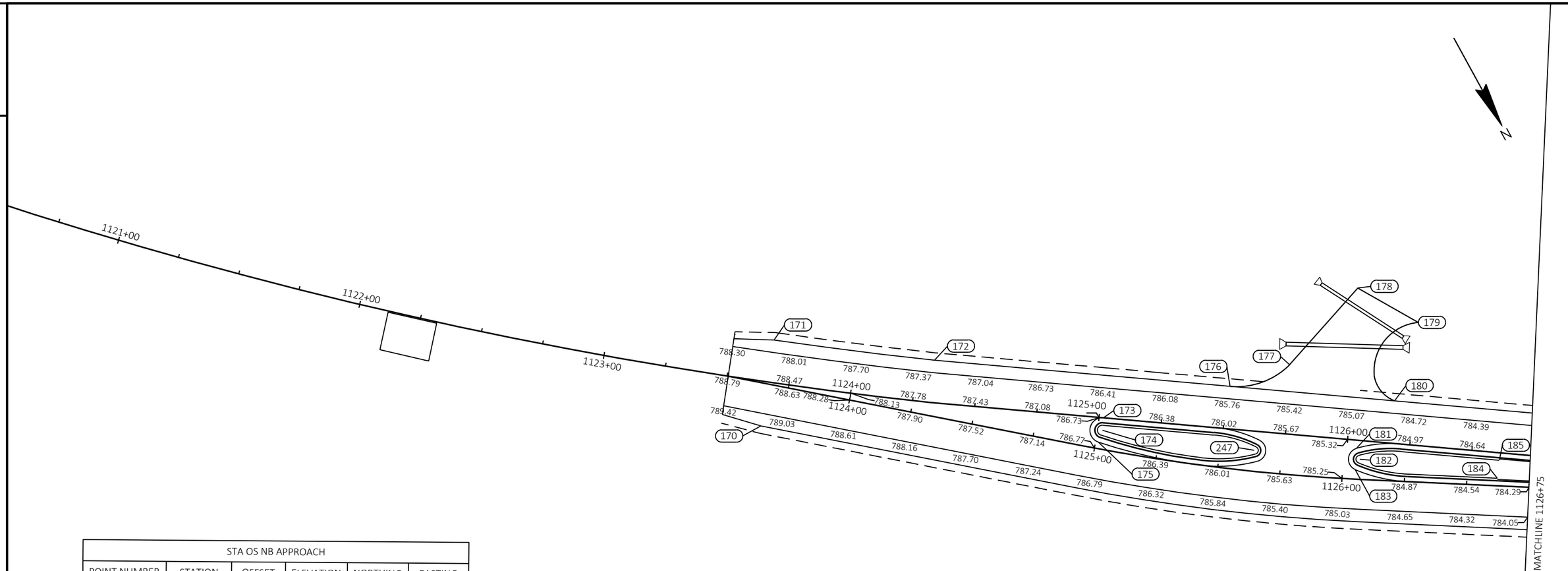

STA OS NB APPROACH					
POINT NUMBER	STATION	OFFSET	ELEVATION	NORTHING	EASTING
170	1123+67.20	17.00' RT	789.34	181671.97	530066.98
171	1123+65.73	17.74' LT	787.93	181644.37	530045.83
172	1124+30.33	22.16' LT	787.13	181682.40	529993.44
173	1125+01.29	12.57' LT	786.70	181735.18	529945.20
174	1125+01.78	7.60' LT	787.29	181739.33	529947.98
175	1125+01.08	2.65' LT	787.23	181742.72	529951.67
176	1125+51.02	32.77' LT	785.65	181748.58	529894.65
177	1125+75.03	43.88' LT	784.75	181752.47	529869.59
178	1126+02.28	76.44' LT	782.55	181738.74	529830.84
179	1126+27.69	63.79' LT	782.23	181762.54	529816.20
180	1126+19.58	32.03' LT	784.74	181785.40	529839.69
181	1126+05.18	12.30' LT	785.69	181794.73	529862.24
182	1126+06.64	8.04' LT	785.75	181799.12	529863.24
183	1126+05.06	3.82' LT	785.65	181801.89	529866.79
184	1126+62.18	3.00' LT	784.95	181832.40	529818.50
185	1126+62.60	10.24' LT	785.05	181826.44	529814.37
186	1127+06.48	17.00' RT	783.75	181872.57	529791.16
247	1125+63.90	8.39' LT	786.38	181775.73	529898.47

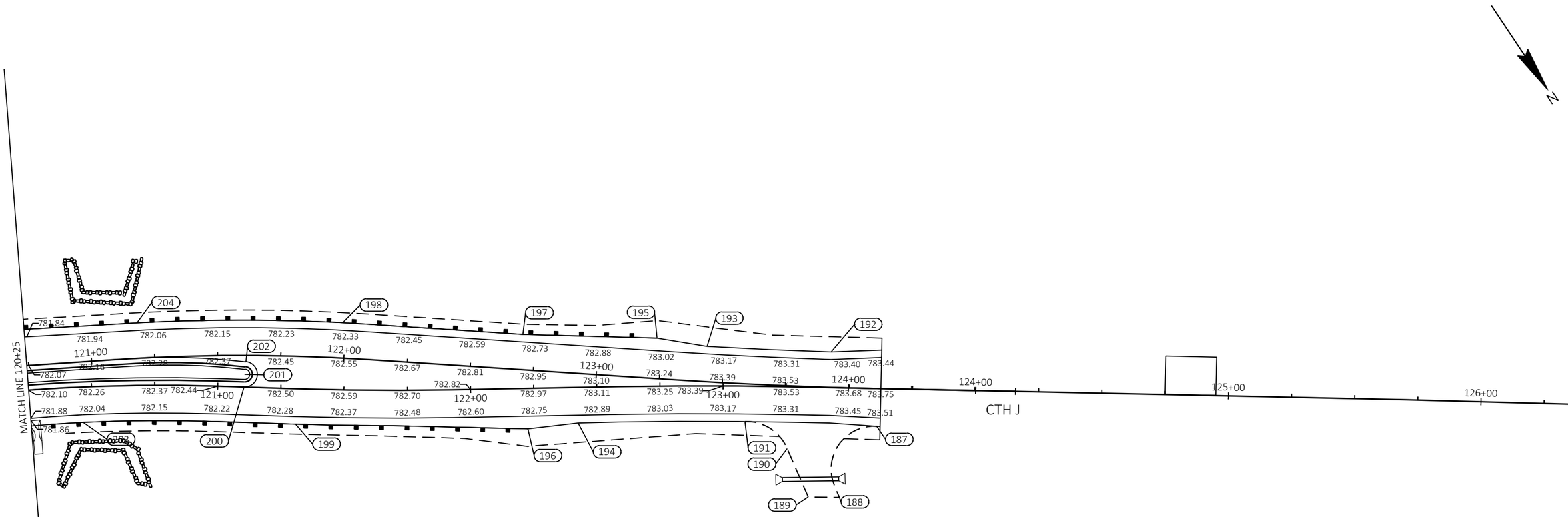

STA OS NB EXIT					
POINT NUMBER	STATION	OFFSET	ELEVATION	NORTHING	EASTING
187	123+61.18	14.95' RT	783.44	182261.34	529220.35
188	123+46.93	43.43' RT	782.65	182276.54	529248.34
189	123+34.59	43.45' RT	782.47	182269.49	529258.47
190	123+25.83	24.48' RT	782.87	182248.95	529254.75
191	123+08.81	14.00' RT	783.16	182230.77	529262.68
192	123+42.49	14.11' LT	783.31	182226.82	529219.04
193	122+93.64	15.62' LT	783.02	182197.73	529258.68
194	122+42.35	14.08' RT	782.78	182194.61	529317.97
195	122+74.06	19.02' LT	782.85	182184.00	529273.31

STA OS NB EXIT					
POINT NUMBER	STATION	OFFSET	ELEVATION	NORTHING	EASTING
196	122+22.38	16.00' RT	782.63	182185.45	529335.81
197	122+21.12	21.42' LT	782.61	182153.26	529316.68
198	121+49.05	26.59' LT	782.23	182109.88	529373.32
199	121+31.31	14.00' RT	782.24	182132.90	529411.13
200	121+10.43	0.00'	782.46	182109.36	529419.95
201	121+10.43	5.00' LT	0.00	182105.30	529417.04
202	121+10.87	9.98' LT	782.72	182101.50	529413.79
203	120+46.04	14.00' RT	781.96	182085.57	529480.72
204	120+68.33	24.74' LT	781.93	182064.69	529441.11

STA OS CENTER CIRCLE					
POINT NUMBER	STATION	OFFSET	ELEVATION	NORTHING	EASTING
205	1+00.52	24.17' LT	785.97	181942.63	529643.53
206	2+89.75	27.56' LT	785.88	181957.06	529621.90
207	1+52.29	27.56' LT	0.00	181957.47	529664.88
208	2+37.63	24.00' LT	785.80	181972.20	529643.24
209	3+36.16	102.47' RT	782.16	181853.56	529541.63
210	3+36.90	95.90' RT	782.48	181857.23	529547.47
211	3+37.51	71.37' RT	782.75	181875.17	529564.27
212	3+62.03	22.50' RT	784.01	181897.92	529626.10
213	1+25.74	53.53' RT	783.88	181877.01	529692.68
214	1+29.90	74.24' RT	783.83	181863.53	529710.84
215	1+32.59	85.22' RT	783.58	181858.03	529722.44
216	1+36.02	100.12' RT	783.66	181851.63	529738.83
217	1+52.71	109.71' RT	783.70	181881.94	529779.50
218	1+53.06	94.39' RT	783.91	181891.69	529767.57
219	1+52.91	55.21' RT	784.13	181912.43	529734.33
220	1+71.12	34.45' RT	784.34	181962.77	529726.66
221	1+84.07	78.63' RT	783.98	182013.45	529755.12
222	1+84.25	104.45' RT	0.00	182027.80	529776.60
223	2+03.53	110.39' RT	783.20	182075.41	529739.72
224	2+04.49	97.86' RT	0.00	182066.83	529730.16

STA OS CENTER CIRCLE					
POINT NUMBER	STATION	OFFSET	ELEVATION	NORTHING	EASTING
225	2+05.05	61.91' RT	783.81	182038.04	529708.59
226	2+12.08	37.26' RT	783.99	182023.71	529684.45
227	2+62.33	44.06' RT	783.28	182029.63	529599.25
228	2+72.62	74.75' RT	782.48	182043.78	529564.57
229	2+91.87	111.00' RT	782.05	182024.83	529501.05
230	2+92.27	57.51' RT	782.80	181997.58	529547.10
231	3+04.87	37.08' RT	783.38	181959.61	529557.31
232	3+17.75	72.40' RT	782.65	181915.59	529530.94
233	3+19.68	86.29' RT	782.33	181902.70	529521.85
234	3+31.08	23.00' RT	784.07	181918.89	529588.05
235	3+23.43	23.00' RT	783.98	181927.26	529581.04
236	1+26.18	23.00' RT	784.61	181904.39	529679.17
237	1+43.61	23.00' RT	784.86	181919.38	529698.91
238	1+85.89	23.00' RT	784.84	181986.77	529706.09
239	2+00.14	23.00' RT	784.67	182001.67	529692.28
240	2+70.71	23.99' RT	783.79	182005.43	529598.01
241	2+82.43	24.03' RT	783.79	181994.08	529585.44

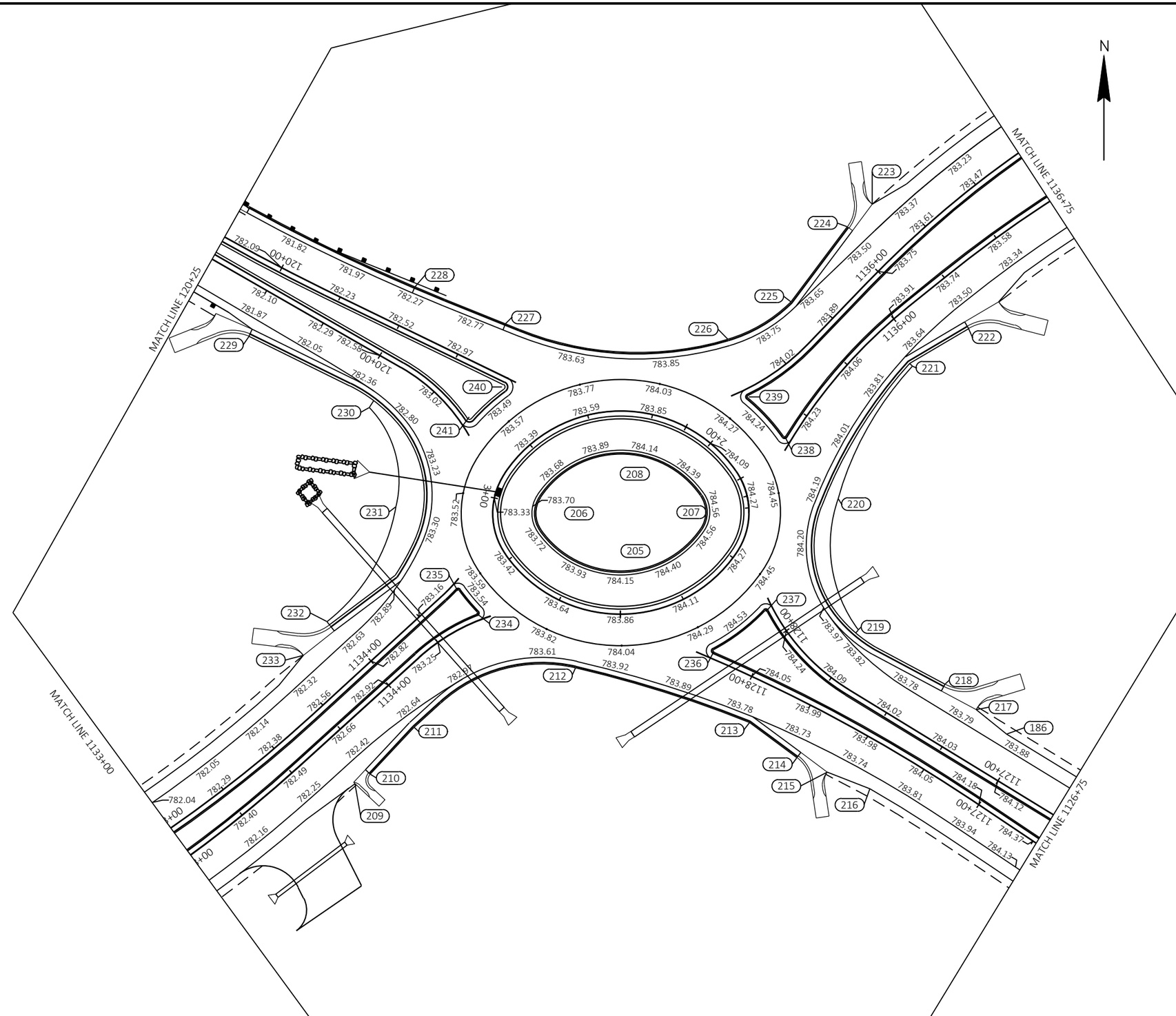

2

2

STA 1130EB+70.22
-68.06' LT

STA 1131EB+51.68
-71.78' LT

STA 1130EB+66.95
-69.67' LT

STA 1131EB+32.42
-68.77' LT

STA 1130EB+43.17
-64.65' LT

STA 1131EB+18.50
-70.41' LT

STA 1132EB+06.63
-73.50' LT

STA 1129EB+16.25
-65.29' LT

STA 1130EB+10.82
-51.39' LT

STA 1129EB+06.48
-65.74' LT

STA 1131EB+96.86
-73.67' LT

TLE

STA 1129EB+98.50
-48.79' LT

ERW

ERW

STA 1129EB+07.99
-64.25' LT

BEGIN PROJECT
STA 1127+85.34

1128+00

1129+00

1130+00

1130+00

1131+00

1131+00

1132+00

1132+00

CTH A

MATCHLINE 1133+00

ERW

TLE

ERW

STA 1128EB+61.37
50.47' RT

LEGEND

- EROSION MAT URBAN CLASS I TYPE A
- EROSION MAT URBAN CLASS I TYPE B
- SILT FENCE
- SILT FENCE HEAVY DUTY
- SLOPE INTERCEPT
- INLET PROTECTION
- TEMPORARY DITCH CHECK
- CULVERT PIPE CHECK
- SURFACE WATER FLOW
- TEMPORARY TURTLE FENCING
- A — INLET PROTECTION TYPE A
- D — INLET PROTECTION TYPE D

PROJECT NO: 2814-03-70	HWY: CTH A	COUNTY: RACINE	EROSION CONTROL - CTH A	SHEET 29	E

FILE NAME : Y:\54XX\5486.DP22.CTH.A.RCN.INTRSCTN.CTH.J\CADDS\28140300\SHEETS\022001-EC.DWG
LAYOUT NAME - 022001-ec

PLOT DATE : 10/16/2024 5:08 PM PLOT BY : NICHOLAS BECKER PLOT NAME : PLOT SCALE : 1 IN:40 FT

WISDOT/CADDS SHEET 42

2

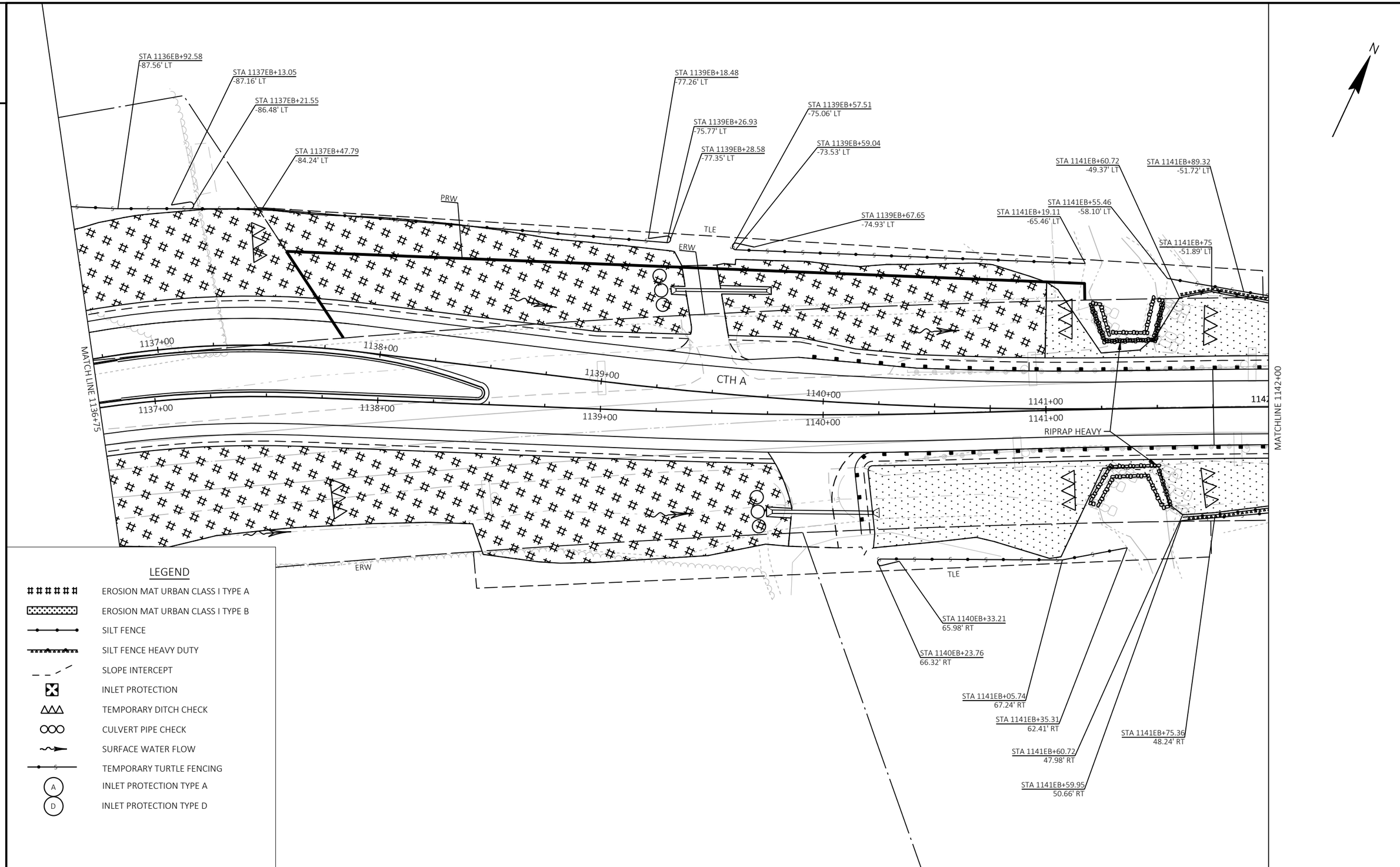

2

PROJECT NO: 2814-03-70	HWY: CTH A	COUNTY: RACINE	EROSION CONTROL - CTH A	SHEET 30	E

FILE NAME : Y:\54XX\5486.DP22.CTH.A.RCN.INTRSCTN.CTH.J\CADDS\28140300\SHEETS\022001-EC.DWG
LAYOUT NAME - 022002-ec
PLOT DATE : 10/16/2024 5:08 PM
PLOT BY : NICHOLAS BECKER
PLOT NAME :
PLOT SCALE : 1 IN:40 FT

2

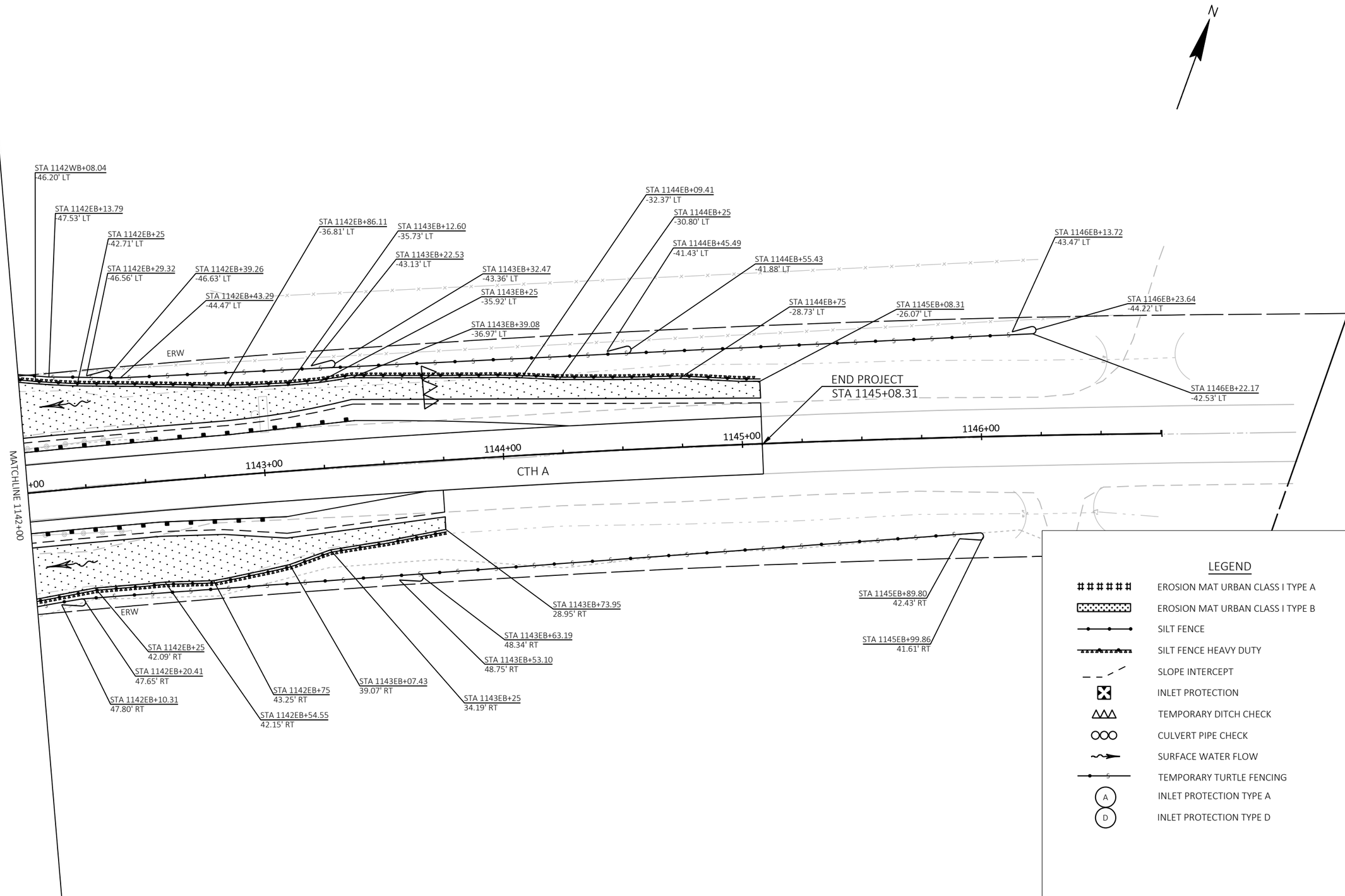

PROJECT NO: 2814-03-70	HWY: CTH A	COUNTY: RACINE	EROSION CONTROL - CTH A	SHEET 31	E

FILE NAME : Y:\54XX\5486.DP22.CTH.A.RCN.INTRSCTN.CTH.J\CADDS\28140300\SHEETS\022001-EC.DWG
LAYOUT NAME - 022003-ec
PLOT DATE : 10/16/2024 5:08 PM PLOT BY : NICHOLAS BECKER PLOT NAME : PLOT SCALE : 1 IN:40 FT
WISDOT/CADDS SHEET 42

2

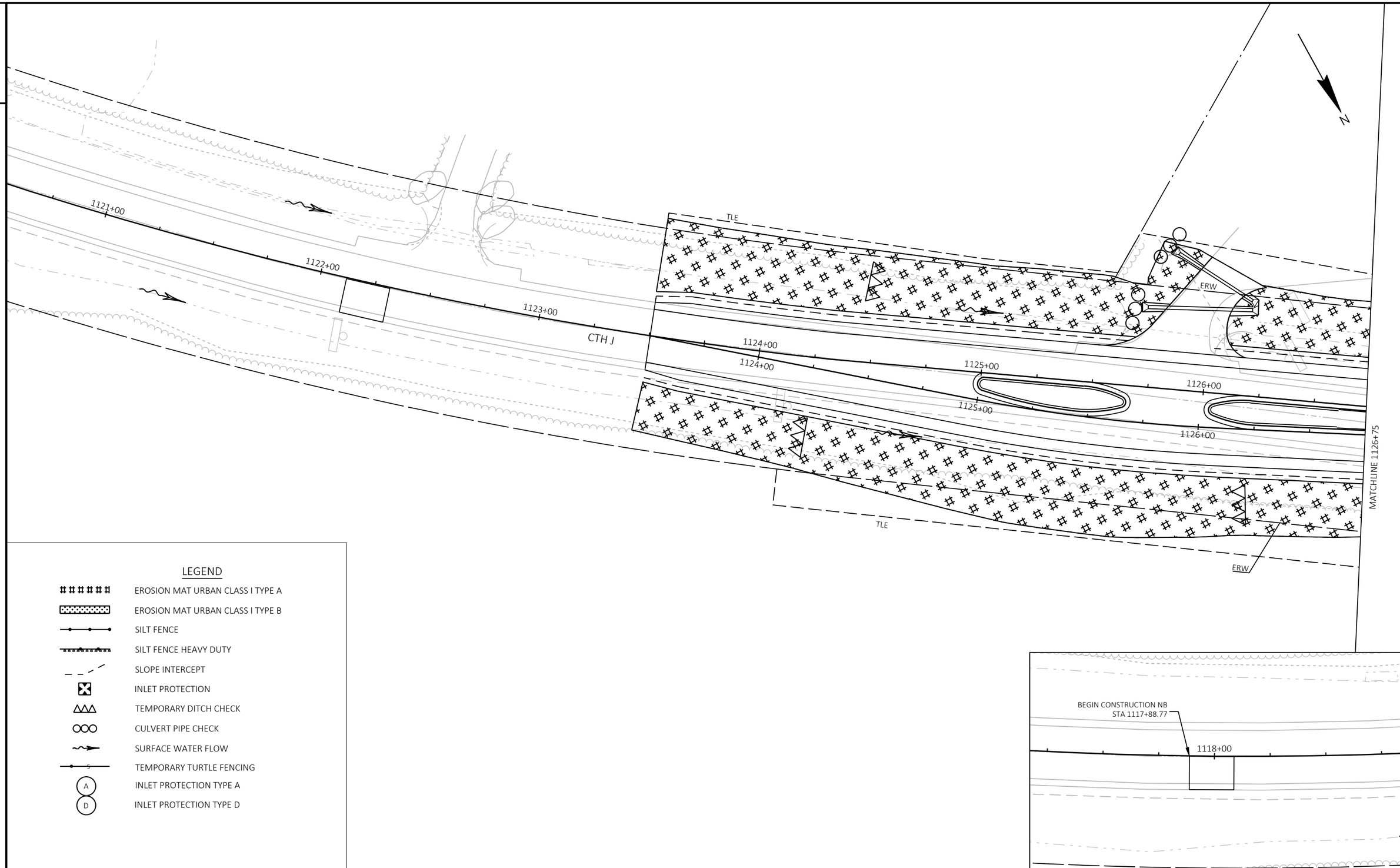

LEGEND

- EROSION MAT URBAN CLASS I TYPE A
- EROSION MAT URBAN CLASS I TYPE B
- SILT FENCE
- SILT FENCE HEAVY DUTY
- SLOPE INTERCEPT
- INLET PROTECTION
- TEMPORARY DITCH CHECK
- CULVERT PIPE CHECK
- SURFACE WATER FLOW
- TEMPORARY TURTLE FENCING
- A — INLET PROTECTION TYPE A
- D — INLET PROTECTION TYPE D

PROJECT NO: 2814-03-70	HWY: CTH A	COUNTY: RACINE	EROSION CONTROL - CTH J	SHEET 32	E

FILE NAME : Y:\54XX\5486.DP22.CTH.A.RCN.INTRSCTN.CTH.J\CADDS\28140300\SHEETS\022001-EC.DWG
LAYOUT NAME - 022004-ec
PLOT DATE : 10/16/2024 5:08 PM
PLOT BY : NICHOLAS BECKER
PLOT NAME :
PLOT SCALE : 1 IN:40 FT

2

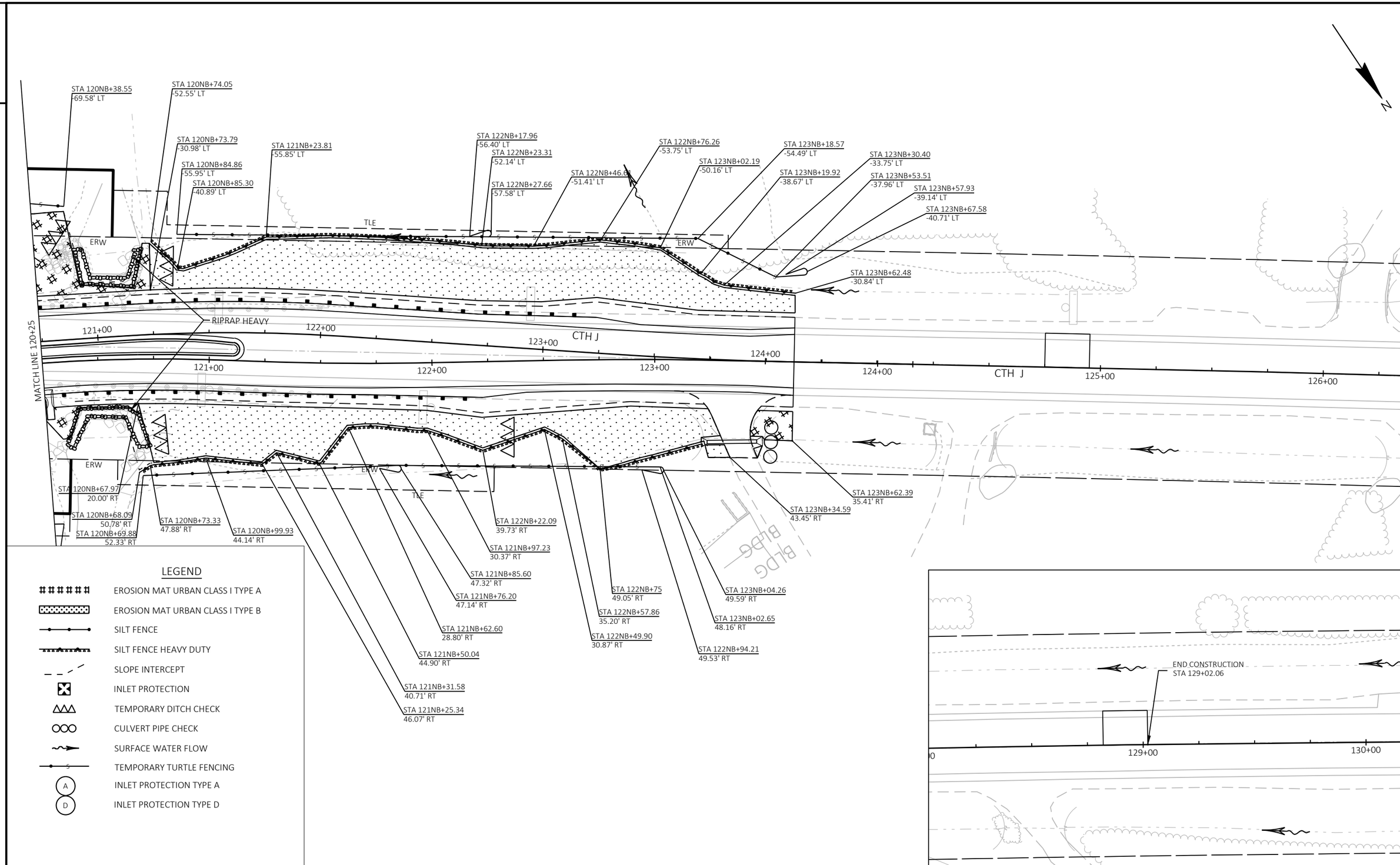

2

PROJECT NO: 2814-03-70	HWY: CTH A	COUNTY: RACINE	EROSION CONTROL - CTH J	SHEET 33	E

FILE NAME : Y:\54XX\5486.DP22.CTH.A.RCN.INTRSCTN.CTH.J\CADDS\28140300\SHEETS\022001-EC.DWG
LAYOUT NAME - 022005-ec
PLOT DATE : 10/16/2024 5:08 PM
PLOT BY : NICHOLAS BECKER
PLOT NAME :
PLOT SCALE : 1 IN:40 FT
WISDOT/CADDS SHEET 42

2

LEGEND

- EROSION MAT URBAN CLASS I TYPE A
- EROSION MAT URBAN CLASS I TYPE B
- SILT FENCE
- SILT FENCE HEAVY DUTY
- SLOPE INTERCEPT
- INLET PROTECTION
- TEMPORARY DITCH CHECK
- CULVERT PIPE CHECK
- SURFACE WATER FLOW
- TEMPORARY TURTLE FENCING
- INLET PROTECTION TYPE A
- INLET PROTECTION TYPE D

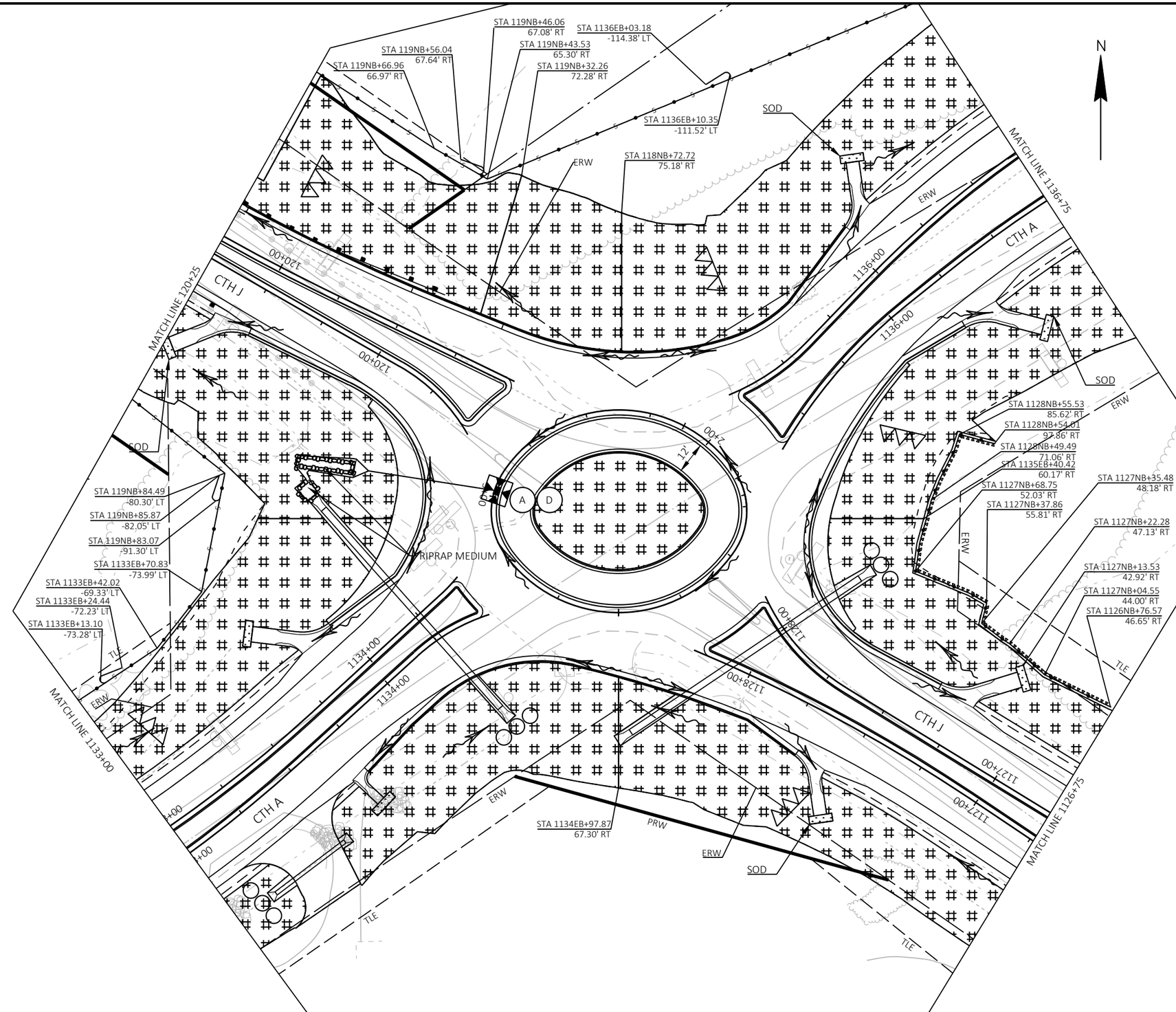

PROJECT NO: 2814-03-70	HWY: CTH A	COUNTY: RACINE	EROSION CONTROL - CTH A	SHEET 34	E

FILE NAME : Y:\54XX\5486.DP22.CTH.A.RCN.INTRSCTN.CTH.J\CADDS\28140300\SHEETS\022001-EC.DWG
LAYOUT NAME - 022006-ec
PLOT DATE : 10/16/2024 5:08 PM
PLOT BY : NICHOLAS BECKER
PLOT NAME :
PLOT SCALE : 1 IN:40 FT

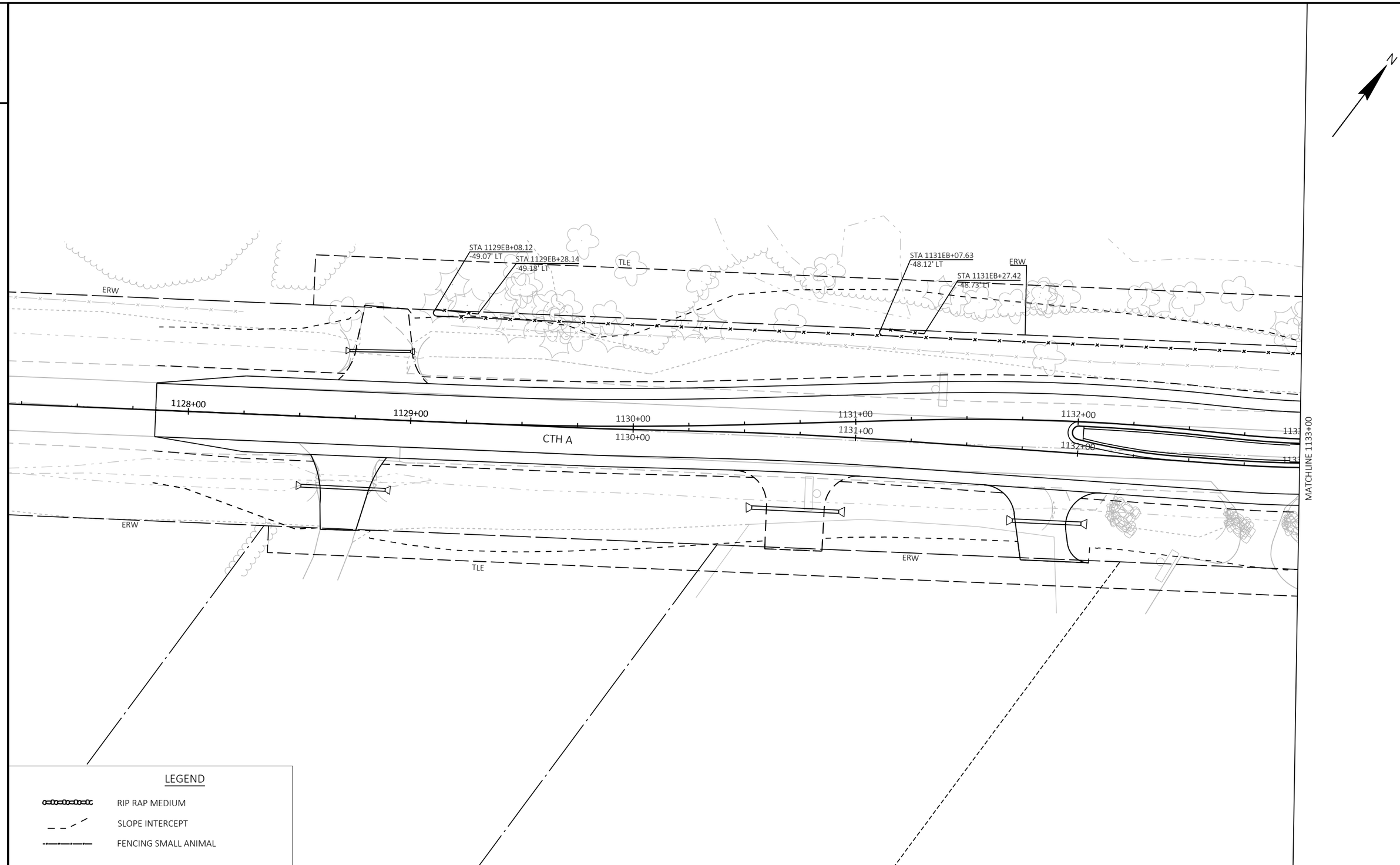

PROJECT NO: 2814-03-70	HWY: CTH A	COUNTY: RACINE	PERMANENT EROSION CONTROL - CTH A	SHEET 35	E

FILE NAME : Y:\54XX\5486.DP22.CTH.A.RCN.INTRSCTN.CTH.J\CADDS\28140300\SHEETS\022001-EC_PERM.DWG
LAYOUT NAME - 022001-pec
PLOT DATE : 2/19/2025 8:28 AM PLOT BY : NICHOLAS BECKER PLOT NAME : PLOT SCALE : 1 IN:40 FT

2

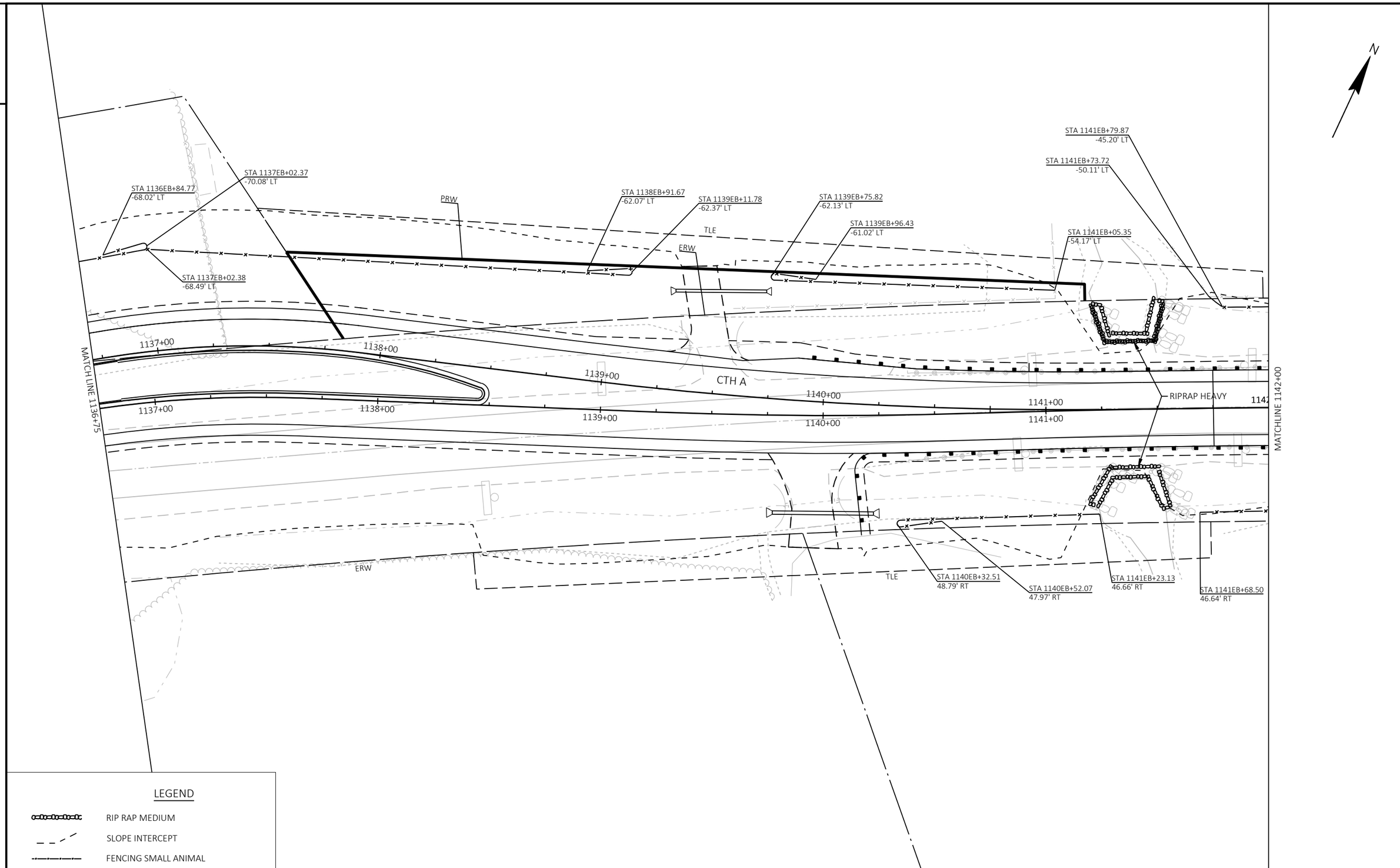

2

LEGEND

RIP RAP MEDIUM

SLOPE INTERCEPT

FENCING SMALL ANIMAL

PROJECT NO: 2814-03-70	HWY: CTH A	COUNTY: RACINE	PERMANENT EROSION CONTROL - CTH A	SHEET 36	E

FILE NAME : Y:\54XX\5486.DP22.CTH.A.RCN.INTRSCTN.CTH.J\CADDS\28140300\SHEETS\022001-EC_PERM.DWG
LAYOUT NAME - 022002-pec
PLOT DATE : 2/19/2025 8:28 AM
PLOT BY : NICHOLAS BECKER
PLOT NAME :
PLOT SCALE : 1 IN:40 FT

WISDOT/CADDS SHEET 42

2

2

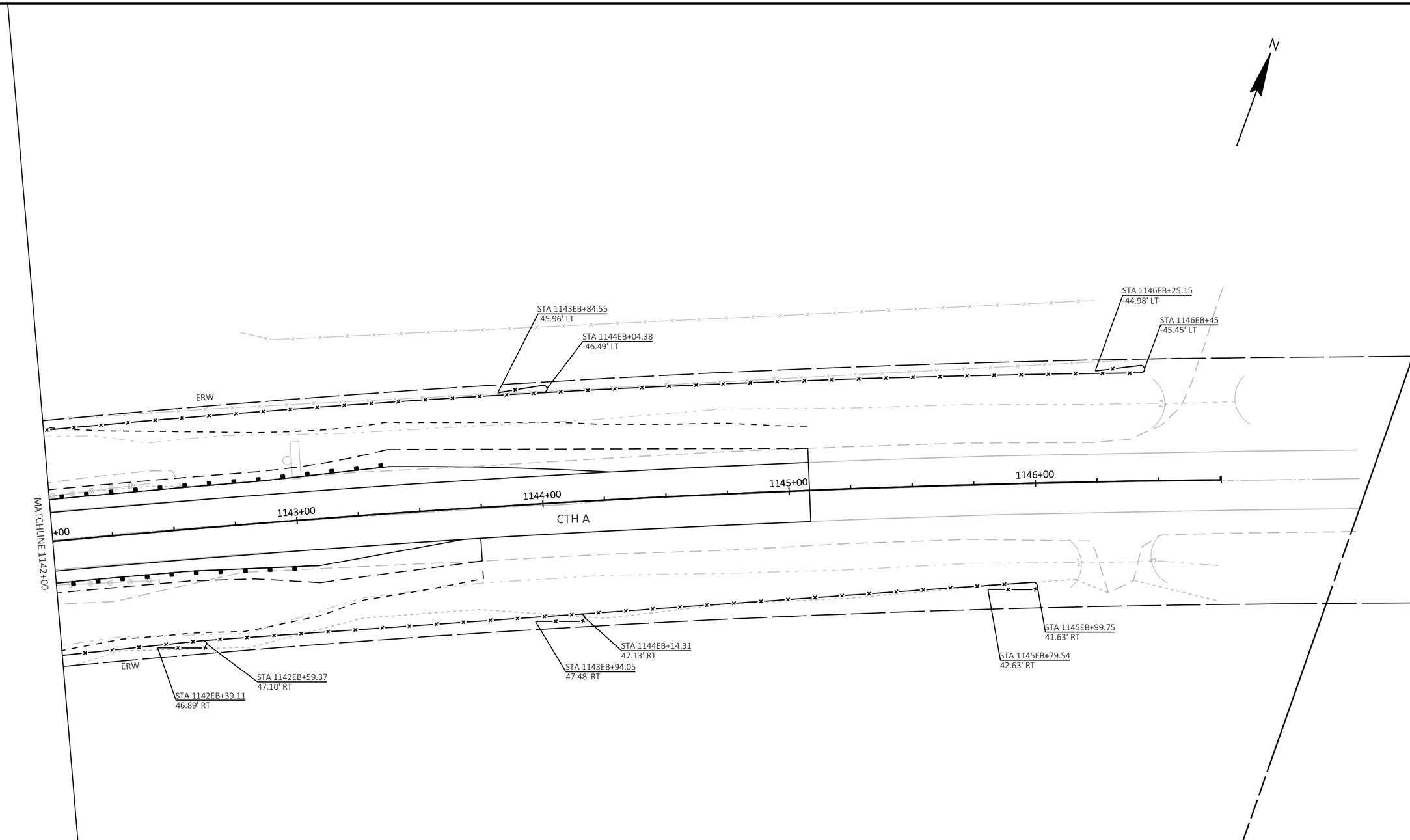

LEGEND

RIP RAP MEDIUM

SLOPE INTERCEPT

FENCING SMALL ANIMAL

PROJECT NO: 2814-03-70	HWY: CTH A	COUNTY: RACINE	PERMANENT EROSION CONTROL - CTH A	SHEET 37	E

FILE NAME : Y:\54XX\5486.DP22.CTH.A.RCN.INTRSCTN.CTH.J\CADDS\28140300\SHEETS\022001-EC_PERM.DWG
LAYOUT NAME - 022003-pec
PLOT DATE : 2/19/2025 8:28 AM PLOT BY : NICHOLAS BECKER PLOT NAME : PLOT SCALE : 1 IN:40 FT

WISDOT/CADDS SHEET 42

2

2

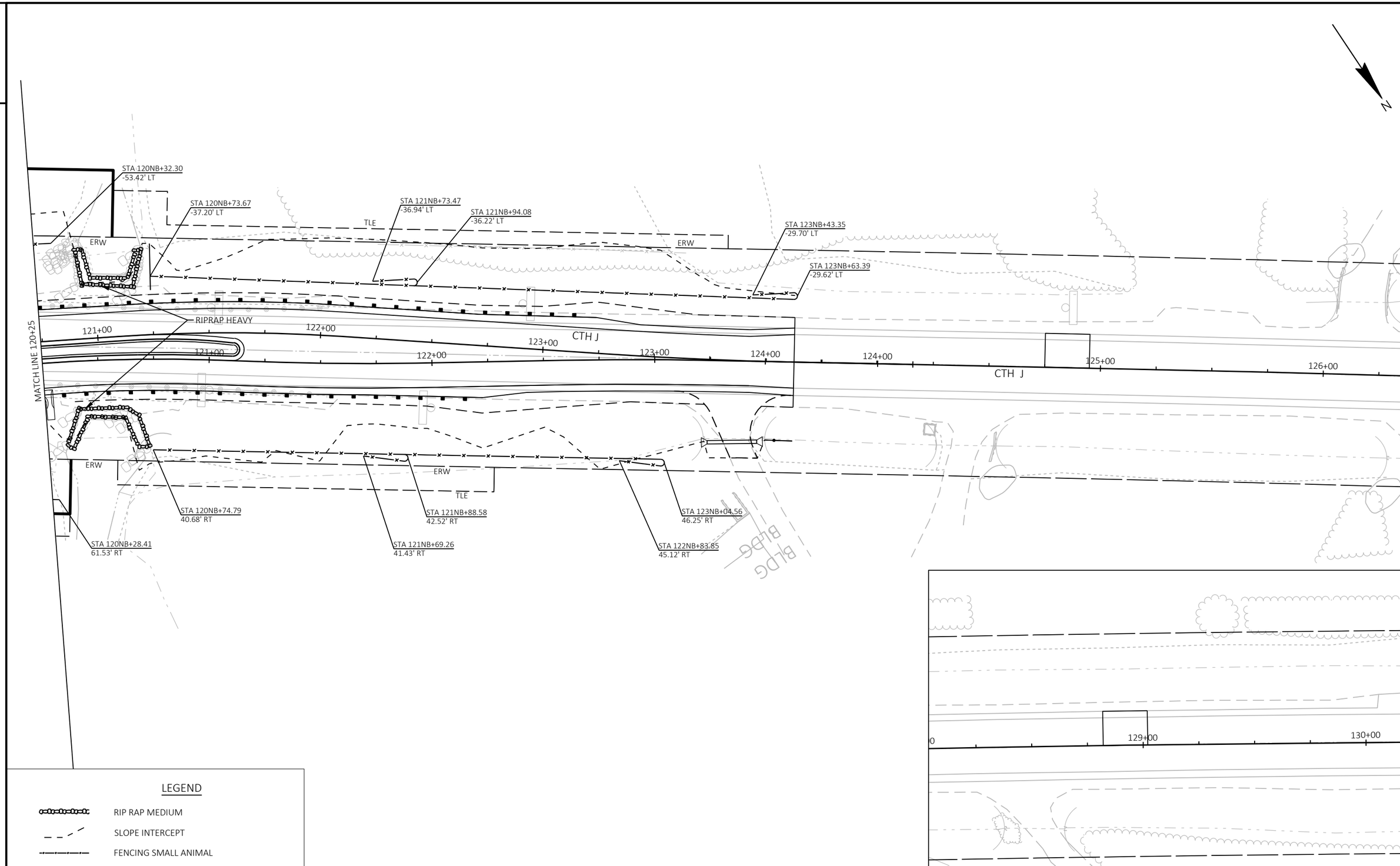

LEGEND

RIP RAP MEDIUM

SLOPE INTERCEPT

FENCING SMALL ANIMAL

PROJECT NO: 2814-03-70	HWY: CTH A	COUNTY: RACINE	PERMANENT EROSION CONTROL - CTH J	SHEET 38	E

FILE NAME : Y:\54XX\5486.DP22.CTH.A.RCN.INTRSCTN.CTH.J\CADDS\28140300\SHEETS\022001-EC_PERM.DWG
LAYOUT NAME - 022005-pec

PLOT DATE : 2/19/2025 8:28 AM PLOT BY : NICHOLAS BECKER PLOT NAME : PLOT SCALE : 1 IN:40 FT

WISDOT/CADDS SHEET 42

2

LEGEND

- RIP RAP MEDIUM
- SLOPE INTERCEPT
- FENCING SMALL ANIMAL

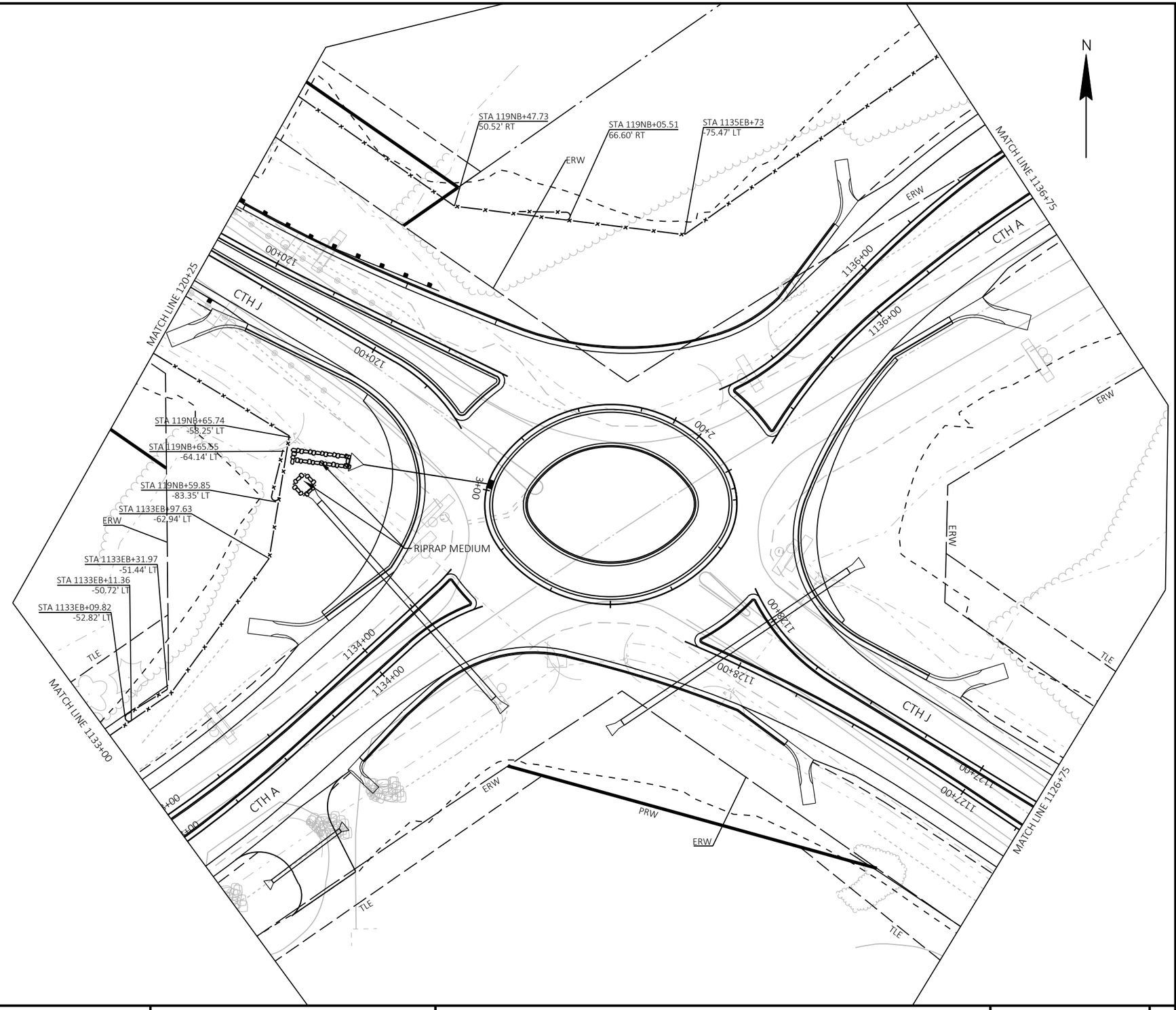

2

PROJECT NO: 2814-03-70	HWY: CTH A	COUNTY: RACINE	PERMANENT EROSION CONTROL - CTH A	SHEET 39	E

FILE NAME : Y:\54XX\5486.DP22.CTH.A.RCN.INTRSCTN.CTH.J\CADDS\28140300\SHEETS\022001-EC_PERM.DWG
LAYOUT NAME - 022006-pec
PLOT DATE : 2/19/2025 8:28 AM
PLOT BY : NICHOLAS BECKER
PLOT NAME :
PLOT SCALE : 1 IN:40 FT
WISDOT/CADDS SHEET 42

2

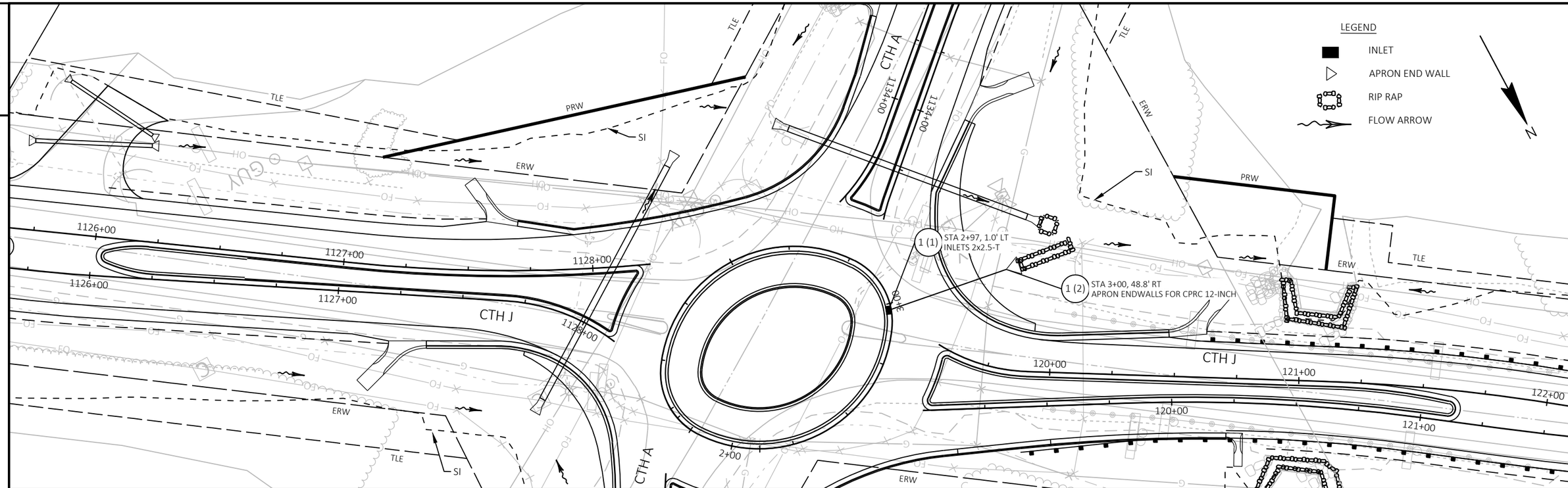

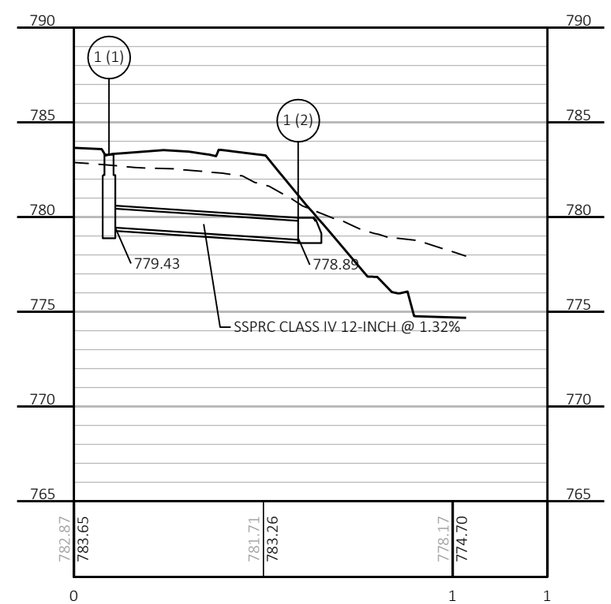

PROJECT NO: 2814-03-70	HWY: CTH A	COUNTY: RACINE	PROPOSED STORM SEWER	SHEET 40	E

FILE NAME : Y:\54XX\5486.DP22.CTH.A.RCN.INTRSCTN.CTH.J\CADDS\28140300\SHEETS\022501-SS.DWG
LAYOUT NAME - 01
PLOT DATE : 10/17/2024 4:14 PM PLOT BY : CODY LABELLE PLOT NAME : PLOT SCALE : 1 IN:40 FT

2

LEGEND

EXISTING SIGN MOUNTED ON POST(S)

PROPOSED SIGN MOUNTED ON POST(S)

XXX DENOTES SIGN NUMBER

(X) INDICATES SIGN SIZE

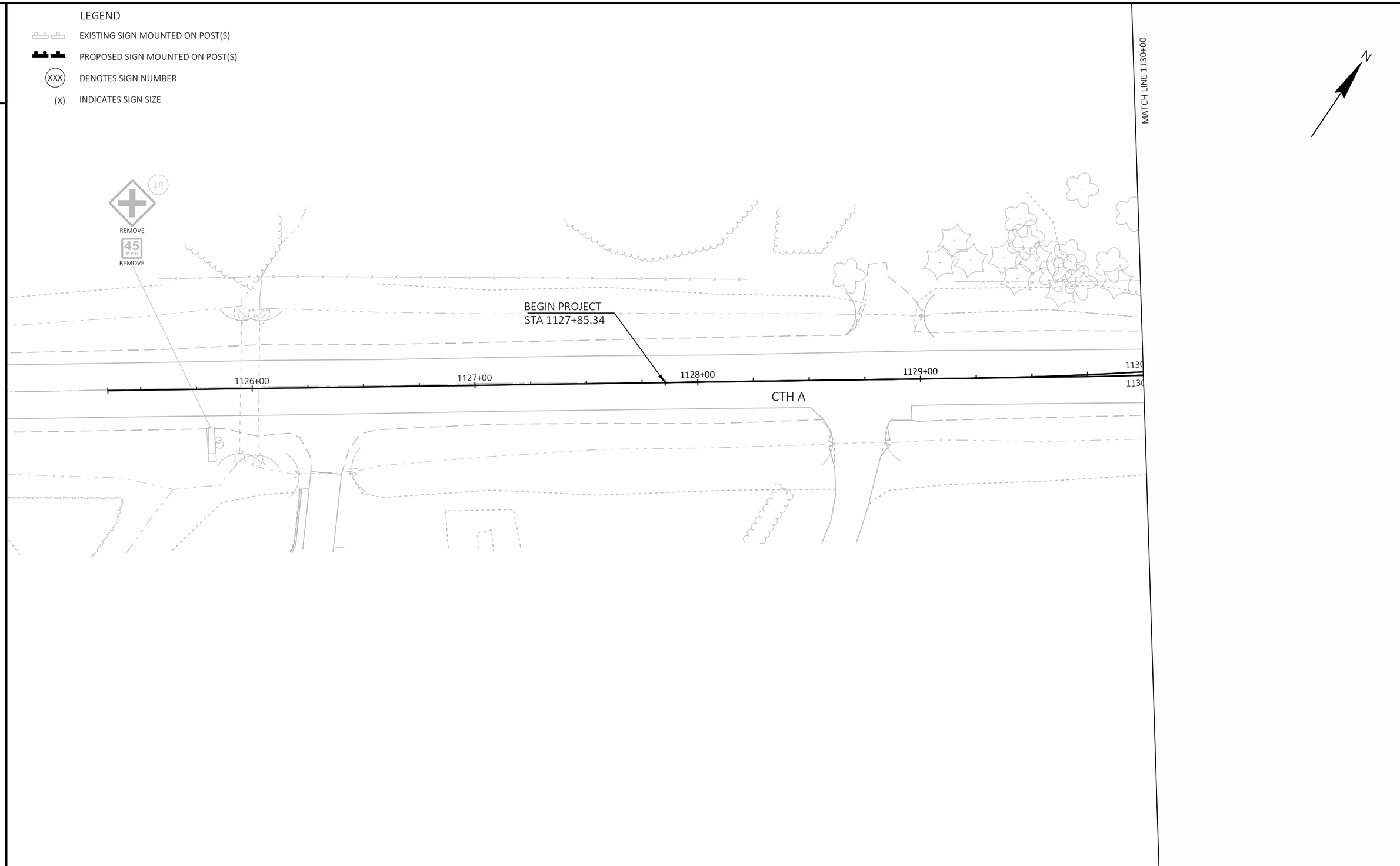

2

PROJECT NO: 2814-03-70	HWY: CTH A	COUNTY: RACINE	EXISTING SIGNING	SHEET 41	E

FILE NAME : Y:\54XX\5486.DP22.CTH.A.RCN.INTRSCTN.CTH.J\CADDS\28140300\SHEETS\023201-PS.DWG
LAYOUT NAME - E-1

PLOT DATE : 10/17/2024 12:23 PM PLOT BY : NICHOLAS BECKER PLOT NAME : PLOT SCALE : 1 IN:40 FT

WISDOT/CADDS SHEET 42

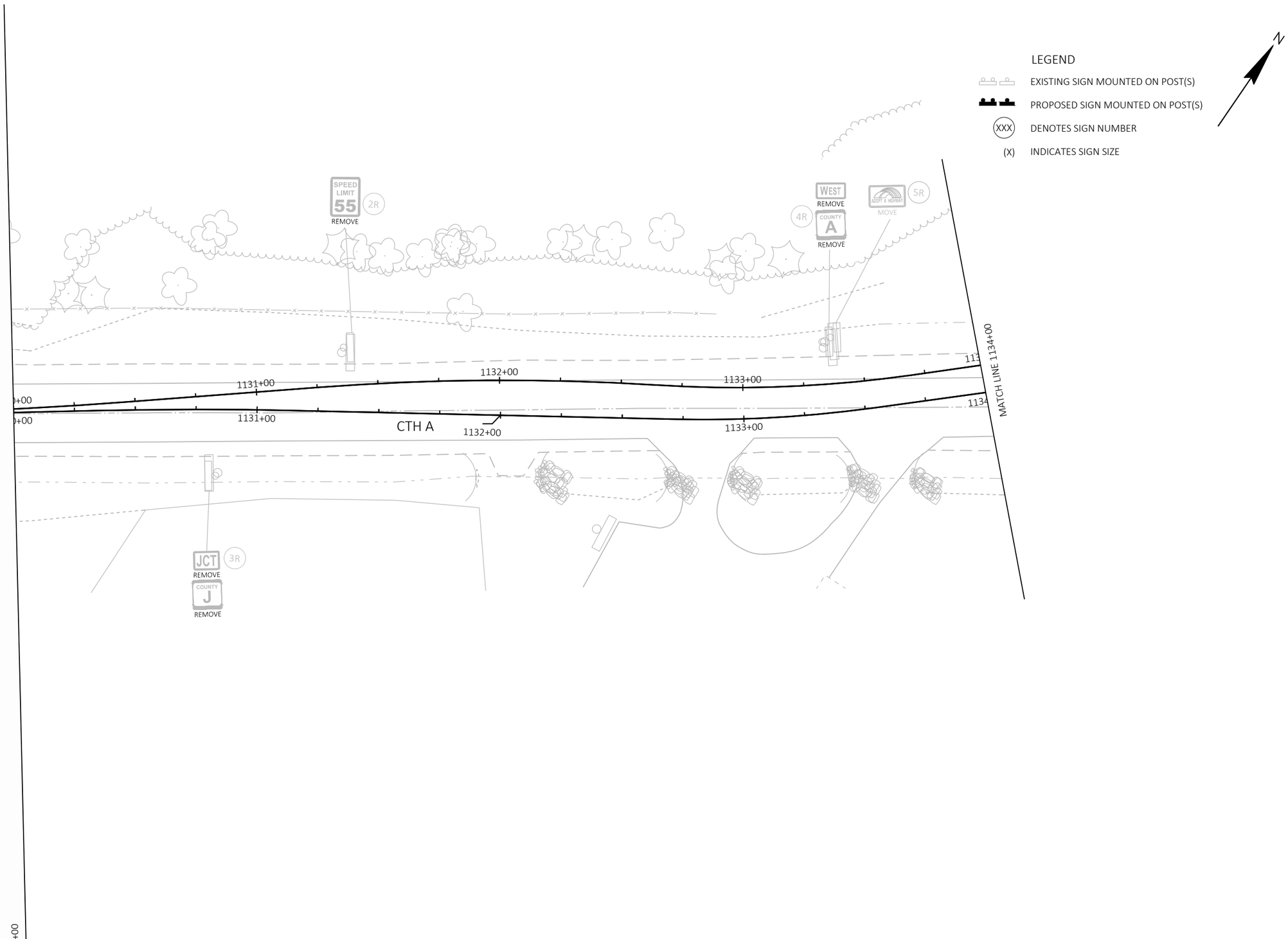
LEGEND
EXISTING SIGN MOUNTED ON POST(S)
PROPOSED SIGN MOUNTED ON POST(S)
XXX DENOTES SIGN NUMBER
(X) INDICATES SIGN SIZE
N
SPEED LIMIT 55
2R
REMOVE
WEST
REMOVE
4R
COUNTY A
REMOVE
ADOPT A HIGHWAY
MOVE
5R
1131+00
1132+00
1133+00
CTH A
MATCH LINE 1134+00
JCT
3R
REMOVE
COUNTY J
REMOVE

2

LEGEND

EXISTING SIGN MOUNTED ON POST(S)

PROPOSED SIGN MOUNTED ON POST(S)

XXX DENOTES SIGN NUMBER

(X) INDICATES SIGN SIZE

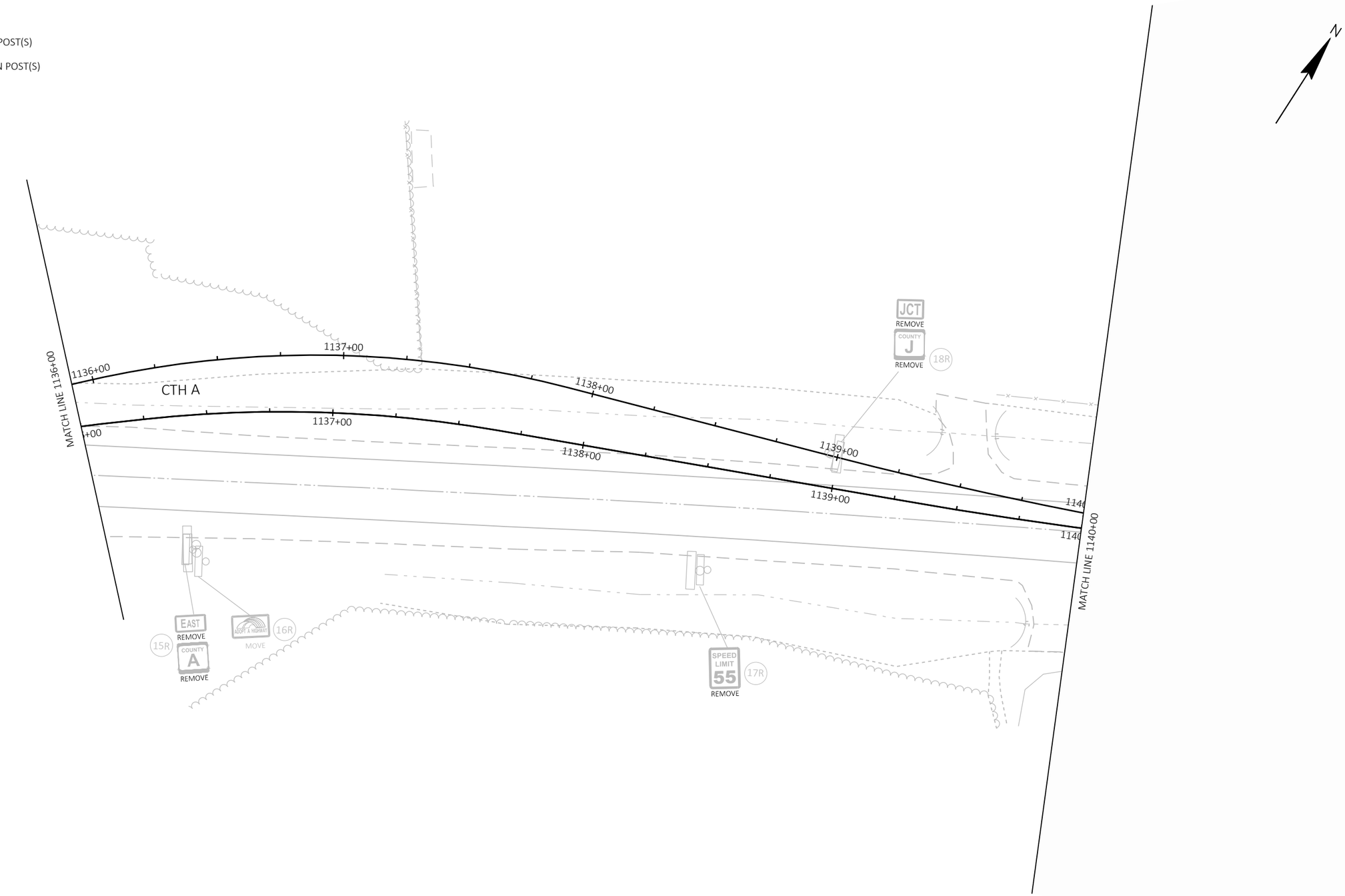

2

PROJECT NO: 2814-03-70	HWY: CTH A	COUNTY: RACINE	EXISTING SIGNING	SHEET 43	E

FILE NAME : Y:\54XX\5486.DP22.CTH.A.RCN.INTRSCTN.CTH.J\CADDS\28140300\SHEETS\023201-PS.DWG
LAYOUT NAME - E-3

PLOT DATE : 10/17/2024 12:23 PM PLOT BY : NICHOLAS BECKER PLOT NAME : PLOT SCALE : 1 IN:40 FT

2

LEGEND

EXISTING SIGN MOUNTED ON POST(S)

PROPOSED SIGN MOUNTED ON POST(S)

XXX DENOTES SIGN NUMBER

(X) INDICATES SIGN SIZE

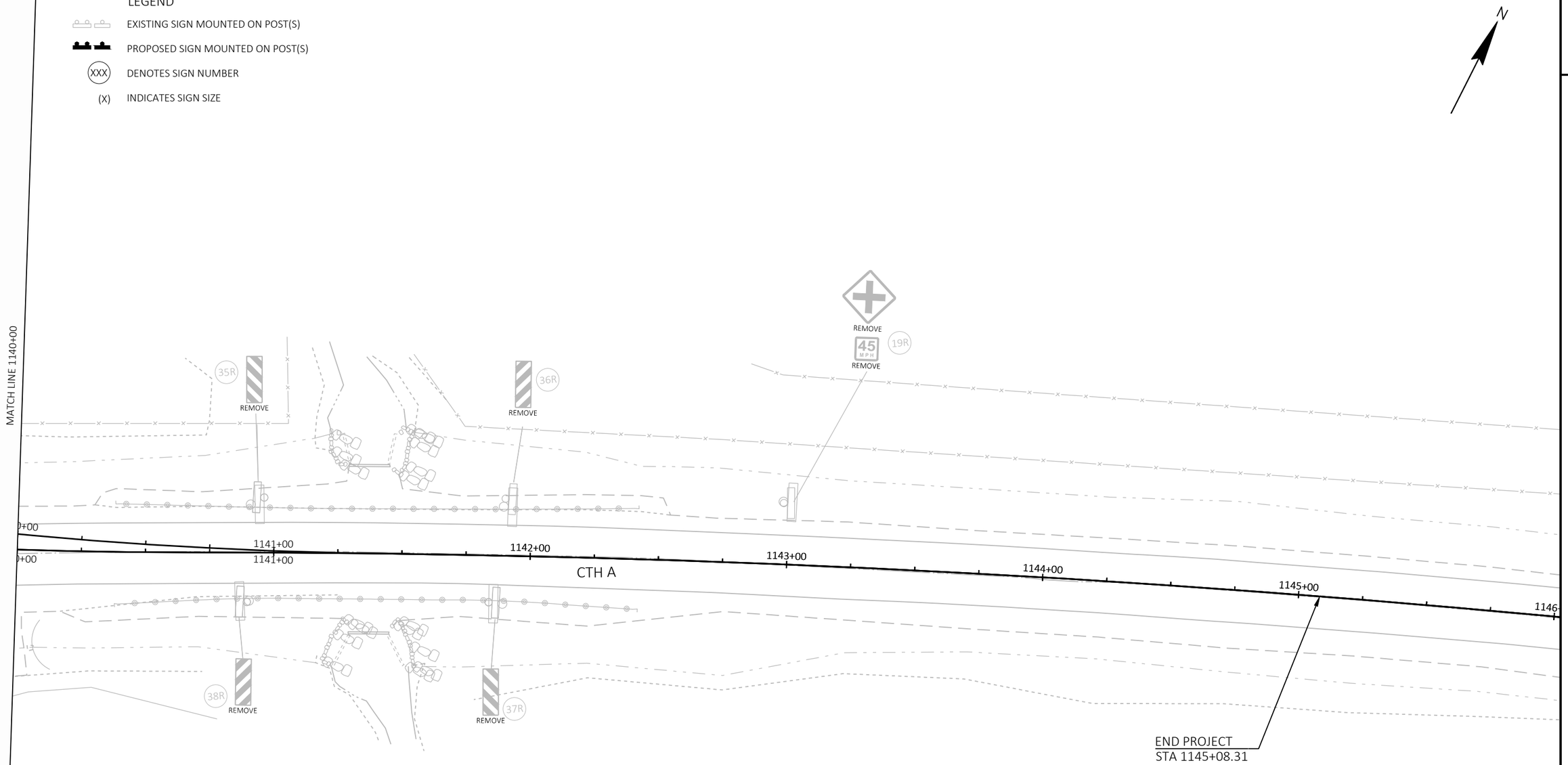

2

PROJECT NO: 2814-03-70	HWY: CTH A	COUNTY: RACINE	EXISTING SIGNING	SHEET 44	E

FILE NAME : Y:\54XX\5486.DP22.CTH.A.RCN.INTRSCTN.CTH.J\CADDS\28140300\SHEETS\023201-PS.DWG
LAYOUT NAME - E-4

PLOT DATE : 10/17/2024 12:23 PM PLOT BY : NICHOLAS BECKER PLOT NAME : PLOT SCALE : 1 IN:40 FT

WISDOT/CADDS SHEET 42

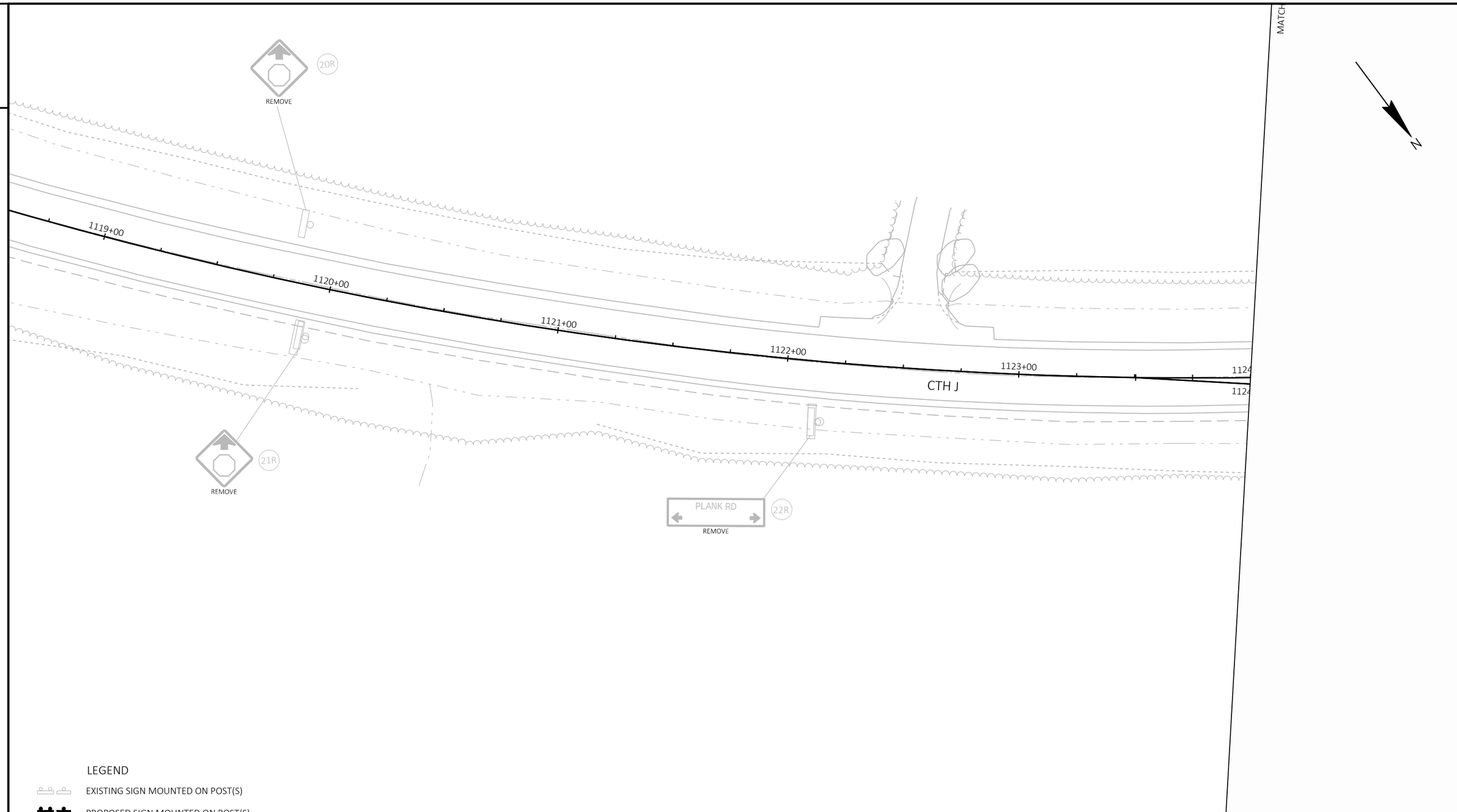

LEGEND

- EXISTING SIGN MOUNTED ON POST(S)
- PROPOSED SIGN MOUNTED ON POST(S)
- (XXX) DENOTES SIGN NUMBER
- (X) INDICATES SIGN SIZE

PROJECT NO: 2814-03-70	HWY: CTH A	COUNTY: RACINE	EXISTING SIGNING	SHEET 45	E

FILE NAME : Y:\54XX\5486.DP22.CTH.A.RCN.INTRSCTN.CTH.J\CADDS\28140300\SHEETS\023201-PS.DWG
LAYOUT NAME - E-5
PLOT DATE : 10/17/2024 12:23 PM
PLOT BY : NICHOLAS BECKER
PLOT NAME :
PLOT SCALE : 1 IN:40 FT
WISDOT/CADDS SHEET 42

2

LEGEND

EXISTING SIGN MOUNTED ON POST(S)

PROPOSED SIGN MOUNTED ON POST(S)

(XXX) DENOTES SIGN NUMBER

(X) INDICATES SIGN SIZE

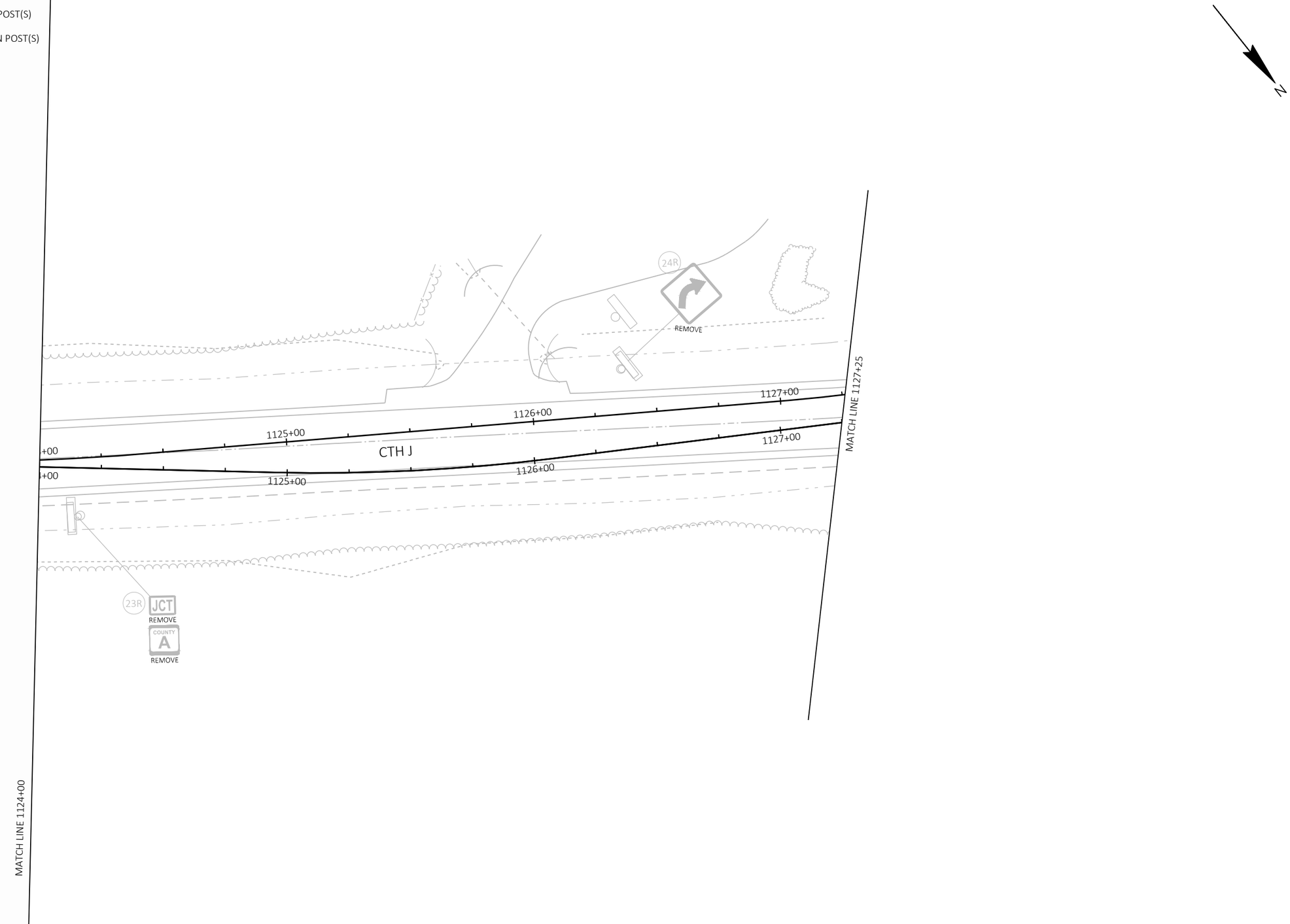

2

PROJECT NO: 2814-03-70	HWY: CTH A	COUNTY: RACINE	EXISTING SIGNING	SHEET 46	E

FILE NAME : Y:\54XX\5486.DP22.CTH.A.RCN.INTRSCTN.CTH.J\CADDS\28140300\SHEETS\023201-PS.DWG
LAYOUT NAME - E-6

PLOT DATE : 10/17/2024 12:23 PM PLOT BY : NICHOLAS BECKER PLOT NAME : PLOT SCALE : 1 IN:40 FT

WISDOT/CADDS SHEET 42

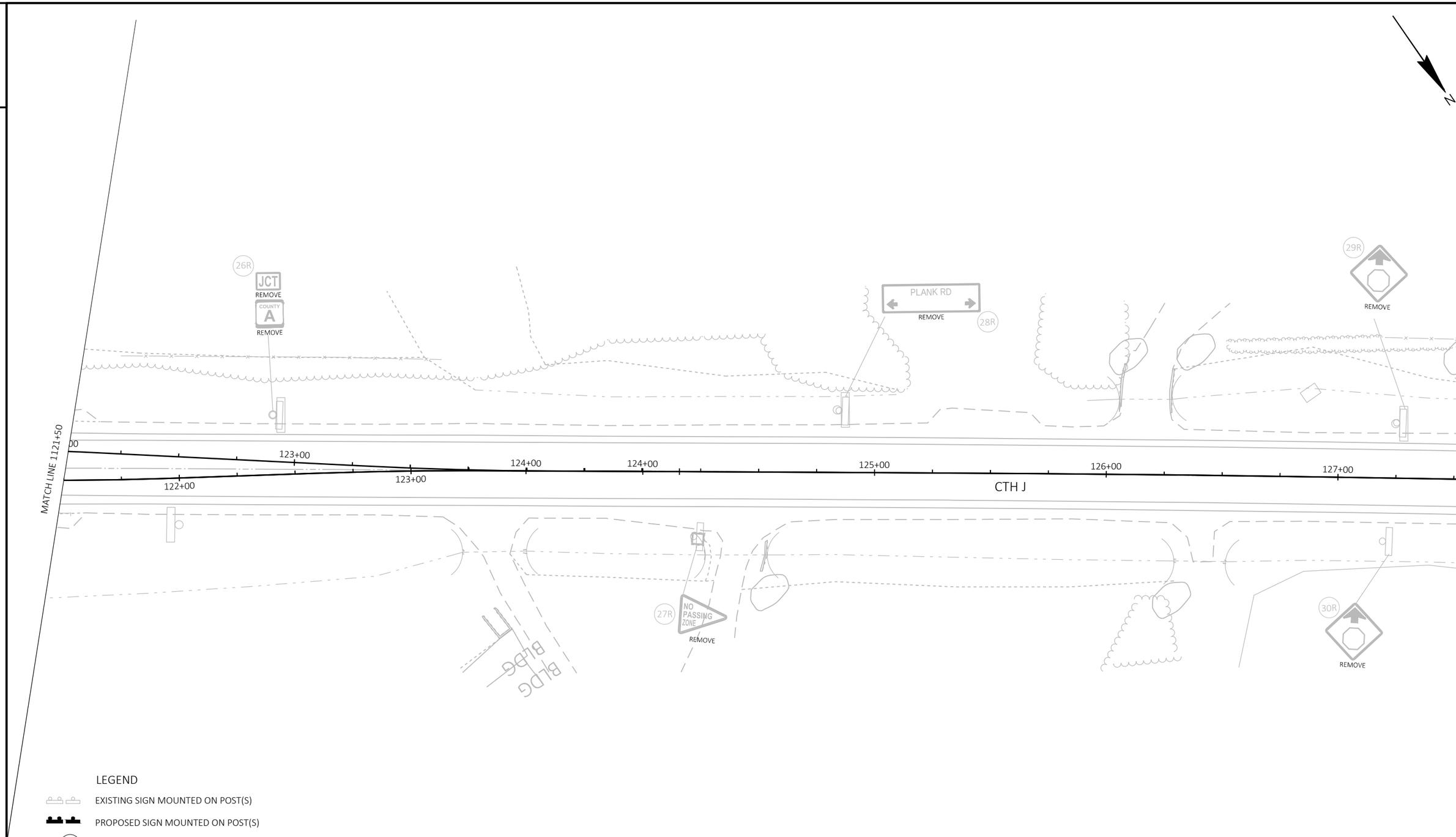

LEGEND

EXISTING SIGN MOUNTED ON POST(S)

PROPOSED SIGN MOUNTED ON POST(S)

XXX DENOTES SIGN NUMBER

(X) INDICATES SIGN SIZE

PROJECT NO: 2814-03-70	HWY: CTH A	COUNTY: RACINE	EXISTING SIGNING	SHEET 47	E

FILE NAME : Y:\54XX\5486.DP22.CTH.A.RCN.INTRSCTN.CTH.J\CADDS\28140300\SHEETS\023201-PS.DWG
LAYOUT NAME - E-7
PLOT DATE : 10/17/2024 12:23 PM
PLOT BY : NICHOLAS BECKER
PLOT NAME :
PLOT SCALE : 1 IN:40 FT

2

LEGEND

EXISTING SIGN MOUNTED ON POST(S)

PROPOSED SIGN MOUNTED ON POST(S)

XXX DENOTES SIGN NUMBER

(X) INDICATES SIGN SIZE

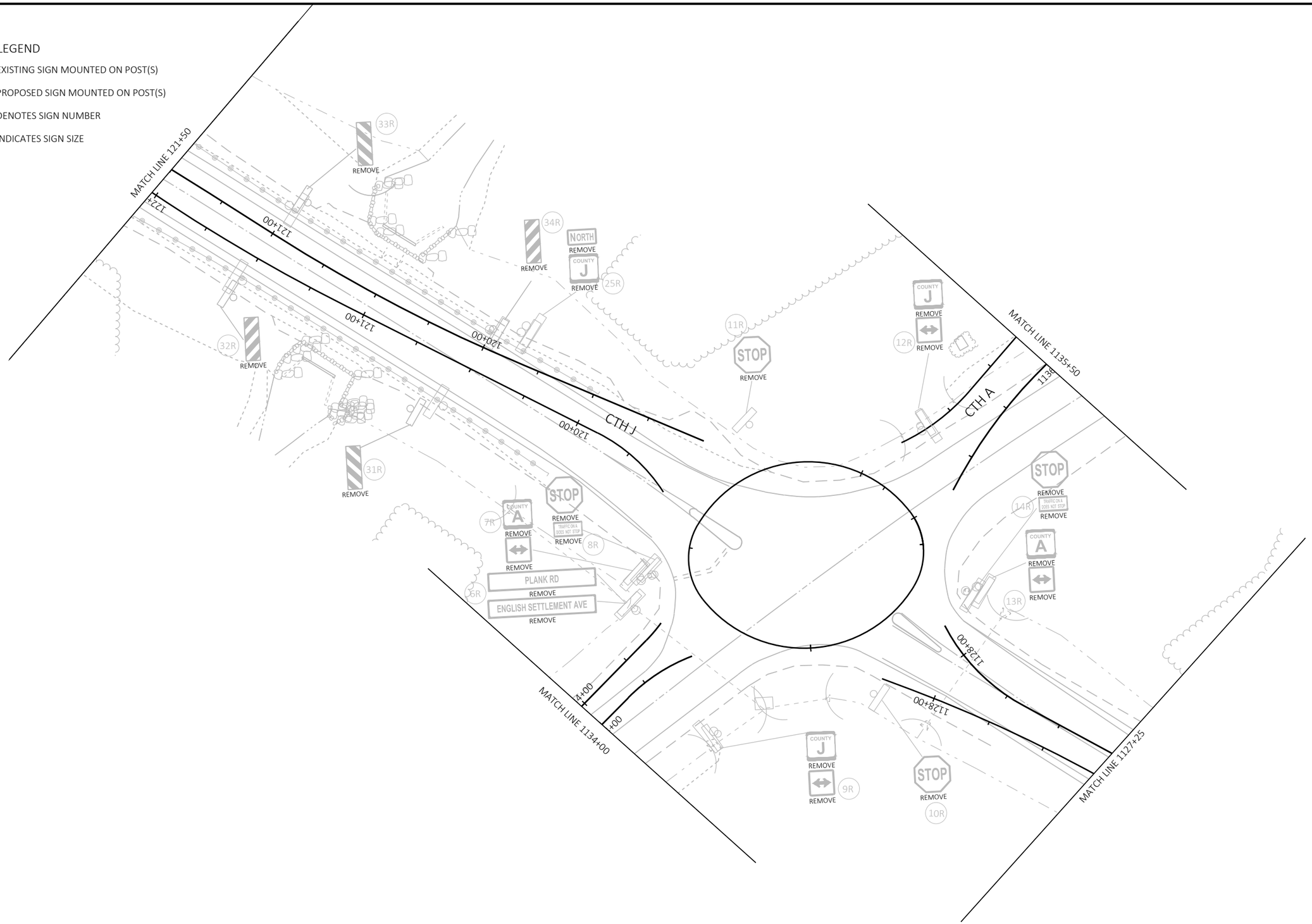

2

PROJECT NO: 2814-03-70	HWY: CTH A	COUNTY: RACINE	EXISTING SIGNING	SHEET 48	E

FILE NAME : Y:\54XX\5486.DP22.CTH.A.RCN.INTRSCTN.CTH.J\CADDS\28140300\SHEETS\023201-PS.DWG
LAYOUT NAME - E-8

PLOT DATE : 10/17/2024 12:23 PM PLOT BY : NICHOLAS BECKER PLOT NAME : PLOT SCALE : 1 IN:40 FT

WISDOT/CADDS SHEET 42

2

PAVEMENT MARKING LEGEND

- 4W MARKING LINE EPOXY 4-INCH (WHITE)
- 4Y MARKING LINE EPOXY 4-INCH (YELLOW)
- 4DW MARKING LINE EPOXY 4-INCH (WHITE, 3' LINE, 9' SKIP)
- 8W MARKING LINE EPOXY 8-INCH (WHITE)
- 12Y MARKING DIAGONAL EPOXY 12-INCH (YELLOW, 25' C-C)
- CY MARKING CURB EPOXY (YELLOW)
- INY MARKING ISLAND NOSE EPOXY (YELLOW)
- 18D MARKING LINE DOTTED EXTENSION EPOXY 18-INCH (WHITE, 2' LINE, 2' SKIP)

LEGEND

- EXISTING SIGN MOUNTED ON POST(S)
- PROPOSED SIGN MOUNTED ON POST(S)
- XXX DENOTES SIGN NUMBER
- (X) INDICATES SIGN SIZE

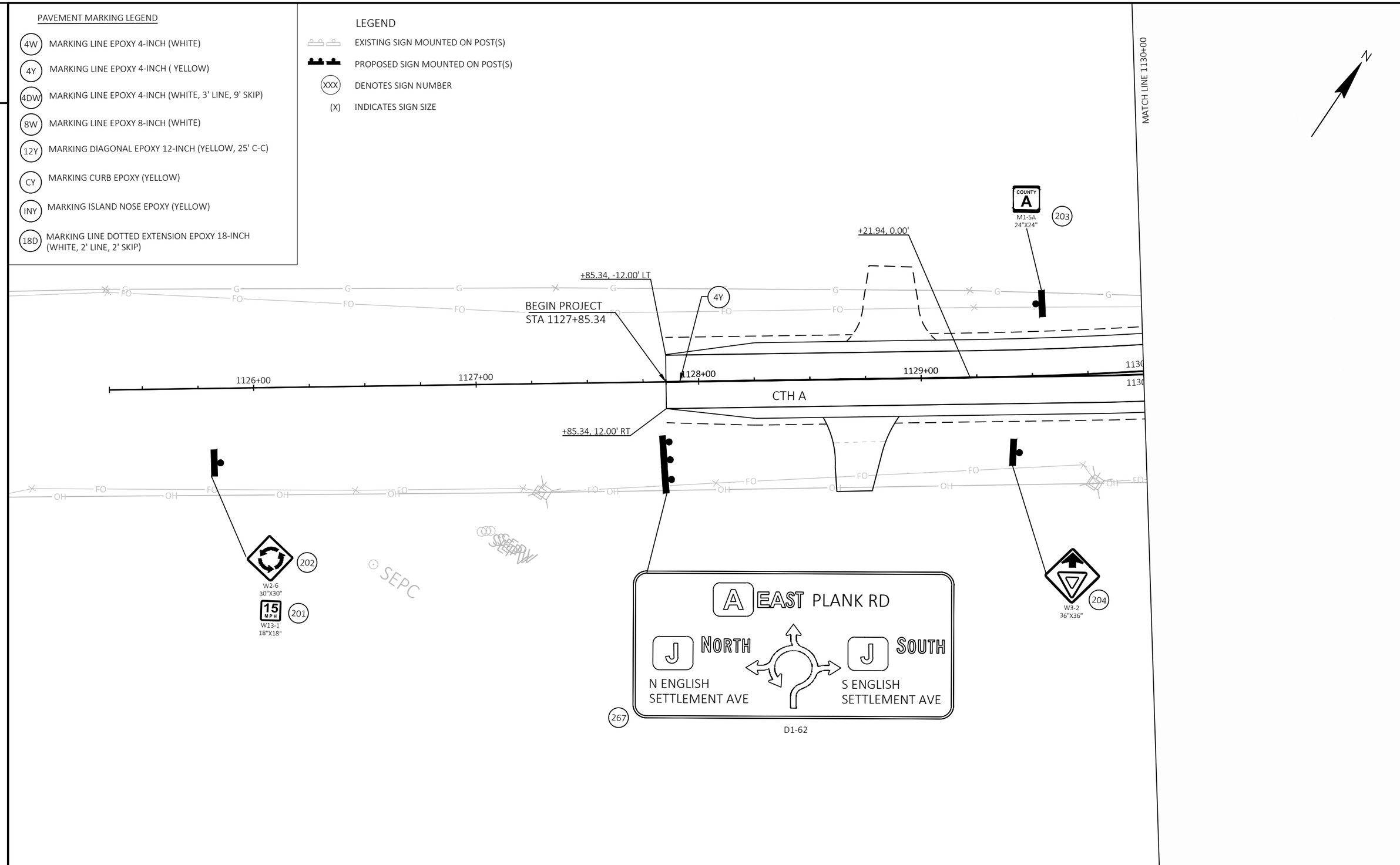

2

PROJECT NO: 2814-03-70	HWY: CTH A	COUNTY: RACINE	PERMANENT SIGNING AND PAVEMENT MARKING	SHEET 49	E

FILE NAME : Y:\54XX\5486.DP22.CTH.A.RCN.INTRSCTN.CTH.J\CADDS\28140300\SHEETS\023201-PS.DWG
LAYOUT NAME - P-1
PLOT DATE : 10/17/2024 12:23 PM PLOT BY : NICHOLAS BECKER PLOT NAME : PLOT SCALE : 1 IN:40 FT
WISDOT/CADDS SHEET 42

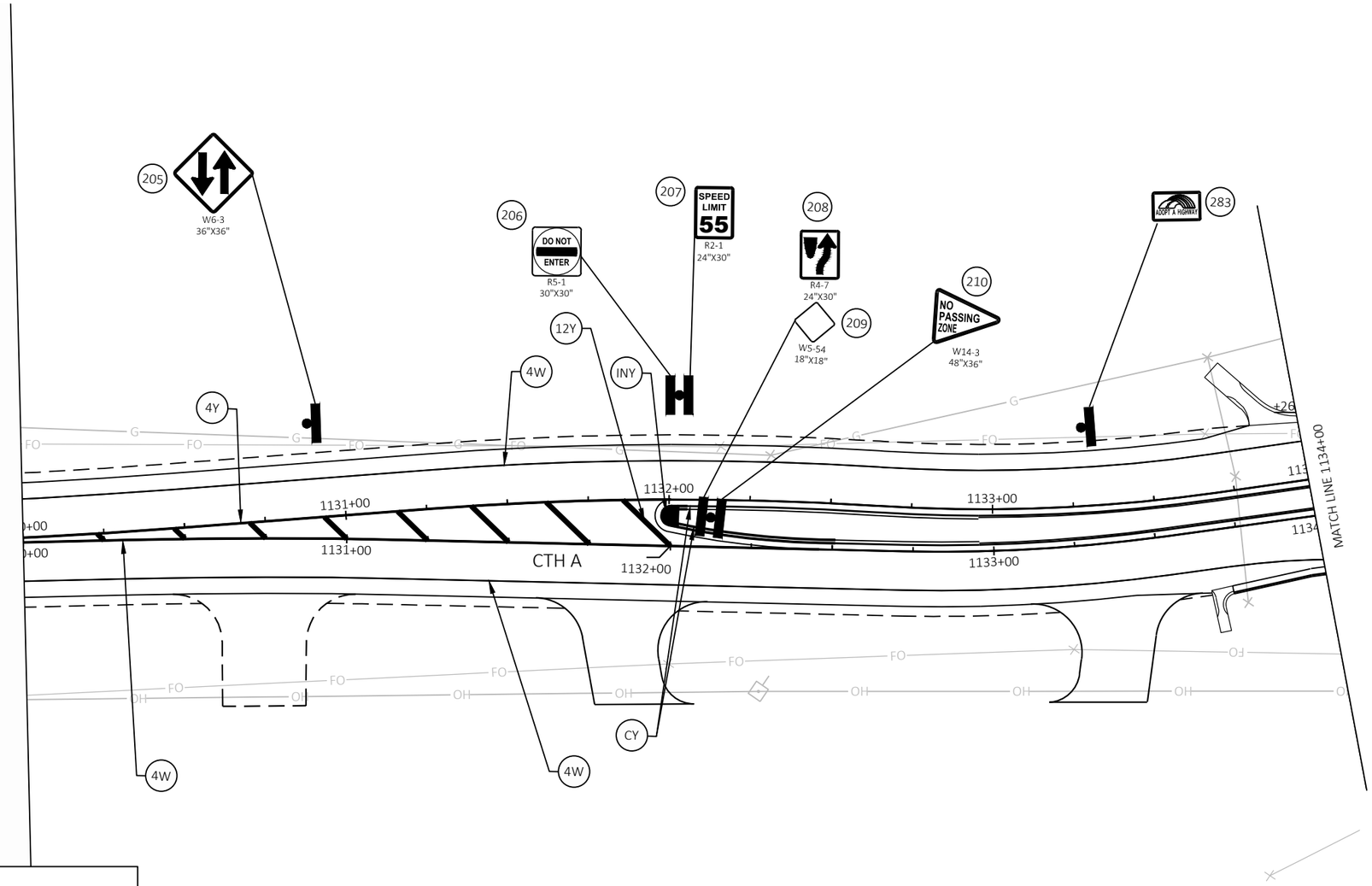

PAVEMENT MARKING LEGEND

- 4W — MARKING LINE EPOXY 4-INCH (WHITE)
- 4Y — MARKING LINE EPOXY 4-INCH (YELLOW)
- 4DW — MARKING LINE EPOXY 4-INCH (WHITE, 3' LINE, 9' SKIP)
- 8W — MARKING LINE EPOXY 8-INCH (WHITE)
- 12Y — MARKING DIAGONAL EPOXY 12-INCH (YELLOW, 25' C-C)
- CY — MARKING CURB EPOXY (YELLOW)
- INY — MARKING ISLAND NOSE EPOXY (YELLOW)
- 18D — MARKING LINE DOTTED EXTENSION EPOXY 18-INCH (WHITE, 2' LINE, 2' SKIP)

LEGEND

- EXISTING SIGN MOUNTED ON POST(S)
- PROPOSED SIGN MOUNTED ON POST(S)
- XXX — DENOTES SIGN NUMBER
- (X) — INDICATES SIGN SIZE

PROJECT NO: 2814-03-70	HWY: CTH A	COUNTY: RACINE	PERMANENT SIGNING AND PAVEMENT MARKING	SHEET 50	E

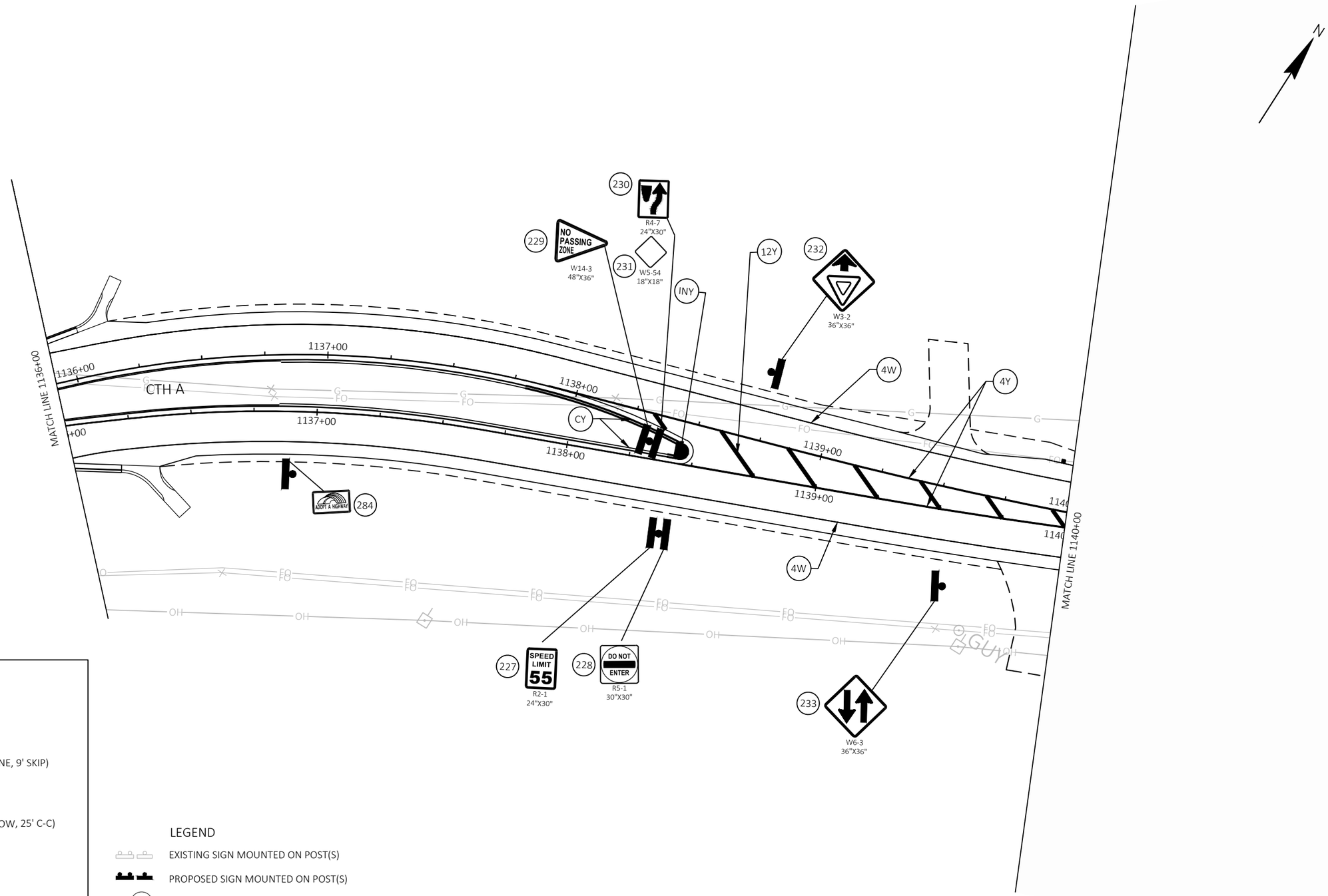

PAVEMENT MARKING LEGEND

- 4W — MARKING LINE EPOXY 4-INCH (WHITE)
- 4Y — MARKING LINE EPOXY 4-INCH (YELLOW)
- 4DW — MARKING LINE EPOXY 4-INCH (WHITE, 3' LINE, 9' SKIP)
- 8W — MARKING LINE EPOXY 8-INCH (WHITE)
- 12Y — MARKING DIAGONAL EPOXY 12-INCH (YELLOW, 25' C-C)
- CY — MARKING CURB EPOXY (YELLOW)
- INY — MARKING ISLAND NOSE EPOXY (YELLOW)
- 18D — MARKING LINE DOTTED EXTENSION EPOXY 18-INCH (WHITE, 2' LINE, 2' SKIP)

LEGEND

- EXISTING SIGN MOUNTED ON POST(S)
- PROPOSED SIGN MOUNTED ON POST(S)
- XXX — DENOTES SIGN NUMBER
- (X) — INDICATES SIGN SIZE

PROJECT NO: 2814-03-70	HWY: CTH A	COUNTY: RACINE	PERMANENT SIGNING AND PAVEMENT MARKING	SHEET 51	E

2

LEGEND

EXISTING SIGN MOUNTED ON POST(S)

PROPOSED SIGN MOUNTED ON POST(S)

(XXX) DENOTES SIGN NUMBER

(X) INDICATES SIGN SIZE

PAVEMENT MARKING LEGEND

4W	MARKING LINE EPOXY 4-INCH (WHITE)
4Y	MARKING LINE EPOXY 4-INCH (YELLOW)
4DW	MARKING LINE EPOXY 4-INCH (WHITE, 3' LINE, 9' SKIP)
8W	MARKING LINE EPOXY 8-INCH (WHITE)
12Y	MARKING DIAGONAL EPOXY 12-INCH (YELLOW, 25' C-C)
CY	MARKING CURB EPOXY (YELLOW)
INY	MARKING ISLAND NOSE EPOXY (YELLOW)
18D	MARKING LINE DOTTED EXTENSION EPOXY 18-INCH (WHITE, 2' LINE, 2' SKIP)

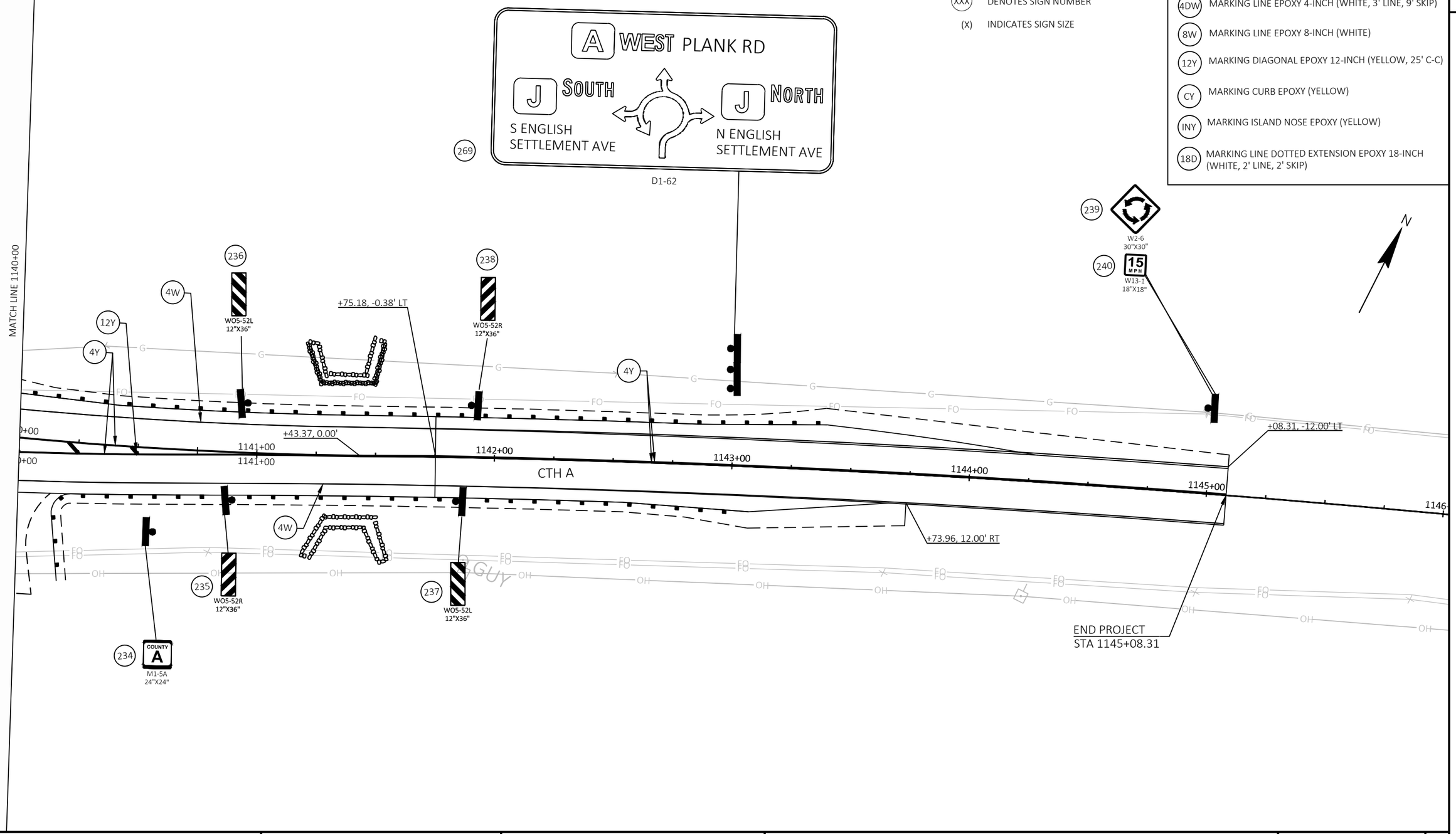

2

PROJECT NO: 2814-03-70	HWY: CTH A	COUNTY: RACINE	PERMANENT SIGNING AND PAVEMENT MARKING	SHEET 52	E

FILE NAME : Y:\54XX\5486.DP22.CTH.A.RCN.INTRSCTN.CTH.J\CADDS\28140300\SHEETS\023201-PS.DWG
LAYOUT NAME - P-4
PLOT DATE : 10/17/2024 12:24 PM
PLOT BY : NICHOLAS BECKER
PLOT NAME :
PLOT SCALE : 1 IN:40 FT

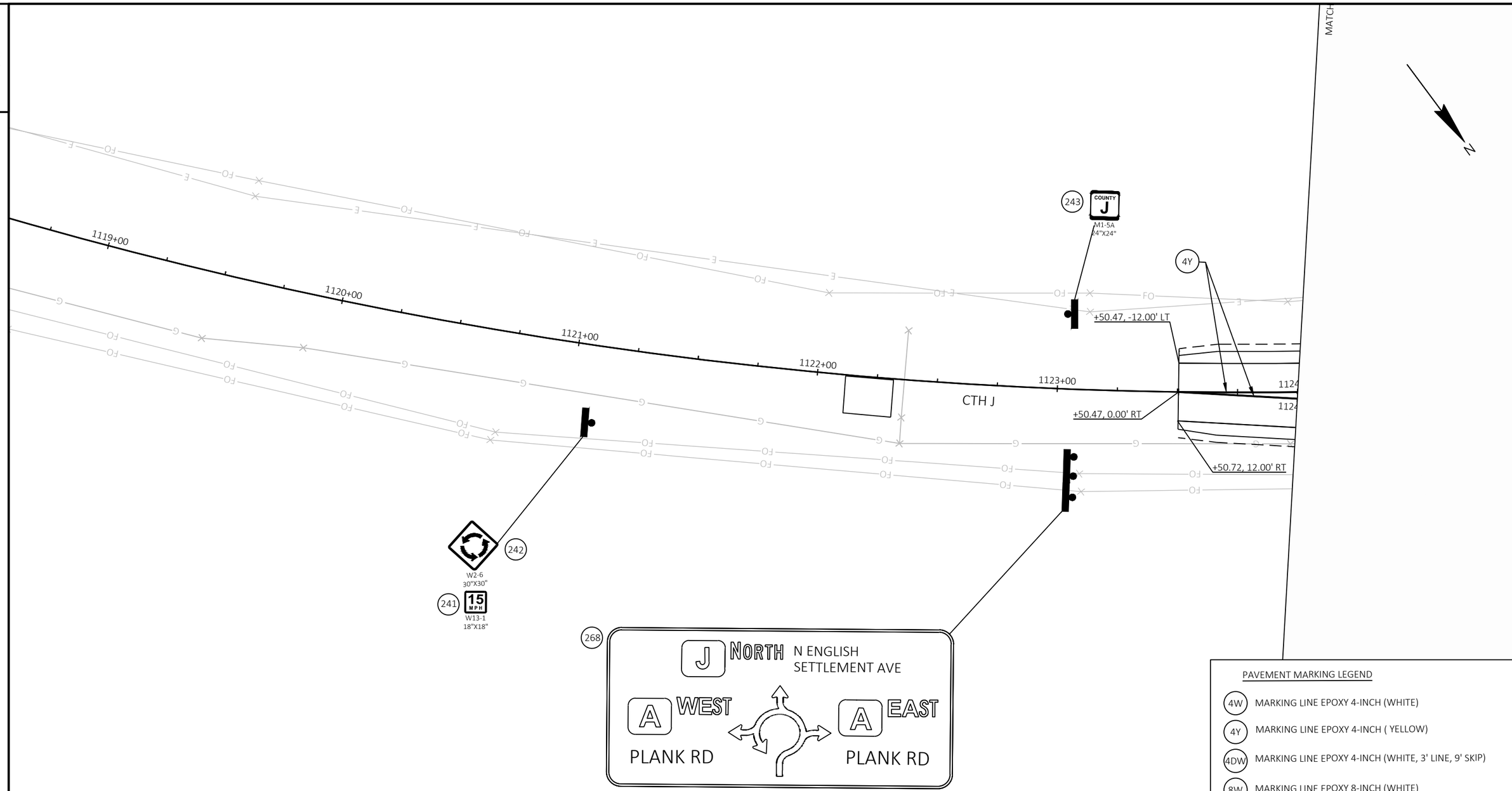

LEGEND

- EXISTING SIGN MOUNTED ON POST(S)
- PROPOSED SIGN MOUNTED ON POST(S)
- (XXX) DENOTES SIGN NUMBER
- (X) INDICATES SIGN SIZE

PAVEMENT MARKING LEGEND

- (4W) MARKING LINE EPOXY 4-INCH (WHITE)
- (4Y) MARKING LINE EPOXY 4-INCH (YELLOW)
- (4DW) MARKING LINE EPOXY 4-INCH (WHITE, 3' LINE, 9' SKIP)
- (8W) MARKING LINE EPOXY 8-INCH (WHITE)
- (12Y) MARKING DIAGONAL EPOXY 12-INCH (YELLOW, 25' C-C)
- (CY) MARKING CURB EPOXY (YELLOW)
- (INY) MARKING ISLAND NOSE EPOXY (YELLOW)
- (18D) MARKING LINE DOTTED EXTENSION EPOXY 18-INCH (WHITE, 2' LINE, 2' SKIP)

PROJECT NO: 2814-03-70	HWY: CTH A	COUNTY: RACINE	PERMANENT SIGNING AND PAVEMENT MARKING	SHEET 53	E

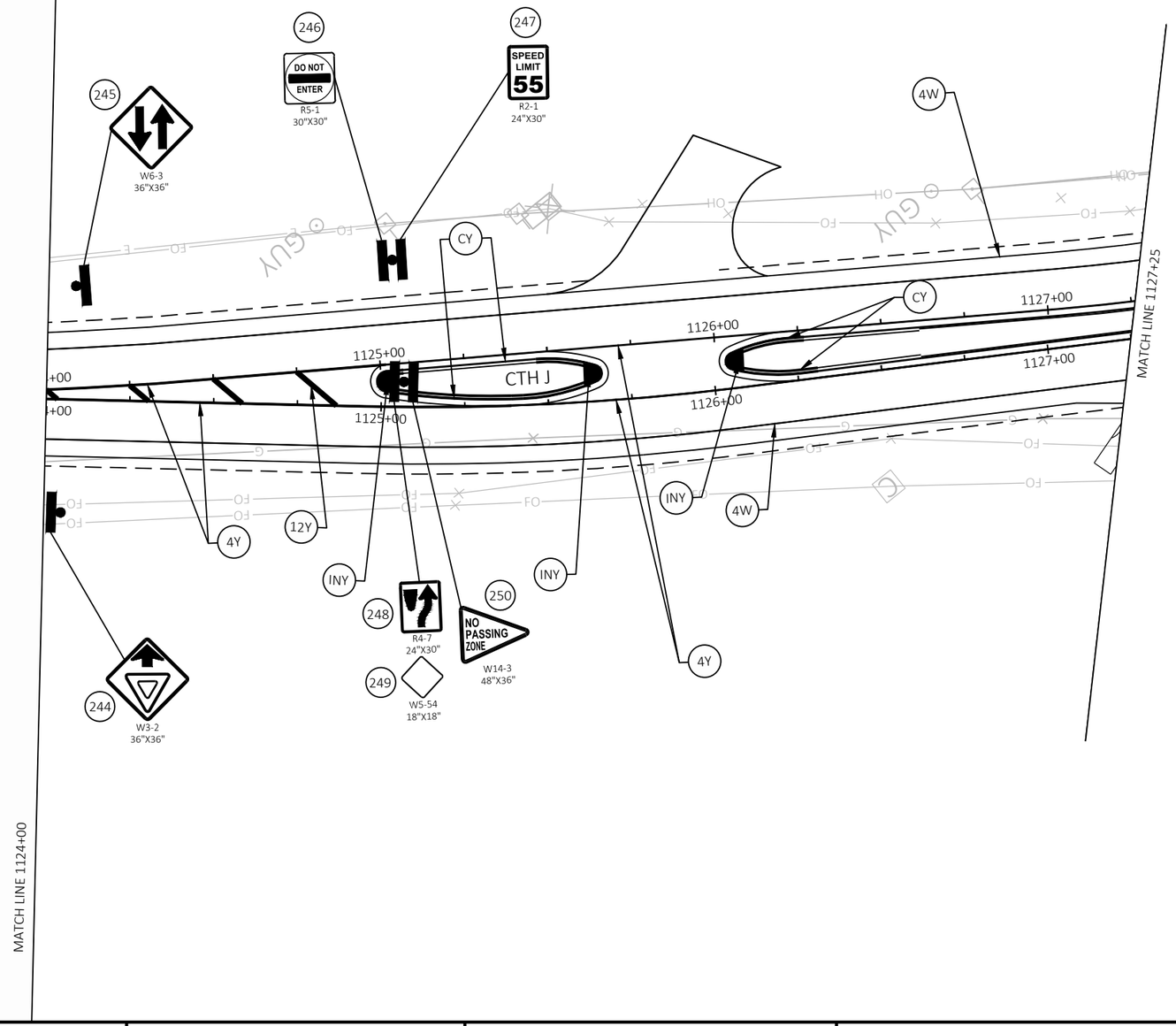

N

LEGEND

- EXISTING SIGN MOUNTED ON POST(S)
- PROPOSED SIGN MOUNTED ON POST(S)
- (XXX) DENOTES SIGN NUMBER
- (X) INDICATES SIGN SIZE

PAVEMENT MARKING LEGEND

- 4W MARKING LINE EPOXY 4-INCH (WHITE)
- 4Y MARKING LINE EPOXY 4-INCH (YELLOW)
- 4DW MARKING LINE EPOXY 4-INCH (WHITE, 3' LINE, 9' SKIP)
- 8W MARKING LINE EPOXY 8-INCH (WHITE)
- 12Y MARKING DIAGONAL EPOXY 12-INCH (YELLOW, 25' C-C)
- CY MARKING CURB EPOXY (YELLOW)
- INY MARKING ISLAND NOSE EPOXY (YELLOW)
- 18D MARKING LINE DOTTED EXTENSION EPOXY 18-INCH (WHITE, 2' LINE, 2' SKIP)

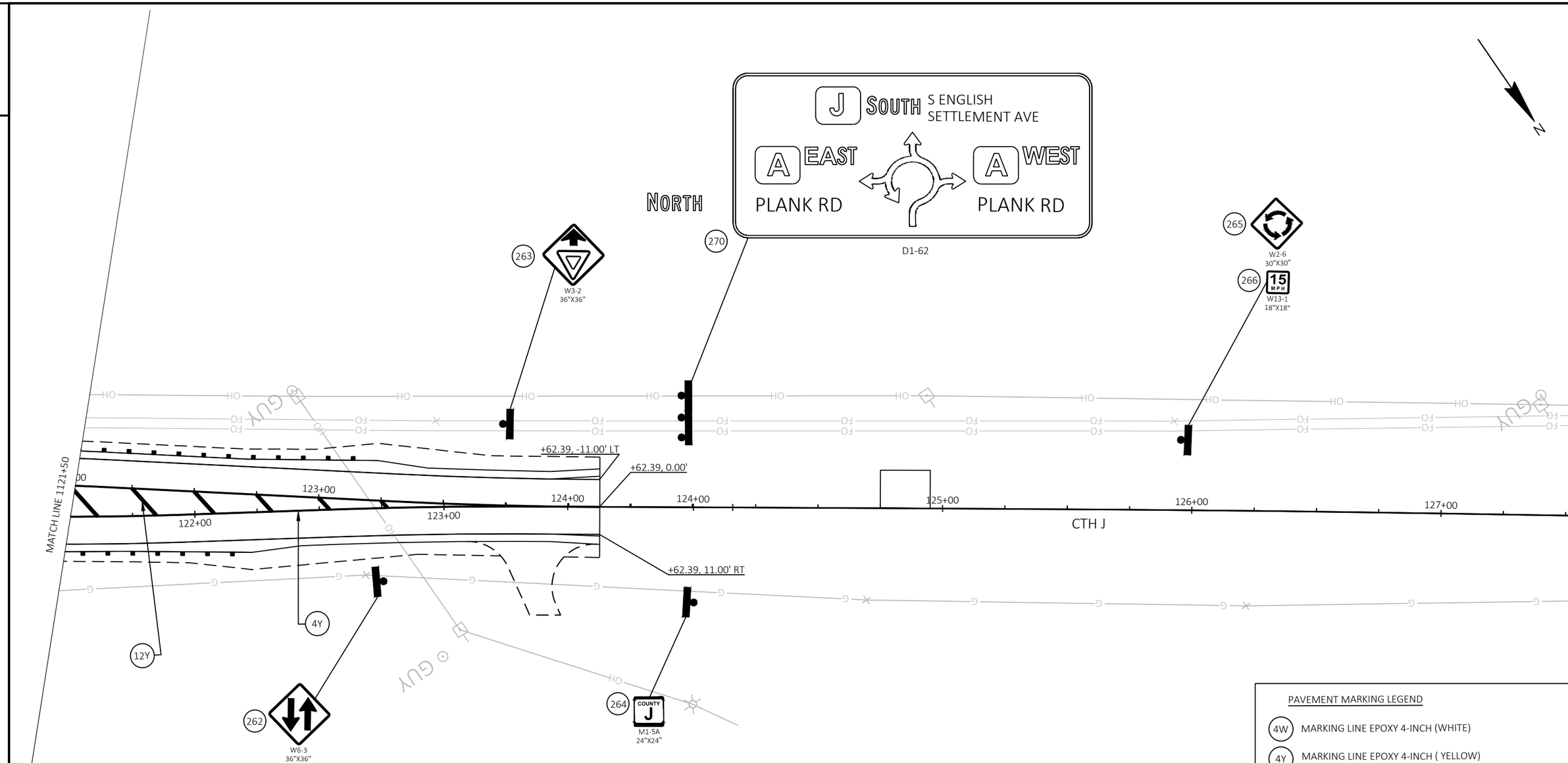

LEGEND

- EXISTING SIGN MOUNTED ON POST(S)
- PROPOSED SIGN MOUNTED ON POST(S)
- (XXX) DENOTES SIGN NUMBER
- (X) INDICATES SIGN SIZE

PAVEMENT MARKING LEGEND

- 4W MARKING LINE EPOXY 4-INCH (WHITE)
- 4Y MARKING LINE EPOXY 4-INCH (YELLOW)
- 4DW MARKING LINE EPOXY 4-INCH (WHITE, 3' LINE, 9' SKIP)
- 8W MARKING LINE EPOXY 8-INCH (WHITE)
- 12Y MARKING DIAGONAL EPOXY 12-INCH (YELLOW, 25' C-C)
- CY MARKING CURB EPOXY (YELLOW)
- INY MARKING ISLAND NOSE EPOXY (YELLOW)
- 18D MARKING LINE DOTTED EXTENSION EPOXY 18-INCH (WHITE, 2' LINE, 2' SKIP)

PROJECT NO: 2814-03-70	HWY: CTH A	COUNTY: RACINE	PERMANENT SIGNING AND PAVEMENT MARKING	SHEET 55	E

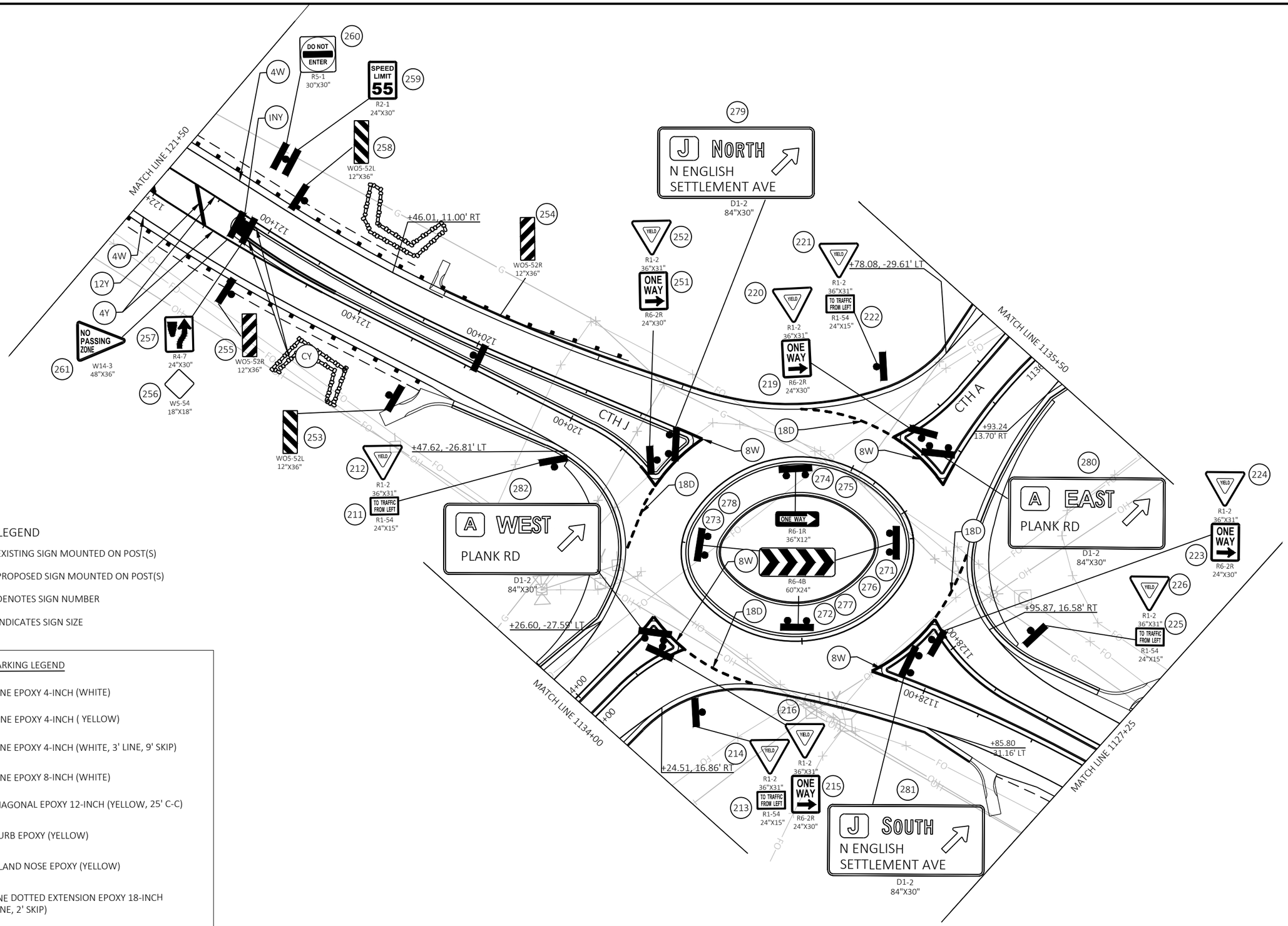

LEGEND

- EXISTING SIGN MOUNTED ON POST(S)
- PROPOSED SIGN MOUNTED ON POST(S)
- (XXX) DENOTES SIGN NUMBER
- (X) INDICATES SIGN SIZE

PAVEMENT MARKING LEGEND

- (4W) MARKING LINE EPOXY 4-INCH (WHITE)
- (4Y) MARKING LINE EPOXY 4-INCH (YELLOW)
- (4DW) MARKING LINE EPOXY 4-INCH (WHITE, 3' LINE, 9' SKIP)
- (8W) MARKING LINE EPOXY 8-INCH (WHITE)
- (12Y) MARKING DIAGONAL EPOXY 12-INCH (YELLOW, 25' C-C)
- (CY) MARKING CURB EPOXY (YELLOW)
- (INY) MARKING ISLAND NOSE EPOXY (YELLOW)
- (18D) MARKING LINE DOTTED EXTENSION EPOXY 18-INCH (WHITE, 2' LINE, 2' SKIP)

PROJECT NO: 2814-03-70	HWY: CTH A	COUNTY: RACINE	PERMANENT SIGNING AND PAVEMENT MARKING	SHEET 56	E

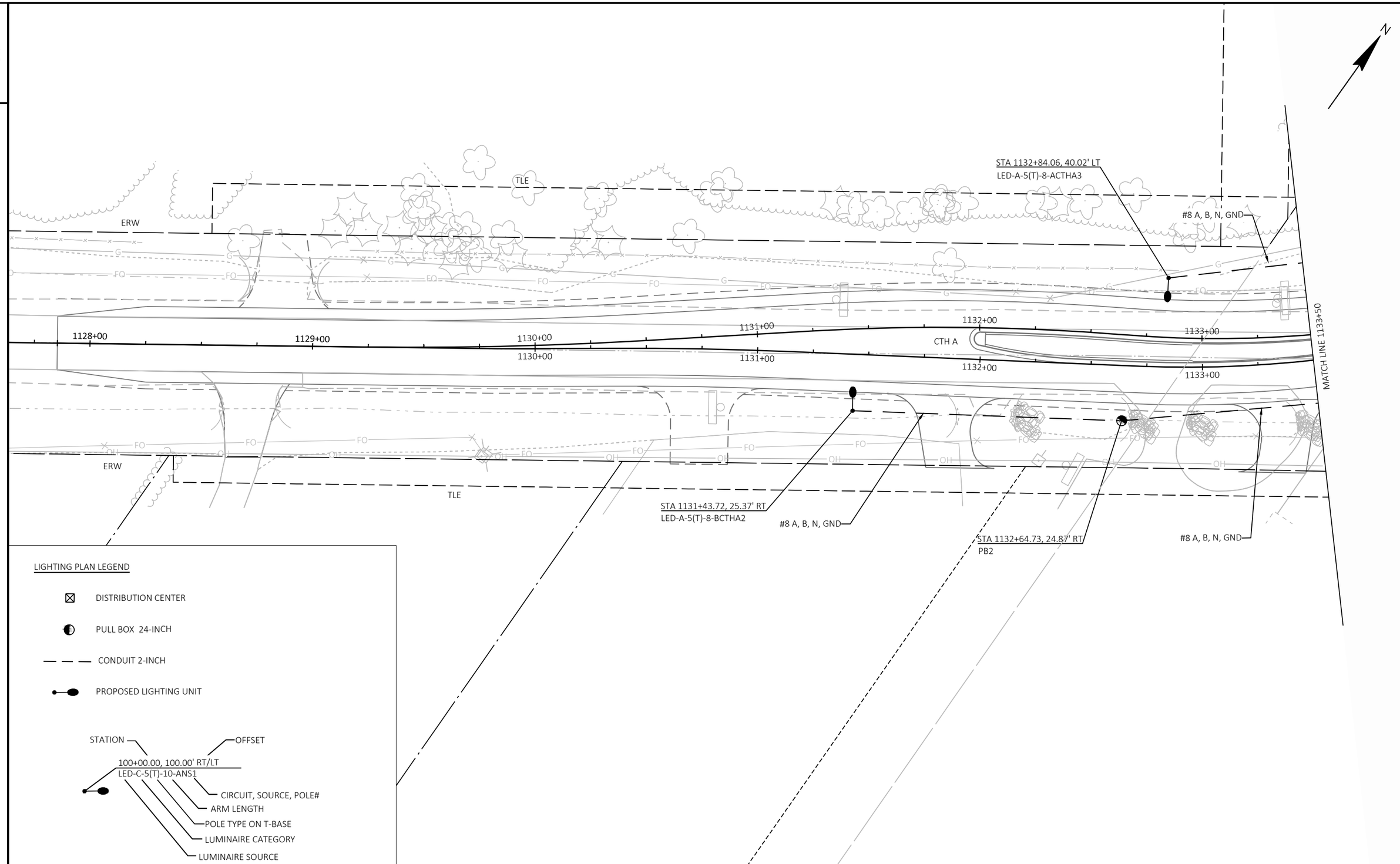

PROJECT NO: 2814-03-70	HWY: CTH A	COUNTY: RACINE	LIGHTING PLAN	SHEET 57	E

FILE NAME : Y:\54XX\5486.DP22.CTH.A.RCN.INTRSCTN.CTH.J\CADDS\28140300\SHEETS\023601-LP.DWG
LAYOUT NAME - 023601-lp
PLOT DATE : 10/17/2024 4:18 PM PLOT BY : CODY LABELLE PLOT NAME : PLOT SCALE : 1 IN:40 FT

LIGHTING PLAN LEGEND

- DISTRIBUTION CENTER
- PULL BOX 24-INCH
- CONDUIT 2-INCH
- PROPOSED LIGHTING UNIT

STATION — OFFSET

100+00.00, 100.00' RT/LT
LED-C-5(T)-10-ANS1

- CIRCUIT, SOURCE, POLE#
- ARM LENGTH
- POLE TYPE ON T-BASE
- LUMINAIRE CATEGORY
- LUMINAIRE SOURCE

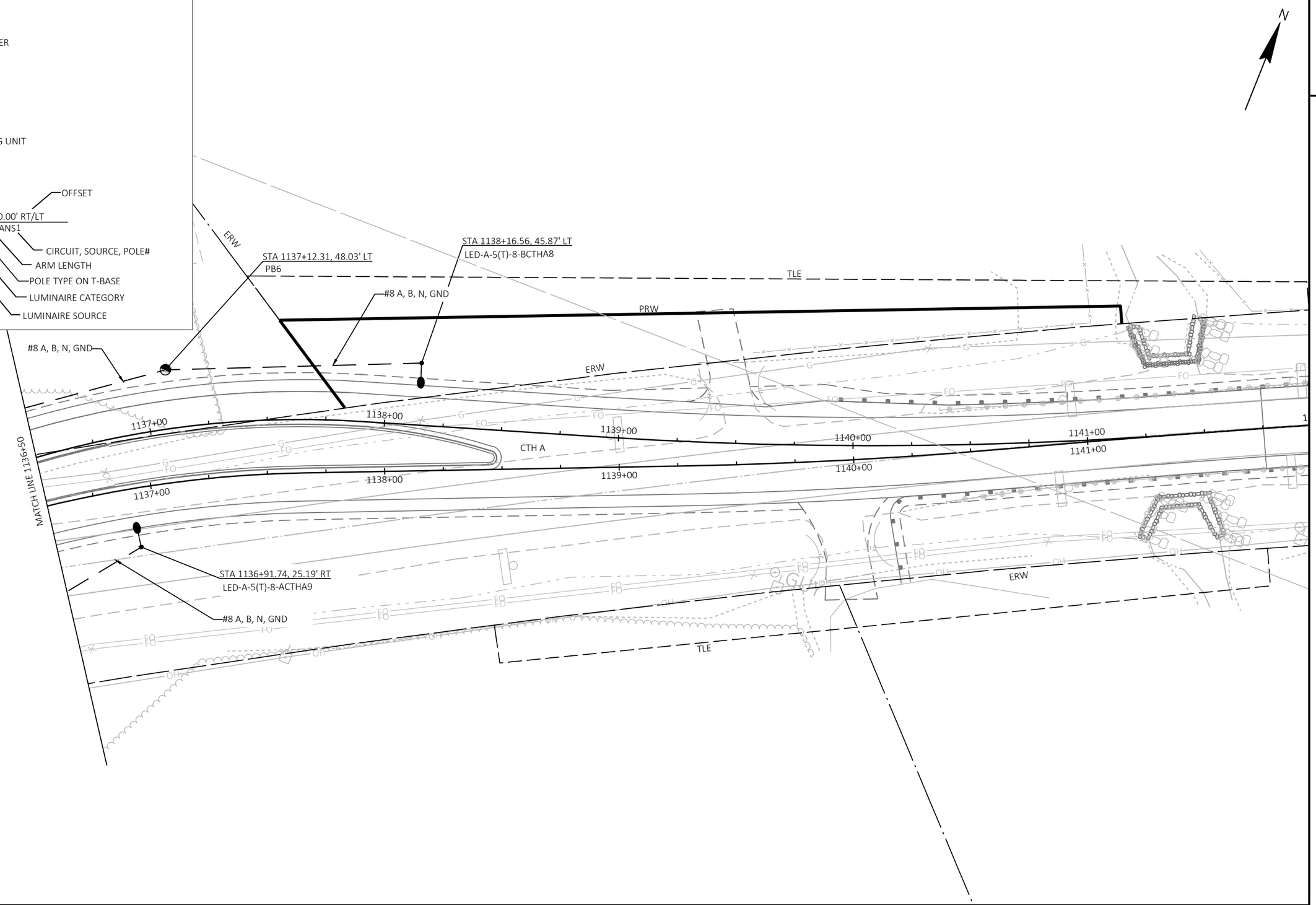

LIGHTING PLAN LEGEND

- DISTRIBUTION CENTER
- PULL BOX 24-INCH
- CONDUIT 2-INCH
- PROPOSED LIGHTING UNIT

STATION — OFFSET

100+00.00, 100.00' RT/LT

LED-C-5(T)-10-ANS1

- CIRCUIT, SOURCE, POLE#
- ARM LENGTH
- POLE TYPE ON T-BASE
- LUMINAIRE CATEGORY
- LUMINAIRE SOURCE

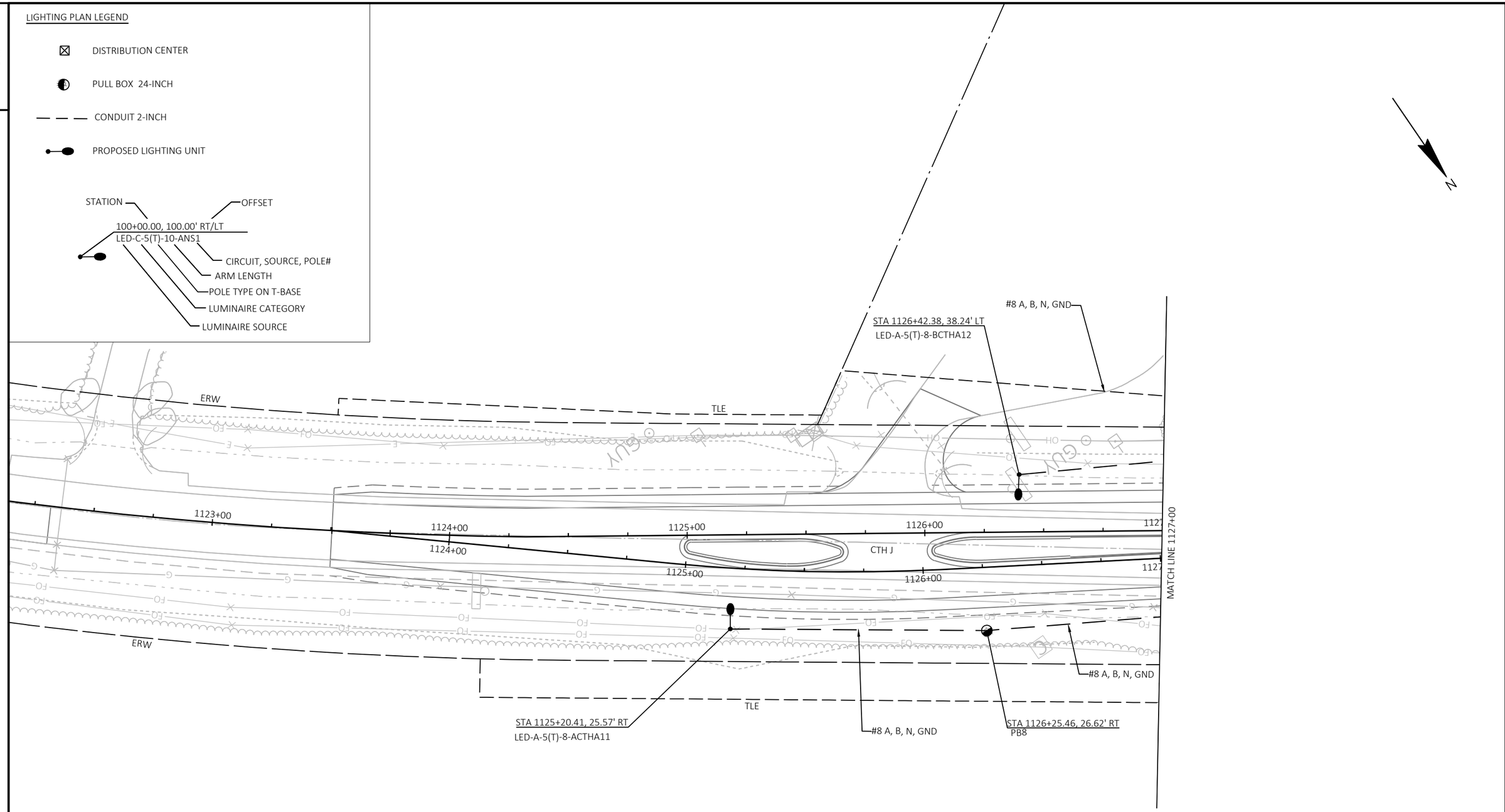

PROJECT NO: 2814-03-70	HWY: CTH A	COUNTY: RACINE	LIGHTING PLAN	SHEET 59	E

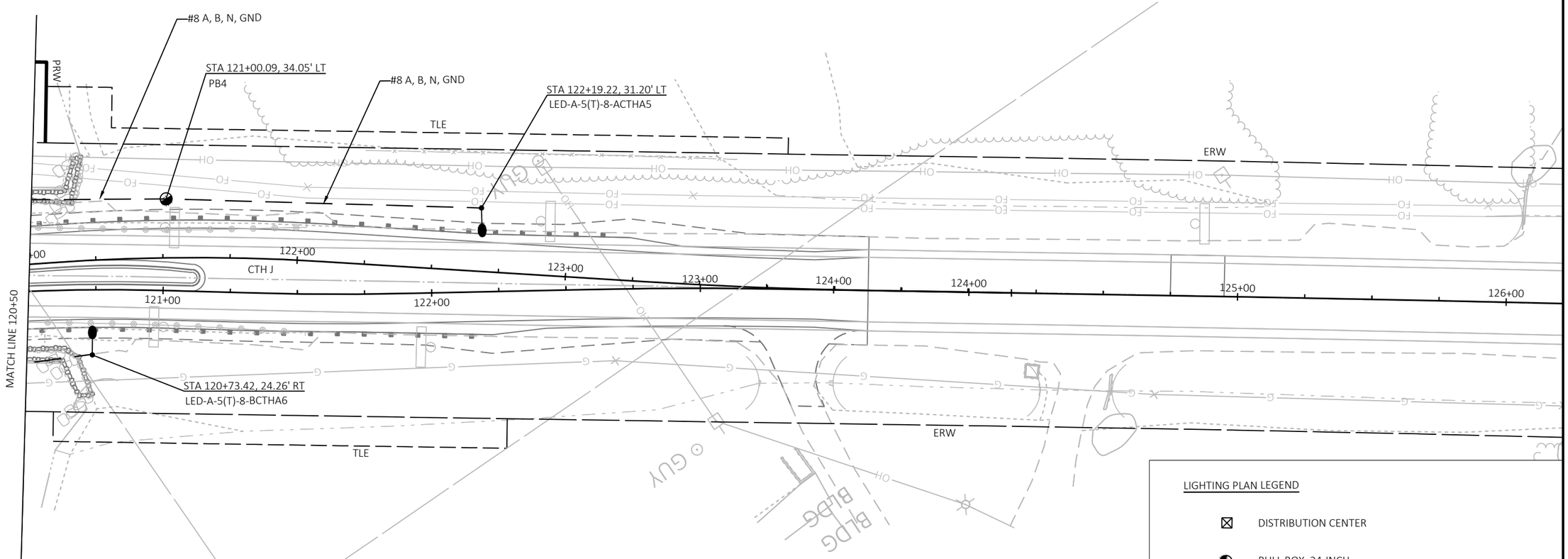

LIGHTING PLAN LEGEND

- DISTRIBUTION CENTER
- PULL BOX 24-INCH
- CONDUIT 2-INCH
- PROPOSED LIGHTING UNIT

STATION — OFFSET

100+00.00, 100.00' RT/LT
LED-C-5(T)-10-ANS1

- CIRCUIT, SOURCE, POLE#
- ARM LENGTH
- POLE TYPE ON T-BASE
- LUMINAIRE CATEGORY
- LUMINAIRE SOURCE

PROJECT NO: 2814-03-70	HWY: CTH A	COUNTY: RACINE	LIGHTING PLAN	SHEET 60	E

2

LIGHTING PLAN LEGEND

- DISTRIBUTION CENTER
- PULL BOX 24-INCH
- CONDUIT 2-INCH
- PROPOSED LIGHTING UNIT

STATION — OFFSET

100+00.00, 100.00' RT/LT
LED-C-5(T)-10-ANS1

- CIRCUIT, SOURCE, POLE#
- ARM LENGTH
- POLE TYPE ON T-BASE
- LUMINAIRE CATEGORY
- LUMINAIRE SOURCE

DISTRIBUTION CENTER	MAIN BREAKER	BRANCH CIRCUIT	COMPUTED AMPS	BRANCH CIRCUIT BREAKER	VOLTAGE DROP %	WIRE SIZE
L-CTH A-ST	100 AMP	A	2.7	20 AMP	1.4	#8 Cu
		B	2.7	20 AMP	1.0	#8 Cu

DISTRIBUTION CENTER A	
A, B	BLACK/ RED
N	WHITE
GND	GREEN
A, B	20A
120/240 VAC	
ISOLATED NUETRAL	

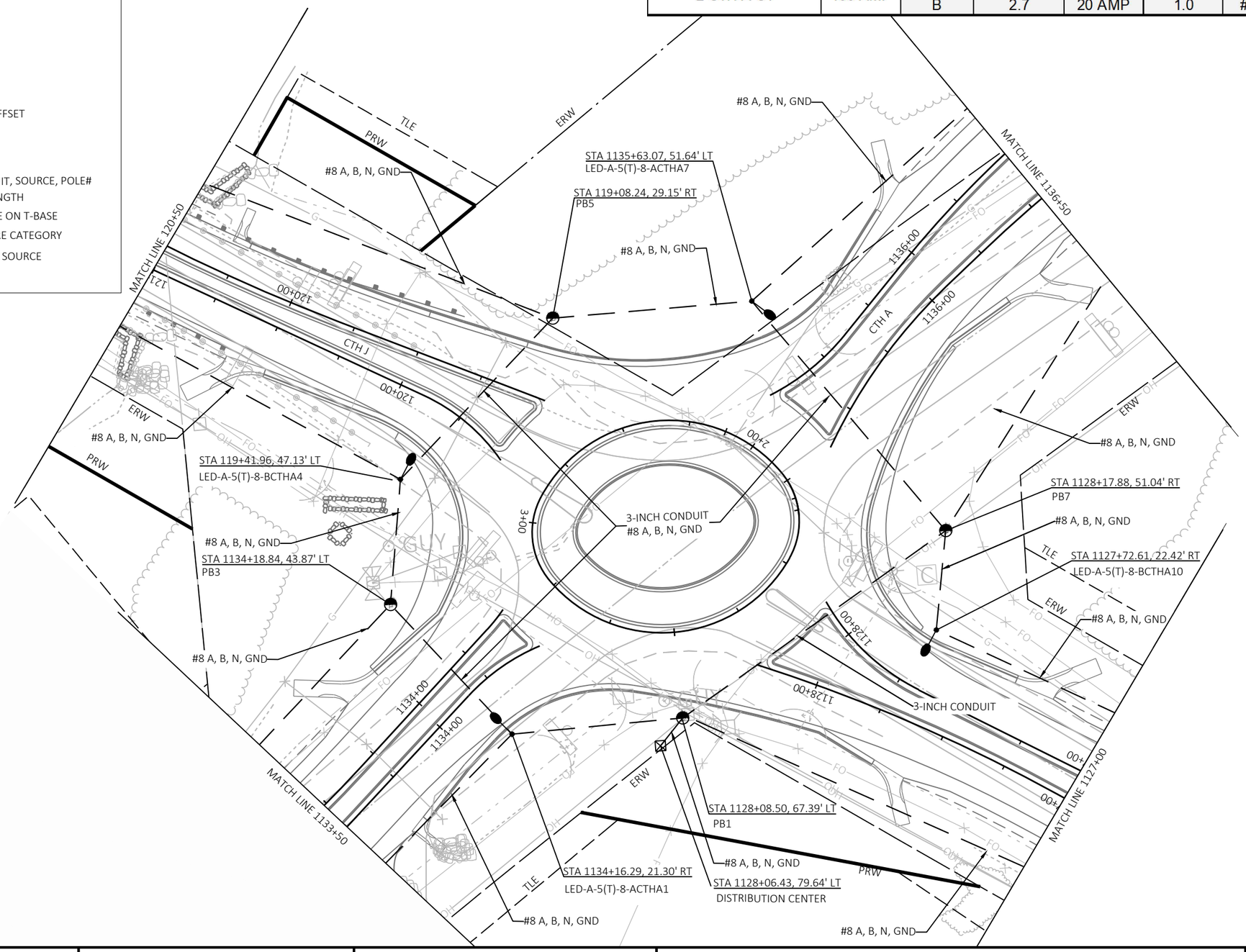

2

PROJECT NO: 2814-03-70	HWY: CTH A	COUNTY: RACINE	LIGHTING PLAN	SHEET 61	E

FILE NAME : Y:\54XX\5486.DP22.CTH.A.RCN.INTRSCTN.CTH.J\CADDS\28140300\SHEETS\023601-LP.DWG
LAYOUT NAME - 023606-lp
PLOT DATE : 10/17/2024 4:19 PM PLOT BY : CODY LABELLE PLOT NAME : PLOT SCALE : 1 IN:40 FT

2

NOTE: ALL SIGNS ARE 48" X 48" UNLESS OTHERWISE NOTED.

LEGEND

BARRICADE TYPE III

BARRICADE TYPE III WITH ATTACHED SIGN

SIGN ON TEMPORARY SUPPORT

WORK AREA

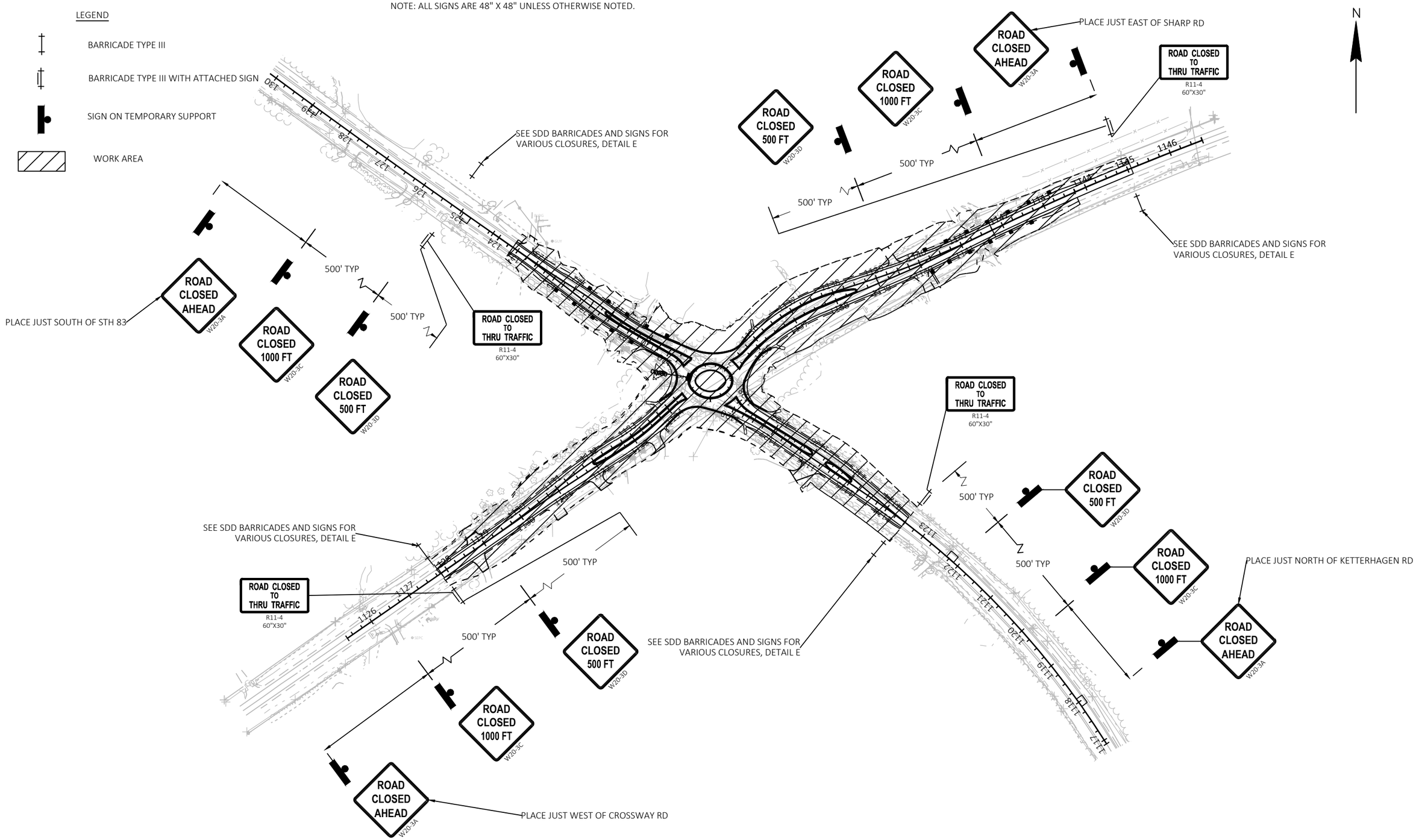

2

PROJECT NO: 2814-03-70	HWY: CTH A	COUNTY: RACINE	TRAFFIC CONTROL	SHEET 62	E

FILE NAME : Y:\54XX\5486.DP22.CTH.A.RCN.INTRSCTN.CTH.J\CADDS\28140300\SHEETS\025100-TC.DWG
LAYOUT NAME - 025100-tc
PLOT DATE : 10/16/2024 3:21 PM PLOT BY : CODY LABELLE PLOT NAME : PLOT SCALE : 1 IN:200 FT

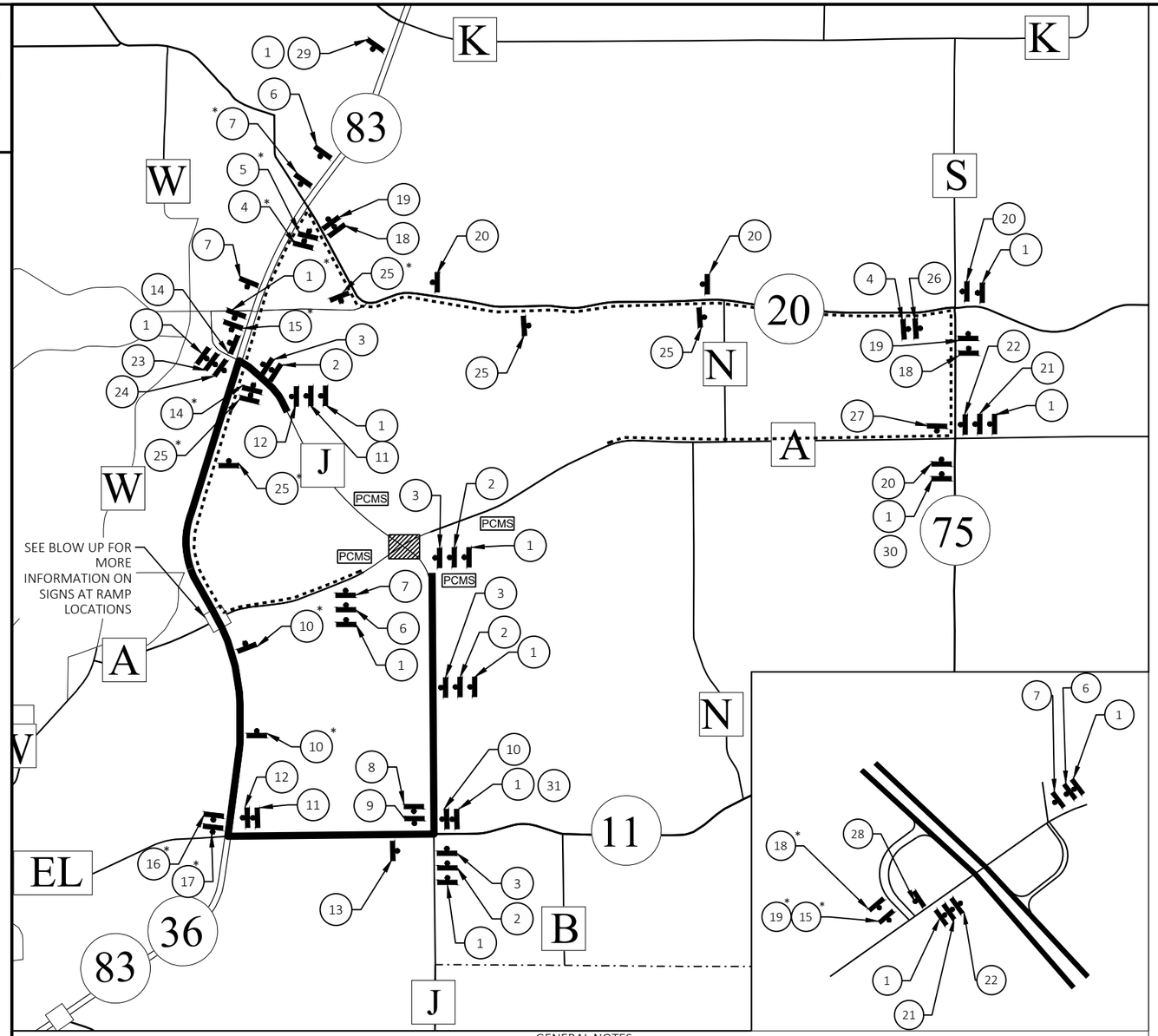

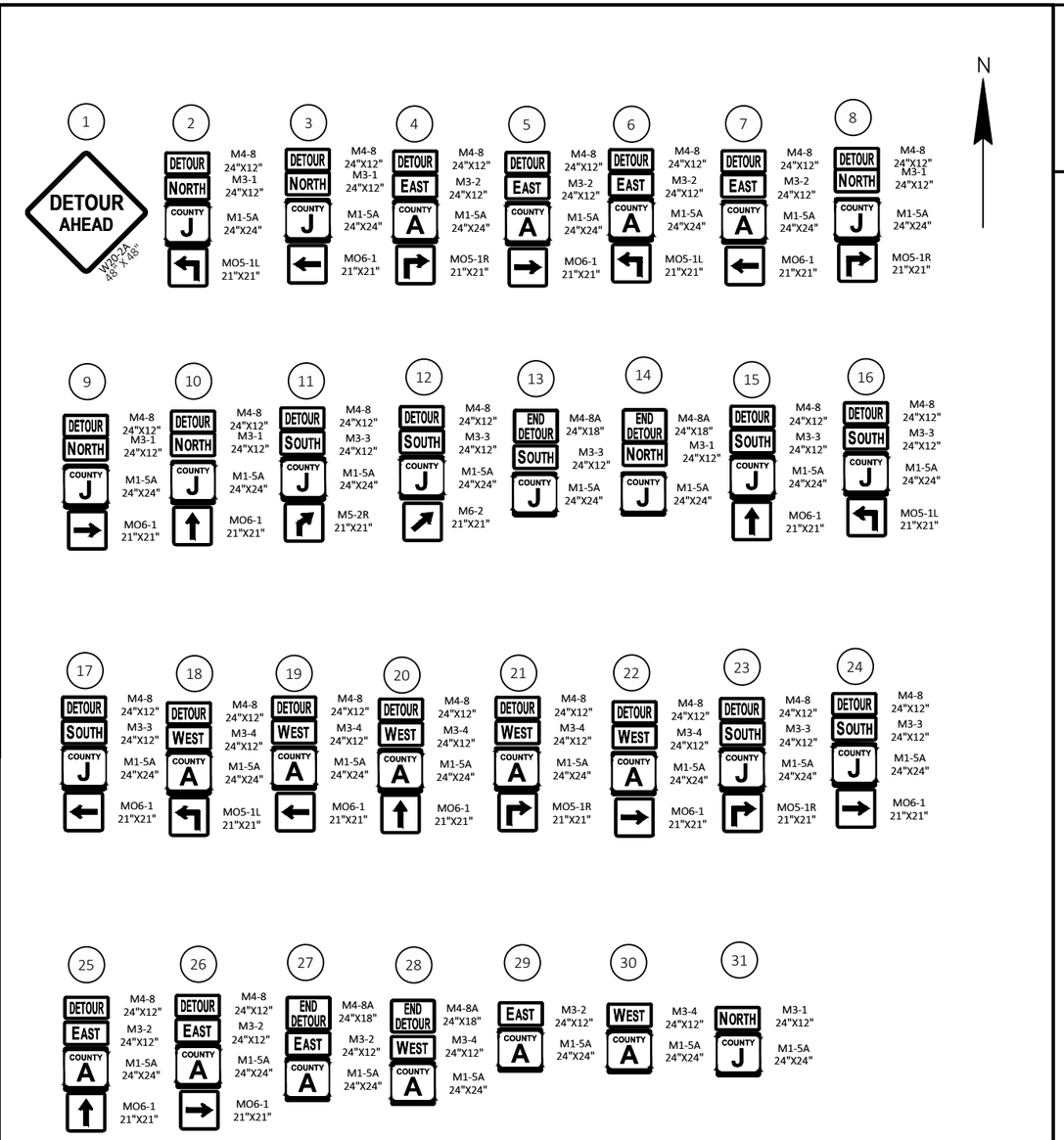

LEGEND

- FIXED MESSAGE ON WOOD POST SUPPORTS
- DETOUR ROUTE TO CTH J
- DETOUR ROUTE TO CTH A
- XX — DETOUR ROUTE SIGN NUMBER
- WORK AREA
- PCMS — PORTABLE CHANGEABLE MESSAGE SIGN

GENERAL NOTES:

1. THE EXACT NUMBER, LOCATION, AND SPACING OF ALL SIGNS SHALL BE ADJUSTED TO FIT FIELD CONDITIONS AS APPROVED BY THE ENGINEER.
2. IF THERE ARE EXISTING ROUTE MARKER ASSEMBLIES THAT WILL REMAIN IN PLACE, ADJUST THE LOCATION OF THE DETOUR ROUTE SIGNS
3. THE SPACING BETWEEN TRAFFIC CONTROL AND DETOUR SIGNS SHOULD BE ADJUSTED TO NOT CONFLICT WITH AND TO PROVIDE A DESIRABLE MINIMUM OF 200 FEET CLEARANCE TO EXISTING SIGNS THAT WILL REMAIN IN PLACE.
4. ALL EXISTING SIGNS THAT NEED TO BE COVERED SHALL BE COVERED WITH A BLANK ORANGE PANEL.
5. PLACE TRAFFIC CONTROL SIGNS PCMS 7 CALENDAR DAYS PRIOR TO START OF DETOUR.
6. SEE TRAFFIC CONTROL PLANS FOR ADDITIONAL SIGNS AND TRAFFIC CONTROL DEVICES.

*M3-X SHALL BE 24" X 12" (36" X 18" IF NEEDED TO MATCH EXISTING SIGNS)
M4-8 SHALL BE 24" X 12" (36" X 18" IF NEEDED TO MATCH EXISTING SIGNS)
M1-4, M1-5A AND M1-6 SHALL BE 24" X 24" (36" X 36" IF NEEDED TO MATCH EXISTING SIGNS)
MO5-1 AND MO6-1 SHALL BE 21" X 21" (30" X 30" IF NEEDED TO MATCH EXISTING SIGNS)

PROJECT NO: 2814-03-70	HWY: CTH A	COUNTY: RACINE	DETOUR	SHEET 63	E

CURVE 'WB'1
PI STA = 1129+84.49
Y = 181649.86
X = 529217.08
PC STA = 1129+21.94
Y=181614.20
X=529165.70
PT STA = 1130+46.98
Y=181689.00
X=529265.87
DELTA = 3°58'49"
D = 3°10'59"
T = 62.55'
L = 125.04'
R = 1800.00'

CURVE 'WB'2
PI STA = 1131+95.18
Y = 181781.74
X = 529381.46
PC STA = 1131+26.14
Y=181738.54
X=529327.62
PT STA = 1132+63.99
Y=181817.13
X=529440.74
DELTA = 7°53'53"
D = 5°43'46"
T = 69.03'
L = 137.85'
R = 1000.00'

CURVE 'WB'3
PI STA = 1133+17.56
Y = 181844.59
X = 529486.73
PC STA = 1132+65.51
Y=181817.91
X=529442.04
PT STA = 1133+69.25
Y=181879.75
X=529525.11
DELTA = 11°39'17"
D = 11°14'04"
T = 52.05'
L = 103.74'
R = 510.00'

CURVE 'WB'4
PI STA = 1134+59.05
Y = 181940.41
X = 529591.32
PC STA = 1134+36.80
Y=181925.38
X=529574.91
PT STA = 1134+79.68
Y=181962.35
X=529595.08
DELTA = 37°48'03"
D = 88°08'50"
T = 22.26'
L = 42.88'
R = 65.00'

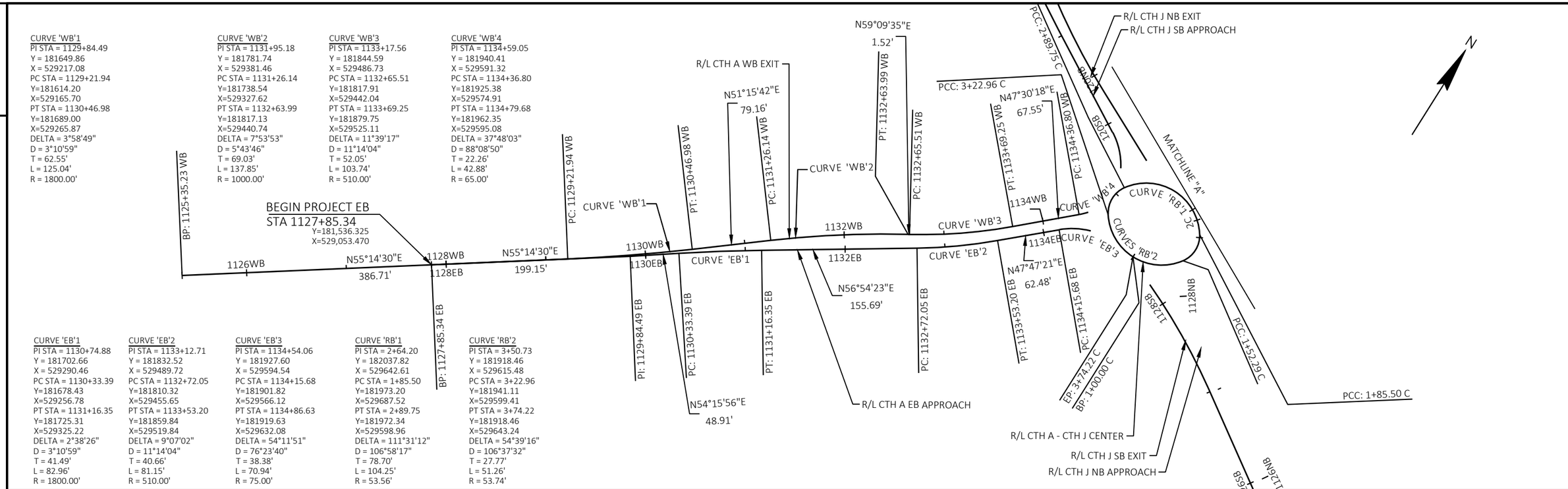

CURVE 'EB'1
PI STA = 1130+74.88
Y = 181702.66
X = 529290.46
PC STA = 1130+33.39
Y=181678.43
X=529256.78
PT STA = 1131+16.35
Y=181725.31
X=529325.22
DELTA = 2°38'26"
D = 3°10'59"
T = 41.49'
L = 82.96'
R = 1800.00'

CURVE 'EB'2
PI STA = 1133+12.71
Y = 181832.52
X = 529489.72
PC STA = 1132+72.05
Y=181810.32
X=529455.65
PT STA = 1133+53.20
Y=181859.84
X=529519.84
DELTA = 9°07'02"
D = 11°14'04"
T = 40.66'
L = 81.15'
R = 510.00'

CURVE 'EB'3
PI STA = 1134+54.06
Y = 181927.60
X = 529594.54
PC STA = 1134+15.68
Y=181901.82
X=529566.12
PT STA = 1134+86.63
Y=181919.63
X=529632.08
DELTA = 54°11'51"
D = 76°23'40"
T = 38.38'
L = 70.94'
R = 75.00'

CURVE 'RB'1
PI STA = 2+64.20
Y = 182037.82
X = 529642.61
PC STA = 1+85.50
Y=181973.20
X=529687.52
PT STA = 2+89.75
Y=181972.34
X=529598.96
DELTA = 111°31'12"
D = 106°58'17"
T = 78.70'
L = 104.25'
R = 53.56'

CURVE 'RB'2
PI STA = 3+50.73
Y = 181918.46
X = 529615.48
PC STA = 3+22.96
Y=181941.11
X=529599.41
PT STA = 3+74.22
Y=181918.46
X=529643.24
DELTA = 54°39'16"
D = 106°37'32"
T = 27.77'
L = 51.26'
R = 53.74'

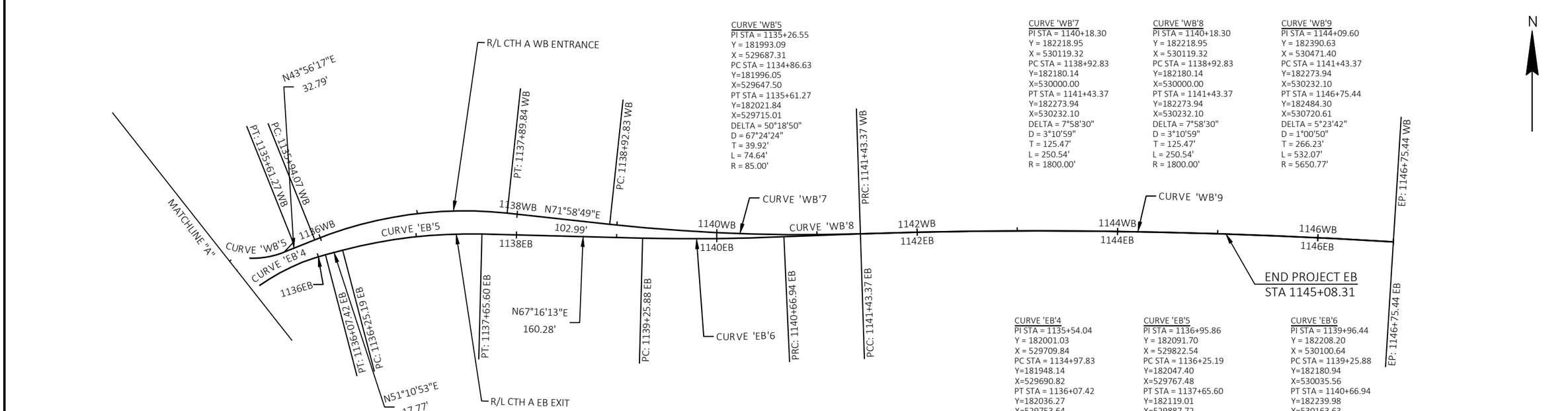

CURVE 'WB'5
PI STA = 1135+26.55
Y = 181993.09
X = 529687.31
PC STA = 1134+86.63
Y=181996.05
X=529647.50
PT STA = 1135+61.27
Y=182021.84
X=529715.01
DELTA = 50°18'50"
D = 67°24'24"
T = 39.92'
L = 74.64'
R = 85.00'

CURVE 'WB'7
PI STA = 1140+18.30
Y = 182218.95
X = 530119.32
PC STA = 1138+92.83
Y=182180.14
X=530000.00
PT STA = 1141+43.37
Y=182273.94
X=530232.10
DELTA = 7°58'30"
D = 3°10'59"
T = 125.47'
L = 250.54'
R = 1800.00'

CURVE 'WB'8
PI STA = 1140+18.30
Y = 182218.95
X = 530119.32
PC STA = 1138+92.83
Y=182180.14
X=530000.00
PT STA = 1141+43.37
Y=182273.94
X=530232.10
DELTA = 7°58'30"
D = 3°10'59"
T = 125.47'
L = 250.54'
R = 1800.00'

CURVE 'WB'9
PI STA = 1144+09.60
Y = 182390.63
X = 530471.40
PC STA = 1141+43.37
Y=182273.94
X=530232.10
PT STA = 1146+75.44
Y=182484.30
X=530720.61
DELTA = 5°23'42"
D = 1°00'50"
T = 266.23'
L = 532.07'
R = 5650.77'

CURVE 'EB'4
PI STA = 1135+54.04
Y = 182001.03
X = 529709.84
PC STA = 1134+97.83
Y=181948.14
X=529690.82
PT STA = 1136+07.42
Y=182036.27
X=529753.64
DELTA = 31°23'43"
D = 28°38'52"
T = 56.21'
L = 109.59'
R = 200.00'

CURVE 'EB'5
PI STA = 1136+95.86
Y = 182091.70
X = 529822.54
PC STA = 1136+25.19
Y=182047.40
X=529767.48
PT STA = 1137+65.60
Y=182119.01
X=529887.72
DELTA = 16°05'21"
D = 11°27'33"
T = 70.67'
L = 140.40'
R = 500.00'

CURVE 'EB'6
PI STA = 1139+96.44
Y = 182208.20
X = 530100.64
PC STA = 1139+25.88
Y=182180.94
X=530035.56
PT STA = 1140+66.94
Y=182239.98
X=530163.63
DELTA = 4°02'28"
D = 2°51'53"
T = 70.56'
L = 141.06'
R = 2000.00'

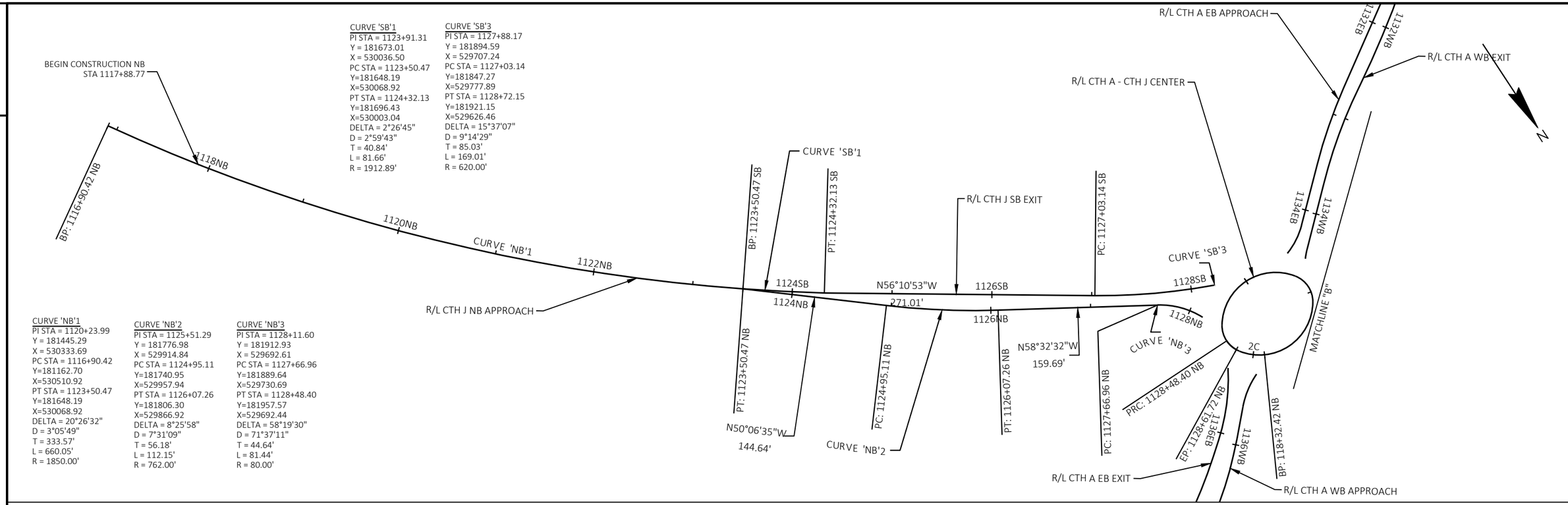
BEGIN CONSTRUCTION NB
STA 1117+88.77
BP: 1116+90.42 NB
1118NB
1120NB
CURVE 'NB'1
1122NB
R/L CTH J NB APPROACH
CURVE 'SB'1
PI STA = 1123+91.31
Y = 181673.01
X = 530036.50
PC STA = 1123+50.47
Y=181648.19
X=530068.92
PT STA = 1124+32.13
Y=181696.43
X=530003.04
DELTA = 2°26'45"
D = 2°59'43"
T = 40.84'
L = 81.66'
R = 1912.89'
CURVE 'SB'3
PI STA = 1127+88.17
Y = 181894.59
X = 529707.24
PC STA = 1127+03.14
Y=181847.27
X=529777.89
PT STA = 1128+72.15
Y=181921.15
X=529626.46
DELTA = 15°37'07"
D = 9°14'29"
T = 85.03'
L = 169.01'
R = 620.00'
CURVE 'NB'1
PI STA = 1120+23.99
Y = 181445.29
X = 530333.69
PC STA = 1116+90.42
Y=181162.70
X=530510.92
PT STA = 1123+50.47
Y=181648.19
X=530068.92
DELTA = 20°26'32"
D = 3°05'49"
T = 333.57'
L = 660.05'
R = 1850.00'
CURVE 'NB'2
PI STA = 1125+51.29
Y = 181776.98
X = 529914.84
PC STA = 1124+95.11
Y=181740.95
X=529957.94
PT STA = 1126+07.26
Y=181806.30
X=529866.92
DELTA = 8°25'58"
D = 7°31'09"
T = 56.18'
L = 112.15'
R = 762.00'
CURVE 'NB'3
PI STA = 1128+11.60
Y = 181912.93
X = 529692.61
PC STA = 1127+66.96
Y=181889.64
X=529730.69
PT STA = 1128+48.40
Y=181957.57
X=529692.44
DELTA = 58°19'30"
D = 71°37'11"
T = 44.64'
L = 81.44'
R = 80.00'
BP: 1123+50.47 SB
CURVE 'SB'1
PT: 1124+32.13 SB
R/L CTH J SB EXIT
PC: 1127+03.14 SB
CURVE 'SB'3
1124SB
1124NB
N56°10'53"W
271.01'
1126SB
1126NB
1128SB
1128NB
PT: 1123+50.47 NB
N50°06'35"W
144.64'
PC: 1124+95.11 NB
CURVE 'NB'2
PT: 1126+07.26 NB
N58°32'32"W
159.69'
PC: 1127+66.96 NB
CURVE 'NB'3
PRC: 1128+48.40 NB
2C
R/L CTH A EB APPROACH
R/L CTH A WB EXIT
R/L CTH A - CTH J CENTER
1132EB
1132WB
1134EB
1134WB
MATCHLINE "B"
N
EP: 1128+61.72 NB
1136EB
1136WB
BP: 118+32.42 NB
R/L CTH A EB EXIT
R/L CTH A WB APPROACH

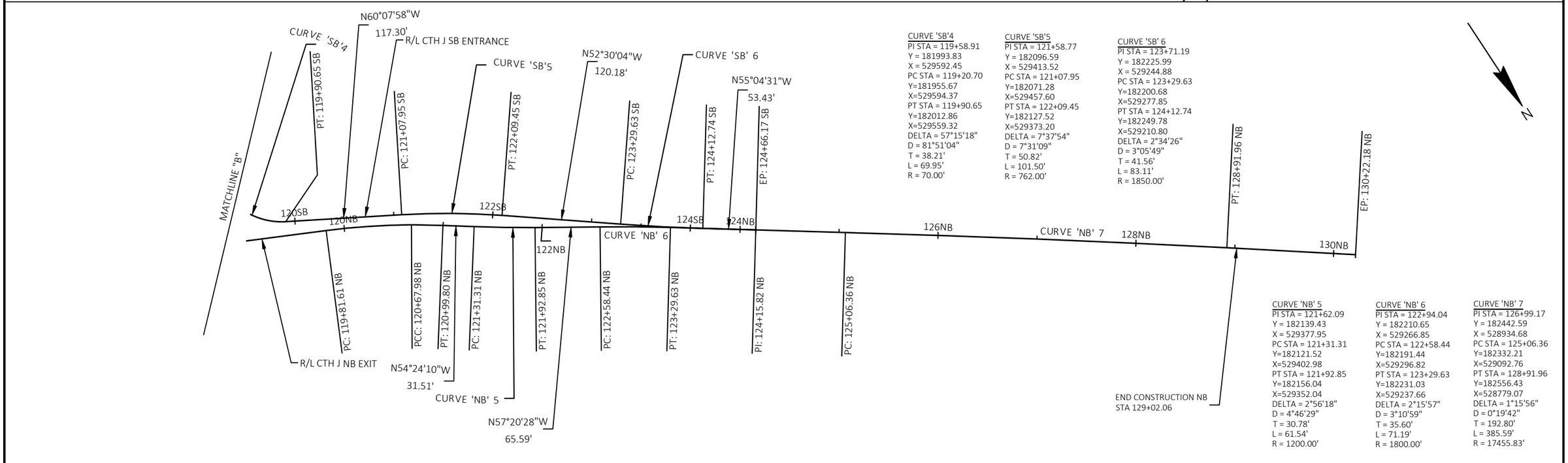
CURVE 'SB'4
N60°07'58"W
117.30'
R/L CTH J SB ENTRANCE
CURVE 'SB'5
N52°30'04"W
120.18'
CURVE 'SB' 6
N55°04'31"W
53.43'
PT: 119+90.65 SB
PC: 121+07.95 SB
PT: 122+09.45 SB
PC: 123+29.63 SB
PT: 124+12.74 SB
EP: 124+66.17 SB
MATCHLINE "B"
120SB
120NB
122SB
122NB
CURVE 'NB' 6
124SB
124NB
126NB
CURVE 'NB' 7
128NB
130NB
PT: 128+91.96 NB
EP: 130+22.18 NB
PC: 119+81.61 NB
PCC: 120+67.98 NB
PT: 120+99.80 NB
PC: 121+31.31 NB
PT: 121+92.85 NB
PC: 122+58.44 NB
PT: 123+29.63 NB
PI: 124+15.82 NB
PC: 125+06.36 NB
R/L CTH J NB EXIT
N54°24'10"W
31.51'
CURVE 'NB' 5
N57°20'28"W
65.59'
CURVE 'SB'4
PI STA = 119+58.91
Y = 181993.83
X = 529592.45
PC STA = 119+20.70
Y=181955.67
X=529594.37
PT STA = 119+90.65
Y=182012.86
X=529559.32
DELTA = 57°15'18"
D = 81°51'04"
T = 38.21'
L = 69.95'
R = 70.00'
CURVE 'SB'5
PI STA = 121+58.77
Y = 182096.59
X = 529413.52
PC STA = 121+07.95
Y=182071.28
X=529457.60
PT STA = 122+09.45
Y=182127.52
X=529373.20
DELTA = 7°37'54"
D = 7°31'09"
T = 50.82'
L = 101.50'
R = 762.00'
CURVE 'SB' 6
PI STA = 123+71.19
Y = 182225.99
X = 529244.88
PC STA = 123+29.63
Y=182200.68
X=529277.85
PT STA = 124+12.74
Y=182249.78
X=529210.80
DELTA = 2°34'26"
D = 3°05'49"
T = 41.56'
L = 83.11'
R = 1850.00'
N
END CONSTRUCTION NB
STA 129+02.06
CURVE 'NB' 5
PI STA = 121+62.09
Y = 182139.43
X = 529377.95
PC STA = 121+31.31
Y=182121.52
X=529402.98
PT STA = 121+92.85
Y=182156.04
X=529352.04
DELTA = 2°56'18"
D = 4°46'29"
T = 30.78'
L = 61.54'
R = 1200.00'
CURVE 'NB' 6
PI STA = 122+94.04
Y = 182210.65
X = 529266.85
PC STA = 122+58.44
Y=182191.44
X=529296.82
PT STA = 123+29.63
Y=182231.03
X=529237.66
DELTA = 2°15'57"
D = 3°10'59"
T = 35.60'
L = 71.19'
R = 1800.00'
CURVE 'NB' 7
PI STA = 126+99.17
Y = 182442.59
X = 528934.68
PC STA = 125+06.36
Y=182332.21
X=529092.76
PT STA = 128+91.96
Y=182556.43
X=528779.07
DELTA = 1°15'56"
D = 0°19'42"
T = 192.80'
L = 385.59'
R = 17455.83'

2

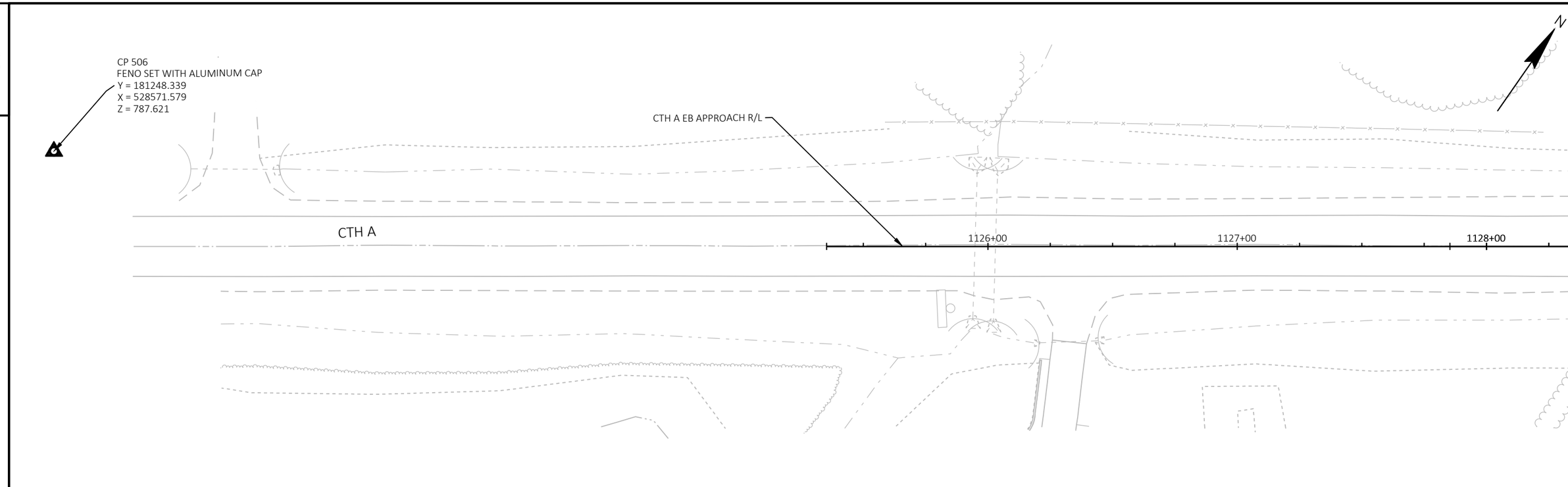

2

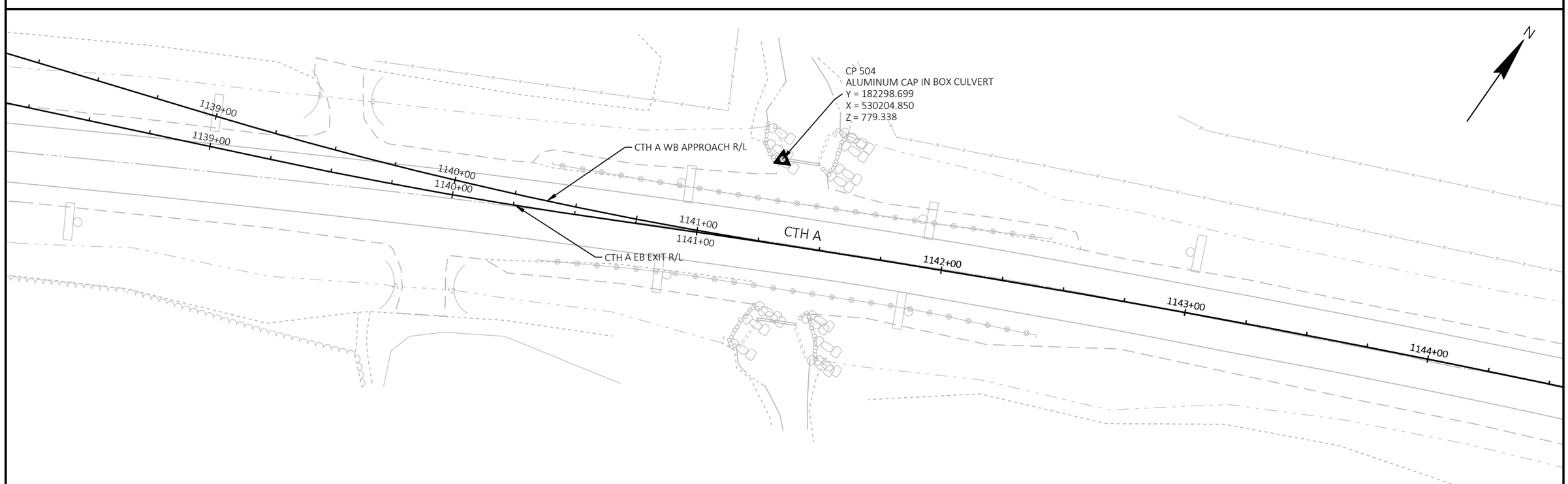

PROJECT NO: 2814-03-70	HWY: CTH A	COUNTY: RACINE	ALIGNMENT LAYOUT - SURVEY CONTROL	SHEET 66	E

FILE NAME : Y:\54XX\5486.DP22.CTH.A.RCN.INTRSCTN.CTH.J\CADDS\28140300\SHEETS\027203-AD.DWG
LAYOUT NAME - 027203-ad
PLOT DATE : 10/17/2024 4:30 PM PLOT BY : CODY LABELLE PLOT NAME : PLOT SCALE : 1 IN:40 FT

2

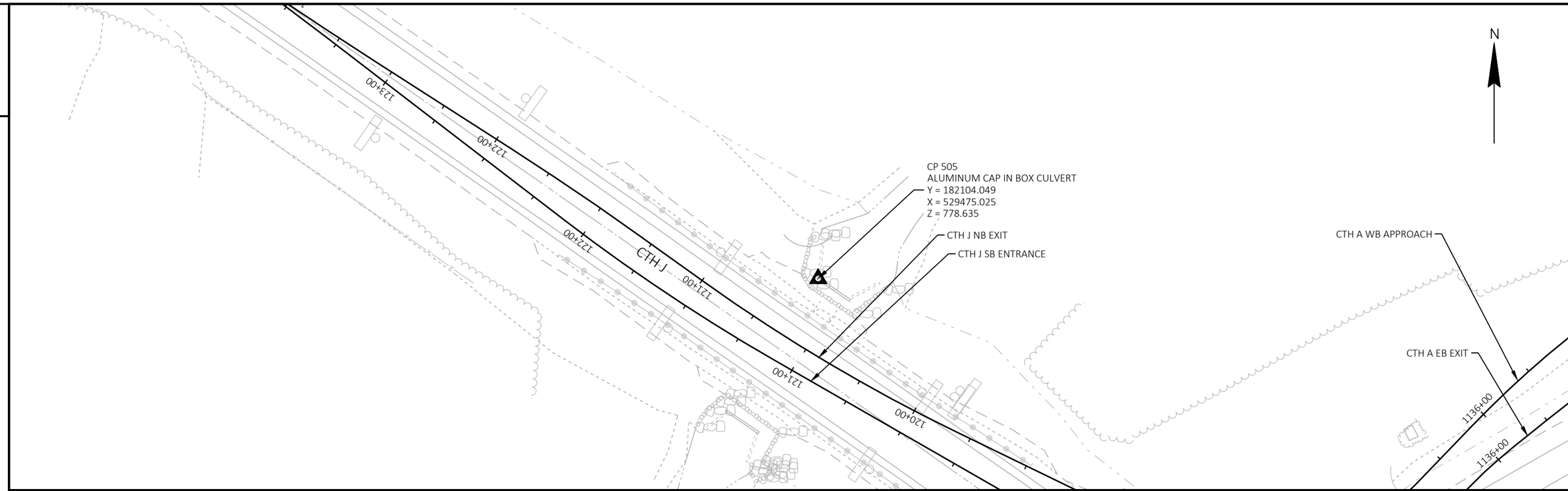

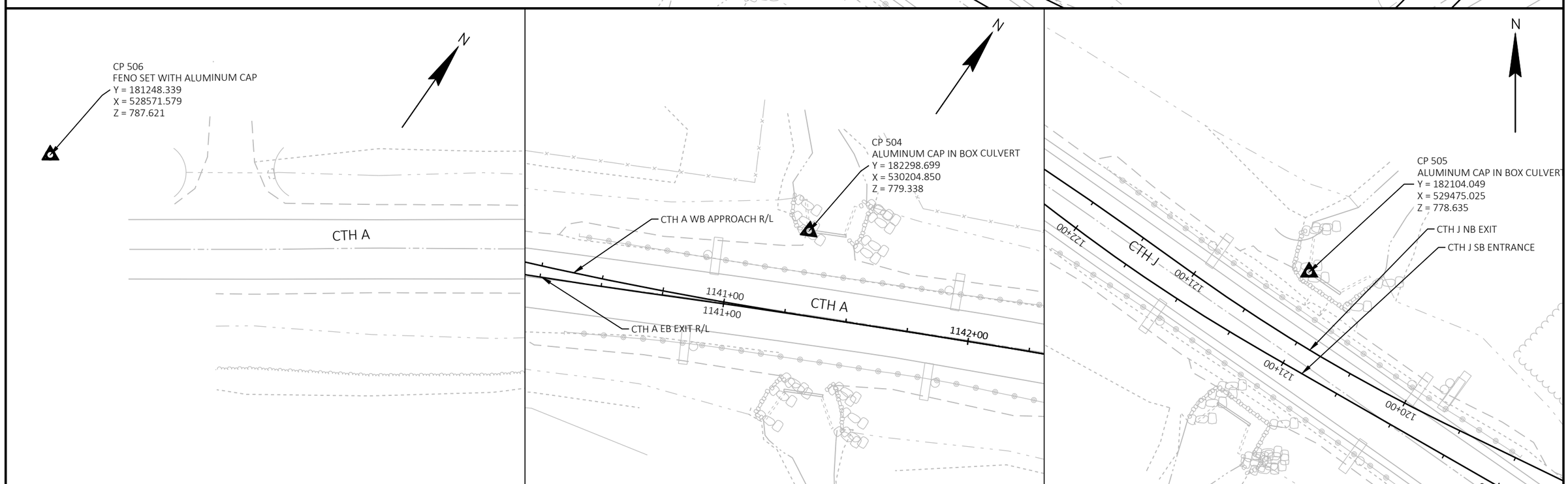

2

PROJECT NO: 2814-03-70	HWY: CTH A	COUNTY: RACINE	ALIGNMENT LAYOUT - SURVEY CONTROL	SHEET 67	E

FILE NAME : Y:\54XX\5486.DP22.CTH.A.RCN.INTRSCTN.CTH.J\CADDS\28140300\SHEETS\027203-AD.DWG
LAYOUT NAME - 027204-ad
PLOT DATE : 10/17/2024 4:30 PM PLOT BY : CODY LABELLE PLOT NAME : PLOT SCALE : 1 IN:40 FT

Estimate Of Quantities

2814-03-70

Line	Item	Item Description	Unit	Total	Qty
0002	201.0205	Grubbing	STA	17.000	17.000
0004	203.0100	Removing Small Pipe Culverts	EACH	15.000	15.000
0006	204.0120	Removing Asphaltic Surface Milling	SY	1,020.000	1,020.000
0008	204.0165	Removing Guardrail	LF	820.000	820.000
0010	204.0170	Removing Fence	LF	1,260.000	1,260.000
0012	204.0215	Removing Catch Basins	EACH	1.000	1.000
0014	205.0100	Excavation Common	CY	26,590.000	26,590.000
0016	213.0100	Finishing Roadway (project) 01. 2814-03-70	EACH	1.000	1.000
0018	305.0110	Base Aggregate Dense 3/4-Inch	TON	370.000	370.000
0020	305.0120	Base Aggregate Dense 1 1/4-Inch	TON	10,400.000	10,400.000
0022	305.0130	Base Aggregate Dense 3-Inch	TON	13,950.000	13,950.000
0024	312.0110	Select Crushed Material	TON	10,500.000	10,500.000
0026	405.0100	Coloring Concrete WisDOT Red	CY	108.000	108.000
0028	415.2010	Concrete Truck Apron 12-inch	SY	554.000	554.000
0030	455.0605	Tack Coat	GAL	771.000	771.000
0032	460.2000	Incentive Density HMA Pavement	DOL	2,050.000	2,050.000
0034	460.5223	HMA Pavement 3 LT 58-28 S	TON	1,960.000	1,960.000
0036	460.5224	HMA Pavement 4 LT 58-28 S	TON	1,240.000	1,240.000
0038	465.0120	Asphaltic Surface Driveways and Field Entrances	TON	70.000	70.000
0040	465.0315	Asphaltic Flumes	SY	119.000	119.000
0042	520.1024	Apron Endwalls for Culvert Pipe 24-Inch	EACH	4.000	4.000
0044	520.4124	Culvert Pipe Class IV 24-Inch	LF	208.000	208.000
0046	521.1012	Apron Endwalls for Culvert Pipe Steel 12-Inch	EACH	2.000	2.000
0048	521.1015	Apron Endwalls for Culvert Pipe Steel 15-Inch	EACH	6.000	6.000
0050	521.1018	Apron Endwalls for Culvert Pipe Steel 18-Inch	EACH	12.000	12.000
0052	521.3115	Culvert Pipe Corrugated Steel 15-Inch	LF	120.000	120.000
0054	521.3118	Culvert Pipe Corrugated Steel 18-Inch	LF	222.000	222.000
0056	522.1012	Apron Endwalls for Culvert Pipe Reinforced Concrete 12-Inch	EACH	1.000	1.000
0058	524.0112	Culvert Pipe Salvaged 12-Inch	LF	28.000	28.000
0060	601.0405	Concrete Curb & Gutter 18-Inch Type A	LF	174.000	174.000
0062	601.0411	Concrete Curb & Gutter 30-Inch Type D	LF	1,412.000	1,412.000
0064	601.0553	Concrete Curb & Gutter 4-Inch Sloped 36-Inch Type D	LF	1,586.000	1,586.000
0066	602.0405	Concrete Sidewalk 4-Inch	SF	8,530.000	8,530.000
0068	606.0200	Riprap Medium	CY	5.000	5.000
0070	606.0300	Riprap Heavy	CY	83.000	83.000
0072	608.0412	Storm Sewer Pipe Reinforced Concrete Class IV 12-Inch	LF	50.000	50.000
0074	611.0652	Inlet Covers Type T	EACH	1.000	1.000
0076	611.3225	Inlets 2x2.5-FT	EACH	1.000	1.000
0078	612.0106	Pipe Underdrain 6-Inch	LF	158.000	158.000
0080	612.0700	Drain Tile Exploration	LF	400.000	400.000
0082	614.2300	MGS Guardrail 3	LF	904.000	904.000
0084	614.2350	MGS Guardrail Short Radius	LF	13.000	13.000
0086	614.2610	MGS Guardrail Terminal EAT	EACH	5.000	5.000
0088	614.2620	MGS Guardrail Terminal Type 2	EACH	1.000	1.000
0090	614.2630	MGS Guardrail Short Radius Terminal	EACH	1.000	1.000
0092	616.0120.S	Fencing Small Animal	LF	3,200.000	3,200.000
0094	618.0100	Maintenance and Repair of Haul Roads (project) 01. 2814-03-70	EACH	1.000	1.000
0096	619.1000	Mobilization	EACH	1.000	1.000
0098	620.0300	Concrete Median Sloped Nose	SF	387.000	387.000

Estimate Of Quantities

2814-03-70

Line	Item	Item Description	Unit	Total	Qty
0100	624.0100	Water	MGAL	210.000	210.000
0102	625.0100	Topsoil	SY	3,040.000	3,040.000
0104	625.0500	Salvaged Topsoil	SY	15,100.000	15,100.000
0106	628.1504	Silt Fence	LF	176.000	176.000
0108	628.1520	Silt Fence Maintenance	LF	176.000	176.000
0110	628.1530.S	Silt Fence Heavy Duty	LF	1,720.000	1,720.000
0112	628.1535.S	Silt Fence Heavy Duty Maintenance	LF	1,720.000	1,720.000
0114	628.1905	Mobilizations Erosion Control	EACH	6.000	6.000
0116	628.1910	Mobilizations Emergency Erosion Control	EACH	4.000	4.000
0118	628.2006	Erosion Mat Urban Class I Type A	SY	15,100.000	15,100.000
0120	628.2008	Erosion Mat Urban Class I Type B	SY	3,060.000	3,060.000
0122	628.7005	Inlet Protection Type A	EACH	1.000	1.000
0124	628.7020	Inlet Protection Type D	EACH	1.000	1.000
0126	628.7504	Temporary Ditch Checks	LF	251.000	251.000
0128	628.7555	Culvert Pipe Checks	EACH	29.000	29.000
0130	628.7560	Tracking Pads	EACH	4.000	4.000
0132	630.0130	Seeding Mixture No. 30	LB	114.000	114.000
0134	630.0160	Seeding Mixture No. 60	LB	18.000	18.000
0136	630.0200	Seeding Temporary	LB	397.000	397.000
0138	630.0500	Seed Water	MGAL	400.000	400.000
0140	631.0300	Sod Water	MGAL	1.000	1.000
0142	631.1100	Sod Erosion Control	SY	25.000	25.000
0144	633.5200	Markers Culvert End	EACH	25.000	25.000
0146	634.0614	Posts Wood 4x6-Inch X 14-FT	EACH	2.000	2.000
0148	634.0616	Posts Wood 4x6-Inch X 16-FT	EACH	36.000	36.000
0150	634.0618	Posts Wood 4x6-Inch X 18-FT	EACH	10.000	10.000
0152	634.0620	Posts Wood 4x6-Inch X 20-FT	EACH	10.000	10.000
0154	634.0622	Posts Wood 4x6-Inch X 22-FT	EACH	12.000	12.000
0156	637.2210	Signs Type II Reflective H	SF	528.000	528.000
0158	637.2230	Signs Type II Reflective F	SF	161.000	161.000
0160	638.2102	Moving Signs Type II	EACH	2.000	2.000
0162	638.2602	Removing Signs Type II	EACH	52.000	52.000
0164	638.3000	Removing Small Sign Supports	EACH	38.000	38.000
0166	642.5001	Field Office Type B	EACH	1.000	1.000
0168	643.0300	Traffic Control Drums	DAY	1,110.000	1,110.000
0170	643.0420	Traffic Control Barricades Type III	DAY	888.000	888.000
0172	643.0900	Traffic Control Signs	DAY	32,750.000	32,750.000
0174	643.1050	Traffic Control Signs PCMS	DAY	28.000	28.000
0176	643.5000	Traffic Control	EACH	1.000	1.000
0178	645.0120	Geotextile Type HR	SY	138.000	138.000
0180	645.0140	Geotextile Type SAS	SY	6,980.000	6,980.000
0182	646.1020	Marking Line Epoxy 4-Inch	LF	7,890.000	7,890.000
0184	646.3020	Marking Line Epoxy 8-Inch	LF	192.000	192.000
0186	646.6320	Marking Dotted Extension Epoxy 18-Inch	LF	78.000	78.000
0188	646.7120	Marking Diagonal Epoxy 12-Inch	LF	321.000	321.000
0190	646.8120	Marking Curb Epoxy	LF	281.000	281.000
0192	646.8220	Marking Island Nose Epoxy	EACH	6.000	6.000
0194	650.4000	Construction Staking Storm Sewer	EACH	2.000	2.000
0196	650.4500	Construction Staking Subgrade	LF	2,955.000	2,955.000

2814-03-70

Line	Item	Item Description	Unit	Total	Qty
0198	650.5000	Construction Staking Base	LF	2,955.000	2,955.000
0200	650.5500	Construction Staking Curb Gutter and Curb & Gutter	LF	3,434.000	3,434.000
0202	650.6000	Construction Staking Pipe Culverts	EACH	12.000	12.000
0204	650.8501	Construction Staking Electrical Installations (project) 01. 2814-03-70	EACH	1.000	1.000
0206	650.9500	Construction Staking Sidewalk (project) 01. 2814-03-70	EACH	1.000	1.000
0208	650.9911	Construction Staking Supplemental Control (project) 01. 2814-03-70	EACH	1.000	1.000
0210	650.9920	Construction Staking Slope Stakes	LF	2,955.000	2,955.000
0212	652.0225	Conduit Rigid Nonmetallic Schedule 40 2-Inch	LF	1,983.000	1,983.000
0214	652.0235	Conduit Rigid Nonmetallic Schedule 40 3-Inch	LF	434.000	434.000
0216	653.0140	Pull Boxes Steel 24x42-Inch	EACH	8.000	8.000
0218	654.0105	Concrete Bases Type 5	EACH	12.000	12.000
0220	654.0224	Concrete Control Cabinet Bases Type L24	EACH	1.000	1.000
0222	655.0610	Electrical Wire Lighting 12 AWG	LF	1,548.000	1,548.000
0224	655.0620	Electrical Wire Lighting 8 AWG	LF	10,128.000	10,128.000
0226	656.0201	Electrical Service Meter Breaker Pedestal (location) 01. 1127+93.50,72.61'LT	EACH	1.000	1.000
0228	657.0255	Transformer Bases Breakaway 11 1/2-Inch Bolt Circle	EACH	12.000	12.000
0230	657.0322	Poles Type 5-Aluminum	EACH	12.000	12.000
0232	657.0614	Luminaire Arms Single Member 4-Inch Clamp 8-FT	EACH	12.000	12.000
0234	659.1115	Luminaires Utility LED A	EACH	12.000	12.000
0236	659.2124	Lighting Control Cabinets 120/240 24-Inch	EACH	1.000	1.000
0238	690.0150	Sawing Asphalt	LF	750.000	750.000
0240	715.0720	Incentive Compressive Strength Concrete Pavement	DOL	500.000	500.000
0242	740.0440	Incentive IRI Ride	DOL	960.000	960.000
0244	ASP.1T0A	On-the-Job Training Apprentice at $5.00/HR	HRS	800.000	800.000
0246	ASP.1T0G	On-the-Job Training Graduate at $5.00/HR	HRS	2,280.000	2,280.000
0248	SPV.0090	Special 01. Silt Fence Turtle Exclusion Barrier	LF	3,040.000	3,040.000
0250	SPV.0090	Special 02. Concrete Curb and Gutter 3-Inch sloped 36-inch, Type T	LF	262.000	262.000

3

CLEARING AND GRUBBING ITEMS

CATEGORY	STAGE	LOCATION	STATION	STATION	201.0205 GRUBBING STA
0010	1				
		J NB APP	1123+57	1127+18	4
		J SB EXIT	1123+50	1125+61	2
		A EB EXIT	1138+81	1139+34	1
		A WB APP	1136+17	1137+23	2
		SUBTOTAL			10
		J NB EXIT	118+70	119+61	1
		J SB APP	121+89	123+69	2
		A WB EXIT	1129+50	1133+07	4
		SUBTOTAL			7
		PROJECT TOTAL			17

REMOVAL ITEMS

CATEGORY	STAGE	LOCATION	204.0120 REMOVING ASPHALTIC SURFACE MILLING SY	204.0165 REMOVING GUARDRAIL LF	204.0170 REMOVING FENCE LF
0010	1				
		CTH A & CTH J	1,020	820	1,260
		PROJECT TOTAL	1,020	820	1,260

REMOVING DRAINAGE ITEMS

CATEGORY	STAGE	LOCATION	STATION	OFFSET	TO	STATION	OFFSET	ALIGNMENT	204.0215 REMOVING CATCH BASINS EACH	203.0100 REMOVING SMALL PIPE CULVERTS EACH	COMMENTS
0010	1										
		CTH A APPROACH	1128+60.03	28' RT	-	1128+83.96	28' RT	CTH A EB INSIDE APPROACH	--	1	15" X 24' CMCP
		CTH A APPROACH	1128+71.29	30' LT	-	1129+01.92	28' LT	CTH A EB INSIDE APPROACH	--	1	12" X 31' CPCP
		CTH A APPROACH	1131+90.55	25' RT	-	1132+17.19	25' RT	CTH A EB INSIDE APPROACH	--	1	18" X 27' CMCP
		CTH A APPROACH	1132+69.27	24' RT	-	1132+94.79	24' RT	CTH A EB INSIDE APPROACH	--	1	18" X 27' CMCP
		CTH A APPROACH	1133+40.68	27' RT	-	1133+66.13	31' RT	CTH A EB INSIDE APPROACH	--	1	18" X 26' CMCP
		CTH A CROSS CULVERT	1134+24.96	91' LT	-	1134+80.33	27' RT	CTH A EB INSIDE APPROACH	--	1	18" X 135' CMCP
		CTH A APPROACH	1134+35.20	38' RT	-	1134+79.21	28' RT	CTH A EB INSIDE APPROACH	--	1	15" X 26' CMCP
		CTH A CATCH BASIN	1134+79.86	24' RT				CTH A EB INSIDE APPROACH	1	--	CATCH BASIN
		CTH A APPROACH	1134+81.41	26' RT	-	1135+01.78	22' RT	CTH A EB INSIDE APPROACH	--	1	15" X 26' CMCP
		CTH A EXIT	1135+43.45	30' LT	-	1135+64.51	19' LT	CTH A EB INSIDE EXIT	--	1	15" X 26' CMCP
		CTH A EXIT	1139+39.28	29' LT	-	1139+60.71	31' LT	CTH A EB INSIDE EXIT	--	1	15" X 21' CMCP
		CTH A EXIT	1139+83.43	41' RT	-	1140+07.03	38' RT	CTH A EB INSIDE EXIT	--	1	15" X 24' CMCP
		CTH J APPROACH	1125+62.84	42' LT	-	1126+09.92	40' LT	CTH J NB INSIDE APPROACH	--	1	18" X 45' CMCP
		CTH J APPROACH	1125+83.46	78' LT	-	1126+11.61	42' LT	CTH J NB INSIDE APPROACH	--	1	14" X 45' CPCP
		CTH J CROSS CULVERT	1127+90.36	30' LT	-	1128+03.76	22' RT	CTH J NB INSIDE APPROACH	--	1	24" X 54' CMCP
		CTH J EXIT	123+22.28	35' RT	-	123+49.99	35' RT	CTH J NB INSIDE EXIT	--	1	18" X 28' CMCP
		PROJECT TOTAL							1	15	

3

DIVISION	FROM/TO STATION	205.0100 COMMON EXCAVATION (1) CUT (2)	EBS EXCAVATION (3)	SALVAGED/UNUSABLE PAVEMENT MATERIAL (4)	AVAILABLE MATERIAL (5)	305.0130 BASE AGGREGATE DENSE 3-INCH (3) TON	645.0140 GEOTEXTILE TYPE SAS SY	UNEXPANDED FILL	EXPANDED FILL (6) FACTOR 1.15	MASS ORDINATE +/- (7)	WASTE
DIVISION 1											
CENTER CIRCLE	01+00.000/03+50.00	790	716	175	615	1,430	720	246	283	332	-1,174
EB APP	1127+85.336/1134+26.2	4,439	1,770	241	4,198	3,540	1,770	752	865	3,333	3,333
EB EXIT	1135+39.248/1145+08.313	8,132	1,969	365	7,767	3,940	1,970	472	543	7,224	7,224
NB APP	1123+50.47/1128+05.234	2,931	1,280	191	2,740	2,560	1,280	524	603	2,137	2,137
NB EXIT	119+00/123+62.388	3,328	1,240	100	3,228	2,480	1,240	321	369	2,859	2,859
DIVISION 1 SUBTOTAL		19,620	6,975	1,072	18,548	13,950	6,980	2,315	2,662	15,886	14,380
GRAND TOTAL		19,620	6,975	1,072	18,548	13,950	6,980	2,315	2,662	15,886	14,380
TOTAL COMMON EXC		26,590									

NOTES:
(1) COMMON EXCAVATION IS THE SUM OF THE CUT AND EBS EXCAVATION COLUMNS. ITEM NUMBER 205.0100
(2) SALVAGED/UNSUABLE PAVEMENT MATERIAL IS INCLUDED IN CUT.
(3) EBS EXCAVATION TO BE BACKFILLED WITH BASE AGGREGATE DESNE 3-INCH
(4) SALVAGED/UNUSABLE PAVEMENT MATERIAL
(5) AVAILABLE MATERIAL = CUT - SALVAGED/UNUSUABLE PAVEMENT MATERIAL
(6) EXPANDED FILL FACTOR EXPANDED FILL = (UNEXPANDED FILL) * FILL FACTOR
(7) THE MASS ORDINATE + OR - QTY CALCULATED FOR THE DIVISION. PLUS QUANTITY INDICATES AN EXCESS OF MATERIAL WITHIN THE DIVISION. MINUS INDICATES A SHORTAGE OF MATERIAL WITHIN THE DIVISION.
(8) FACTORS USED TO COMPUTE ANTICIPATED WASTE AND THE COMPUTED WASTE VOLUME IDENTIFIED ARE FOR GENERAL INFORMATION ONLY.

3

DRIVEWAYS

CATEGORY	STAGE	LOCATION	305.0120* BASE AGGREGATE DENSE 1 1/4-INCH TON	465.0120 ASPHALTIC SURFACE DRIVEWAYS AND FIELD ENTRANCES TON
0010	1			
		CTH A & CTH J	300	70
		PROJECT TOTAL	300	70

*ADDITIONAL QUANTITIES SHOWN ELSEWHERE

BASE AGGREGATE ITEMS

CATEGORY	STAGE	LOCATION	305.0110 BASE AGGREGATE DENSE 3/4-INCH TON	305.0120* BASE AGGREGATE DENSE 1 1/4-INCH TON	312.0110 SELECT CRUSHED MATERIAL TON
0010	1				
		CTH A & CTH J	--	8,900	10,500
		CTH J SHOULDER	100	400	--
		SHOULDER CTH A	270	600	--
		MEDIANS SIDEWALK	--	200	--
		PROJECT TOTAL	370	10,100	10,500

*ADDITIONAL QUANTITIES SHOWN ELSEWHERE

3

ASPHALTIC ITEMS

CATEGORY	STAGE	LOCATION	455.0605 TACK COAT GAL	460.5224 HMA PAVEMENT 4 LT 58-28 S TON	460.5223 HMA PAVEMENT 3 LT 58-28 S TON	465.0315 ASPHALTIC FLUMES SY
0010	1					
		CTH A & CTH J	762	1,220	1,960	119
		CTH J RUMBLE STRIP	9	20	--	--
		PROJECT TOTAL	771	1,240	1,960	119

CONCRETE CURB & GUTTER

CATEGORY	STAGE	LOCATION	601.0553 CONCRETE CURB & GUTTER 4-INCH SLOPED 36-INCH TYPE D LF	SPV.0090.02 CONCRETE CURB & GUTTER 3-INCH SLOPED 36-INCH TYPE T LF	601.0405 CONCRETE CURB & GUTTER 18-INCH TYPE A LF	601.0411 CONCRETE CURB & GUTTER 30-INCH TYPE D LF	COMMENTS
0010	1						
		CTH A & CTH J	1,586	262	174	1,412	
		PROJECT TOTAL	1,586	262	174	1,412	

CONCRETE SIDEWALK

CATEGORY	STAGE	LOCATION	STATION	OFFSET	TO STATION	OFFSET	ALIGNMENT	602.0405 CONCRETE SIDEWALK 4-INCH SF
0010	1							
		CTH A & CTH J						8,530
		PROJECT TOTAL						8,530

CONCRETE MEDIAN NOSE

CATEGORY	STAGE	LOCATION	620.0300 CONCRETE MEDIAN SLOPED NOSE TYPE 1 SF	TYPE 2 SF	COMMENTS
0010	1				
		CTH A - CTH J	295	92	
		PROJECT TOTAL	387		

CONCRETE PAVEMENT ITEMS

CATEGORY	STAGE	LOCATION	405.0100 COLORING CONCRETE WISDOT RED CY	415.2010 CONCRETE TRUCK APRON 12-INC SY	COMMENTS
0010	1				
		CTH A & CTH J	108	554	
		PROJECT TOTAL	108	554	

3

CROSS DRAINS

CATEGORY	STAGE	LOCATION	STATION	OFFSET	TO	STATION	OFFSET	ALIGNMENT	INLET ELEVATION	DISCHARGE ELEVATION	SLOPE	520.1024 APRON ENDWALLS FOR CULVERT PIPE 24-INCH EACH	521.1012 APRON ENDWALLS FOR CULVERT PIPE STEEL 12-INCH EACH	521.1015 APRON ENDWALLS FOR CULVERT PIPE STEEL 15-INCH EACH	521.1018 APRON ENDWALLS FOR CULVERT PIPE STEEL 18-INCH EACH	520.4124 CULVERT PIPE CLASS IV 24-INCH LF	524.0112 CULVERT PIPE SALVAGED 12-INCH LF	521.3115 CULVERT PIPE CORRUGATED STEEL 15-INCH LF	521.3118 CULVERT PIPE CORRUGATED STEEL 18-INCH LF	633.5200* MARKERS CULVERT END EACH	COMMENTS
0010	1																				
		CTH A APPROACH	1128+51.92	31' RT	-	1128+89.83	31' RT	CTH A EB INSIDE APPROACH	783.29	782.99	0.79%	--	--	2	--	--	--	38	--	2	0.064" THICKNESS
		CTH A APPROACH	1128+71.87	30' LT	-	1128+99.14	31' LT	CTH A EB INSIDE APPROACH	783.24	783.10	0.51%	--	2	--	--	--	28	--	--	2	
		CTH A APPROACH	1130+54.57	34' RT	-	1130+94.38	34' RT	CTH A EB INSIDE APPROACH	781.45	781.18	0.68%	--	--	--	2	--	--	--	40	2	0.064" THICKNESS
		CTH A APPROACH	1131+72.89	32' RT	-	1132+03.75	31' RT	CTH A EB INSIDE APPROACH	780.55	780.29	0.80%	--	--	--	2	--	--	--	32	2	0.064" THICKNESS
		CTH A APPROACH	1133+16.49	32' RT	-	133+47.50	34' RT	CTH A EB INSIDE APPROACH	779.17	778.85	0.94%	--	--	--	2	--	--	--	34	2	0.064" THICKNESS
		CTH A CROSS CULVERT	1134+21.60	66' LT	-	1134+34.75	35' RT	CTH A EB INSIDE APPROACH	777.85	774.91	2.88%	2	--	--	--	102	--	--	--	2	
		CTH A EXIT	1139+31.95	55' LT	-	1139+73.85	55' LT	CTH A EB INSIDE EXIT	777.37	777.15	0.52%	--	--	2	--	--	--	42	--	2	0.064" THICKNESS
		CTH A EXIT	1139+77.75	44' RT	-	1140+22.20	44' RT	CTH A EB INSIDE EXIT	777.08	776.92	0.34%	--	--	--	2	--	--	--	46	2	0.064" THICKNESS
		CTH J APPROACH	1125+72.75	52' LT	-	1126+21.97	54' LT	CTH J NB INSIDE APPROACH	781.72	780.28	3.00%	--	--	--	2	--	--	--	48	2	0.064" THICKNESS
		CTH J APPROACH	1125+85.87	77' LT	-	1126+21.77	58' LT	CTH J NB INSIDE APPROACH	780.51	780.31	0.50%	--	--	2	--	--	--	40	--	2	0.064" THICKNESS
		CTH J CROSS CULVERT	1127+98.75	35' RT	-	128+00.62	71' LT	CTH J NB INSIDE APPROACH	778.98	778.11	0.82%	2	--	--	--	106	--	--	--	2	
		CTH J EXIT	123+24.11	37' RT	-	123+46.42	36' RT	CTH J NB INSIDE EXIT	781.06	780.81	1.15%	--	--	--	2	--	--	--	22	2	0.064" THICKNESS
		PROJECT TOTAL										4	2	6	12	208	28	120	222	24	

*ADDITIONAL QUANTITIES SHOWN ELSEWHERE

NOTE
1) STATION OFFSETS SHOWN ARE TO THE CENTER OF END OF PIPE AT APRON ENDWALLS (NOT INCLUDING LENGTH OF ENDWALL).

STORM SEWER STRUCTURES

CATEGORY	STAGE	LOCATION	STATION	OFFSET	ALIGNMENT	STRUCTURE NUMBER	RIM ELEVATION	STRUCTURE ELEVATION	BOTTOM OF STRUCTURE ELEVATION	DEPTH	522.1012 APRON ENDWALLS FOR CULVERT PIPE REINFORCED CONCRETE 12-INCH EACH	608.0412 STORM SEWER PIPE REINFORCED CONCRETE CLASS IV 12-INCH LF	611.0652 INLET COVERS INLET COVERS TYPE T EACH	611.3225 INLET COVERS INLETS 2X2.5-FT EACH	633.5200* MARKERS CULVERT END EACH	650.4000 CONSTRUCTION STAKING STORM SEWER EACH
0010	1															
		CTH A - CTH J CENTER	2+97	1' LT	CTH A - CTH J CENTER	1	783.29	779.43	778.89	4.40	1	50	1	1	1	2
		PROJECT TOTAL									1	50	1	1	1	2

*ADDITIONAL QUANTITIES SHOWN ELSEWHERE

NOTE
1) STATIONS SHOWN ARE TO THE ENDS OF THE PIPE OR CENTER OF STRUCTURE
2) OFFSETS ARE TO THE FLANGE LINE FOR STRUCTURES IN THE ROADWAY WITH INLET GRATES AND TO THE CENTER OF COVER FOR FIELD INLETS AND MANHOLES WITH SOLID LIDS
3) RIM ELEVATIONS ARE GIVEN AT THE FLANGE LINE FOR INLET GRATES OR THE CENTER OF THE MANHOLE COVER FOR MANHOLES
4) DEPTH = RIM ELEVATION - INVERT - CASTING HEIGHT - ADJUSTMENT CASTING HEIGHT = 0.75 FT FOR J COVERS; 0.5 FT FOR HM AND S COVERS; 0.83 FT FOR TYPE V COVERS; 0.67 FOR TYPE B COVERS; 0 FT FOR TYPE MS COVERS
ADJUSTMENT (RINGS) = 0.33 FT FOR B, V, J, HM, AND S COVERS; 0 FT FOR TYPE MS COVERS

3

RIPRAP ITEMS

CATEGORY	STAGE	LOCATION	STATION	OFFSET	ALIGNMENT	606.0200 RIPRAP MEDIUM CY	606.0300 RIPRAP HEAVY CY	645.0120 GEOTEXTILE TYPE HR SY
0010	1							
		CTH J	119+42	LT	CTH J NB	4	--	16
		CTH J	119+53	LT	CTH J NB	1	--	7
		CTH J BOX CULVERT	120+50	LT & RT	CTH J NB	--	30	46
		CTH A BOX CULVERT	1141+40	LT & RT	CTH A EB	--	53	69
		PROJECT TOTAL				5	83	138

INLET PROTECTION

CATEGORY	STAGE	LOCATION	628.7005 INLET PROTECTION TYPE A EACH	628.7020 INLET PROTECTION TYPE D EACH
0010	1			
		CTH A-CTH J CENTER CIRCLE	1	1
		PROJECT TOTAL	1	1

DRAINTILE EXPLORATION

CATEGORY	STAGE	LOCATION	612.0700 DRAIN TILE EXPLORATION LF
0010	ALL	CTH A WEST LEG	400
		PROJECT TOTAL	400

3

TRACKING PADS

CATEGORY	STAGE	LOCATION	628.7560 EACH
0010	1	UNDISTRIBUTED	4
		PROJECT TOTAL	4

MAINTENANCE AND REPAIR OF HAUL ROADS (2814-03-70)

CATEGORY	STAGE	LOCATION	618.0100.01 MAINTENANCE AND REPAIR OF HAUL ROADS (2814-03-70) EACH
0020	ALL	PROJECT	1
		PROJECT TOTAL	1

EROSION CONTROL MOBILIZATION

CATEGORY	STAGE	LOCATION	628.1905 MOBILIZATIONS EROSION CONTROL EACH	628.1910 MOBILIZATIONS EMERGENCY EROSION CONTROL EACH
0010	1	UNDISTRIBUTED	6	4
		PROJECT TOTAL	6	4

EROSION CONTROL ITEMS

CATEGORY	STAGE	LOCATION	STATION	OFFSET TO	STATION	OFFSET	ALIGNMENT	616.0120.S FENCING SMALL ANIMAL LF	628.1530.S SILT FENCE HEAVY DUTY LF	628.1535.S SILT FENCE HEAVY DUTY MAINTENANCE LF	628.1504 SILT FENCE LF	628.1520 SILT FENCE MAINTENANCE LF	628.2006 EROSION MAT URBAN CLASS I TYPE A SY	628.2008 EROSION MAT URBAN CLASS I TYPE B SY	628.7504 TEMPORARY DITCH CHECKS LF	628.7555 CULVERT PIPE CHECKS EACH	SPV.0090.001 SILT FENCE TURTLE EXCLUSION BARRIER LF
0010	1																
		NW LEG	118+60	-	123+62.39		CTH J NB	610	576	576	--	--	1,400	1,140	63	2	630
		NE LEG	1135+05	-	1145+08.32		CTH A EB	1,900	613	613	--	--	4,300	1,410	113	4	1,800
		SE LEG	1123+50.47	-	1135+05		CTH J NB	--	118	118	--	--	2,800	--	50	9	--
		SW LEG	1127+85.34	-	1134+70		CTH A EB	690	126	126	147	147	3,900	--	25	14	610
		CENTER CIRCLE	1+00	-	3+74		CENTER CIRCLE	--	--	--	--	--	200	--	--	--	--
		UNDISTRIBUTED						--	287	287	29	29	2,500	510	--	--	--
		PROJECT TOTAL						3,200	1,720	1,720	176	176	15,100	3,060	251	29	3,040

3

RESTORATION ITEMS

CATEGORY	STAGE	LOCATION	STATION	OFFSET	TO	STATION	OFFSET	ALIGNMENT	625.0100 TOPSOIL SY	625.0500 SALVAGED TOPSOIL SY	630.0160 SEEDING MIXTURE NO. 60 LB	630.0130 SEEDING MIXTURE NO. 30 LB	630.0200 SEEDING TEMPORARY LB	630.0500 SEED WATER MGAL	631.0300 SOD WATER MGAL	631.1100 SOD EROSION CONTROL SY
0010	1															
		NW LEG	119+19	LT	-	120+73.79	LT	CTH J NB	--	600	4	--	15	10	--	--
			120+73.79	LT	-	123+62.39	LT	CTH J NB	--	600	--	5	14	10	0.1	3
			118+59.09	RT	-	119+32.26	RT	CTH J NB	--	300	--	2	7	10	--	--
			119+32.26	RT	-	120+67.97	RT	CTH J NB	--	500	4	--	12	10	--	--
			120+67.97	RT	-	123+62.39	RT	CTH J NB	--	500	--	4	12	10	--	--
		NE LEG	1135+35	LT	-	1145+08.32	LT	CTH A EB	--	3,100	--	22	69	70	0.1	3
			1135+18.15	RT	-	1145+08.32	RT	CTH A EB	--	2,600	--	19	59	60	0.1	3
		SE LEG	1123+51	RT	-	1127+14	RT	CTH J NB	--	1,100	--	8	24	20	0.1	3
			1127+14	RT	-	1128+43	RT	CTH J NB	--	300	2	--	6	10	--	--
			1127+13.53	LT	-	1134+97.87	LT	CTH J NB	--	1,400	--	10	32	30	0.1	3
		SW LEG	1127+85.34	RT	-	1128+61.37	RT	CTH A EB	--	200	1	--	4	--	--	--
			1128+61.37	RT	-	1134+97.87	RT	CTH A EB	--	1,600	--	12	36	40	0.1	3
			1127+85.34	LT	-	1130+12.30	LT	CTH A EB	--	600	--	4	14	10	--	--
			1130+12.30	LT	-	1131+32.42	LT	CTH A EB	--	500	4	--	12	10	--	--
			1131+32.42	LT	-	1134+05.60	LT	CTH A EB	--	1,000	--	7	23	20	0.1	3
		CENTER CIRCLE						CENTER CIRCLE	--	200	--	2	5	10	--	--
		UNDISTRIBUTED							3,040	--	3	19	68	70	0.1	4
		PROJECT TOTAL							3,040	15,100	18	114	397	400	1.0	25

3

REMOVING AND MOVING SIGNS

CATEGORY	STAGE	LOCATION	SIGN NUMBER	SIGN CODE	SIGN MESSAGE	638.2102 MOVING SIGNS TYPE II EACH	638.2602 REMOVING SIGNS TYPE II EACH	638.3000 REMOVING SMALL SIGN SUPPORTS EACH
0010	1	CTH A & CTH J	1R	W2-1 & W13-1	CROSSROADS & 45 MPH ADVISORY SPEED	--	2	1
			2R	R2-1	SPEED LIMIT 55	--	1	1
			3R	M2-1 & M1-5A	JCT & COUNTY J	--	2	1
			4R	M1-5A & M3-4	COUNTY A & WEST	--	2	1
			5R	I55-56	ADOPT A HIGHWAY	1	--	1
			6R	I2-2	PLANK RD & ENGLISH SETTLEMENT AVE	--	2	1
			7R	M1-5A & M6-4	COUNTY J	--	2	1
			8R	R1-1	STOP & TRAFFIC ON A DOES NOT STOP	--	2	1
			9R	M6-4 & M1-5A	COUNTY J	--	2	1
			10R	R1-1	STOP	--	1	1
			11R	R1-1	STOP	--	1	1
			12R	M6-4 & M1-5A	COUNTY J	--	2	1
			13R	M6-4 & M1-5A	COUNTY A	--	2	1
			14R	R1-1	TRAFFIC ON A DOES NOT STOP & STOP	--	2	1
			15R	M1-5A & M3-2	COUNTY A & EAST	--	2	1
			16R	I55-56	ADOPT A HIGHWAY	1	--	1
			17R	R2-1	SPEED LIMIT 55	--	1	1
			18R	M1-5A & M2-1	COUNTY J & JCT	--	2	1
			19R	W13-1 & W2-1	45 MPH	--	2	1
			20R	W3-1	STOP AHEAD	--	1	1
			21R	W3-1	STOP AHEAD	--	1	1
			22R	D1-60	PLANK RD	--	1	1
			23R	M2-1 & M1-5A	JCT & COUNTY A	--	2	1
			24R	W1-2R	ROAD CURVES RIGHT	--	1	1
			25R	M1-5A & M3-2	COUNTY J & NORTH	--	2	1
			26R	M2-1 & M1-5A	JCT	--	2	1
			27R	W14-3	NO PASSING ZONE	--	1	1
			28R	I2-2	PLANK RD	--	1	1
			29R	W3-1	STOP AHEAD	--	1	1
			30R	W3-1	STOP AHEAD	--	1	1
			31R	WO5-52L	BRIDGE HASH MARKS	--	1	1
			32R	WO5-52L	BRIDGE HASH MARKS	--	1	1
			33R	WO5-52L	BRIDGE HASH MARKS	--	1	1
			34R	WO5-52L	BRIDGE HASH MARKS	--	1	1
			35R	WO5-52L	BRIDGE HASH MARKS	--	1	1
			36R	WO5-52L	BRIDGE HASH MARKS	--	1	1
			37R	WO5-52L	BRIDGE HASH MARKS	--	1	1
			38R	WO5-52L	BRIDGE HASH MARKS	--	1	1
		PROJECT TOTAL				2	52	38

3

TYPE II SIGNS AND SUPPORTS

CATEGORY	SIGN NUMBER	SIGN CODE	SIGN SIZE	SIGN TYPE	SIGN DIMENSION W X H IN	X	IN	DESCRIPTION	634.0614 POSTS WOOD 4X6-INCH X 14-FT EACH	634.0616 POSTS WOOD 4X6-INCH X 16-FT EACH	634.0618 POSTS WOOD 4X6-INCH X 18-FT EACH	634.0620 POSTS WOOD 4X6-INCH X 20-FT EACH	634.0622 POSTS WOOD 4X6-INCH X 22-FT EACH	637.2210 SIGNS TYPE II REFLECTIVE H SF	637.2230 SIGNS TYPE II REFLECTIVE F SF	SIGN MOUNTED ON SAME POST AS SIGN NO.
0010	201	W13-1	2S	II	18	X	18	ADVISORY SPEED PLATE (YELLOW BACK)	--	--	--	--	--	--	2.25	202
	202	W2-6	2S	II	30	X	30	CIRCULAR INTERSECTION SIGN	--	--	1	--	--	--	6.25	
	203	M1-5A	2S	II	24	X	24	COUNTY MARKER	--	1	--	--	--	4.00	--	
	204	W3-2	2S	II	36	X	36	YIELD AHEAD	--	1	--	--	--	--	9.00	
	205	W6-3	2S	II	36	X	36	TWO-WAY TRAFFIC SYMBOL	--	1	--	--	--	--	9.00	
	206	R5-1	2S	II	30	X	30	DO NOT ENTER	--	--	--	--	--	6.25	--	207
	207	R2-1	2S	II	24	X	30	SPEED LIMIT _ MPH	--	1	--	--	--	5.00	--	
	208	R4-7	2S	II	24	X	30	KEEP RIGHT	--	--	--	--	--	5.00	--	210
	209	W5-54	2S	II	18	X	18	CLEARANCE MARKER WITH YELLOW TYPE F SHEETING	--	--	--	--	--	--	2.25	210
	210	W14-3	2S	II	48	X	36	NO PASSING ZONE	--	1	--	--	--	--	5.56	
	211	R1-54	2S	II	24	X	15	TO TRAFFIC FROM LEFT	--	--	--	--	--	2.50	--	212
	212	R1-2	2S	II	36	X	31	YIELD	--	--	1	--	--	3.88	--	
	213	R1-54	2S	II	24	X	15	TO TRAFFIC FROM LEFT	--	--	--	--	--	2.50	--	214
	214	R1-2	2S	II	36	X	31	YIELD	--	--	1	--	--	3.88	--	
	215	R6-2R	2S	II	24	X	30	ONE WAY RIGHT ARROW	--	--	--	--	--	5.00	--	216
	216	R1-2	2S	II	36	X	31	YIELD	--	--	1	--	--	3.88	--	
	219	R6-2R	2S	II	24	X	30	ONE WAY RIGHT ARROW	--	--	--	--	--	5.00	--	220
	220	R1-2	2S	II	36	X	31	YIELD	--	--	--	1	--	3.88	--	
	221	R1-2	2S	II	36	X	31	YIELD	--	--	1	--	--	3.88	--	222
	222	R1-54	2S	II	24	X	15	TO TRAFFIC FROM LEFT	--	--	--	--	--	2.50	--	
	223	R6-2R	2S	II	24	X	30	ONE WAY RIGHT ARROW	--	--	--	--	--	5.00	--	224
	224	R1-2	2S	II	36	X	31	YIELD	--	--	--	1	--	3.88	--	
	225	R1-54	2S	II	24	X	15	TO TRAFFIC FROM LEFT	--	--	--	--	--	2.50	--	226
	226	R1-2	2S	II	36	X	31	YIELD	--	--	1	--	--	3.88	--	
	227	R2-1	2S	II	24	X	30	SPEED LIMIT _ MPH	--	--	--	--	--	5.00	--	228
	228	R5-1	2S	II	30	X	30	DO NOT ENTER	--	1	--	--	--	6.25	--	
	229	W14-3	2S	II	48	X	36	NO PASSING ZONE	--	--	--	--	--	--	5.56	231
	230	R4-7	2S	II	24	X	30	KEEP RIGHT	--	--	--	--	--	5.00	--	231
	231	W5-54	2S	II	18	X	18	CLEARANCE MARKER WITH YELLOW TYPE F SHEETING	--	1	--	--	--	--	2.25	
	232	W3-2	2S	II	36	X	36	YIELD AHEAD	--	1	--	--	--	--	9.00	
	233	W6-3	2S	II	36	X	36	TWO-WAY TRAFFIC SYMBOL	--	1	--	--	--	--	9.00	
	234	M1-5A	2S	II	24	X	24	COUNTY MARKER	--	1	--	--	--	4.00	--	
	235	WO5-52R	2S	II	12	X	36	CLEARANCE STRIPER DOWN LEFT	--	1	--	--	--	--	3.00	
	236	WO5-52L	2S	II	12	X	36	CLEARANCE STRIPER DOWN RIGHT	--	1	--	--	--	--	3.00	
	237	WO5-52L	2S	II	12	X	36	CLEARANCE STRIPER DOWN RIGHT	--	1	--	--	--	--	3.00	
	238	WO5-52R	2S	II	12	X	36	CLEARANCE STRIPER DOWN LEFT	--	1	--	--	--	--	3.00	
	239	W2-6	2S	II	30	X	30	CIRCULAR INTERSECTION SIGN	--	--	--	--	--	--	6.25	240
	240	W13-1	2S	II	18	X	18	ADVISORY SPEED PLATE (YELLOW BACK)	--	--	1	--	--	--	2.25	
	241	W13-1	2S	II	18	X	18	ADVISORY SPEED PLATE (YELLOW BACK)	--	--	--	--	--	--	2.25	242
	242	W2-6	2S	II	30	X	30	CIRCULAR INTERSECTION SIGN	--	--	1	--	--	--	6.25	
	243	M1-5A	2S	II	24	X	24	COUNTY MARKER	--	1	--	--	--	4.00	--	
	244	W3-2	2S	II	36	X	36	YIELD AHEAD	--	1	--	--	--	--	9.00	
	245	W6-3	2S	II	36	X	36	TWO-WAY TRAFFIC SYMBOL	--	1	--	--	--	--	9.00	
	246	R5-1	2S	II	30	X	30	DO NOT ENTER	--	--	--	--	--	6.25	--	247
	247	R2-1	2S	II	24	X	30	SPEED LIMIT _ MPH	--	1	--	--	--	5.00	--	
	248	R4-7	2S	II	24	X	30	KEEP RIGHT	--	--	--	--	--	5.00	--	250
	249	W5-54	2S	II	18	X	18	CLEARANCE MARKER WITH YELLOW TYPE F SHEETING	--	--	--	--	--	--	2.25	250
	250	W14-3	2S	II	48	X	36	NO PASSING ZONE	--	1	--	--	--	--	5.56	
	251	R6-2R	2S	II	24	X	30	ONE WAY RIGHT ARROW	--	--	--	--	--	5.00	--	252
	252	R1-2	2S	II	36	X	31	YIELD	--	--	1	--	--	3.88	--	
	253	WO5-52L	2S	II	12	X	36	CLEARANCE STRIPER DOWN RIGHT	--	1	--	--	--	--	3.00	
	254	WO5-52R	2S	II	12	X	36	CLEARANCE STRIPER DOWN LEFT	--	1	--	--	--	--	3.00	
	255	WO5-52R	2S	II	12	X	36	CLEARANCE STRIPER DOWN LEFT	--	1	--	--	.	--	3.00	
	256	W5-54	2S	II	18	X	18	CLEARANCE MARKER WITH YELLOW TYPE F SHEETING	--	--	--	--	--	--	2.25	261
	257	R4-7	2S	II	24	X	30	KEEP RIGHT	--	--	--	--	--	5.00	--	261
	258	WO5-52L	2S	II	12	X	36	CLEARANCE STRIPER DOWN RIGHT	--	1	--	--	--	--	3.00	
	259	R2-1	2S	II	24	X	30	SPEED LIMIT _ MPH	--	--	--	--	--	5.00	--	260
	260	R5-1	2S	II	30	X	30	DO NOT ENTER	--	1	--	--	--	6.25	--	
	261	W14-3	2S	II	48	X	36	NO PASSING ZONE	--	1	--	--	--	--	5.56	
	262	W6-3	2S	II	36	X	36	TWO-WAY TRAFFIC SYMBOL	--	1	--	--	--	--	9.00	
	263	W3-2	2S	II	36	X	36	YIELD AHEAD	--	1	--	--	--	--	9.00	
	264	M1-5A	2S	II	24	X	24	COUNTY MARKER	--	1	--	--	--	4.00	--	
	265	W2-6	2S	II	30	X	30	CIRCULAR INTERSECTION SIGN	--	--	--	--	--	--	6.25	266
	266	W13-1	2S	II	18	X	18	ADVISORY SPEED PLATE (YELLOW BACK)	--	--	1	--	--	--	2.25	
	267	D1-62	-	II	144	X	66	ROUNDABOUT EXITS	--	--	--	--	3	66.00	--	
	268	D1-62	-	II	144	X	66	ROUNDABOUT EXITS	--	--	--	--	3	66.00	--	
	269	D1-62	-	II	144	X	66	ROUNDABOUT EXITS	--	--	--	--	3	66.00	--	
	270	D1-62	-	II	144	X	66	ROUNDABOUT EXITS	--	--	--	--	3	66.00	--	
	271	R6-4B	2S	II	60	X	24	ROUNDABOUT CHEVRON BANK	--	--	--	--	--	10.00	--	276
	272	R6-4B	2S	II	60	X	24	ROUNDABOUT CHEVRON BANK	--	--	--	--	--	10.00	--	277
	273	R6-4B	2S	II	60	X	24	ROUNDABOUT CHEVRON BANK	--	--	--	--	--	10.00	--	278
	274	R6-4B	2S	II	60	X	24	ROUNDABOUT CHEVRON BANK	--	--	--	--	--	10.00	--	275
	275	R6-1R	2S	II	36	X	12	ONE WAY RIGHT ARROW	--	--	--	2	--	3.00	--	
	276	R6-1R	2S	II	36	X	12	ONE WAY RIGHT ARROW	--	--	--	2	--	3.00	--	
	277	R6-1R	2S	II	36	X	12	ONE WAY RIGHT ARROW	--	--	--	2	--	3.00	--	
	278	R6-1R	2S	II	36	X	12	ONE WAY RIGHT ARROW	--	--	--	2	--	3.00	--	
	279	D1-2	-	II	84	X	30	J NORTH EXIT	--	2	--	--	--	17.50	--	
	280	D1-2	-	II	84	X	30	A EAST EXIT	--	2	--	--	--	17.50	--	
	281	D1-2	-	II	84	X	30	J SOUTH EXIT	--	2	--	--	--	17.50	--	
	282	D1-2	-	II	84	X	30	A WEST EXIT	--	2	--	--	--	17.50	--	
	283	I55-56	2	II	30	X	18	ADOPT A HIGHWAY MOVE SIGN	1	--	--	--	--	--	--	
	284	I55-56	2	II	30	X	18	ADOPT A HIGHWAY MOVE SIGN	1	--	--	--	--	--	--	
PROJECT TOTAL									2	36	10	10	12	528.00	161.00	

3

3

TRAFFIC CONTROL ITEMS

CATEGORY	STAGE	LOCATION	STAGE DURATION DAYS	643.0300 TRAFFIC CONTROL DRUMS NO.	643.0300 TRAFFIC CONTROL DRUMS DAY	643.0420 TRAFFIC CONTROL BARRICADES TYPE III NO.	643.0420 TRAFFIC CONTROL BARRICADES TYPE III DAY	643.0900* TRAFFIC CONTROL SIGNS NO.	643.0900* TRAFFIC CONTROL SIGNS DAY
0010	1		111						
		CTH J NW LEG		--	--	2	222	4	444
		CTH A NE LEG		--	--	2	222	4	444
		CTH J SE LEG		--	--	2	222	4	444
		CTH A SW LEG		--	--	2	222	4	444
									--
		UNDISTRIBUTED		10	1,110				
		PROJECT TOTAL			1,110		888		1,780

*ADDITIONAL QUANTITIES SHOWN ELSEWHERE

TRAFFIC CONTROL ITEMS-DETOUR

CATEGORY	STAGE	LOCATION	643.1050 TRAFFIC CONTROL SIGNS PCMS NO.	643.1050 TRAFFIC CONTROL SIGNS PCMS DAY	643.0900* TRAFFIC CONTROL SIGNS NO.	643.0900* TRAFFIC CONTROL SIGNS DAY
0010	1					
		CHURCH RD		--	9	999
		KETTERHAGEN RD		--	9	999
		STH 11		--	21	2,331
		CTH J	2	14	40	4,440
		STH 83		--	73	8,103
		CTH A	2	14	42	4,662
		SHARP RD		--	9	999
		ROWNTREE RD		--	9	999
		CROSSWAY RD		--	9	999
		STH 20		--	37	4,107
		STH 75		--	21	2,331
		PROJECT TOTAL		28		30,970

*ADDITIONAL QUANTITIES SHOWN ELSEWHERE

3

3

LONG LINE PAVEMENT MARKING ITEMS

CATEGORY	STAGE	LOCATION	646.1020 MARKING LINE EPOXY 4-INCH SOLID WHITE LF	646.1020 MARKING LINE EPOXY 4-INCH SOLID YELLOW LF	646.3020 MARKING LINE EPOXY 8-INCH SOLID WHITE LF	646.7120 MARKING DIAGONAL EPOXY 12-INCH 25' C-C YELLOW LF	646.8120 MARKING CURB EPOXY SOLID YELLOW LF	646.8220 MARKING ISLAND NOSE EPOXY YELLOW EACH	646.6320 MARKING DOTTED EXTENSION EPOXY 18-INCH 2' LINE, 2'SKIP SOLID WHITE LF
0010	1	CTH A-J	4,780	3,110	192	321	281	6	78
		PROJECT TOTAL	7,890		192	321	281	6	78

GUARDRAIL ITEMS

CATEGORY	STAGE	LOCATION	614.2300 MGS GUARDRAIL 3 LF	614.2610 MGS GUARDRAIL TERMINAL EAT EACH	614.2620 MGS GUARDRAIL TERMINAL TYPE 2 EACH	614.2630 MGS GUARDRAIL SHORT RADIUS TERMINAL EACH	614.2350 MGS GUARDRAIL SHORT RADIUS LF	COMMENTS
0010	1	CTH A & CTH J	904	5	1	1	13	8' RADIUS WITH 2 CRT POSTS
		PROJECT TOTAL	904	5	1	1	13	

3

PIPE UNDERDRAIN ITEMS

CATEGORY	STAGE	LOCATION	STATION	OFFSET	TO STATION	OFFSET	ALIGNMENT	612.0106 PIPE UNDERDRAIN 6-INCH LF	COMMENTS
0010	1								
		CTH A & CTH J	1+00	LT	3+73	LT	CENTER CIRCLE	158	UNDERDRAIN USED BEHIND 18-INCH CURB AND GUTTER IN CENTER CIRCLE. TO BE CONNECTED TO INLET AT STA 2+97
		PROJECT TOTAL						158	

CONSTRUCTION STAKING

CATEGORY	STAGE	LOCATION	650.4500 CONSTRUCTION STAKING SUBGRADE LF	650.5000 CONSTRUCTION STAKING BASE LF	650.5500 CONSTRUCTION STAKING CURB GUTTER AND CURB & GUTTER LF	650.6000 CONSTRUCTION STAKING PIPE CULVERTS EACH	650.8501.01 CONSTRUCTION STAKING ELECTRICAL INSTALLATIONS (2814-03-70) EACH	650.9911.01 CONSTRUCTION STAKING SUPPLEMENTAL CONTROL (2814-03-70) EACH	650.9920 CONSTRUCTION STAKING SLOPE STAKES LF	650.9500.01 CONSTRUCTION STAKING SIDEWALK (2814-03-70) EACH
0010	1	CTH A APPROACH	672	672	668	6			672	
		CTH A EXIT	986	986	867	2	--	--	986	--
		CTH J APPROACH	474	474	771	3	--	--	474	--
		CTH J EXIT	469	469	692	1	--	--	469	--
		CENTER CIRCLE	354	354	436	--	--	--	354	--
		CTH A & CTH J	--	--	--	--	1	1		1
		PROJECT TOTAL	2,955	2,955	3,434	12	1	1	2,955	1

3

FINISHING ROADWAY (2814-03-70)

CATEGORY	STAGE	LOCATION	213.0100.01 FINISHING ROADWAY (2814-03-70) EACH
0010	1		
		PROJECT	1
		PROJECT TOTAL	1

MOBILIZATION

CATEGORY	STAGE	LOCATION	619.1000 MOBILIZATION EACH
0010	ALL	PROJECT	1
		PROJECT TOTAL	1

FIELD OFFICE

CATEGORY	STAGE	LOCATION	642.5001 FIELD OFFICE TYPE B EACH
0010	ALL	PROJECT	1
		PROJECT TOTAL	1

3

WATER

CATEGORY	STAGE	LOCATION	624.0100 MGAL
0010	ALL	PROJECT-BASE COMPACTION	110
		PROJECT-COMMON EXCAVATION	100
		PROJECT TOTAL	210

SAWING

CATEGORY	STAGE	LOCATION	690.0150 SAWING ASPHALT LF
0010	1		
		CTH A & CTH J	750
		PROJECT TOTAL	750

TRAFFIC CONTROL

CATEGORY	STAGE	LOCATION	643.5000 TRAFFIC CONTROL EACH
0010	ALL	PROJECT	1
		PROJECT TOTAL	1

3

LIGHTING-POLES

POLE I.D. OR LOCATION	657.0255 TRANSFORMER BASES BREAKAWAY 11.5-INCH BOLT CIRCLE EACH	657.0322 POLES TYPE 5 ALUMINUM EACH	654.0105 CONCRETE BASES TYPE 5 EACH
BCTHA2	1	1	1
ACTHA3	1	1	1
ACTHA9	1	1	1
BCTHA8	1	1	1
ACTHA11	1	1	1
BCTHA12	1	1	1
BCTHA6	1	1	1
ACTHA5	1	1	1
BCTHA4	1	1	1
ACTHA1	1	1	1
BCTH10	1	1	1
ACTHA7	1	1	1
TOTALS	12	12	12

LIGHTING-PULL BOXES

DESCRIPTION	STATION	OFFSET	ALIGHNMENT	653.0140 PULL BOXES STEEL 24X42-INCH EACH
PB1	1128.08.50	67.39' LT	NB	1
PB2	1132+64.73	24.87' RT	EB	1
PB3	1134+18.84	43.87' LT	EB	1
PB4	121+00.09	34.05' LT	NB	1
PB5	119+08.24	29.15' RT	EB	1
PB6	1137+12.31	48.03' LT	EB	1
PB7	1128+17.88	51.04' RT	NB	1
PB8	1126+25.46	26.62' RT	NB	1
TOTAL				8

LIGHTING-MISCELLANEOUS

DESCRIPTION	STATION	OFFSET	ALIGNMENT	654.0224 CONCRETE CONTROL CABINET BASES TYPE L24 EACH	656.0201.01 ELECTRIC SERVICE METER BREAKER PEDESTAL (1127+93.50,72.61'LT) EACH	659.2124 LIGHTING CONTROL CABINETS 120/240 24-INCH EACH
DISTRIBUTION CENTER A	1128+06.43	79.64' LT	NB	1	1	1
TOTALS				1	1	1

3

LIGHTING-ARMS AND LUMINAIRES

POLE I.D. OR LOCATION	655.0610 ELECTRICAL WIRE LIGHTING 12 AWG LF	657.0615 LUMINAIRE ARMS SINGLE MEMBER 4 1/2-INCH CLAMP 8-FT EACH	659.1115 LUMINAIRES UTILITY LED A EACH
BCTHA2	129	1	1
ACTHA3	129	1	1
ACTHA9	129	1	1
BCTHA8	129	1	1
ACTHA11	129	1	1
BCTHA12	129	1	1
BCTHA6	129	1	1
ACTHA5	129	1	1
BCTHA4	129	1	1
ACTHA1	129	1	1
BCTH10	129	1	1
ACTHA7	129	1	1
TOTALS	1,548	12	12

LIGHTING-WIRE AND CONDUIT

FROM	TO	652.0225 CONDUIT RIGID NONMETALLIC SCHEDULE 40 2-INCH LF	652.0235 CONDUIT RIGID NONMETALLIC SCHEDULE 40 3-INCH LF	655.0620 ELECTRICAL WIRE LIGHTING 8 AWG LF
DC	PB1	18	-	132
PB1	AXX1	84	-	356
AXX1	PB2	155	-	680
PB2	BXX2	122	-	508
AXX1	PB3	-	73	352
PB3	AXX3	142	-	588
PB3	BXX4	35	-	160
BXX4	PB4	168	-	732
PB4	AXX5	118	-	492
BXX4	PB5	-	162	388
PB5	BXX6	162		668
PB5	AXX7	74	-	316
AXX7	PB6	169	-	736
PB6	BXX8	110	-	460
AXX7	PB7	-	101	464
PB7	AXX9	158	-	652
PB7	BXX10	39	-	176
BXX10	PB8	146	-	644
PB8	AXX11	108	-	452
PB7	PB1	-	98	452
PB1	BXX12	175	-	720
TOTALS		1,983	434	10,128

COMPOSITE DRAWING, ORIGINAL ON FILE AT COUNTY REGISTER OF DEEDS OFFICE

TRANSPORTATION PROJECT PLAT NO: 2814-03-00-4.01

THAT PART OF NE1/4 OF THE SE1/4 OF SECTION 13, PART OF LOT 1 OF CSM 2579, LOCATED IN PART OF THE SE1/4 OF THE SE1/4 OF SECTION 13, PART OF THE SE1/4 OF THE SE1/4 OF SECTION 13, AND PART OF LOTS 3 & 4 OF CSM 1995, LOT 2 OF CSM 2480, LOCATED IN PART OF THE SW1/4 OF THE SE1/4 OF SECTION 13, ALL LOCATED IN TOWNSHIP 3 NORTH, RANGE 19 EAST, VILLAGE OF ROCHESTER, RACINE COUNTY, WISCONSIN.

RELOCATION ORDER - LOCAL ROAD, VILLAGE OF ROCHESTER CTH J (INTERSECTION WITH CTH A), RACINE COUNTY

TO PROPERLY ESTABLISH, LAY OUT, WIDEN, ENLARGE, EXTEND, CONSTRUCT, RECONSTRUCT, IMPROVE, OR MAINTAIN A PORTION OF THE HIGHWAY DESIGNATED ABOVE, RACINE COUNTY DEEMS IT NECESSARY TO RELOCATE OR CHANGE SAID HIGHWAY AND ACQUIRE CERTAIN LANDS AND INTERESTS OR RIGHTS IN LANDS FOR THE ABOVE PROJECT.

TO EFFECT THIS CHANGE, PURSUANT TO AUTHORITY GRANTED UNDER SECTION 83.08 (1), WISCONSIN STATUTES, RACINE COUNTY HEREBY ORDERS THAT:
1. THAT PORTION OF SAID HIGHWAY AS SHOWN ON THIS PLAT IS LAID OUT AND ESTABLISHED TO THE LINES AND WIDTHS AS SO SHOWN FOR THE ABOVE PROJECT.
2. THE LANDS OR INTERESTS OR RIGHTS IN LANDS AS SHOWN ON THIS PLAT ARE REQUIRED BY RACINE COUNTY FOR THE ABOVE PROJECT AND SHALL BE ACQUIRED IN THE NAME OF RACINE COUNTY, PURSUANT TO THE PROVISIONS OF SECTION 83.08 (1), WISCONSIN STATUTES.

LOCATION SKETCH NOT TO SCALE

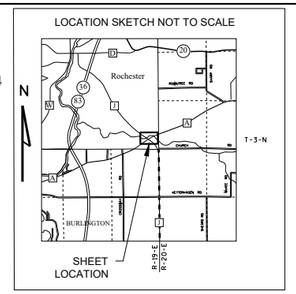

ALL TLES ARE FOR SLOPE GRADING PURPOSES

REFER TO THE TITLE SHEET, RECORDED AS SHEET 2 OF 3, FOR ADDITIONAL INFORMATION.

SEE SHEET 3 OF 3 FOR NOTES, CURVE DATA, TABLES & DETAILS.

Document # 2678456
RACINE COUNTY REGISTER OF DEEDS
June 11, 2024 9:00 AM
Karie Y. Pope
KARIE POPE
RACINE COUNTY
REGISTER OF DEEDS
Fee Amount: $75.00
Pages: 3

RESERVED FOR REGISTER OF DEEDS
PROJECT NUMBER 2814-03-00-4.01
SHEET 1 OF 3
AMENDMENT NO:___

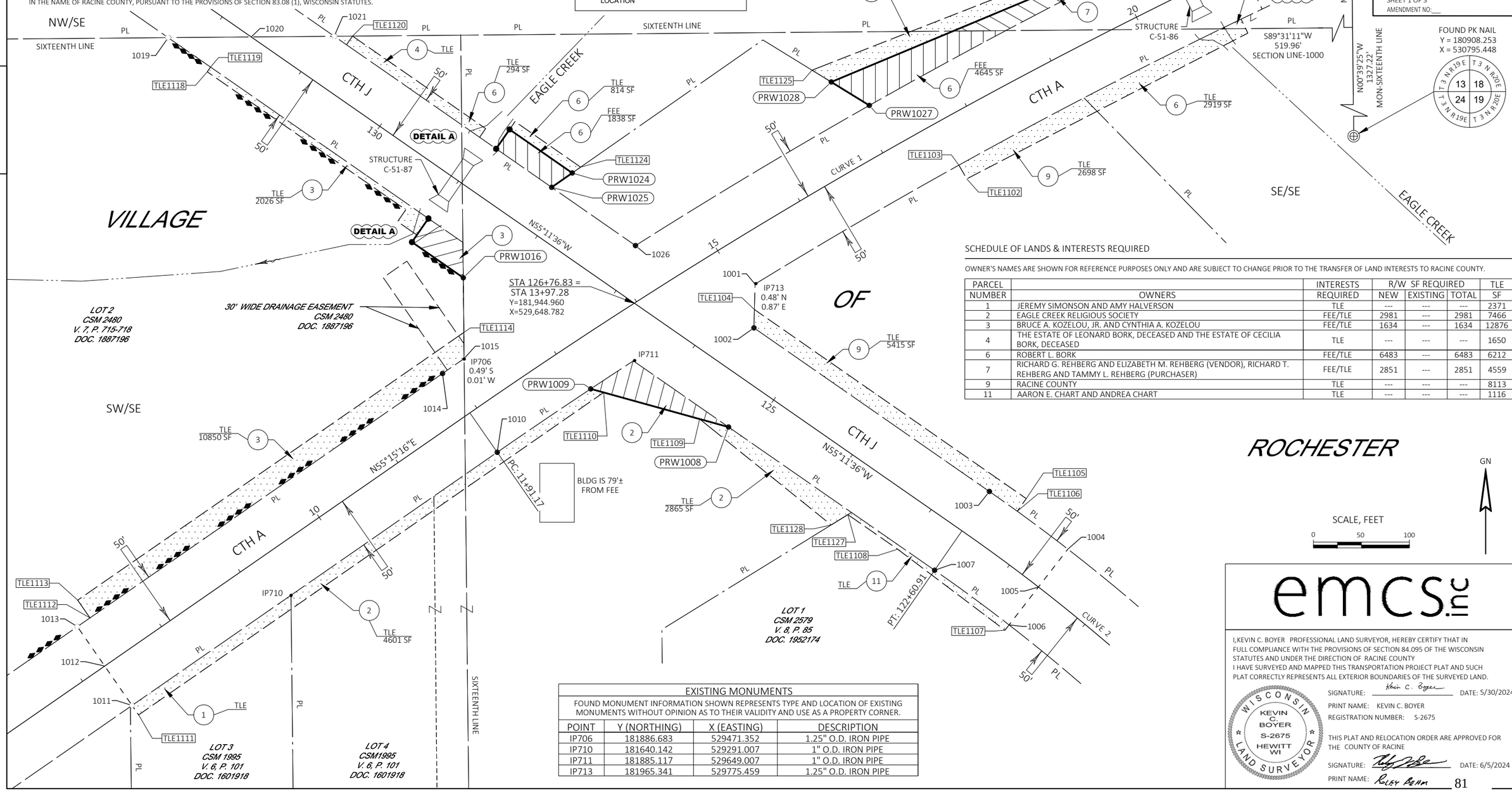

SCHEDULE OF LANDS & INTERESTS REQUIRED

OWNER'S NAMES ARE SHOWN FOR REFERENCE PURPOSES ONLY AND ARE SUBJECT TO CHANGE PRIOR TO THE TRANSFER OF LAND INTERESTS TO RACINE COUNTY.

PARCEL NUMBER	OWNERS	INTERESTS REQUIRED	R/W SF REQUIRED NEW	EXISTING	TOTAL	TLE SF
1	JEREMY SIMONSON AND AMY HALVERSON	TLE	---	---	---	2371
2	EAGLE CREEK RELIGIOUS SOCIETY	FEE/TLE	2981	---	2981	7466
3	BRUCE A. KOZELOU, JR. AND CYNTHIA A. KOZELOU	FEE/TLE	1634	---	1634	12876
4	THE ESTATE OF LEONARD BORK, DECEASED AND THE ESTATE OF CECILIA BORK, DECEASED	TLE	---	---	---	1650
6	ROBERT L. BORK	FEE/TLE	6483	---	6483	6212
7	RICHARD G. REHBERG AND ELIZABETH M. REHBERG (VENDOR), RICHARD T. REHBERG AND TAMMY L. REHBERG (PURCHASER)	FEE/TLE	2851	---	2851	4559
9	RACINE COUNTY	TLE	---	---	---	8113
11	AARON E. CHART AND ANDREA CHART	TLE	---	---	---	1116

EXISTING MONUMENTS

FOUND MONUMENT INFORMATION SHOWN REPRESENTS TYPE AND LOCATION OF EXISTING MONUMENTS WITHOUT OPINION AS TO THEIR VALIDITY AND USE AS A PROPERTY CORNER.

POINT	Y (NORTHING)	X (EASTING)	DESCRIPTION
IP706	181886.683	529471.352	1.25" O.D. IRON PIPE
IP710	181640.142	529291.007	1" O.D. IRON PIPE
IP711	181885.117	529649.007	1" O.D. IRON PIPE
IP713	181965.341	529775.459	1.25" O.D. IRON PIPE

SCALE, FEET
0 50 100

GN

emcs.inc

I, KEVIN C. BOYER PROFESSIONAL LAND SURVEYOR, HEREBY CERTIFY THAT IN FULL COMPLIANCE WITH THE PROVISIONS OF SECTION 84.095 OF THE WISCONSIN STATUTES AND UNDER THE DIRECTION OF RACINE COUNTY I HAVE SURVEYED AND MAPPED THIS TRANSPORTATION PROJECT PLAT AND SUCH PLAT CORRECTLY REPRESENTS ALL EXTERIOR BOUNDARIES OF THE SURVEYED LAND.

WISCONSIN KEVIN C. BOYER S-2675 HEWITT WI LAND SURVEYOR

SIGNATURE: Kevin C. Boyer DATE: 5/30/2024
PRINT NAME: KEVIN C. BOYER
REGISTRATION NUMBER: S-2675

THIS PLAT AND RELOCATION ORDER ARE APPROVED FOR THE COUNTY OF RACINE

SIGNATURE: DATE: 6/5/2024
PRINT NAME: Riley Behm

FILE NAME : Y:\54XX\5486.DP22.CTH.A.RCN.INTRSCTN.CTH.J\CADDS\28140300\SHEETS\TPP\040101-RP.DWG
APPRAISAL PLAT DATE : 03/26/2024
PLOT DATE : 4/30/2024 12:00 PM PLOT BY : MICHAELA GALGANSKI PLOT NAME : PLOT SCALE :

2814-03-00-4.01

NOTE
CONTROL POINTS WERE USED AS VERTICAL BENCHMARKS. SEE ALIGNMENT DETAIL - SURVEY CONTROL SHEETS FOR CONTROL POINT INFORMATION

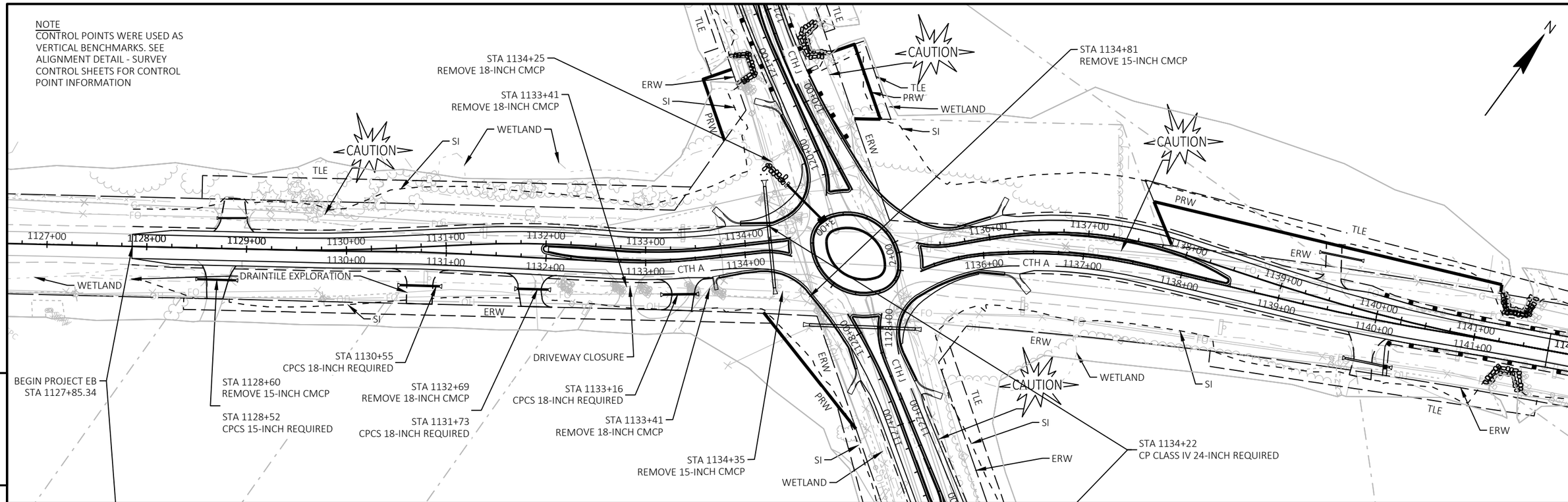

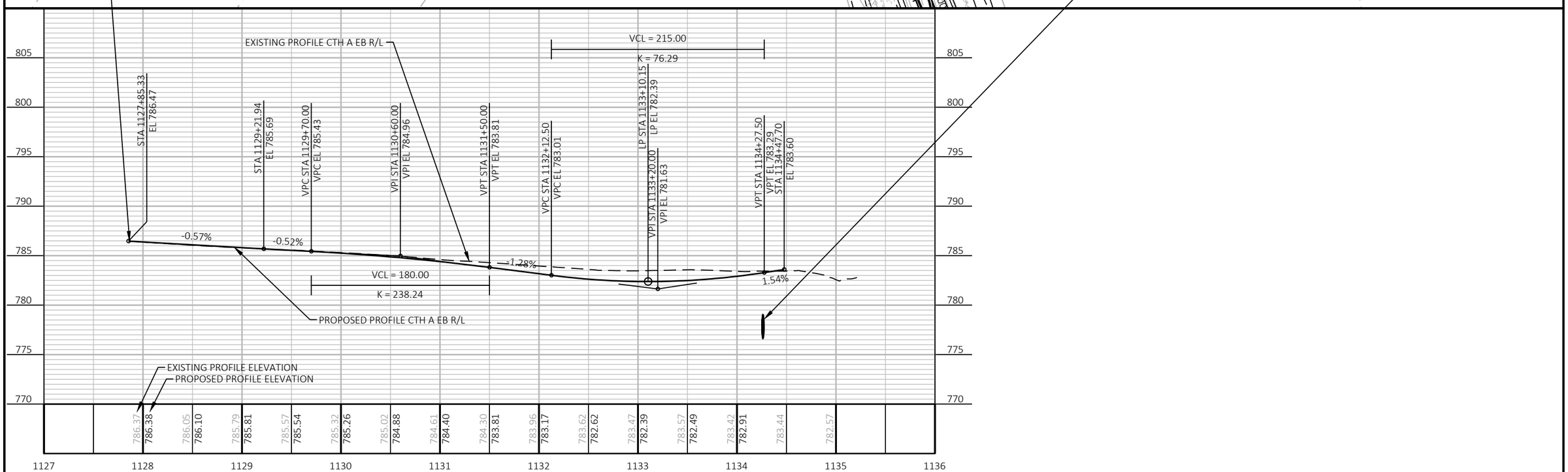

PROJECT NO: 2814-03-70	HWY: CTH A	COUNTY: RACINE	PLAN AND PROFILE: CTH A EB APPROACH	SHEET 82	E

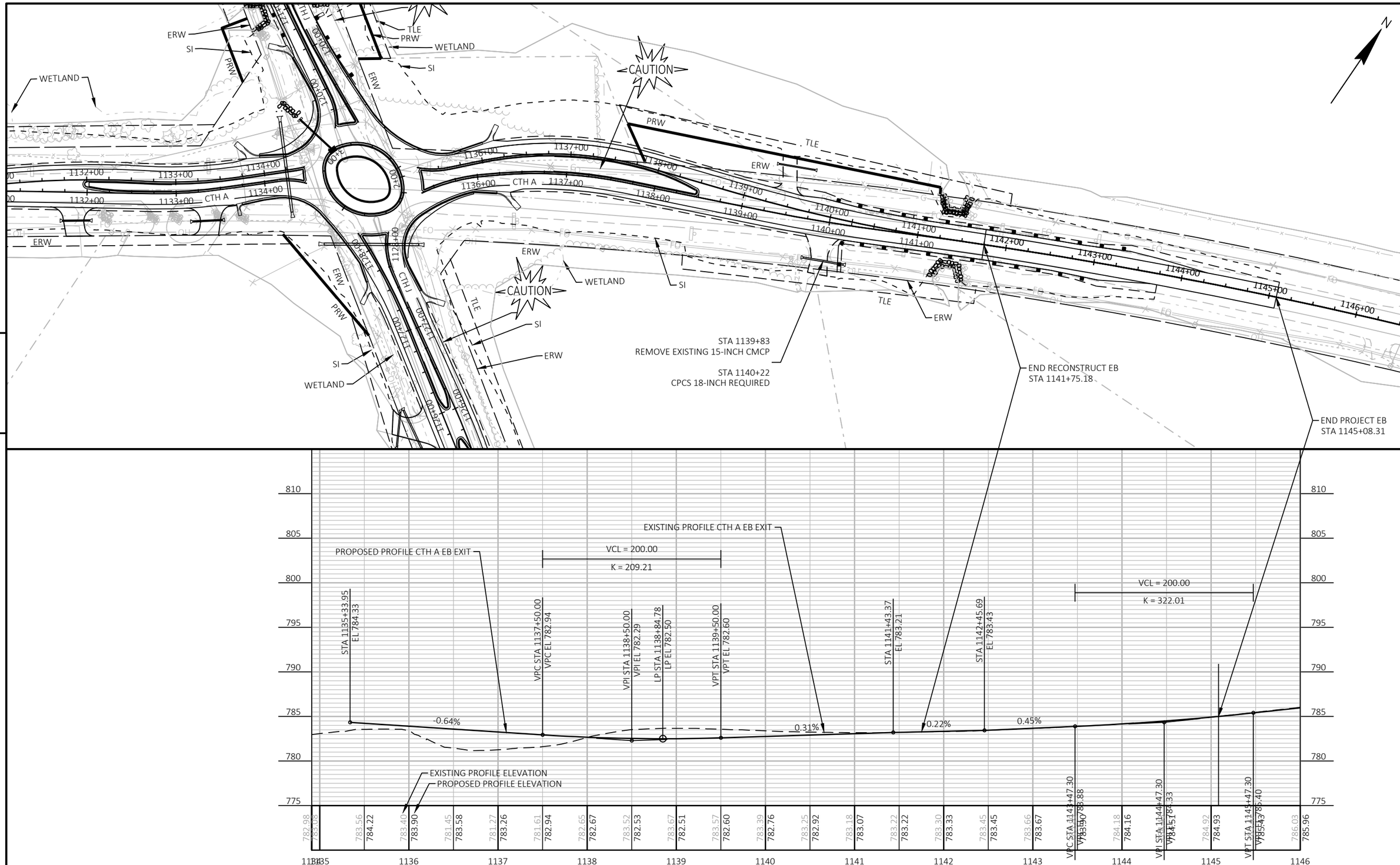

PROJECT NO: 2814-03-70	HWY: CTH A	COUNTY: RACINE	PLAN AND PROFILE: CTH A EB EXIT	SHEET 83	E

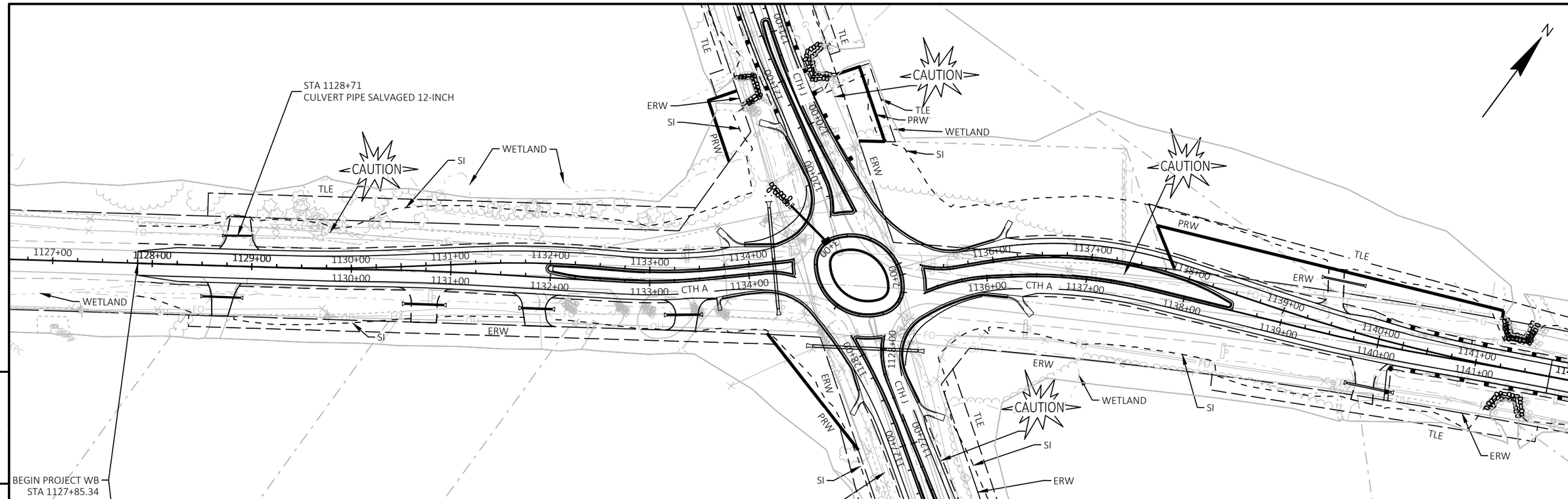

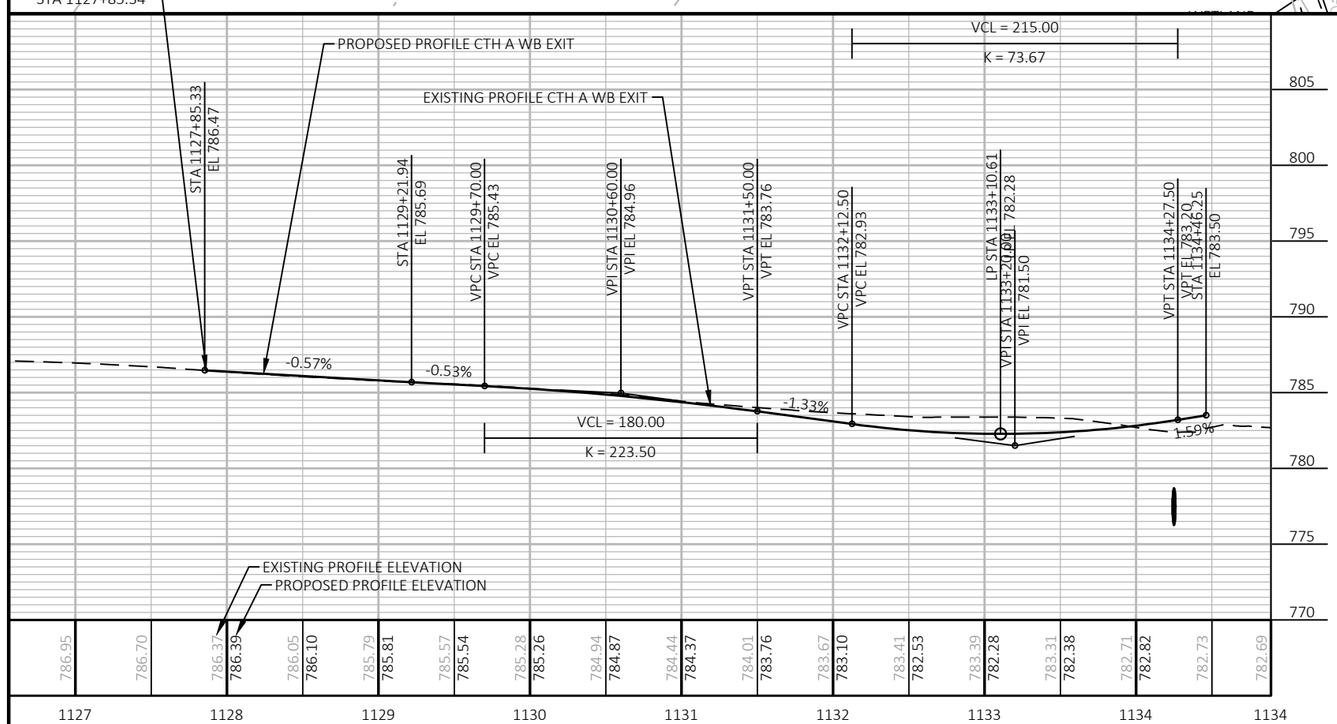

PROJECT NO: 2814-03-70	HWY: CTH A	COUNTY: RACINE	PLAN AND PROFILE: CTH A WB EXIT	SHEET 84	E

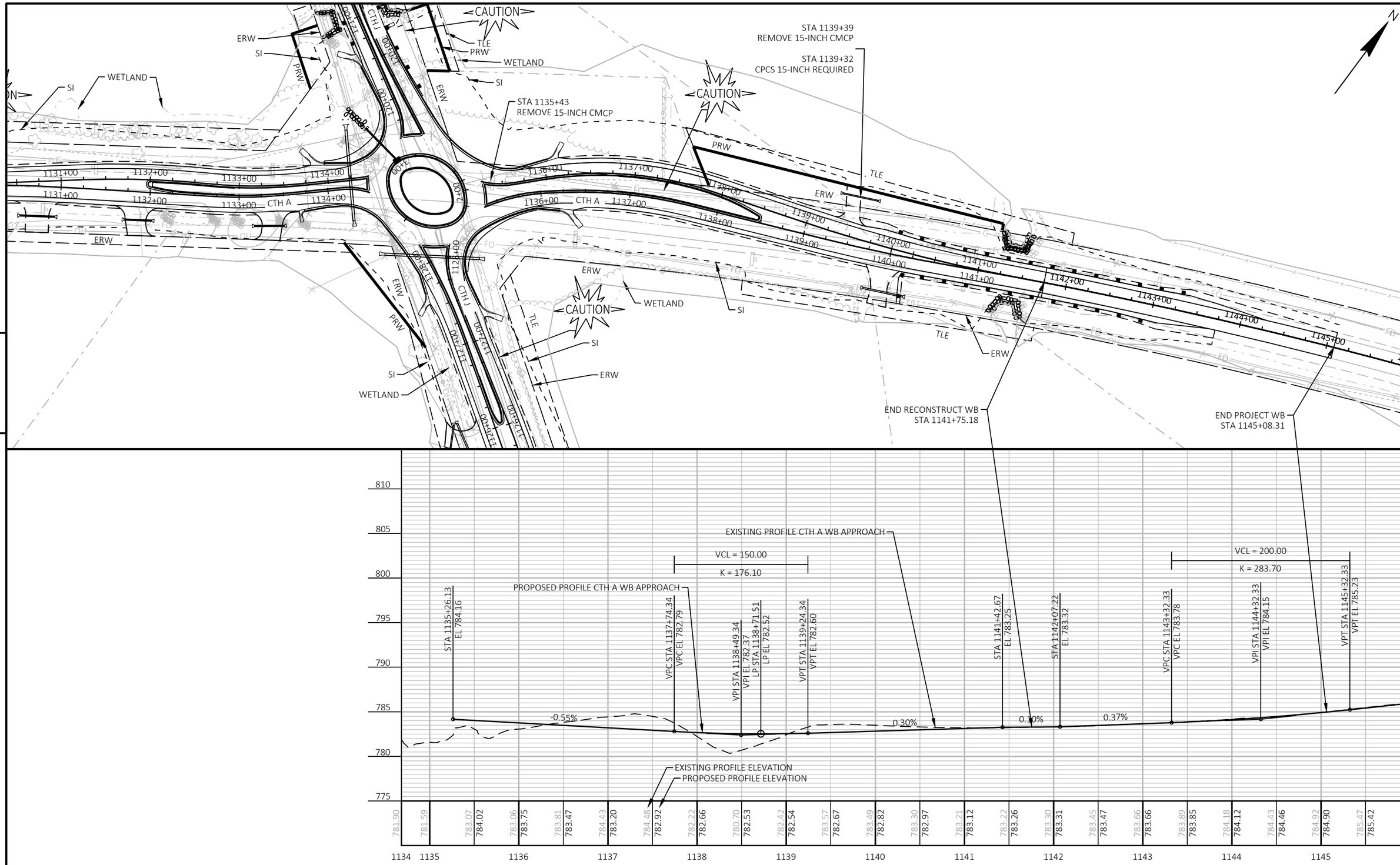

PROJECT NO: 2814-03-70	HWY: CTH A	COUNTY: RACINE	PLAN AND PROFILE: CTH A WB APPROACH	SHEET 85	E

FILE NAME : Y:\54XX\5486.DP22.CTH.A.RCN.INTRSCTN.CTH.J\CADDS\28140300\SHEETS\050101-PP.DWG
LAYOUT NAME - 050104-pp
PLOT DATE : 2/19/2025 10:36 AM
PLOT BY : NICHOLAS BECKER
PLOT NAME :
PLOT SCALE : 1 IN:100 FT
WISDOT/CADDS SHEET 44

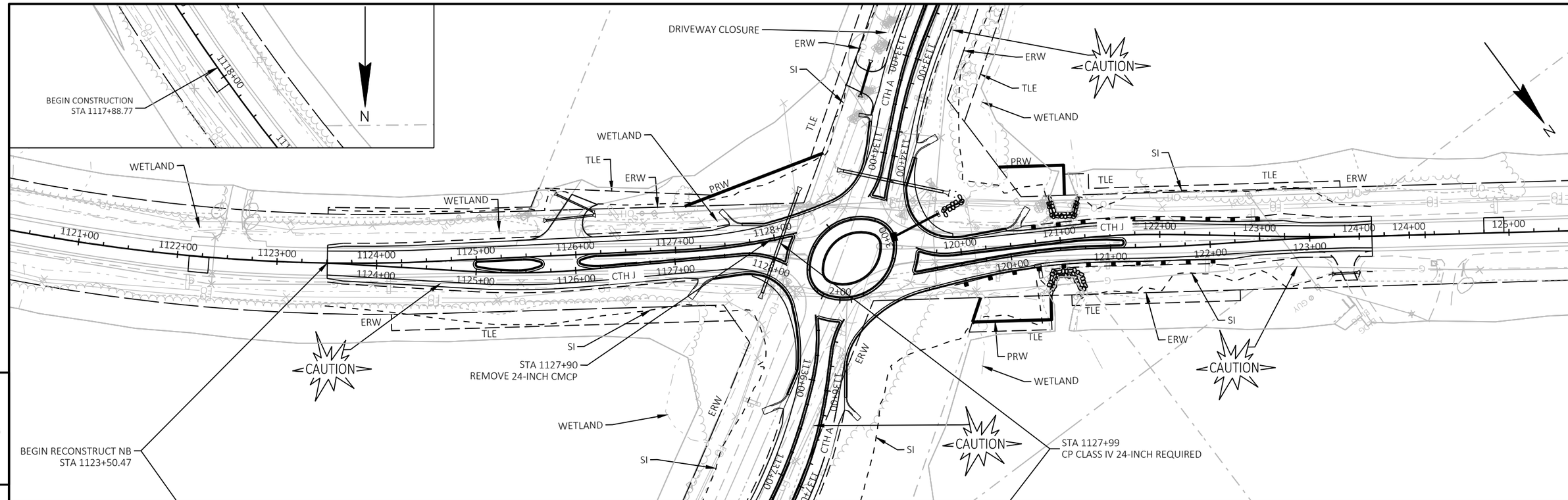

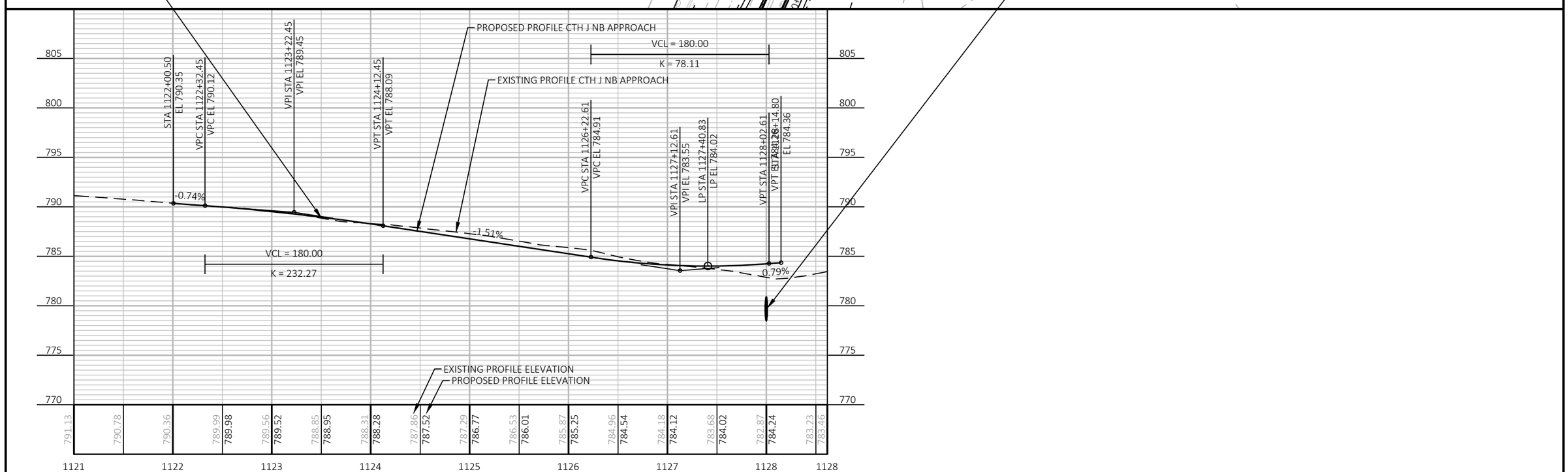

PROJECT NO: 2814-03-70	HWY: CTH A	COUNTY: RACINE	PLAN AND PROFILE: CTH J NB APPROACH	SHEET 86	E

FILE NAME : Y:\54XX\5486.DP22.CTH.A.RCN.INTRSCTN.CTH.J\CADDS\28140300\SHEETS\050101-PP.DWG
LAYOUT NAME - 050105-pp
PLOT DATE : 2/19/2025 10:36 AM
PLOT BY : NICHOLAS BECKER
PLOT NAME :
PLOT SCALE : 1 IN:100 FT

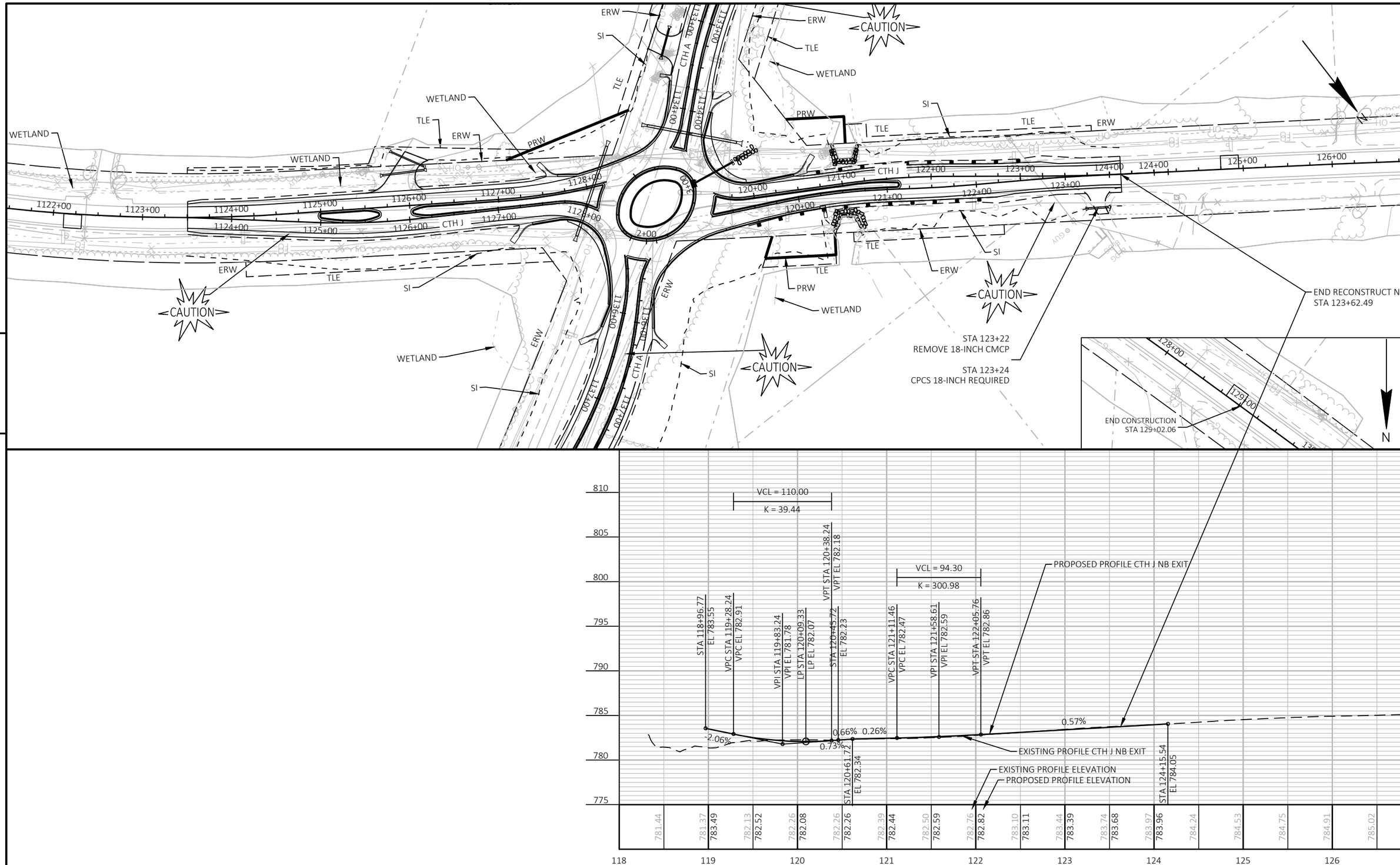

PROJECT NO: 2814-03-70	HWY: CTH A	COUNTY: RACINE	PLAN AND PROFILE: CTH J NB EXIT	SHEET 87	E

FILE NAME : Y:\54XX\5486.DP22.CTH.A.RCN.INTRSCTN.CTH.J\CADDS\28140300\SHEETS\050101-PP.DWG
LAYOUT NAME - 050106-pp
PLOT DATE : 2/19/2025 10:36 AM
PLOT BY : NICHOLAS BECKER
PLOT NAME :
PLOT SCALE : 1 IN:100 FT
WISDOT/CADDS SHEET 44

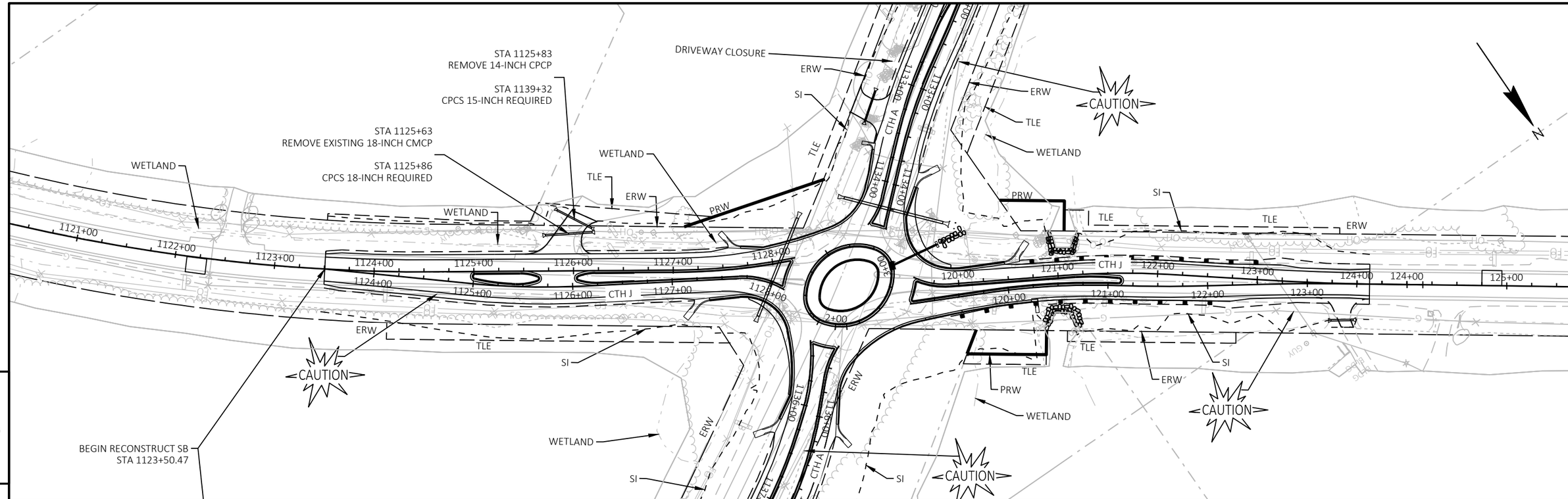

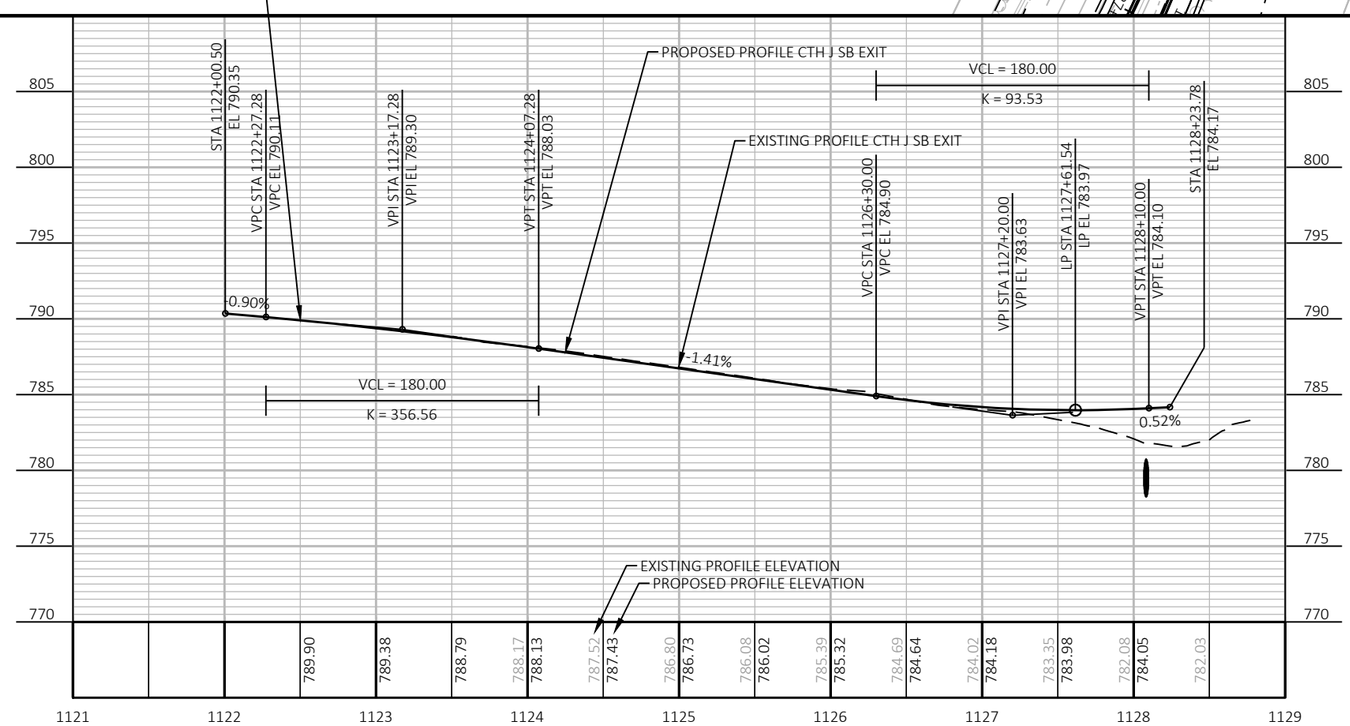

PROJECT NO: 2814-03-70	HWY: CTH A	COUNTY: RACINE	PLAN AND PROFILE: CTH J SB EXIT	SHEET 88	E

FILE NAME : Y:\54XX\5486.DP22.CTH.A.RCN.INTRSCTN.CTH.J\CADDS\28140300\SHEETS\050101-PP.DWG
LAYOUT NAME - 050107-pp
PLOT DATE : 2/19/2025 10:36 AM
PLOT BY : NICHOLAS BECKER
PLOT NAME :
PLOT SCALE : 1 IN:100 FT

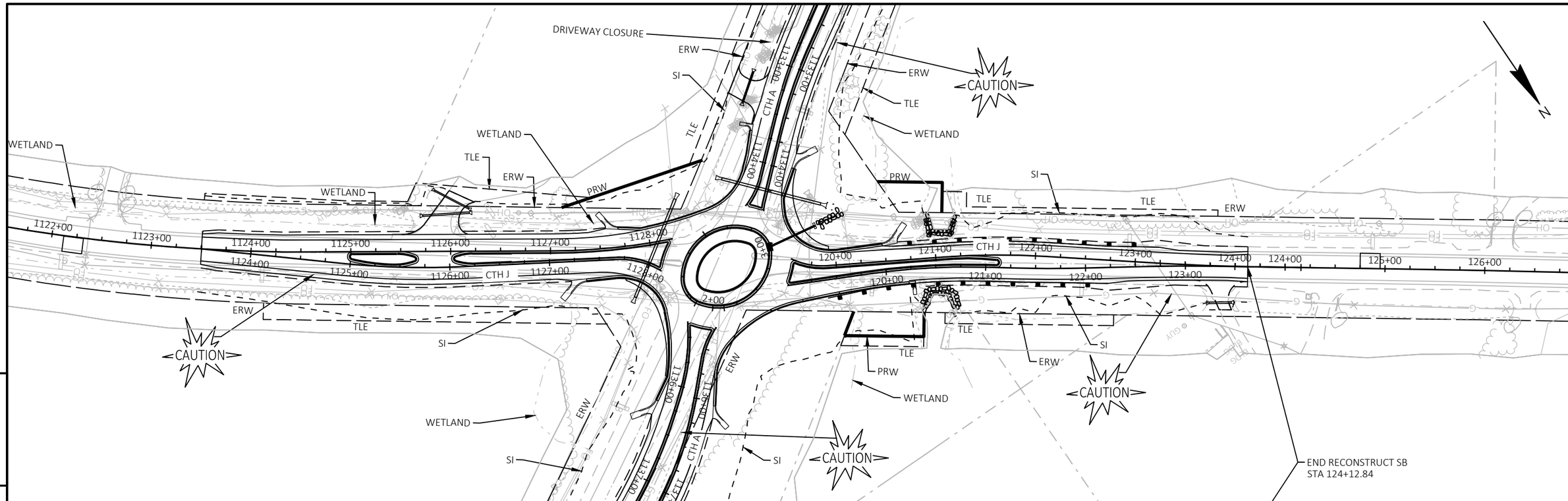

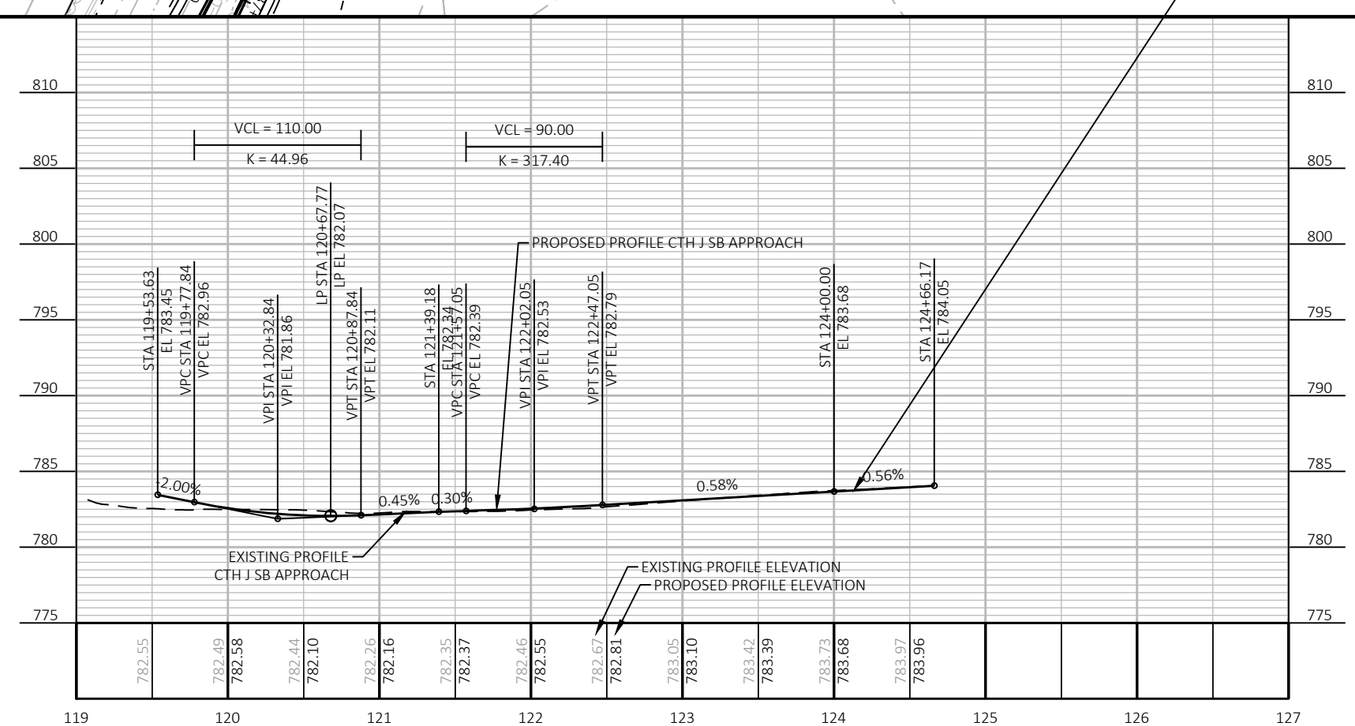

PROJECT NO: 2814-03-70	HWY: CTH A	COUNTY: RACINE	PLAN AND PROFILE: CTH J SB APPROACH	SHEET 89	E

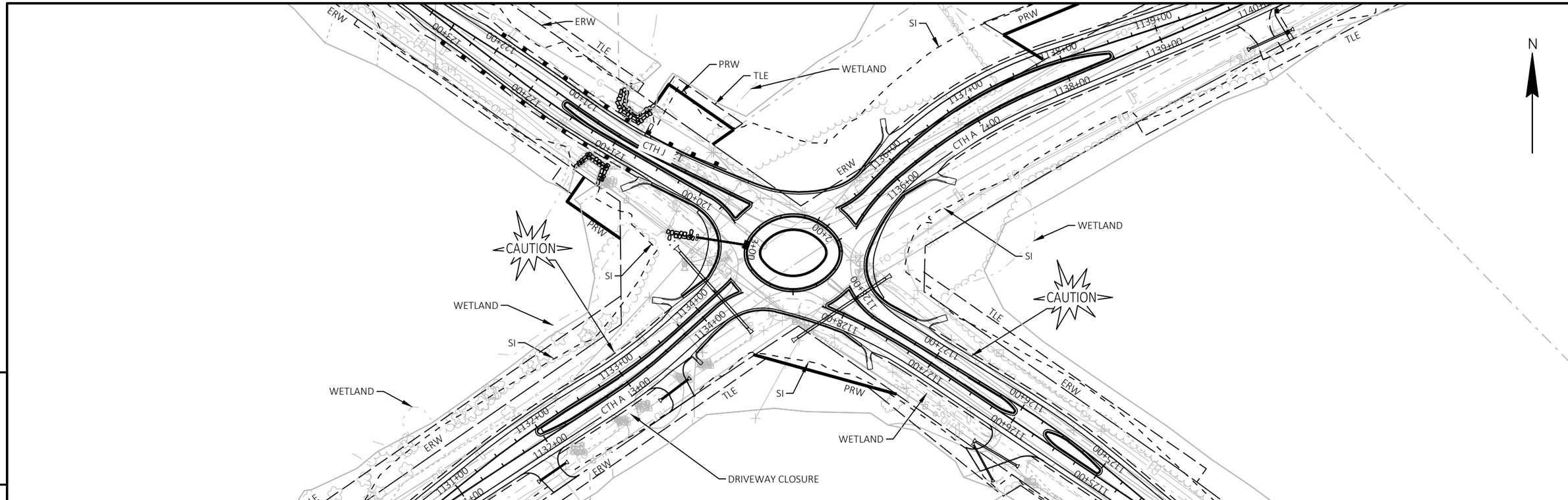

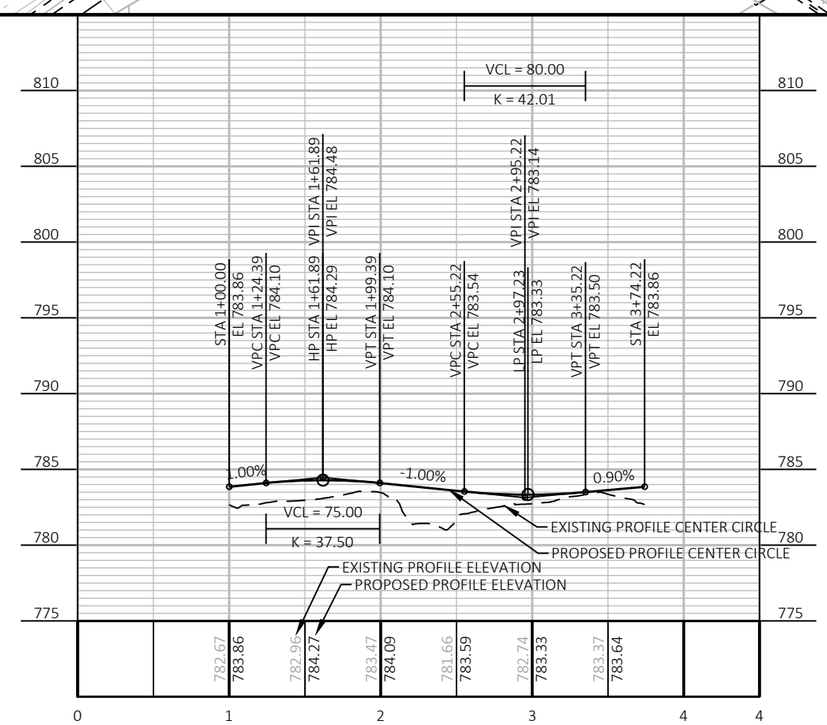

PROJECT NO: 2814-03-70	HWY: CTH A	COUNTY: RACINE	PLAN AND PROFILE: CTH A & CTH J CENTER CIRCLE	SHEET 90	E

FILE NAME : Y:\54XX\5486.DP22.CTH.A.RCN.INTRSCTN.CTH.J\CADDS\28140300\SHEETS\050101-PP.DWG
LAYOUT NAME - 050109-pp
PLOT DATE : 2/19/2025 10:36 AM
PLOT BY : NICHOLAS BECKER
PLOT NAME :
PLOT SCALE : 1 IN:100 FT

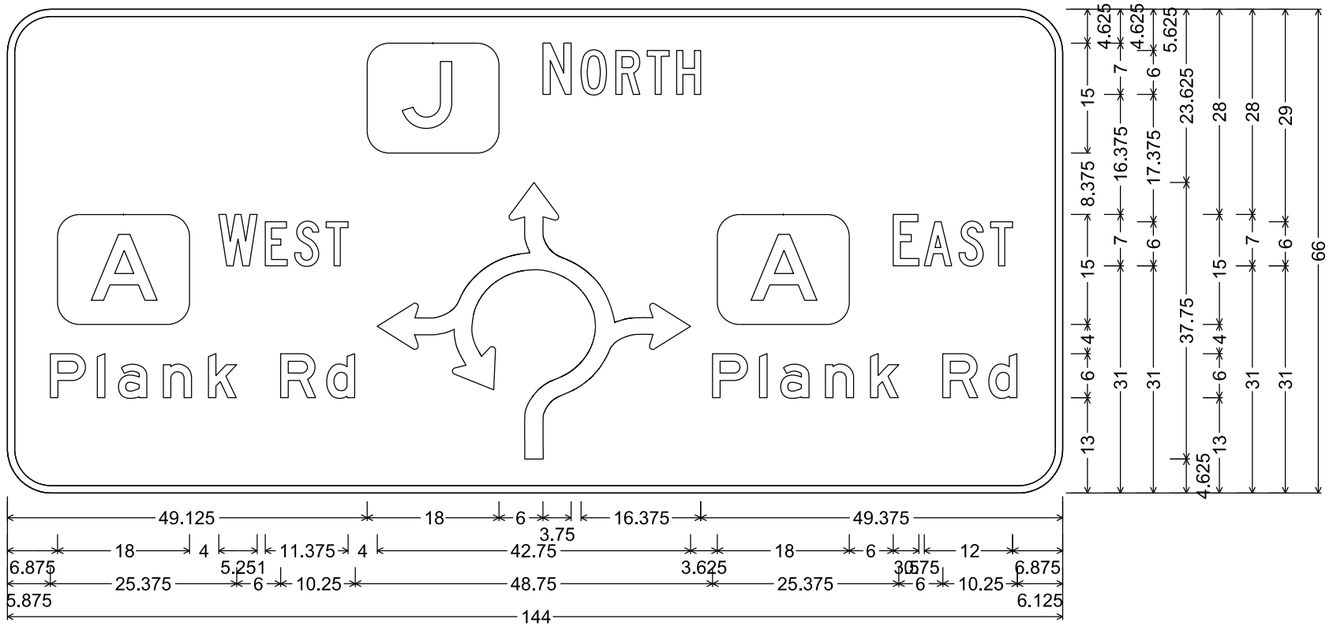

D1-62; 6.000" Radius, 1.000" Border,
"NORTH", C; "WEST", C; "Plank", E; "Rd", E; "EAST", C; "Plank", E; "Rd", E

NOTES

1. Signs are Type II - Type H Reflective
2. Color:
   Background - Green
   Message - White
3. Message Series - C except as noted

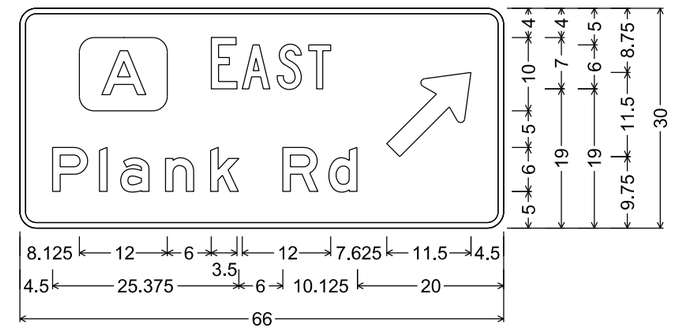

D1-2; 2.250" Radius, 0.750" Border,
"EAST", C; "Plank", E; "Rd", E

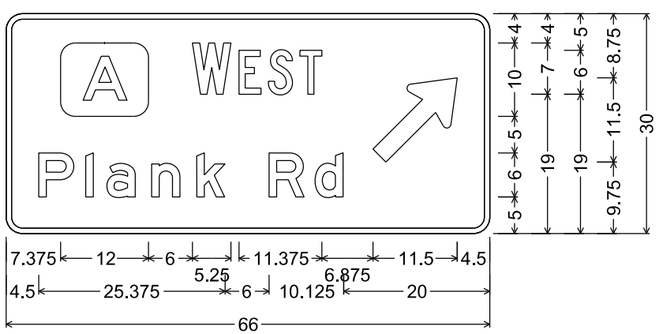

D1-2; 2.250" Radius, 0.750" Border,
"WEST", C; "Plank", E; "Rd", E

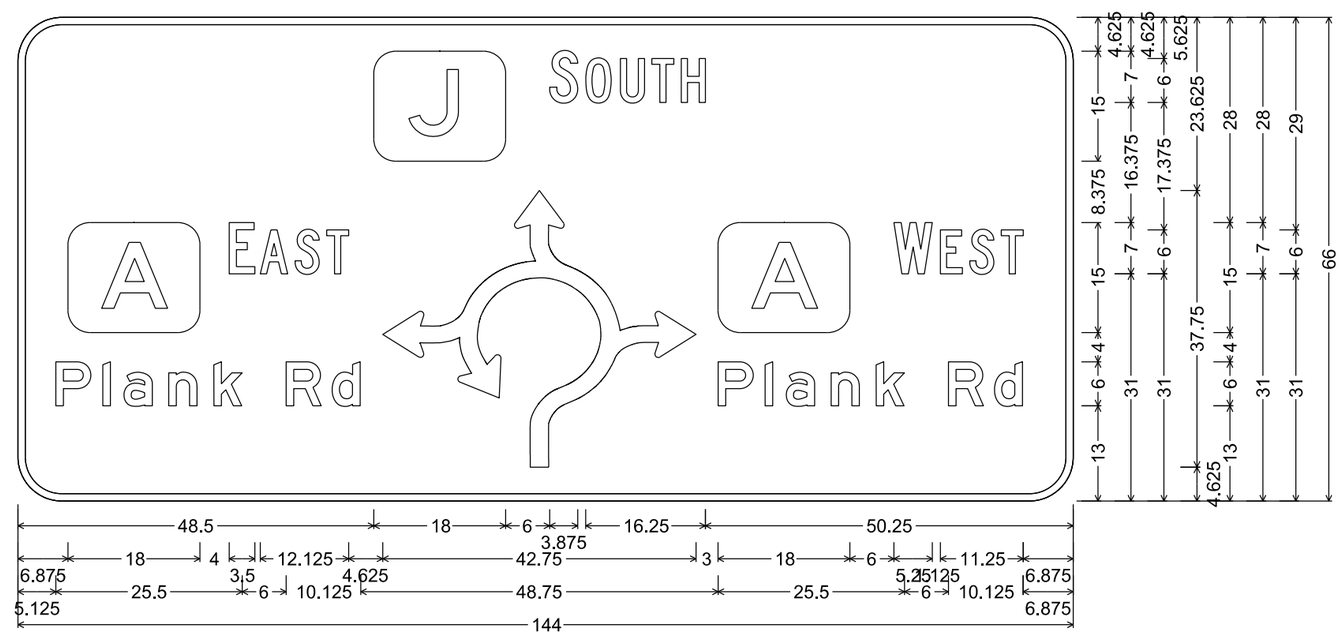

D1-62; 6.000" Radius, 1.000" Border,
"SOUTH", C; "EAST", C; "Plank", E; "Rd", E; "WEST", C; "Plank", E; "Rd", E

7

7

NOTES

1. Signs are Type II - Type H Reflective
2. Color:
   Background - Green
   Message - White
3. Message Series - C except as noted

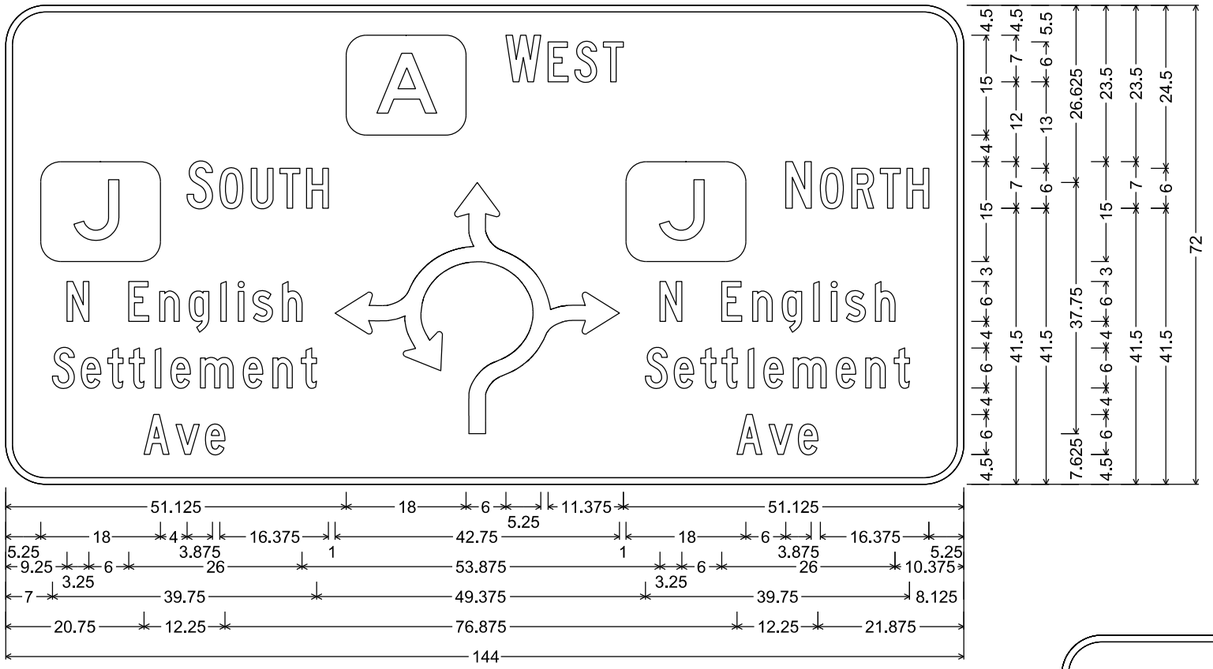

D1-62; 6.000" Radius, 1.000" Border,
"WEST", C; "SOUTH", C; "N", C; "English", C; "Settlement", C; "Ave", C; "NORTH", C

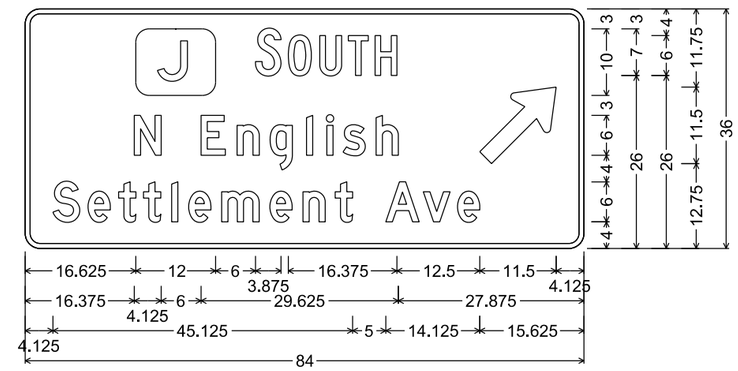

D1-2; 2.250" Radius, 0.750" Border,
"SOUTH", C; "N", D; "English", D; "Settlement", D; "Ave", D

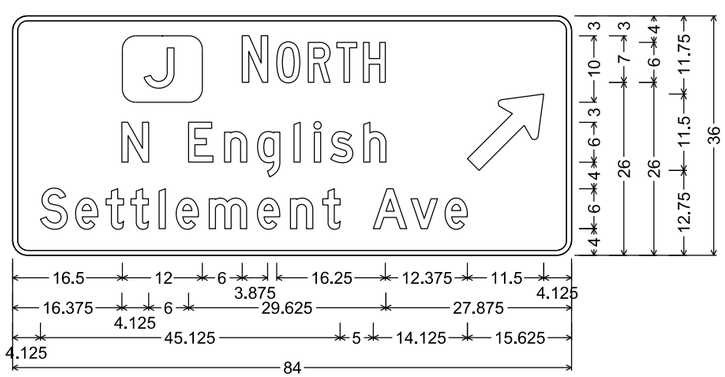

D1-2; 2.250" Radius, 0.750" Border,
"NORTH", C; "N", D; "English", D; "Settlement", D; "Ave", D

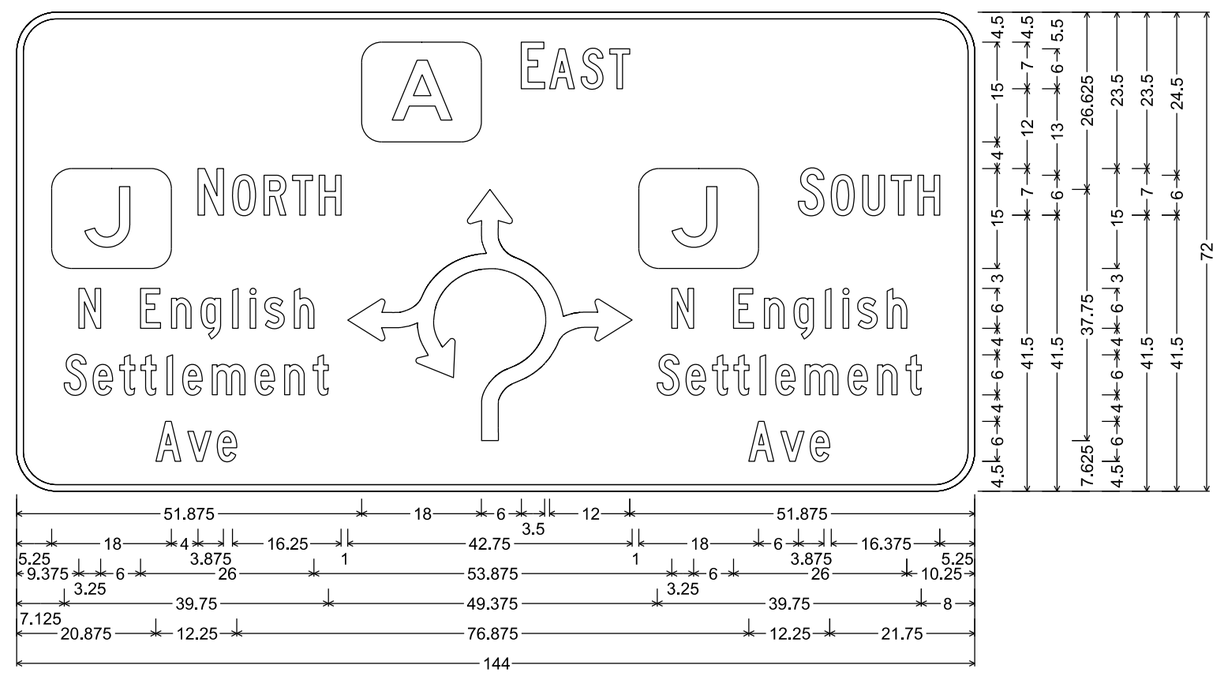

D1-62; 6.000" Radius, 1.000" Border,
"EAST", C; "NORTH", C; "N", C; "English", C; "Settlement", C; "Ave", C; "SOUTH", C

7

7

PROJECT NO:2814-03-70	HWY: CTH A	COUNTY:RACINE	PERMANENT SIGNING	SHEET NO: 92	E

Standard Detail Drawing List

08A05-21C	INLET COVERS TYPE F, HM, HM-S, S, T, HM-GJ & HM-GJ-S
08C07-03	INLETS 2X2-FT, 2X2.5-FT, 2X3-FT, 2.5X3-FT & 2X3.5-FT
08D01-23A	CONCRETE CURB & GUTTER
08D01-23B	CONCRETE CURB, TIES AND CURB AND GUTTER APPLICATIONS
08D04-07	CONCRETE SURFACE DRAINS & ASPHALTIC FLUMES
08E08-03	TYPICAL INSTALLATIONS OF EROSION BALES / TEMPORARY DITCH CHECKS
08E09-06	SILT FENCE
08E10-02	INLET PROTECTION TYPE A, B, C AND D
08E14-01	TRACKING PAD
08E15-01	CULVERT PIPE CHECK
08F01-11	APRON ENDWALLS FOR CULVERT PIPE
08F04-08	JOINT TIES FOR CONCRETE PIPE AND CONCRETE COLLAR DETAIL
09B02-10	CONDUIT
09B04-12	PULL BOX
09C02-09	CONCRETE BASES, TYPES 1, 2, 5, & 6
09C03-04	TRANSFORMER/PEDESTAL BASES
09C05-10	CONCRETE CONTROL CABINET BASES
09C14-03	CONCRETE CONTROL CABINET BASE, TYPE L
09D01-05	CABINET SERVICE INSTALLATION (METER BREAKER PEDESTAL)
09D04-03	LIGHTING CONTROL CABINET 120/240 VOLT
09E01-15D	POLE MOUNTINGS FOR LIGHTING UNITS, TYPE 5 (30 FEET)
09E01-15G	HARDWARE DETAILS FOR POLE MOUNTINGS
11B02-02	CONCRETE MEDIAN NOSE
14B42-07A	MIDWEST GUARDRAIL SYSTEM (MGS) GUARDRAIL
14B42-07B	MIDWEST GUARDRAIL SYSTEM (MGS) GUARDRAIL
14B42-07C	MIDWEST GUARDRAIL SYSTEM (MGS) GUARDRAIL
14B42-07D	MIDWEST GUARDRAIL SYSTEM (MGS) GUARDRAIL
14B44-04A	MIDWEST GUARDRAIL SYSTEM ENERGY ABSORBING TERMINAL (MGS)
14B44-04B	MIDWEST GUARDRAIL SYSTEM ENERGY ABSORBING TERMINAL (MGS)
14B44-04C	MIDWEST GUARDRAIL SYSTEM ENERGY ABSORBING TERMINAL (MGS)
14B53-02A	SHORT RADIUS BEAM GUARD (MGS) SHORT RADIUS TERMINAL (MGS)
14B53-02B	SHORT RADIUS BEAM GUARD (MGS) SHORT RADIUS TERMINAL (MGS)
14B53-02C	SHORT RADIUS BEAM GUARD (MGS) SHORT RADIUS TERMINAL (MGS)
14B53-02D	SHORT RADIUS BEAM GUARD (MGS) SHORT RADIUS TERMINAL (MGS)
14B53-02E	SHORT RADIUS BEAM GUARD (MGS) SHORT RADIUS TERMINAL (MGS)
14B53-02F	SHORT RADIUS BEAM GUARD (MGS) SHORT RADIUS TERMINAL (MGS)
14B53-02G	SHORT RADIUS BEAM GUARD (MGS) SHORT RADIUS TERMINAL (MGS)
14B53-02H	SHORT RADIUS BEAM GUARD (MGS) SHORT RADIUS TERMINAL (MGS)
14B53-02I	SHORT RADIUS BEAM GUARD (MGS) SHORT RADIUS TERMINAL (MGS)
15A03-02A	FLEXIBLE MARKER POST FOR CULVERT END
15A03-02B	FLEXIBLE MARKER POST FOR CULVERT END
15C02-09A	BARRICADES AND SIGNS FOR MAINLINE CLOSURES
15C02-09B	BARRICADES AND SIGNS FOR VARIOUS CLOSURES
15C02-09C	DETOUR SIGNING FOR MAINLINE CLOSURES
15C08-23A	PERMANENT LONGITUDINAL PAVEMENT MARKINGS
15C11-10B	CHANNELIZING DEVICES DRUMS, CONES, BARRICADES AND VERTICAL PANELS
15C18-09A	MEDIAN ISLAND MARKINGS
15C18-09B	PAVEMENT MARKINGS, MEDIAN ISLAND NOSE
15C22-01	DOTTED EXTENSION FOR ROUNDABOUT

6

GENERAL NOTES

DETAILS OF CONSTRUCTION, MATERIALS AND WORKMANSHIP NOT SHOWN ON THIS DRAWING SHALL CONFORM TO THE PERTINENT REQUIREMENTS OF THE STANDARD SPECIFICATIONS AND THE APPLICABLE SPECIAL PROVISIONS.

DETAIL DRAWINGS FOR PROPOSED ALTERNATE DESIGNS FOR INLET COVERS SHALL BE SUBMITTED TO THE ENGINEER FOR APPROVAL PROVIDING THAT SUCH ALTERNATE DESIGNS MAKE PROVISION FOR EQUIVALENT CAPACITY AND STRENGTH.

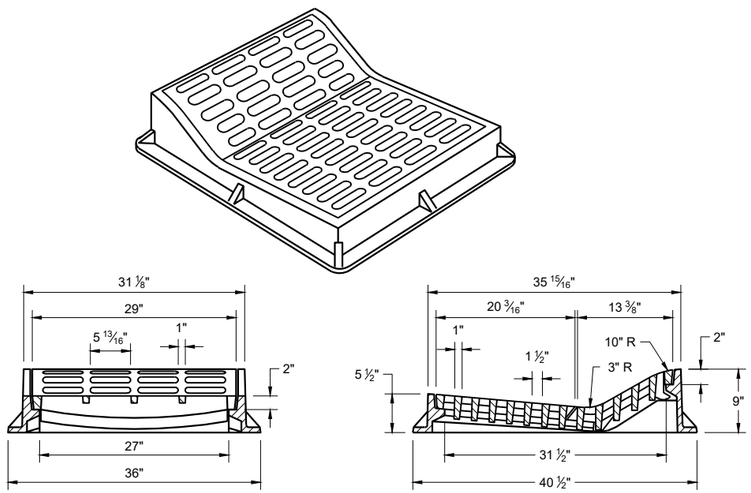

TYPE "F"

USE WITH TYPES "A" AND "D" CONCRETE CURB AND GUTTER, 36"

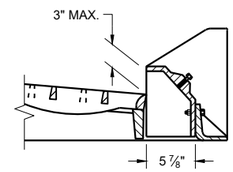

ALTERNATIVE CURB BOX FOR TYPE "HM" COVER

USE WITH TYPES "G" AND "J" CONCRETE CURB AND GUTTER, 30 INCH
NOTED AS TYP "HM-GJ" ON DRAINAGE TABLE

NOTE:
SPECIAL GRATE FOR THE TYPE "H" COVER MAY ALSO BE USED FOR THE TYPE "HM-GJ" COVER.

NOTED AS TYPE HM-GJ-S ON THE DRAINAGE TABLE.

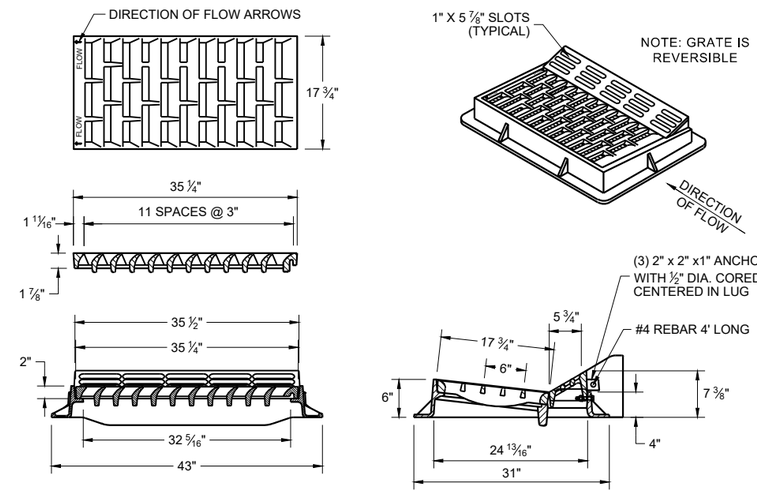

TYPE "HM"

USE WITH TYPES "A" AND "D" CONCRETE CURB AND GUTTER, 36"

NOTE:
SPECIAL GRATE FOR THE TYPE "H" COVER MAY ALSO BE USED FOR THE TYPE "HM-GJ" COVER.

NOTED AS TYPE HM-GJ-S ON THE DRAINAGE TABLE.

6

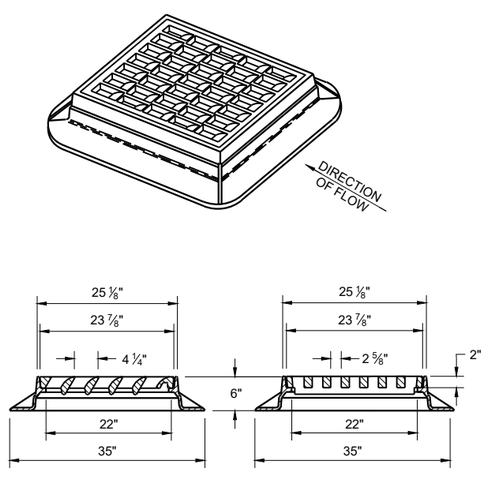

TYPE "S"

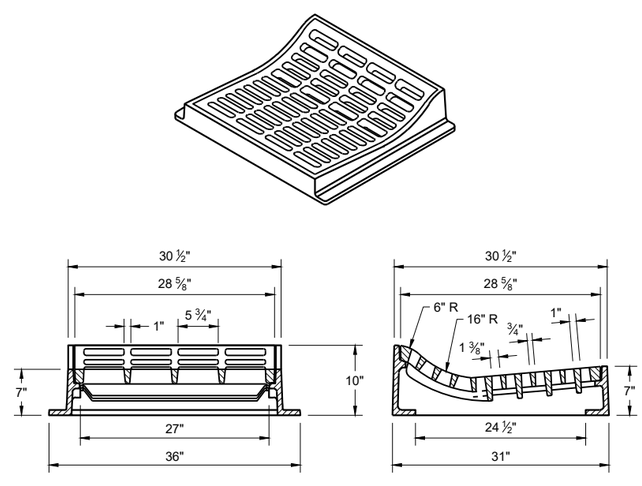

TYPE "T"

USE WITH TYPES "R" AND "T" CONCRETE CURB AND GUTTER, 36"

INLET COVERS
TYPES F, HM, HM-S, S, T, HM-GJ AND HM-GJ-S

STATE OF WISCONSIN
DEPARTMENT OF TRANSPORTATION

APPROVED
December 2023 — DATE
/S/ Rodney Taylor — ROADWAY STANDARDS DEVELOPMENT UNIT SUPERVISOR

FHWA

6

SDD 08A05-21c

SDD 08A05-21c

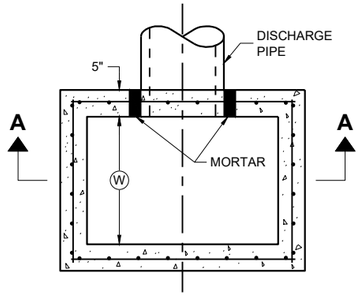

PLAN VIEW

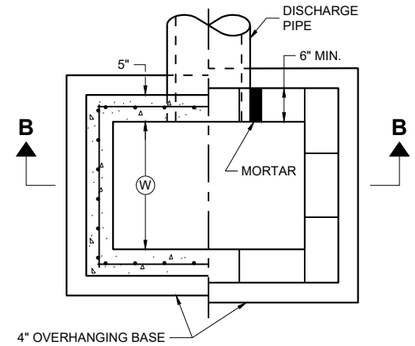

PLAN VIEW

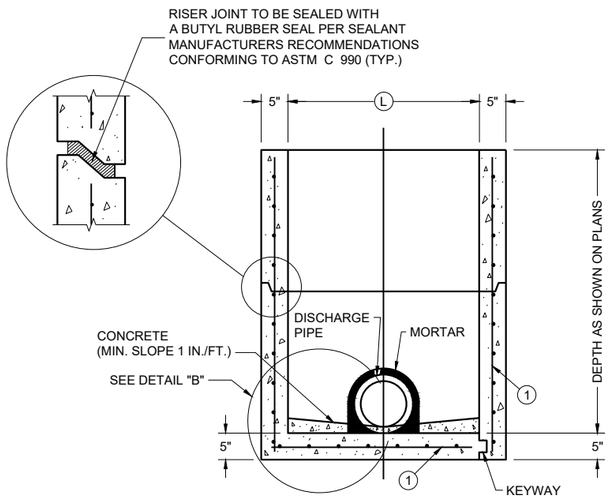

PRECAST REINFORCED CONCRETE WITH MONOLITHIC BASE

PRECAST REINFORCED CONCRETE WITH INTEGRAL BASE

SECTION A - A

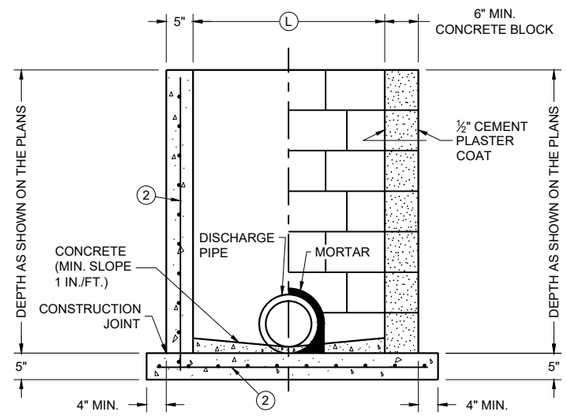

CAST IN PLACE REINFORCED CONCRETE

CONCRETE BLOCK WITH CAST IN PLACE OR PRECAST REINFORCED CONCRETE BASE (1)

SECTION B - B

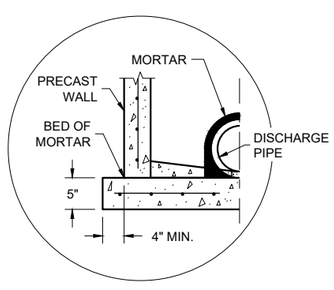

SEPARATE PRECAST REINFORCED CONCRETE BASE OPTION

DETAIL "B"

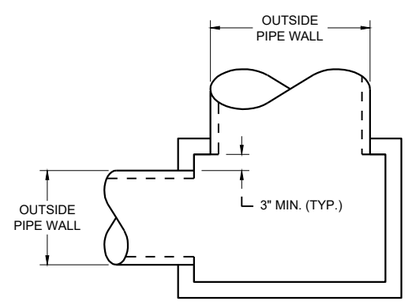

DETAIL "A"

GENERAL NOTES

DETAILS OF CONSTRUCTION, MATERIALS AND WORKMANSHIP N0T SHOWN ON THIS DRAWING SHALL CONFORM TO THE PERTINENT REQUIREMENTS OF THE STANDARD SPECIFICATIONS AND THE APPLICABLE SPECIAL PROVISIONS.

UNLESS OTHERWISE AUTHORIZED IN WRITING BY THE ENGINEER, THE CONTRACTOR SHALL NOT ORDER AND DELIVER PRECAST INLET UNITS REQUIRED FOR THE PROJECT UNTIL A LIST OF SIZES IS FURNISHED BY THE ENGINEER.

DETAILED DRAWINGS FOR PROPOSED ALTERNATE DESIGNS FOR UNDERGROUND DRAINAGE STRUCTURES SHALL BE SUBMITTED TO THE ENGINEER FOR APPROVAL PROVIDING THAT SUCH ALTERNATE DESIGNS MAKE PROVISION FOR EQUIVALENT CAPACITY AND STRENGTH.

ALL PRECAST INLET UNITS SHALL CONFORM TO THE PERTINENT REQUIREMENTS OF ASTM C 913.

ALL DRAINAGE STRUCTURES ARE DESIGNATED ON THE PLANS AS "MANHOLES 3X3-L", "CATCH BASINS 4-B", "INLETS 2X3-H", ETC. THE FIRST NUMBERS DESIGNATES THE SIZE OF THE STRUCTURE, AND THE FOLLOWING LETTER DESIGNATES THE TYPE OF COVER TO BE USED TO COMPRISE THE COMPLETE UNIT.

BASES SHALL BE PLACED ON A BED OF MATERIAL AT LEAST 6 INCHES IN DEPTH, WHICH MEETS THE REQUIREMENTS OF FOUNDATION BACKFILL. THIS BEDDING SHALL BE COMPACTED AND PROVIDE UNIFORM SUPPORT FOR THE ENTIRE AREA OF THE BASE.

ALL BAR STEEL REINFORCEMENT SHALL BE EMBEDDED 2 INCHES CLEAR UNLESS OTHERWISE SHOWN OR NOTED.

PRECAST REINFORCED RISERS SHALL HAVE A TONGUE AND GROOVE JOINT WITH TONGUE UP OR DOWN.

4" OVERHANGING BASES ARE REQUIRED FOR CAST-IN-PLACE REINFORCED CONCRETE AND CONCRETE BLOCK INSTALLATIONS. 4" OVERHANG IS REQUIRED WHEN SEPARATE PRECAST BASE IS PROVIDED. OVERHANG IS NOT REQUIRED ON PRECAST STRUCTURES WITH AN INTEGRAL OR MONOLITHIC BASE.

MAXIMUM INSIDE PIPE DIAMETER DETERMINED BY 3" CLEARANCE ON EACH SIDE OF THE OUTSIDE WALL OF THE PIPE. SEE DETAIL "A". ASSUMES PIPE ENTERS PERPENDICULAR TO THE STRUCTURE.

(1) FOR PRECAST INLETS AND REINFORCED CONCRETE BASES PROVIDE REINFORCING STEEL IN ACCORDANCE TO ASTM C 913

(2) CONTRACTOR TO PROVIDE DRAWING(S) STAMPED BY A PROFESSIONAL ENGINEER FOR STEEL REINFORCING DESIGN FOR CAST-IN-PLACE STRUCTURES.

CATCH BASIN COVER MATRIX

INLET SIZE	WIDTH (W) (FT.)	LENGTH (L) (FT.)	INLET COVER TYPE									
			ALL A'S	ALL B'S	BW	F	ALL H'S	S	T	V	WM	V V-B
2 X 2-FT	2	2	X	X				X				
2 X 2.5-FT	2	2.5			X			X	X	X	X	
2 X 3-FT	2	3					X					
2.5 X 3-FT	2.5	3				X						
2 X 3.5-FT	2	3.5										X

PIPE MATRIX

CATCH BASIN SIZE	MAXIMUM INSIDE PIPE DIAMETER FOR TWO PIPES	
	WIDTH (IN)	LENGTH (IN)
2 X 2-FT	12	12
2 X 2.5-FT	12	18
2 X 3-FT	12	24
2.5 X 3-FT	18	24
2 X 3.5-FT	12	30

INLETS 2 X 2-FT, 2 X 2.5-FT, 2 X 3-FT, 2.5 X 3-FT AND 2X3.5-FT

INLETS 2 X 2-FT, 2 X 2.5-FT, 2 X 3-FT, 2.5 X 3-FT AND 2 X 3.5-FT

STATE OF WISCONSIN
DEPARTMENT OF TRANSPORTATION

APPROVED
December 2023 — DATE
/S/ Rodney Taylor — ROADWAY STANDARDS DEVELOPMENT UNIT SUPERVISOR
FHWA

6

SDD 08C07-03

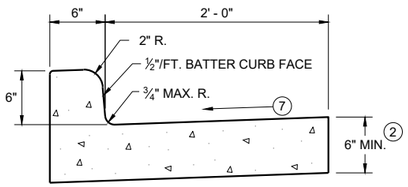

TYPES A (1) & D

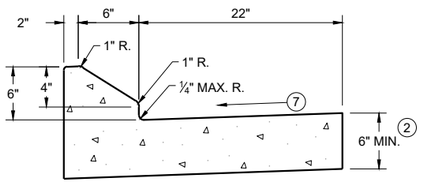

6" SLOPED CURB TYPES G (1) & J

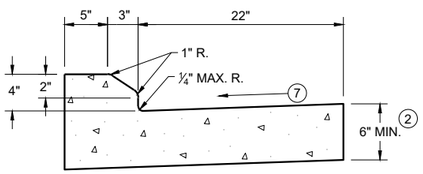

4" SLOPED CURB TYPES G (1) & J

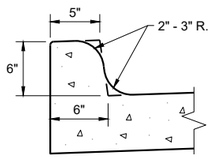

TYPES K (1) & L
(OPTIONAL CURB SHAPE)

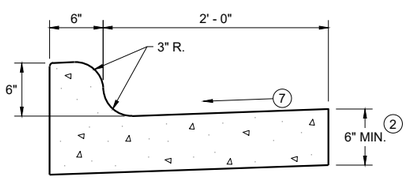

TYPES K (1) & L

CONCRETE CURB AND GUTTER 30"

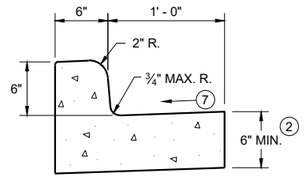

TYPES A (1) & D

CONCRETE CURB AND GUTTER 18"

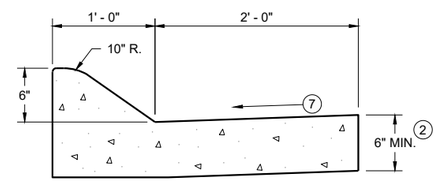

6" SLOPED CURB TYPES A (1) & D

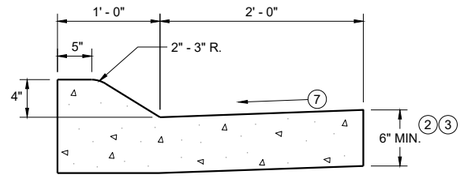

4" SLOPED CURB TYPES A (1) & D

CONCRETE CURB AND GUTTER 36"

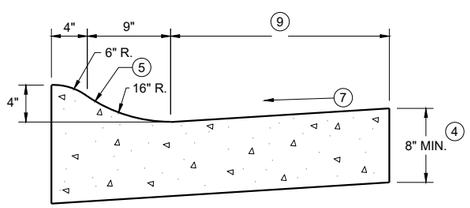

4" SLOPED CURB TYPES R (1) & T

TBT & TBTT	X
30"	22"
36"	28"

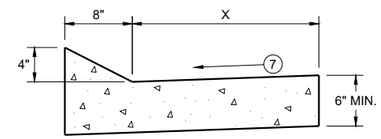

TYPES TBT & TBTT (1)

CONCRETE CURB AND GUTTER

PAVEMENT THICKNESS AND MAXIMUM CONCRETE PANEL WIDTH TABLE

PAVEMENT THICKNESS	MAXIMUM PANEL WIDTH
LESS THAN 10"	12'
10" & ABOVE	15'

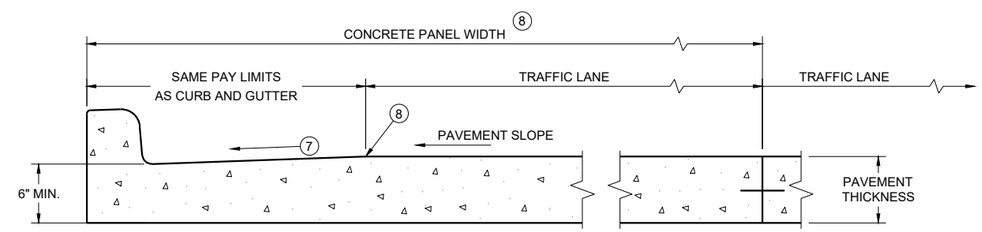

PARTIAL SECTION OF PAVEMENT * WITH INTEGRAL CURB AND GUTTER

* BIKE LANE IS NOT SHOWN

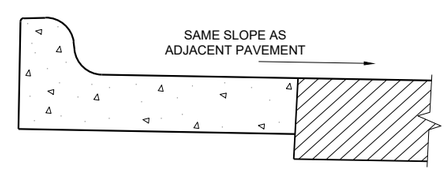

REVERSE SLOPE GUTTER (6)
(TYPICAL FOR ALL CURB & GUTTER TYPES)

GENERAL NOTES

DETAILS OF CONSTRUCTION AND WORKMANSHIP NOT SHOWN ON THIS DRAWING SHALL CONFORM TO THE PERTINENT REQUIREMENTS OF THE CONTRACT.

PAVEMENT TIES AND TIE BARS SHALL BE EPOXY COATED IN CONFORMANCE WITH SUBSECTION 505.2.6.2 OF THE STANDARD SPECIFICATIONS.

INTEGRAL CURB AND GUTTER SHALL CONFORM TO THE DETAILS SHOWN FOR CONCRETE CURB AND GUTTER INCLUDING THE TRANSVERSE GUTTER SLOPE.

UNLESS OTHERWISE SHOWN ON THE TYPICAL CROSS SECTIONS, THE BASE AGGREGATE AND COMMON EXCAVATION LIMITS ARE 2' - 0" BEHIND THE BACK OF CURBS.

(1) TIE BARS ARE REQUIRED FOR CURB AND GUTTERS TYPES A, G, K, R, AND TBTT.

(2) THE BOTTOM OF CURB AND GUTTER MAY BE CONSTRUCTED EITHER LEVEL OR PARALLEL TO THE SLOPE OF THE SUBGRADE OR BASE AGGREGATE PROVIDED A 6" MINIMUM GUTTER THICKNESS IS MAINTAINED.

(3) USE 8" MINIMUM GUTTER THICKNESS WHEN USED WITH AN ADJACENT CONCRETE TRUCK APRON PLACED BEHIND BACK OF CURB.

(4) THE BOTTOM OF CURB AND GUTTER MAY BE CONSTRUCTED EITHER LEVEL OR PARALLEL TO THE SLOPE OF THE SUBGRADE OR BASE AGGREGATE PROVIDED A 8" MINIMUM GUTTER THICKNESS IS MAINTAINED.

(5) UNLESS OTHERWISE NOTED, FOR STAKING PURPOSES THE FACE OF CURB IS 6" FROM THE BACK OF CURB.

(6) WHEN REVERSE SLOPE GUTTER IS REQUIRED, THE LOCATION(S) WILL BE SHOWN ELSEWHERE IN THE PLAN.

(7) USE 4% GUTTER CROSS SLOPE UNLESS OTHERWISE NOTED IN THE PLANS.

(8) INCLUDE LONGITUDINAL JOINT AND TIE BARS ALONG LANE EDGE WHEN CONCRETE PANEL WIDTH EXCEEDS THE MAXIMUM WIDTH PER TABLE BELOW. LONGITUDINAL JOINT(S) ARE NOT ALLOWED WITHIN TRAFFIC LANES AND BIKE LANES. LONGITUDINAL JOINT MAY BE SAWED.

(9) CONCRETE CURB AND GUTTER 4-INCH SLOPED 30-INCH TYPE "R" AND "T" = 17 INCHES
CONCRETE CURB AND GUTTER 4-INCH SLOPED 36-INCH TYPE "R" AND "T" = 23 INCHES

CONCRETE CURB AND GUTTER

STATE OF WISCONSIN
DEPARTMENT OF TRANSPORTATION

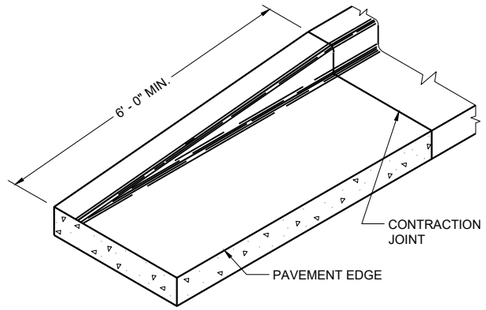

END SECTION CURB AND GUTTER

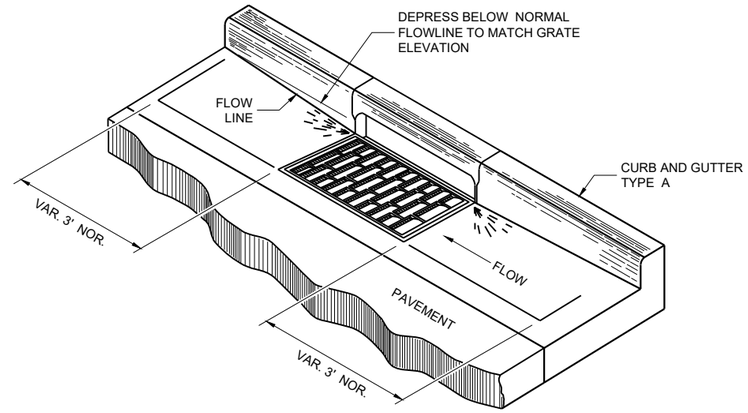

DETAIL OF CURB AND GUTTER AT INLETS

(TYPICAL H INLET COVER SHOWN)

GENERAL NOTES

DETAILS OF CONSTRUCTION AND WORKMANSHIP NOT SHOWN ON THIS DRAWING SHALL CONFORM TO THE PERTINENT REQUIREMENTS OF THE CONTRACT.

PAVEMENT TIES AND TIE BARS SHALL BE EPOXY COATED IN CONFORMANCE WITH SUBSECTION 505.2.6.2 OF THE STANDARD SPECIFICATIONS.

UNLESS OTHERWISE SHOWN ON THE TYPICAL CROSS SECTIONS, THE BASE AGGREGATE AND COMMON EXCAVATION LIMITS ARE 2' - 0" BEHIND THE BACK OF CURBS.

(1) TIE BARS ARE REQUIRED FOR CURB AND GUTTERS TYPES A, G, K, R, AND TBTT.

(2) THE BOTTOM OF CURB AND GUTTER MAY BE CONSTRUCTED EITHER LEVEL OR PARALLEL TO THE SLOPE OF THE SUBGRADE OR BASE AGGREGATE PROVIDED A 6" MINIMUM GUTTER THICKNESS IS MAINTAINED.

(10) REFER TO SDD 08D18 AND 08D19 FOR ADDITIONAL DRIVEWAY ENTRANCE CURB DETAILS.

(11) PLACE 1" THICK EXPANSION JOINT MATERIAL BETWEEN VERTICAL FACE CURB TYPES EXTENDING FROM THE TOP OF CURB TO 1 INCH BELOW THE ADJOINING CONCRETE SURFACE. RIGID CONCRETE STRUCTURES INCLUDE RAISED CONCRETE MEDIANS, CONCRETE SAFETY ISLANDS, SPLITTER ISLANDS, OR LOCATIONS IDENTIFIED ON THE PLANS.

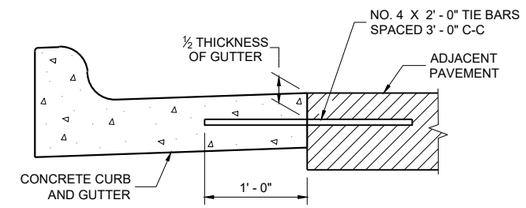

TYPICAL TIE BAR LOCATION (1)

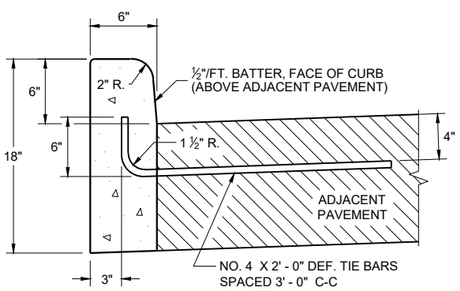

TYPES A (1) & D

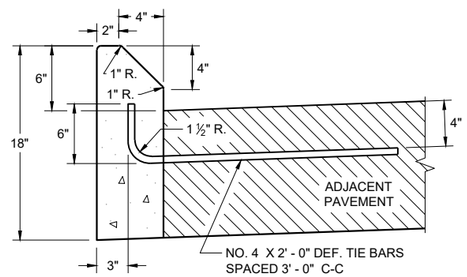

TYPES G (1) & J

CONCRETE CURB

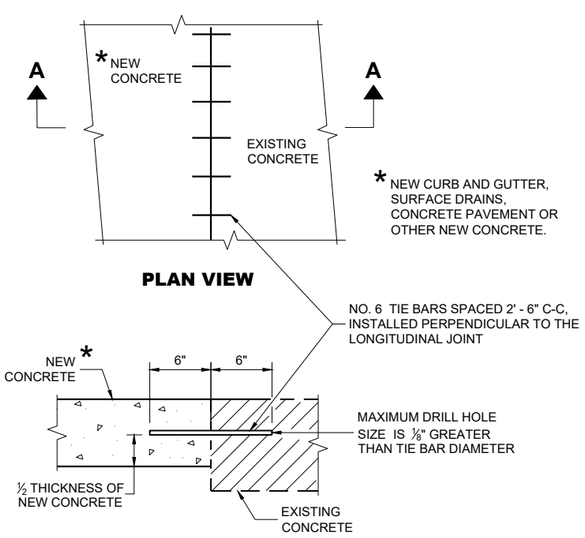

PLAN VIEW

SECTION A - A

TIE BARS DRILLED INTO EXISTING PAVEMENT

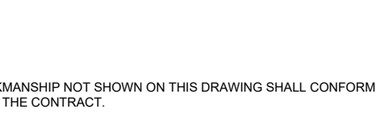

DRIVEWAY ENTRANCE CURB (10)

(WHEN DIRECTED BY THE ENGINEER)

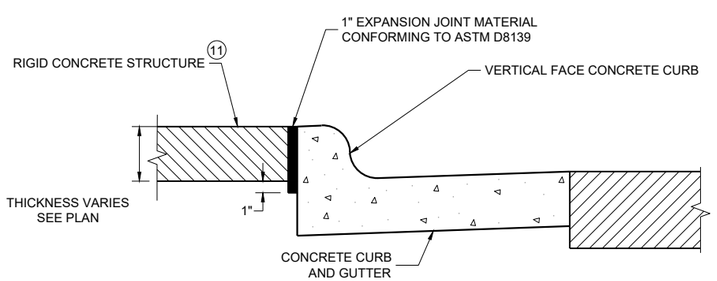

EXPANSION JOINT DETAIL FOR VERTICAL CURB ABUTTING A RIGID STRUCTURE (11)

CONCRETE CURB, TIES AND CURB AND GUTTER APPLICATIONS

STATE OF WISCONSIN
DEPARTMENT OF TRANSPORTATION

APPROVED
May 2023 — DATE
/S/ Rodnery Taylor — ROADWAY STANDARDS DEVELOPMENT UNIT SUPERVISOR

FHWA

NOTE: TAPER CURB ENDS TO GUTTER IN 1' - 0"

ASPHALTIC FLUME

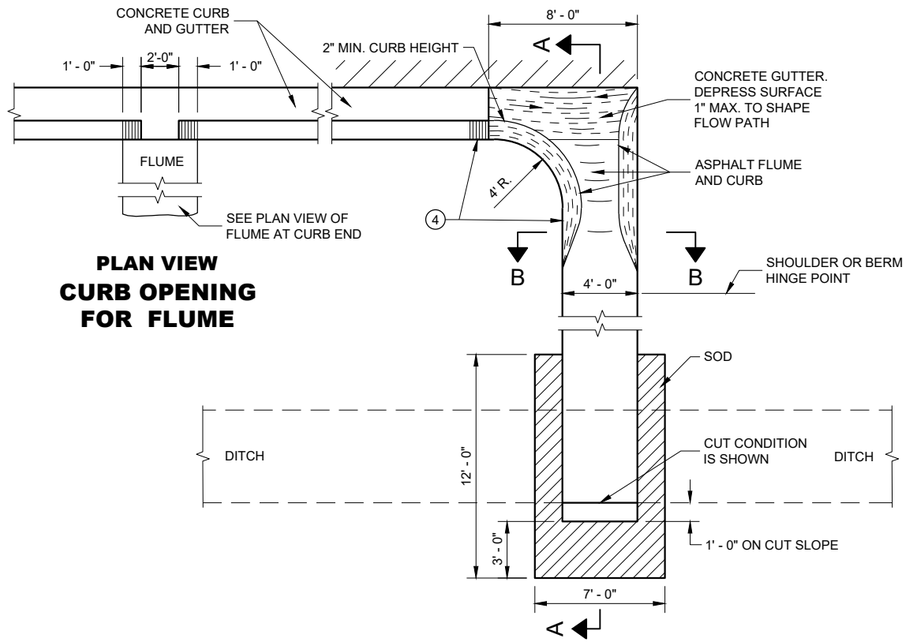

PLAN VIEW
CURB OPENING FOR FLUME

PLAN VIEW
FLUME AT CURB END

GENERAL NOTES

DETAILS OF CONSTRUCTION, MATERIALS AND WORKMANSHIP NOT SHOWN ON THIS DRAWING SHALL CONFORM TO PERTINENT REQUIREMENTS OF THE STANDARD SPECIFICATIONS AND APPLICABLE SPECIAL PROVISIONS.

4" X 4" - W3.0 X W3.0 CONCRETE REINFORCEMENT SHALL BE IN ACCORDANCE WITH AASHTO SPECIFICATION M55.

1. JOINTS SHALL BE ⅛" TO ¼" WIDE BY 1½" DEEP AND SPACED AT UNIFORM INTERVALS OF APPROXIMATELY 4 FEET.
2. GEOTEXTILE TYPE "R" SHALL UNDERLAY THE FULL LENGTH AND WIDTH OF THE CONCRETE SURFACE DRAIN AND RIPRAP.
3. CONCRETE SURFACE DRAIN WITHOUT CURB AND GUTTER MAY BE USED ON BACKSLOPES WHEN SPECIFIED.
4. ANGLE OF FLUME IN RELATION TO BACK OF CURB TO BE CONSTRUCTED PER THE PLAN DETAILS OR AS DIRECTED BY THE ENGINEER. ANGLE OF FLUME MAY BE OTHER THAN 90 DEGREES AS SHOWN.

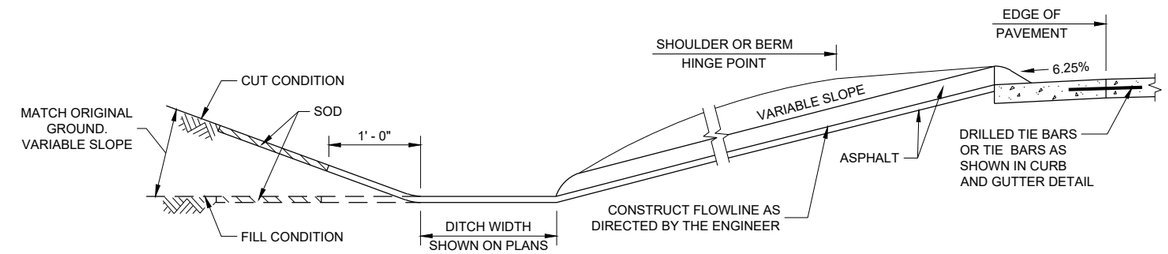

SECTION A - A

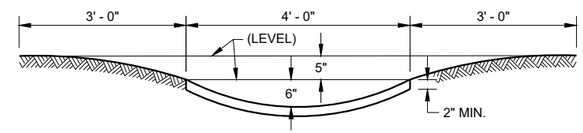

SECTION B - B

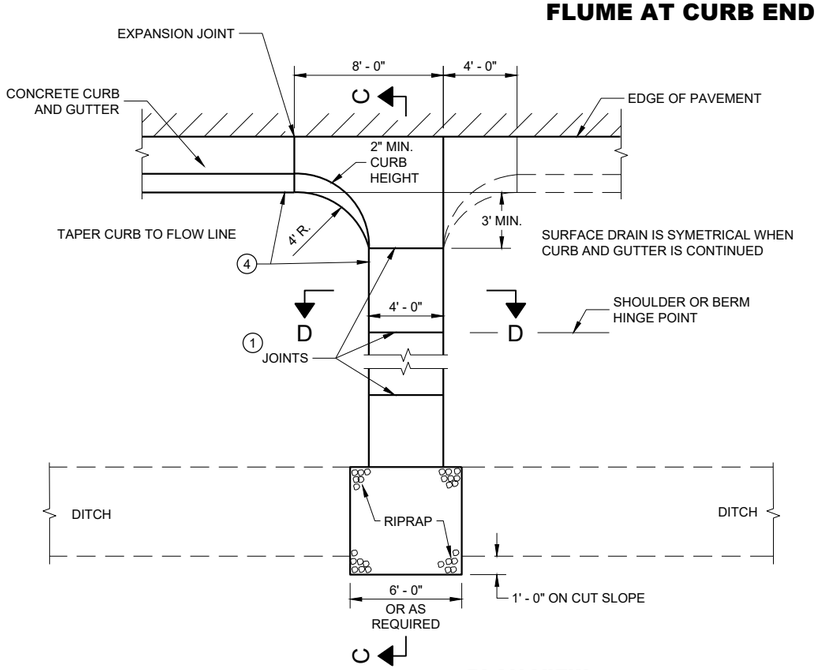

PLAN VIEW
CONCRETE SURFACE DRAIN

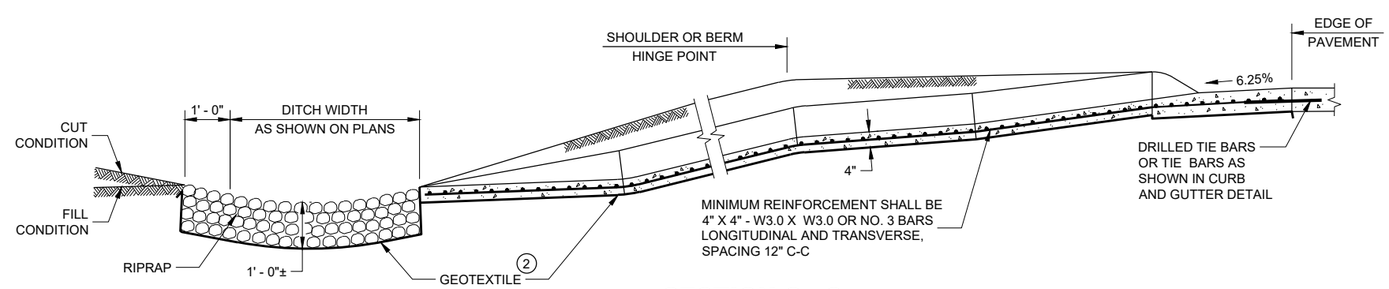

SECTION C - C

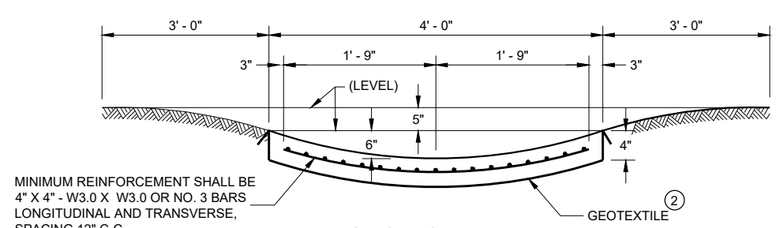

SECTION D - D

CONCRETE SURFACE DRAINS AND ASPHALTIC FLUMES

STATE OF WISCONSIN
DEPARTMENT OF TRANSPORTATION

APPROVED
May 2023 — DATE
/S/ Rodney Taylor — ROADWAY STANDARDS DEVE ENGINEER

FHWA

6

SDD 08D04 - 07

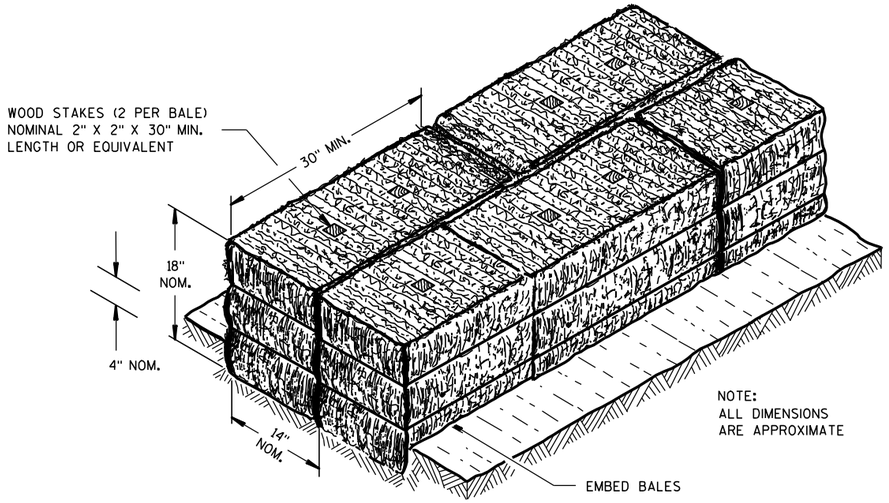

SECTION A-A

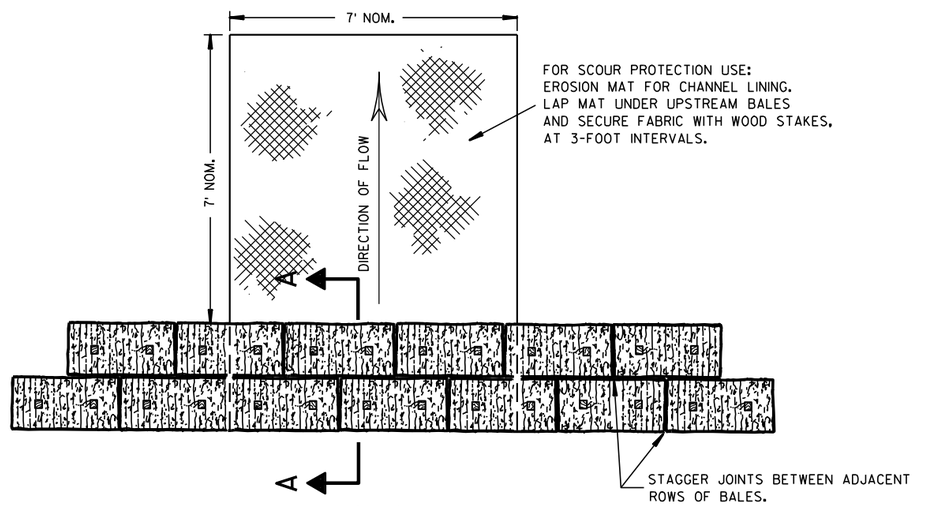

PLAN VIEW

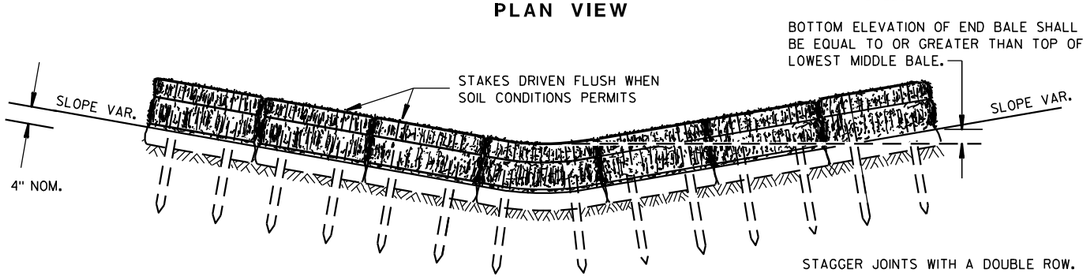

FRONT ELEVATION

TEMPORARY DITCH CHECK USING EROSION BALES ①

GENERAL NOTES

DETAILS OF CONSTRUCTION, MATERIALS AND WORKMANSHIP NOT SHOWN ON THIS DRAWING SHALL CONFORM TO THE PERTINENT REQUIREMENTS OF THE STANDARD SPECIFICATIONS AND THE APPLICABLE SPECIAL PROVISIONS.

① TEMPORARY DITCH CHECKS EITHER EROSION BALES OR MANUFACTURED SHALL BE PAID FOR UNDER THE BID ITEM OF TEMPORARY DITCH CHECK. THE DEPARTMENT WILL NOT PAY FOR TEMPORARY DITCH CHECKS CONSTRUCTED OF A SINGLE ROW OF EROSION BALES.

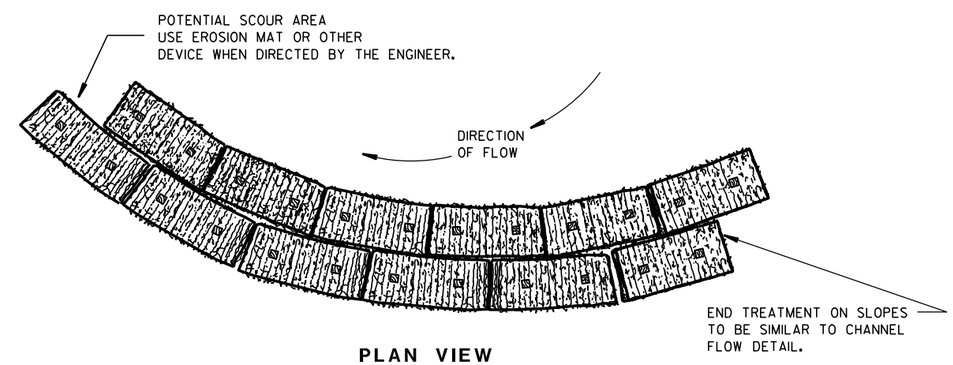

PLAN VIEW

WHEN ALTERING THE DIRECTION OF FLOW

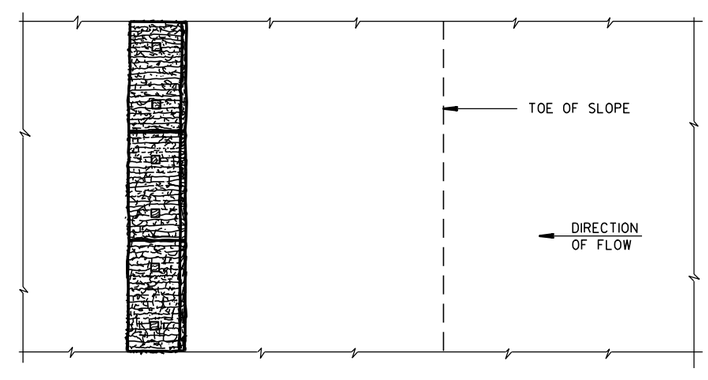

PLAN VIEW

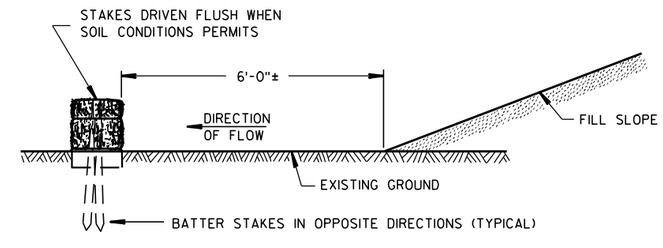

FRONT ELEVATION

WHEN EXISTING GROUND SLOPES AWAY FROM FILL SLOPE

EROSION BALES FOR SHEET FLOW

TYPICAL INSTALLATIONS OF EROSION BALES / TEMPORARY DITCH CHECKS

STATE OF WISCONSIN
DEPARTMENT OF TRANSPORTATION

APPROVED
6/04/02 — DATE
/S/ Beth Cann — CHIEF ROADWAY DEVELOPMENT ENGINEER
FHWA

6

6

S.D.D. 8 E 8-3

S.D.D. 8 E 8-3

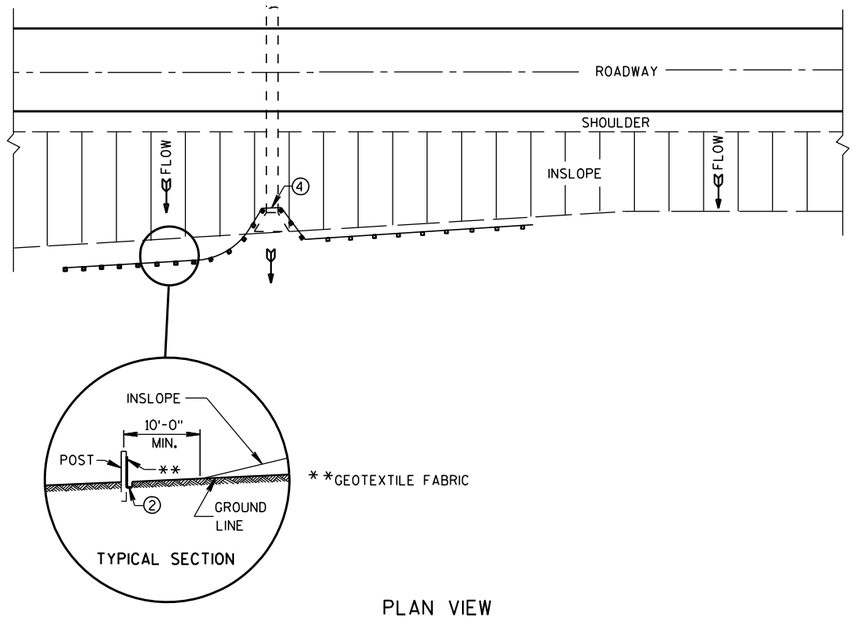

PLAN VIEW

TYPICAL APPLICATION OF SILT FENCE

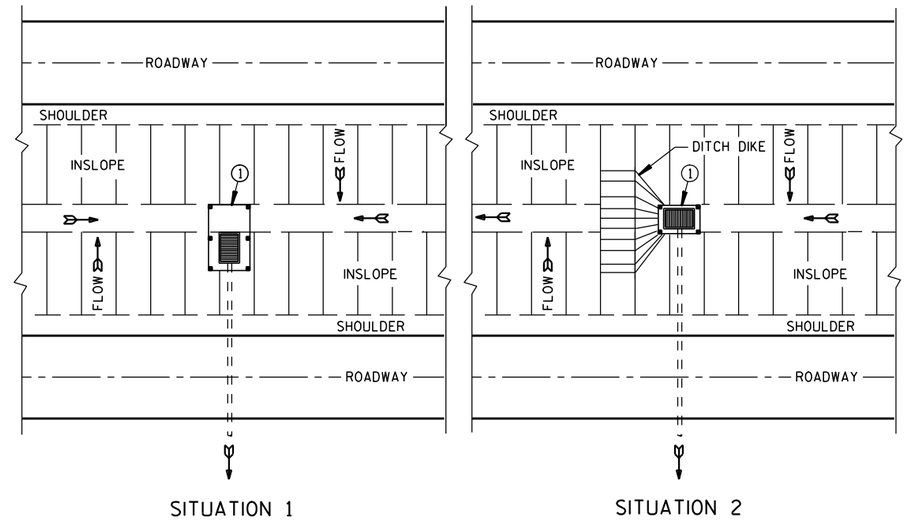

PLAN VIEW

SILT FENCE AT MEDIAN SURFACE DRAINS

GENERAL NOTES

DETAILS OF CONSTRUCTION NOT SHOWN ON THIS DRAWING SHALL CONFORM TO THE PERTINENT REQUIREMENTS OF THE STANDARD SPECIFICATIONS AND APPLICABLE SPECIAL PROVISIONS.

① HORIZONTAL BRACE REQUIRED WITH 2" X 4" WOODEN FRAME OR EQUIVALENT AT TOP OF POSTS.

② FOR MANUAL INSTALLATIONS THE TRENCH SHALL BE A MINIMUM OF 4" WIDE & 6" DEEP TO BURY AND ANCHOR THE GEOTEXTILE FABRIC. FOLD MATERIAL TO FIT TRENCH AND BACKFILL & COMPACT TRENCH WITH EXCAVATED SOIL.

③ WOOD POSTS SHALL BE A MINIMUM SIZE OF 1⅛" X 1⅛" OF OAK OR HICKORY.

④ SILT FENCE TO EXTEND ACROSS THE TOP OF THE PIPE.

⑤ CONSTRUCT SILT FENCE FROM A CONTINUOUS ROLL IF POSSIBLE BY CUTTING LENGTHS TO AVOID JOINTS. IF A JOINT IS NECESSARY USE ONE OF THE FOLLOWING TWO METHODS; A) OVERLAP THE END POSTS AND TWIST, OR ROTATE, AT LEAST 180 DEGREES. B) HOOK THE END OF EACH SILT FENCE LENGTH.

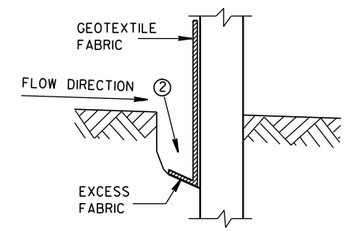

TRENCH DETAIL

NOTE: ADDITIONAL POST DEPTH OR TIE BACKS MAY BE REQUIRED IN UNSTABLE SOILS

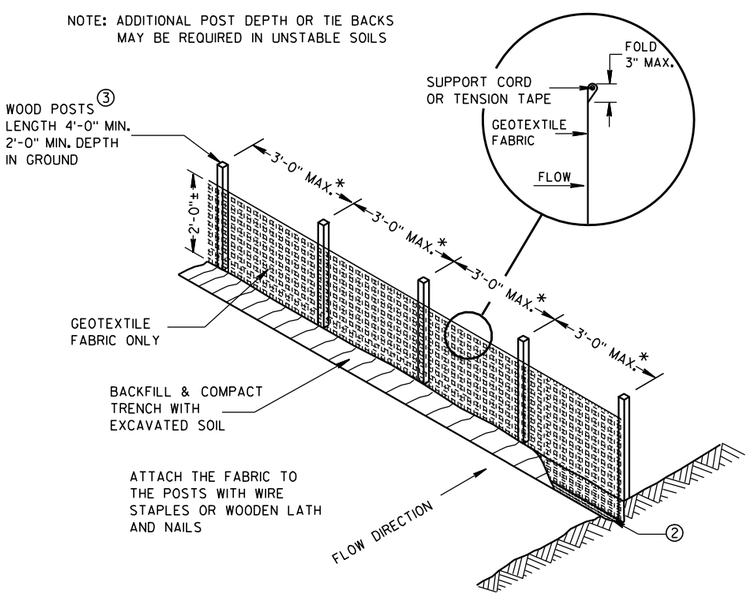

*NOTE: 8'-0" POST SPACING ALLOWED IF A WOVEN GEOTEXTILE FABRIC IS USED.

SILT FENCE

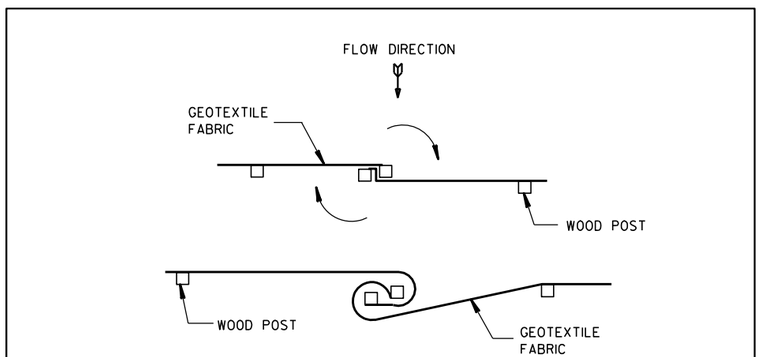

TWIST METHOD

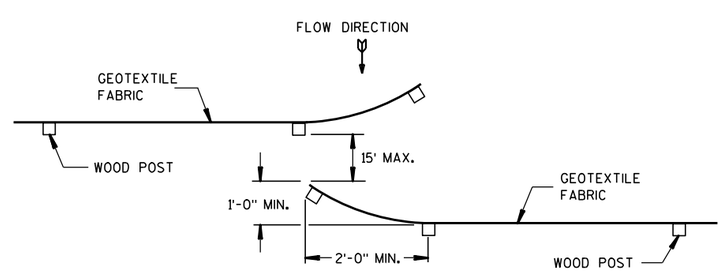

HOOK METHOD

JOINING TWO LENGTHS OF SILT FENCE ⑤

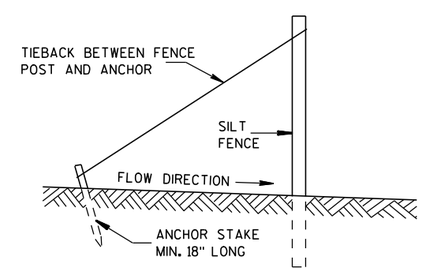

SILT FENCE TIE BACK

(WHEN REQUIRED BY THE ENGINEER)

SILT FENCE
STATE OF WISCONSIN DEPARTMENT OF TRANSPORTATION
APPROVED 4-29-05 /S/ Beth Cann----- DATE CHIEF ROADWAY DEVELOP ENGINEER FHWA

6

6

S.D.D. 8 E 9-6

S.D.D. 8 E 9-6

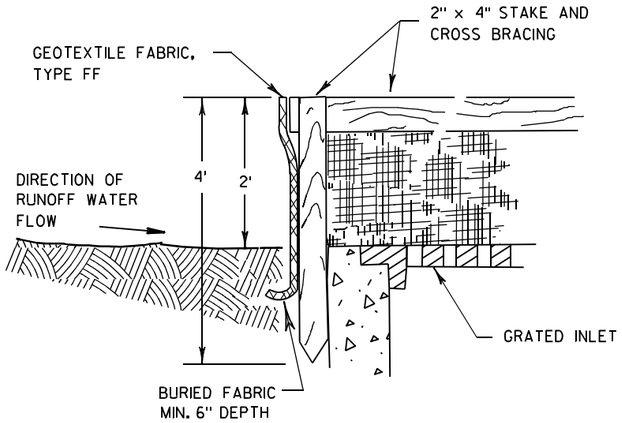

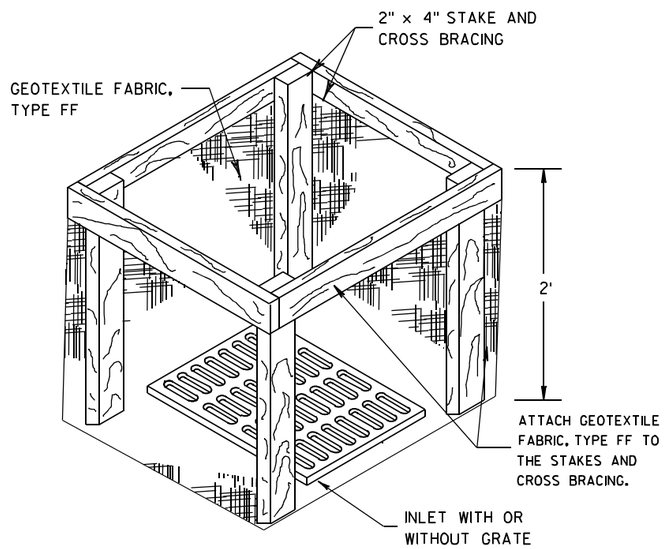

INLET PROTECTION, TYPE A

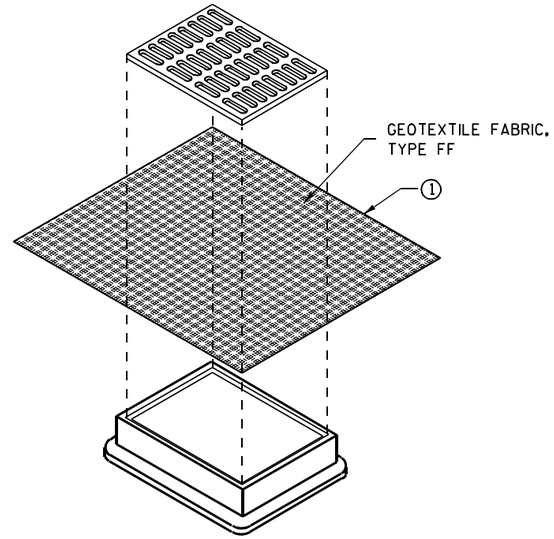

INLET PROTECTION, TYPE B (WITHOUT CURB BOX)

(CAN BE INSTALLED IN ANY INLET WITHOUT A CURB BOX)

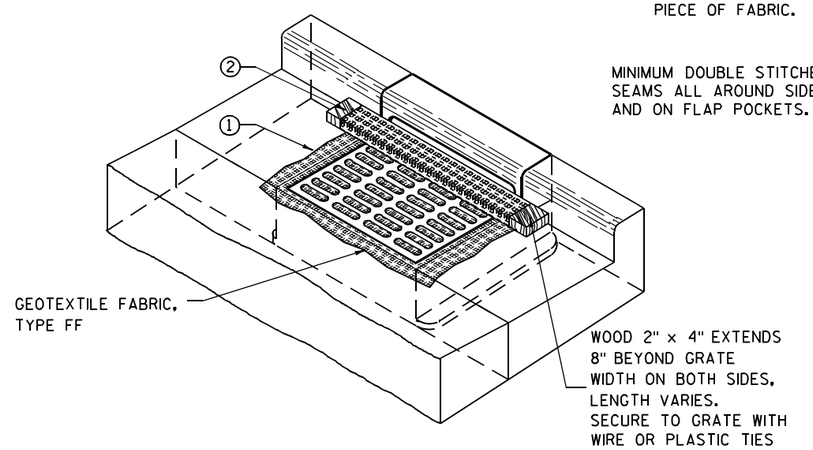

INLET PROTECTION, TYPE C (WITH CURB BOX)

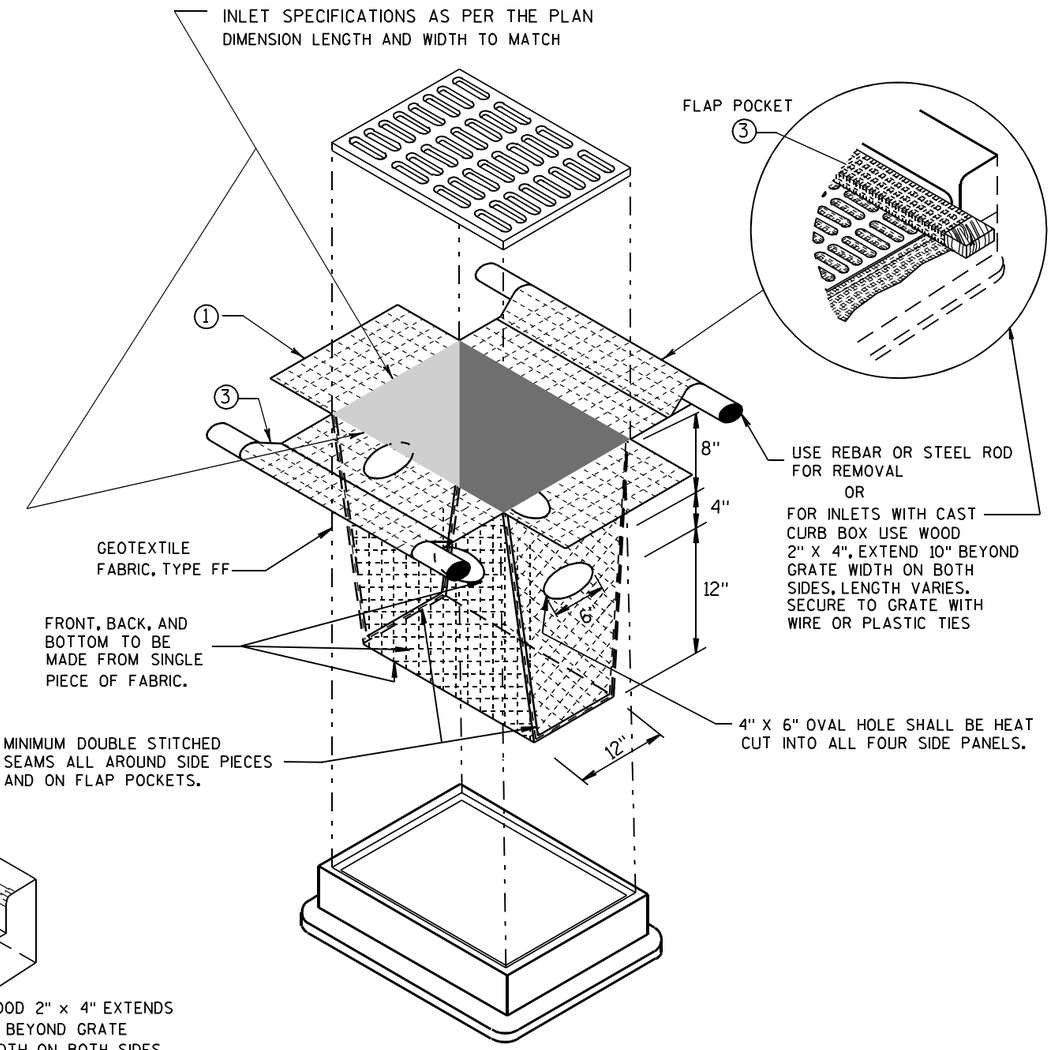

INLET PROTECTION, TYPE D

(CAN BE INSTALLED IN ANY INLET TYPE WITH OR WITHOUT A CURB BOX AS PER NOTE 2)

GENERAL NOTES

INLET PROTECTION DEVICES SHALL BE MAINTAINED OR REPLACED AT THE DIRECTION OF THE ENGINEER.

MANUFACTURED ALTERNATIVES APPROVED AND LISTED ON THE DEPARTMENT'S EROSION CONTROL PRODUCT ACCEPTABILITY LIST MAY BE SUBSTITUTED.

WHEN REMOVING OR MAINTAINING INLET PROTECTION, CARE SHALL BE TAKEN SO THAT THE SEDIMENT TRAPPED ON THE GEOTEXTILE FABRIC DOES NOT FALL INTO THE INLET. ANY MATERIAL FALLING INTO THE INLET SHALL BE REMOVED IMMEDIATELY.

1. FINISHED SIZE, INCLUDING FLAP POCKETS WHERE REQUIRED, SHALL EXTEND A MINIMUM OF 10" AROUND THE PERIMETER TO FACILITATE MAINTENANCE OR REMOVAL.
2. FOR INLET PROTECTION, TYPE C (WITH CURB BOX), AN ADDITIONAL 18" OF FABRIC IS WRAPPED AROUND THE WOOD AND SECURED WITH STAPLES. THE WOOD SHALL NOT BLOCK THE ENTIRE HEIGHT OF THE CURB BOX OPENING.
3. FLAP POCKETS SHALL BE LARGE ENOUGH TO ACCEPT WOOD 2X4.

INSTALLATION NOTES

TYPE B & C

TRIM EXCESS FABRIC IN THE FLOW LINE TO WITHIN 3" OF THE GRATE.

THE CONTRACTOR SHALL DEMONSTRATE A METHOD OF MAINTENANCE, USING A SEWN FLAP, HAND HOLDS OR OTHER METHOD TO PREVENT ACCUMULATED SEDIMENT FROM ENTERING THE INLET.

TYPE D

DO NOT INSTALL INLET PROTECTION TYPE D IN INLETS SHALLOWER THAN 30", MEASURED FROM THE BOTTOM OF THE INLET TO THE TOP OF THE GRATE.

TRIM EXCESS FABRIC IN THE FLOW LINE TO WITHIN 3" OF THE GRATE.

THE INSTALLED BAG SHALL HAVE A MINIMUM SIDE CLEARANCE, BETWEEN THE INLET WALLS AND THE BAG, MEASURED AT THE BOTTOM OF THE OVERFLOW HOLES, OF 3". WHERE NECESSARY THE CONTRACTOR SHALL CINCH THE BAG, USING PLASTIC ZIP TIES, TO ACHIEVE THE 3" CLEARANCE. THE TIES SHALL BE PLACED AT A MAXIMUM OF 4" FROM THE BOTTOM OF THE BAG.

INLET PROTECTION TYPE A, B, C, AND D

STATE OF WISCONSIN
DEPARTMENT OF TRANSPORTATION

APPROVED
10/16/02 — DATE
/S/ Beth Cannestra — CHIEF ROADWAY DEVELOPMENT ENGINEER
FHWA

6
S.D.D. 8 E 10-2

GENERAL NOTES

DETAILS OF CONSTRUCTION, MATERIALS AND WORKMANSHIP NOT SHOWN ON THIS DRAWING SHALL CONFORM TO THE PERTINENT REQUIREMENTS OF THE STANDARD SPECIFICATIONS AND THE APPLICABLE SPECIAL PROVISIONS.

TRACKING PAD SHALL BE INSPECTED DAILY. DEFICIENT AREAS SHALL BE REPAIRED OR REPLACED IMMEDIATELY.

TRACKING PAD TO BE REMOVED AFTER CONSTRUCTION IS COMPLETED.

TRACKING PAD SHALL BE THE FULL WIDTH OF THE EGRESS POINT.

SURFACE WATER MUST BE PREVENTED FROM PASSING THROUGH THE TRACKING PAD. FLOWS SHALL BE DIVERTED AWAY, AROUND OR CONVEYED UNDER THE TRACKING PAD.

CULVERT PIPE OR OTHER BMP USED TO DIVERT WATER AWAY, AROUND OR UNDER THE TRACKING PAD SHALL BE DESIGNED TO CONVEY THE 2 YEAR - 24 HOUR EVENT.

THE COST OF ADDITIONAL BMP TO DIVERT WATER ARE INCIDENTAL TO THE TRACKING PAD BID ITEM.

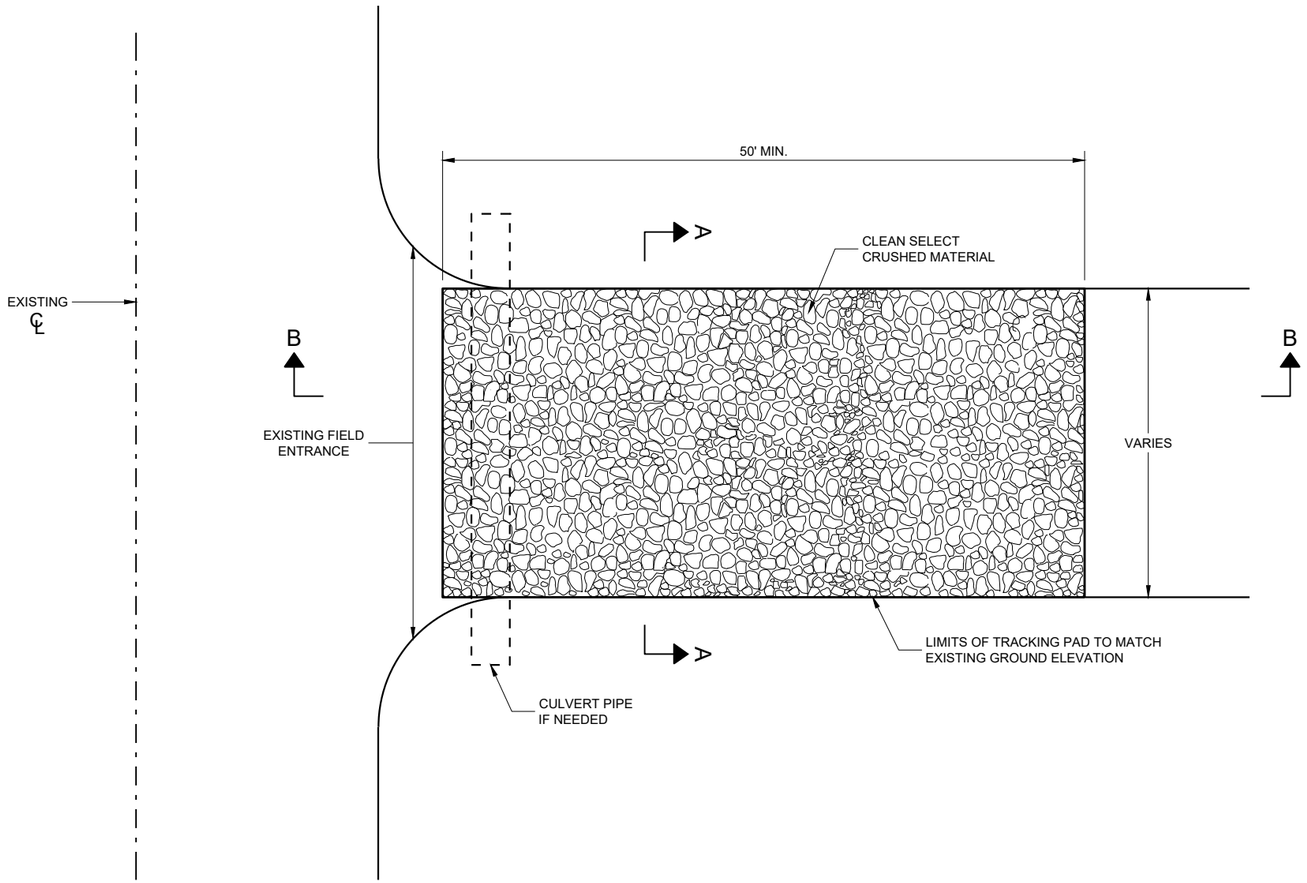

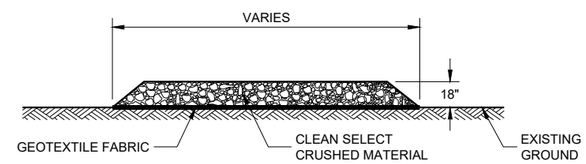

SECTION A - A

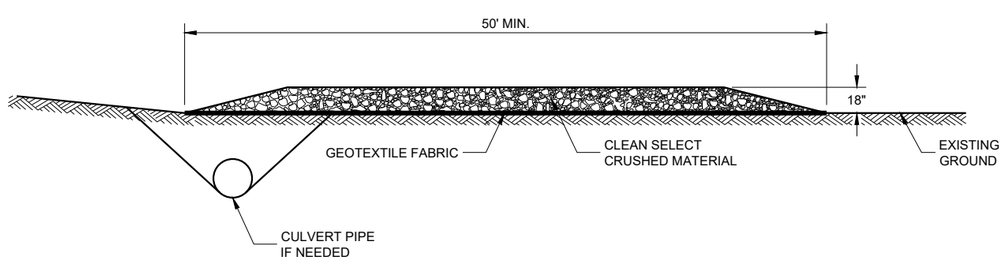

SECTION B - B

TRACKING PAD

STATE OF WISCONSIN
DEPARTMENT OF TRANSPORTATION

APPROVED
3/24/2011 — DATE
/S/ Jerry H. Zogg — ROADWAY STANDARDS DEVE ENGINEER
FHWA

6

SDD 08E14 - 01

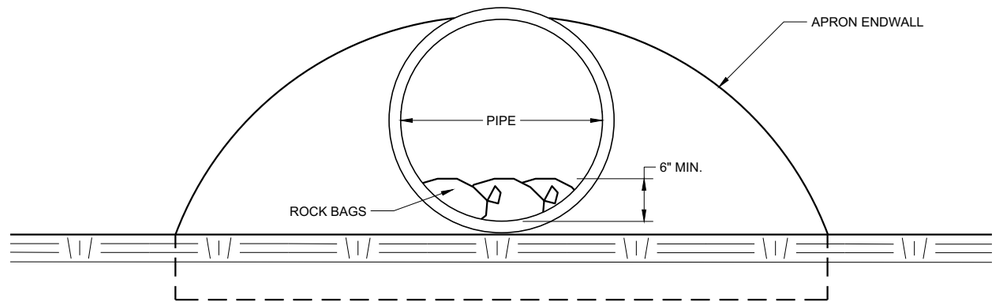

END VIEW

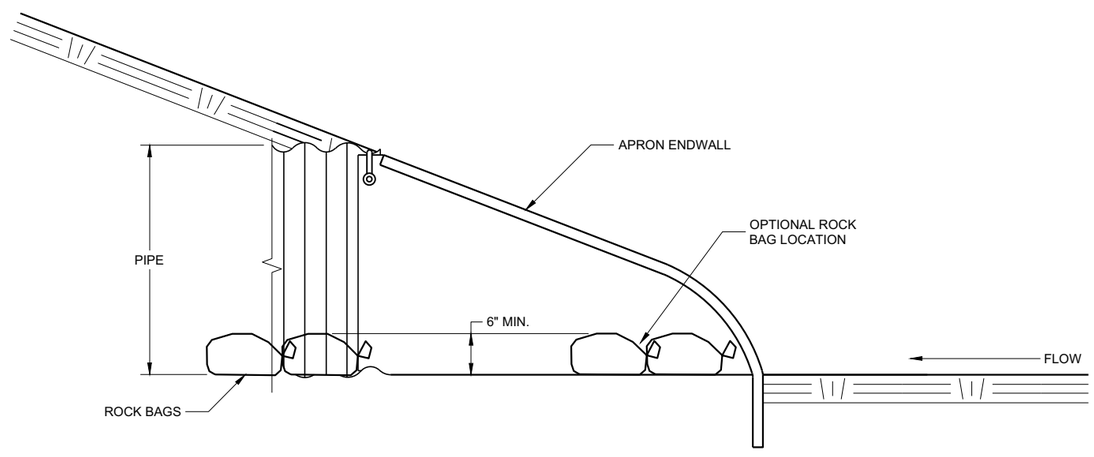

SIDE VIEW

CULVERT PIPE CHECK

(INSTALL ON INLET END ONLY)

CULVERT PIPE CHECK

STATE OF WISCONSIN
DEPARTMENT OF TRANSPORTATION

APPROVED
May 2019 — DATE
/S/ Daniel Schave — EROSION CONTROL ENGI
FHWA

6

6

SDD 08E15 - 01

SDD 08E15 - 01

METAL APRON ENDWALLS

PIPE DIA. (IN.)	MIN. THICK. (Inches) STEEL	MIN. THICK. (Inches) ALUM.	DIMENSIONS (Inches) A (±1")	B (MAX.)	H (±1")	L (±1 1/2")	L1 ①	L2 ①	W (±2")	APPROX. SLOPE	BODY
12	.064	.060	6	6	6	21	12	17 1/2	24	2 1/2 to 1	1 Pc.
15	.064	.060	7	8	6	26	14	21 3/4	30	2 1/2 to 1	1 Pc.
18	.064	.060	8	10	6	31	15	28 1/4	36	2 1/2 to 1	1 Pc.
21	.064	.060	9	12	6	36	18	29 5/8	42	2 1/2 to 1	1 Pc.
24	.064	.075	10	13	6	41	18	37 1/4	48	2 1/2 to 1	1 Pc.
30	.079	.075	12	16	8	51	18	52 1/4	60	2 1/2 to 1	1 Pc.
36	.079	.105	14	19	9	60	24	59 3/4	72	2 1/2 to 1	2 Pc.
42	.109	.105	16	22	11	69	24	75 5/8	84	2 1/2 to 1	2 Pc.
48	.109	.105	18	27	12	78	24	81	90	2 1/4 to 1	3 Pc.
54	.109	.105	18	30	12	84	30	85 1/2	102	2 1/4 to 1	3 Pc.
60	.109×	.105×	18	33	12	87	—	—	114	2 to 1	3 Pc.
66	.109×	.105×	18	36	12	87	—	—	120	2 to 1	3 Pc.
72	.109×	.105×	18	39	12	87	—	—	126	2 to 1	3 Pc.
78	.109×	.105×	18	42	12	87	—	—	132	1 1/2 to 1	3 Pc.
84	.109×	.105×	18	45	12	87	—	—	138	1 1/2 to 1	3 Pc.
90	.109×	.105×	18	37	12	87	—	—	144	1 1/2 to 1	3 Pc.
96	.109×	.105×	18	35	12	87	—	—	150	1 1/2 to 1	3 Pc.

× EXCEPT CENTER PANEL
SEE GENERAL NOTES

REINFORCED CONCRETE APRON ENDWALLS

PIPE DIA. (IN.)	DIMENSIONS (Inches) T	A	B	C	D	E	G	APPROX. SLOPE
12	2	4	24	48 7/8	72 7/8	24	2	3 to 1
15	2 1/4	6	27	46	73	30	2 1/4	3 to 1
18	2 1/2	9	27	46	73	36	2 1/2	3 to 1
21	2 3/4	9	36	37 1/2	73 1/2	42	2 3/4	3 to 1
24	3	9 1/2	43 1/2	30	73 1/2	48	3	3 to 1
27	3 1/4	10 1/2	49 1/2	24	73 1/2	54	3 1/4	3 to 1
30	3 1/2	12	54	19 3/4	73 1/2	60	3 1/2	3 to 1
36	4	15	63	34 3/4	97 3/4	72	4	3 to 1
42	4 1/2	21	63	35	98	78	4 1/2	3 to 1
48	5	24	72	26	98	84	5	3 to 1
54	5 1/2	27	65	*33 1/4-**35	*98 1/4-**100	90	5 1/2	2 2/5 to 1
60	6	*30-**35	60	39	99	96	5	2 to 1
66	6 1/2	*24-**30	*72-**78	*21-**27	99	102	5 1/2	2 to 1
72	7	*24-**36	78	21	99	108	6	2 to 1
78	7 1/2	*24-**36	78	21	99	114	6 1/2	2 to 1
84	8	36	90 1/2	21	111 1/2	120	6 1/2	1 1/2 to 1
90	8 1/2	41	87 1/2	24	111 1/2	132	6 1/2	1 1/2 to 1

*MINIMUM
**MAXIMUM

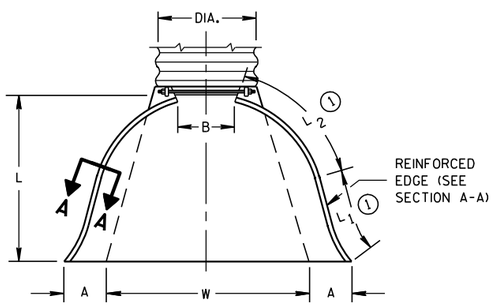

PLAN VIEW

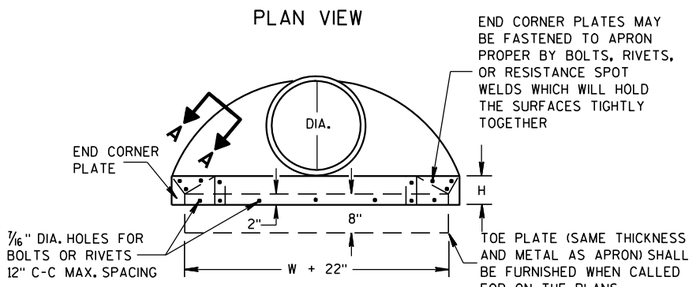

END VIEW

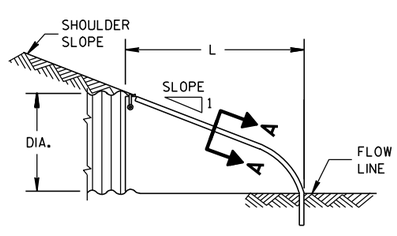

SIDE ELEVATION

METAL ENDWALLS

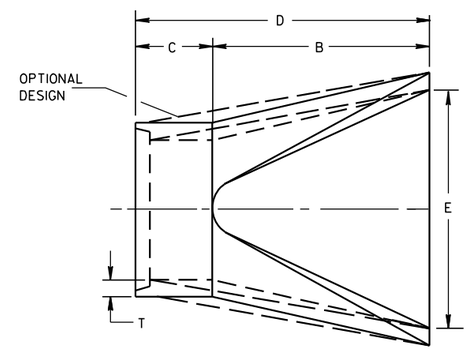

PLAN

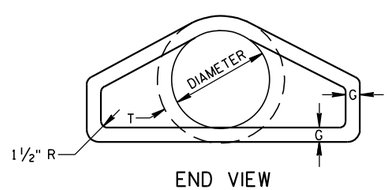

END VIEW

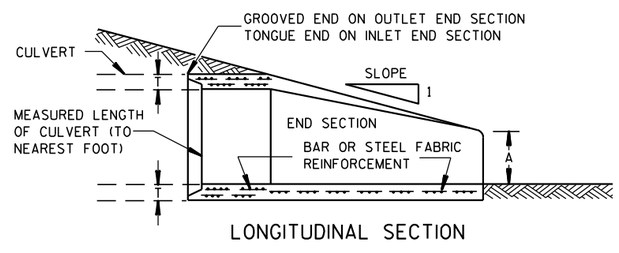

LONGITUDINAL SECTION

CONCRETE ENDWALLS

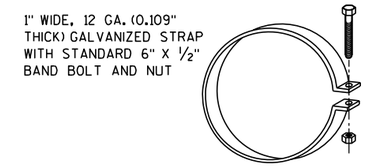

ALTERNATE FOR TYPE 1 CONNECTION

END SECTION CONNECTOR STRAP

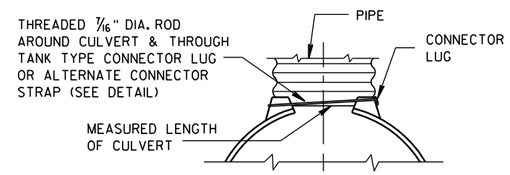

TYPE 1
FOR 12" THRU 24" CORR. PIPE

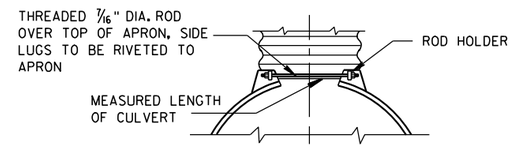

TYPE 2
FOR 30" THRU 96" CORR. PIPE

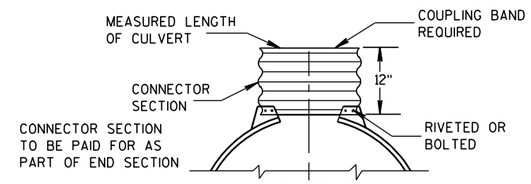

TYPE 3
FOR 42" THRU 96" CORR. PIPE

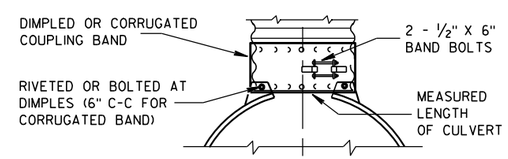

TYPE 5
ALTERNATE FOR:
ALL SIZES CORRUGATED CIRCULAR PIPE

NOTE: DIMPLED BAND FITS OVER OUTSIDE OF ENDWALL, AND CORRUGATED BAND FITS INSIDE ENDWALL. DIMPLED BAND MAY BE USED WITH HELICALLY CORRUGATED PIPE.

FOR CIRCUMFERENTIALLY CORRUGATED PIPE USE ENDWALL CONNECTION DETAILS 1, 2, 3 OR 5 AS APPLICABLE.

FOR HELICALLY CORRUGATED PIPE USE ENDWALL CONNECTION DETAILS 1, 2 OR 5.

FOR HELICALLY CORRUGATED PIPES WITH TWO CIRCUMFERENTIAL CORRUGATIONS AT EACH END USE ENDWALL CONNECTION DETAILS 1, 2 OR 3.

CONNECTION DETAILS

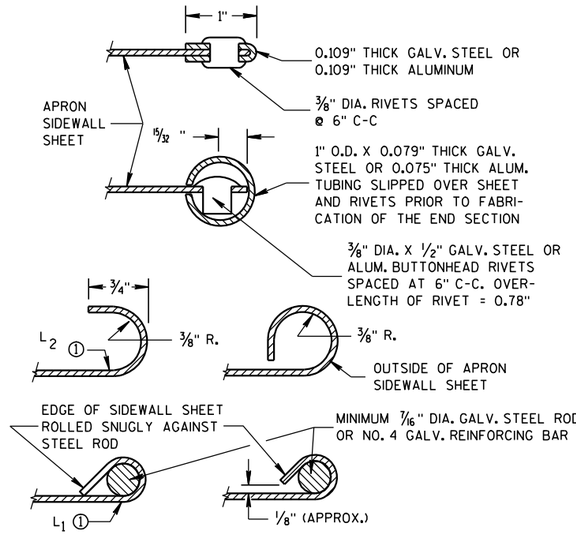

SECTION A-A

GENERAL NOTES

DETAILS OF CONSTRUCTION, MATERIALS AND WORKMANSHIP NOT SHOWN ON THIS DRAWING SHALL CONFORM TO THE PERTINENT REQUIREMENTS OF THE STANDARD SPECIFICATIONS AND THE APPLICABLE SPECIAL PROVISIONS.

CONCRETE CULVERT ENDWALLS MAY NOT BE USED WITH GALVANIZED STEEL OR ALUMINUM CULVERT PIPE OR VISE VERSA. GALVANIZED STEEL OR ALUMINUM ENDWALLS SHALL NORMALLY BE INSTALLED ON CULVERT PIPE OF THE SAME METAL.

ALL THREE PIECE STEEL APRON ENDWALLS FOR 60" DIAMETER PIPE AND LARGER SHALL HAVE 0.109" SIDES AND 0.138" CENTER PANELS. ALL THREE PIECE ALUMINUM APRON ENDWALLS FOR 60" DIAMETER PIPE AND LARGER SHALL HAVE 0.105" SIDES AND 0.134" CENTER PANELS. THE WIDTH OF CENTER PANELS SHALL BE GREATER THAN 20 PERCENT OF THE PIPE PERIMETER.

LAP SEAMS SHALL BE TIGHTLY JOINED BY GALVANIZED RIVETS OR BOLTS FOR STEEL UNITS AND ALUMINUM RIVETS AND BOLTS FOR ALUMINUM UNITS. FOR THE 60" THROUGH 96" DIAMETER APRON ENDWALL SIZES, THE REINFORCED EDGES AND CENTER PANEL SEAMS SHALL BE FURTHER REINFORCED WITH GALVANIZED STEEL OR ALUMINUM STIFFENER ANGLES. THE ANGLES SHALL BE ATTACHED BY GALVANIZED NUTS AND BOLTS FOR STEEL UNITS AND ALUMINUM NUTS AND BOLTS FOR ALUMINUM UNITS.

WHERE TWO OR MORE PIPES WITH APRON ENDWALLS ARE LAID ADJACENT TO EACH OTHER, THEY SHALL BE SEPARATED BY A DISTANCE SUFFICIENT TO PROVIDE A MINIMUM CLEARANCE OF 6 INCHES BETWEEN APRON ENDWALLS.

① FOR PIPE SIZES UP TO 60" DIAMETER, A 180° ROLLED EDGE MAY BE USED INSTEAD OF STEEL ROD REINFORCEMENT. SEE SECTION A-A.

APRON ENDWALLS FOR CULVERT PIPE

STATE OF WISCONSIN
DEPARTMENT OF TRANSPORTATION

APPROVED
11/30/94 — DATE
/S/ Rory L. Rhinesmith — CHIEF ROADWAY DEVELOPMENT ENGINEER
FHWA

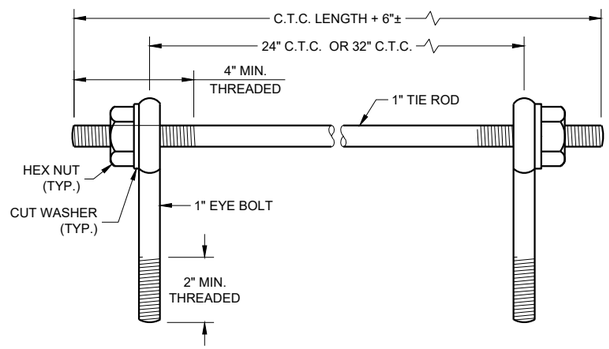

EYE BOLTS AND TIE ROD

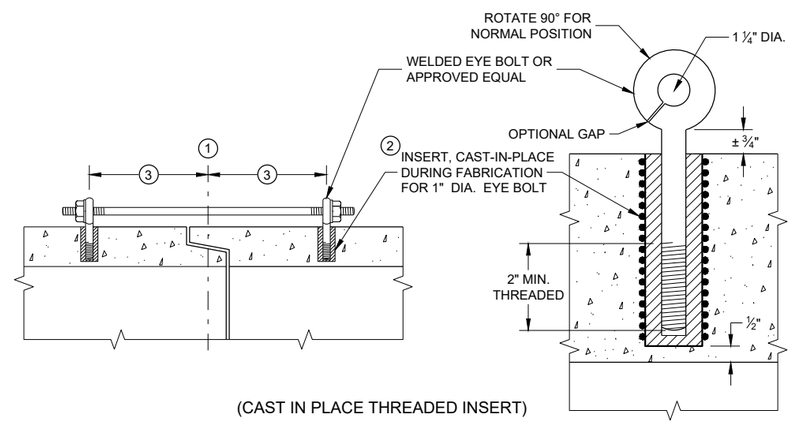

(CAST IN PLACE THREADED INSERT)

LONGITUDINAL SECTIONS

EYE BOLT AND TIE ROD ASSEMBLY (ALTERNATE NO. 1)

GENERAL NOTES

DETAILS OF CONSTRUCTION, MATERIALS, AND WORKMANSHIP NOT SHOWN ON THIS DRAWING SHALL CONFORM TO THE PERTINENT REQUIREMENTS OF THE STANDARD SPECIFICATIONS AND APPLICABLE SPECIAL PROVISIONS.

CONCRETE CULVERT AND STORM SEWER PIPE SHALL BE TIED TOGETHER IN THE MANNER ILLUSTRATED BY THIS DETAIL AT LOCATIONS DESIGNATED IN THE STANDARD SPECIFICATIONS AND THE PLAN. THE CONTRACTOR MAY USE EITHER ALTERNATE 1, 2 OR 3 FOR DRAINAGE STRUCTURES. ONLY ALTERNATE 1 AND 3 MAY BE USED FOR CATTLE PASSES, UNLESS OTHERWISE STATED IN THE CONTRACT. THE MATERIALS, FABRICATION AND WORK NECESSARY TO TIE THE PIPE BY THIS DETAIL WILL BE CONSIDERED INCIDENTAL TO THE PIPE AND APRON ENDWALLS IF REQUIRED.

DETAILED DRAWINGS FOR PROPOSED ALTERNATE DESIGNS FOR JOINT TIES SHALL BE SUBMITTED TO THE ENGINEER FOR APPROVAL.

JOINT TIES TO BE HOT-DIP GALVANIZED PER ASTM A 153.

1. CENTER LINE OF TONGUE AND GROOVE OR BELL AND SPIGOT JOINTS.
2. THE INSIDE OF THE THREADED INSERTS SHALL BE CLEAN TO ALLOW THE INSERTION OF THREADED EYE BOLTS.
3. HOLES SHALL BE CAST-IN-PLACE OR DRILLED PER THE APPLICABLE DETAIL, AND EQUAL DISTANCE FROM THE CENTERLINE OF THE JOINT.
4. BOLT PROJECTION INSIDE OF PIPE SHALL NOT EXCEED 2 INCHES.
5. OPENING TO BE ROD DIAMETER PLUS 1 INCH.
6. LENGTH ADEQUATE TO EXTEND TO WITHIN ½ INCH OF THE INNER SURFACE OF THE PIPE.
7. EYE BOLT LENGTH DETERMINED BY WALL THICKNESS, BELL THICKNESS AND BOLT PROJECTION INSIDE PIPE.

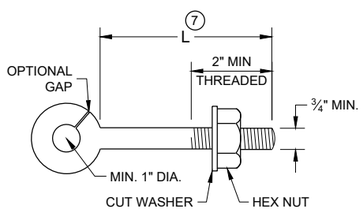

EYE BOLT 7

NOTE: TWO EYE BOLTS MAY BE USED WITH A 30" OR 38" LONG THREADED ROD IN LIEU OF THE 90° BENT TIE ROD.

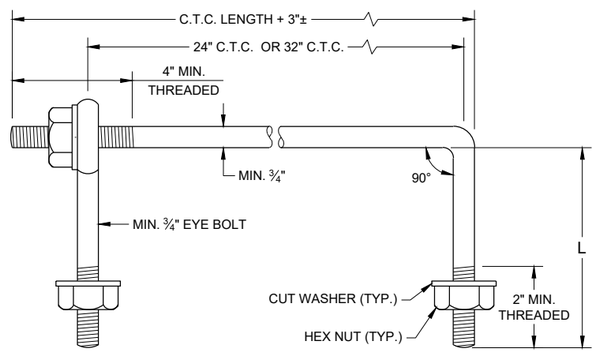

EYE BOLT AND TIE ROD

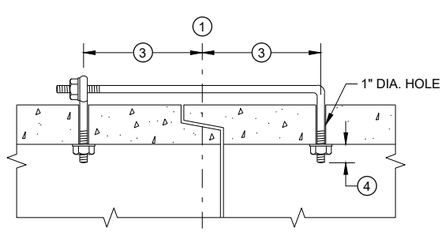

(TONGUE AND GROOVE PIPE)

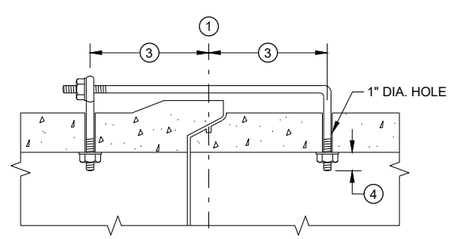

(MODIFIED BELL PIPE)

LONGITUDINAL SECTION

(JOINT TIES FOR 18" TO 66" DIA. CONCRETE PIPE)

EYE BOLT AND TIE ROD ASSEMBLY (ALTERNATE NO. 2)

ADJUSTABLE TIE ROD TABLE

PIPE DIAMETER	TIE ROD DIAMETER	D	L_1	N
12 - 60	⅝	⅝	5	½
66 - 84	¾	¾	5	½
90 - 144	1	1	7	1 7/16

DIMENSIONS SHOWN ARE IN INCHES

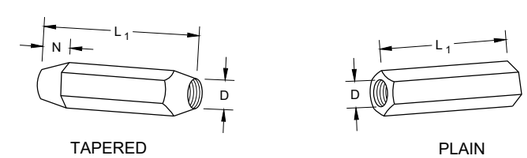

RIGHT AND LEFT THREADS

SLEEVE NUTS

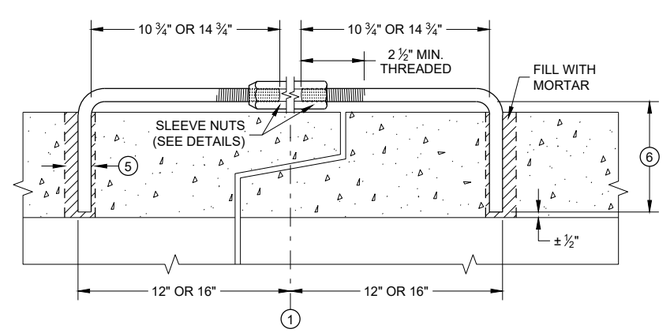

LONGITUDINAL SECTION

ADJUSTABLE TIE ROD (ALTERNATE NO. 3)

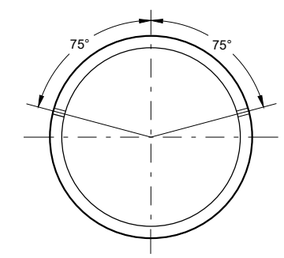

PLACEMENT OF (2) CAST-IN-PLACE INSERTS OR HOLES DURING FABRICATION FOR PIPE SECTIONS REQUIRING TIE RODS

TRANSVERSE SECTION

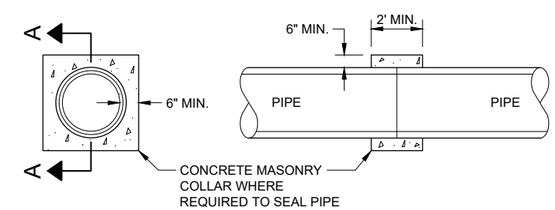

SECTION A - A

CONCRETE COLLAR DETAIL

JOINT TIES FOR CONCRETE PIPE AND CONCRETE COLLAR DETAIL

STATE OF WISCONSIN
DEPARTMENT OF TRANSPORTATION

APPROVED
November 2021 — DATE
/S/ Rodney Taylor — ROADWAY STANDARDS DEVE ENGINEER
FHWA

6

SDD 08F04 - 08

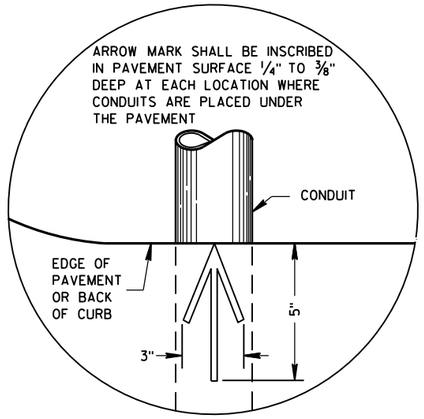

PLAN VIEW

ARROW MARK

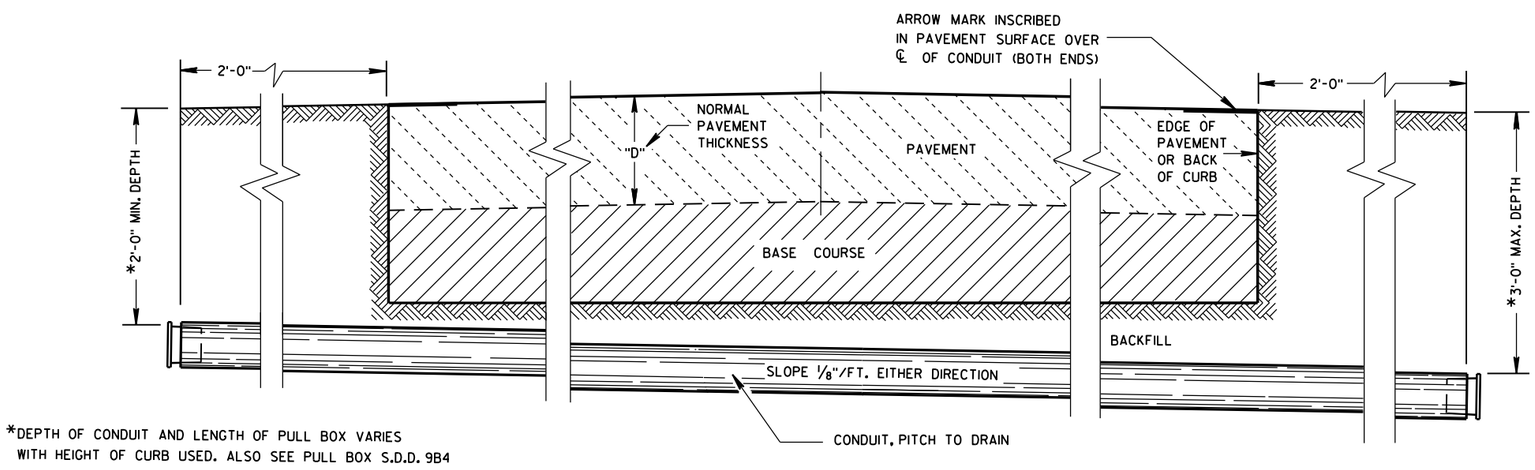

*DEPTH OF CONDUIT AND LENGTH OF PULL BOX VARIES WITH HEIGHT OF CURB USED. ALSO SEE PULL BOX S.D.D. 9B4

SIDE ELEVATION

DETAIL FOR CONDUIT UNDER PAVED HIGHWAYS

GENERAL NOTES

DETAILS OF CONSTRUCTION, MATERIALS AND WORKMANSHIP NOT SHOWN ON THIS DRAWING SHALL CONFORM TO THE PERTINENT REQUIREMENTS OF THE CONTRACT.

METALLIC (STANDARD SPECIFICATION 652.2.2) OR NONMETALLIC (STANDARD SPECIFICATION 652.2.3) CONDUIT SHALL BE FURNISHED AND PLACED AS SHOWN.

DEPTH OF CONDUIT INSTALLED BELOW THE TRAVELED WAY SHALL BE 24 INCHES MINIMUM AND 36 INCHES MAXIMUM.

DEPTH OF CONDUIT INSTALLED THAT IS NOT BELOW THE TRAVELED WAY SHALL BE 18 INCHES MINIMUM AND 36 INCHES MAXIMUM.

ANY EXCEPTION TO THE MAXIMUM DEPTH SHALL BE ONLY WITH THE WRITTEN APPROVAL OF THE ENGINEER.

THE TRENCH SHALL NOT BE BACKFILLED PRIOR TO INSPECTION OF THE CONDUIT.

ALL METALLIC CONDUIT RACEWAY ENDS SHALL BE REAMED AND THREADED.

ALL METALLIC CONDUIT IN WHICH WIRE OR CABLE IS TO BE INSTALLED SHALL BE BUSHED WITH APPROVED THREADED BUSHINGS BEFORE INSTALLATION OF THE WIRE OR CABLE.

ALL METALLIC CONDUITS IN WHICH WIRE OR CABLE IS NOT TO BE INSTALLED SHALL BE CAPPED WITH THREADED PROTECTIVE CAPS, AS APPROVED BY THE ENGINEER.

ALL NONMETALLIC CONDUIT SHALL BE CAPPED OR PLUGGED IMMEDIATELY AFTER INSTALLATION AND SHALL REMAIN CAPPED OR PLUGGED UNTIL WIRE/CABLES ARE INSTALLED.

NONMETALLIC CONDUITS IN WHICH WIRE OR CABLE IS NOT BEING INSTALLED SHALL REMAIN CAPPED OR PLUGGED.

BENDING OF PVC ELECTRICAL CONDUIT SHALL BE ACCOMPLISHED BY USING A BLANKET OR EMERSION TYPE TANK DESIGNED FOR THE PURPOSE OF BENDING PVC ELECTRICAL CONDUIT.

ALL CUT ENDS SHALL BE TRIMMED INSIDE AND OUTSIDE TO REMOVE ALL ROUGH EDGES ON NONMETALLIC CONDUIT. (SEE NEC 347.5)

WHEN REQUIRED TO CONNECT NONMETALLIC CONDUIT TO METALLIC CONDUIT, ONLY U.L. LISTED ADAPTER FITTINGS SHALL BE USED.

PRIOR TO CONDUIT ACCEPTANCE, CONDUIT CAPS OR PLUGS SHALL BE REMOVED, AND THE CAPS, PLUGS AND CONDUIT ENDS SHALL BE THOROUGHLY CLEANED AND THEN THE CAPS OR PLUGS REINSTALLED TO ENSURE THAT THE CAPS OR PLUGS CAN BE EASILY REMOVED IN THE FUTURE.

ALL CONDUIT BEING FURNISHED AND INSTALLED SHALL HAVE THE U.L. LABEL FIRMLY ATTACHED.

CONDUIT RUNS SHALL BE THE SAME SIZE OF CONDUIT FROM ONE END TO THE OTHER (FROM PULL BOX TO PULL BOX-OR-JUNCTION BOX TO JUNCTION BOX-OR-BASE TO BASE, ETC.).

TRACER WIRE SHALL BE INSTALLED AS STATED IN THE STANDARD SPECIFICATION, ITEM 652.3.1.1.

ALL CONDUIT RUNS SHALL BE STRAIGHT (WITHOUT BENDS) FROM PULL BOX TO PULL BOX, PULL BOX TO BASE AND BASE TO BASE AS SHOWN ON THE PLANS.

CONDUIT	
STATE OF WISCONSIN DEPARTMENT OF TRANSPORTATION	
APPROVED March, 2017 DATE	/S/ Ahmet Demirbilek STATE ELECTRICAL
FHWA	

6

S.D.D. 9 B 2-10

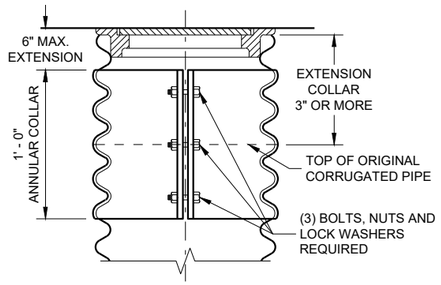

CORRUGATED PIPE EXTENDER

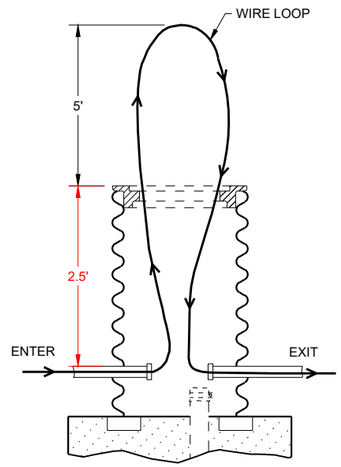

MEASUREMENT DETAIL FOR WIRE/CABLE IN THE PULL BOX

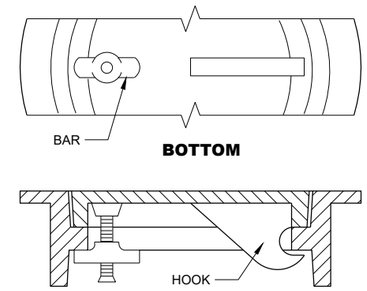

ALTERNATE COVER (LOCKING)

TIGHTENING BAR TYPE

GENERAL NOTES

DETAILS OF CONSTRUCTION, MATERIALS AND WORKMANSHIP NOT SHOWN ON THIS DRAWING SHALL CONFORM TO THE PERTINENT REQUIREMENTS OF THE CONTRACT.

ALL FRAMES AND COVERS SHALL BE HEAVY DUTY TYPE, SUITABLE FOR VEHICULAR TRAFFIC LOADS.

PULL BOXES LOCATED IN THE ROADWAYS SHALL HAVE LOCKING COVERS.

ENTRANCE HOLES INTO PULL BOXES SHALL BE CUT WITH A CIRCULAR HOLE SAW OR HYDRAULIC CONDUIT PUNCH. HOLE SIZE SHALL BE THE OUTSIDE DIAMETER OF THE CONDUIT THAT IS TO FIT IN THE OPENING PLUS NO MORE THAN ¼".

THE CONTRACTOR SHALL NOT INSTALL WIRE IN ANY PULL BOX UNTIL ITS INSTALLATION HAS BEEN INSPECTED AND ACCEPTED BY THE ENGINEER.

GROUNDING LUGS (MECHANICAL CONNECTORS) SHALL BE U.L. LISTED AND APPROVED FOR USE WITH COPPER WIRE.

ALL METALLIC CONDUIT IN WHICH WIRE AND/OR CABLE IS TO BE INSTALLED, SHALL BE BUSHED BEFORE INSTALLATION OF THE WIRE AND/OR CABLE.

WHEN PULL BOXES ARE INSTALLED FOR FUTURE USE, DO NOT INSTALL THE EQUIPMENT GROUNDING LUG. THE EQUIPMENT GROUNDING LUG, THE EQUIPMENT GROUNDING ELECTRODE AND THE EQUIPMENT GROUNDING CONDUCTOR SHALL BE REQUIRED AND INSTALLED UNDER A FUTURE WIRING CONTRACT.

TABLE OF NOMINAL DIMENSIONS AND WEIGHTS

DIMENSION IN INCHES		CORRUGATED STEEL PIPE								
PIPE DIAMETER (INSIDE)	A	12	12	12	18	18	18	24	24	24
PIPE LENGTH**	B	24	30	36	24	30	36	36	42	48
WALL THICKNESS	C	0.064	0.064	0.064	0.064	0.064	0.064	0.064	0.064	0.064
COVER	D	10 ¼	10 ¼	10 ¼	16 ¼	16 ¼	16 ¼	22 ¼	22 ¼	22 ¼
FRAME	E	14 ½	14 ½	14 ½	20 ½	20 ½	20 ½	26 ½	26 ½	26 ½
FRAME	F	8 ½	8 ½	8 ½	14 ½	14 ½	14 ½	20 ½	20 ½	20 ½
FRAME	G	11 ½	11 ½	11 ½	17 ½	17 ½	17 ½	23 ½	23 ½	23 ½
WEIGHT IN POUNDS*										
FRAME AND COVER		60	60	60	110	110	110	155	155	155

*THE ACTUAL WEIGHT OF THE MANHOLE FRAME AND COVER MAY VARY WITHIN 5 PERCENT PLUS OR MINUS OF THE WEIGHTS SHOWN.

**NORMALLY USED LENGTHS. THE PROJECT ENGINEER SHALL DETERMINE IF PIPE LENGTHS, OTHER THAN THOSE SPECIFIED, SHALL BE USED, TO A MAXIMUM OF 48" (CONTINUOUS LENGTH, NON-SPLICED). THE ADDITIONAL LENGTH SHALL BE INCIDENTAL TO THE PULL BOX BID PRICE.

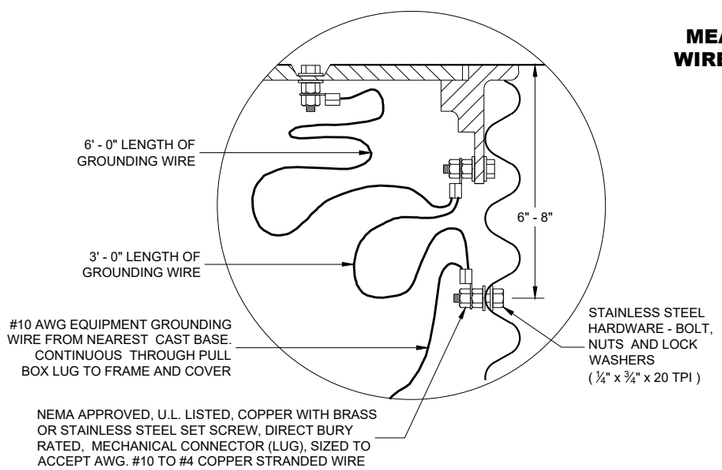

EQUIPMENT GROUNDING LUG AND LOCATION IN STEEL PULL BOXES

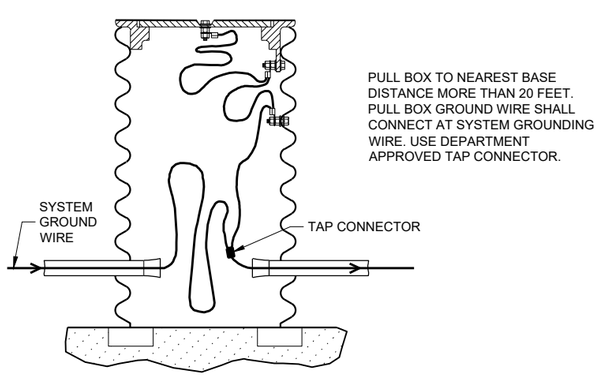

EQUIPMENT GROUNDING LUG AND LOCATION IN STEEL PULL BOXES

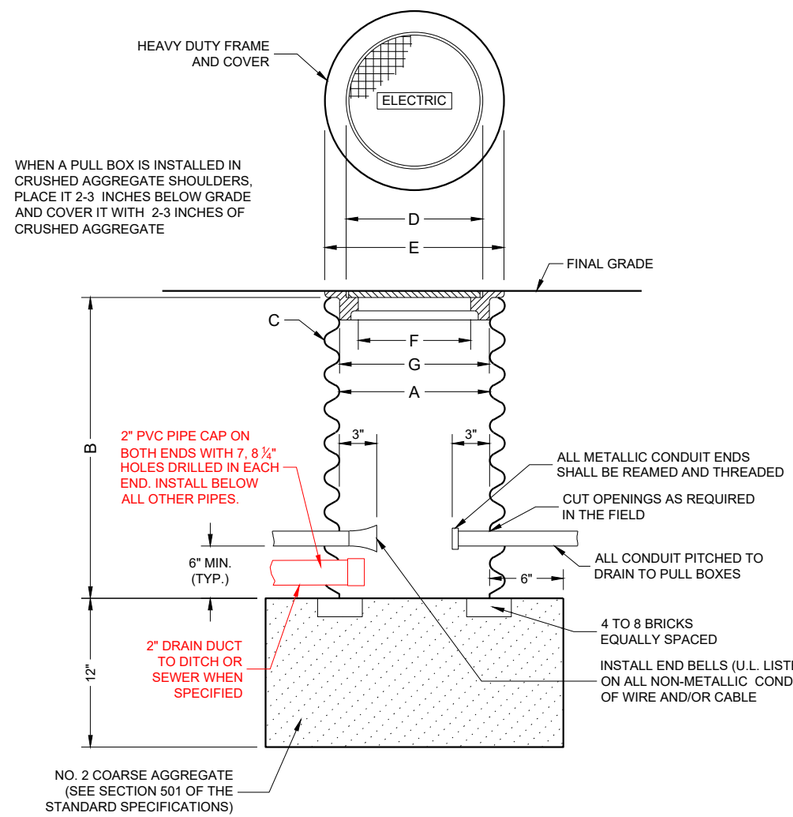

PULL BOX

PULL BOX

STATE OF WISCONSIN
DEPARTMENT OF TRANSPORTATION

APPROVED
May 2022 — DATE
/S/ Ahmet Demirbilek — STATE ELECTRICAL ENGI

FHWA

6

SDD 09B04-12

FORM DEPTH SHALL BE NO MORE THAN 6" BELOW GRADE ON THE LOWER SIDE OF BASE

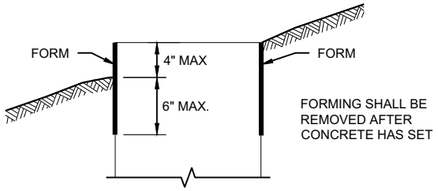

FORMING DETAIL

QUANTITY REQUIREMENTS	CONCRETE BASE TYPE		
	1	2	5 & 6
APPROX. CUBIC YARDS OF CONCRETE	0.40	0.57	0.40
LBS. OF HOOP BAR STEEL	NONE	23	16
LBS. OF VERTICAL BAR STEEL	NONE	60	18

GENERAL NOTES

DETAILS OF CONSTRUCTION, MATERIALS AND WORKMANSHIP NOT SHOWN ON THIS DRAWINGSHALL CONFORM TO THE PERTINENT REQUIREMENTS OF THE CONTRACT.

BASES SHALL BE EXCAVATED BY USE OF A CIRCULAR AUGER.

TOP SURFACES OF CONCRETE BASES SHALL BE TROWEL FINISHED SMOOTH AND LEVEL.

CONDUIT SIZES AND LOCATIONS SHALL BE SHOWN ON THE PLANS

THE FINAL OR TERMINATING CONCRETE BASE IN A CONDUIT RUN SHALL HAVE A 6" EXIT STUB INSTALLED FOR FUTURE CABLING USE. THE EXIT STUB SHALL BE SIZED AS USED THROUGHOUT THE CONDUIT RUN AS SHOWN A THE ENTRANCE OF THE BASE.

ENDS OF CONDUIT INSTALLED BELOW GRADE FRO FUTURE USE SHALL BE CAPPED IF METALLIC OR PLUGGED IF NON-METALLIC.

MINIMUM BENDING RADIUS OF CONDUIT IS EQUAL TO 6X THE DIAMETER.

CONDUIT HEIGHT ABOVE CONCRETE BASES SHALL BE 1 INCH. ALL METALLIC CONDUIT ENDS SHALL BE REAMED AND THREADED.

ALL CONDUIT ENDS AT THE TOP OF CONCRETE BASES SHALL BE CAPPED IF METALLIC OR PLUGGED IF NON-METALLIC IMMEDIATELY AFTER PLACEMENT AND BEFORE CONCRETE IS POURED. CONDUITS IN WHICH WIRE OR CABLE IS NOT INSTALLED SHALL REMAIN CAPPED OR PLUGGED.

BELL ENDS SHALL BE INSTALLED ON ALL PVC CONDUIT EXPOSED AT THE TOP OF CONCRETE BASES BEFORE INSTALLATION.

WHEN REQUIRED TO CONNECT NON-METALLIC CONDUIT TO METALLIC CONDUIT, ONLY ADAPTER FITTINGS, U.L. LISTED FOR ELECTRICAL USE, SHALL BE USED.

IF A BASE REQUIRES A DEEP FORM BECAUSE OF LOOSE DIRT OR FILL, THE FORM SHALL BE REMOVED BEFORE BACKFILLING AROUND THE BASE. BACKFILL SHALL BE TAMPED TIGHT AGAINST THE BARE CONCRETE BASE IN LAYERS OF 1 FOOT OR LESS.

A NO. 4 AWG STRANDED COPPER EQUIPMENT GROUNDING CONDUCTOR SHALL BE EXOTHERMICALLY WELDED TO THE EQUIPMENT GROUNDING ELECTRODE (GROUND ROD) FOR TYPE 2, TYPE 5 AND TYPE 6 BASES.

THE EQUIPMENT GROUNDING CONDUCTOR SHALL BE FURNISHED AND INSTALLED TO ENTER ALL BASE TYPES THROUGH A 1 INCH CONDUIT INSTALLED FOR GROUNDING PURPOSES, LEAVING A 4 FOOT COIL OF WIRE ABOVE THE CONCRETE BASE. THE EQUIPMENT GROUNDING CONDUCTOR SHALL BE NEATLY COILED AND THE COILS TIED TOGETHER.

ANCHOR RODS SHALL BE THREADED 12" IN LENGTH ON EACH END OF THE ROD. ANCHOR RODS SHALL BE MANUFACTURED IN ACCORDANCE WITH SECTION 654.2.1 OF THE STANDARD SPECIFICATIONS.

WASHERS AND LOCK WASHERS ARE REQUIRED ON ALL ANCHOR RODS.

WHEN ANCHOR RODS USING THE ALTERNATE "L" BEND ARE FURNISHED, THE 4 INCH"L" BEND SHALL BE IN ADDITION TO THE SPECIFIED ANCHOR ROD BAR LENGTH. THE "L" BEND SHALL NOT BE THREADED.

ANCHOR RODS SHALL BE INSTALLED WITH MISALIGNMENTS OF LESS THAN 1:40 FROM VERTICAL.

WELDING OF THE ANCHOR RODS TO THE CAGE IS UNACCEPTABLE. TIE WIRES SHALL BE USED.

BAR STEEL REINFORCEMENT SHALL BE COATED WITH POWDERED EPOXY RESIN IN ACCORDANCE WITH SECTION 505 OF THE STANDARD SPECIFICATIONS (LATEST EDITION).

(1) THE MINIMUM DEPTH OF CONDUIT EXITING THE CONCRETE BASE AND INSTALLED BELOW THE TRAVELED WAY SHALL BE 24 INCHES. THE MINIMUM DEPTH OF CONDUIT EXITING THE CONCRETE BASE THAT IS NOT INSTALLED BELOW THE TRAVELED WAY SHALL BE 18 INCHES. THE MAXIMUM DEPTH OF ALL CONDUIT SHALL BE 36 INCHES EXCEPT WITH WRITTEN APPROVAL OF THE ENGINEER.

(2) (4) 1" DIA. X 3' - 6" ANCHOR RODS.

(3) (4) 1" DIA. X 5' - 0" ANCHOR RODS.

(4) (6) NO. 6 X 6' - 8" BAR STEEL REINFORCEMENT.

(5) (7) NO. 4 X 5' - 1" BAR STEEL REINFORCEMENT @ 1' - 0" C - C.

(6) (4) 1" DIA. X 3' - 6" ANCHOR RODS.

(7) (6) NO. 4 X 4' - 8" BAR STEEL REINFORCEMENT.

(8) (5) NO. 4 X 5' - 1" BAR STELL REINFORCEMENT @ 1' - 0" C -C.

(9) EXOTHERMIC CONNECTION TO EUIPMENT GROUNDING CONDUCTOR

(10) ⅝" DIA. X 8' -0" COPPERCLAD EQUIPMENT GROUNDING ELECTRODE REQUIRED

(11) ANY ANCHOR ROD PROJECTION SHORTER THAN 2 ¾" OR LONGER THAN 3 ¼" SHALL REQUIRE THE BASE TO BE REMOVED AND REPLACED AT THE CONTRACTORS EXPENSE.

(12) FOR NON - BREAKAWAY INSTALLATIONS, 4 ½" ± ANCHOR ROD PROJECTION WITH THE USE OF LEVELING NUTS. RODENT SCREEN REQUIRED.

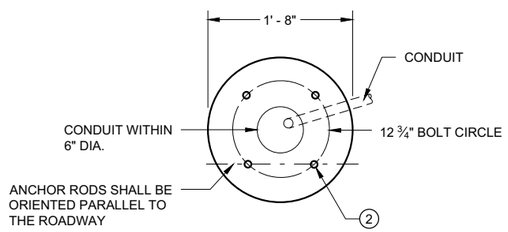

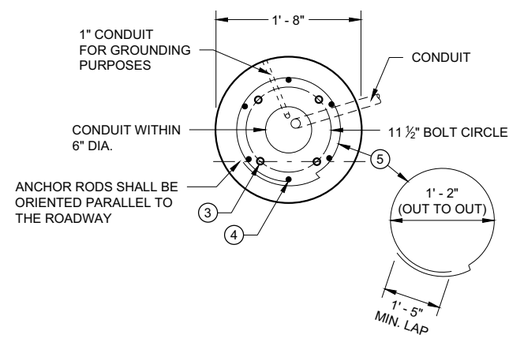

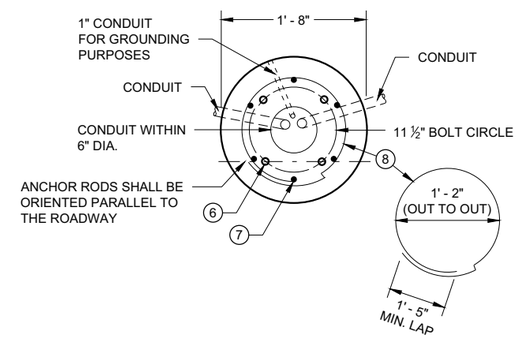

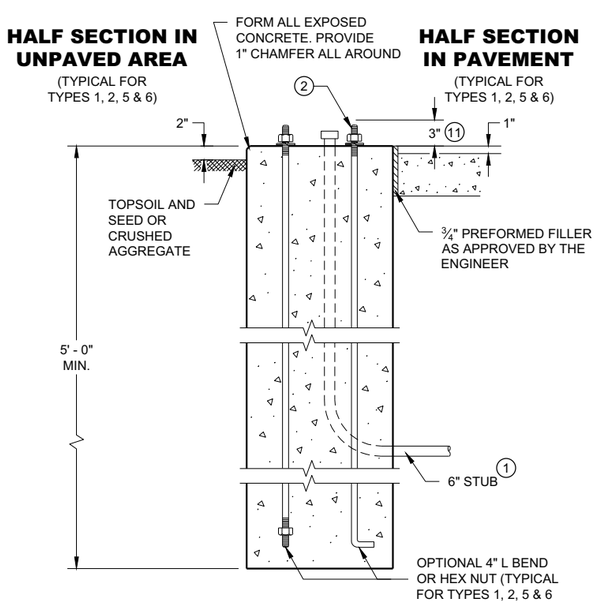

TYPE 1

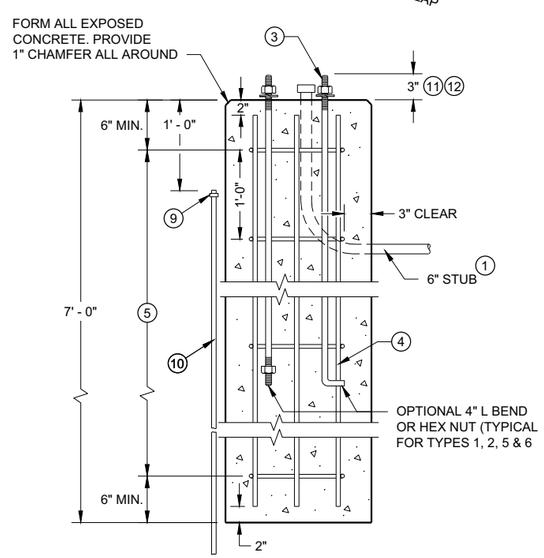

TYPE 2

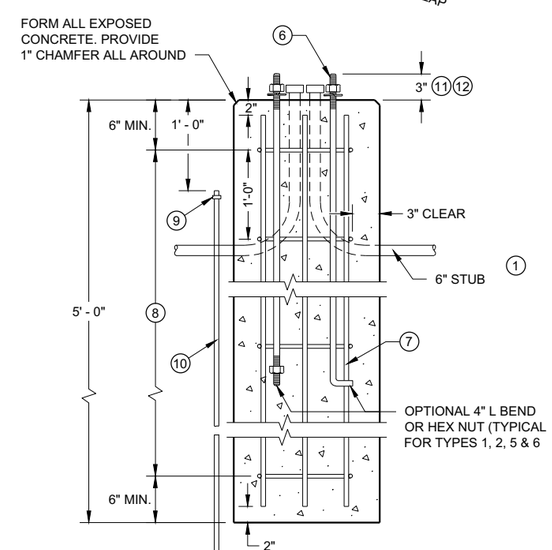

TYPE 5 & 6

CONCRETE BASES

CONCRETE BASES TYPES 1, 2, 5, & 6

STATE OF WISCONSIN
DEPARTMENT OF TRANSPORTATION

APPROVED
May 2019 — DATE
/S/ Ahmet Demirbilek — STATE ELECTRICAL ENGI
FHWA

6

SDD 09C02 - 09

GENERAL NOTES

DETAILS OF CONSTRUCTION, MATERIALS AND WORKMANSHIP NOT SHOWN ON THIS DRAWING SHALL CONFORM TO THE PERTINENT REQUIREMENTS OF THE CONTRACT.

FOUR (4) BOLTS SHALL BE FURNISHED WITH EACH TRANSFORMER BASE. BOLTS SHALL BE 1" DIAMETER, 4" IN LENGTH, WITH WASHERS, LOCK WASHERS AND NUTS. BOLTS, NUTS AND WASHERS SHALL BE MANUFACTURED IN ACCORDANCE WITH SECTION 531.2.2 OF THE STANDARD SPECIFICATIONS.

LEVELING SHIMS, IF NEEDED, SHALL BE DESIGNED FOR THE PURPOSE AND USED UNDER CAST BASES WHEN PLUMBING POLES OR STANDARDS DURING INSTALLATION. THE USE OF WASHERS IN LIEU OF PROPER LEVELING SHIMS IS NOT ACCEPTABLE.

SHIM LENGTH SHALL BE LONG ENOUGH TO COMPLETELY COVER THE AREA UNDER THE LENGTH AND WIDTH OF THE BASE MOUNTING FLANGE.

DOUBLE NUTTING IS NOT ACCEPTABLE FOR LEVELING OR MOUNTING PURPOSES.

A NEMA APPROVED, U.L. LISTED, COPPER WITH BRASS OR STAINLESS STEEL SET SCREW, DIRECT BURY RATED, MECHANICAL CONNECTOR (LUG), SIZED TO ACCEPT AWG. #10 TO #4 COPPER STRANDED WIRE SHALL BE FURNISHED AND INSTALLED IN THE PEDESTAL AND TRANSFORMER BASES.

THE MECHANICAL CONNECTOR SHALL BE INSTALLED USING A 1/4" - 20 (TPI) STAINLESS STEEL HEX HEAD BOLT OF SUFFICIENT LENGTH TO FIRMLY ATTACH THE LUG TO THE BASE.

SHOULD THE MANNER OF ATTACHMENT OF THE LUG REQUIRE WASHERS, HEX NUTS, LOCK WASHER - THEY SHALL BE STAINLESS STEEL AS IS THE BOLT. THE MANNER OF ATTACHMENT SHALL NOT BLOCK ACCESSIBILITY TO WIRE PLACEMENT IN THE CONNECTOR.

PEDESTAL BASE COLLAR THREADING SHALL BE TAPERED AND IN ACCORDANCE WITH NATIONAL PIPE THREADING DIMENSIONS.

BASE COLLAR THREADING SHALL EXTEND INTO THE BASE COLLAR WITH SUFFICIENT DEPTH TO ACCEPT THE INSTALLATION OF TRAFFIC SIGNAL STANDARDS TO A DEPTH OF 1 1/2", THEN TIGHTENING TO A POINT OF BEING IMMOVABLE.

THE ACCESS DOOR SHALL BE OF THE SAME MATERIAL AS THE BASE.

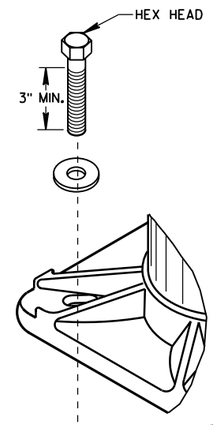

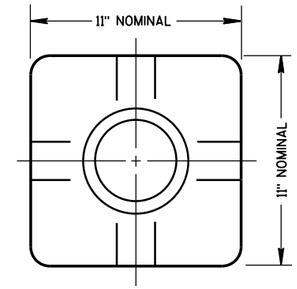

TOP VIEW
(PEDESTAL BASE)

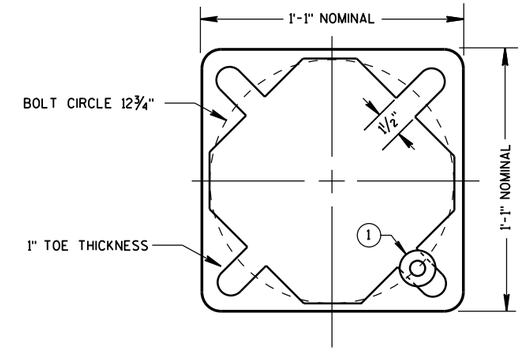

BOTTOM VIEW
(PEDESTAL BASE)

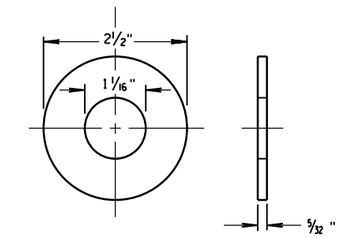

ZINC COATED STEEL WASHER
TO BE PROVIDED BY THE CONTRACTOR

PEDESTAL BASE WASHER (1)

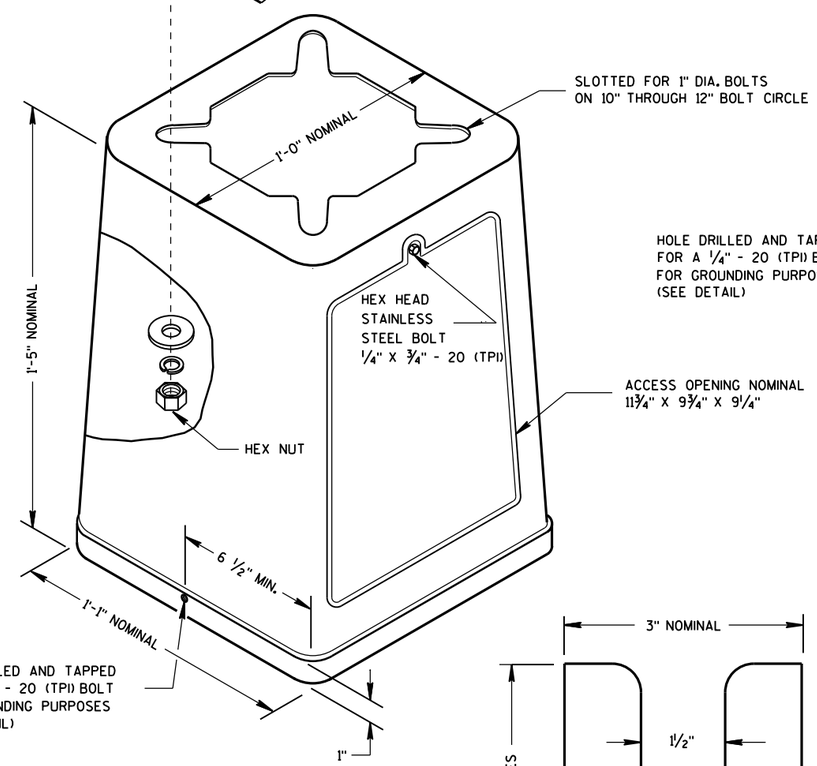

ISOMETRIC VIEW

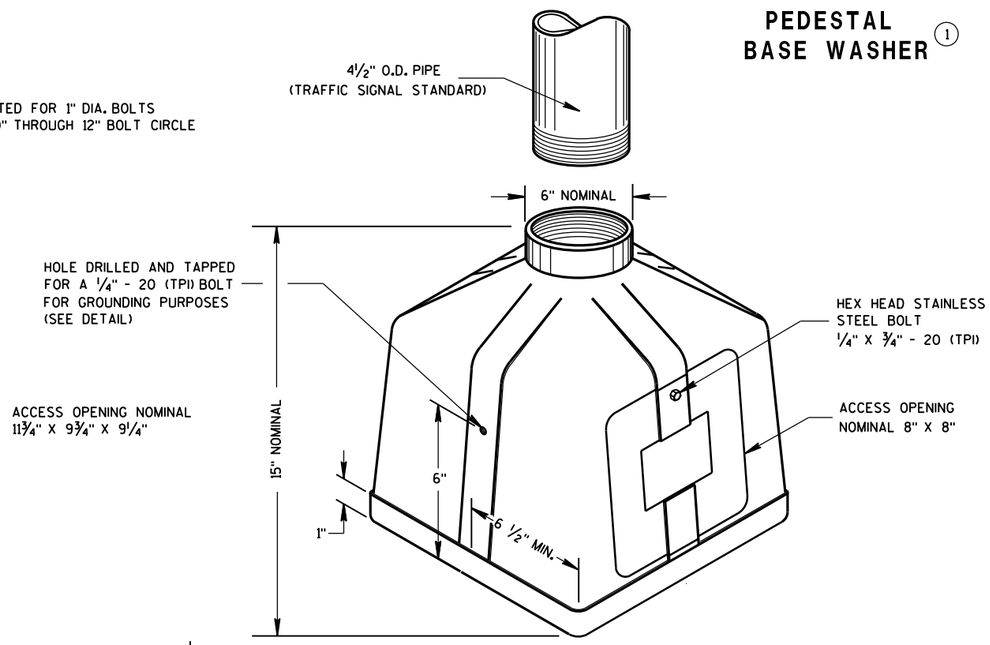

ISOMETRIC VIEW
PEDESTAL BASE

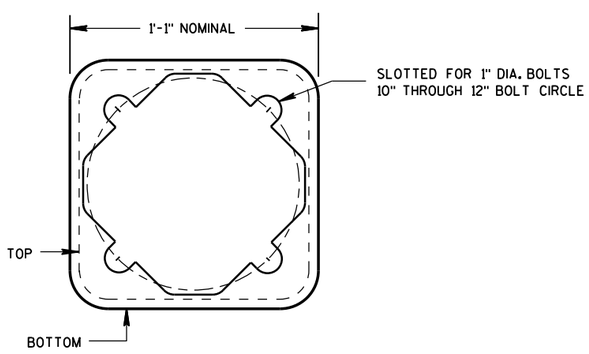

BOTTOM VIEW
(TRANSFORMER BASE)

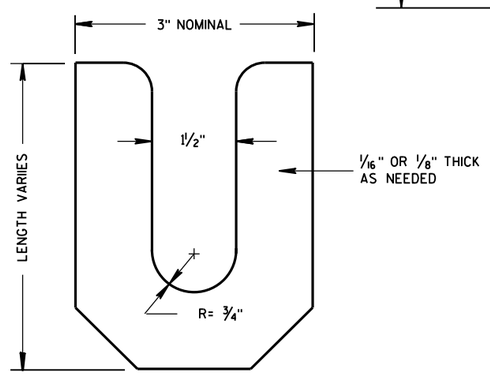

LEVELING SHIM

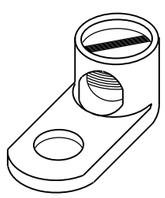

TYPICAL MECHANICAL CONNECTOR LUG

TO BE FURNISHED WITH EACH BASE

TRANSFORMER BASE

INTENDED FOR USE WITH TYPE 2, 3, 4, 5 & 6 POLES

TRANSFORMER/PEDESTAL BASES	
STATE OF WISCONSIN DEPARTMENT OF TRANSPORTATION	
APPROVED Sept. 2014 DATE	/S/ Ahmet Demirbilek STATE ELECTRICAL
FHWA	

6

6

S.D.D. 9 C 3-4

S.D.D. 9 C 3-4

CONTROL CABINET BASE TYPE	DIMENSIONS				CUBIC YARD CONCRETE (APPROX.)
	H	I	J	K	
TYPE 6 - 30" CABINET	34"	60"	10"	17"	.64
TYPE 7 - 38" CABINET	42"	60"	10"	21"	.93
TYPE 8 - 38" CABINET	42"	72"	12"	21"	1.29
TYPE 9 - VARIABLE	54"	72"	14"	27"	1.56
TYPE 10 - POST MOUNT	AS SHOWN				.65*

*INCLUDES MAINTENANCE PLATFORM.

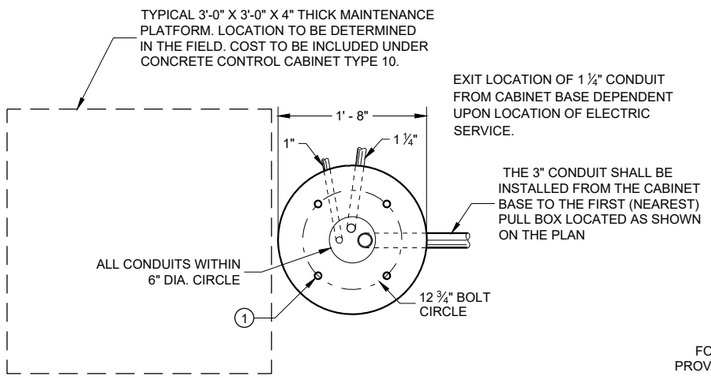

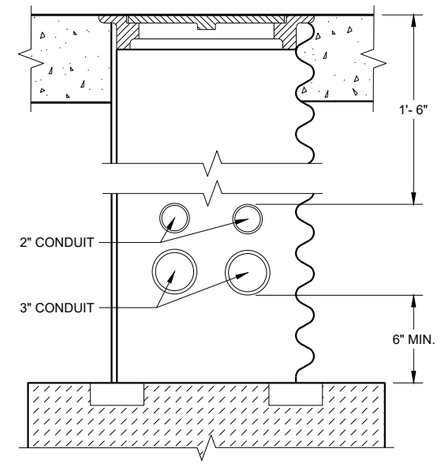

CONDUIT LOCATIONS IN 24" X 36" PULL BOX

(LEADING TO CONTROLLER CABINET BASE TYPE 6, 7, 8 AND 9)

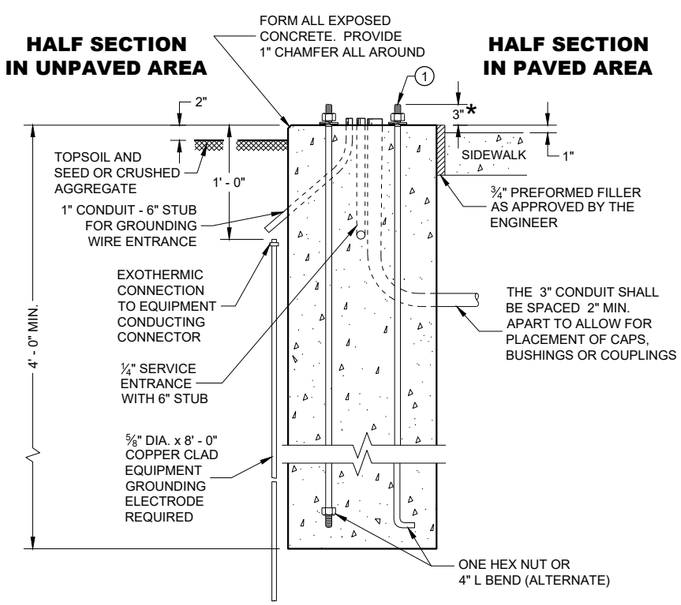

TYPE 10

*ANY ANCHOR ROD PROJECTION SHORTER THAN 2 ¾" OR LONGER THAN 3 ¼" SHALL REQUIRE THE BASE TO BE REMOVED AND REPLACED AT THE CONTRACTORS EXPENSE.

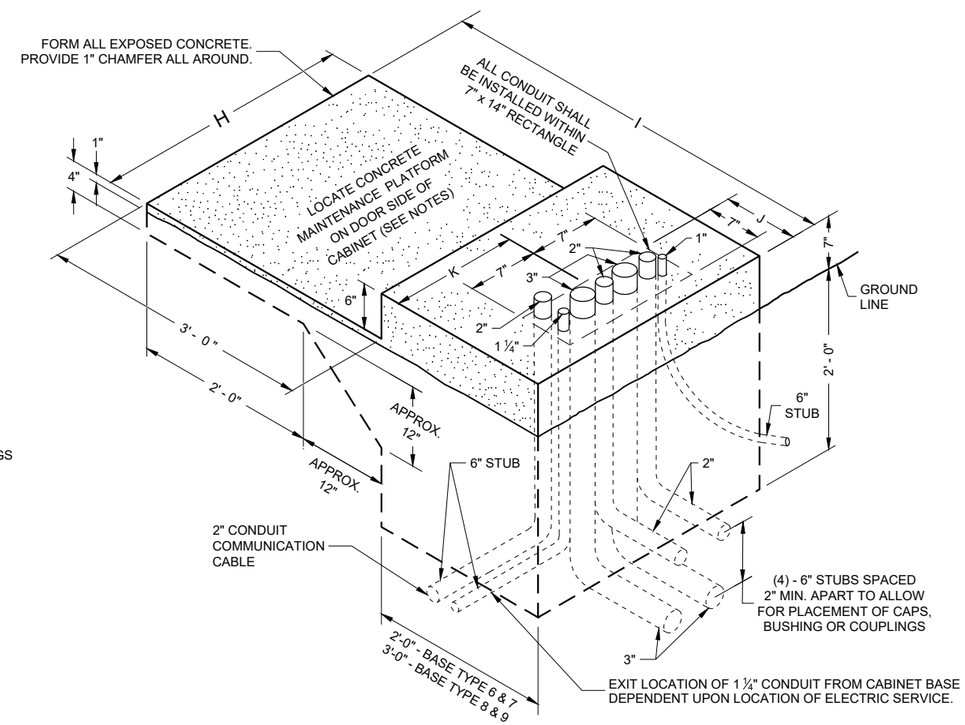

ISOMETRIC VIEW
TYPE 6, 7, 8 AND 9

GENERAL NOTES

DETAILS OF CONSTRUCTION, MATERIALS AND WORKMANSHIP NOT SHOWN ON THIS DRAWING SHALL CONFORM TO THE PERTINENT REQUIREMENTS OF THE CONTRACT.

INSTALL FOUR (4) ½" INCH MINIMUM DIAMETER X 4 INCH MINIMUM LENGTH APPROVED CONCRETE MASONRY ANCHORS WITH A PULLOUT STRENGTH OF 9,000 LBS. TO ANCHOR THE CABINET TO TYPE 6, 7, 8, AND 9 BASES. THE ANCHOR STUDS SHALL BE LOCATED AS DIRECTED BY THE ENGINEER TO PROPERLY ANCHOR THE CONTROL CABINET TO THE BASE.

WHEN REQUIRED TO CONNECT NON - METALLIC CONDUIT TO METALLIC CONDUIT, ONLY ADAPTER FITTINGS, U. L. LISTED FOR ELECTRICAL USE, SHALL BE USED.

CONDUIT HEIGHT ABOVE THE CONCRETE BASE SHALL BE 1 INCH.

DEPTH OF CONDUIT INSTALLED BELOW THE TRAVELED WAY SHALL BE 24 INCHES MINIMUM AND 36 INCHES MAXIMUM.

DEPTH OF CONDUIT INSTALLED THAT IS NOT BELOW THE TRAVELED WAY SHALL BE 18 INCHES MINIMUM AND 36 INCHES MAXIMUM.

ANY EXCEPTION TO THE MAXIMUM DEPTH SHALL BE ONLY WITH THE WRITTEN APPROVAL OF THE ENGINEER.

CONTROL CABINET BASE TOP SURFACE SHALL BE TROWEL FINISHED SMOOTH AND LEVEL.

WHEN A TYPE 10 CONTROL CABINET BASE IS USED TO POST MOUNT A CONTROL CABINET, A 36" SQUARE 4" THICK CONCRETE MAINTENANCE PLATFORM SHALL BE REQUIRED ON THE DOOR SIDE OF THE CABINET. THE TOP 1 INCH SHALL BE ABOVE FINISHED GRADE AND BE BROOM FINISHED AND LEVEL.

MAINTENANCE PLATFORMS ARE NOT REQUIRED WHEN THE SURROUNDING AREA IS PAVED.

MINIMUM BENDING RADIUS OF CONDUIT EQUALS 6 TIMES THE DIAMETER.

ALL METALLIC CONDUIT ENDS SHALL BE REAMED AND THREADED.

ALL CONDUIT ENDS AT THE TOP OF CONCRETE BASES SHALL BE CAPPED IF METALLIC OR PLUGGED IF NON - METALLIC IMMEDIATELY AFTER PLACEMENT AND BEFORE CONCRETE IS POURED. CONDUITS IN WHICH WIRE OR CABLE IS NOT BEING INSTALLED SHALL REMAIN CAPPED OR PLUGGED.

ALL FOUR (TWO INCH AND THREE INCH) CONDUIT SHALL BE INSTALLED FROM THE CABINET BASE TO THE FIRST (NEAREST PULL BOX LOCATED AS SHOWN ON THE PLANS.

BELL ENDS SHALL BE INSTALLED ON ALL PVC CONDUIT EXPOSED AT THE TOP OF THE CONCRETE BASE BEFORE INSTALLATION OF CABLE OR WIRE.

CONCRETE FORM DEPTH BELOW FINISHED GRADE SHALL BE 6" MAXIMUM. CONCRETE FORMS SHALL BE REMOVED AFTER CONCRETE HAS SET.

WHEN ANCHOR RODS USING THE ALTERNATE L BEND ARE FURNISHED FOR THE TYPE 10 BASE, THE 4" L BEND SHALL BE IN ADDITION TO THE SPECIFIED ANCHOR ROD BAR LENGTH.

THE "L" BEND SHALL NOT BE THREADED.

STRAIGHT ANCHOR RODS SHALL BE THREADED 12" IN LENGTH ON EACH END OF THE ROD.

ANCHOR RODS SHALL BE INSTALLED WITH MISALIGNMENTS OF LESS THAN 1 :40 FROM VERTICAL.

(1) FOUR (4) ANCHOR RODS, 1" DIA. X 3'-6". ANCHOR RODS SHALL BE MANUFACTURED IN ACCORDANCE WITH SECTION 654.2 OF THE STANDARD SPECIFICATIONS.

CONCRETE CABINET CONTROL BASES

STATE OF WISCONSIN
DEPARTMENT OF TRANSPORTATION

APPROVED
September 2016 /S/ Ahmet Demerbilek
DATE STATE ELECTRICAL ENGI 110
FHWA

6
SDD 09C05 - 10

CONCRETE CABINET CONTROL BASES

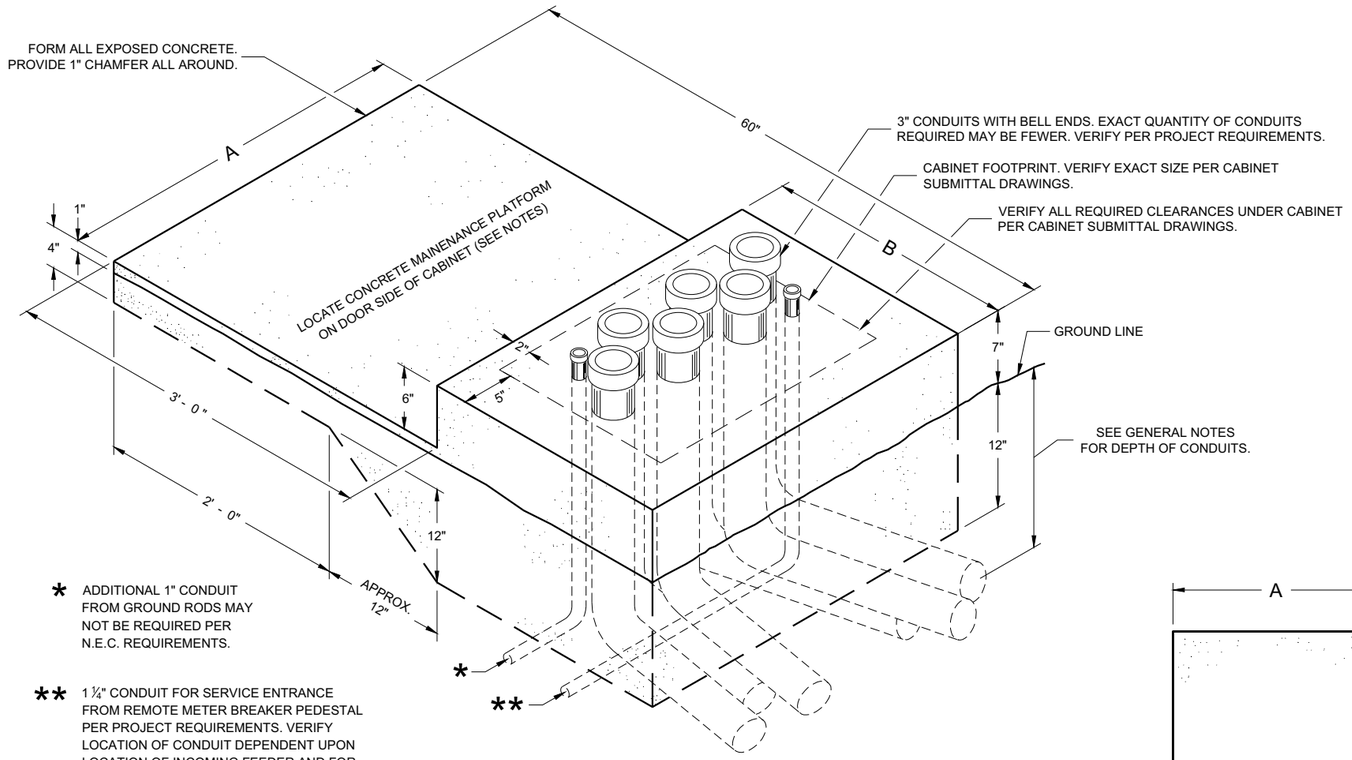

* ADDITIONAL 1" CONDUIT FROM GROUND RODS MAY NOT BE REQUIRED PER N.E.C. REQUIREMENTS.

** 1 ¼" CONDUIT FOR SERVICE ENTRANCE FROM REMOTE METER BREAKER PEDESTAL PER PROJECT REQUIREMENTS. VERIFY LOCATION OF CONDUIT DEPENDENT UPON LOCATION OF INCOMING FEEDER AND FOR EASE OF CONNECTION TO LOAD CENTER.

ISOMETRIC VIEW

CONCRETE CONTROL CABINET BASE, TYPE L

(C.Y. CONCRETE = APPROX. 0.4)

CONCRETE BASE TYPE	CABINET WIDTH	DIMENSIONS		MAXIMUM 3" CONDUITS
		A	B	
L24	24"	34"	24"	4
L30	30"	40"	24"	6

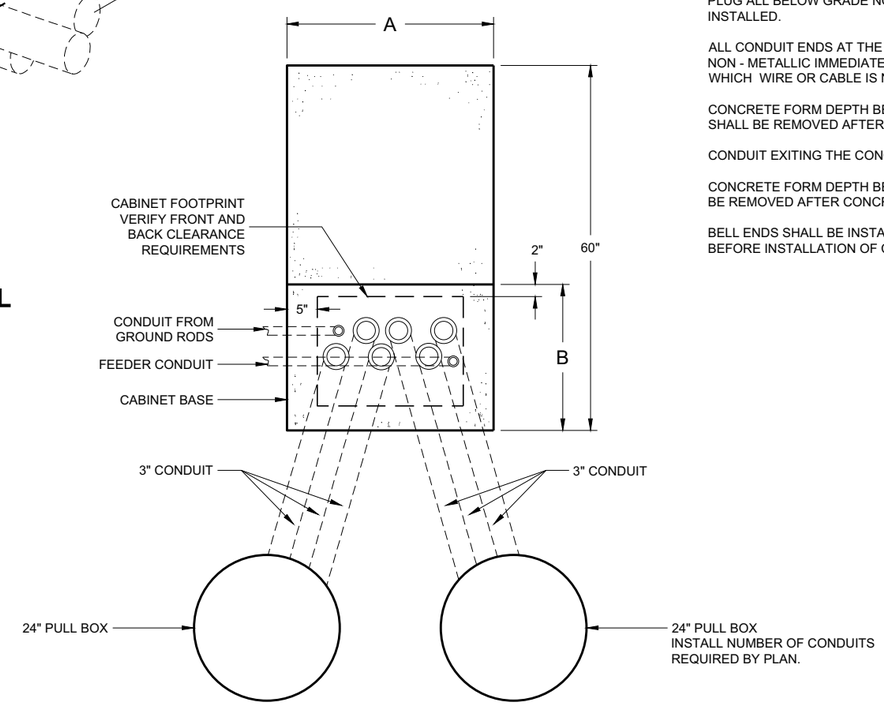

PLAN VIEW

CONCRETE CONTROL CABINET BASE, TYPE L

GENERAL NOTES

DETAILS OF CONSTRUCTION, MATERIALS AND WORKMANSHIP NOT SHOWN ON THIS DRAWING SHALL CONFORM TO THE PERTINENT REQUIREMENTS OF THE CONTRACT.

INSTALL FOUR STAINLESS STEEL APPROVED CONCRETE MASONRY ANCHORS TO ANCHOR THE CABINET BASES. THE ANCHORS SHALL BE LOCATED AS DIRECTED BY THE ENGINEER TO PROPERLY ANCHOR THE CONTROL CABINET TO THE BASE.

WHEN REQUIRED TO CONNECT NON - METALLIC CONDUIT TO METALLIC CONDUIT, ONLY ADAPTER FITTINGS, U. L. LISTED FOR ELECTRICAL USE, SHALL BE USED.

CONDUIT HEIGHT ABOVE THE CONCRETE BASE SHALL BE 1 INCH.

DEPTH OF CONDUIT INSTALLED BELOW THE TRAVELED WAY SHALL BE 24 INCHES MINIMUM AND 36 INCHES MAXIMUM.

DEPTH OF CONDUIT INSTALLED THAT IS NOT BELOW THE TRAVELED WAY SHALL BE 18 INCHES MINIMUM AND 36 INCHES MAXIMUM.

ANY EXCEPTION TO THE MAXIMUM DEPTH SHALL BE ONLY WITH THE WRITTEN APPROVAL OF THE ENGINEER.

LOCATIONS SHALL BE AS SHOWN ON THE PLANS UNLESS DETERMINED BY THE ENGINEER IN THE FIELD.

CONTROL CABINET BASE TOP SURFACE SHALL BE TROWEL FINISHED SMOOTH AND LEVEL.

MAINTENANCE PLATFORM SHALL BE FLOAT OR BROOM FINISHED AND LEVEL.

MAINTENANCE PLATFORMS ARE NOT REQUIRED WHEN THE SURROUNDING AREA IS PAVED.

MINIMUM BENDING RADIUS OF CONDUIT EQUALS 6 TIMES THE DIAMETER.

ALL METALLIC CONDUIT ENDS SHALL BE REAMED AND THREADED.

CAP ALL BELOW GRADE METALLIC CONDUIT ENDS IN WHICH WIRE OR CABLE IS NOT BEING INSTALLED.

PLUG ALL BELOW GRADE NON - METALLIC CONDUIT ENDS IN WHICH WIRE OR CABLE IS NOT BEING INSTALLED.

ALL CONDUIT ENDS AT THE TOP OF CONCRETE BASES SHALL BE CAPPED IF METALLIC OR PLUGGED IF NON - METALLIC IMMEDIATELY AFTER PLACEMENT AND BEFORE CONCRETE IS POURED. CONDUITS IN WHICH WIRE OR CABLE IS NOT BEING INSTALLED SHALL REMAIN CAPPED OR PLUGGED.

CONCRETE FORM DEPTH BELOW FINISHED GRADE SHALL BE 6 INCHES MAXIMUM. CONCRETE FORMS SHALL BE REMOVED AFTER CONCRETE HAS SET.

CONDUIT EXITING THE CONCRETE BASE SHALL TERMINATE IN PULL BOXES AS SHOWN ON THE PLANS.

CONCRETE FORM DEPTH BELOW FINISHED GRADE SHALL BE 6 INCH MAXIMUM. CONCRETE FORMS SHALL BE REMOVED AFTER CONCRETE HAS SET.

BELL ENDS SHALL BE INSTALLED ON ALL PVC CONDUIT EXPOSED AT THE TOP OF THE CONCRETE BASE BEFORE INSTALLATION OF CABLE OR WIRE.

CONCRETE CONTROL CABINET BASE, TYPE L

STATE OF WISCONSIN
DEPARTMENT OF TRANSPORTATION

APPROVED
November 2018 /S/ Ahmet Demirbilek
DATE STATE ELECTRICAL ENGI 111

FHWA

6

6

SDD 09C14 - 03

SDD 09C14 - 03

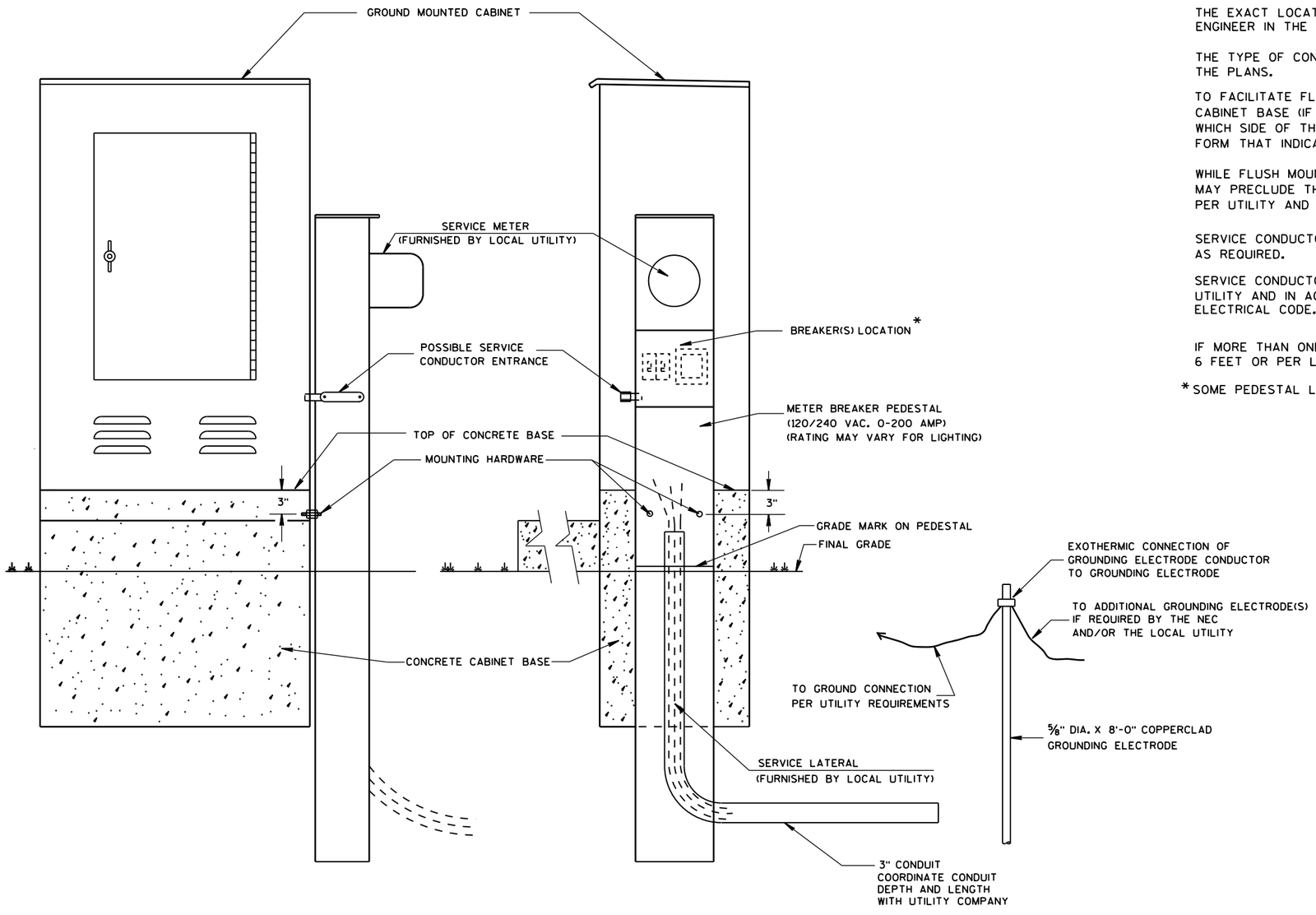

TYPICAL CABINET SERVICE INSTALLATION

GENERAL NOTES

DETAILS OF CONSTRUCTION, MATERIALS AND WORKMANSHIP NOT SHOWN ON THIS DRAWING SHALL CONFORM TO THE PERTINENT REQUIREMENTS OF THE CONTRACT.

THE EXACT LOCATION OF THE METER BREAKER PEDESTAL SHALL BE DETERMINED BY THE ENGINEER IN THE FIELD.

THE TYPE OF CONCRETE CABINET BASE TO BE INSTALLED SHALL BE AS CALLED FOR IN THE PLANS.

TO FACILITATE FLUSH MOUNTING OF THE METER BREAKER PEDESTAL AGAINST THE SIDE OF THE CABINET BASE (IF FLUSH MOUNTING POSSIBLE. CONFER WITH THE LOCAL UTILITY TO DETERMINE WHICH SIDE OF THE CONCRETE BASE THE ELECTRICAL SERVICE LATERAL WILL APPROACH. THEN FORM THAT INDICATED SIDE FOR FULL SIDE DEPTH.

WHILE FLUSH MOUNTING IS THE MOST DESIRABLE MOUNTING CONFIGURATION UTILITY REQUIREMENTS MAY PRECLUDE THIS OPTION. CONTRACTOR MUST PROVIDE UTILITY APPROVED PEDESTAL AND INSTALL PER UTILITY AND MANUFACTURERS REQUIREMENTS.

SERVICE CONDUCTOR ENTRANCES SHALL BE RIGID METALLIC CONDUIT, NIPPLES AND/OR CONDULETS AS REQUIRED.

SERVICE CONDUCTOR ENTRANCES SHALL BE SIZED AND LOCATED AS REQUIRED BY THE LOCAL UTILITY AND IN ACCORDANCE WITH APPROPRIATE ARTICLES OF THE LATEST ACCEPTED NATIONAL ELECTRICAL CODE.

IF MORE THAN ONE GROUNDING ELECTRODE IS REQUIRED, THE DISTANCE APART SHALL BE 6 FEET OR PER LOCAL UTILITY REGULATIONS.

*SOME PEDESTAL LIGHTING PLANS SHOW MAIN LUGS ONLY.

6

6

CABINET SERVICE INSTALLATION (METER BREAKER PEDESTAL)	
STATE OF WISCONSIN DEPARTMENT OF TRANSPORTATION	
APPROVED Sept. 2014 DATE	/S/ Ahmet Demirbilek STATE ELECTRICAL
FHWA	

S.D.D. 9 D 1-5

S.D.D. 9 D 1-5

GENERAL NOTES

DETAILS OF CONSTRUCTION, MATERIALS AND WORKMANSHIP NOT SHOWN ON THIS DRAWING SHALL CONFORM TO THE PERTINENT REQUIREMENTS OF THE STANDARD SPECIFICATIONS AND APPLICABLE SPECIAL PROVISIONS.

ALL INTERNAL ELECTRICAL COMPONENTS WILL BE PRE - WIRED BY THE CABINENT MANUFACTURER.

ALL CONDUIT ENTRIES SHALL BE SEALED WITH AN APPROPRIATE DUCT SEALING COMPOUND.

ORIENT PHOTOCELL AWAY FROM AMBIENT LIGHT SOURCES AND ONCOMING TRAFFIC HEADLIGHTS, UNLESS OTHERWISE CALLED FOR IN THE SPECIAL PROVISION.

THE CONTRACTOR SHALL TOUCH UP ANY DAMAGE TO THE ANODIZED FINISH CAUSED BY THE INSTALLATION PROCESS. COLOR MATCH PAINT SHALL BE USED.

A COMPLETE LIGHTING OR ELECTRICAL PLAN SHALL BE SECURELY PLACED IN THE DOCUMENT HOLDER ATTACHED TO THE DOOR.

FRONT INTERIOR ELEVATION

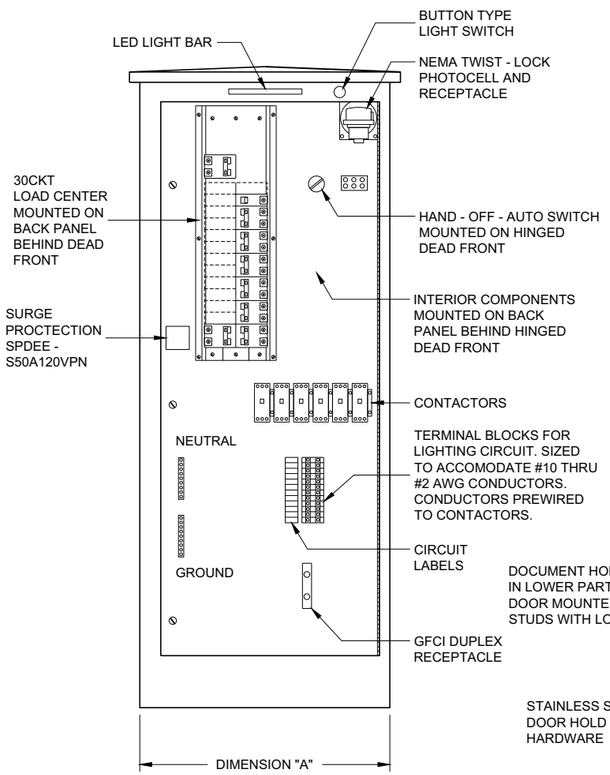

SIDE VIEW

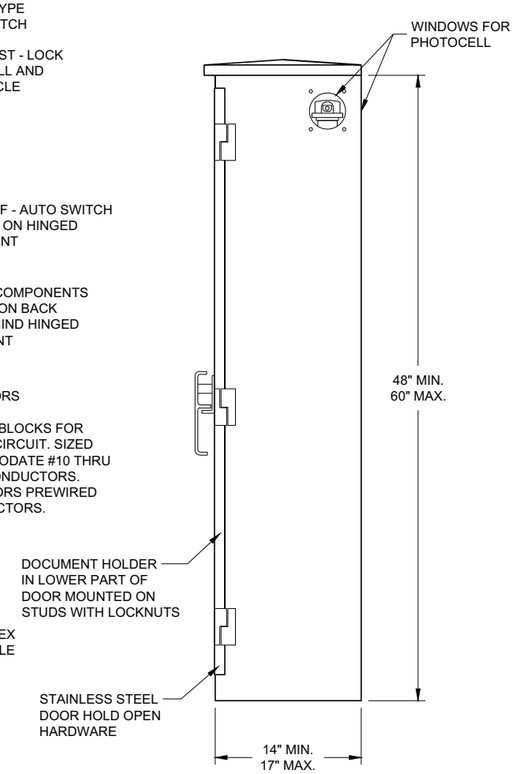

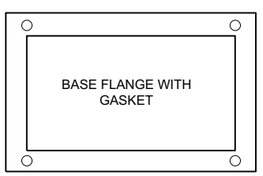

TABLE OF DIMENSIONS (INCHES)		
CONCRETE BASE TYPE	CABINET WIDTH	DIMENSION "A"
L24	24"	24"
L30	30"	30"

LIGHTING CONTROL CABINET

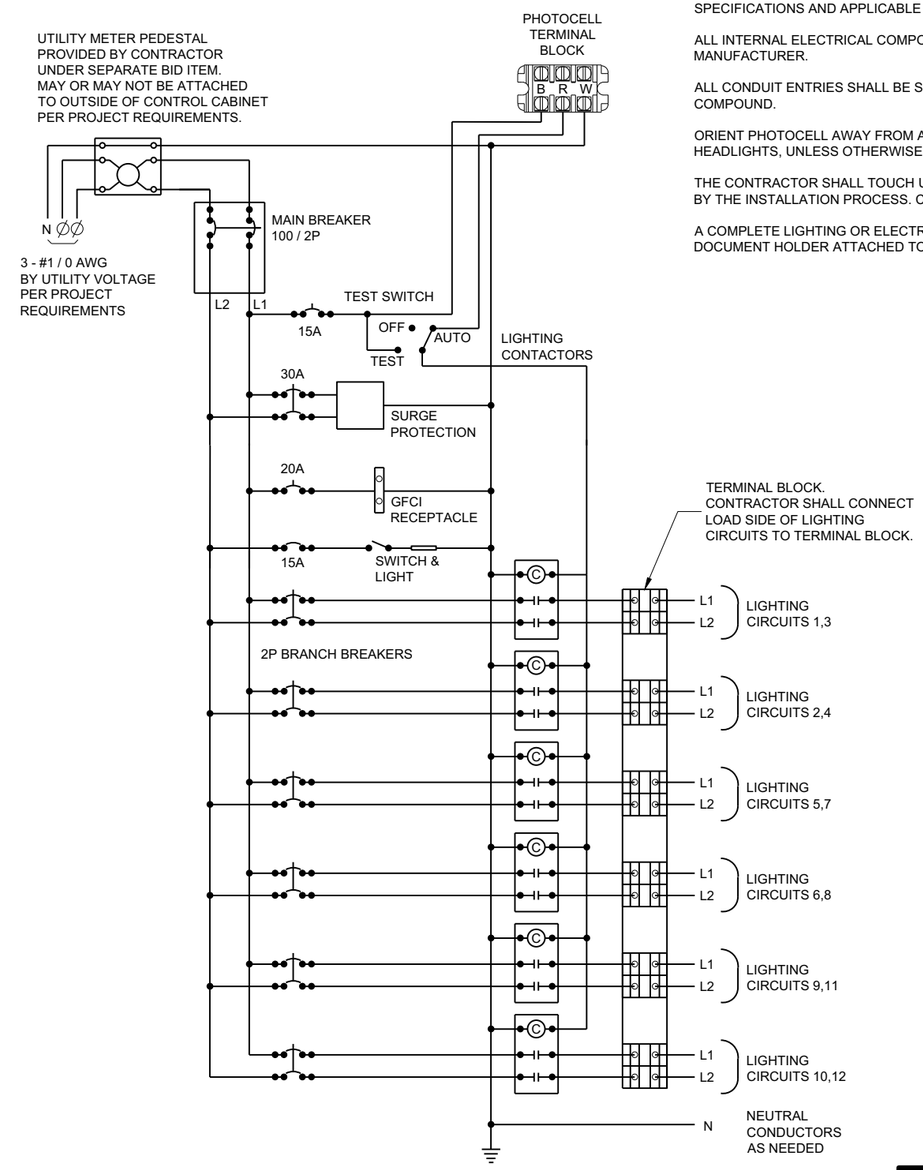

CONTROL CABINET SCHEMATIC

LIGHTING CONTROL CABINET
120 / 240 VOLT

STATE OF WISCONSIN
DEPARTMENT OF TRANSPORTATION

APPROVED
November 2018 /S/ Ahmet Demirbilek
DATE STATE ELECTRICAL ENGI
FHWA

6
SDD 09D04 - 03

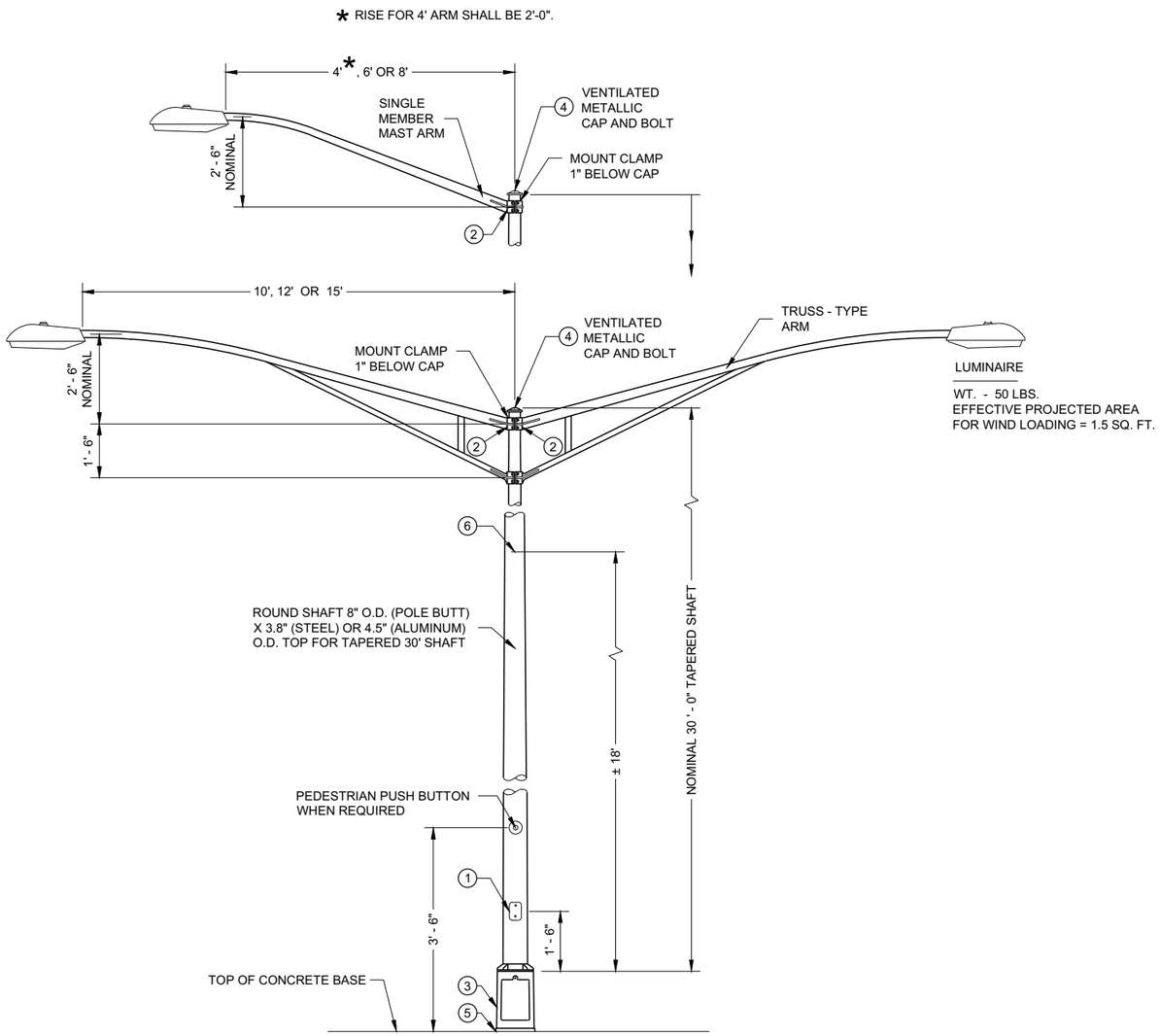

TYPE 5 POLE MOUNTING CONFIGURATION

(MAXIMUM LOAD)

LIGHTING ONLY

GENERAL NOTES

DETAILS OF CONSTRUCTION, MATERIALS AND WORKMANSHIP NOT SHOWN ON THIS DRAWING SHALL CONFORM TO THE PERTINENT REQUIREMENTS OF THE CONTRACT.

SECTION 657, POLES, OF THE STANDARD SPECIFICATIONS SHALL APPLY TO THIS DRAWING.

ALL TYPE 5 POLE MOUNTINGS SHALL BE DESIGNED TO INCLUDE TWIN 15' ARMS WITH LUMINAIRES.

POLES SHALL BE GALVANIZED STEEL OR ALUMINUM, AS CALLED FOR IN THE CONTRACT.

TYPE 5 ALUMINUM POLES SHALL BE CONSTRUCTED OF 6063 - T6 ALUMINUM ALLOY. SLEEVING INSIDE THE POLE IS NOT ACCEPTABLE.

TYPE 5 ALUMINUM POLES SHALL HAVE A MINIMUM WALL THICKNESS OF 0.1888".

TYPE 5 STEEL POLES SHALL HAVE A MINIMUM WALL THICKNESS OF U.S. STANDARD 11 GAGE (0.1196").

THE SLIPFITTER END OF THE LUMINAIRE MAST ARM SHALL BE A NOMINAL 2 ⅜ INCHES IN OUTSIDE DIAMETER. THE STRAIGHT PORTION OF THE SLIPFITTER END OF THE LUMINAIRE MAST ARM SHALL BE A NOMINAL 12 INCHES IN LENGTH.

WHEN TRANSFORMER BASES ARE USED, WIRE CONNECTIONS SHALL BE MADE IN THE TRANSFORMER BASE.

1. 4" X 6" REINFORCED HANDHOLE AND COVER ASSEMBLY WITH TWO (2) ¼" X ¾" - 20 TPI , STAINLESS STEEL, HEX HEAD BOLTS.
2. GROMMETS. 1" CHASE NIPPLES OR 1" CLOSE CONDUIT NIPPLES WITH BUSHINGS SHALL BE PROVIDED FOR 1 ⅜" HOLE IN POLE SHAFT FOR WIRING.
3. CAST ALUMINUM TRANSFORMER BASE, WHEN REQUIRED.
4. FURNISH AND INSTALL VENTILATED, CAST METALLIC (ALUMINUM ALLOY) CAPS. FASTEN CAPS WITH ONE (1) ¼" X ¾" - 20 TPI STAINLESS STEEL, HEX HEAD BOLT.
5. SHIMMING, IF NEEDED, SHALL BE LOCATED BETWEEN THE CONCRETE FOUNDATION AND POLE.
6. INTERNAL DUMBBELL - TYPE VIBRATION DAMPER.

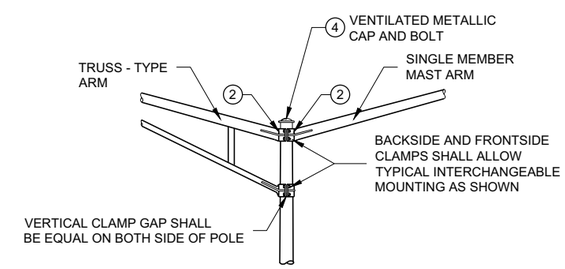

INTERCHANGEABLE MOUNTING DETAIL

6

6

POLE MOUNTINGS FOR LIGHTING UNITS, TYPE 5 (30 FEET)

STATE OF WISCONSIN
DEPARTMENT OF TRANSPORTAT

SDD 09E01 - 15d

SDD 09E01 - 15d

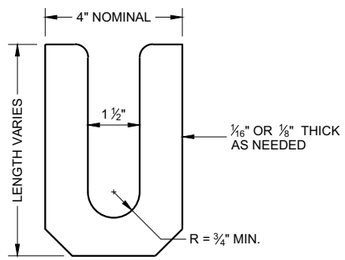

LEVELING SHIM (1)
SHALL BE ALUMINUM

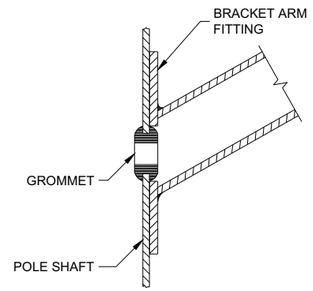

TYPICAL APPLICATION OF GROMMET IN POLE SHAFT

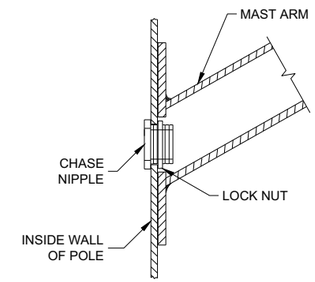

TYPICAL APPLICATION OF CHASE NIPPLE IN POLE SHAFT

GENERAL NOTES

CLAMP BOLT-NUT TIGHTENING TORQUE SHALL BE INDICATED BY INDENT STAMPING (1/2 INCH NUMERALS AND LETTERS) OR WEATHERPROOF PRINTING ON THE INSIDE OF THE CLAMP THAT IS WELDED TO THE ARM MEMBER.

(1) 4.5" I.D. FOR LUMINAIRE MAST ARM CLAMP. 6.625" I.D. FOR TROMBONE MAST ARM CLAMP.

(2) INDIVIDUAL BASE PLATE ANCHOR ROD COVERS. (4 REQUIRED)

(3) BASE PLATE SLOTTED TO ACCEPT 11" THROUGH 12" BOLT CIRCLE USING 1" DIAMETER ANCHOR RODS.

(4) LEVELING SHIMS, DESIGNED FOR THE PURPOSE, SHALL BE USED WHEN PLUMBING POLES. THE USE OF WASHERS IN LIEU OF PROPER LEVELING SHIMS IS NOT ACCEPTABLE. LEVELING SHIMS SHALL BE USED ONLY BETWEEN THE TOP OF THE CONCRETE BASE AND A METALLIC BASE PLATE.

SHIMS SHALL BE LONG ENOUGH AND WIDE ENOUGH TO COMPLETELY COVER THE AREA UNDER THE LENGTH AND WIDTH OF THE BASE MOUNTING FLANGE.

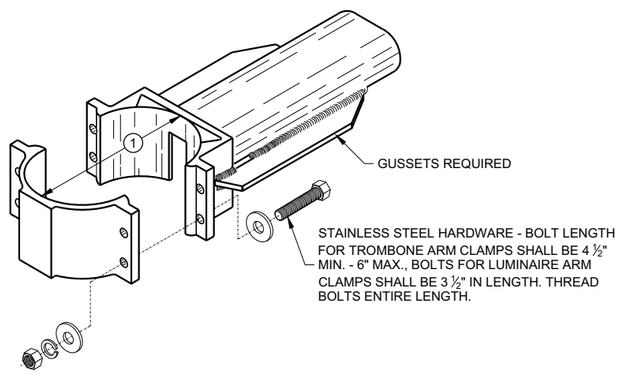

TYPICAL TROMBONE MAST ARM AND SINGLE LUMINAIRE MAST ARM MOUNTING CLAMP

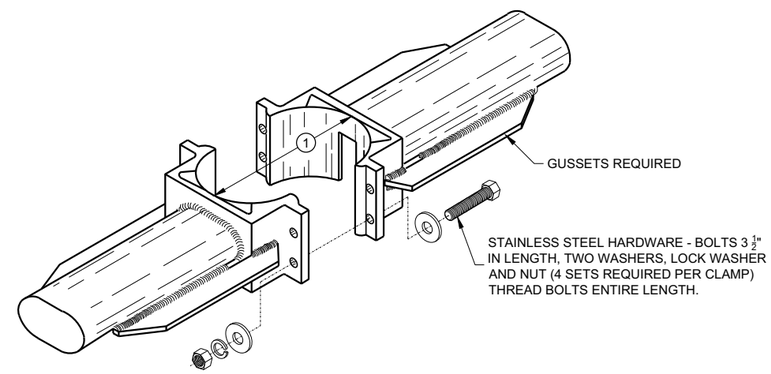

TYPICAL LUMINAIRE MAST ARM (DOUBLE) MOUNTING BRACKETS

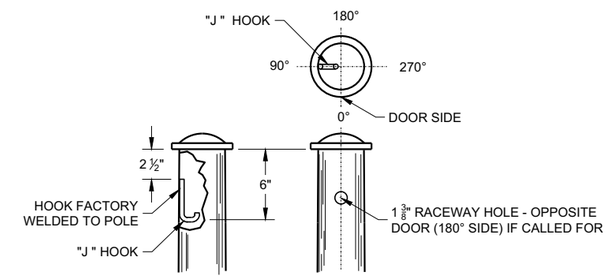

TYPICAL "J" HOOK LOCATION

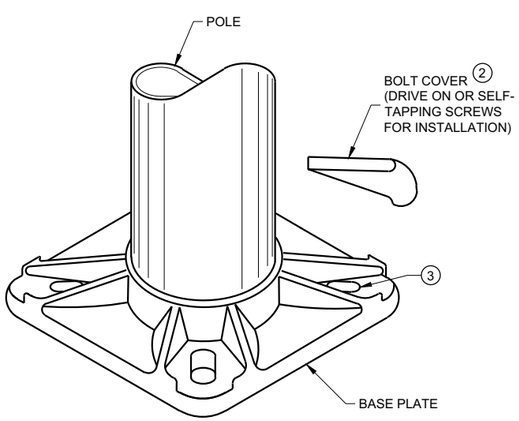

BASE PLATE

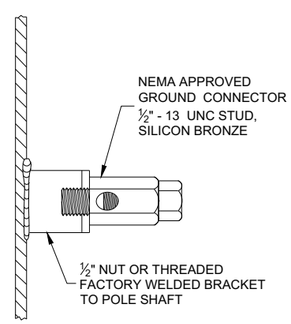

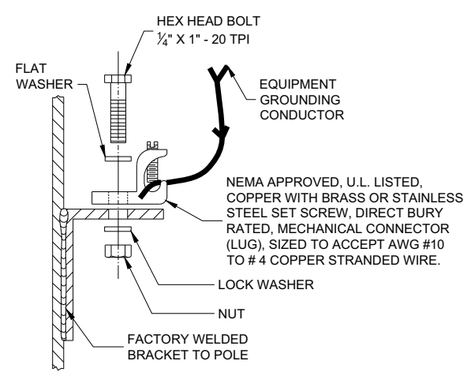

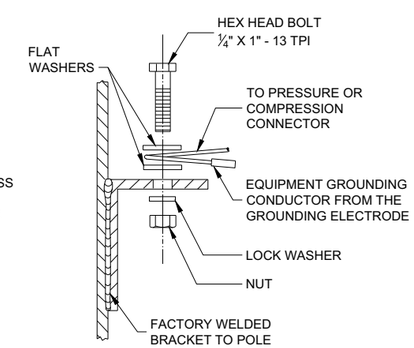

TYPICAL GROUNDING CONNECTIONS
NUT, BOLT AND WASHERS SHALL BE STAINLESS STEEL

HARDWARE DETAILS FOR POLE MOUNTING

STATE OF WISCONSIN
DEPARTMENT OF TRANSPORTATION

APPROVED
November 2018 /S/ Ahmet Demirbilek
DATE STATE ELECTRICAL ENGI

FHWA

6

SDD 09E01 - 15g

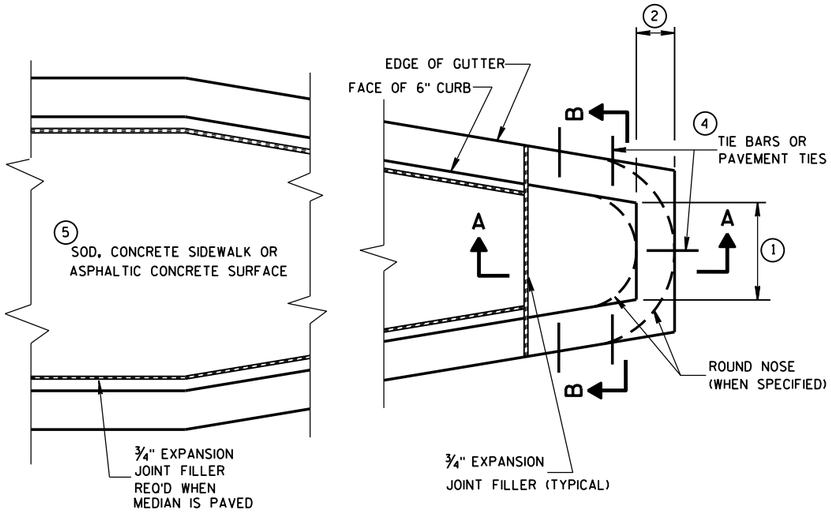

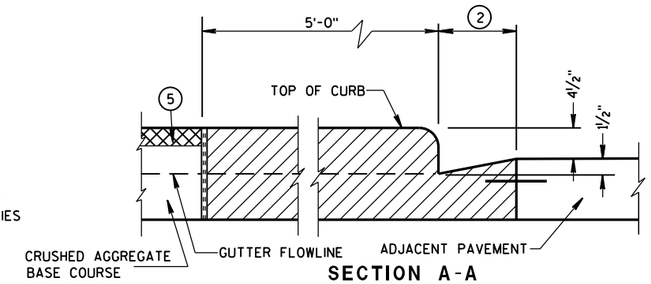

SECTION A-A

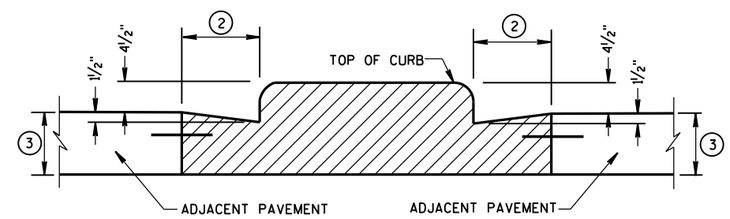

SECTION B-B

CONCRETE MEDIAN BLUNT NOSE DETAIL

GENERAL NOTES

DETAILS OF CONSTRUCTION, MATERIALS AND WORKMANSHIP NOT SHOWN ON THIS DRAWING SHALL CONFORM TO THE PERTINENT REQUIREMENTS OF THE STANDARD SPECIFICATIONS AND THE APPLICABLE SPECIAL PROVISIONS.

1. SEE PLAN FOR MEDIAN NOSE WIDTH AND RADIUS (FOR ROUND NOSE ALTERNATE).
2. WIDTH OF GUTTER TO MATCH EXISTING ADJACENT GUTTER OR AS SPECIFIED ELSEWHERE IN THE PLAN.
3. DEPTH EQUAL TO ADJACENT PAVEMENT. ADJACENT PAVEMENT STRUCTURE DETAILS ARE SHOWN ON THE PLAN. TYPICAL OPTIONS ARE:
   (1) NEW OR EXISTING CONCRETE PAVEMENT.
   (2) ASPHALTIC CONCRETE PAVEMENT OVER NEW OR EXISTING CONCRETE BASE COURSE.
   (3) ASPHALTIC CONCRETE PAVEMENT OVER CRUSHED AGGREGATE BASE COURSE.
4. TIE BARS OR PAVEMENT TIES REQUIRED IN NEW CONCRETE PAVEMENT OR CONCRETE BASE COURSE. TIE BARS SHALL BE NO. 4 X 2'-0" SPACED AT 2'-0" C-C.

   PAVEMENT TIES REQUIRED IN EXISTING CONCRETE BASE COURSE. PAVEMENT TIES SHALL BE NO. 6 X 1'-0" SPACED AT 3'-0" C-C INSTALLED ON A HORIZONTAL SKEW OF 6:1. THE DIRECTION OF SKEW SHALL ALTERNATE AFTER EVERY ONE OR TWO BARS.
5. SURFACE TYPE AND DETAILS ARE SHOWN ELSEWHERE IN THE PLAN.

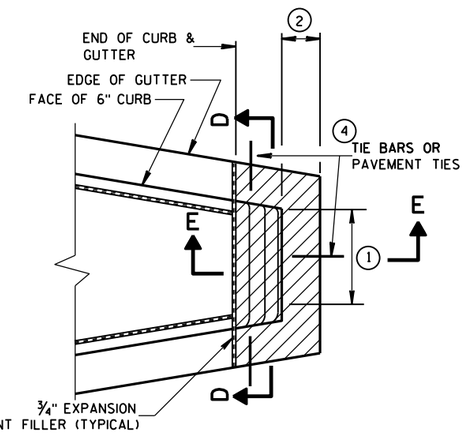

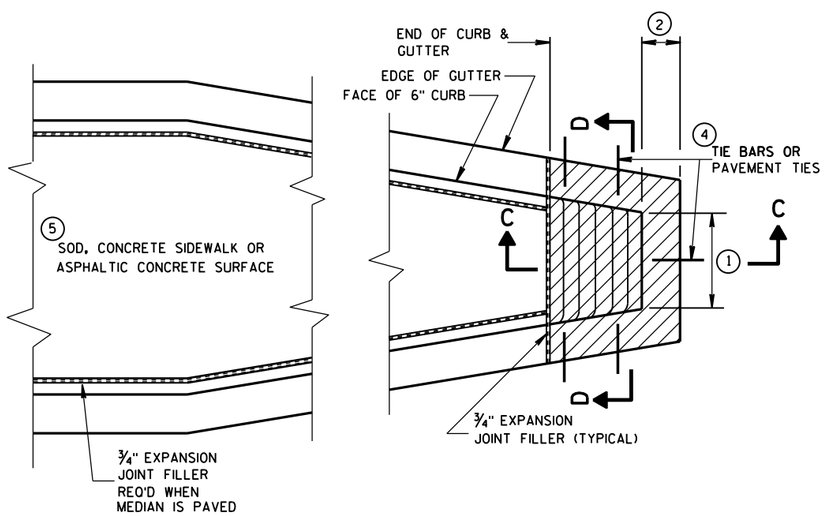

CONCRETE MEDIAN SLOPED NOSE TYPE 1

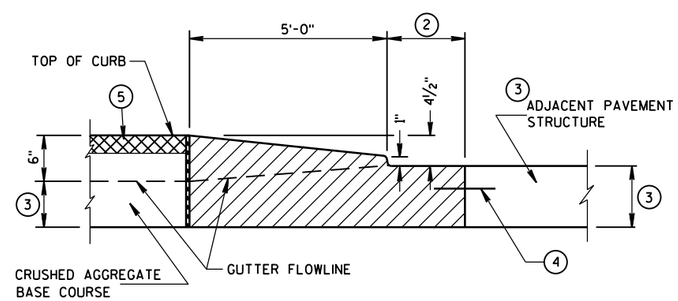

SECTION C-C

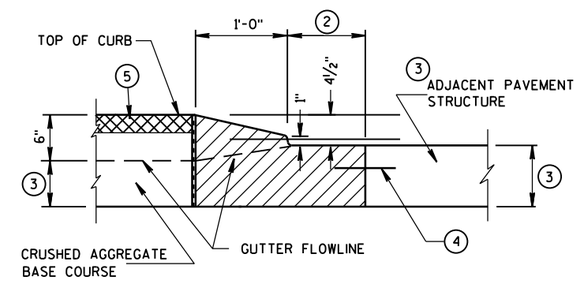

SECTION E-E

CONCRETE MEDIAN SLOPED NOSE TYPE 2

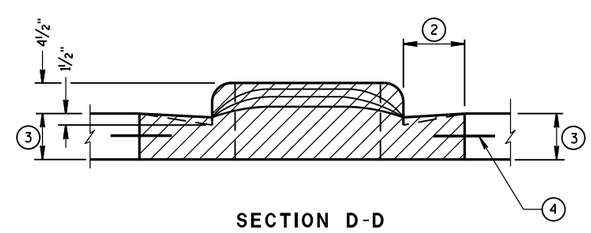

SECTION D-D

CONCRETE MEDIAN NOSE	
STATE OF WISCONSIN DEPARTMENT OF TRANSPORTATION	
APPROVED 6/8/2006 DATE	/S/ Jerry H. Zogg ROADWAY STANDARDS DEVELOPMENT ENGINEER
FHWA	

1. WOOD OR STEEL POSTS (w6X9 OR w6X8.5) MAY BE USED. DO NOT INTERMIX WOOD AND STEEL POSTS. INSTALL STEEL POSTS WITH HOLES ON APPROACHING TRAFFIC SIDE.
2. USE WOOD OR APPROVED PLASTIC BLOCKOUTS. WOOD BLOCKOUTS MAY BE CONSTRUCTED OUT OF TWO OR MORE WOOD BLOCKOUTS. SEE ALTERNATE WOOD BLOCKOUT DETAIL. DIMENSIONS OF APPROVED PLASTIC BLOCKOUTS MAY VARY.
3. IF ROCK IS ENCOUNTERED DURING EXCAVATION, PROVIDE A HOLE 12 INCHES IN DIAMETER EXTENDING 20 INCHES DEEP INTO THE ROCK. PLACE APPROXIMATELY 2 1/2" INCHES OF GRANULAR MATERIAL IN THE BOTTOM OF THE HOLE. CUT THE POSTS THE TO LENGTH AMD INSTALL. BACKFILL WITH EXCAVATED MATERIAL AND COMPACT. BACKFILL IS TO BE FREE OF LARGE ROCKS.
4. WHEN THE DISTANCE FROM BACK OF POST TO SHOULDER HINGE POINT IS LESS THAN 2 FEET INSTALL LONGER POST AT HALF POST SPACING (K).
5. FOR NEW MGS INSTALLATION TOP OF W-BEAM RAIL TOLERANCE IS ±1". FOR EXISTING MGS INSTALLATION TOP OF W-BEAM IS BETWEEN 27 ¾" TO 32".
6. WHEN USING STEEL POST AND WOOD BLOCKOUTS INSTALL FOUR 16D GALVANIZED NAILS. INSTALL NAILS AT THE BACK CORNERS OF THE BLOCK AND BEND THE NAILS OVER THE FLANGE OF THE STEEL POST.
7. TOTAL POST LENGTH FOR TYPE K IS 7' - 0". TOTAL POST LENGTH FOR OTHER MGS TYPES IS 6' - 0".

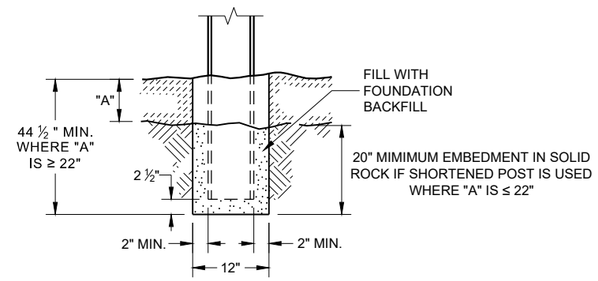

END VIEW
SETTING STEEL OR WOOD POST IN ROCK (3)

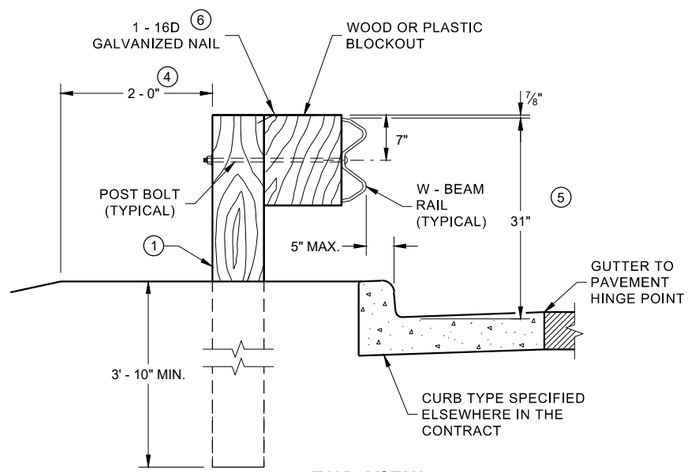

END VIEW
LOCATED ALONG A CURBED ROADWAY

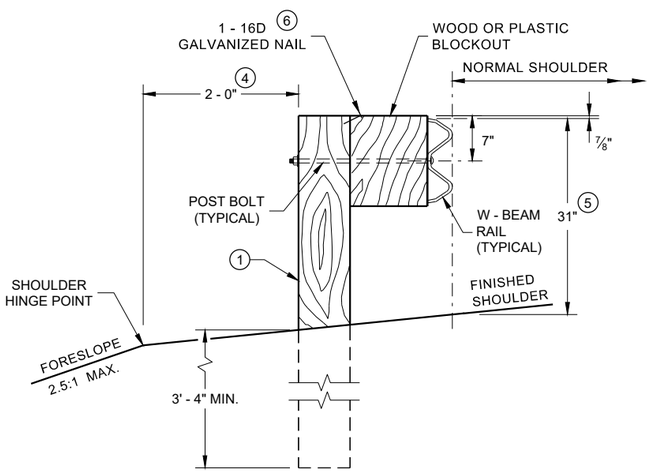

END VIEW
LOCATED ALONG A ROADWAY SHOULDER
STANDARD INSTALLATION

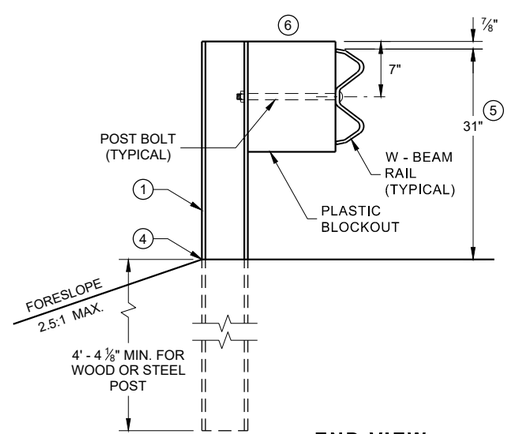

END VIEW
MGS LONGER POST AT HALFPOST
SPACING W BEAM (K)

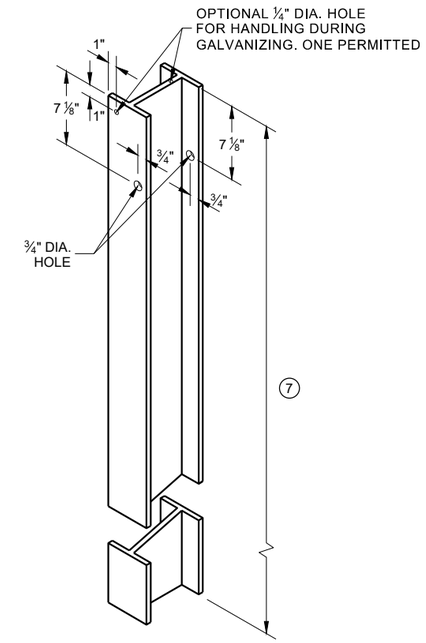

STEEL POST & HOLE
PUNCHING DETAIL
(W 6 X 9) (1)

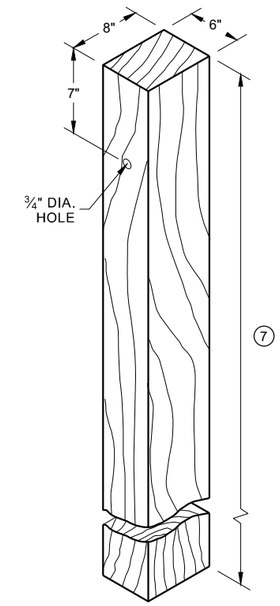

WOOD POST
(6" X 8") NOMINAL (1)

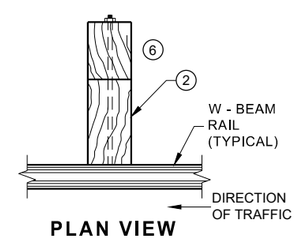

PLAN VIEW
WOOD POST,
BLOCKOUT & BEAM

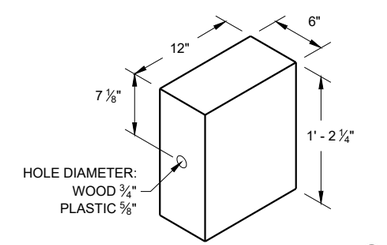

WOOD OR PLASTIC (2)
BLOCKOUT

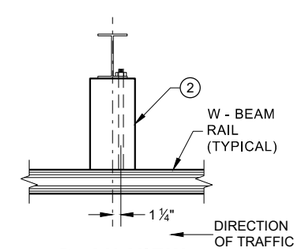

PLAN VIEW
STEEL POST,
PLASTIC BLOCKOUT & BEAM

MIDWEST GUARDRAIL SYSTEM (MGS) GUARDRAIL

STATE OF WISCONSIN
DEPARTMENT OF TRANSPORTA

6

SDD 14B42 - 07a

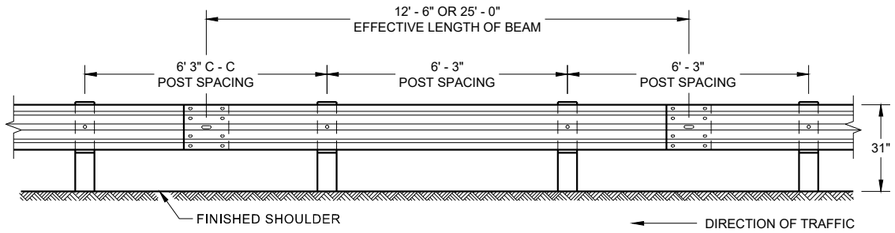

FRONT VIEW
POST SPACING STANDARD INSTALLATION

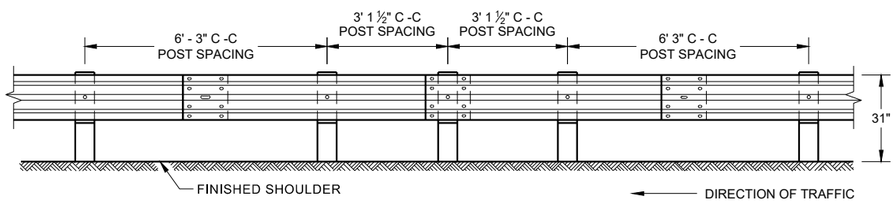

FRONT VIEW
HALF POST SPACING (HS) AND HALF POST SPACING WITH LONGER POSTS (K)

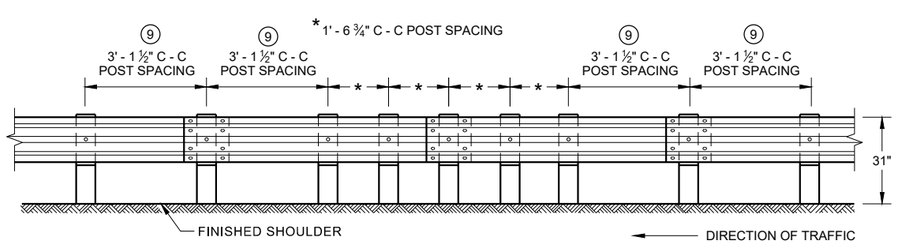

FRONT VIEW
QUARTER POST SPACING (QS)

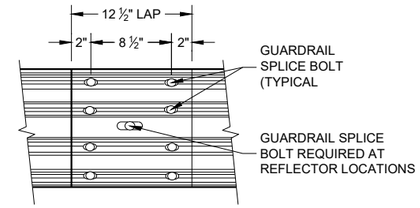

FRONT VIEW
MID-SPAN BEAM SPLICE

GENERAL NOTES

(8) DO NOT INSTALL REFLECTORS ON THE FIRST 50 FEET OF THE APPROACH END OF THE ENERGY ABSORBING TERMINAL.

(9) 25 FEET OF HALF POST SPACING IS REQUIRED ON APPROACH AND DEPARTURE ENDS OF QUARTER POST SPACING.

POST BOLTS ARE A ⅝" DIAMETER ASTM A307 GUARDRAIL BOLT. A POST BOLT REQUIRES ⅝" DIAMETER A563A DOUBLE RECESSED (DR) HEAVY HEX NUT AND ⅝" DIAMETER F844 FLAT WASHER. POST BOLTS MAY BE LONGER IF MULTIPLE BLOCKOUTS ARE BEING USED.

GUARD RAIL SPLICE BOLTS ARE A ⅝" DIAMETER ASTM A307 GUARDRAIL HEAD BOLT. A GUARDRAIL SPLICE BOLT REQUIRES ⅝" DIAMETER A563A DOUBLE RECESSED (DR) HEAVY HEX NUT.

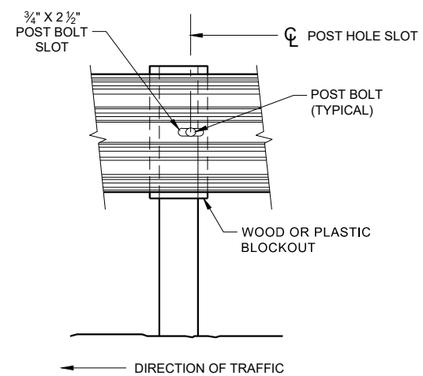

FRONT VIEW AT STEEL POST

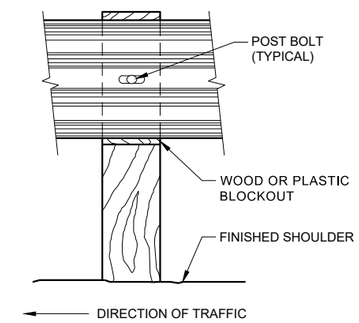

FRONT VIEW AT WOOD POST

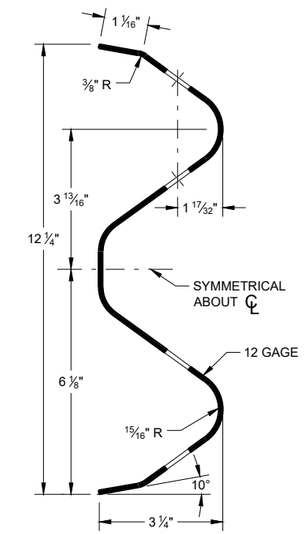

SECTION THRU W-BEAM RAIL

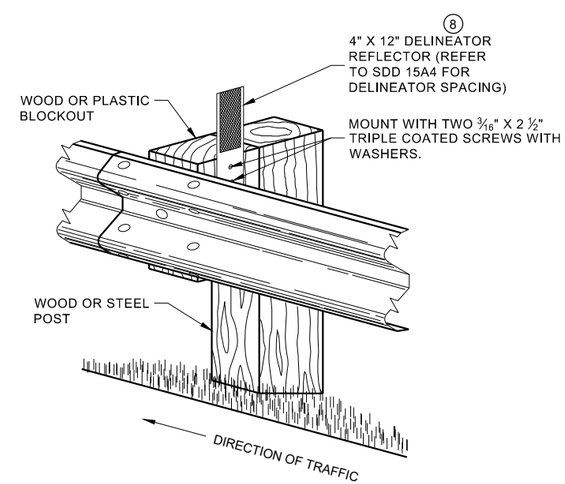

ONE SIDED REFLECTOR DETAIL AND TYPICAL INSTALLATION

MIDWEST GUARDRAIL SYSTEM (MGS) GUARDRAIL

STATE OF WISCONSIN
DEPARTMENT OF TRANSPORTA

6

SDD 14B42 - 07b

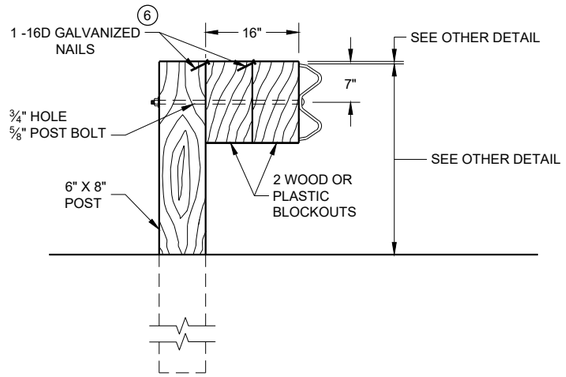

DETAIL FOR 16" BLOCKOUT DEPTH

IT IS ACCEPTABLE TO USE BLOCKOUTS UP TO 16" DEEP TO INCREASE THE POST OFFSET TO AVOID UNDERGROUND OBSTACLES. THERE IS NO LIMIT TO THE NUMBER OF POSTS THAT CAN HAVE ADDITIONAL BLOCKOUTS UP TO 16" DEEP.

NOTE:

1. ALL FILLETS SHALL HAVE A MINIMUM RADIUS OF 3/16".
2. IF THE BOLT EXTENDS MORE THAN ¼" FROM THE NUT THE BOLT SHOULD BE TRIMMED BACK.

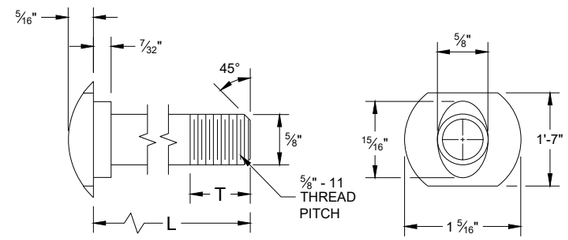

POST BOLT TABLE

L	T (MIN.)
1 ¼"	1 ⅛"
2"	1 ¾"
10"	4"
14"	4 1/16"
18"	4"
21"	4 1/16"
25"	4"

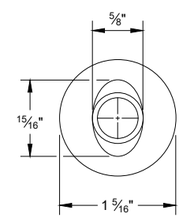

ALTERNATE BOLT HEAD

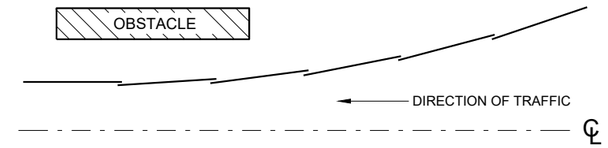

PLAN VIEW
BEAM LAPPING DETAIL

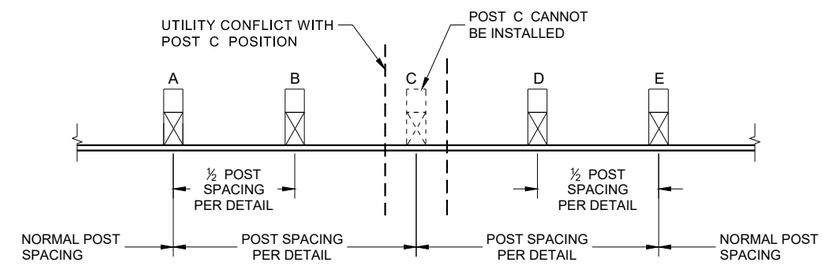

POST DRIVING FOR CONTINUOUS UNDERGROUND OBSTRUCTION

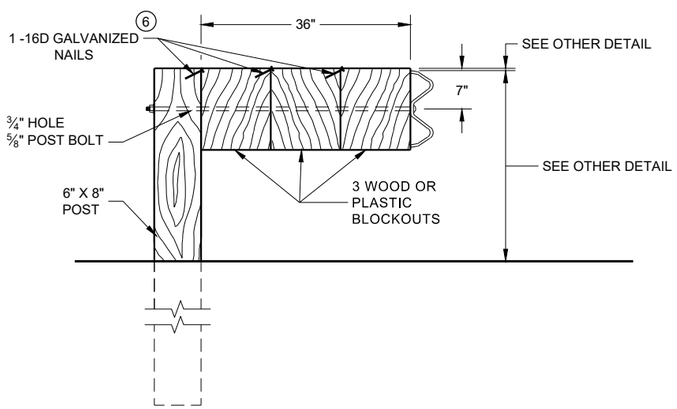

DETAIL FOR 36" BLOCKOUT DEPTH

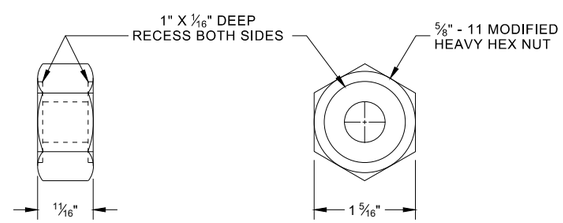

POST BOLT, SPLICE BOLT AND RECESS NUT

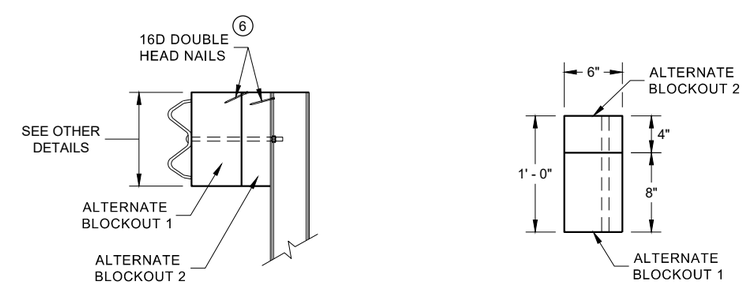

SIDE VIEW

PLAN VIEW

ALTERNATE WOOD BLOCKOUT DETAIL

NOTES: UNDER SPECIAL CIRCUMSTANCES, SUCH AS AVOIDING OBSTACLES THAT ARE NOT RELOCATED, IT IS ACCEPTABLE TO INSTALL ADDITIONAL BLOCKOUTS TO OBTAIN UP TO 36" DEPTH FOR ONE OR TWO POSTS IN A SECTION OF GUARDRAIL.

DO NOT USE 16" OR 36" BLOCKOUTS IF IT CAUSES THE POST TO BE DRIVEN BEYOND SHOULDER HINGE POINT OR CAUSES A FIXED OBJECT TO BE WITHIN THE DEFLECTION DISTANCE OF THE BARRIER.

(6) WHEN USING STEEL POST AD WOOD BLOCKOUTS, INSTALL FOUR 16D GALVANIZED NAILS. INSTALL NAILS AT THE BACK CORNERS OF THE BLOCK AND BEND THE NAILS OVER THE FLANGE OF THE STEEL POST.

MIDWEST GUARDRAIL SYSTEM (MGS) GUARDRAIL

STATE OF WISCONSIN
DEPARTMENT OF TRANSPORTA

6

SDD 14B42 - 07c

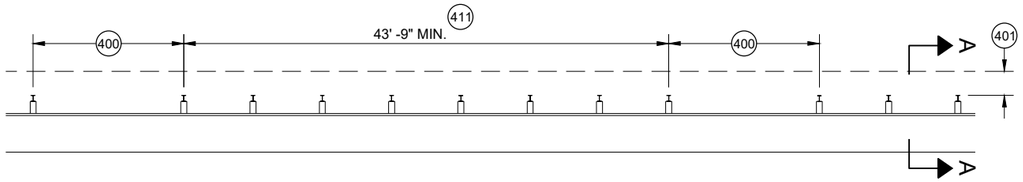

MISSING POST IN MGS GUARDRAIL

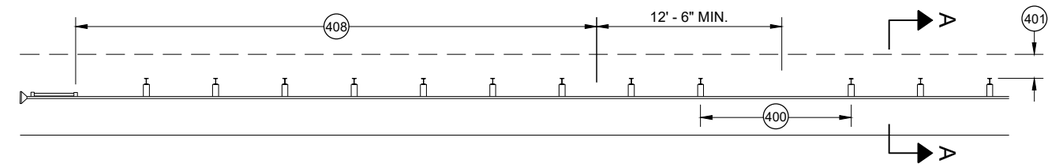

MISSING POST IN MGS GUARDRAIL NEAR EAT

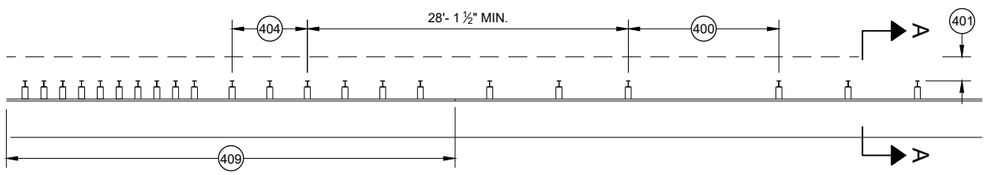

MISSING POST IN MGS GUARDRAIL NEAR AN APPROACH TRANSITION

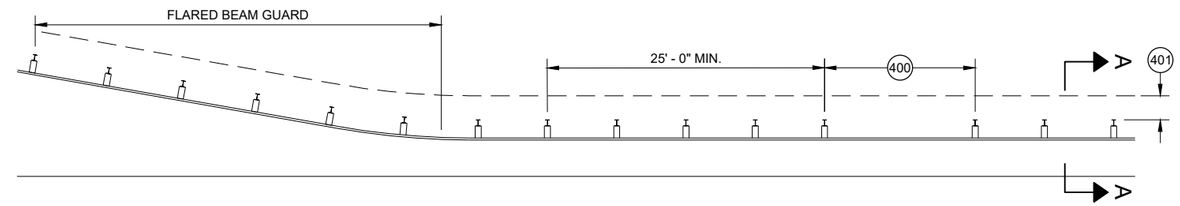

MISSING POST IN MGS GUARDRAIL NEAR FLARED BEAM GUARD

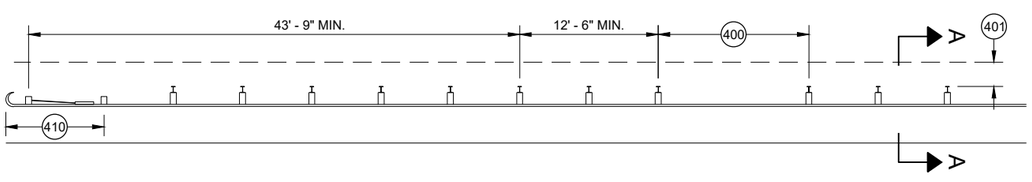

MISSING POST IN MGS GUARDRAIL NEAR A TYPE 2 END TERMINAL

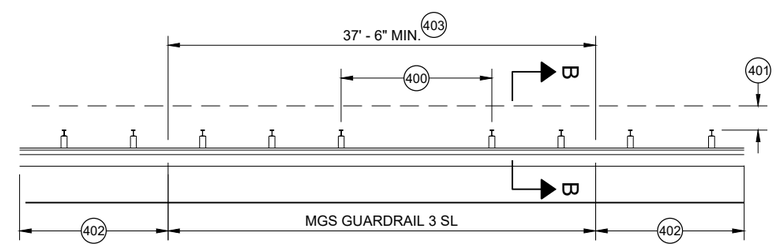

MISSING POST IN SHORT SPAN MGS GUARDRAIL NEAR CURB (SL) 407

400 MAX SPAN 12' - 6"
401 2' MIN.
402 MGS GUARDRAIL 3
403 NESTING BEAM GUARD
404 ASYMMETRIC TRANSITION
405 SOIL WELL DRAINED AND COMPACTED
406 SEE OTHER DRAWINGS IN THIS SDD
407 SEE OTHER DRAWINGS FOR MIN. SPACING BETWEEN SPANS
408 SEE SDD 14B44
409 SEE SDD 14B45
410 SEE SDD 14B47
411 MINIMUM DISTANCE BETWEEN MISSING POST SPANS.

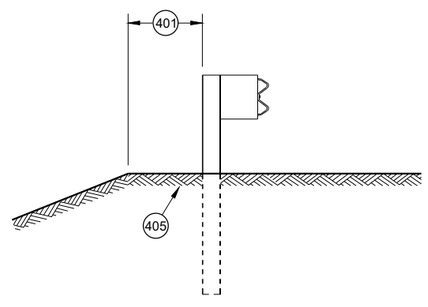

SECTION A - A 406

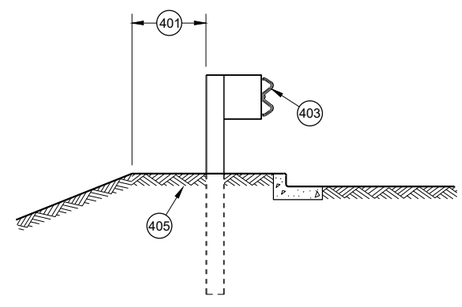

SECTION B - B 406

MIDWEST GUARDRAIL SYSTEM (MGS) GUARDRAIL

STATE OF WISCONSIN
DEPARTMENT OF TRANSPORTATION

APPROVED
May 2021 — DATE
/S/ Rodney Taylor — ROADWAY STANDARDS DEVE UNIT SUPERVISOR
FHWA

6

SDD 14B42 - 07d

GENERAL NOTES

(A) THE SLOPE IN THE AREA BOUNDED BY THE GRADELINE, THE HINGE POINT LINE (HPL) AND THE CLEAR ZONE LIMITS (CZL) SHALL BE 4:1 OR FLATTER.

(B) AFTER FINAL ASSEMBLY, RECHECK CABLE TO BE SURE IT IS TAUT AND HAS NOT RELAXED

(C) DIFFERENT MANUFACTURERS REQUIRE DIFFERENT PERFORATED W - BEAM RAIL END PANELS. SEE MANUFACTURER'S INFORMATION.

(D) ATTACH ALUMINUM SHEET TO E.A.T. HEAD USING 4 STAINLESS STEEL SELF - TAPPING SCREWS. ONE SCREW PER CORNER.

(E) HARDWARE MAY VARY BETWEEN MANUFACTURER. SEE MANUFACTURER'S DRAWING FOR INFORMATION.

DIMENSIONS MAY VARY, MANUFACTURER'S INFORMATION.

SEE SDD 14B42 FOR MORE INFORMATION.

* DO NOT ATTACH BLOCKOUTS TO POST 1 AND 2.

DO NOT INSTALL REFLECTORS ON THE FIRST 50 FEET OF THE APPROACH END OF THE ENERGY ABSORBING TERMINAL.

SEE MANUFACTURER'S DRAWING FOR SPLICE LOCATION, HARDWARE DIMENSIONS AND INSTALLATION INSTRUCTIONS.

THE CENTER OF THE UPPER 3 ½" DIAMETER HOLE ON POST NUMBER 3 THROUGH POST 9 IS TO BE FLUSH WITH THE GROUND LINE UP TO A MAXIMUM OF 2" ABOVE GROUND LINE. WOOD BLOCKS ON POSTS NUMBERED 3 THROUGH 9 MAY BE ADJUSTED UP TO 3" ABOVE THE TOP OF POST.

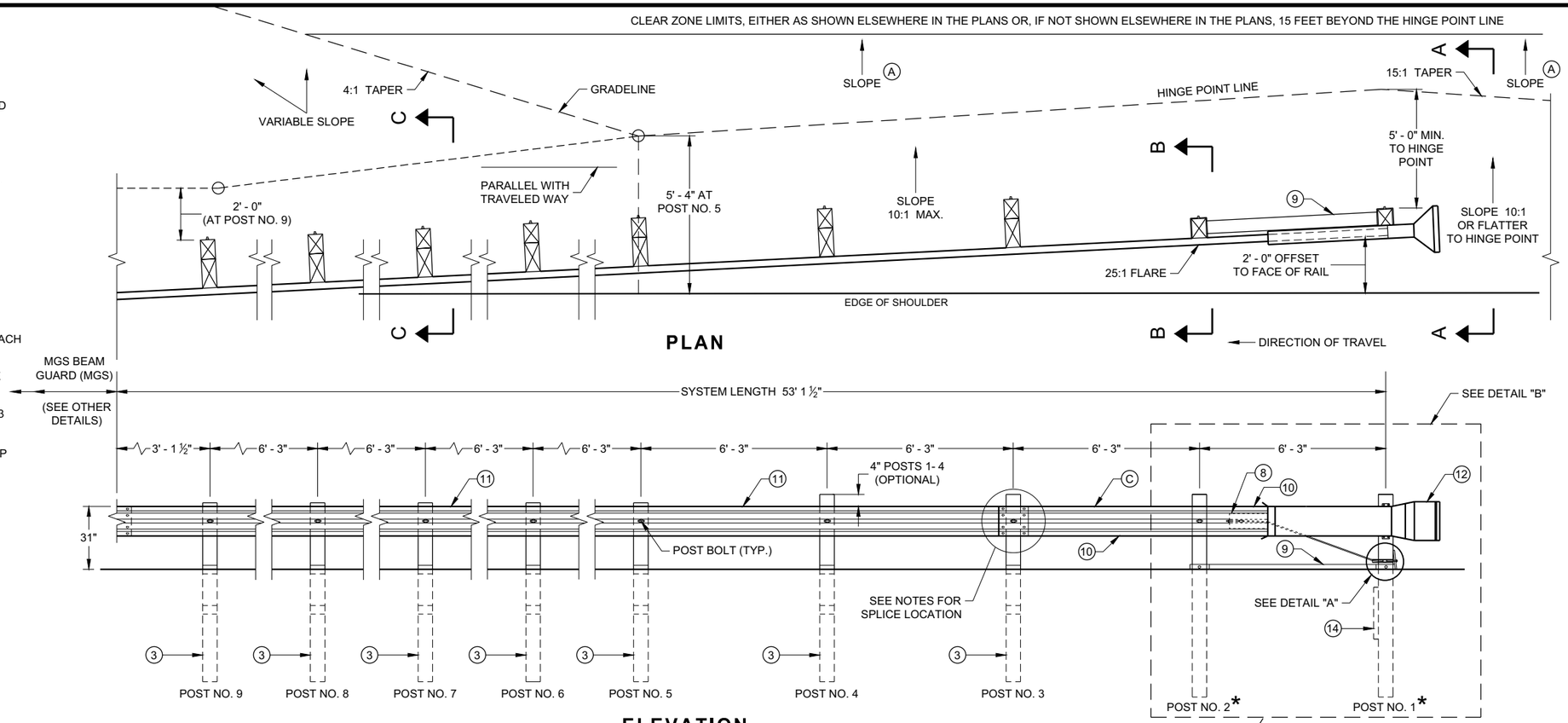

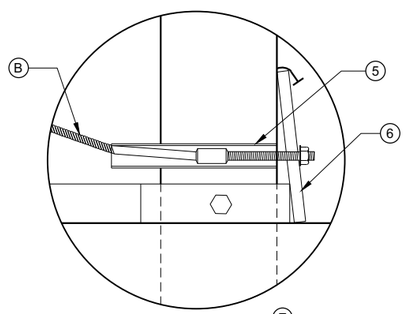

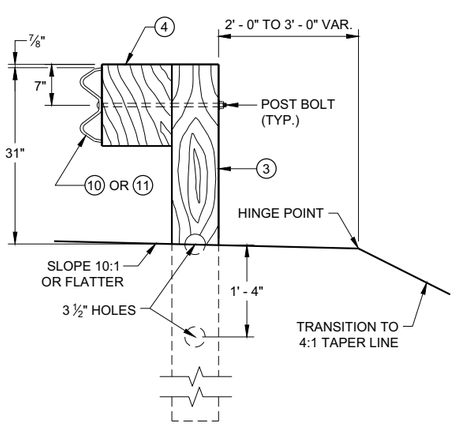

SECTION C - C
TYPICAL AT POST NOS. 3 - 9

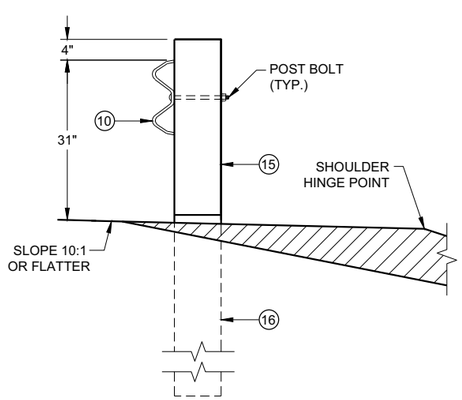

SECTION B - B
TYPICAL AT POST NO. 2*

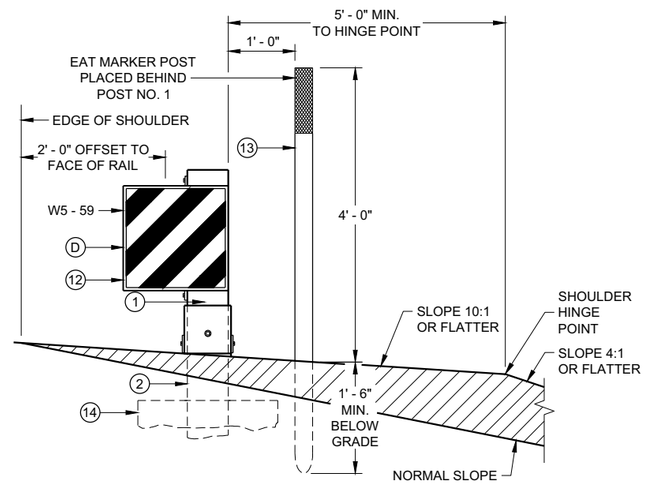

SECTION A - A
TYPICAL AT POST NO. 1*

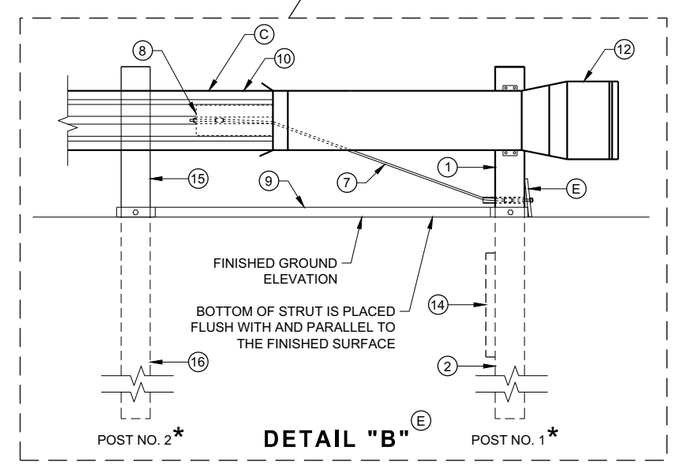

MIDWEST GUARDRAIL SYSTEM ENERGY ABSORBING TERMINAL (MGS)

STATE OF WISCONSIN
DEPARTMENT OF TRANSPORTATION

6

6

SDD 14B44 - 04a

SDD 14B44 - 04a

BILL OF MATERIALS

PART NO.	DESCRIPTION MATERIALS PROVIDED BY MGS EAT MANUFACTURER. SEE MANUGACTURER'S DETAILS FOR MORE INFORMATION.
1	UPPER POST NO. 1 6" X 6" TUBE
2	LOWER POST NO. 1
3	WOOD CRT
4	WOOD BLOCKOUT
5	PIPE SLEEVE
6	BEARING PLATE
7	BCT CABLE ASSEMBLY
8	ANCHOR CABLE BOX
9	GROUND STRUT
10	PERFORATED W-BEAM RAIL END PANEL, 12'-6" LONG.
11	STANDARD W-BEAM RAIL. MULTIPLE SECTIONS REQUIRED. SECTIONS VARY IN LENGTH.
12	IMPACT HEAD
13	EAT MARKER POST - YELLOW (SEE APPROVED PRODUCTS LIST)
14	SOIL PLATE
15	UPPER POST NO. 2
16	LOWER POST NO. 2

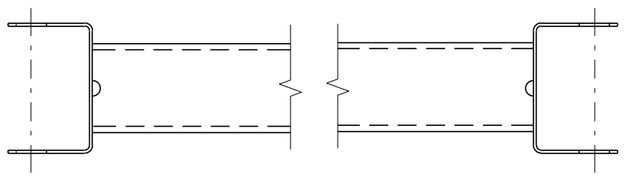

GENERIC GROUND STRUT 9 E

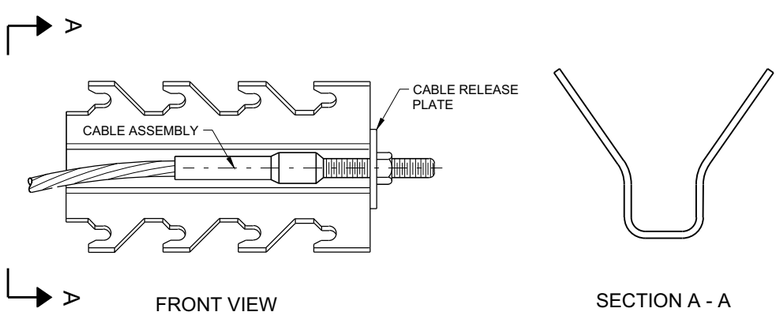

GENERIC ANCHOR CABLE BOX 9 E

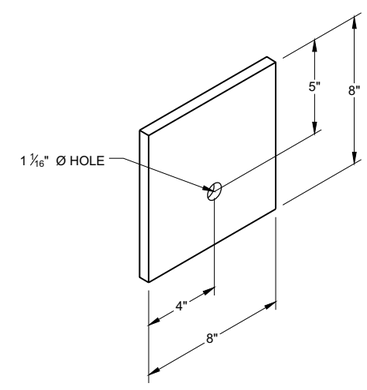

BEARING PLATE 6 E

6

6

SDD 14B44 - 04b

SDD 14B44 - 04b

MIDWEST GUARDRAIL SYSTEM ENERGY ABSORBING TERMINAL (MGS)

STATE OF WISCONSIN
DEPARTMENT OF TRANSPORTAT

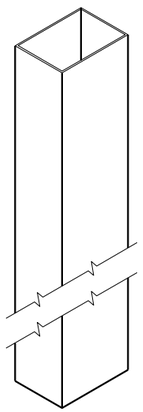

UPPER POST NO. 1 (1) (E)

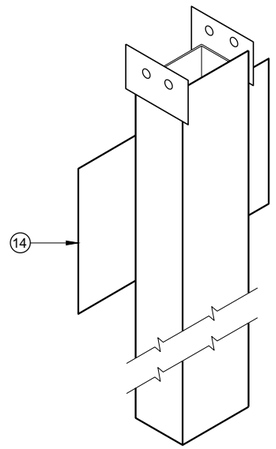

LOWER POST NO. 1 (2) (E)

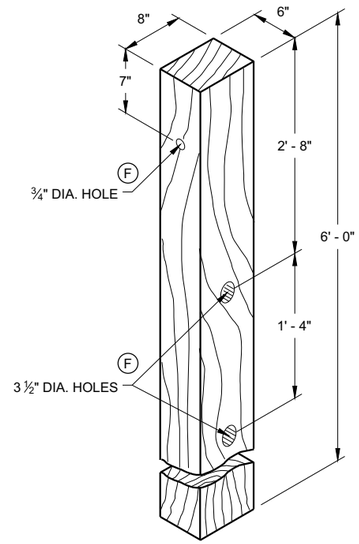

WOOD CRT POST (3) (E)
POSTS NUMBER 3-9

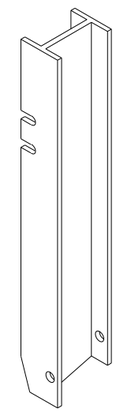

UPPER POST NO. 2 (15) (E)

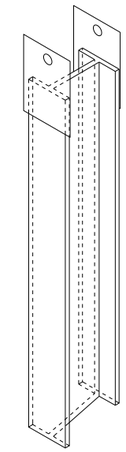

LOWER POST NO. 2 (16) (E)

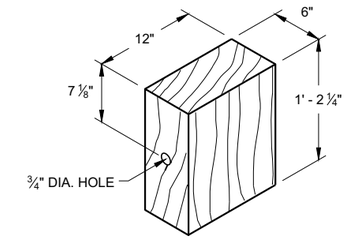

WOOD BLOCKOUT (4)
REQ'D. AT ALL POSTS EXCEPT POST NO'S 1 & 2

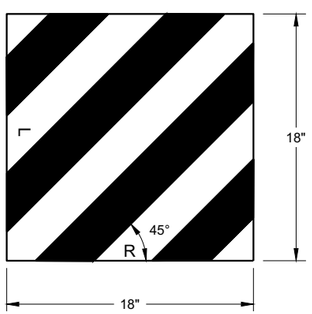

W5 - 59

REFLECTIVE SHEETING DETAIL (E)

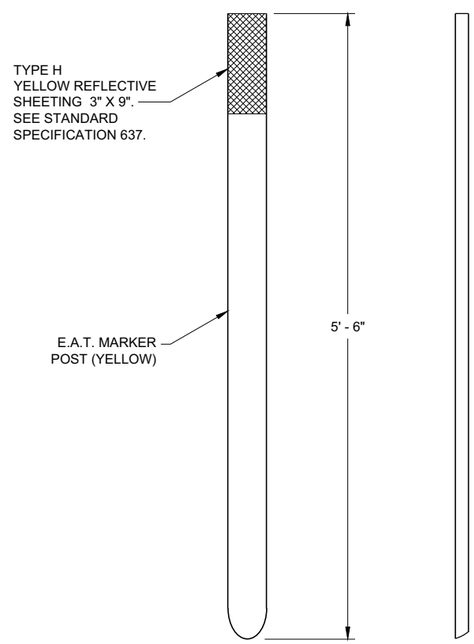

FRONT VIEW SIDE VIEW

E.A.T. MARKER POST (13)

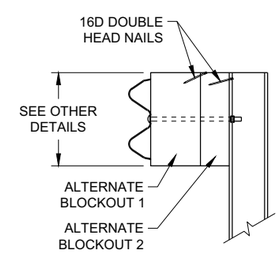

SIDE VIEW

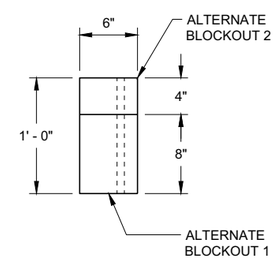

TOP VIEW

ALTERNATE WOOD BLOCKOUT DETAIL

MIDWEST GUARDRAIL SYSTEM ENERGY ABSORBING TERMINAL (MGS)

STATE OF WISCONSIN
DEPARTMENT OF TRANSPORTATION

APPROVED
7/2018 — DATE
/S/ Rodney Taylor — ROADWAY STANDARDS DEVE UNIT SUPERVISOR
FHWA

6

6

SDD 14B44 - 04c

SDD 14B44 - 04c

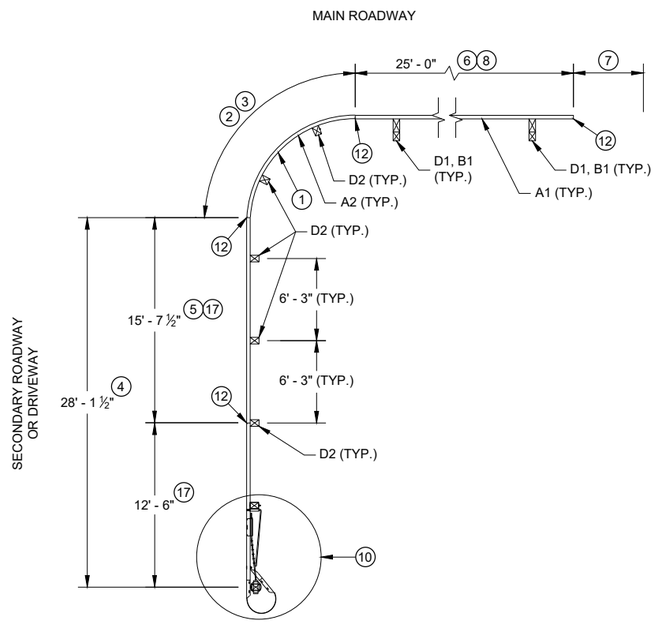

PLAN VIEW

SHORT RADIUS BEAM GUARD WITH SHORT RADIUS TERMINAL ON SECONDARY ROAD OR DRIVEWAY

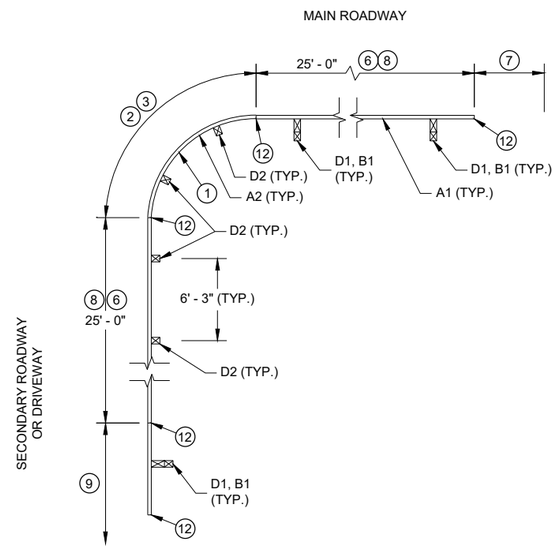

PLAN VIEW

SHORT RADIUS BEAM GUARD WITH EAT, ADDITIONAL BEAM GUARD OR TRANSITION TO RIGID BARRIER ON SECONDARY ROAD OR DRIVEWAY

TABLE FOR RADIUS OF 32' AND LESS

RADIUS (FT)	LENGTH (FT)	WIDTH (FT)
8	25	15
16	30	15
24	40	20
32	50	30

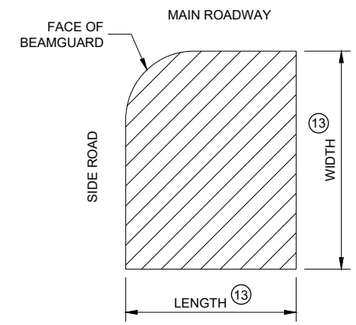

AREA FREE OF FIXED OBJECTS FOR RADIUS 32' AND LESS 16

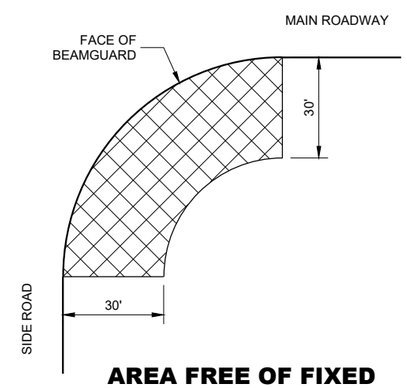

AREA FREE OF FIXED OBJECTS FOR RADIUS GREATER THAN 32'

GENERAL NOTES

SEE PLANS FOR OTHER BARRIER SYSTEM AND LOCATION SPECIFICS.

SEE SDD 14B42 FOR MORE INFORMATION ON BEAM GUARD INSTALLATION, PARTS, MATERIALS, AND INSTALLATION INFORMATION.

GALVANIZE PARTS AFTER FABRICATION.

WELDING TO FOLLOW CURRENT REQUIREMENTS OF THE AMERICAN WELDING SOCIETY STRUCTURAL WELDING CODE ANSI / AWS D1.1.

UNLESS NOTED OTHERWISE, ALL PLATES ARE FLAT AND FREE OF WARP.

UNLESS NOTED OTHERWISE, ALL EDGES ARE SMOOTH, STRAIGHT AND VERTICAL.

ALL CUTS AND HOLES, EXCEPT IN BEAM GUARD RAIL ARE TO BE MACHINED OR MACHINE FLAME CUT.

UNLESS NOTED OTHERWISE, CUT OR PROVIDE BOLTS THAT ARE ¼" TO ½" BEYOND THE NUT.

DRAWINGS ARE NOT TO SCALE.

1. RADIUS MEASURE FROM INSIDE OF RAIL. LENGTH OF BEAM GUARD SHORT RADIUS GUARD MEASURED ALONG TRAFFIC SIDE OF RAIL. RADIUS BETWEEN 8 FEET TO 150 FEET. SEE PLAN FOR REQUIRED RADIUS. BEAM GUARD RAIL IN RADIUS IS SHOP BENT. ODD RAIL LENGTH OR FIELD CUTS MAY BE REQUIRED.
2. CONTROLLED RELEASE TERMINAL (CRT) POSTS ARE USED IN THE RADIUS. CONTROLLED RELEASE TERMINAL (CRT) POSTS ARE SPACED 6' - 3". SEE PLAN FOR NUMBER OF CONTROLLED RELEASE (CRT) POSTS.
3. WITHIN RADIUS BEAM GUARD RAILS ARE NOT BOLTED TO POSTS. BEAM GUARD RAIL IS RESTED ON TOP OF LAG SCREW.
4. MINIMUM LENGTH OF BEAM GUARD ALONG SIDE ROAD OR DRIVEWAY TO INSTALL SHORT RADIUS TERMINAL. BEAM GUARD IS PAID WITH BEAM GUARD ITEM.
5. ODD LENGTH OF BEAM GUARD REQUIRED TO INSTALL SHORT RADIUS TERMINAL.
6. MINIMUM AMOUNT OF BEAM GUARD TO BE INSTALLED PRIOR TO TRANSITION TO RIGID BARRIER. ADDITIONAL BEAM GUARD, OR EAT. BEAM GUARD PAID FOR WITH BEAM GUARD ITEM. SEE PLANS FOR MORE DETAIL.
7. BEAM GUARD, EAT, OR TRANSITION TO RIGID BARRIER. SEE PLAN.
8. TOP OF BEAM GUARD BY THE RADIUS IS 27". HEIGHT OF BEAM GUARD IS 31" BY TRANSITION TO RIGID BARRIER, ADDITIONAL BEAM GUARD OR EAT.
9. ADDITIONAL BEAM GUARD, EAT OR TRANSITION TO RIGID BARRIER. BEAM GUARD SHOWN. SEE PLAN FOR DETAILS.
10. SHORT RADIUS TERMINAL (SEE OTHER DETAILS).
11. HEIGHT VARIES. SEE NOTE 8 AND 8.
12. BEAM GUARD RAIL SPLICE LOCATION. SPLICE LOCATION REQUIRES PART F1 AND F2. SEE SDD 14B42 FOR DETAILS.
13. SEE TABLE FOR VALUES.
14. MAXIMUM HEIGHT FOR CENTER OF HOLE IS ¾" ABOVE FINISHED GROUND ±1".
15. DRILL POST $^{15}/_{64}$" DIA. PILOT HOLE. DO NOT HAMMER LAG SCREW INTO POST.
16. SMALL SIGNS ON BREAKAWAY HARDWARE ARE ACCEPTABLE.
17. TOP OF RAIL HEIGHT IS 27" WHEN USING A SHORT RADIUS TERMINAL (CRT).

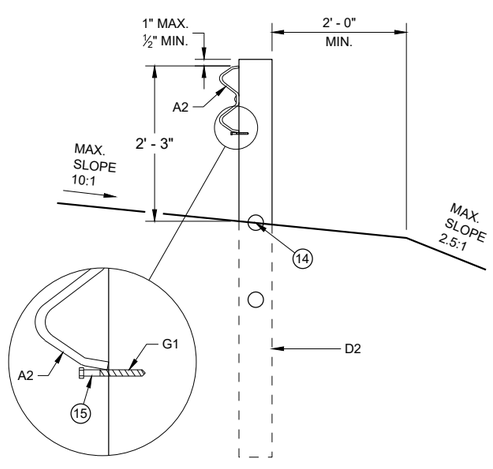

CONTROLLED RELEASE TERMINAL POST (CRT) IN RADIUS

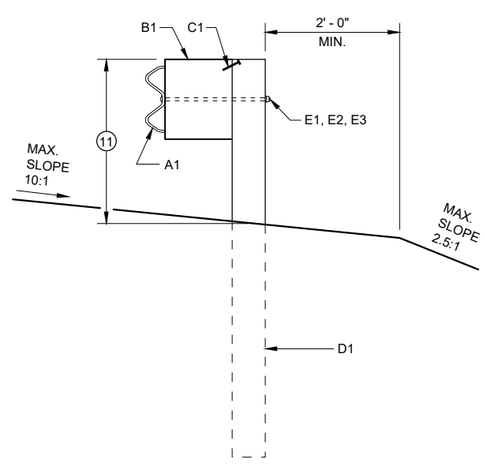

BEAM GUARD POSTS IN HEIGHT TRANSITION

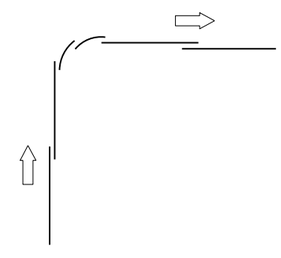

LAP SPLICE DETAIL

SHORT RADIUS BEAM GUARD (MGS) SHORT RADIUS TERMINAL (MGS)

STATE OF WISCONSIN
DEPARTMENT OF TRANSPORTATION

6

SDD 14B53 - 02a

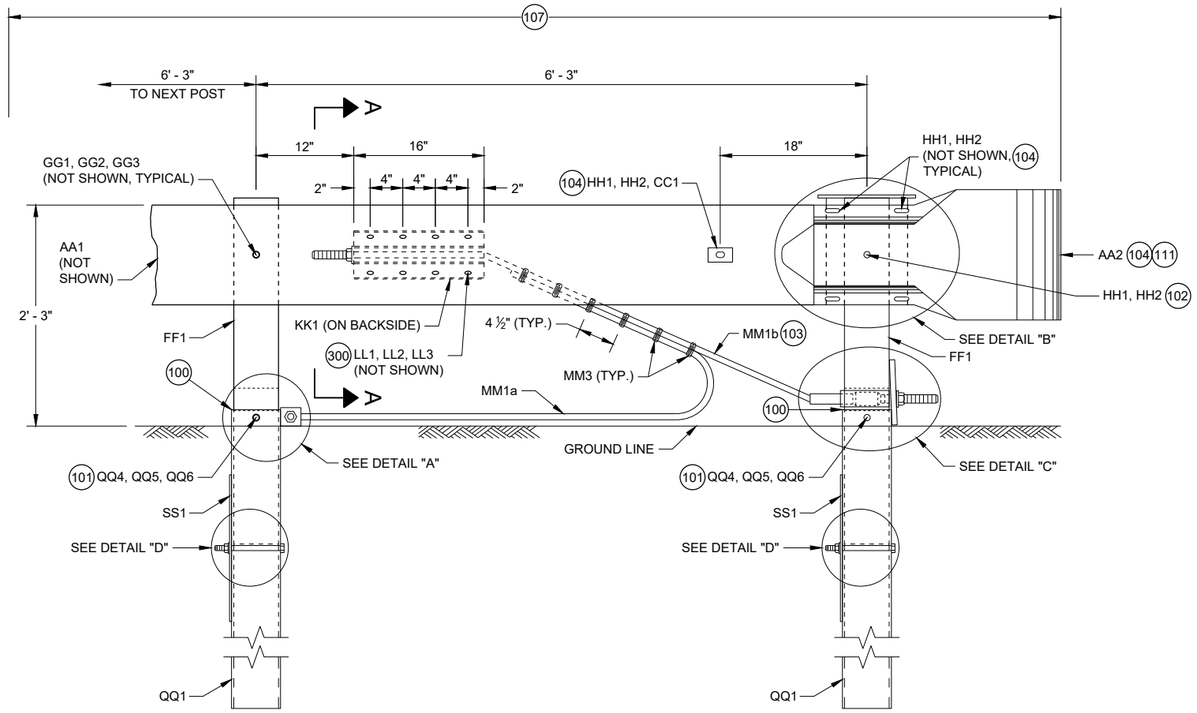

PROFILE VIEW

SHORT RADIUS TERMINAL

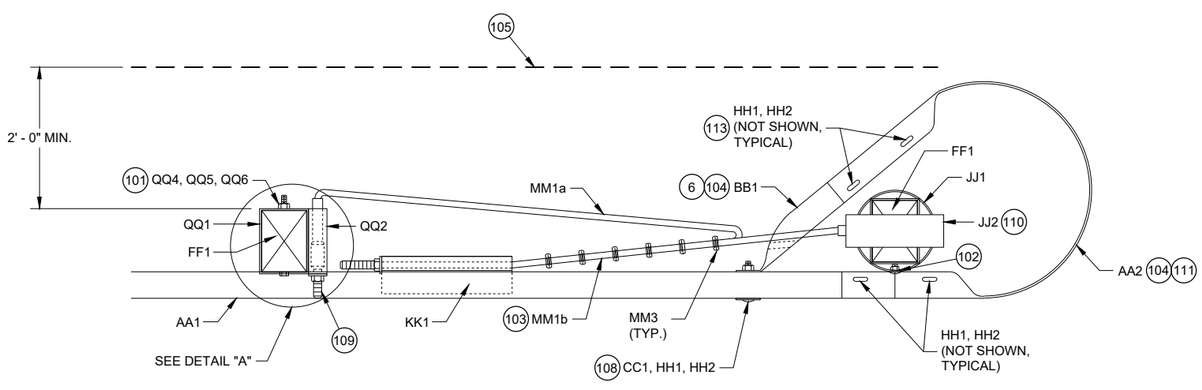

TOP VIEW

SHORT RADIUS TERMINAL

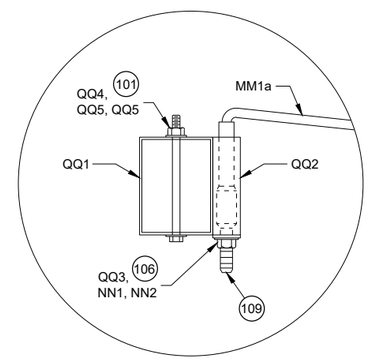

TOP VIEW

DETAIL "A"

(WOOD BREAKAWAY AND BEAM GUARD RAIL POSTS NOT SHOWN)

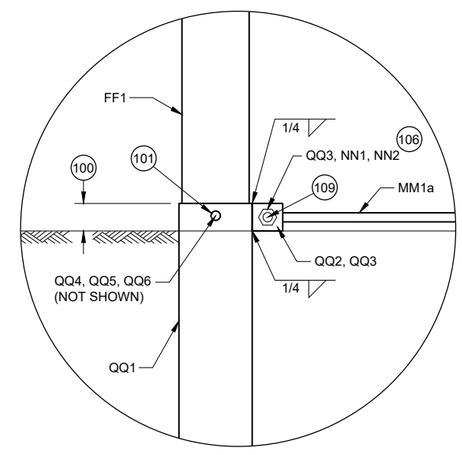

PROFILE VIEW

DETAIL "A"

GENERAL NOTES

100 TOP OF FOUNDATION TUBE 2 INCHES MAXIMUM ABOVE FINISHED GROUND.

101 WASHERS REQUIRED BETWEEN BOLT HEAD AND FOUNDATION TUBE AND BETWEEN NUT AND FOUNDATION TUBE.

102 SPLICE BOLT AND NUT CONNECTS BEAM GUARD RAIL, W-BEAM SECTION BUFFER, AND STEEL PIPE ASSEMBLY. NO WASHER REQUIRED. SEE DETAIL "B".

103 CABLE IS TAUT.

104 ADJUST AA2 AND BB1 TO FIT.

105 BREAK POINT OF SHOULDER.

106 TACK WELD CABLE CONNECTOR TUBE PLATE TO CABLE CONNECTION TUBE. SEE DETAIL "A" PROFILE VIEW.

107 PAY LIMIT FOR BEAM GUARD.

108 SQUARE WASHER BETWEEN HEAD OF BOLT AND TRAFFIC FACE OF BEAM GUARD. ROUND WASHER REQUIRED BETWEEN NUT AND BB1.

109 CUT OR PROVIDE THREADED STUD THAT IS FLUSH WITH FACE OF BEAM GUARD RAIL KK1 (PLUS OR MINUS ½" TOLERANCE). DEBURR AFTER CUTTING.

110 SEE STEEL PIPE ASSEMBLY DETAILS.

111 ATTACH UU2 WITH UU3. SHOP APPLY UU1 TO UU2.

112 FOUR (4) HH1 AND HH2 REQUIRED TO ATTACH AA1 TO AA2.

113 FOUR (4) HH1 AND HH2 REQUIRED TO ATTACH AA2 TO BB1.

6

6

SDD 14B53 - 02b

SDD 14B53 - 02b

SHORT RADIUS BEAM GUARD (MGS) SHORT RADIUS TERMINAL (MGS)

STATE OF WISCONSIN
DEPARTMENT OF TRANSPORTAT

GENERAL NOTES

(200) TWO (2) NAILS SPACED 4 INCHES CENTER TO CENTER.

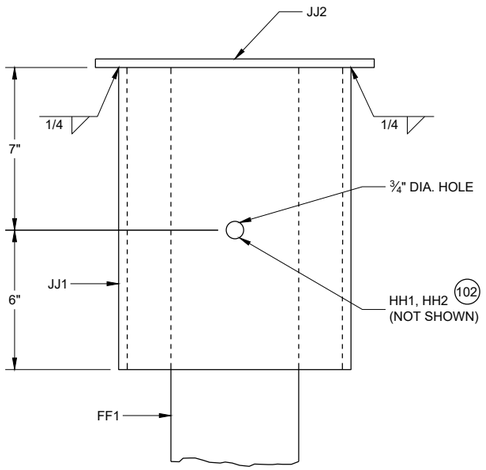

PROFILE VIEW

DETAIL "B"
STEEL PIPE ASSEMBLY
(BEAM GUARD AND W BEAM END SECTION NOT SHOWN)

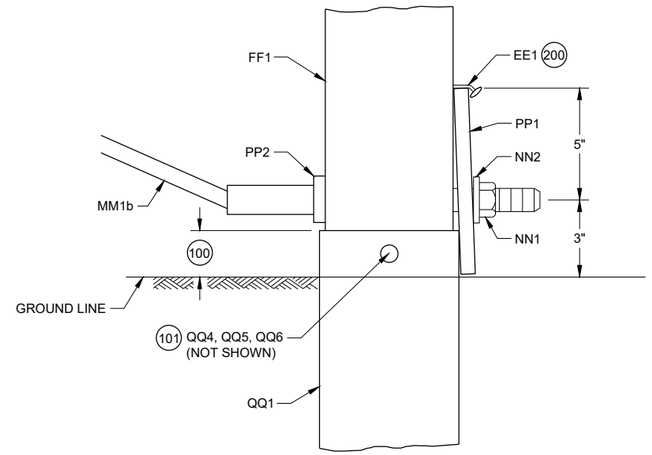

PROFILE VIEW

DETAIL "C"

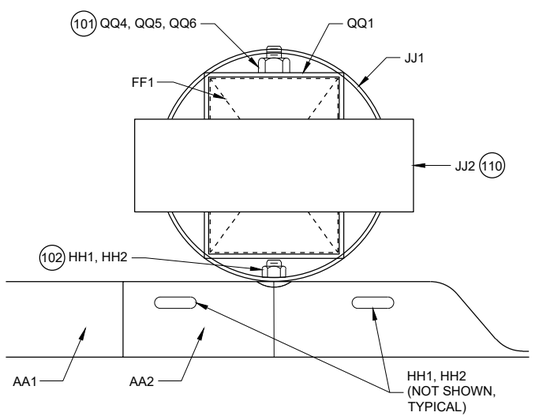

PLAN VIEW

DETAIL "B"
STEEL PIPE ASSEMBLY

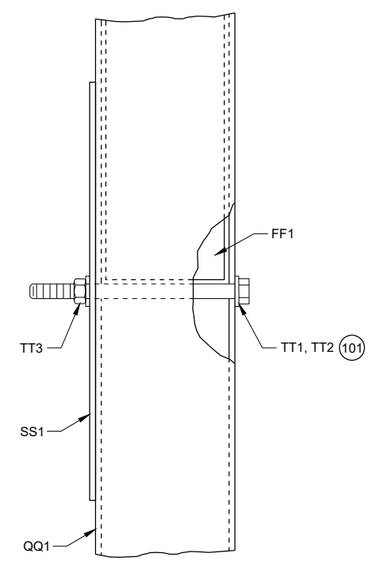

PROFILE VIEW

DETAIL "D"

SHORT RADIUS BEAM GUARD (MGS) SHORT RADIUS TERMINAL (MGS)

STATE OF WISCONSIN
DEPARTMENT OF TRANSPORTAT

6

6

SDD 14B53 - 02c

SDD 14B53 - 02c

GENERAL NOTES

300 WASHERS REQUIRED BETWEEN BOLT HEAD AND BEAM GUARD RAIL AND BETWEEN NUT AND ANCHOR BRACKET. EIGHT (8) LL1 AND LL3 REQUIRED. SIXTEEN (16) LL2 REQUIRED.

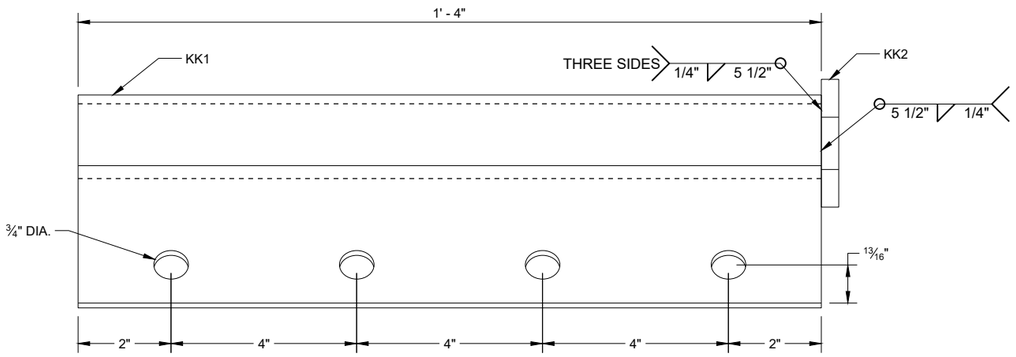

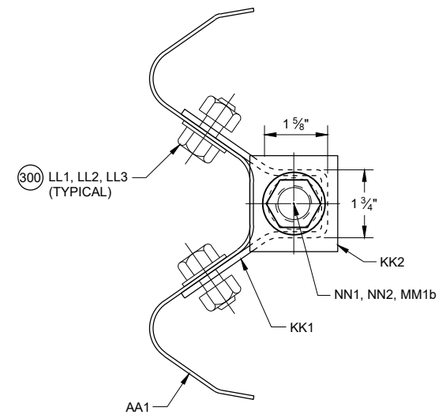

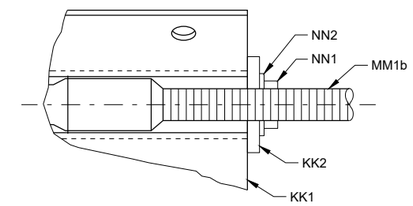

SECTION A - A

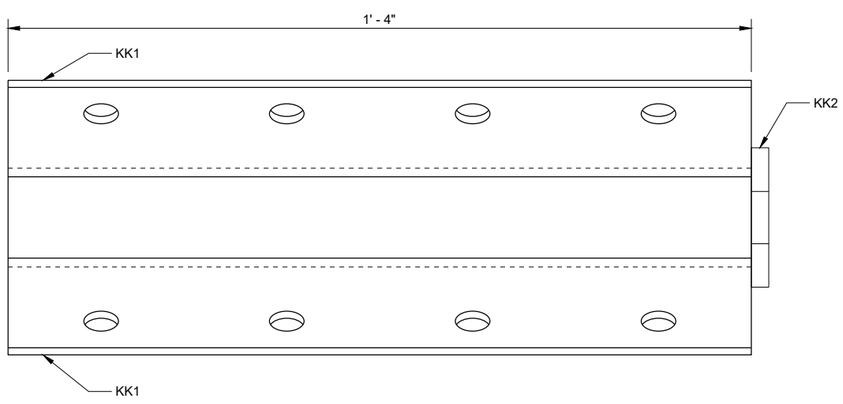

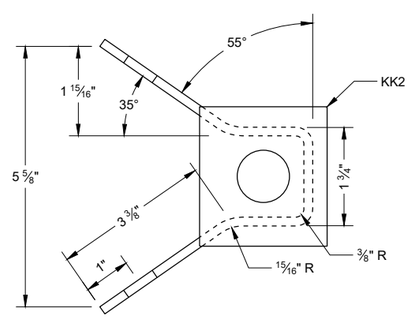

ANCHOR BRACKET (KK1, KK2)

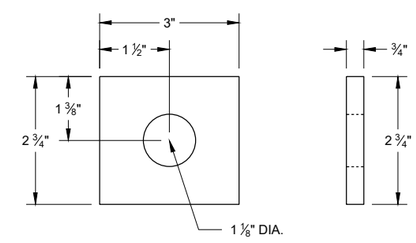

ANCHOR BRACKET BEARING PLATE (KK2)

6

6

SDD 14B53 - 02d

SDD 14B53 - 02d

SHORT RADIUS BEAM GUARD (MGS) SHORT RADIUS TERMINAL (MGS)

STATE OF WISCONSIN
DEPARTMENT OF TRANSPORTAT

GENERAL NOTES

(400) CROSS SECTION OF PART IS TO FIT OVER AA1 .

(401) CROSS SECTION OF PART IS TO FIT OVER OR UNDER AA1 .

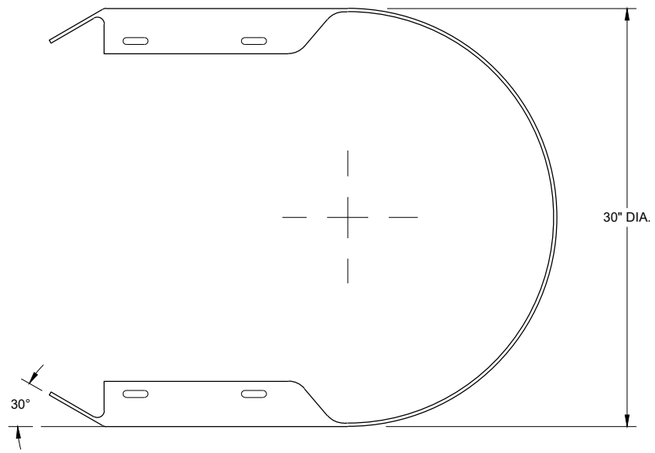

TOP VIEW

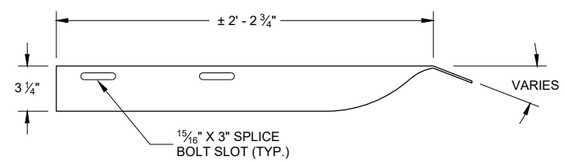

TOP VIEW

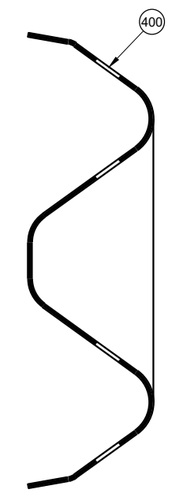

SECTION B -B

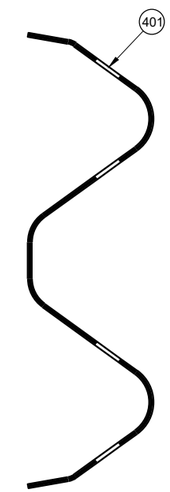

SECTION C -C

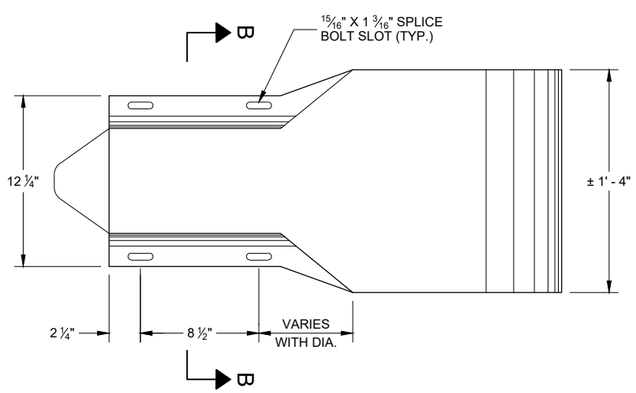

PROFILE VIEW

W BEAM
END SECTION BUFFER (AA2)

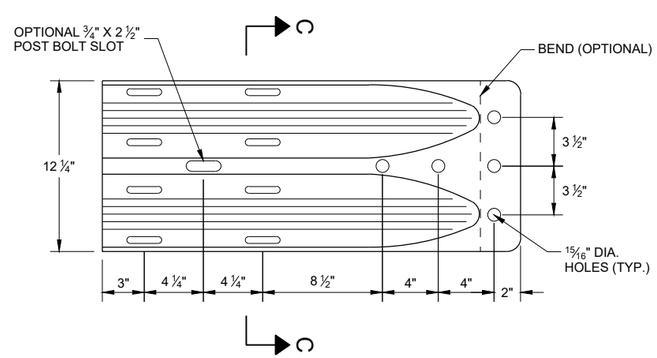

PROFILE VIEW

W BEAM
TERMINAL CONNECTOR (BB1)

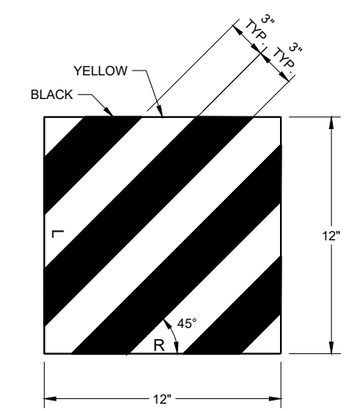

REFLECTIVE SHEETING (UU1, UU2)

SHORT RADIUS BEAM GUARD (MGS) SHORT RADIUS TERMINAL (MGS)

STATE OF WISCONSIN
DEPARTMENT OF TRANSPORTAT

6

6

SDD 14B53 - 02e

SDD 14B53 - 02e

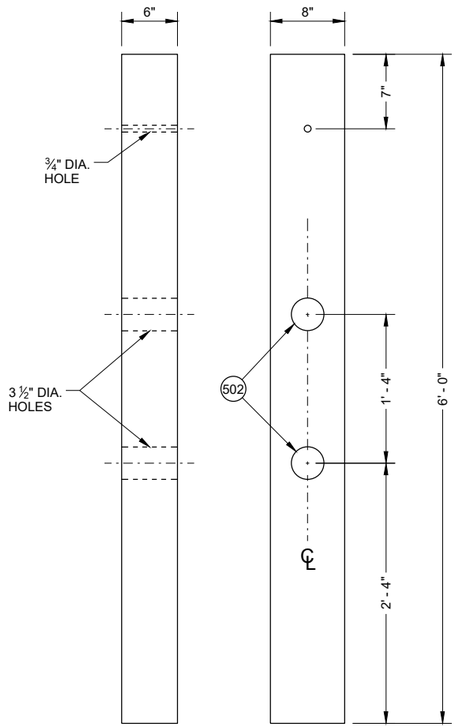

FRONT VIEW SIDE VIEW

CONTROLLED RELEASE POST (CRT) (DD2)

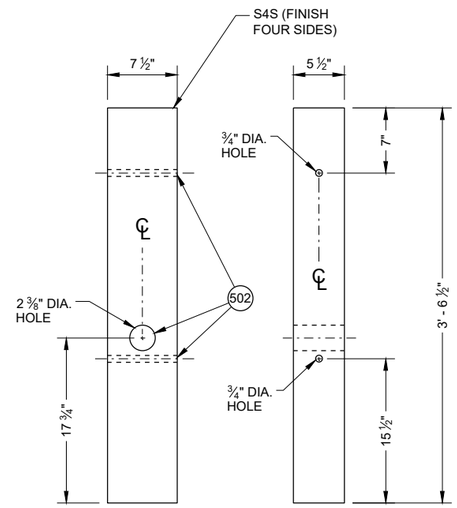

FRONT VIEW SIDE VIEW

WOOD BREAKAWAY POST (FF1)

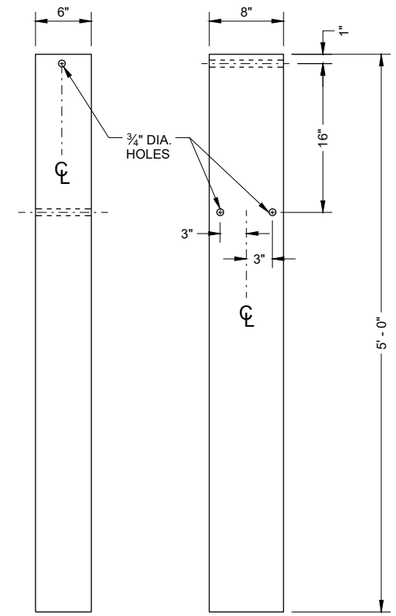

FRONT VIEW SIDE VIEW

FOUNDATION TUBE (QQ1) 500

GENERAL NOTES

500 SEE DETAIL "D" FOR LOCATION AND ATTACHMENT OF SS1.

501 FOR MM1a THREADED STUD ONLY REQUIRED ON ONE END. SWAGED FITTING REQUIRED.

502 LOCATE HOLES ON THE CENTERLINE OF THE SIDE OF THE POST.

503 MM1a MAY HAVE ONE THREADED STUD 4 INCHES LONG. SEE NOTE 109.

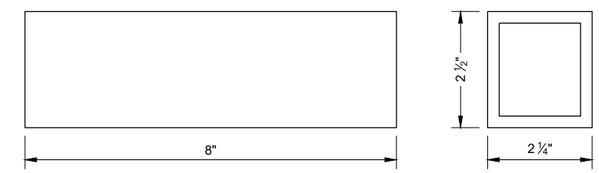

FOUNDATION TUBE - ANCHOR CABLE TUBE (QQ2)

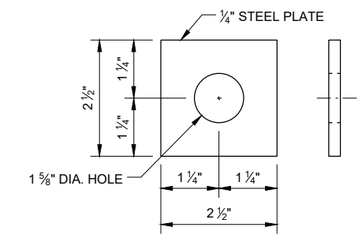

ANCHOR CABLE TUBE END PLATE (QQ3)

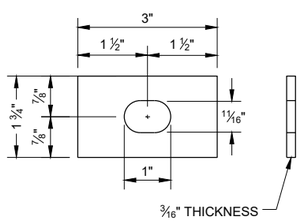

RECTANGULAR PLATE WASHER (CC1)

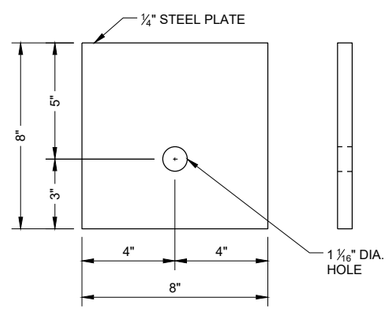

BEARING PLATE (PP1)

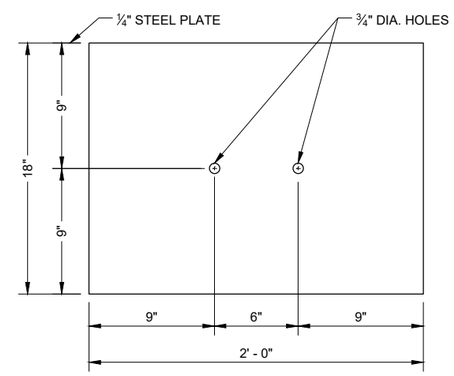

SOIL PLATE (SS1)

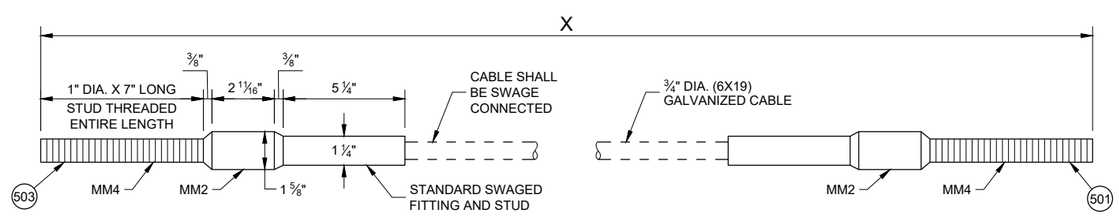

CABLE ASSEMBLY (MM1a, MM1b)

"X" LENGTH

MM1b	9' - 0"
MM1b	6' - 8"

SHORT RADIUS BEAM GUARD (MGS) SHORT RADIUS TERMINAL (MGS)

STATE OF WISCONSIN
DEPARTMENT OF TRANSPORTAT

6

SDD 14B53 - 02f

BILL OF MATERIALS - SHORT RADIUS BEAM GUARD (MGS)

PART	DESCRIPTION	MATERIALS SPECIFICATIONS	NOTES
A1	BEAM GUARD RAIL	AASHTO M180, CLASS A, TYPE 2	
		APPROVED PRODUCER	
A2	BEAM GUARD RAIL - SHOP BENT	INDICATE ON BACK OF RAIL THE RADIUS THAT RAIL WAS BENT TO. SHOP BEND RADIUS IS TO THE NEAREST FOOT. FOLLOW AASHTO M180 ON HOW TO MARK RADIUS INFORMATION.	
		AASHTO M180, CLASS A, TYPE 2	
		APPROVED PRODUCER	
B1	BLOCK - WOOD	WISDOT SPEC. 614	SEE SDD 14B42
C1	NAIL	ASTM A153 HOT DIP CLASS D	
		ASTM F1667 TYPE 1 STYLE 12 (16 DOUBLE HEAD)	
D1	POST-STRONG POST-WOOD	WISDOT SPEC. 614	SEE SDD 14B42
D2	POST-CRT-WOOD	WISDOT SPEC. 614	
E1	POST BOLT	ASTM A307 GRADE A OR SAE J429 GRADE 2	⅝" DIA. SEE SDD 14B42 FOR BOLT GEOMETRY
		AASHTO M180	
		GALV. HOT DIP TO AASHTO M232 CLASS C / ASTM A153 CLASS C / ASTM F2329 OR GALV. MECHANICALLY TO AASHTO M298 CLASS 50, TYPE 1 / ASTM B695 CLASS 50, TYPE 1	
		UNC	
E2	POST BOLT - WASHER	ASTM F436 TYPE 1 (HARDEN TYPICALLY USED WITH STEEL) OR ASTM F844 (UNHARDENED TYPICALLY WITH WOOD)	⅝" DIA.
		GALV. AASHTO M111 / ASTM A 123 OR GALV. HOT DIP. TO AASHTO M232 CLASS C / ASTM A153 CLASS C / ASTM F2329	
E3	POST BOLT - NUT	AASHTO M180 DOUBLE RECESSED HEAVY HEX HEAD	⅝" DIA. SEE SDD 14B42 FOR BOLT GEOMETRY
		GALV. HOT DIP TO AASHTO M232 CLASS C / ASTM A153 CLASS C / ASTM F2329 OR GALV. MECHANICALLY TO AASHTO M298 CLASS 50, TYPE 1 / ASTM B695 CLASS 50, TYPE 1	
		UNC	
		OVER TAPPED NUTS OVER-SIZE AS SPECIFIED IN AASHTO 291 / ASTM A 563	
		ASTM A563 GRADE A HEAVY HEX HEAD	
F1	SPLICE BOLT	GALV. HOT DIP TO AASHTO M232 CLASS C / ASTM A153 CLASS C / ASTM F2329 OR GALV. MECHANICALLY TO AASHTO M298 CLASS 50, TYPE 1 / ASTM B695 CLASS 50, TYPE 1	⅝" DIA. SEE SDD 14B42 FOR BOLT GEOMETRY
		ASTM A307 GRADE A OR SAE J429 GRADE 2	
		UNC	
		AASHTO M180	

PART	DESCRIPTION	MATERIALS SPECIFICATIONS	NOTES
F2	SPLICE BOLT - NUT	ASTM A563 GRADE A	⅝" DIA. SEE SDD 14B42 FOR BOLT GEOMETRY
		AASHTO M180 DOUBLE RECESSED HEAVY HEX HEAD	
		GALV. HOT DIP TO AASHTO M232 CLASS C/ASTM A153 CLASS C/ASTM F2329 OR GALV. MECHANICALLY TO AASHTO M298 CLASS 50, TYPE 1/ASTM B695 CLASS 50, TYPE 1	
		OVER TAPPED NUTS OVER-SIZE AS SPECIFIED IN AASHTO 291 / ASTM A 563	
		UNC	
G1	LAG SCREW	ASTM A308 GRADE A ASTM A153 CLASS D	½" DIA. 6" LONG
H1	DELINEATOR - BEAM GUARD		SEE SDD 14B42 FOR MORE INFORMATION
H2	DELINEATION - SHEETING	YELLOW OR WHITE	
		WISDOT SPEC 637 TYPE SH	
		APPROVED PRODUCT LIST	
J1	FOUNDATION BACKFILL	STANDARD SPEC. 614	
AA1	BEAM GUARD RAIL - PUNCHED	AASHTO M180, CLASS A, TYPE 2	
		APPROVED PRODUCER	
AA2	BEAM GUARD RAIL - END SECTION BUFFER	AASHTO M180, CLASS A, TYPE 2	
		APPROVED PRODUCER	
BB1	BEAM GUARD RAIL - TERMINAL CONNECTOR MODIFIED	AASHTO M180, CLASS A, TYPE 2	
		APPROVED PRODUCER	
CC1	SHORT RADIUS - SQUARE WASHER	AASHTO M180	
		GALV. AASHTO M111 / ASTM A123	
EE1	NAIL	ASTM A153 HOT DIP CLASS D	
		ASTM F1667 TYPE 1 STYLE 12 (16 DOUBLE HEADED)	
FF1	POST - BCT - WOOD	S4S FINISH ON 4 SIDES	
		WISDOT SPEC. 614	
GG1	POST BOLT	ASTM A307 GRADE A OR SAE J429 GRADE 2	⅜" DIA. SEE SDD 14B42 FOR BOLT GEOMETRY
		AASHTO M180	
		GALV. HOT DIP TO AASHTO M232 CLASS C/ASTM A153 CLASS C/ASTM F2329 OR GALV. MECHANICALLY TO AASHTO M298 CLASS 50, TYPE 1/ASTM B695 CLASS 50, TYPE 1	
		UNC	
GG2	POST BOLT - WASHER	ASTM F436 TYPE 1 (HARDEN TYPICALLY USED WITH STEEL) OR ASTM F844 (UNHARDENED TYPICALLY WITH WOOD)	⅜" DIA.
		GALV. AASHTO M111 / ASTM A 123 OR GALV. HOT DIP. TO AASHTO M232 CLASS C/ASTM A153 CLASS C / ASTM F2329	

SHORT RADIUS BEAM GUARD (MGS) SHORT RADIUS TERMINAL (MGS)

STATE OF WISCONSIN
DEPARTMENT OF TRANSPORTAT

6

SDD 14B53 - 02g

BILL OF MATERIALS - SHORT RADIUS BEAM GUARD (MGS)

PART	DESCRIPTION	MATERIALS SPECIFICATIONS	NOTES
GG3	POST BOLT - NUT	ASTM A563 GRADE A	⅜" DIA. SEE 14B42 FOR GEOMETRY
		AASHTO M180 DOUBLE RECESSED HEAVY HEX HEAD	
		GALV. HOT DIP TO AASHTO M232 CLASS C / ASTM A153 CLASS C / ASTM F2329 OR GALV. MECHANICALLY TO AASHTO M298 CLASS 50, TYPE 1 / ASTM B695 CLASS 50, TYPE 1	
		UNC	
		OVER TAPPED NUTS OVER-SIZE AS SPECIFIED IN AASHTO 291 / ASTM A 563	
		ASTM A563 GRADE A HEAVY HEX HEAD	
HH1	SPLICE BOLT	GALV. HOT DIP TO AASHTO M232 CLASS C / ASTM A153 CLASS C / ASTM F2329 OR GALV. MECHANICALLY TO AASHTO M298 CLASS 50, TYPE 1 / ASTM B695 CLASS 50, TYPE 1	⅜" DIA. SEE SDD 14B42 FOR BOLT GEOMETRY
		ASTM A307 GRADE A OR SAE J429 GRADE 2	
		UNC	
		AASHTO M180 HEAD GEOMETRY	
HH2	SPLICE BOLT - NUT	ASTM A563 GRADE A	⅜" DIA. SEE SDD 14B42 FOR BOLT GEOMETRY
		AASHTO M180 DOUBLE RECESSED HEAVY HEX HEAD	
		GALV. HOT DIP TO AASHTO M232 CLASS C / ASTM A153 CLASS C / ASTM F2329 OR GALV. MECHANICALLY TO AASHTO M298 CLASS 50, TYPE 1 / ASTM B695 CLASS 50, TYPE 1	
		OVER TAPPED NUTS OVER-SIZE AS SPECIFIED IN AASHTO 291 / ASTM A 563	
		UNC	
JJ1	PIPE - STEEL	ASTM A53 GALVANIZED GRADE B SCHEDULE 40	10" O.D.
JJ2	TOP PLATE	ASTM A36 MIN. STRENGTH 36 KSI, OR ASTM A529 MAX. STRENGTH 50 KSI, OR ASTM A572 MAX STRENGTH 50 KSI OR ASTM A709 MAX STRENGTH 50 KSI OR ASTM A992 MAX STRENGTH 50 KSI	DIMENSIONS ⅜" X 4" X 1' - 0"
		GALV. AASHTO M111 / ASTM A123	
KK1	ANCHOR BRACKET	ASTM A36 MIN. STRENGTH 36 KSI, OR ASTM A529 MAX. STRENGTH 50 KSI, OR ASTM A572 MAX STRENGTH 50 KSI OR ASTM A709 MAX STRENGTH 50 KSI OR ASTM A992 MAX STRENGTH 50 KSI	
		GALV. AASHTO M111 / ASTM A123	
KK2	ANCHOR BRACKET - BEARING PLATE	ASTM A36 MIN. STRENGTH 36 KSI, OR ASTM A529 MAX. STRENGTH 50 KSI, OR ASTM A572 MAX STRENGTH 50 KSI OR ASTM A709 MAX STRENGTH 50 KSI OR ASTM A992 MAX STRENGTH 50 KSI	
		GALV. AASHTO M111 / ASTM A123	
LL1	ANCHOR BRACKET - BOLT	ASTM A307 GRADE B HEAVY HEX HEAD OR SAE J429 GRADE 2 HEAVY HEX HEAD	⅝" DIA.
		GALV. HOT DIP TO AASHTO M232 CLASS C / ASTM A153 CLASS C / ASTM F2329 OR GALV. MECHANICALLY TO AASHTO M298 CLASS 50, TYPE 1 / ASTM B695 CLASS 50, TYPE 1	
		UNC	

PART	DESCRIPTION	MATERIALS SPECIFICATIONS	NOTES
LL2	ANCHOR BRACKET - WASHER	ASTM F436 TYPE 1 (HARDEN WASHER ONLY)	⅝" DIA.
		GALV. AASHTO M111 / ASTM A123 OR GALV. HOT DIP TO AASHTO M232 CLASS C / ASTM A153 CLASS C / ASTM F2329	
LL3	ANCHOR BRACKET - NUT	ASTM A563 GRADE A	⅝" DIA.
		GALV. HOT DIP TO AASHTO M232 CLASS C / ASTM A153 CLASS C / ASTM F2329 OR GALV. MECHANICALLY TO AASHTO M298 CLASS 50, TYPE 1 / ASTM B695 CLASS 50, TYPE 1	
		OVER TAPPED NUTS OVER-SIZE AS SPECIFIED IN AASHTO 291 / ASTM A 563	
		UNC	
MM1a	ANCHOR CABLE	AASHTO M30 / ASTM A741 INDEPENDENT WIRE CORE (IWRC) OR WIRE STRAND CORE (WCS), IMPROVED PLOW STEEL (IPS), 6X19, TYPE II OR IIc CLASS C ZINC COATED	
MM1b	ANCHOR CABLE	AASHTO M30 / ASTM A741 INDEPENDENT WIRE CORE (IWRC) OR WIRE STRAND CORE (WCS), IMPROVED PLOW STEEL (IPS), 6X19, TYPE II OR IIc CLASS C ZINC COATED	
MM2	ANCHOR CABLE - SWAGE FITTING	ASTM A576 GRADE 1035	
		SWAGE FITTINGS ARE TO BE FACTORY SWEDGED. WITH A BREAKING STRENGTH 40,000 LBS.	
		GALV. AASHTO M111 / ASTM A123	
		ASME B30.26 FORGED, CAST, OR DIE STAMPED WITH THE FOLLOWING INTO CONNECTION: NAME OF MANUFACTURER OR TRADEMARK OF CONNECTION'S MANUFACTURER, SIZE OR RATED LOAD, GRADE.	
MM3	WIRE ROPE CABLE CLAMPS	FF-C-450D TYPE 1 CLASS 1	¾"
		ASTM A153 HOT DIP CLASS D	
MM4	ANCHOR CABLE - SWAGE FITTING - STUD	ASTM F3125 GRADE A325 TYPE 1 OR SAE GRADE 5 OR ASTM A449 TYPE 1 HEAVY HEX HEAD	
		GALV. HOT DIP TO AASHTO M232 CLASS C / ASTM A153 CLASS C / ASTM F2329 OR GALV. MECHANICALLY TO AASHTO M298 CLASS 50, TYPE 1 / ASTM B695 CLASS 50, TYPE 1	
		UNC	
NN1	ANCHOR CABLE - NUT	ASTM A563 GRADE A	1" DIA.
		AASHTO M180 DOUBLE RECESSED HEAVY HEX HEAD	
		GALV. HOT DIP TO AASHTO M232 CLASS C / ASTM A153 CLASS C / ASTM F2329 OR GALV. MECHANICALLY TO AASHTO M298 CLASS 50, TYPE 1 / ASTM B695 CLASS 50, TYPE 1	
		OVER TAPPED NUTS OVER-SIZE AS SPECIFIED IN AASHTO 291 / ASTM A 563	
		UNC	
NN2	ANCHOR CABLE - NUT - WASHER	ASTM F436 TYPE 1 (HARDEN WASHER ONLY)	1" DIA.
		GALV. AASHTO M111 / ASTM A123 OR GALV. HOT DIP TO AASHTO M232 CLASS C / ASTM A153 CLASS C / ASTM F2329	

6

SDD 14B53 - 02h

SHORT RADIUS BEAM GUARD (MGS) SHORT RADIUS TERMINAL (MGS)

STATE OF WISCONSIN
DEPARTMENT OF TRANSPORTAT

6

SDD 14B53 - 02h

BILL OF MATERIALS - SHORT RADIUS BEAM GUARD (MGS)

PART	DESCRIPTION	MATERIALS SPECIFICATIONS	NOTES
PP1	BEARING PLATE AT POST	ASTM A36 MIN. STRENGTH 36 KSI, OR ASTM A529 MAX. STRENGTH 50 KSI, OR ASTM A572 MAX STRENGTH 50 KSI OR ASTM A709 MAX STRENGTH 50 KSI OR ASTM A992 MAX STRENGTH 50 KSI	
		GALV. AASHTO M111 / ASTM A123	
PP2	PIPE - STEEL	ASTM A53 GALVANIZED GRADE B SCHEDULE 40	2" DIA. x 6" LONG
QQ1	FOUNDATION TUBE	ASTM A500 GRADE B	8" X 6" X 3/16"
		GALV. AASHTO M111 / ASTM A123	
QQ2	SHORT RADIUS - FOUNDATION TUBE - ANCHOR CABLE - TUBE	ASTM A500 GRADE B	DIMENSIONS 2 1/2" X 2 1/4" X 1/4" X 8"
		GALV. AASHTO M111 / ASTM A123	
QQ3	SHORT RADIUS - SOIL TUBE - ANCHOR CABLE - TUBE - END PLATE	ASTM A36 MIN. STRENGTH 36 KSI, OR ASTM A529 MAX. STRENGTH 50 KSI, OR ASTM A572 MAX STRENGTH 50 KSI OR ASTM A709 MAX STRENGTH 50 KSI OR ASTM A992 MAX STRENGTH 50 KSI	DIMENSIONS 2 1/2" X 2 1/2" X 1/4"
		GALV. AASHTO M111 / ASTM A123	
QQ4	GROUND STRUT AND YOKE - BOLT	GALV. HOT DIP TO AASHTO M232 CLASS C / ASTM A153 CLASS C / ASTM F2329 OR GALV. MECHANICALLY TO AASHTO M298 CLASS 50, TYPE 1 / ASTM B695 CLASS 50, TYPE 1	5/8 DIA.
		ASTM A307 GRADE B HEAVY HEX HEAD OR SAE J429 GRADE 2 HEAVY HEX HEAD	
		UNC	
QQ5	GROUND PLATE AND YOKE - WASHER	ASTM F436 TYPE 1 (HARDEN WASHER ONLY)	5/8 DIA.
		GALV. AASHTO M111 / ASTM A123 OR GALV. HOT DIP TO AASHTO M232 CLASS C / ASTM A153 CLASS C / ASTM F2329	
QQ6	GROUND STRUT AND YOKE - NUT	HEAVY HEX	5/8 DIA.
		UNC	
		ASTM A563 GRADE A	
		OVER TAPPED NUTS AS SPECIFIED IN AASHTO 291 / ASTM A 563	
		GALV. HOT DIP TO AASHTO M232 CLASS C / ASTM A153 CLASS C / ASTM F2329 OR GALV. MECHANICALLY TO AASHTO M298 CLASS 50, TYPE 1 / ASTM B695 CLASS 50, TYPE 1	

PART	DESCRIPTION	MATERIALS SPECIFICATIONS	NOTES
SS1	SOIL PLATE	ASTM A36 MIN. STRENGTH 36 KSI, OR ASTM A529 MAX. STRENGTH 50 KSI, OR ASTM A572 MAX STRENGTH 50 KSI OR ASTM A709 MAX STRENGTH 50 KSI OR ASTM A992 MAX STRENGTH 50 KSI	
		GALV. AASHTO M111 / A123	
TT1	SOIL PLATE - BOLT	ASTM A307 GRADE B HEAVY HEX HEAD OR SAE J429 GRADE 2 HEAVY HEX HEAD	5/8 DIA.
		GALV. HOT DIP TO AASHTO M232 CLASS C / ASTM A153 CLASS C / ASTM F2329 OR GALV. MECHANICALLY TO AASHTO M298 CLASS 50, TYPE 1 / ASTM B695 CLASS 50, TYPE 1	
		UNC	
TT2	SOIL PLATE - WASHER	ASTM F436 TYPE 1 (HARDEN WASHER ONLY)	5/8 DIA.
		GALV. AASHTO M111 / ASTM A123 OR GALV. HOT DIP TO AASHTO M232 CLASS C / ASTM A153 CLASS C / ASTM F2329	
TT3	SOIL PLATE - NUT	GALV. HOT DIP TO AASHTO M232 CLASS C / ASTM A153 CLASS C / ASTM F2329 OR GALV. MECHANICALLY TO AASHTO M298 CLASS 50, TYPE 1 / ASTM B695 CLASS 50, TYPE 1	5/8 DIA.
UU1	OBJECT MARKER - SHEETING	MUTCD / WISDOT OBJECT MARKER TYPE 3	PATTERN AND COLOR FOR SHEETING. SHEETING TYPE FOR MARKER.
		WISDOT SPEC 637 TYPE F	
		APPROVED PRODUCT LIST	
UU2	OBJECT MARKER - ALUMINUM PLATE	WISDOT SPEC 637 ALUMINUM PLATE	MATERIAL AND THICKNESS OF MATERIALS
UU3	OBJECT MARKER - SCREWS	STAINLESS SELF-TAPPING SCREWS	
VV1	FOUNDATION BACKFILL	WISDOT SPEC 614	

6

6

SHORT RADIUS BEAM GUARD (MGS) SHORT RADIUS TERMINAL (MGS)

STATE OF WISCONSIN
DEPARTMENT OF TRANSPORTATION

APPROVED
May 2022 — DATE
/S/ Rodney Taylor — ROADWAY STANDARDS DEVE ENGINEER
FHWA

SDD 14B53 - 02i

GENERAL NOTES

DETAILS OF CONSTRUCTION, MATERIALS AND WORKMANSHIP NOT SHOWN ON THIS DRAWING SHALL CONFORM TO THE PERTINENT REQUIREMENTS OF THE STANDARD SPECIFICATIONS AND THE APPLICABLE SPECIAL PROVISIONS.

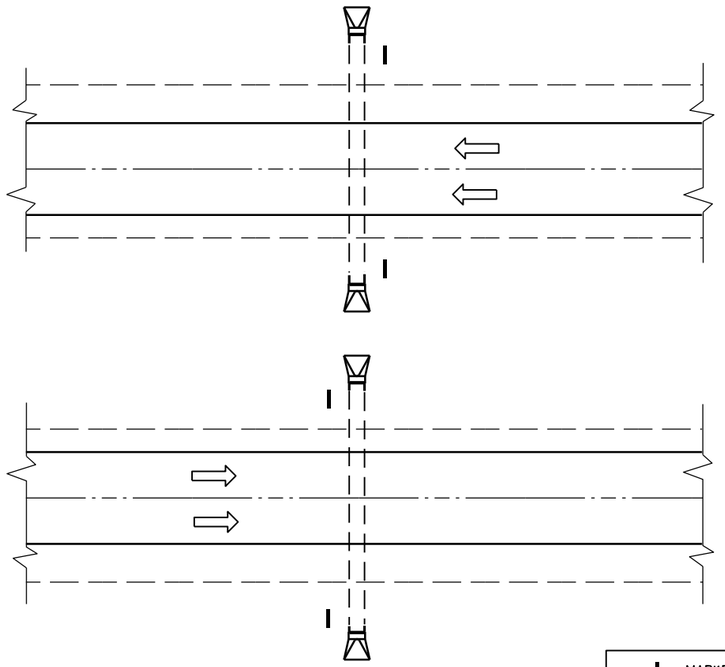

PLAN VIEW

DIVIDED HIGHWAY

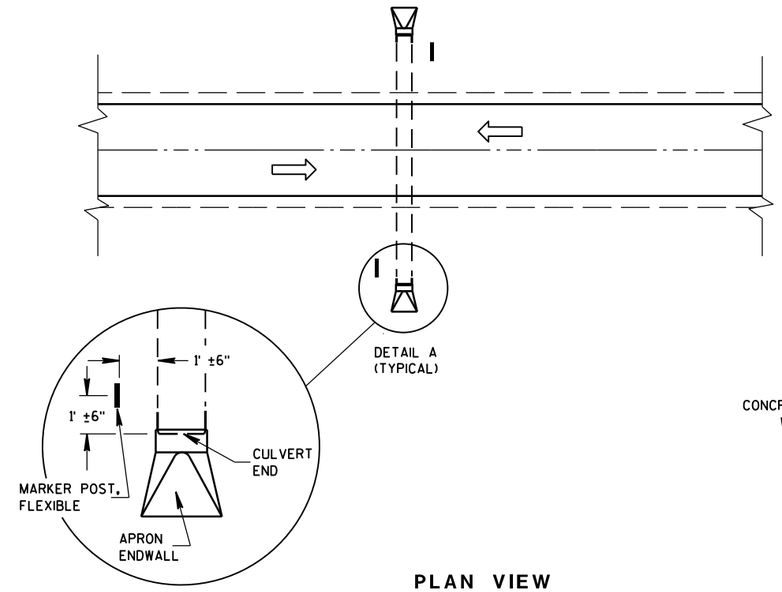

DETAIL A
(TYPICAL)

PLAN VIEW

UNDIVIDED HIGHWAY

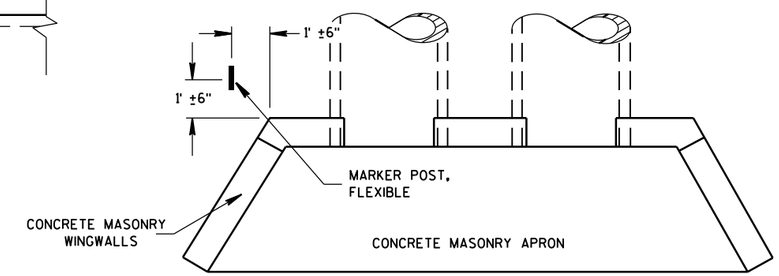

PLAN VIEW

CONCRETE MASONRY ENDWALLS FOR CULVERT PIPE AND PIPE ARCH

MARKER POST, FLEXIBLE

DIRECTION OF TRAFFIC FLOW

FLEXIBLE MARKER POST LOCATION

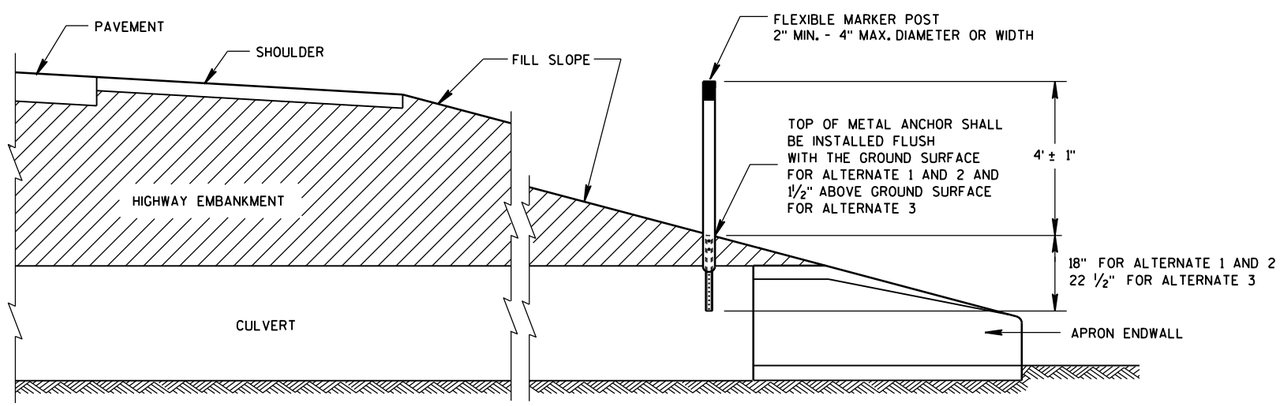

CROSS SECTION

FLEXIBLE MARKER POST

FLEXIBLE MARKER POST FOR CULVERT END

STATE OF WISCONSIN
DEPARTMENT OF TRANSPOR

6

6

S.D.D. 15 A 3-2a

S.D.D. 15 A 3-2a

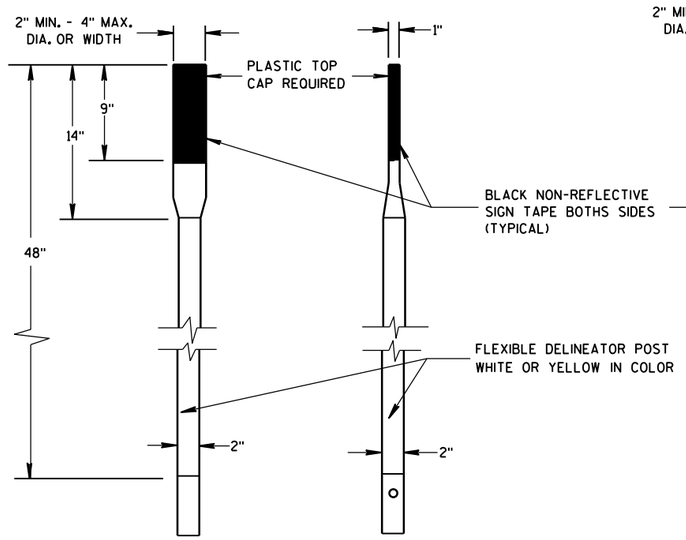

FRONT VIEW SIDE VIEW

ALTERNATE 1

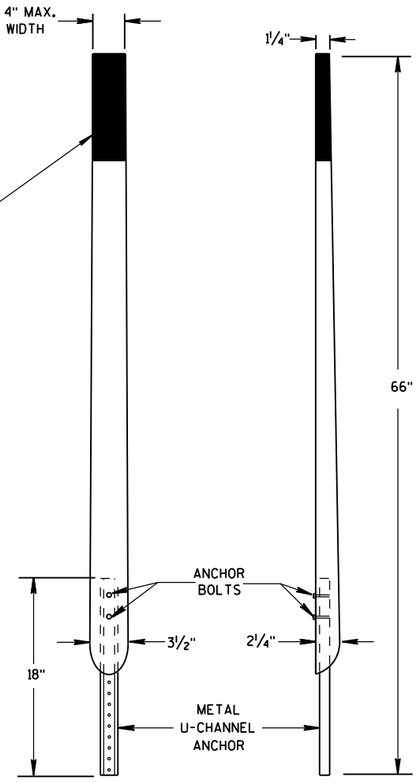

FRONT VIEW SIDE VIEW

ALTERNATE 2

FLEXIBLE MARKER POSTS

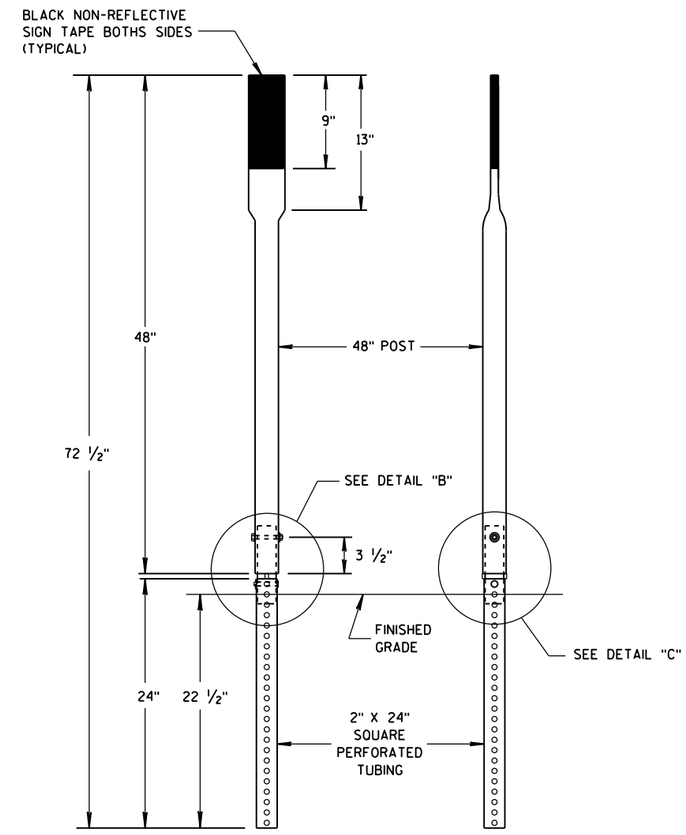

FRONT VIEW SIDE VIEW

ALTERNATE 3

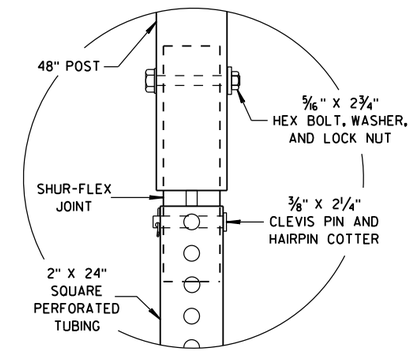

DETAIL B

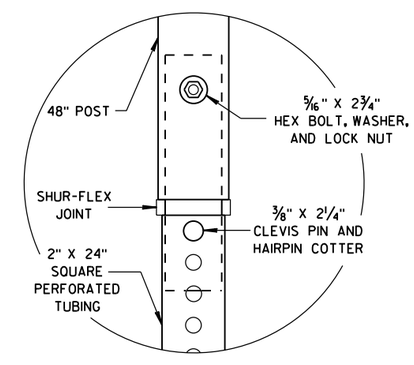

DETAIL C

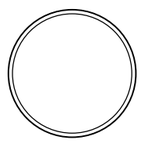

SECTION A-A

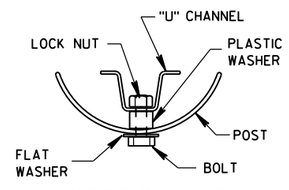

SECTION B-B

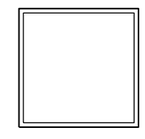

SECTION C-C

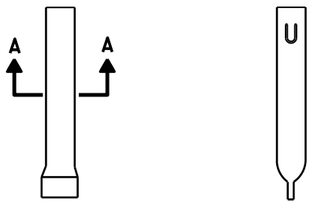

FRONT VIEW SIDE VIEW

ALTERNATE 1

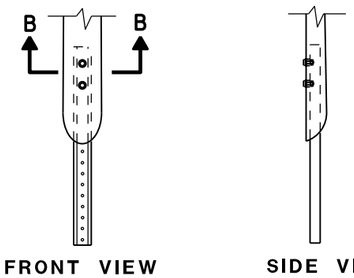

FRONT VIEW SIDE VIEW

ALTERNATE 2

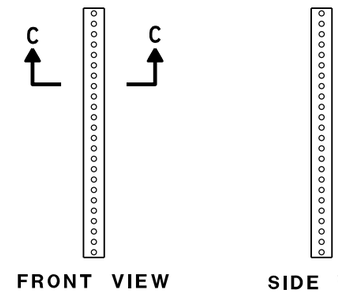

FRONT VIEW SIDE VIEW

ALTERNATE 3

FLEXIBLE MARKER POST ANCHORS

FLEXIBLE MARKER POST
FOR CULVERT END

STATE OF WISCONSIN
DEPARTMENT OF TRANSPORTATION

APPROVED
10/1/2012 /S/ Travis Feltes
DATE STATE TRAFFIC ENGINEER
FHWA

6

6

S.D.D. 15 A 3-2b

S.D.D. 15 A 3-2b

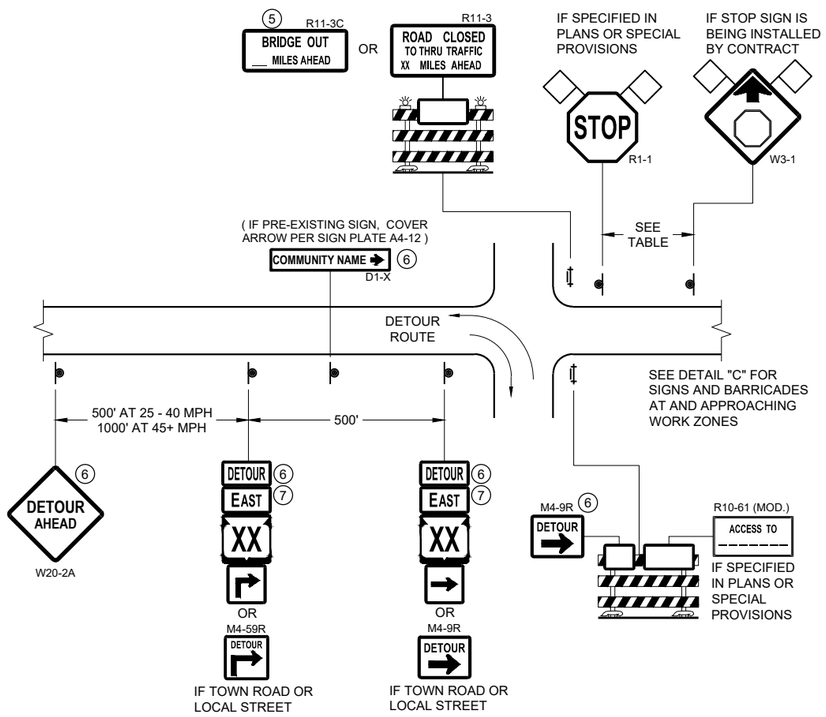

DETAIL A
MAINLINE CLOSURE WITH POSTED DETOUR
WORK ZONE GREATER THAN OR EQUAL TO ½ MILE FROM DETOUR ROUTE (1000 FEET IF URBAN)

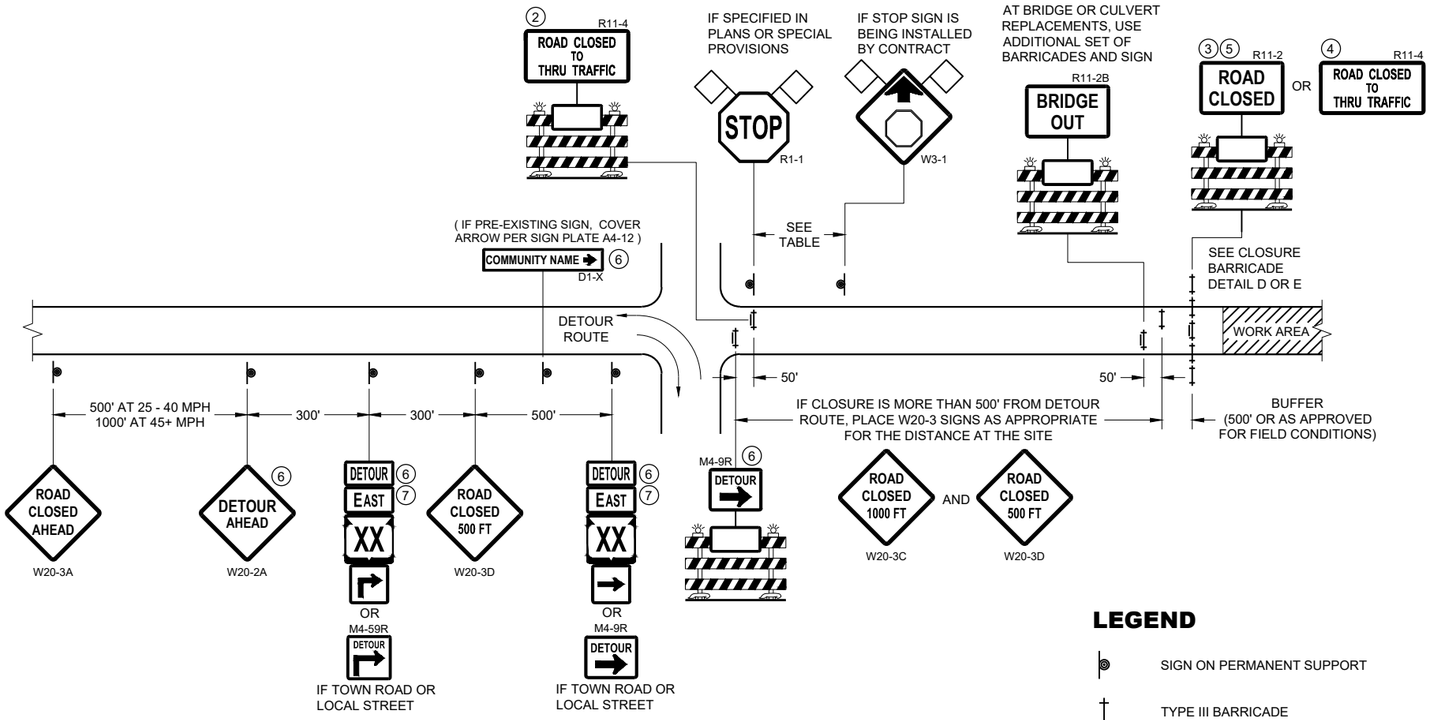

DETAIL B
MAINLINE CLOSURE WITH POSTED DETOUR
WORK ZONE LESS THAN ½ MILE FROM DETOUR ROUTE (1000 FEET IF URBAN)

LEGEND

- SIGN ON PERMANENT SUPPORT
- TYPE III BARRICADE
- TYPE III BARRICADE WITH ATTACHED SIGN
- TYPE "A" WARNING LIGHT (FLASHING)
- WORK AREA
- FLAGS, 16" X 16" MIN. (ORANGE)
- DETOUR M4 - 8
- EAST M3 - X
- XX (M1 - 4) OR XX (M1 - 6) OR COUNTY X (M1 - 5A)
- M05 - 1 OR M06 - 1

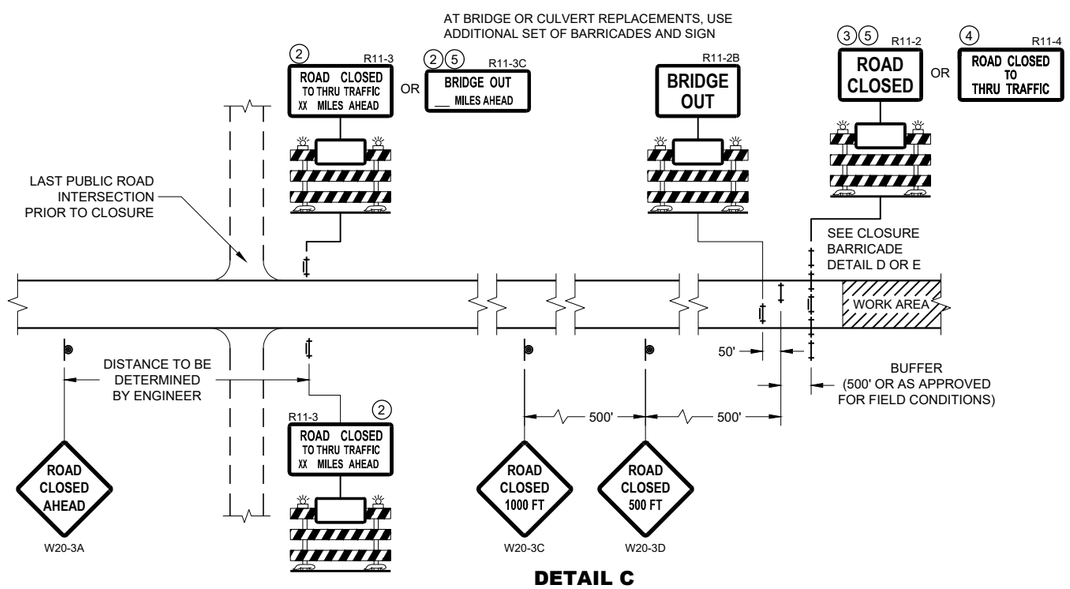

DETAIL C
MAINLINE CLOSURE, NO POSTED DETOUR

SPEED LIMIT (MPH)	"STOP AHEAD" ADVANCE WARNING DISTANCE (FT)
25	200
30	200
35	350
40	350
45	500
50	550
55	750

SEE SDD 15C2-SHEET "b" FOR GENERAL NOTES AND FOOTNOTES 1 THROUGH 7

BARRICADES AND SIGNS FOR MAINLINE CLOSURES

STATE OF WISCONSIN
DEPARTMENT OF TRANSPORTATION

APPROVED
May 2023 — DATE
/S/ Andrew Heidtke — WORK ZONE ENGINEER

FHWA

6

SDD 15C02 - 09a

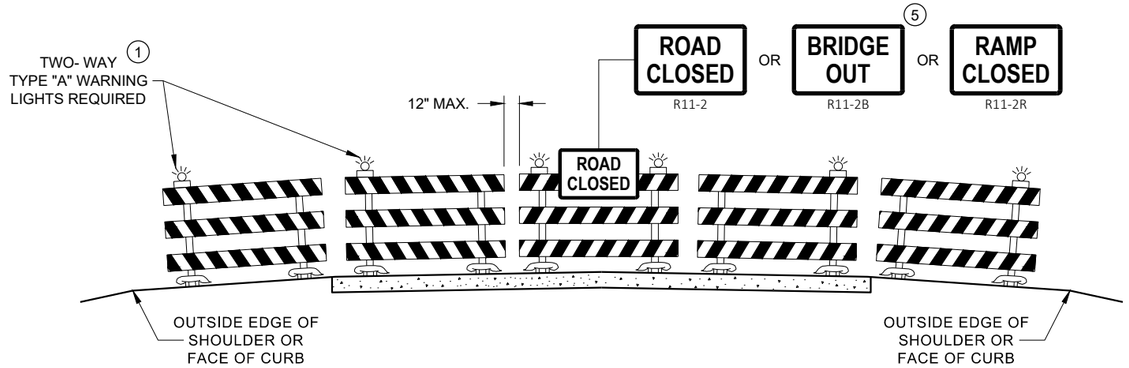

DETAIL D
ROAD CLOSURE BARRICADE DETAIL
APPROACH VIEW

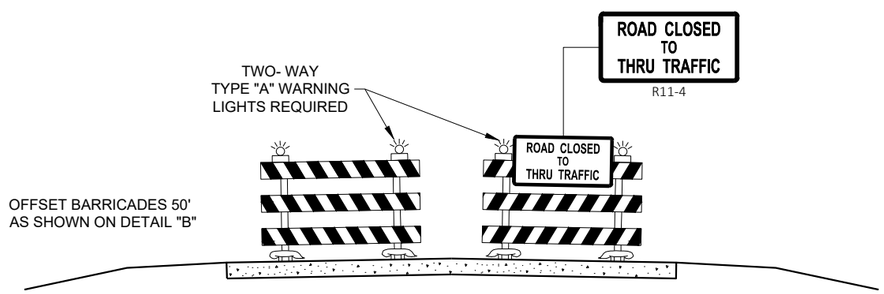

DETAIL E
LANE CLOSURE BARRICADE DETAIL
APPROACH VIEW

SEE SDD 15C2 - SHEET "a" FOR LEGEND

GENERAL NOTES

THE EXACT NUMBER, LOCATION, AND SPACING OF ALL SIGNS AND BARRICADES SHALL BE ADJUSTED TO FIT FIELD CONDITIONS AS APPROVED BY THE ENGINEER.

ANY SIGNS TEMPORARY OR EXISTING, WHICH CONFLICT WITH TRAFFIC CONTROL "IN USE", SHALL BE REMOVED OR COVERED AS NEEDED AND AS APPROVED BY THE ENGINEER.

THE SPACING BETWEEN TRAFFIC CONTROL SIGNS SHOULD BE ADJUSTED TO NOT CONFLICT WITH AND SHOULD PROVIDE A DESIRABLE MINIMUM OF 200 FEET CLEARANCE TO EXISTING SIGNS THAT WILL REMAIN IN PLACE.

BARRICADES THAT MUST BE MOVED FOR A WORK OPERATION SHALL BE IMMEDIATELY RE-ESTABLISHED UPON COMPLETION OF THE OPERATION, OR FOR CONTINUING OPERATIONS, AT THE END OF EACH WORKING DAY.

SIGNS THAT WILL BE IN PLACE LESS THAN 7 CONTINUOUS DAYS AND NIGHTS MAY BE MOUNTED ON PORTABLE SUPPORTS.

ALL TYPE III BARRICADES SHALL HAVE RAILS REFLECTORIZED ON BOTH FACES. STRIPES SHALL BE PROPERLY SLOPED DOWN TOWARD THE TRAFFIC SIDE OR AS SHOWN IN THE ROAD CLOSURE BARRICADE DETAIL "D" FOR FULL ROAD CLOSURES.

TYPE "A" LOW - INTENSITY FLASHING WARNING LIGHTS SHALL BE VISIBLE ON BOTH SIDES OF THE BARRICADE.

THE R11 - 2, R11 - 3, M4 - 9, R11 - 4, AND R10 - 61 SIGNS PLACED ON THE BARRICADES SHALL COVER NO MORE THAN THE TOP RAIL. THE SIGNS SHALL NOT COVER ANY PORTION OF THE MIDDLE RAIL OR BOTTOM RAILS.

"WO" AND "MO" SIGNS ARE THE SAME AS "W" AND "M" SIGNS EXCEPT THE BACKGROUND IS ORANGE.

ALL SIGNS SHALL BE 48" X 48" UNLESS OTHERWISE NOTED BELOW:
- R11 - 2 SHALL BE 48" X 30"
- R11 - 3 SHALL, R11 - 4 AND R10 - 61 SHALL BE 60 " X 30"
- M4 - 9 SHALL BE 30" X 24"
- M3 - X SHALL BE 24" X 12" (36" X 18" IF NEEDED TO MATCH EXISTING SIGNS)
- M4 - 8 SHALL BE 24" X 12" (36" X 18" IF NEEDED TO MATCH EXISTING SIGNS)
- M1 - 4, M1 - 5A AND M1 - 6 SHALL BE 24" X 24" (36" X 36" IF NEEDED TO MATCH EXISTING SIGNS)
- MO5 - 1 AND MO6 - 1 SHALL BE 21" X 21" (30" X 30" IF NEEDED TO MATCH EXISTING SIGNS)
- D1 - X SHALL BE AS SHOWN ON SPECIFIC PROJECT SIGNING DETAIL SHEETS.
- R1 - 1 SHALL BE 36" X 36"

1. TWO WARNING LIGHTS SHALL BE PROVIDED ON THE CENTER BARRICADE AND A MINIMUM OF ONE WARNING LIGHT SHALL BE PROVIDED ON EACH OF THE OTHER BARRICADES WITHIN THE ROADWAY LIMITS. SPACING OF THE WARNING LIGHTS SHALL BE UNIFORM TO THE EDGE OF ROADWAY AS SHOWN (APPROX. 8 FOOT LIGHT SPACING.
2. THESE SIGNS AND BARRICADES ARE NOT REQUIRED IF ROAD CLOSURE BEGINS AT AN INTERSECTION.
3. FOR ROAD CLOSURE WITHOUT LOCAL ACCESS TO PROJECT, SEE ROAD CLOSURE BARRICADE DETAIL "D".
4. FOR ROAD CLOSURE WITH LOCAL ACCESS TO PROJECT, SEE ROAD CLOSURE BARRICADE DETAIL "E".
5. FOR BRIDGE OR CULVERT REPLACEMENTS, SUBSTITUTE "BRIDGE OUT" INSTEAD OF "ROAD CLOSED" ON R11 - 2 AND R11 - 3 SIGNS.
6. INSTALL DETOUR AND COMMUNITY GUIDE SIGNS AND ARROWS ONLY IF SPECIFIED IN THE CONTRACT. IF THERE ARE EXISTING ROUTE MARKER ASSEMBLIES THAT WILL REMAIN IN PLACE, ADJUST THE LOCATION OF THE DETOUR ROUTE SIGNS TO CORRESPOND WITH THE EXISTING ASSEMBLIES. MODIFY EXISTING SIGNS WHERE POSSIBLE. SEE SPECIFIC PROJECT DETOUR SIGNING DETAIL SHEETS. IF DETOUR SIGNS ARE BEING INSTALLED BY OTHERS, PLACE THE CONTRACTED TRAFFIC CONTROL SIGNS TO ALLOW FOR PLACEMENT OF ALL WARNING, DETOUR AND GUIDE SIGNS AS SHOWN.
7. "EAST" CARDINAL DIRECTION MARKERS AND RIGHT TURN ARROWS ARE SHOWN. USE OTHER CARDINAL DIRECTIONS AND ARROWS AS APPROPRIATE.

BARRICADES AND SIGNS FOR VARIOUS CLOSURES

STATE OF WISCONSIN
DEPARTMENT OF TRANSPORTATION

APPROVED
May 2023 — DATE
/S/ Andrew Heidtke — WORK ZONE ENGINEE
FHWA

THIS DRAWING PROVIDES GENERAL GUIDANCE ON TYPICAL DETOUR SIGN LAYOUT AND SPACING. SEE PROJECT DETOUR SIGNING SHEETS FOR SPECIFIC DETAILS FOR EACH PROJECT.

LEGEND

- SIGN ON PERMANENT SUPPORT
- WORK AREA
- DETOUR — M4 - 8
- EAST — M3 - X
- XX — M1 - 4 OR XX — M1 - 6 OR COUNTY X — M1 - 5A
- M05 - 1 OR M06 - 1 OR M06 - 1

GENERAL NOTES

THE EXACT NUMBER, LOCATION AND SPACING OF ALL SIGNS SHALL BE ADJUSTED TO FIT FIELD CONDITIONS AS APPROVED BY THE ENGINEER.

IF THERE ARE EXISTING ROUTE MARKER ASSEMBLIES THAT WILL REMAIN IN PLACE, ADJUST THE LOCATION OF THE DETOUR ROUTE SIGNS TO CORRESPOND WITH THE EXISTING ASSEMBLIES. SEE SPECIFIC PROJECT DETOUR SIGNING DETAIL SHEETS. MODIFY EXISTING SIGNS WHERE POSSIBLE.

THE SPACING BETWEEN TRAFFIC CONTROL AND DETOUR SIGNS SHOULD BE ADJUSTED TO NOT CONFLICT WITH AND TO PROVIDE A DESIRABLE MINIMUM OF 200 FEET CLEARANCE TO EXISTING SIGNS THAT WILL REMAIN IN PLACE.

ANY SIGNS TEMPORARY OR EXISTING, WHICH CONFLICT WITH TRAFFIC CONTROL "IN USE" SHALL BE REMOVED OR COVERED AS NEEDED AND AS APPROVED BY THE ENGINEER.

SIGNS THAT WILL BE IN PLACE LESS THAN 7 CONTINUOUS DAYS AND NIGHTS MAY BE MOUNTED ON PORTABLE SUPPORTS.

"MO" SIGNS ARE THE SAME AS "M" SIGNS EXCEPT THE BACKGROUND IS ORANGE.

SIGN SIZES SHALL BE AS FOLLOWS:

M3-X SHALL BE 24" X 12" (36" X 18" IF NEEDED TO MATCH EXISTING SIGNS)
M4-8 SHALL BE 24" X 12" (36" X 18" IF NEEDED TO MATCH EXISTING SIGNS)
M1-4, M1-5A AND M1-6 SHALL BE 24" X 24" (36" X 36" IF NEEDED TO MATCH EXISTING SIGNS)
M05-1 AND M06-1 SHALL BE 21" X 21" (30" X 30" IF NEEDED TO MATCH EXISTING SIGNS)
M4-9 AND M4-59 SHALL BE 30" X 24"
M4-8a SHALL BE 24" X 18"
G20-51 SHALL BE 60" X 24"
W20-2A SHALL BE 48" X 48"
D1-X SHALL BE AS SHOWN ON SPECIFIC PROJECT SIGNING DETAIL SHEETS.

* OPTIONAL SIGNS. SEE SPECIFIC PROJECT DETOUR SIGNING DETAIL SHEETS.

** FOR A TOWN ROAD OR LOCAL STREET DETOURED ONTO A STATE TRUNK HIGHWAY, PLACE A ROAD NAME PLAQUE ABOVE THE M4-9 SIGN AS SPECIFIED IN THE CONTRACT.

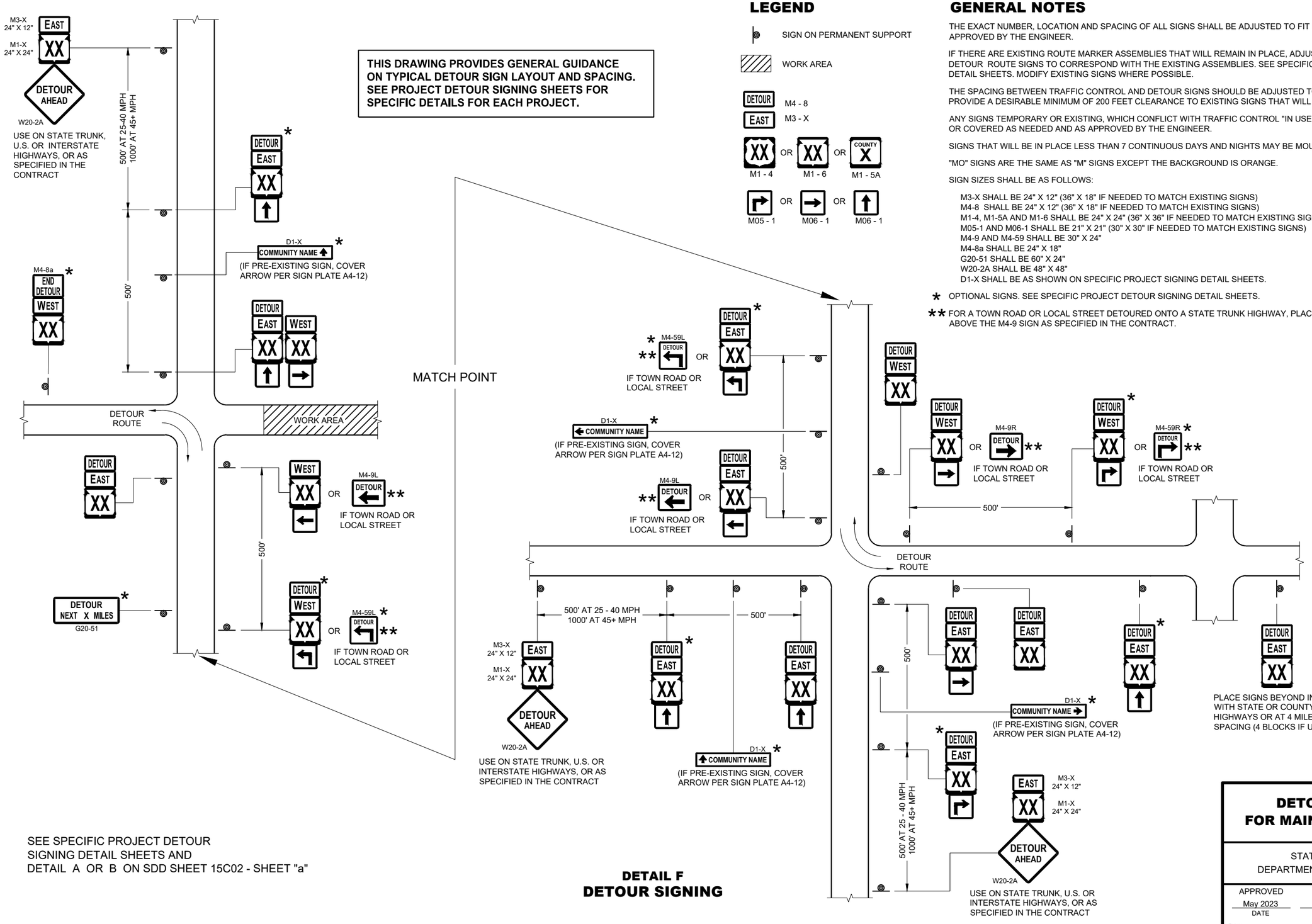

SEE SPECIFIC PROJECT DETOUR SIGNING DETAIL SHEETS AND DETAIL A OR B ON SDD SHEET 15C02 - SHEET "a"

DETAIL F
DETOUR SIGNING

DETOUR SIGNING FOR MAINLINE CLOSURES

STATE OF WISCONSIN
DEPARTMENT OF TRANSPORTATION

APPROVED
May 2023 — DATE
/S/ Andrew Heidtke — WORK ZONE ENGINEER
FHWA

6

SDD 15C02 - 09c

*CONFIRM MARKING LINE WIDTH WITH THE MISCELLANEOUS QUANTITIES

GENERAL NOTES

DETAILS OF CONSTRUCTION NOT SHOWN ON THIS DRAWING SHALL CONFORM TO STANDARD SPECIFICATIONS AND SPECIAL PROVISIONS.

1. LOCATE THE NO PASSING ZONE W14-3 SIGN WITHIN 50 FEET OF THE "T" MARKING
2. MEASURE FROM EDGE OF MARKING TO JOINT LINE. THIS DOES NOT INCLUDE SPACE NEEDED FOR GROOVING OPERATIONS.

LEGEND

"T" MARKING

SIGN ON PERMANENT SUPPORT

DIRECTION OF TRAFFIC

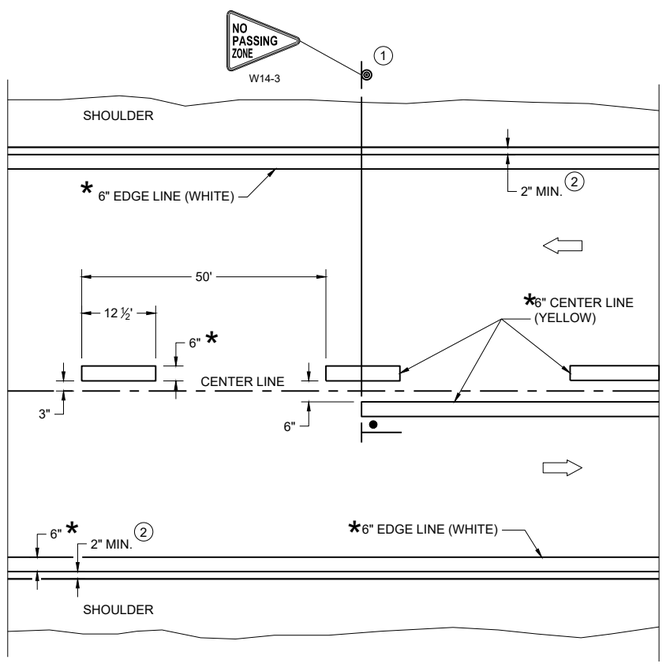

TWO WAY TRAFFIC

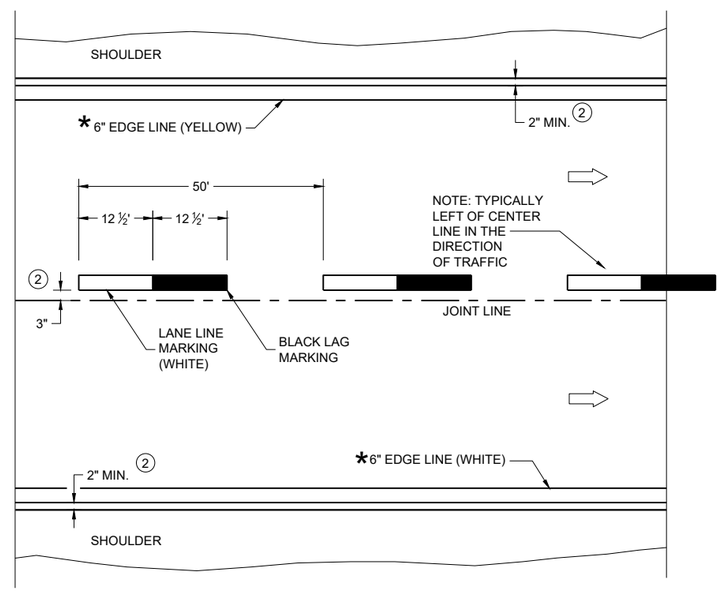

ONE WAY TRAFFIC

PERMANENT PAVEMENT MARKING

6

SDD 15C08-23a

PERMANENT LONGITUDINAL PAVEMENT MARKINGS

STATE OF WISCONSIN
DEPARTMENT OF TRANSPORTATION

APPROVED
May 2023 — DATE
/S/ Jeannie Silver — Statewide Pavement Marking Engineer
FHWA

GENERAL NOTES

1. REFLECTIVE SHEETING SHALL FOLLOW THE REQUIREMENTS IN THE APPROVED PRODUCTS LISTING FOR SIGN SHEETING.
2. LOCATION OF WARNING LIGHTS WHEN SHOWN ON THE PLAN.

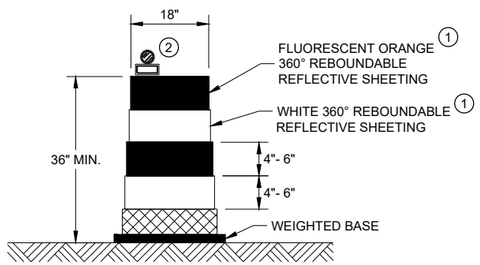

DRUM

BALLAST WIDTHS
RANGE FROM 24"-36"

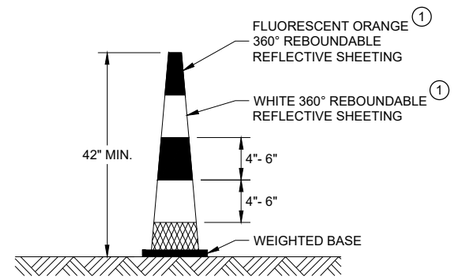

42" CONE

DO NOT USE IN TAPERS
½ SPACING OF DRUMS

BALLAST WIDTHS
RANGE FROM 14"-20"

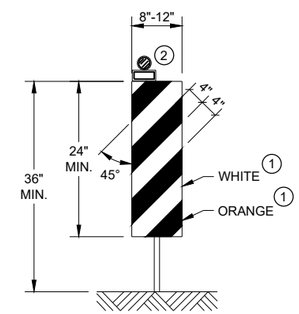

VERTICAL PANEL

THE STRIPES SHALL SLOPE DOWNWARD TO
THE TRAFFIC SIDE FOR CHANNELIZATION.

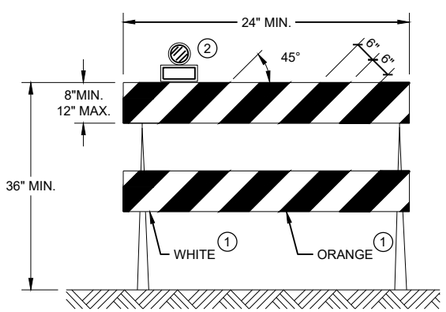

TYPE II BARRICADE

FOR RAILS LESS THAN 36" LONG, 4" WIDE STRIPES
MAY BE USED. ALL STRIPES SHALL SLOPE DOWNWARD
TO THE TRAFFIC SIDE FOR CHANNELIZATION.

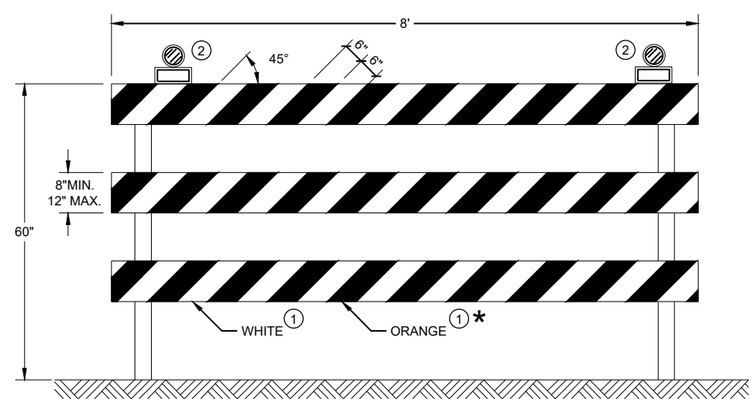

TYPE III BARRICADE

IF SIGN MOUNTED, DO NOT COVER MORE THAN 50% OF THE TOP
TWO RAILS OR 33% OF THE TOTAL AREA OF THE THREE RAILS.

* IF USED FOR A PERMANENT APPLICATION USE RED SHEETING.

CHANNELIZING DEVICES
DRUMS, CONES, BARRICADES
AND VERTICAL PANELS

STATE OF WISCONSIN
DEPARTMENT OF TRANSPORTATION

APPROVED
November 2022 /S/ Andrew Heidtke
DATE WORK ZONE ENGINEE
FHWA

6

6

SDD 15C11 - 10b

SDD 15C11 - 10b

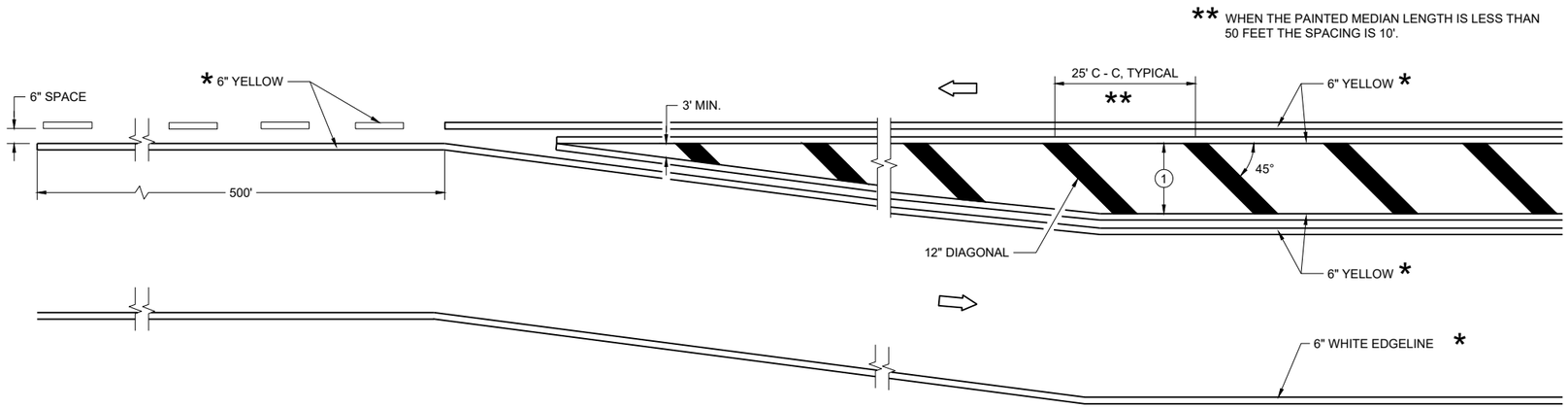

MEDIAN ISLAND DETAIL

GENERAL NOTES

1. DIAGONALS ARE OPTIONAL WHEN PAINTED ISLAND IS LESS THAN 6 FEET AT THE WIDEST POINT. OMIT DIAGONALS IF WIDTH IS LESS THAN 4 FEET.

⇨ DIRECTION OF TRAVEL

*CONFIRM MARKING LINE WIDTH WITH THE MISCELLANEOUS QUANTITIES

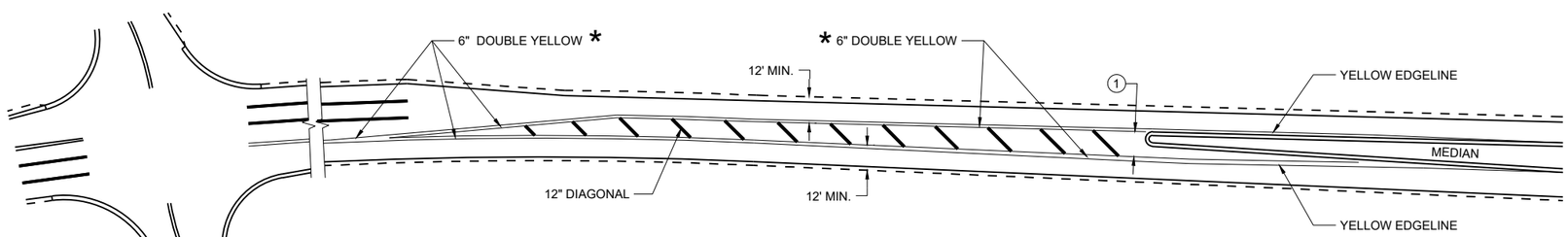

APPROACH MARKINGS FOR OTHER MEDIAN TYPES

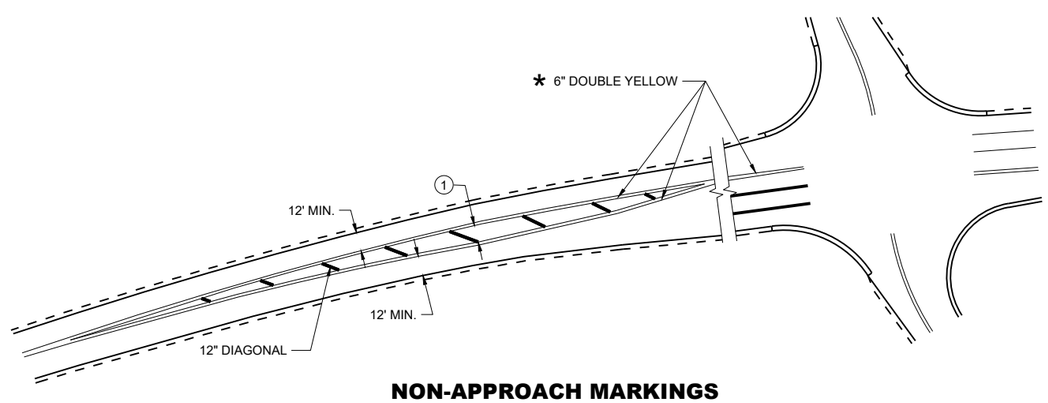

NON-APPROACH MARKINGS

MEDIAN ISLAND PAVEMENT MARKINGS

STATE OF WISCONSIN
DEPARTMENT OF TRANSPORTATION

APPROVED
August 2024 — DATE
/S/ Jeannie Silver — Statewide Pavement Marking Engineer
FHWA

6

SDD 15C18-09a

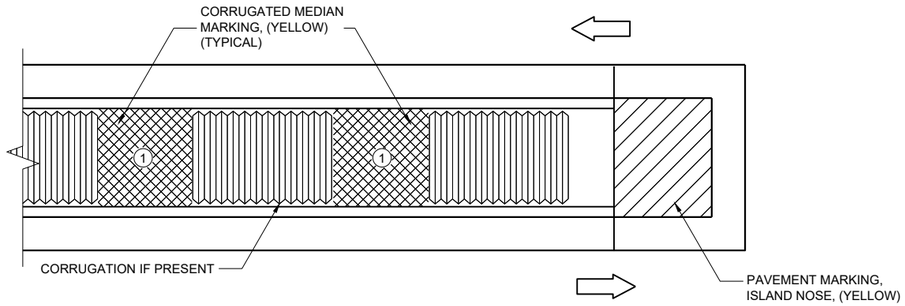

MEDIAN ISLAND WITH SQUARE BLUNT NOSE

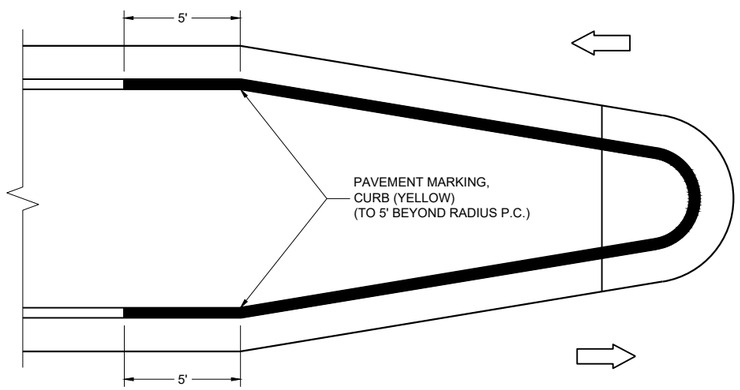

MEDIAN ISLAND WITH ROUND BLUNT NOSE

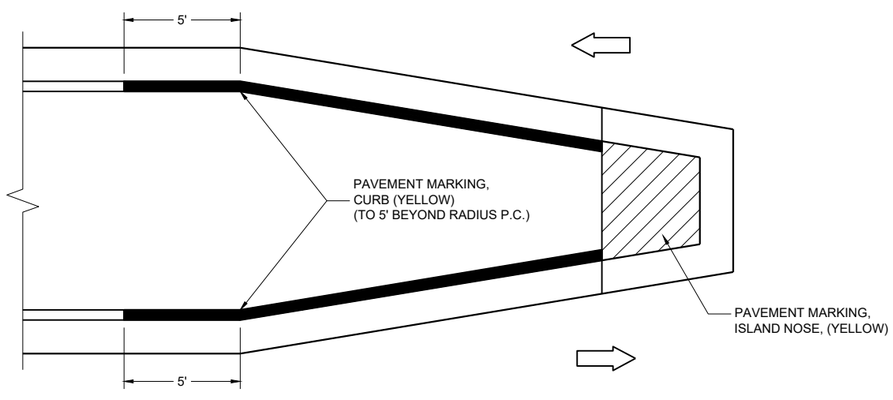

MEDIAN ISLAND WITH SLOPED NOSE

TYPICAL PLACEMENT OF PAVEMENT MARKING ON MEDIAN ISLANDS

GENERAL NOTES

WHEN CONCRETE CORRUGATED MEDIAN IS CONSTRUCTED TO SEPARATE TRAFFIC OPERATING IN THE OPPOSING DIRECTION, YELLOW PAVEMENT MARKING SHALL BE APPLIED TO THE FLAT PORTION OF THE CONCRETE CORRUGATED MEDIAN. THE ITEM OF PAVEMENT MARKING, CONCRETE CORRUGATED MEDIAN, WILL BE MEASURED IN PLACE AND ACCEPTED IN ACCORDANCE WITH THE CONTRACT AND PAID FOR AT THE CONTRACT UNIT PRICE PER SQUARE FOOT.

(1) APPLY PAVEMENT MARKING TO THE FLAT PORTION OF CORRUGATED MEDIAN.

ISLAND NOSE MARKING

CURB MARKING

CORRUGATED MEDIAN MARKING

DIRECTION OF TRAVEL

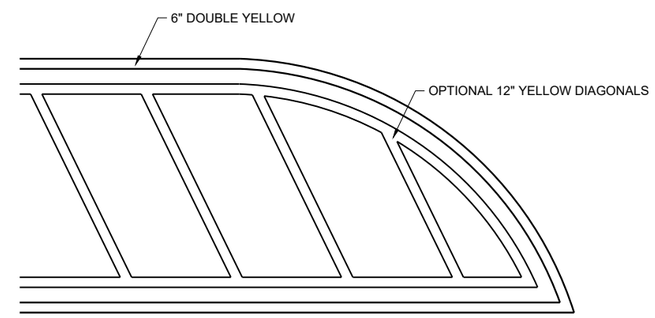

FLUSH MEDIAN ISLAND NOSE

PAVEMENT MARKINGS, MEDIAN ISLAND NOSE

STATE OF WISCONSIN
DEPARTMENT OF TRANSPORTATION

APPROVED
August 2024 — DATE
/S/ Jeannie Silver — Statewide Pavement Marking Engineer
FHWA

6

SDD 15C18-09b

LEGEND

1. 10" WHITE
2. 12" DIAGONALS AT 25' SPACING. (CAN BE OMITTED IF LESS THAN 6')
3. 18" WHITE, 2' LINE, 2' GAP
4. 6" LINE (6 FT LINE, 3'GAP)

DIRECTION OF TRAFFIC

CURB AND GUTTER

RIGHT OF WAY

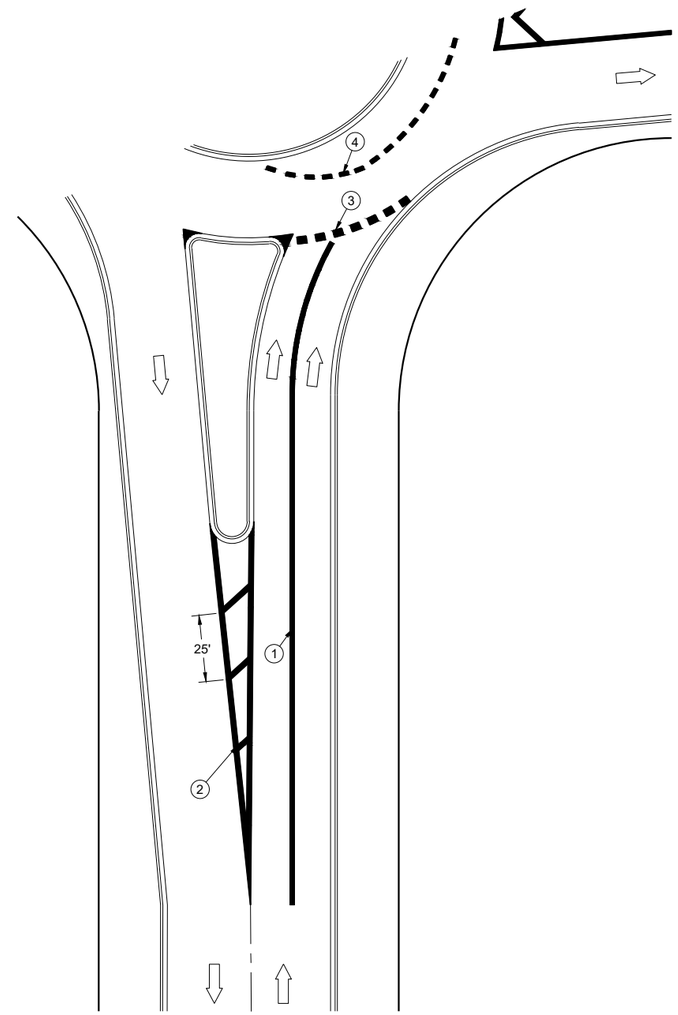

DOTTED EXTENSION FOR ROUNDABOUT

STATE OF WISCONSIN
DEPARTMENT OF TRANSPORTATION

APPROVED
August 2024 — DATE
/S/ Matthew Rauch — ROADWAY STANDARDS DEVELOPMENT UNIT SUPERVISOR

FHWA

6

SDD 15C22-01

TYPICAL ASSEMBLIES

J1-1

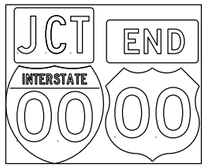

J1-2

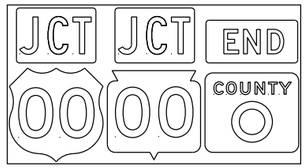

J1-3

JR1-1

J2-1

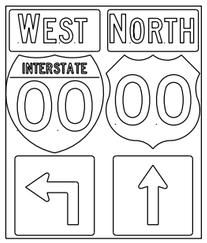

J2-2

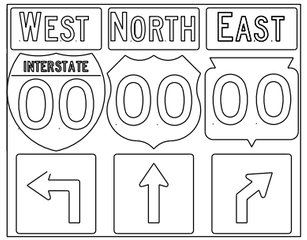

J2-3

JV

(Typical Vertical J-Assembly
See Note 10 and 11)

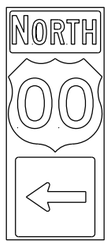

J3-1

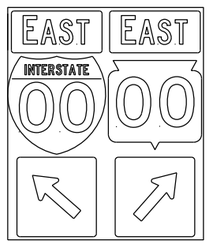

J3-2

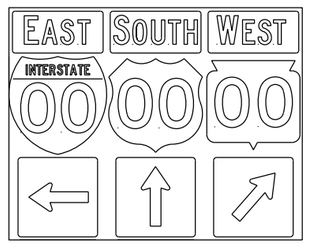

J3-3

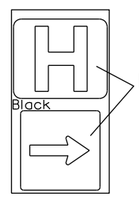

JH-1

Blue Background

J4-1

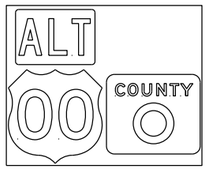

J4-2

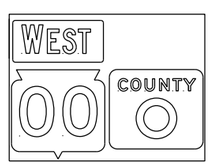

J4-2

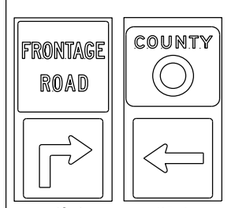

J12-1 J13-1

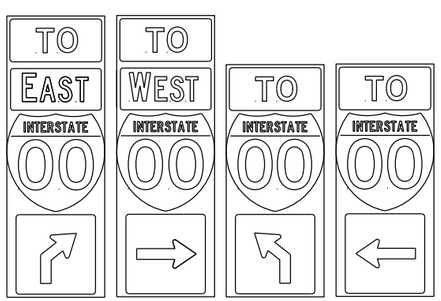

J32-1 J33-1 J22-1 J23-1 JR13-1 JR23-1 JR99-1

blue background
with interstate

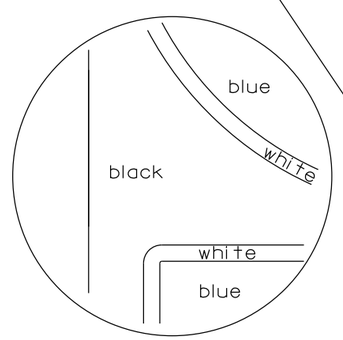

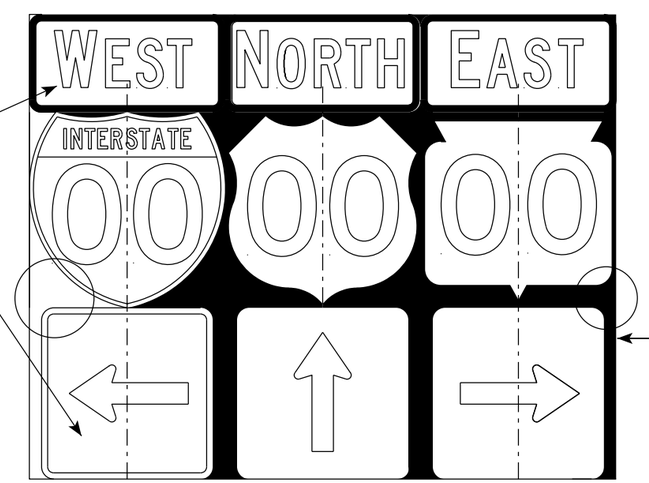

black background

NOTES

1. Signs are Type II - Type H Reflective
2. Color:
   Background - Black Non-reflective
   Message - see Note 4
3. Message Series - See Note 4
4. The colors and message spacing on each marker shall be according to the applicable route marker panel specifications.
5. Certain marker heads require the component pieces to be the same color. As an example, all the components used with an M1-1 Interstate marker shall be blue.
6. Single panel j-assemblies shall only be used with route marker shields that are same size. If the route marker shields are different size use multiple piece component.
7. Route assemblies that have 24 inch route shields and have dimensions greater than 48 inches (both vertical and horizontal) shall have one horizontal splice between the arrows and route shields. Vertical splices shall not be used on route assemblies with a horizontal dimension of 144 inches or less. The contractor shall not use more than one vertical joint per sign and the joint shall be between route shields.
8. Route assemblies that have 36 inch shields and have dimensions greater than 48 inchs (both vertical and horizontal) shall have two horizontal splices. One horizontal splice shall be between the cardinal direction and route shields and the other horizontal splice shall be between the arrows and route shields. Vertical splices shall not be used on route assemblies with a horizontal dimension of 144 or less. The contractor shall not use more than one vertical joint per sign and the joint shall be between route shields.
9. All Vertical J Assemblies are given a Sign Code of JV
10. For JV Assemblies that have a mixture of Interstate and Non-Interstate shields, arrows and cardinals shall be white on blue.
11. For JV Assemblies that have a mixture of Non-Interstate and Auto-Tour shields, arrows and cardinals shall be black on white.

ROUTE MARKERS & COMPONENTS
IN TYPICAL ASSEMBLIES

WISCONSIN DEPT OF TRANSPORTATION

APPROVED Matthew R Rauch
for State Traffic Engineer

DATE 6/7/23 PLATE NO. A2-1S.10

PROJECT NO:

SHEET NO: 143 E

URBAN AREA

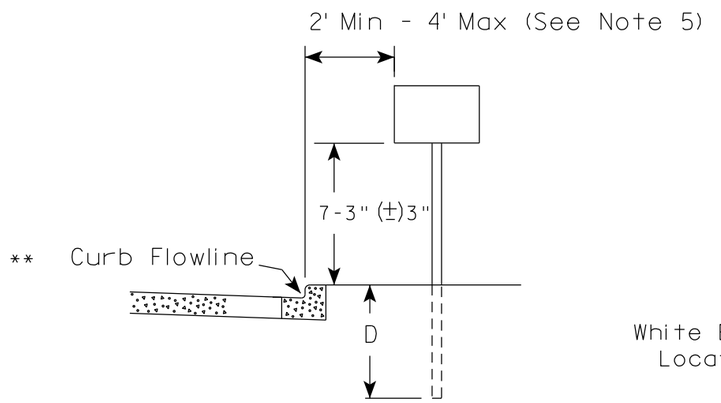

RURAL AREA (See Note 2)

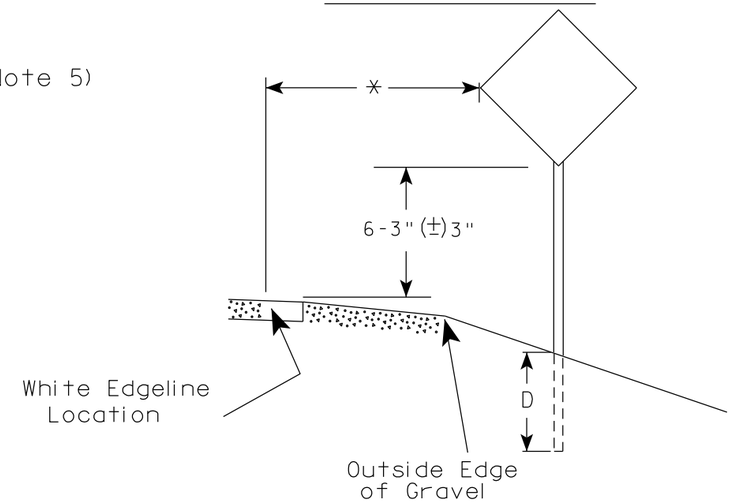

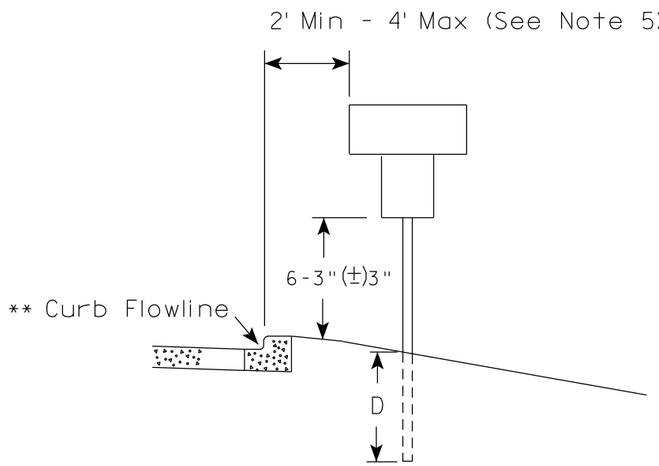

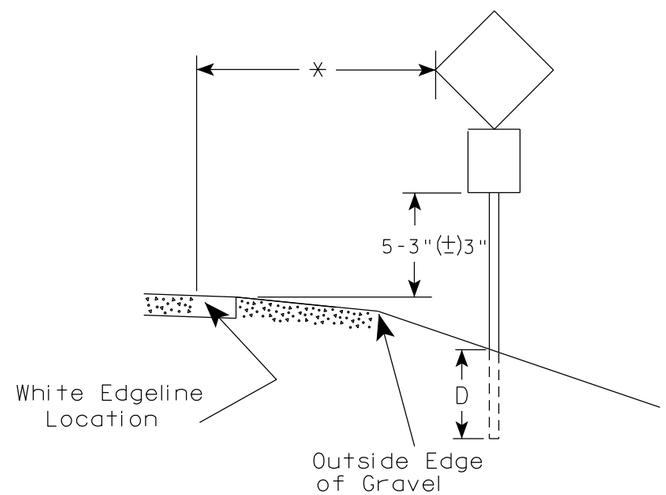

** The existence of curb and gutter does not in itself mandate the vertical clearance illustrated. That height is typically measured where there is sidewalk adjacent to the roadway or parking is permitted. In the absence of sidewalk vertical clearance is measured from the top of the curb. Offset of signs is measured from the flow line.

* 6 feet from edge of a paved shoulder or 12 feet from the edge of pavement (edge line location) or 2 feet from outside edge of gravel, whichever is greater unless directed by project engineer.

GENERAL NOTES

1. Signs wider than 4 feet or 20 sq.ft or larger, shall be mounted on multiple posts. Refer to plate A4-4.
2. If signs are mounted on or behind barrier wall, see A4-10 sign plate.
   The Double Arrow sign (W12-1D) shall be mounted at a height of 2'-3" (±) 3". The Chevron sign (W1-8), Roundabout Chevron panel (R6-4B), Enhanced Reference Markers, Clearance Markers (W5-52), Mile Markers (D10 series), In Road Object Markers (W5-54) & End of Road Markers (W5-56) shall be mounted at a height of 4'-3" (±) 3".
3. For expressways and freeways, mounting height is 7'- 3" (±) 3" or 6'-3" (±) 3" depending upon existence of a sub-sign.
4. Minimum mounting height for signs mounted on traffic signal poles is 5'- 3" (±) 3".
5. Offset distance shall be consistent with existing signs or consistent throughout length of project.
6. Folding signs shall be mounted at a height of 5'-3" (±) 3" or as directd by the Engineer.

POST EMBEDMENT DEPTH

Area of Sign Installation (Sq. Ft.)	D (Min)
20 or Less	4'
Greater than 20	5'

TYPICAL INSTALLATION OF PERMANENT TYPE II SIGNS ON SINGLE POSTS

WISCONSIN DEPT OF TRANSPORTATION

APPROVED Matthew R Rauch
for State Traffic Engineer

DATE 12/6/23 PLATE NO. A4-3.23

7 7

PROJECT NO:	HWY:	COUNTY:		SHEET NO: 144	E

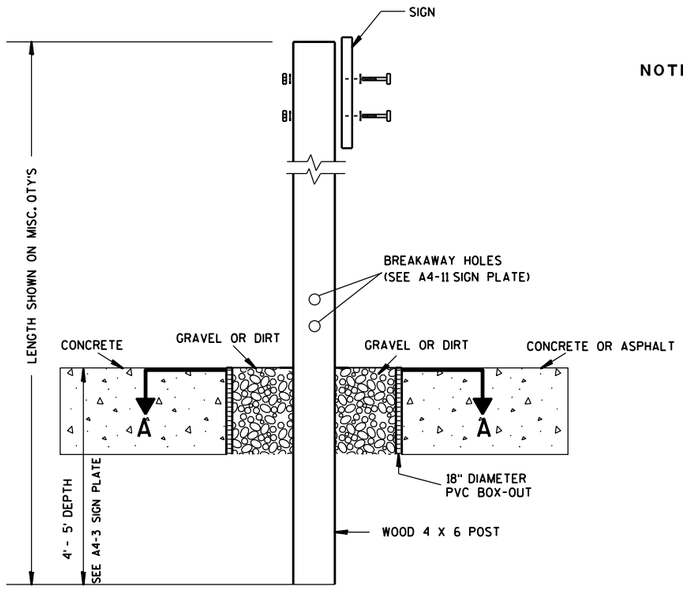

ELEVATION VIEW

DETAIL OF WOOD 4 X 6 SIGN POST IN BOX-OUT

NOTES:
1. ALL MATERIAL TO BE APPROVED BY ENGINEER PRIOR TO INSTALLATION
2. SEE SIGN PLATE A4-8 FOR SIGN HARDWARE REQUIREMENTS
3. 18 INCH X 18 INCH SQUARE BOX-OUTS MAY BE USED FOR INSTALLATIONS IN EXISTING CONCRETE OR ASPHALT LOCATIONS.

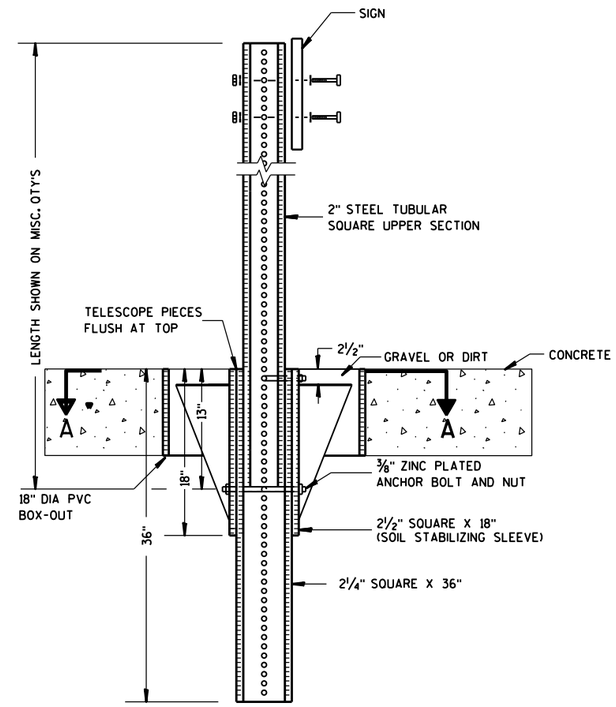

ELEVATION VIEW

DETAIL OF STEEL 2 X 2 SIGN POST IN BOX-OUT

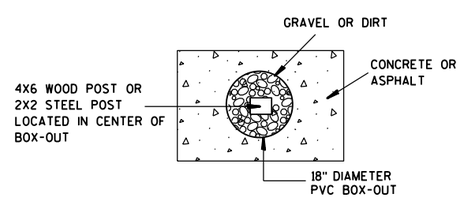

PLAN VIEW

FOR NEW CONCRETE/ASPHALT INSTALLATIONS

SIGN POST
BOX-OUTS
A4-3B

WISCONSIN DEPT OF TRANSPORTATION

APPROVED Matthew R Rauch
for State Traffic Engineer

DATE 1/27/14 PLATE NO. A4-3B.1

PROJECT NO:	HWY:	COUNTY:		SHEET NO:	E

URBAN AREA

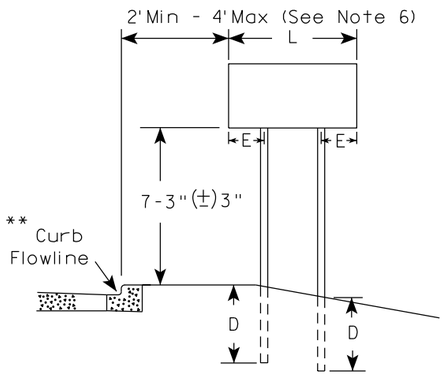

RURAL AREA (See Note 3)

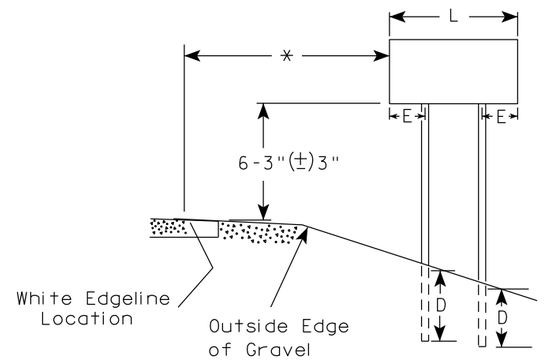

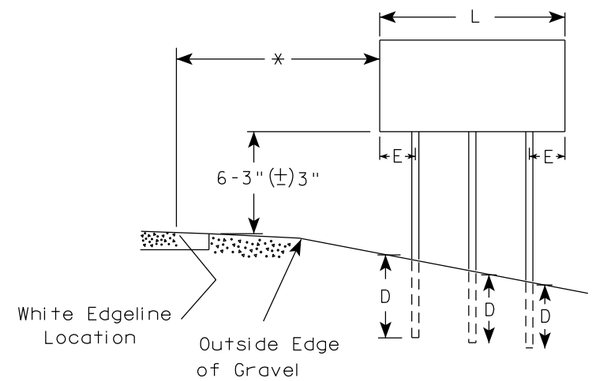

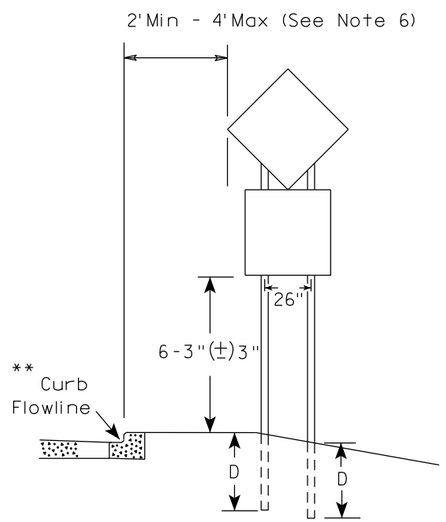

48" DIAMOND WARNING SIGN

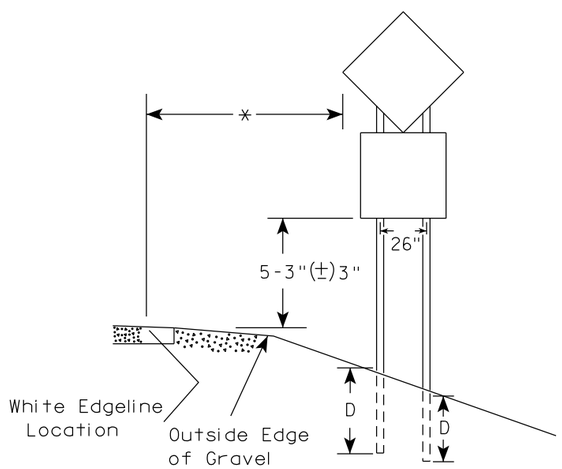

48" DIAMOND WARNING SIGN

GENERAL NOTES

1. For 3 or 4 post installations, individual post spacing shall be greater than 3'-6".
2. See tables below for required number of posts.
3. For expressways and freeways, mounting height is 7'-3" (±) 3" or 6'-3" (±) 3" depending upon existence of sub-sign.
4. The (±) tolerance for mounting height is 3 inches.
5. J-Assemblies are considered to be one sign for mounting height.
6. Offset distance shall be consistent with existing signs or consistent throughout length of project.
7. Folding signs shall be mounted at a height of 5'-3" (±) 3" or as directed by the engineer.
8. The Double Arrow sign (W12-1) shall be mounted at a height of 2'-3" (±) 3". The Chevron sign (W1-8), Roundabout Chevron panel (R6-4B), Clearance Markers (W5-52), Mile Markers (D10 series), In Road Object Markers (W5-54) & End of Road Markers (W5-56) shall be mounted at a height of 4"-3" (±) 3".

* 6 feet from edge of a paved shoulder or 12 feet from the edge of pavement (edge line location) or 2 feet from outside edge of gravel, whichever is greater unless directed by project engineer.

** The existence of curb and gutter does not in itself mandate the vertical clearance illustrated. That height is typically measured where there is sidewalk adjacent to the roadway or parking is permitted. In the absence of sidewalk vertical clearance is measured from the top of the curb. Offset of signs is measured from the flow line.

*** See A4-3 sign plate for signs 4' or less in width and less than 20 S.F. in area.

SIGN SHAPE OTHER THAN DIAMOND (TWO POSTS REQUIRED)	
L	E
*** Greater than 48" Less than 60"	12"
60" to 108"	L/5

SIGN SHAPE OTHER THAN DIAMOND (THREE POSTS REQUIRED)	
L	E
Greater than 108" to 144"	12"

POST EMBEDMENT DEPTH

Area of Sign Installation (Sq. Ft.)	D (Min)
20 or Less	4'
Greater than 20	5'

TYPICAL INSTALLATION OF TYPE II SIGNS ON MULTIPLE POSTS

WISCONSIN DEPT OF TRANSPORTATION

APPROVED Matthew R Rauch
for State Traffic Engineer

DATE 12/6/23 PLATE NO. A4-4.16

PROJECT NO:	HWY:	COUNTY:		SHEET NO: 146	E

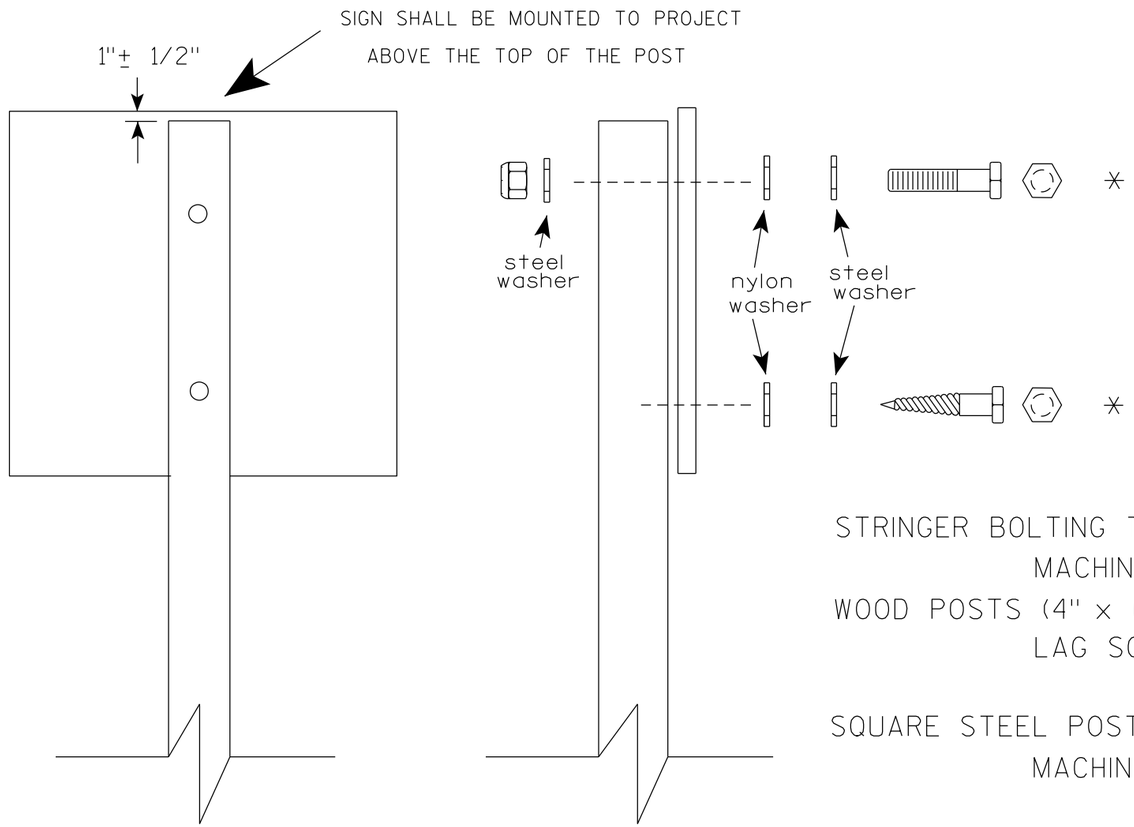

Nuts, bolts and lags used for mounting signs shall have hexagonal heads and shall be either :

a. Hot dip galvanized in accordance with ASTM Designation: A 153, Class D, or SC 3

b. Electro-galvanized in accordance with ASTM Designation : B 633, TYPE III, SC 3.

Threads on bolts and nuts shall be manufactured with sufficient allowance for the cadmium plate or galvanized coating to permit the nuts to run freely on the bolts.

STRINGER BOLTING TO ALUMINUM SIGNS (SEE SIGN PLATE A4-18)

MACHINE BOLTS - 5/16" X 1-3/4" Length w/ lock nuts

WOOD POSTS (4" x 6")

LAG SCREWS - 3/8" X 3" (NO STRINGERS ON BACK OF SIGN)
3/8" X 4" (STRINGERS ON BACK OF SIGN)

SQUARE STEEL POSTS (2" x 2")

MACHINE BOLTS - 3/8" X 3-1/4" Length w/ nuts (NO STRINGER ON BACK OF SIGN)
3/8" X 5" Length w/ nuts (STRINGERS ON BACK OF SIGN)

RIVETS - 9/32 " (6605-9-6) BULB-TITE, TRI-FOLD, ALUMINUM BODY/MANDREL
O.D. FLANGE .720-.765 INCH, GRIP RANGE .042-.375 INCH

WASHERS (ALL POSTS) -

1-1/4" O.D. X 3/8" I.D. X 1/16" STEEL
1-1/4" O.D. X 3/8" I.D. X .080 NYLON

* Two different fastening systems are shown for illustration purposes. On any individual sign, either one or the other system shall be used. Actual number of fasteners per sign varies with the sign area, but normally there are two. For a single post installation, all signs greater than 9 sq. ft. require the use of 3 fasteners.

ATTACHMENT OF SIGNS TO POSTS

WISCONSIN DEPT OF TRANSPORTATION

APPROVED Matthew R Rauch
for State Traffic Engineer

DATE 4/1/2020 PLATE NO. A4-8.9

TELESCOPIC TUBING ANCHORS
TWO PIECE SYSTEM

2 1/4" SQUARE
12 GAUGE
PERFORATED
GALVANIZED FINISH

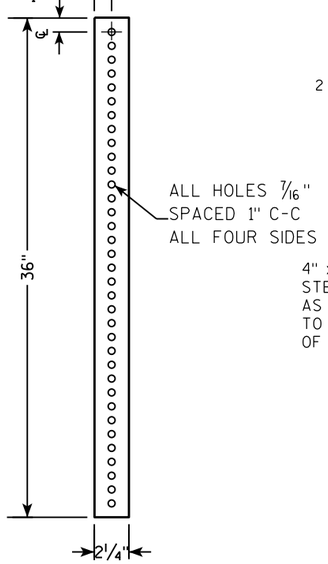

2 1/2" SQUARE
12 GAUGE
OMNI-DIRECTIONAL
PERFORATED
SOIL STABILIZING SLEEVE
GALVANIZED FINISH

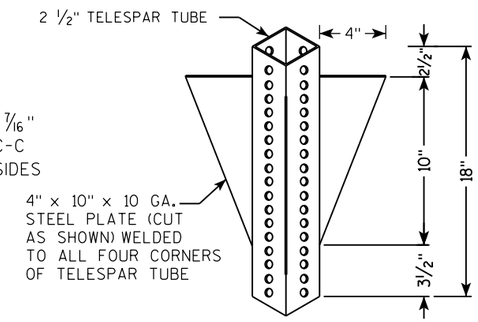

DETAIL OF TUBULAR STEEL SIGN POST
(IN POURED CONCRETE OR ASPHALT)

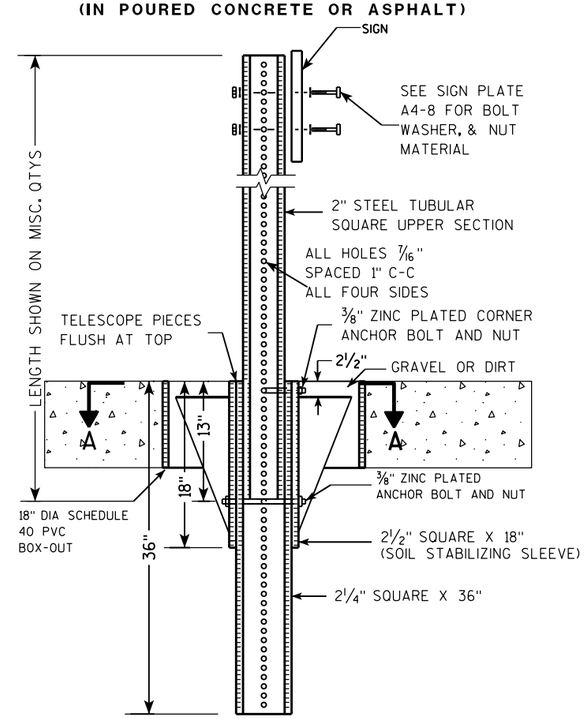

DETAIL OF TUBULAR STEEL SIGN POST
(IN LOCATIONS OTHER THAN POURED CONCRETE OR ASPHALT)

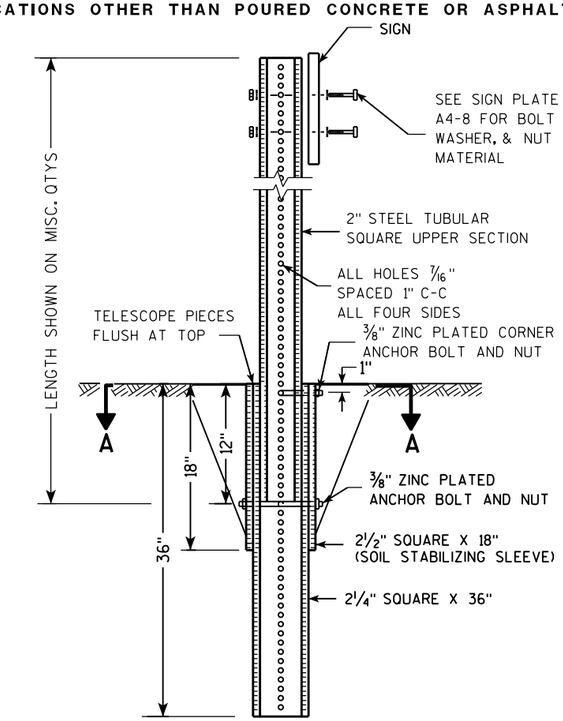

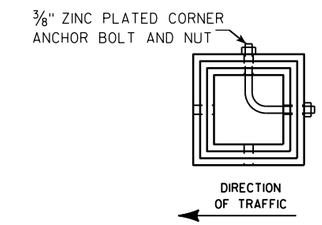

SECTION A-A

Area of Sign Installation (Sq. Ft.)	Number of Required Posts
9 or less	1
Greater than 9 less than or equal to 18	2
Greater than 18 less than or equal to 27	3

Signs wider than 3 feet or larger than 9 sq. ft shall be mounted on multiple posts (see above table).

TUBULAR STEEL
SIGN POST
A4-9

WISCONSIN DEPT OF TRANSPORTATION

APPROVED Matthew R Rauch
for State Traffic Engineer

DATE 2/05/15 PLATE A4-9.9

7

7

PROJECT NO:	HWY:	COUNTY:		SHEET NO:	E

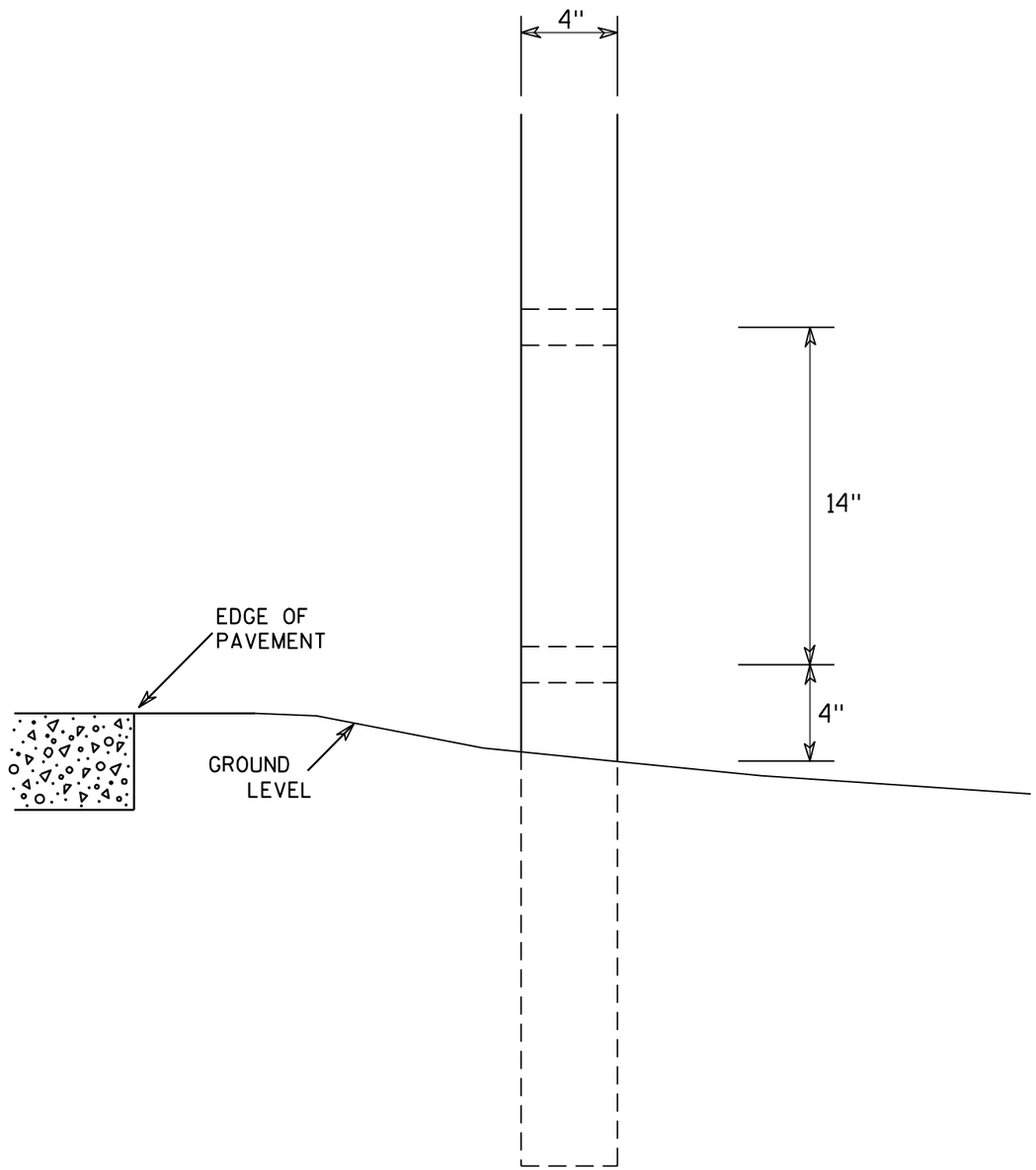

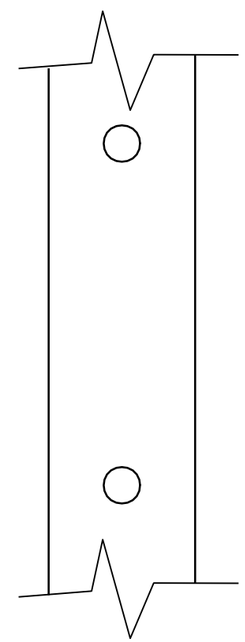

SIDE VIEW

GENERAL NOTES

1. All 4 x 6 Wood Posts shall be modified by having two 1½" diameter holes drilled perpendicular to the roadway centerline.

7

7

4 X 6 WOOD POST MODIFICATIONS

WISCONSIN DEPT OF TRANSPORTATION

APPROVED Chester J Spang for State Traffic Engineer

DATE 3/27/97 PLATE NO. A4-11.2

PROJECT NO:	HWY:	COUNTY:		SHEET NO: 149	E

BANDING

SINGLE SIGN

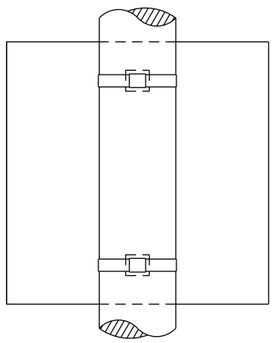

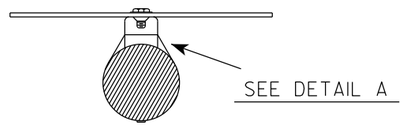

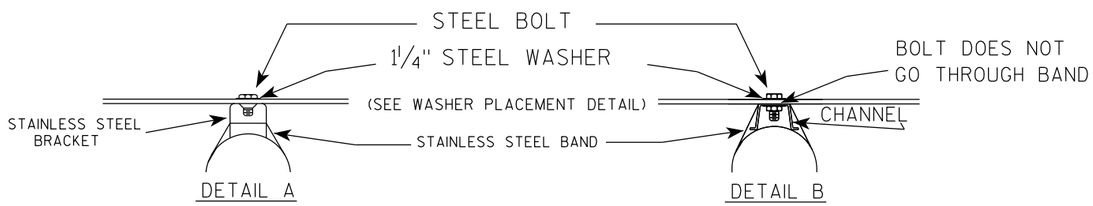

WASHER PLACEMENT

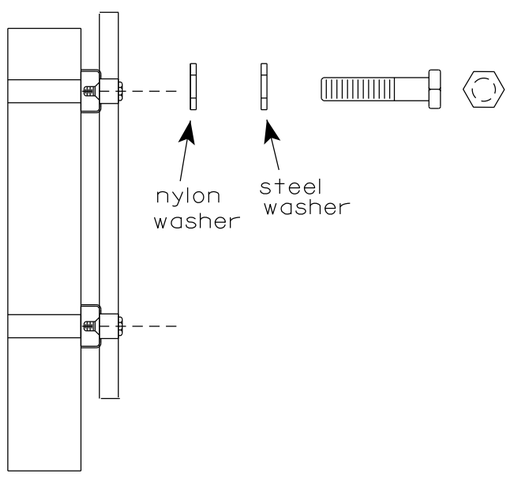

WASHERS (ALL POSTS) -
1-1/4" O.D. X 3/8" I.D. X 1/16" STEEL
1-1/4" O.D. X 3/8" I.D. X .080 NYLON
FOR ALL TYPE H SIGNS

GENERAL NOTES

1. Any sign over 3 feet in width shall use the V-Block banding method. See A5-10 standard plate.
2. Signs 3 feet or greater in height shall have three bracket bands installed. Signs less than 3 feet in height shall have two bracket bands installed.
3. Banding and assembly bracket shall be stainless steel. All bands shall be ¾" in width and 0.025" thickness.
4. ALL SIGN MOUNTING BOLTS AND WASHERS SHALL BE EITHER:
   a. Hot dip or mechanically galvanized in accordance with ASTM Designation: A 153, Class D
   b. Electro-galvanized in accordance with ASTM designation: B 633, Type III, SC 3

"J" ASSEMBLY

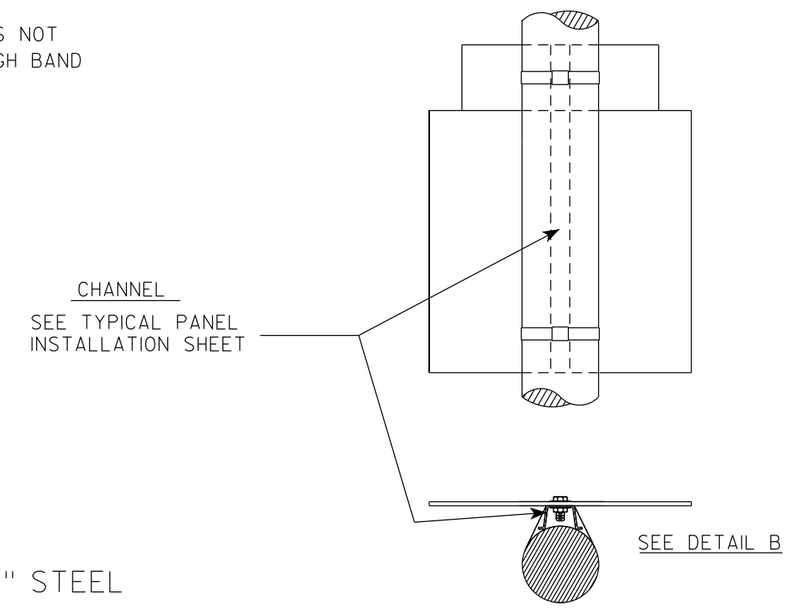

STANDARD SIGN
SIGN BANDING DETAILS

WISCONSIN DEPT OF TRANSPORTATION

APPROVED Matthew R Rauch for State Traffic Engineer

DATE 6/10/19 PLATE NO. A5-9.4

PROJECT NO:	HWY:	COUNTY:		SHEET NO: 150	E

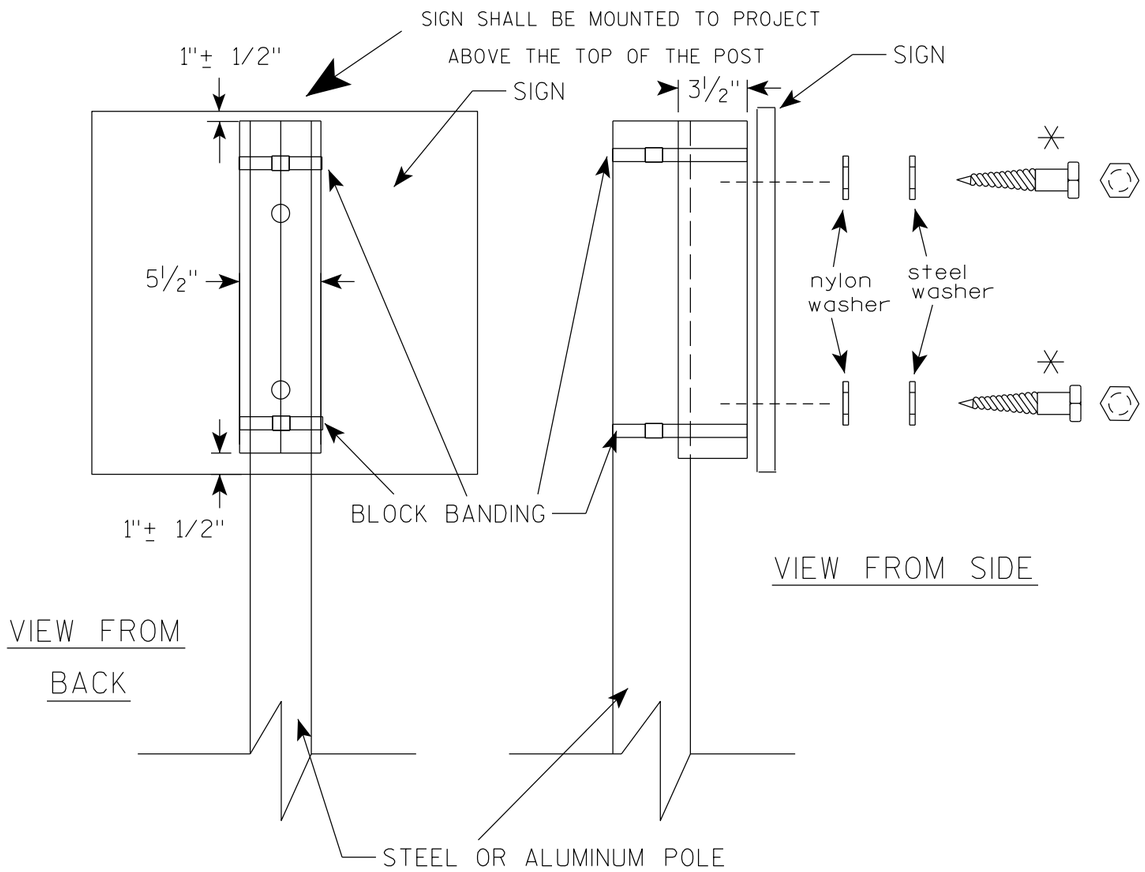

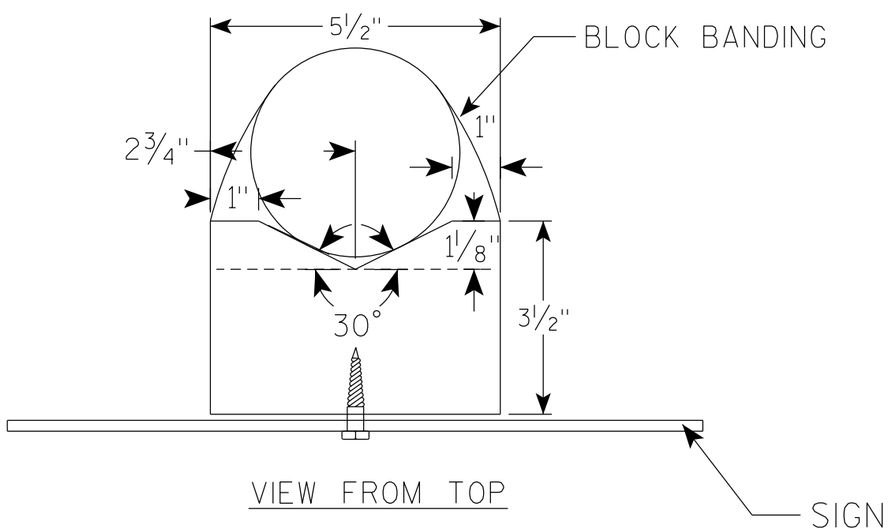

GENERAL NOTES

1. WOOD 4"X6" POST MATERIAL SHALL CONFORM TO 507.2.2 OF THE WisDOT STANDARD SPECIFICATIONS
2. BLOCK BANDING AND CLIPS SHALL BE STAINLESS STEEL, 3/4" WIDTH AND 0.025" THICKNESS
3. SIGNS 3' OR GREATER IN HEIGHT SHALL UTILIZE 3 BLOCK BANDS. SIGNS UNDER 3' IN HEIGHT SHALL UTILIZE 2 BLOCK BANDS
4. ACTUAL NUMBER OF FASTENERS PER SIGN VARIES WITH THE SIGN AREA, BUT NORNALLY THERE ARE TWO. FOR SIGNS GREATER THAN 9 S.F. 3 FASTENERS SHALL BE USED.
5. ALL SIGN MOUNTING BOLTS AND WASHERS SHALL BE EITHER:
   a. Hot dip or mechanically galvanized in accordance with ASTM Designation: A 153, Class D
   b. Electro-galvanized in accordance with ASTM Designation : B 633, TYPE III, SC 3
6. ALL BOLTS SHALL HAVE HEXAGONAL HEADS.
7. STEEL WASHERS SHALL BE 1 1/4" O.D. X 3/8" I.D. X 1/16"
8. NYLON WASHERS SHALL BE 1 1/4" O.D. X 3/8" I.D. X .080 FOR TYPE H OR TYPE F FACE SIGN

✳ LAG BOLTS SHALL BE 3/8" X 2 1/2"

7

7

BLOCK BANDING DETAIL
(V-BLOCK OPTION)

WISCONSIN DEPT OF TRANSPORTATION

APPROVED Matthew R Rauch
for State Traffic Engineer

DATE 4/19/2022 PLATE NO. A5-10.3

PROJECT NO:				SHEET NO: 151	E

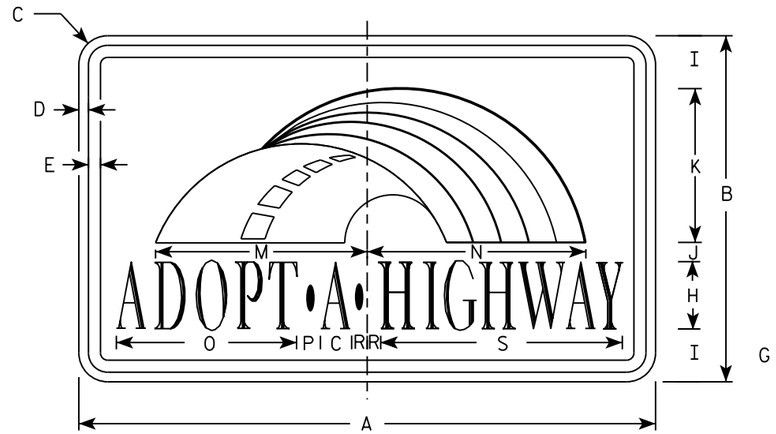

I55-56

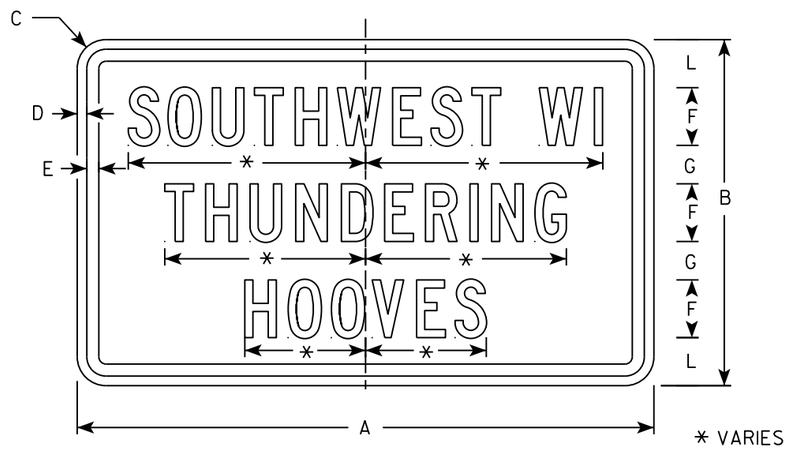

I55-56P

* VARIES

Background Colors of Symbol*

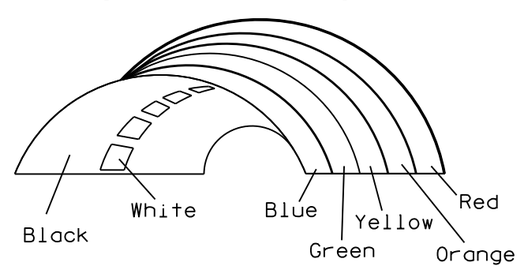

*1/4" Black Border between each color of rainbow and border of rainbow

NOTES

1. Sign is Type II - Type H Reflective
2. Color:
   Background - White
   Message - (See Note 4)
3. Message Series - (See Note 5)
4. Border - Blue
   Adopt a Highway - Red
   All other Text - Blue
5. Adopt a Highway - Dutch 8011L
   All other Text - Series C
6. Contractor shall provide and install a new post bracket in accordance with the I55-56B sign detail.

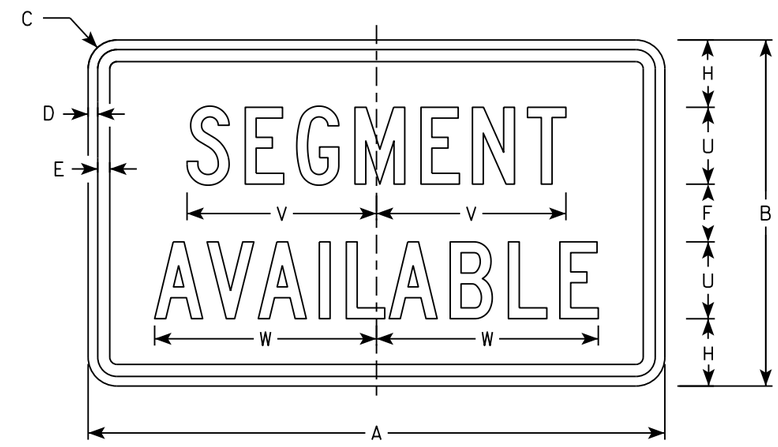

I55-56S

SIZE	A	B	C	D	E	F	G	H	I	J	K	L	M	N	O	P	Q	R	S	T	U	V	W	X	Y	Z	Area sq. ft.
1																											
2	30	18	1 1/2	1/2	5/8	3	2	3 1/2	2 3/4	1	8	2 1/2	11 1/4	11 1/8	9 3/8	1 1/4		3/4	12 5/8	7 1/2	4	9 7/8	11 1/2				3.75
3																											
4																											
5																											

STANDARD SIGN
I55-56

WISCONSIN DEPT OF TRANSPORTATION

APPROVED Matthew R Rauch
for State Traffic Engineer

DATE 2/20/18 PLATE NO. I55-56.4

PROJECT NO: | HWY: | COUNTY: | SHEET NO: 152 | E

ISOMETRIC VIEW

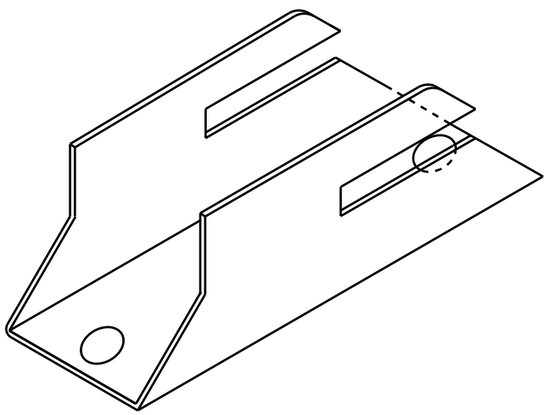

TOP VIEW

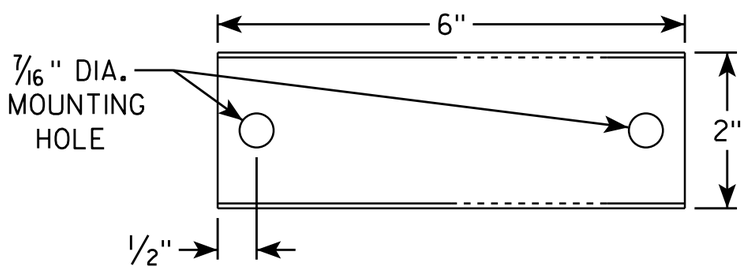

SIDE VIEW

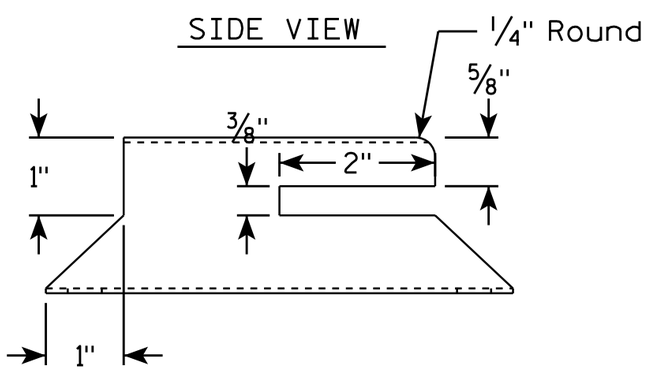

END VIEW

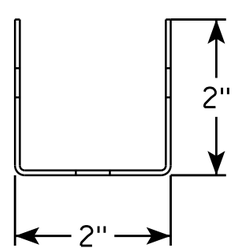

NOTES

1. Must be capable of permanent attachment to a wood or steel channel sign post utilizing the fastening hardware specified on the A4-8 sign plate.
2. Shall be entirely primed and painted with two coats of a black powder coated enamel paint.
3. Shall be made with 12 gauge steel, and incorporate no welds, no hinged components, no threaded lock-type components, and no parts which are loose or can be separated from the main body.
4. Shall have rounded edges with at least 1/8" radii.
5. Shall not have unrounded and uncoated metal edges which can contact the back surface of the roll-up sign.
6. Top of bracket shall be mounted 2' below the bottom of the I55-56 sign.
7. Cost of bracket and fastening hardware shall be incidental to the I55-56 sign.

SIDE VIEW

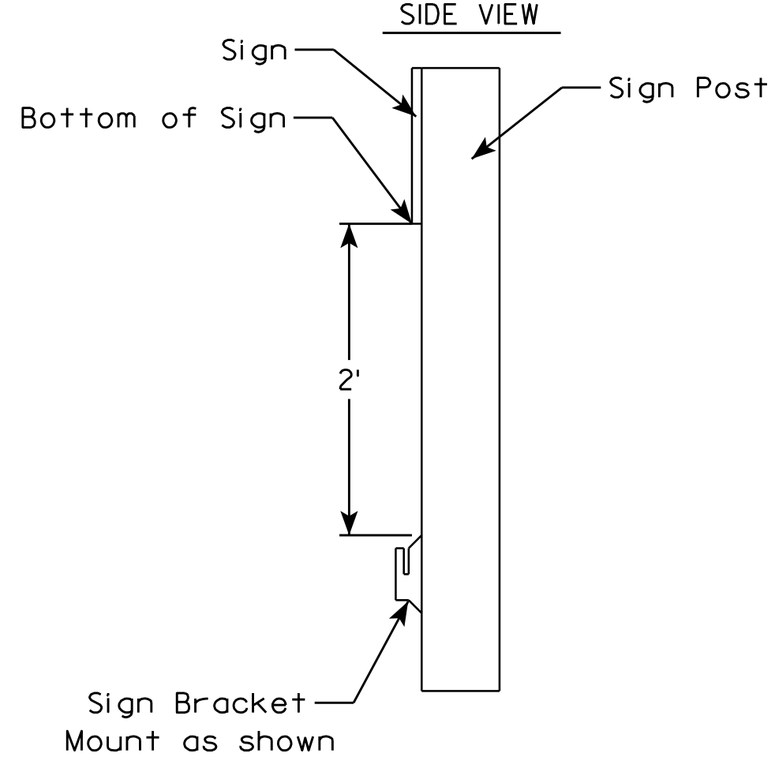

ROLLUP SIGN BRACKET
I55-56B

WISCONSIN DEPT OF TRANSPORTATION

APPROVED Matthew R Rauch
for State Traffic Engineer

DATE 4/26/16 PLATE I55-56B.2

PROJECT NO:	HWY:	COUNTY:		SHEET NO:	E

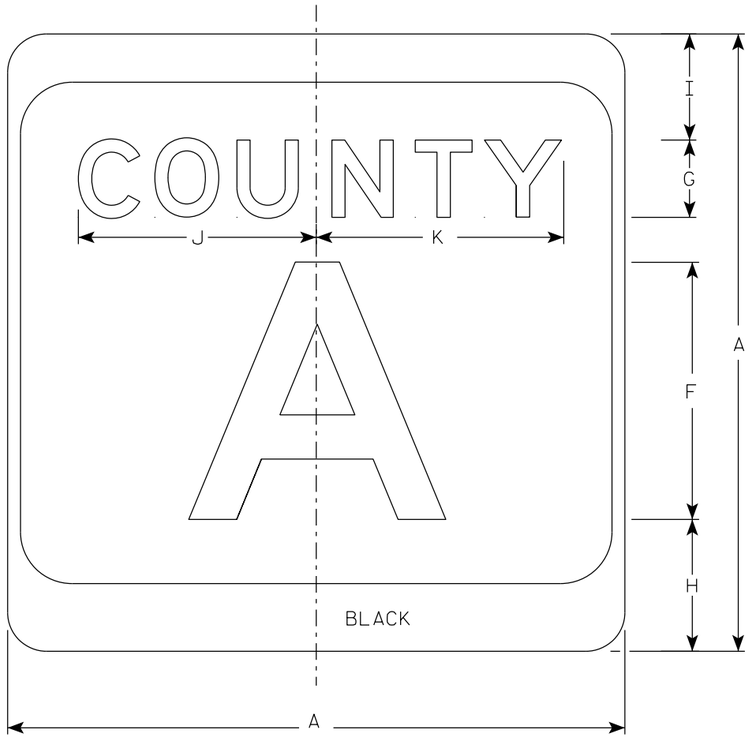

M1-5A

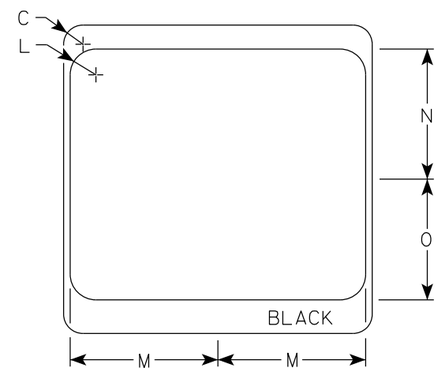

NOTES

1. Sign is Type II - Type H Reflective
2. Color:
   Background - White & Black
   Message - Black
3. Message Series - see Note 4
4. Message Series E for 1 letter.
   Message Series D for 2 letters unless message is too big then Series C.
   Message Series C for 3 letters unless message is too big then Series B.
5. Substitute appropriate letters & optically center to achieve proper balance.

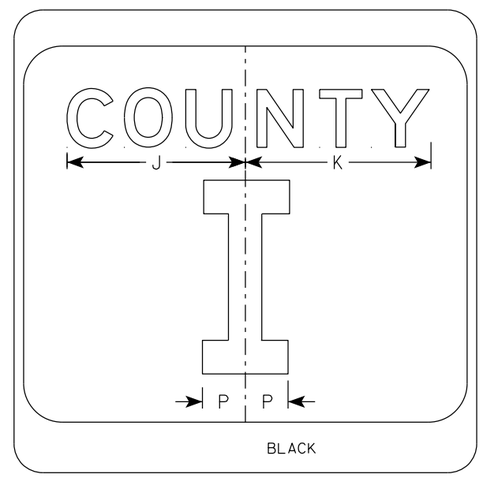

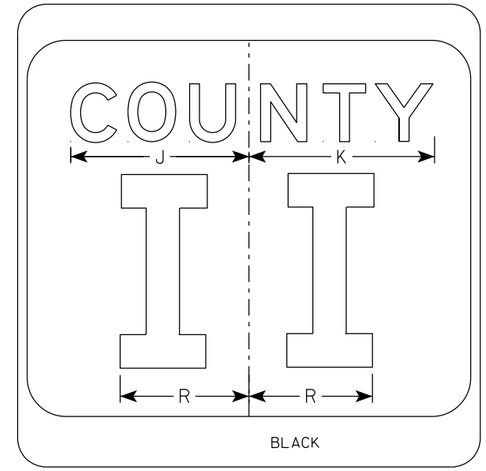

SIZE	A	B	C	D	E	F	G	H	I	J	K	L	M	N	O	P	Q	R	S	T	U	V	W	X	Y	Z	Area sq. ft.
1																											
2	24		1 1/2			10	3	5 1/8	4 1/8	9 1/4	9 5/8	2	11 1/2	10 1/8	9 3/8	2 1/4		6 5/8									4.0
2M	24		1 1/2			10	3	5 1/8	4 1/8	9 1/4	9 5/8	2	11 1/2	10 1/8	9 3/8	2 1/4		6 5/8									4.0
3	36		2 1/4			16	4	7 5/8	5 5/8	12 1/4	12 7/8	3	17 1/8	15 1/4	14	3 3/8		10									9.0
4	36		2 1/4			16	4	7 5/8	5 5/8	12 1/4	12 7/8	3	17 1/8	15 1/4	14	3 3/8		10									9.0
5	36		2 1/4			16	4	7 5/8	5 5/8	12 1/4	12 7/8	3	17 1/8	15 1/4	14	3 3/8		10									9.0

CTH MARKER
M1-5A FOR ASSEMBLIES

WISCONSIN DEPT OF TRANSPORTATION

APPROVED Matthew R Rauch
for State Traffic Engineer

DATE 11/8/2022 PLATE NO. M1-5A.9

PROJECT NO: | HWY: | COUNTY: | SHEET NO: | E

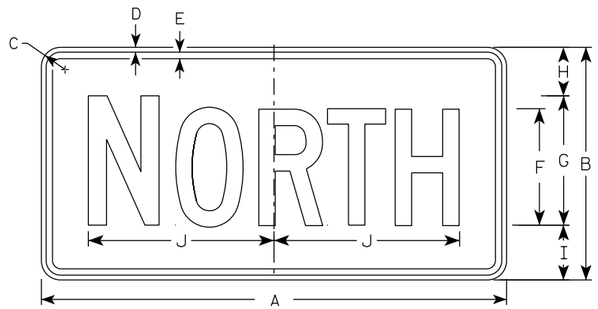

M3-1
MM3-1
MP3-1

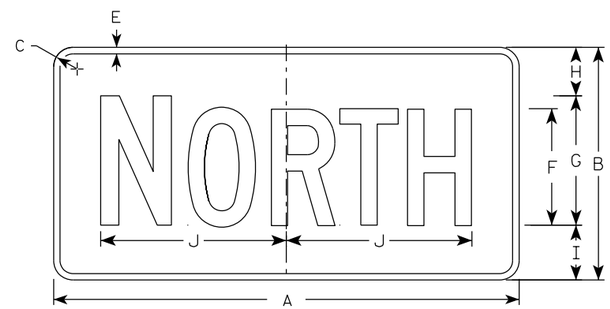

MB3-1
MK3-1
MN3-1

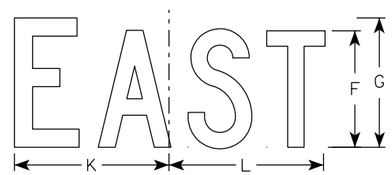

M3-2
MM3-2
MP3-2

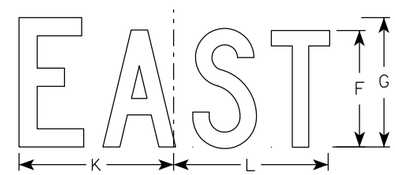

MB3-2
MK3-2
MN3-2

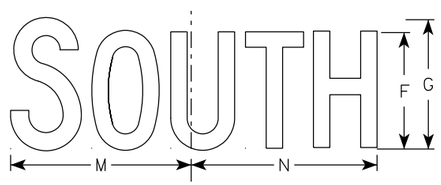

M3-3
MM3-3
MP3-3

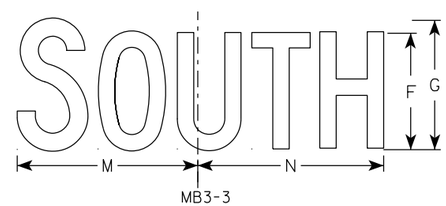

MB3-3
MK3-3
MN3-3

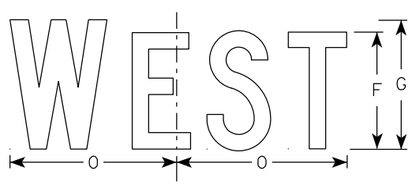

M3-4
MM3-4
MP3-4

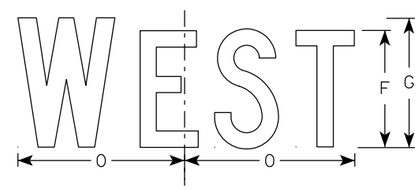

MB3-4
MK3-4
MN3-4

NOTES

1. All Signs Type II - Type H Reflective
2. Color:
   Background - See note 5
   Message - See note 5
3. Message Series - C
4. Corners may be square or rounded when base material is plywood but borders shall be rounded as shown. When base material is metal, the corners and borders shall be rounded.
5. M3-1 thru M3-4 Background - White
   Message - Black
   MB3-1 thru MB3-4 Background - Blue
   Message - White
   MK3-1 thru MK3-4 Background - Green
   Message - White
   MM3-1 thru MM3-4 Background - White
   Message - Green
   MN3-1 thru MN3-4 Background - Brown
   Message - White
   MP3-1 thru MP3-4 Background - White
   Message - Blue
6. Note the first letter of each direction is larger than the remainder of the message.

SIZE	A	B	C	D	E	F	G	H	I	J	K	L	M	N	O	P	Q	R	S	T	U	V	W	X	Y	Z	Area sq. ft.
1																											
2S	24	12	1 1/2	3/8	3/8	6	7	2 1/4	2 3/4	10 1/4	7 7/8	8 3/8	10 1/4	9 3/4	8 3/4												2.00
2M	24	12	1 1/2	3/8	3/8	6	7	2 1/4	2 3/4	10 1/4	7 7/8	8 3/8	10 1/4	9 3/4	8 3/4												2.00
3	36	18	1 1/2	3/8	1/2	9	10	3 3/4	4 1/4	14 3/8	12	12 1/8	14	14 1/8	13												4.5
4	36	18	1 1/2	3/8	1/2	9	10	3 3/4	4 1/4	14 3/8	12	12 1/8	14	14 1/8	13												4.5
5	36	18	1 1/2	3/8	1/2	9	10	3 3/4	4 1/4	14 3/8	12	12 1/8	14	14 1/8	13												4.5

STANDARD SIGNS
M3-1 THRU M3-4
SERIES

WISCONSIN DEPT OF TRANSPORTATION

APPROVED Matthew R Rauch
For State Traffic Engineer

DATE 2/8/2023 PLATE NO. M3-1.15

PROJECT NO: | HWY: | COUNTY: | SHEET NO: 155 | E

NOTES

1. Sign is Type II - Type F Reflective
2. Color:
   Background - Orange
   Message - Black
3. Message Series - B
4. Corners may be square or rounded when base material is plywood but borders shall be rounded as shown. When base material is metal, the corners and borders shall be rounded.

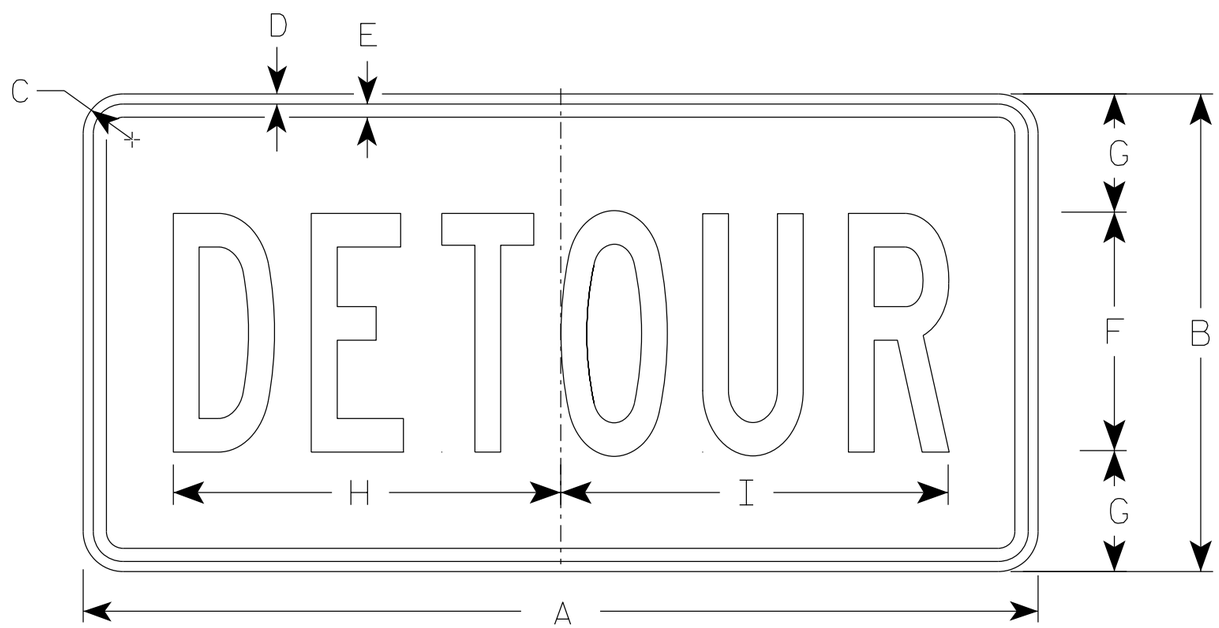

M4-8

SIZE	A	B	C	D	E	F	G	H	I	J	K	L	M	N	O	P	Q	R	S	T	U	V	W	X	Y	Z	Area sq. ft.
1																											
2	24	12	1 1/2	3/8	3/8	6	3	10	10 1/4																		2.0
2M	24	12	1 1/2	3/8	3/8	6	3	10	10 1/4																		2.0
3	36	18	1 1/2	3/8	1/2	9	4 1/2	14 5/8	14 1/2																		4.5
4	36	18	1 1/2	3/8	1/2	9	4 1/2	14 5/8	14 1/2																		4.5
5	36	18	1 1/2	3/8	1/2	9	4 1/2	14 5/8	14 1/2																		4.5

STANDARD SIGN
M4-8

WISCONSIN DEPT OF TRANSPORTATION

APPROVED Matthew R Rauch
for State Traffic Engineer

DATE 2/9/2023 PLATE NO. M4-8.4

PROJECT NO:	HWY:	COUNTY:		SHEET NO:	E

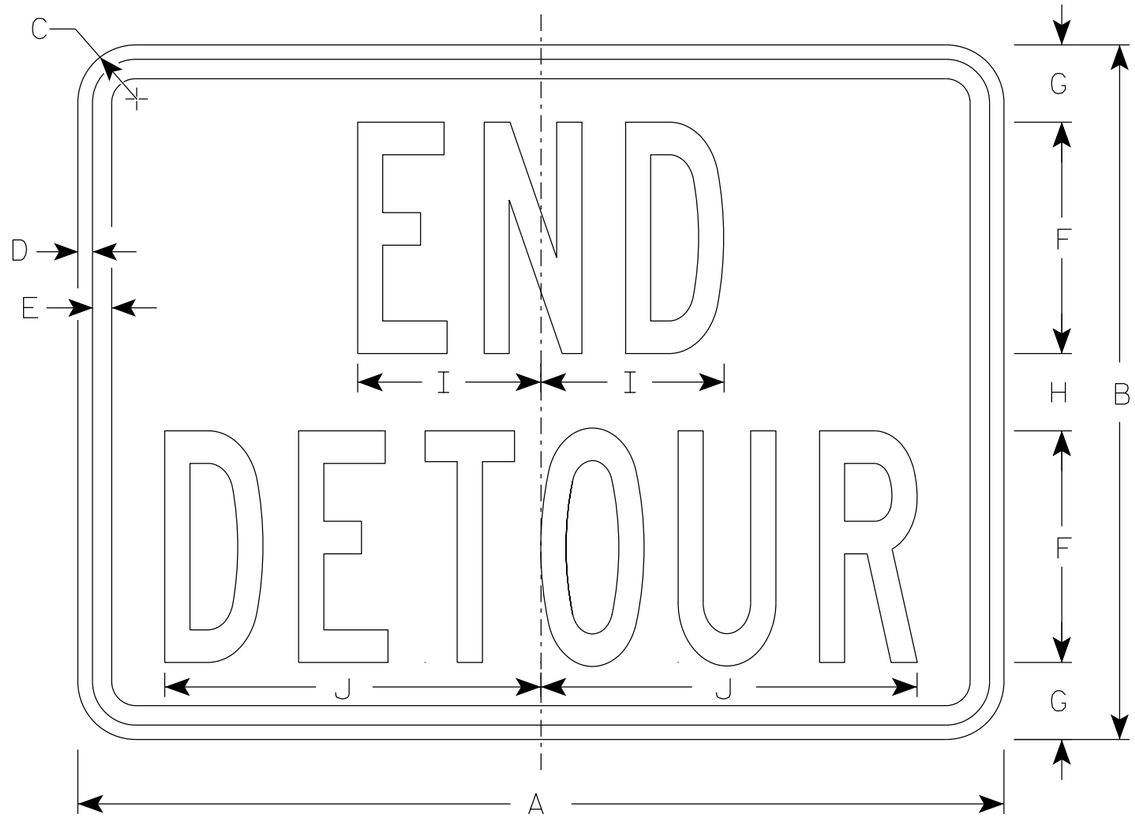

M4-8A

NOTES

1. Sign is Type II - Type F Reflective
2. Color:
   Background - Orange
   Message - Black
3. Message Series - B
4. Corners may be square or rounded when base material is plywood but borders shall be rounded as shown. When base material is metal, the corners and borders shall be rounded.

SIZE	A	B	C	D	E	F	G	H	I	J	K	L	M	N	O	P	Q	R	S	T	U	V	W	X	Y	Z	Area sq. ft.
1																											
2	24	18	1 1/2	3/8	1/2	6	2	2	4 3/4	9 3/4																	3.0
2M	24	18	1 1/2	3/8	1/2	6	2	2	4 3/4	9 3/4																	3.0
3	30	24	1 1/2	3/8	1/2	8	2 1/2	3	6 3/4	13																	5.0
4	30	24	1 1/2	3/8	1/2	8	2 1/2	3	6 3/4	13																	5.0
5	30	24	1 1/2	3/8	1/2	8	2 1/2	3	6 3/4	13																	5.0

STANDARD SIGN
M4-8A

WISCONSIN DEPT OF TRANSPORTATION

APPROVED Matthew R Rauch
for State Traffic Engineer

DATE 2/9/2023 PLATE NO. M4-8A.4

PROJECT NO: | HWY: | COUNTY: | SHEET NO: 157 | E

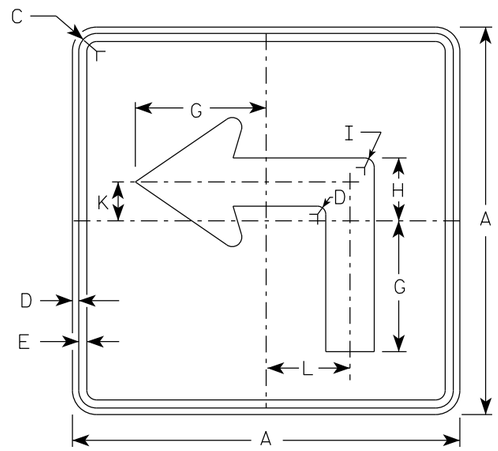

M5-1L
MM5-1L
MO5-1L
MP5-1L

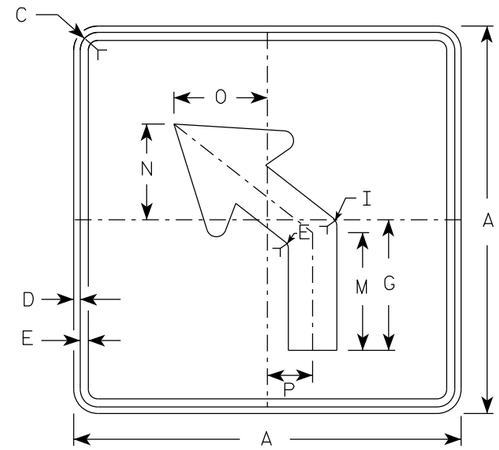

M5-2L
MM5-2L
MO5-2L
MP5-2L

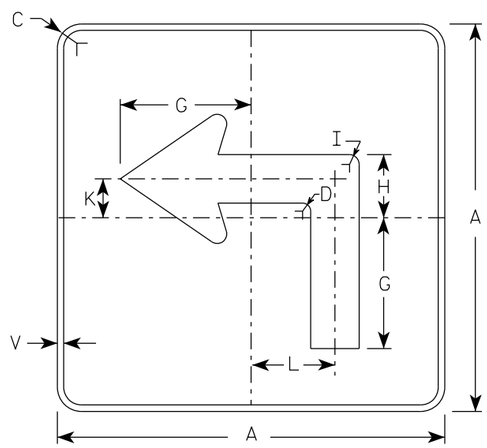

MB5-1L
MK5-1L
MN5-1L
MR5-1L

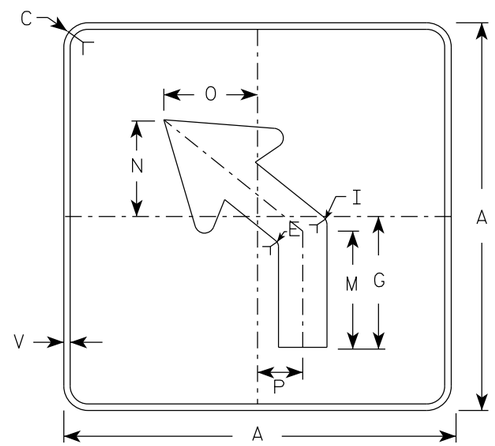

MB5-2L
MK5-2L
MN5-2L
MR5-2L

NOTES

1. Signs are Type II - Type H reflective except as shown
2. Color:
   Background - See note 4
   Message - See note 4
3. Corners may be square or rounded when base material is plywood but borders shall be rounded as shown. When base material is metal, the corners and borders shall be rounded.
4. M5-1 and M5-2 Background - White
   Message - Black
   MB5-1 and MB5-2 Background - Blue
   Message - White
   MK5-1 and MK5-2 Background - Green
   Message - White
   MM5-1 and MM5-2 Background - White
   Message - Green
   MN5-1 and MN5-2 Background - Brown
   Message - White
   MO5-1 and MO5-2 Background - Orange - Type F Reflective
   Message - Black
   MP5-1 and MP5-2 Background - White
   Message - Blue
   MR5-1 and MR5-2 Background - Brown
   Message - Yellow
5. M5-1R same as M5-1L except arrow points right.
6. M5-2R same as M5-2L except arrow tilts right.

ARROW DETAIL

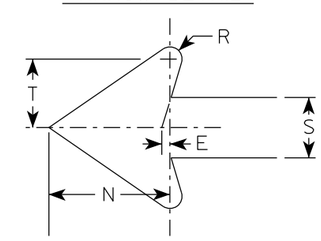

SIZE	A	B	C	D	E	F	G	H	I	J	K	L	M	N	O	P	Q	R	S	T	U	V	W	X	Y	Z	Area sq. ft.
1																											
2S	21		1 1/2	3/8	3/8		7	3 3/8	5/8		2 1/8	4 1/2	6 3/8	5 1/4	5	2 1/2		1/2	2 5/8	3		1/2					3.06
2M	21		1 1/2	3/8	3/8		7	3 3/8	5/8		2 1/8	4 1/2	6 3/8	5 1/4	5	2 1/2		1/2	2 5/8	3		1/2					3.06
3	30		1 7/8	1/2	5/8		10 1/8	4 7/8	7/8		3	6 1/2	9 1/8	7 1/2	7 1/4	3 1/2		3/4	3 3/4	4 1/4		1/2					6.25
4	30		1 7/8	1/2	5/8		10 1/8	4 7/8	7/8		3	6 1/2	9 1/8	7 1/2	7 1/4	3 1/2		3/4	3 3/4	4 1/4		1/2					6.25
5	30		1 7/8	1/2	5/8		10 1/8	4 7/8	7/8		3	6 1/2	9 1/8	7 1/2	7 1/4	3 1/2		3/4	3 3/4	4 1/4		1/2					6.25

STANDARD SIGN
M5-1 & M5-2

WISCONSIN DEPT OF TRANSPORTATION

APPROVED Matthew R Rauch
for State Traffic Engineer

DATE 2/13/2023 PLATE NO. M5-1.15

PROJECT NO: | HWY: | COUNTY: | SHEET NO: 158 | E

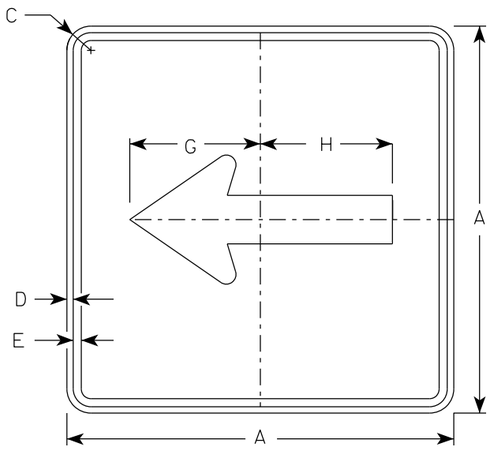

M6-1
MM6-1
MO6-1
MP6-1

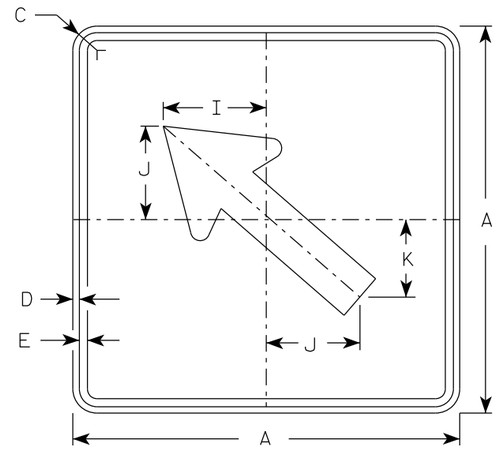

M6-2
MM6-2
MO6-2
MP6-2

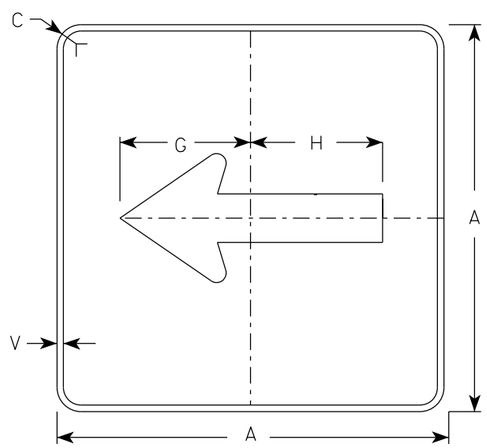

MB6-1
MK6-1
MN6-1
MR6-1

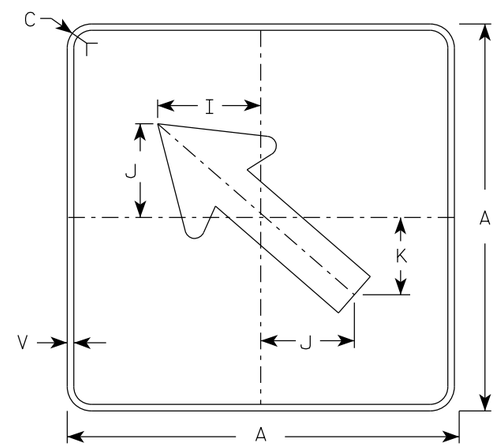

MB6-2
MK6-2
MN6-2
MR6-2

NOTES

1. Signs are Type II - Type H Reflective except as Shown
2. Color:
   Background - See note 4
   Message - See note 4
3. Corners may be square or rounded when base material is plywood but borders shall be rounded as shown. When base material is metal, the corners and borders shall be rounded.
4. M6-1 and M6-2 Background - White
   Message - Black
   MB6-1 and MB6-2 Background - Blue
   Message - White
   MK6-1 and MK6-2 Background - Green
   Message - White
   MM6-1 and MM6-2 Background - White
   Message - Green
   MN6-1 and MN6-2 Background - Brown
   Message - White
   MO6-1 and MO6-2 Background - Orange - Type F Reflective
   Message - Black
   MP6-1 and MP6-2 Background - White
   Message - Blue
   MR6-1 and MR6-2 Background - Brown
   Message - Yellow

ARROW DETAIL

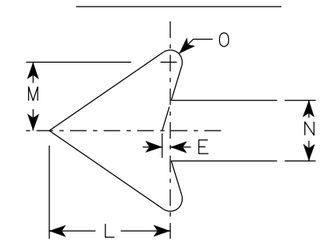

SIZE	A	B	C	D	E	F	G	H	I	J	K	L	M	N	O	P	Q	R	S	T	U	V	W	X	Y	Z	Area sq. ft.
1																											
2S	21		1 1/2	3/8	3/8		7 1/2	7 1/8	5 5/8	5	4 1/4	5 1/4	3	2 5/8	1/2							1/2					3.06
2M	21		1 1/2	3/8	3/8		7 1/2	7 1/8	5 5/8	5	4 1/4	5 1/4	3	2 5/8	1/2							1/2					3.06
3	30		1 7/8	1/2	5/8		10 3/4	10 1/4	8	7 1/4	6	7 1/2	4 1/4	3 3/4	3/4							1/2					6.25
4	30		1 7/8	1/2	5/8		10 3/4	10 1/4	8	7 1/4	6	7 1/2	4 1/4	3 3/4	3/4							1/2					6.25
5	30		1 7/8	1/2	5/8		10 3/4	10 1/4	8	7 1/4	6	7 1/2	4 1/4	3 3/4	3/4							1/2					6.25

STANDARD SIGN
M6-1 & M6-2
SERIES

WISCONSIN DEPT OF TRANSPORTATION

APPROVED Matthew R Rauch
for State Traffic Engineer

DATE 2/13/2023 PLATE NO. M6-1.16

PROJECT NO: | HWY: | COUNTY: | SHEET NO: 159 | E

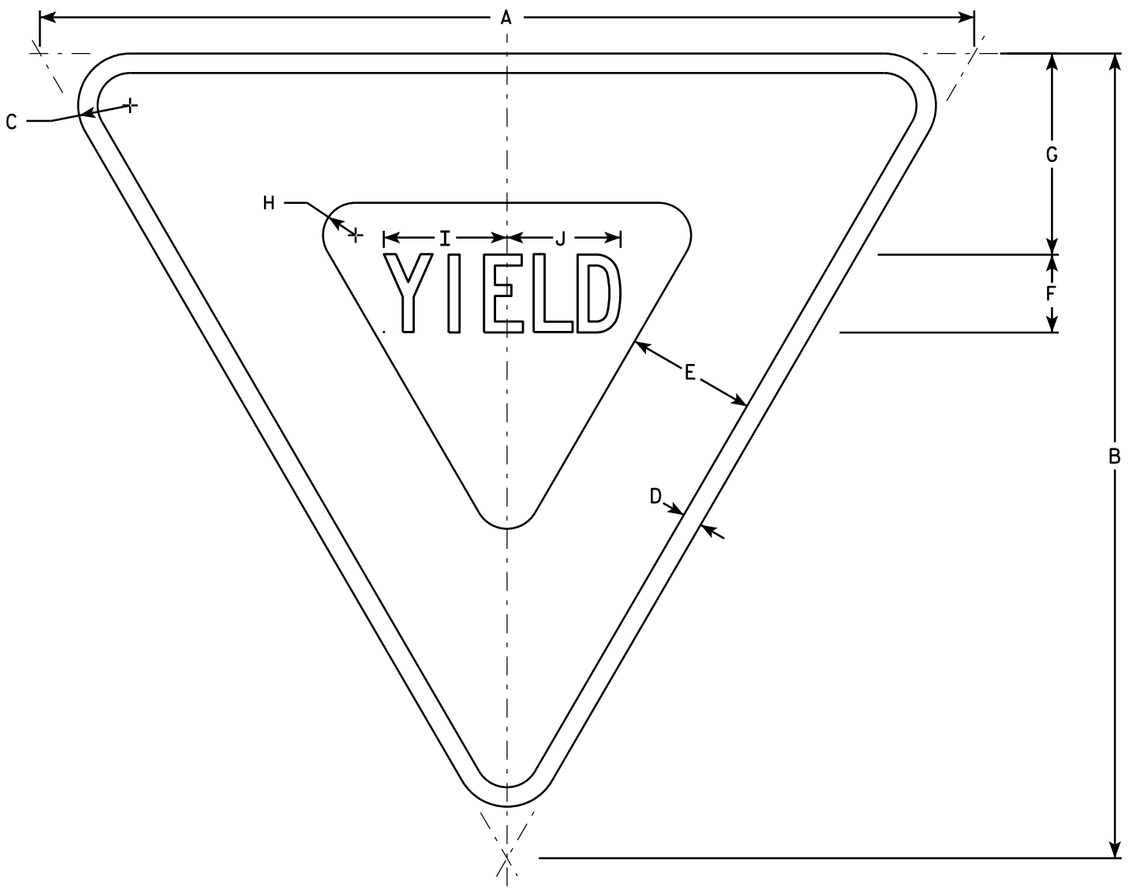

R1-2

NOTES

1. Sign is Type II - Type H Reflective - reference WIS DOT Standard Specification for HIGHWAY and STRUCTURE CONSTRUCTION latest edition.
2. Color:
   Background - White
   Message - See note 5
3. Message Series - C
4. Corners may be square or rounded when base material is plywood but borders shall be rounded as shown. When base material is metal, the corners and borders shall be rounded.
5. The border strip and word message are reflectorized red.

SIZE	A	B	C	D	E	F	G	H	I	J	K	L	M	N	O	P	Q	R	S	T	U	V	W	X	Y	Z	Area sq. ft.
1	30	26	1 1/2	5/8	4	2 1/2	6 3/8	7/8	4	3 5/8																	2.71
2S	36	31	2	3/4	5	3	7 3/4	1 1/4	4 3/4	4 3/8																	3.88
2M	48	42	3	1	6	4	9 3/4	2	6 1/4	5 7/8																	7.00
3	48	42	3	1	6	4	9 3/4	2	6 1/4	5 7/8																	7.00
4	48	42	3	1	6	4	9 3/4	2	6 1/4	5 7/8																	7.00
5	60	52	3	1 1/2	8	5	13	2 1/2	7 7/8	7 1/4																	10.83
6																											
7	18	15 1/2	1	3/8	2 1/2	1 1/2	3 7/8	5/8	2 3/8	2 1/4																	0.97

STANDARD SIGN
R1-2

WISCONSIN DEPT OF TRANSPORTATION

APPROVED Matthew R Rauch
for State Traffic Engineer

DATE 10/13/14 PLATE R1-2.12

PROJECT NO: | HWY: | COUNTY: | SHEET NO: | E

NOTES

1. Sign is Type II - Type H Reflective
2. Color:
   Background - White
   Message - Black
3. Message Series - B

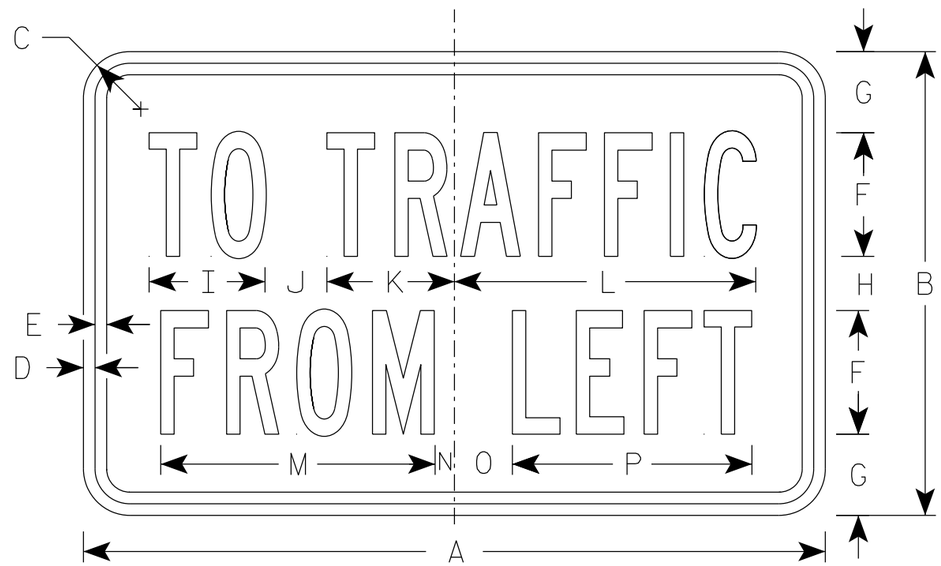

R1-54

SIZE	A	B	C	D	E	F	G	H	I	J	K	L	M	N	O	P	Q	R	S	T	U	V	W	X	Y	Z	Area sq. ft.
1																											
2S	24	15	1 1/2	3/8	3/8	4	2 5/8	1 3/4	3 3/4	2	4 1/8	9 3/4	8 7/8	5/8	1 7/8	7 3/4											2.5
2M	24	15	1 1/2	3/8	3/8	4	2 5/8	1 3/4	3 3/4	2	4 1/8	9 3/4	8 7/8	5/8	1 7/8	7 3/4											2.5
3																											
4																											
5																											

STANDARD SIGN
R1-54

WISCONSIN DEPT OF TRANSPORTATION

APPROVED Matthew R Rauch
for State Traffic Engineer

DATE 3/26/24 PLATE NO. R1-54.3

PROJECT NO:	HWY:	COUNTY:		SHEET NO: 161	E

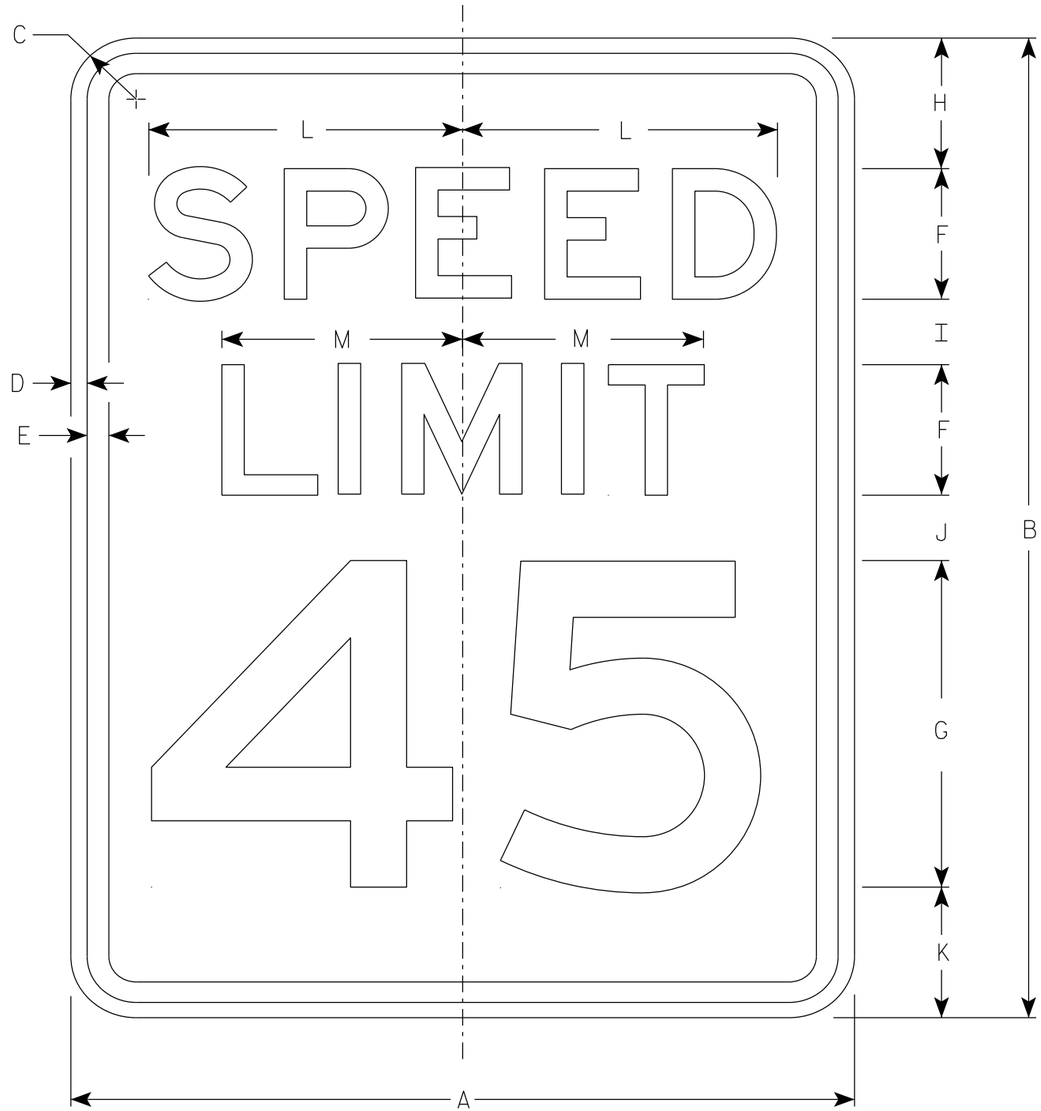

R2-1

NOTES

1. Sign is Type II - Type H Reflective
2. Color:
   Background - White
   Message - Black
3. Message Series - E
4. Substitute appropriate numerals and optically adjust spacing to achieve proper balance.

SIZE	A	B	C	D	E	F	G	H	I	J	K	L	M	N	O	P	Q	R	S	T	U	V	W	X	Y	Z	Area sq. ft.
1	18	24	1 1/2	3/8	1/2	3	8	3	2	2	3	7 1/4	5 1/2														3.0
2S	24	30	1 1/2	3/8	1/2	4	10	3	2 1/4	3 3/8	3 3/8	9 5/8	7 3/8														5.0
2M	30	36	1 7/8	1/2	5/8	5	12	5	2 1/2	2 1/2	4	12	9 1/4														7.5
3	36	48	1 7/8	1/2	5/8	6	14	6	5	5	6	14 3/8	11														12.0
4	36	48	1 7/8	1/2	5/8	6	14	6	5	5	6	14 3/8	11														12.0
5	48	60	3	3/4	1	8	20	6	4 1/2	6 3/4	6 3/4	19 1/4	14 5/8														20.0

STANDARD SIGN
R2-1

WISCONSIN DEPT OF TRANSPORTATION

APPROVED Matthew R Rauch
for State Traffic Engineer

DATE 2/1/23 PLATE NO. R2-1.14

PROJECT NO: | HWY: | COUNTY: | SHEET NO: 162 | E

NOTES

1. Sign is Type II - Type H Reflective
2. Color:
   Background - White
   Message - Black
3. R4-8 is the same as R4-7 except Legend is reversed.

DIVIDER DETAIL

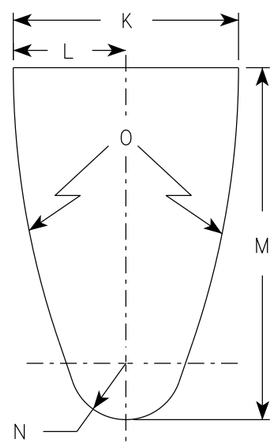

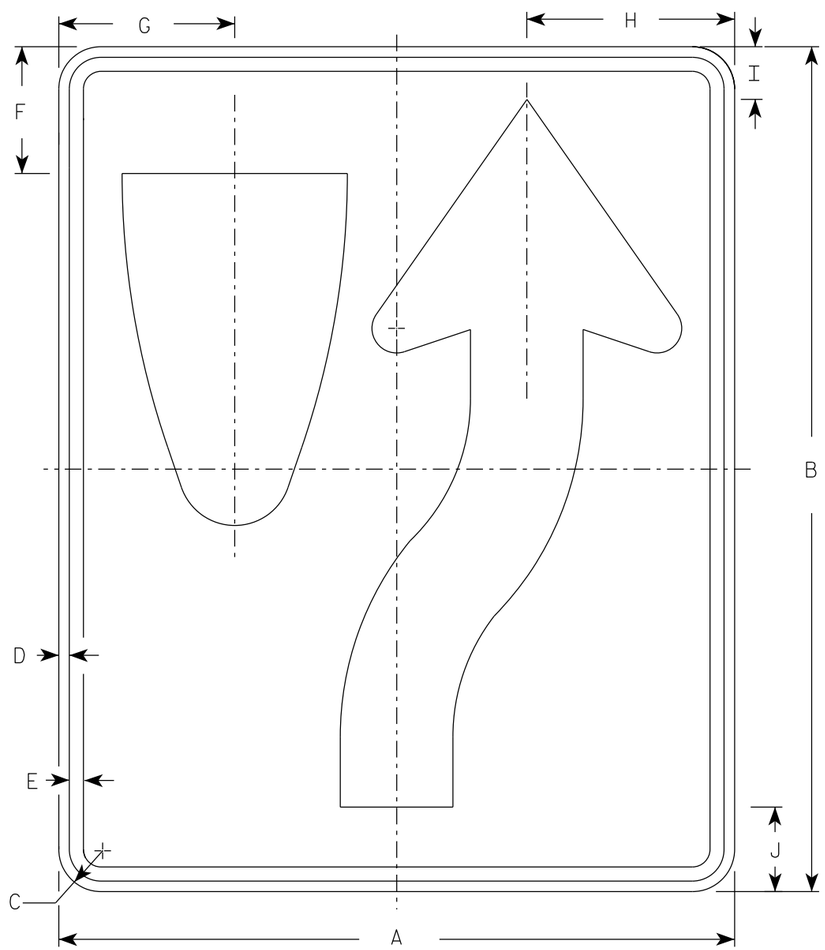

R4-7

ARROW DETAIL

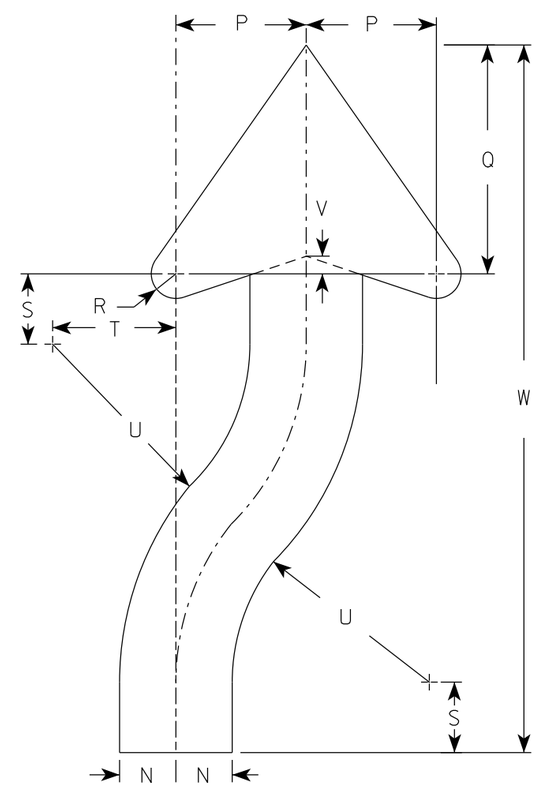

SIZE	A	B	C	D	E	F	G	H	I	J	K	L	M	N	O	P	Q	R	S	T	U	V	W	X	Y	Z	Area sq. ft.
1	18	24	1 1/2	3/8	1/2	3 3/8	4 3/4	5 1/2	1 3/8	2 1/4	6	3	9 3/8	1 1/2	22 1/2	3 1/2	6 1/8	5/8	1 7/8	3 1/4	6 3/4	1/2	20 3/8				3.0
2S	24	30	1 1/2	3/8	1/2	4 1/2	6 1/4	7 3/8	1 7/8	3	8	4	12 1/2	2	30	4 5/8	8 1/8	7/8	2 1/2	4 3/8	9	5/8	25 1/8				5.0
2M	24	30	1 1/2	3/8	1/2	4 1/2	6 1/4	7 3/8	1 7/8	3	8	4	12 1/2	2	30	4 5/8	8 1/8	7/8	2 1/2	4 3/8	9	5/8	25 1/8				5.0
3	36	48	1 7/8	1/2	5/8	6 3/4	9 3/8	11 1/8	2 7/8	4 1/2	12	6	18 3/4	3	45	6 7/8	12 1/4	1 1/4	3 3/4	6 5/8	13 1/2	1	40 3/4				12.0
4	36	48	1 7/8	1/2	5/8	6 3/4	9 3/8	11 1/8	2 7/8	4 1/2	12	6	18 3/4	3	45	6 7/8	12 1/4	1 1/4	3 3/4	6 5/8	13 1/2	1	40 3/4				12.0
5	48	60	3	3/4	1	9	12 1/2	14 3/4	3 3/4	6	16	8	25	4	60	9 1/4	16 1/4	1 5/8	5	8 3/4	18	1 1/4	50 1/4				20.0

STANDARD SIGN
R4-7 & R4-8

WISCONSIN DEPT OF TRANSPORTATION

APPROVED Matthew R Rauch for State Traffic Engineer

DATE 8/17/23 PLATE NO. R4-7.9

PROJECT NO: | HWY: | COUNTY: | SHEET NO: 163 | E

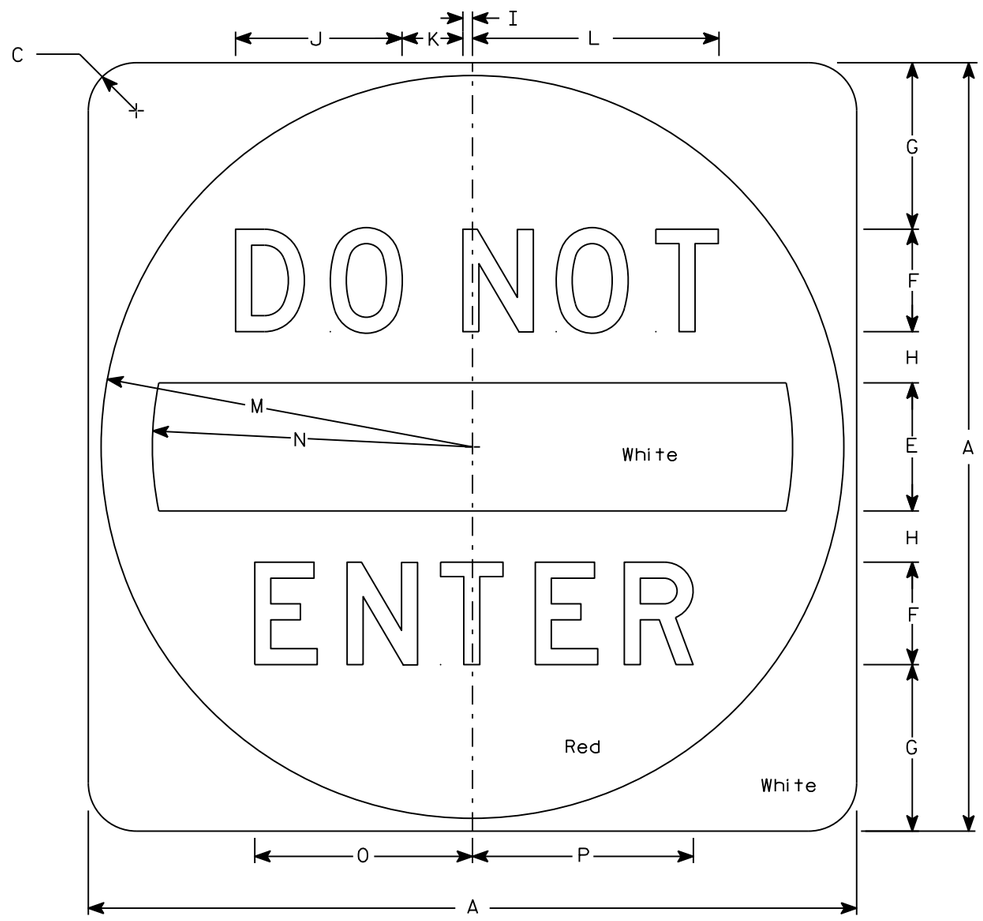

R5-1

NOTES

1. Sign is Type II - Type H Reflective
2. Color:
   Background - See detail
   Message - White
3. Message Series - D

SIZE	A	B	C	D	E	F	G	H	I	J	K	L	M	N	O	P	Q	R	S	T	U	V	W	X	Y	Z	Area sq. ft.
1																											
2S	30		1 7/8		5	4	6 1/2	2	3/8	6 1/2	2 3/8	9 5/8	14 1/2	12 1/2	8 1/2	8 5/8											6.25
2M	36		2 1/4		6	5	7 1/2	2 1/2	1/2	8 1/8	3	12 1/8	17 1/2	15	10 5/8	10 3/4											9.0
3	36		2 1/4		6	5	7 1/2	2 1/2	1/2	8 1/8	3	12 1/8	17 1/2	15	10 5/8	10 3/4											9.0
4	36		2 1/4		6	5	7 1/2	2 1/2	1/2	8 1/8	3	12 1/8	17 1/2	15	10 5/8	10 3/4											9.0
5	48		3		8	6	11	3	5/8	9 3/4	3 5/8	14 1/2	23 1/2	20	12 3/4	12 7/8											16.0

STANDARD SIGN
R5-1

WISCONSIN DEPT OF TRANSPORTATION

APPROVED Matthew R Rauch
for State Traffic Engineer

DATE 3/15/18 PLATE NO. R5-1.16

PROJECT NO: | HWY: | COUNTY: | SHEET NO: 164 | E

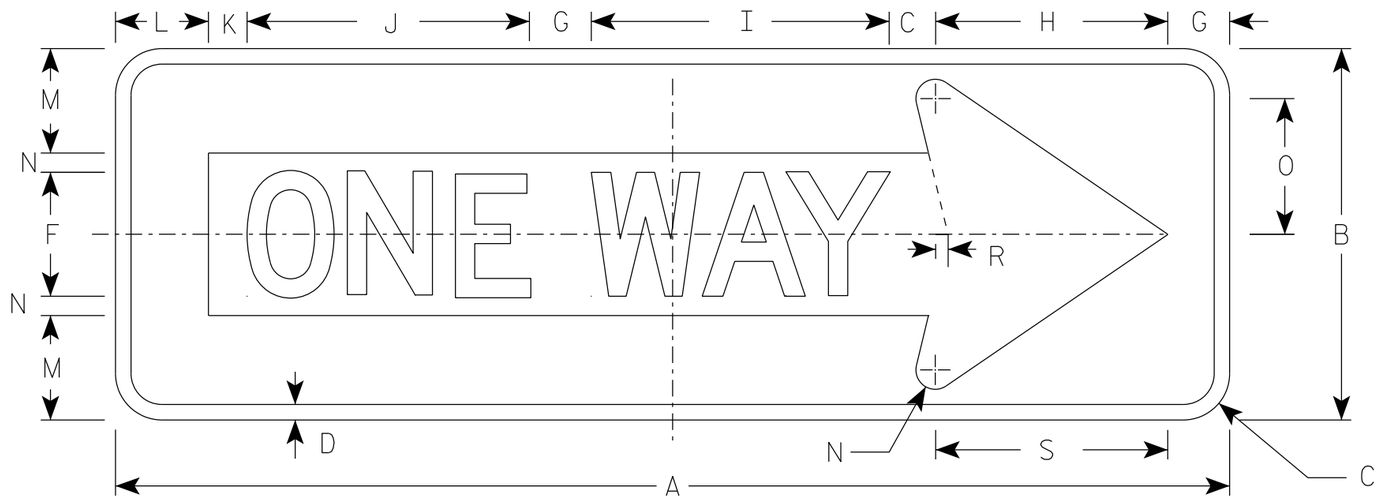

R6-1 R

NOTES

1. Sign is Type II - Type H Reflective
2. Color:
   Background - Black
   Message - Black Legend & White Arrow & Border
3. Message Series - D

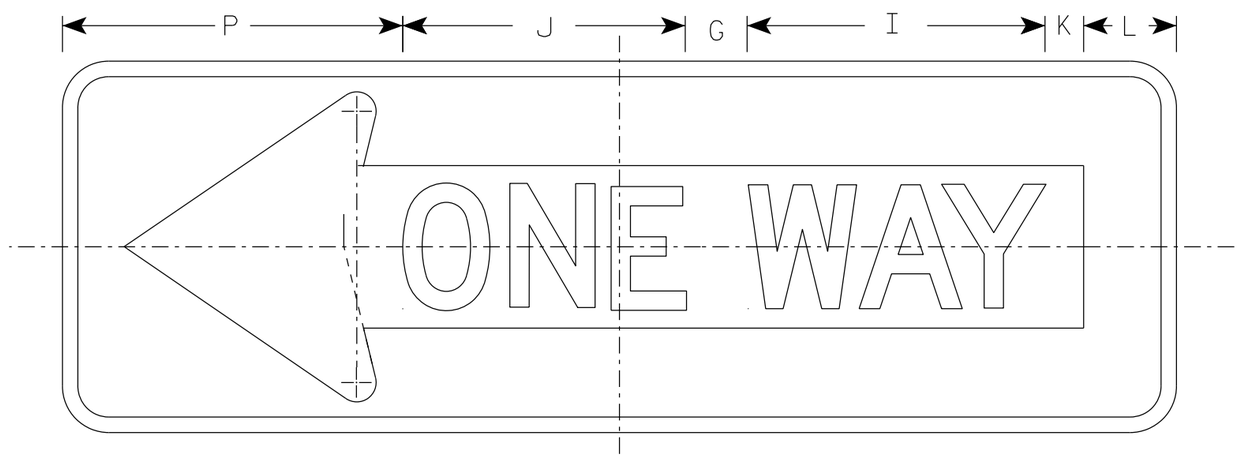

R6-1 L

SIZE	A	B	C	D	E	F	G	H	I	J	K	L	M	N	O	P	Q	R	S	T	U	V	W	X	Y	Z	Area sq. ft.
1																											
2S	36	12	1 1/2	1/2		4	2	7 1/2	9 5/8	9 1/8	1 1/4	3	3 3/8	5/8	4 3/8	11		3/8	7 1/2								3.0
2M	54	18	1 1/2	3/4		6	3	11 1/4	13 5/8	14 1/2	1 7/8	4 1/2	5	1	6 1/2	16 1/2		5/8	11 1/4								6.75
3	54	18	1 1/2	3/4		6	3	11 1/4	13 5/8	14 1/2	1 7/8	4 1/2	5	1	6 1/2	16 1/2		5/8	11 1/4								6.75
4	54	18	1 1/2	3/4		6	3	11 1/4	13 5/8	14 1/2	1 7/8	4 1/2	5	1	6 1/2	16 1/2		5/8	11 1/4								6.75
5																											

STANDARD SIGN
R6-1 L&R

WISCONSIN DEPT OF TRANSPORTATION

APPROVED Matthew R Rauch
for State Traffic Engineer

DATE 8/30/23 PLATE NO. R6-1.4

PROJECT NO:

SHEET NO: 165 E

NOTES

1. Sign is Type II - Type H Reflective
2. Color:
   Background - White
   Message - Black
3. Message Series - D
4. R6-2L same as R6-2R except arrow points to the left.

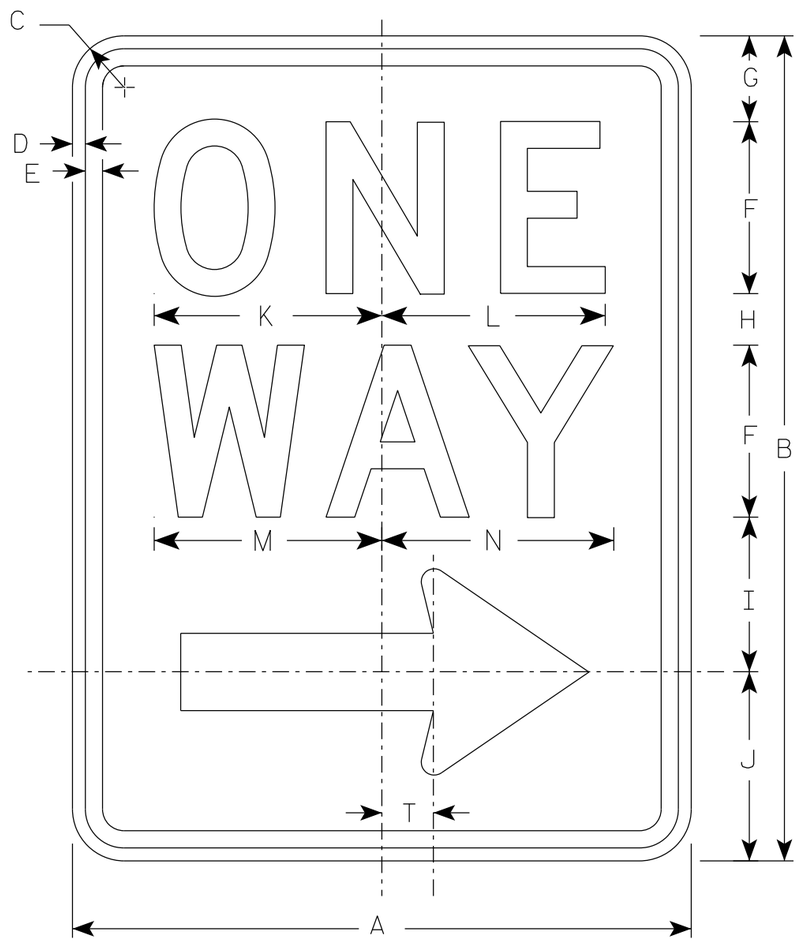

R6-2R

Arrow Detail

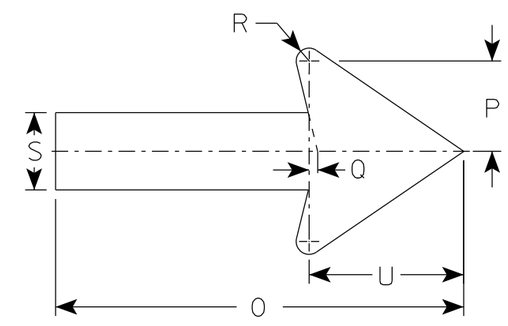

SIZE	A	B	C	D	E	F	G	H	I	J	K	L	M	N	O	P	Q	R	S	T	U	V	W	X	Y	Z
1	18	24	1 1/2	3/8	1/2	5	2 1/2	1 1/2	4 1/2	5 1/2	6 5/8	6 1/2	6 5/8	6 3/4	11 7/8	2 5/8	1/4	3/8	2 1/4	1 1/2	4 1/2					
2S	24	1 1/2	1 1/2	3/8	1/2	6	3	2 1/2	5 1/2	7	8 1/8	8 1/8	8 1/2	8 5/8	16	3 1/2	3/8	1/2	3	2	6					
2M	30	36	1 7/8	1/2	5/8	8	2 1/2	2 5/8	6 7/8	8	10 1/2	10 1/2	11 1/4	11 1/4	20	4 3/8	1/2	5/8	3 3/4	2 1/2	7 1/2					
3	36	48	1 7/8	1/2	5/8	10	5 1/4	3 1/4	9	10 1/2	12 3/4	12 3/4	13 1/4	13 1/2	24	5 5/8	1/2	3/4	4 3/4	3	9					
4	36	48	1 7/8	1/2	5/8	10	5 1/4	3 1/4	9	10 1/2	12 3/4	12 3/4	13 1/4	13 1/2	24	5 5/8	1/2	3/4	4 3/4	3	9					
5																										

STANDARD SIGN
R6-2 R&L

WISCONSIN DEPT OF TRANSPORTATION

APPROVED Matthew R Rauch
for State Traffic Engineer

DATE 11/2/10 PLATE NO. R6-2.8

PROJECT NO: | HWY: | COUNTY: | SHEET NO: 166 | E

NOTES

1. Sign is Type II - Type H Reflective
2. Color:
   Background - WHITE
   Message - BLACK

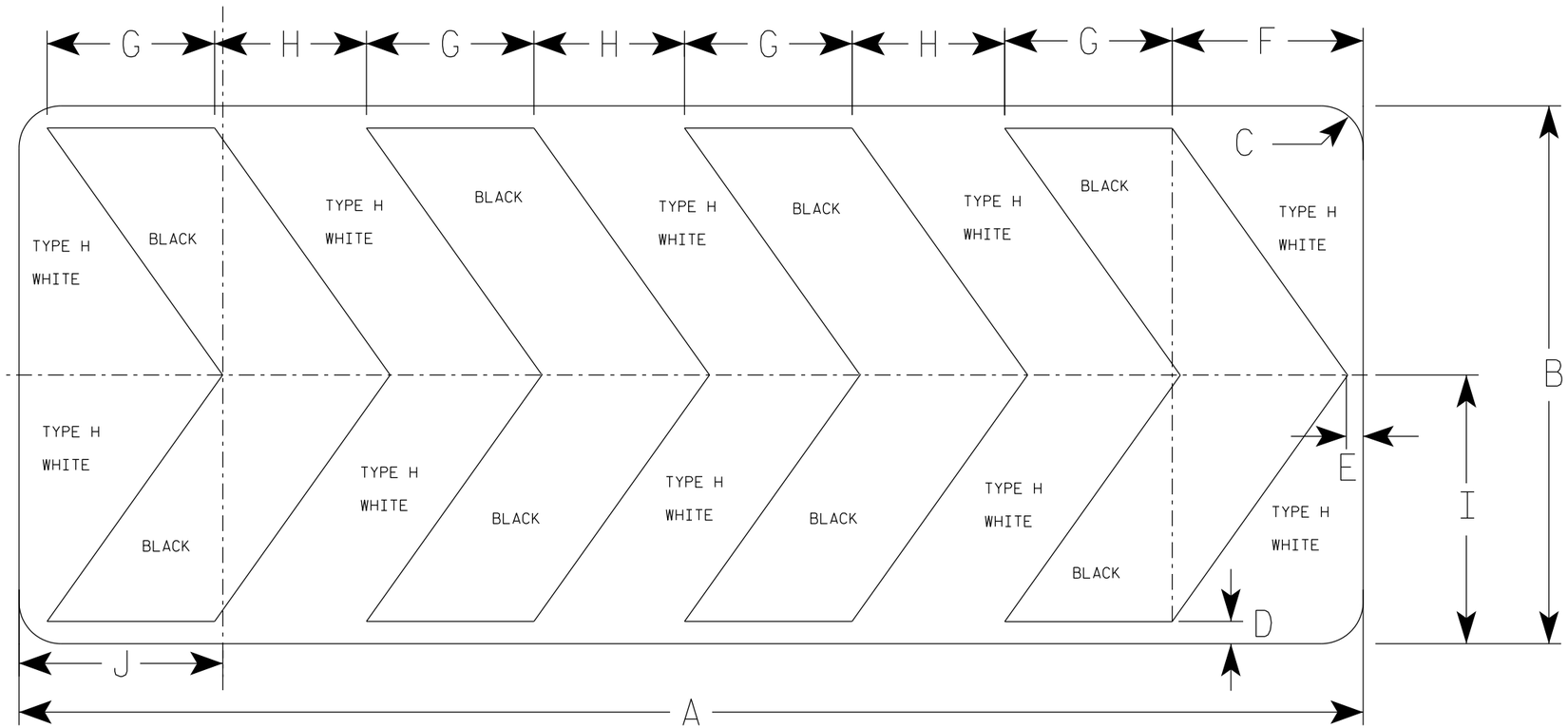

R6-4B

SIZE	A	B	C	D	E	F	G	H	I	J	K	L	M	N	O	P	Q	R	S	T	U	V	W	X	Y	Z	Area sq. ft.
1																											
2S	60	24	1 7/8	1	3/4	8 1/2	7 1/2	6 3/4	12	9 1/8																	10.0
2M	60	24	1 7/8	1	3/4	8 1/2	7 1/2	6 3/4	12	9 1/8																	10.0
3																											
4																											
5																											

STANDARD SIGN
R6-4B

WISCONSIN DEPT OF TRANSPORTATION

APPROVED Matthew R Rauch
for State Traffic Engineer

DATE 10/26/23 PLATE NO. R6-4.4

PROJECT NO:

SHEET NO: 167 E

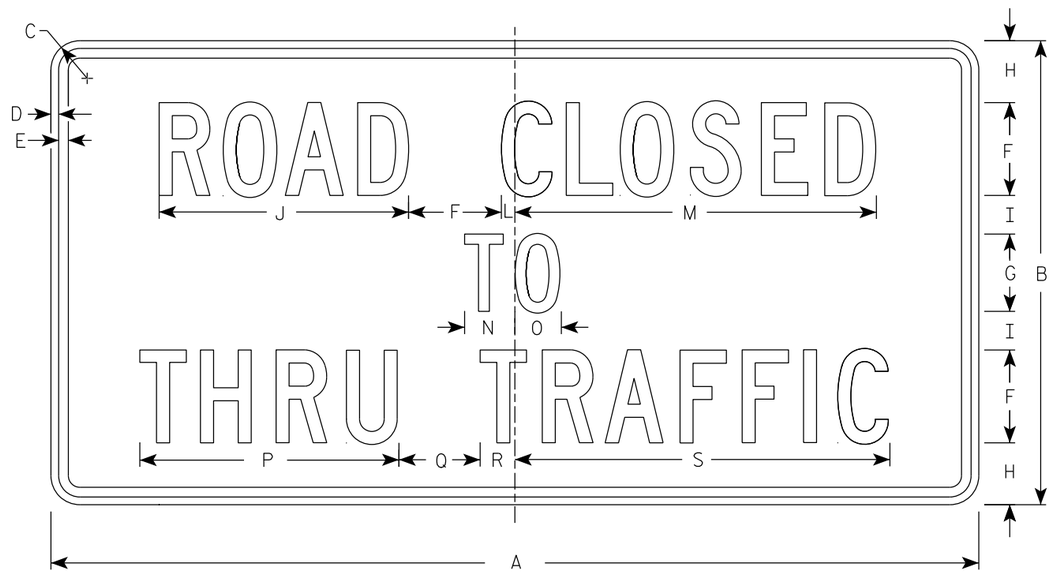

R11-4

NOTES

1. Sign is Type II - Type H Reflective
2. Color:
   Background - White
   Message - Black
3. Message Series - C
4. Corners may be square or rounded when base material is plywood but borders shall be rounded as shown. When base material is metal, the corners and borders shall be rounded.

SIZE	A	B	C	D	E	F	G	H	I	J	K	L	M	N	O	P	Q	R	S	T	U	V	W	X	Y	Z	Area sq. ft.
1																											
2S	60	30	1 7/8	1/2	5/8	6	5	4	2 1/2	16 1/8		7/8	23 3/8	3 1/4	3	16 3/4	5 1/4	2 1/4	24 1/4								12.5
2M	60	30	1 7/8	1/2	5/8	6	5	4	2 1/2	16 1/8		7/8	23 3/8	3 1/4	3	16 3/4	5 1/4	2 1/4	24 1/4								12.5
3																											
4																											
5																											

STANDARD SIGN
R11 - 4

WISCONSIN DEPT OF TRANSPORTATION

APPROVED Matthew R Rauch
for State Traffic Engineer

DATE 2/5/24 PLATE NO. R11-4.4

PROJECT NO: | HWY: | COUNTY: | SHEET NO: 168 | E

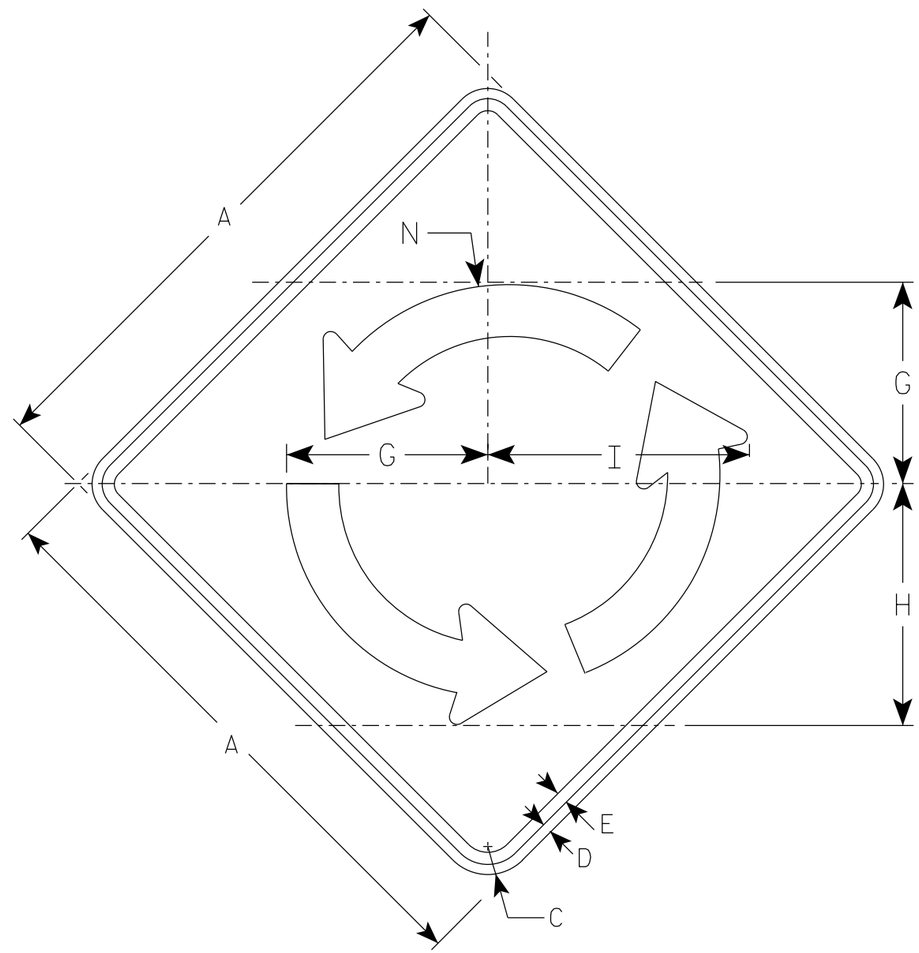

W2-6

NOTES

1. Sign is Type II - Type F Reflective
2. Color:
   Background - Yellow
   Message - Black

Arrow Detail

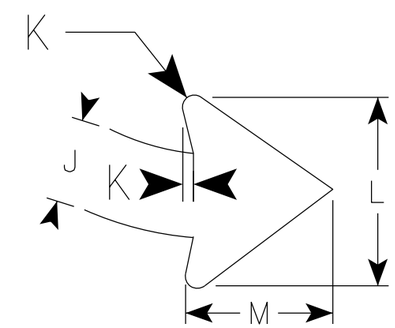

SIZE	A	B	C	D	E	F	G	H	I	J	K	L	M	N	O	P	Q	R	S	T	U	V	W	X	Area sq. ft.
1																									
2S	30		1 7/8	1/2	5/8		10 3/8	12 1/2	13 1/2	2 3/4	3/8	6	4 3/4	11 1/8											6.25
2M	30		1 7/8	1/2	5/8		10 3/8	12 1/2	13 1/2	2 3/4	3/8	6	4 3/4	11 1/8											6.25
3	36		2 1/4	5/8	3/4		12 1/2	15	16 1/4	3 1/4	1/2	7 3/8	5 3/4	13 3/8											9.00
4	48		3	3/4	1		16 5/8	20	16 1/4	4 3/8	5/8	9 3/4	7 5/8	17 7/8											16.0
5																									

STANDARD SIGN
W2-6

WISCONSIN DEPT OF TRANSPORTATION

APPROVED Matthew R Rauch
for State Traffic Engineer

DATE 8/17/2023 PLATE NO. W2-6.8

PROJECT NO:

SHEET NO: 169 E

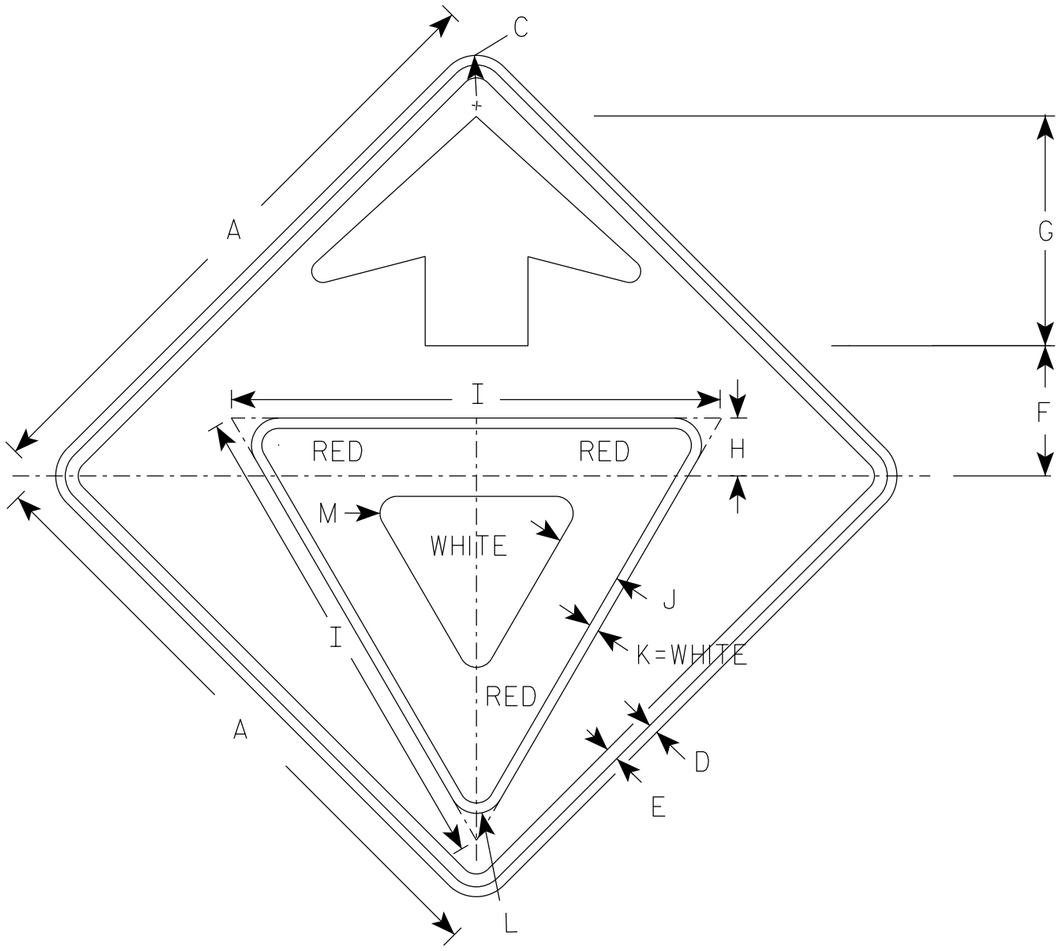

W3-2

NOTES

1. Sign is Type II- Type F Reflective
2. Color:
   Background - Yellow
   Arrow & Border - Black
   Yield Symbol - White Border on Red Background

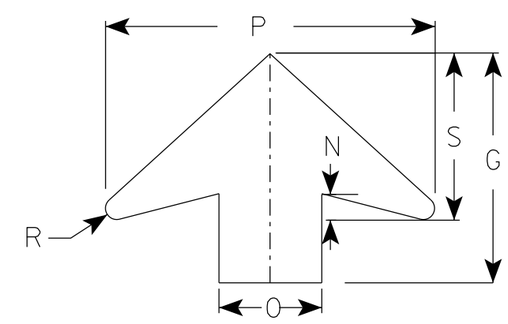

ARROW DETAIL

SIZE	A	B	C	D	E	F	G	H	I	J	K	L	M	N	O	P	Q	R	S	T	U	V	W	X	Y	Z	Area sq. ft.
1	30		1 7/8	1/2	5/8	6 1/4	11 1/4	3	25	3 3/8	1/2	1 3/8	7/8	1 1/4	5	16		1/2	8								6.25
2S	36		2 1/4	5/8	3/4	7 1/2	13 1/2	3 3/8	28	3 3/4	5/8	1 1/2	1	1 5/8	6	19 1/4		5/8	9 3/4								9.0
2M	36		2 1/4	5/8	3/4	7 1/2	13 1/2	3 3/8	28	3 3/4	5/8	1 1/2	1	1 5/8	6	19 1/4		5/8	9 3/4								9.0
3	36		2 1/4	5/8	3/4	7 1/2	13 1/2	3 3/8	28	3 3/4	5/8	1 1/2	1	1 5/8	6	19 1/4		5/8	9 3/4								9.0
4	48		3	3/4	1	10	17 7/8	4 1/2	38	5	3/4	2 1/8	1 3/8	2	8	25 5/8		7/8	13								16.0
5	48		3	3/4	1	10	17 7/8	4 1/2	38	5	3/4	2 1/8	1 3/8	2	8	25 5/8		7/8	13								16.0

STANDARD SIGN
W3-2

WISCONSIN DEPT OF TRANSPORTATION

APPROVED Matthew R Rauch
for State Traffic Engineer

DATE 8/17/2023 PLATE NO. W3-2.10

PROJECT NO:

SHEET NO: 170 E

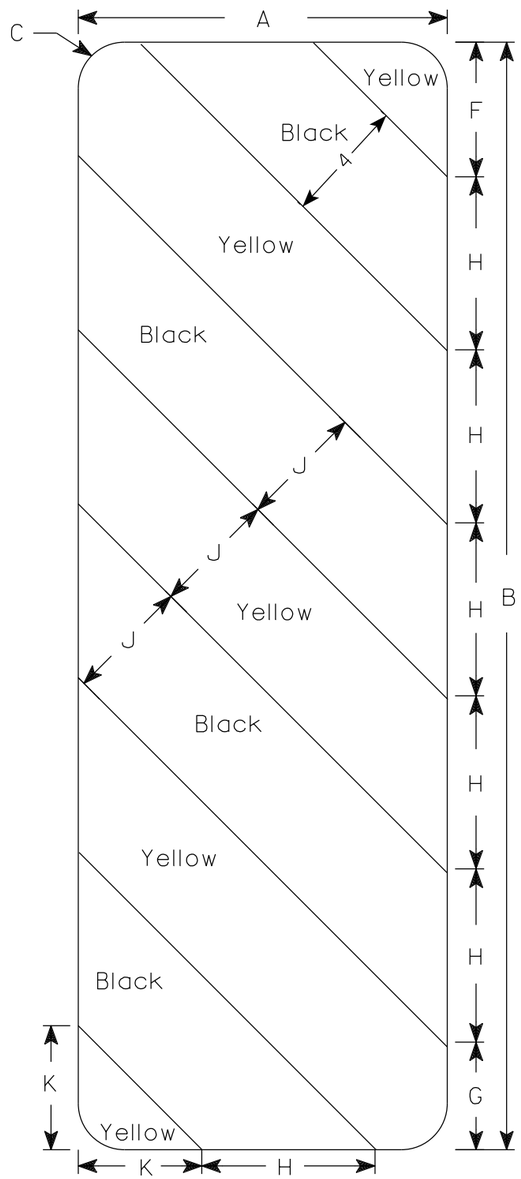

W5-52L

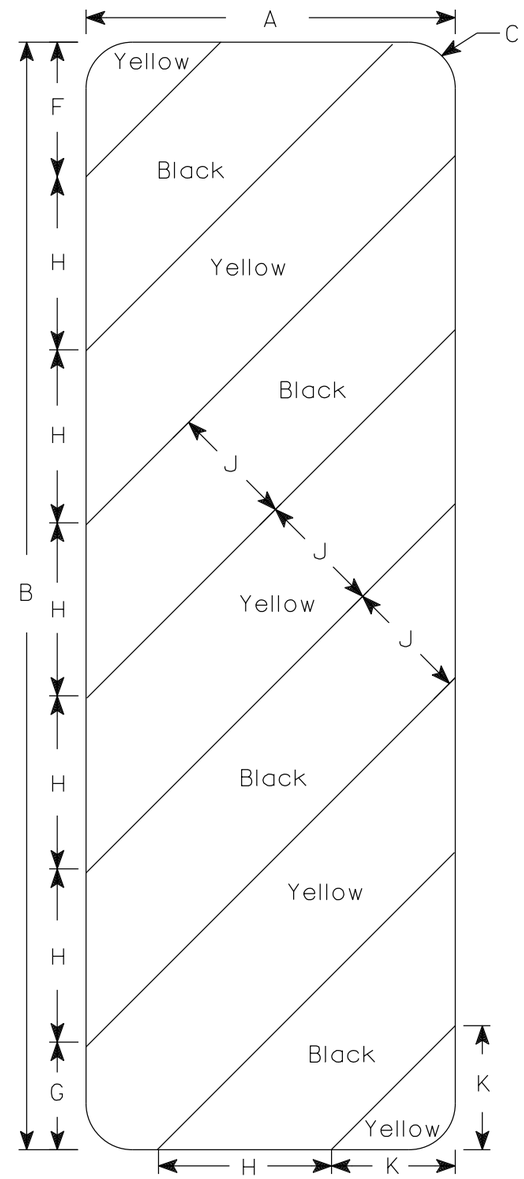

W5-52R

NOTES

1. Sign is Type II - Type F Reflective
2. Color:
   Background - Yellow
   Message - Black
3. Alternate colors of stripes as shown.

SIZE	A	B	C	D	E	F	G	H	I	J	K	L	M	N	O	P	Q	R	S	T	U	V	W	X	Y	Z	Area sq. ft.
1																											
2S	12	36	1 1/2			4 3/8	3 1/2	5 5/8	45°	4	4																3.0
2M	12	36	1 1/2			4 3/8	3 1/2	5 5/8	45°	4	4																3.0
3	18	54	1 1/2			6	5 1/2	8 1/2	45°	6	6 9/16																6.75
4																											
5																											

STANDARD SIGN
W5-52L & W5-52R

WISCONSIN DEPT OF TRANSPORTATION

APPROVED Matthew R Rauch
For State Traffic Engineer

DATE 3/4/2024 PLATE NO. W5-52.10

PROJECT NO: | HWY: | COUNTY: | SHEET NO: 171 | E

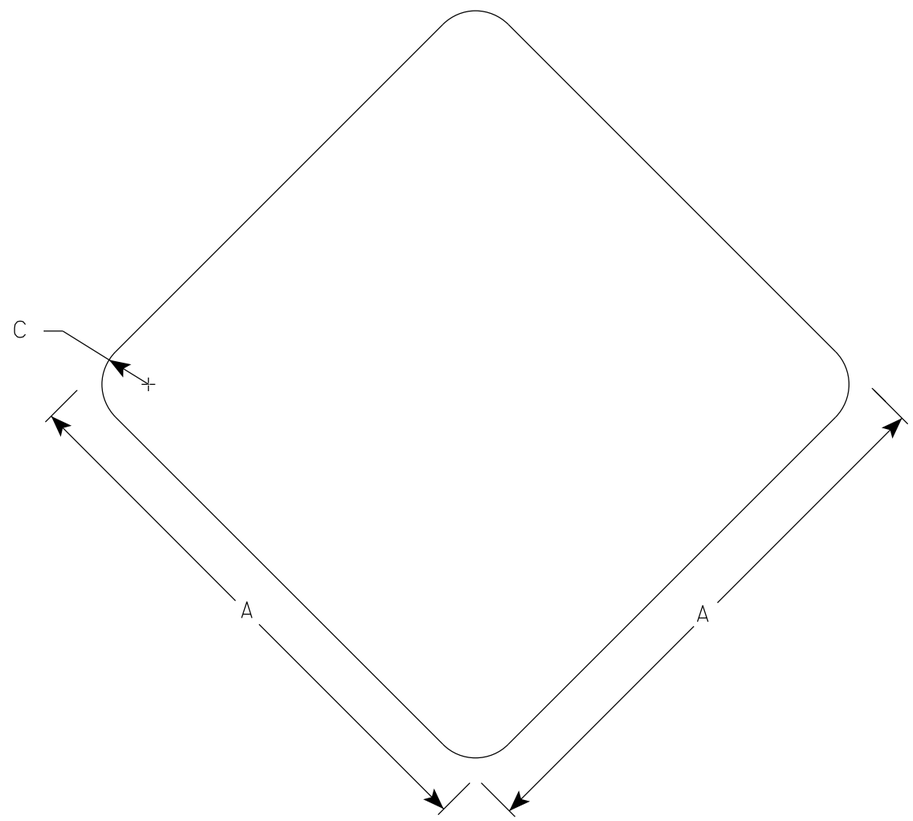

W5-54

NOTES

1. Sign is Type II - Type F Reflective
2. Color:
   Background - Yellow

SIZE	A	B	C	D	E	F	G	H	I	J	K	L	M	N	O	P	Q	R	S	T	U	V	W	X	Y	Z	Area sq. ft.
1	12		1 ½																								1.0
2S	18		1 ½																								2.25
2M	18		1 ½																								2.25
3																											
4																											
5																											

STANDARD SIGN

W5-54

WISCONSIN DEPT OF TRANSPORTATION

APPROVED Matthew R Rauch
for State Traffic Engineer

DATE 3/5/2024 PLATE NO. W5-54.9

PROJECT NO: | HWY: | COUNTY: | SHEET NO: E

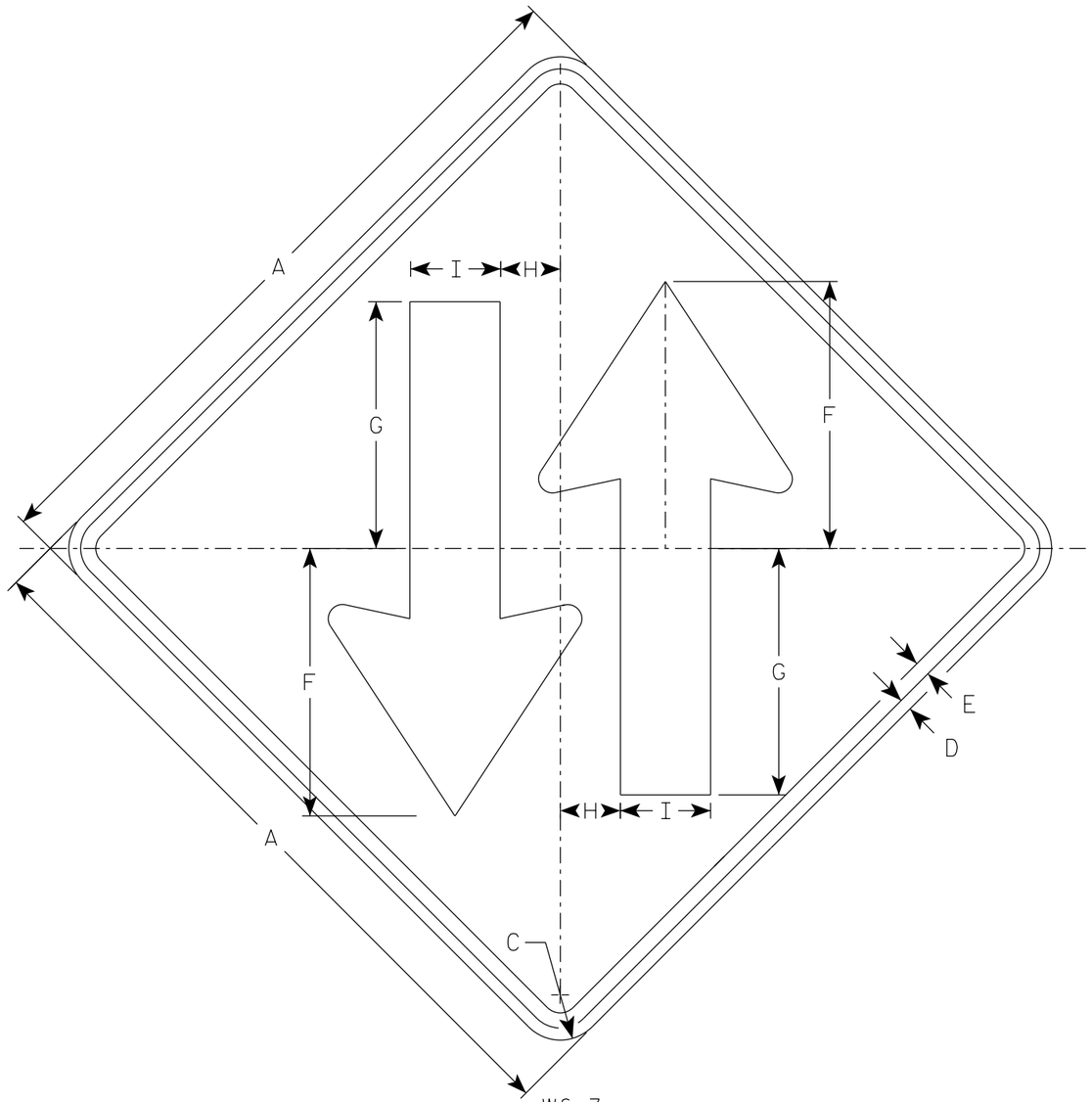

W6-3

NOTES

1. Sign is Type II - Type F Reflective
2. Color:
   Background - Yellow
   Message - Black

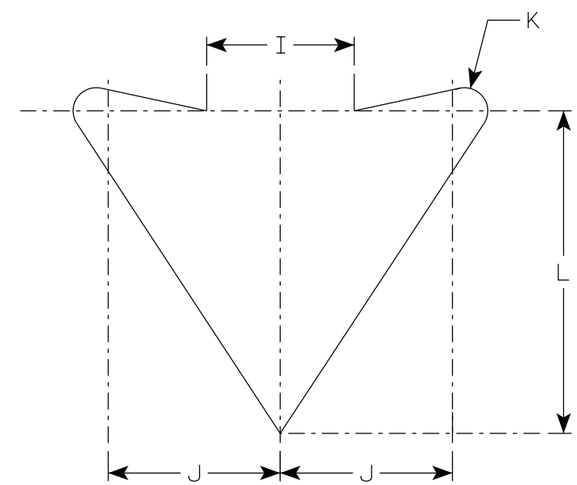

ARROW DETAIL

SIZE	A	B	C	D	E	F	G	H	I	J	K	L	M	N	O	P	Q	R	S	T	U	V	W	X	Y	Z	Area sq. ft.
1	30		1 7/8	1/2	5/8	11 1/8	10 1/4	2 1/2	3 3/4	4 3/8	5/8	8 1/4															6.25
2S	36		2 1/4	5/8	3/4	13 3/8	12 1/4	3	4 1/2	5 1/4	3/4	9 7/8															9.0
2M	36		2 1/4	5/8	3/4	13 3/8	12 1/4	3	4 1/2	5 1/4	3/4	9 7/8															9.0
3	36		2 1/4	5/8	3/4	13 3/8	12 1/4	3	4 1/2	5 1/4	3/4	9 7/8															9.0
4	48		3	3/4	1	17 3/4	16 3/8	4	6	7	1	13 1/8															16.0
5	48		3	3/4	1	17 3/4	16 3/8	4	6	7	1	13 1/8															16.0

STANDARD SIGN

W6-3

WISCONSIN DEPT OF TRANSPORTATION

APPROVED Matthew R Rauch
for State Traffic Engineer

DATE 9/6/2023 PLATE NO. W6-3.12

PROJECT NO: | HWY: | COUNTY: | SHEET NO: | E

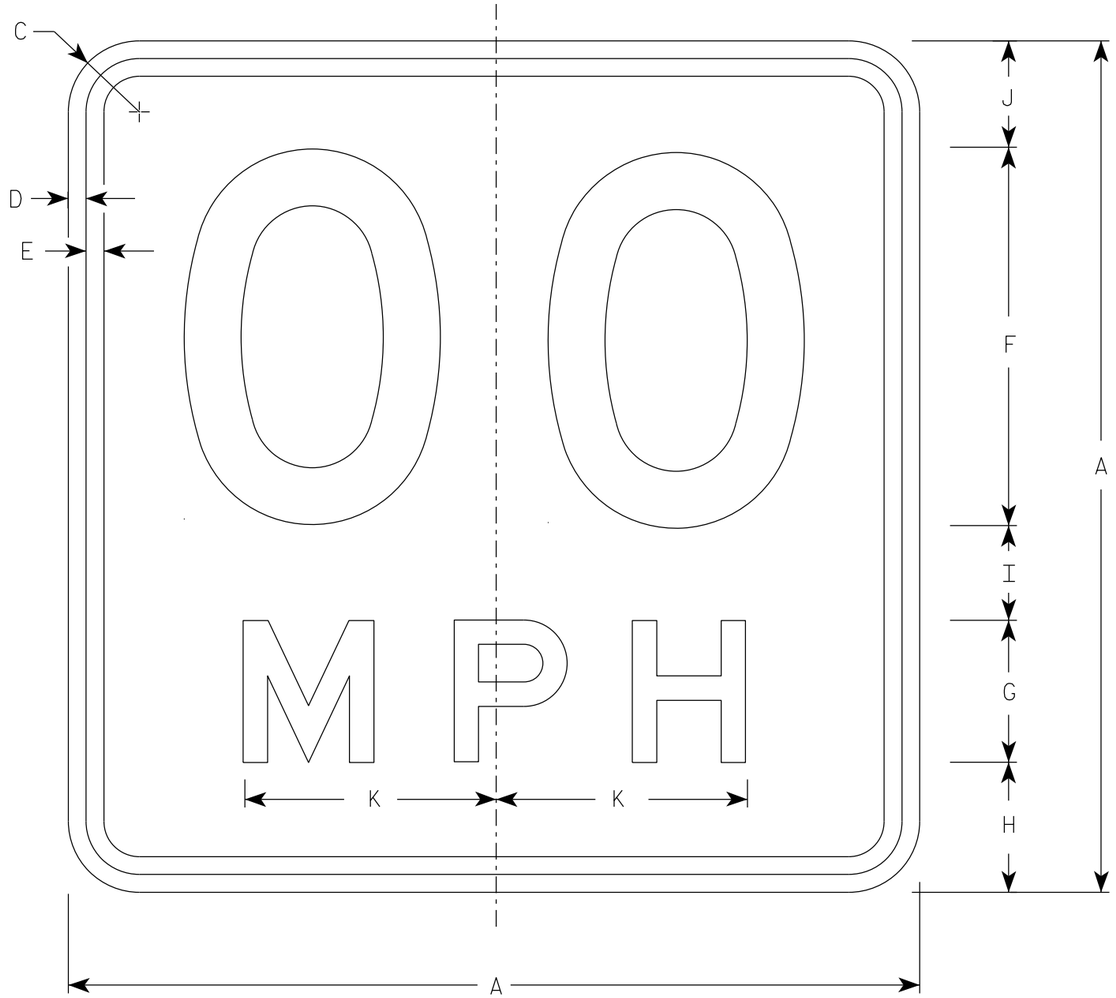

W13-1

* For 30" x 30" Warning Signs, use 18" x 18" W13-1 signs.
For 36" x 36" Warning Signs, use 24" x 24" W13-1 signs.

NOTES

1. Sign is Type II - Type F Reflective
2. Color:
   Background - Yellow
   Message - Black
3. Message Series - See Note 5
4. Substitute appropriate numerals and optically space about centerline to achieve proper balance.
5. Line 1 is Series D
   Line 2 is Series E

SIZE	A	B	C	D	E	F	G	H	I	J	K	L	M	N	O	P	Q	R	S	T	U	V	W	X	Y	Z	Area sq. ft.
1	18		1 1/2	3/8	3/8	8	3	2 3/4	2	2 1/4	5 3/8																2.25
* 2S	18		1 1/2	3/8	3/8	8	3	2 3/4	2	2 1/4	5 3/8																2.25
* 2M	18		1 1/2	3/8	3/8	8	3	2 3/4	2	2 1/4	5 3/8																2.25
3	24		1 1/2	3/8	1/2	10	4	4	2 3/4	3 1/4	6 5/8																4.00
4	36		2 1/4	5/8	3/4	16	6	5 1/2	4	4 1/2	10 5/8																9.00
5	36		2 1/4	5/8	3/4	16	6	5 1/2	4	4 1/2	10 5/8																9.00

STANDARD SIGN
W13-1

WISCONSIN DEPT OF TRANSPORTATION

APPROVED Matthew R Rauch
For State Traffic Engineer

DATE 1/8/2024 PLATE NO. W13-1.17

PROJECT NO: | HWY: | COUNTY: | SHEET NO: E

NOTES

1. Sign is Type II- Type F Reflective
2. Color:
   Background - Yellow
   Message - Black
3. Message Series - Lines 1 and 2 are Series D.
   Line 3 is series C.
4. Corners and borders shall be rounded on all base materials for this sign.

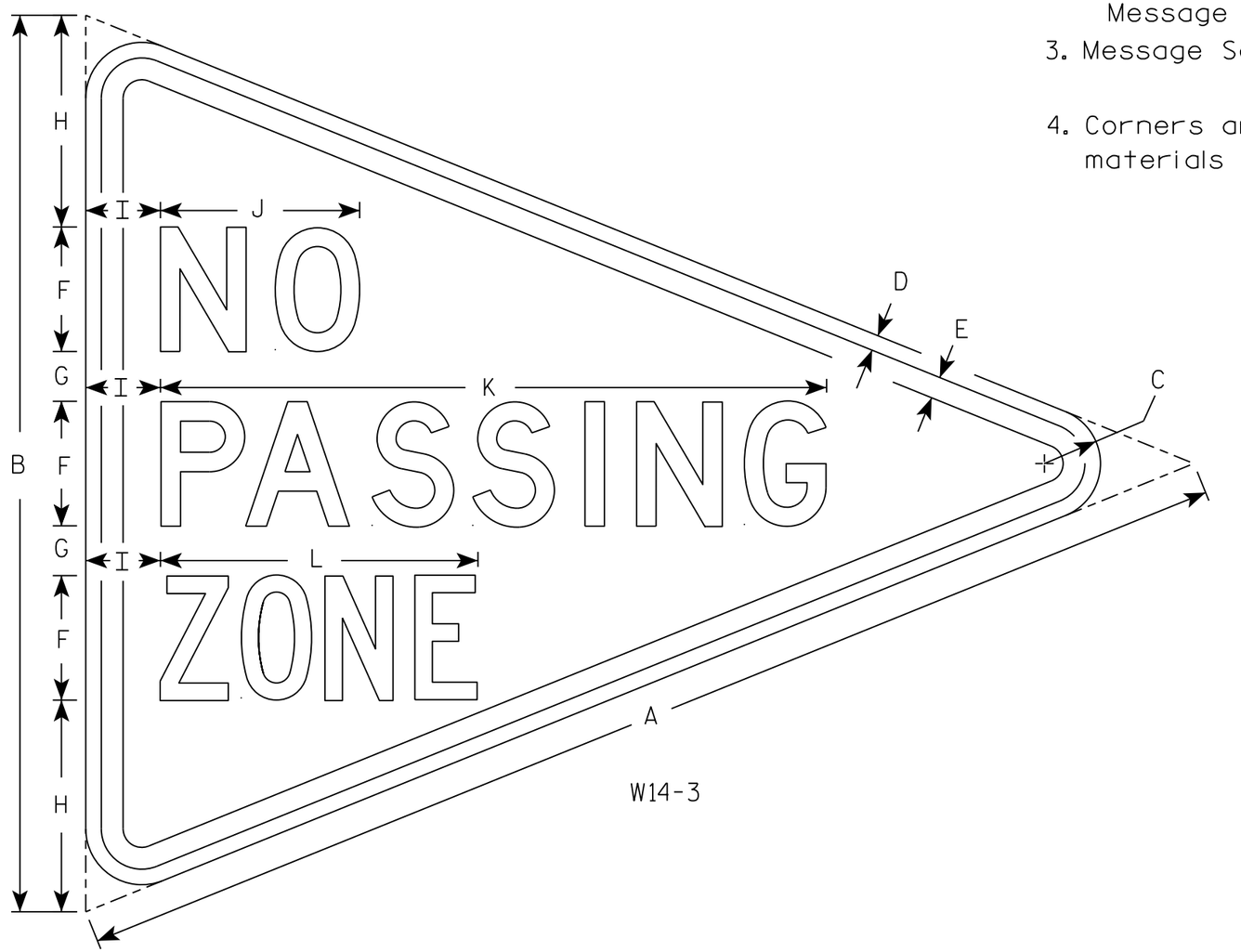

W14-3

SIZE	A	B	C	D	E	F	G	H	I	J	K	L	M	N	O	P	Q	R	S	T	U	V	W	X	Y	Z	Area sq. ft.
1																											
2S	48	36	2 1/4	5/8	7/8	5	2	8 1/2	3	8	26 3/4	12 3/4															5.56
2M																											
3																											
4																											
5																											

STANDARD SIGN
W14-3

WISCONSIN DEPT OF TRANSPORTATION

APPROVED Matthew R Rauch
for State Traffic Engineer
DATE 3/21/17 PLATE NO. W14-3.10

PROJECT NO: | HWY: | COUNTY: | SHEET NO: 175 | E

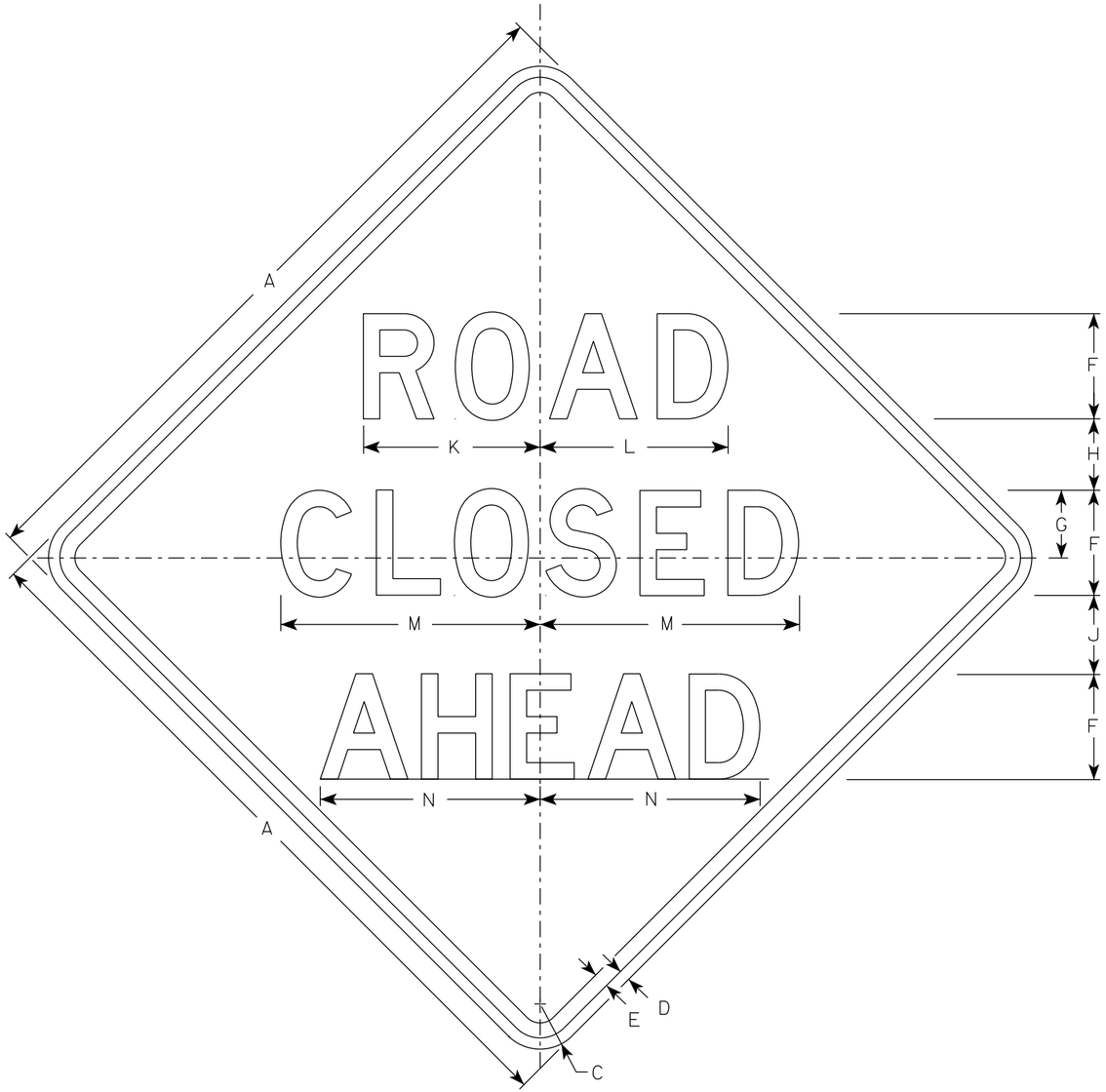

W20-3A

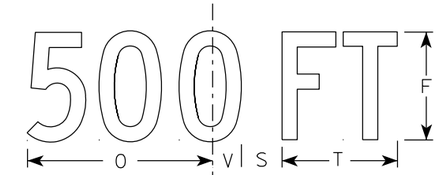

W20-3D

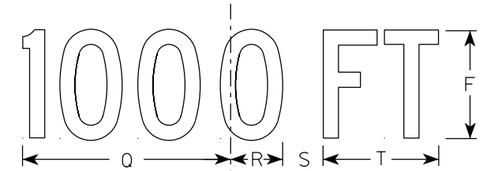

W20-3C

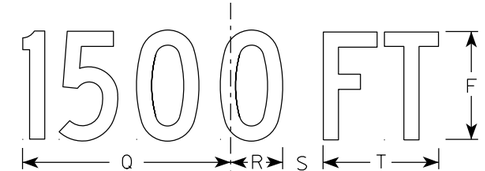

W20-3B

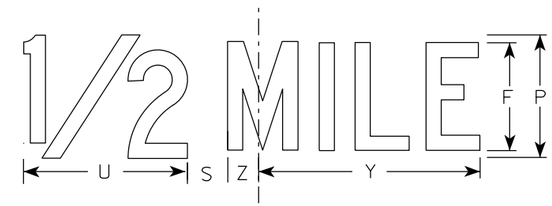

W20-3G

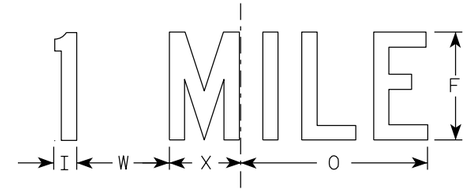

W20-3F

NOTES

1. Sign is Type II - Type F Reflective
2. Color:
   Background - Orange
   Message - Black
3. Message Series - see note 5
4. Corners may be square or rounded when base material is plywood but borders shall be rounded as shown. When base material is metal, the corners and borders shall be rounded.
5. Lines 1 and 2 are Series D.
   Line 3 is Series D for AHEAD and Series C for all other distances.

SIZE	A	B	C	D	E	F	G	H	I	J	K	L	M	N	O	P	Q	R	S	T	U	V	W	X	Y	Z	Area sq. ft.
1	36		2 1/4	5/8	3/4	5	3 3/8	3 1/2	1 1/8	4	8 3/8	8 7/8	12 1/2	11	9	6	10 1/8	2 1/2	1 7/8	5 5/8	8	1 3/8	4 1/2	3 1/2	10 3/4	1 3/4	9.0
2S	48		3	3/4	1	7	4 1/2	4 3/4	1 1/2	5 1/4	11 3/4	12 1/2	17 1/4	14 5/8	12	8	13 1/2	3 3/8	2 5/8	7 1/2	10 5/8	1 7/8	6	4 5/8	14 3/8	2 3/8	16.0
2M	48		3	3/4	1	7	4 1/2	4 3/4	1 1/2	5 1/4	11 3/4	12 1/2	17 1/4	14 5/8	12	8	13 1/2	3 3/8	2 5/8	7 1/2	10 5/8	1 7/8	6	4 5/8	14 3/8	2 3/8	16.0
3	48		3	3/4	1	7	4 1/2	4 3/4	1 1/2	5 1/4	11 3/4	12 1/2	17 1/4	14 5/8	12	8	13 1/2	3 3/8	2 5/8	7 1/2	10 5/8	1 7/8	6	4 5/8	14 3/8	2 3/8	16.0
4	48		3	3/4	1	7	4 1/2	4 3/4	1 1/2	5 1/4	11 3/4	12 1/2	17 1/4	14 5/8	12	8	13 1/2	3 3/8	2 5/8	7 1/2	10 5/8	1 7/8	6	4 5/8	14 3/8	2 3/8	16.0
5	48		3	3/4	1	7	4 1/2	4 3/4	1 1/2	5 1/4	11 3/4	12 1/2	17 1/4	14 5/8	12	8	13 1/2	3 3/8	2 5/8	7 1/2	10 5/8	1 7/8	6	4 5/8	14 3/8	2 3/8	16.0

STANDARD SIGN
W20-3A, B, C, D, F & G

WISCONSIN DEPT OF TRANSPORTATION

APPROVED Matthew R Rauch
for State Traffic Engineer

DATE 1/10/2024 PLATE NO. W20-3.8

PROJECT NO: | HWY: | COUNTY: | SHEET NO: E

DIVISION 1 - CTH A - CTH J CENTER

STATION	REAL STATION	DISTANCE	AREA (SF)			INCREMENTAL VOL (CY) (UNADJUSTED)			CUMULATIVE VOL (CY)		
			CUT	SALVAGED/UNUSABLE PAVEMENT MATERIAL	FILL	CUT	SALVAGED/UNUSABLE PAVEMENT MATERIAL	FILL	CUT	EXPANDED FILL	MASS ORDINATE
						NOTE 1	NOTE 2	NOTE 3	1.00 NOTE 1	1.15	NOTE 4
01+00	100.00	0.00	51.99	10.12	105.72	0	0	0	0	0	0
01+25	125.00	25.00	59.40	10.62	20.65	52	10	59	52	68	-26
01+50	150.00	25.00	70.21	13.55	21.53	60	11	20	112	91	0
01+75	175.00	25.00	69.24	31.54	17.52	65	21	18	177	112	23
02+00	200.00	25.00	79.57	33.53	18.48	69	30	17	246	131	43
02+25	225.00	25.00	52.49	17.68	19.90	61	24	18	307	152	59
02+50	250.00	25.00	58.61	16.04	29.10	51	16	23	358	178	68
02+75	275.00	25.00	125.96	15.72	18.00	85	15	22	443	204	112
03+00	300.00	25.00	126.41	15.93	28.18	117	15	21	560	228	190
03+07.124	307.12	7.12	99.19	18.41	35.66	30	5	8	590	237	206
03+25	325.00	17.88	140.89	21.40	16.00	79	13	17	669	256	253
03+50	350.00	25.00	121.11	10.15	33.26	121	15	23	790	283	332

Notes:	
1 - CUT	CUT INCLUDES SALVAGED/UNUSABLE PAVEMENT MATERIAL
2 - SALVAGED/UNUSABLE PAVEMENT MATERIAL	THIS DOES NOT SHOW UP IN CROSS SECTIONS
3 - FILL	DOES NOT INCLUDE UNUSABLE PAVEMENT EXC VOLUME
4 - MASS ORDINATE	EBS TO BE BACKFILLED WITH BASE AGGREGATE DENSE 3-INCH: [(CUT - SALVAGED PAVT - EXPANDED EBS) - ((FILL) * FILL FACTOR)]

9

9

DIVISION 1 - CTH A EB INSIDE APPROACH

STATION	DISTANCE	AREA (SF)			INCREMENTAL VOL (CY) (UNADJUSTED)			CUMULATIVE VOL (CY)		
		CUT	SALVAGED/UNUSABLE PAVEMENT MATERIAL	FILL	CUT	SALVAGED/UNUSABLE PAVEMENT MATERIAL	FILL	CUT 1.00	EXPANDED FILL 1.15	MASS ORDINATE
					NOTE 1	NOTE 2	NOTE 3	NOTE 1		NOTE 4
1127+85.336	0.00	112.41	10.00	0.04	0	0	0	0	0	0
1128+00	14.66	115.08	10.00	0.03	62	5	0	62	0	57
1128+50	50.00	137.93	10.00	0.00	234	19	0	296	0	272
1128+72.495	22.49	133.56	10.00	2.26	113	8	1	409	1	376
1129+00	27.51	182.55	10.00	0.00	161	10	1	570	2	526
1129+50	50.00	189.31	10.00	0.00	344	19	0	914	2	851
1130+00	50.00	167.57	10.00	2.54	330	19	2	1,244	5	1,159
1130+50	50.00	154.55	10.00	96.95	298	19	92	1,542	110	1,333
1130+74.809	24.81	131.34	10.00	130.15	131	9	104	1,673	230	1,335
1131+00	25.19	141.32	10.00	136.12	127	9	124	1,800	373	1,310
1131+50	50.00	149.18	10.00	85.58	269	19	205	2,069	608	1,325
1131+93.046	43.05	166.03	10.00	48.45	251	16	107	2,320	731	1,437
1132+00	6.95	182.91	10.00	43.89	45	3	12	2,365	745	1,465
1132+50	50.00	199.18	10.00	16.42	354	19	56	2,719	810	1,735
1133+00	50.00	234.39	10.00	0.77	401	19	16	3,120	828	2,099
1133+29.391	29.39	229.45	10.00	7.37	252	11	4	3,372	833	2,335
1133+50	20.61	302.62	10.00	2.61	203	8	4	3,575	837	2,526
1134+00	50.00	268.18	10.00	9.57	529	19	11	4,104	850	3,023
1134+26.2	26.20	422.48	10.00	17.70	335	10	13	4,439	865	3,333

DIVISION 1 - CTH A EB INSIDE EXIT

STATION	DISTANCE	AREA (SF)			INCREMENTAL VOL (CY) (UNADJUSTED)			CUMULATIVE VOL (CY)		
		CUT	SALVAGED/UNUSABLE PAVEMENT MATERIAL	FILL	CUT	SALVAGED/UNUSABLE PAVEMENT MATERIAL	FILL	CUT 1.00	EXPANDED FILL 1.15	MASS ORDINATE
					NOTE 1	NOTE 2	NOTE 3	NOTE 1		NOTE 4
1135+39.248	0.00	309.20	10.00	40.14	0	0	0	0	0	0
1135+50	10.75	484.64	10.00	18.79	158	4	12	158	14	140
1136+00	50.00	253.55	10.00	1.93	684	19	19	842	36	783
1136+50	50.00	367.69	10.00	0.00	575	19	2	1,417	38	1,337
1137+00	50.00	446.31	10.00	0.00	754	19	0	2,171	38	2,072
1137+50	50.00	469.69	10.00	0.00	848	19	0	3,019	38	2,901
1138+00	50.00	437.58	10.00	0.00	840	19	0	3,859	38	3,722
1138+50	50.00	397.29	10.00	0.00	773	19	0	4,632	38	4,476
1139+00	50.00	377.54	10.00	0.00	717	19	0	5,349	38	5,174
1139+50	50.00	275.98	10.00	0.00	605	19	0	5,954	38	5,760
1140+00	50.00	242.90	10.00	7.98	480	19	7	6,434	46	6,213
1140+50	50.00	227.89	10.00	22.22	436	19	28	6,870	78	6,598
1141+00	50.00	140.80	10.00	59.22	341	19	75	7,211	164	6,834
1141+50	50.00	117.56	10.00	13.80	239	19	68	7,450	243	6,975
1141+75	25.00	113.26	10.00	71.20	107	9	39	7,557	288	7,029
1142+50	75.00	45.85	10.00	24.44	221	28	133	7,778	440	7,069
1142+57.637	7.64	46.28	10.00	22.89	13	3	7	7,791	449	7,071
1142+82.695	25.06	47.87	10.00	21.01	44	9	20	7,835	472	7,083
1142+89.223	6.53	49.28	10.00	20.81	12	2	5	7,847	477	7,087
1143+00	10.78	51.68	10.00	20.16	20	4	8	7,867	486	7,094
1143+07.753	7.75	53.50	10.00	19.10	15	3	6	7,882	493	7,099
1143+14.13	6.38	53.76	10.00	16.98	13	2	4	7,895	498	7,105
1143+39.038	24.91	55.63	10.00	14.98	50	9	15	7,945	515	7,129
1143+50	10.96	53.95	10.00	12.99	22	4	6	7,967	522	7,140
1144+00	50.00	25.29	10.00	3.40	73	19	15	8,040	539	7,177
1144+50	50.00	22.98	10.00	0.38	45	19	3	8,085	543	7,199
1145+00	50.00	20.82	10.00	0.00	41	19	0	8,126	543	7,221
1145+08.313	8.31	18.87	10.00	0.00	6	3	0	8,132	543	7,224

Notes:	
1 - CUT	CUT INCLUDES SALVAGED/UNUSABLE PAVEMENT MATERIAL
2 - SALVAGED/UNUSABLE PAVEMENT MATERIAL	THIS DOES NOT SHOW UP IN CROSS SECTIONS
3 - FILL	DOES NOT INCLUDE UNUSABLE PAVEMENT EXC VOLUME
4 - MASS ORDINATE	EBS TO BE BACKFILLED WITH BASE AGGREGATE DENSE 3-INCH: [(CUT - SALVAGED PAVT - EXPANDED EBS) - ((FILL) * FILL FACTOR)]

DIVISION 1 - CTH J NB INSIDE APPROACH

STATION	DISTANCE	AREA (SF)			INCREMENTAL VOL (CY) (UNADJUSTED)			CUMULATIVE VOL (CY)		
		CUT	SALVAGED/UNUSABLE PAVEMENT MATERIAL	FILL	CUT	SALVAGED/UNUSABLE PAVEMENT MATERIAL	FILL	CUT 1.00	EXPANDED FILL 1.15	MASS ORDINATE
					NOTE 1	NOTE 2	NOTE 3	NOTE 1		NOTE 4
1123+50.47	0.00	137.33	11.25	9.11	0	0	0	0	0	0
1124+00	49.53	161.37	11.25	15.67	274	21	23	274	26	227
1124+50	50.00	190.02	11.25	15.13	325	21	29	599	60	497
1125+00	50.00	219.40	11.25	8.70	379	21	22	978	85	830
1125+50	50.00	244.94	11.25	9.94	430	21	17	1,408	105	1,219
1126+00	50.00	198.48	11.25	16.47	411	21	24	1,819	132	1,582
1126+50	50.00	183.13	11.25	26.33	353	21	40	2,172	178	1,868
1127+00	50.00	146.31	11.25	28.38	305	21	51	2,477	237	2,093
1127+50	50.00	113.44	11.25	60.83	241	21	83	2,718	332	2,218
1128+00	50.00	94.85	11.25	157.19	193	21	202	2,911	565	2,157
1128+05.234	5.23	107.90	11.25	179.22	20	2	33	2,931	603	2,137

DIVISION 1 - CTH J NB INSIDE EXIT

STATION	DISTANCE	AREA (SF)			INCREMENTAL VOL (CY) (UNADJUSTED)			CUMULATIVE VOL (CY)		
		CUT	SALVAGED/UNUSABLE PAVEMENT MATERIAL	FILL	CUT	SALVAGED/UNUSABLE PAVEMENT MATERIAL	FILL	CUT 1.00	EXPANDED FILL 1.15	MASS ORDINATE
					NOTE 1	NOTE 2	NOTE 3	NOTE 1		NOTE 4
119+00	0.00	409.63	5.63	6.71	0	0	0	0	0	0
119+50	50.00	542.76	5.63	31.42	882	10	35	882	40	832
120+00	50.00	205.86	5.63	51.37	693	10	77	1,575	129	1,426
120+50	50.00	128.55	5.63	6.16	310	10	53	1,885	190	1,665
121+00	50.00	132.31	5.63	15.04	242	10	20	2,127	213	1,874
121+50	50.00	124.23	5.63	23.22	238	10	35	2,365	253	2,062
121+72.616	22.62	120.27	5.63	20.93	102	5	18	2,467	274	2,138
121+97.363	24.75	119.73	5.63	17.86	110	5	18	2,577	294	2,223
122+00	2.64	120.16	5.63	17.39	12	1	2	2,589	297	2,231
122+22.345	22.35	123.82	5.63	14.32	101	5	13	2,690	312	2,312
122+50	27.65	123.14	6.88	9.99	126	6	12	2,816	325	2,419
123+00	50.00	122.06	6.88	15.15	227	13	23	3,043	352	2,606
123+50	50.00	124.20	5.63	0.94	228	12	15	3,271	369	2,805
123+62.388	12.39	123.83	5.63	1.12	57	3	0	3,328	369	2,859

Notes:	
1 - CUT	CUT INCLUDES SALVAGED/UNUSABLE PAVEMENT MATERIAL
2 - SALVAGED/UNUSABLE PAVEMENT MATERIAL	THIS DOES NOT SHOW UP IN CROSS SECTIONS
3 - FILL	DOES NOT INCLUDE UNUSABLE PAVEMENT EXC VOLUME
4 - MASS ORDINATE	EBS TO BE BACKFILLED WITH BASE AGGREGATE DENSE 3-INCH: [(CUT - SALVAGED PAVT - EXPANDED EBS) - ((FILL) * FILL FACTOR)]

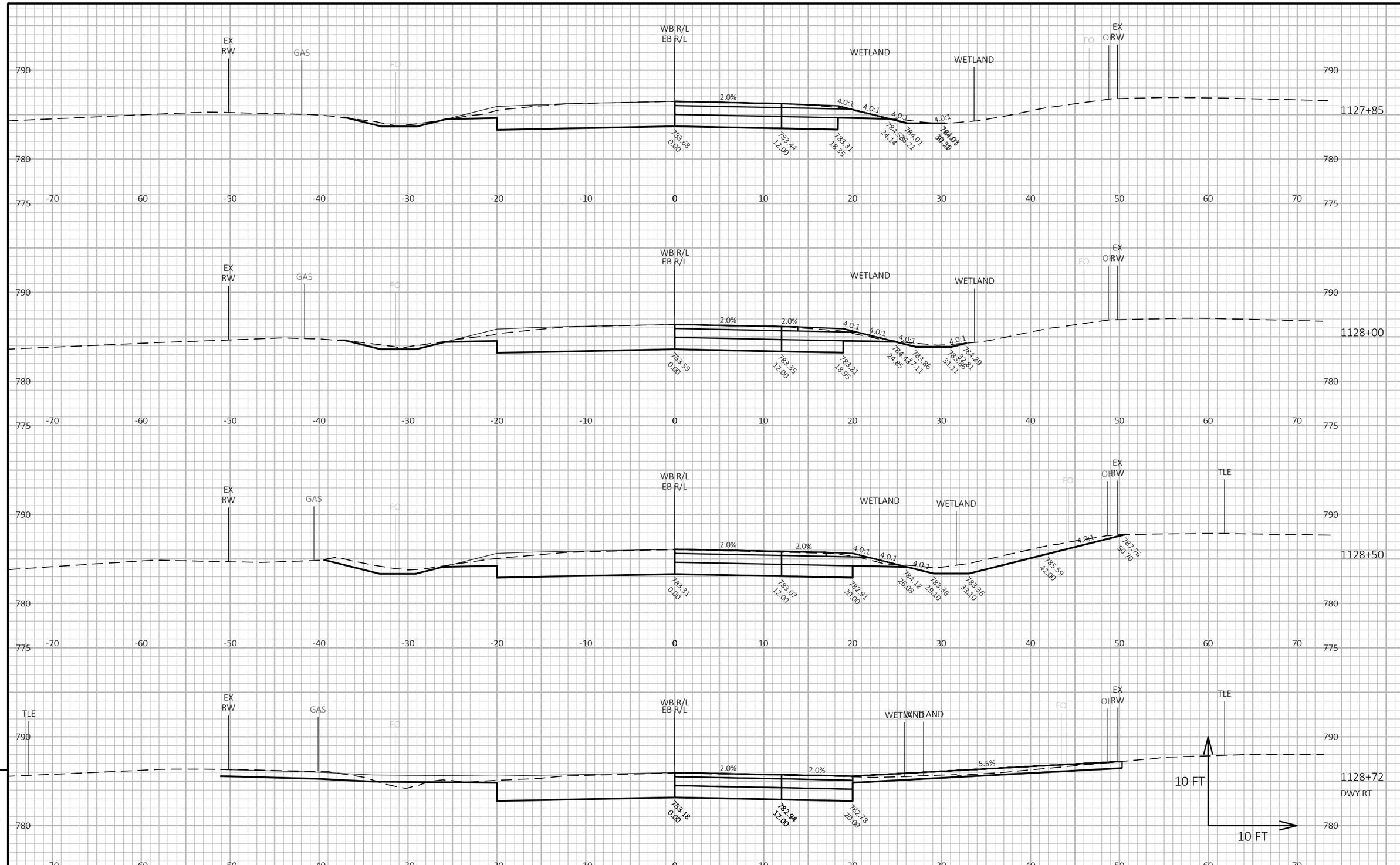

9

9

PROJECT NO: 2814-03-70	HWY: CTH A	COUNTY: RACINE	CROSS SECTIONS: CTH A EASTBOUND APPROACH	SHEET 180	E

FILE NAME : Y:\54XX\5486.DP22.CTH.A.RCN.INTRSCTN.CTH.J\CADDS\28140300\SHEETS\090201-XS.DWG
LAYOUT NAME - EB App 1

PLOT DATE : 2/19/2025 7:53 AM

PLOT BY : NICHOLAS BECKER

PLOT NAME :

PLOT SCALE : 1 IN:10 FT HORZ. / 1 IN:10 FT VERT.

WISDOT/CADDS SHEET 49

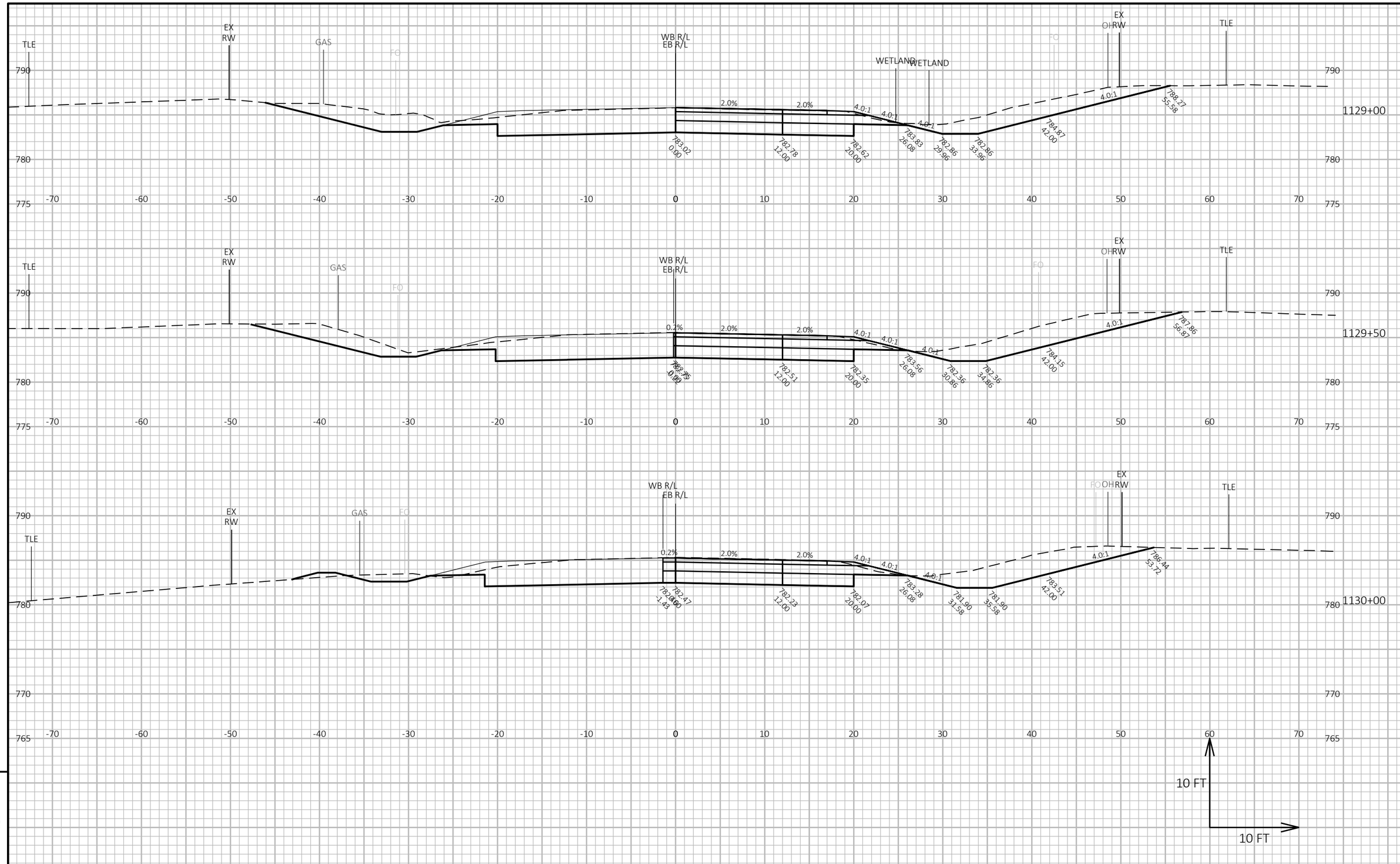

9

9

PROJECT NO: 2814-03-70	HWY: CTH A	COUNTY: RACINE	CROSS SECTIONS: CTH A EASTBOUND APPROACH	SHEET 181	E

FILE NAME : Y:\54XX\5486.DP22.CTH.A.RCN.INTRSCTN.CTH.J\CADDS\28140300\SHEETS\090201-XS.DWG
LAYOUT NAME - EB App 2
PLOT DATE : 2/19/2025 7:53 AM
PLOT BY : NICHOLAS BECKER
PLOT NAME :
PLOT SCALE : 1 IN:10 FT HORZ. / 1 IN:10 FT VERT.
WISDOT/CADDS SHEET 49

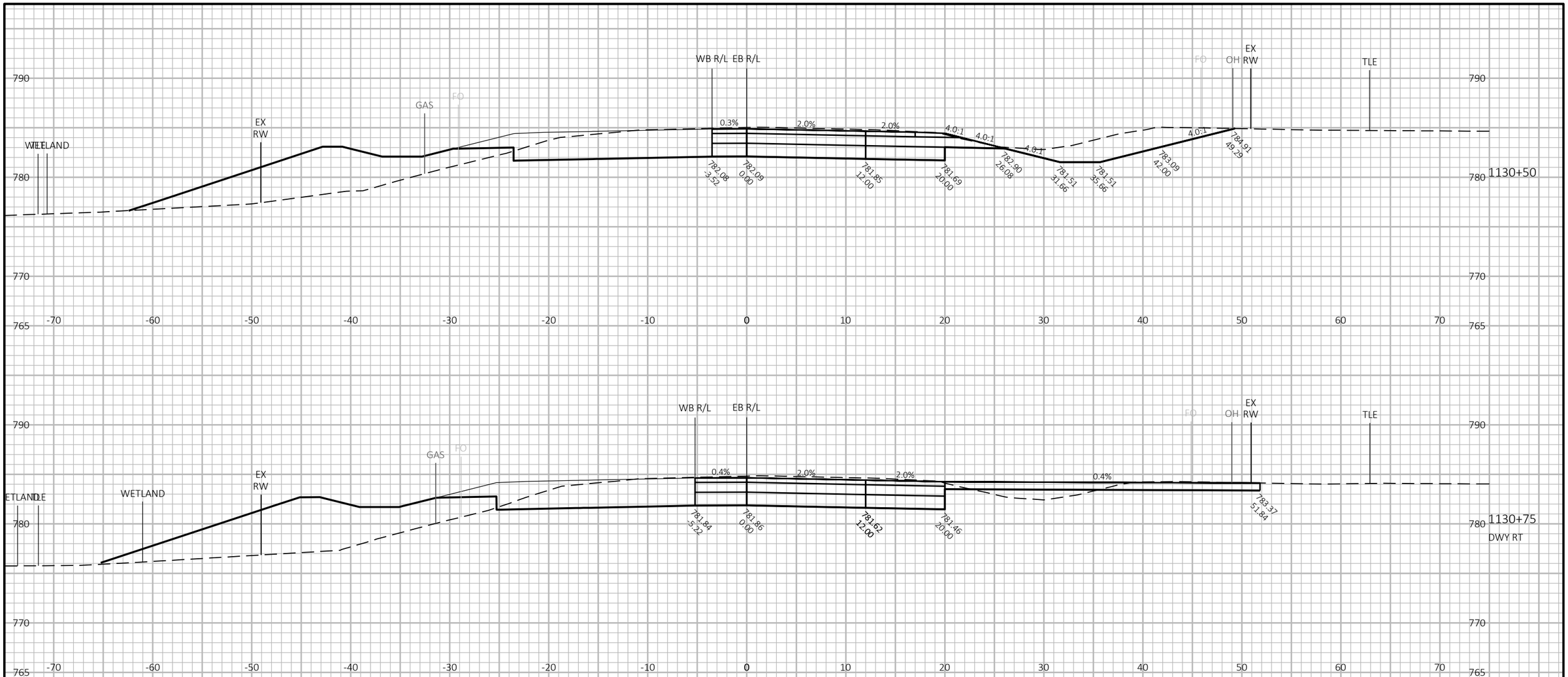

10 FT

10 FT

9

9

PROJECT NO: 2814-03-70	HWY: CTH A	COUNTY: RACINE	CROSS SECTIONS: CTH A EASTBOUND APPROACH	SHEET 182	E

FILE NAME : Y:\54XX\5486.DP22.CTH.A.RCN.INTRSCTN.CTH.J\CADDS\28140300\SHEETS\090201-XS.DWG
LAYOUT NAME - EB App 3

PLOT DATE : 2/19/2025 7:53 AM PLOT BY : NICHOLAS BECKER PLOT NAME : PLOT SCALE : 1 IN:10 FT HORZ. / 1 IN:10 FT VERT.

WISDOT/CADDS SHEET 49

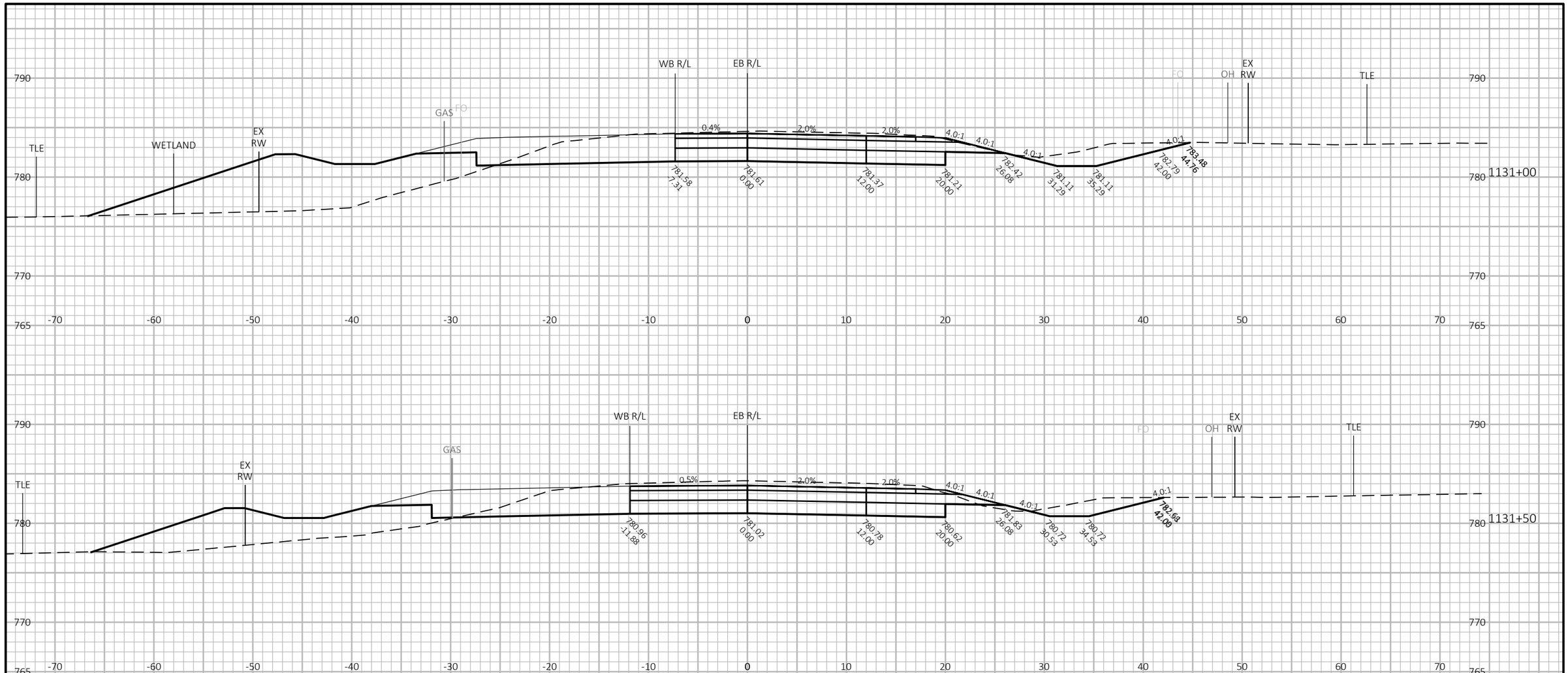

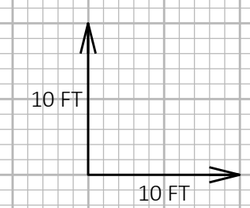

9

9

PROJECT NO: 2814-03-70	HWY: CTH A	COUNTY: RACINE	CROSS SECTIONS: CTH A EASTBOUND APPROACH	SHEET 183	E

FILE NAME : Y:\54XX\5486.DP22.CTH.A.RCN.INTRSCTN.CTH.J\CADDS\28140300\SHEETS\090201-XS.DWG
LAYOUT NAME - EB App 4
PLOT DATE : 2/19/2025 7:53 AM
PLOT BY : NICHOLAS BECKER
PLOT NAME :
PLOT SCALE : 1 IN:10 FT HORZ. / 1 IN:10 FT VERT.
WISDOT/CADDS SHEET 49

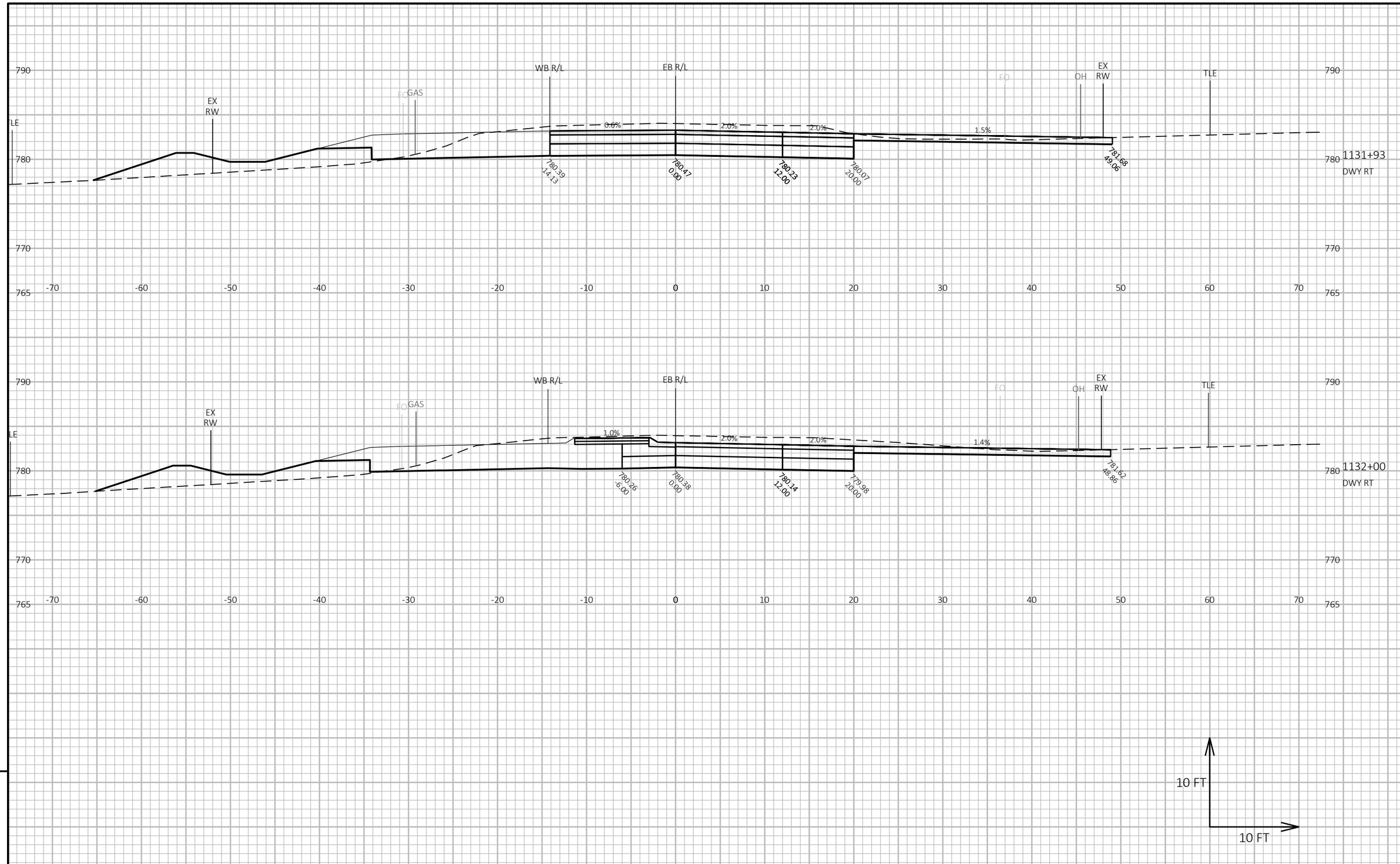

9

9

PROJECT NO: 2814-03-70	HWY: CTH A	COUNTY: RACINE	CROSS SECTIONS: CTH A EASTBOUND APPROACH	SHEET 184	E

FILE NAME : Y:\54XX\5486.DP22.CTH.A.RCN.INTRSCTN.CTH.J\CADDS\28140300\SHEETS\090201-XS.DWG
LAYOUT NAME - EB App 5

PLOT DATE : 2/19/2025 7:53 AM PLOT BY : NICHOLAS BECKER PLOT NAME : **PLOT SCALE :** 1 IN:10 FT HORZ. / 1 IN:10 FT VERT.

WISDOT/CADDS SHEET 49

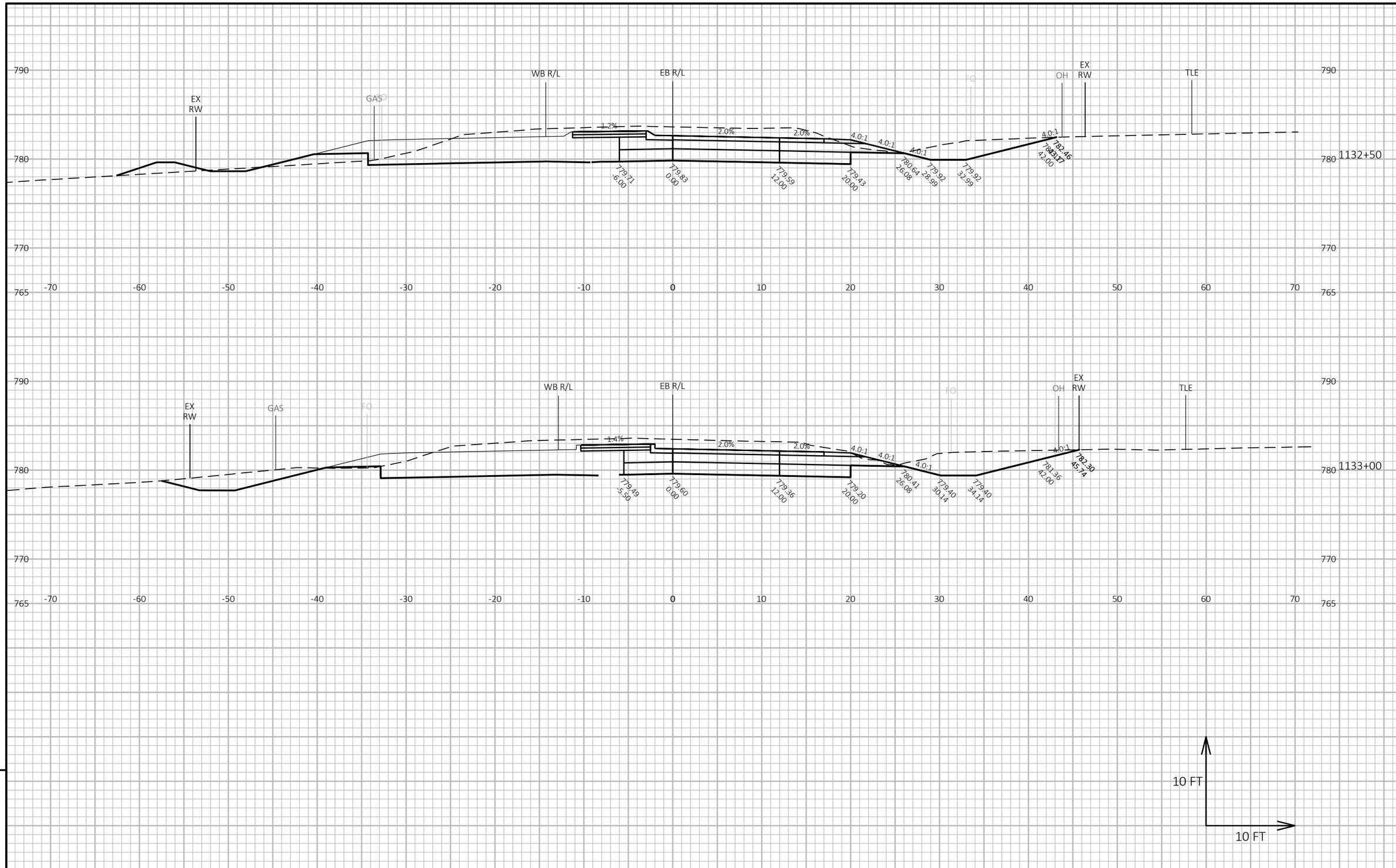

9

9

PROJECT NO: 2814-03-70	HWY: CTH A	COUNTY: RACINE	CROSS SECTIONS: CTH A EASTBOUND APPROACH	SHEET 185	E

FILE NAME : Y:\54XX\5486.DP22.CTH.A.RCN.INTRSCTN.CTH.J\CADDS\28140300\SHEETS\090201-XS.DWG
LAYOUT NAME - EB App 6

PLOT DATE : 2/19/2025 7:53 AM PLOT BY : NICHOLAS BECKER PLOT NAME : **PLOT SCALE :** 1 IN:10 FT HORZ. / 1 IN:10 FT VERT.

WISDOT/CADDS SHEET 49

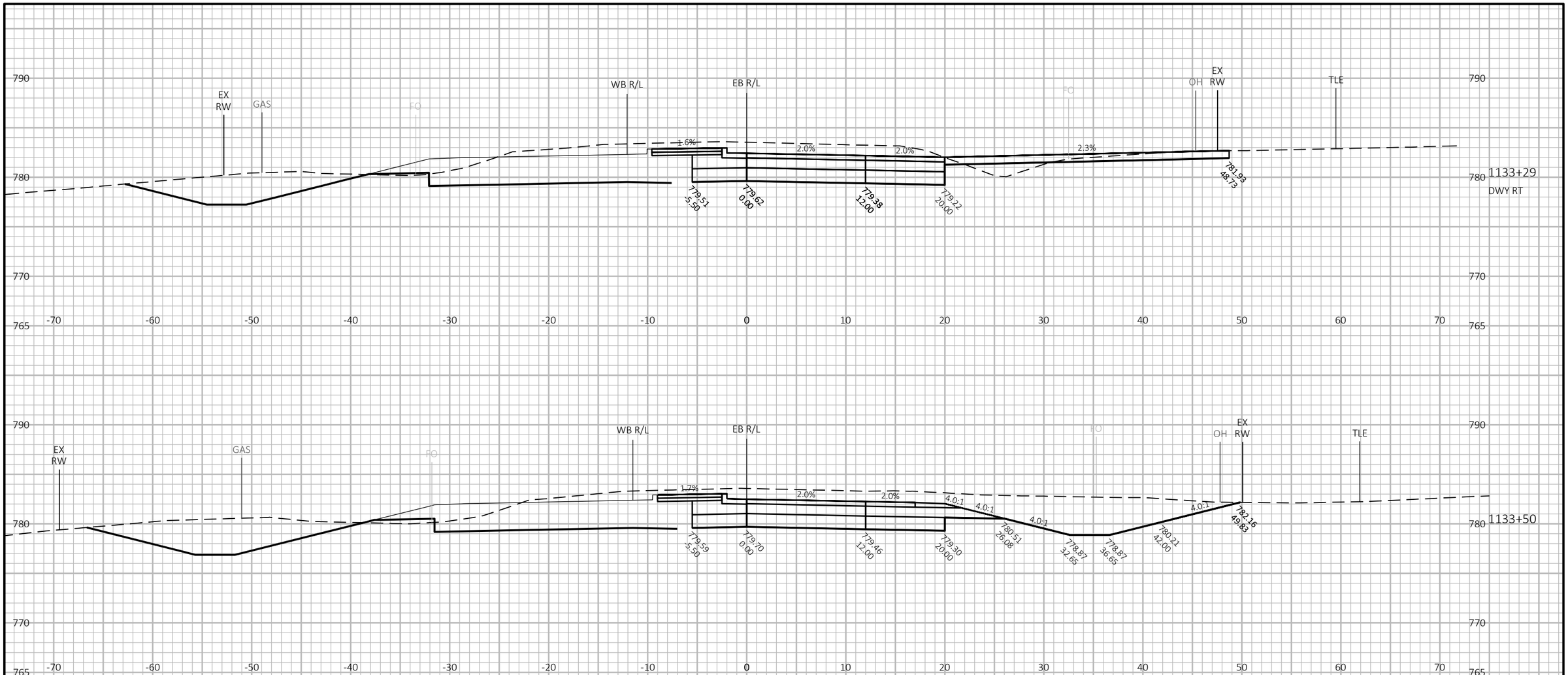

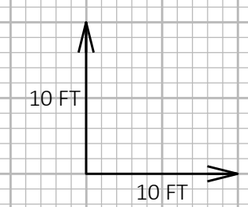

9

9

PROJECT NO: 2814-03-70	HWY: CTH A	COUNTY: RACINE	CROSS SECTIONS: CTH A EASTBOUND APPROACH	SHEET 186	E

FILE NAME : Y:\54XX\5486.DP22.CTH.A.RCN.INTRSCTN.CTH.J\CADDS\28140300\SHEETS\090201-XS.DWG
LAYOUT NAME - EB App 7
PLOT DATE : 2/19/2025 7:53 AM
PLOT BY : NICHOLAS BECKER
PLOT NAME :
PLOT SCALE : 1 IN:10 FT HORZ. / 1 IN:10 FT VERT.

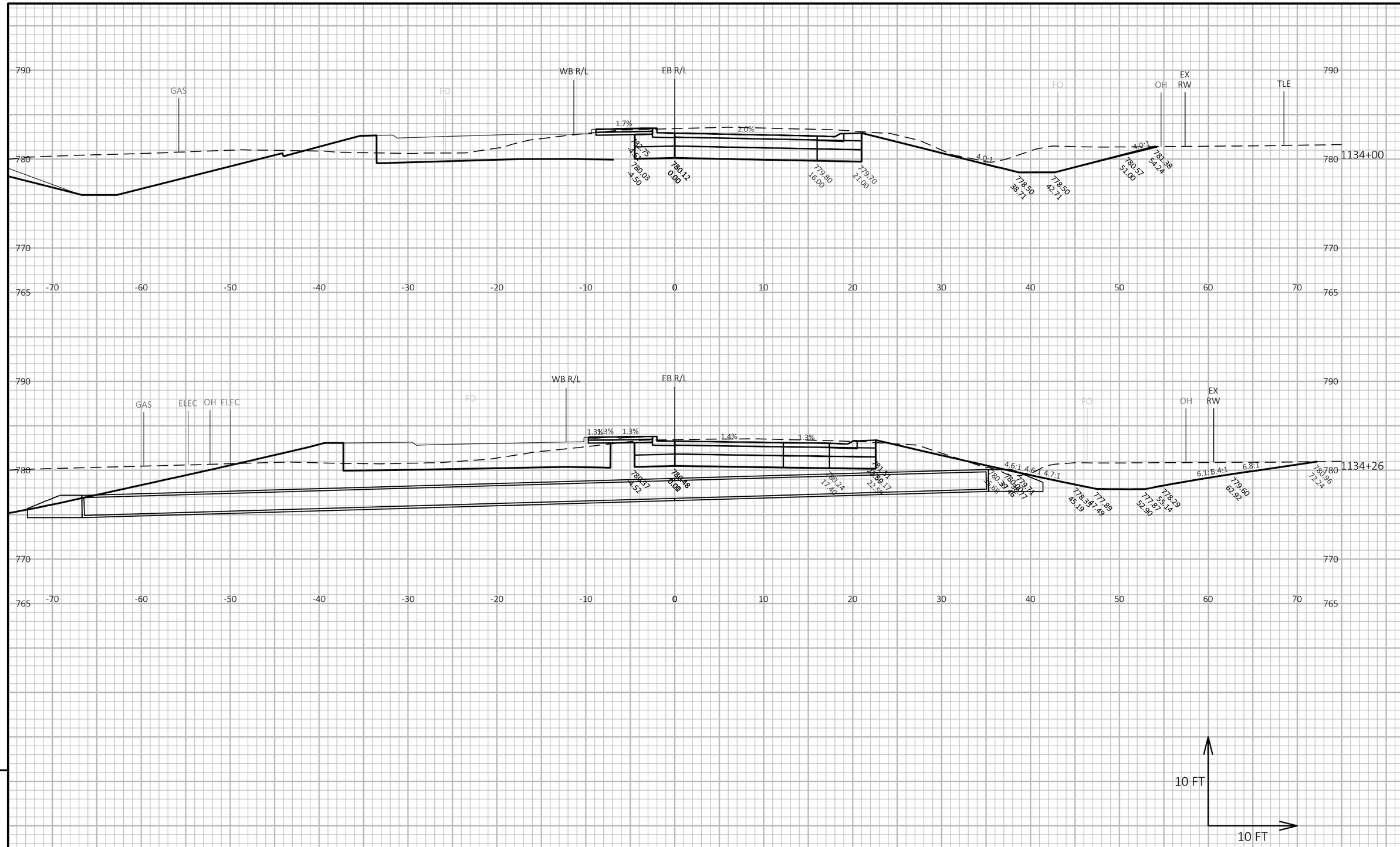

9

9

PROJECT NO: 2814-03-70	HWY: CTH A	COUNTY: RACINE	CROSS SECTIONS: CTH A EASTBOUND APPROACH	SHEET 187	E

FILE NAME : Y:\54XX\5486.DP22.CTH.A.RCN.INTRSCTN.CTH.J\CADDS\28140300\SHEETS\090201-XS.DWG
LAYOUT NAME - EB App 8

PLOT DATE : 2/19/2025 7:53 AM PLOT BY : NICHOLAS BECKER PLOT NAME : PLOT SCALE : 1 IN:10 FT HORZ. / 1 IN:10 FT VERT.

WISDOT/CADDS SHEET 49

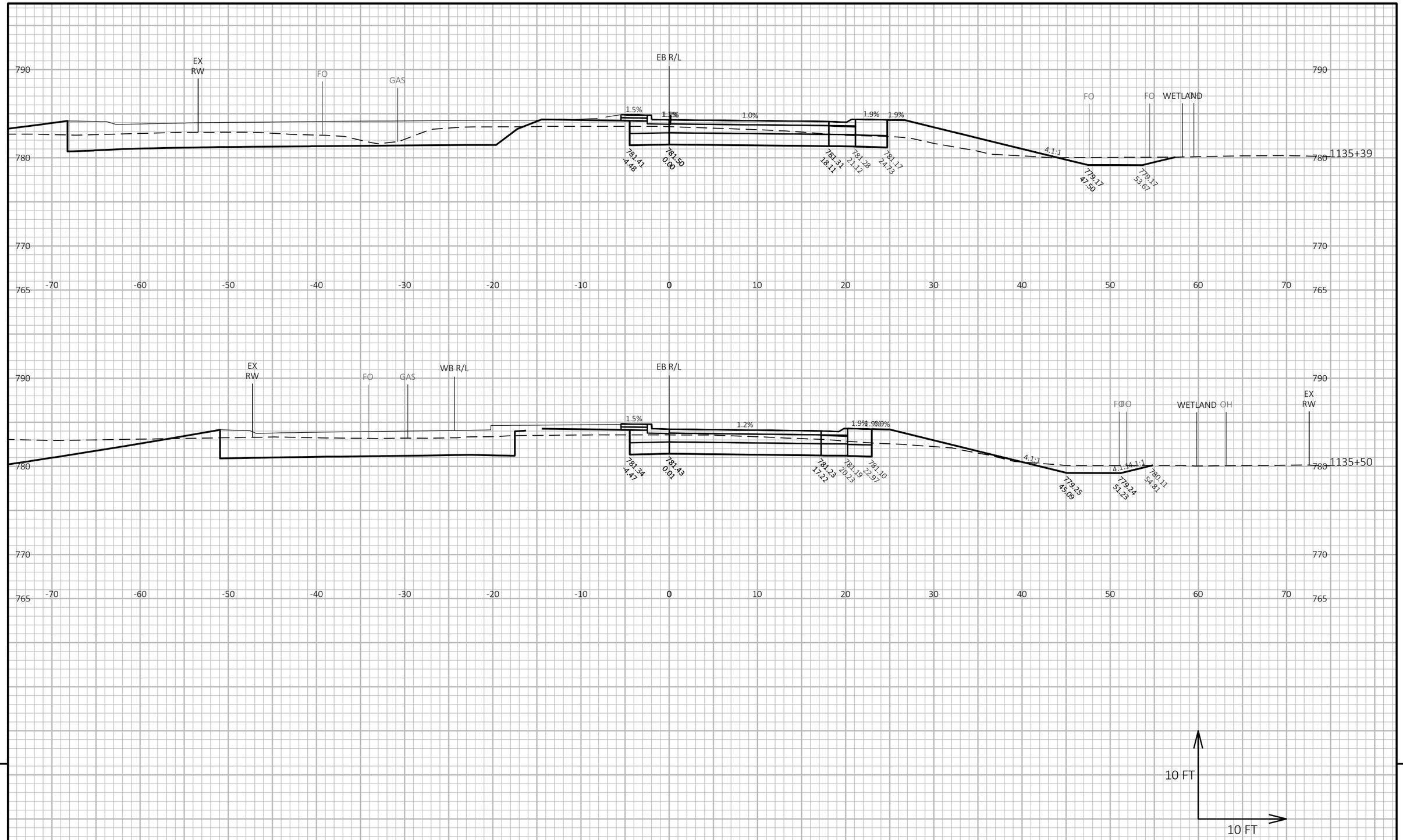

9

9

PROJECT NO: 2814-03-70	HWY: CTH A	COUNTY: RACINE	CROSS SECTIONS: CTH A EASTBOUND EXIT	SHEET 188	E

FILE NAME : Y:\54XX\5486.DP22.CTH.A.RCN.INTRSCTN.CTH.J\CADDS\28140300\SHEETS\090201-XS.DWG
LAYOUT NAME - EB Exit 1

PLOT DATE : 2/19/2025 7:53 AM PLOT BY : NICHOLAS BECKER PLOT NAME : PLOT SCALE : 1 IN:10 FT HORZ. / 1 IN:10 FT VERT.

WISDOT/CADDS SHEET 49

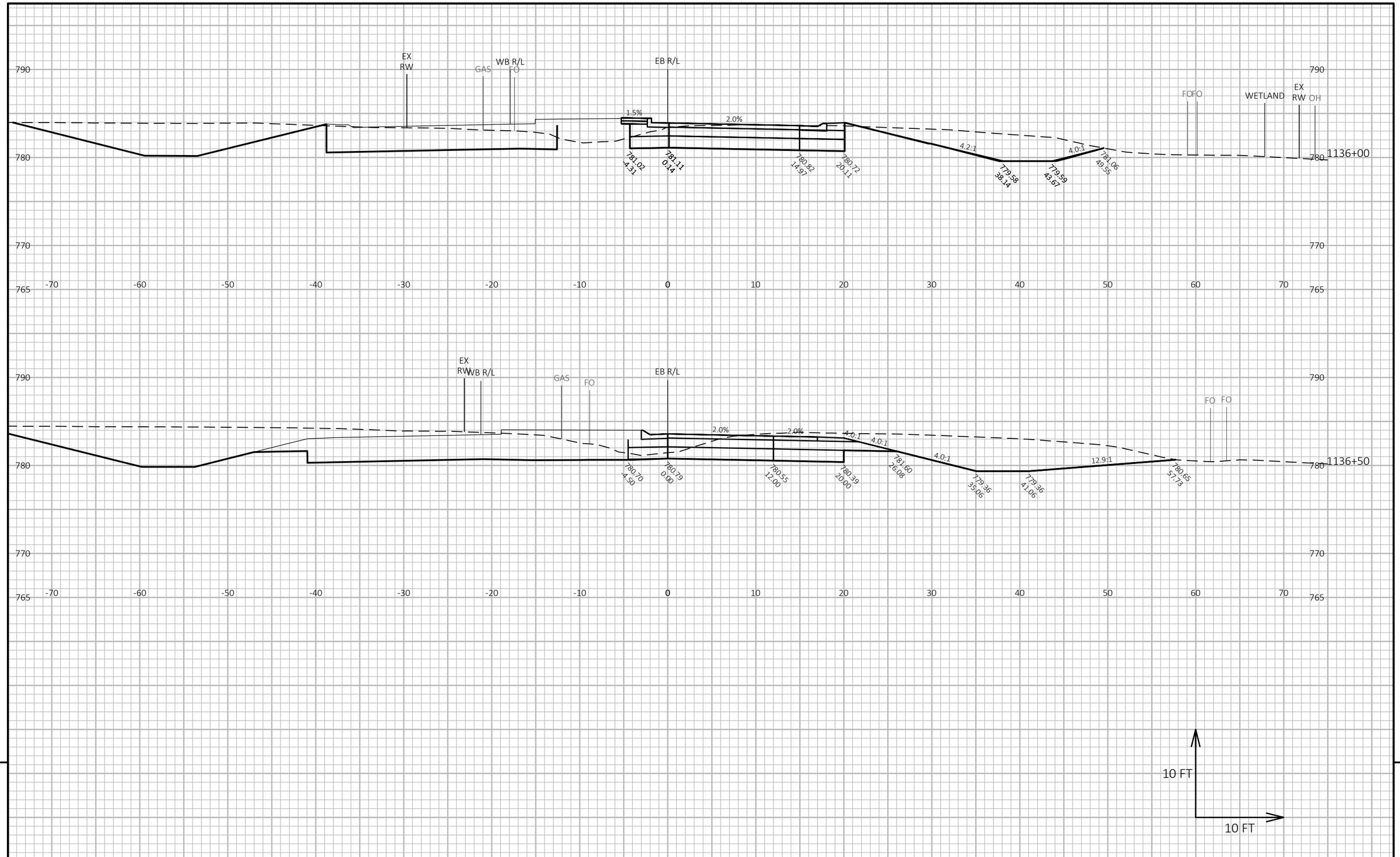

PROJECT NO: 2814-03-70	HWY: CTH A	COUNTY: RACINE	CROSS SECTIONS: CTH A EASTBOUND EXIT	SHEET 189	E

FILE NAME : Y:\54XX\5486.DP22.CTH.A.RCN.INTRSCTN.CTH.J\CADDS\28140300\SHEETS\090201-XS.DWG
LAYOUT NAME - EB Exit 2
PLOT DATE : 2/19/2025 7:54 AM
PLOT BY : NICHOLAS BECKER
PLOT NAME :
PLOT SCALE : 1 IN:10 FT HORZ. / 1 IN:10 FT VERT.
WISDOT/CADDS SHEET 49

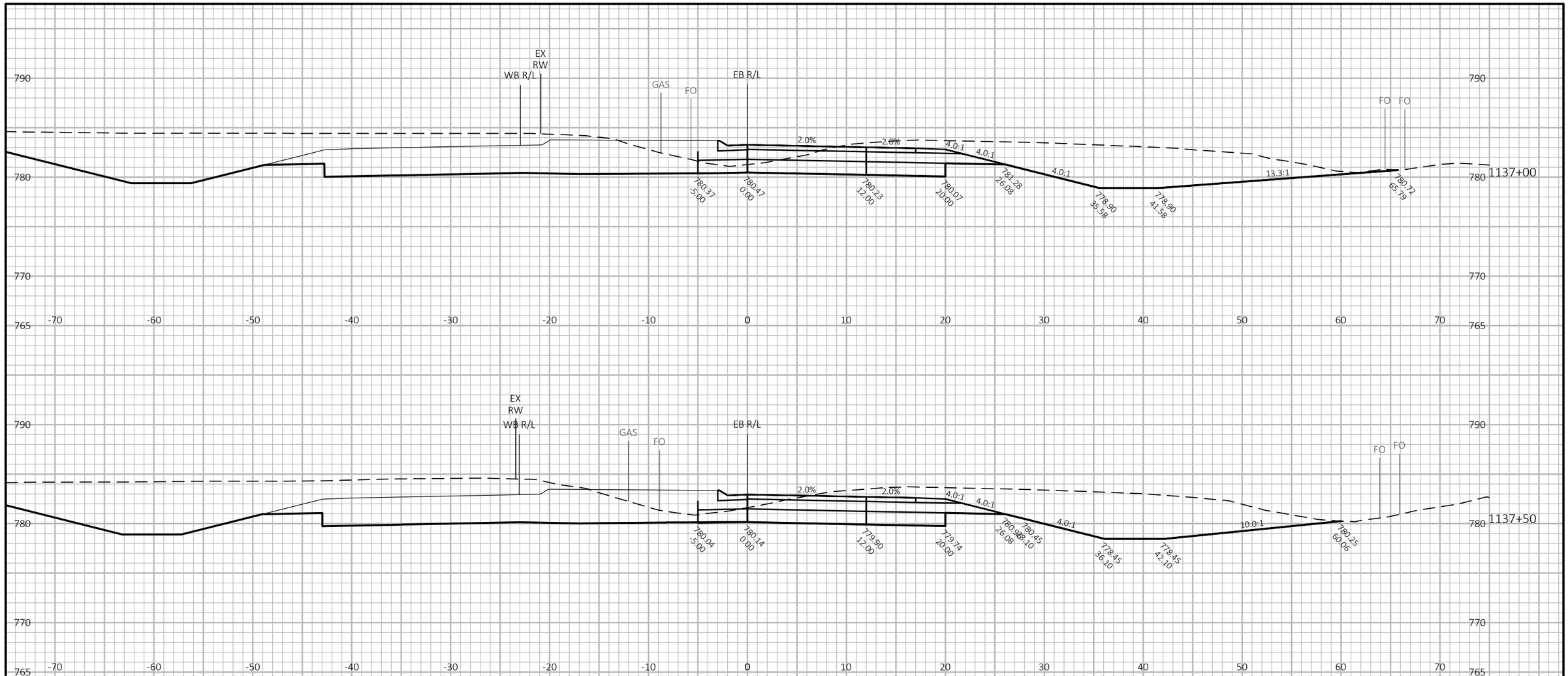

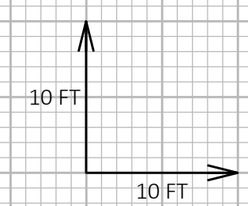

9

9

PROJECT NO: 2814-03-70	HWY: CTH A	COUNTY: RACINE	CROSS SECTIONS: CTH A EASTBOUND EXIT	SHEET 190	E

FILE NAME : Y:\54XX\5486.DP22.CTH.A.RCN.INTRSCTN.CTH.J\CADDS\28140300\SHEETS\090201-XS.DWG
LAYOUT NAME - EB Exit 3

PLOT DATE : 2/19/2025 7:54 AM PLOT BY : NICHOLAS BECKER PLOT NAME : **PLOT SCALE :** 1 IN:10 FT HORZ. / 1 IN:10 FT VERT.

WISDOT/CADDS SHEET 49

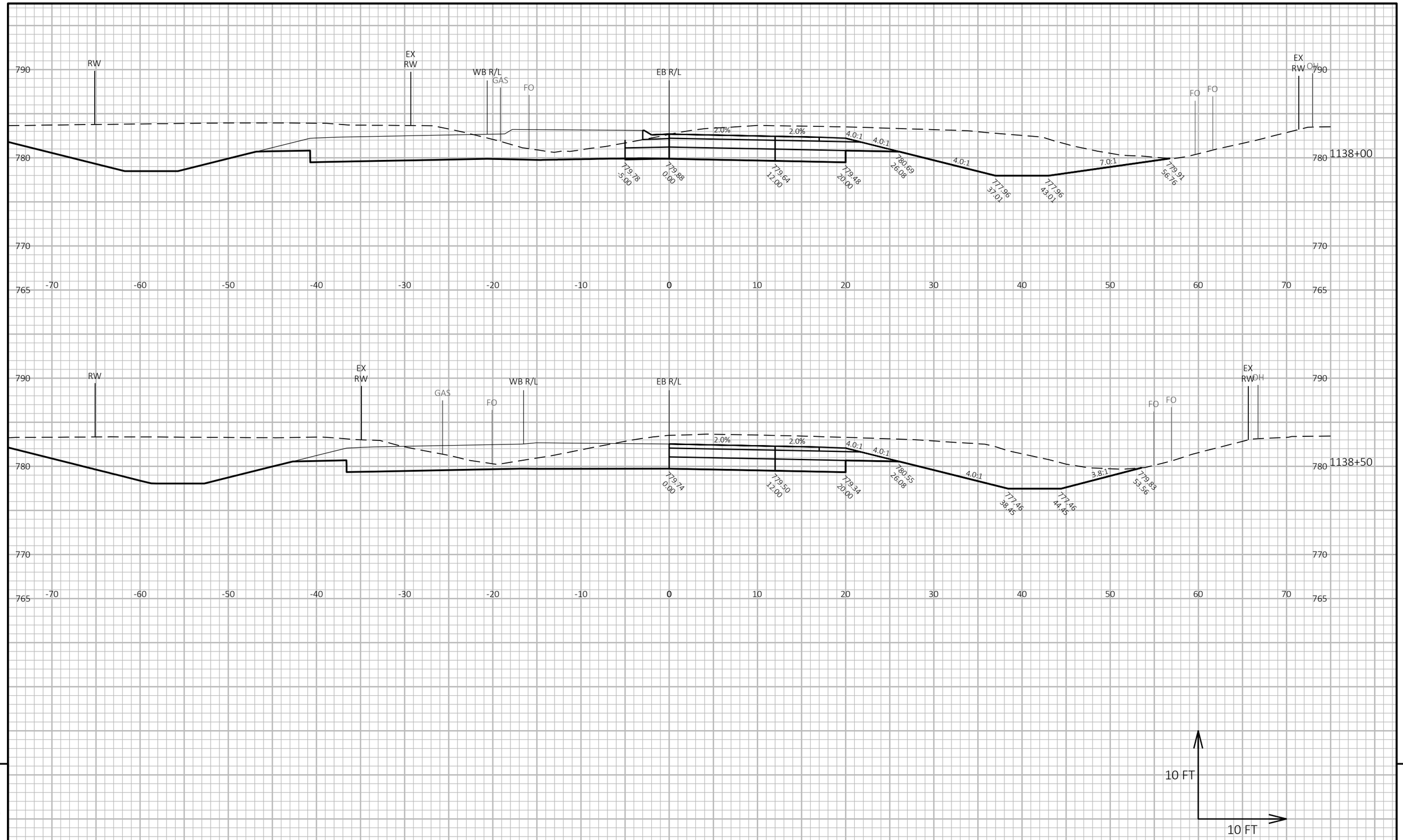

9

9

PROJECT NO: 2814-03-70	HWY: CTH A	COUNTY: RACINE	CROSS SECTIONS: CTH A EASTBOUND EXIT	SHEET 191	E

FILE NAME : Y:\54XX\5486.DP22.CTH.A.RCN.INTRSCTN.CTH.J\CADDS\28140300\SHEETS\090201-XS.DWG
LAYOUT NAME - EB Exit 4

PLOT DATE : 2/19/2025 7:54 AM PLOT BY : NICHOLAS BECKER PLOT NAME : PLOT SCALE : 1 IN:10 FT HORZ. / 1 IN:10 FT VERT.

WISDOT/CADDS SHEET 49

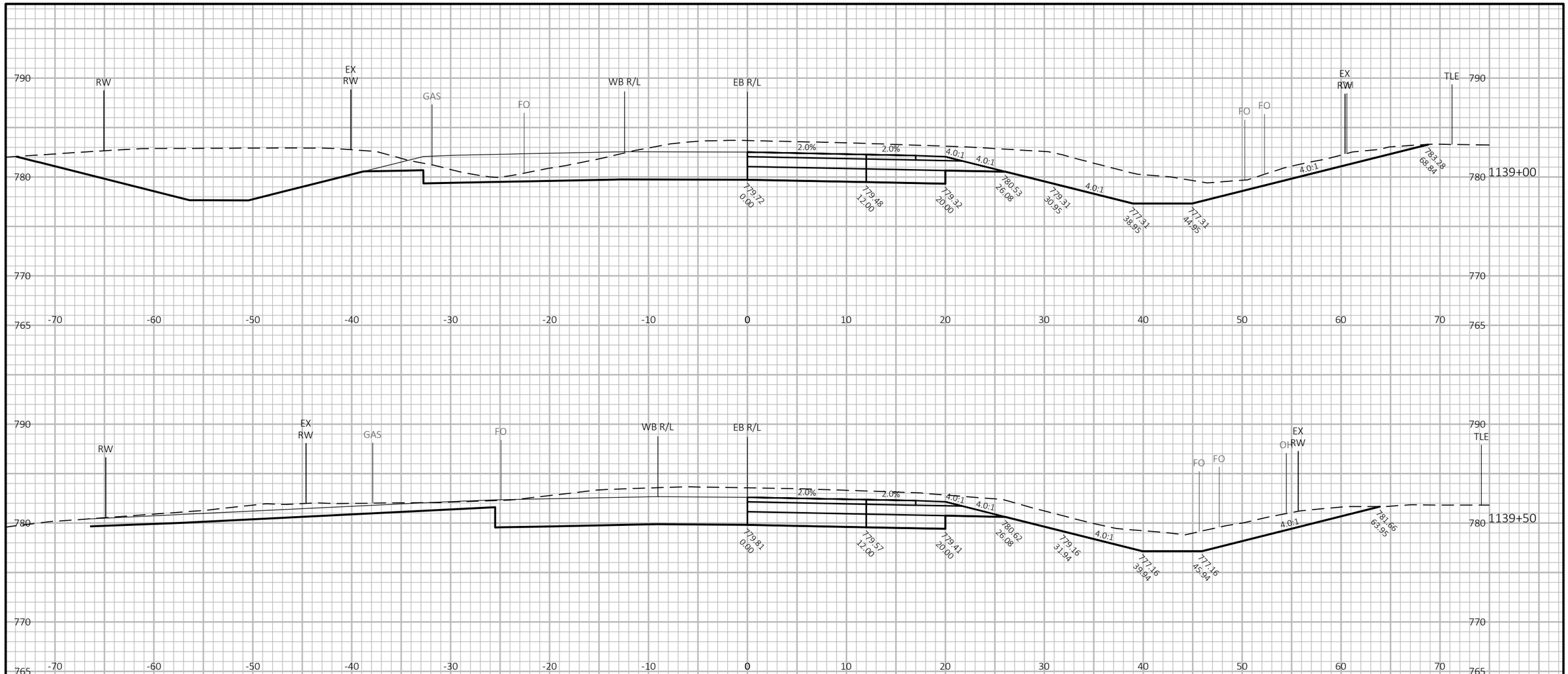

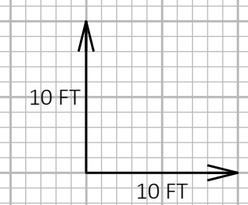

9

9

PROJECT NO: 2814-03-70	HWY: CTH A	COUNTY: RACINE	CROSS SECTIONS: CTH A EASTBOUND EXIT	SHEET 192	E

FILE NAME : Y:\54XX\5486.DP22.CTH.A.RCN.INTRSCTN.CTH.J\CADDS\28140300\SHEETS\090201-XS.DWG
LAYOUT NAME - EB Exit 5
PLOT DATE : 2/19/2025 7:54 AM
PLOT BY : NICHOLAS BECKER
PLOT NAME :
PLOT SCALE : 1 IN:10 FT HORZ. / 1 IN:10 FT VERT.
WISDOT/CADDS SHEET 49

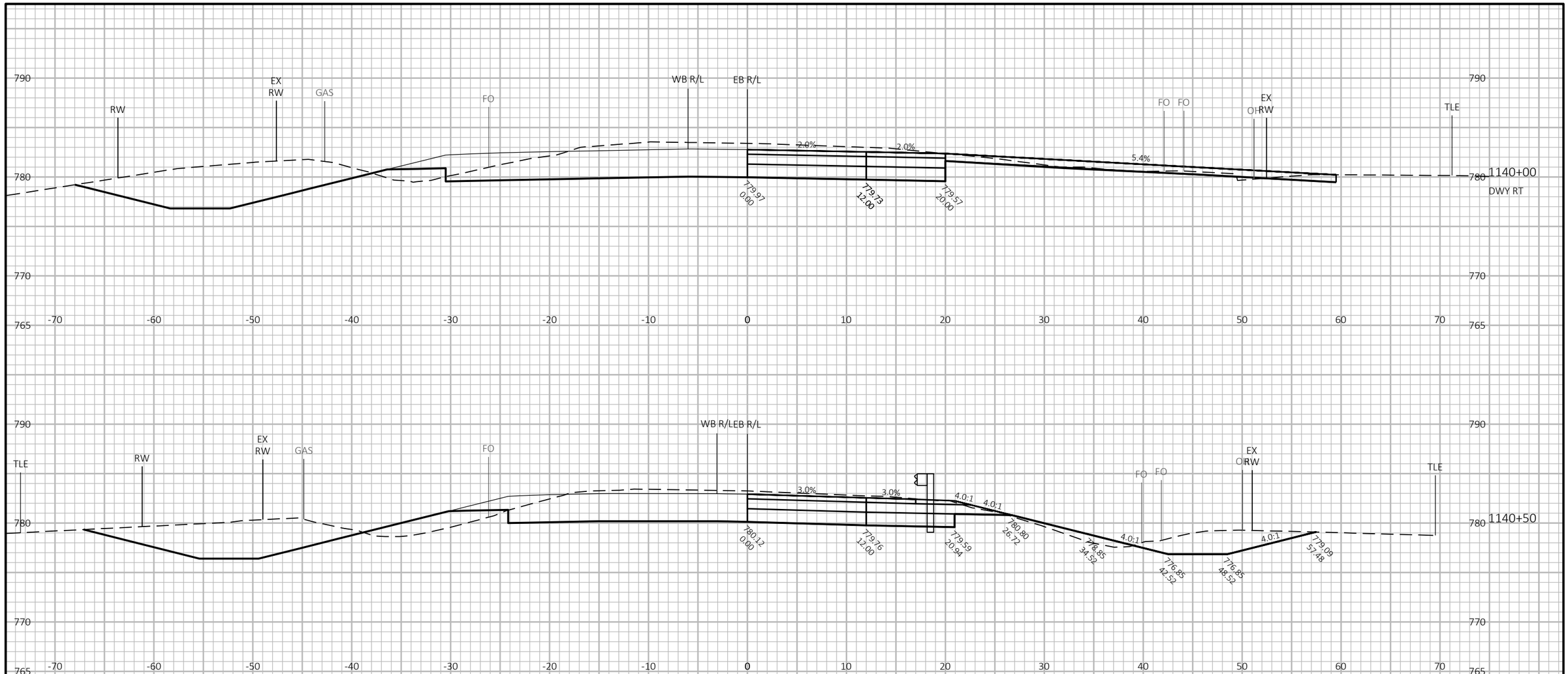

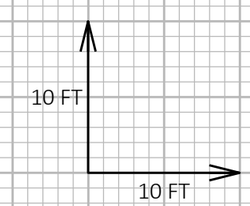

9

9

PROJECT NO: 2814-03-70	HWY: CTH A	COUNTY: RACINE	CROSS SECTIONS: CTH A EASTBOUND EXIT	SHEET 193	E

FILE NAME : Y:\54XX\5486.DP22.CTH.A.RCN.INTRSCTN.CTH.J\CADDS\28140300\SHEETS\090201-XS.DWG
LAYOUT NAME - EB Exit 6

PLOT DATE : 2/19/2025 7:54 AM PLOT BY : NICHOLAS BECKER PLOT NAME : **PLOT SCALE :** 1 IN:10 FT HORZ. / 1 IN:10 FT VERT.

WISDOT/CADDS SHEET 49

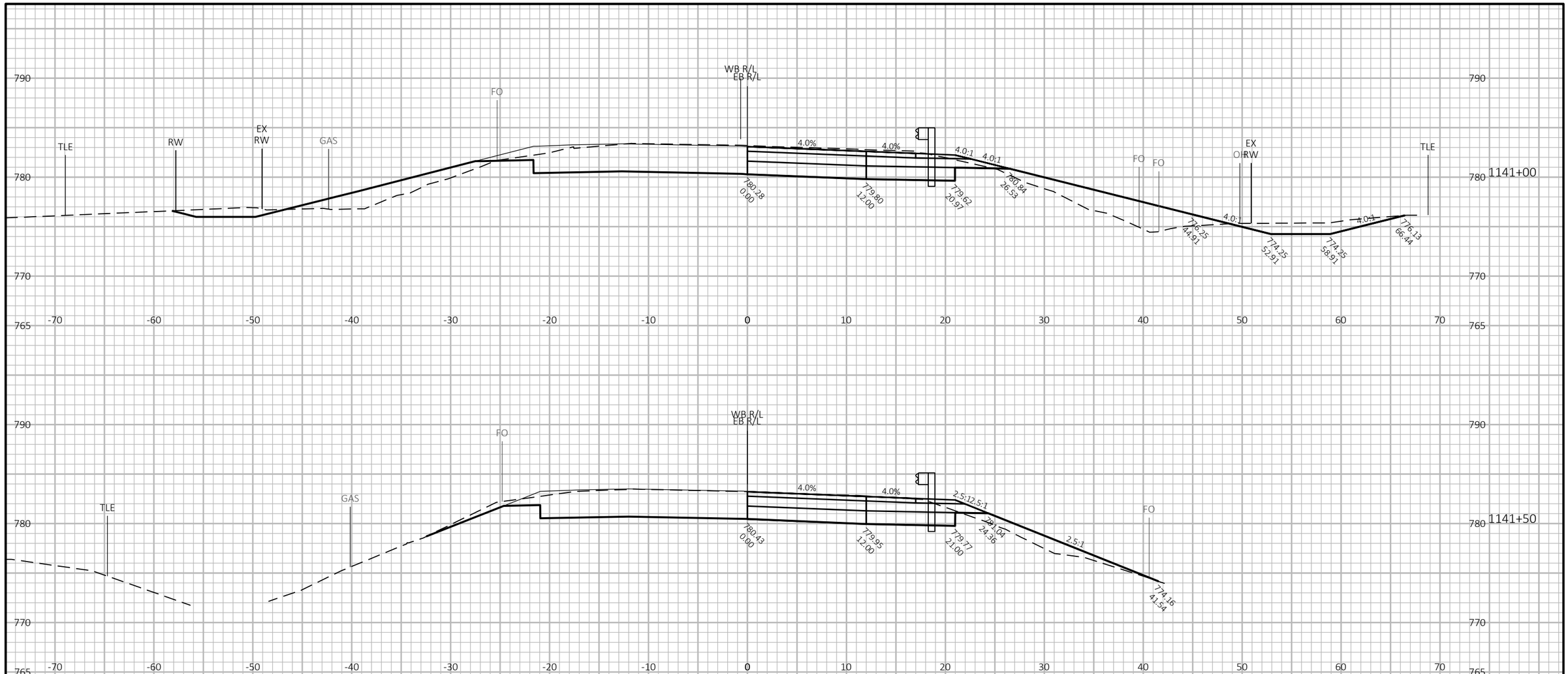

10 FT

10 FT

9

9

PROJECT NO: 2814-03-70	HWY: CTH A	COUNTY: RACINE	CROSS SECTIONS: CTH A EASTBOUND EXIT	SHEET 194	E

FILE NAME : Y:\54XX\5486.DP22.CTH.A.RCN.INTRSCTN.CTH.J\CADDS\28140300\SHEETS\090201-XS.DWG
LAYOUT NAME - EB Exit 7

PLOT DATE : 2/19/2025 7:54 AM PLOT BY : NICHOLAS BECKER PLOT NAME : PLOT SCALE : 1 IN:10 FT HORZ. / 1 IN:10 FT VERT.

WISDOT/CADDS SHEET 49

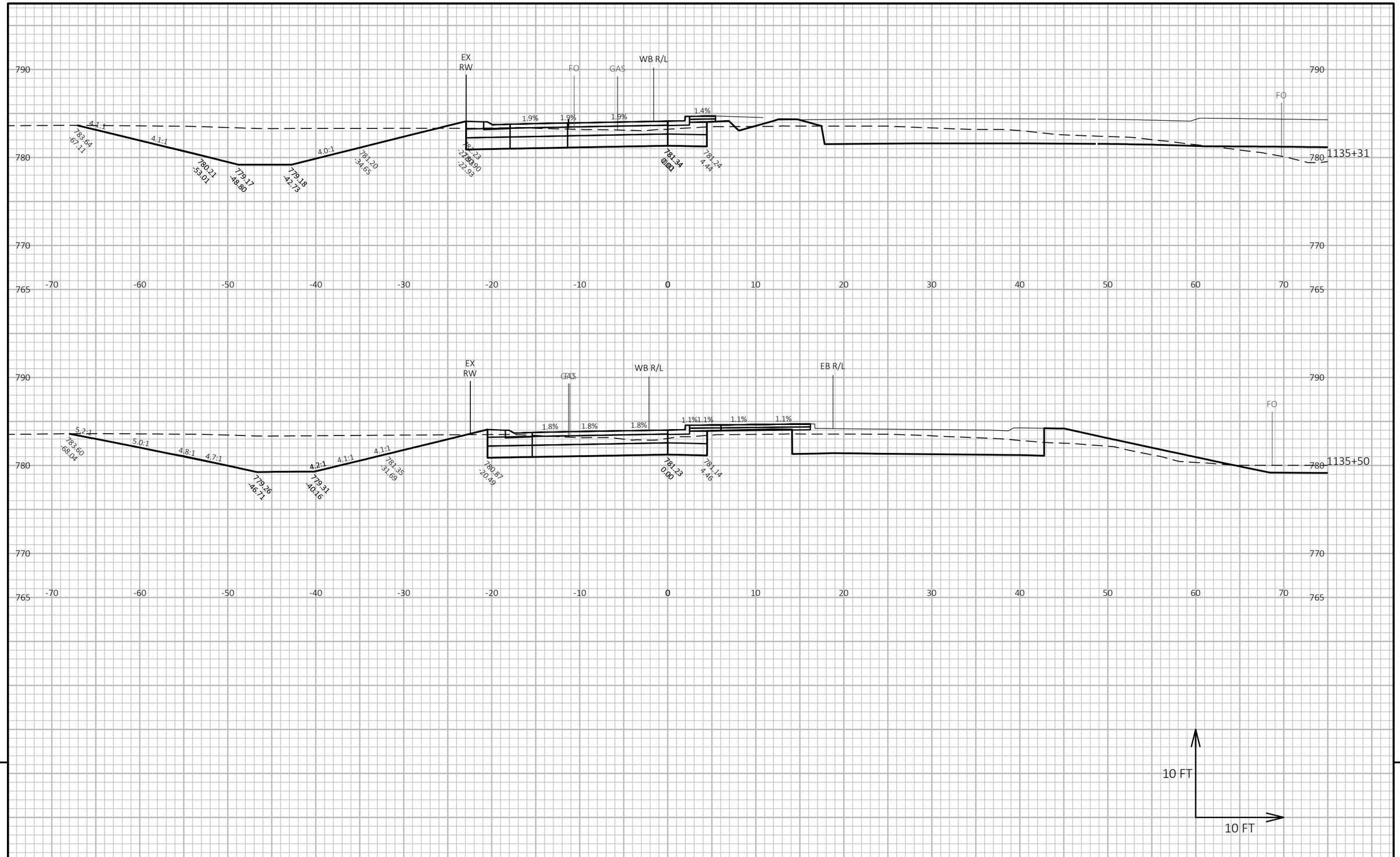

PROJECT NO: 2814-03-70	HWY: CTH A	COUNTY: RACINE	CROSS SECTIONS: CTH A WESTBOUND APPROACH	SHEET 195	E

FILE NAME : Y:\54XX\5486.DP22.CTH.A.RCN.INTRSCTN.CTH.J\CADDS\28140300\SHEETS\090201-XS.DWG
LAYOUT NAME - WB App1
PLOT DATE : 2/19/2025 7:54 AM
PLOT BY : NICHOLAS BECKER
PLOT NAME :
PLOT SCALE : 1 IN:10 FT HORZ. / 1 IN:10 FT VERT.
WISDOT/CADDS SHEET 49

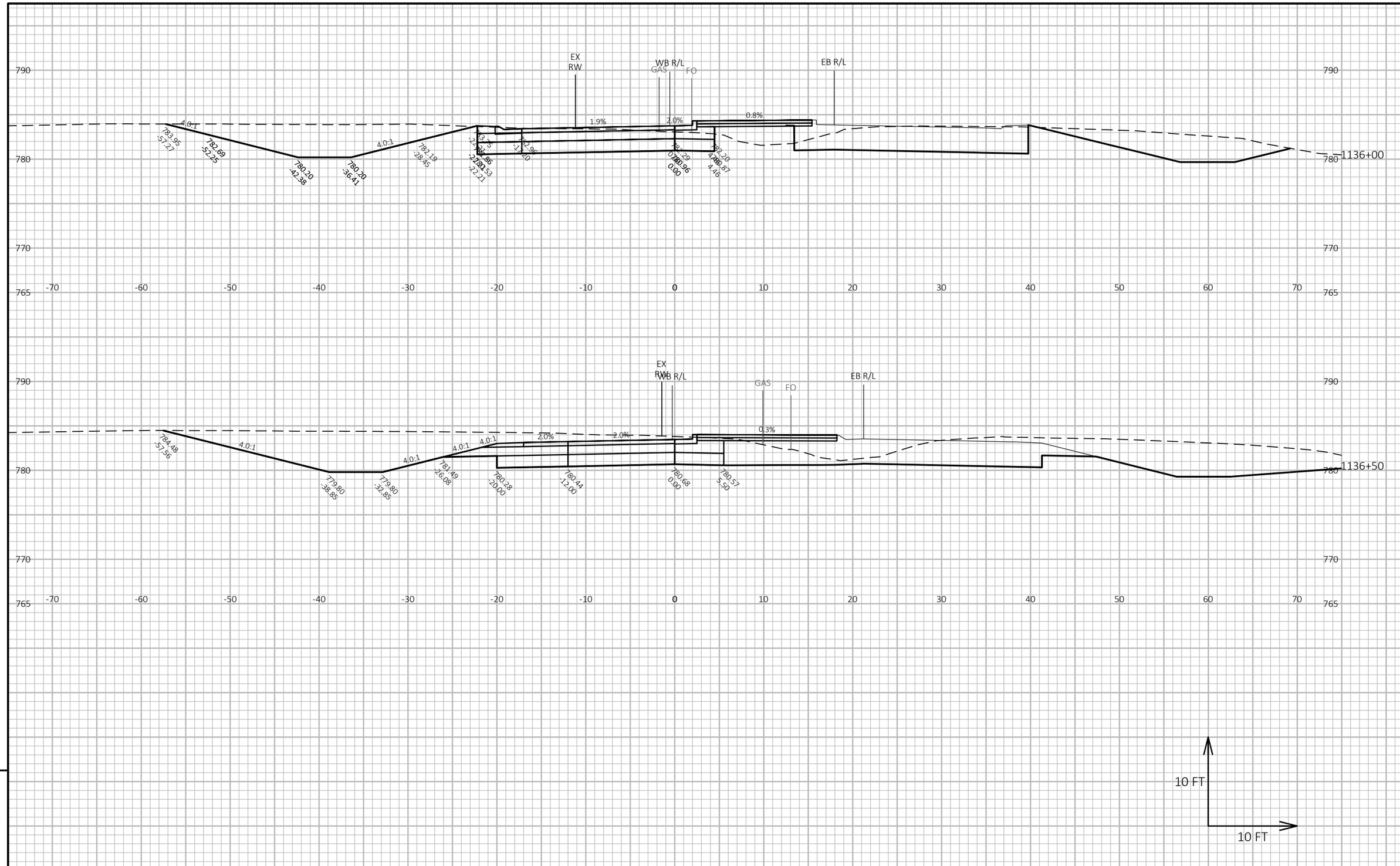

9

9

PROJECT NO: 2814-03-70	HWY: CTH A	COUNTY: RACINE	CROSS SECTIONS: CTH A WESTBOUND APPROACH	SHEET 196	E

FILE NAME : Y:\54XX\5486.DP22.CTH.A.RCN.INTRSCTN.CTH.J\CADDS\28140300\SHEETS\090201-XS.DWG
LAYOUT NAME - WB App2

PLOT DATE : 2/19/2025 7:54 AM PLOT BY : NICHOLAS BECKER PLOT NAME : PLOT SCALE : 1 IN:10 FT HORZ. / 1 IN:10 FT VERT.

WISDOT/CADDS SHEET 49

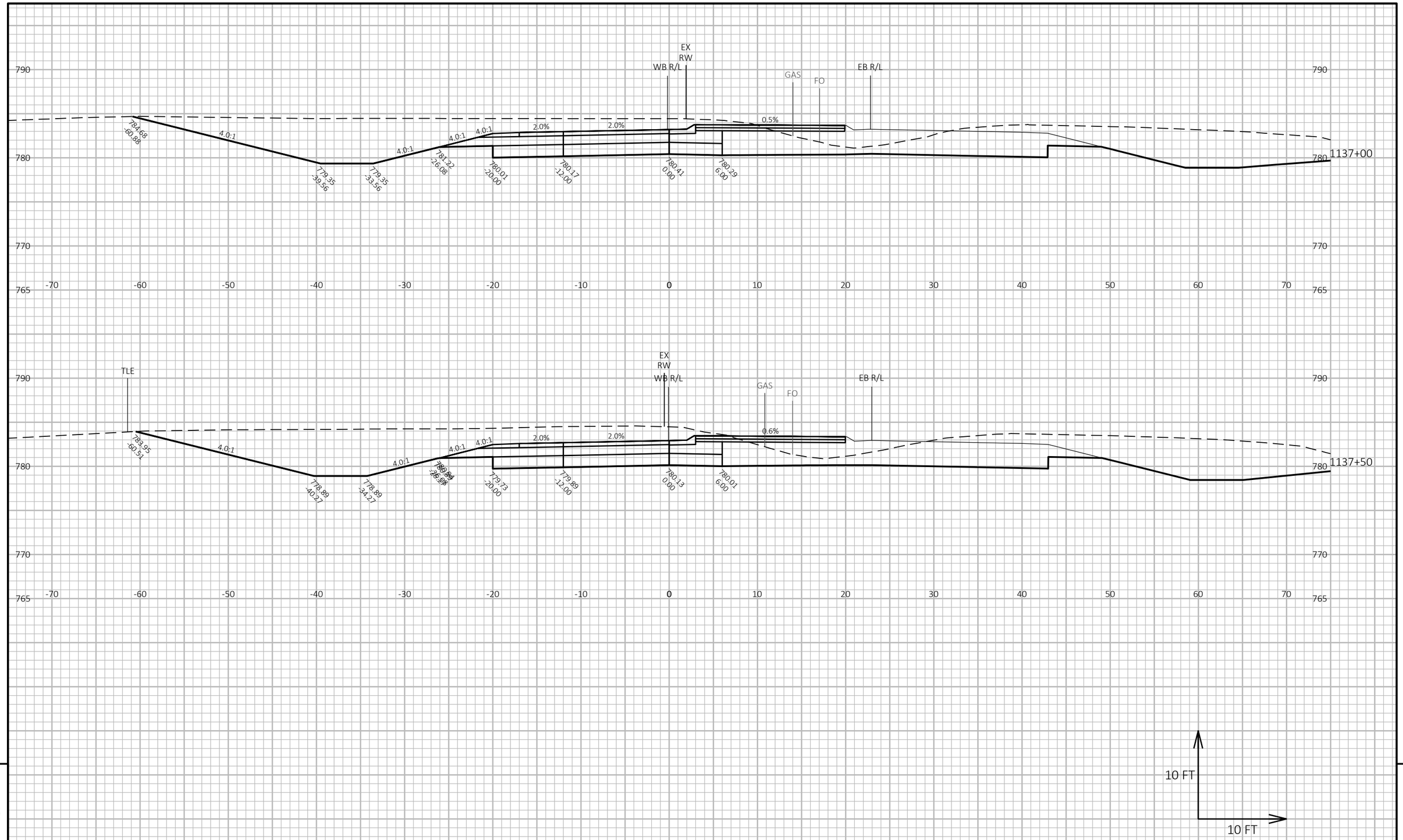

9

9

PROJECT NO: 2814-03-70	HWY: CTH A	COUNTY: RACINE	CROSS SECTIONS: CTH A WESTBOUND APPROACH	SHEET 197	E

FILE NAME : Y:\54XX\5486.DP22.CTH.A.RCN.INTRSCTN.CTH.J\CADDS\28140300\SHEETS\090201-XS.DWG
LAYOUT NAME - WB App3

PLOT DATE : 2/19/2025 7:54 AM PLOT BY : NICHOLAS BECKER PLOT NAME : **PLOT SCALE :** 1 IN:10 FT HORZ. / 1 IN:10 FT VERT.

WISDOT/CADDS SHEET 49

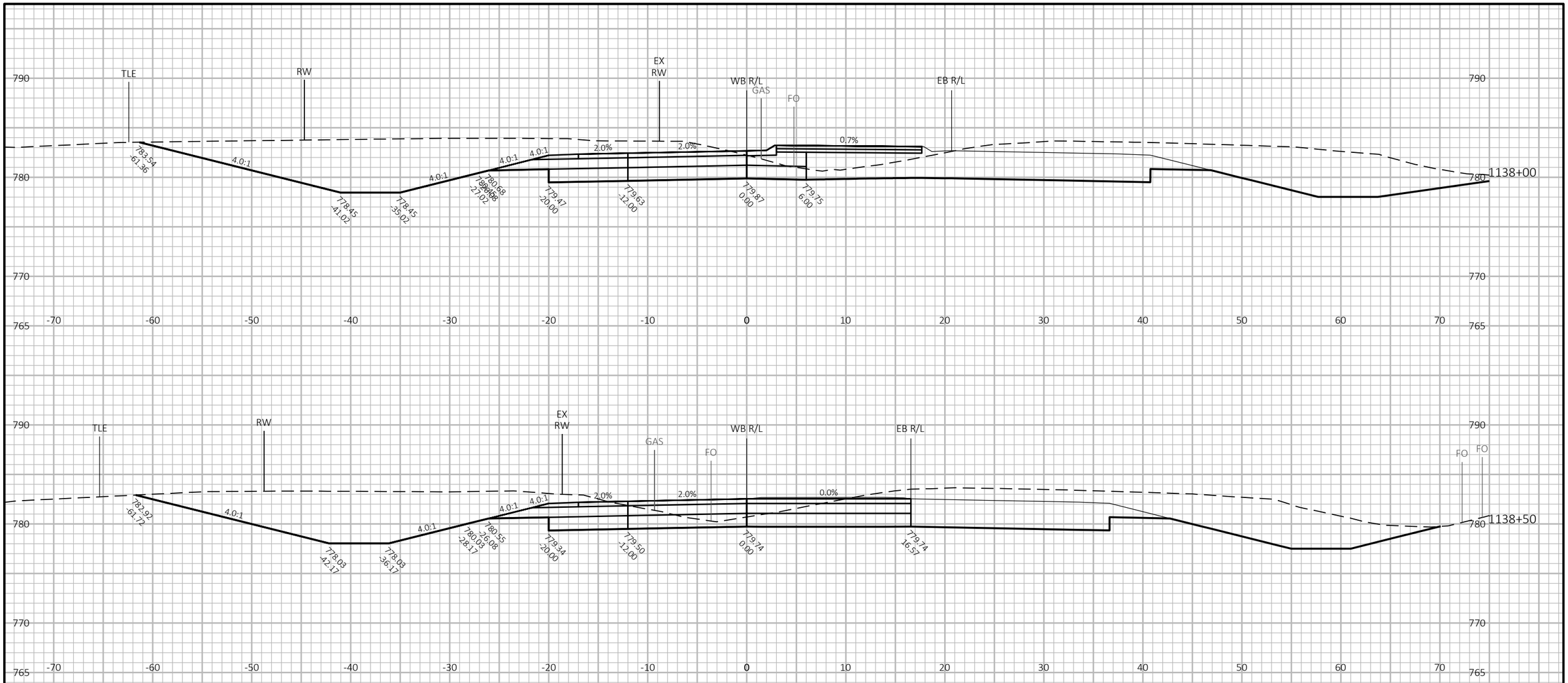

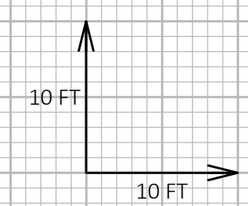

9

9

PROJECT NO: 2814-03-70	HWY: CTH A	COUNTY: RACINE	CROSS SECTIONS: CTH A WESTBOUND APPROACH	SHEET 198	E

FILE NAME : Y:\54XX\5486.DP22.CTH.A.RCN.INTRSCTN.CTH.J\CADDS\28140300\SHEETS\090201-XS.DWG
LAYOUT NAME - WB App4

PLOT DATE : 2/19/2025 7:54 AM PLOT BY : NICHOLAS BECKER PLOT NAME : **PLOT SCALE :** 1 IN:10 FT HORZ. / 1 IN:10 FT VERT.

WISDOT/CADDS SHEET 49

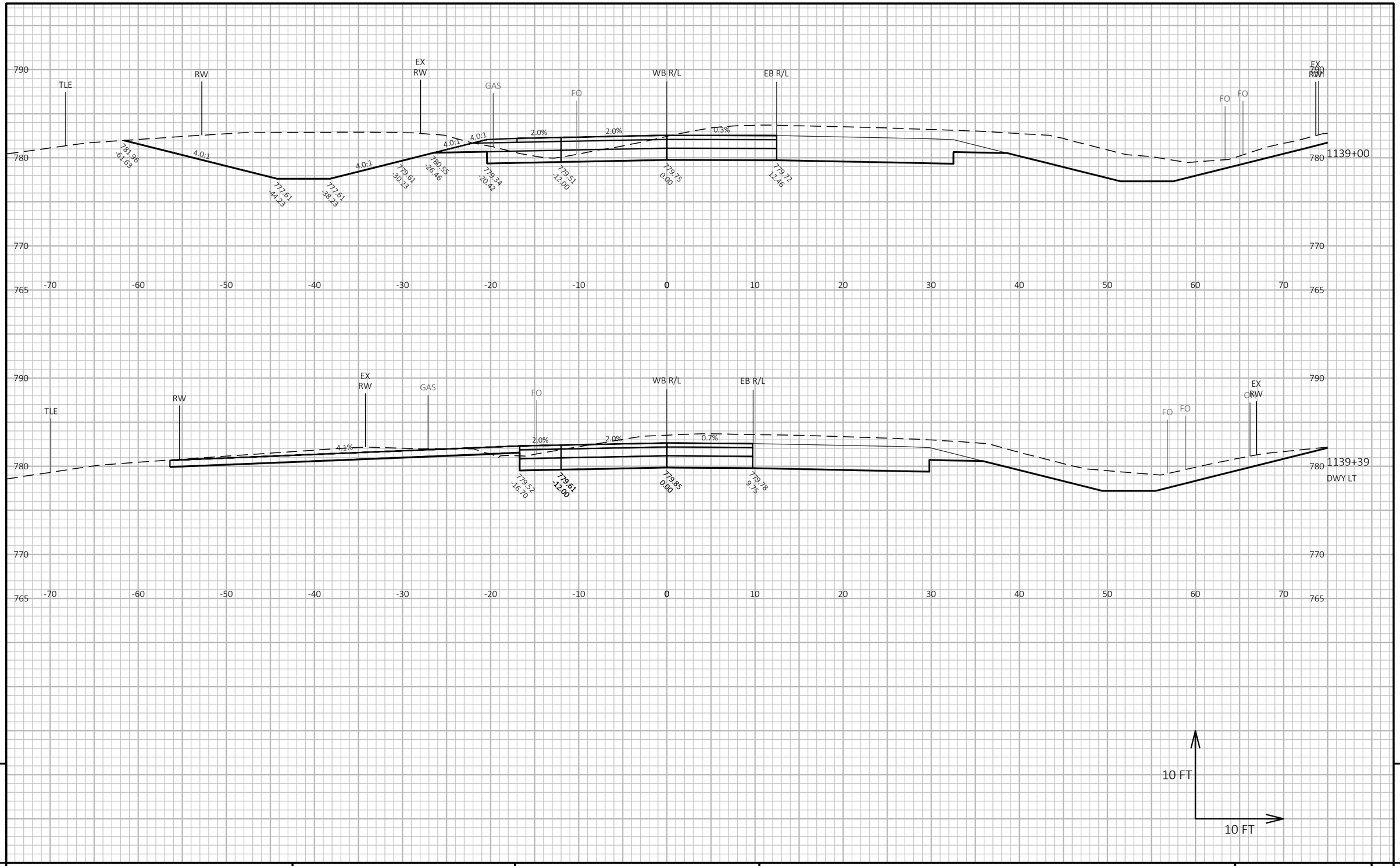

9

9

PROJECT NO: 2814-03-70	HWY: CTH A	COUNTY: RACINE	CROSS SECTIONS: CTH A WESTBOUND APPROACH	SHEET 199	E

FILE NAME : Y:\54XX\5486.DP22.CTH.A.RCN.INTRSCTN.CTH.J\CADDS\28140300\SHEETS\090201-XS.DWG
LAYOUT NAME - WB App5

PLOT DATE : 2/19/2025 7:54 AM PLOT BY : NICHOLAS BECKER PLOT NAME : **PLOT SCALE :** 1 IN:10 FT HORZ. / 1 IN:10 FT VERT.

WISDOT/CADDS SHEET 49

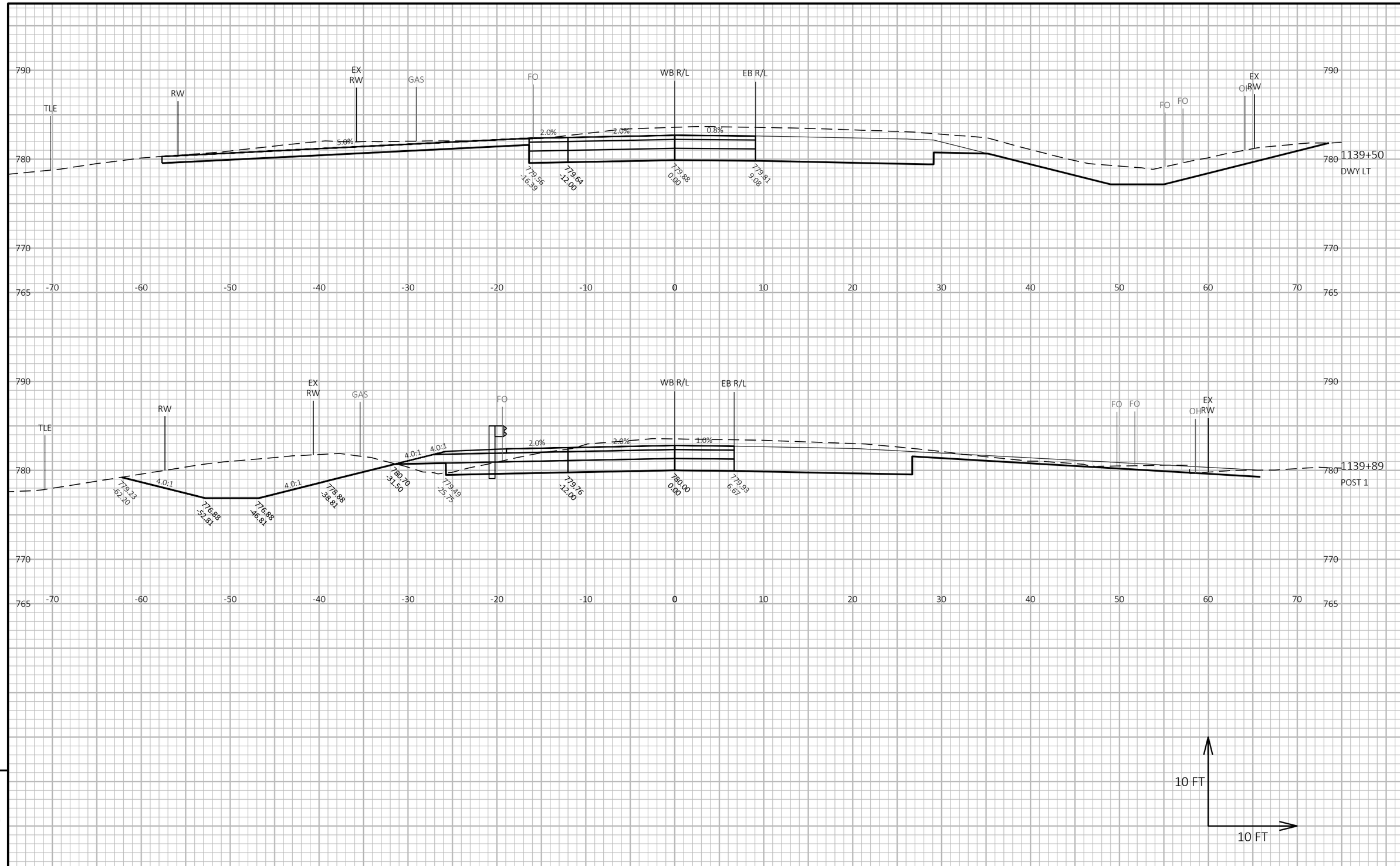

PROJECT NO: 2814-03-70	HWY: CTH A	COUNTY: RACINE	CROSS SECTIONS: CTH A WESTBOUND APPROACH	SHEET 200	E

FILE NAME : Y:\54XX\5486.DP22.CTH.A.RCN.INTRSCTN.CTH.J\CADDS\28140300\SHEETS\090201-XS.DWG
LAYOUT NAME - WB App6
PLOT DATE : 2/19/2025 7:55 AM
PLOT BY : NICHOLAS BECKER
PLOT NAME :
PLOT SCALE : 1 IN:10 FT HORZ. / 1 IN:10 FT VERT.
WISDOT/CADDS SHEET 49

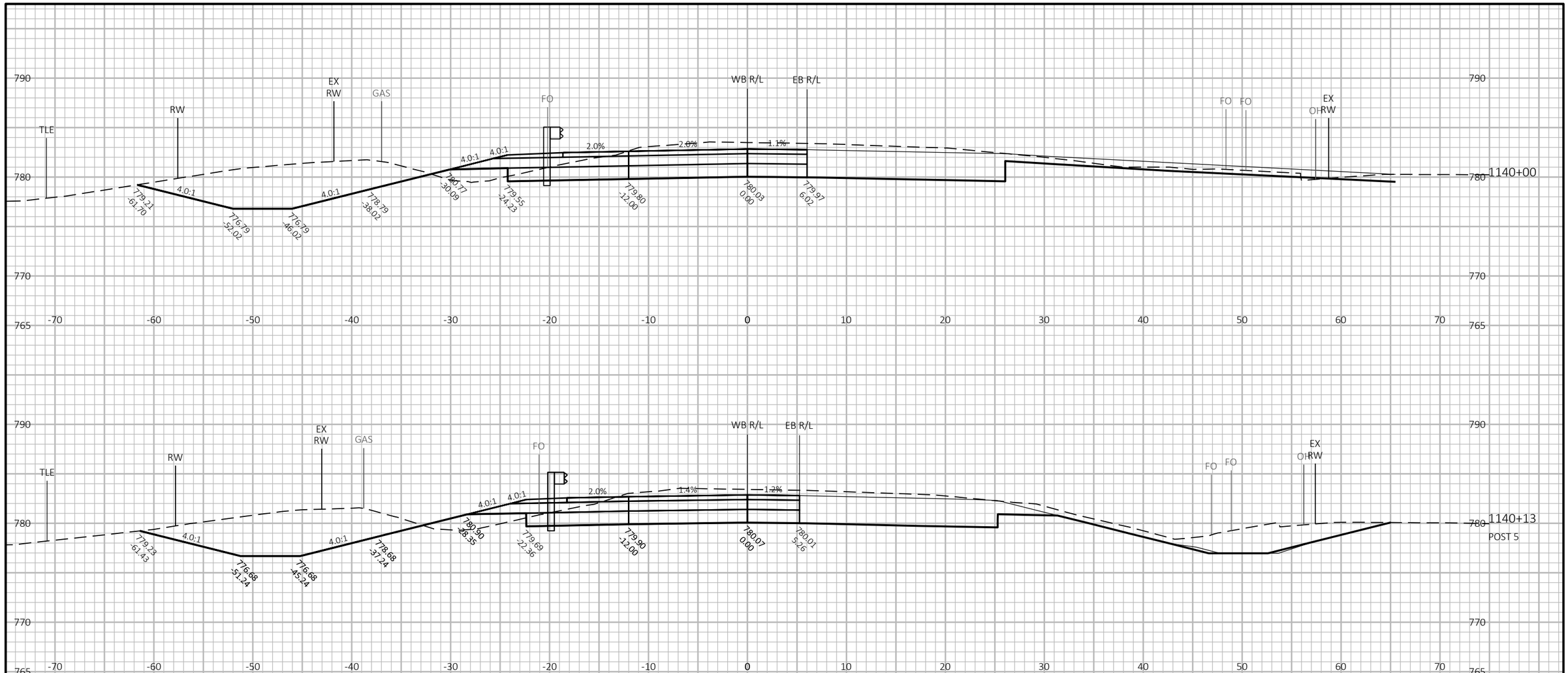

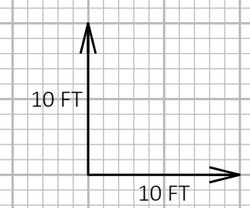

9 9

PROJECT NO: 2814-03-70	HWY: CTH A	COUNTY: RACINE	CROSS SECTIONS: CTH A WESTBOUND APPROACH	SHEET 201	E

FILE NAME : Y:\54XX\5486.DP22.CTH.A.RCN.INTRSCTN.CTH.J\CADDS\28140300\SHEETS\090201-XS.DWG
LAYOUT NAME - WB App7
PLOT DATE : 2/19/2025 7:55 AM
PLOT BY : NICHOLAS BECKER
PLOT NAME :
PLOT SCALE : 1 IN:10 FT HORZ. / 1 IN:10 FT VERT.
WISDOT/CADDS SHEET 49

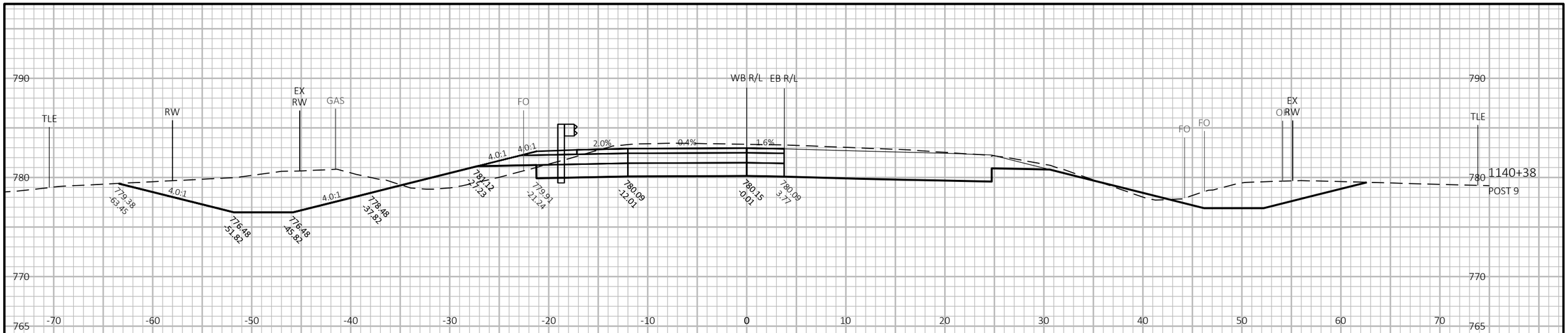

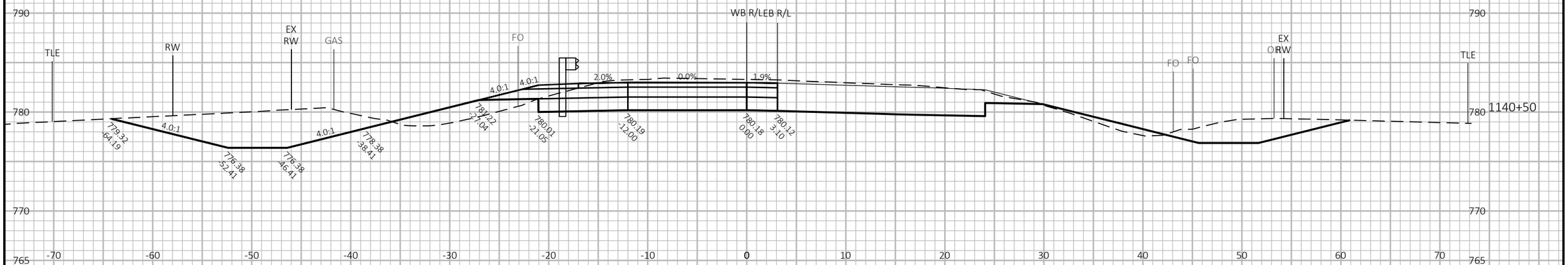

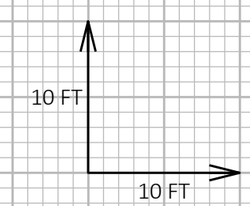

9

9

PROJECT NO: 2814-03-70	HWY: CTH A	COUNTY: RACINE	CROSS SECTIONS: CTH A WESTBOUND APPROACH	SHEET 202	E

FILE NAME : Y:\54XX\5486.DP22.CTH.A.RCN.INTRSCTN.CTH.J\CADDS\28140300\SHEETS\090201-XS.DWG
LAYOUT NAME - WB App8

PLOT DATE : 2/19/2025 7:55 AM PLOT BY : NICHOLAS BECKER PLOT NAME : **PLOT SCALE :** 1 IN:10 FT HORZ. / 1 IN:10 FT VERT.

WISDOT/CADDS SHEET 49

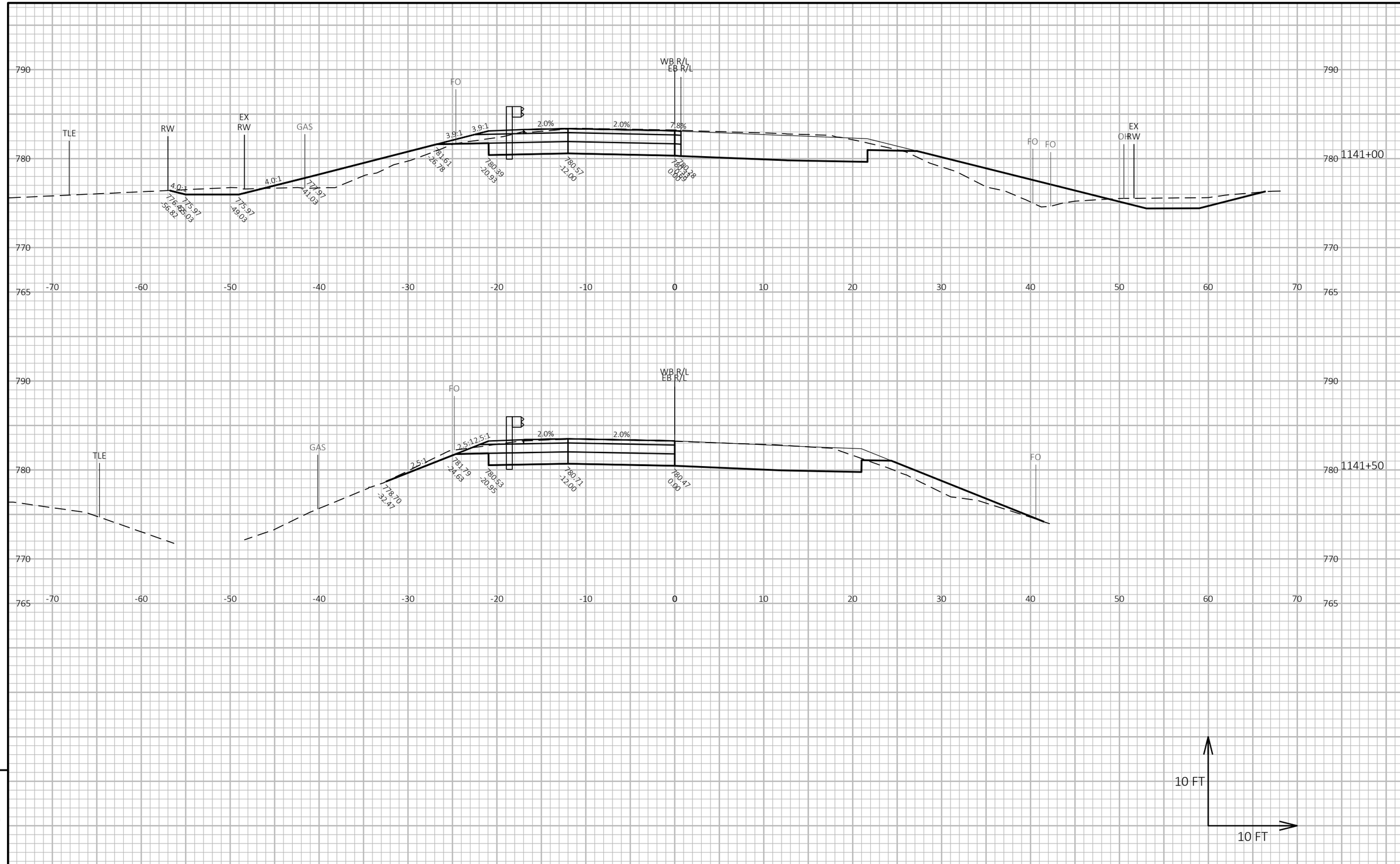

9

9

PROJECT NO: 2814-03-70	HWY: CTH A	COUNTY: RACINE	CROSS SECTIONS: CTH A WESTBOUND APPROACH	SHEET 203	E

FILE NAME : Y:\54XX\5486.DP22.CTH.A.RCN.INTRSCTN.CTH.J\CADDS\28140300\SHEETS\090201-XS.DWG
LAYOUT NAME - WB App9

PLOT DATE : 2/19/2025 7:55 AM PLOT BY : NICHOLAS BECKER PLOT NAME : **PLOT SCALE :** 1 IN:10 FT HORZ. / 1 IN:10 FT VERT.

WISDOT/CADDS SHEET 49

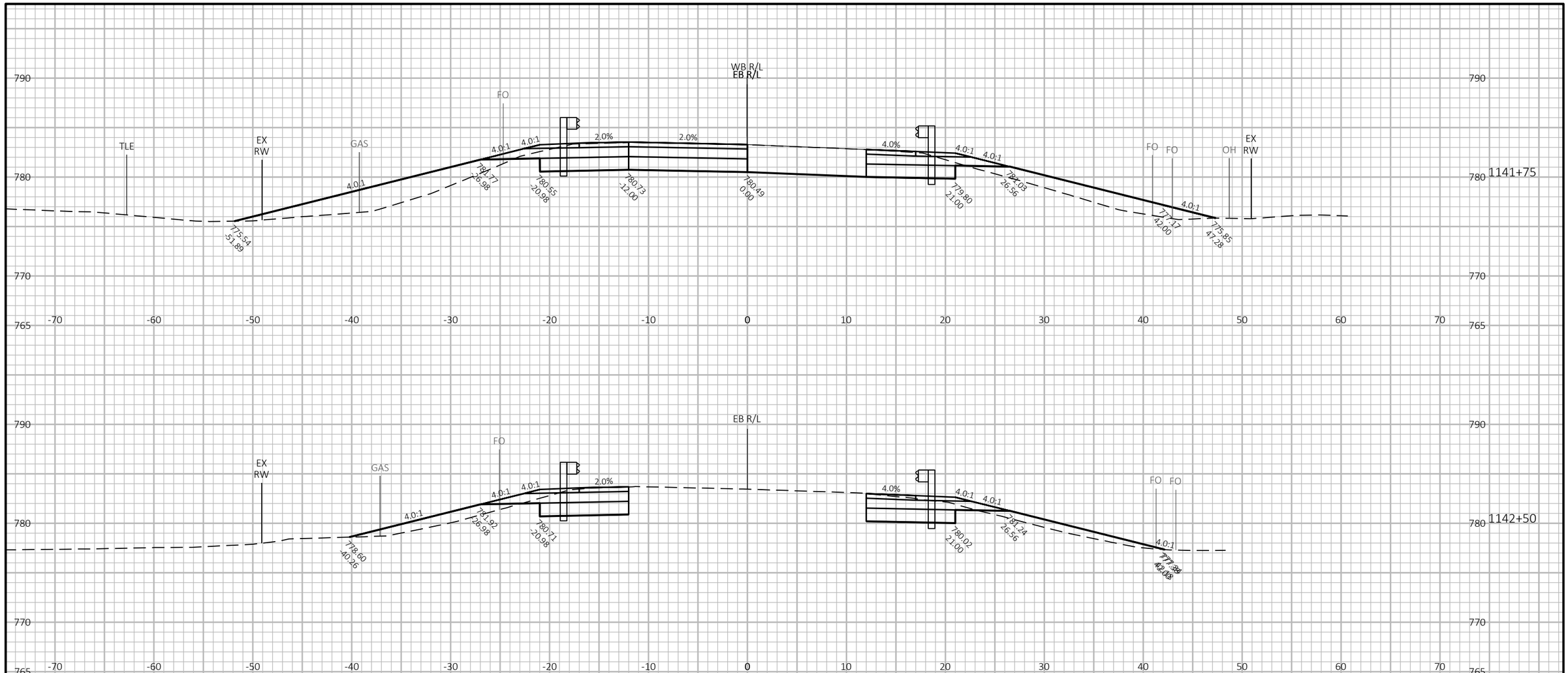

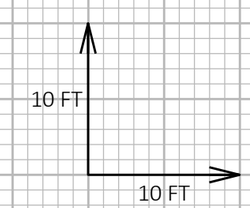

9

9

PROJECT NO: 2814-03-70	HWY: CTH A	COUNTY: RACINE	CROSS SECTIONS: CTH A WESTBOUND APPROACH	SHEET 204	E

FILE NAME : Y:\54XX\5486.DP22.CTH.A.RCN.INTRSCTN.CTH.J\CADDS\28140300\SHEETS\090201-XS.DWG
LAYOUT NAME - WB App10

PLOT DATE : 2/19/2025 7:55 AM PLOT BY : NICHOLAS BECKER PLOT NAME : PLOT SCALE : 1 IN:10 FT HORZ. / 1 IN:10 FT VERT.

WISDOT/CADDS SHEET 49

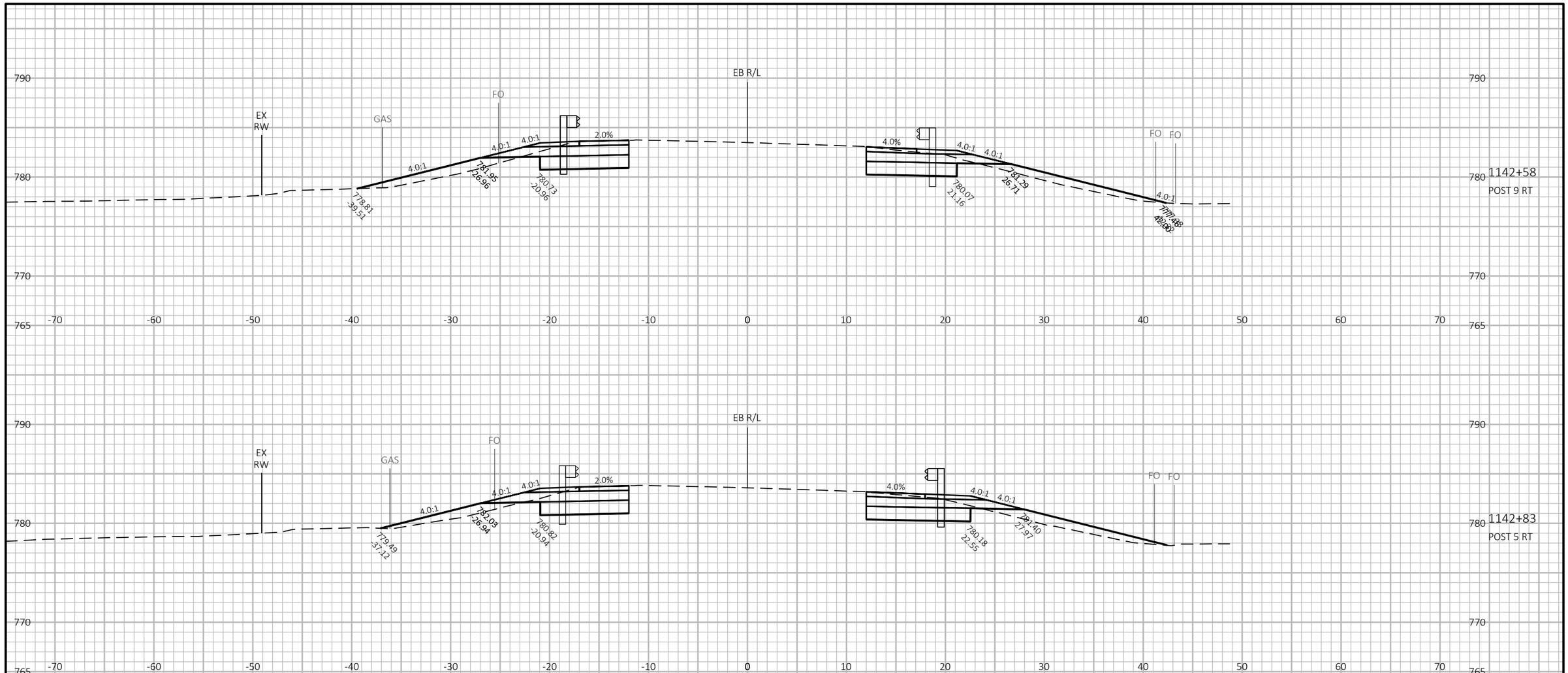

9

9

PROJECT NO: 2814-03-70	HWY: CTH A	COUNTY: RACINE	CROSS SECTIONS: CTH A WESTBOUND APPROACH	SHEET 205	E

FILE NAME : Y:\54XX\5486.DP22.CTH.A.RCN.INTRSCTN.CTH.J\CADDS\28140300\SHEETS\090201-XS.DWG
LAYOUT NAME - WB App11

PLOT DATE : 2/19/2025 7:55 AM PLOT BY : NICHOLAS BECKER PLOT NAME : **PLOT SCALE :** 1 IN:10 FT HORZ. / 1 IN:10 FT VERT.

WISDOT/CADDS SHEET 49

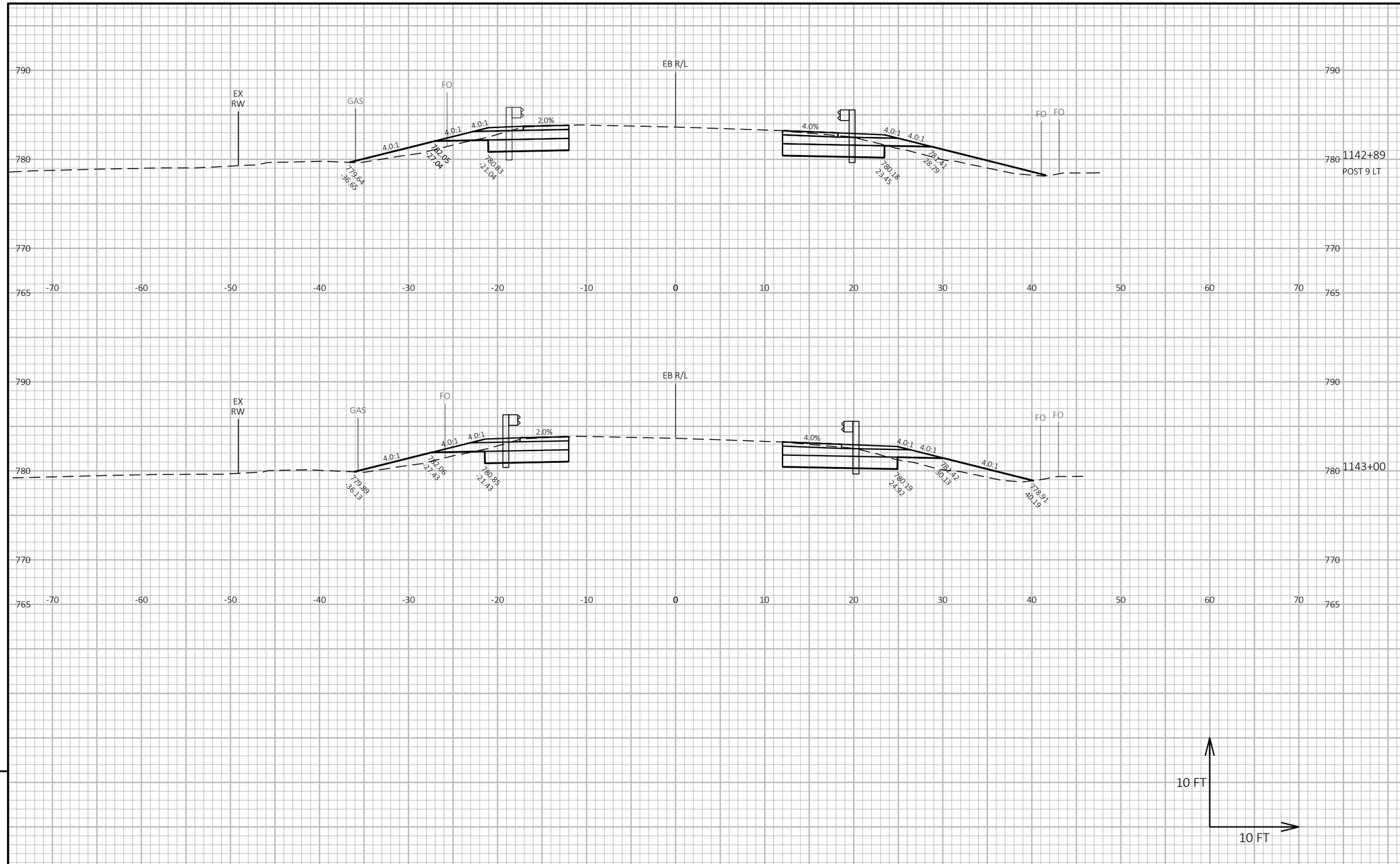

PROJECT NO: 2814-03-70	HWY: CTH A	COUNTY: RACINE	CROSS SECTIONS: CTH A WESTBOUND APPROACH	SHEET 206	E

FILE NAME : Y:\54XX\5486.DP22.CTH.A.RCN.INTRSCTN.CTH.J\CADDS\28140300\SHEETS\090201-XS.DWG
LAYOUT NAME - WB App12
PLOT DATE : 2/19/2025 7:55 AM
PLOT BY : NICHOLAS BECKER
PLOT NAME :
PLOT SCALE : 1 IN:10 FT HORZ. / 1 IN:10 FT VERT.
WISDOT/CADDS SHEET 49

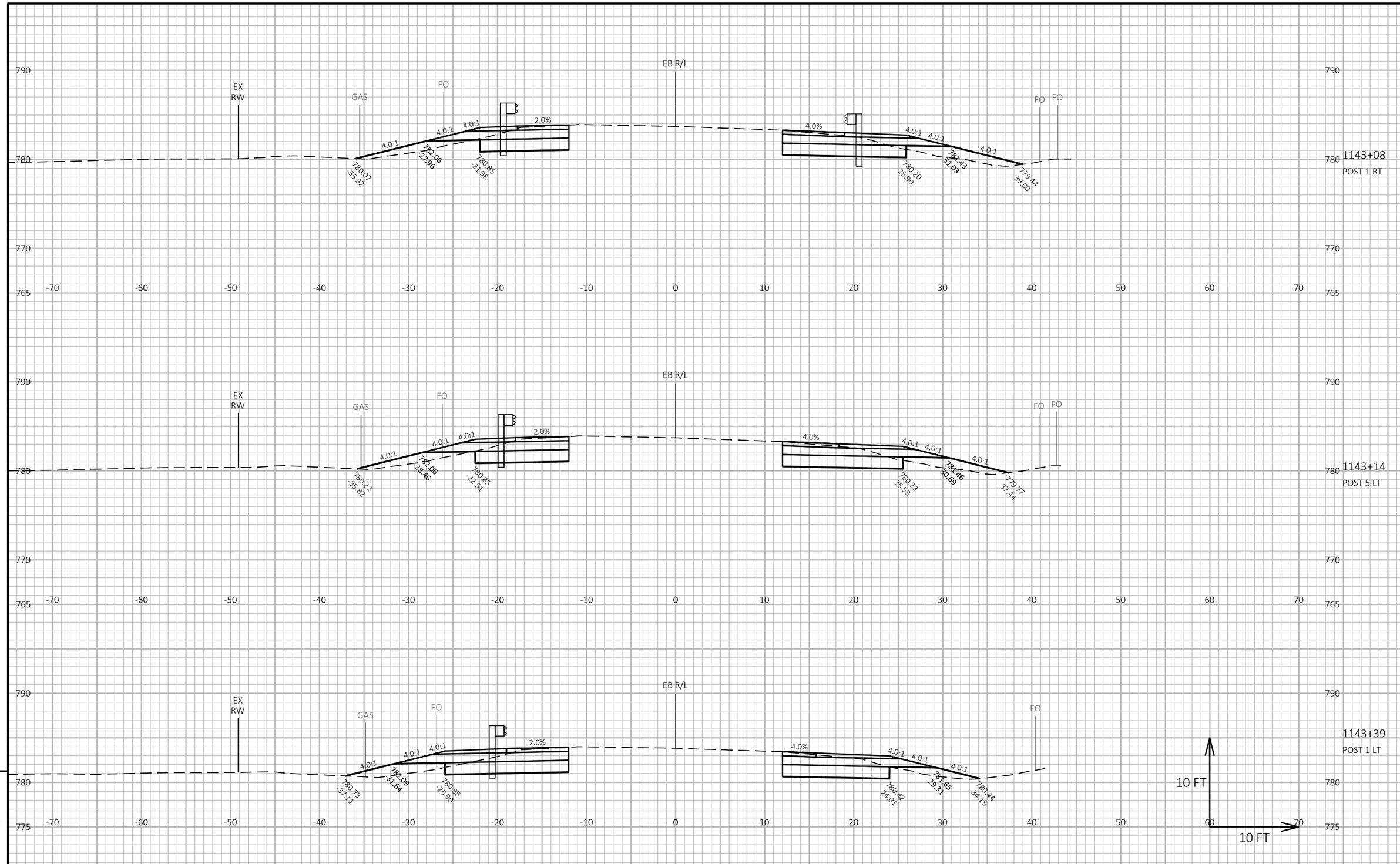

PROJECT NO: 2814-03-70	HWY: CTH A	COUNTY: RACINE	CROSS SECTIONS: CTH A WESTBOUND APPROACH	SHEET 207	E

FILE NAME : Y:\54XX\5486.DP22.CTH.A.RCN.INTRSCTN.CTH.J\CADDS\28140300\SHEETS\090201-XS.DWG
LAYOUT NAME - WB App13
PLOT DATE : 2/19/2025 7:55 AM
PLOT BY : NICHOLAS BECKER
PLOT NAME :
PLOT SCALE : 1 IN:10 FT HORZ. / 1 IN:10 FT VERT.
WISDOT/CADDS SHEET 49

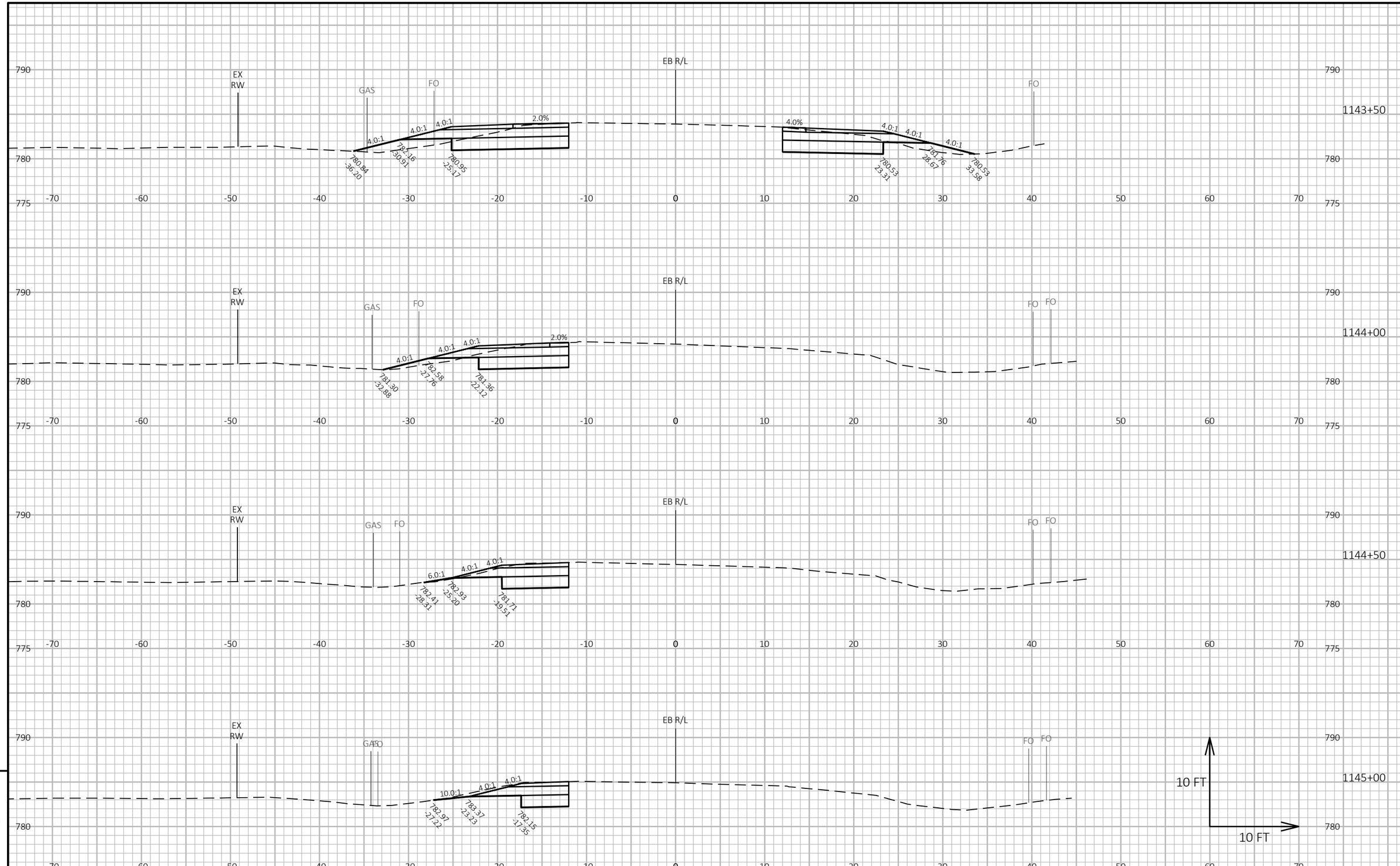

PROJECT NO: 2814-03-70	HWY: CTH A	COUNTY: RACINE	CROSS SECTIONS: CTH A WESTBOUND APPROACH	SHEET 208	E

FILE NAME : Y:\54XX\5486.DP22.CTH.A.RCN.INTRSCTN.CTH.J\CADDS\28140300\SHEETS\090201-XS.DWG
LAYOUT NAME - WB App14
PLOT DATE : 2/19/2025 7:55 AM
PLOT BY : NICHOLAS BECKER
PLOT NAME :
PLOT SCALE : 1 IN:10 FT HORZ. / 1 IN:10 FT VERT.

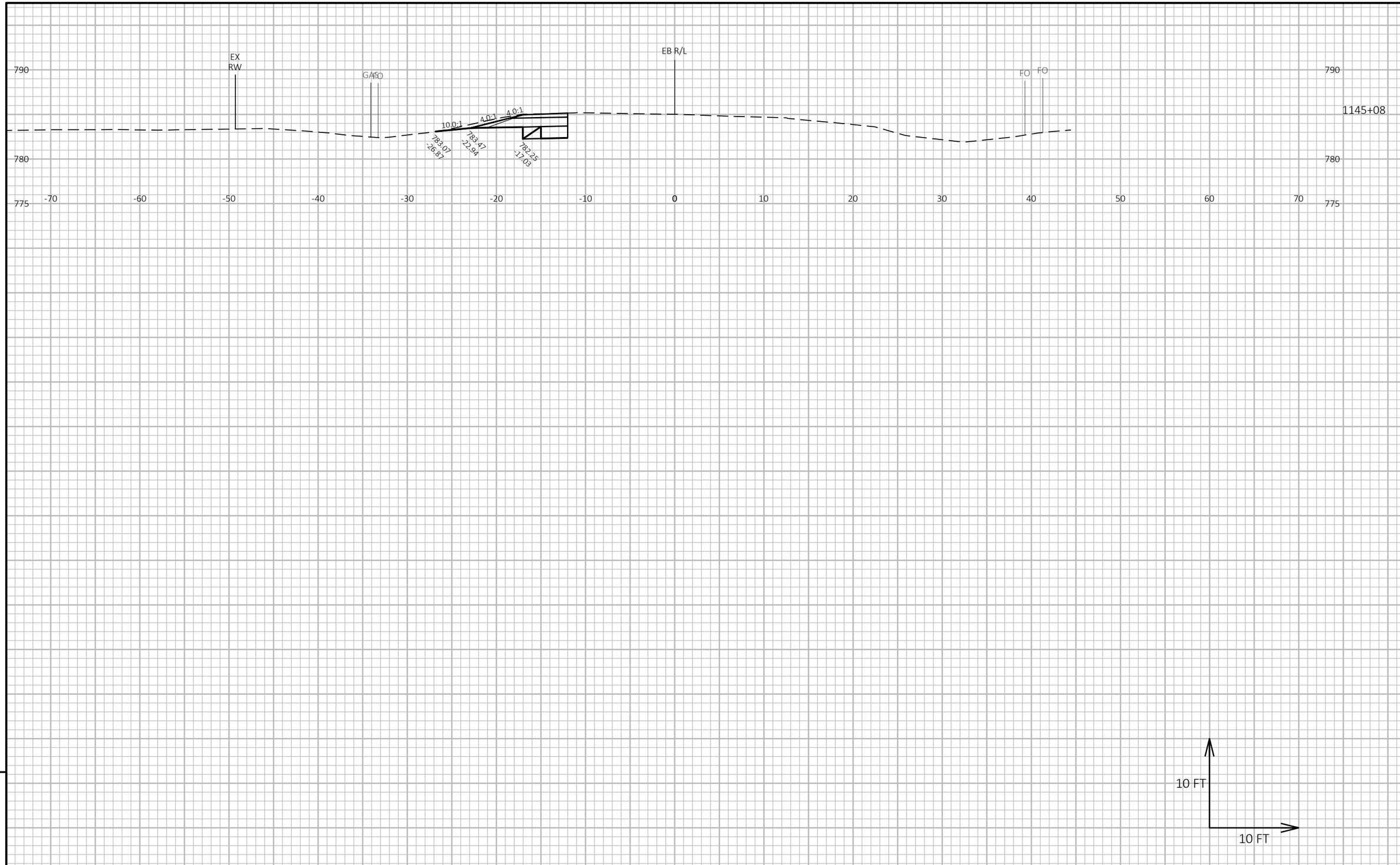

9

9

PROJECT NO: 2814-03-70	HWY: CTH A	COUNTY: RACINE	CROSS SECTIONS: CTH A WESTBOUND APPROACH	SHEET 209	E

FILE NAME : Y:\54XX\5486.DP22.CTH.A.RCN.INTRSCTN.CTH.J\CADDS\28140300\SHEETS\090201-XS.DWG
LAYOUT NAME - WB App15
PLOT DATE : 2/19/2025 7:55 AM
PLOT BY : NICHOLAS BECKER
PLOT NAME :
PLOT SCALE : 1 IN:10 FT HORZ. / 1 IN:10 FT VERT.
WISDOT/CADDS SHEET 49

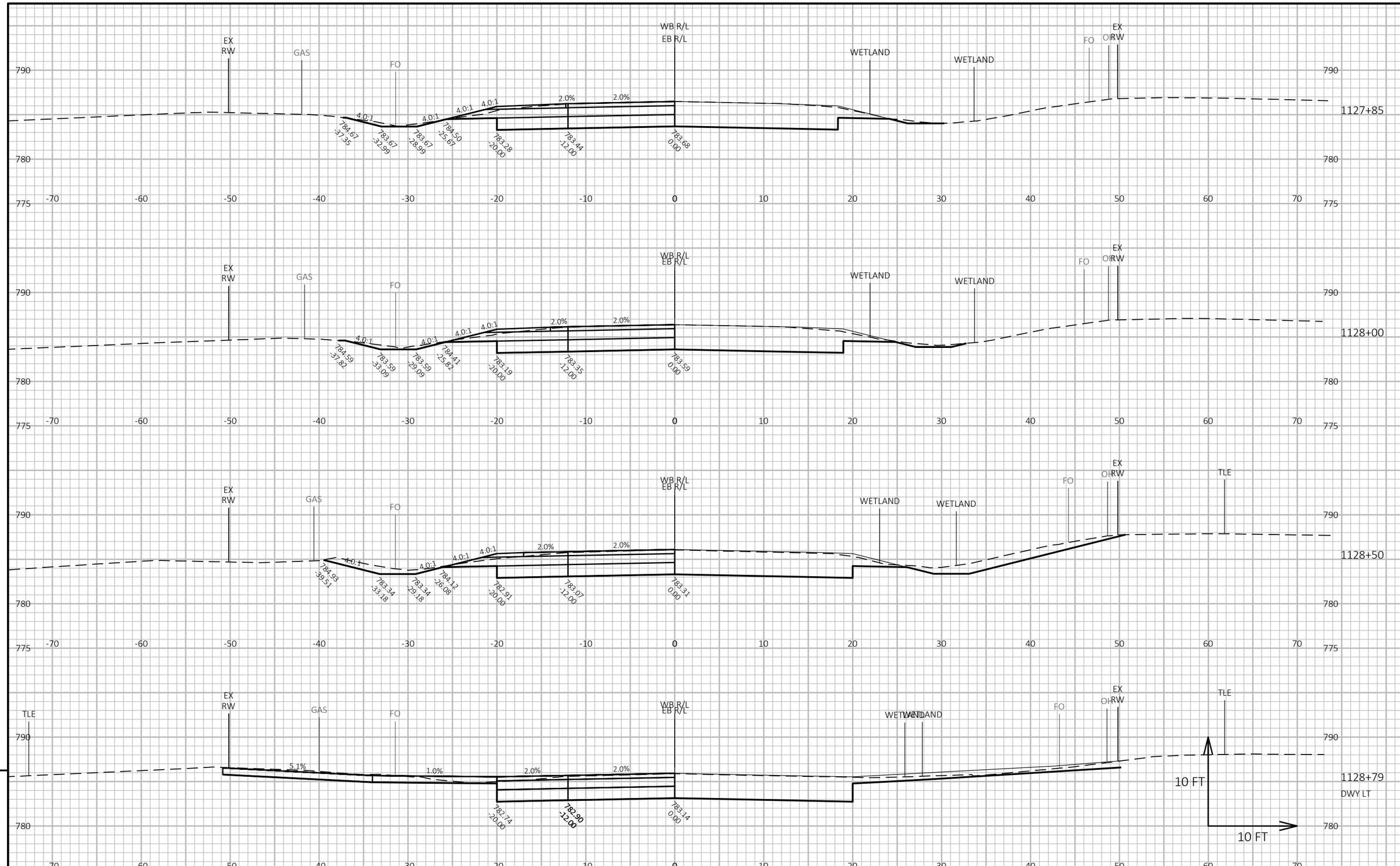

9

9

PROJECT NO: 2814-03-70	HWY: CTH A	COUNTY: RACINE	CROSS SECTIONS: CTH A WESTBOUND EXIT	SHEET 210	E

FILE NAME : Y:\54XX\5486.DP22.CTH.A.RCN.INTRSCTN.CTH.J\CADDS\28140300\SHEETS\090201-XS.DWG
LAYOUT NAME - WB Exit1

PLOT DATE : 2/19/2025 7:55 AM PLOT BY : NICHOLAS BECKER PLOT NAME : **PLOT SCALE :** 1 IN:10 FT HORZ. / 1 IN:10 FT VERT.

WISDOT/CADDS SHEET 49

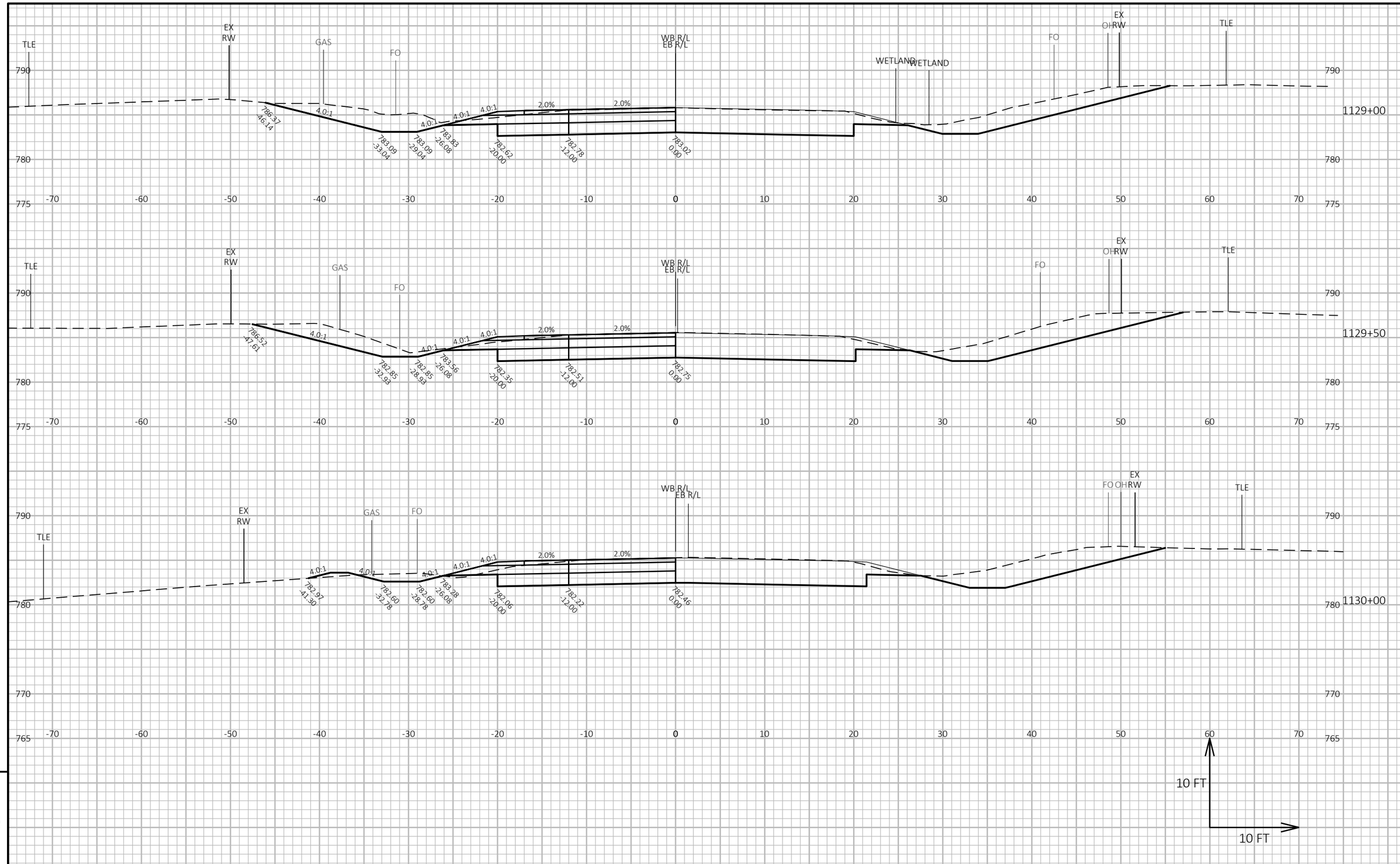

PROJECT NO: 2814-03-70	HWY: CTH A	COUNTY: RACINE	CROSS SECTIONS: CTH A WESTBOUND EXIT	SHEET 211	E

FILE NAME : Y:\54XX\5486.DP22.CTH.A.RCN.INTRSCTN.CTH.J\CADDS\28140300\SHEETS\090201-XS.DWG
LAYOUT NAME - WB Exit2
PLOT DATE : 2/19/2025 7:56 AM
PLOT BY : NICHOLAS BECKER
PLOT NAME :
PLOT SCALE : 1 IN:10 FT HORZ. / 1 IN:10 FT VERT.
WISDOT/CADDS SHEET 49

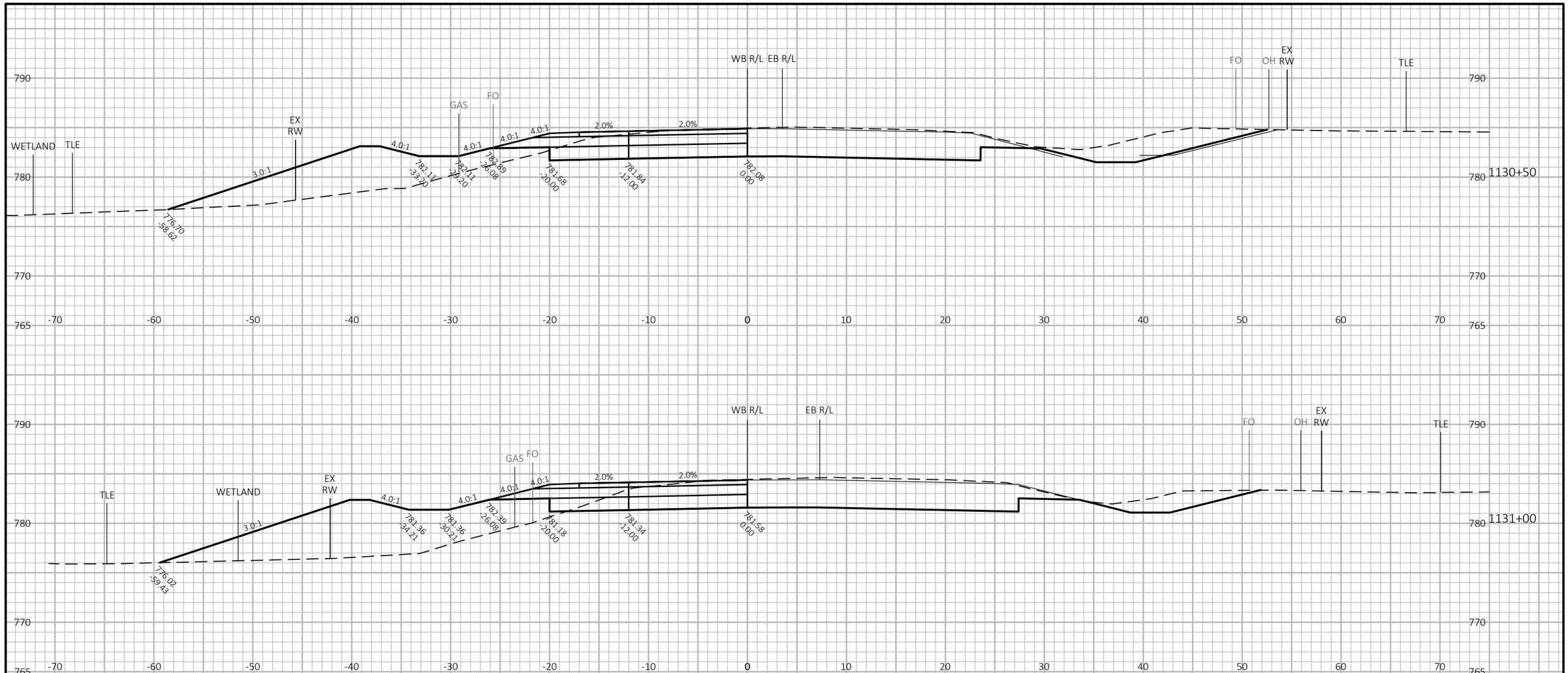

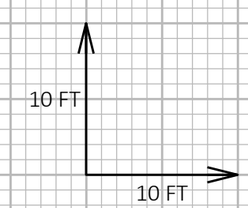

9

9

PROJECT NO: 2814-03-70	HWY: CTH A	COUNTY: RACINE	CROSS SECTIONS: CTH A WESTBOUND EXIT	SHEET 212	E

FILE NAME : Y:\54XX\5486.DP22.CTH.A.RCN.INTRSCTN.CTH.J\CADDS\28140300\SHEETS\090201-XS.DWG
LAYOUT NAME - WB Exit3

PLOT DATE : 2/19/2025 7:56 AM PLOT BY : NICHOLAS BECKER PLOT NAME : PLOT SCALE : 1 IN:10 FT HORZ. / 1 IN:10 FT VERT.

WISDOT/CADDS SHEET 49

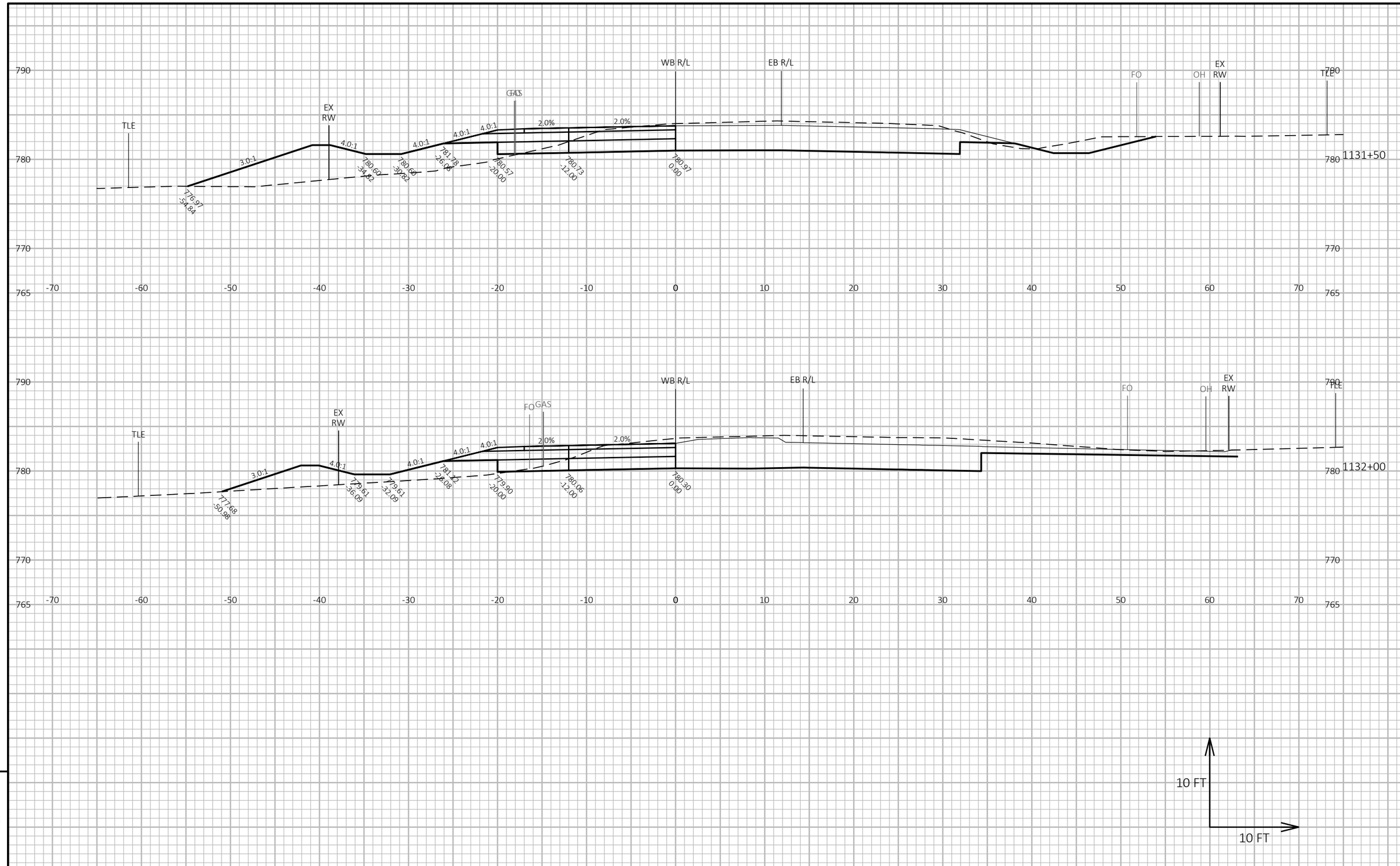

9

9

PROJECT NO: 2814-03-70	HWY: CTH A	COUNTY: RACINE	CROSS SECTIONS: CTH A WESTBOUND EXIT	SHEET 213	E

FILE NAME : Y:\54XX\5486.DP22.CTH.A.RCN.INTRSCTN.CTH.J\CADDS\28140300\SHEETS\090201-XS.DWG
LAYOUT NAME - WB Exit4

PLOT DATE : 2/19/2025 7:56 AM PLOT BY : NICHOLAS BECKER PLOT NAME : **PLOT SCALE :** 1 IN:10 FT HORZ. / 1 IN:10 FT VERT.

WISDOT/CADDS SHEET 49

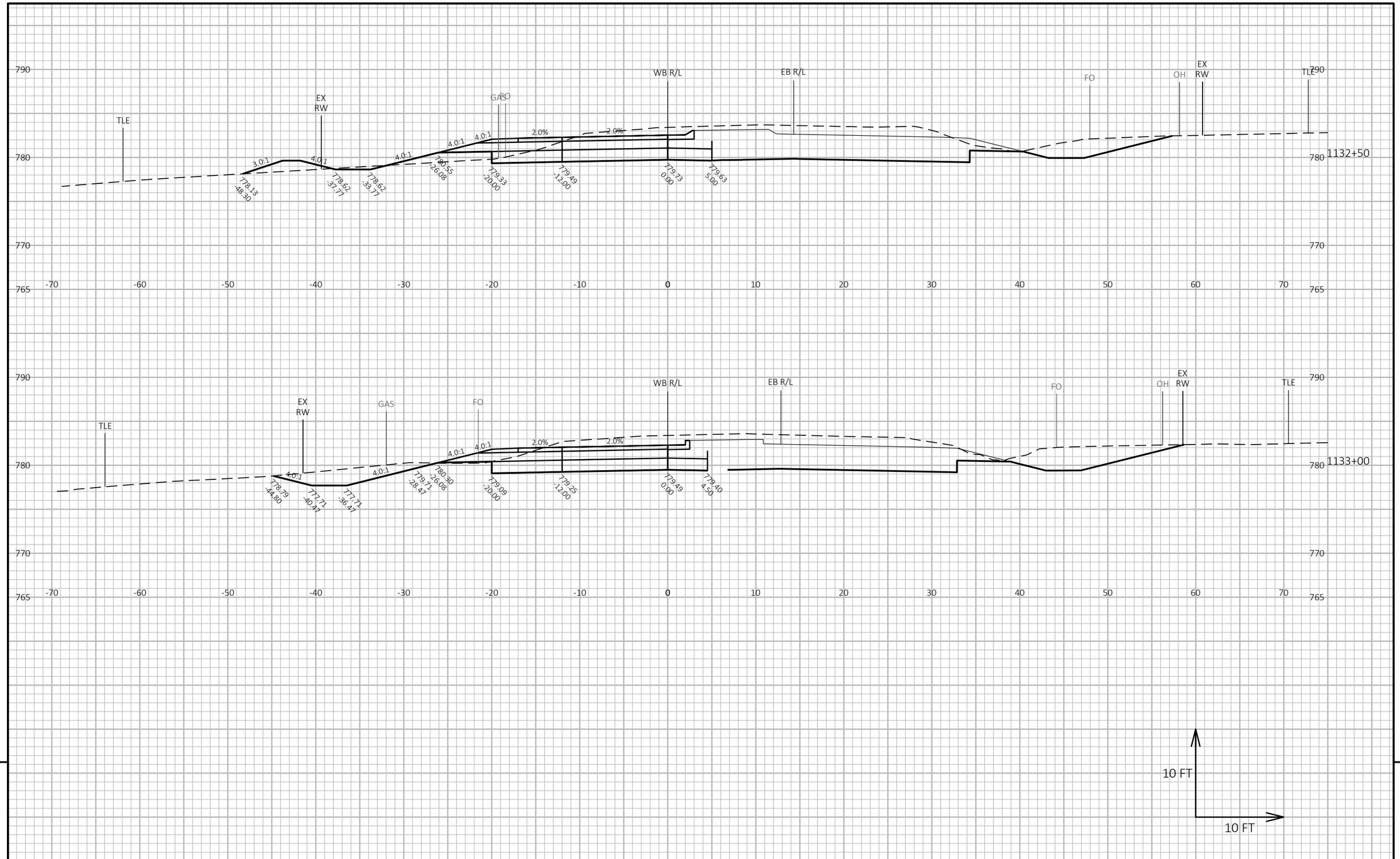

9

9

PROJECT NO: 2814-03-70	HWY: CTH A	COUNTY: RACINE	CROSS SECTIONS: CTH A WESTBOUND EXIT	SHEET 214	E

FILE NAME : Y:\54XX\5486.DP22.CTH.A.RCN.INTRSCTN.CTH.J\CADDS\28140300\SHEETS\090201-XS.DWG
LAYOUT NAME - WB Exit5

PLOT DATE : 2/19/2025 7:56 AM PLOT BY : NICHOLAS BECKER PLOT NAME : **PLOT SCALE :** 1 IN:10 FT HORZ. / 1 IN:10 FT VERT.

WISDOT/CADDS SHEET 49

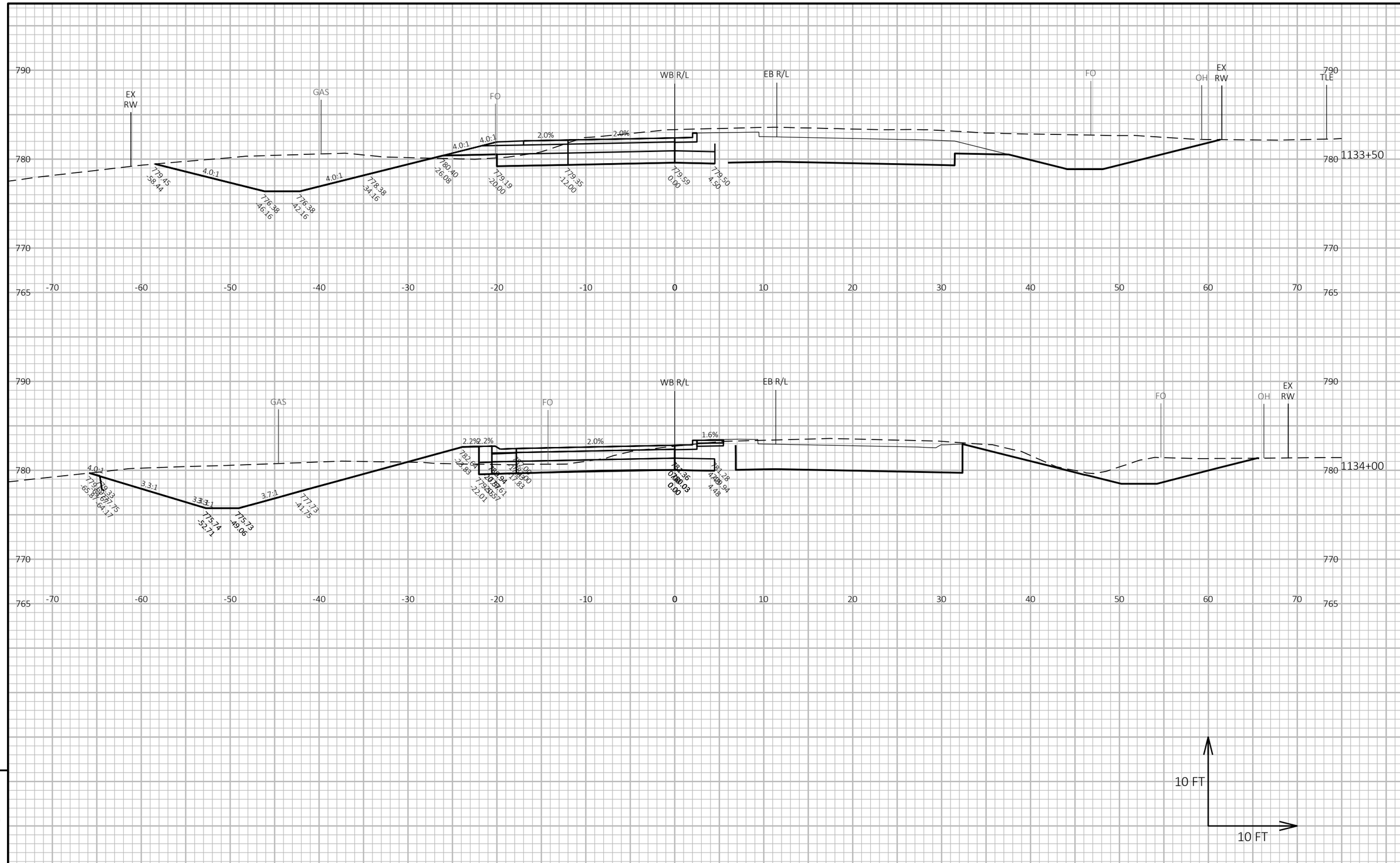

9

9

PROJECT NO: 2814-03-70	HWY: CTH A	COUNTY: RACINE	CROSS SECTIONS: CTH A WESTBOUND EXIT	SHEET 215	E

FILE NAME : Y:\54XX\5486.DP22.CTH.A.RCN.INTRSCTN.CTH.J\CADDS\28140300\SHEETS\090201-XS.DWG
LAYOUT NAME - WB Exit6

PLOT DATE : 8/28/2024 12:29 PM PLOT BY : NICHOLAS BECKER PLOT NAME : PLOT SCALE : 1 IN:10 FT HORZ. / 1 IN:10 FT VERT.

WISDOT/CADDS SHEET 49

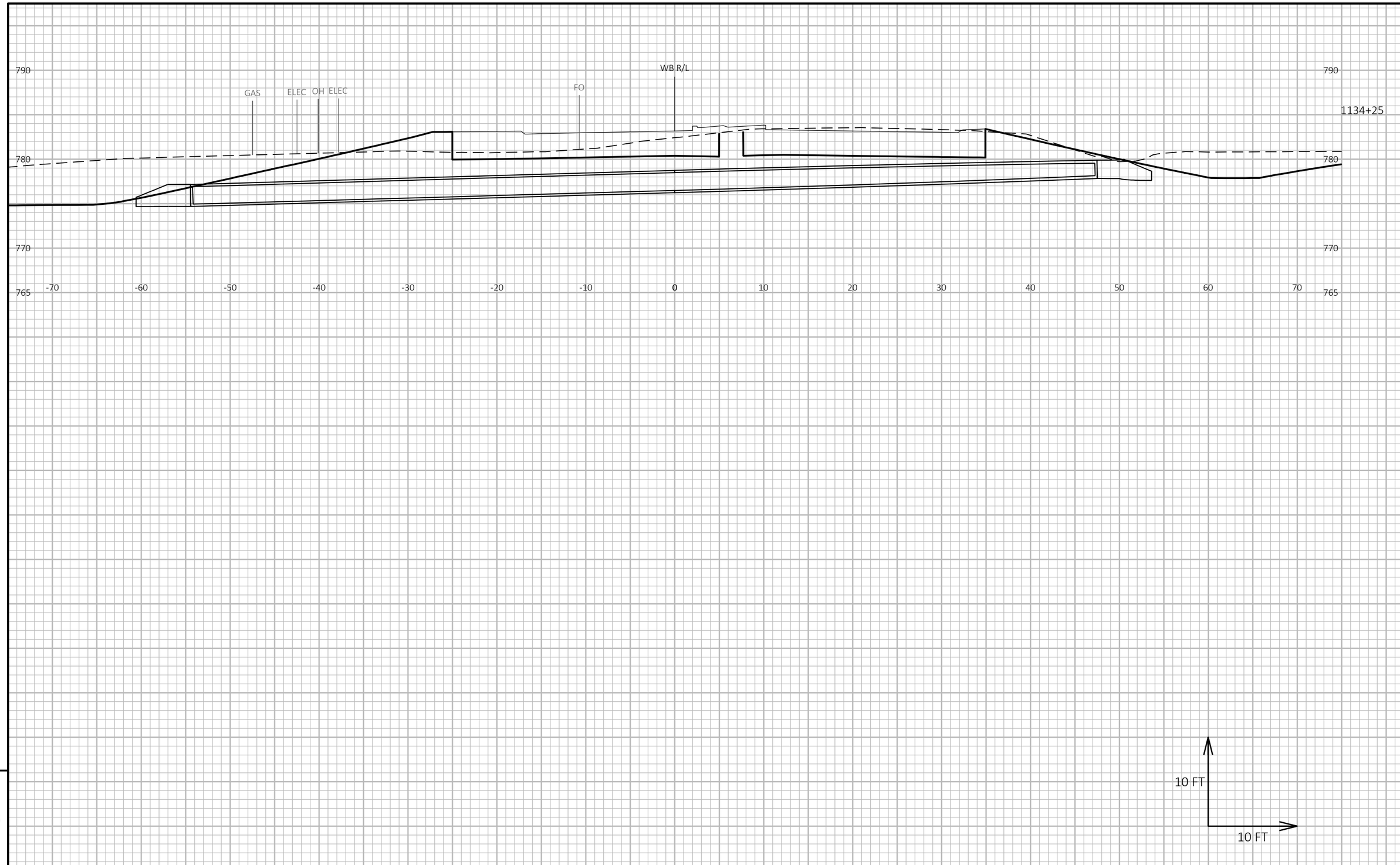

9

9

PROJECT NO: 2814-03-70	HWY: CTH A	COUNTY: RACINE	CROSS SECTIONS: CTH A WESTBOUND EXIT	SHEET 216	E

FILE NAME : Y:\54XX\5486.DP22.CTH.A.RCN.INTRSCTN.CTH.J\CADDS\28140300\SHEETS\090201-XS.DWG
LAYOUT NAME - WB Exit7

PLOT DATE : 2/19/2025 7:56 AM PLOT BY : NICHOLAS BECKER PLOT NAME : **PLOT SCALE :** 1 IN:10 FT HORZ. / 1 IN:10 FT VERT.

WISDOT/CADDS SHEET 49

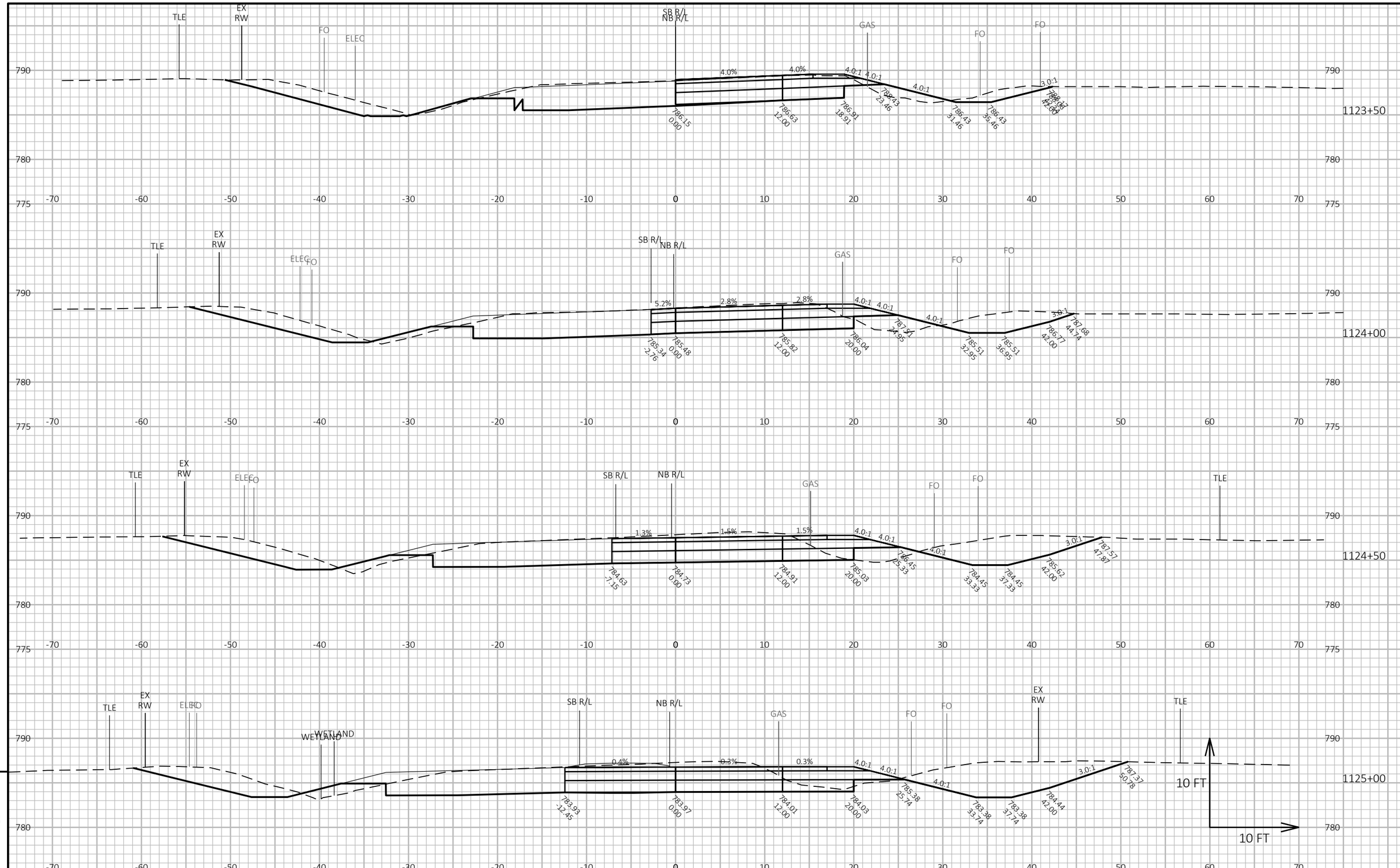

9

9

PROJECT NO: 2814-03-70	HWY: CTH A	COUNTY: RACINE	CROSS SECTIONS: CTH J NORTHBOUND APPROACH	SHEET 217	E

FILE NAME : Y:\54XX\5486.DP22.CTH.A.RCN.INTRSCTN.CTH.J\CADDS\28140300\SHEETS\090201-XS.DWG
LAYOUT NAME - NB App 1
PLOT DATE : 2/19/2025 7:56 AM
PLOT BY : NICHOLAS BECKER
PLOT NAME :
PLOT SCALE : 1 IN:10 FT HORZ. / 1 IN:10 FT VERT.
WISDOT/CADDS SHEET 49

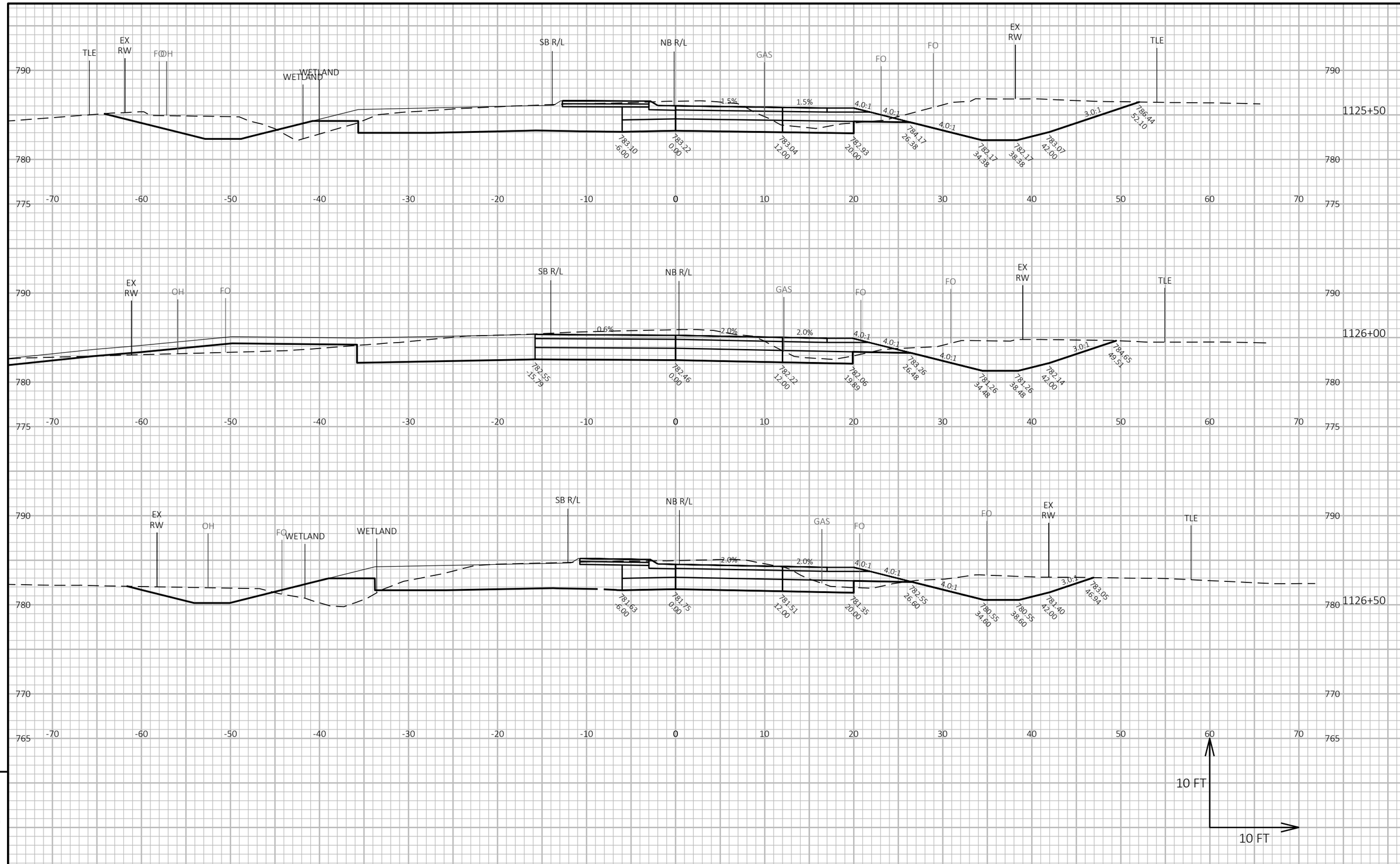

9

9

PROJECT NO: 2814-03-70	HWY: CTH A	COUNTY: RACINE	CROSS SECTIONS: CTH J NORTHBOUND APPROACH	SHEET 218	E

FILE NAME : Y:\54XX\5486.DP22.CTH.A.RCN.INTRSCTN.CTH.J\CADDS\28140300\SHEETS\090201-XS.DWG
LAYOUT NAME - NB App 2
PLOT DATE : 2/19/2025 7:56 AM
PLOT BY : NICHOLAS BECKER
PLOT NAME :
PLOT SCALE : 1 IN:10 FT HORZ. / 1 IN:10 FT VERT.

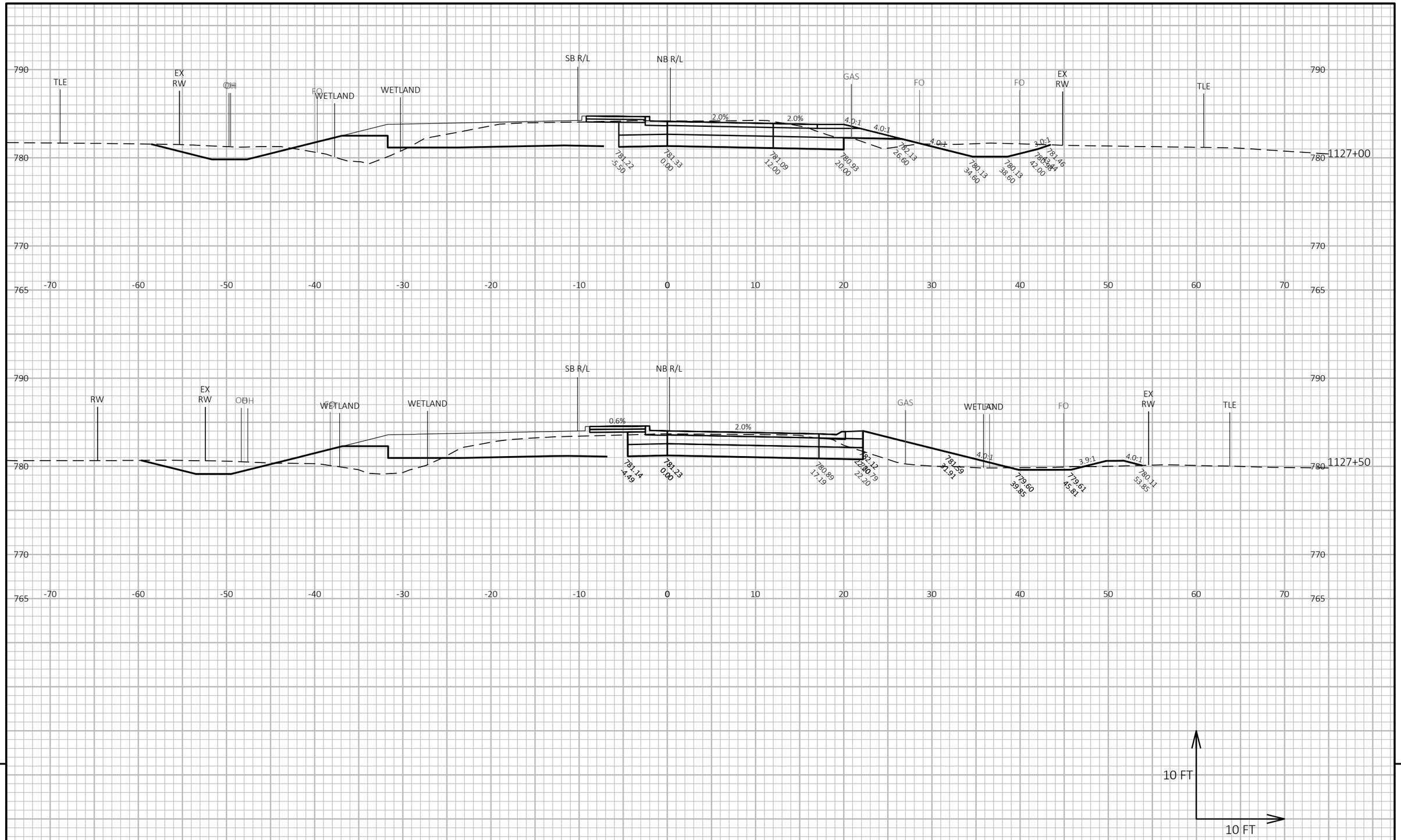

9

9

PROJECT NO: 2814-03-70	HWY: CTH A	COUNTY: RACINE	CROSS SECTIONS: CTH J NORTHBOUND APPROACH	SHEET 219	E

FILE NAME : Y:\54XX\5486.DP22.CTH.A.RCN.INTRSCTN.CTH.J\CADDS\28140300\SHEETS\090201-XS.DWG
LAYOUT NAME - NB App 3

PLOT DATE : 2/19/2025 7:56 AM PLOT BY : NICHOLAS BECKER PLOT NAME : PLOT SCALE : 1 IN:10 FT HORZ. / 1 IN:10 FT VERT.

WISDOT/CADDS SHEET 49

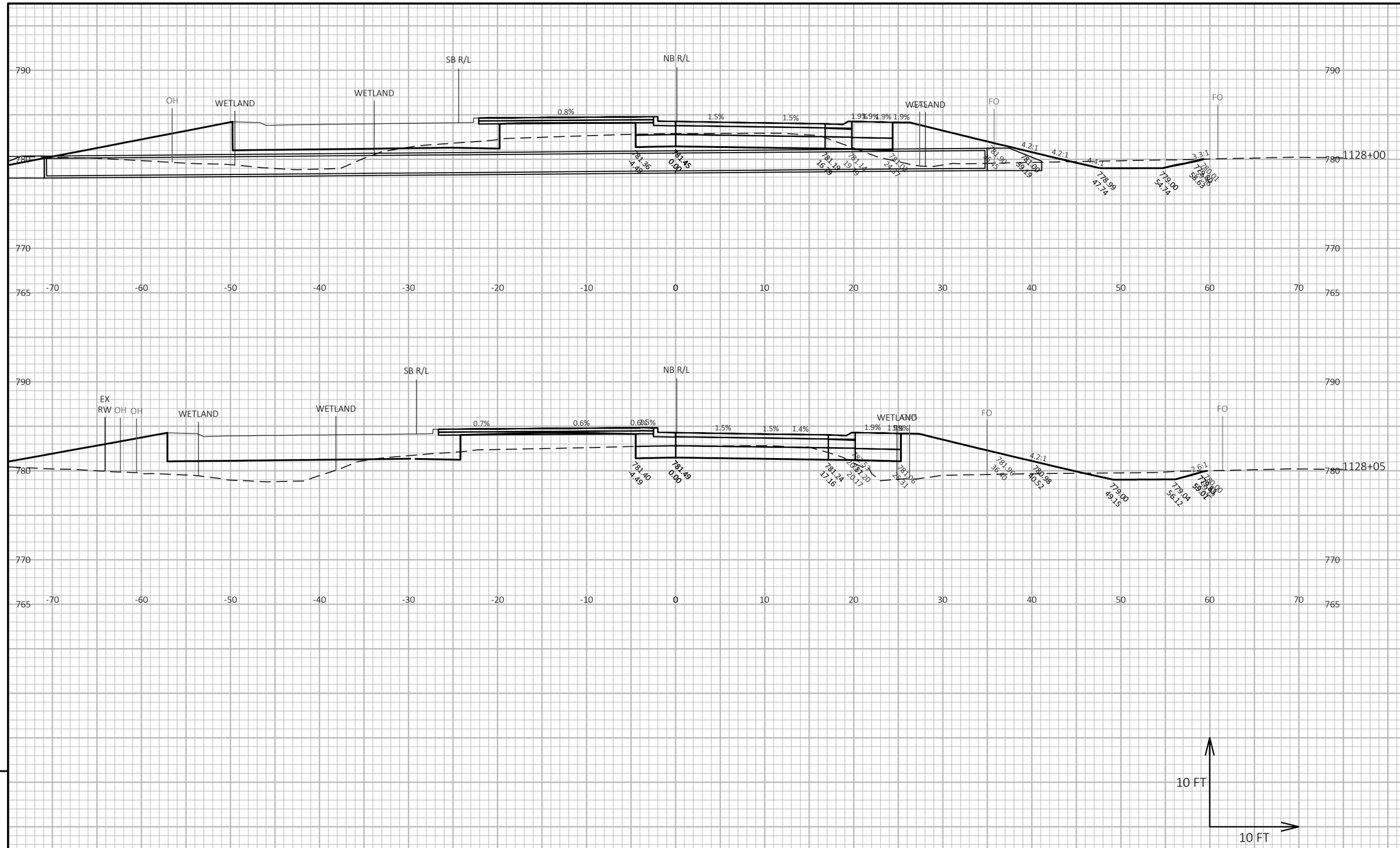

9

9

PROJECT NO: 2814-03-70	HWY: CTH A	COUNTY: RACINE	CROSS SECTIONS: CTH J NORTHBOUND APPROACH	SHEET 220	E

FILE NAME : Y:\54XX\5486.DP22.CTH.A.RCN.INTRSCTN.CTH.J\CADDS\28140300\SHEETS\090201-XS.DWG
LAYOUT NAME - NB App 4

PLOT DATE : 2/19/2025 7:56 AM PLOT BY : NICHOLAS BECKER PLOT NAME : PLOT SCALE : 1 IN:10 FT HORZ. / 1 IN:10 FT VERT.

WISDOT/CADDS SHEET 49

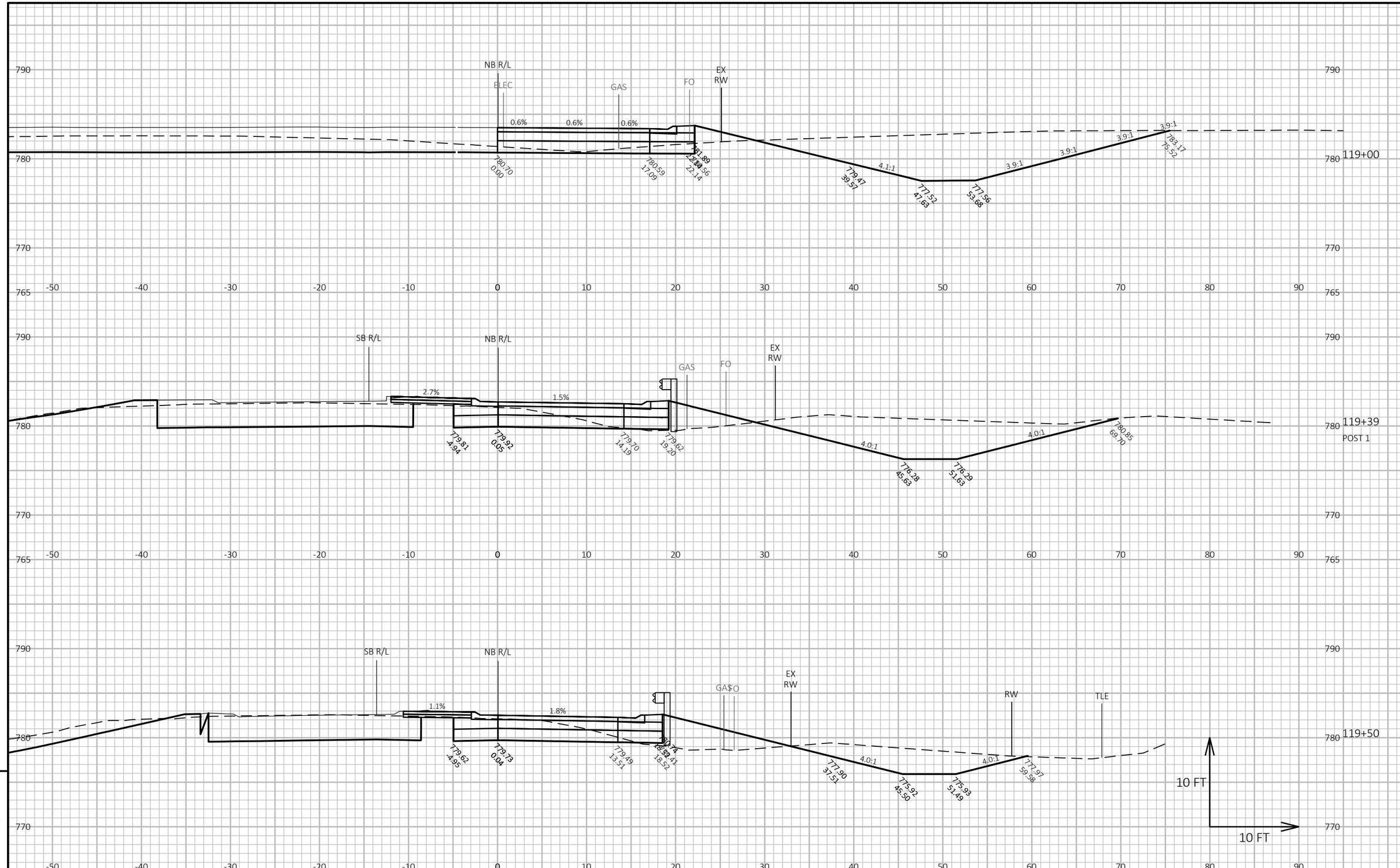

9

9

PROJECT NO: 2814-03-70	HWY: CTH A	COUNTY: RACINE	CROSS SECTIONS: CTH J NORTHBOUND EXIT	SHEET 221	E

FILE NAME : Y:\54XX\5486.DP22.CTH.A.RCN.INTRSCTN.CTH.J\CADDS\28140300\SHEETS\090201-XS.DWG
LAYOUT NAME - NB Exit 1

PLOT DATE : 2/19/2025 7:56 AM PLOT BY : NICHOLAS BECKER PLOT NAME : **PLOT SCALE :** 1 IN:10 FT HORZ. / 1 IN:10 FT VERT.

WISDOT/CADDS SHEET 49

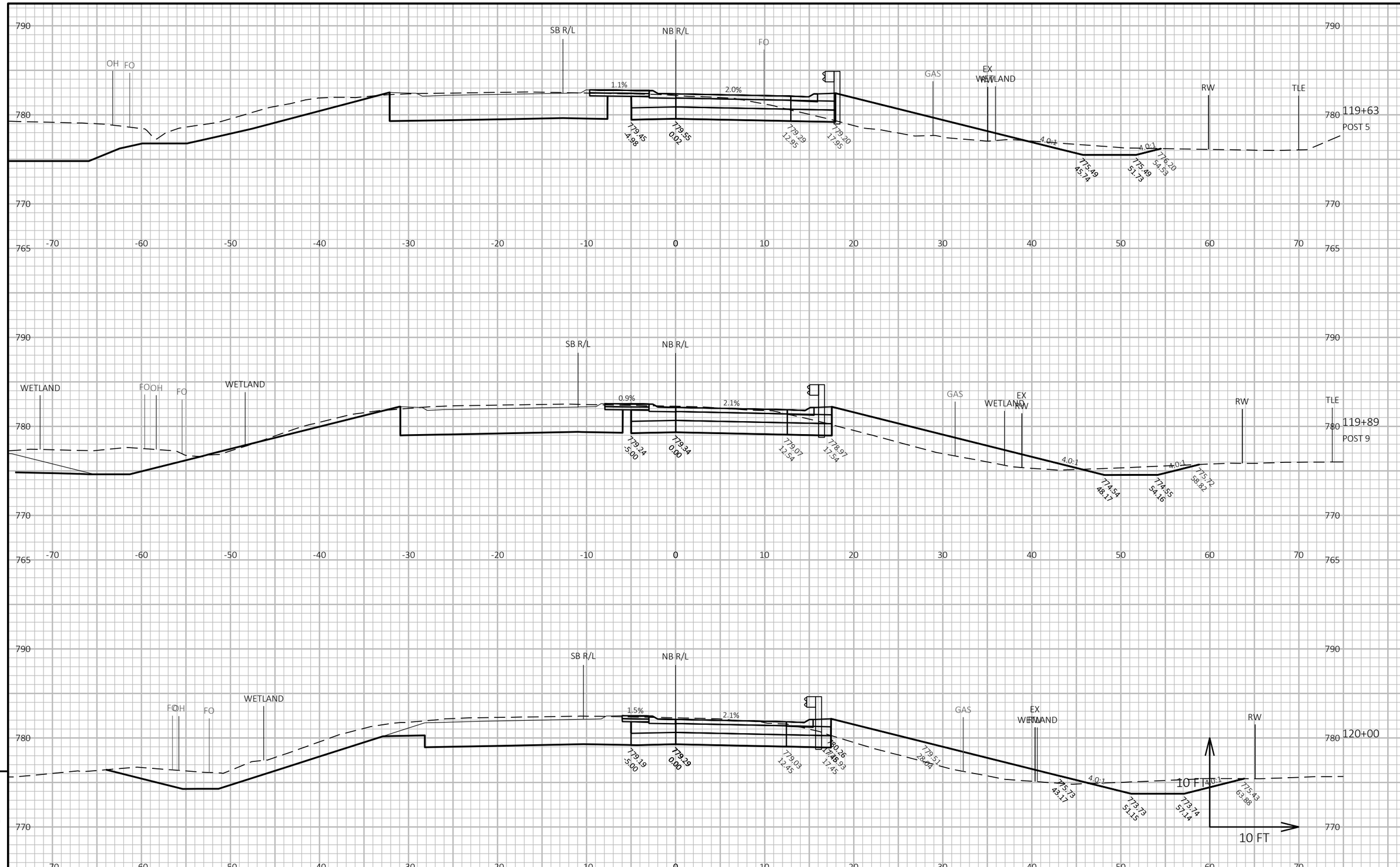

PROJECT NO: 2814-03-70	HWY: CTH A	COUNTY: RACINE	CROSS SECTIONS: CTH J NORTHBOUND EXIT	SHEET 222	E

FILE NAME : Y:\54XX\5486.DP22.CTH.A.RCN.INTRSCTN.CTH.J\CADDS\28140300\SHEETS\090201-XS.DWG
LAYOUT NAME - NB Exit 2
PLOT DATE : 2/19/2025 7:57 AM
PLOT BY : NICHOLAS BECKER
PLOT NAME :
PLOT SCALE : 1 IN:10 FT HORZ. / 1 IN:10 FT VERT.
WISDOT/CADDS SHEET 49

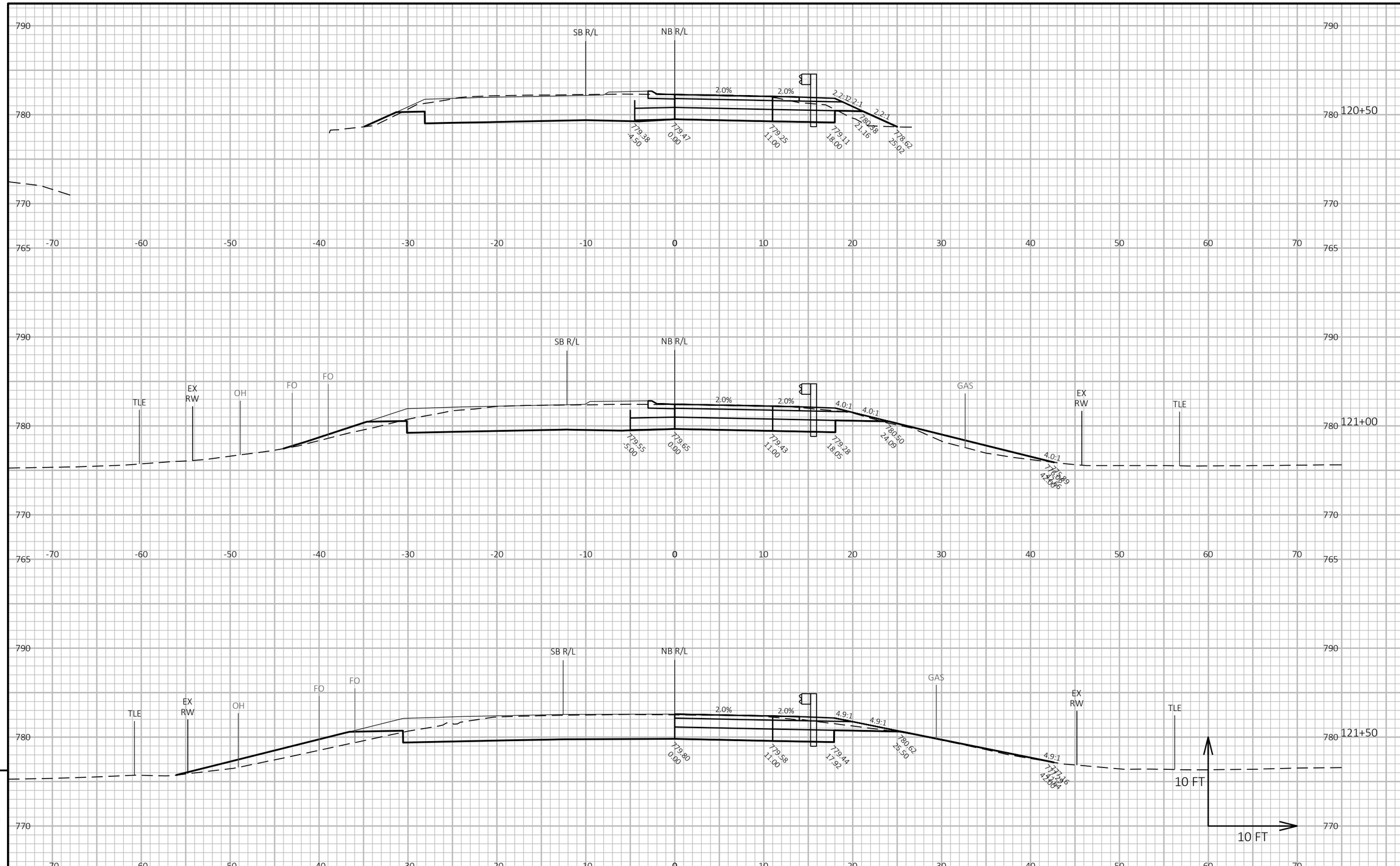

9

9

PROJECT NO: 2814-03-70	HWY: CTH A	COUNTY: RACINE	CROSS SECTIONS: CTH J NORTHBOUND EXIT	SHEET 223	E

FILE NAME : Y:\54XX\5486.DP22.CTH.A.RCN.INTRSCTN.CTH.J\CADDS\28140300\SHEETS\090201-XS.DWG
LAYOUT NAME - NB Exit 3

PLOT DATE : 2/19/2025 7:57 AM PLOT BY : NICHOLAS BECKER PLOT NAME : **PLOT SCALE :** 1 IN:10 FT HORZ. / 1 IN:10 FT VERT.

WISDOT/CADDS SHEET 49

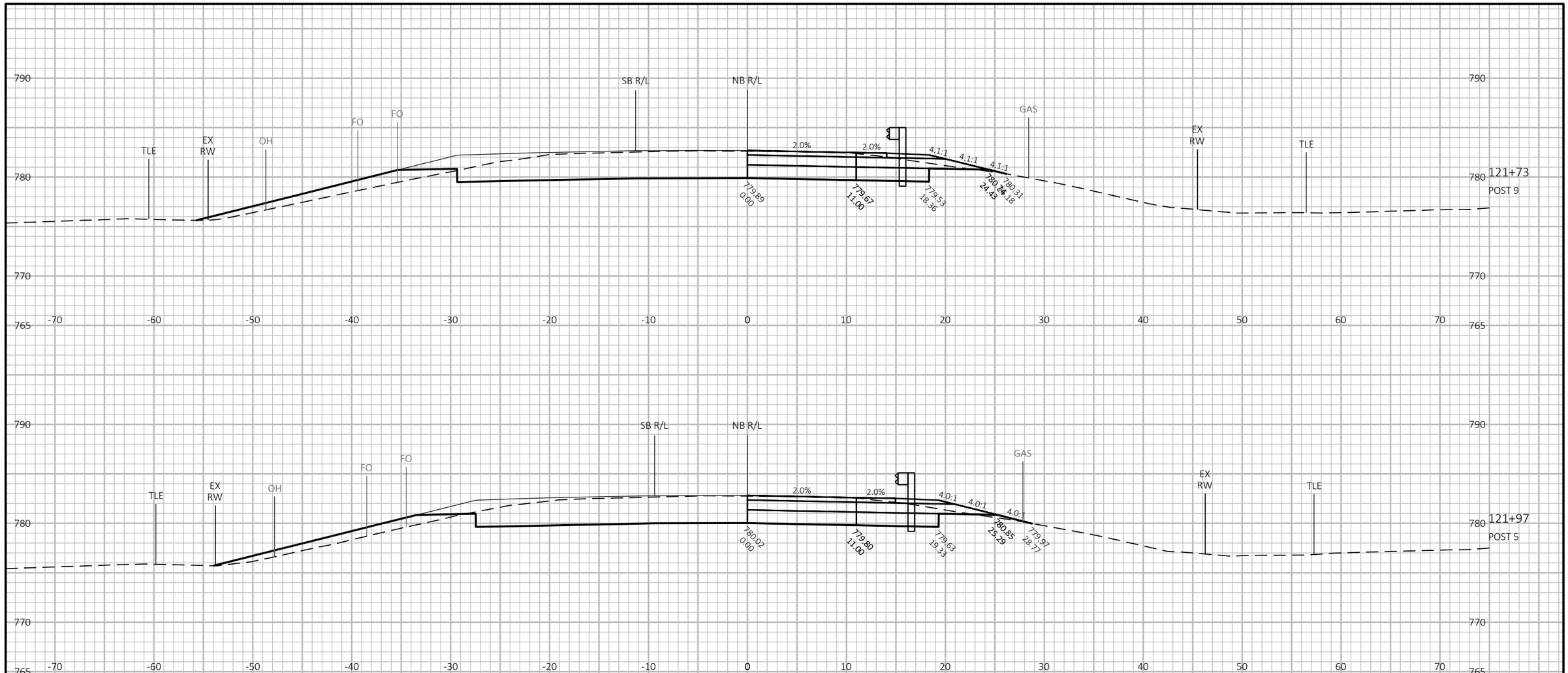

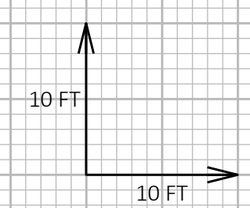

9

9

PROJECT NO: 2814-03-70	HWY: CTH A	COUNTY: RACINE	CROSS SECTIONS: CTH J NORTHBOUND EXIT	SHEET 224	E

FILE NAME : Y:\54XX\5486.DP22.CTH.A.RCN.INTRSCTN.CTH.J\CADDS\28140300\SHEETS\090201-XS.DWG
LAYOUT NAME - NB Exit 4

PLOT DATE : 2/19/2025 7:57 AM PLOT BY : NICHOLAS BECKER PLOT NAME : **PLOT SCALE :** 1 IN:10 FT HORZ. / 1 IN:10 FT VERT.

WISDOT/CADDS SHEET 49

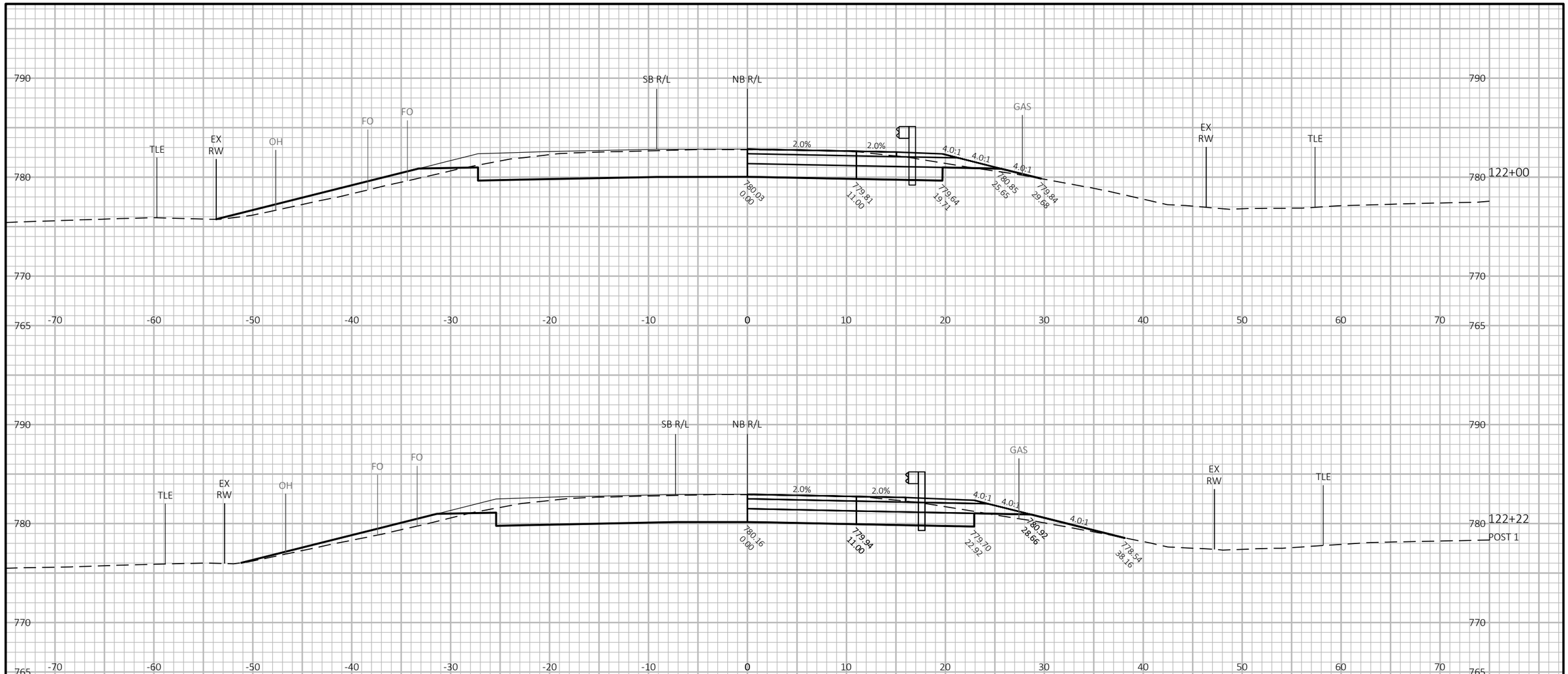

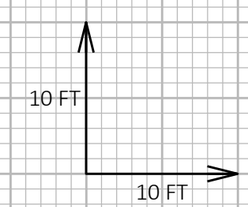

9

9

PROJECT NO: 2814-03-70	HWY: CTH A	COUNTY: RACINE	CROSS SECTIONS: CTH J NORTHBOUND EXIT	SHEET 225	E

FILE NAME : Y:\54XX\5486.DP22.CTH.A.RCN.INTRSCTN.CTH.J\CADDS\28140300\SHEETS\090201-XS.DWG
LAYOUT NAME - NB Exit 5

PLOT DATE : 2/19/2025 7:57 AM PLOT BY : NICHOLAS BECKER PLOT NAME : **PLOT SCALE :** 1 IN:10 FT HORZ. / 1 IN:10 FT VERT.

WISDOT/CADDS SHEET 49

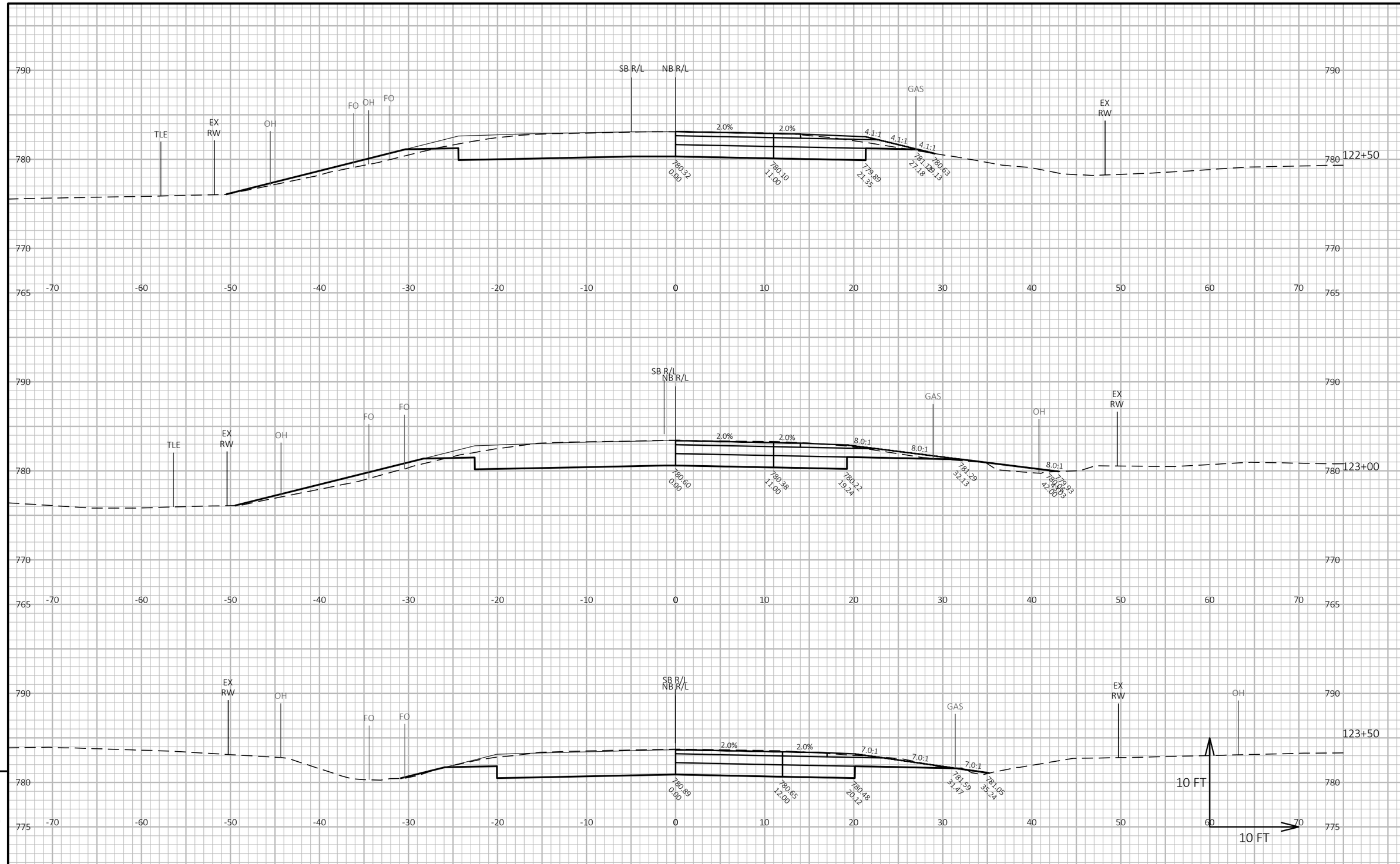

9

9

PROJECT NO: 2814-03-70	HWY: CTH A	COUNTY: RACINE	CROSS SECTIONS: CTH J NORTHBOUND EXIT	SHEET 226	E

FILE NAME : Y:\54XX\5486.DP22.CTH.A.RCN.INTRSCTN.CTH.J\CADDS\28140300\SHEETS\090201-XS.DWG
LAYOUT NAME - NB Exit 6

PLOT DATE : 2/19/2025 7:57 AM PLOT BY : NICHOLAS BECKER PLOT NAME : **PLOT SCALE :** 1 IN:10 FT HORZ. / 1 IN:10 FT VERT.

WISDOT/CADDS SHEET 49

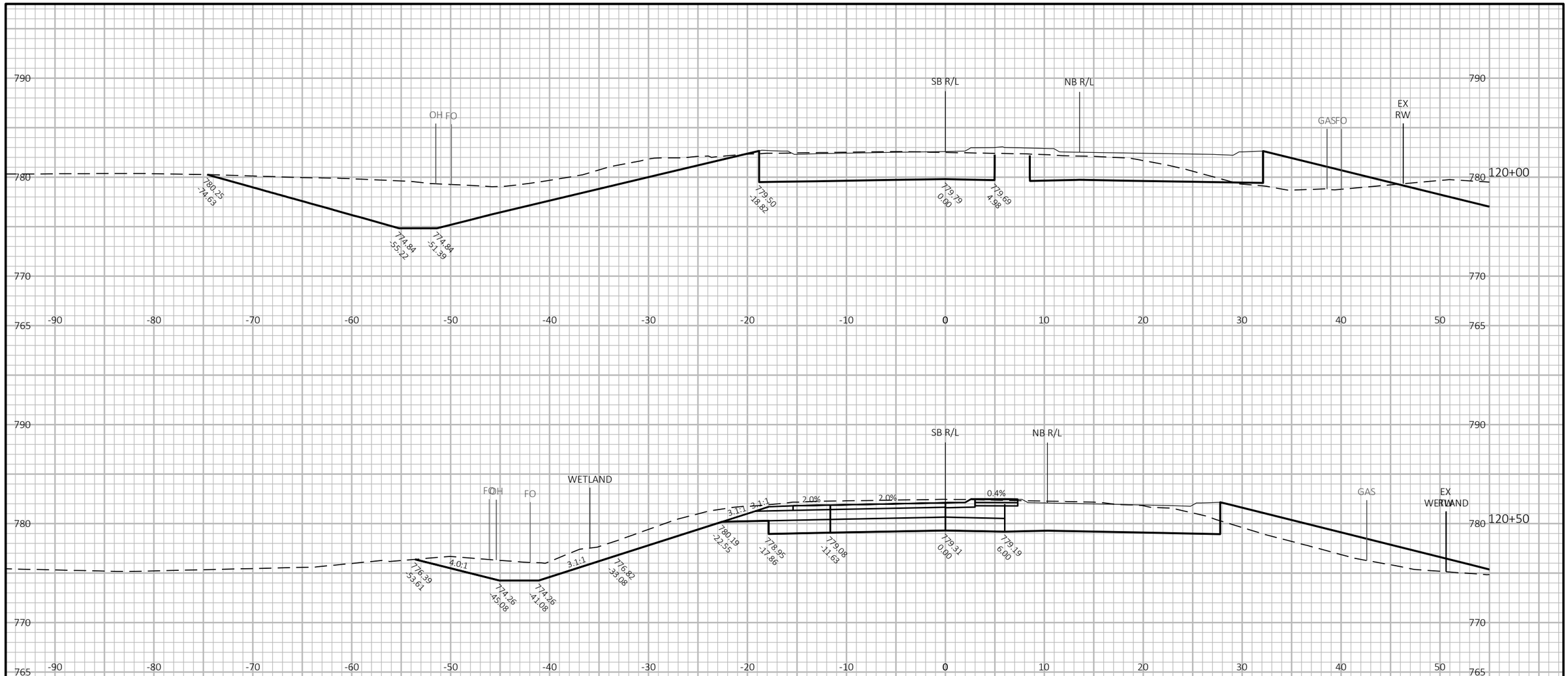

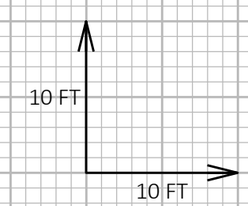

9

9

PROJECT NO: 2814-03-70	HWY: CTH A	COUNTY: RACINE	CROSS SECTIONS: CTH J SOUTHBOUND APPROACH	SHEET 227	E

FILE NAME : Y:\54XX\5486.DP22.CTH.A.RCN.INTRSCTN.CTH.J\CADDS\28140300\SHEETS\090201-XS.DWG
LAYOUT NAME - SB App 1

PLOT DATE : 2/19/2025 7:57 AM PLOT BY : NICHOLAS BECKER PLOT NAME : **PLOT SCALE :** 1 IN:10 FT HORZ. / 1 IN:10 FT VERT.

WISDOT/CADDS SHEET 49

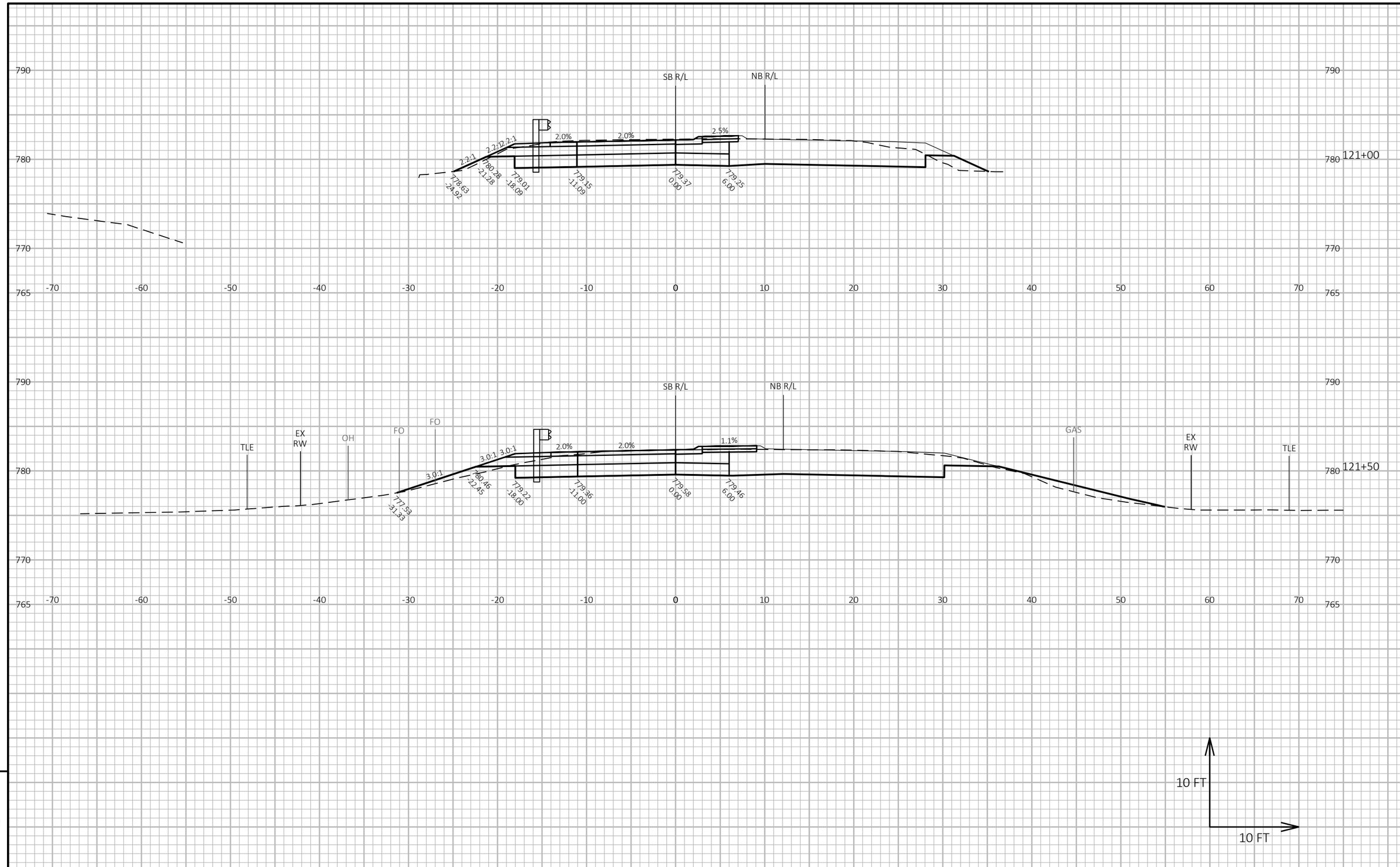

PROJECT NO: 2814-03-70	HWY: CTH A	COUNTY: RACINE	CROSS SECTIONS: CTH J SOUTHBOUND APPROACH	SHEET 228	E

FILE NAME : Y:\54XX\5486.DP22.CTH.A.RCN.INTRSCTN.CTH.J\CADDS\28140300\SHEETS\090201-XS.DWG
LAYOUT NAME - SB App 2
PLOT DATE : 2/19/2025 7:57 AM
PLOT BY : NICHOLAS BECKER
PLOT NAME :
PLOT SCALE : 1 IN:10 FT HORZ. / 1 IN:10 FT VERT.
WISDOT/CADDS SHEET 49

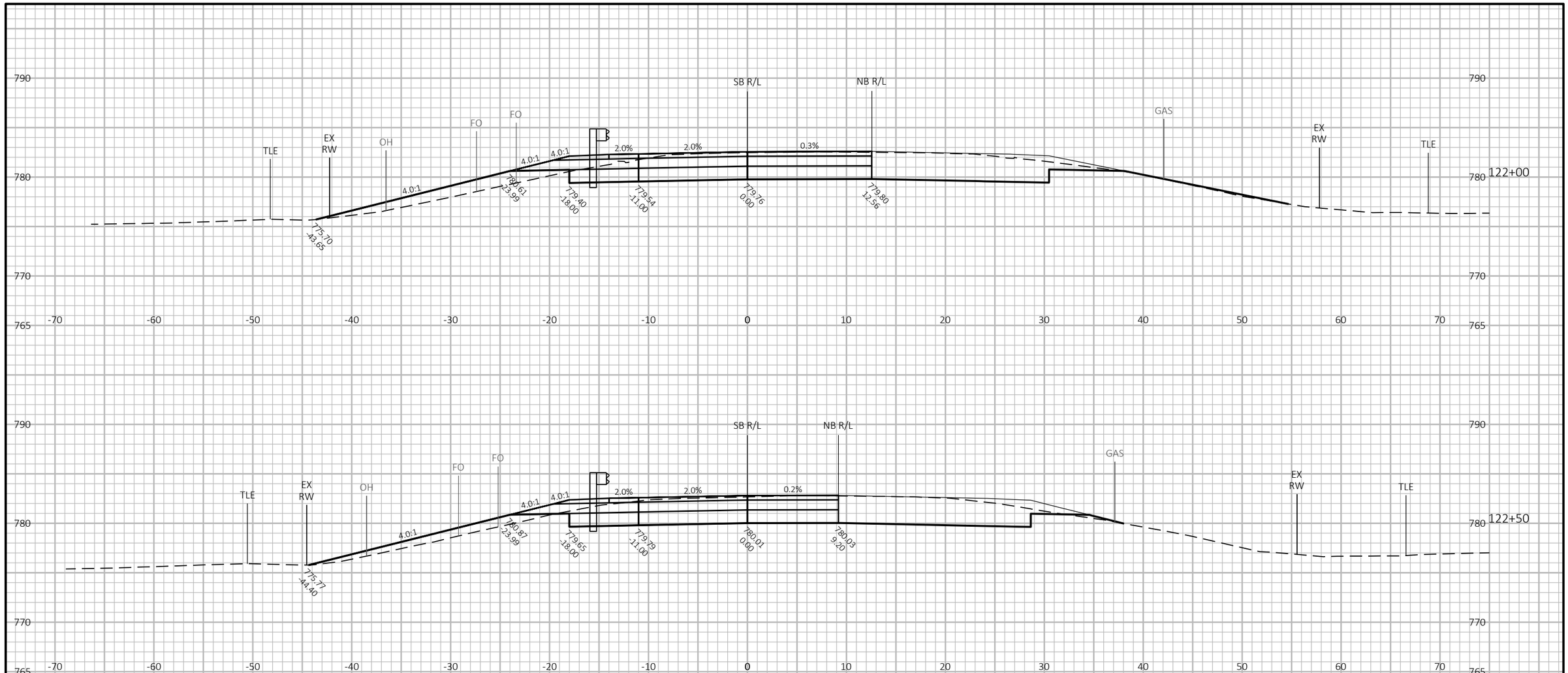

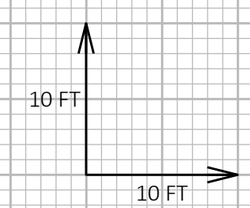

9

9

PROJECT NO: 2814-03-70	HWY: CTH A	COUNTY: RACINE	CROSS SECTIONS: CTH J SOUTHBOUND APPROACH	SHEET 229	E

FILE NAME : Y:\54XX\5486.DP22.CTH.A.RCN.INTRSCTN.CTH.J\CADDS\28140300\SHEETS\090201-XS.DWG
LAYOUT NAME - SB App 3

PLOT DATE : 2/19/2025 7:57 AM PLOT BY : NICHOLAS BECKER PLOT NAME : PLOT SCALE : 1 IN:10 FT HORZ. / 1 IN:10 FT VERT.

WISDOT/CADDS SHEET 49

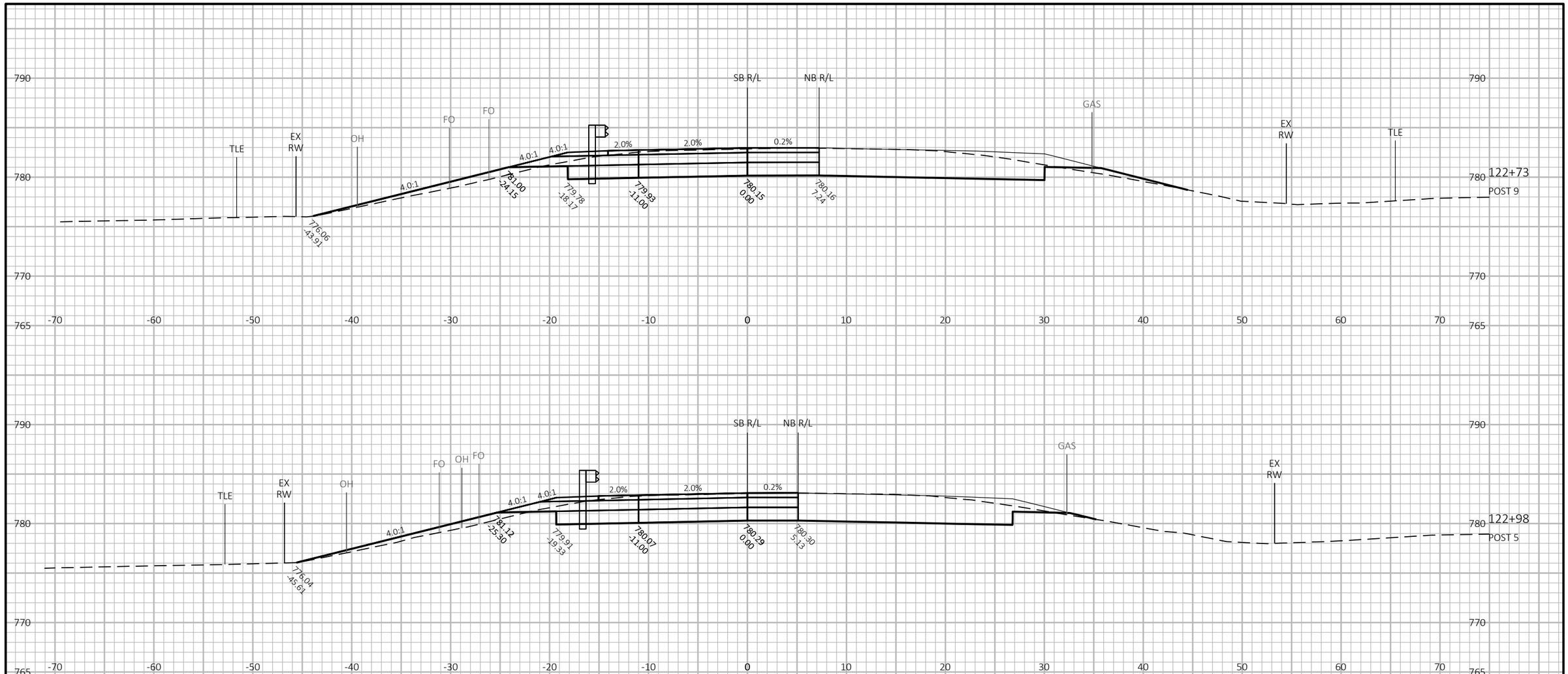

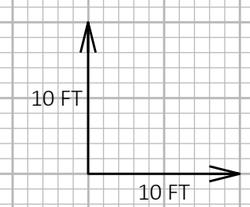

9

9

PROJECT NO: 2814-03-70	HWY: CTH A	COUNTY: RACINE	CROSS SECTIONS: CTH J SOUTHBOUND APPROACH	SHEET 230	E

FILE NAME : Y:\54XX\5486.DP22.CTH.A.RCN.INTRSCTN.CTH.J\CADDS\28140300\SHEETS\090201-XS.DWG
LAYOUT NAME - SB App 4

PLOT DATE : 2/19/2025 7:57 AM PLOT BY : NICHOLAS BECKER PLOT NAME : PLOT SCALE : 1 IN:10 FT HORZ. / 1 IN:10 FT VERT.

WISDOT/CADDS SHEET 49

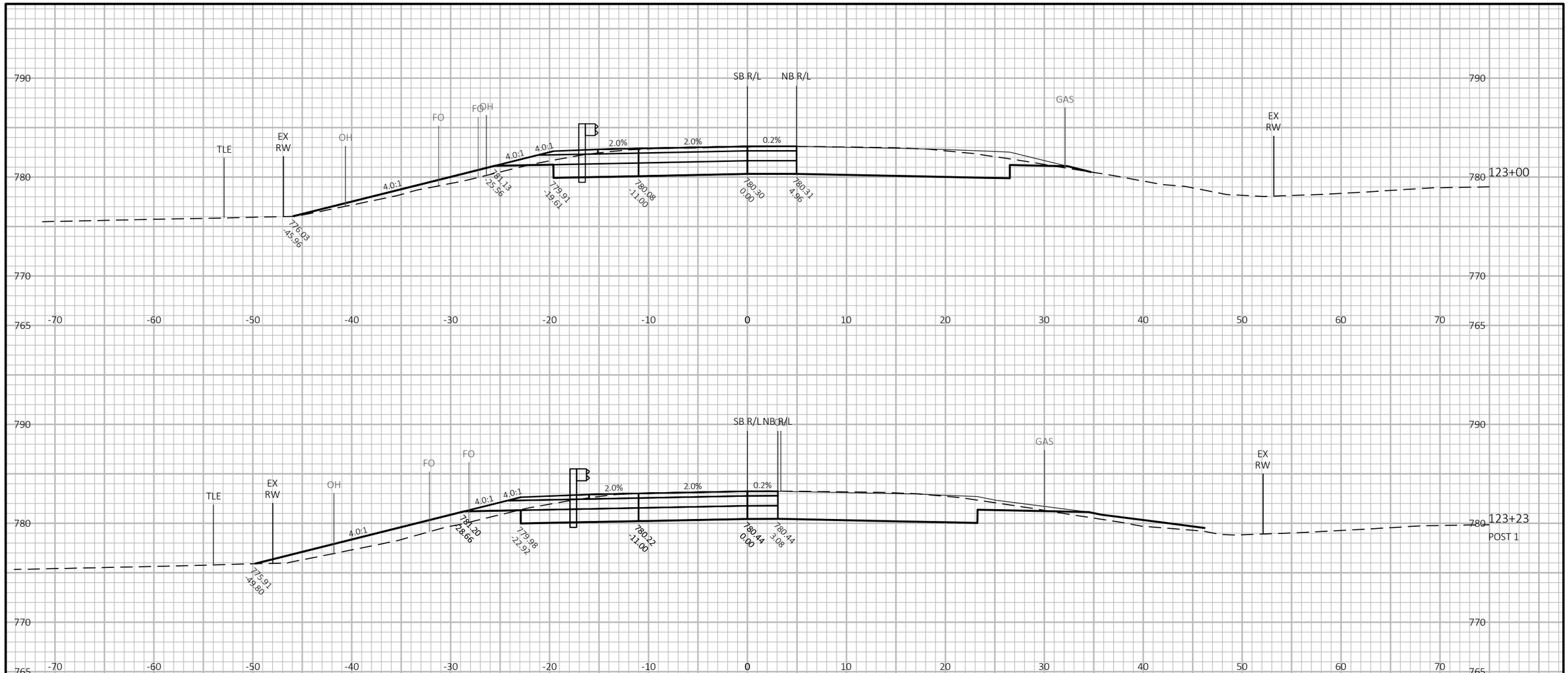

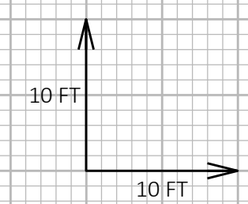

9

9

PROJECT NO: 2814-03-70	HWY: CTH A	COUNTY: RACINE	CROSS SECTIONS: CTH J SOUTHBOUND APPROACH	SHEET 231	E

FILE NAME : Y:\54XX\5486.DP22.CTH.A.RCN.INTRSCTN.CTH.J\CADDS\28140300\SHEETS\090201-XS.DWG
LAYOUT NAME - SB App 5
PLOT DATE : 2/19/2025 7:57 AM
PLOT BY : NICHOLAS BECKER
PLOT NAME :
PLOT SCALE : 1 IN:10 FT HORZ. / 1 IN:10 FT VERT.
WISDOT/CADDS SHEET 49

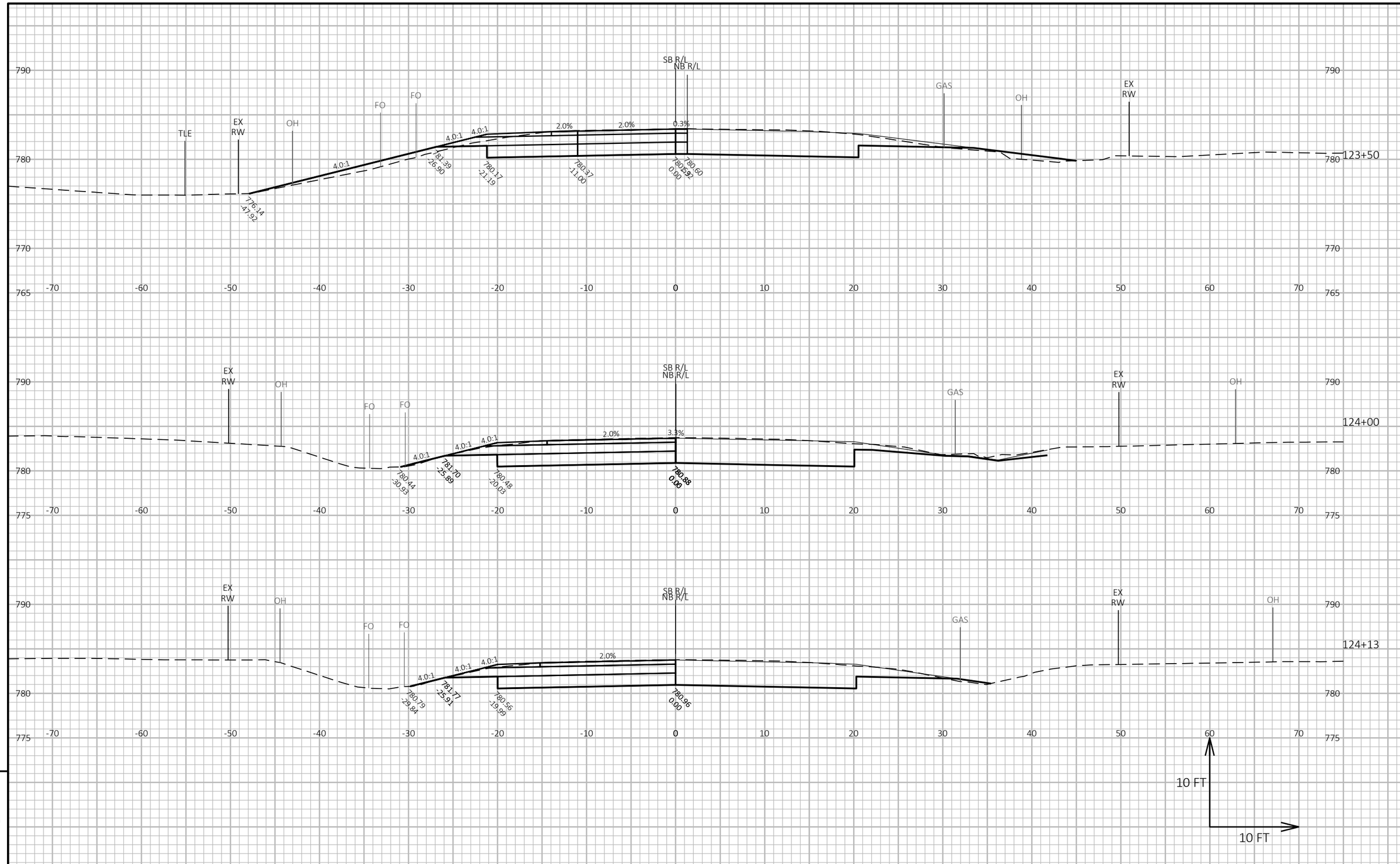

9

9

PROJECT NO: 2814-03-70	HWY: CTH A	COUNTY: RACINE	CROSS SECTIONS: CTH J SOUTHBOUND APPROACH	SHEET 232	E

FILE NAME : Y:\54XX\5486.DP22.CTH.A.RCN.INTRSCTN.CTH.J\CADDS\28140300\SHEETS\090201-XS.DWG
LAYOUT NAME - SB App 6

PLOT DATE : 2/19/2025 7:58 AM PLOT BY : NICHOLAS BECKER PLOT NAME : PLOT SCALE : 1 IN:10 FT HORZ. / 1 IN:10 FT VERT.

WISDOT/CADDS SHEET 49

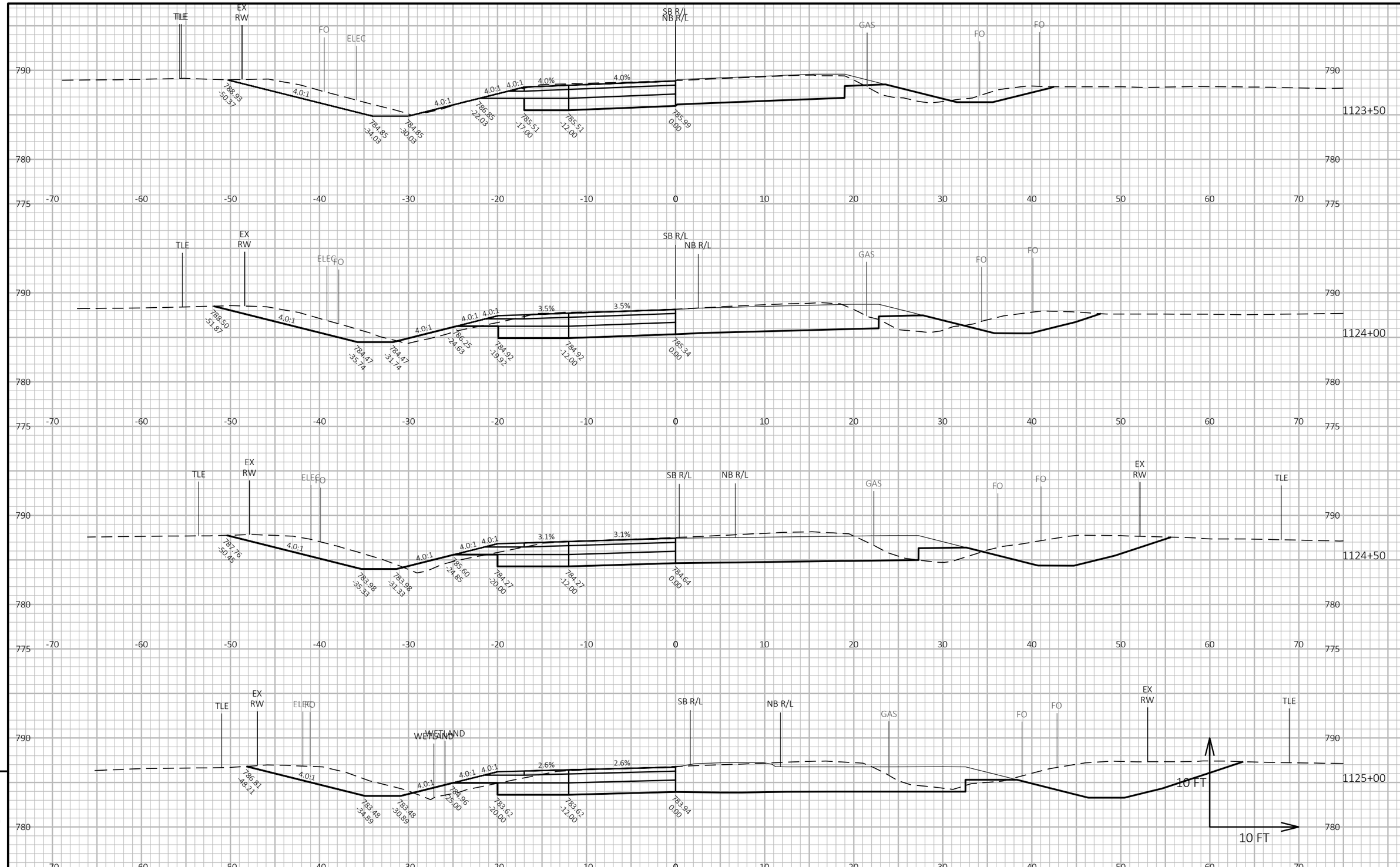

PROJECT NO: 2814-03-70	HWY: CTH A	COUNTY: RACINE	CROSS SECTIONS: CTH J SOUTHBOUND EXIT	SHEET 233	E

FILE NAME : Y:\54XX\5486.DP22.CTH.A.RCN.INTRSCTN.CTH.J\CADDS\28140300\SHEETS\090201-XS.DWG
LAYOUT NAME - SB Exit 1
PLOT DATE : 2/19/2025 7:58 AM
PLOT BY : NICHOLAS BECKER
PLOT NAME :
PLOT SCALE : 1 IN:10 FT HORZ. / 1 IN:10 FT VERT.
WISDOT/CADDS SHEET 49

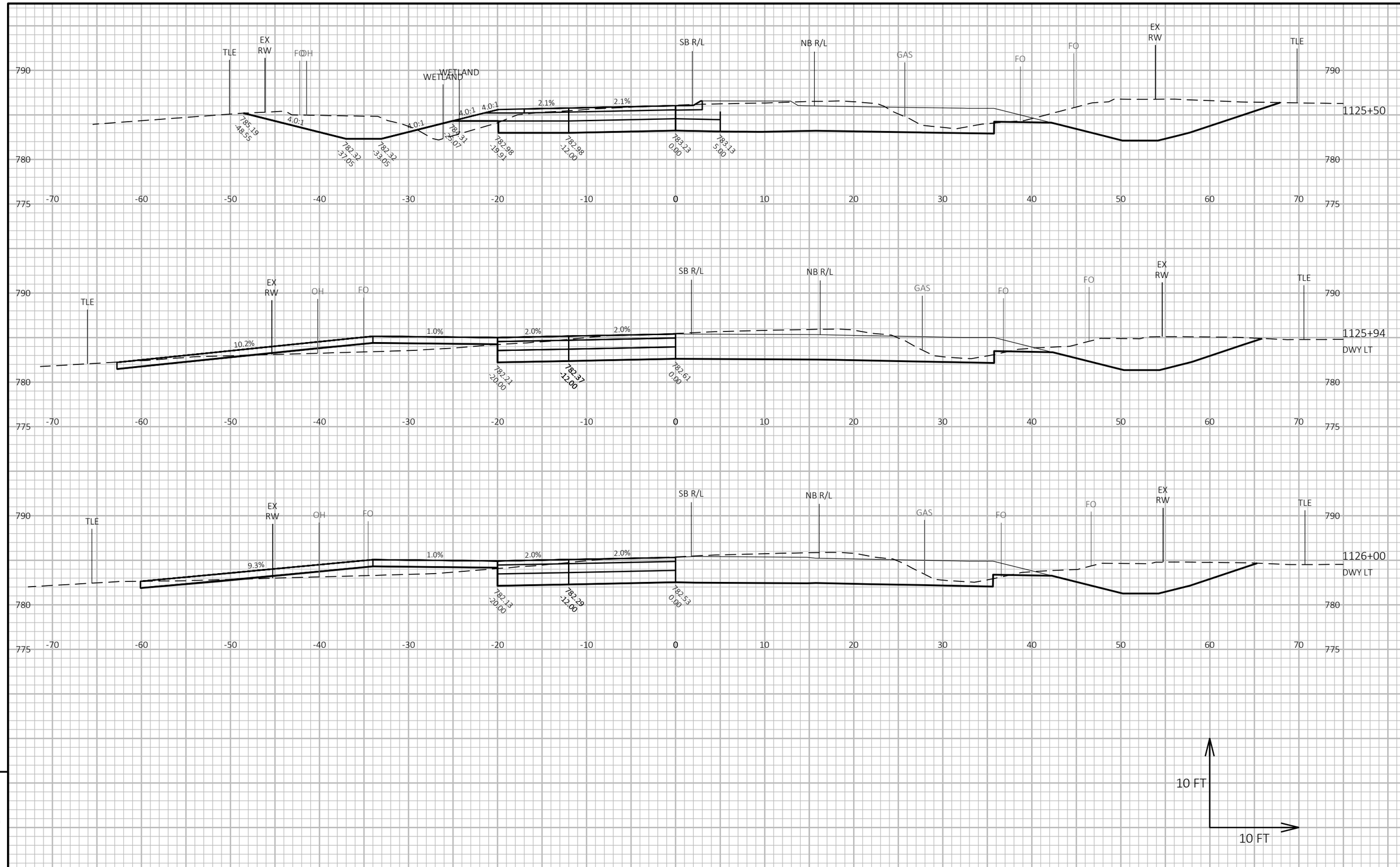

9

9

PROJECT NO: 2814-03-70	HWY: CTH A	COUNTY: RACINE	CROSS SECTIONS: CTH J SOUTHBOUND EXIT	SHEET 234	E

FILE NAME : Y:\54XX\5486.DP22.CTH.A.RCN.INTRSCTN.CTH.J\CADDS\28140300\SHEETS\090201-XS.DWG
LAYOUT NAME - SB Exit 2

PLOT DATE : 2/19/2025 7:58 AM PLOT BY : NICHOLAS BECKER PLOT NAME : **PLOT SCALE :** 1 IN:10 FT HORZ. / 1 IN:10 FT VERT.

WISDOT/CADDS SHEET 49

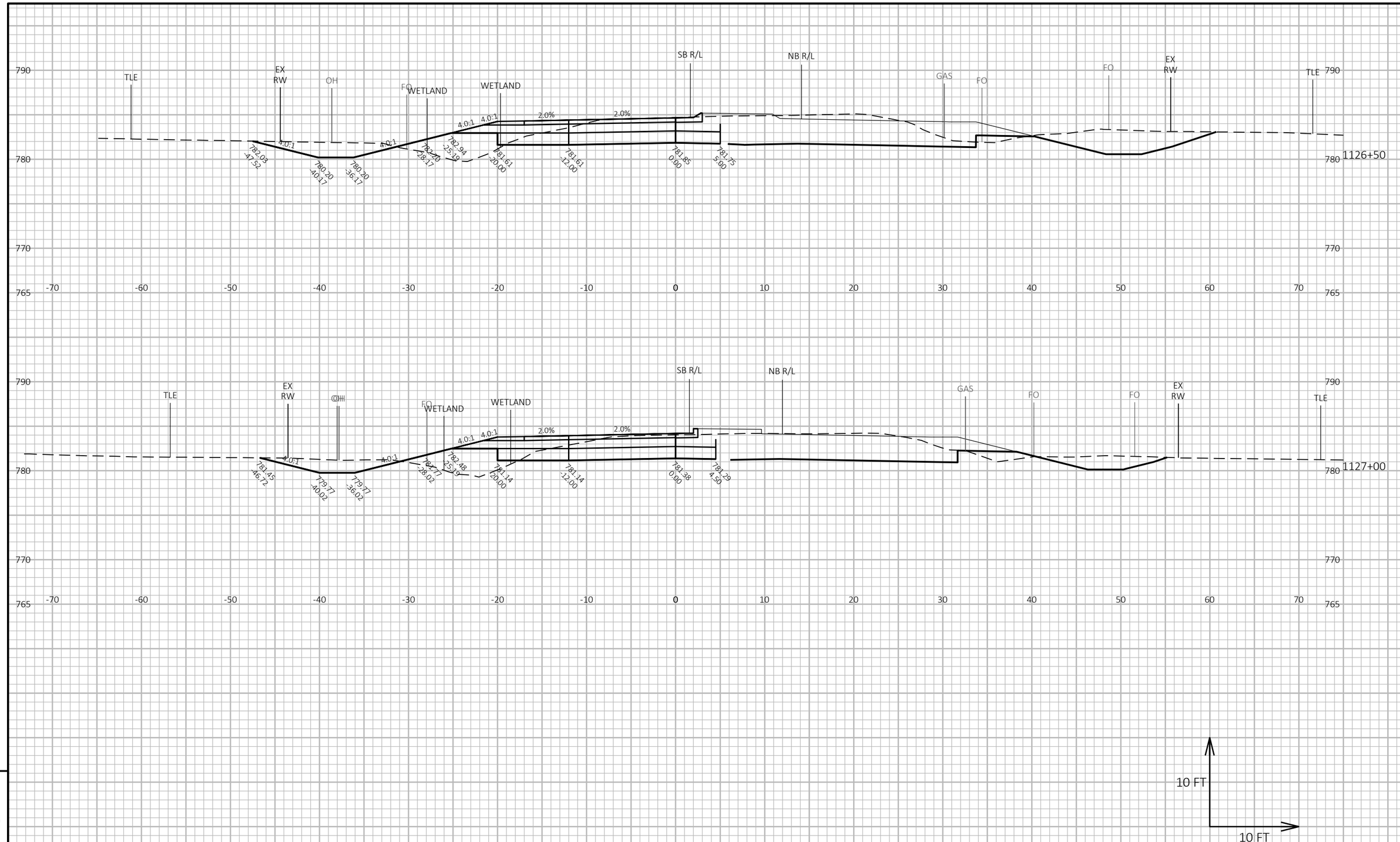

9

9

PROJECT NO: 2814-03-70	HWY: CTH A	COUNTY: RACINE	CROSS SECTIONS: CTH J SOUTHBOUND EXIT	SHEET 235	E

FILE NAME : Y:\54XX\5486.DP22.CTH.A.RCN.INTRSCTN.CTH.J\CADDS\28140300\SHEETS\090201-XS.DWG
LAYOUT NAME - SB Exit 3

PLOT DATE : 2/19/2025 7:58 AM PLOT BY : NICHOLAS BECKER PLOT NAME : PLOT SCALE : 1 IN:10 FT HORZ. / 1 IN:10 FT VERT.

WISDOT/CADDS SHEET 49

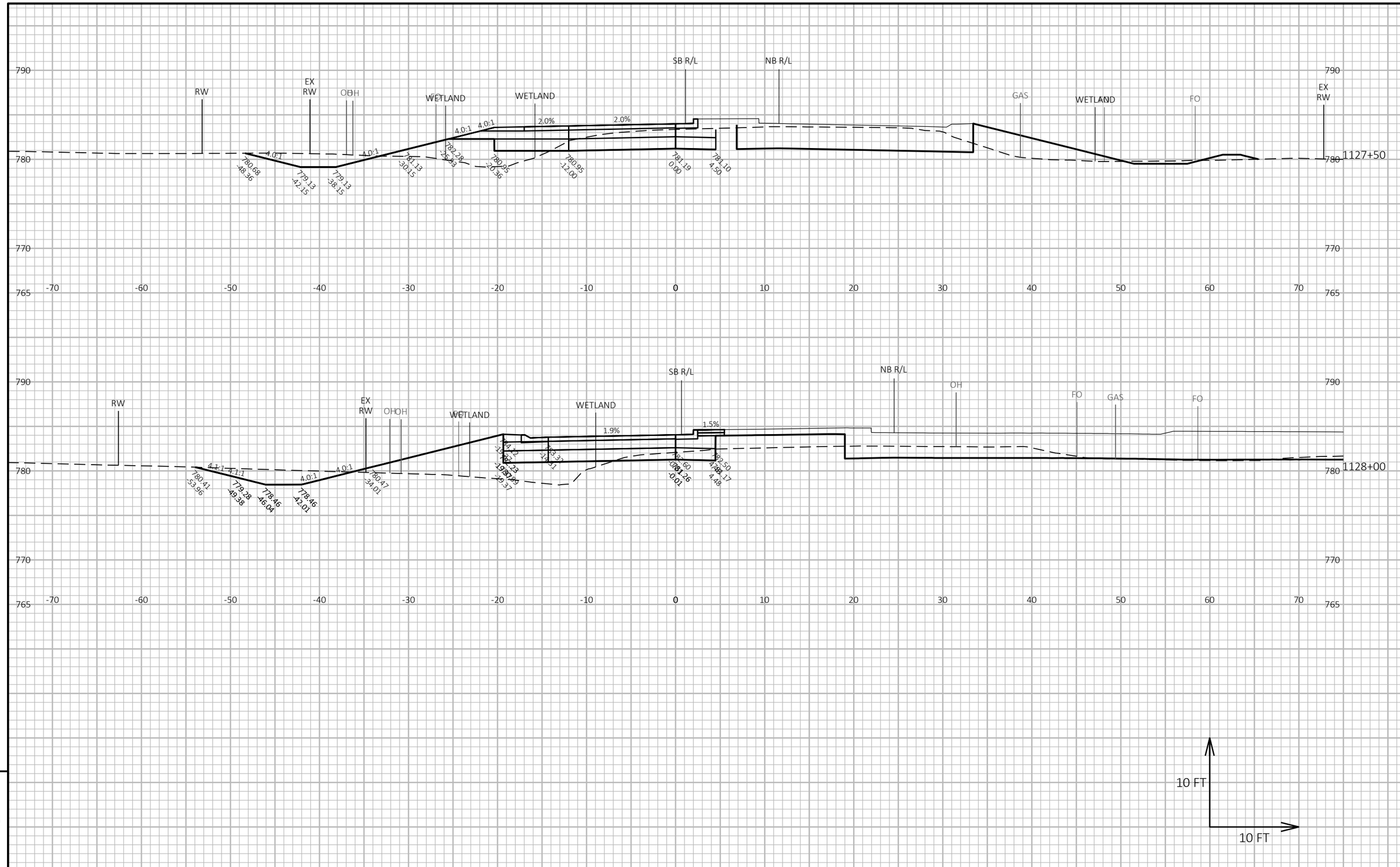

PROJECT NO: 2814-03-70	HWY: CTH A	COUNTY: RACINE	CROSS SECTIONS: CTH J SOUTHBOUND EXIT	SHEET 236	E

FILE NAME : Y:\54XX\5486.DP22.CTH.A.RCN.INTRSCTN.CTH.J\CADDS\28140300\SHEETS\090201-XS.DWG
LAYOUT NAME - SB Exit 4
PLOT DATE : 2/19/2025 7:58 AM
PLOT BY : NICHOLAS BECKER
PLOT NAME :
PLOT SCALE : 1 IN:10 FT HORZ. / 1 IN:10 FT VERT.
WISDOT/CADDS SHEET 49

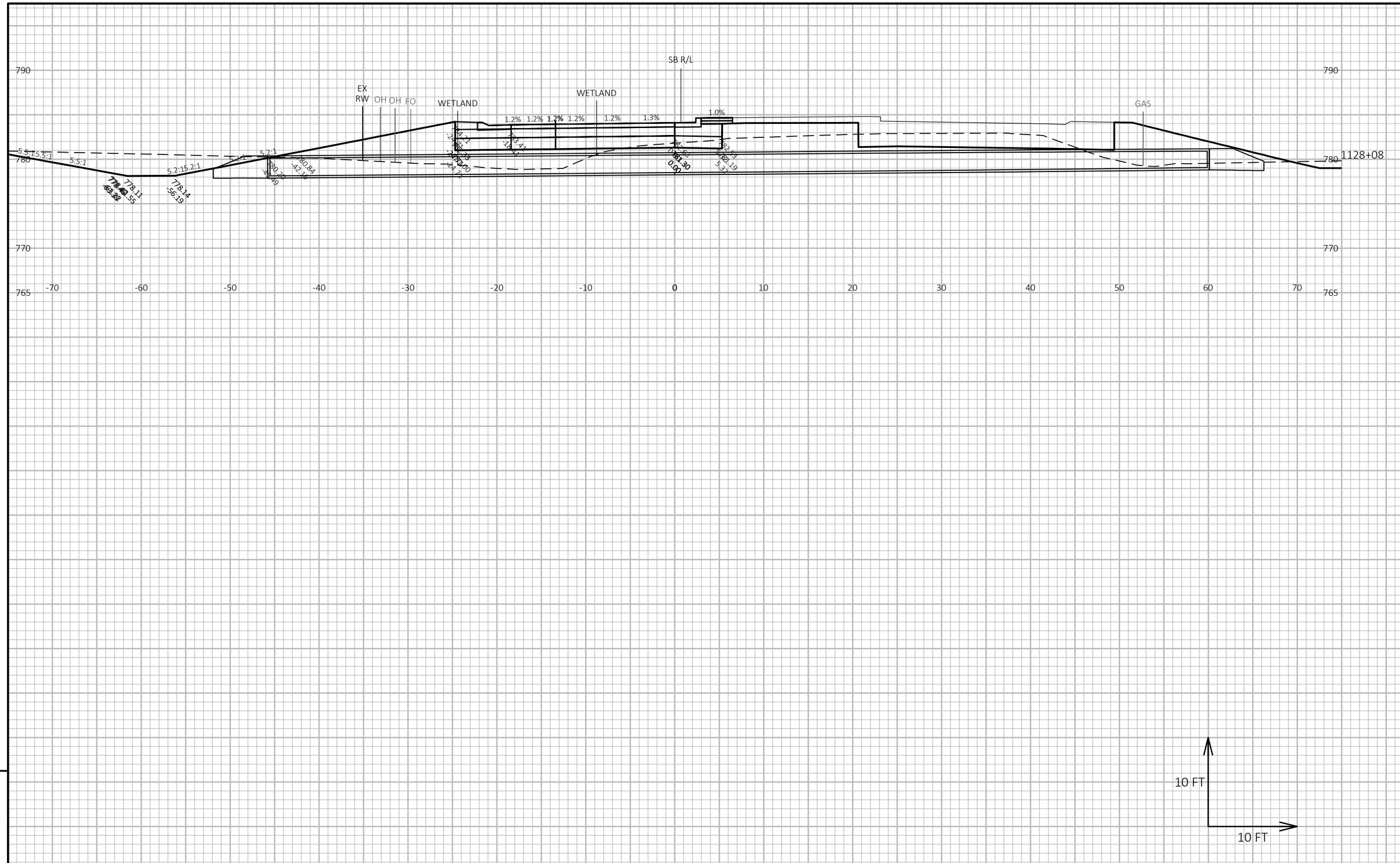

9

9

PROJECT NO: 2814-03-70	HWY: CTH A	COUNTY: RACINE	CROSS SECTIONS: CTH J SOUTHBOUND EXIT	SHEET 237	E

FILE NAME : Y:\54XX\5486.DP22.CTH.A.RCN.INTRSCTN.CTH.J\CADDS\28140300\SHEETS\090201-XS.DWG
LAYOUT NAME - SB Exit 5

PLOT DATE : 2/19/2025 7:58 AM PLOT BY : NICHOLAS BECKER PLOT NAME : **PLOT SCALE :** 1 IN:10 FT HORZ. / 1 IN:10 FT VERT.

WISDOT/CADDS SHEET 49

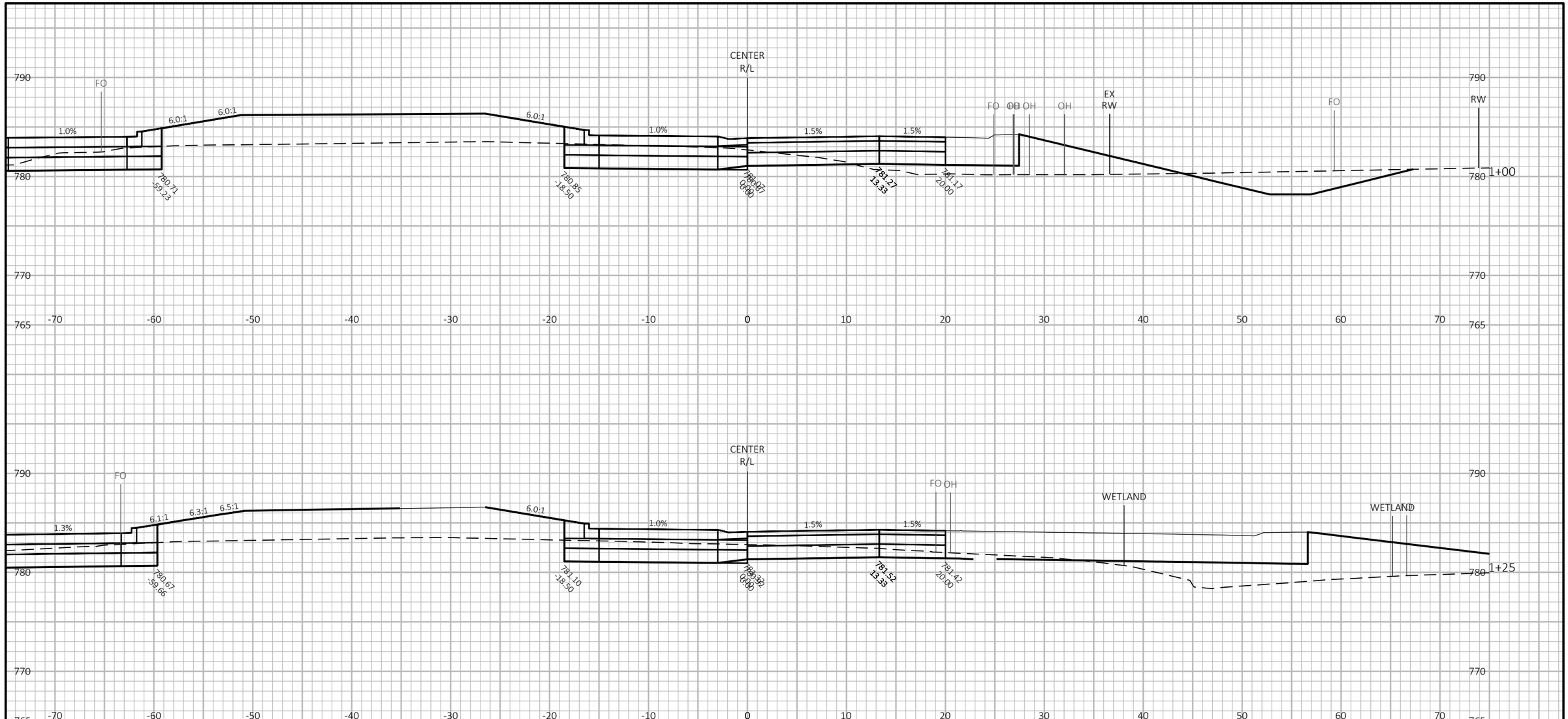

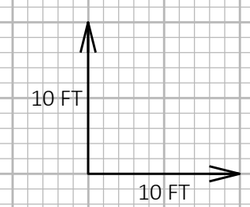

9

9

PROJECT NO: 2814-03-70	HWY: CTH A	COUNTY: RACINE	CROSS SECTIONS: CENTER CIRCLE	SHEET 238	E

FILE NAME : Y:\54XX\5486.DP22.CTH.A.RCN.INTRSCTN.CTH.J\CADDS\28140300\SHEETS\090201-XS.DWG
LAYOUT NAME - CC1

PLOT DATE : 2/19/2025 7:58 AM

PLOT BY : NICHOLAS BECKER

PLOT NAME :

PLOT SCALE : 1 IN:10 FT HORZ. / 1 IN:10 FT VERT.

WISDOT/CADDS SHEET 49

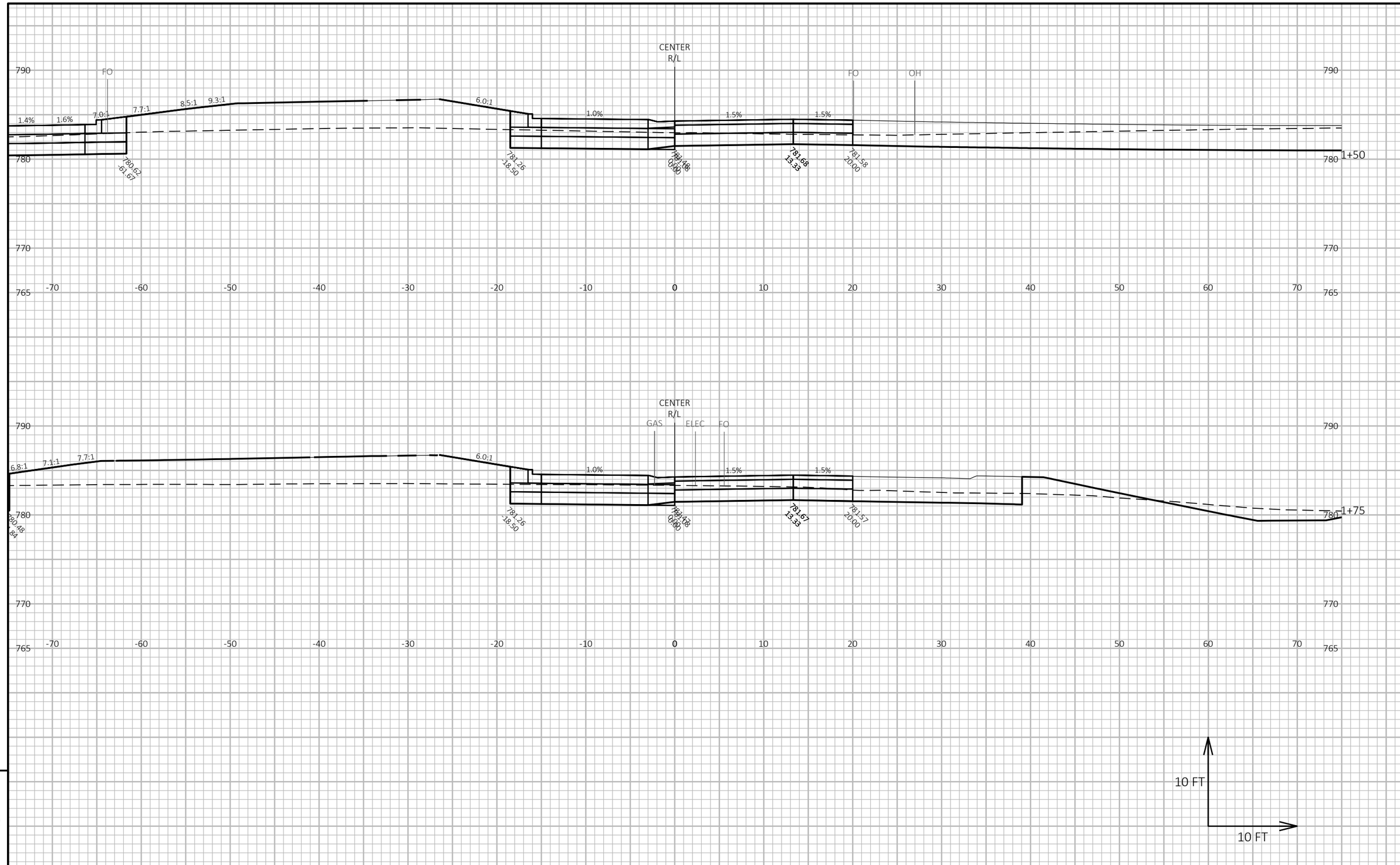

9

9

PROJECT NO: 2814-03-70	HWY: CTH A	COUNTY: RACINE	CROSS SECTIONS: CENTER CIRCLE	SHEET 239	E

FILE NAME : Y:\54XX\5486.DP22.CTH.A.RCN.INTRSCTN.CTH.J\CADDS\28140300\SHEETS\090201-XS.DWG
LAYOUT NAME - CC2

PLOT DATE : 2/19/2025 7:58 AM PLOT BY : NICHOLAS BECKER PLOT NAME : PLOT SCALE : 1 IN:10 FT HORZ. / 1 IN:10 FT VERT.

WISDOT/CADDS SHEET 49

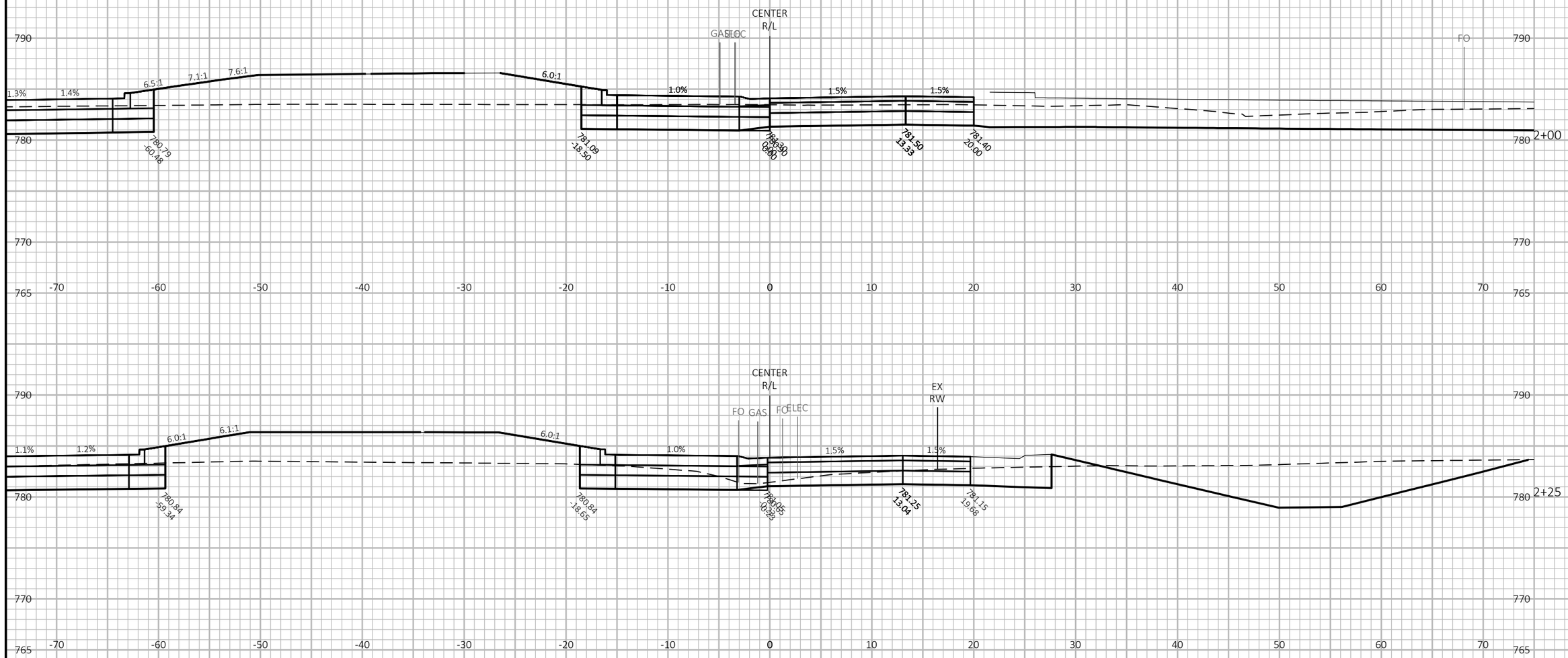

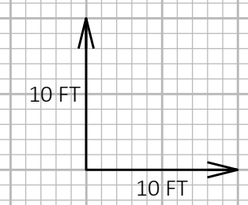

9

9

PROJECT NO: 2814-03-70	HWY: CTH A	COUNTY: RACINE	CROSS SECTIONS: CENTER CIRCLE	SHEET 240	E

FILE NAME : Y:\54XX\5486.DP22.CTH.A.RCN.INTRSCTN.CTH.J\CADDS\28140300\SHEETS\090201-XS.DWG
LAYOUT NAME - CC3
PLOT DATE : 2/19/2025 7:58 AM
PLOT BY : NICHOLAS BECKER
PLOT NAME :
PLOT SCALE : 1 IN:10 FT HORZ. / 1 IN:10 FT VERT.
WISDOT/CADDS SHEET 49

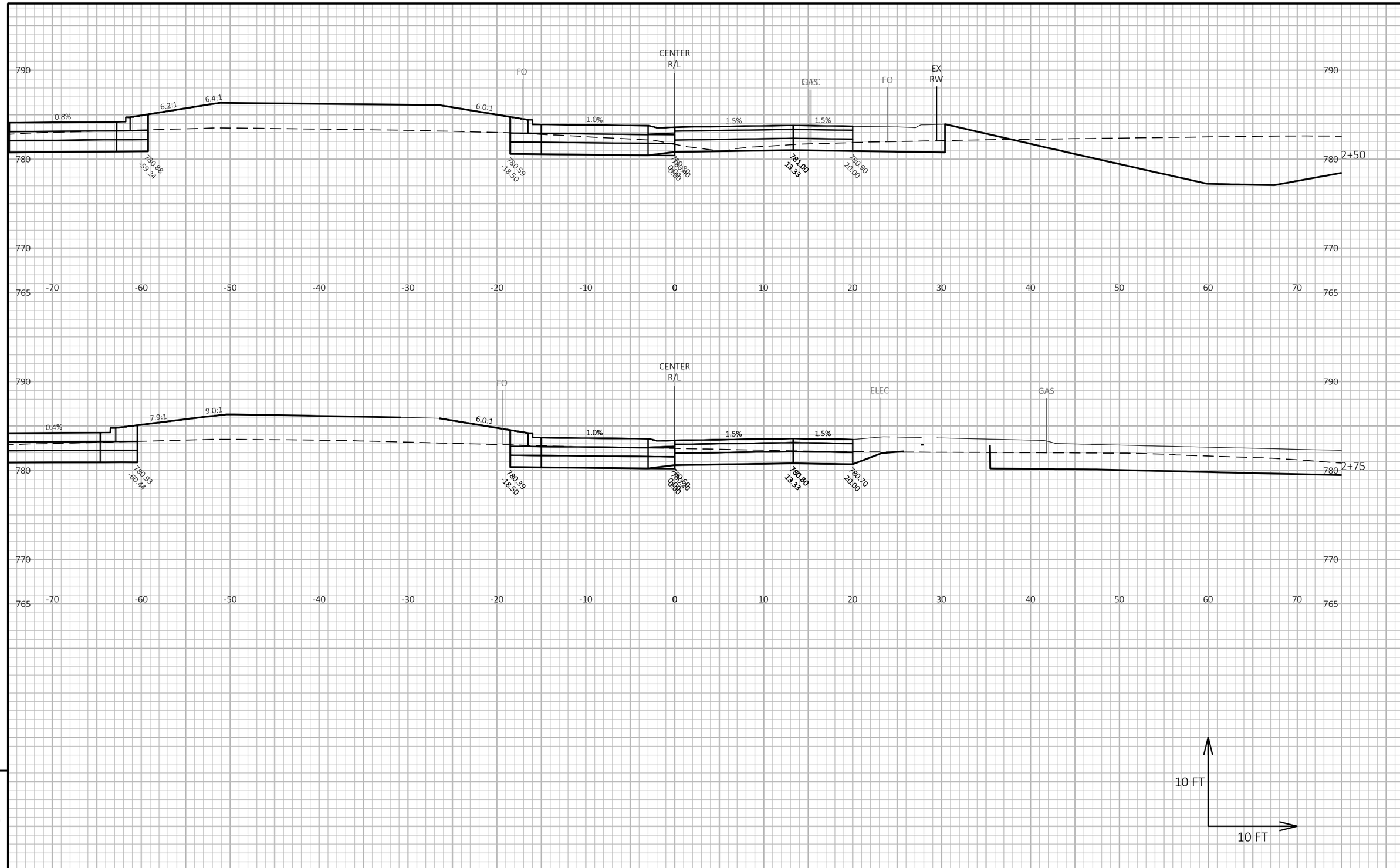

9

9

PROJECT NO: 2814-03-70	HWY: CTH A	COUNTY: RACINE	CROSS SECTIONS: CENTER CIRCLE	SHEET 241	E

FILE NAME : Y:\54XX\5486.DP22.CTH.A.RCN.INTRSCTN.CTH.J\CADDS\28140300\SHEETS\090201-XS.DWG
LAYOUT NAME - CC4

PLOT DATE : 2/19/2025 7:58 AM PLOT BY : NICHOLAS BECKER PLOT NAME : **PLOT SCALE :** 1 IN:10 FT HORZ. / 1 IN:10 FT VERT.

WISDOT/CADDS SHEET 49

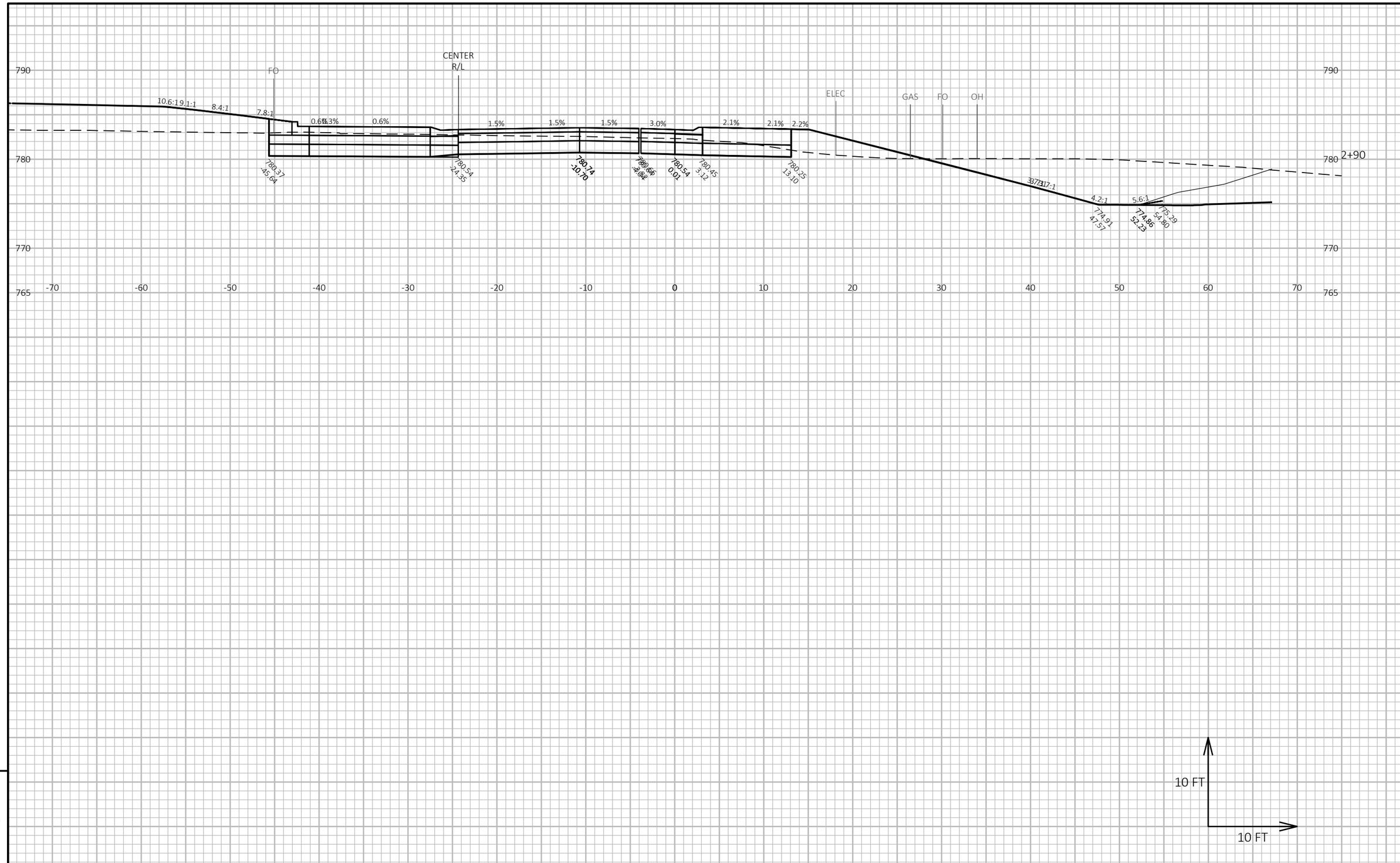

9

9

PROJECT NO: 2814-03-70	HWY: CTH A	COUNTY: RACINE	CROSS SECTIONS: WEST QUADRANT	SHEET 242	E

FILE NAME : Y:\54XX\5486.DP22.CTH.A.RCN.INTRSCTN.CTH.J\CADDS\28140300\SHEETS\090201-XS.DWG
LAYOUT NAME - West Quad 1

PLOT DATE : 2/19/2025 7:58 AM PLOT BY : NICHOLAS BECKER PLOT NAME : **PLOT SCALE :** 1 IN:10 FT HORZ. / 1 IN:10 FT VERT.

WISDOT/CADDS SHEET 49

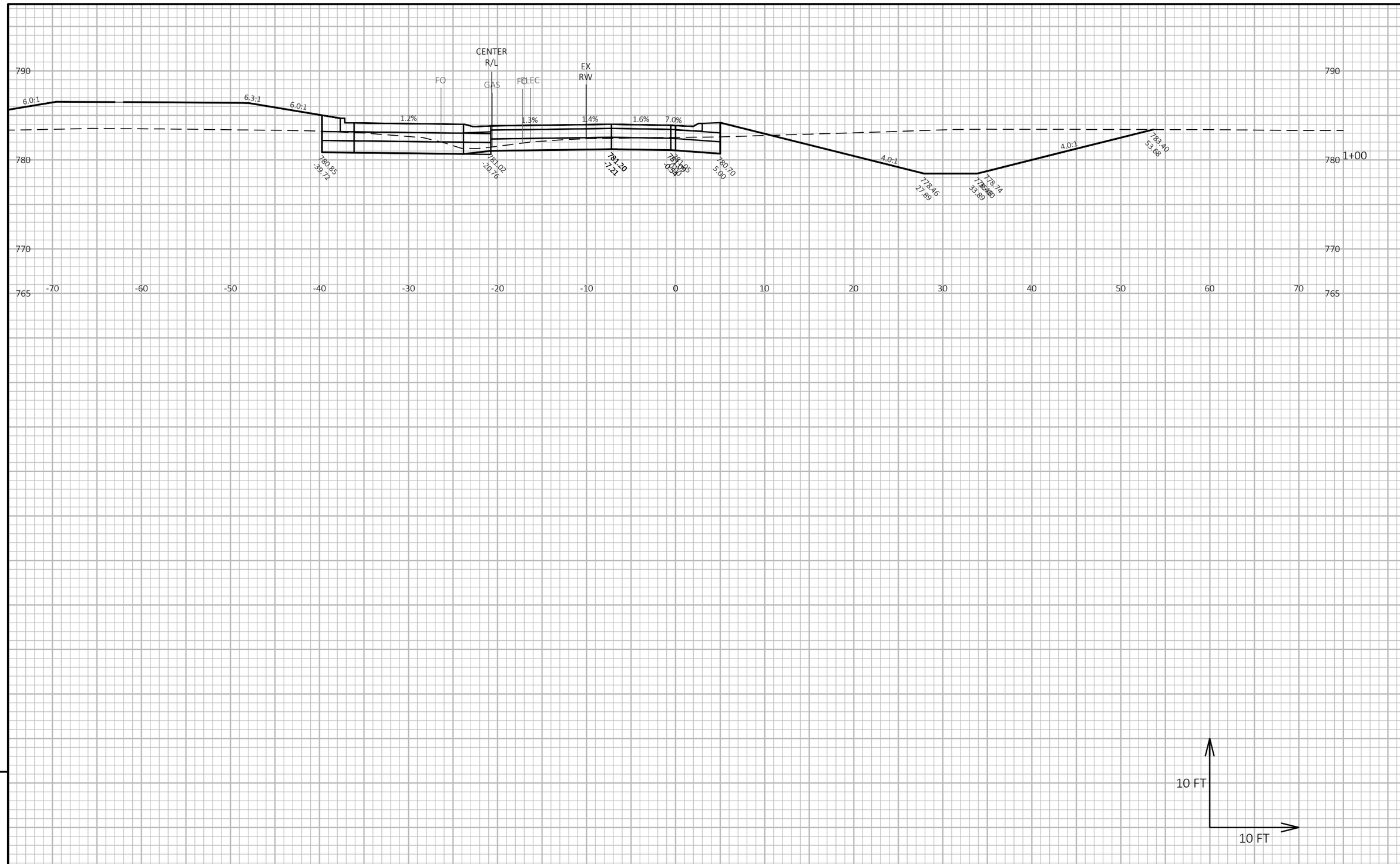

9

9

PROJECT NO: 2814-03-70	HWY: CTH A	COUNTY: RACINE	CROSS SECTIONS: NORTH QUADRANT	SHEET 243	E

FILE NAME : Y:\54XX\5486.DP22.CTH.A.RCN.INTRSCTN.CTH.J\CADDS\28140300\SHEETS\090201-XS.DWG
LAYOUT NAME - North Quad1

PLOT DATE : 2/19/2025 7:59 AM PLOT BY : NICHOLAS BECKER PLOT NAME : **PLOT SCALE :** 1 IN:10 FT HORZ. / 1 IN:10 FT VERT.

WISDOT/CADDS SHEET 49

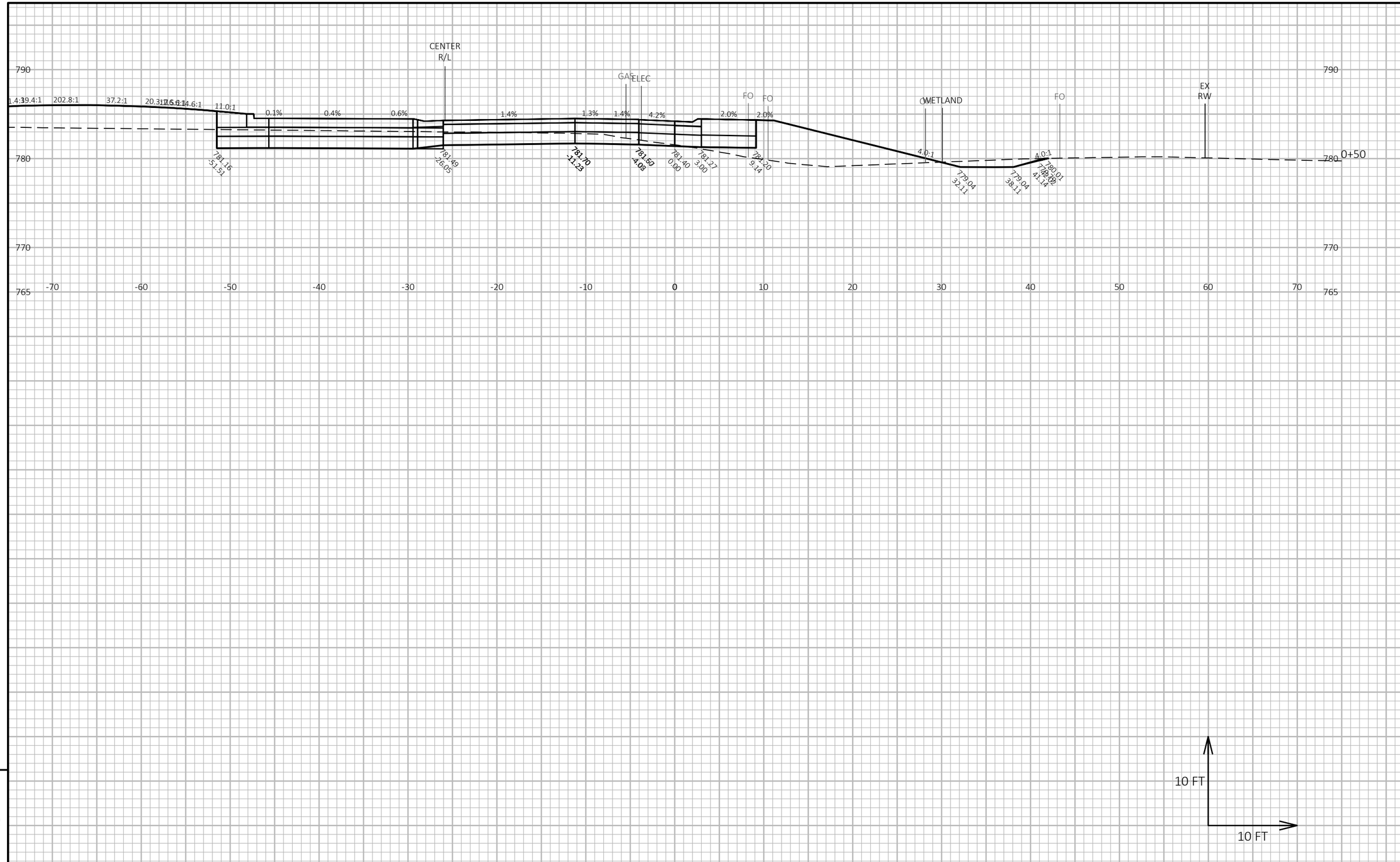

9

9

PROJECT NO: 2814-03-70	HWY: CTH A	COUNTY: RACINE	CROSS SECTIONS: EAST QUADRANT	SHEET 244	E

FILE NAME : Y:\54XX\5486.DP22.CTH.A.RCN.INTRSCTN.CTH.J\CADDS\28140300\SHEETS\090201-XS.DWG
LAYOUT NAME - East Quad 1

PLOT DATE : 2/19/2025 7:59 AM PLOT BY : NICHOLAS BECKER PLOT NAME : **PLOT SCALE :** 1 IN:10 FT HORZ. / 1 IN:10 FT VERT.

WISDOT/CADDS SHEET 49

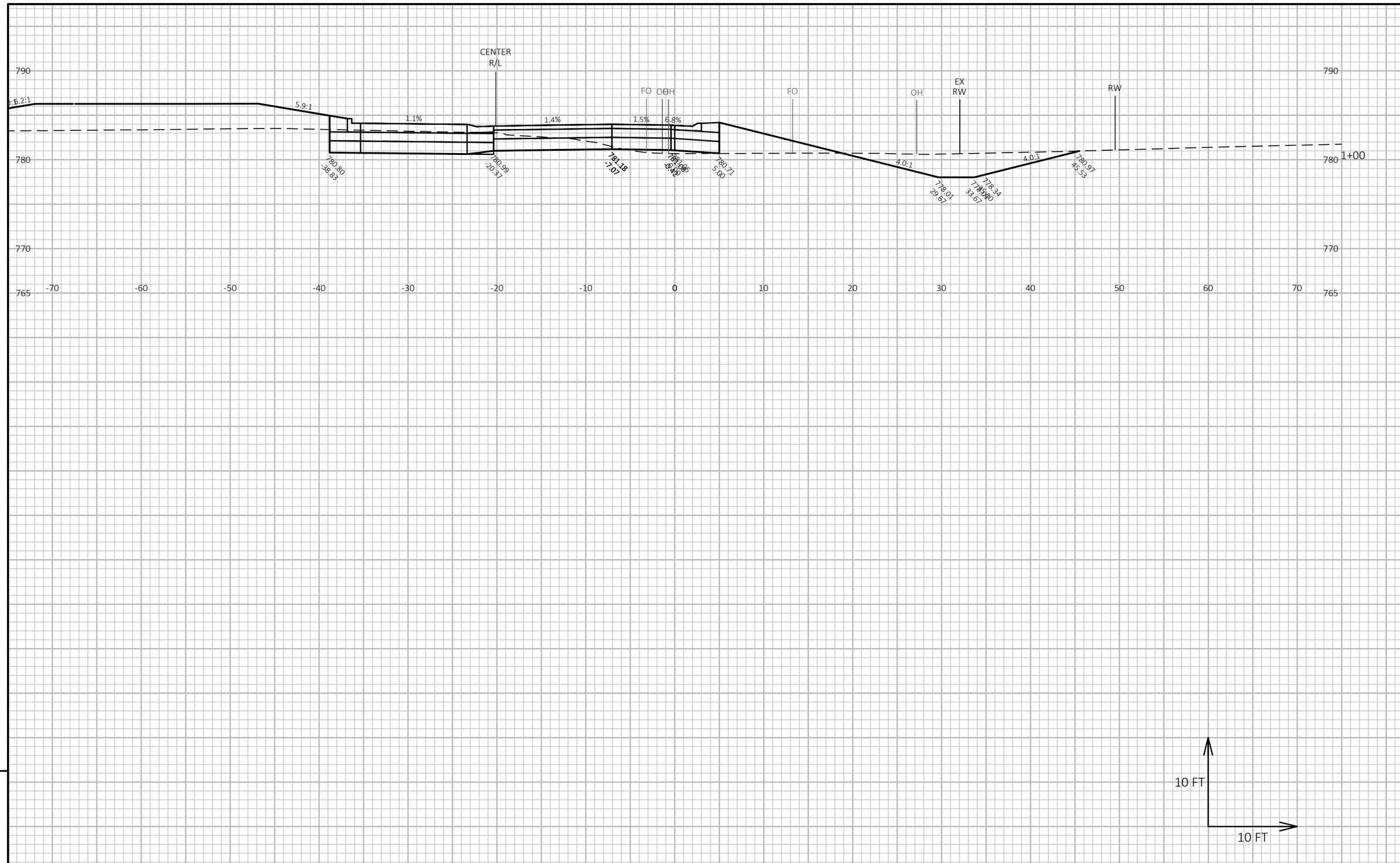

9

9

PROJECT NO: 2814-03-70	HWY: CTH A	COUNTY: RACINE	CROSS SECTIONS: SOUTH QUADRANT	SHEET 245	E

FILE NAME : Y:\54XX\5486.DP22.CTH.A.RCN.INTRSCTN.CTH.J\CADDS\28140300\SHEETS\090201-XS.DWG
LAYOUT NAME - South Quad 1

PLOT DATE : 2/19/2025 7:59 AM PLOT BY : NICHOLAS BECKER PLOT NAME : **PLOT SCALE :** 1 IN:10 FT HORZ. / 1 IN:10 FT VERT.

WISDOT/CADDS SHEET 49

Wisconsin Department of Transportation

Dedicated people creating transportation solutions through innovation and exceptional service.

http://www.dot.wisconsin.gov