WKE PROJECT ID 2984-21-73

APRIL 2025

ORDER OF SHEETS

SECTION NO. 1 TITLE
SECTION NO. 2 TYPICAL DETAILS
SECTION NO. 3 ESTIMATE OF QUANTITIES
SECTION NO. 3 MISCELLANEOUS QUANTITIES
~~SECTION NO. 4 RIGHT OF WAY PLAT~~
SECTION NO. 5 PLAN AND PROFILE
SECTION NO. 6 STANDARD DETAIL DRAWINGS
SECTION NO. 7 SIGN PLATES
~~SECTION NO. 8 STRUCTURE PLANS~~
~~SECTION NO. 9 COMPUTER EARTHWORK DATA~~
~~SECTION NO. 9 CROSS SECTIONS~~

TOTAL SHEETS = 222

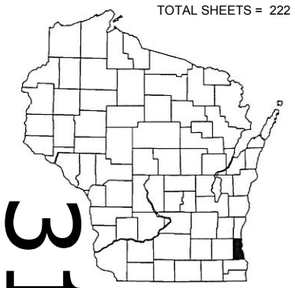

31

STATE OF WISCONSIN
DEPARTMENT OF TRANSPORTATION

PLAN OF PROPOSED IMPROVEMENT

C MILWAUKEE W MORGAN AVENUE

INTS W/ 20TH, 16TH, 13TH, & 6TH ST

LOCAL STREET

MILWAUKEE COUNTY

STATE PROJECT	FEDERAL PROJECT	
	PROJECT	CONTRACT
2984-21-73	WISC 2025373	1

STATE PROJECT NUMBER

2984-21-73

N

DESIGN DESIGNATION

A.D.T.	(CURRENT)	= 21,500-26,000
A.D.T.		= N/A
D.H.V.		= N/A
D.		= N/A
T.		= N/A
DESIGN SPEED		= 35 MPH
ESALS		= N/A

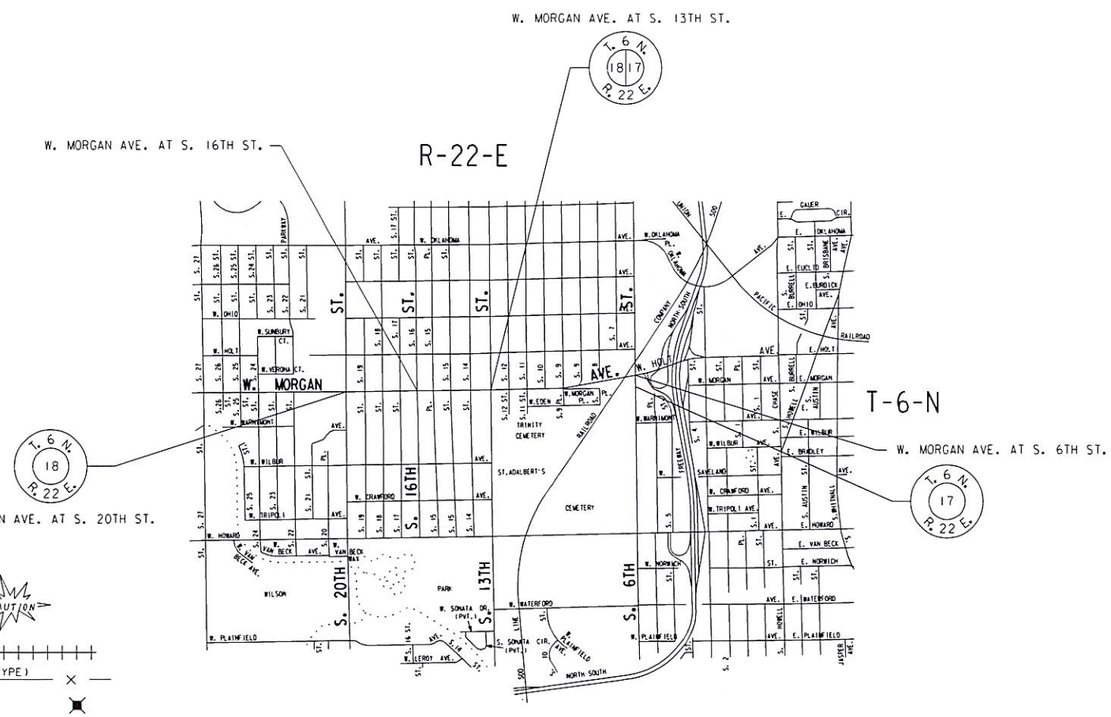

CONVENTIONAL SYMBOLS

PLAN

COUNTY LINE
TOWNSHIP OR RANGE LINE
SECTION LINE
CORPORATE OR CITY LIMITS
PROPERTY LINE — P.L.
STANDARD BENCH MARK
EXISTING RIGHT OF WAY LINE — R/W
PROPOSED SEWER LATERAL — (SIZE)
BASE OF SURVEY LINE
CONCRETE WALK/DWY. REMOVAL
LIMITS OF CONCRETE PAVEMENT REMOVAL — X X X X X X
CATCH BASIN OR INLET — EXISTING PROPOSED

COMBUSTIBLE FLUIDS UNDER PRESSURE — CAUTION
RAILROADS
FENCE — (TYPE)
FIRE & POLICE CALL BOX
LIGHT POLE
POWER POLE
TELEPHONE OR TELEGRAPH POLE
TRAFFIC SIGNAL
TRAFFIC SIGNAL CONTROL BOX
HYDRANT
GAS OR WATER GATE VALVE
MANHOLES - SEWER UTILITY (TYPE)
TREES - EXISTING TO BE REMOVED

LAYOUT

SCALE: 1 INCH = 1/2 MILE

TOTAL NET LENGTH OF CENTERLINE = 0.000 MI (URBAN)

POSITIONS SHOWN ON THIS PLAN ARE WISCONSIN COORDINATE REFERENCE SYSTEM COORDINATES (WISCRS), MILWAUKEE COUNTY, NAD 83 (2011) IN US SURVEY FEET. VALUES SHOWN ARE GRID COORDINATES, GRID BEARINGS, AND GRID DISTANCES. GRID DISTANCES MAY BE USED AS GROUND DISTANCES.

ELEVATIONS SHOWN ON THIS PLAN ARE REFERENCED TO THE CITY OF MILWAUKEE DATUM.

TO CONVERT ELEVATIONS SHOWN ON THIS PLAN TO NATIONAL GEODEDIC VERTICAL DATUM OF 1929, ADD 580.603 TO ELEVATIONS SHOWN ON THIS PLAN.

Accepted For
City of Milwaukee

10/15/2024 (Date) Commissioner of Public Works

Original Plans Prepared By

WISCONSIN KEVIN J. MUHS 46391-6 MILWAUKEE, WI PROFESSIONAL ENGINEER

10/15/2024 (Date) City Engineer

STATE OF WISCONSIN
DEPARTMENT OF TRANSPORTATION

PREPARED BY

Surveyor CITY OF MILWAUKEE
Designer CITY OF MILWAUKEE
Region Examiner
Region Supervisor Amy Taetsch

APPROVED FOR THE DEPARTMENT

DATE: 10/21/2024

(Signature)

E

COUNTY MILWAUKEE

FILENAME: W:\SPR\MONOTUBE PROJECTS\2984-21-03 MORGAN AVE_6TH_13TH_16TH_20TH\MISC\TITLE.DGN

PLOT DATE:

REVISED DATE: 1-31-2024 BY SDB

GENERAL NOTES

1. ALL DISTURBED AREAS, NOT SURFACED, ARE TO BE COVERED WITH 4-INCHES OF TOPSOIL, SODDED UNLESS OTHERWISE DIRECTED BY THE ENGINEER. TOPSOIL AREAS SHALL BE SODDED WITHIN 5 CALENDAR DAYS.
2. ALL STATION AND OFFSET OF CURB REFERENCED IN THE PLANS ARE TO THE FACE OF THE CURB.
3. ANY MESH OR REINFORCEMENT FOUND DURING REMOVAL OF THE PAVEMENT SHALL BE CONSIDERED INCIDENTAL TO THE ITEM “REMOVING PAVEMENT”.
4. THERE MAY BE UTILITY FACILITIES WITHIN THE PROJECT AREA THAT ARE NOT SHOWN ON THE PLANS. THE CONTRACTOR SHALL COORDINATE HIS CONSTRUCTION ACTIVITIES WITH A CALL TO DIGGERS HOTLINE AND/OR A DIRECT CALL TO THE UTILITIES THAT HAVE FACILITIES IN THE AREA. NOT ALL UTILITIES ARE MEMBERS OF DIGGERS HOTLINE
5. THESE PLANS SHOW UTILITY FACILITIES EXISTING AT THE TIME OF THE ORIGINAL SURVEY IN SEPTEMBER OF 2022. CONTRACTOR IS ENCOURAGED TO CONTACT CITY OF MILWAUKEE PLANNING PERMIT SECTION AT (414) 286-2487 TO IDENTIFY ANY UTILITY FACILITIES INSTALLED AFTER THIS DATE.
6. EROSION CONTROL DEVICES ARE SHOWN AT SUGGESTED LOCATIONS. THE ACTUAL LOCATIONS WILL BE DETERMINED BY THE CONTRACTOR’S ECIP AND BY THE ENGINEER. EROSION CONTROL DEVICES SHALL BE MAINTAINED UNTIL PERMANENT VEGETATION IS ESTABLISHED OR UNTIL THE ENGINEER DETERMINES THE DEVICE IS NO LONGER NECESSARY.
7. TRAFFIC CONTROL DEVICES ARE SHOWN AT SUGGESTED LOCATIONS. THE ACTUAL LOCATIONS WILL BE DETERMINED BY THE CONTRACTOR’S TRAFFIC CONTROL PLAN AND BY THE ENGINEER. TRAFFIC CONTROL DEVICES SHALL BE MAINTAINED UNTIL CONSTRUCTION IS COMPLETE OR UNTIL THE ENGINEER DETERMINES THAT THE TRAFFIC CONTROL DEVICE IS NO LONGER NECESSARY.

STANDARD ABBREVIATIONS

ASPH.	- ASPHALT
B.M.	- BENCH MARK
CTR.	- CENTER
C/L	- CENTER LINE
COMB.	- COMBINED
CONC.	- CONCRETE
C.W.	- CONCRETE WALK
COR.	- CORNER
C	- CURB
ELEV.	- ELEVATION
ENT.	- ENTRANCE
EXIST.	- EXISTING
F	- FLANGE
G	- GUTTER, OR GAS
HYD.	- HYDRANT
LT	- LEFT
MMSD	- MILWAUKEE METROPOLITAN SEWERAGE DISTRICT
NB	- NORTHBOUND
P/L	- PROPERTY LINE
PGL	- PROFILE GRADE LINE
R OR RAD.	- RADIUS
RET.	- RETAINING
RT	- RIGHT
R/W	- RIGHT OF WAY
SB	- SOUTHBOUND
TEL	- AMERITECH
TES	- TRAFFIC ENGINEERING, AND ELECTRICAL SERVICES
T/L	- TRANSIT LINE
V.T. 0R VT	- VARIABLE THICKNESS
WEP	- WISCONSIN ELECTRIC POWER

ORDER OF SECTION 2 SHEETS

GENERAL NOTES
UTILITY CONTACTS
PROJECT OVERVIEW
REMOVAL PLANS
CONTAMINATED SOIL LIMITS
PLAN DETAILS
CURB RAMP DETAILS
EROSION CONTROL PLAN
STREET LIGHTING PLAN
TRAFFIC SIGNAL PLAN
UNDERGROUND CONDUIT PLAN
PAVEMENT MARKING REMOVAL PLAN
PAVEMENT MARKING PLAN
TRAFFIC CONTROL AND STAGING PLAN
ALIGNMENT

UTILITY CONTACTS

AT&T WISCONSIN
NATHAN GIBERT
411 7th St,
RACINE, WI 53403
PHONE: 262-720-8235
EMAIL: NG952W@ATT.COM

CHARTER/SPECTRUM
CHARLES BRASILE
1320 N. DR. MARTIN LUTHER KING JR. DR.
MILWAUKEE, WI 53212
PHONE: 414-277-4045
EMAIL:CHARLES.BRASILE@CHARTER.COM

CITY OF MILWAUKEE, COMMUNICATIONS
DPW-COMMUNICATIONS DISPATCH
AND WILLIE COTTON
1440 WEST CANAL STREET
MILWAUKEE, WI 53233
PHONE: 414-708-7992

CITY OF MILWAUKEE, SEWERS
ROBERT SELEEN
841 N. BROADWAY
MILWAUKEE, WI 53202
PHONE: 414-286-2465
EMAIL: RSELEE@MILWAUKEE.GOV

CITY OF MILWAUKEE, WATER WORKS
JOSH IWEN
841 N. BROADWAY, ROOM 409
MILWAUKEE, WI 53202
PHONE: 414-286-3640
EMAIL:JOSHUA.IWEN@MILWAUKEE.GOV

ROGER COMMUNICATIONS
JULIE PAULSON – GABES CONSTRUCTION
4804 N. 40TH STREET
SHEBOYGAN WI. 53081
PHONE: 920-459-2600
JPAULSON@GABES.COM

TDS METROCOM
JASON KENNY
525 JUNCTION ROAD
MADISON, WI
PHONE: 608-345-7939

WE ENERGIES – ALL CORRESPONDENCE
SYDNEY BATCHELOR
500 S. 116TH ST.
WEST ALLIS, WI 53214
PHONE: 414-221-5617
EMAIL: WE-UTILITY-RELOCATIONS@WE-ENERGIES.COM

OTHER CONTACTS

CITY OF MILWAUKEE, STREET LIGHTING
LISA HICKMAN
841 N. BROADWAY
MILWAUKEE, WI. 53202
PHONE: 414-286-3270
EMAIL: LHICKM@ MILWAUKEE.GOV

CITY OF MILWAUKEE, TRAFFIC SIGNALS
SCOTT REINBACHER
841 NORTH BROADWAY
MILWAUKEE, WI 53202
PHONE: 414-286-3232
EMAIL: SREINB@MILWAUKEE.GOV

CITY OF MILWAUKEE, CUC
KAREN ROGNEY
841 N. BROADWAY
MILWAUKEE, WI 53202
PHONE: 414-286-3243
EMAIL: KROGNEY@MILWAUKEE.GOV

CITY OF MILWAUKEE, UTILITY COORDINATOR
MOHAMMAD O. ABULUGHOD CONSTRUCTION
UTILITY COORDINATOR
841 NORTH BROADWAY, RM 710
DIRECT LINE: 414-708-0645
EMAIL: MABULU@MILWAUKEE.GOV

MILWAUKEE COUNTY TRANSIT SYSTEM
ARMOND SENSABAUGH
1942 N. 17TH ST.
MILWAUKEE, WI 53205
PHONE: 414-343-1728
EMAIL: ASENSABAUGH@MCTS.ORG

DAVID LOCHER
TRANSPORTATION MANAGER (BUS STOPS)
1942 N 17TH ST
MILWAUKEE, WI 53205
PHONE: 414-343-1727

MILWAUKEE METROPOLITAN SEWERAGE DISTRICT
MICHAEL LEE
260 W. SEEBOTH STREET
MILWAUKEE, WI 53204-1446
PHONE: 414-272-5100
EMAIL: MLEE@MMSD.COM

SE REGION RAILROAD COORDINATOR
JASON KAZMIERSKI
141 N. BARSTOW STREET
WAUKESHA, WI. 53188
PHONE: 262-548-6700
JASON.KAZMIERSKI@DOT.WI.GOV

SOUTHEASTERN WISCONSIN REGIONAL PLANNING COMMISSION
ROB MERRY
CHIEF SURVEYOR
P.O. BOX 1607
WAUKESHA, WI 53187-4289
PHONE: 262-953-4289

ANDY TRAEGER
W239 N1812 ROCKWOOD DRIVE
WAUKESHA, WI 53187
PHONE: 262-547-6721
EMAIL: :ATRAEGER@SEWRPC.ORG

WISCONSIN DEPT. OF NATURAL RESOURCES
RYAN PAPPAS
1027 W. SAINT PAUL AVENUE
MILWAUKEE, WI 53233
PHONE: 414-750-7495
EMAIL:RYAN.PAPPAS@WISCONSIN.GOV

DIGGERS HOTLINE
Dial 811 or (800) 242-8511
www.DiggersHotline.com

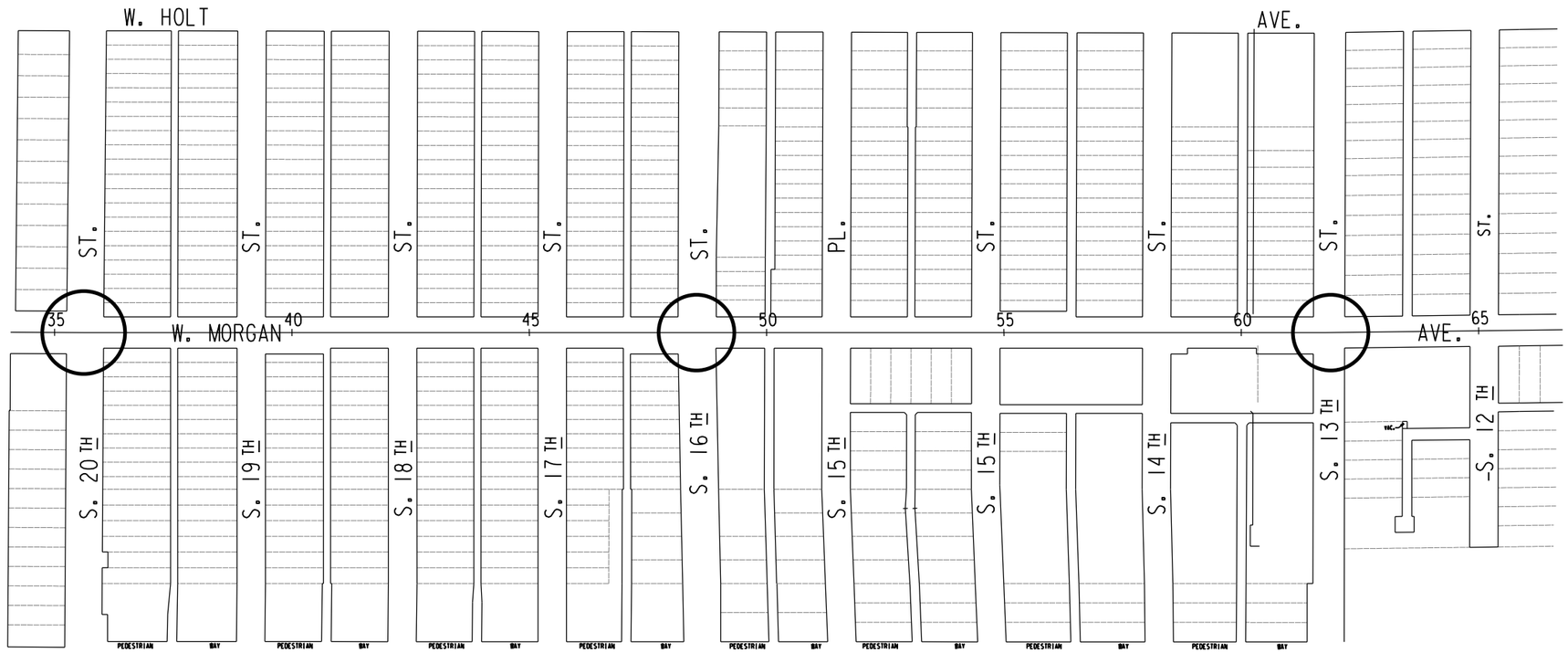

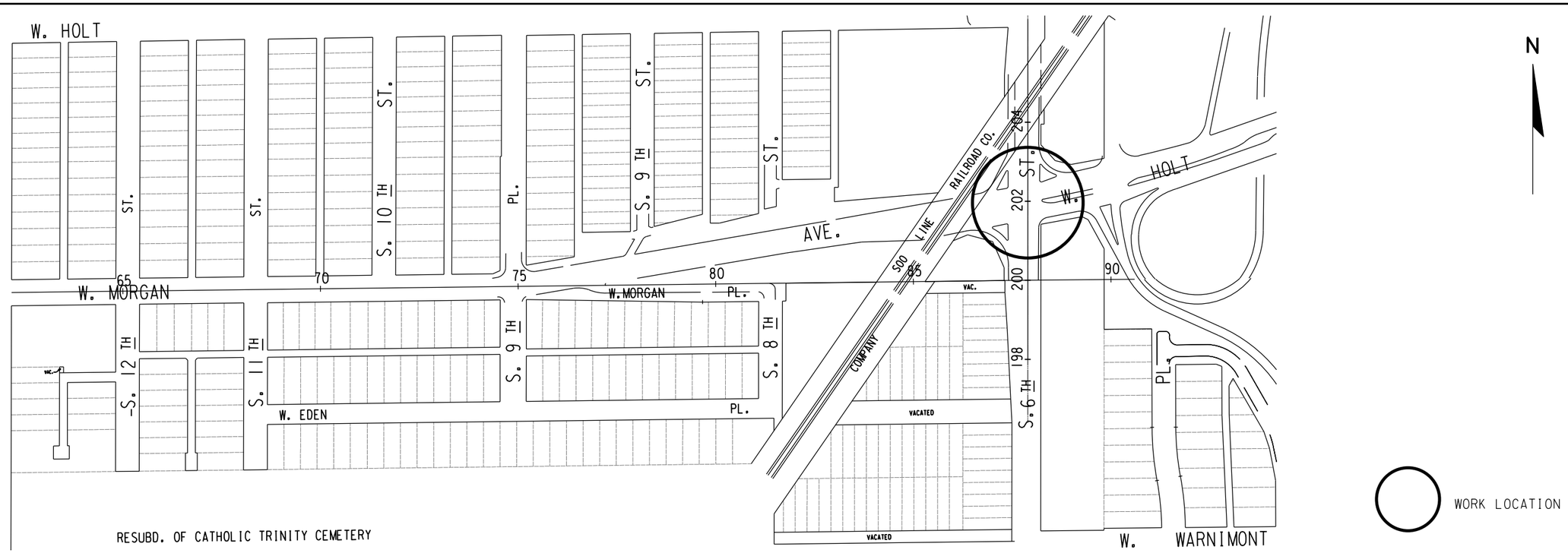

STATE PROJECT NUMBER 2984-21-73	HWY: W. MORGAN AVENUE	COUNTY: MILWAUKEE	PROJECT OVERVIEW	SCALE FEET 0' 300'	SHEET NO: 4	E

FILENAME: W:\SPR\MONOTUBE PROJECTS\2984-21-03 MORGAN AVE_6TH_13TH_16TH_20TH\MISC\PROJECT OVERVIEW.DGN

REVISED DATE: 09-03-2024 BY SLB

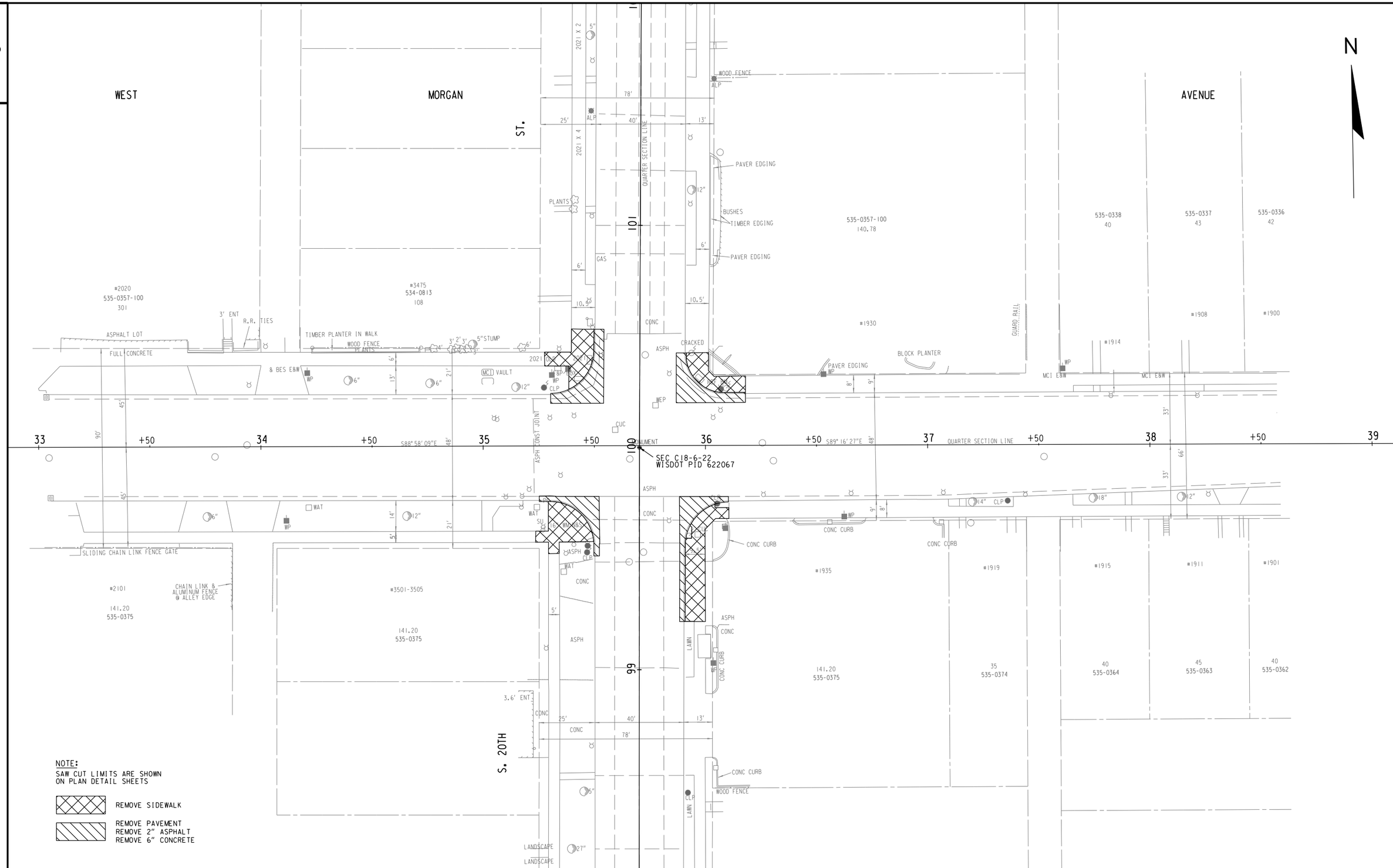

STATE PROJECT NUMBER 2984-21-73	HWY: W. MORGAN AVE.	COUNTY: MILWAUKEE	REMOVAL PLAN - S. 20TH ST.	SCALE FEET 0' 40'	SHEET NO: 5	E

FILENAME: W:\SPR\MONOTUBE PROJECTS\2984-21-03 MORGAN AVE_6TH_13TH_16TH_20TH\DESIGN\20TH ST- REMOVAL.DGN

REVISED DATE: 01-28-2025 BY JC

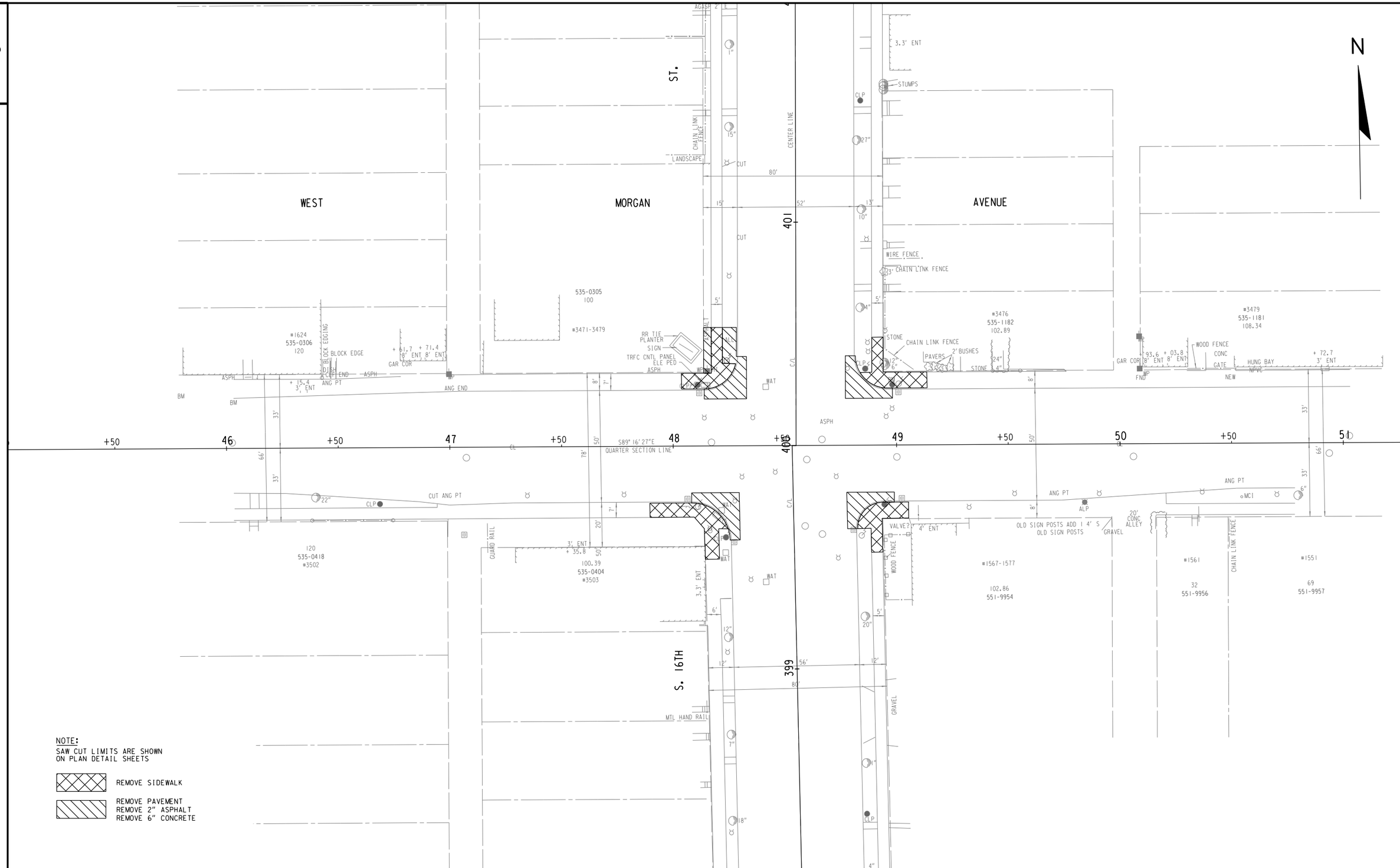

STATE PROJECT NUMBER 2984-21-73 - -	HWY: W. MORGAN AVE	COUNTY: MILWAUKEE	REMOVAL PLAN - S. 16TH ST.	SCALE FEET 0' 40'	SHEET NO: 6	E

FILENAME: W:\SPR\MONOTUBE PROJECTS\2984-21-03 MORGAN AVE_6TH_13TH_16TH_20TH\DESIGN\16TH ST- REMOVAL.DGN

REVISED DATE: 01-28-2025 BY JC

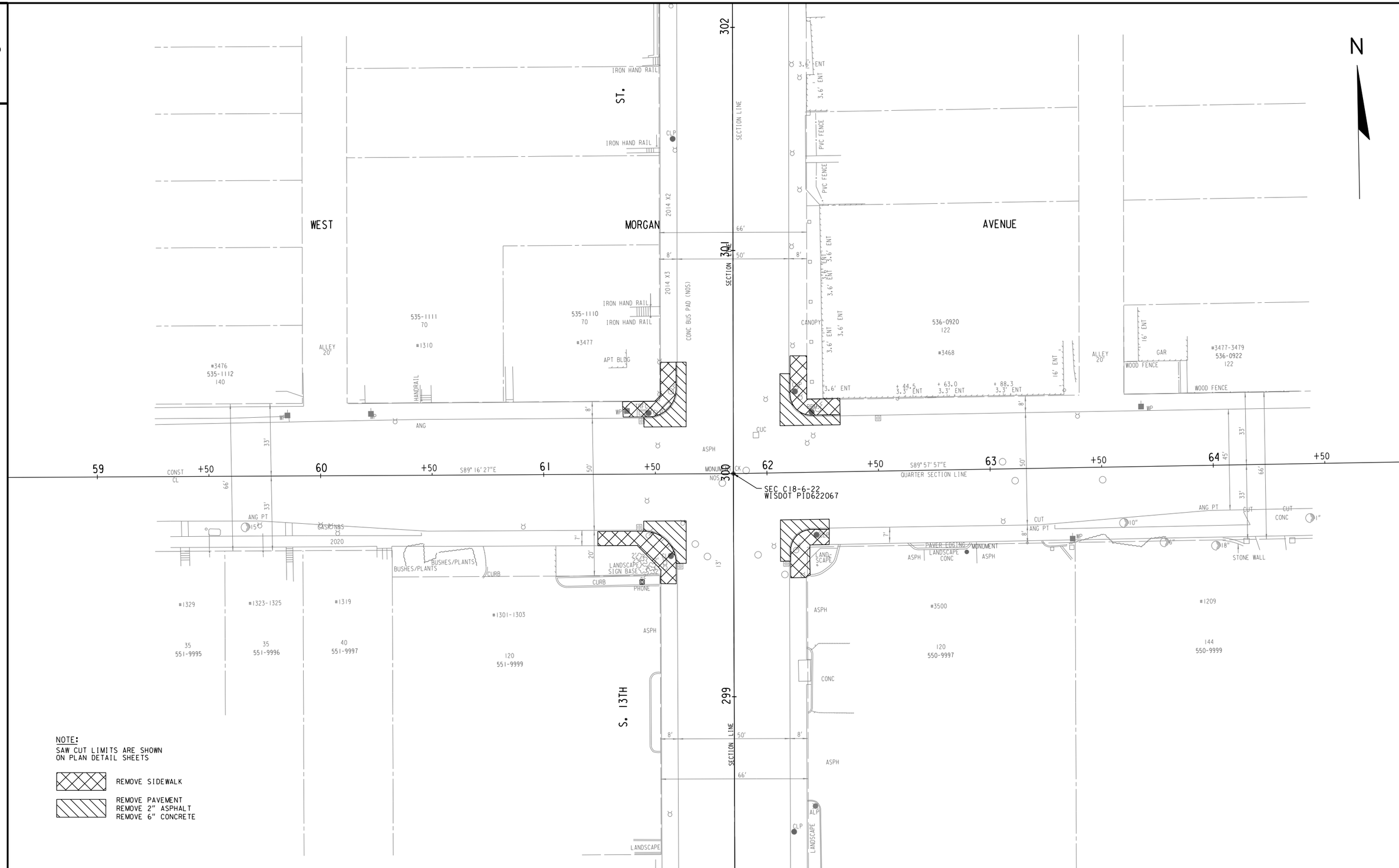

STATE PROJECT NUMBER 2984-21-73 - -	HWY: W. MORGAN AVE	COUNTY: MILWAUKEE	REMOVAL PLAN - S. 13TH ST.	SCALE FEET 0' 40'	SHEET NO: 7	E

FILENAME: W:\SPR\MONOTUBE PROJECTS\2984-21-03 MORGAN AVE_6TH_13TH_16TH_20TH\DESIGN\13TH ST- REMOVAL.DGN

REVISED DATE: 01-28-2025 BY JC

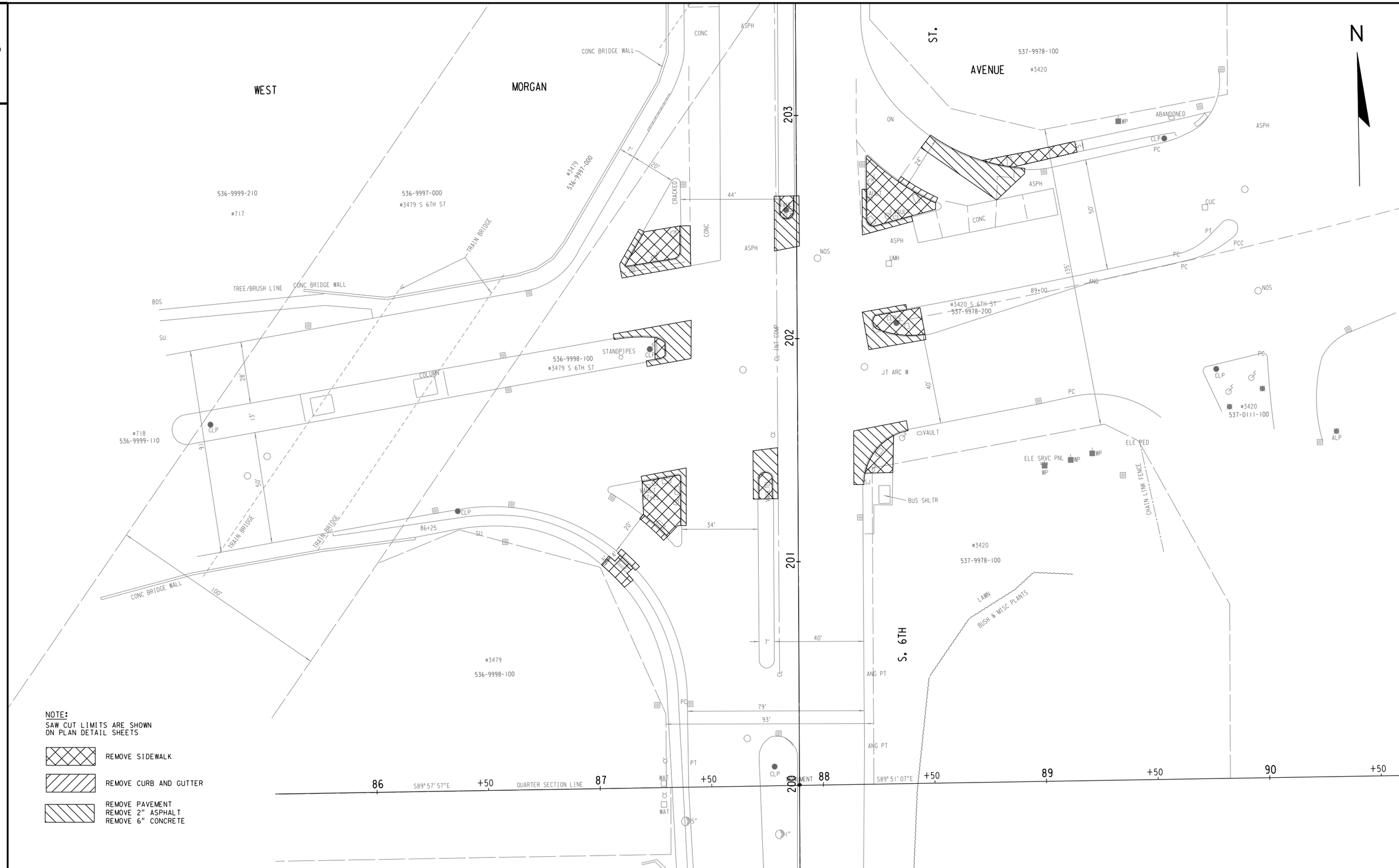

STATE PROJECT NUMBER 2984-21-73 - -	HWY: W. MORGAN AVE	COUNTY: MILWAUKEE	REMOVAL PLAN - S. 6TH ST.	SCALE FEET 0' 40'	SHEET NO: 8	E

FILENAME: W:\SPR\MONOTUBE PROJECTS\2984-21-03 MORGAN AVE_6TH_13TH_16TH_20TH\DESIGN\6TH ST- REMOVAL.DGN

REVISED DATE: 01-28-2025 BY JC

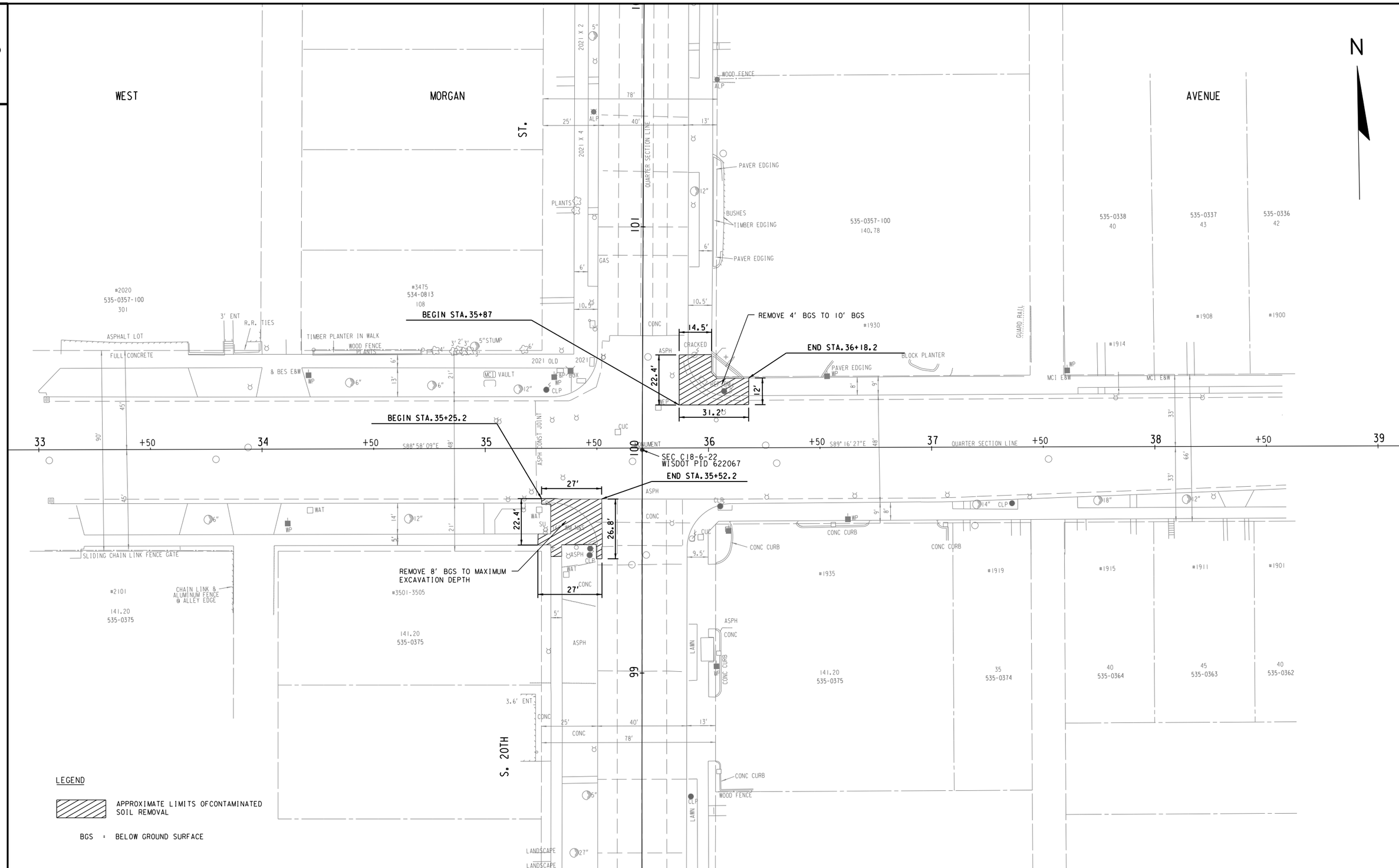

STATE PROJECT NUMBER 2984-21-73	HWY: W. MORGAN AVE.	COUNTY: MILWAUKEE	CONTAMINATED SOIL LIMITS	SCALE FEET 0' 40'	SHEET NO: 9	E

FILENAME: W:\SPR\MONOTUBE PROJECTS\2984-21-03 MORGAN AVE_6TH_13TH_16TH_20TH\DESIGN\20TH ST- HAZMAT.DGN

REVISED DATE: 01-28-2025 BY JC

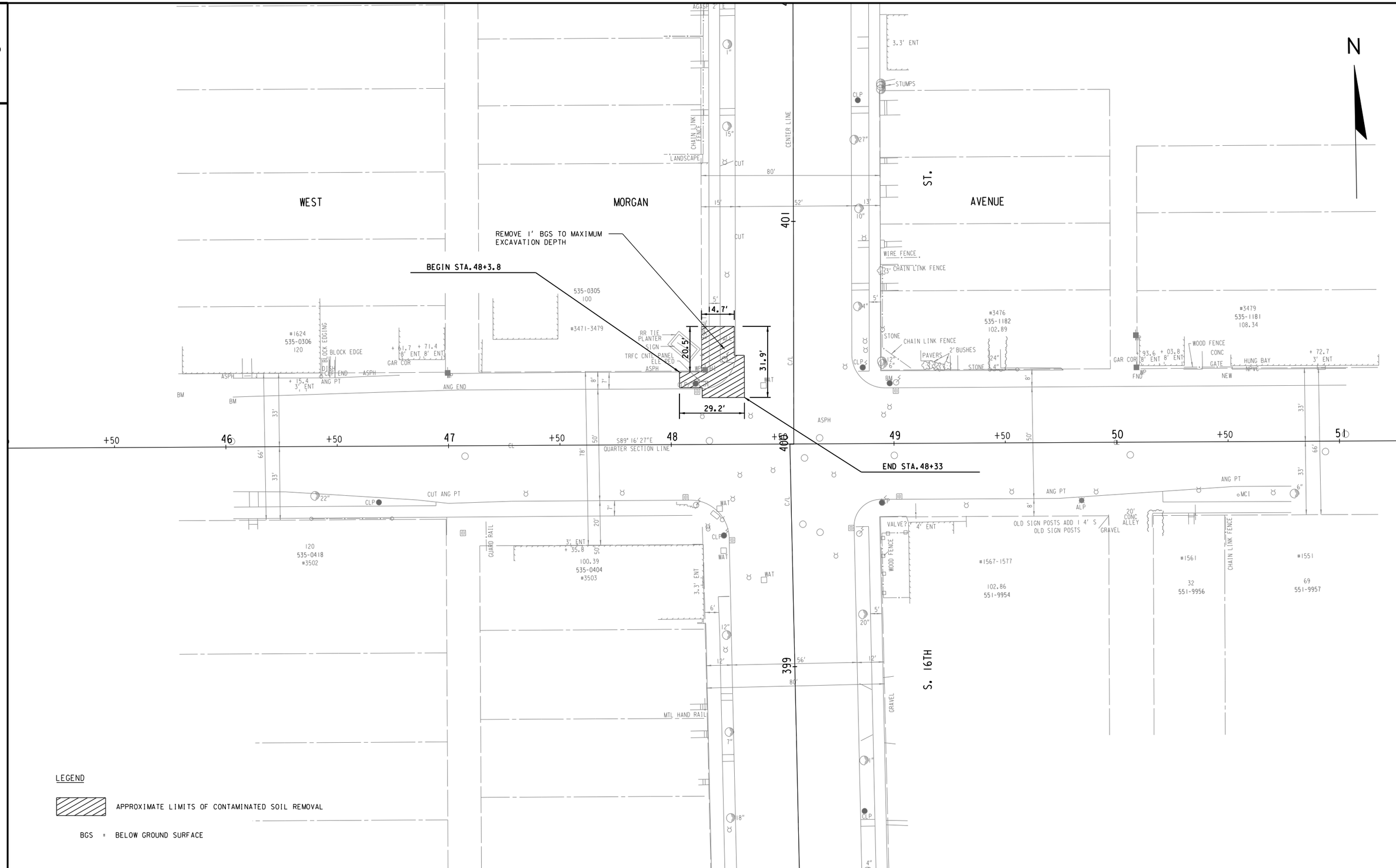

LEGEND

APPROXIMATE LIMITS OF CONTAMINATED SOIL REMOVAL

BGS = BELOW GROUND SURFACE

STATE PROJECT NUMBER 2984-21-73 - -	HWY: W. MORGAN AVE	COUNTY: MILWAUKEE	CONTAMINATED SOIL LIMITS	SCALE FEET 0' 40'	SHEET NO: 10	E

FILENAME: W:\SPR\MONOTUBE PROJECTS\2984-21-03 MORGAN AVE_6TH_13TH_16TH_20TH\DESIGN\16TH ST- HAZMAT.DGN

REVISED DATE: 01-17-2025 BY JC

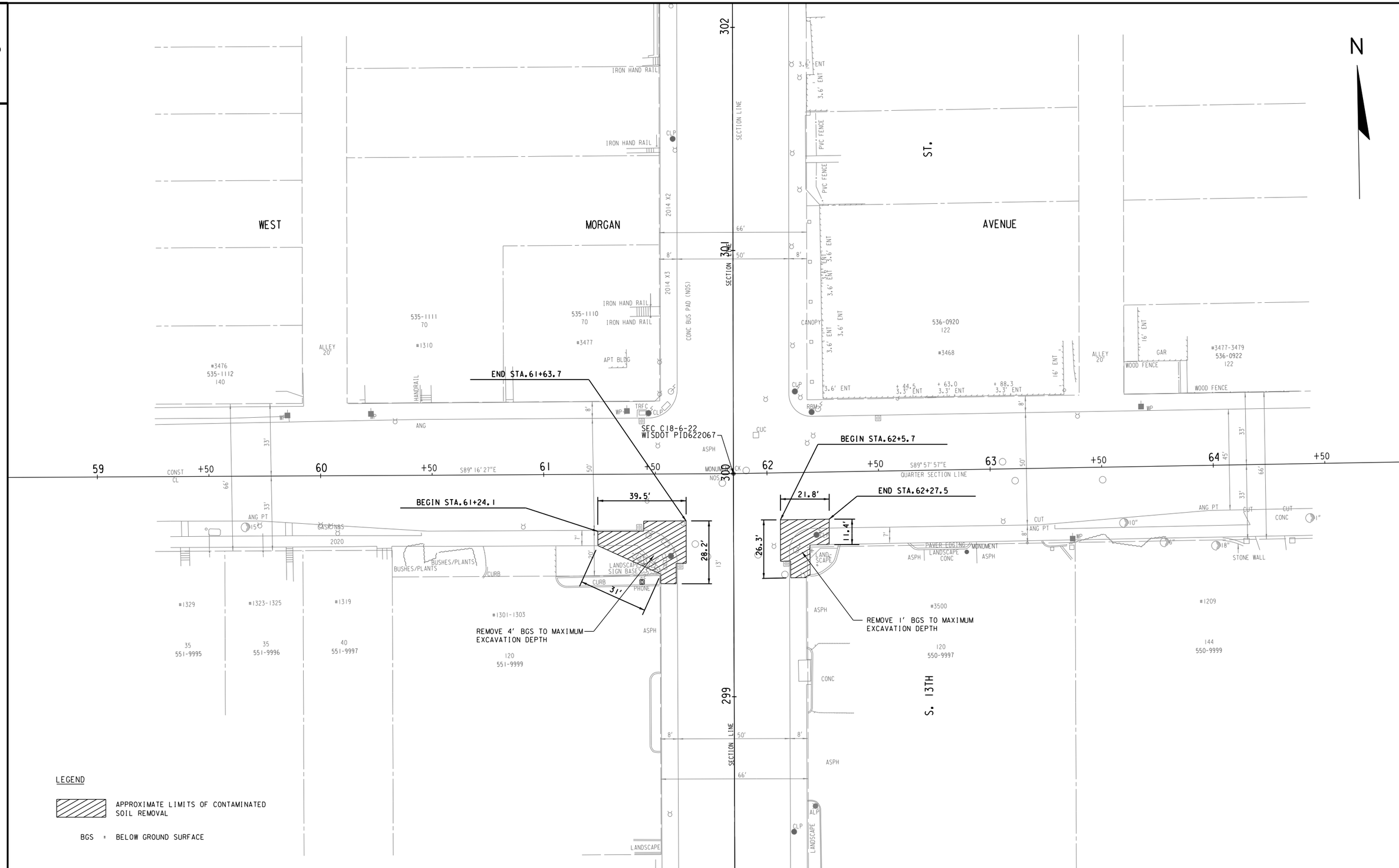

STATE PROJECT NUMBER 2984-21-73 - -	HWY: W. MORGAN AVE	COUNTY: MILWAUKEE	CONTAMINATED SOIL LIMITS	SCALE FEET 0' 40'	SHEET NO: 11	E

FILENAME: W:\SPR\MONOTUBE PROJECTS\2984-21-03 MORGAN AVE_6TH_13TH_16TH_20TH\DESIGN\13TH ST- HAZMAT.DGN

REVISED DATE: 01-28-2025 BY JC

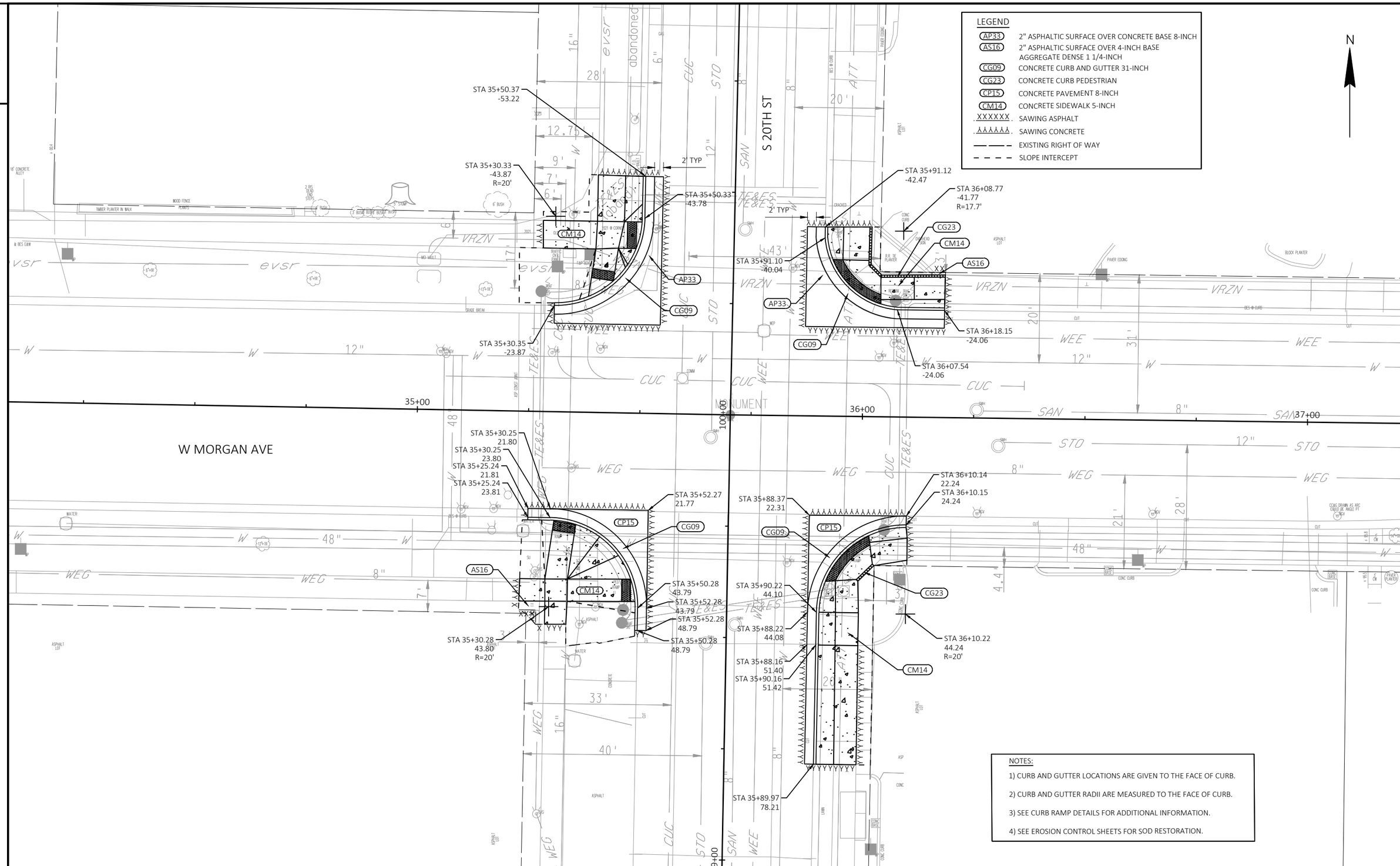

PROJECT NO: 2984-21-73	HWY: W. MORGAN AVE	COUNTY: MILWAUKEE	PLAN DETAILS	SHEET 12	E

FILE NAME : S:\MILW_CO\MILWCITY\GOV\230520 MORGAN AVENUE\C3D-MORGANAVE\SHEETS\021201-PD.DWG
LAYOUT NAME - PD-20
PLOT DATE : 1/27/2025 1:32 PM PLOT BY : WALTER A. WOLAK II PLOT NAME : PLOT SCALE : 1 IN:20 FT

WISDOT/CADDS SHEET 42

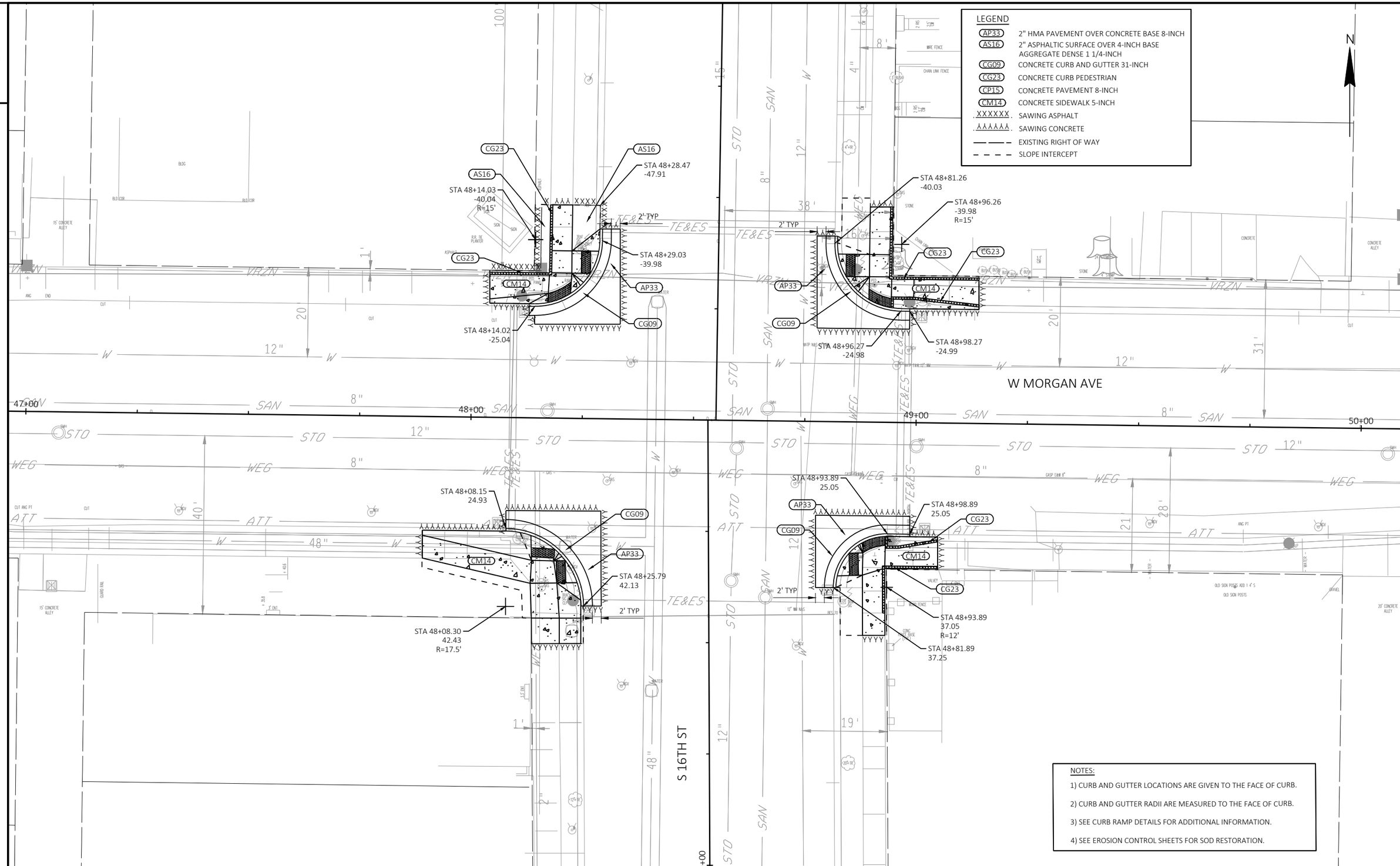

PROJECT NO: 2984-21-73	HWY: W. MORGAN AVE	COUNTY: MILWAUKEE	PLAN DETAILS	SHEET 13	E

FILE NAME : S:\MILW_CO\MILWCITY\GOV\230520 MORGAN AVENUE\C3D-MORGANAVE\SHEETS\021201-PD.DWG
LAYOUT NAME - PD-16
PLOT DATE : 10/29/2024 10:03 AM PLOT BY : WALTER A. WOLAK II PLOT NAME : PLOT SCALE : 1 IN:20 FT

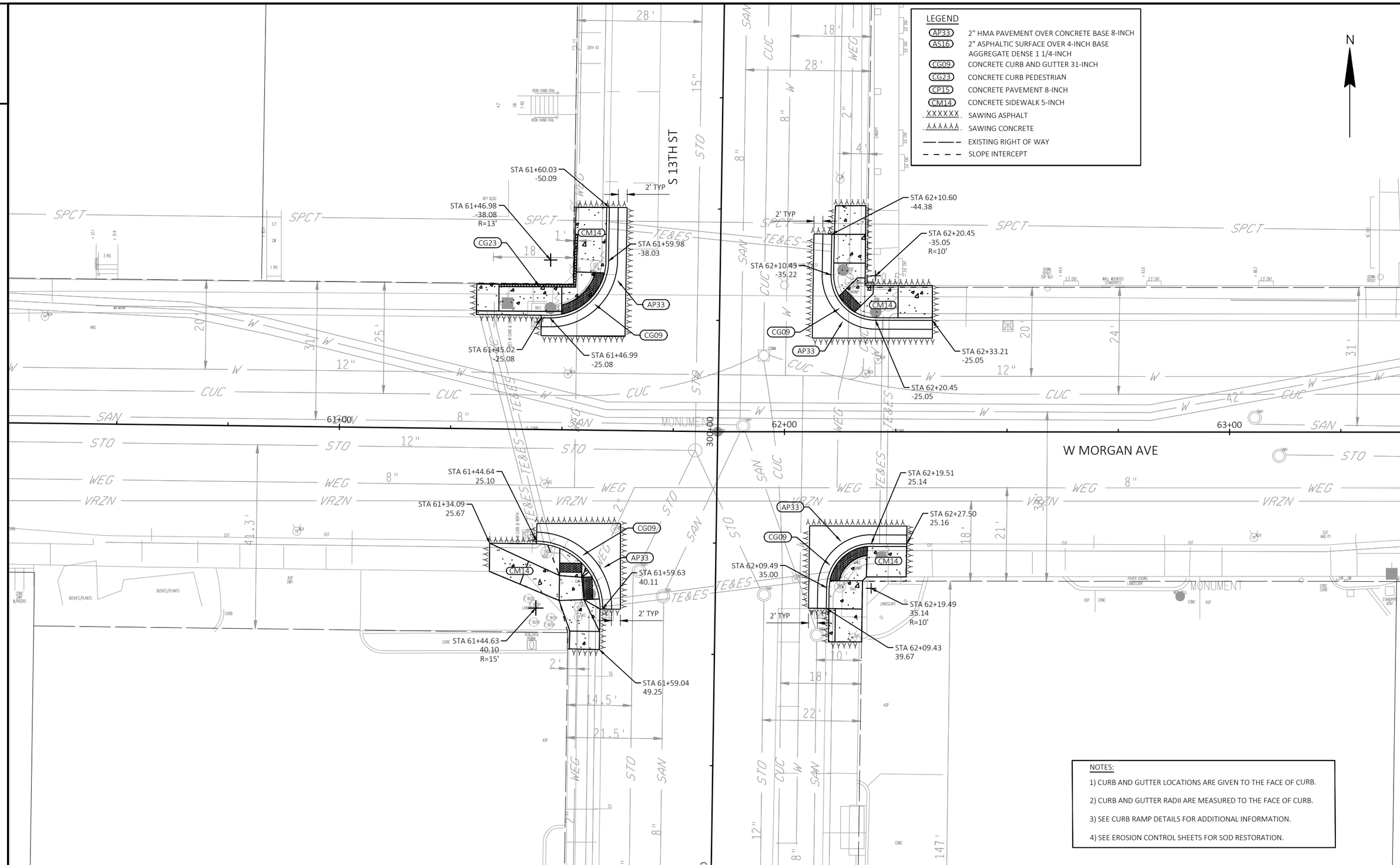

NOTES:

1) CURB AND GUTTER LOCATIONS ARE GIVEN TO THE FACE OF CURB.

2) CURB AND GUTTER RADII ARE MEASURED TO THE FACE OF CURB.

3) SEE CURB RAMP DETAILS FOR ADDITIONAL INFORMATION.

4) SEE EROSION CONTROL SHEETS FOR SOD RESTORATION.

PROJECT NO: 2984-21-73	HWY: W. MORGAN AVE	COUNTY: MILWAUKEE	PLAN DETAILS	SHEET 14	E

2

NOTES:

1) CURB AND GUTTER LOCATIONS ARE GIVEN TO THE FACE OF CURB.

2) CURB AND GUTTER RADII ARE MEASURED TO THE FACE OF CURB.

3) SEE CURB RAMP DETAILS FOR ADDITIONAL INFORMATION.

4) SEE EROSION CONTROL SHEETS FOR SOD RESTORATION.

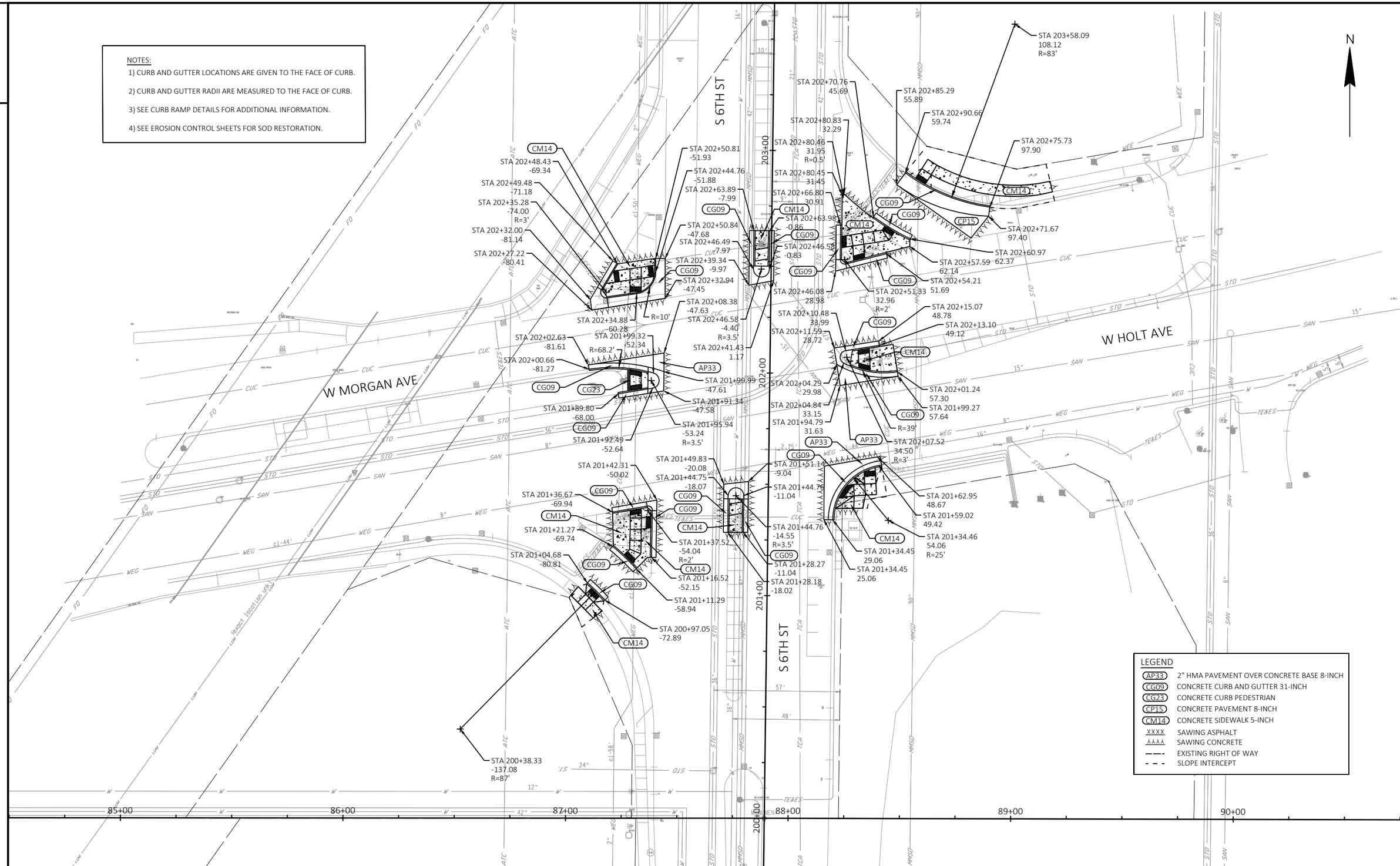

2

PROJECT NO: 2984-21-73	HWY: W. MORGAN AVE	COUNTY: MILWAUKEE	PLAN DETAILS	SHEET 15	E

FILE NAME : S:\MILW_CO\MILWCITY\GOV\230520 MORGAN AVENUE\C3D-MORGANAVE\SHEETS\021201-PD.DWG
LAYOUT NAME - PD-6
PLOT DATE : 10/29/2024 10:03 AM
PLOT BY : WALTER A. WOLAK II
PLOT NAME :
PLOT SCALE : 1 IN:40 FT

WISDOT/CADDS SHEET 42

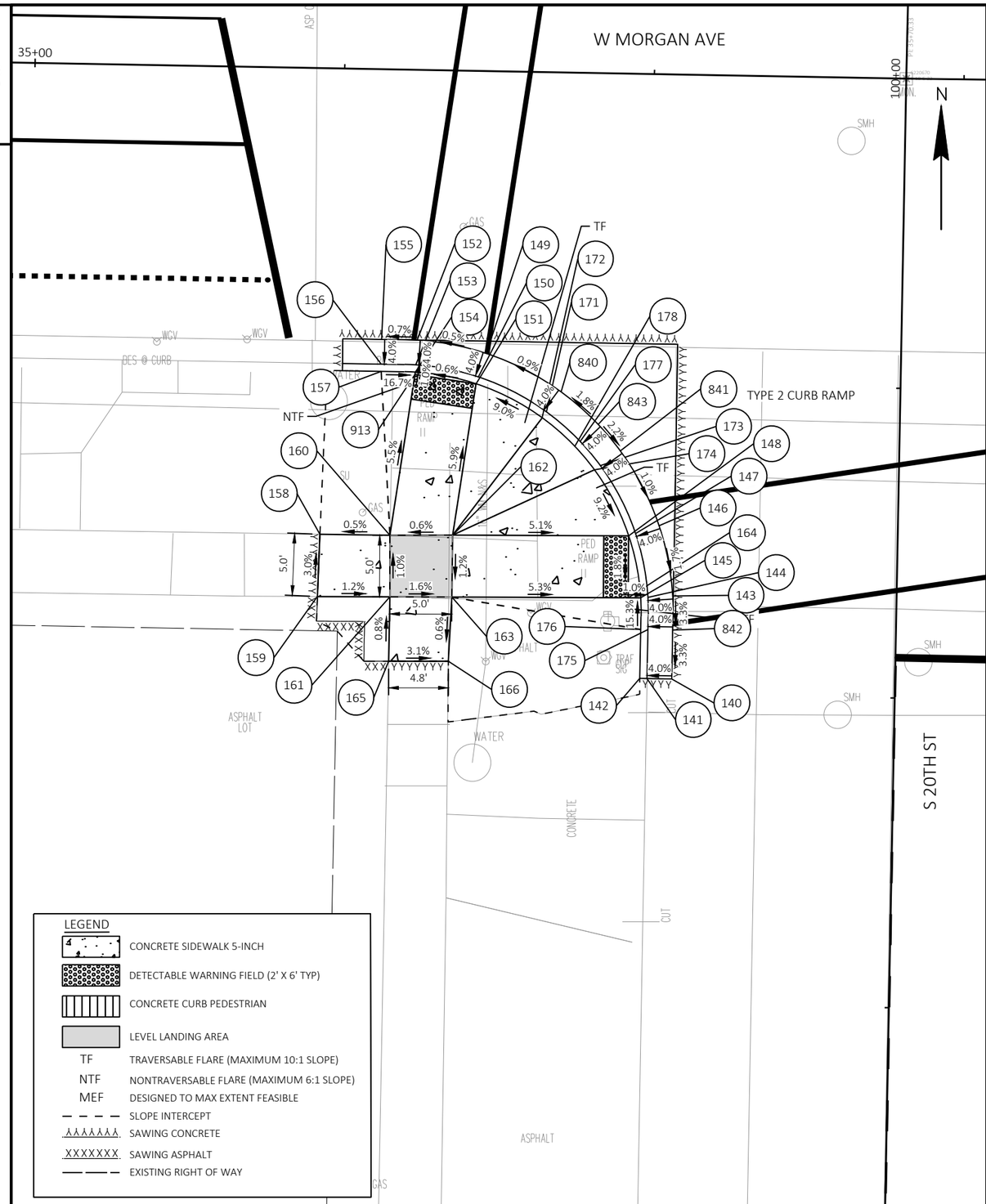

POINT TABLE					
PT #	STA	OFFSET	Y	X	ELEV
140	35+52.28	48.79 RT	278577.91	598133.33	126.89
141	35+50.28	48.79 RT	278577.95	598131.33	126.81
142	35+49.70	48.79 RT	278577.96	598130.75	127.29
143	35+52.21	42.09 RT	278584.61	598133.38	127.11
144	35+50.22	42.25 RT	278584.49	598131.39	127.03
145	35+49.64	42.29 RT	278584.46	598130.80	127.05
146	35+51.01	36.44 RT	278590.28	598132.28	127.21
147	35+49.13	37.11 RT	278589.65	598130.39	127.13
148	35+48.58	37.31 RT	278589.46	598129.83	127.15
149	35+36.82	22.79 RT	278604.18	598118.34	127.21
150	35+36.23	24.70 RT	278602.28	598117.71	127.13
151	35+36.05	25.26 RT	278601.73	598117.53	127.15
152	35+31.24	21.82 RT	278605.26	598112.78	127.18
153	35+31.15	23.82 RT	278603.26	598112.65	127.10
154	35+31.13	24.40 RT	278602.68	598112.62	127.12
155	35+28.37	21.80 RT	278605.33	598109.91	127.16
156	35+28.37	23.80 RT	278603.33	598109.88	127.08
157	35+28.38	24.38 RT	278602.74	598109.87	127.58
158	35+23.67	37.62 RT	278589.60	598104.93	127.82
159	35+23.56	42.64 RT	278584.58	598104.73	127.97

POINT TABLE					
PT #	STA	OFFSET	Y	X	ELEV
160	35+29.33	37.60 RT	278589.51	598110.58	127.85
161	35+29.40	42.57 RT	278584.54	598110.57	127.90
162	35+34.39	37.50 RT	278589.52	598115.64	127.88
163	35+34.40	42.50 RT	278584.52	598115.57	127.82
164	35+48.65	42.30 RT	278584.46	598129.81	127.06
165	35+29.40	47.77 RT	278579.34	598110.47	127.94
166	35+34.21	47.68 RT	278579.34	598115.28	127.79
171	35+41.77	27.43 RT	278599.46	598123.21	127.19
172	35+41.44	27.91 RT	278598.98	598122.86	127.69
173	35+46.19	31.67 RT	278595.13	598127.54	127.20
174	35+45.72	32.03 RT	278594.79	598127.07	127.70
175	35+50.28	44.84 RT	278581.90	598131.40	126.94
176	35+49.70	44.84 RT	278581.91	598130.82	127.44
177	35+44.53	29.77 RT	278597.07	598125.92	127.26
178	35+44.11	30.18 RT	278596.67	598125.50	127.76
840	35+42.92	25.80 RT	278601.07	598124.39	127.27
841	35+47.78	30.46 RT	278596.32	598129.16	127.28
842	35+52.28	44.84 RT	278581.86	598133.40	127.02
843	35+45.96	28.36 RT	278598.45	598127.37	127.34
913	35+31.10	24.60 RT	278602.48	598112.59	127.12

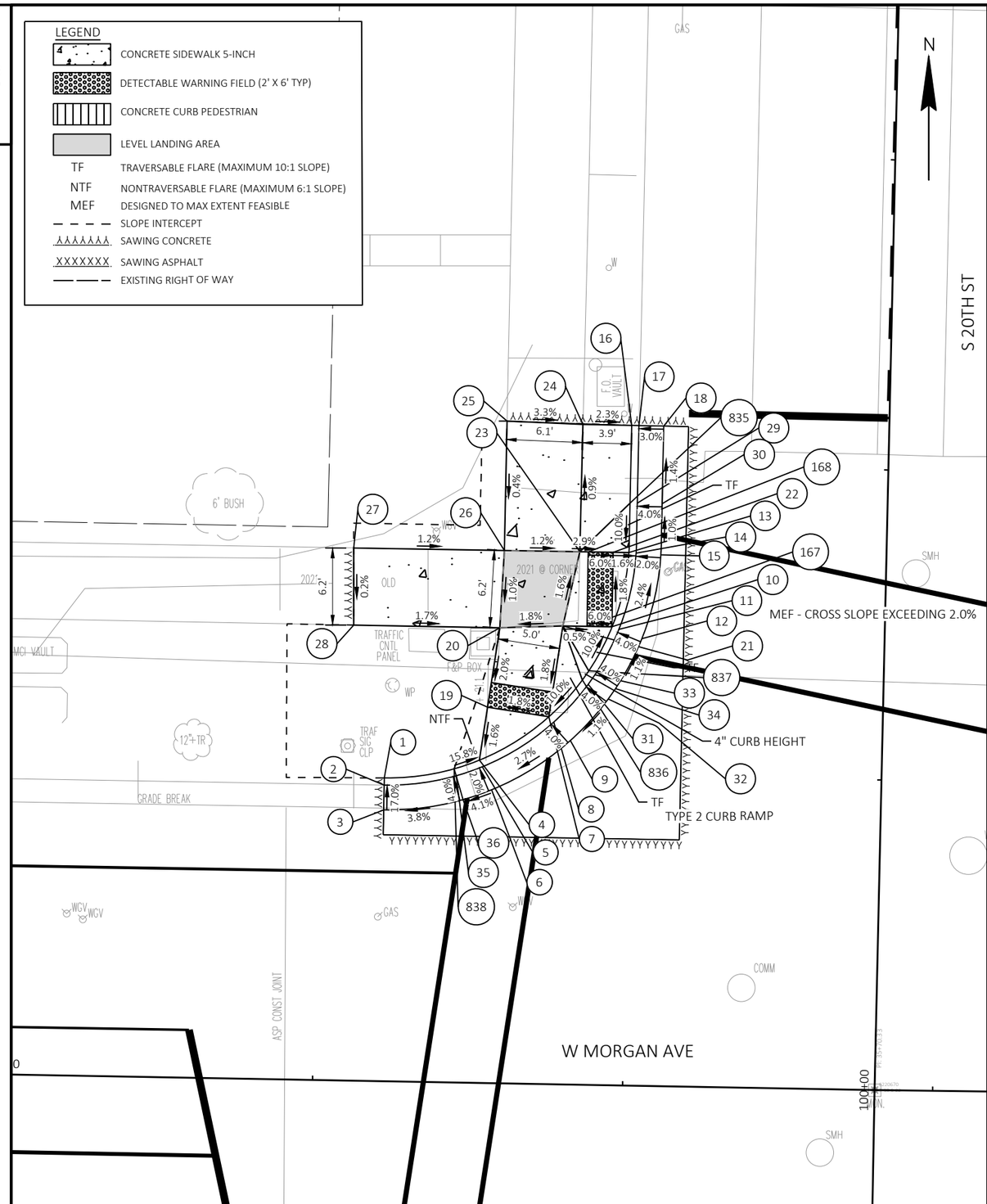

POINT TABLE					
PT #	STA	OFFSET	Y	X	ELEV
1	35+30.35	24.45 LT	278651.53	598112.72	126.94
2	35+30.35	23.87 LT	278650.95	598112.71	126.46
3	35+30.35	21.87 LT	278648.95	598112.67	126.80
4	35+37.99	26.03 LT	278652.97	598120.39	127.12
5	35+38.22	25.49 LT	278652.43	598120.61	127.10
6	35+39.01	23.65 LT	278650.58	598121.37	127.14
7	35+43.53	29.63 LT	278656.47	598125.99	127.28
8	35+43.92	29.20 LT	278656.04	598126.38	127.26
9	35+45.28	27.73 LT	278654.55	598127.71	127.34
10	35+48.48	36.96 LT	278663.72	598131.07	127.28
11	35+49.02	36.75 LT	278663.50	598131.61	127.26
12	35+50.89	36.04 LT	278662.75	598133.46	127.34
13	35+49.72	42.96 LT	278669.69	598132.42	127.15
14	35+50.31	42.93 LT	278669.66	598133.01	127.13
15	35+52.30	42.84 LT	278669.53	598135.00	127.17
16	35+49.79	53.22 LT	278679.95	598132.67	127.13
17	35+50.37	53.22 LT	278679.94	598133.26	126.98
18	35+52.37	53.21 LT	278679.89	598135.26	127.04
19	35+38.57	30.30 LT	278657.24	598121.05	127.19
20	35+39.45	36.71 LT	278663.63	598122.04	127.32
21	35+44.53	36.96 LT	278663.78	598127.12	127.41

POINT TABLE					
PT #	STA	OFFSET	Y	X	ELEV
22	35+48.47	42.96 LT	278669.71	598131.17	127.17
23	35+45.78	42.96 LT	278669.76	598128.48	127.31
24	35+45.85	53.24 LT	278680.04	598128.74	127.22
25	35+39.73	53.38 LT	278680.29	598122.62	127.42
26	35+39.70	42.95 LT	278669.87	598122.40	127.38
27	35+27.55	42.94 LT	278670.07	598110.25	127.53
28	35+27.66	36.73 LT	278663.86	598110.25	127.52
29	35+50.34	46.96 LT	278673.68	598133.11	127.05
30	35+52.34	46.95 LT	278673.63	598135.11	127.13
31	35+46.64	32.30 LT	278659.09	598129.15	127.31
32	35+48.27	31.14 LT	278657.90	598130.76	127.39
33	35+47.17	33.07 LT	278659.85	598129.69	127.31
34	35+48.85	31.99 LT	278658.74	598131.35	127.39
35	35+36.14	24.73 LT	278651.71	598118.52	126.96
36	35+36.72	22.82 LT	278649.79	598119.06	127.04
167	35+46.48	36.96 LT	278663.75	598129.07	127.40
168	35+46.47	42.96 LT	278669.75	598129.17	127.29
835	35+49.76	46.96 LT	278673.69	598132.53	127.55
836	35+46.17	32.63 LT	278659.43	598128.68	127.68
837	35+46.67	33.39 LT	278660.18	598129.20	127.68
838	35+35.97	25.29 LT	278652.27	598118.36	127.46

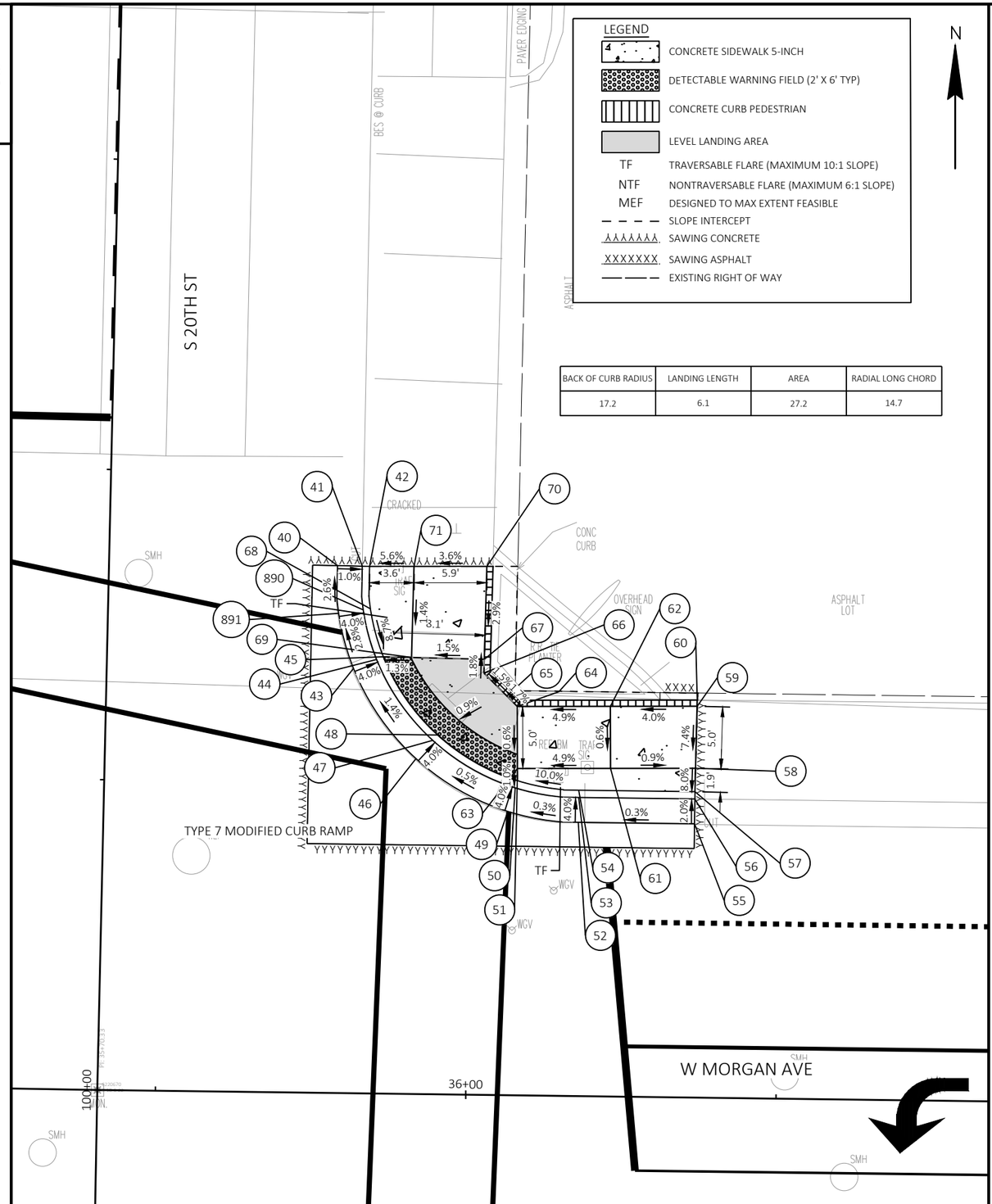

BACK OF CURB RADIUS	LANDING LENGTH	AREA	RADIAL LONG CHORD
17.2	6.1	27.2	14.7

POINT TABLE					
PT #	STA	OFFSET	Y	X	ELEV
40	35+89.12	42.48 LT	278668.61	598171.58	127.25
41	35+91.12	42.47 LT	278668.57	598173.58	127.23
42	35+91.71	42.46 LT	278668.56	598174.17	127.35
43	35+90.52	34.21 LT	278660.32	598172.88	127.48
44	35+92.37	34.97 LT	278661.06	598174.74	127.40
45	35+92.91	35.20 LT	278661.28	598175.28	127.42
46	35+95.65	27.01 LT	278653.05	598177.91	127.60
47	35+96.98	28.50 LT	278654.53	598179.26	127.52
48	35+97.36	28.94 LT	278654.96	598179.65	127.54
49	36+03.10	22.85 LT	278648.80	598185.31	127.64
50	36+03.67	24.77 LT	278650.71	598185.91	127.56
51	36+03.84	25.33 LT	278651.27	598186.08	127.58
52	36+08.79	22.06 LT	278647.94	598190.99	127.66
53	36+08.79	24.06 LT	278649.94	598191.02	127.58
54	36+08.79	24.65 LT	278650.52	598191.03	128.08
55	36+18.15	22.06 LT	278647.82	598200.35	127.69
56	36+18.15	24.06 LT	278649.82	598200.37	127.65

POINT TABLE					
PT #	STA	OFFSET	Y	X	ELEV
57	36+18.15	24.65 LT	278650.41	598200.38	127.75
58	36+18.17	26.53 LT	278652.29	598200.43	127.90
59	36+18.24	31.53 LT	278657.29	598200.56	128.27
60	36+18.24	32.03 LT	278657.79	598200.56	128.28
61	36+11.33	26.43 LT	278652.28	598193.58	127.96
62	36+11.26	31.43 LT	278657.28	598193.58	127.99
63	36+03.83	26.32 LT	278652.27	598186.08	127.59
64	36+03.76	31.32 LT	278657.27	598186.08	127.62
65	36+02.91	32.15 LT	278658.10	598185.24	127.60
66	36+01.03	33.97 LT	278659.95	598183.39	127.56
67	36+01.05	35.08 LT	278661.06	598183.42	127.54
68	35+91.82	39.05 LT	278665.14	598174.24	127.77
69	35+95.19	35.17 LT	278661.22	598177.56	127.45
70	36+01.15	42.58 LT	278668.56	598183.61	127.76
71	35+95.29	42.51 LT	278668.56	598177.75	127.55
890	35+91.25	38.95 LT	278665.05	598173.66	127.27
891	35+89.27	38.64 LT	278664.76	598171.68	127.35

2

PROJECT NO: 2984-21-73	HWY: W. MORGAN AVE	COUNTY: MILWAUKEE	CURB RAMP DETAILS	SHEET 18	E

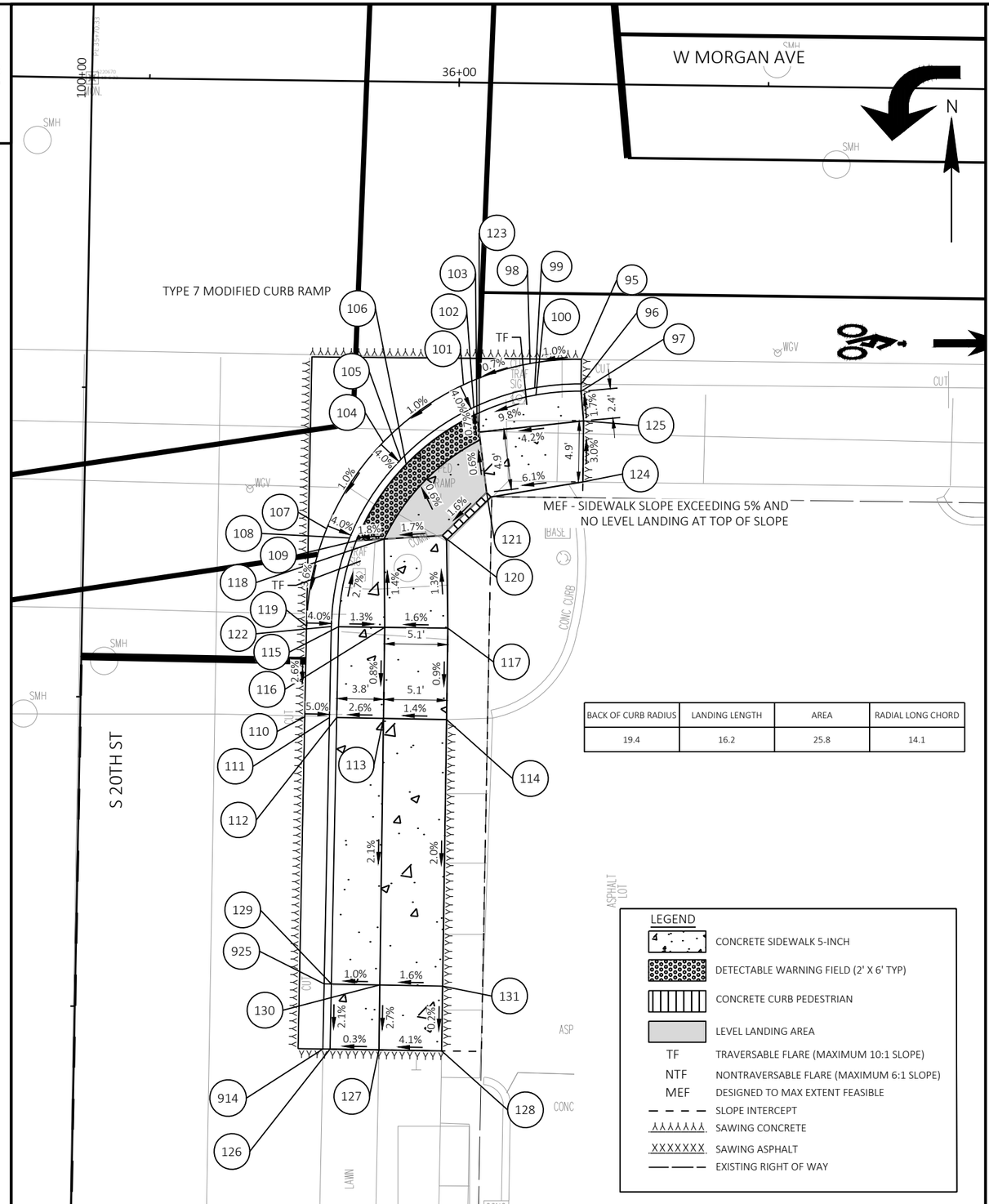

BACK OF CURB RADIUS	LANDING LENGTH	AREA	RADIAL LONG CHORD
19.4	16.2	25.8	14.1

POINT TABLE

PT #	STA	OFFSET	Y	X	ELEV
95	36+10.14	22.24 RT	278603.63	598191.78	127.35
96	36+10.15	24.24 RT	278601.63	598191.76	127.23
97	36+10.15	24.82 RT	278601.04	598191.76	127.54
98	36+06.02	22.64 RT	278603.28	598187.66	127.31
99	36+06.40	24.61 RT	278601.31	598188.01	127.23
100	36+06.52	25.18 RT	278600.73	598188.12	127.70
101	36+00.65	24.43 RT	278601.56	598182.26	127.27
102	36+01.52	26.23 RT	278599.75	598183.11	127.19
103	36+01.77	26.76 RT	278599.22	598183.35	127.21
104	35+94.23	29.13 RT	278596.94	598175.78	127.19
105	35+95.68	30.50 RT	278595.55	598177.22	127.11
106	35+96.11	30.90 RT	278595.14	598177.64	127.13
107	35+89.75	36.18 RT	278589.95	598171.21	127.11
108	35+91.61	36.91 RT	278589.19	598173.06	127.03
109	35+92.15	37.12 RT	278588.97	598173.60	127.05
110	35+88.16	51.40 RT	278574.75	598169.43	126.63
111	35+90.16	51.42 RT	278574.71	598171.43	126.53
112	35+90.75	51.42 RT	278574.69	598172.02	127.03
113	35+94.53	51.44 RT	278574.63	598175.80	127.13
114	35+99.63	51.46 RT	278574.54	598180.90	127.20

POINT TABLE

PT #	STA	OFFSET	Y	X	ELEV
115	35+90.80	44.09 RT	278582.03	598172.16	127.24
116	35+94.53	44.09 RT	278581.98	598175.90	127.19
117	35+99.64	44.09 RT	278581.91	598181.00	127.27
118	35+94.39	36.96 RT	278589.11	598175.85	127.09
119	35+88.22	44.06 RT	278582.08	598169.58	126.82
120	35+99.09	36.61 RT	278589.39	598180.55	127.17
121	36+02.63	33.08 RT	278592.88	598184.13	127.25
122	35+90.22	44.08 RT	278582.04	598171.58	126.74
123	36+01.97	28.23 RT	278597.74	598183.54	127.22
124	36+10.40	32.14 RT	278593.72	598191.91	127.73
125	36+10.40	27.20 RT	278598.66	598191.97	127.58
126	35+90.55	78.21 RT	278547.91	598171.48	126.53
127	35+94.50	78.22 RT	278547.85	598175.43	126.54
128	35+99.56	78.23 RT	278547.78	598180.50	126.75
129	35+90.59	72.94 RT	278553.18	598171.59	126.64
130	35+94.51	72.97 RT	278553.10	598175.51	126.68
131	35+99.58	73.00 RT	278553.00	598180.57	126.76
914	35+89.97	78.21 RT	278547.92	598170.90	126.53
925	35+90.01	72.93 RT	278553.19	598171.01	126.14

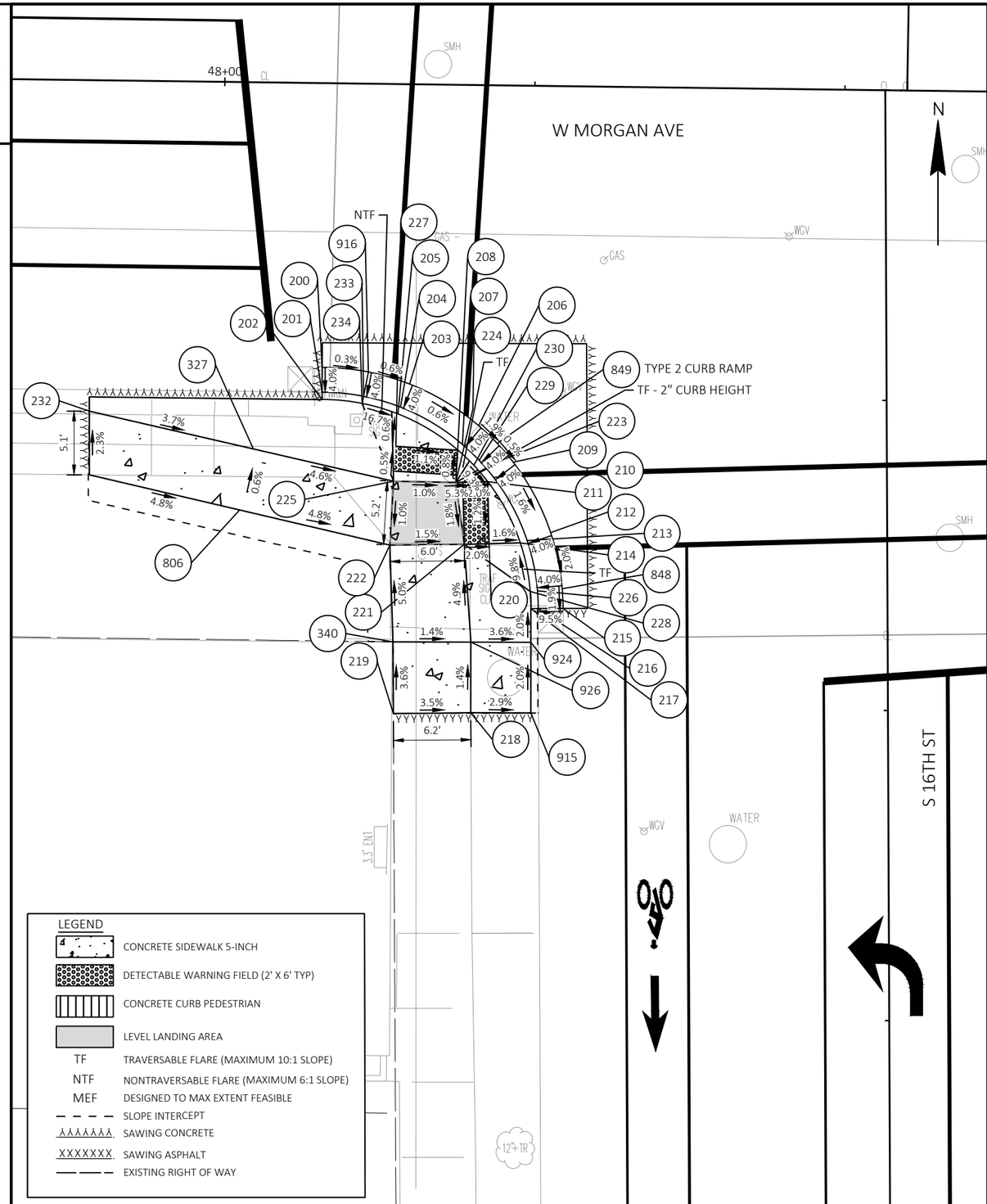

POINT TABLE					
PT #	STA	OFFSET	Y	X	ELEV
200	48+08.13	22.93 RT	278587.76	599389.67	119.88
201	48+08.15	24.93 RT	278585.76	599389.66	119.80
202	48+08.15	25.51 RT	278585.18	599389.66	120.30
203	48+15.20	24.19 RT	278586.41	599396.72	119.85
204	48+14.49	26.06 RT	278584.55	599395.99	119.77
205	48+14.29	26.61 RT	278584.01	599395.77	119.79
206	48+20.81	27.47 RT	278583.06	599402.28	119.81
207	48+19.53	29.01 RT	278581.54	599400.98	119.73
208	48+19.15	29.45 RT	278581.10	599400.60	119.75
209	48+23.62	30.36 RT	278580.13	599405.05	119.76
210	48+22.04	31.60 RT	278578.91	599403.47	119.68
211	48+21.59	31.96 RT	278578.56	599403.00	119.70
212	48+26.71	36.01 RT	278574.44	599408.08	119.66
213	48+24.82	36.67 RT	278573.81	599406.18	119.58
214	48+24.27	36.86 RT	278573.62	599405.63	119.60
215	48+27.79	42.10 RT	278568.34	599409.08	119.54
216	48+25.79	42.13 RT	278568.34	599407.08	119.35
217	48+25.21	42.14 RT	278568.33	599406.50	119.84
218	48+20.46	50.60 RT	278559.93	599401.65	120.15
219	48+14.07	50.75 RT	278559.87	599395.41	120.37
220	48+21.78	36.96 RT	278573.56	599403.13	119.64
221	48+19.78	37.03 RT	278573.51	599401.13	119.68

POINT TABLE					
PT #	STA	OFFSET	Y	X	ELEV
222	48+14.26	36.76 RT	278573.45	599395.13	119.77
223	48+19.59	32.04 RT	278578.51	599401.01	119.74
224	48+19.02	32.06 RT	278578.49	599400.44	119.77
225	48+14.02	32.02 RT	278578.60	599395.44	119.82
226	48+25.71	40.71 RT	278569.76	599407.02	119.49
227	48+14.16	29.20 RT	278581.41	599395.61	119.80
228	48+25.13	40.77 RT	278569.71	599406.44	119.99
229	48+20.88	30.26 RT	278580.26	599402.32	119.69
230	48+20.46	30.67 RT	278579.86	599401.89	119.86
231	47+89.47	31.82 RT	278579.10	599370.90	120.98
232	47+89.41	26.69 RT	278584.24	599370.90	120.86
233	48+11.50	25.22 RT	278585.42	599393.01	119.79
234	48+11.40	25.80 RT	278584.85	599392.90	120.29
327	48+02.70	29.61 RT	278581.15	599384.15	120.35
340	48+14.07	50.75 RT	278565.65	599395.38	120.16
806	48+01.62	34.50 RT	278576.28	599383.01	120.38
848	48+27.70	40.52 RT	278569.93	599409.01	119.57
849	48+22.32	28.87 RT	278581.64	599403.77	119.77
915	48+25.32	50.56 RT	278559.91	599406.50	120.01
916	48+11.87	23.26 RT	278587.38	599393.40	119.87
924	48+25.32	50.56 RT	278565.62	599406.50	119.89
926	48+20.46	50.60 RT	278565.63	599401.66	120.07

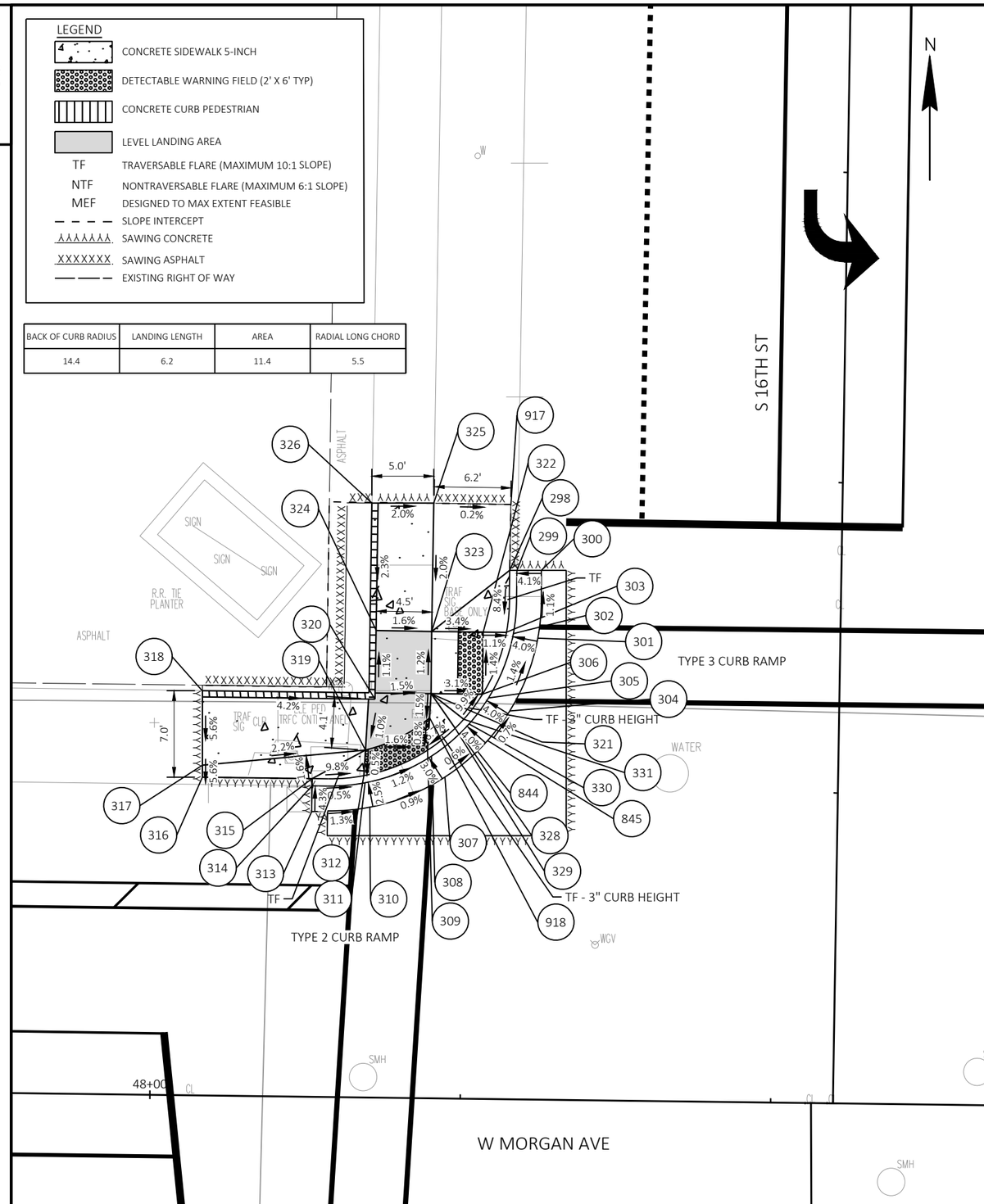

BACK OF CURB RADIUS	LANDING LENGTH	AREA	RADIAL LONG CHORD
14.4	6.2	11.4	5.5

POINT TABLE					
PT #	STA	OFFSET	Y	X	ELEV
298	48+28.45	42.60 LT	278653.03	599410.82	120.03
299	48+29.04	42.61 LT	278653.03	599411.40	119.53
300	48+30.99	42.63 LT	278653.03	599413.35	119.61
301	48+30.78	37.17 LT	278647.57	599413.08	119.67
302	48+28.81	37.51 LT	278647.93	599411.11	119.59
303	48+28.24	37.60 LT	278648.03	599410.54	119.61
304	48+28.59	31.27 LT	278641.70	599410.81	119.76
305	48+26.88	32.30 LT	278642.75	599409.11	119.68
306	48+26.38	32.60 LT	278643.06	599408.61	119.70
307	48+23.45	25.89 LT	278636.38	599405.60	119.82
308	48+22.34	27.55 LT	278638.06	599404.51	119.76
309	48+22.02	28.04 LT	278638.55	599404.20	119.78
310	48+17.42	23.38 LT	278633.95	599399.54	119.88
311	48+17.02	25.34 LT	278635.91	599399.17	119.83
312	48+16.90	25.91 LT	278636.49	599399.06	119.85
313	48+12.74	22.96 LT	278633.58	599394.86	119.94
314	48+12.75	25.04 LT	278635.66	599394.89	119.85
315	48+12.74	25.62 LT	278636.25	599394.89	120.26

POINT TABLE					
PT #	STA	OFFSET	Y	X	ELEV
316	48+03.92	25.62 LT	278636.36	599386.07	120.10
317	48+03.90	26.60 LT	278637.34	599386.07	120.16
318	48+03.81	32.60 LT	278643.34	599386.05	120.49
319	48+17.01	27.98 LT	278638.56	599399.19	119.86
320	48+17.74	32.10 LT	278642.66	599399.97	119.90
321	48+22.24	32.60 LT	278643.11	599404.48	119.83
322	48+26.37	37.60 LT	278648.06	599408.67	119.63
323	48+22.23	37.60 LT	278648.11	599404.53	119.77
324	48+17.75	37.62 LT	278648.19	599400.05	119.84
325	48+22.27	47.94 LT	278658.44	599404.70	119.98
326	48+17.29	47.87 LT	278658.44	599399.72	120.08
328	48+24.62	29.42 LT	278639.90	599406.82	119.72
329	48+24.21	29.84 LT	278640.32	599406.41	119.97
330	48+25.33	30.18 LT	278640.65	599407.54	119.70
331	48+24.89	30.57 LT	278641.04	599407.10	119.95
844	48+26.04	28.01 LT	278638.47	599408.21	119.80
845	48+26.84	28.87 LT	278639.32	599409.03	119.78
917	48+28.47	47.91 LT	278658.34	599410.90	119.97

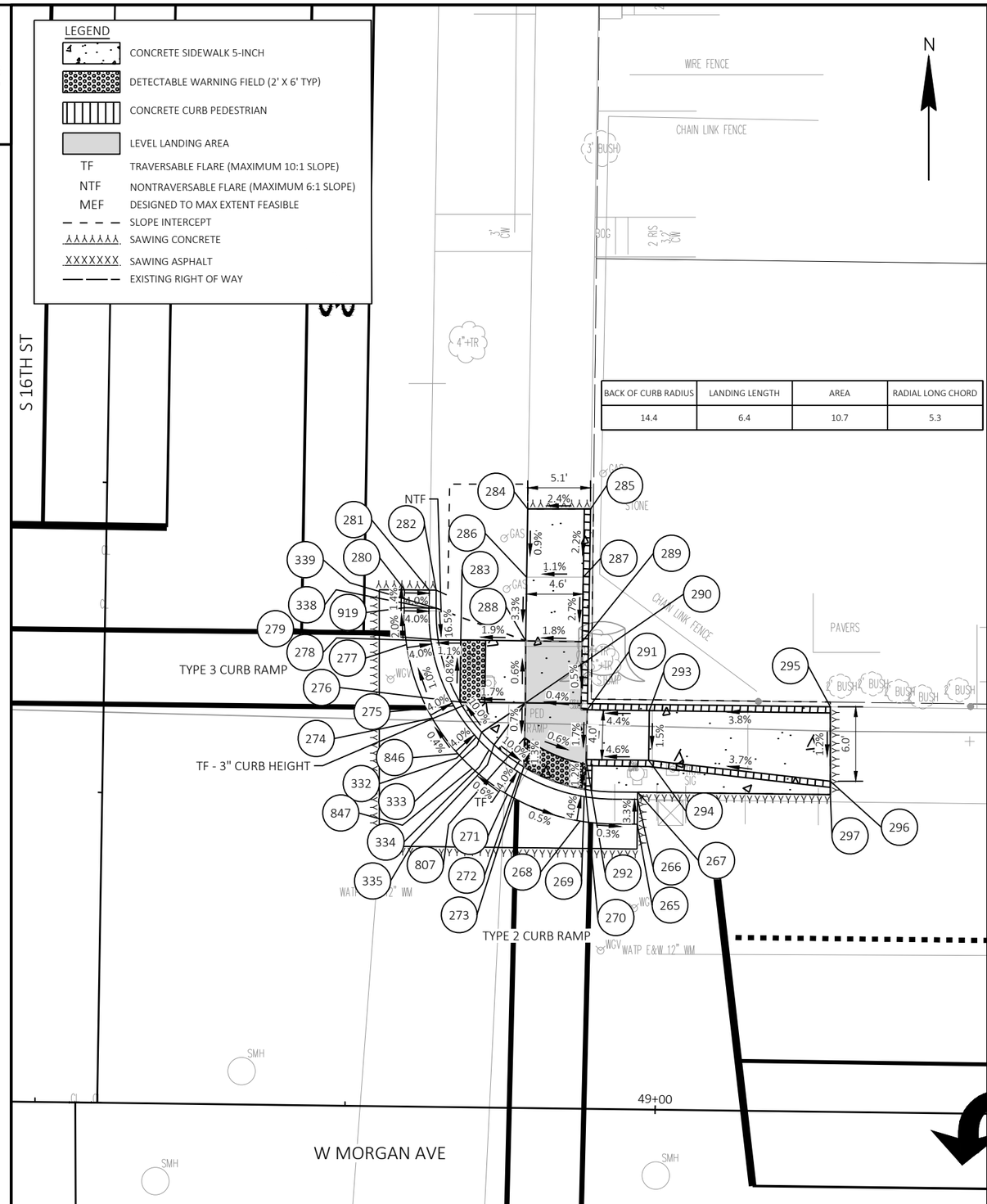

BACK OF CURB RADIUS	LANDING LENGTH	AREA	RADIAL LONG CHORD
14.4	6.4	10.7	5.3

POINT TABLE					
PT #	STA	OFFSET	Y	X	ELEV
265	48+98.28	22.99 LT	278632.53	599480.38	119.43
266	48+98.27	24.99 LT	278634.53	599480.41	119.36
267	48+98.27	25.57 LT	278635.11	599480.42	119.77
268	48+93.65	23.19 LT	278632.79	599475.76	119.44
269	48+93.96	25.16 LT	278634.76	599476.09	119.36
270	48+94.05	25.74 LT	278635.34	599476.19	119.38
271	48+87.78	25.25 LT	278634.93	599469.92	119.47
272	48+88.78	26.99 LT	278636.65	599470.94	119.39
273	48+89.07	27.49 LT	278637.15	599471.23	119.41
274	48+81.63	31.34 LT	278641.09	599463.84	119.43
275	48+83.35	32.36 LT	278642.09	599465.58	119.35
276	48+83.85	32.65 LT	278642.38	599466.08	119.37
277	48+79.49	37.23 LT	278647.01	599461.78	119.37
278	48+81.46	37.56 LT	278647.31	599463.76	119.29
279	48+82.04	37.65 LT	278647.40	599464.33	119.31
280	48+79.27	41.65 LT	278651.44	599461.62	119.29
281	48+81.27	41.65 LT	278651.41	599463.62	119.21
282	48+81.83	41.65 LT	278651.40	599464.17	119.71
283	48+83.85	37.65 LT	278647.38	599466.14	119.33
284	48+89.12	48.30 LT	278657.96	599471.55	119.65
285	48+94.18	48.36 LT	278657.96	599476.61	119.77
286	48+89.10	42.79 LT	278652.45	599471.46	119.60

POINT TABLE					
PT #	STA	OFFSET	Y	X	ELEV
287	48+93.66	42.85 LT	278652.45	599476.02	119.65
288	48+89.08	37.66 LT	278647.32	599471.38	119.43
289	48+93.64	37.64 LT	278647.24	599475.94	119.51
290	48+89.13	32.66 LT	278642.32	599471.36	119.46
291	48+94.12	32.16 LT	278641.76	599476.35	119.48
292	48+94.08	28.16 LT	278637.76	599476.25	119.41
293	48+99.13	32.16 LT	278641.69	599481.35	119.70
294	48+99.13	28.16 LT	278637.69	599481.30	119.64
295	49+13.71	32.65 LT	278642.00	599495.94	120.26
296	49+13.79	26.65 LT	278636.00	599495.94	120.19
297	49+13.80	25.58 LT	278634.93	599495.94	120.19
332	48+85.21	29.85 LT	278639.56	599467.40	119.36
333	48+85.64	30.24 LT	278639.95	599467.84	119.67
334	48+86.25	28.82 LT	278638.51	599468.43	119.37
335	48+86.64	29.25 LT	278638.94	599468.83	119.71
338	48+81.26	40.20 LT	278649.95	599463.59	119.23
339	48+81.85	40.19 LT	278649.95	599464.17	119.73
807	48+89.10	29.85 LT	278639.51	599471.29	119.44
846	48+83.73	28.50 LT	278638.23	599465.91	119.44
847	48+84.91	27.33 LT	278637.04	599467.08	119.45
919	48+79.27	40.20 LT	278649.99	599461.59	119.31

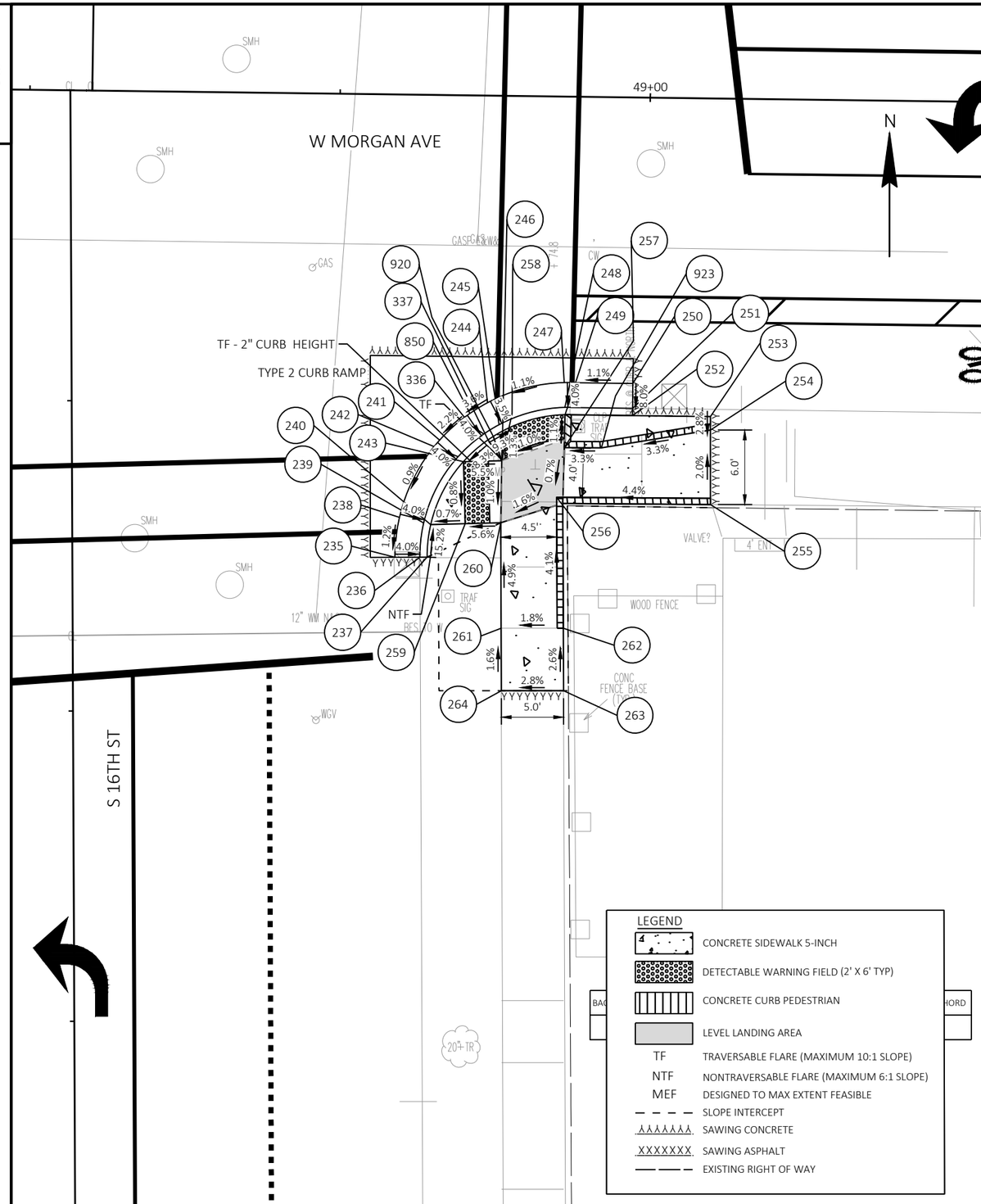

POINT TABLE					
PT #	STA	OFFSET	Y	X	ELEV
235	48+79.89	37.29 RT	278572.49	599461.24	119.54
236	48+81.89	37.25 RT	278572.50	599463.24	119.46
237	48+82.47	37.24 RT	278572.51	599463.82	119.92
238	48+80.21	34.07 RT	278575.71	599461.60	119.58
239	48+82.17	34.49 RT	278575.26	599463.55	119.50
240	48+82.74	34.62 RT	278575.13	599464.12	119.52
241	48+83.37	27.81 RT	278581.93	599464.84	119.64
242	48+84.87	29.13 RT	278580.59	599466.32	119.56
243	48+85.31	29.51 RT	278580.20	599466.76	119.58
244	48+87.20	24.75 RT	278584.94	599468.70	119.77
245	48+88.15	26.51 RT	278583.17	599469.63	119.70
246	48+88.43	27.02 RT	278582.65	599469.91	119.72
247	48+93.35	23.06 RT	278586.55	599474.87	119.84
248	48+93.43	25.06 RT	278584.55	599474.93	119.76
249	48+93.45	25.64 RT	278583.97	599474.94	119.78
250	48+98.89	23.05 RT	278586.49	599480.41	119.90
251	48+98.89	25.05 RT	278584.49	599480.39	119.74
252	48+98.89	25.63 RT	278583.91	599480.38	120.19

POINT TABLE					
PT #	STA	OFFSET	Y	X	ELEV
253	49+05.17	25.63 RT	278583.83	599486.66	120.23
254	49+05.18	26.72 RT	278582.74	599486.66	120.20
255	49+05.26	32.72 RT	278576.74	599486.66	120.32
256	48+92.86	32.29 RT	278577.33	599474.27	119.78
257	48+93.42	28.29 RT	278581.32	599474.88	119.81
258	48+88.40	29.39 RT	278580.28	599469.85	119.75
259	48+85.50	34.51 RT	278575.20	599466.89	119.54
260	48+88.37	34.40 RT	278575.27	599469.76	119.70
261	48+88.51	42.90 RT	278566.78	599469.79	120.12
262	48+93.53	42.83 RT	278566.78	599474.80	120.21
263	48+93.61	47.86 RT	278561.75	599474.82	120.34
264	48+88.59	47.92 RT	278561.75	599469.80	120.20
336	48+86.94	27.27 RT	278582.43	599468.41	119.63
337	48+87.28	27.74 RT	278581.95	599468.75	119.80
850	48+85.78	25.63 RT	278584.07	599467.28	119.71
920	48+87.69	27.46 RT	278582.22	599469.16	119.80
923	48+96.42	28.27 RT	278581.30	599477.88	119.91

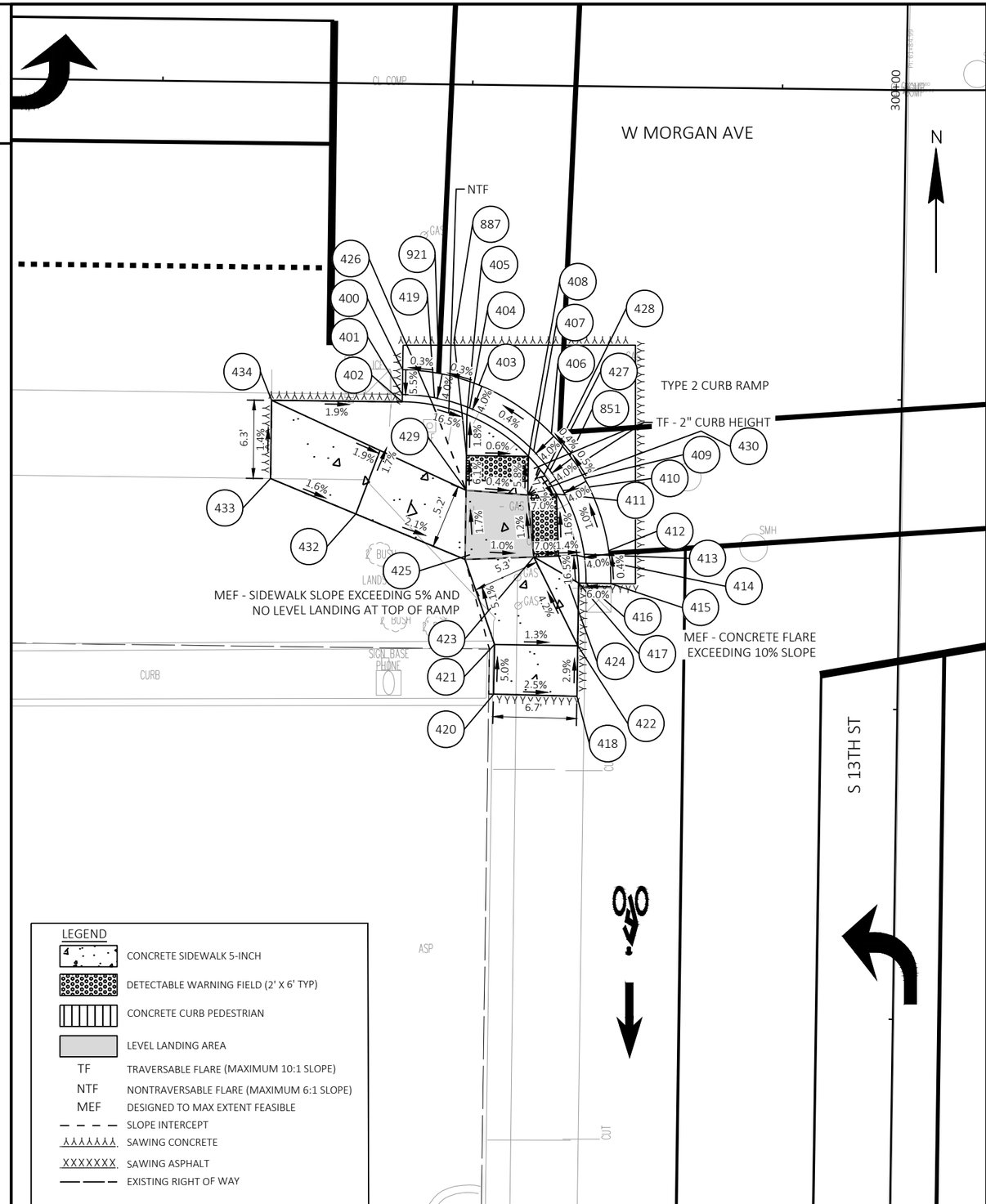

POINT TABLE					
PT #	STA	OFFSET	Y	X	ELEV
400	61+44.64	23.10 RT	278570.66	600726.07	110.52
401	61+44.64	25.10 RT	278568.66	600726.04	110.41
402	61+44.64	25.68 RT	278568.08	600726.03	110.84
403	61+50.81	24.26 RT	278569.42	600732.22	110.54
404	61+50.08	26.12 RT	278567.57	600731.47	110.46
405	61+49.87	26.66 RT	278567.03	600731.25	110.48
406	61+56.71	28.12 RT	278565.48	600738.07	110.57
407	61+55.29	29.53 RT	278564.09	600736.63	110.49
408	61+54.87	29.94 RT	278563.69	600736.21	110.51
409	61+59.40	31.67 RT	278561.90	600740.72	110.59
410	61+57.67	32.67 RT	278560.93	600738.97	110.51
411	61+57.16	32.95 RT	278560.65	600738.46	110.53
412	61+61.43	37.48 RT	278556.07	600742.67	110.65
413	61+59.46	37.79 RT	278555.79	600740.69	110.57
414	61+58.88	37.88 RT	278555.70	600740.12	110.59
415	61+61.63	40.11 RT	278553.43	600742.84	110.66
416	61+59.63	40.11 RT	278553.46	600740.84	110.54
417	61+59.05	40.11 RT	278553.46	600740.26	110.96
418	61+59.04	49.25 RT	278544.33	600740.13	111.21

POINT TABLE					
PT #	STA	OFFSET	Y	X	ELEV
419	61+47.23	25.32 RT	278568.40	600728.62	110.45
420	61+52.30	49.18 RT	278544.48	600733.39	111.38
421	61+52.34	45.16 RT	278548.50	600733.48	111.18
422	61+59.05	45.17 RT	278548.41	600740.19	111.09
423	61+55.41	38.05 RT	278555.58	600736.64	110.75
424	61+57.40	37.95 RT	278555.65	600738.64	110.61
425	61+50.26	37.94 RT	278555.75	600731.50	110.80
426	61+47.13	25.90 RT	278567.83	600728.52	110.95
427	61+56.62	31.07 RT	278562.54	600737.94	110.50
428	61+56.15	31.42 RT	278562.19	600737.47	110.67
429	61+49.87	32.73 RT	278560.96	600731.17	110.71
430	61+54.87	33.07 RT	278560.56	600736.17	110.69
432	61+41.00	34.76 RT	278559.04	600722.28	111.01
433	61+34.09	31.99 RT	278561.90	600715.41	111.13
434	61+34.09	25.67 RT	278568.22	600715.49	111.04
851	61+58.21	29.87 RT	278563.72	600739.55	110.58
887	61+49.87	29.94 RT	278563.75	600731.21	110.54
921	61+47.57	23.35 RT	278570.37	600728.99	110.53

2

PROJECT NO: 2984-21-73	HWY: W. MORGAN AVE	COUNTY: MILWAUKEE	CURB RAMP DETAILS	SHEET 24	E

FILE NAME : S:\MILW_CO\MILWCITY\GOV\230520 MORGAN AVENUE\C3D-MORGANAVE\SHEETS\021299-CR.DWG
LAYOUT NAME - CR-13-SW BLUE
PLOT DATE : 10/29/2024 10:04 AM PLOT BY : WALTER A. WOLAK II PLOT NAME : PLOT SCALE : 1 IN:10 FT
WISDOT/CADDS SHEET 42

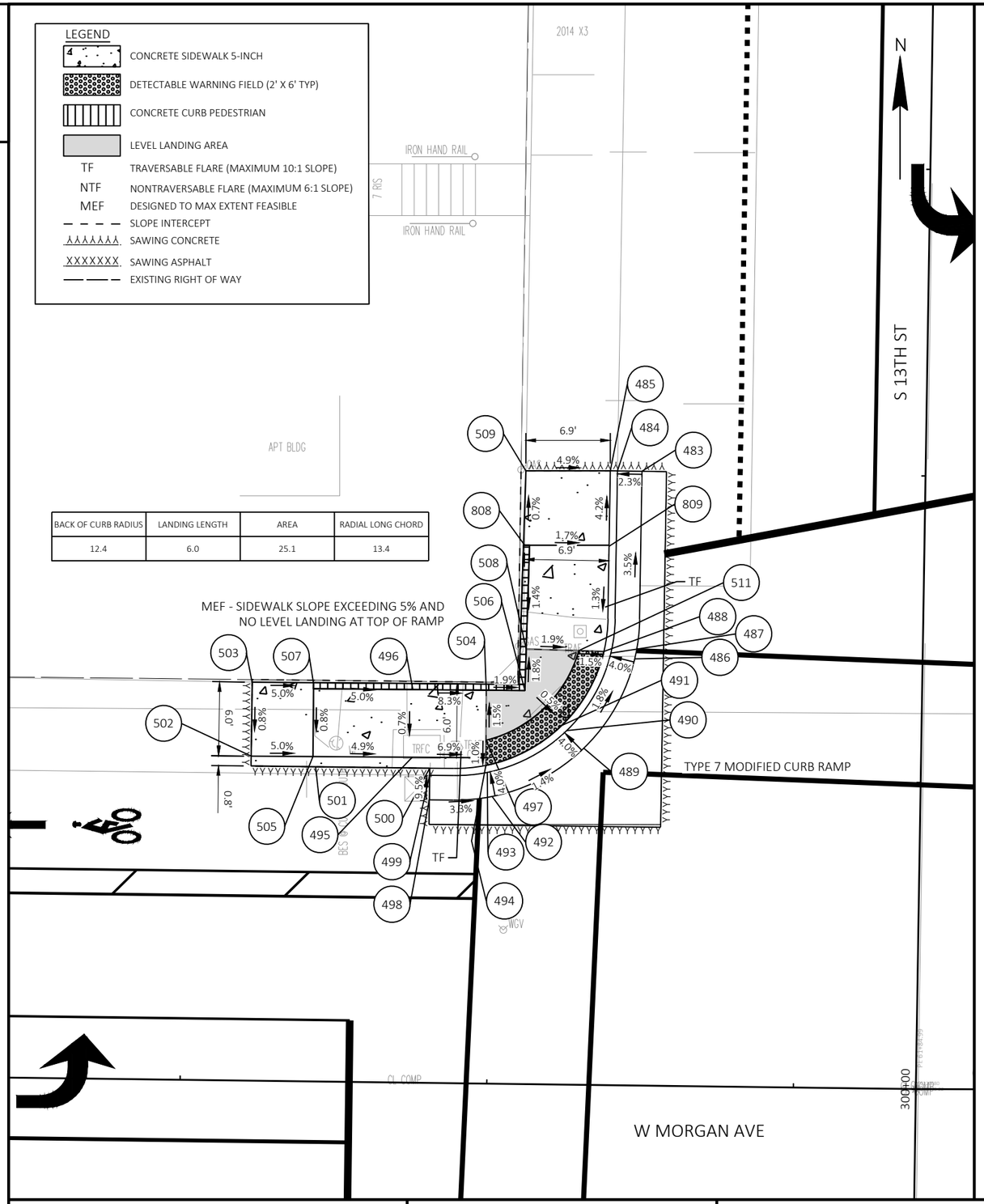

BACK OF CURB RADIUS	LANDING LENGTH	AREA	RADIAL LONG CHORD
12.4	6.0	25.1	13.4

POINT TABLE

PT #	STA	OFFSET	Y	X	ELEV
483	61+62.03	50.09 LT	278643.62	600744.38	108.92
484	61+60.03	50.09 LT	278643.65	600742.38	108.87
485	61+59.44	50.10 LT	278643.66	600741.80	109.24
486	61+61.61	34.79 LT	278628.33	600743.77	109.45
487	61+59.66	35.23 LT	278628.79	600741.83	109.37
488	61+59.09	35.36 LT	278628.93	600741.26	109.39
489	61+57.57	27.46 LT	278621.05	600739.63	109.60
490	61+56.16	28.88 LT	278622.48	600738.24	109.52
491	61+55.75	29.29 LT	278622.90	600737.83	109.54
492	61+50.14	23.42 LT	278617.10	600732.15	109.72
493	61+49.72	25.37 LT	278619.06	600731.76	109.64
494	61+49.60	25.95 LT	278619.64	600731.64	109.66
495	61+43.59	26.54 LT	278620.31	600725.65	110.08
496	61+43.57	32.05 LT	278625.82	600725.69	110.12
497	61+49.58	28.00 LT	278621.69	600731.66	109.68

POINT TABLE

PT #	STA	OFFSET	Y	X	ELEV
498	61+45.02	23.08 LT	278616.83	600727.03	109.89
499	61+45.02	25.08 LT	278618.83	600727.06	109.70
500	61+45.02	25.67 LT	278619.41	600727.06	0.00
501	61+35.72	25.66 LT	278619.53	600717.76	110.57
502	61+30.46	26.46 LT	278620.39	600712.51	110.73
503	61+30.46	32.50 LT	278626.43	600712.59	110.78
504	61+49.56	32.08 LT	278625.77	600731.68	109.62
505	61+35.49	26.49 LT	278620.36	600717.55	110.48
506	61+52.70	32.09 LT	278625.74	600734.82	109.56
507	61+35.46	32.52 LT	278626.39	600717.59	110.53
508	61+52.77	35.49 LT	278629.14	600734.93	109.50
509	61+52.56	50.01 LT	278643.66	600734.91	109.58
511	61+57.05	35.40 LT	278628.99	600739.21	109.42
808	61+52.54	43.94 LT	278637.59	600734.81	109.62
809	61+59.42	43.95 LT	278637.51	600741.69	109.50

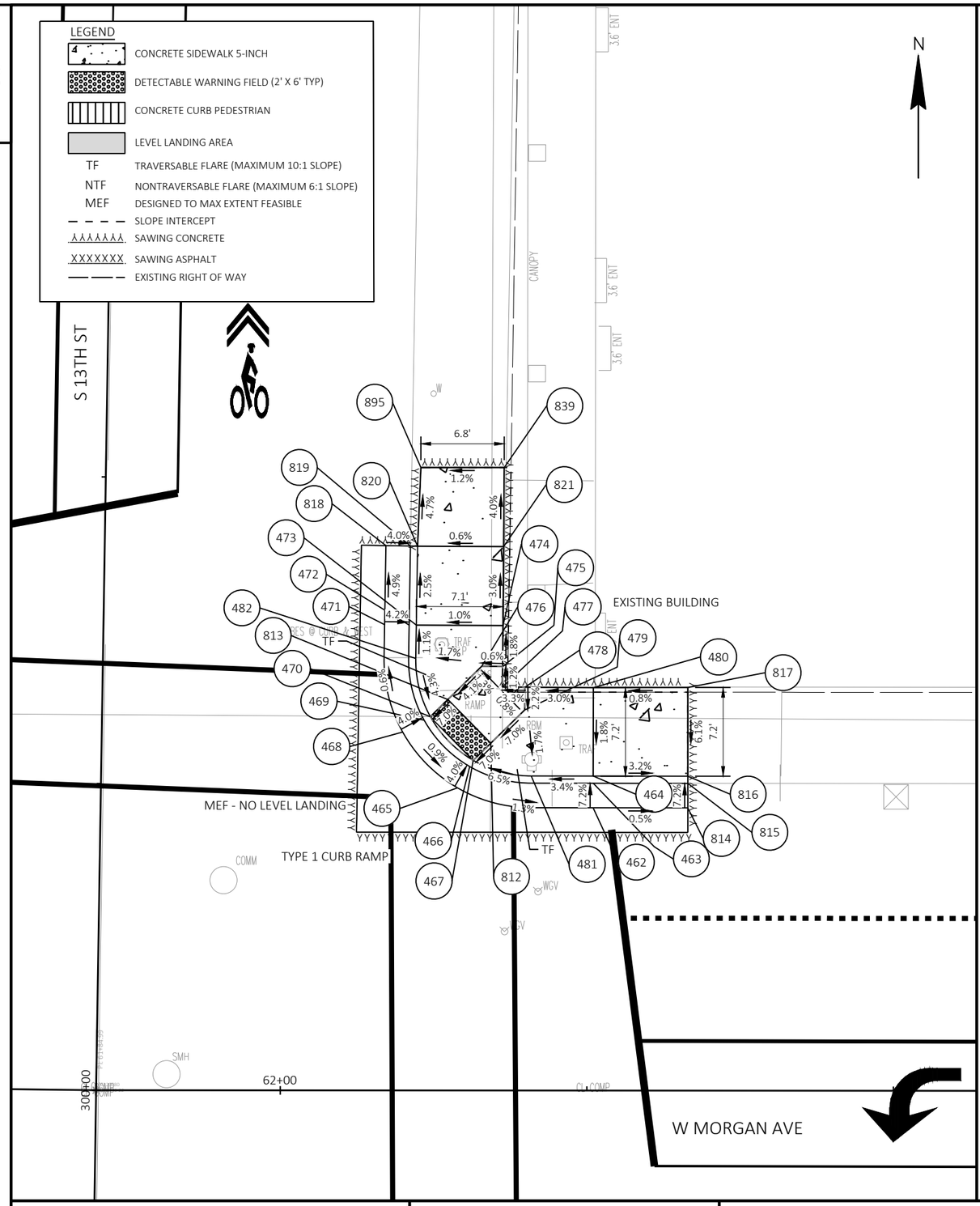

POINT TABLE					
PT #	STA	OFFSET	Y	X	ELEV
462	62+25.51	23.05 LT	278616.27	600807.23	109.17
463	62+25.51	25.05 LT	278618.27	600807.24	109.03
464	62+25.51	25.63 LT	278618.86	600807.24	109.75
465	62+14.43	24.67 LT	278617.90	600796.16	109.32
466	62+15.43	26.40 LT	278619.63	600797.16	109.24
467	62+15.73	26.90 LT	278620.13	600797.46	109.26
468	62+09.96	29.21 LT	278622.44	600791.70	109.38
469	62+11.71	30.19 LT	278623.41	600793.44	109.30
470	62+12.22	30.47 LT	278623.70	600793.95	109.32
471	62+08.49	37.97 LT	278631.20	600790.23	109.32
472	62+10.49	37.93 LT	278631.16	600792.23	109.24
473	62+11.08	37.92 LT	278631.15	600792.81	109.50
474	62+18.14	37.91 LT	278631.13	600799.88	109.57
475	62+18.12	34.56 LT	278627.79	600799.86	109.63
476	62+16.41	34.59 LT	278627.82	600798.15	109.62
477	62+18.10	32.88 LT	278626.11	600799.83	109.65
478	62+19.93	32.87 LT	278626.10	600801.66	109.71

POINT TABLE					
PT #	STA	OFFSET	Y	X	ELEV
479	62+19.92	31.03 LT	278624.25	600801.65	109.67
480	62+25.51	32.84 LT	278626.06	600807.24	109.88
481	62+20.45	25.64 LT	278618.86	600802.17	109.58
482	62+11.03	35.21 LT	278628.44	600792.77	109.53
812	62+17.15	28.31 LT	278621.53	600798.88	109.40
813	62+13.65	31.87 LT	278625.10	600795.38	109.46
814	62+33.21	23.05 LT	278616.27	600814.94	109.13
815	62+33.21	25.05 LT	278618.27	600814.94	108.99
816	62+33.21	25.63 LT	278618.85	600814.94	109.50
817	62+33.22	32.87 LT	278626.08	600814.95	109.94
818	62+08.60	44.41 LT	278637.64	600790.34	109.01
819	62+10.60	44.38 LT	278637.61	600792.34	108.93
820	62+11.18	44.37 LT	278637.60	600792.92	109.34
821	62+18.19	44.34 LT	278637.57	600799.93	109.38
839	62+18.23	50.78 LT	278644.00	600799.98	109.12
895	62+11.44	50.77 LT	278644.00	600793.18	109.04

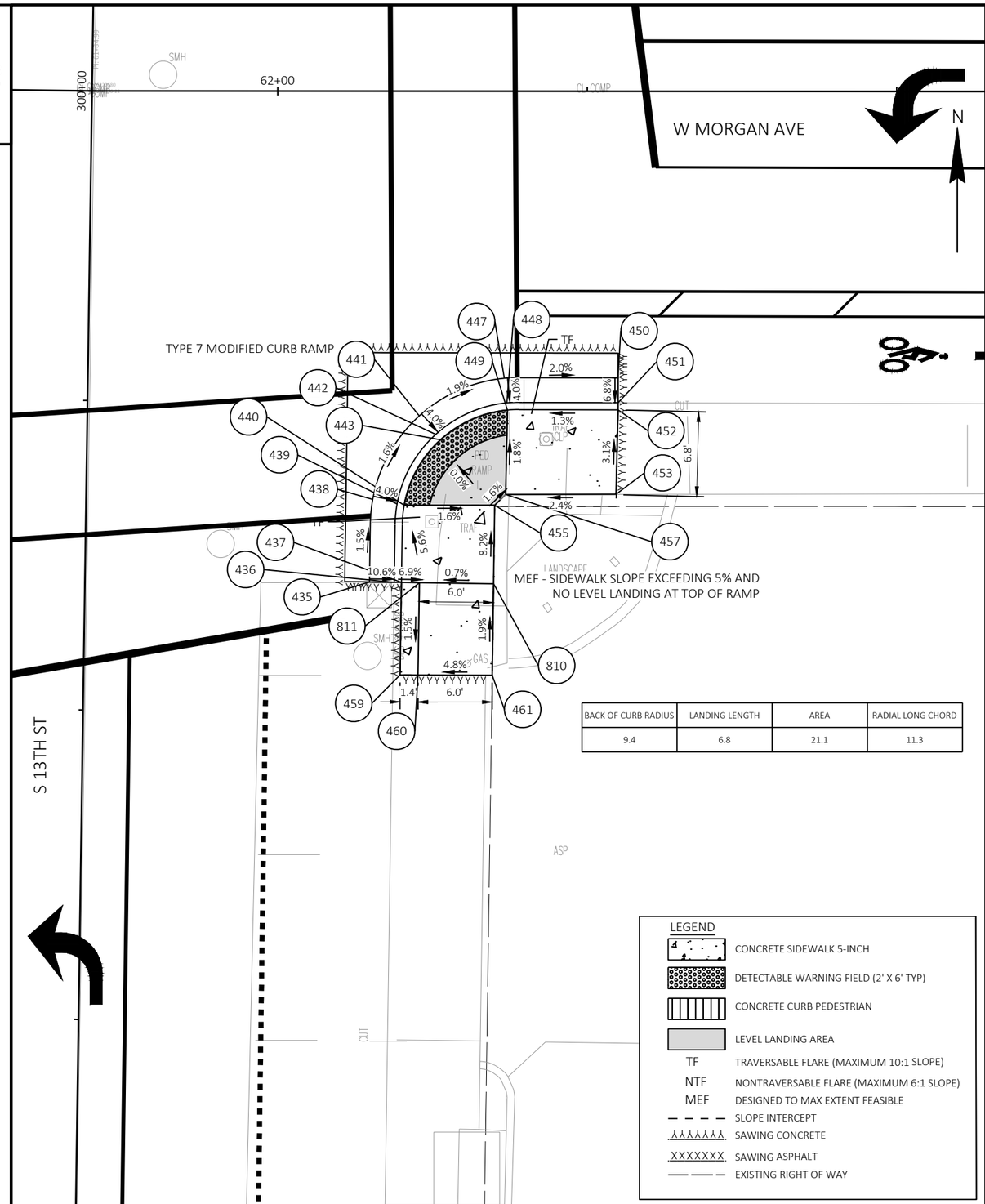

BACK OF CURB RADIUS	LANDING LENGTH	AREA	RADIAL LONG CHORD
9.4	6.8	21.1	11.3

LEGEND

- CONCRETE SIDEWALK 5-INCH
- DETECTABLE WARNING FIELD (2' X 6' TYP)
- CONCRETE CURB PEDESTRIAN
- LEVEL LANDING AREA
- TF — TRAVERSABLE FLARE (MAXIMUM 10:1 SLOPE)
- NTF — NONTRAVERSABLE FLARE (MAXIMUM 6:1 SLOPE)
- MEF — DESIGNED TO MAX EXTENT FEASIBLE
- SLOPE INTERCEPT
- SAWING CONCRETE
- SAWING ASPHALT
- EXISTING RIGHT OF WAY

POINT TABLE

PT #	STA	OFFSET	Y	X	ELEV
435	62+07.43	39.65 RT	278553.58	600789.12	110.50
436	62+09.43	39.67 RT	278553.56	600791.12	110.29
437	62+10.01	39.68 RT	278553.55	600791.70	110.80
438	62+07.69	32.98 RT	278560.26	600789.38	110.40
439	62+09.66	33.34 RT	278559.89	600791.35	110.32
440	62+10.23	33.44 RT	278559.79	600791.93	110.34
441	62+11.45	26.24 RT	278566.99	600793.15	110.28
442	62+12.79	27.72 RT	278565.51	600794.49	110.20
443	62+13.18	28.15 RT	278565.08	600794.88	110.22
447	62+18.33	23.20 RT	278570.03	600800.03	110.14
448	62+18.52	25.19 RT	278568.04	600800.22	110.06
449	62+18.58	25.77 RT	278567.46	600800.28	110.08

POINT TABLE

PT #	STA	OFFSET	Y	X	ELEV
450	62+27.50	23.16 RT	278570.06	600809.20	109.96
451	62+27.50	25.16 RT	278568.06	600809.20	109.82
452	62+27.50	25.74 RT	278567.48	600809.20	110.20
453	62+27.35	32.55 RT	278560.67	600809.04	110.41
455	62+17.55	33.44 RT	278559.79	600799.24	110.22
457	62+18.43	32.57 RT	278560.65	600800.12	110.20
459	62+09.91	47.16 RT	278546.07	600791.59	110.59
460	62+11.35	47.16 RT	278546.06	600793.04	110.59
461	62+17.35	47.17 RT	278546.05	600799.04	110.88
810	62+17.46	39.79 RT	278553.44	600799.15	110.74
811	62+11.46	39.70 RT	278553.53	600793.15	110.70

2

POINT TABLE					
PT #	STA	OFFSET	Y	X	ELEV
512	87+19.11	99.25 LT	278690.98	603300.88	55.86
513	87+17.04	101.49 LT	278693.22	603298.81	55.80
514	87+13.37	105.11 LT	278696.84	603295.15	55.72
515	87+11.10	107.15 LT	278698.89	603292.88	55.68
516	87+17.61	97.92 LT	278689.65	603299.39	55.81
517	87+15.59	100.11 LT	278691.84	603297.36	55.72
518	87+12.01	103.65 LT	278695.38	603293.78	55.64
519	87+09.79	105.64 LT	278697.38	603291.56	55.62
520	87+17.18	97.53 LT	278689.26	603298.95	56.10
521	87+15.17	99.71 LT	278691.44	603296.94	55.74
522	87+11.61	103.22 LT	278694.95	603293.39	55.66
523	87+09.41	105.20 LT	278696.94	603291.18	55.96
524	87+12.52	97.00 LT	278688.73	603294.29	56.00
525	87+09.03	100.58 LT	278692.31	603290.80	55.92
526	87+16.36	93.05 LT	278684.78	603298.13	56.25
527	87+12.41	89.89 LT	278681.63	603294.18	56.31
528	87+08.91	93.45 LT	278685.19	603290.68	56.08
529	87+05.41	97.01 LT	278688.75	603287.18	56.00
530	87+02.32	100.14 LT	278691.88	603284.10	56.07
531	87+05.66	104.03 LT	278695.77	603287.44	55.97
532	87+19.78	120.56 LT	278712.29	603301.56	56.01
533	87+24.55	116.36 LT	278708.08	603306.33	56.09
534	87+28.05	112.95 LT	278704.67	603309.83	56.17
535	87+30.26	110.63 LT	278702.36	603312.04	56.24
536	87+21.05	122.10 LT	278713.83	603302.84	56.09
537	87+25.91	117.82 LT	278709.55	603307.70	56.01
538	87+29.48	114.35 LT	278706.07	603311.26	56.09
539	87+31.73	111.99 LT	278703.72	603313.51	56.16
540	87+21.42	122.55 LT	278714.27	603303.21	56.33
541	87+26.31	118.25 LT	278709.97	603308.10	56.03
542	87+29.89	114.76 LT	278706.48	603311.68	56.11
543	87+32.16	112.39 LT	278704.11	603313.94	56.66

POINT TABLE					
PT #	STA	OFFSET	Y	X	ELEV
544	87+28.84	120.83 LT	278712.56	603310.63	56.08
545	87+33.81	118.76 LT	278710.48	603315.59	56.16
546	87+38.00	117.15 LT	278708.87	603319.79	56.78
547	87+38.58	117.14 LT	278708.86	603320.37	56.28
548	87+40.58	117.11 LT	278708.82	603322.37	56.36
549	87+40.81	130.44 LT	278722.15	603322.60	56.29
550	87+40.90	135.51 LT	278727.23	603322.69	56.28
551	87+40.94	138.09 LT	278729.81	603322.74	56.25
552	87+36.28	142.10 LT	278733.82	603318.08	56.22
553	87+33.55	141.64 LT	278733.36	603315.35	56.20
554	87+28.56	140.80 LT	278732.52	603310.35	56.12
555	87+20.70	139.47 LT	278731.20	603302.50	55.98
556	87+38.81	130.47 LT	278722.19	603320.60	56.21
557	87+38.23	130.48 LT	278722.20	603320.02	56.23
558	87+38.90	135.55 LT	278727.26	603320.69	56.20
559	87+38.32	135.56 LT	278727.27	603320.11	56.22
560	87+38.94	138.12 LT	278729.84	603320.74	56.17
561	87+38.36	138.13 LT	278729.85	603320.16	56.67
562	87+36.61	140.13 LT	278731.85	603318.41	56.18
563	87+36.71	139.55 LT	278731.27	603318.51	56.67
564	87+33.89	139.67 LT	278731.39	603315.68	56.12
565	87+33.98	139.09 LT	278730.82	603315.78	56.14
566	87+28.89	138.82 LT	278730.55	603310.68	56.04
567	87+28.99	138.25 LT	278729.97	603310.78	56.06
568	87+21.04	137.50 LT	278729.23	603302.83	55.92
569	87+21.13	136.92 LT	278728.65	603302.93	56.28
570	87+28.99	134.87 LT	278726.59	603310.78	56.16
571	87+33.99	134.87 LT	278726.60	603315.78	56.25
572	87+34.00	129.81 LT	278721.53	603315.79	56.28
573	87+28.99	129.68 LT	278721.40	603310.79	56.22
574	87+28.91	124.86 LT	278716.59	603310.70	56.27
575	87+33.91	124.78 LT	278716.50	603315.70	56.24

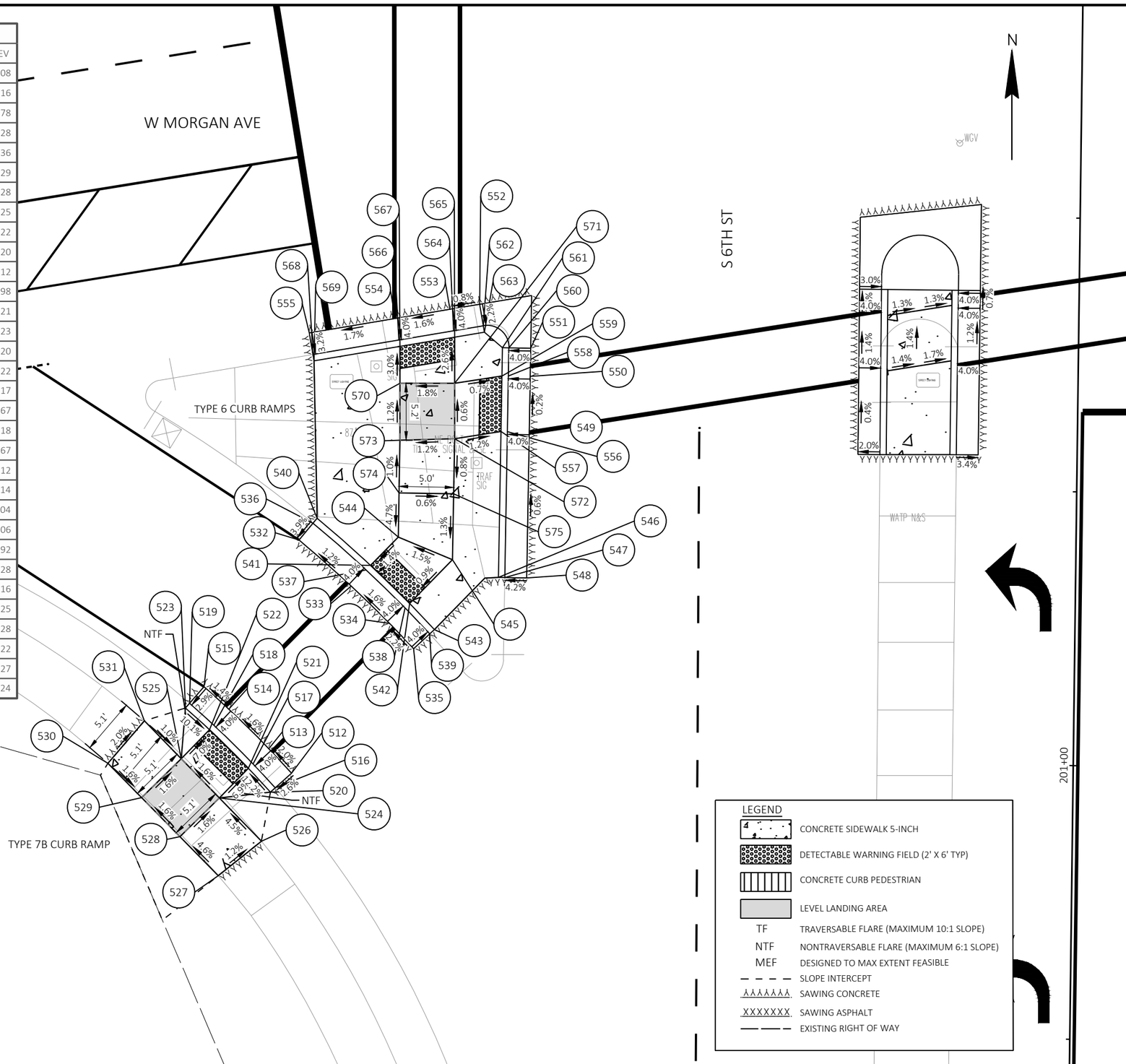

2

PROJECT NO: 2984-21-73	HWY: W. MORGAN AVE	COUNTY: MILWAUKEE	CURB RAMP DETAILS	SHEET 28	E

FILE NAME : S:\MILW_CO\MILWCITY\GOV\230520 MORGAN AVENUE\C3D-MORGANAVE\SHEETS\021299-CR.DWG
LAYOUT NAME - CR-6-SW CYAN
PLOT DATE : 10/29/2024 10:05 AM PLOT BY : WALTER A. WOLAK II PLOT NAME : PLOT SCALE : 1 IN:10 FT
WISDOT/CADDS SHEET 42

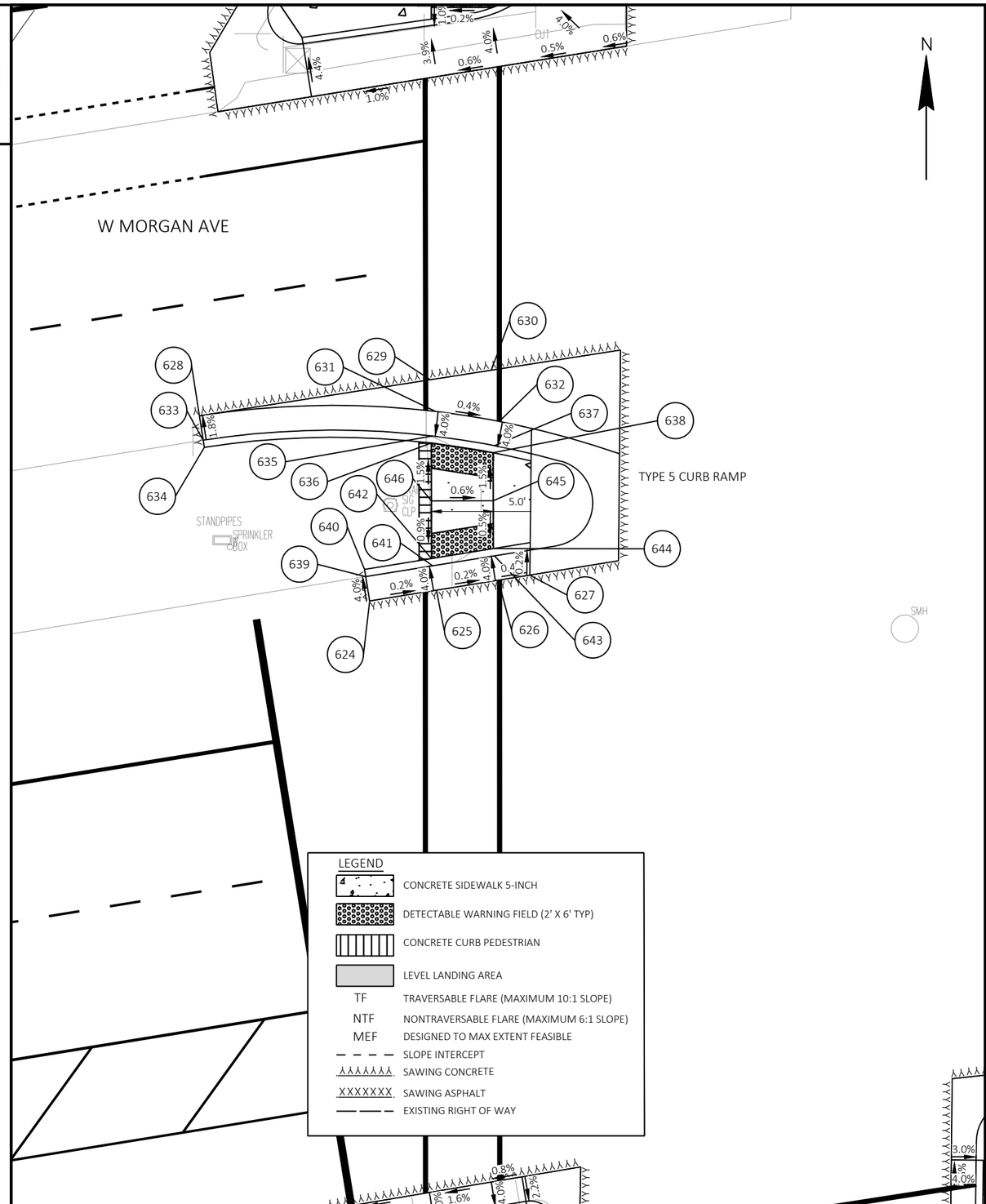

POINT TABLE					
PT #	STA	OFFSET	Y	X	ELEV
624	87+23.94	188.64 LT	278780.36	603305.76	56.01
625	87+29.35	189.51 LT	278781.24	603311.17	56.00
626	87+34.35	190.33 LT	278782.05	603316.17	55.99
627	87+36.89	190.74 LT	278782.46	603318.72	55.98
628	87+10.17	203.60 LT	278795.34	603292.00	55.95
629	87+28.82	206.53 LT	278798.25	603310.66	55.94
630	87+33.77	207.30 LT	278799.02	603315.61	55.93
631	87+29.22	203.97 LT	278795.70	603311.06	55.97
632	87+34.42	203.16 LT	278794.89	603316.25	55.95
633	87+10.48	201.63 LT	278793.36	603292.31	55.99
634	87+10.57	201.05 LT	278792.79	603292.40	56.35
635	87+28.99	201.99 LT	278793.71	603310.83	55.89
636	87+28.92	201.41 LT	278793.13	603310.76	55.91
637	87+34.04	201.20 LT	278792.92	603315.87	55.87
638	87+33.92	200.63 LT	278792.35	603315.76	55.89
639	87+23.62	190.61 LT	278782.34	603305.44	55.93
640	87+23.52	191.19 LT	278782.91	603305.35	56.36
641	87+29.03	191.49 LT	278783.21	603310.85	55.92
642	87+28.93	192.06 LT	278783.79	603310.76	55.94
643	87+34.03	192.30 LT	278784.02	603315.85	55.91
644	87+33.93	192.88 LT	278784.60	603315.76	55.93
645	87+33.93	196.75 LT	278788.47	603315.76	55.95
646	87+28.93	196.73 LT	278788.46	603310.76	55.98

2

POINT TABLE					
PT #	STA	OFFSET	Y	X	ELEV
649	87+22.19	240.77 LT	278832.50	603304.05	55.59
650	87+29.63	231.05 LT	278822.77	603311.48	55.65
651	87+34.65	231.85 LT	278823.57	603316.51	55.68
652	87+44.69	233.49 LT	278825.21	603326.54	55.73
653	87+44.54	243.27 LT	278834.99	603326.40	55.63
654	87+44.67	248.37 LT	278840.09	603326.53	55.57
659	87+19.24	247.04 LT	278838.77	603301.10	55.54
660	87+21.05	245.97 LT	278837.70	603302.91	55.53
661	87+28.98	235.09 LT	278826.81	603310.84	55.49
662	87+33.98	236.04 LT	278827.76	603315.84	55.51
663	87+28.89	235.67 LT	278827.39	603310.74	55.51
664	87+33.89	236.63 LT	278828.35	603315.74	55.53
665	87+28.89	236.62 LT	278828.34	603310.74	55.52
666	87+40.26	243.32 LT	278835.03	603322.12	55.46
667	87+39.67	243.32 LT	278835.04	603321.52	55.48
668	87+40.49	248.41 LT	278840.13	603322.36	55.41
669	87+39.91	248.42 LT	278840.14	603321.77	55.43
670	87+38.90	248.26 LT	278839.98	603320.77	55.44
671	87+33.88	242.43 LT	278834.15	603315.74	55.87
672	87+33.91	247.49 LT	278839.21	603315.77	55.79
673	87+28.88	241.72 LT	278833.45	603310.74	55.82

POINT TABLE					
PT #	STA	OFFSET	Y	X	ELEV
674	87+28.90	246.78 LT	278838.50	603310.77	55.87
675	87+16.71	237.62 LT	278829.35	603298.56	55.99
676	87+16.28	237.87 LT	278829.61	603298.13	55.49
677	87+21.48	245.72 LT	278837.45	603303.35	55.56
678	87+21.16	250.32 LT	278842.05	603303.02	55.50
822	87+24.17	241.05 LT	278832.78	603306.03	55.67
852	87+19.22	229.39 LT	278821.12	603301.07	55.54
853	87+18.53	233.68 LT	278825.41	603300.38	55.35
854	87+18.45	234.18 LT	278825.91	603300.30	55.85
855	87+43.01	233.22 LT	278824.94	603324.87	55.72
856	87+37.64	238.42 LT	278830.14	603319.50	55.42
857	87+37.23	238.83 LT	278830.55	603319.08	55.92
861	87+44.67	251.39 LT	278843.11	603326.53	55.53
862	87+40.42	251.42 LT	278843.13	603322.29	55.38
863	87+39.92	251.42 LT	278843.14	603321.79	55.88
888	87+16.00	241.51 LT	278833.24	603297.86	55.52
889	87+17.80	240.46 LT	278832.19	603299.66	55.51
892	87+18.23	240.21 LT	278831.94	603300.09	55.53
893	87+14.48	238.92 LT	278830.66	603296.34	55.50
905	87+23.42	249.00 LT	278840.73	603305.28	55.96
906	87+22.99	249.25 LT	278840.98	603304.85	55.46

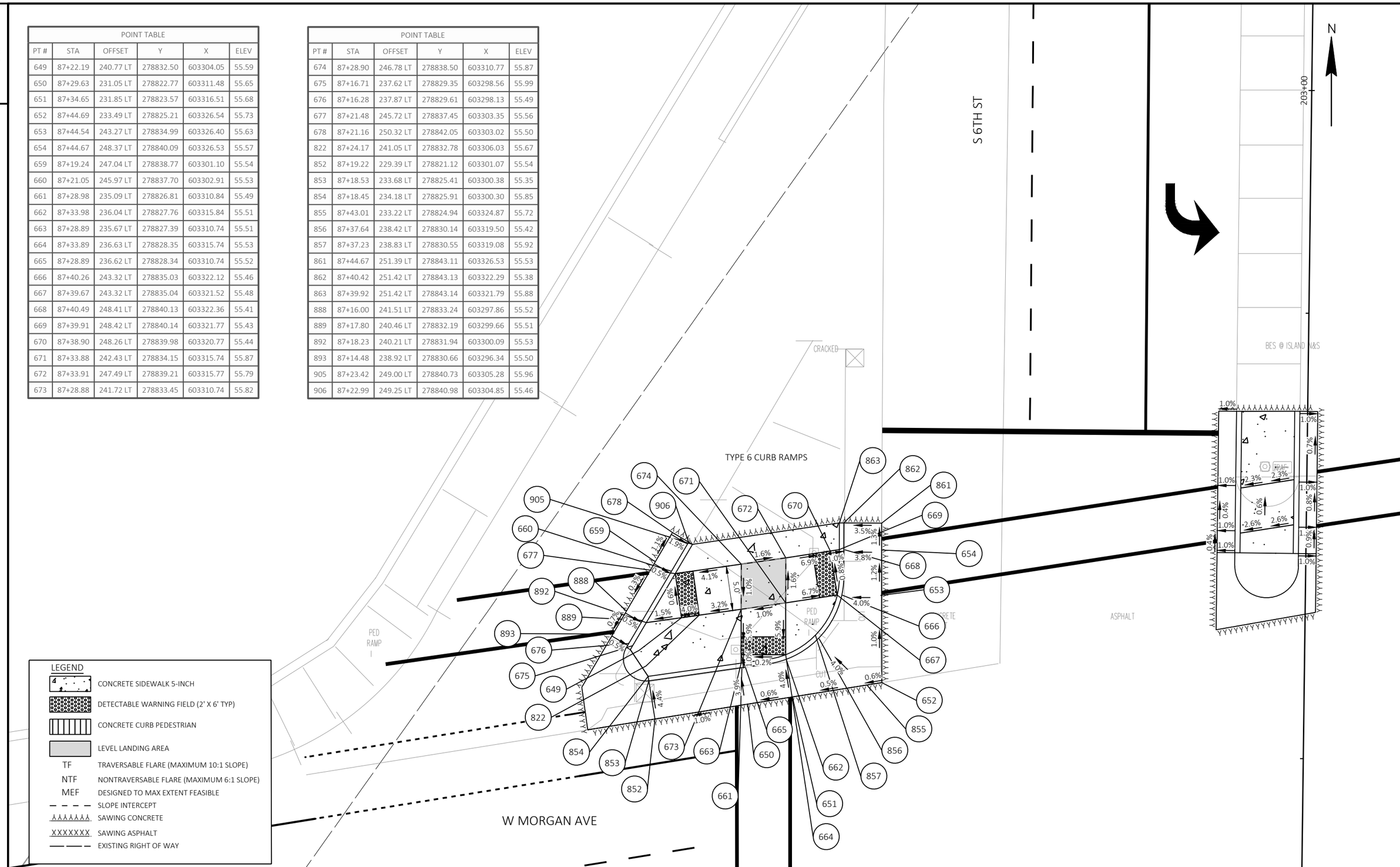

2

PROJECT NO: 2984-21-73	HWY: W. MORGAN AVE	COUNTY: MILWAUKEE	CURB RAMP DETAILS	SHEET 30	E

FILE NAME : S:\MILW_CO\MILWCITY\GOV\230520 MORGAN AVENUE\C3D-MORGANAVE\SHEETS\021299-CR.DWG
LAYOUT NAME - CR-6-NW MAGENTA
PLOT DATE : 10/29/2024 10:05 AM PLOT BY : WALTER A. WOLAK II PLOT NAME : PLOT SCALE : 1 IN:10 FT

WISDOT/CADDS SHEET 42

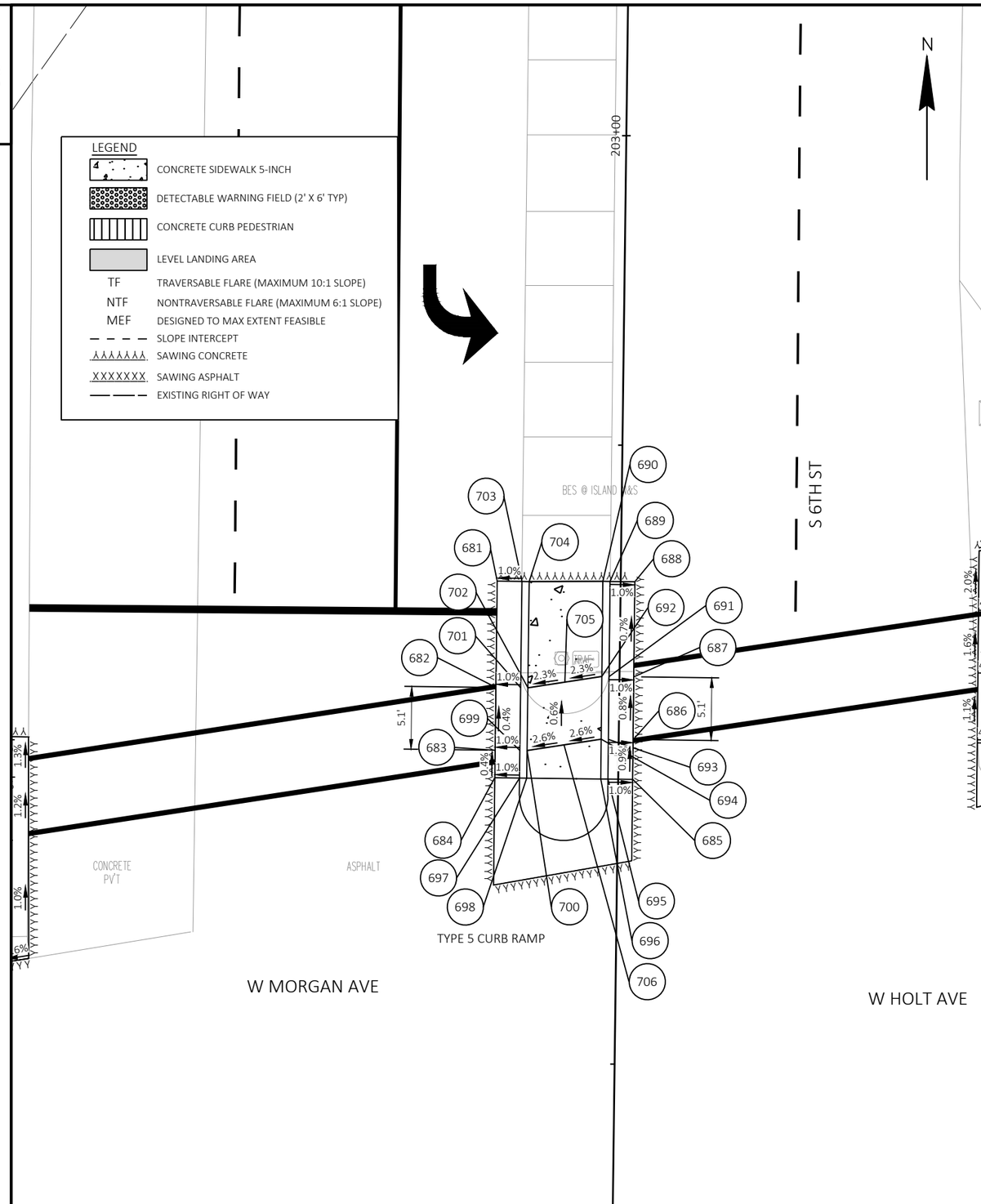

POINT TABLE					
PT #	STA	OFFSET	Y	X	ELEV
681	87+82.52	263.99 LT	278855.68	603364.39	55.90
682	87+82.42	255.40 LT	278847.09	603364.29	55.96
683	87+82.37	250.33 LT	278842.03	603364.23	55.98
684	87+82.34	248.11 LT	278839.80	603364.20	55.99
685	87+92.99	248.00 LT	278839.67	603375.34	56.17
686	87+93.02	251.21 LT	278842.89	603375.38	56.14
687	87+93.06	256.28 LT	278847.95	603375.43	56.10
688	87+93.13	263.96 LT	278855.64	603375.52	56.05
689	87+91.13	263.98 LT	278855.66	603373.52	56.07
690	87+90.54	263.98 LT	278855.67	603372.94	56.57
691	87+91.06	256.29 LT	278847.98	603373.43	56.12
692	87+90.48	256.30 LT	278847.98	603372.85	56.14
693	87+91.02	251.23 LT	278842.91	603373.38	56.16
694	87+90.43	251.23 LT	278842.92	603372.79	56.18
695	87+90.99	248.01 LT	278839.69	603373.34	56.19
696	87+90.40	248.01 LT	278839.70	603372.76	56.79
697	87+84.34	248.09 LT	278839.78	603366.20	56.01
698	87+84.92	248.08 LT	278839.77	603366.79	56.51
699	87+84.37	250.31 LT	278842.00	603366.23	56.00
700	87+84.95	250.31 LT	278842.00	603366.81	56.02
701	87+84.42	255.38 LT	278847.07	603366.29	55.98
702	87+85.01	255.37 LT	278847.06	603366.87	56.00
703	87+84.52	263.97 LT	278855.66	603366.39	55.92
704	87+85.10	263.96 LT	278855.65	603366.97	56.42
705	87+88.00	255.83 LT	278847.52	603369.86	56.07
706	87+87.94	250.77 LT	278842.46	603369.80	56.10

1' E TO W

2

POINT TABLE					
PT #	STA	OFFSET	Y	X	ELEV
707	88+20.92	266.54 LT	278858.14	603403.32	55.96
708	88+20.89	261.47 LT	278853.08	603403.28	56.06
709	88+20.85	256.41 LT	278848.01	603403.23	56.14
710	88+20.81	251.01 LT	278842.62	603403.18	56.20
711	88+25.81	247.11 LT	278838.70	603408.16	56.28
712	88+29.48	248.05 LT	278839.63	603411.83	56.29
713	88+34.42	249.31 LT	278840.88	603416.77	56.31
714	88+44.07	251.78 LT	278843.33	603426.44	56.33
715	88+55.19	262.18 LT	278853.69	603437.58	56.17
716	88+48.40	265.77 LT	278857.31	603430.80	56.04
717	88+44.23	268.31 LT	278859.85	603426.64	55.96
718	88+38.92	271.95 LT	278863.50	603421.34	55.93
719	88+22.92	266.52 LT	278858.13	603405.32	55.88
720	88+23.51	266.52 LT	278858.12	603405.91	56.38
721	88+22.89	261.46 LT	278853.06	603405.28	55.98

POINT TABLE					
PT #	STA	OFFSET	Y	X	ELEV
722	88+23.47	261.45 LT	278853.05	603405.86	56.00
723	88+22.85	256.39 LT	278847.99	603405.23	56.06
724	88+23.43	256.39 LT	278847.99	603405.81	56.08
725	88+22.81	251.00 LT	278842.60	603405.18	56.12
726	88+23.40	250.99 LT	278842.59	603405.76	56.62
727	88+25.31	249.04 LT	278840.64	603407.67	56.20
728	88+25.17	249.61 LT	278841.20	603407.52	56.70
729	88+28.98	249.98 LT	278841.57	603411.34	56.21
730	88+28.84	250.55 LT	278842.13	603411.20	56.23
731	88+33.92	251.25 LT	278842.82	603416.28	56.23
732	88+33.78	251.81 LT	278843.39	603416.14	56.25
733	88+43.58	253.72 LT	278845.27	603425.95	56.25
734	88+43.43	254.28 LT	278845.83	603425.80	56.75
735	88+54.32	260.38 LT	278851.90	603436.71	56.21
736	88+54.07	259.85 LT	278851.37	603436.45	56.70

POINT TABLE					
PT #	STA	OFFSET	Y	X	ELEV
737	88+47.40	264.04 LT	278855.58	603429.80	56.11
738	88+47.11	263.53 LT	278855.07	603429.51	56.13
739	88+43.15	266.62 LT	278858.17	603425.56	56.04
740	88+42.84	266.13 LT	278857.68	603425.24	56.06
741	88+37.74	270.33 LT	278861.89	603420.15	55.98
742	88+36.92	269.66 LT	278861.22	603419.33	56.48
743	88+27.72	262.12 LT	278853.71	603410.11	56.20
744	88+28.49	257.18 LT	278848.76	603410.86	56.30
745	88+32.68	262.89 LT	278854.47	603415.07	56.28
746	88+33.45	257.95 LT	278849.53	603415.83	56.32
747	88+37.67	263.67 LT	278855.24	603420.06	56.16
748	88+38.44	258.73 LT	278850.29	603420.82	56.25
749	88+41.66	264.30 LT	278855.85	603424.06	56.10
750	88+44.66	259.70 LT	278851.25	603427.04	56.20
751	88+48.17	284.66 LT	278876.20	603430.61	55.69

POINT TABLE					
PT #	STA	OFFSET	Y	X	ELEV
752	88+52.93	281.53 LT	278873.06	603435.37	55.76
753	88+57.74	278.86 LT	278870.37	603440.18	55.81
754	88+89.45	270.68 LT	278862.11	603471.87	56.24
755	88+51.99	290.04 LT	278881.56	603434.45	55.50
756	88+52.33	290.51 LT	278882.03	603434.79	0.00
757	88+56.28	287.09 LT	278878.61	603438.74	55.53
758	88+56.59	287.59 LT	278879.11	603439.04	55.55
759	88+60.61	284.50 LT	278876.01	603443.06	55.56
760	88+60.88	285.02 LT	278876.52	603443.33	55.58
761	88+90.00	274.73 LT	278866.15	603472.42	56.25
762	88+90.07	275.30 LT	278866.73	603472.50	56.70
763	88+59.37	291.94 LT	278883.44	603441.84	55.88
764	88+63.58	289.24 LT	278880.74	603446.04	55.93
765	88+62.07	296.15 LT	278887.65	603444.55	55.96
766	88+66.14	293.54 LT	278885.03	603448.61	56.01

POINT TABLE					
PT #	STA	OFFSET	Y	X	ELEV
767	89+17.01	286.41 LT	278877.76	603499.46	57.08
768	89+18.12	281.67 LT	278873.02	603500.56	57.03
864	88+53.76	288.78 LT	278880.30	603436.22	55.52
865	88+54.09	289.26 LT	278880.78	603436.55	56.02
866	88+63.26	283.09 LT	278874.58	603445.70	55.57
867	88+63.52	283.61 LT	278875.10	603445.97	56.07
907	88+88.10	285.74 LT	278877.17	603470.55	56.93
908	88+87.12	280.83 LT	278872.27	603469.56	56.85
909	89+02.59	284.59 LT	278875.98	603485.04	57.22
910	89+02.63	279.59 LT	278870.98	603485.06	57.16
911	88+76.80	288.75 LT	278880.21	603459.26	56.60
912	88+75.13	284.04 LT	278875.50	603457.58	56.52

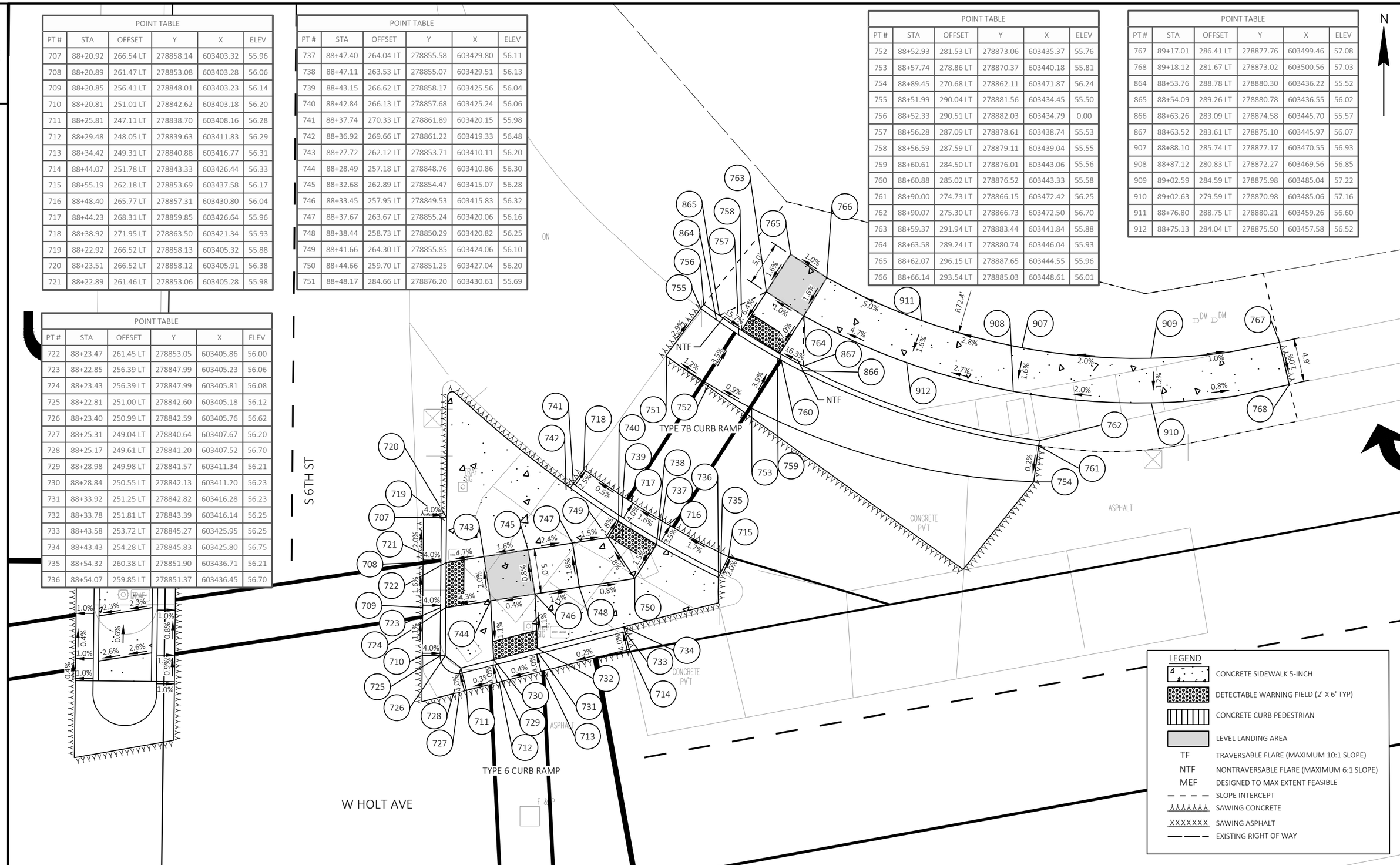

2

PROJECT NO: 2984-21-73	HWY: W. MORGAN AVE	COUNTY: MILWAUKEE	CURB RAMP DETAILS	SHEET 32	E

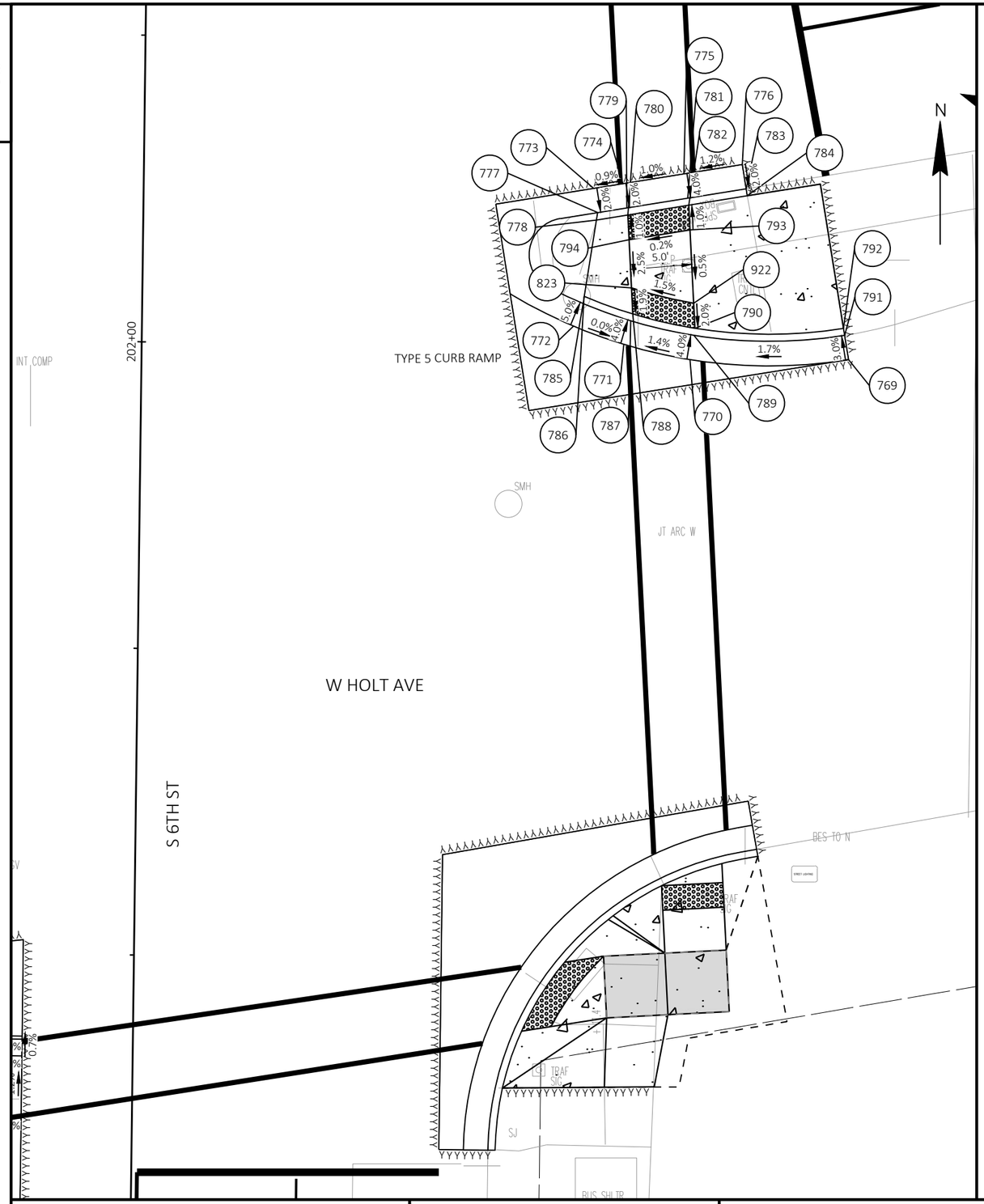

POINT TABLE					
PT #	STA	OFFSET	Y	X	ELEV
769	88+48.97	198.68 LT	278790.22	603431.19	56.68
770	88+36.04	198.65 LT	278790.22	603418.27	56.46
771	88+30.63	199.89 LT	278791.47	603412.86	56.38
772	88+26.53	201.36 LT	278792.95	603408.77	56.38
773	88+28.16	212.60 LT	278804.18	603410.43	56.44
774	88+30.53	212.98 LT	278804.56	603412.80	56.46
775	88+35.50	213.79 LT	278805.36	603417.76	56.51
776	88+40.26	214.57 LT	278806.12	603422.53	56.57
777	88+28.49	210.62 LT	278802.21	603410.74	56.40
778	88+28.39	210.02 LT	278801.60	603410.65	56.90
779	88+30.86	211.01 LT	278802.59	603413.11	56.42
780	88+30.95	210.43 LT	278802.01	603413.21	56.44
781	88+35.82	211.82 LT	278803.38	603418.08	56.43
782	88+35.91	211.24 LT	278802.81	603418.17	56.45
783	88+40.59	212.59 LT	278804.15	603422.85	56.53
784	88+40.68	212.02 LT	278803.57	603422.94	56.96
785	88+27.31	203.20 LT	278794.79	603409.55	56.28
786	88+27.40	203.80 LT	278795.38	603409.64	56.73
787	88+31.21	201.80 LT	278793.38	603413.44	56.30
788	88+31.38	202.36 LT	278793.94	603413.61	56.32
789	88+36.35	200.63 LT	278792.20	603418.58	56.38
790	88+36.44	201.21 LT	278792.77	603418.68	56.40
791	88+48.65	200.66 LT	278792.19	603430.88	56.62
792	88+48.55	201.23 LT	278792.77	603430.79	56.99
793	88+36.02	209.23 LT	278800.80	603418.27	56.47
794	88+31.06	208.42 LT	278800.00	603413.31	56.46

LEGEND

- CONCRETE SIDEWALK 5-INCH
- DETECTABLE WARNING FIELD (2' X 6' TYP)
- CONCRETE CURB PEDESTRIAN
- LEVEL LANDING AREA
- TF — TRAVERSABLE FLARE (MAXIMUM 10:1 SLOPE)
- NTF — NONTRAVERSABLE FLARE (MAXIMUM 6:1 SLOPE)
- MEF — DESIGNED TO MAX EXTENT FEASIBLE
- SLOPE INTERCEPT
- SAWING CONCRETE
- SAWING ASPHALT
- EXISTING RIGHT OF WAY

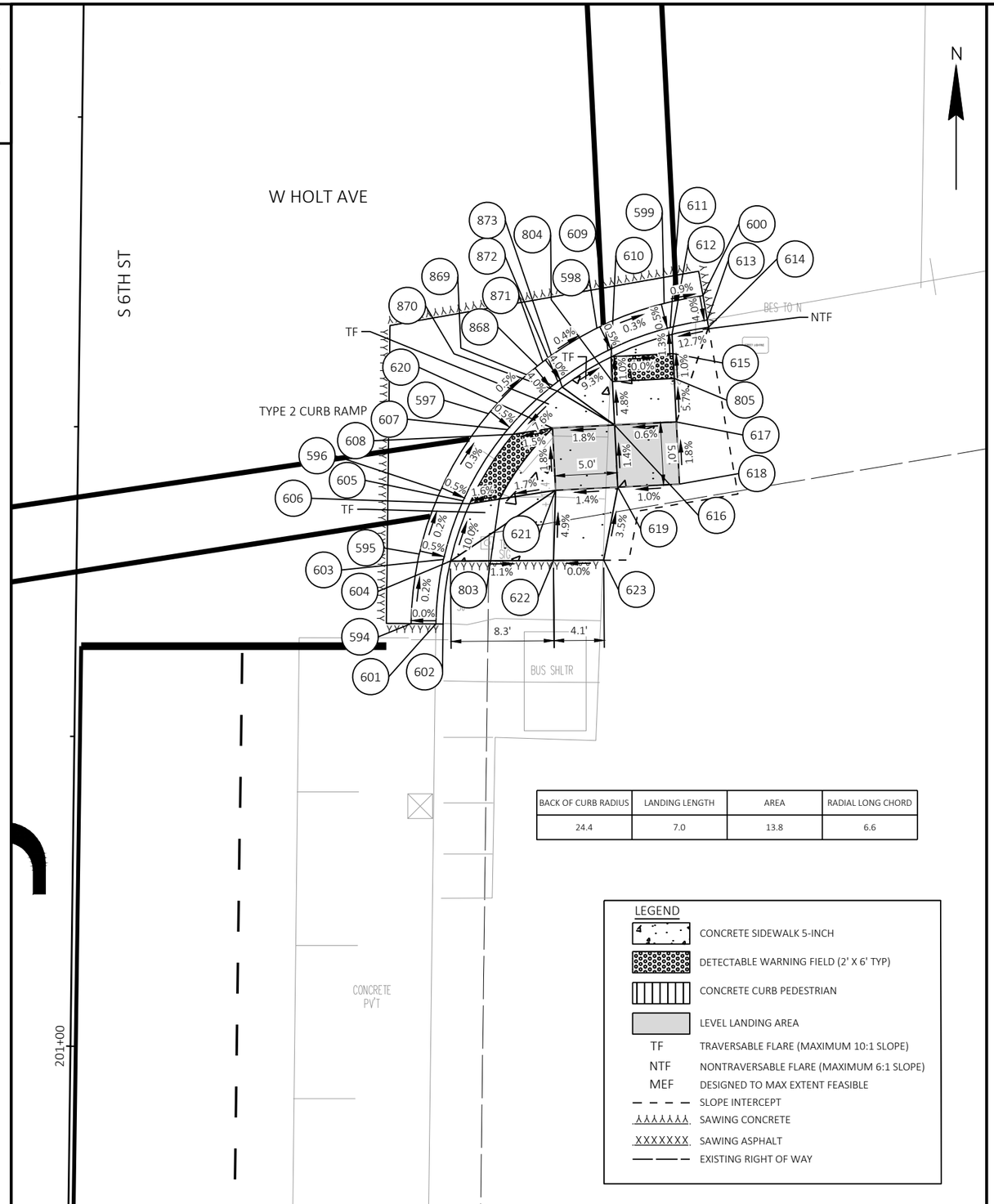

BACK OF CURB RADIUS	LANDING LENGTH	AREA	RADIAL LONG CHORD
24.4	7.0	13.8	6.6

LEGEND

- CONCRETE SIDEWALK 5-INCH
- DETECTABLE WARNING FIELD (2' X 6' TYP)
- CONCRETE CURB PEDESTRIAN
- LEVEL LANDING AREA
- TF — TRAVERSABLE FLARE (MAXIMUM 10:1 SLOPE)
- NTF — NONTRAVERSABLE FLARE (MAXIMUM 6:1 SLOPE)
- MEF — DESIGNED TO MAX EXTENT FEASIBLE
- SLOPE INTERCEPT
- SAWING CONCRETE
- SAWING ASPHALT
- EXISTING RIGHT OF WAY

POINT TABLE

PT #	STA	OFFSET	Y	X	ELEV
594	88+17.74	134.17 LT	278725.78	603399.80	56.52
595	88+18.38	139.79 LT	278731.40	603400.46	56.51
596	88+20.08	144.91 LT	278736.52	603402.17	56.50
597	88+23.94	151.13 LT	278742.72	603406.04	56.48
598	88+32.68	158.06 LT	278749.64	603414.80	56.43
599	88+38.11	160.08 LT	278751.64	603420.23	56.41
600	88+41.23	160.71 LT	278752.26	603423.36	56.38
601	88+19.74	134.15 LT	278725.76	603401.80	56.52
602	88+20.32	134.15 LT	278725.75	603402.38	56.78
603	88+20.34	139.35 LT	278730.96	603402.41	56.50
604	88+20.91	139.23 LT	278730.83	603402.98	57.00
605	88+21.91	144.10 LT	278735.70	603403.99	56.49
606	88+22.44	143.86 LT	278735.46	603404.52	56.51
607	88+25.48	149.85 LT	278741.44	603407.58	56.47
608	88+25.93	149.48 LT	278741.07	603408.03	56.49
609	88+33.57	156.27 LT	278747.85	603415.69	56.42
610	88+33.83	155.75 LT	278747.32	603415.95	56.44
611	88+38.60	158.14 LT	278749.70	603420.72	56.40
612	88+38.74	157.58 LT	278749.14	603420.86	56.42
613	88+41.58	158.74 LT	278750.29	603423.70	56.30

POINT TABLE

PT #	STA	OFFSET	Y	X	ELEV
614	88+41.68	158.16 LT	278749.72	603423.81	56.80
615	88+38.82	156.02 LT	278747.57	603420.94	56.44
616	88+34.12	150.25 LT	278741.82	603416.22	56.63
617	88+39.11	150.51 LT	278742.07	603421.22	56.66
618	88+39.38	145.49 LT	278737.05	603421.47	56.75
619	88+34.39	145.23 LT	278736.80	603416.47	56.70
620	88+29.12	149.99 LT	278741.57	603411.22	56.54
621	88+29.38	144.97 LT	278736.55	603411.47	56.63
622	88+29.22	139.31 LT	278730.89	603411.29	56.91
623	88+33.27	139.34 LT	278730.92	603415.35	56.91
803	88+24.84	144.24 LT	278735.84	603406.93	56.55
804	88+33.94	153.75 LT	278745.33	603416.05	56.46
805	88+38.93	154.02 LT	278745.58	603421.04	56.46
868	88+27.88	155.00 LT	278746.59	603410.00	56.45
869	88+29.13	153.44 LT	278745.02	603411.24	56.37
870	88+29.50	152.98 LT	278744.57	603411.60	56.87
871	88+28.32	155.34 LT	278746.93	603410.43	56.45
872	88+29.53	153.75 LT	278745.34	603411.64	56.37
873	88+29.89	153.29 LT	278744.87	603412.00	56.87

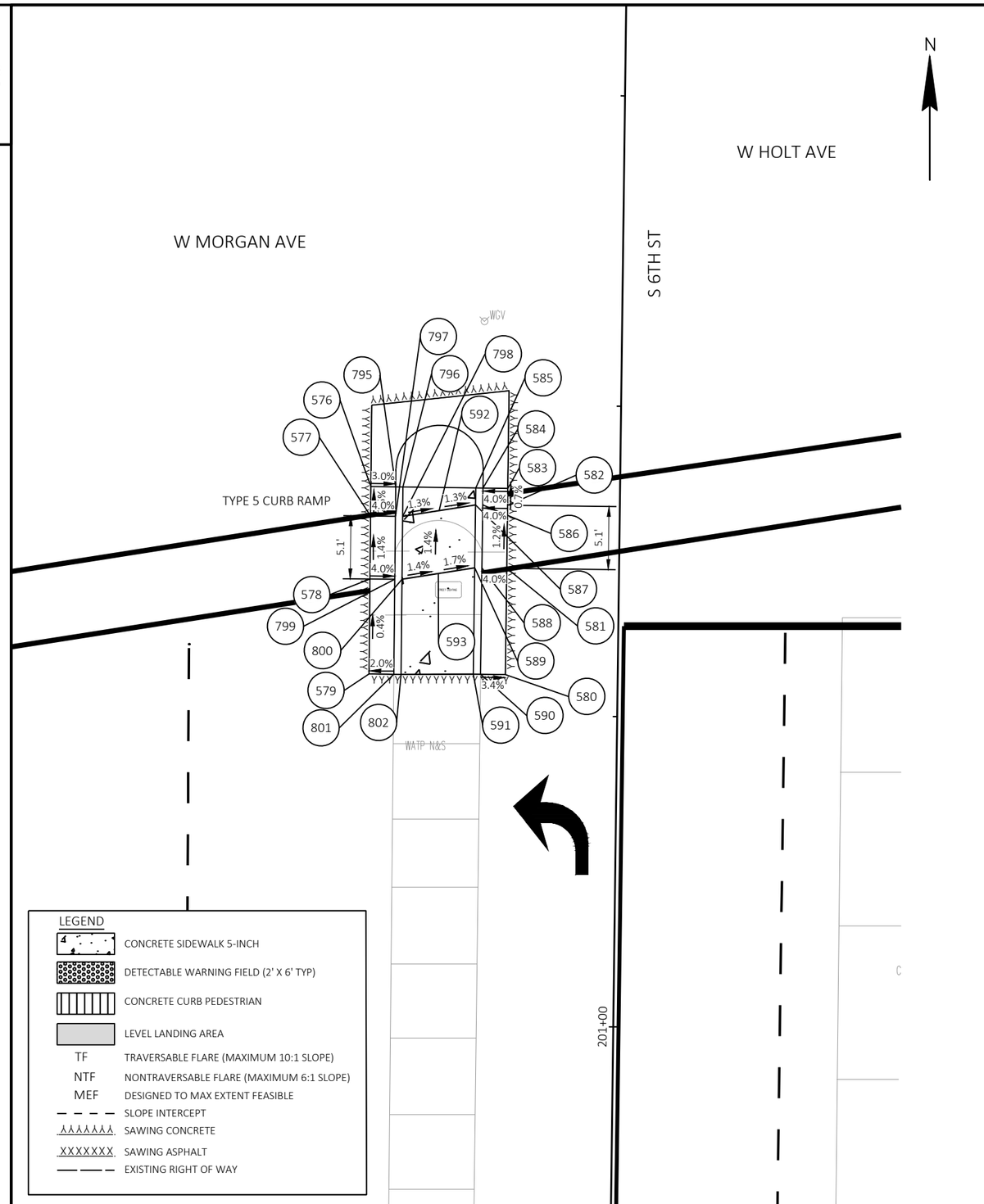

POINT TABLE

PT #	STA	OFFSET	Y	X	ELEV
576	87+70.99	143.50 LT	278735.20	603352.79	56.55
577	87+70.97	141.13 LT	278732.83	603352.77	56.61
578	87+70.92	136.06 LT	278727.76	603352.72	56.68
579	87+70.85	128.41 LT	278720.10	603352.64	56.71
580	87+81.84	128.37 LT	278720.06	603363.63	56.78
581	87+81.94	136.93 LT	278728.62	603363.73	56.59
582	87+82.00	142.00 LT	278733.69	603363.80	56.53
583	87+82.01	143.37 LT	278735.06	603363.81	56.52
584	87+80.01	143.39 LT	278735.09	603361.81	56.44
585	87+79.43	143.40 LT	278735.09	603361.23	56.94
586	87+80.00	142.02 LT	278733.72	603361.80	56.45
587	87+79.41	142.03 LT	278733.72	603361.21	56.47
588	87+79.94	136.95 LT	278728.65	603361.73	56.51
589	87+79.35	136.96 LT	278728.65	603361.15	56.53
590	87+79.84	128.39 LT	278720.08	603361.63	56.85
591	87+79.25	128.40 LT	278720.09	603361.04	56.12
592	87+76.48	141.57 LT	278733.26	603358.28	56.51
593	87+76.43	136.50 LT	278728.19	603358.23	56.58
795	87+72.99	143.48 LT	278735.17	603354.79	56.49
796	87+73.57	143.47 LT	278735.17	603355.37	56.59
797	87+72.97	141.11 LT	278732.81	603354.77	56.53
798	87+73.55	141.11 LT	278732.80	603355.35	56.55
799	87+72.92	136.04 LT	278727.74	603354.72	56.60
800	87+73.50	136.04 LT	278727.74	603355.30	56.62
801	87+72.85	128.39 LT	278720.08	603354.64	56.75
802	87+73.44	128.38 LT	278720.08	603355.23	56.98

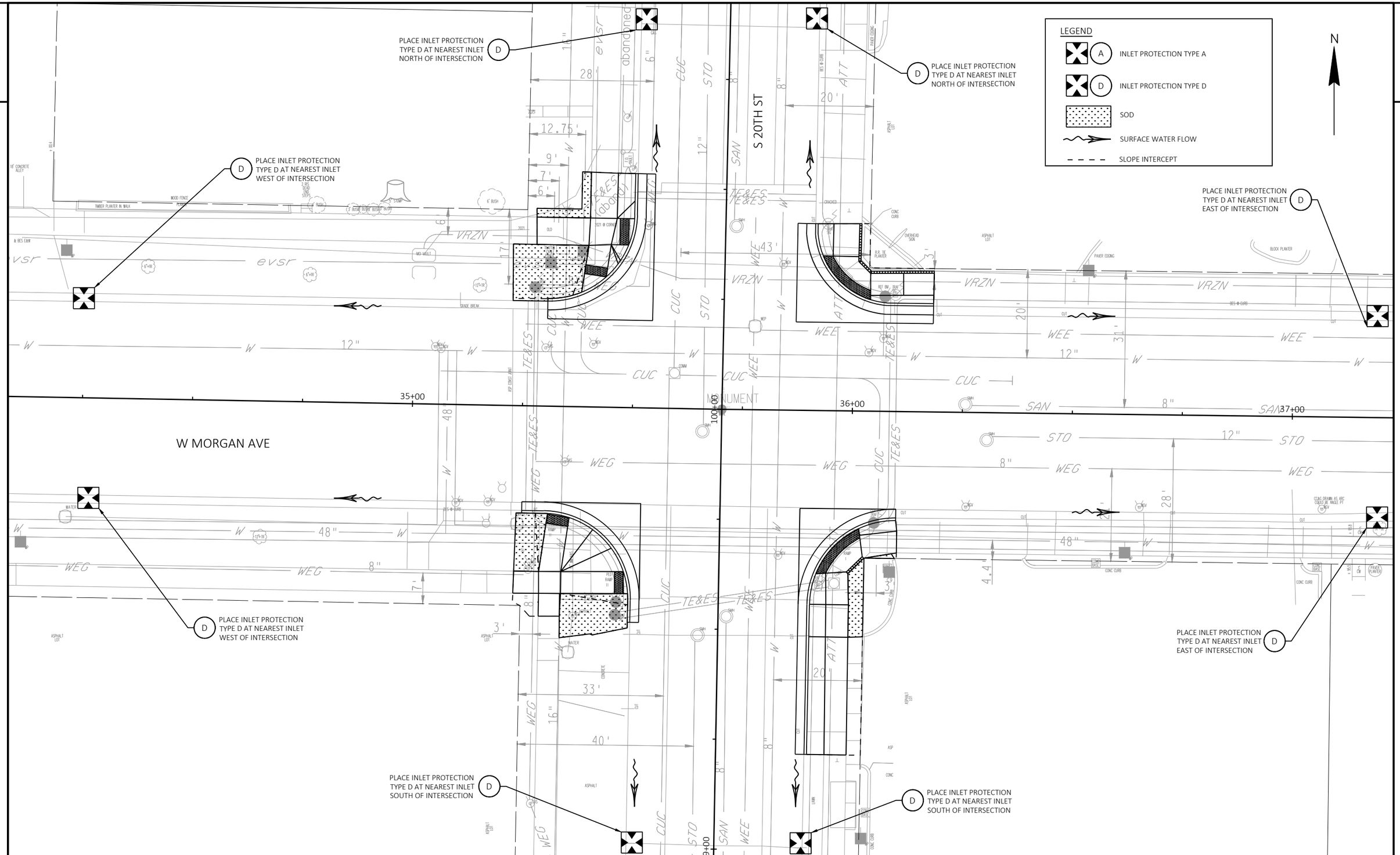

PROJECT NO: 2984-21-73	HWY: W. MORGAN AVE	COUNTY: MILWAUKEE	EROSION CONTROL PLAN	SHEET 36	E

FILE NAME : S:\MILW_CO\MILWCITY\GOV\230520 MORGAN AVENUE\C3D-MORGANAVE\SHEETS\022001-EC.DWG
LAYOUT NAME - EC-20
PLOT DATE : 10/29/2024 10:06 AM PLOT BY : WALTER A. WOLAK II PLOT NAME : PLOT SCALE : 1 IN:20 FT

WISDOT/CADDS SHEET 42

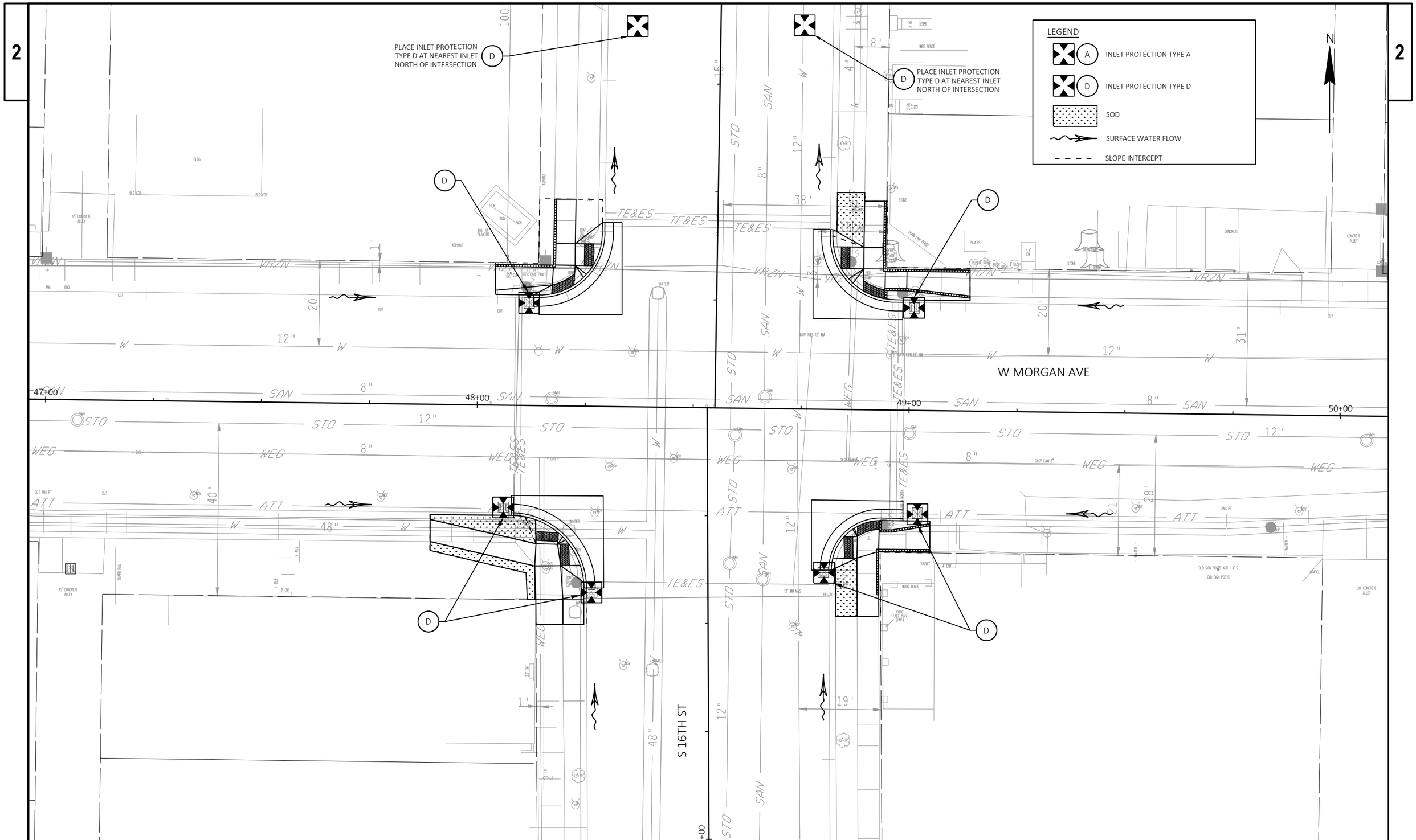

PROJECT NO: 2984-21-73	HWY: W. MORGAN AVE	COUNTY: MILWAUKEE	EROSION CONTROL PLAN	SHEET 37	E

FILE NAME : S:\MILW_CO\MILWCITY\GOV\230520 MORGAN AVENUE\C3D-MORGANAVE\SHEETS\022001-EC.DWG
LAYOUT NAME - EC-16
PLOT DATE : 10/29/2024 10:06 AM
PLOT BY : WALTER A. WOLAK II
PLOT NAME :
PLOT SCALE : 1 IN:20 FT
WISDOT/CADDS SHEET 42

2

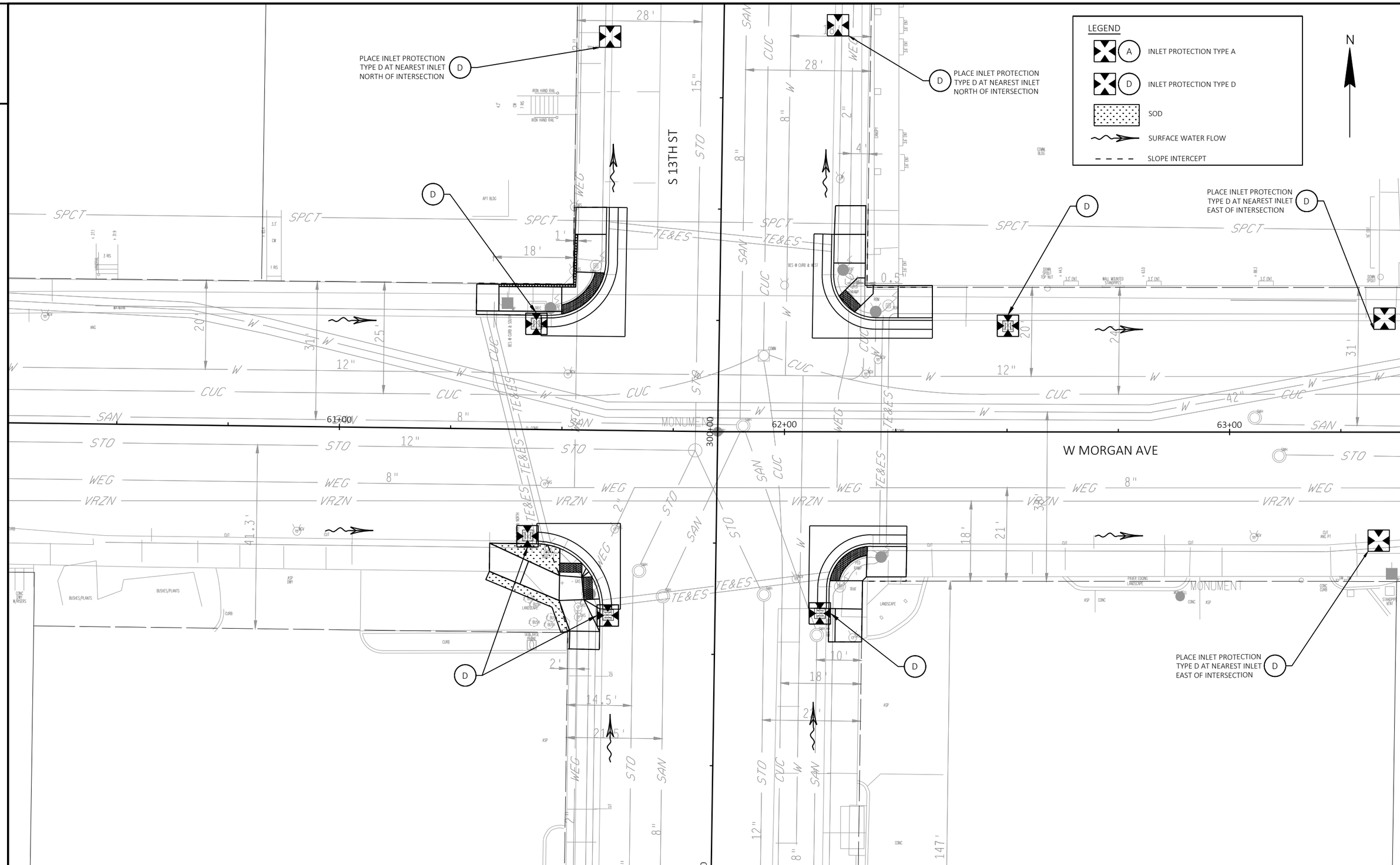

2

PROJECT NO: 2984-21-73	HWY: W. MORGAN AVE	COUNTY: MILWAUKEE	EROSION CONTROL PLAN	SHEET 38	E

FILE NAME : S:\MILW_CO\MILWCITY\GOV\230520 MORGAN AVENUE\C3D-MORGANAVE\SHEETS\022001-EC.DWG
LAYOUT NAME - EC-13
PLOT DATE : 10/29/2024 10:06 AM PLOT BY : WALTER A. WOLAK II PLOT NAME : PLOT SCALE : 1 IN:20 FT

WISDOT/CADDS SHEET 42

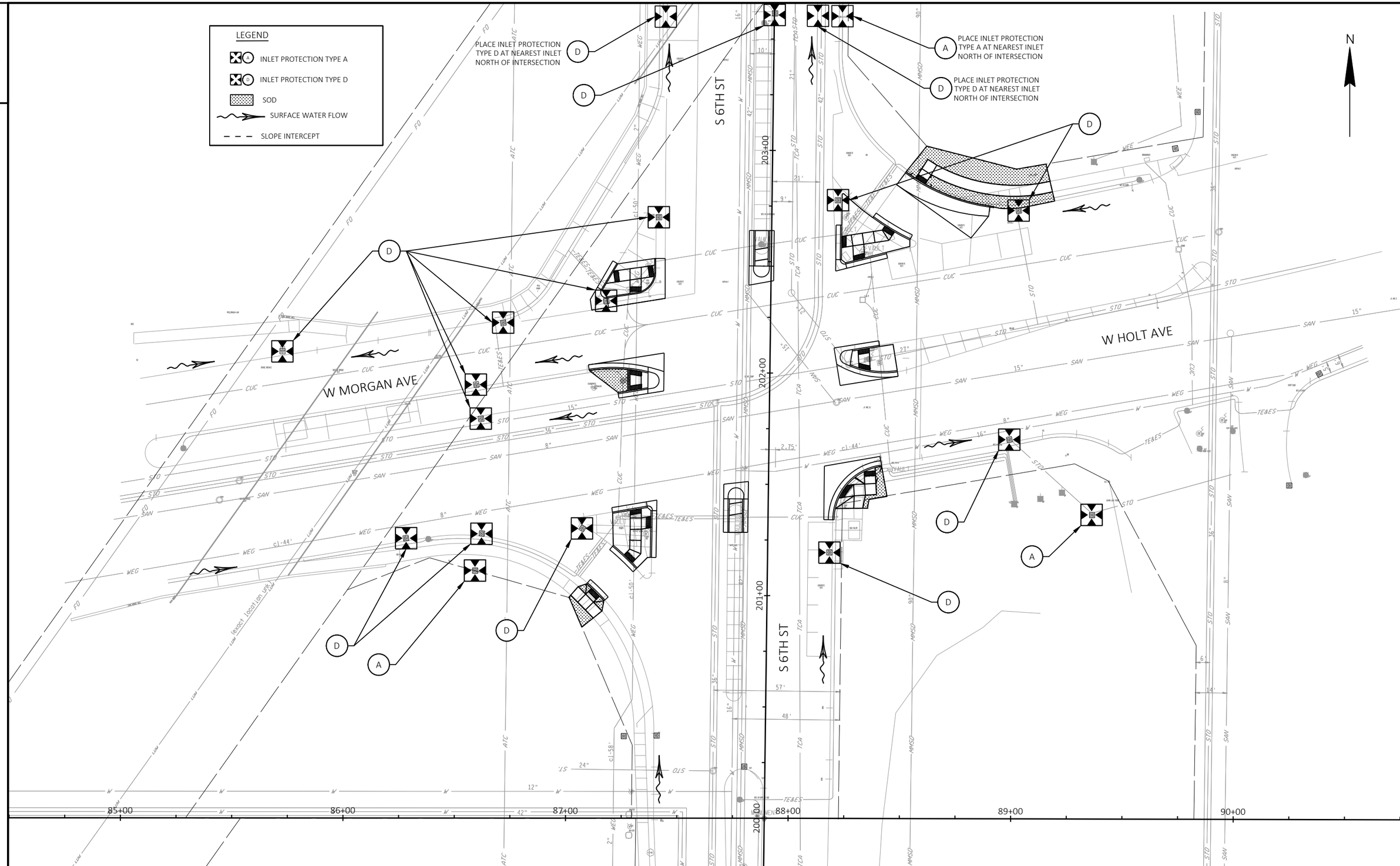

2

PROJECT NO: 2984-21-73	HWY: W. MORGAN AVE	COUNTY: MILWAUKEE	EROSION CONTROL PLAN	SHEET 39	E

2

STREET LIGHTING GENERAL NOTES:

PRIOR TO CONSTRUCTION, THE LOCATION OF UNDERGROUND UTILITIES SHALL BE DETERMINED IN THE FIELD BY CONTACTING "DIGGERS HOTLINE."

THE LOCATION OF EXISTING AND PROPOSED UTILITIES AS SHOWN ON THE PLANS ARE APPROXIMATE, IN ADDITION, THERE MAY BE OTHER UTILITIES WITHIN THE PROJECT AREA WHICH ARE NOT SHOWN. THE CONTRACTOR SHALL VERIFY THE LOCATIONS OF ALL UTILITIES PRIOR TO CONSTRUCTION.

STREET LIGHTING SHALL BE INSTALLED IN COMPLIANCE WITH WISCONSIN DEPARTMENT OF TRANSPORTATION STANDARD SPECIFICATIONS SECTIONS 652 TO 657 AND 659 EXCEPT:

ALL CHANGES OR ANY DEVIATIONS FROM PLANS MUST BE APPROVED BY STREET LIGHTING ENGINEERING.

1 DETAILS OF CONSTRUCTION MATERIALS AND WORKMANSHIP NOT SHOWN ON THESE DRAWINGS SHALL CONFORM TO THE PERTINENT REQUIREMENTS OF THE CONTRACT.

2 THE CONTRACTOR IS RESPONSIBLE FOR ALL COSTS INCLUDING REPAIRS, REPLACEMENT OR RELOCATION ETC. OF STREET LIGHTING FACILITIES IF THE CONTRACTOR DOES ANY DEVIATION FROM THE STREET LIGHTING DESIGN WITHOUT THE STREET LIGHTING ENGINEERS SIGNED APPROVAL.

3 LOCATIONS OF THE HDPE AND NONMETALLIC PVC CONDUITS ARE IDENTIFIED IN THE PLANS WHERE THEY ARE REQUIRED. HOWEVER, INSTALLATION MAY REQUIRE INTEGRATION WITH EXISTING FIELD CONDITIONS. UNDER THE APPROVAL OF THE CITY OF MILWAUKEE DPW STREET LIGHTING, APPROPRIATE ADJUSTMENT ON CONDUIT LOCATIONS MAY BE MADE IF THE FIELD CONDITIONS ARE SUCH THAT THE CONDUIT CANNOT BE INSTALLED AT THE SPECIFIED LOCATIONS. FIELD MARK EACH CONDUIT LOCATION IN RED TO ILLUSTRATE AS BUILT CONDITIONS.

4 CONDUIT INSTALLED BEHIND CURB AND UNDER DRIVEWAYS SHALL BE INSTALLED AT A DISTANCE OF MINIMUM OF 12 INCHES AWAY FROM THE BACK OF CURB TO THE CENTER LINE OF CONDUIT, AND MINIMUM 24 INCHES DOWN MEASURED FROM THE TOP OF CURB OR FINISHED GRADE TO THE TOP OF CONDUIT.

5 DEPTH OF CONDUIT INSTALLED BELOW STREETS, HIGHWAYS, AND ALLEYS SHALL BE 24-INCHES MINIMUM AND 36-INCHES MAXIMUM. (MEASURED FROM FINISHED FLANGE LINE) IF THE CONTRACTOR DOES ANY DEVIATION FROM THE STREET LIGHTING DESIGN WITHOUT THE STREET LIGHTING ENGINEERS SIGNED APPROVAL.

6 CONDUIT LATERALS SHALL BE TRENCHED UNDER PAVEMENT BEFORE PAVEMENT CONSTRUCTION.

7 WHEN THERE IS MORE THAN ONE CONDUIT TO BE INSTALLED, PLACE ALL CONDUITS IN THE SAME TRENCH, OR BORE MULTIPLE CONDUITS TOGETHER AT THE SAME TIME.

8 CONDUIT INSTALLATION THAT REQUIRE TRENCHING SHALL NOT BE BACKFILLED PRIOR TO INSPECTION ON THE CONDUIT.

9 ANY EXCEPTION TO THE MINIMUM OR MAXIMUM DEPTH SHALL BE ONLY WITH THE WRITTEN APPROVAL OF THE STREET LIGHTING ENGINEER.

10 BENDING OF PVC ELECTRICAL CONDUIT SHALL BE ACCOMPLISHED BY USING A BLANKET OR IMMERSION TYPE TANK DESIGNED FOR THE PURPOSE OF BENDING PVC ELECTRICAL CONDUIT.

11 ALL CUT ENDS SHALL BE TRIMMED INSIDE AND OUTSIDE TO REMOVE ALL ROUGH EDGES ON ALL CONDUITS.

12 PRIOR TO CONDUIT ACCEPTANCE, ALL OPEN CONDUIT ENDS, AND UN-TERMINATED CONDUITS SHALL BE THOROUGHLY CLEANED AND BE CAPPED IMMEDIATELY AFTER INSTALLATION WITH THE APPROPRIATE CAST PLASTIC CAP WHICH FITS SNUGGLY ON THE CONDUIT, BUT EASILY REMOVED. DUCT TAPE OR ANY OTHER CAPPING METHOD IS NOT ACCEPTABLE.

13 ALL CONDUIT BEING FURNISHED AND INSTALLED SHALL HAVE THE U.L. APPROVED LABEL FIRMLY ATTACHED.

14 PULL ROPE (3/8-INCH NYLON) SHALL BE INSTALLED IN ALL NEW CONDUIT.

15 CONDUIT RUNS SHALL BE THE SAME SIZE CONDUIT FROM ONE END TO THE OTHER (FROM PULL BOX-TO-PULL BOX OR JUNCTION BOX OR PULL BOX TO CONCRETE BASE, OR BASE-TO-BASE ETC.).

16 UNLESS THE CONDUIT IS DESIGNED AND SHOWN WITH BENDS ON THE PLANS, ALL CONDUIT RUNS SHALL BE STRAIGHT (WITHOUT BENDS) FROM PULL BOX TO PULL BOX, PULL BOX TO CONCRETE BASE, AND PULL BOX TO ENCLOSURE. OTHERWISE IT MUST BE APPROVED BY THE STREET LIGHTING ENGINEER.

2

STREET LIGHTING GENERAL NOTES:

17 MINIMUM CONDUIT CLEARANCES FOR CONDUIT CROSSINGS AND PULL BOXES FROM THE FOLLOWING:
FIRE HYDRANTS: 6-FT TREE TRUNKS: 10-FT END OF DRIVEWAY FLARES: 6-FT
UNLESS NOTED OTHERWISE, OR APPROVED BY THE STREET LIGHTING ENGINEER.

18 HAND DIGGING MAY BE REQUIRED FOR LOCATIONS ADJACENT TO EXISTING GAS AND POWER LINES. HAND EXCAVATION SHOULD BE ANTICIPATED AND WILL BE CONSIDERED INCIDENTAL TO THE BID ITEM BEING INSTALLED. COORDINATE ALL WORK NEAR GAS LINES WITH WE ENERGIES.

19 TYPICAL RECTANGULAR PULL BOXES / VAULTS SHOULD BE INSTALLED AS SHOWN ON PLANS, BUT WHEN IT IS NOT POSSIBLE, A 3 FT. TO 4 FT. OFFSET FROM STREET LIGHT POLES, SIGNAL STANDARDS AND FIRE HYDRANTS SHOULD BE USED, OTHERWISE APPROVED BY THE STREET LIGHTING ENGINEER.

20 TYPICAL CONDUIT INSTALLATION FROM THE PULL BOX TO A DIRECT BURIED STREET LIGHT POLE IS AS FOLLOWS: USE A NYLON LIQUIDTIGHT CONNECTOR (UL APPROVED) TO CONNECT THE 1 1/2-INCH LIQUIDTIGHT FLEXIBLE NONMETALLIC CONDUIT LFNC-B (UL APPROVED) TO THE PULL BOX AND CONNECT TO STREET LIGHT POLE BY STUBBING UP A MINIMUM OF 6 INCHES OF THE LIQUIDTIGHT FLEXIBLE NONMETALLIC CONDUIT (LFNC-B) INTO THE CABLE SLOT.

21 ALL CONDUITS AND JUNCTION BOXES EMBEDDED IN STRUCTURE SHALL BE PAID UNDER STRUCTURE PAY ITEMS. CONTRACTOR SHALL COORDINATE THE EXACT LOCATION OF EMBEDDED CONDUITS.

22 AT EVERY BRIDGE JOINT, EXPANSION/DEFLECTION FITTINGS MUST BE USED TO PREVENT DAMAGE TO CONDUIT AND LIGHTING CIRCUITS. THIS ITEM IS INCIDENTAL TO THE CONDUIT BID ITEM, AND SHALL BE PAID UNDER STRUCTURE PAY ITEMS.

23 THE SUPPORT CHANNELS FOR INSTALLATION OF CONDUITS, LUMINAIRES, JUNCTION BOXES AND ENCLOSURES SHALL BE STAINLESS STEEL UNISTRUT P1000 SERIES OR APPROVED EQUAL, CHANNELS SHALL BE SLOTTED OR PERFORATED.

24 ALL HDPE OR NONMETALLIC PVC CONDUITS THAT CONNECT TO PULL BOXES REQUIRE A PVC END BELL CONNECTOR INSIDE THE PULL BOX

25 PROVIDE REMOVABLE SEALANT SUCH AS DUCT SEAL IN THE CONDUITS AT THE CABINETS, PULL BOXES AND JUNCTION BOXES TO AVOID CONDENSATION CAUSED BY AIRFLOW THROUGH THE CONDUITS DUE TO TEMPERATURE DIFFERENCE. THIS WORK SHALL BE INCIDENTAL TO ASSOCIATED CONDUIT PAY ITEM.

26 PROVIDE 3 INCH PVC SCHEDULE 40 CONDUIT ELBOWS IN ALL GROUND MOUNTED CONCRETE LIGHT BASES FOR CABLE IN DUCT TYPE INSTALLATION. THIS WORK IS INCIDENTAL TO CONCRETE BASES PAY ITEMS.

27 AT EACH SIGNAL STANDARD BASE PROVIDE 2 INCH PVC SCHEDULE 40 CONDUIT FROM PULL BOX TO SIGNAL STANDARD BASE. INSTALLATION OF PULL BOX AND CONDUIT ARE INCIDENTAL TO SIGNAL STANDARD BASE INSTALLATION WORK.

28 CONDUCTOR COLORS: 240/480, 1 PHASE - BLACK (HOT) /WHITE (NEUTRAL) // RED (HOT) /GRAY (NEUTRAL) / GREEN (GROUND)

29 INSTALL COMMON GROUND CONDUCTOR IN CONDUIT WHERE MULTIPLE BRANCH CIRCUITS CONDUCTORS ARE INSTALLED IN SAME CONDUIT AND SPLICE THE GROUND CONDUCTOR WITH TAP CONNECTOR IN PULLBOX.

30 PROVIDE MINIMUM WIRES / CONDUCTOR(S) SLACK AS NOTED BELOW:
PULL BOXES: SEE DETAIL 142
- CONNECTED WIRES TO LIGHT POLE IN PULL BOX MUST BE EXTENDED MINIMUM 3 FT. BEYOND TOP OF PULL BOX
- UNCONNECTED WIRES THAT BY PASS THROUGH PULL BOX MUST HAVE A MINIMUM OF 6 FT. SLACK COIL LEFT INSIDE PULL BOX

EMBEDDED JUNCTION BOXES IN PARAPIT WALL :
- CONNECTED WIRES IN JUNCTION BOX EXTEND MINIMUM 2 FT. BEYOND TOP OF JUNCTION BOX
- UNCONNECTED WIRES IN JUNCTION BOX LEAVE MINIMUM OF 4 FT. SLACK COIL IN JUNCTION BOX

DISTRIBUTION CENTER/LOAD CENTER: EXTEND 10-FT.
BREAK AWAY TRANSFORMER BASE: EXTEND 2-FT.

31 UNDERGROUND WIRE & CONDUIT SHOWN ON PLANS TO BE ABANDONED IN PLACE UNLESS DIRECTED BY THE ENGINEER. CONTRACTOR MAY CHOOSE TO REMOVE CONDUCTOR AT THEIR OWN EXPENSE.

32 LIGHT POLES INSTALLED BEHIND THE CURB NEED TO BE SET 30 INCHES BACK FROM FACE OF CURB TO CENTER OF POLE, SO TO MEET THE MINIMUM DISTANCE OF 24 INCHES FROM THE CURB FACE TO THE CURB SIDE FACE OF THE POLE.

33 ON ALL NEW STREET LIGHT POLES A PLAQUE WITH THE POLE NUMBER AS SHOWN ON THE PLANS SHALL BE AFFIXED ONTO THE POLE SHAFT AS PART OF POLE INSTALLATION.

CITY OF MILWAUKEE
DEPARTMENT OF PUBLIC WORKS
STREET LIGHTING SECTION
REVISION BY: $$...PLOTUSER...$$ REVISION DATE: PLOTDATE
APPROVED REVISION BY: R.BERTRAN APPROVED REVISION DATE: DEC.13-2023

2

STREET LIGHTING GENERAL NOTES:

34 ALL WIRE CONNECTIONS REQUIRE ANTI-OXIDANT TO BE APPLIED TO THE CONNECTIONS

35 ALL HARDWARE NUT AND BOLT CONNECTIONS REQUIRE ANTI SEIZE TO BE APPLIED TO THEM

36 COORDINATE NEW CONDUIT CONNECTIONS WITH EXISTING CONDUIT, DUCT PACKAGES, AND PULL BOXES/ VAULTS/ MANHOLES WITH CITY OF MILWAUKEE STREET LIGHTING. THE CITY REQUIRES THREE WORKING DAYS ADVANCED NOTICE. CONTACT ELECTRICAL SUPERVISOR
STREET LIGHTING - NEAL KARWEIK (OFFICE 414-286-5943 (CELL) 414-708-4245
STREET LIGHTING - STEVEN RHODA (OFFICE) 414-286-5942 (CELL) 414-708-4251
STREET LIGHTING - DISPATCHER @ 414-286-5944
TRAFFIC SIGNALS - RUDY GUTIERREZ (OFFICE) 414-286-5941 (CELL) 414-708-5148
TRAFFIC SIGNALS - DISPATCHER @ 414-286-3687

37 IMMEDIATELY AFTER THE CONTRACTOR HAS COMPLETED ALL THE ELECTRICAL PULL BOXES / VAULTS, CONDUIT AND CONDUIT CONNECTIONS, AND JUST BEFORE ELECTRICAL WORK IS COVERED UP WITH CONCRETE, SOIL, OR ETC. THE CONTRACTOR IS REQUIRED TO CONTACT THE CITY OF MILWAUKEE ELECTRICAL SHOP SUPERVISORS FOR FINAL INSPECTION AND APPROVAL OF ALL WORK.
STREET LIGHTING - NEAL KARWEIK (OFFICE) 414-286-5943 (CELL) 414-708-4245
STREET LIGHTING - STEVEN RHODA (OFFICE) 414-286-5942 (CELL) 414-708-4251
STREET LIGHTING - DISPATCHER @ 414-286-5944
TRAFFIC SIGNALS - RUDY GUTIERREZ (OFFICE) 414-286-5941 (CELL) 414-708-5148
TRAFFIC SIGNALS - DISPATCHER @ 414-286-3687

38 CONTRACTOR SHALL SUPPLY AS-BUILT DRAWINGS FOR ALL WORK BEING DONE DETAILING THE FINAL PLACEMENT OF CONDUIT, CABLING, EQUIPMENT, AND GEOMETRIC MODIFICATIONS UNDER THE CONTRACT. PROVIDE (.PDF FORMAT) COPY CONFORMING TO CMM 1-65.14, OR RECORD ALL CHANGES IN RED INK ONLY ON THE AS-LET (DESIGN) PAPER DRAWINGS. THE CITY OF MILWAUKEE DPW ENGINEER WILL REJECT AS-BUILTS WITH INCOMPLETE OR INCORRECT CONTENT OR NOT CONFORMING TO CMM STANDARDS.

39 CONTRACTOR TO DELIVER THE FOLLOWING REMOVED STREET LIGHTING MATERIALS:
-ALUMINUM AND WOOD POLES
-LUMINAIRE BRACKET ARMS
-LUMINAIRES
-BREAKAWAY TRANSFORMER PEDESTALS
-WIRING PEDESTALS (GREEN IN COLOR)
TO CITY OF MILWAUKEE STREET LIGHTING YARD AT 1540 W. CANAL ST.
CALL RICO LOPEZ AT 414-286-5983 (CANAL OFFICE) OR 414-286-6123 (DPW FIELD OFFICE) OR DISPATCHER AT 414-286-5944
THREE (3) WORKING DAYS BEFORE TO COORDINATE DELIVERY OF MATERIALS

40 CONTRACTOR IS RESPONSIBLE FOR THE DISPOSAL OF CONCRETE POLES, CONCRETE BASES, AND ABANDON WIRING.

41 CONTRACTOR SHALL DISPOSE OF REMOVED EXISTING LAMPS IN ACCORDANCE WITH THE SPECIAL PROVISIONS., UNLESS NOTED OTHERWISE.

42 ONLY WHEN THE CITY OF MILWAUKEE IS FURNISHING MATERIALS FOR A PROJECT THE CONTRACTOR IS RESPONSIBLE TO CONTACT THE STREET LIGHTING SHOP YARD CONTACT PERSON FOUR (4) WORKING DAYS BEFORE, AND WILL NEED TO PROVIDE THE EXACT QUANTITY OF MATERIALS NEEDED. THE ADVANCE NOTICE WILL ALLOW THE SHOP TO GATHER THE REQUEST ITEMS FOR THE CONTRACTOR TO PICK UP AND SIGN FOR TAKING POSSESSION OF THE MATERIALS.

THE CONTRACTOR WILL BE RESPONSIBLE FOR THE MATERIALS THAT THEY TAKE POSSESSION OF AND FOR THE ANY RETURNING OF ANY UNUSED MATERIALS BACK TO THE SHOP IN GOOD CONDITION. IF ANY MATERIALS COME BACK DAMAGED OR BROKEN THE CONTRACTOR WILL BE RESPONSIBLE FOR REPLACING THE BROKEN OR DAMAGED ITEMS.

STREET LIGHTING SHOP YARD CONTACT PERSON:
NEAL KARWEIK 414-286-5943 (OFFICE) 414-708-4245 (CELL)
ALL THE MATERIALS MUST BE EITHER PICKED OR DROPPED OFF ALL AT ONE TIME.
THE STREET LIGHTING SHOP YARD HOURS FOR PICKING UP MATERIALS IS FROM 8AM TO 2PM:
MONDAY THROUGH FRIDAY.

CONTRACTOR MUST BE OUT OF THE SHOP YARD BY 2PM NO LATER.

STREET LIGHTING GENERAL NOTES:

2

AS-BUILT GUIDELINES:

PROVIDE AS-BUILT DRAWINGS DETAILING THE FINAL PLACEMENT OF CONDUIT, CABLING, EQUIPMENT, AND GEOMETRIC MODIFICATIONS UNDER THE CONTRACT. PROVIDE PDF COPY CONFORMING TO CMM 1-65.14, OR RECORD ALL CHANGES IN RED INK ONLY ON THE AS-LET (DESIGN) PAPER DRAWINGS. THE ENGINEER WILL REJECT AS-BUILTS WITH INCOMPLETE OR INCORRECT CONTENT OR NOT CONFORMING TO CMM STANDARDS.

UPON PROJECT COMPLETION, FOLLOW THE WISDOT REQUIREMENTS PER CMM 165.12 AS-BUILT PLANS, THE PROJECT ENGINEER AND/OR ELECTRICAL CONTRACTOR SHALL SUBMIT AN ELECTRONIC AS-BUILT PLAN. ANY CHANGES FROM THE AS-LET PLAN THAT WERE BUILT INTO THE PROJECT SHOULD BE RECORDED IN RED USING ADOBE ACROBAT PROFESSIONAL OR EQUIVALENT SOFTWARE. DO NOT SCAN FIELD NOTES TO CREATE THE DIGITAL AS-BUILT PLAN.

IF THERE IS A STRUCTURE DRAWING, INCLUDE ALL STRUCTURES DRAWING SHEETS. IT IS THE RESPONSIBILITY OF THE CONTRACTOR TO INSERT ANY ADDENDUM OR REPLACEMENT DRAWING SHEETS. TO DO THIS, RENUMBER THEM SIMILARLY TO THE ORIGINAL DRAWING SHEET.
FOR EXAMPLE:
REVISED SHEET 5 WOULD REPLACE SHEET 5. HOWEVER, ALL THE ORIGINAL SHEETS SHALL REMAIN IN THE AS-BUILT. IF THE SHEET HAS BEEN REPLACED CROSS IT OUT WITH AN X AND INDICATE THE NUMBER OF ITS REPLACEMENT SHEET. IF ADDITIONAL SHEETS WERE ADDED, INSERT THEM IN THE ORIGINAL LOCATION AND LABEL THEM WITH THE PREVIOUS SHEET NUMBER FOLLOWED BY AN "A", "B", "C", ETC.

NOTE THE SHEET CHANGES ON THE TITLE SHEET UNDER THE ORDER OF SHEETS.

THE TITLE SHEET OF THE AS-BUILT DRAWING SHOULD INCLUDE THE FOLLOWING INFORMATION:
AS-BUILT DRAWING
SUPERVISOR:
PROJECT MANAGER:
CONTRACTOR LEADER:
CONTRACTOR COMAPNY:
WORK STARTED:
WORK COMPLETED:

LINE OUT OR CROSS OUT ALL CHANGED INFORMATION AND WRITE-IN THE CORRECTED INFORMATION ABOVE THE ORIGINAL OR CLOSE TO IT WHEREVER POSSIBLE. USE BLANK SPACES ON THE DRAWING SO NOTES ARE NOT SUPERIMPOSED. DRAWINGS WITH EXCESSIVE DETAIL MAY REQUIRE AN ALTERNATE APPROACH. NUMBERED CHANGES OR ADDITIONS MAY BE SHOWN ON SUPPLEMENTAL NON-DRAWING SHEETS.

- LOCATE AND CLEARLY LABEL ALL CONDUIT RUNS, FITTINGS, SPLICE VAULTS, PULL BOXES, METER PEDESTALS, CONCRETE BASES, TRANSFORMERS, POLES AND OTHER APPURTENANCES IN TWO DIRECTIONS. SWING TIES SHOULD BE MADE FROM THE OBJECTS THAT ARE PERMANENT IN NATURE AND VISIBLE ON THE FINISHED SURFACE.
- STREET NAMES SHALL BE ON ALL SHEETS.
- SHOW ALL SIZES AND MATERIAL TYPES OF PIPES AND CONDUITS, IF CHANGED OR MODIFIED FROM ORIGINAL DESIGN.
- ALL HORIZONTAL DISTANCES SHALL BE SHOWN TO THE NEAREST TENTH OF A FOOT (I.E., 205.3').
  ALL VERTICAL DISTANCES SHALL BE TO THE NEAREST INCH (I.E., 24")
- SHOW LOCATION AND ELEVATIONS ON CONDUIT AND FITTINGS WHERE CHANGES OR DEFLECTIONS IN DIRECTION OCCUR.
- SPECIAL DETAIL DRAWINGS MAY BE REQUIRED WHERE INSTALLATIONS ARE NOT SHOWN ON APPROVED CONSTRUCTION DRAWINGS FOR WHATEVER REASON OR WHERE REQUIRED FOR CLARITY.
- TYPICAL SERVICE INSTALLATION DETAILS WITH DEVIATIONS FROM ORIGINAL PLANS OR STANDARD DETAILS SHALL BE NOTED ON AS-BUILT DRAWINGS.
- NO ARBITRARY MARK-UPS WILL BE PERMITTED.

IF THERE ARE NO CORRECTIONS OR ADDITIONS TO THE AS-LET PLAN(S) PUT "NO CHANGE" ON THE SHEET WITH ALL OTHER REQUIRED AS-BUILT INFORMATION.

BY MAIL SEND TO:
CITY OF MILWAUKEE
INFRASTRUCTURE SERVICES DIVISION
TRANSPORTATION SECTION - CONSTRUCTION
CHIEF CONSTRUCTION ENGINEER
TONY KOTECKI
841 NORTH BROADWAY, ROOM 701
MILWAUKEE, WISCONSIN 53202

BY EMAIL SEND TO:
CITY OF MILWAUKEE
INFRASTRUCTURE SERVICES DIVISION
TRANSPORTATION SECTION - CONSTRUCTION
CHIEF CONSTRUCTION ENGINEER
TONY KOTECKI
AKOTEC@MILWAUKEE.GOV

CITY OF MILWAUKEE
DEPARTMENT OF PUBLIC WORKS
STREET LIGHTING SECTION
REVISION BY: $$..PLOTUSER..$$ REVISION DATE: PLOTDATE
APPROVED REVISION BY: R.BERTRAN APPROVED REVISION DATE: DEC.13-2023

2

RECORD RETENTION REQUIREMENTS:

* CONTRACTOR TO LOCATE AND CLEARLY DIMENSION ALL OF THERE NEWLY INSTALLED CONDUIT RUNS, FITTINGS, SPLICE VAULTS, PULL BOXES, METER PEDESTALS, CONCRETE BASES, TRANSFORMERS, POLES AND OTHER APPURTENANCES IN TWO (2) DIRECTIONS. SWING TIES SHOULD BE MADE FROM OBJECTS THAT ARE PERMANENT IN NATURE AND VISIBLE ON THE FINISHED SURFACE.
* STREET NAMES SHALL BE ON ALL SHEETS.
* SHOW ALL SIZES AND MATERIAL TYPES OF PIPES AND CONDUITS, IF CHANGED OR MODIFIED FROM ORGINAL DESIGN.
* ALL HORIZONTAL DISTANCES SHALL BE SHOWN TO THE NEAREST TENTH OF A FOOT (I.E., 205.3').
  ALL VERTICAL DISTANCES SHALL BE SHOWN TO THE NEAREST INCH (I.E. 24").
* SHOW LOCATION AND ELEVATIONS OF PIPES AND FITTINGS WHERE CHANGES OR DEFLECTIONS IN DIRECTION OCCUR.
* SPECIAL DETAIL DRAWINGS WILL BE SUPPLIED WHERE REQUIRED FOR CLARITY.
* DEVIATIONS FROM ORIGINAL PLANS OR STANDARD DETAILS SHALL BE NOTED ON AS-BUILT DRAWINGS.
* IF THERE ARE NO CORRECTIONS OR ADDITIONS TO THE AS-LET PLAN(S) PUT "NO CHANGE" ON THE SHEET.

SUPERVISOR:_____
PROJECT MANAGER:_____
CONTRACTOR LEADER:_____
CONTRACTOR COMPANY:_____
WORK STARTED:_____
WORK COMPLETED:_____

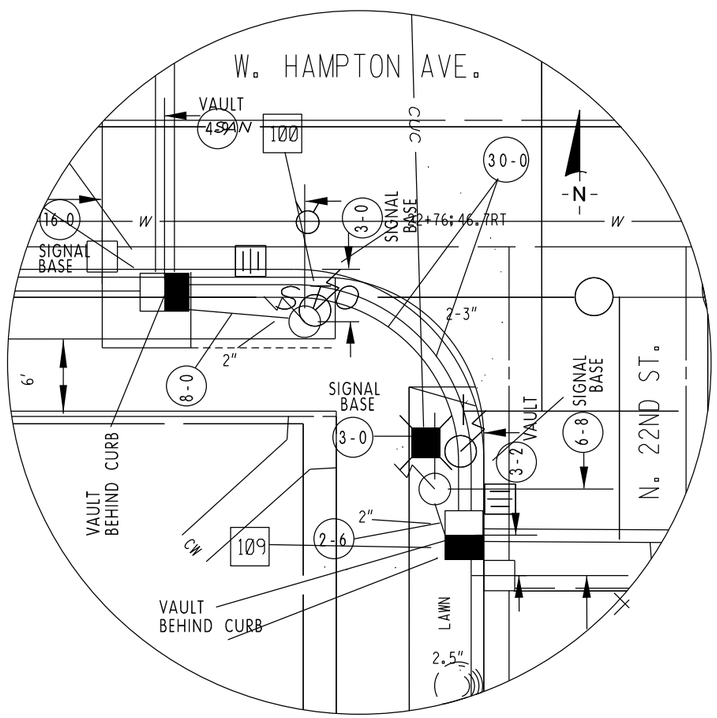

FIELD RECORD EXAMPLE DETAIL NOT TO SCALE

TYPICAL DIMENSIONING OF CONDUIT, VAULTS, AND CONCRETE BASES

MEASURING GUIDE LINES

IF CONDUIT IS NOT PLACED DIRECTLY BEHIND THE CURB IN THE ISLANDS & SIDE TERRACE AREAS, A MEASURED DISTANCE FROM THE FACE OF CURB TO THE CONDUIT WILL NEED TO BE PROVIDED.

PROVIDE A MEASURED DISTANCE OF UNINTERRUPTED CONDUIT RUNS

USE PERMANENT OBJECTS LIKE HYDRANTS, CATCH BASINS, OR EVEN CURB FACE LINES EXTENED TO MEASURE OFF WHEN LOCATING CONDUIT, VAULTS AND CONCRETE BASES.

MEASURE TO OR FROM THE CENTERS OF OBJECTS FOR DISTANCE TAKING.

(39D) MEANS = CONDUIT IS 39" DEEP

(48-5) MEANS = LENGTH OF CONDUIT IS 48.5 FT. LONG (MEASURED TO NEAREST TENTH OF A FOOT)

OR

(25-6) MEANS = DISTANCE OF 25.6 FT. BETWEEN PERMANENT OBJECT OR CURB FACE TO CONDUIT, VAULT, AND CONCRETE BASE (MEASURED TO NEAREST TENTH OF A FOOT)

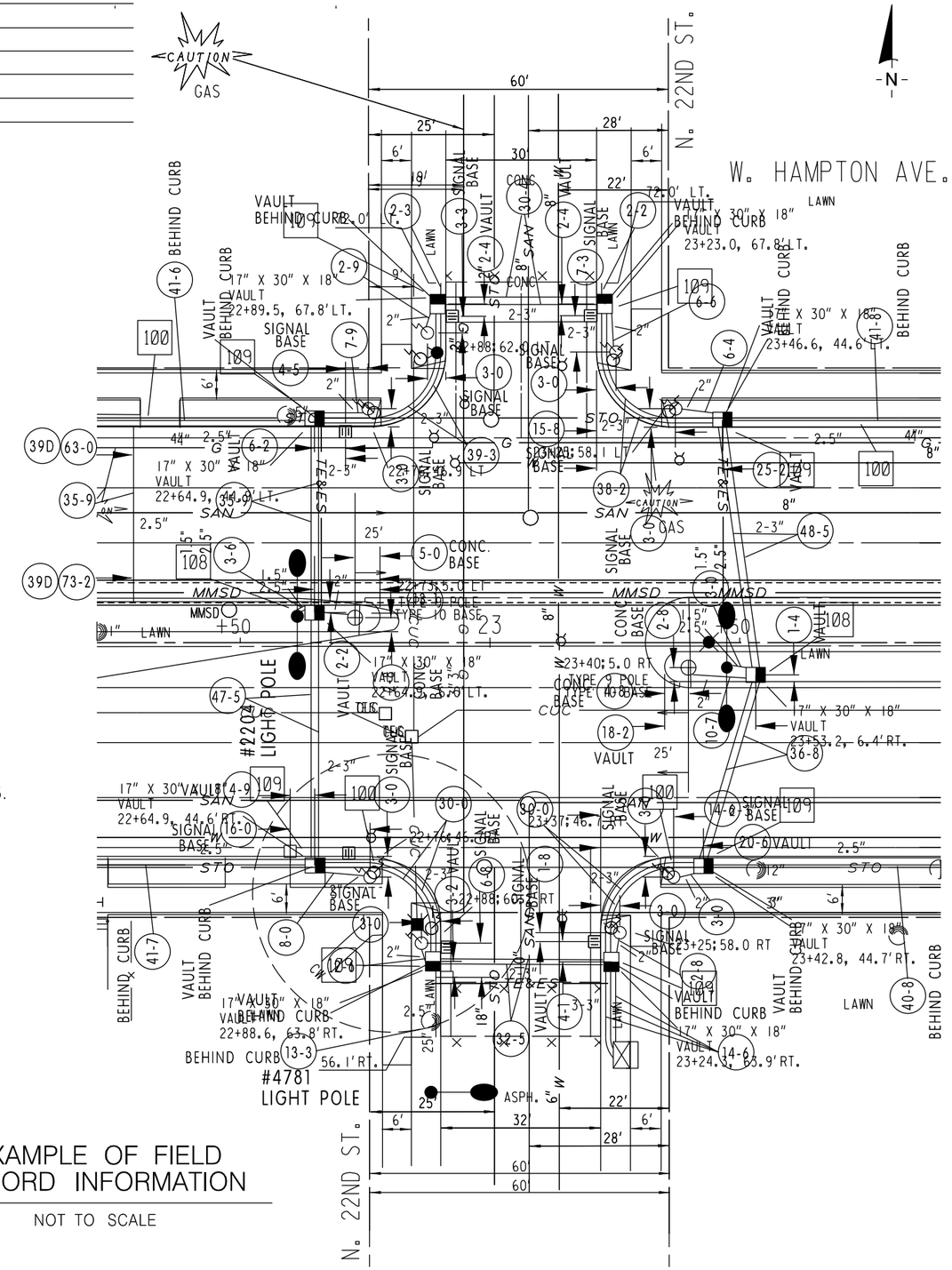

EXAMPLE OF FIELD RECORD INFORMATION

NOT TO SCALE

2

PROJECT NO: 2984-21-73	HWY: W. MORGAN AVE.	COUNTY: MILWAUKEE	STREET LIGHTING DETAILS	SHEET 42	E

2

NOTE: 1.) KEEP AREA BEHIND CURB FREE OF DEBRIS AND CONCRETE OVERPOUR.
2.) CONDUIT TO BE PLACED WITHIN A 6" AREA DIRECTLY BEHIND CURB, UNLESS NOTED OR APPROVED BY ENGINEER.

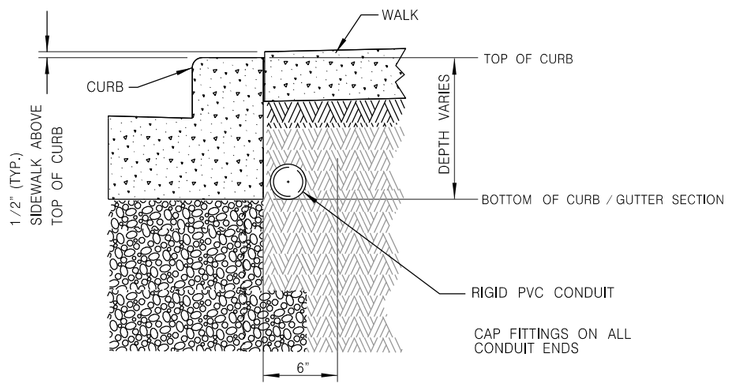

100 DETAIL "A"

TYPICAL CONDUIT INSTALLATION
BEHIND CURB

NOT TO SCALE

ANY DEVIATIONS FROM DETAIL WILL REQUIRE PERMISSION FROM STREET LIGHTING FORCES.
CONTACT DISPATCHER AT (414) 286-5944 FOR THE APPROPRIATE SHOP SUPERVISOR.

NOTE: 1.) KEEP AREA BEHIND CURB FREE OF DEBRIS AND CONCRETE OVERPOUR.

DETAIL "B"

CONDUIT TO BE PLACED WITHIN A 6" AREA DIRECTLY BEHIND CURB,
UNLESS NOTED OR APPROVED BY ENGINEER.

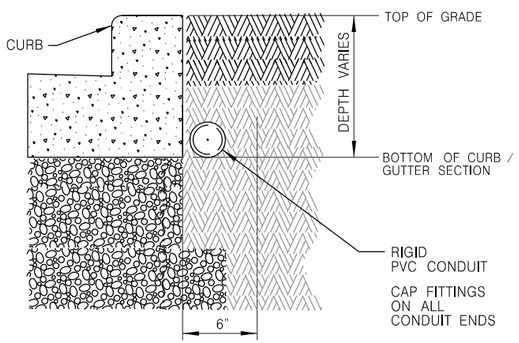

DETAIL "C"

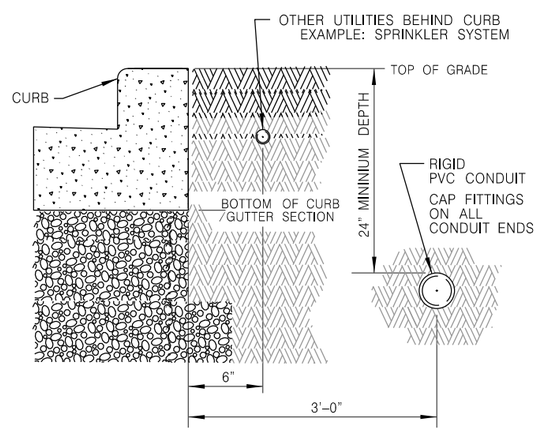

100 DETAIL "B" & "C"

TYPICAL CONDUIT INSTALLATION
BEHIND CURB

NOT TO SCALE

ANY DEVIATIONS FROM DETAIL WILL REQUIRE PERMISSION FROM STREET LIGHTING FORCES.
CONTACT DISPATCHER AT (414) 286-5944 FOR THE APPROPRIATE SHOP SUPERVISOR.

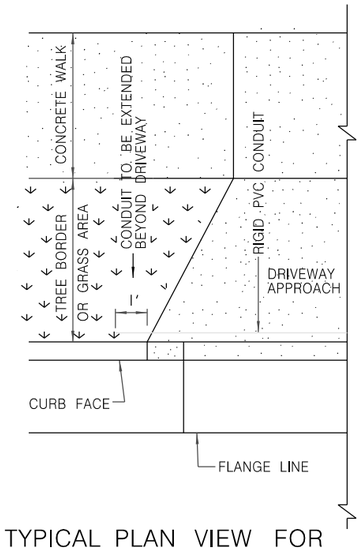

TYPICAL PLAN VIEW FOR
FLARED DRIVEWAY

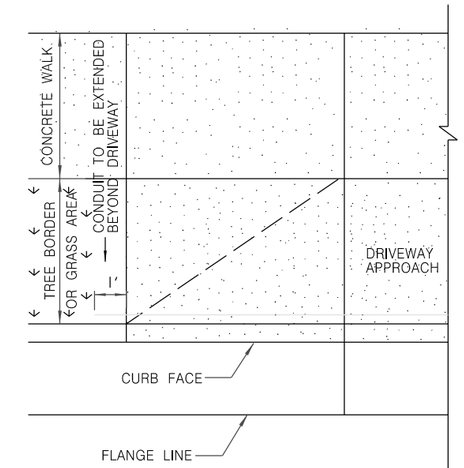

TYPICAL PLAN VIEW FOR
DEPRESSED DRIVEWAY

2

NOTE: 1.) KEEP AREA BEHIND CURB FREE OF DEBRIS AND CONCRETE OVERPOUR.
2.) CONDUIT TO BE PLACED WITHIN A 6" AREA DIRECTLY BEHIND CURB, UNLESS NOTED OR APPROVED BY ENGINEER.

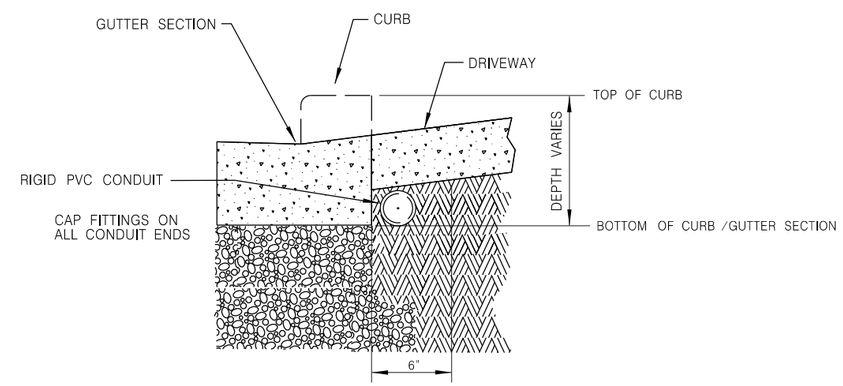

101 DETAIL

TYPICAL CONDUIT INSTALLATION
UNDER DRIVEWAYS OR PEDESTRIAN RAMPS

NOT TO SCALE

ANY DEVIATIONS FROM DETAIL WILL REQUIRE PERMISSION FROM STREET LIGHTING FORCES.
CONTACT DISPATCHER AT (414) 286-5944 FOR THE APPROPRIATE SHOP SUPERVISOR.

2

NOTE:

ARROW MARK SHALL BE INSCRIBED IN PAVEMENT SURFACE 1/4-INCH TO 3/8-INCH DEEP AT EACH LOCATION WHERE CONDUITS ARE PLACED UNDER THE PAVEMENT.

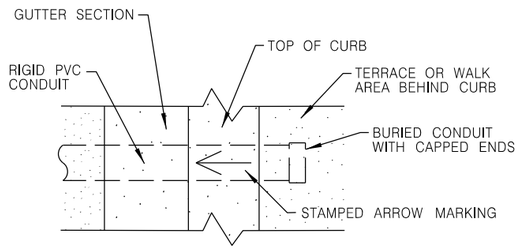

TOP VIEW OF CURB STAMPING

NOT TO SCALE

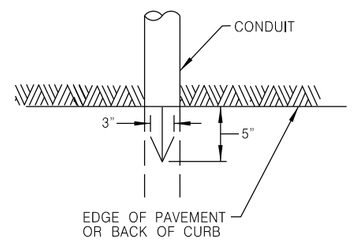

ARROW MARK

NOT TO SCALE

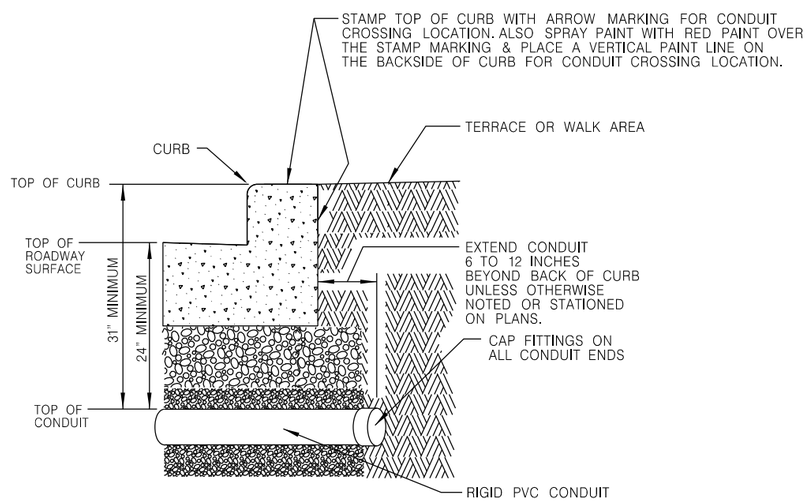

102

DETAIL VERSION #1

TYPICAL CONDUIT INSTALLATION FOR CROSSING ROADWAYS

NOT TO SCALE

ANY DEVIATIONS FROM DETAIL WILL REQUIRE PERMISSION FROM STREET LIGHTING FORCES. CONTACT DISPATCHER AT (414) 286-5944 FOR THE APPROPRIATE SHOP SUPERVISOR.

2

NOTE:

ARROW MARK SHALL BE INSCRIBED IN PAVEMENT SURFACE 1/4-INCH TO 3/8-INCH DEEP AT EACH LOCATION WHERE CONDUITS ARE PLACED UNDER THE PAVEMENT.

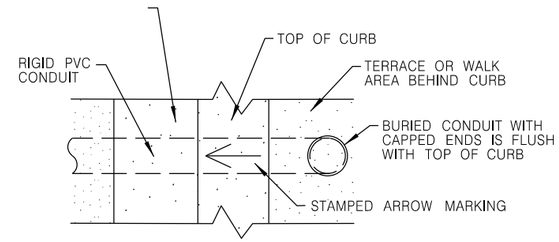

TOP VIEW OF CURB STAMPING

NOT TO SCALE

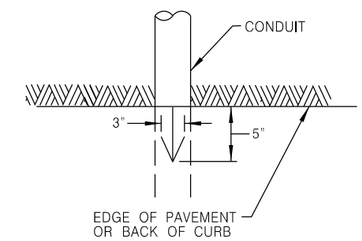

ARROW MARK

NOT TO SCALE

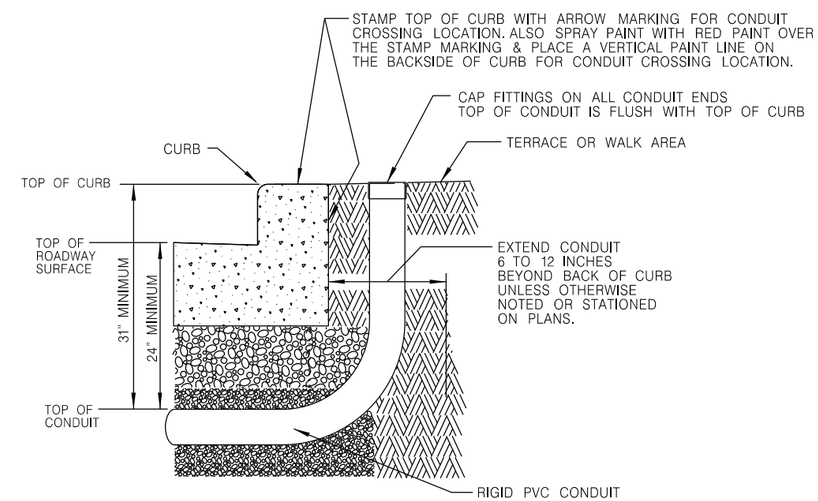

102

DETAIL VERSION #2

TYPICAL CONDUIT INSTALLATION FOR CROSSING ROADWAYS

NOT TO SCALE

ANY DEVIATIONS FROM DETAIL WILL REQUIRE PERMISSION FROM STREET LIGHTING FORCES. CONTACT DISPATCHER AT (414) 286-5944 FOR THE APPROPRIATE SHOP SUPERVISOR.

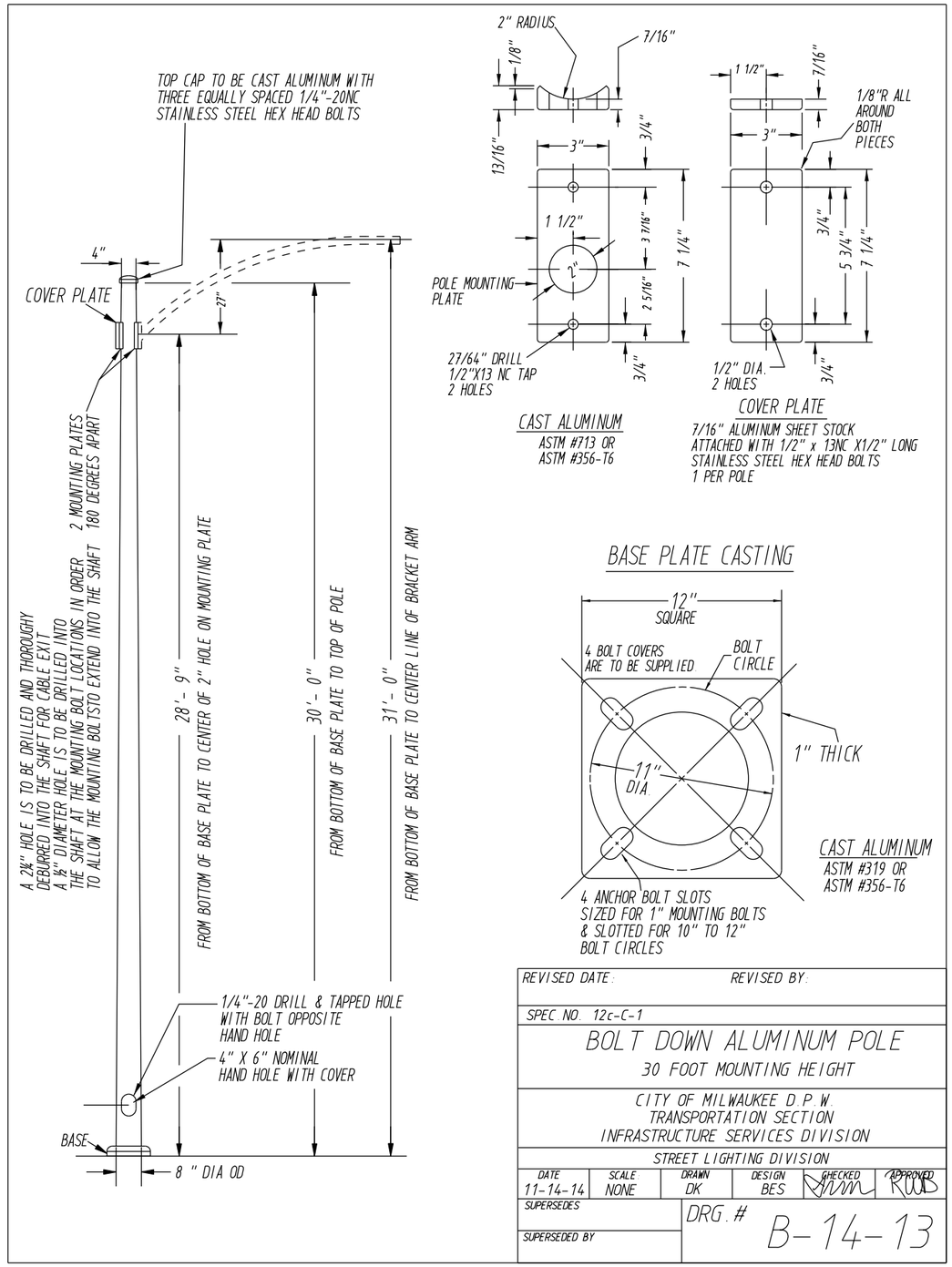

REVISED DATE:		REVISED BY:			
SPEC NO. 12c-C-1					
BOLT DOWN ALUMINUM POLE 30 FOOT MOUNTING HEIGHT					
CITY OF MILWAUKEE D.P.W. TRANSPORTATION SECTION INFRASTRUCTURE SERVICES DIVISION					
STREET LIGHTING DIVISION					
DATE 11-14-14	SCALE: NONE	DRAWN DK	DESIGN BES	CHECKED	APPROVED
SUPERSEDES		DRG. # B-14-13			
SUPERSEDED BY					

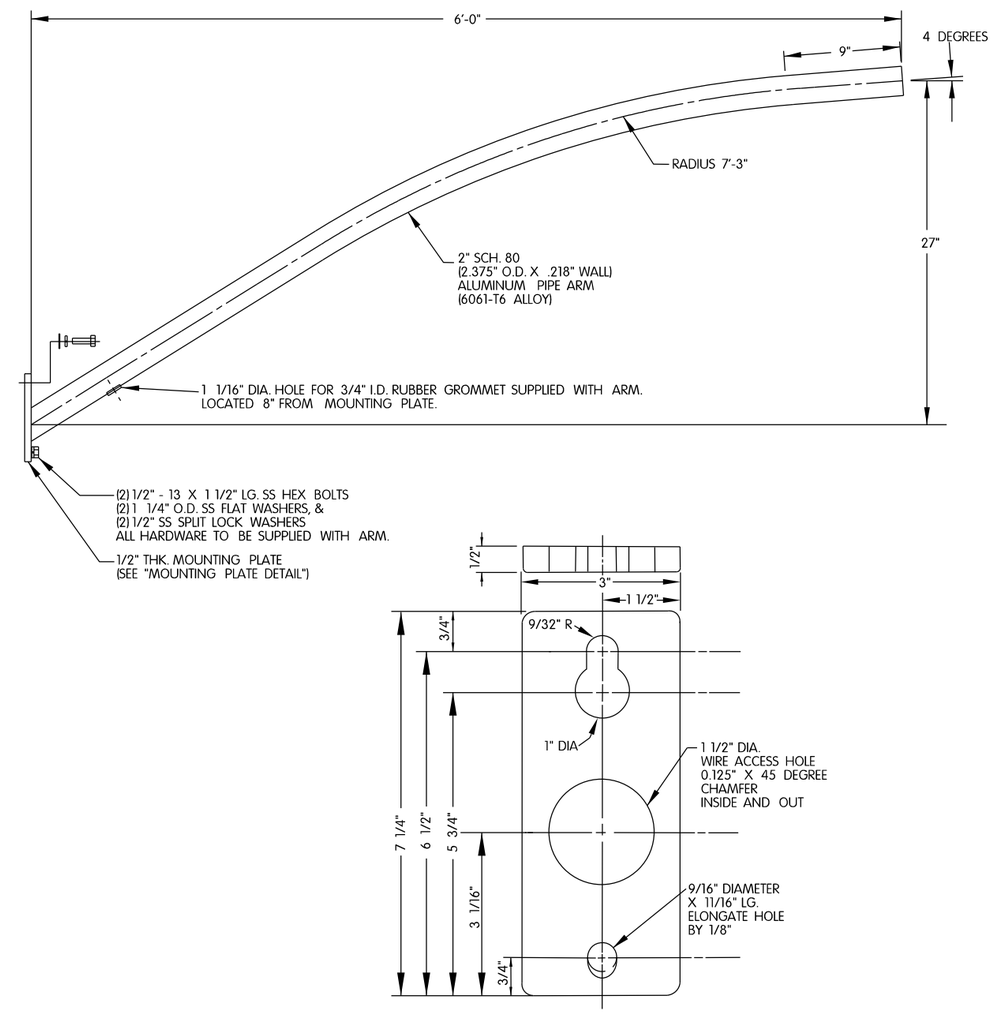

MOUNTING PLATE DETAIL "ES #436"
1/2" THK. ALUMINUM
(6061-T6 ALLOY)

NOTE:
1" I.D. RUBBER GROMMET PROVIDED FOR USE IN POLE SHAFT

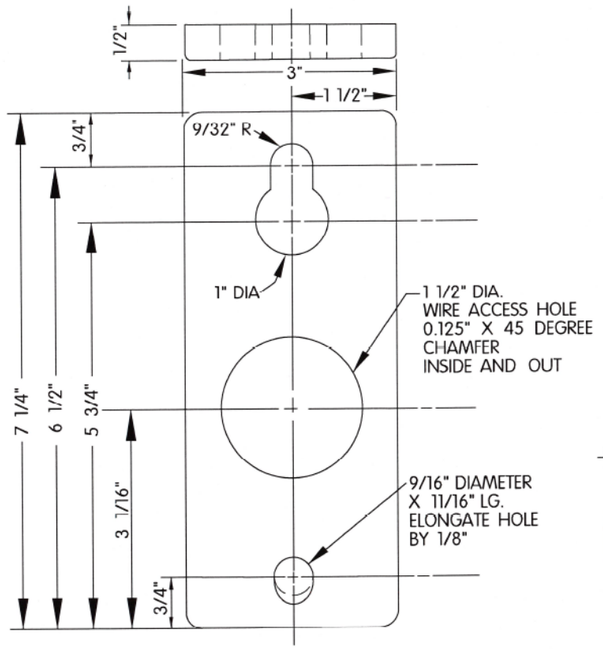

MOUNTING PLATE
DETAIL "ES #436"
1/2" THK. PLATE
ASTM A36

NOTE:
1" I.D. RUBBER GROMMET PROVIDED
FOR USE IN POLE SHAFT

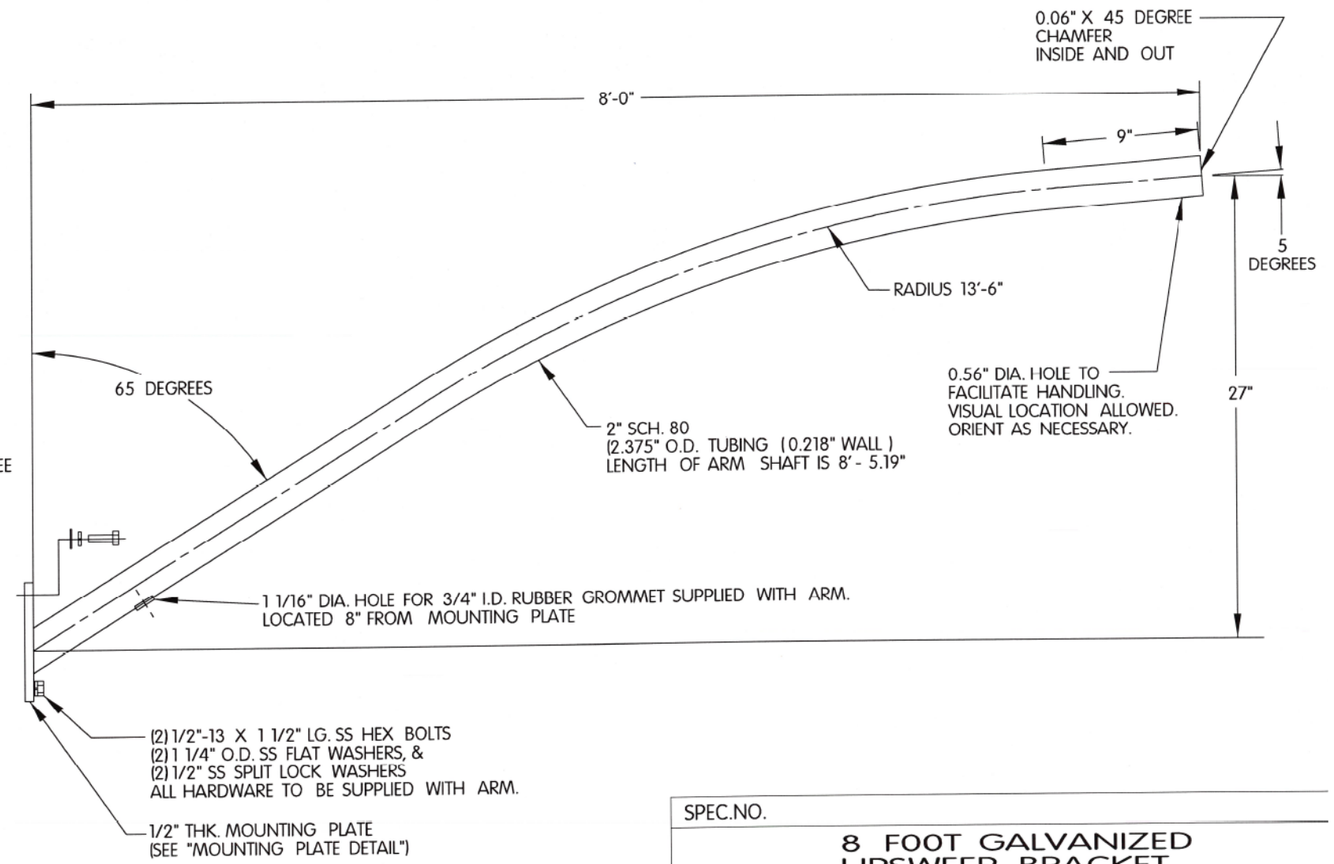

MATERIAL INFO			FINISH INFO
COMPONENT	ASTM DESIGNATION	MIN YIELD (KSI)	BASE COAT: HOT DIP GALVANIZED TO ASTM A123
PIPE ARM	A501, A513, A618	36	PRIME COAT:
SIMPLEX PLATE	A36	36	FINISH COAT:
CONNECTING BOLTS	TYPE 304		COLOR:
			SPEC:

SPEC.NO.

8 FOOT GALVANIZED UPSWEEP BRACKET

8'-0" X 27" X 2.4 SGL PIPE 3" X 7.25" PLMT
GALVANIZED

CITY OF MILWAUKEE D.P.W.
TRANSPORTATION SECTION
INFRASTRUCTURE SERVICES DIVISION

STREET LIGHTING DIVISION

DATE	SCALE:	DRAWN	DESIGN	CHECKED	APPROVED
8/2/2022	NONE	DK			RMB

SUPERSEDES

SUPERSEDED BY

DRG.# C-22-26

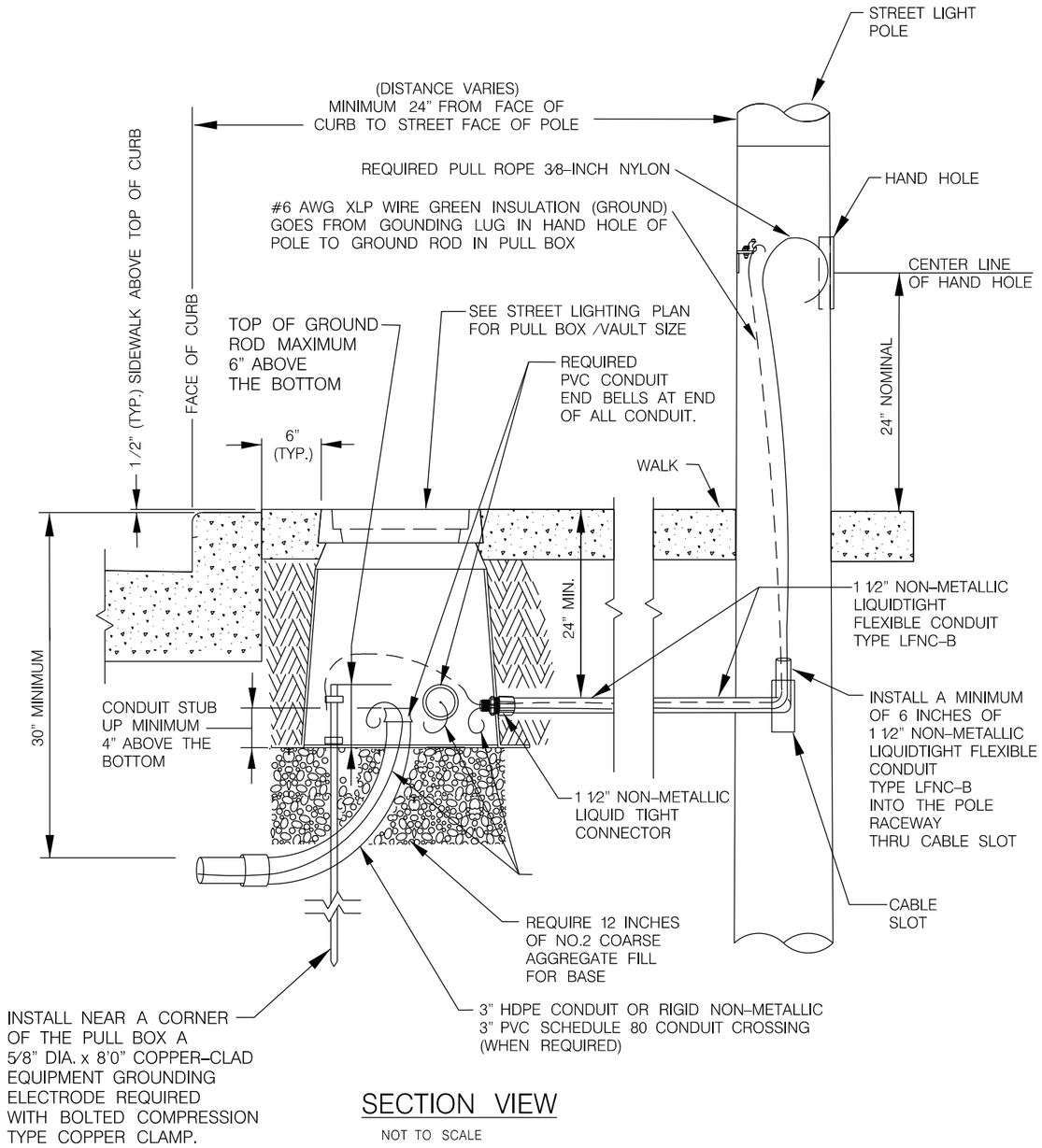

SECTION VIEW

NOT TO SCALE

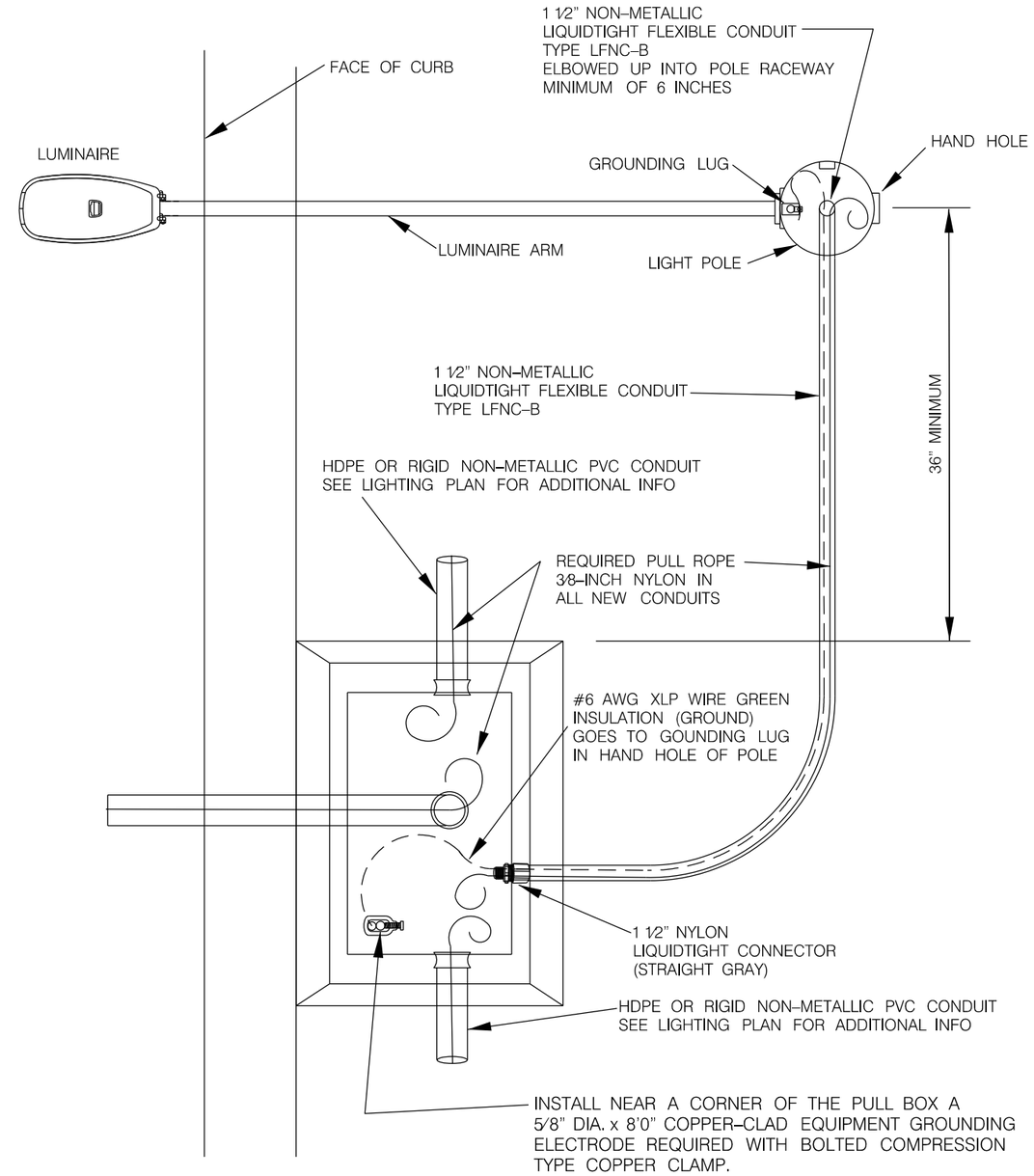

PLAN VIEW

NOT TO SCALE

108

DETAIL VERSION

TYPICAL CONDUIT INSTALLATION FROM PULL BOX /VAULT TO DIRECT BURIED POLE

ANY DEVIATIONS FROM DETAIL WILL REQUIRE PERMISSION FROM STREET LIGHTING FORCES. CONTACT DISPATCHER AT (414) 286-5944 FOR THE APPROPRIATE SHOP SUPERVISOR.

CITY OF MILWAUKEE
DEPARTMENT OF PUBLIC WORKS
STREET LIGHTING SECTION

REVISION BY: REVISION DATE:
APPROVED REVISION BY: R.BERTRAN APPROVED REVISION DATE: DEC.14-2023

REV.	ALTERATION	DATE	BY

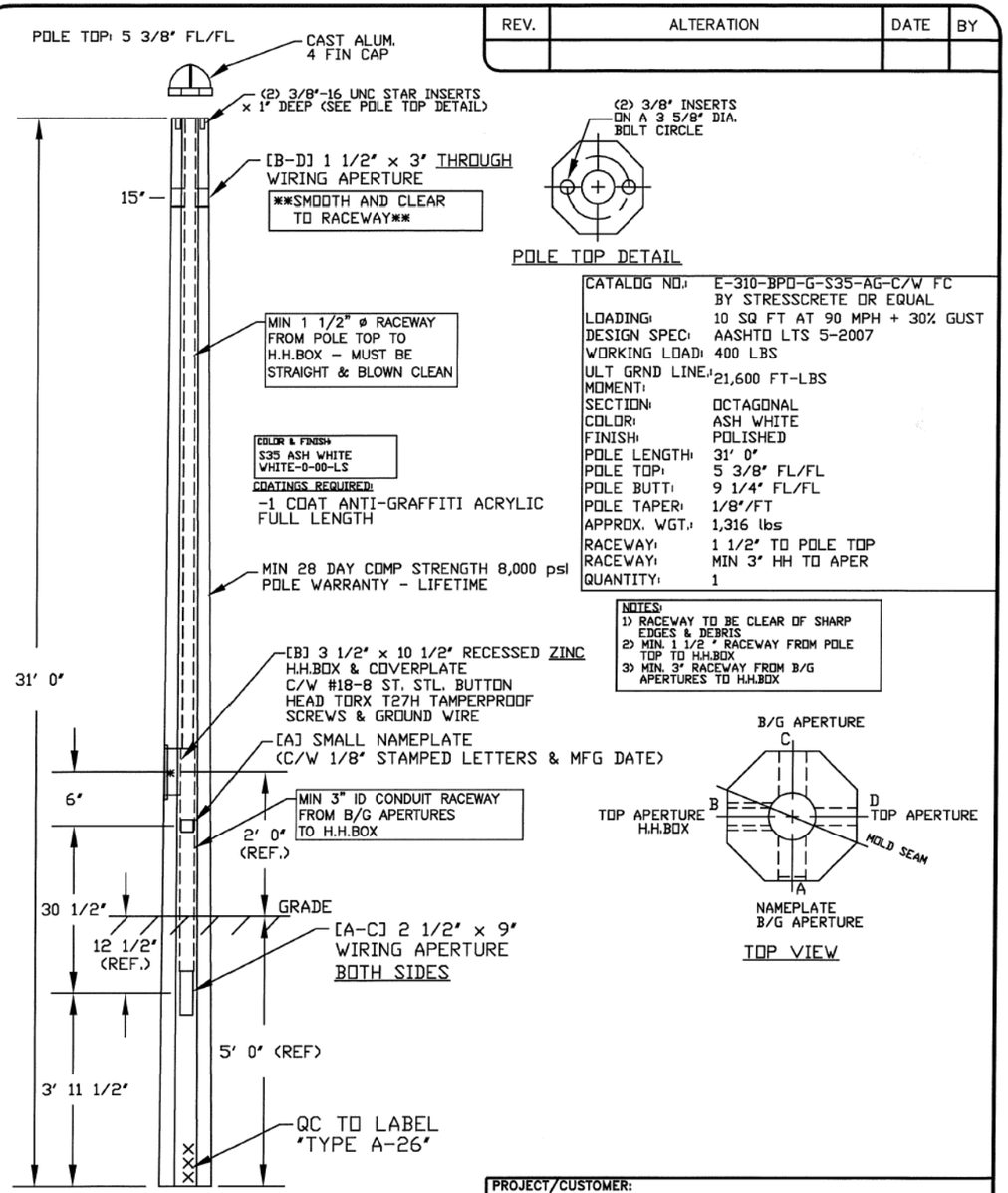

CATALOG NO.:	E-310-BPD-G-S35-AG-C/W FC BY STRESSCRETE OR EQUAL
LOADING:	10 SQ FT AT 90 MPH + 30% GUST
DESIGN SPEC:	AASHTO LTS 5-2007
WORKING LOAD:	400 LBS
ULT GRND LINE MOMENT:	21,600 FT-LBS
SECTION:	OCTAGONAL
COLOR:	ASH WHITE
FINISH:	POLISHED
POLE LENGTH:	31' 0"
POLE TOP:	5 3/8" FL/FL
POLE BUTT:	9 1/4" FL/FL
POLE TAPER:	1/8"/FT
APPROX. WGT.:	1,316 lbs
RACEWAY:	1 1/2" TO POLE TOP
RACEWAY:	MIN 3" HH TO APER
QUANTITY:	1

NOTES:
1) RACEWAY TO BE CLEAR OF SHARP EDGES & DEBRIS
2) MIN. 1 1/2" RACEWAY FROM POLE TOP TO H.H.BOX
3) MIN. 3" RACEWAY FROM B/G APERTURES TO H.H.BOX

PROJECT/CUSTOMER: CITY OF MILWAUKEE SPEC. DWG.# E-53-55 (REV 11-25-86)				
DRAWN BY:	AT:	CHECKED BY:	DATE: 12-20-17	REVISION:
DRAWING TYPE: SPECIFICATION DRAWING			DRAWING NUMBER: TYPE A-26	

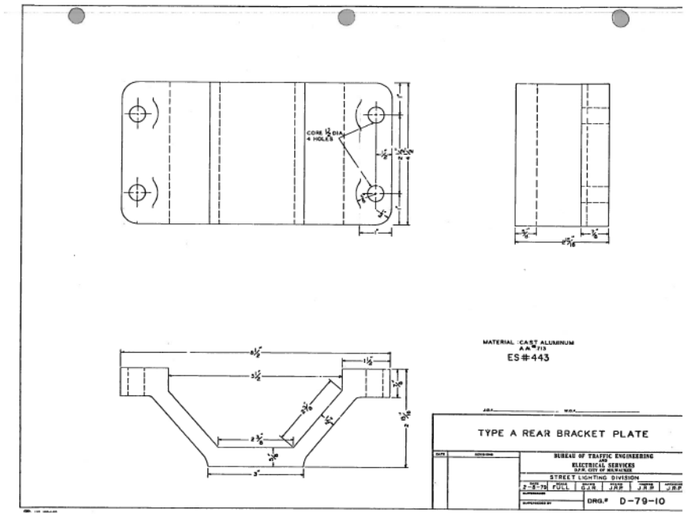

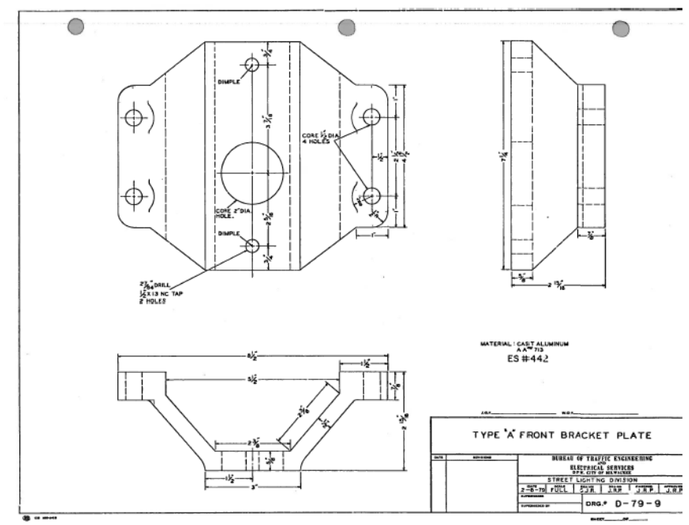

DETAIL NOT TO SCALE

TYPICAL 26 FT. DIRECT BURY POLE W/MITCHELL ARM MOUNTING BRACKET

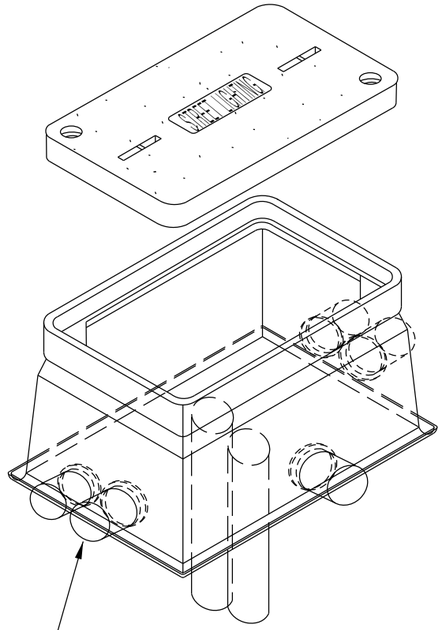

HEAVY DUTY COVER
W/ STREETLIGHTING LOGO
& W / 2 BOLTS
COLOR: GRAY

ELECTRICAL PULLBOX
FLARED WALL
BOX W / NO BASE
COLOR: GRAY

(VARIOUS SIZES)

PLUG OR CAP FITTINGS ON ALL
UNUSED CONDUITS IN THE ENCLOSURE

BOX ADAPTERS, COUPLINGS
TO ALL PVC CONDUITS

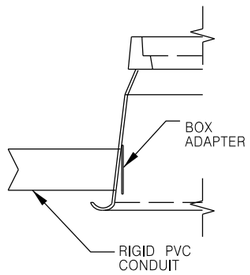

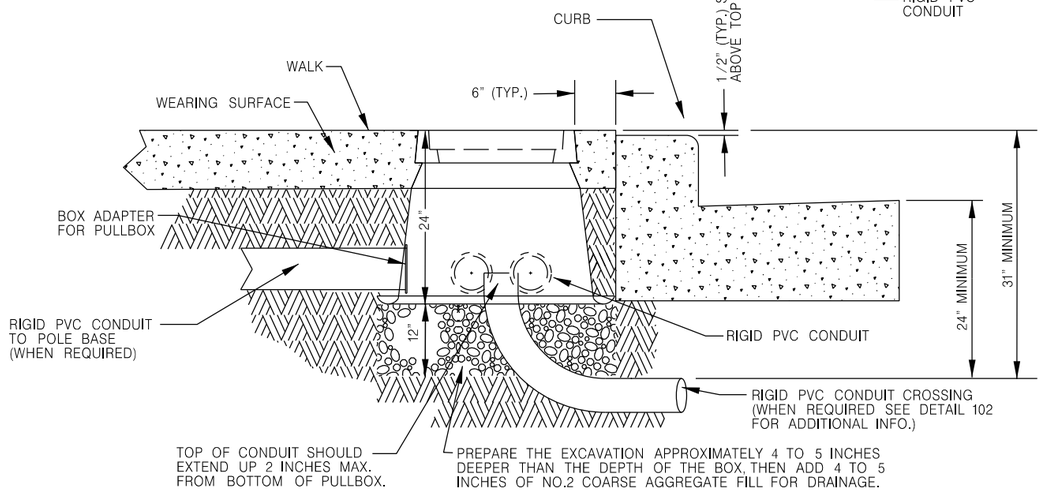

112 DETAIL
TYPICAL PULLBOX INSTALLATION IN WALK

NOT TO SCALE

ANY DEVIATIONS FROM DETAIL WILL REQUIRE PERMISSION FROM STREET LIGHTING FORCES.
CONTACT DISPATCHER AT (414) 286–5944 FOR THE APPROPRIATE SHOP SUPERVISOR.

2

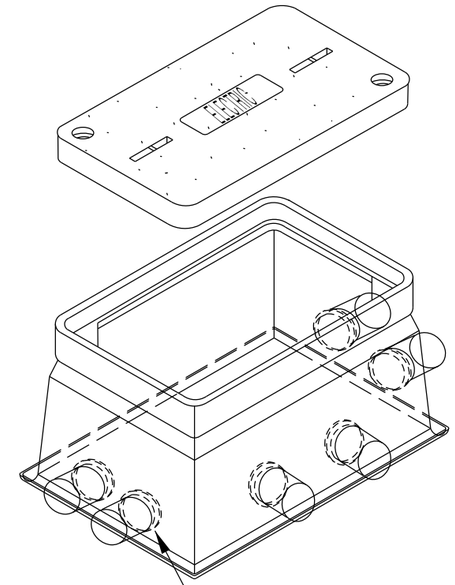

HEAVY DUTY COVER
W/ ELECTRIC LOGO
& W / 2 BOLTS
COLOR: GRAY

ELECTRICAL PULLBOX
FLARED WALL
BOX W / NO BASE
COLOR: GRAY
(VARIOUS SIZES)

PLUG OR CAP FITTINGS ON ALL
UNUSED CONDUITS IN THE ENCLOSURE

BOX ADAPTERS, COUPLINGS
TO ALL PVC CONDUITS

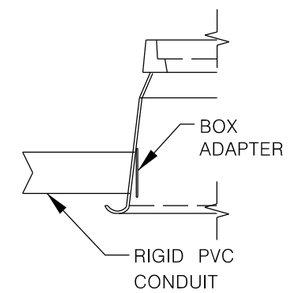

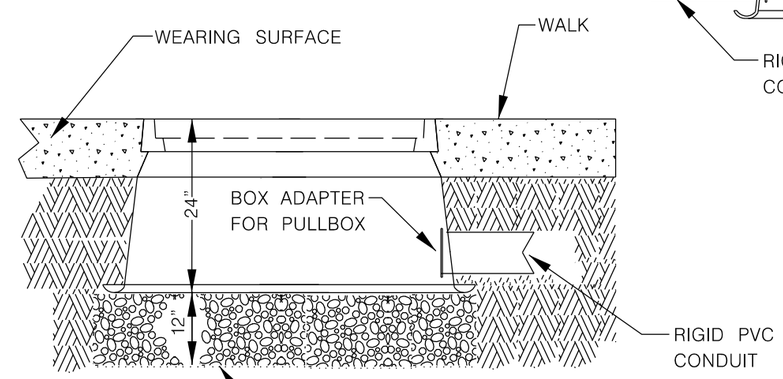

PREPARE THE EXCAVATION APPROXIMATELY 4 TO 5 INCHES
DEEPER THAN THE DEPTH OF THE BOX, THEN ADD 4 TO 5
INCHES OF NO.2 COARSE AGGREGATE FILL FOR DRAINAGE.

113 DETAIL
TYPICAL PULLBOX INSTALLATION IN SIDEWALK

NOT TO SCALE

ANY DEVIATIONS FROM DETAIL WILL REQUIRE PERMISSION FROM STREET LIGHTING FORCES.
CONTACT DISPATCHER AT (414) 286–5944 FOR THE APPROPRIATE SHOP SUPERVISOR.

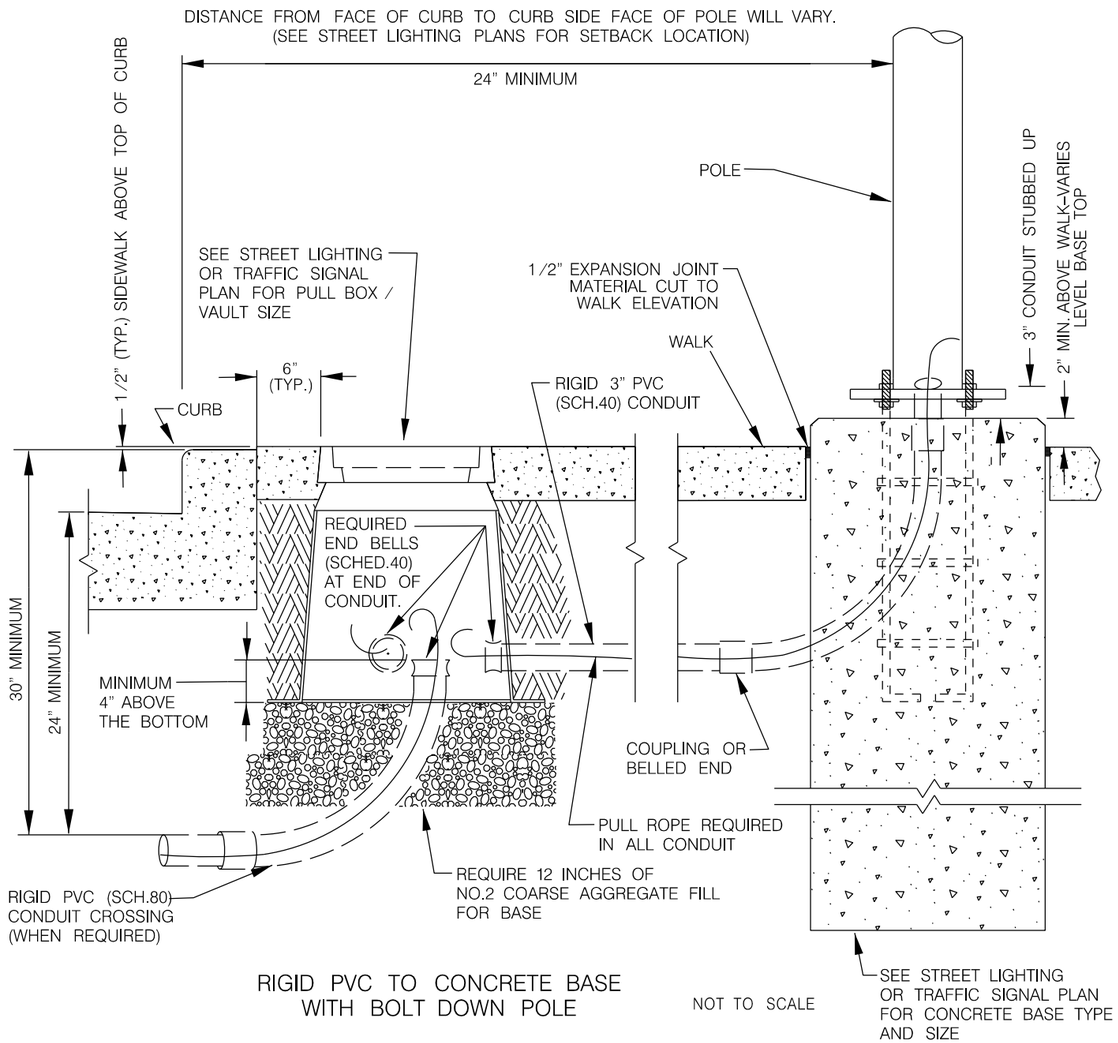

RIGID PVC TO CONCRETE BASE
WITH BOLT DOWN POLE

NOT TO SCALE

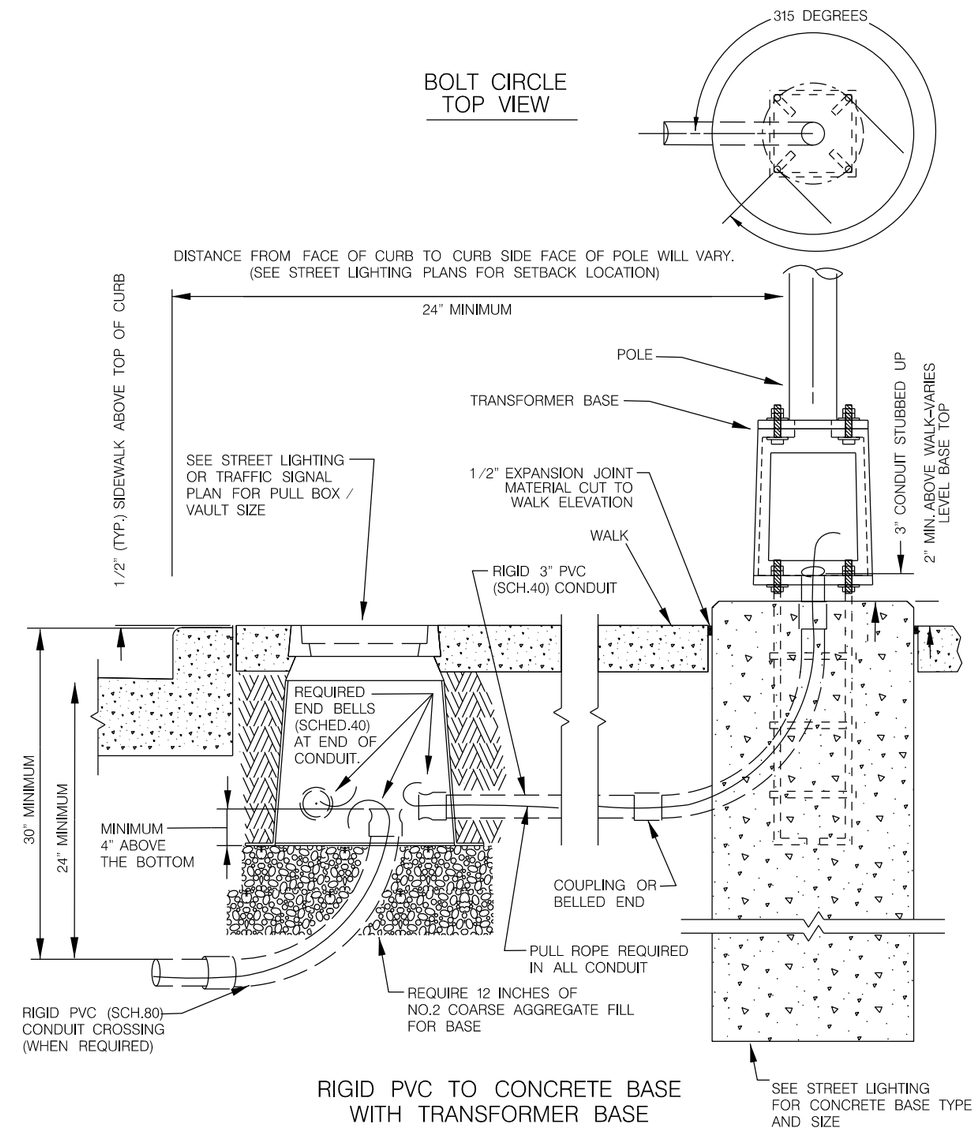

RIGID PVC TO CONCRETE BASE
WITH TRANSFORMER BASE

124 DETAIL

TYPICAL CONDUIT INSTALLATION
FROM PULL BOX / VAULT
TO CONCRETE BASE

CITY OF MILWAUKEE
DEPARTMENT OF PUBLIC WORKS
STREET LIGHTING SECTION

REVISION BY: $$...PLOTUSER...$$ REVISION DATE: PLOTDATE
APPROVED REVISION BY: R.BERTRAN APPROVED REVISION DATE: DEC.13-2023

PROJECT NO. 2984-21-73	HWY: W. MORGAN AVE.	COUNTY: MILWAUKEE	STREET LIGHTING DETAILS	SHEET 50	E

2

NOTE:
DIMENSIONS SHOWN ARE FOR A 35–FOOT POLE, FOR A 40–FOOT POLE MAKE THE HOLE DEPTH 7–FEET AND EMBED POLE 6–FEET 4–INCHES.

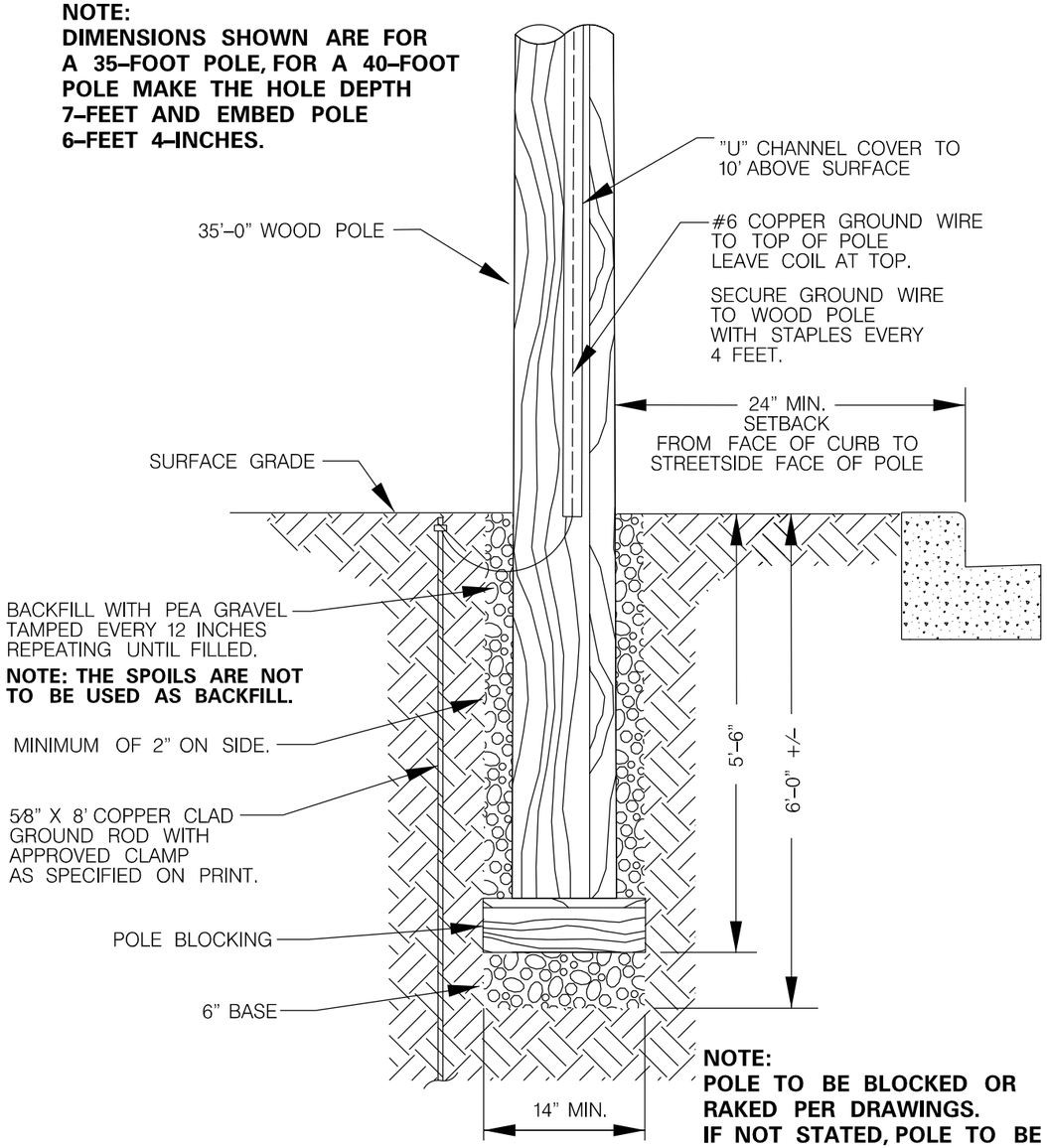

NOTE:
POLE TO BE BLOCKED OR RAKED PER DRAWINGS.
IF NOT STATED, POLE TO BE PERPENDICULAR WITH GROUND

130A

DETAIL NOT TO SCALE

TYPICAL 35 FT.WOOD POLE INSTALLATION

SEE NOTE FOR 40 FOOT POLE

ANY DEVIATIONS FROM DETAIL WILL REQUIRE PERMISSION FROM STREET LIGHTING FORCES. CONTACT DISPATCHER AT (414) (414) 286–5944 FOR THE APPROPRIATE SHOP SUPERVISOR.

CITY OF MILWAUKEE
DEPARTMENT OF PUBLIC WORKS
STREET LIGHTING SECTION
REVISION BY: $$...PLOTUSER...$$ REVISION DATE: PLOTDATE
APPROVED REVISION BY: R.BERTRAN APPROVED REVISION DATE: DEC.12-2022

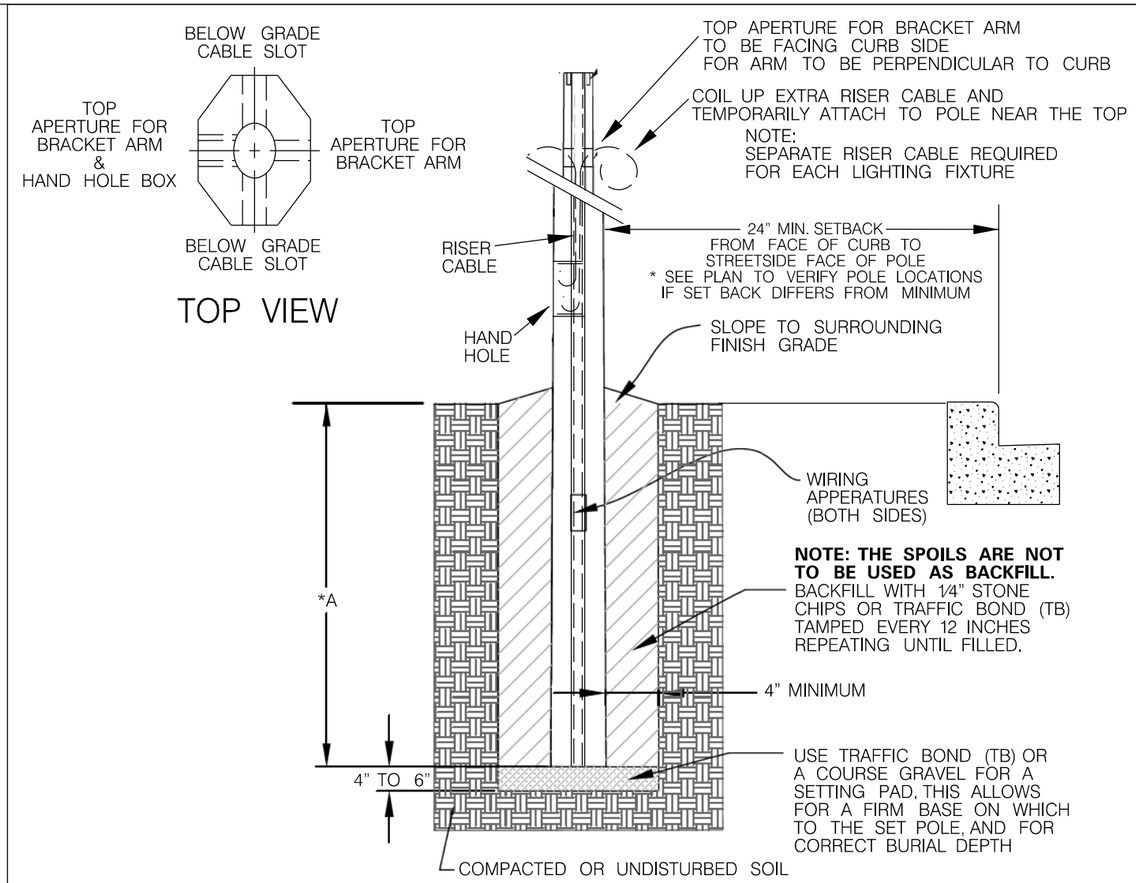

2

Pole Type Burial Depth Chart
FOR DIMENSION *A USE THE FOLLOWING BURIAL DEPTHS DEPENDING ON THE LENGTH OF THE POLE.
A21 = 26 FT. POLE LENGTH BURIED DEPTH = 5 FT.
A26 = 31 FT. POLE LENGTH BURIED DEPTH = 5 FT. – 6 INCHES
A31 = 36 FT. 10 INCHES POLE LENGTH BURIED DEPTH = 6 FT. – 4 INCHES

RISER CABLE LENGTH CHART
INTERNAL RISER CABLE IS COPPER 2#12UF WITH GROUND
A21 = 30 FT. OF CABLE
A26 = 35 FT. OF CABLE
A31 = 40 FT. OF CABLE

130C

DETAIL NOT TO SCALE

TYPICAL CONCRETE POLE INSTALLATION

ANY DEVIATIONS FROM DETAIL WILL REQUIRE PERMISSION FROM STREET LIGHTING FORCES. CONTACT DISPATCHER AT (414) (414) 286–5944 FOR THE APPROPRIATE SHOP SUPERVISOR.

CITY OF MILWAUKEE
DEPARTMENT OF PUBLIC WORKS
STREET LIGHTING SECTION
REVISION BY: $$...PLOTUSER...$$ REVISION DATE: PLOTDATE
APPROVED REVISION BY: R.BERTRAN APPROVED REVISION DATE: DEC.12-2022

2

GENERAL NOTES

DETAILS OF CONSTRUCTION AND WORKMANSHIP NOT SHOWN IN THIS DRAWING SHALL CONFORM TO THE PERTINENT REQUIREMENTS OF THE CONTRACT.

USE THIS DETAIL 142 IN CONJUNCTION WITH THIS DETAIL FOR ELECTRICAL WIRING.

USE EITHER THE POLARIS EDGE (ISPB2) OR MORRIS PRODUCT SUBMERSIBLE INSULATED CONNECTOR OR ELSE AN EQUAL CONNECTOR THAT IS 3 or 4 PORT PRE-INSULATED, THAT IS DESIGNED FOR USE IN BELOW GRADE BOXES, DIRECT BURIAL, AND SUBMERSIBLE. THE CONDUCTORS RANGE FROM #2/0 - #14 RATED FOR 600 VOLTS DUAL RATED FOR CU. or AL.

USE A WATERPROOF IN-LINE FUSE HOLDER ASSEMBLY THAT NEEDS TO BE 600 VOLT RATED, AND UP TO 30 AMPS, 1-POLE BREAKAWAY, WITH COPPER CRIMP TERMINALS FOR LOAD, AND WIRE SIZE RANGE #12 TO #8 AWG.
PROVIDE A FAST ACTING 5 AMP 250 VOLT FUSES, FROM THE RECOMMENDED FUSE LIST FROM THE IN-LINE FUSE HOLDER MANUFACTURER.

USE WATERPROOF AND TEAR RESISTANT CABLE TAGS/LABELS AT EACH PULL BOX, TO IDENTIFY THE LINE SIDE OF EACH CIRCUIT USING A FADE-RESISANT WATERPROOF BLACK MARKER PEN AND PROVIDE THE FOLLOWING INFO:

CIRCUIT ID: (CIR.WD-E)
LINE SIDE COMING FROM UNTIL STREET LIGHT UNIT IS ON: (STREET NAME)
SIDE OF STREET LIGHT UNIT IS ON: (N,S,E,or W)
NUMBER OF STREET LIGHTING UNITS FROM NEAREST CROSSING STREET: (1,2,3,4,5)
DIRECTION FROM THE NEAREST CROSSING STREET: (N,S,E,or W)
NAME OF THE NEAREST CROSSING STREET: (STREET NAME)

EXAMPLE OF TAG INFO:

CIR.WD-E,
LINE SIDE FROM: W. CANAL ST. / N. / 1 / W. /OF POTAWATOMI CIR.

WIRING FOR SINGLE LUMINAIRE POLES IS SHOWN WITH SOLID LINES. WIRING FOR THE SECOND LUMINAIRE OF TWIN LUMINAIRE POLES IS SHOWN WITH DOTTED LINES.

THE PLANS WILL SHOW WHICH CIRCUIT LEG(S) ARE CONNECTED TO EACH INSTALLATION.

USE 2#12UF WITH GROUND FROM THE PULL BOX / JUNCTION BOX TO THE POLE HANDHOLE

THE INTENT OF THE PULL BOX / JUNCTION BOX/ TRANSFORMER BASE SPLICES AS SHOWN IN THIS DETAIL IS FOR LIGHTING SYSTEMS WITH HEAVY LINE WIRE TOO LARGE TO PULL THROUGH THE CONDUIT INTO THE POLE HANDHOLE, DUE TO CONDUIT FILL REQUIREMENTS OF N.E.C. AND / OR THE STIFFNESS OF THE WIRE COMPARED TO THE NUMBER OF BENDS IN THE CONDUIT.

LEGEND

BLACK & RED	UNGROUNDED SYSTEM CIRCUIT CONDUCTORS (L1 & L2)
WHITE & GRAY (N)	GROUNDED SYSTEM CIRCUIT CONDUCTORS (N1 & N2)
GREEN (GND)	EQUIPMENT GROUNDING CONDUCTOR
	HANDHOLE GROUNDED LUG
	SINGLE-POLE (1P) FUSE ASSEMBLY
	UNFUSED LUMINAIRE
	TERMINAL
	SPLICE
	CONDUCTOR
	GROUND ROD

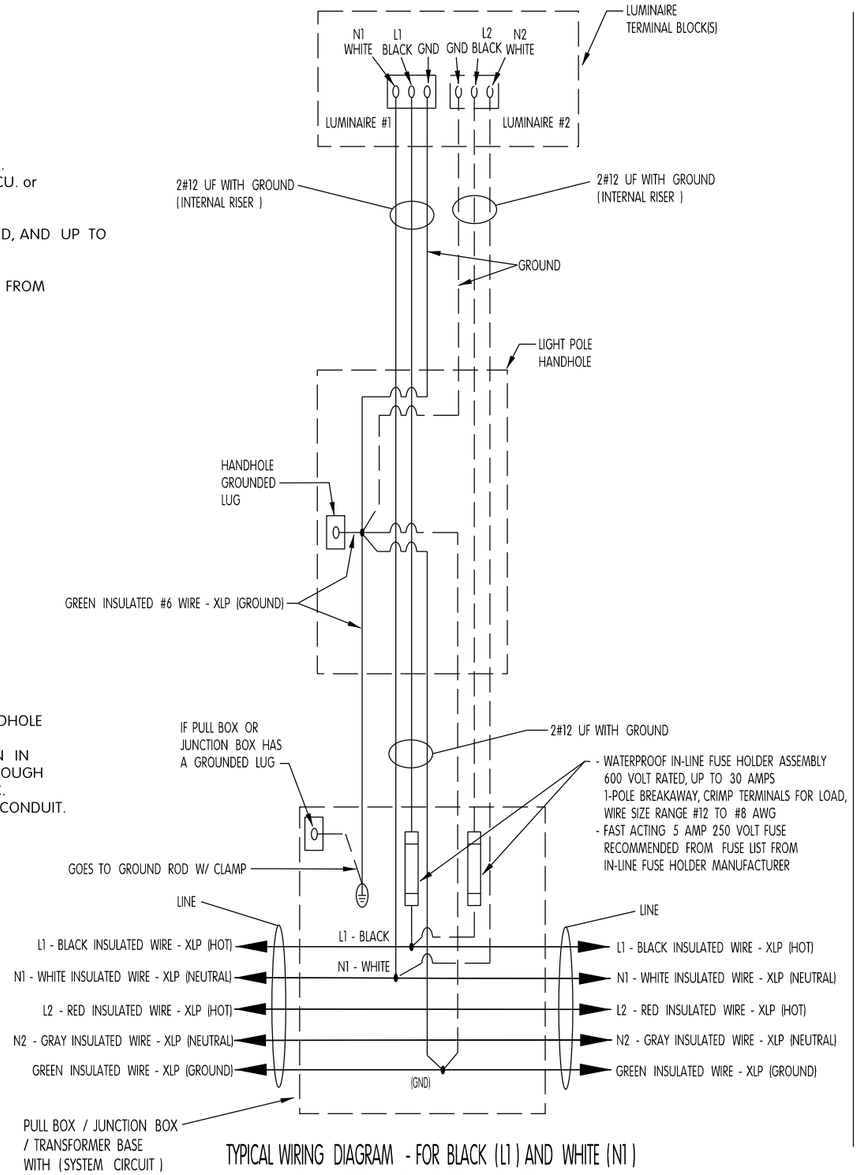

TYPICAL WIRING DIAGRAM - FOR BLACK (L1) AND WHITE (N1)
TWO SEPARATE NEUTRALS SYSTEM
240 / 480VAC 4 WIRE

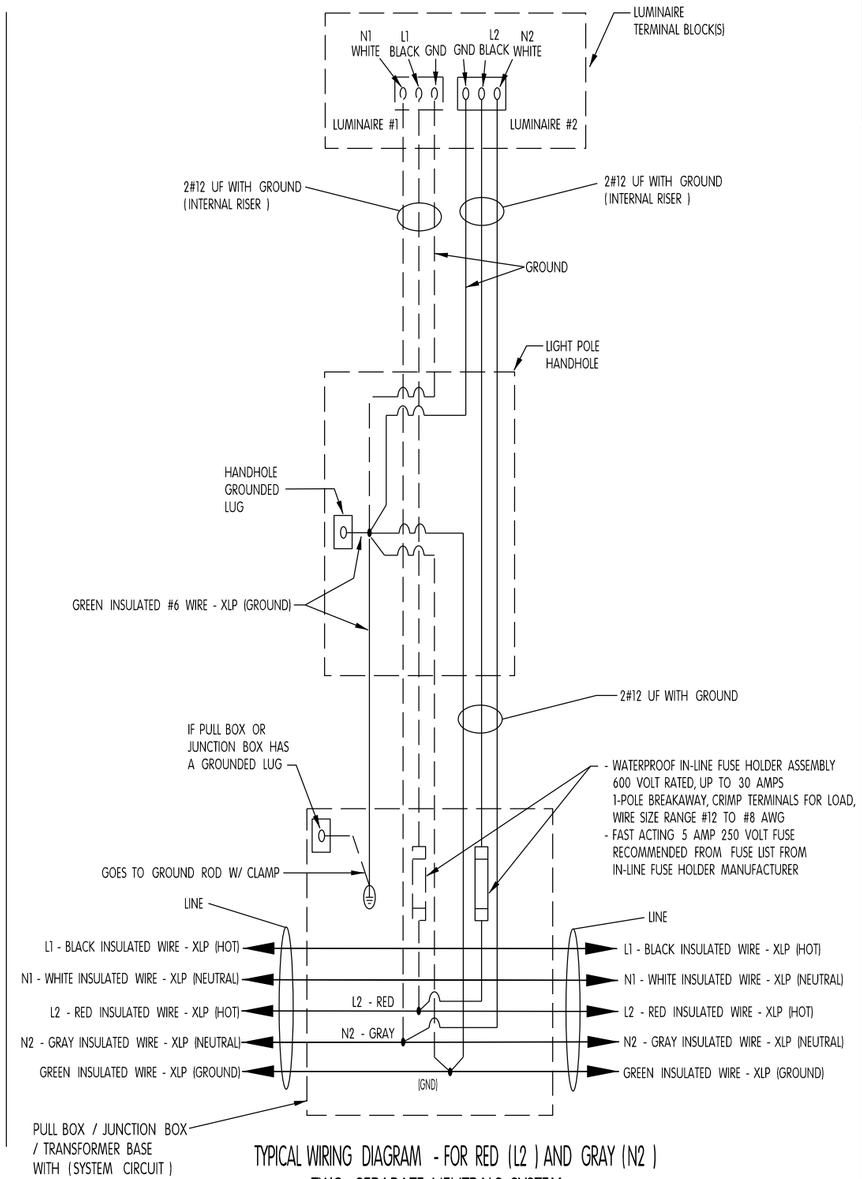

TYPICAL WIRING DIAGRAM - FOR RED (L2) AND GRAY (N2)
TWO SEPARATE NEUTRALS SYSTEM
240 / 480VAC 4 WIRE

2

145 ELECTRICAL DETAILS STRUCTURE MOUNT
LIGHT POLES SEPARATED NEUTRALS SYSTEM
NOT TO SCALE

CITY OF MILWAUKEE
DEPARTMENT OF PUBLIC WORKS
STREET LIGHTING SECTION
REVISION BY: $$...PLOTUSER...$$ REVISION DATE: PLOTDATE
APPROVED REVISION BY: _____ APPROVED REVISION DATE: _____

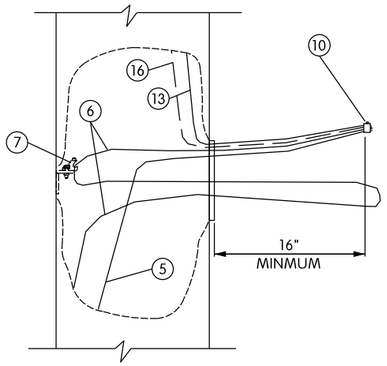

EQUIPMENT GROUNDING
CONDUCTOR SLACK

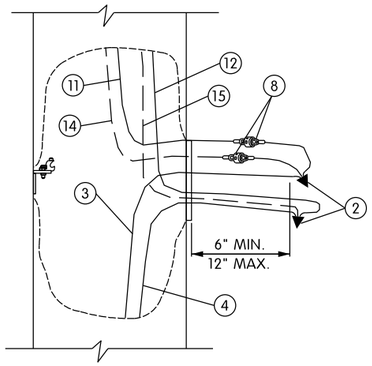

UNGROUNDED CONDUCTOR SLACK
(AND GROUNDED NEUTRAL SLACK
IN GROUNDED NEUTRAL SYSTEM)

TYPICAL CONDUCTOR SLACK AT HANDHOLES

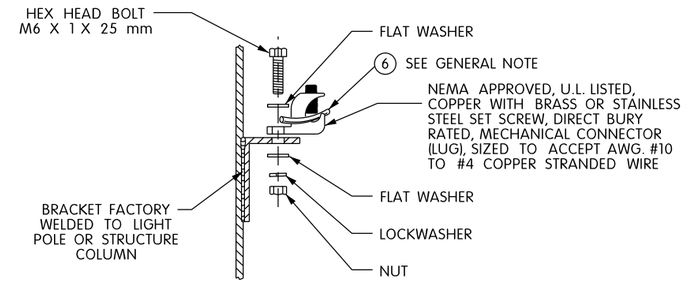

HANDHOLE GROUNDING LUG

(NUT, BOLT, WASHERS, AND LOCK WASHERS SHALL BE STAINLESS STEEL)

CONDUCTOR COLOR CODES

KEY	CONDUCTOR	COLOR
3	UNGROUNDED LINE WIRE	BLACK OR RED
4	GROUNDED LINE WIRE	WHITE OR GRAY
5	SYSTEM GROUNDING LINE WIRE	GREEN
6	GROUNDING ELECTRODE CONDUCTOR	GREEN
11	UNGROUNDED POLE WIRE	*
12	GROUNDED POLE WIRE	WHITE
13	EQUIPMENT GROUNDING POLE WIRE	GREEN

* FOLLOW COLOR CODING SHOWN IN THE PLANS.
WHERE THE PLANS DO NOT SHOW COLOR CODING,

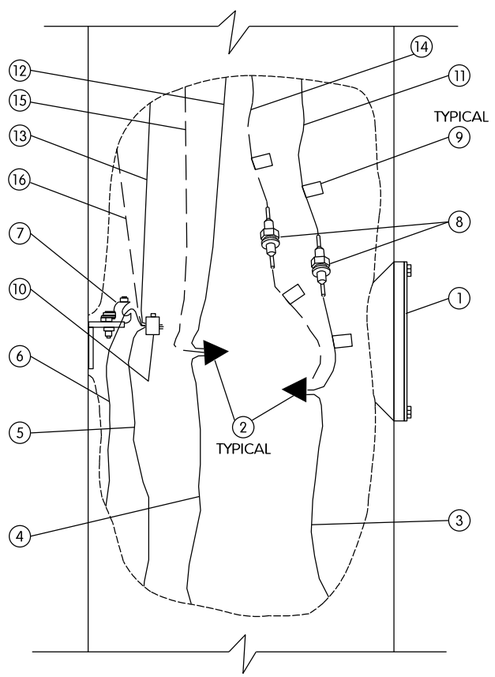

CUTAWAY HANDHOLE DETAIL

SEPARATED NEUTRAL SYSTEMS
SINGLE PHASE

NOTE: REQUIRED CONDUCTOR SLACK NOT SHOWN ON "CUTAWAY HAND HOLE" DETAILS FOR DRAWING CLARITY, SEE TYPICAL CONDUCTOR SLACK AT HANDHOLES ON THIS SHEET.

1. HANDHOLE AND COVER
2. INSULATED SPLICE
3. SYSTEM UNGROUNDED LINE WIRE
4. SYSTEM GROUNDED LINE WIRE
5. SYSTEM GROUNDING LINE WIRE
6. GROUNDING ELECTRODE CONDUCTOR
7. HANDHOLE GROUNDING LUG
8. FUSE ASSEMBLY, 1P OR 2P AS REQUIRED
9. CIRCUIT TAG (SEE GENERAL NOTE)
10. REVERSIBLE PRESSURE OR COMPRESSION GROUNDING CONNECTOR (NOT INSULATED)
11. RISER UNGROUNDED POLE WIRE - LUMINAIRE #1
12. RISER GROUNDED POLE WIRE - LUMINAIRE #1
13. RISER EQUIPMENT GROUNDING POLE WIRE - LUMINAIRE #1
14. RISER UNGROUNDED POLE WIRE - LUMINAIRE #2
15. RISER GROUNDED POLE WIRE - LUMINAIRE #2
16. RISER EQUIPMENT GROUNDING POLE WIRE - LUMINAIRE #2

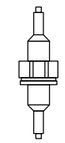

- 600 VOLT RATED, UP TO 30 AMPS
  1-POLE BREAKAWAY, CRIMP TERMINALS
  FOR LOAD,
  WIRE SIZE RANGE #12 TO #8 AWG
- FAST ACTING 5 AMP 250 VOLT FUSE
  RECOMMENDED FROM FUSE LIST FROM
  IN-LINE FUSE HOLDER MANUFACTURER

WATERPROOF IN-LINE FUSE HOLDER ASSEMBLY

GENERAL NOTES

DETAILS OF CONSTRUCTION AND WORKMANSHIP NOT SHOWN IN THIS DRAWING SHALL CONFORM TO THE PERTINENT REQUIREMENTS OF THE CONTRACT.

USE THIS DETAIL IN CONJUNCTION WITH THE ELECTRICAL DETAILS FOR THE APPLICATION, WHICH MAY BE A LIGHT POLE, SIGN BRIDGE, ETC.

THE GROUNDING ELECTRODE CONDUCTOR SHALL BE CONTINUOUS WITHOUT SPLICES FROM THE GROUNDING ELECTRODE THROUGH THE HANDHOLE GROUNDING LUG TO THE CONNECTOR.

THREE POLE WIRES ARE SHOWN FOR A SINGLE LUMINAIRE LIGHT POLE. THREE ADDITIONAL POLE WIRES REQUIRED FOR TWIN LUMINIAIRE LIGHT POLES ARE OMITTED FROM THE DRAWING FOR CLARITY. IN THE TWIN POLE CASE, BUNDLE EACH SET OF THREE WIRES WITH A NYLON CABLE TIE.

CIRCUIT TAGS SHALL BE INSTALLED IN ALL THE PULL BOXES AND WHERE INDICATED ON THE PLANS AND SPECIAL PROVISIONS.

146 ELECTRICAL HANDHOLE WIRING DETAIL

NOT TO SCALE

CITY OF MILWAUKEE
DEPARTMENT OF PUBLIC WORKS
STREET LIGHTING SECTION
REVISION BY: $$...PLOTUSER...$$ REVISION DATE: PLOTDATE
APPROVED REVISION BY: E.K. LEE APPROVED REVISION DATE: MAY 30-2024

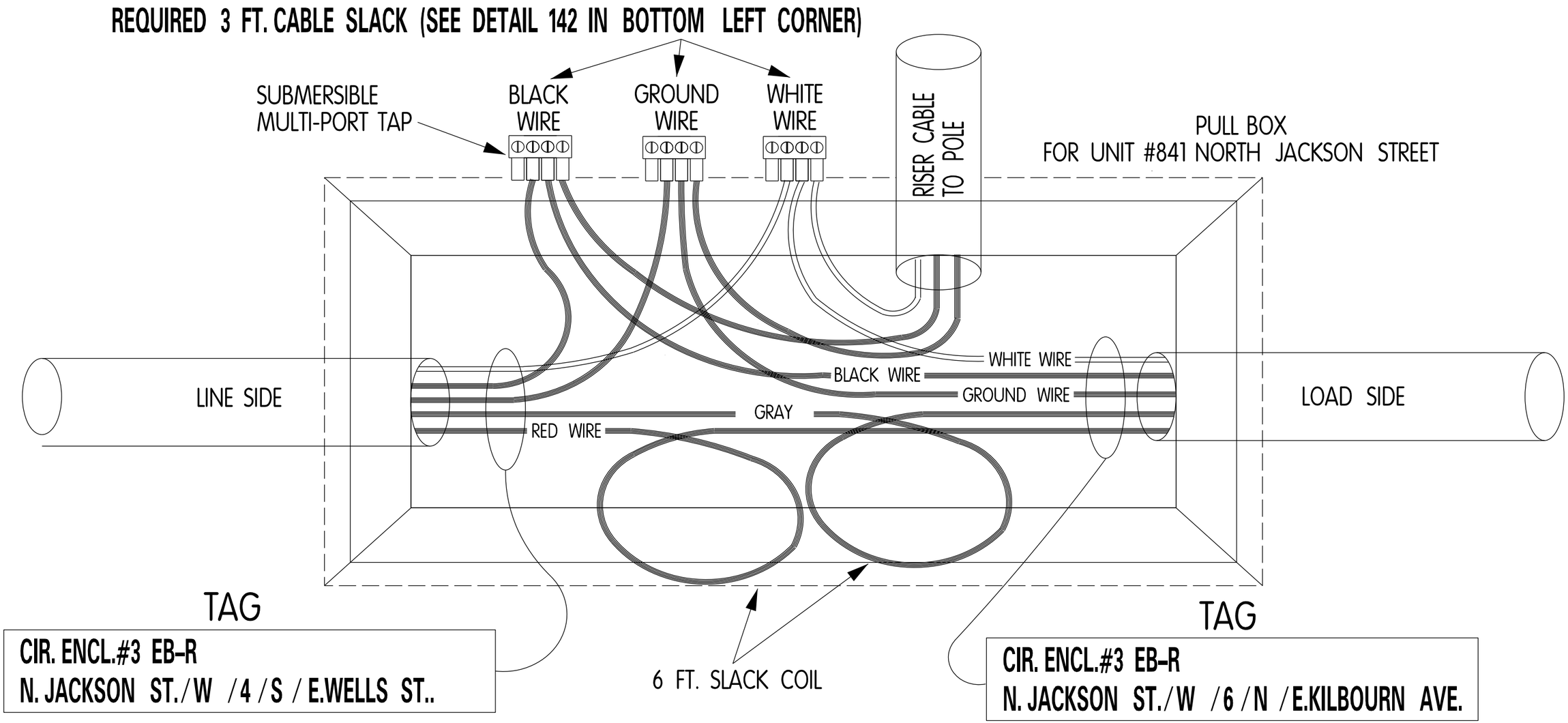

TAG DESCRIPTION BREAKDOWN - LINE SIDE

CIRCUIT ID: (CIR. ENCL.#3 EB-R)
LINE SIDE COMING FROM UNIT STREET LIGHT UNIT IS ON: (N. JACKSON ST.)
SIDE OF STREET LIGHT UNIT IS ON: (WEST SIDE)
NUMBER OF STREET LIGHTING UNITS FROM NEAREST CROSSING STREET: (COMING FROM UNIT 4)
DIRECTION FROM THE NEAREST CROSSING STREET: (TO THE SOUTH)
NAME OF THE NEAREST CROSSING STREET: (E. WELLS ST.)

TAG DESCRIPTION BREAKDOWN - LOAD SIDE

CIRCUIT ID: (CIR. ENCL.#3 EB-R)
LINE SIDE COMING FROM UNIT STREET LIGHT UNIT IS ON: (N. JACKSON ST.)
SIDE OF STREET LIGHT UNIT IS ON: (WEST SIDE)
NUMBER OF STREET LIGHTING UNITS FROM NEAREST CROSSING STREET: (GOING TO UNIT 6)
DIRECTION FROM THE NEAREST CROSSING STREET: (TO THE NORTH)
NAME OF THE NEAREST CROSSING STREET: (E. KILBOURN AVE.)

147 DETAIL
TYPICAL SCHEMATIC AND TAGGING

CITY OF MILWAUKEE
DEPARTMENT OF PUBLIC WORKS
STREET LIGHTING SECTION
REVISION BY: $$..PLOTUSER..$$ REVISION DATE: PLOTDATE
APPROVED REVISION BY: R.BERTRAN APPROVED REVISION DATE: AUG.14-2023

LEGEND

- EXISTING LIGHT POLE
- REMOVE COMPLETE EXISTING LIGHT POLE
- 40' WOOD POLE COBRA HEAD LUMINAIRE 6' WOOD POLE MOUNT ARM
- 40' WOOD POLE
- OVERHEAD CABLE SPAN
- Ⓡ Ⓑ - RED/BLACK WIRE TERMINATION

NOTES:

1. PRIMARY CABLE RISER WITH PVC COVER ON SPECIFIED CIRCUIT.
2. EXISTING CONDUIT AND/OR CABLE TO REMAIN IN SERVICE. EXCAVATE 5' CABLE LENGTH ALLOWANCE FOR CONNECTION SHOWN IN STREET LIGHTING PLAN.
3. MINIMUM CLEARANCE AT CENTER OF SPAN: 17-FT. ABOVE ROADWAY OR GRADE.
4. TEMPORARY 240V FIXTURES WIRED PHASE TO NEUTRAL USING ALUMINUM TRIPLEX OR FLATSTRAP, LOAD BALANCED AS SPECIFIED BY BLACK/RED TERMINATION.
5. ALL LUMINAIRES AND AERIAL CABLES ARE SEPARATE BID ITEMS AND ARE NOT PART OF THE BID ITEM "WOOD POLE 40-FOOT". ALL REMAINING ITEMS SUCH AS WIRE ROPE TETHERS, WIRE CLIPS, DRIVE HOOKS, SERVICE SLEEVES, HEAVY DUTY INSULATED PULLY CLEVISES ARE INCIDENTAL TO BID ITEM "WOOD POLE 40-FOOT".

N

SUMMARY OF SELECTED ITEMS FOR INFORMATION ONLY

QUANTITY	DESCRIPTION
6 EA	40' WOOD POLES, CLASS 4
750 LF	1#6 PRI. LINEWIRE
2000 LF	3#12UF-B
5 EA	6' WP ARM, TEMP. COBRA
6 EA	RISER

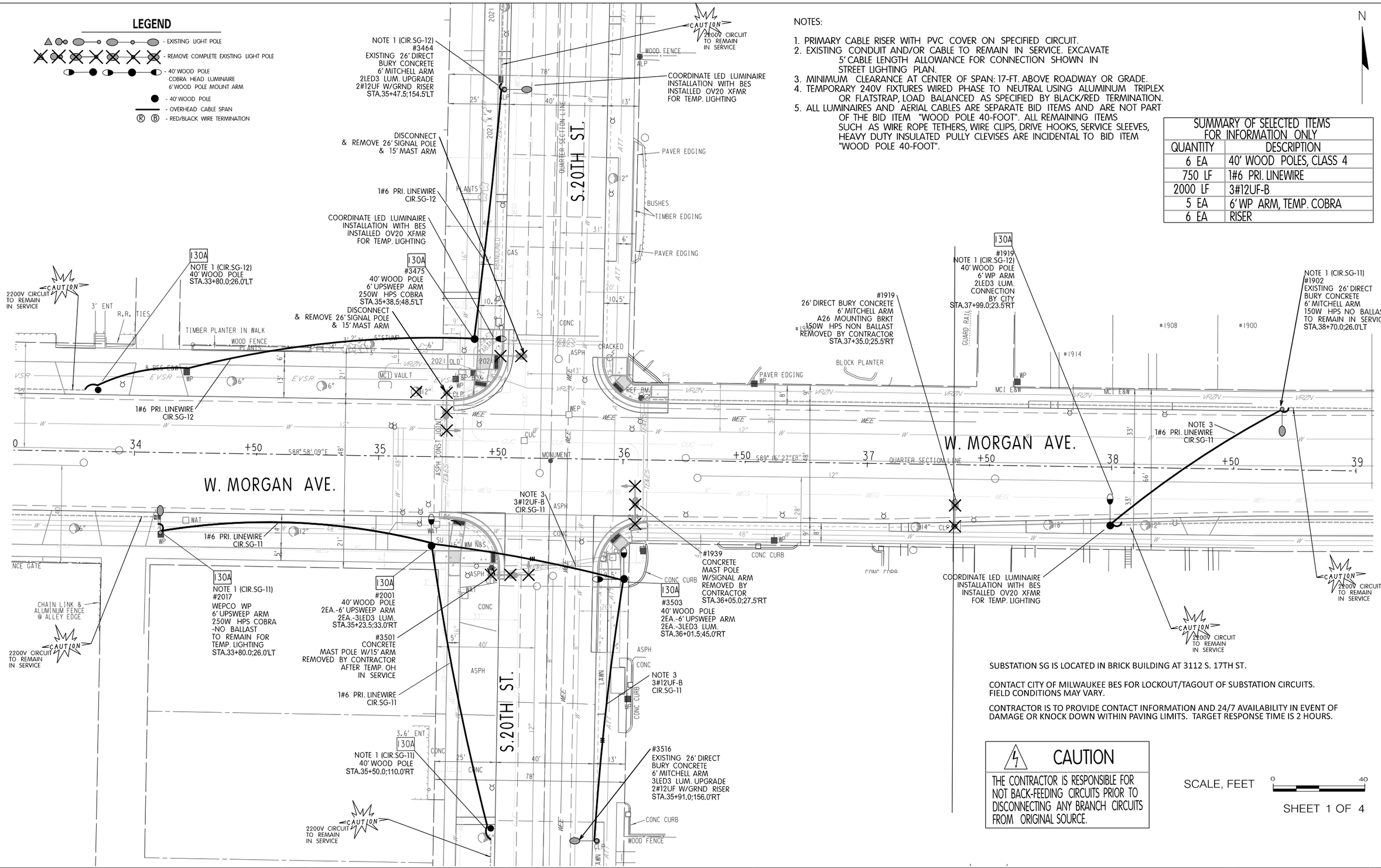

SUBSTATION SG IS LOCATED IN BRICK BUILDING AT 3112 S. 17TH ST.

CONTACT CITY OF MILWAUKEE BES FOR LOCKOUT/TAGOUT OF SUBSTATION CIRCUITS. FIELD CONDITIONS MAY VARY.

CONTRACTOR IS TO PROVIDE CONTACT INFORMATION AND 24/7 AVAILABILITY IN EVENT OF DAMAGE OR KNOCK DOWN WITHIN PAVING LIMITS. TARGET RESPONSE TIME IS 2 HOURS.

CAUTION

THE CONTRACTOR IS RESPONSIBLE FOR NOT BACK-FEEDING CIRCUITS PRIOR TO DISCONNECTING ANY BRANCH CIRCUITS FROM ORIGINAL SOURCE.

SCALE, FEET 0 40

SHEET 1 OF 4

PROJECT NO: 2984-21-73	HWY: W. MORGAN AVE.	COUNTY: MILWAUKEE	TEMPORARY STREET LIGHTING PLAN	SHEET 55	E

LEGEND

- EXISTING LIGHT POLE
- REMOVE COMPLETE EXISTING LIGHT POLE
- 40' WOOD POLE COBRA HEAD LUMINAIRE 6' WOOD POLE MOUNT ARM
- 40' WOOD POLE
- OVERHEAD CABLE SPAN
- Ⓡ Ⓑ - RED/BLACK WIRE TERMINATION

NOTES:

1. PRIMARY CABLE RISER WITH PVC COVER ON SPECIFIED CIRCUIT.
2. EXISTING CONDUIT AND/OR CABLE TO REMAIN IN SERVICE. EXCAVATE 5' CABLE LENGTH ALLOWANCE FOR CONNECTION SHOWN IN STREET LIGHTING PLAN.
3. MINIMUM CLEARANCE AT CENTER OF SPAN: 17-FT. ABOVE ROADWAY OR GRADE.
4. TEMPORARY 240V FIXTURES WIRED PHASE TO NEUTRAL USING ALUMINUM TRIPLEX OR FLATSTRAP, LOAD BALANCED AS SPECIFIED BY BLACK/RED TERMINATION.
5. ALL LUMINAIRES AND AERIAL CABLES ARE SEPARATE BID ITEMS AND ARE NOT PART OF THE BID ITEM "WOOD POLE 40-FOOT". ALL REMAINING ITEMS SUCH AS WIRE ROPE TETHERS, WIRE CLIPS, DRIVE HOOKS, SERVICE SLEEVES, HEAVY DUTY INSULATED PULLY CLEVISES ARE INCIDENTAL TO BID ITEM "WOOD POLE 40-FOOT".

SUMMARY OF SELECTED ITEMS FOR INFORMATION ONLY	
QUANTITY	DESCRIPTION
7 EA	40' WOOD POLES, CLASS 4
1150 LF	1#6 PRI. LINEWIRE
0 LF	3#12UF-B
4 EA	6' WP ARM, TEMP. COBRA
4 EA	RISER

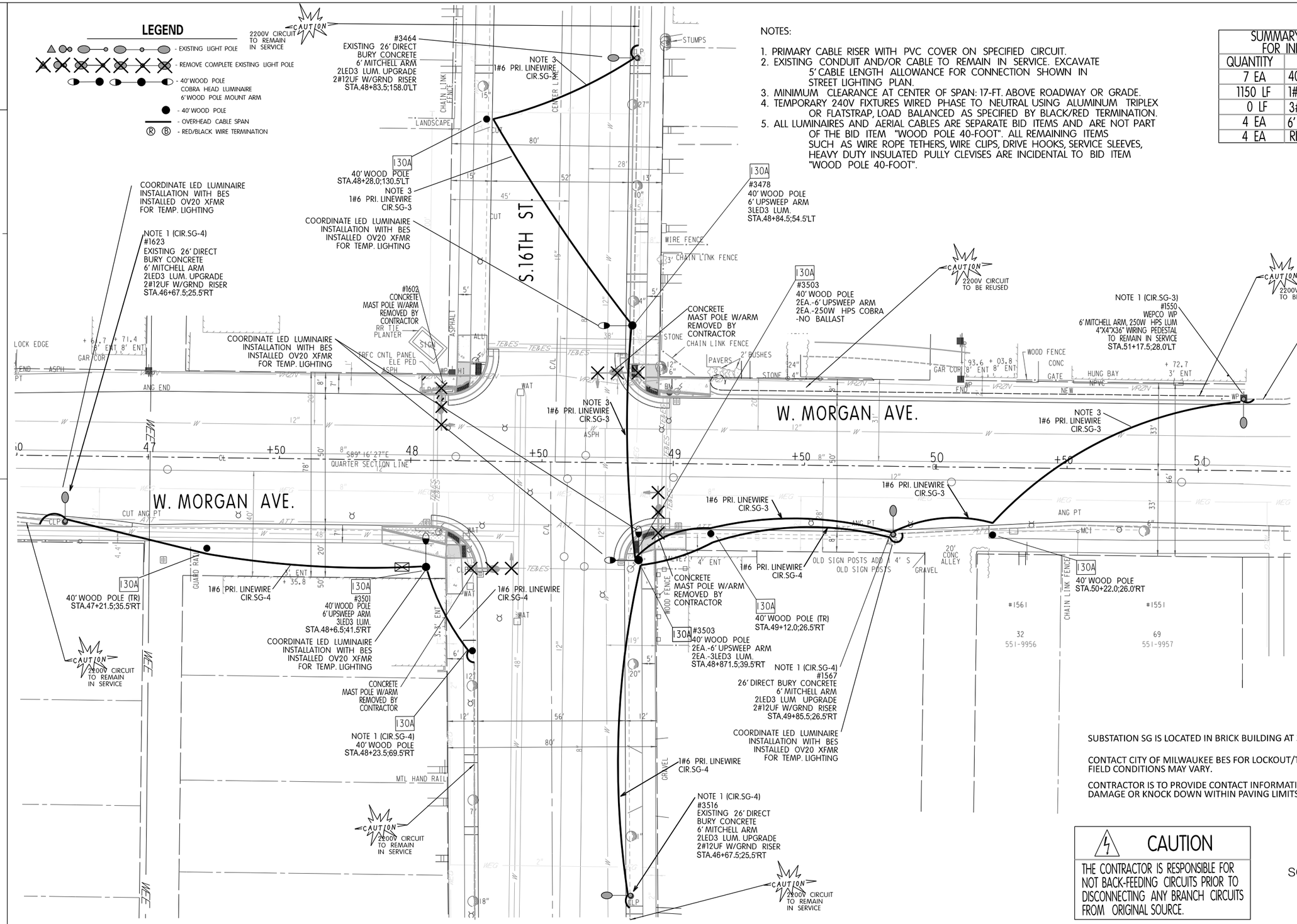

SUBSTATION SG IS LOCATED IN BRICK BUILDING AT 3112 S. 17TH ST.

CONTACT CITY OF MILWAUKEE BES FOR LOCKOUT/TAGOUT OF SUBSTATION CIRCUITS. FIELD CONDITIONS MAY VARY.

CONTRACTOR IS TO PROVIDE CONTACT INFORMATION AND 24/7 AVAILABILITY IN EVENT OF DAMAGE OR KNOCK DOWN WITHIN PAVING LIMITS. TARGET RESPONSE TIME IS 2 HOURS.

CAUTION

THE CONTRACTOR IS RESPONSIBLE FOR NOT BACK-FEEDING CIRCUITS PRIOR TO DISCONNECTING ANY BRANCH CIRCUITS FROM ORIGINAL SOURCE.

SCALE, FEET 0 40

SHEET 2 OF 4

LEGEND

- EXISTING LIGHT POLE
- REMOVE COMPLETE EXISTING LIGHT POLE
- 40' WOOD POLE COBRA HEAD LUMINAIRE 6' WOOD POLE MOUNT ARM
- 40' WOOD POLE
- OVERHEAD CABLE SPAN
- Ⓡ Ⓑ - RED/BLACK WIRE TERMINATION

SUMMARY OF SELECTED ITEMS FOR INFORMATION ONLY	
QUANTITY	DESCRIPTION
4 EA	40' WOOD POLES, CLASS 4
1000 LF	2-2-4 AL TRIPLEX
200 LF	UF-B
4 EA	6' WP ARM, LED COBRA
4 EA	RISER

NOTES:

1. SECONDARY CABLE RISER WITH PVC COVER ON SPECIFIED CIRCUIT.
2. EXISTING CONDUIT AND/OR CABLE TO REMAIN IN SERVICE. EXCAVATE 5' CABLE LENGTH ALLOWANCE FOR CONNECTION SHOWN IN STREET LIGHTING PLAN.
3. MINIMUM CLEARANCE AT CENTER OF SPAN: 17-FT. ABOVE ROADWAY OR GRADE.
4. TEMPORARY 240V FIXTURES WIRED PHASE TO NEUTRAL USING ALUMINUM TRIPLEX OR FLATSTRAP, LOAD BALANCED AS SPECIFIED BY BLACK/RED TERMINATION.
5. ALL LUMINAIRES AND AERIAL CABLES ARE SEPARATE BID ITEMS AND ARE NOT PART OF THE BID ITEM "WOOD POLE 40-FOOT". ALL REMAINING ITEMS SUCH AS WIRE ROPE TETHERS, WIRE CLIPS, DRIVE HOOKS, SERVICE SLEEVES, HEAVY DUTY INSULATED PULLY CLEVISES ARE INCIDENTAL TO BID ITEM "WOOD POLE 40-FOOT".

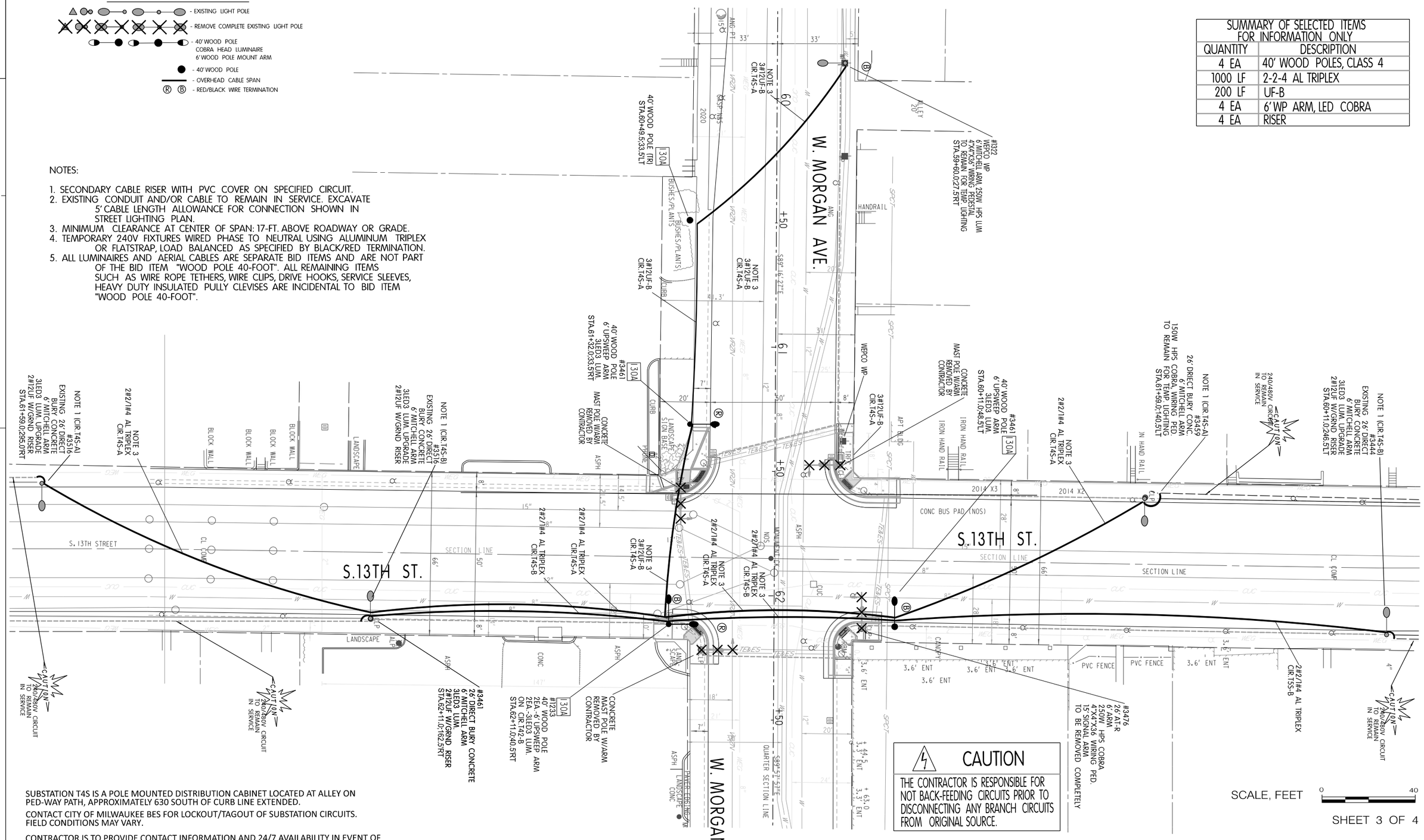

SUBSTATION T4S IS A POLE MOUNTED DISTRIBUTION CABINET LOCATED AT ALLEY ON PED-WAY PATH, APPROXIMATELY 630 SOUTH OF CURB LINE EXTENDED.

CONTACT CITY OF MILWAUKEE BES FOR LOCKOUT/TAGOUT OF SUBSTATION CIRCUITS. FIELD CONDITIONS MAY VARY.

CONTRACTOR IS TO PROVIDE CONTACT INFORMATION AND 24/7 AVAILABILITY IN EVENT OF DAMAGE OR KNOCK DOWN WITHIN PAVING LIMITS. TARGET RESPONSE TIME IS 2 HOURS.

PROJECT NO: 2984–21–73	HWY: W. MORGAN AVE.	COUNTY: MILWAUKEE	TEMPORARY STREET LIGHTING PLAN	SHEET 57	E

LEGEND

- EXISTING LIGHT POLE
- REMOVE COMPLETE EXISTING LIGHT POLE
- 40' WOOD POLE COBRA HEAD LUMINAIRE 6' WOOD POLE MOUNT ARM
- 40' WOOD POLE
- OVERHEAD CABLE SPAN
- Ⓡ Ⓑ RED/BLACK WIRE TERMINATION

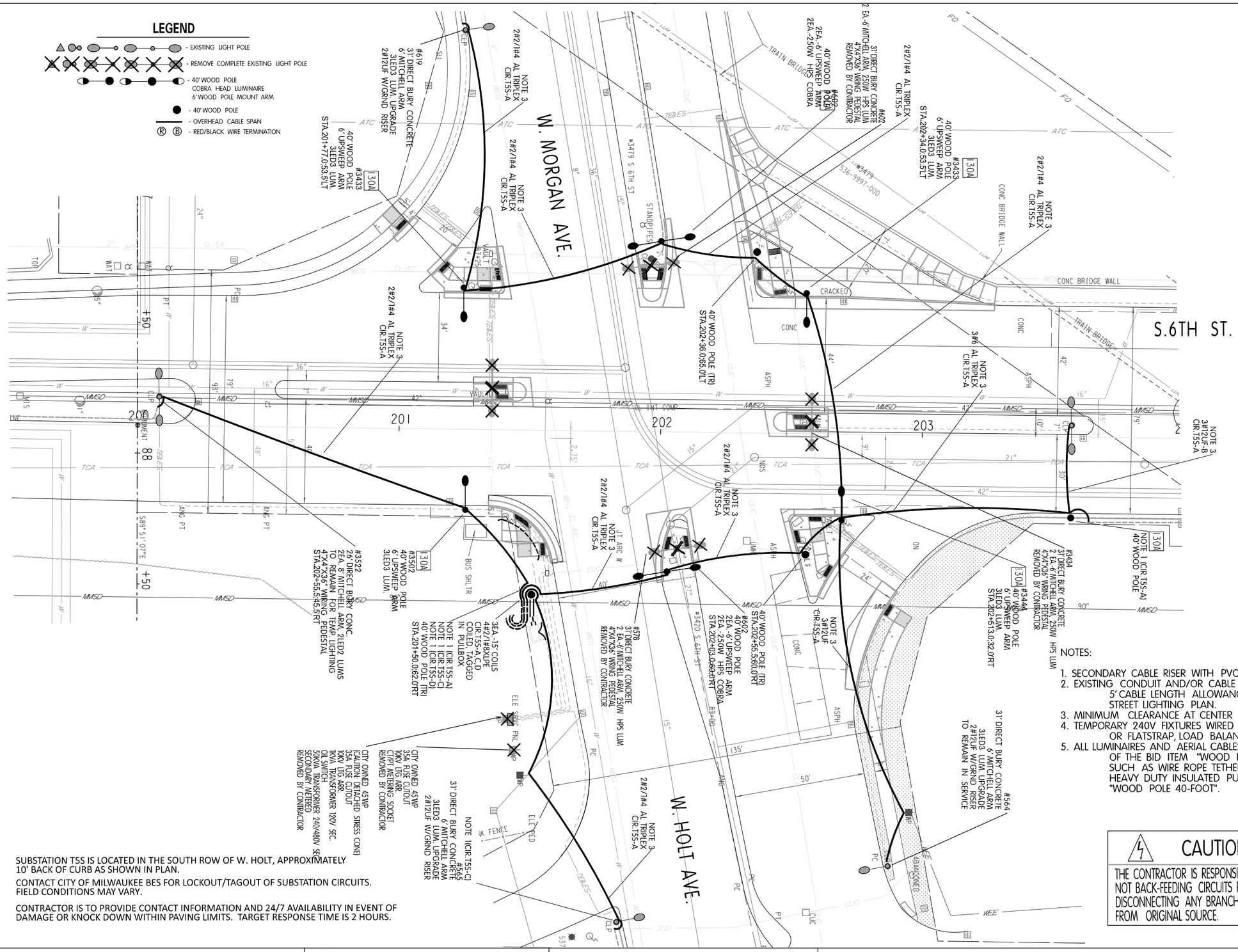

SUMMARY OF SELECTED ITEMS FOR INFORMATION ONLY	
QUANTITY	DESCRIPTION
10 EA	40' WOOD POLES, CLASS 4
850 LF	2-2-4 AL TRIPLEX
140 LF	3#6AL TRIPLEX
8 EA	6' WP ARM, HPS COBRA
7 EA	RISER

NOTES:

1. SECONDARY CABLE RISER WITH PVC COVER ON SPECIFIED CIRCUIT.
2. EXISTING CONDUIT AND/OR CABLE TO REMAIN IN SERVICE. EXCAVATE 5' CABLE LENGTH ALLOWANCE FOR CONNECTION SHOWN IN STREET LIGHTING PLAN.
3. MINIMUM CLEARANCE AT CENTER OF SPAN: 17-FT. ABOVE ROADWAY OR GRADE.
4. TEMPORARY 240V FIXTURES WIRED PHASE TO NEUTRAL USING ALUMINUM TRIPLEX OR FLATSTRAP, LOAD BALANCED AS SPECIFIED BY BLACK/RED TERMINATION.
5. ALL LUMINAIRES AND AERIAL CABLES ARE SEPARATE BID ITEMS AND ARE NOT PART OF THE BID ITEM "WOOD POLE 40-FOOT". ALL REMAINING ITEMS SUCH AS WIRE ROPE TETHERS, WIRE CLIPS, DRIVE HOOKS, SERVICE SLEEVES, HEAVY DUTY INSULATED PULLY CLEVISES ARE INCIDENTAL TO BID ITEM "WOOD POLE 40-FOOT".

SUBSTATION T5S IS LOCATED IN THE SOUTH ROW OF W. HOLT, APPROXIMATELY 10' BACK OF CURB AS SHOWN IN PLAN.

CONTACT CITY OF MILWAUKEE BES FOR LOCKOUT/TAGOUT OF SUBSTATION CIRCUITS. FIELD CONDITIONS MAY VARY.

CONTRACTOR IS TO PROVIDE CONTACT INFORMATION AND 24/7 AVAILABILITY IN EVENT OF DAMAGE OR KNOCK DOWN WITHIN PAVING LIMITS. TARGET RESPONSE TIME IS 2 HOURS.

CAUTION

THE CONTRACTOR IS RESPONSIBLE FOR NOT BACK-FEEDING CIRCUITS PRIOR TO DISCONNECTING ANY BRANCH CIRCUITS FROM ORIGINAL SOURCE.

SCALE, FEET 0 40

SHEET 4 OF 4

LEGEND

- EXISTING STREET LIGHT POLE
- STREET LIGHT POLE (INSTALLED BY CONTRACTOR)
- TRAFFIC SIGNAL MOUNTED ON LIGHT POLE
- PVC CONDUIT (SCHEDULE NOTED ON PLAN)
- STREET LIGHTING (LTP) CABLE (LTP = LOW THERMAL PLASTIC INSULATION) CABLE INSTALLED IN CONDUIT
- ELECTRICAL VAULT
- STREET LIGHTING ENCLOSURE
- TRAFFIC CONTROL CABINET
- EXISTING SIGNAL STANDARD
- TRAFFIC SIGNAL BASE TO BE INSTALLED (CONCRETE BASE TYPE 1)
- MONOTUBE MAST ARM BASE (EXISTING)
- 000 - SEE DETAIL NUMBER FOR ADDITIONAL INFORMATION
- MAST ARM (EXISTING)

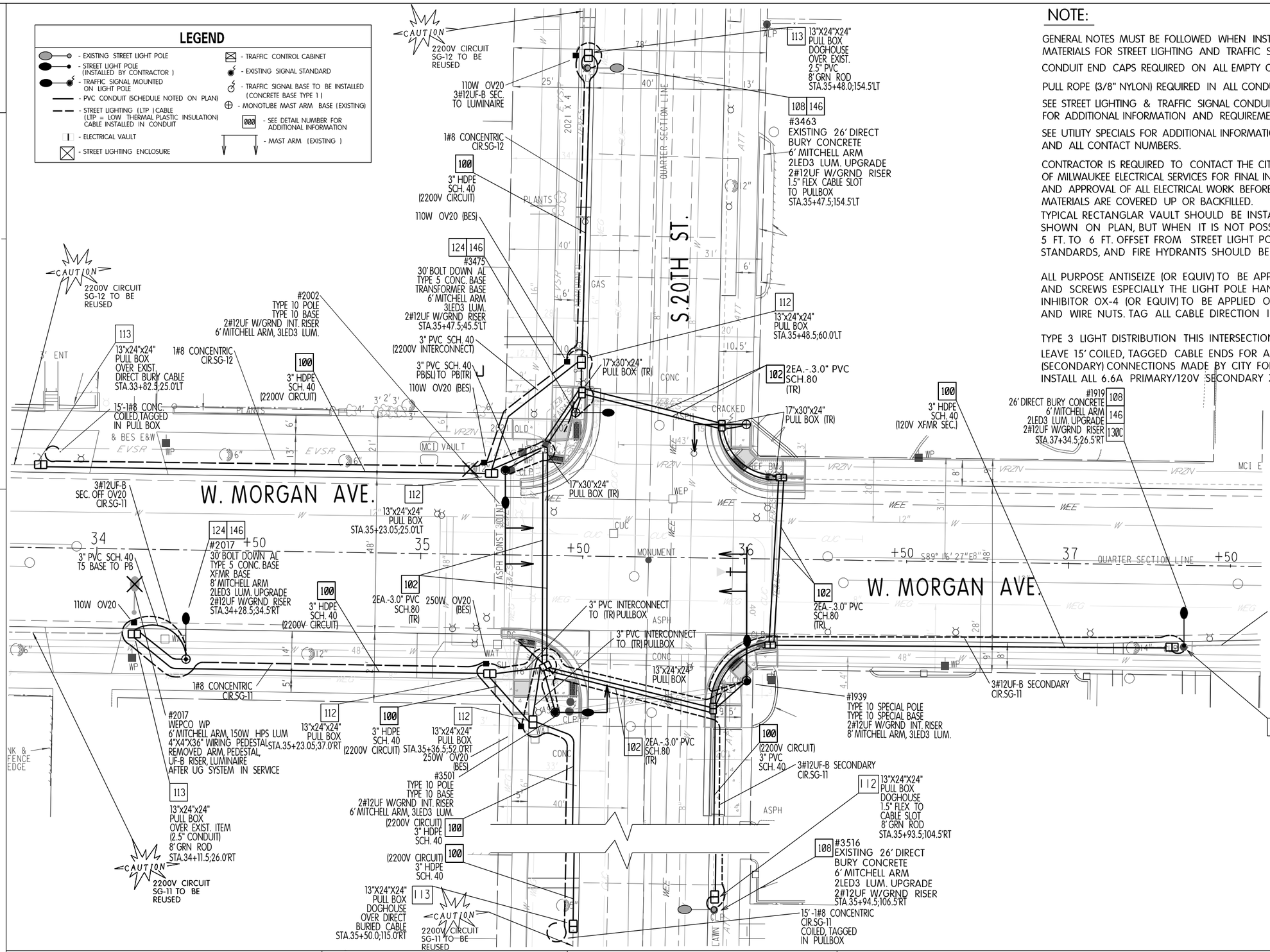

NOTE:

GENERAL NOTES MUST BE FOLLOWED WHEN INSTALLING MATERIALS FOR STREET LIGHTING AND TRAFFIC SIGNALS.

CONDUIT END CAPS REQUIRED ON ALL EMPTY CONDUIT.

PULL ROPE (3/8" NYLON) REQUIRED IN ALL CONDUIT.

SEE STREET LIGHTING & TRAFFIC SIGNAL CONDUIT DETAILS FOR ADDITIONAL INFORMATION AND REQUIREMENTS.

SEE UTILITY SPECIALS FOR ADDITIONAL INFORMATION AND ALL CONTACT NUMBERS.

CONTRACTOR IS REQUIRED TO CONTACT THE CITY OF MILWAUKEE ELECTRICAL SERVICES FOR FINAL INSPECTION AND APPROVAL OF ALL ELECTRICAL WORK BEFORE ANY MATERIALS ARE COVERED UP OR BACKFILLED.

TYPICAL RECTANGLAR VAULT SHOULD BE INSTALLED AS SHOWN ON PLAN, BUT WHEN IT IS NOT POSSIBLE A 5 FT. TO 6 FT. OFFSET FROM STREET LIGHT POLES, SIGNAL STANDARDS, AND FIRE HYDRANTS SHOULD BE USED.

ALL PURPOSE ANTISEIZE (OR EQUIV) TO BE APPLIED ON ALL BOLTS AND SCREWS ESPECIALLY THE LIGHT POLE HAND HOLE PANEL. OXIDE INHIBITOR OX-4 (OR EQUIV) TO BE APPLIED ON ALL WIRE CONNECTION AND WIRE NUTS. TAG ALL CABLE DIRECTION IN VAULT AND HAND HOLE PANEL.

TYPE 3 LIGHT DISTRIBUTION THIS INTERSECTION UNLESS OTHERWISE SPECIFIED.

LEAVE 15' COILED, TAGGED CABLE ENDS FOR ALL 5kV (PRIMARY) & UF-B (SECONDARY) CONNECTIONS MADE BY CITY FORCES. CITY FORCES TO INSTALL ALL 6.6A PRIMARY/120V SECONDARY XFMRS.

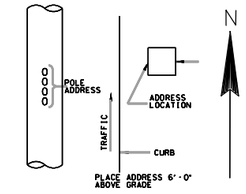

SCALE, FEET 0 30

SHEET 1 OF 5

PROJECT NO: 2984–21–73	HWY: W. MORGAN AVE.	COUNTY: MILWAUKEE	STREET LIGHTING PLAN	SHEET 59	E

NOTE:

GENERAL NOTES MUST BE FOLLOWED WHEN INSTALLING MATERIALS FOR STREET LIGHTING AND TRAFFIC SIGNALS.

CONDUIT END CAPS REQUIRED ON ALL EMPTY CONDUIT.

PULL ROPE (3/8" NYLON) REQUIRED IN ALL CONDUIT.

SEE STREET LIGHTING & TRAFFIC SIGNAL CONDUIT DETAILS FOR ADDITIONAL INFORMATION AND REQUIREMENTS.

SEE UTILITY SPECIALS FOR ADDITIONAL INFORMATION AND ALL CONTACT NUMBERS.

CONTRACTOR IS REQUIRED TO CONTACT THE CITY OF MILWAUKEE ELECTRICAL SERVICES FOR FINAL INSPECTION AND APPROVAL OF ALL ELECTRICAL WORK BEFORE ANY MATERIALS ARE COVERED UP OR BACKFILLED.

TYPICAL RECTANGLAR VAULT SHOULD BE INSTALLED AS SHOWN ON PLAN, BUT WHEN IT IS NOT POSSIBLE A 5 FT. TO 6 FT. OFFSET FROM STREET LIGHT POLES, SIGNAL STANDARDS, AND FIRE HYDRANTS SHOULD BE USED.

LEGEND

- EXISTING STREET LIGHT POLE
- STREET LIGHT POLE (INSTALLED BY CONTRACTOR)
- TRAFFIC SIGNAL MOUNTED ON LIGHT POLE
- PVC CONDUIT (SCHEDULE NOTED ON PLAN)
- STREET LIGHTING (LTP) CABLE (LTP = LOW THERMAL PLASTIC INSULATION) CABLE INSTALLED IN CONDUIT
- ELECTRICAL VAULT
- STREET LIGHTING ENCLOSURE
- TRAFFIC CONTROL CABINET
- EXISTING SIGNAL STANDARD
- TRAFFIC SIGNAL BASE TO BE INSTALLED (CONCRETE BASE TYPE 1)
- MONOTUBE MAST ARM BASE (EXISTING)
- 000 - SEE DETAIL NUMBER FOR ADDITIONAL INFORMATION
- MAST ARM (EXISTING)

NOTE (continued):

ALL PURPOSE ANTISEIZE (OR EQUIV) TO BE APPLIED ON ALL BOLTS AND SCREWS ESPECIALLY THE LIGHT POLE HAND HOLE PANEL. OXIDE INHIBITOR OX-4 (OR EQUIV) TO BE APPLIED ON ALL WIRE CONNECTION AND WIRE NUTS. TAG ALL CABLE DIRECTION IN VAULT AND HAND HOLE PANEL.

TYPE 3 LIGHT DISTRIBUTION THIS INTERSECTION UNLESS OTHERWISE SPECIFIED.

LEAVE 15' COILED, TAGGED CABLE ENDS FOR ALL 5kV (PRIMARY) & UF-B (SECONDARY) CONNECTIONS MADE BY CITY FORCES (OV20 XFMR). CITY FORCES TO INSTALL ALL 6.6A PRIMARY/120V SECONDARY XFMRS.

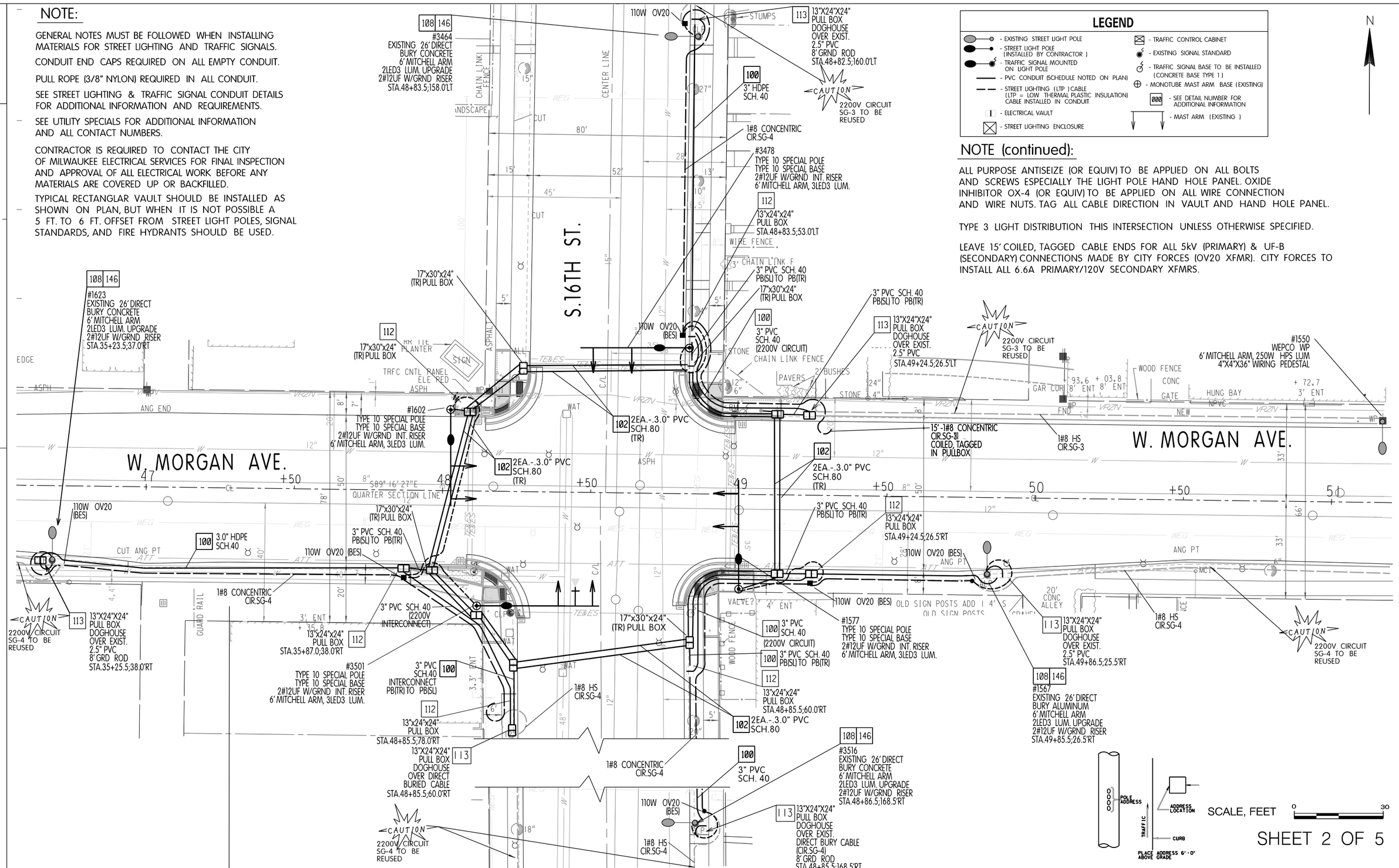

SHEET 2 OF 5

PROJECT NO: 2984-21-73	HWY: W. MORGAN AVE.	COUNTY: MILWAUKEE	STREET LIGHTING PLAN	SHEET 60	E

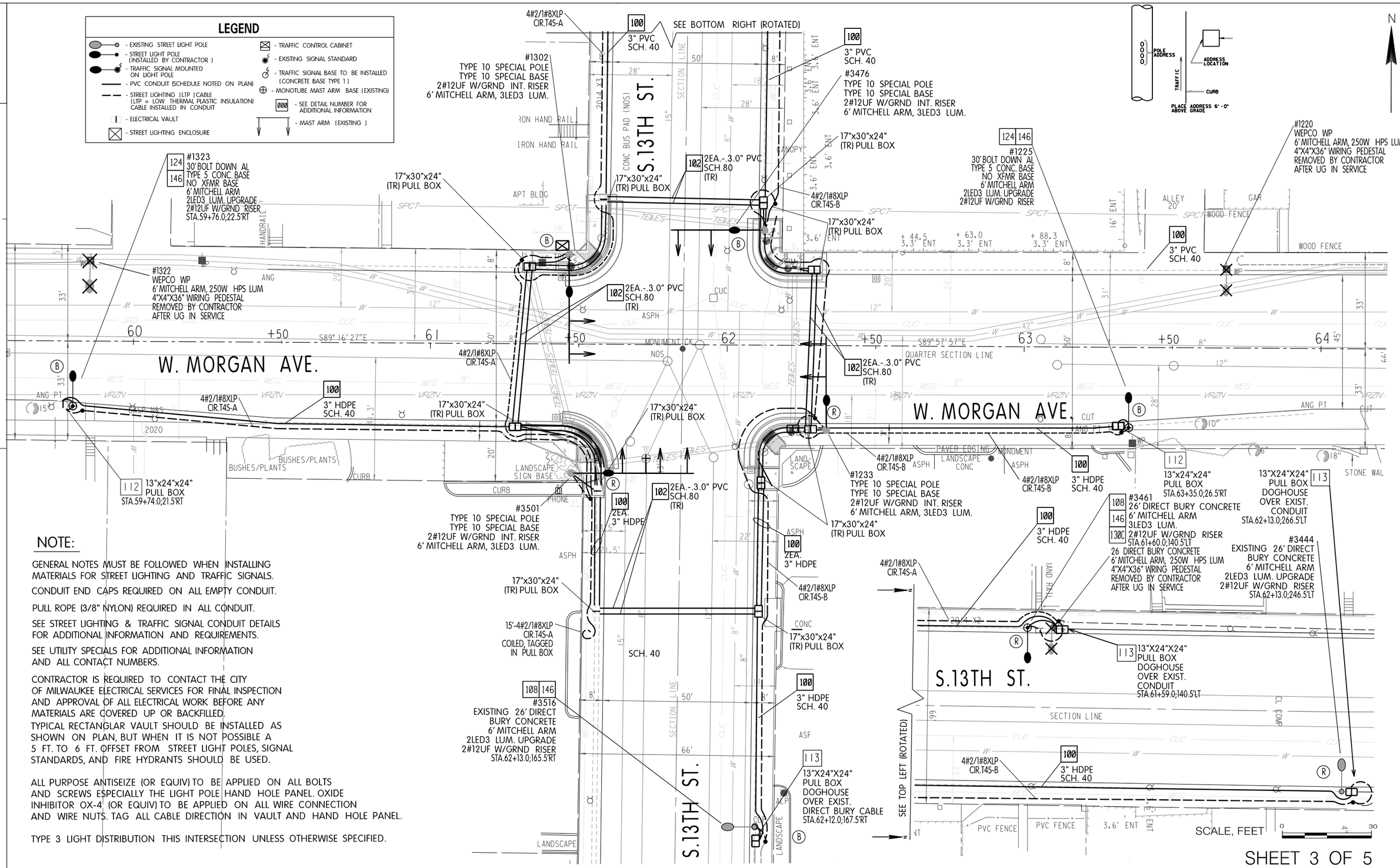

NOTE:

GENERAL NOTES MUST BE FOLLOWED WHEN INSTALLING MATERIALS FOR STREET LIGHTING AND TRAFFIC SIGNALS.

CONDUIT END CAPS REQUIRED ON ALL EMPTY CONDUIT.

PULL ROPE (3/8" NYLON) REQUIRED IN ALL CONDUIT.

SEE STREET LIGHTING & TRAFFIC SIGNAL CONDUIT DETAILS FOR ADDITIONAL INFORMATION AND REQUIREMENTS.

SEE UTILITY SPECIALS FOR ADDITIONAL INFORMATION AND ALL CONTACT NUMBERS.

CONTRACTOR IS REQUIRED TO CONTACT THE CITY OF MILWAUKEE ELECTRICAL SERVICES FOR FINAL INSPECTION AND APPROVAL OF ALL ELECTRICAL WORK BEFORE ANY MATERIALS ARE COVERED UP OR BACKFILLED.

TYPICAL RECTANGLAR VAULT SHOULD BE INSTALLED AS SHOWN ON PLAN, BUT WHEN IT IS NOT POSSIBLE A 5 FT. TO 6 FT. OFFSET FROM STREET LIGHT POLES, SIGNAL STANDARDS, AND FIRE HYDRANTS SHOULD BE USED.

ALL PURPOSE ANTISEIZE (OR EQUIV) TO BE APPLIED ON ALL BOLTS AND SCREWS ESPECIALLY THE LIGHT POLE HAND HOLE PANEL. OXIDE INHIBITOR OX-4 (OR EQUIV) TO BE APPLIED ON ALL WIRE CONNECTION AND WIRE NUTS. TAG ALL CABLE DIRECTION IN VAULT AND HAND HOLE PANEL.

TYPE 3 LIGHT DISTRIBUTION THIS INTERSECTION UNLESS OTHERWISE SPECIFIED.

SHEET 3 OF 5

PROJECT NO: 2984–21–73	HWY: W. MORGAN AVE.	COUNTY: MILWAUKEE	STREET LIGHTING PLAN	SHEET 61	E

2

NOTE:

GENERAL NOTES MUST BE FOLLOWED WHEN INSTALLING MATERIALS FOR STREET LIGHTING AND TRAFFIC SIGNALS.

CONDUIT END CAPS REQUIRED ON ALL EMPTY CONDUIT.

PULL ROPE (3/8" NYLON) REQUIRED IN ALL CONDUIT.

SEE STREET LIGHTING & TRAFFIC SIGNAL CONDUIT DETAILS FOR ADDITIONAL INFORMATION AND REQUIREMENTS.

SEE UTILITY SPECIALS FOR ADDITIONAL INFORMATION AND ALL CONTACT NUMBERS.

CONTRACTOR IS REQUIRED TO CONTACT THE CITY OF MILWAUKEE ELECTRICAL SERVICES FOR FINAL INSPECTION AND APPROVAL OF ALL ELECTRICAL WORK BEFORE ANY MATERIALS ARE COVERED UP OR BACKFILLED.

TYPICAL RECTANGLAR VAULT SHOULD BE INSTALLED AS SHOWN ON PLAN, BUT WHEN IT IS NOT POSSIBLE A 5 FT. TO 6 FT. OFFSET FROM STREET LIGHT POLES, SIGNAL STANDARDS, AND FIRE HYDRANTS SHOULD BE USED.

ALL PURPOSE ANTISEIZE (OR EQUIV) TO BE APPLIED ON ALL BOLTS AND SCREWS ESPECIALLY THE LIGHT POLE HAND HOLE PANEL. OXIDE INHIBITOR OX-4 (OR EQUIV) TO BE APPLIED ON ALL WIRE CONNECTION AND WIRE NUTS. TAG ALL CABLE DIRECTION IN VAULT AND HAND HOLE PANEL.

TYPE 3 LIGHT DISTRIBUTION THIS INTERSECTION UNLESS OTHERWISE SPECIFIED.

HYDROVAC TYPE 5 BASES THIS INTERSECTION.

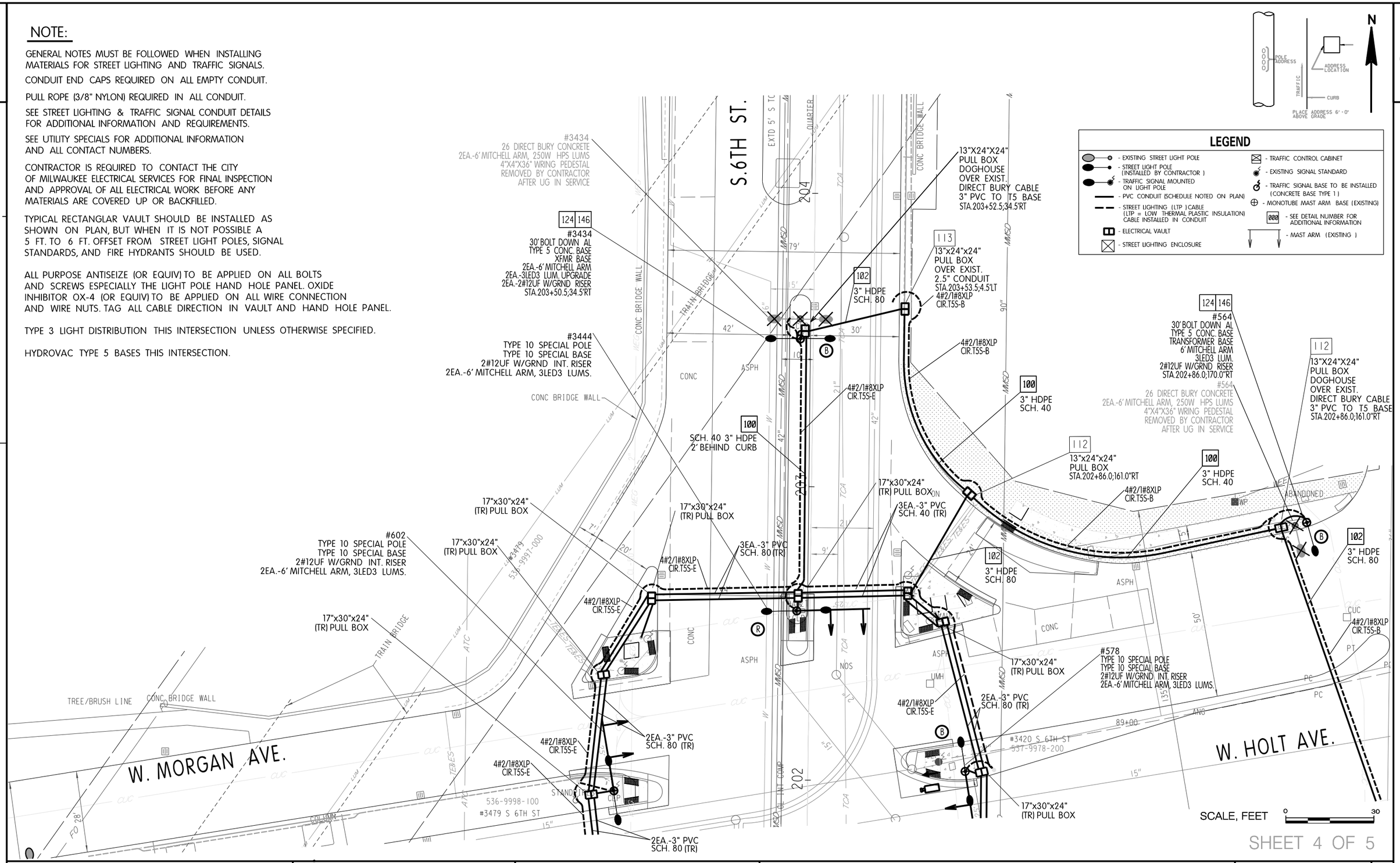

SHEET 4 OF 5

2

PROJECT NO: 2984–21–73	HWY: W. MORGAN AVE.	COUNTY: MILWAUKEE	STREET LIGHTING PLAN	SHEET 62	E

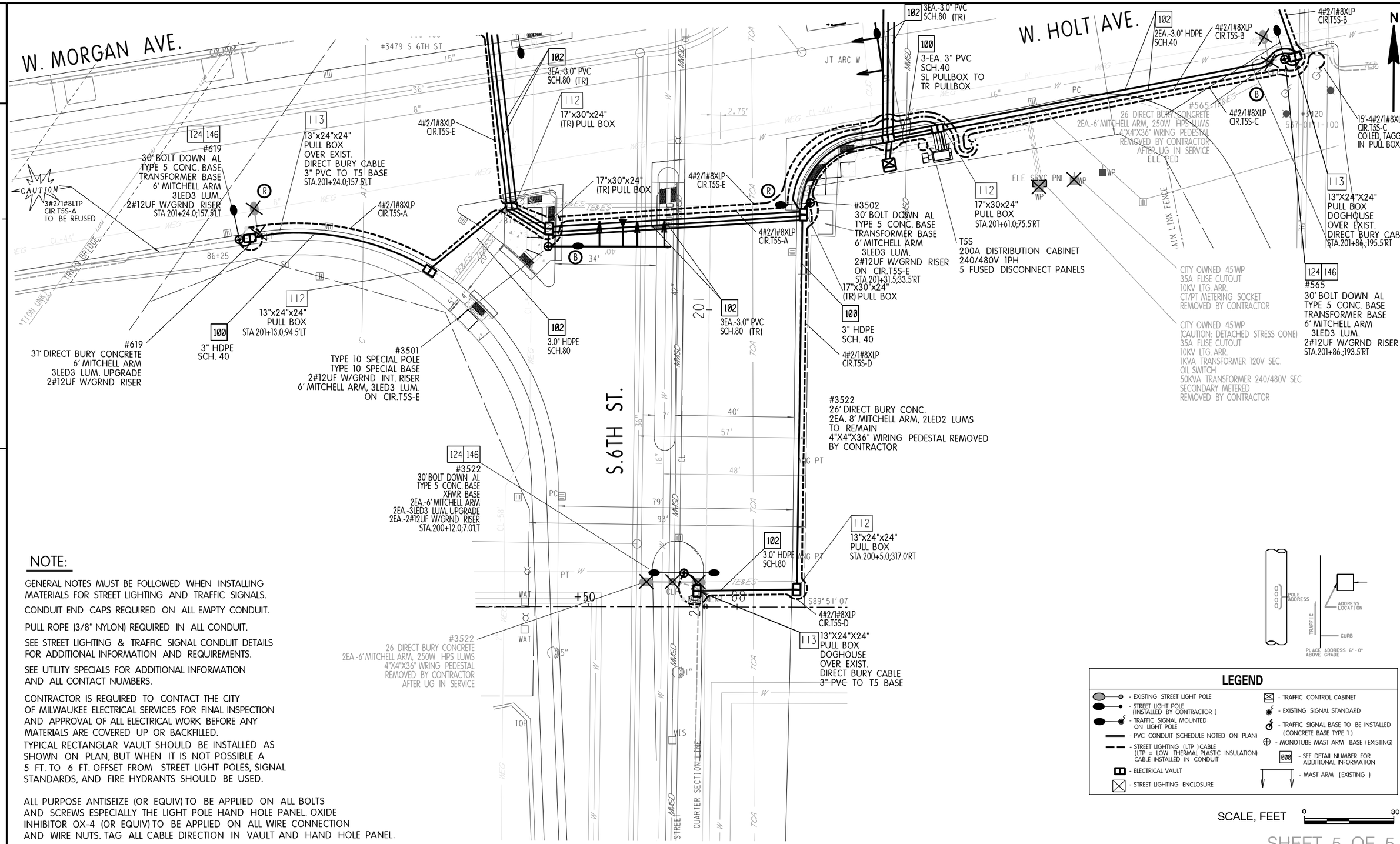

NOTE:

GENERAL NOTES MUST BE FOLLOWED WHEN INSTALLING MATERIALS FOR STREET LIGHTING AND TRAFFIC SIGNALS.

CONDUIT END CAPS REQUIRED ON ALL EMPTY CONDUIT.

PULL ROPE (3/8" NYLON) REQUIRED IN ALL CONDUIT.

SEE STREET LIGHTING & TRAFFIC SIGNAL CONDUIT DETAILS FOR ADDITIONAL INFORMATION AND REQUIREMENTS.

SEE UTILITY SPECIALS FOR ADDITIONAL INFORMATION AND ALL CONTACT NUMBERS.

CONTRACTOR IS REQUIRED TO CONTACT THE CITY OF MILWAUKEE ELECTRICAL SERVICES FOR FINAL INSPECTION AND APPROVAL OF ALL ELECTRICAL WORK BEFORE ANY MATERIALS ARE COVERED UP OR BACKFILLED.

TYPICAL RECTANGLAR VAULT SHOULD BE INSTALLED AS SHOWN ON PLAN, BUT WHEN IT IS NOT POSSIBLE A 5 FT. TO 6 FT. OFFSET FROM STREET LIGHT POLES, SIGNAL STANDARDS, AND FIRE HYDRANTS SHOULD BE USED.

ALL PURPOSE ANTISEIZE (OR EQUIV) TO BE APPLIED ON ALL BOLTS AND SCREWS ESPECIALLY THE LIGHT POLE HAND HOLE PANEL. OXIDE INHIBITOR OX-4 (OR EQUIV) TO BE APPLIED ON ALL WIRE CONNECTION AND WIRE NUTS. TAG ALL CABLE DIRECTION IN VAULT AND HAND HOLE PANEL.

TYPE 3 LIGHT DISTRIBUTION THIS INTERSECTION UNLESS OTHERWISE SPECIFIED.

LEGEND

- EXISTING STREET LIGHT POLE
- STREET LIGHT POLE (INSTALLED BY CONTRACTOR)
- TRAFFIC SIGNAL MOUNTED ON LIGHT POLE
- PVC CONDUIT (SCHEDULE NOTED ON PLAN)
- STREET LIGHTING (LTP) CABLE (LTP = LOW THERMAL PLASTIC INSULATION) CABLE INSTALLED IN CONDUIT
- ELECTRICAL VAULT
- STREET LIGHTING ENCLOSURE
- TRAFFIC CONTROL CABINET
- EXISTING SIGNAL STANDARD
- TRAFFIC SIGNAL BASE TO BE INSTALLED (CONCRETE BASE TYPE 1)
- MONOTUBE MAST ARM BASE (EXISTING)
- 000 - SEE DETAIL NUMBER FOR ADDITIONAL INFORMATION
- MAST ARM (EXISTING)

SCALE, FEET 0 30

SHEET 5 OF 5

PROJECT NO: 2984-21-73	HWY: W. MORGAN AVE.	COUNTY: MILWAUKEE	STREET LIGHTING PLAN	SHEET 63	E

2

TRAFFIC SIGNAL GENERAL NOTES:

PRIOR TO CONSTRUCTION, THE LOCATION OF UNDERGROUND UTILITIES SHALL BE DETERMINED IN THE FIELD BY CONTACTING "DIGGERS HOTLINE."

THE LOCATION OF EXISTING AND PROPOSED UTILITIES AS SHOWN ON THE PLANS ARE APPROXIMATE, IN ADDITION, THERE MAY BE OTHER UTILITIES WITHIN THE PROJECT AREA WHICH ARE NOT SHOWN. THE CONTRACTOR SHALL VERIFY THE LOCATIONS OF ALL UTILITIES PRIOR TO CONSTRUCTION.

TRAFFIC SHALL BE INSTALLED IN COMPLIANCE WITH WISCONSIN DEPARTMENT OF TRANSPORTATION STANDARD SPECIFICATIONS SECTIONS 652 TO 657 AND 659 EXCEPT:

ALL CHANGES OR ANY DEVIATIONS FROM PLANS MUST BE APPROVED BY TRAFFIC ENGINEERING.

1 DETAILS OF CONSTRUCTION MATERIALS AND WORKMANSHIP NOT SHOWN ON THESE DRAWINGS SHALL CONFORM TO THE PERTINENT REQUIREMENTS OF THE CONTRACT.

2 THE CONTRACTOR IS RESPONSIBLE FOR ALL COSTS INCLUDING REPAIRS, REPLACEMENT OR RELOCATION ETC. OF TRAFFIC FACILITIES IF THE CONTRACTOR DOES ANY DEVIATION FROM THE TRAFFIC DESIGN WITHOUT THE TRAFFIC ENGINEERS SIGNED APPROVAL.

3 LOCATIONS OF THE HDPE AND NONMETALLIC PVC CONDUITS ARE IDENTIFIED IN THE PLANS WHERE THEY ARE REQUIRED. HOWEVER, INSTALLATION MAY REQUIRE INTEGRATION WITH EXISTING FIELD CONDITIONS. UNDER THE APPROVAL OF THE CITY OF MILWAUKEE DPW TRAFFIC, APPROPRIATE ADJUSTMENT ON CONDUIT LOCATIONS MAY BE MADE IF THE FIELD CONDITIONS ARE SUCH THAT THE CONDUIT CANNOT BE INSTALLED AT THE SPECIFIED LOCATIONS. FIELD MARK EACH CONDUIT LOCATION IN RED TO ILLUSTRATE AS BUILT CONDITIONS.

4 CONDUIT INSTALLED BEHIND CURB AND UNDER DRIVEWAYS SHALL BE INSTALLED AT A DISTANCE OF MINIMUM OF 6 INCHES AWAY FROM THE BACK OF CURB TO THE CENTER LINE OF CONDUIT, AND MINIMUM 24 INCHES DOWN MEASURED FROM THE TOP OF CURB OR FINISHED GRADE TO THE TOP OF CONDUIT.

5 DEPTH OF CONDUIT INSTALLED BELOW STREETS, HIGHWAYS, AND ALLEYS SHALL BE 24-INCHES MINIMUM AND 36-INCHES MAXIMUM. (MEASURED FROM FINISHED FLANGE LINE) IF THE CONTRACTOR DOES ANY DEVIATION FROM THE TRAFFIC DESIGN WITHOUT THE TRAFFIC ENGINEERS SIGNED APPROVAL.

6 CONDUIT LATERALS SHALL BE TRENCHED UNDER PAVEMENT BEFORE PAVEMENT CONSTRUCTION.

7 WHEN THERE IS MORE THAN ONE CONDUIT TO BE INSTALLED, PLACE ALL CONDUITS IN THE SAME TRENCH, OR BORE MULTIPLE CONDUITS TOGETHER AT THE SAME TIME.

8 CONDUIT INSTALLATION THAT REQUIRE TRENCHING SHALL NOT BE BACKFILLED PRIOR TO INSPECTION ON THE CONDUIT.

9 ANY EXCEPTION TO THE MINIMUM OR MAXIMUM DEPTH SHALL BE ONLY WITH THE WRITTEN APPROVAL OF THE STREET LIGHTING ENGINEER.

10 BENDING OF PVC ELECTRICAL CONDUIT SHALL BE ACCOMPLISHED BY USING A BLANKET OR IMMERSION TYPE TANK DESIGNED FOR THE PURPOSE OF BENDING PVC ELECTRICAL CONDUIT.

11 ALL CUT ENDS SHALL BE TRIMMED INSIDE AND OUTSIDE TO REMOVE ALL ROUGH EDGES ON ALL CONDUITS.

12 PRIOR TO CONDUIT ACCEPTANCE, ALL OPEN CONDUIT ENDS, AND UN-TERMINATED CONDUITS SHALL BE THOROUGHLY CLEANED AND BE CAPPED IMMEDIATELY AFTER INSTALLATION WITH THE APPROPRIATE CAST PLASTIC CAP WHICH FITS SNUGGLY ON THE CONDUIT, BUT EASILY REMOVED. DUCT TAPE OR ANY OTHER CAPPING METHOD IS NOT ACCEPTABLE.

13 ALL CONDUIT BEING FURNISHED AND INSTALLED SHALL HAVE THE U.L. APPROVED LABEL FIRMLY ATTACHED.

14 PULL ROPE (3/8-INCH NYLON) SHALL BE INSTALLED IN ALL NEW CONDUIT.

15 CONDUIT RUNS SHALL BE THE SAME SIZE CONDUIT FROM ONE END TO THE OTHER (FROM PULL BOX-TO-PULL BOX OR JUNCTION BOX OR PULL BOX TO CONCRETE BASE, OR BASE-TO-BASE ETC.).

16 UNLESS THE CONDUIT IS DESIGNED AND SHOWN WITH BENDS ON THE PLANS, ALL CONDUIT RUNS SHALL BE STRAIGHT (WITHOUT BENDS) FROM PULL BOX TO PULL BOX, PULL BOX TO CONCRETE BASE, AND PULL BOX TO ENCLOSURE. OTHERWISE IT MUST BE APPROVED BY THE TRAFFIC ENGINEER.

TRAFFIC SIGNAL GENERAL NOTES:

2

17 MINIMUM CONDUIT CLEARANCES FOR CONDUIT CROSSINGS AND PULL BOXES FROM THE FOLLOWING:
FIRE HYDRANTS: 6-FT TREE TRUNKS: 10-FT END OF DRIVEWAY FLARES: 6-FT
UNLESS NOTED OTHERWISE, OR APPROVED BY THE TRAFFIC ENGINEER.

18 HAND DIGGING MAY BE REQUIRED FOR LOCATIONS ADJACENT TO EXISTING GAS AND POWER LINES. HAND EXCAVATION SHOULD BE ANTICIPATED AND WILL BE CONSIDERED INCIDENTAL TO THE BID ITEM BEING INSTALLED. COORDINATE ALL WORK NEAR GAS LINES WITH WE ENERGIES.

19 TYPICAL RECTANGULAR PULL BOXES / VAULTS SHOULD BE INSTALLED AS SHOWN ON PLANS, BUT WHEN IT IS NOT POSSIBLE, A 5 FT. TO 6 FT. OFFSET FROM STREET LIGHT POLES, SIGNAL STANDARDS AND FIRE HYDRANTS SHOULD BE USED, OTHERWISE APPROVED BY THE STREET LIGHTING ENGINEER.

20 ALL HDPE OR NONMETALLIC PVC CONDUITS THAT CONNECT TO PULL BOXES REQUIRE A PVC END BELL CONNECTOR INSIDE THE PULL BOX

21 PROVIDE REMOVABLE SEALANT SUCH AS DUCT SEAL IN THE CONDUITS AT THE CABINETS, PULL BOXES AND JUNCTION BOXES TO AVOID CONDENSATION CAUSED BY AIRFLOW THROUGH THE CONDUITS DUE TO TEMPERATURE DIFFERENCE. THIS WORK SHALL BE INCIDENTAL TO ASSOCIATED CONDUIT PAY ITEM.

22 PROVIDE 3 INCH PVC SCHEDULE 40 CONDUIT ELBOWS IN ALL GROUND MOUNTED CONCRETE LIGHT BASES FOR CABLE IN DUCT TYPE INSTALLATION. THIS WORK IS INCIDENTAL TO CONCRETE BASES PAY ITEMS.

23 AT EACH SIGNAL STANDARD BASE PROVIDE 2 INCH PVC SCHEDULE 40 CONDUIT FROM PULL BOX TO SIGNAL STANDARD BASE. INSTALLATION OF PULL BOX AND CONDUIT ARE INCIDENTAL TO SIGNAL STANDARD BASE INSTALLATION WORK.

24 UNDERGROUND WIRE & CONDUIT SHOWN ON PLANS TO BE ABANDONED IN PLACE UNLESS DIRECTED BY THE ENGINEER. CONTRACTOR MAY CHOOSE TO REMOVE CONDUCTOR AT THEIR OWN EXPENSE.

25 LIGHT POLES INSTALLED BEHIND THE CURB NEED TO BE SET 30 INCHES BACK FROM FACE OF CURB TO CENTER OF POLE, SO TO MEET THE MINIMUM DISTANCE OF 24 INCHES FROM THE CURB FACE TO THE CURB SIDE FACE OF THE POLE.

26 ON ALL NEW STREET LIGHT POLES A PLAQUE WITH THE POLE NUMBER AS SHOWN ON THE PLANS SHALL BE AFFIXED ONTO THE POLE SHAFT AS PART OF POLE INSTALLATION.

27 ALL WIRE CONNECTIONS REQUIRE ANTI-OXIDANT TO BE APPLIED TO THE CONNECTIONS

28 ALL HARDWARE NUT AND BOLT CONNECTIONS REQUIRE ANTI SEIZE TO BE APPLIED TO THEM

29 COORDINATE NEW CONDUIT CONNECTIONS WITH EXISTING CONDUIT, DUCT PACKAGES, AND PULL BOXES/ VAULTS/ MANHOLES WITH CITY OF MILWAUKEE TRAFFIC. THE CITY REQUIRES THREE WORKING DAYS ADVANCED NOTICE. CONTACT ELECTRICAL SUPERVISOR
TRAFFIC SIGNALS - RUDY GUTIERREZ (OFFICE) 414-286-5941 (CELL) 414-708-5148
TRAFFIC SIGNALS - DISPATCHER @ 414-286-3687

30 IMMEDIATELY AFTER THE CONTRACTOR HAS COMPLETED ALL THE ELECTRICAL PULL BOXES / VAULTS, CONDUIT AND CONDUIT CONNECTIONS, AND JUST BEFORE ELECTRICAL WORK IS COVERED UP WITH CONCRETE, SOIL, OR ETC. THE CONTRACTOR IS REQUIRED TO CONTACT THE CITY OF MILWAUKEE ELECTRICAL SHOP SUPERVISORS FOR FINAL INSPECTION AND APPROVAL OF ALL WORK.
TRAFFIC SIGNALS - RUDY GUTIERREZ (OFFICE) 414-286-5941 (CELL) 414-708-5148
TRAFFIC SIGNALS - DISPATCHER @ 414-286-3687

31 CONTRACTOR SHALL SUPPLY AS-BUILT DRAWINGS FOR ALL WORK BEING DONE DETAILING THE FINAL PLACEMENT OF CONDUIT, CABLING, EQUIPMENT, AND GEOMETRIC MODIFICATIONS UNDER THE CONTRACT. PROVIDE (.PDF FORMAT) COPY CONFORMING TO CMM 1-65.14, OR RECORD ALL CHANGES IN RED INK ONLY ON THE AS-LET (DESIGN) PAPER DRAWINGS. THE CITY OF MILWAUKEE DPW ENGINEER WILL REJECT AS-BUILTS WITH INCOMPLETE OR INCORRECT CONTENT OR NOT CONFORMING TO CMM STANDARDS.

TRAFFIC SIGNAL GENERAL NOTES:

AS-BUILT GUIDELINES:

PROVIDE AS-BUILT DRAWINGS DETAILING THE FINAL PLACEMENT OF CONDUIT, CABLING, EQUIPMENT, AND GEOMETRIC MODIFICATIONS UNDER THE CONTRACT. PROVIDE PDF COPY CONFORMING TO CMM 1-65.14, OR RECORD ALL CHANGES IN RED INK ONLY ON THE AS-LET (DESIGN) PAPER DRAWINGS. THE ENGINEER WILL REJECT AS-BUILTS WITH INCOMPLETE OR INCORRECT CONTENT OR NOT CONFORMING TO CMM STANDARDS.

UPON PROJECT COMPLETION, FOLLOW THE WISDOT REQUIREMENTS PER CMM 165.12 AS-BUILT PLANS, THE PROJECT ENGINEER AND/OR ELECTRICAL CONTRACTOR SHALL SUBMIT AN ELECTRONIC AS-BUILT PLAN. ANY CHANGES FROM THE AS-LET PLAN THAT WERE BUILT INTO THE PROJECT SHOULD BE RECORDED IN RED USING ADOBE ACROBAT PROFESSIONAL OR EQUIVALENT SOFTWARE. DO NOT SCAN FIELD NOTES TO CREATE THE DIGITAL AS-BUILT PLAN.

IF THERE IS A STRUCTURE DRAWING, INCLUDE ALL STRUCTURES DRAWING SHEETS. IT IS THE RESPONSIBILITY OF THE CONTRACTOR TO INSERT ANY ADDENDUM OR REPLACEMENT DRAWING SHEETS. TO DO THIS, RENUMBER THEM SIMILARLY TO THE ORIGINAL DRAWING SHEET.

FOR EXAMPLE:
REVISED SHEET 5 WOULD REPLACE SHEET 5. HOWEVER, ALL THE ORIGINAL SHEETS SHALL REMAIN IN THE AS-BUILT. IF THE SHEET HAS BEEN REPLACED CROSS IT OUT WITH AN X AND INDICATE THE NUMBER OF ITS REPLACEMENT SHEET. IF ADDITIONAL SHEETS WERE ADDED, INSERT THEM IN THE ORIGINAL LOCATION AND LABEL THEM WITH THE PREVIOUS SHEET NUMBER FOLLOWED BY AN "A", "B", "C", ETC.

NOTE THE SHEET CHANGES ON THE TITLE SHEET UNDER THE ORDER OF SHEETS.

THE TITLE SHEET OF THE AS-BUILT DRAWING SHOULD INCLUDE THE FOLLOWING INFORMATION:
AS-BUILT DRAWING
SUPERVISOR:
PROJECT MANAGER:
CONTRACTOR LEADER:
CONTRACTOR COMAPNY:
WORK STARTED:
WORK COMPLETED:

LINE OUT OR CROSS OUT ALL CHANGED INFORMATION AND WRITE-IN THE CORRECTED INFORMATION ABOVE THE ORIGINAL OR CLOSE TO IT WHEREVER POSSIBLE. USE BLANK SPACES ON THE DRAWING SO NOTES ARE NOT SUPERIMPOSED. DRAWINGS WITH EXCESSIVE DETAIL MAY REQUIRE AN ALTERNATE APPROACH. NUMBERED CHANGES OR ADDITIONS MAY BE SHOWN ON SUPPLEMENTAL NON-DRAWING SHEETS.

- LOCATE AND CLEARLY LABEL ALL CONDUIT RUNS, FITTINGS, SPLICE VAULTS, PULL BOXES, METER PEDESTALS CONCRETE BASES, TRANSFORMERS, POLES AND OTHER APPURTENANCES IN TWO DIRECTIONS. SWING TIES SHOULD BE MADE FROM THE OBJECTS THAT ARE PERMANENT IN NATURE AND VISIBLE ON THE FINISHED SURFACE.
- STREET NAMES SHALL BE ON ALL SHEETS.
- SHOW ALL SIZES AND MATERIAL TYPES OF PIPES AND CONDUITS, IF CHANGED OR MODIFIED FROM ORIGINAL DESIGN.
- ALL HORIZONTAL DISTANCES SHALL BE SHOWN TO THE NEAREST TENTH OF A FOOT (I.E., 205.3').
  ALL VERTICAL DISTANCES SHALL BE TO THE NEAREST INCH (I.E., 24")
- SHOW LOCATION AND ELEVATIONS ON CONDUIT AND FITTINGS WHERE CHANGES OR DEFLECTIONS IN DIRECTION OCCUR.
- SPECIAL DETAIL DRAWINGS MAY BE REQUIRED WHERE INSTALLATIONS ARE NOT SHOWN ON APPROVED CONSTRUCTION DRAWINGS FOR WHATEVER REASON OR WHERE REQUIRED FOR CLARITY.
- TYPICAL SERVICE INSTALLATION DETAILS WITH DEVIATIONS FROM ORIGINAL PLANS OR STANDARD DETAILS SHALL BE NOTED ON AS-BUILT DRAWINGS.
- NO ARBITRARY MARK-UPS WILL BE PERMITTED.

IF THERE ARE NO CORRECTIONS OR ADDITIONS TO THE AS-LET PLAN(S) PUT "NO CHANGE" ON THE SHEET WITH ALL OTHER REQUIRED AS-BUILT INFORMATION.

BY MAIL SEND TO:
CITY OF MILWAUKEE
INFRASTRUCTURE SERVICES DIVISION
TRANSPORTATION SECTION - CONSTRUCTION
CHIEF CONSTRUCTION ENGINEER
TONY KOTECKI
841 NORTH BROADWAY, ROOM 701
MILWAUKEE, WISCONSIN 53202

BY EMAIL SEND TO:
CITY OF MILWAUKEE
INFRASTRUCTURE SERVICES DIVISION
TRANSPORTATION SECTION - CONSTRUCTION
CHIEF CONSTRUCTION ENGINEER
TONY KOTECKI
AKOTEC@MILWAUKEE.GOV

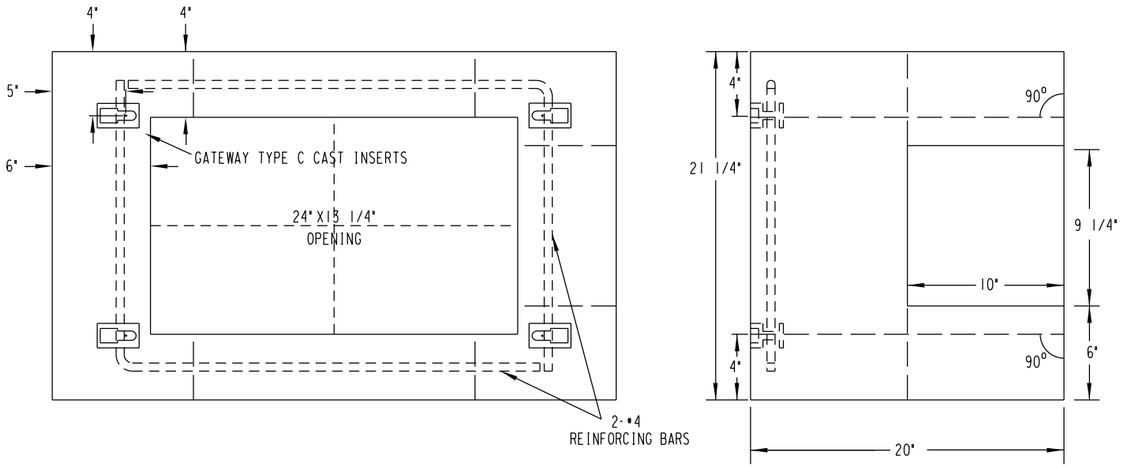

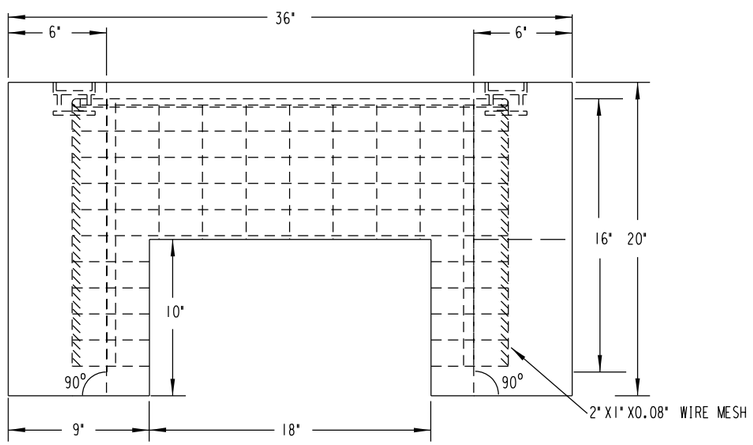

NOT TO SCALE

6 BAG MIX #1 STONE

COMM. CODE XXXX-XXX PRE-CAST CONCRETE FOUNDATION TRAFFIC SIGNAL CABINETS P1 AND P2				
TRAFFIC ENGINEERING AND ELECTRICAL SERVICES D.P.W. CITY OF MILWAUKEE				
TRAFFIC CONTROL MATERIAL				
DATE 8-30-16	SCALE N.T.S.	DRAWN JAB/JOZ	CHECKED SCR	APPROVED JCB
SUPERSEDES	REVISED DATE	DRG.		
SUPERSEDED BY	NEW DRG.	C-16-500-T		

125 DETAIL

TYPICAL TRAFFIC CONTROL
CABINET CONRETE FOUNDATION

ANY DEVIATIONS FROM DETAIL WILL REQUIRE PERMISSION
FROM TRAFFIC SIGNAL FORCES.
CONTACT DISPATCHER AT (414) 286-3687 FOR SHOP SUPERVISOR.

THE CONTRACTOR IS REQUIRED TO INSTALL EXPANSION JOINT FILLER INTO THE CONCRETE WALK, WHICH SHALL BE 1/2" WIDE MINIMUM TO BE USED TO CREATE A SEPARATION BETWEEN A SMALL CONCRETE AREA AROUND THE TRAFFIC & STREET LIGHTING FACILITIES AND THE REST OF THE CONCRETE WALK.

THE BOX SIZE OF THE AREA CREATED USING THE EXPANSION JOINT FILLER IS STANDARD AROUND LIGHT POLES AND TRAFFIC SIGNALS, BUT WILL VARY WHEN PLACED AROUND TRAFFIC & LIGHTING CONTROL CABINETS.

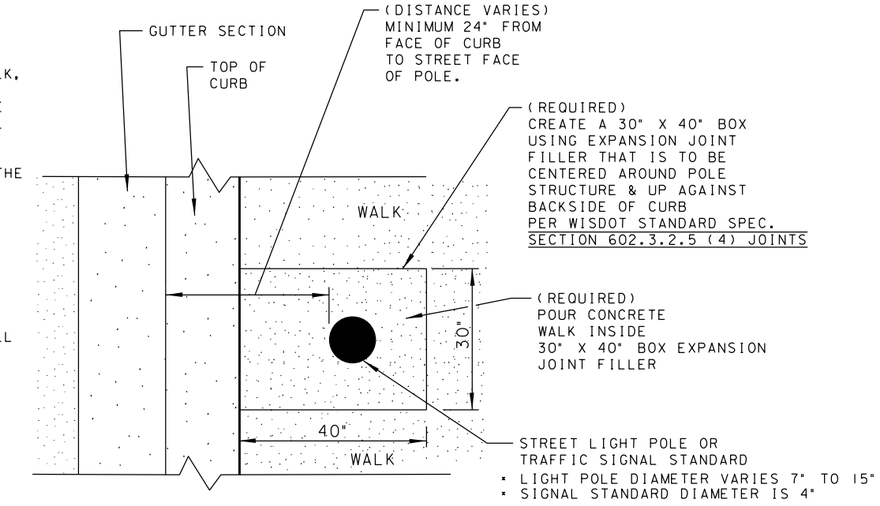

122 DETAIL VERSION #1

TYPICAL BOX EXPANSION JOINT FILLER
AROUND TRAFFIC SIGNAL
OR STREET LIGHTING CONTROL FACILITIES

ANY DEVIATIONS FROM DETAIL WILL REQUIRE PERMISSION FROM STREET LIGHTING FORCES.
CONTACT DISPATCHER AT (414) 286-5944 FOR THE APPROPRIATE SHOP SUPERVISOR.

NOT TO SCALE

THE CONTRACTOR IS REQUIRED TO INSTALL EXPANSION JOINT FILLER INTO THE CONCRETE WALK, WHICH SHALL BE 1/2" WIDE MINIMUM TO BE USED TO CREATE A SEPARATION BETWEEN A SMALL CONCRETE AREA AROUND THE TRAFFIC & STREET LIGHTING FACILITIES AND THE REST OF THE CONCRETE WALK.

THE BOX SIZE OF THE AREA CREATED USING THE EXPANSION JOINT FILLER IS STANDARD AROUND LIGHT POLES AND TRAFFIC SIGNALS, BUT WILL VARY WHEN PLACED AROUND TRAFFIC & LIGHTING CONTROL CABINETS.

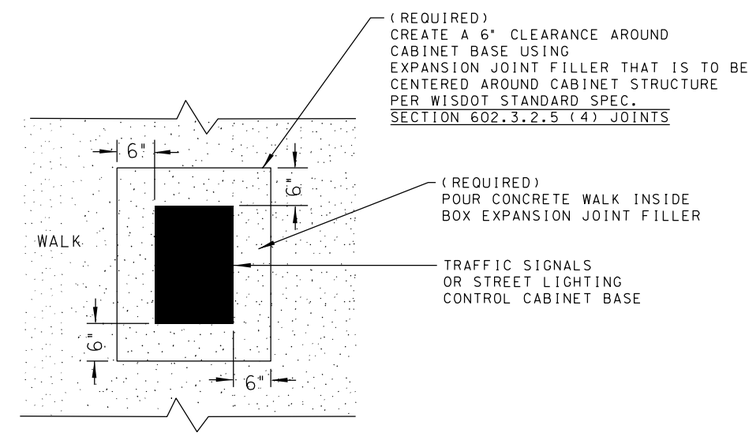

122 DETAIL VERSION #2

TYPICAL BOX EXPANSION JOINT FILLER
AROUND TRAFFIC SIGNAL
OR STREET LIGHTING CONTROL CABINET

ANY DEVIATIONS FROM DETAIL WILL REQUIRE PERMISSION FROM STREET LIGHTING FORCES.
CONTACT DISPATCHER AT (414) 286-5944 FOR THE APPROPRIATE SHOP SUPERVISOR.

NOT TO SCALE

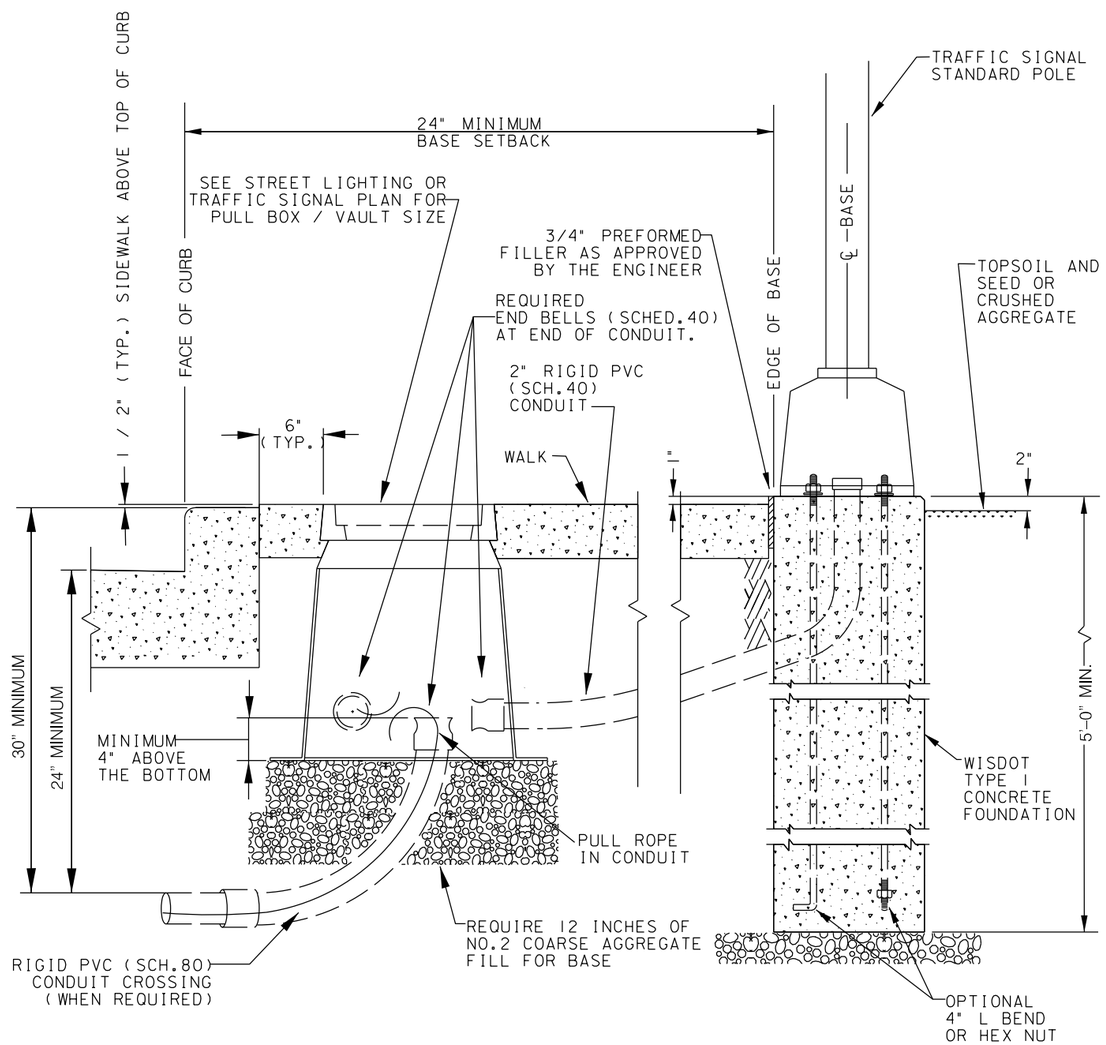

109 DETAIL

TYPICAL CONDUIT INSTALLATION FROM PULL BOX / VAULT TO SIGNAL STANDARD AND TYPICAL BASE INSTALLATION

ANY DEVIATIONS FROM DETAIL WILL REQUIRE PERMISSION FROM STREET LIGHTING FORCES.
CONTACT DISPATCHER AT (414) 286-5944 FOR THE APPROPRIATE SHOP SUPERVISOR.

NOT TO SCALE

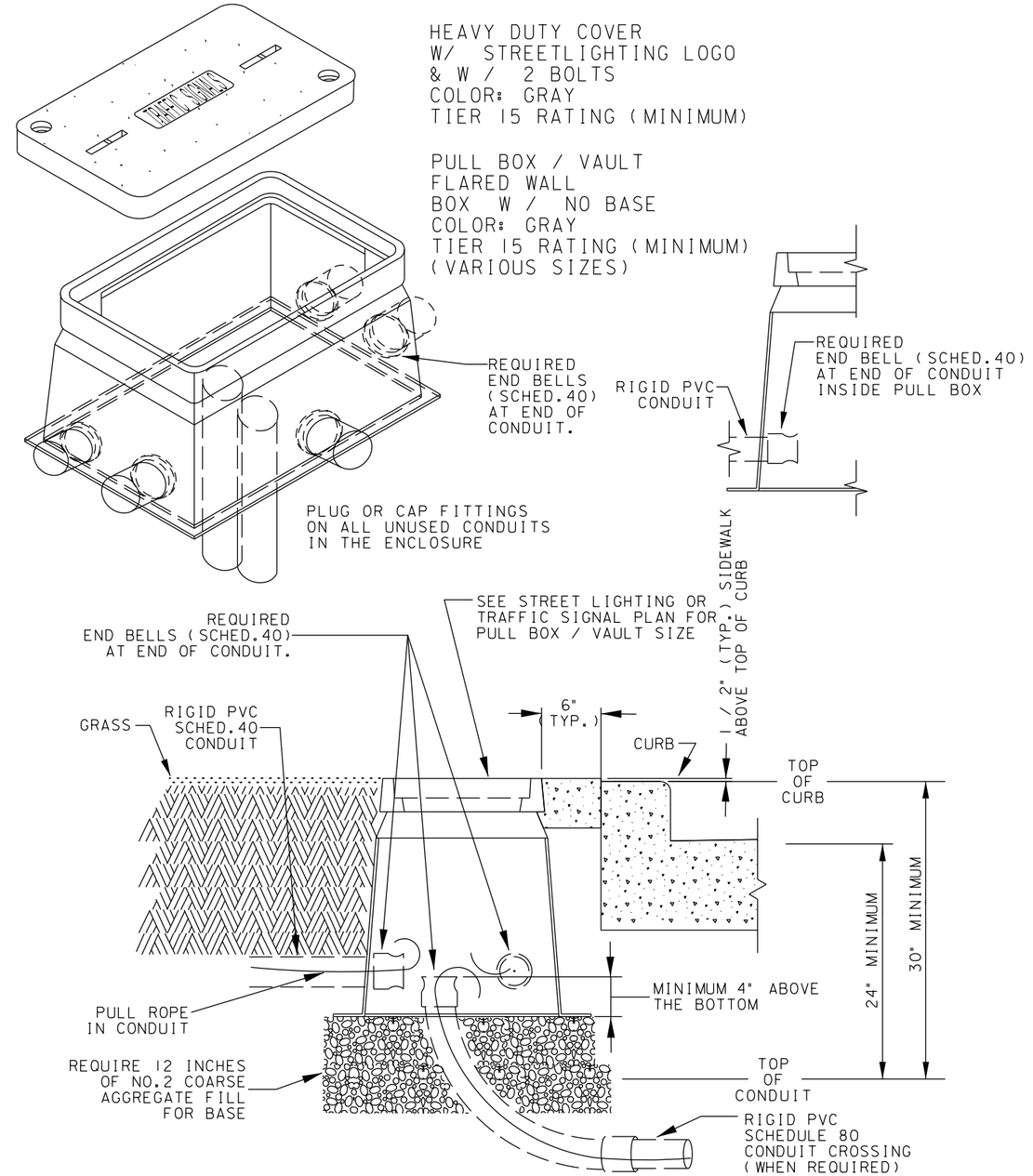

112 DETAIL

TYPICAL PULL BOX / VAULT INSTALLATION IN EITHER PAVEMENT OR GRASS AREAS

ANY DEVIATIONS FROM DETAIL WILL REQUIRE PERMISSION FROM STREET LIGHTING FORCES.
CONTACT DISPATCHER AT (414) 286-5944 FOR THE APPROPRIATE SHOP SUPERVISOR.

NOT TO SCALE

GENERAL NOTES

DETAILS OF CONSTRUCTION, MATERIALS AND WORKMANSHIP NOT SHOWN ON THIS DRAWING SHALL CONFORM TO THE PERTINENT REQUIREMENTS OF THE CONTRACT.

ORIENT ANCHOR RODS IN FOOTING AND PROVIDE ANCHOR ROD PROJECTION ABOVE TOP OF CONCRETE FOOTING BASE PER THIS SHEET.

BENDING DIMENSIONS FOR REINFORCING BARS ARE OUT TO OUT.

USE 3" CLEAR FOR ALL REINFORCEMENT UNLESS NOTED OTHERWISE.

THE CONTRACTOR IS RESPONSIBLE FOR MAKING THIER OWN DETERMINATION AS TO THE TYPE AND LOCATION OF THE UNDERGROUND UTILITIES AS MAY BE NECESSARY TO AVOID DAMAGE THERETO.

WELDING OF ANCHOR RODS TO THE CAGE IS UNACCEPTABLE. TEMPLATES SHALL BE USED.

THE FORM SHALL BE REMOVED BEFORE BACKFILLING AROUNG THE BASE. BACKFILL SHALL BE TAMPED TIGHT AGAINST THE BARE CONCRETE BASE IN LAYERS OF 1 FOOT OR LESS.

TOP SURFACE OF THE CONCRETE BASE SHALL BE TROWEL FINISHED AND SLOPED TO DRAIN.

CONDUIT SIZE AND LOCATIONS SHALL BE AS SHOWN ON THE PLANS.

MINIMUM BENDING RADIUS OF CONDUIT IS EQUAL TO 6 X THE DIAMETER.

CONDUIT HEIGHT ABOVE CONCRETE BASE SHALL BE 4½" INCHES. ALL METALLIC CONDUIT ENDS SHALL BE REAMED AND THREADED. NONMETALLIC CONDUIT SHALL HAVE BELL ENDS INSTALLED. ALL CONDUIT SHALL SLOPE TO PULL BOX.

ALL CONDUIT ENDS AT THE TOP OF THE BASES SHALL BE CAPPED IF METALLIC OR PLUGGED IF NONMETALLIC IMMEDIATELY AFTER PLACEMENT AND BEFORE CONCRETE IS POURED. CONDUITS IN WHICH WIRE OR CABLE IS NOT INSTALLED SHALL REMAIN CAPPED OR PLUGGED.

BELL ENDS SHALL BE INSTALLED ON ALL PVC CONDUIT EXPOSED AT THE TOP OF CONCRETE BASES BEFORE INSTALLATION OF CABLE OR WIRE.

WHEN REQUIRED TO CONNECT NONMETALLIC CONDUIT TO METALLIC CONDUIT, ONLY ADAPTOR FITTINGS, UL LISTED FOR ELECTRICAL USE, SHALL BE USED.

A NO. 4 AWG, STRANDED COPPER EQUIPMENT GROUNDING CONDUCTOR SHALL BE EXOTHERMICALLY WELDED TO THE EQUIPMENT GROUNDING ELECTRODE (GROUND ROD).

THE EQUIPMENT GROUNDING CONDUCTOR SHALL BE FURNISHED AND INSTALLED TO ENTER THE BASE THROUGH A 1-INCH CONDUIT INSTALLED FOR GROUNDING PURPOSES, LEAVING A 4-FOOT COIL OF WIRE ABOVE THE CONCRETE BASE, THE EQUIPMENT GROUNDING CONDUCTOR SHALL BE NEATLY COILED AND THE COILS TIED TOGETHER.

BAR STEEL REINFORCEMENT SHALL BE COATED WITH POWDERED EPOXY RESIN IN ACCORDANCE WITH SECTION 505 OF THE STANDARD SPECIFICATIONS.

THE MINIMUM DEPTH OF CONDUIT EXITING THE CONCRETE BASE AND INSTALLED BELOW THE TRAVEL WAY SHALL BE 24-INCHES. THE MINIMUM DEPTH OF CONDUIT EXITING THE CONCRETE BASE THAT IS NOT INSTALLED BELOW THE TRAVELED WAY SHALL BE 18-INCHES. THE MAXIMUM DEPTH OF ALL CONDUIT SHALL BE 36-INCHES, (GREATER THAN 36-INCHES IF INSTALLED IN BREAKER-RUN), EXCEPT WITH THE WRITTEN APPROVAL OF THE ENGINEER.

ANCHOR RODS SHALL BE INSTALLED WITH MISALIGNMENTS OF LESS THAN 1:40 FROM VERTICAL.

CONCRETE MASONRY ---------- fc=3,500 p.s.i.
HIGH STRENGTH BAR STEEL REINFORCEMENT, GRADE 60 ------ fy=60,000 p.s.i.
ANCHOR RODS, ASTM F1554 GRADE 55 (IN ACCORDANCE WITH SECTION 641.2.2.3 OF THE STANDARD SPECIFICATIONS --- fy=55,000 p.s.i.
TEMPLATES, ASTM A709 GRADE 36 ---------- fy=36,000 p.s.i.

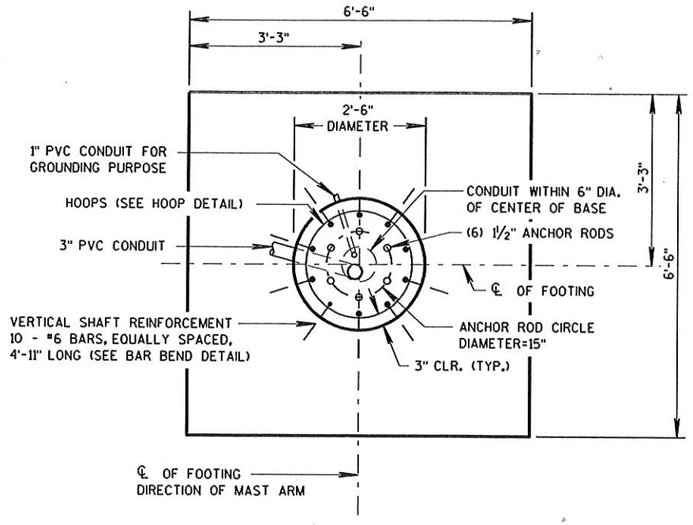

PLAN VIEW

QUANTITY REQUIREMENTS (EA. FOOTING)

CUBIC YARDS OF CONCRETE	3.6
LBS. OF BAR STEEL	155

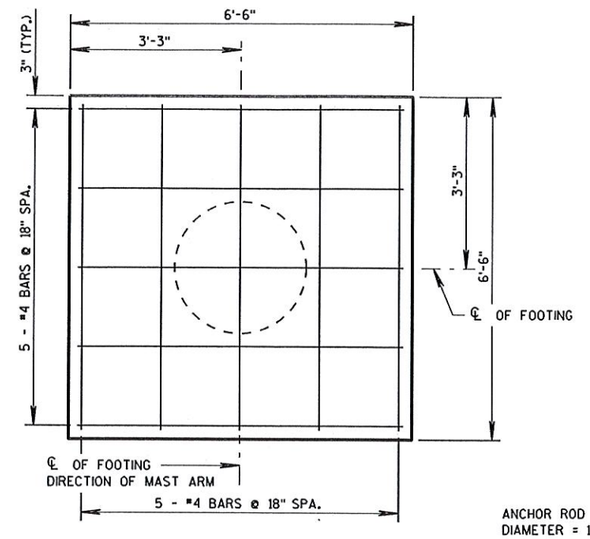

PLAN VIEW - FOOTING REINF.

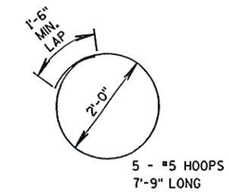

HOOP DETAIL

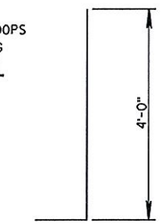

BAR BEND DETAIL

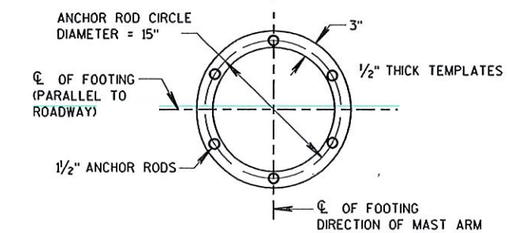

TOP AND BOTTOM TEMPLATES

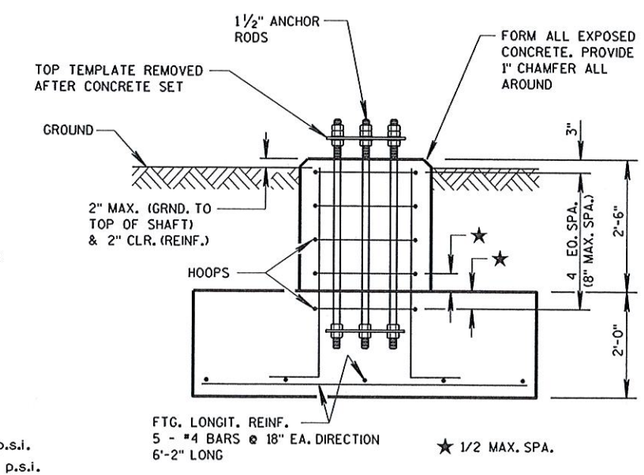

ELEVATION VIEW*

*CONDUITS ARE NOT SHOWN ON THIS VIEW FOR CLARITY

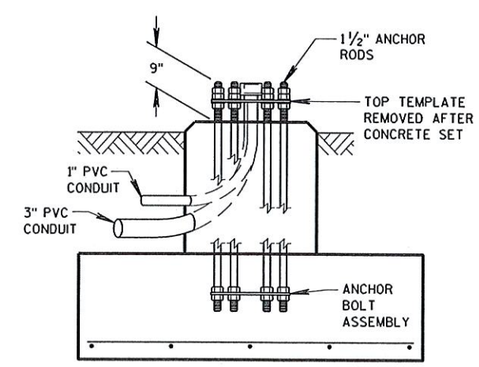

SIDE VIEW**

**HOOPS AND VERTICAL SHAFT REINFORCEMENT NOT SHOWN ON THIS VIEW FOR CLARITY

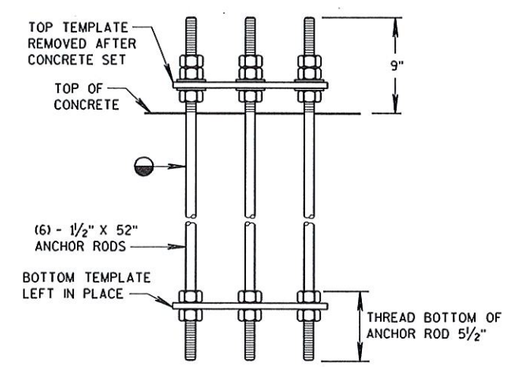

ANCHOR BOLT ASSEMBLY DETAIL

CONCRETE BASE ANCHOR ASSEMBLY

THREAD TOP 9" OF ANCHOR ROD FOR 3 NUTS AND 2 WASHERS AND BOTTOM 5½" FOR 2 NUTS PER ANCHOR ROD. HOT-DIP GALVANIZE THE ENTIRE LENGTH OF THE ANCHOR RODS (ASTM A123) AND HOT-DIP NUTS AND WASHERS (ASTM A153). USE ZINC COATED NUTS MANUFACTURED WITH SUFFICIENT ALLOWANCE TO ALLOW NUTS TO RUN FREELY ON THE THREADS.

2

2

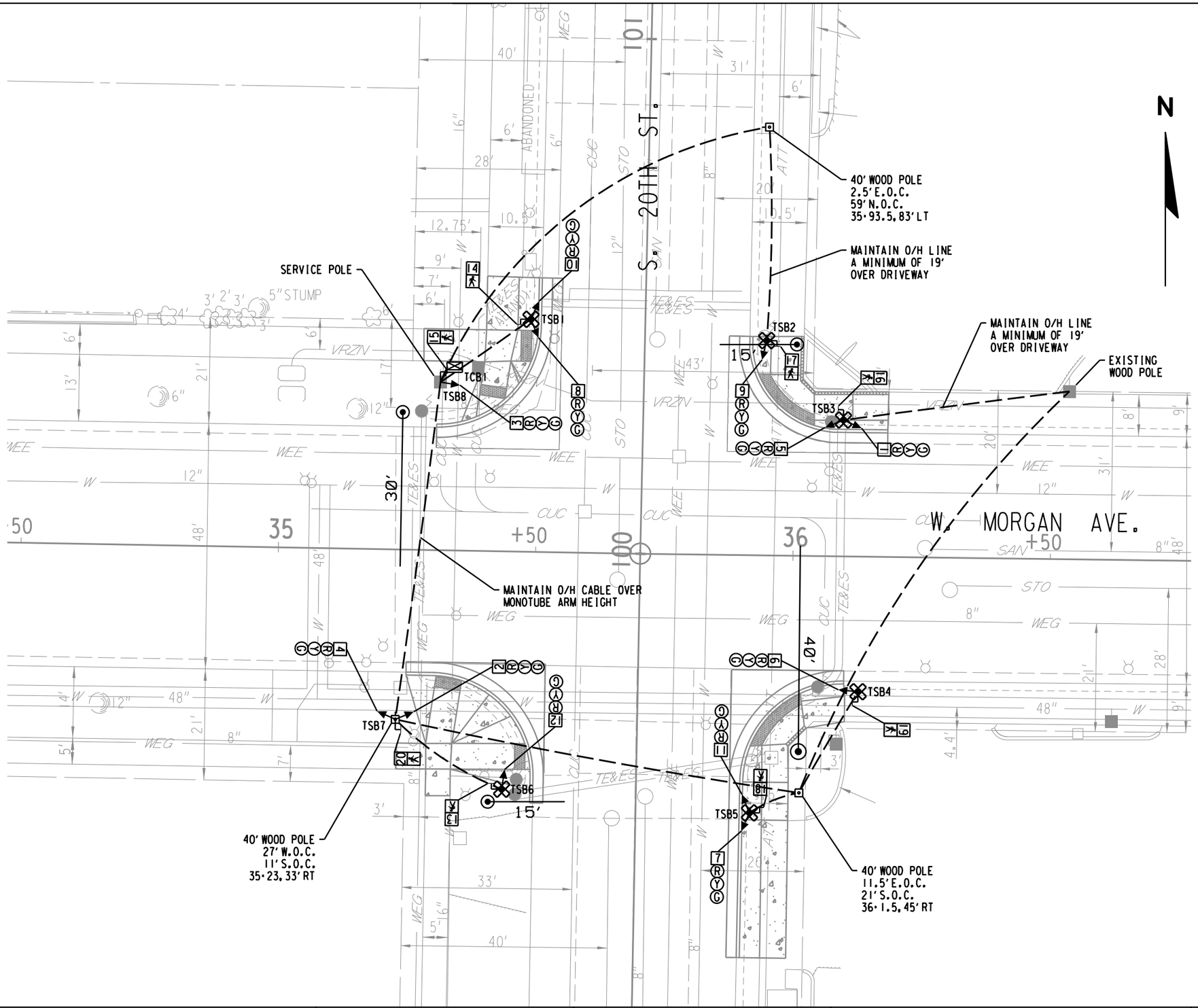

LEGEND

- CONTROL CABINET
- 40' CLASS 4 WOOD POLE
- MOVEABLE SIGNAL STANDARD
- OVERHEAD TRAFFIC SIGNAL CABLE
- PROPOSED MONOTUBE BASE

TRAFFIC CONTROL SIGNAL
W. MORGAN AVE. & S. 20TH ST.
CITY OF MILWAUKEE
MILWAUKEE COUNTY

SIGNAL NO.

CONTROLLER TYPE: ECONOLITE COBALT

DATE PAGE OF

STATE PROJECT NO: 2984-21-73	HWY: W. MORGAN AVE.	COUNTY: MILWAUKEE	TEMPORARY TRAFFIC SIGNAL PLAN	SCALE FEET 0 20	SHEET 69	E

	HEAD NUMBERS	FLASH
Ø2	10.11.12	R
Ø4	1.2.3	R
Ø6	7.8.9	R
Ø8	4.5.6	R
Ø2P	13.14	R
Ø4P	15.16	R
Ø6P	17.18	R
Ø8P	19.20	R

SEQUENCE OF OPERATION

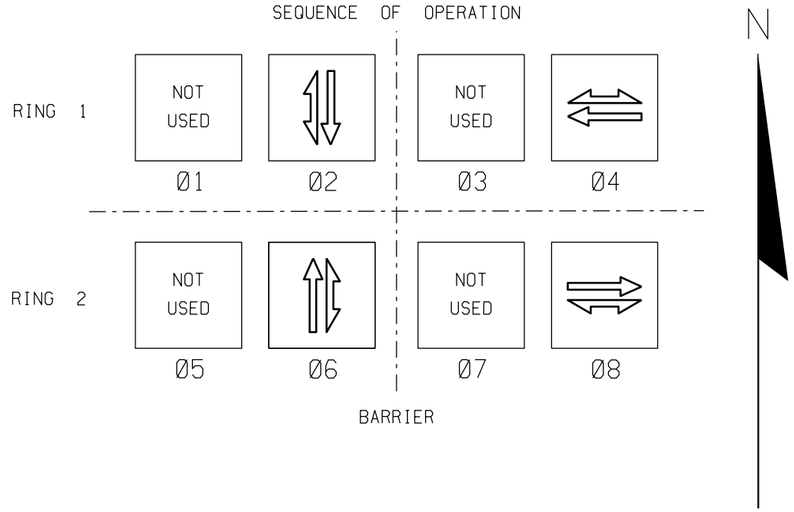

CONTROLLER LOGIC

PHASE NUMBER	PHASE LOCKING	DUAL ENTRY W/Ø	PHASE RECALL	PHASE ACTIVE
1				
2		6	COORD.	X
3				
4		8	PED.	X
5				
6		2	COORD.	X
7				
8		4	PED.	X

DETECTOR LOGIC

DETECTOR INPUT	3	1	7	5	11	9	15	13
PLAN LOOP DETECTOR								
CALLED PHASE								
CALL OPTION								
DELAY TIME								
EXTENTION OPTION								
EXTEND TIME								
USE ADDED INITIAL								
CROSS SWITCH PHASE								

DETECTOR INPUT	4	2	8	6	12	10	16	14
PLAN LOOP DETECTOR								
CALLED PHASE								
CALL OPTION								
DELAY TIME								
EXTENTION OPTION								
EXTEND TIME								
USE ADDED INITIAL								
CROSS SWITCH PHASE								

GENERAL NOTES:

1. ANY ACTUATED PHASE FOR WHICH THERE IS NO CALL SHALL BE SKIPPED.

TYPE OF INTERCONNECT COMMUNICATION	
NONE	X
TBC	
CLOSED LOOP TWISTED PAIR*	
CLOSED LOOP FIBER OPTIC*	
FIBER OPTIC	
RADIO	
*LOCATION OF MASTER CONTROLLER NO: S-	
SIGNAL SYSTEM *: SS- .	

TYPE OF PRE-EMPT	
NONE	
RAILROAD	
EMERGENCY VEHICLE	
GTT	X
TOMAR	
HARDWIRE	
OTHER	
LIFT BRIDGE	
QUEUE DETECTOR	

TYPE OF LIGHTING	
BY OTHER AGENCY	
IN TRAFFIC SIGNAL CABINET	
IN SEPARATE LIGHTING CABINET	X

TRAFFIC CONTROL SIGNAL
W. MORGAN AVE. & S. 20TH ST.
CITY OF MILWAUKEE
MILWAUKEE COUNTY

SIGNAL NO.

CONTROLLER TYPE: ECONOLITE COBALT

DATE PAGE OF

2

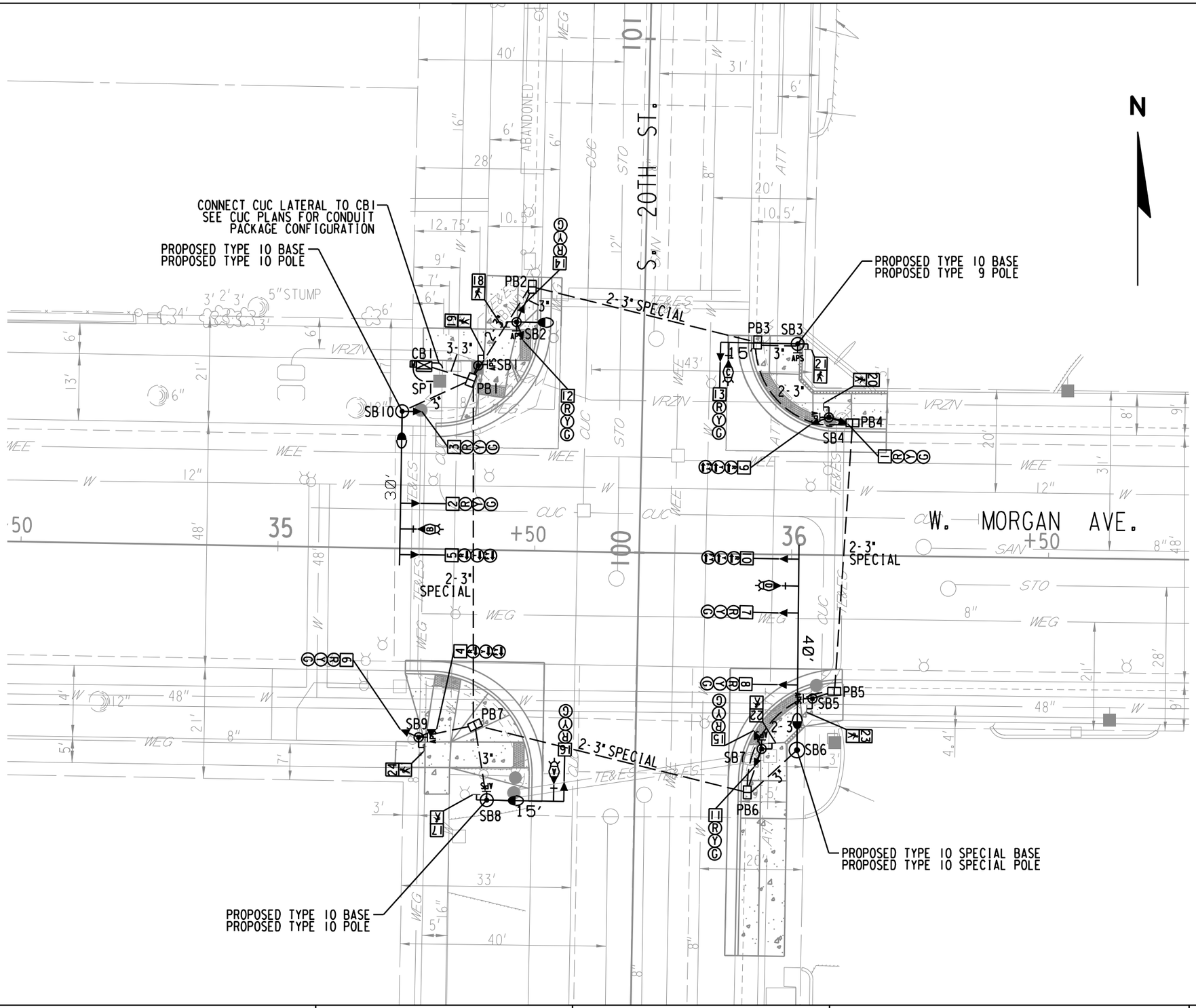

LEGEND

- CABINET
- (XX) MONOTUBE BASE, POLE, 15'-45' ARM
- CONCRETE POLYMER PULL BOX 17"X30"X24"
- NONMETALLIC CONDUIT 2", UNLESS OTHERWISE NOTED
- TRAFFIC SIGNAL STANDARD, PEDESTAL BASE
- LUMINAIRE
- M METER PEDESTAL
- APS PUSH BUTTON
- X SIGNAL HEAD NUMBER
- R RED CIRCULAR INDICATOR
- Y YELLOW CIRCULAR INDICATOR
- G GREEN CIRCULAR INDICATOR
- RED ARROWS
- YELLOW ARROWS
- GREEN ARROWS
- WALK-DON'T WALK INDICATOR 12" COUNTDOWN TIMER 12"
- CONFIRMATION LIGHT
- X EVP DESIGNATOR
- EVP DETECTOR HEAD

TRAFFIC CONTROL SIGNAL
W. MORGAN AVE. & S. 20TH ST.
CITY OF MILWAUKEE
MILWAUKEE COUNTY

SIGNAL NO.

CONTROLLER TYPE: ECONOLITE COBALT

DATE PAGE OF

STATE PROJECT NO: 2984-21-73	HWY: W.MORGAN AVE.	COUNTY: MILWAUKEE	TRAFFIC SIGNAL PLAN	SCALE FEET 0 20	SHEET 71	E

2

	HEAD NUMBERS	FLASH
Ø2	14,15,16	R
Ø4	1,2,3	R
OLF	9,10	R
Ø6	11,12,13	R
Ø8	6,7,8	R
OLH	4,5	R
Ø2P	17,18	R
Ø4P	19,20	R
Ø6P	21,22	R
Ø8P	23,24	R

SEQUENCE OF OPERATION

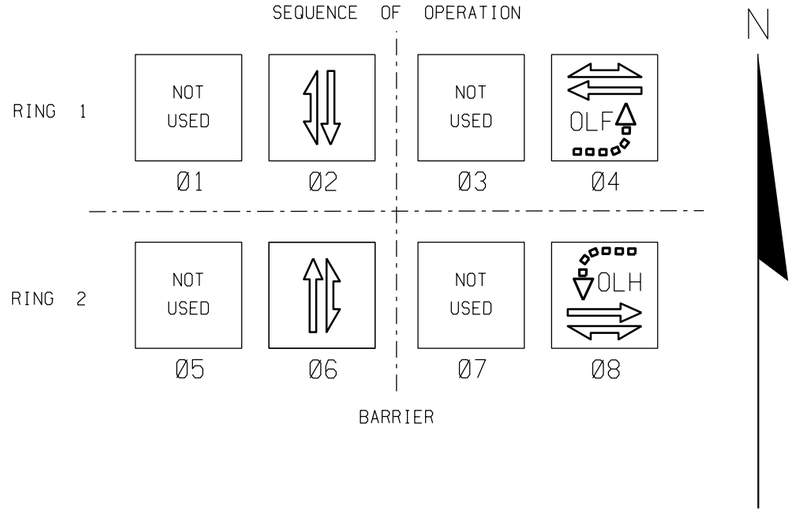

CONTROLLER LOGIC

PHASE NUMBER	PHASE LOCKING	DUAL ENTRY W/Ø	PHASE RECALL	PHASE ACTIVE
1				
2		6	COORD.	X
3				
4		8	PED.	X
5				
6		2	COORD.	X
7				
8		4	PED.	X

OVERLAPS

O.L.	"F"	=	EB	FYA
O.L.	"H"	=	WB	FYA

DETECTOR LOGIC

DETECTOR INPUT	3	1	7	5	11	9	15	13
PLAN LOOP DETECTOR								
CALLED PHASE								
CALL OPTION								
DELAY TIME								
EXTENTION OPTION								
EXTEND TIME								
USE ADDED INITIAL								
CROSS SWITCH PHASE								

DETECTOR INPUT	4	2	8	6	12	10	16	14
PLAN LOOP DETECTOR								
CALLED PHASE								
CALL OPTION								
DELAY TIME								
EXTENTION OPTION								
EXTEND TIME								
USE ADDED INITIAL								
CROSS SWITCH PHASE								

GENERAL NOTES:

1. ANY ACTUATED PHASE FOR WHICH THERE IS NO CALL SHALL BE SKIPPED.

TYPE OF INTERCONNECT COMMUNICATION	
NONE	
TBC	
CLOSED LOOP TWISTED PAIR*	
CLOSED LOOP FIBER OPTIC*	
FIBER OPTIC	
RADIO	X
*LOCATION OF MASTER CONTROLLER NO: S-	
SIGNAL SYSTEM *: SS- .	

TYPE OF PRE-EMPT	
NONE	
RAILROAD	
EMERGENCY VEHICLE	
GTT	X
TOMAR	
HARDWIRE	
OTHER	
LIFT BRIDGE	
QUEUE DETECTOR	

TYPE OF LIGHTING	
BY OTHER AGENCY	
IN TRAFFIC SIGNAL CABINET	
IN SEPARATE LIGHTING CABINET	X

EMERGENCY VEHICLE PREEMPTION SEQUENCE

EMERGENCY VEHICLE PREEMPTOR	CHANNEL	
	B/D	A/C
MOVEMENT	← →	↓ ↑
PHASE	4-8	2-6

TRAFFIC CONTROL SIGNAL
W. MORGAN AVE. & S. 20TH ST.
CITY OF MILWAUKEE
MILWAUKEE COUNTY

SIGNAL NO.

CONTROLLER TYPE: ECONOLITE COBALT

DATE PAGE OF

PROJECT ID:	2984-21-73
INTERSECTION:	W. MORGAN AVE. & S. 20TH ST.

SIGNAL WIRE COLOR CODING			
	BLK-BLACK	RED-RED	GRN-GREEN
	WHT-WHITE	BLU-BLUE	ORG-ORANGE

DATE: 10/17/2024

CB1 TO	JUMPER	# OF COND.	HEAD NO.	PHASE	SIGNAL INDICATION WIRE COLOR								PED BUTTON	OTHER
					RED	YELLOW	GREEN	<RED>	<YELLOW>	<FLASH YELLOW>	D/WALK	WALK		
SB1		9	19	4							BLU	BLK		
			APS	2									ORG	
			PUSH BUTTON	2									WHT/BLK	
SB2		15	12	6	RED	ORG	GRN							
			14	2	RED/BLK	ORG/BLK	GRN/BLK							
			18	2							BLU	BLK		
			APS	4									BLK/WHT	
			PUSH BUTTON	4									WHT/BLK	
SB3		12	13	6	RED	ORG	GRN							
			21	6							BLU	BLK		
			APS	4									BLK/WHT	
			PUSH BUTTON	4									WHT/BLK	
SB4		15	1	4	RED	ORG	GRN							
			9	OLF				RED/BLK	ORG/BLK	GRN/BLK				
			20	4							BLU	BLK		
			APS	6									BLK/WHT	
			PUSH BUTTON	6									WHT/BLK	
SB5		9	23	8							BLU	BLK		
			APS	6									ORG	
			PUSH BUTTON	6									WHT/BLK	
SB6		19	7	8	RED	ORG	GRN							
			8	8	RED/BLK	ORG/BLK	GRN/BLK							
			10	OLF				RED/WHT	BLU/WHT	GRN/WHT				
SB7		15	11	6	RED	ORG	GRN							
			15	2	RED/BLK	ORG/BLK	GRN/BLK							
			22	6							BLU	BLK		
			APS	8									BLK/WHT	
			PUSH BUTTON	8									WHT/BLK	
SB8		12	16	2	RED	ORG	GRN							
			17	2							BLU	BLK		
			APS	8									BLK/WHT	
			PUSH BUTTON	8									WHT/BLK	
SB9		15	4	OLH				RED	ORG	GRN				
			6	8	RED/BLK	ORG/BLK	GRN/BLK							
			24	8							BLU	BLK		
			APS	2									BLK/WHT	
			PUSH BUTTON	2									WHT/BLK	
SB10		19	2	4	RED	ORG	GRN							
			3	4	RED/BLK	ORG/BLK	GRN/BLK							
			5	OLH				RED/WHT	BLU/WHT	GRN/WHT				

EQUIPMENT GROUNDING CONDUCTOR 10 AWG GRN XLP	
FROM	TO
CB1	SB1
SB1	SB2
SB2	SB3
SB3	SB4
SB4	SB5
SB5	SB6
SB6	SB7
SB7	SB8
SB8	SB9
SB9	SB10
SB10	CB1

EMERGENCY VEHICLE PREEMPTION AND UF 2-12 CONFIRMATION	
FROM	TO
CB1	SB10
SB10	HEAD B
CB1	SB8
SB8	HEAD A
CB1	SB6
SB6	HEAD D
CB1	SB3
SB3	HEAD C

NOTES:
1. USE WHITE CONDUCTOR IN THE SIGNAL CABLE AS THE GROUNDED CONDUCTOR FOR ALL TRAFFIC SIGNAL INDICATIONS
2. ENSURE THE GROUNDED CONDUCTOR IN THE FEEDER CABLE AND THE POLE CABLES ARE BOTH 12" LONGER THAN THE UNGROUNDED CONDUCTORS.
3. AT THE SIGNAL BASES, CONNECT ONE TERMINAL FROM THE PEDESTRIAN PUSH BUTTONS. TO THE COLOR INDICATED IN THE CHART. CONNECT THE OTHER TERMINAL TO THE GROUNDED CONDUCTOR.
4. "OTHER" COLUMN MAY INCLUDE SHADOW BOX (BLANK OUT) SIGN.
5. SPV.0090.307 IS WIRED FROM CONTROLLER CABINET TO METER PEDESTAL

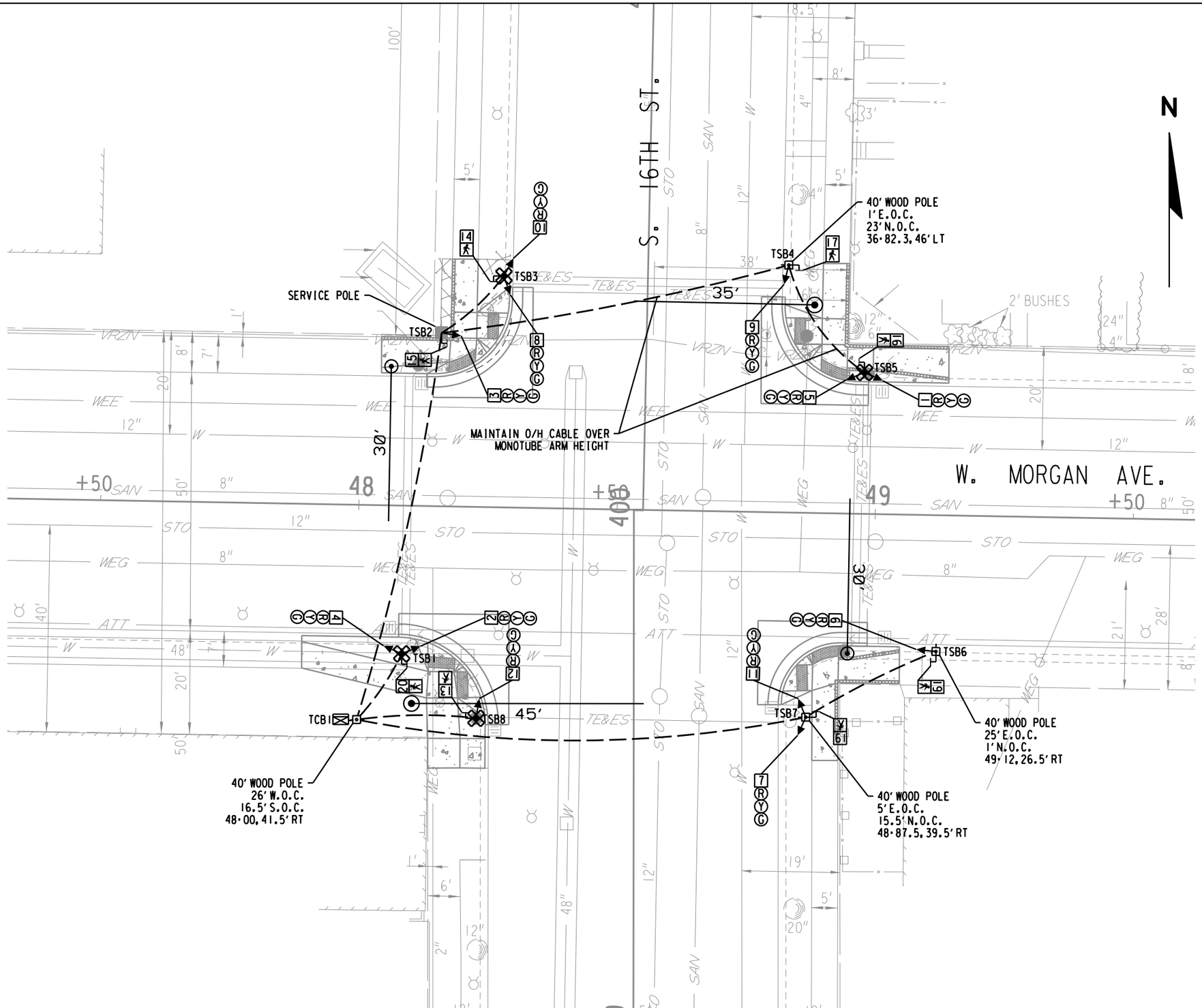

LEGEND

- CONTROL CABINET
- 40' CLASS 4 WOOD POLE
- MOVEABLE SIGNAL STANDARD
- OVERHEAD TRAFFIC SIGNAL CABLE
- PROPOSED MONOTUBE BASE

TRAFFIC CONTROL SIGNAL
W. MORGAN AVE. & S. 16TH ST.
CITY OF MILWAUKEE
MILWAUKEE COUNTY

SIGNAL NO.

CONTROLLER TYPE: ECONOLITE COBALT

DATE PAGE OF

STATE PROJECT NO: 2984-21-73	HWY: W. MORGAN AVE.	COUNTY: MILWAUKEE	TEMPORARY TRAFFIC SIGNAL PLAN	SCALE FEET 0 20	SHEET 74	E

2

	HEAD NUMBERS	FLASH
Ø2	10.11.12	R
Ø4	1.2.3	R
Ø6	7.8.9	R
Ø8	4.5.6	R
Ø2P	13.14	R
Ø4P	15.16	R
Ø6P	17.18	R
Ø8P	19.20	R

SEQUENCE OF OPERATION

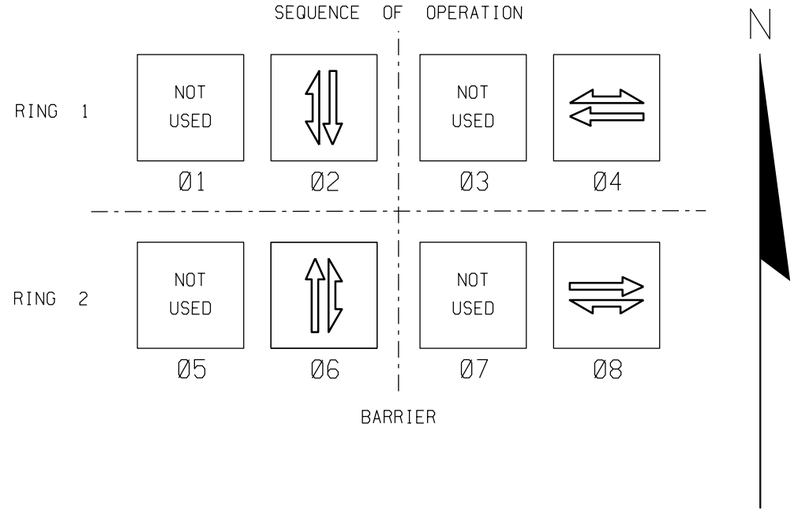

CONTROLLER LOGIC

PHASE NUMBER	PHASE LOCKING	DUAL ENTRY W/Ø	PHASE RECALL	PHASE ACTIVE
1				
2		6	COORD.	X
3				
4		8	PED.	X
5				
6		2	COORD.	X
7				
8		4	PED.	X

2

DETECTOR LOGIC

DETECTOR INPUT	3	1	7	5	11	9	15	13
PLAN LOOP DETECTOR								
CALLED PHASE								
CALL OPTION								
DELAY TIME								
EXTENTION OPTION								
EXTEND TIME								
USE ADDED INITIAL								
CROSS SWITCH PHASE								

DETECTOR INPUT	4	2	8	6	12	10	16	14
PLAN LOOP DETECTOR								
CALLED PHASE								
CALL OPTION								
DELAY TIME								
EXTENTION OPTION								
EXTEND TIME								
USE ADDED INITIAL								
CROSS SWITCH PHASE								

GENERAL NOTES:

1. ANY ACTUATED PHASE FOR WHICH THERE IS NO CALL SHALL BE SKIPPED.

TYPE OF INTERCONNECT COMMUNICATION	
NONE	X
TBC	
CLOSED LOOP TWISTED PAIR*	
CLOSED LOOP FIBER OPTIC*	
FIBER OPTIC	
RADIO	
*LOCATION OF MASTER CONTROLLER NO: S-	
SIGNAL SYSTEM *: SS- .	

TYPE OF PRE-EMPT	
NONE	
RAILROAD	
EMERGENCY VEHICLE	
GTT	X
TOMAR	
HARDWIRE	
OTHER	
LIFT BRIDGE	
QUEUE DETECTOR	

TYPE OF LIGHTING	
BY OTHER AGENCY	
IN TRAFFIC SIGNAL CABINET	
IN SEPARATE LIGHTING CABINET	X

TRAFFIC CONTROL SIGNAL
W. MORGAN AVE. & S. 16TH ST.
CITY OF MILWAUKEE
MILWAUKEE COUNTY

SIGNAL NO.

CONTROLLER TYPE: ECONOLITE COBALT

DATE PAGE OF

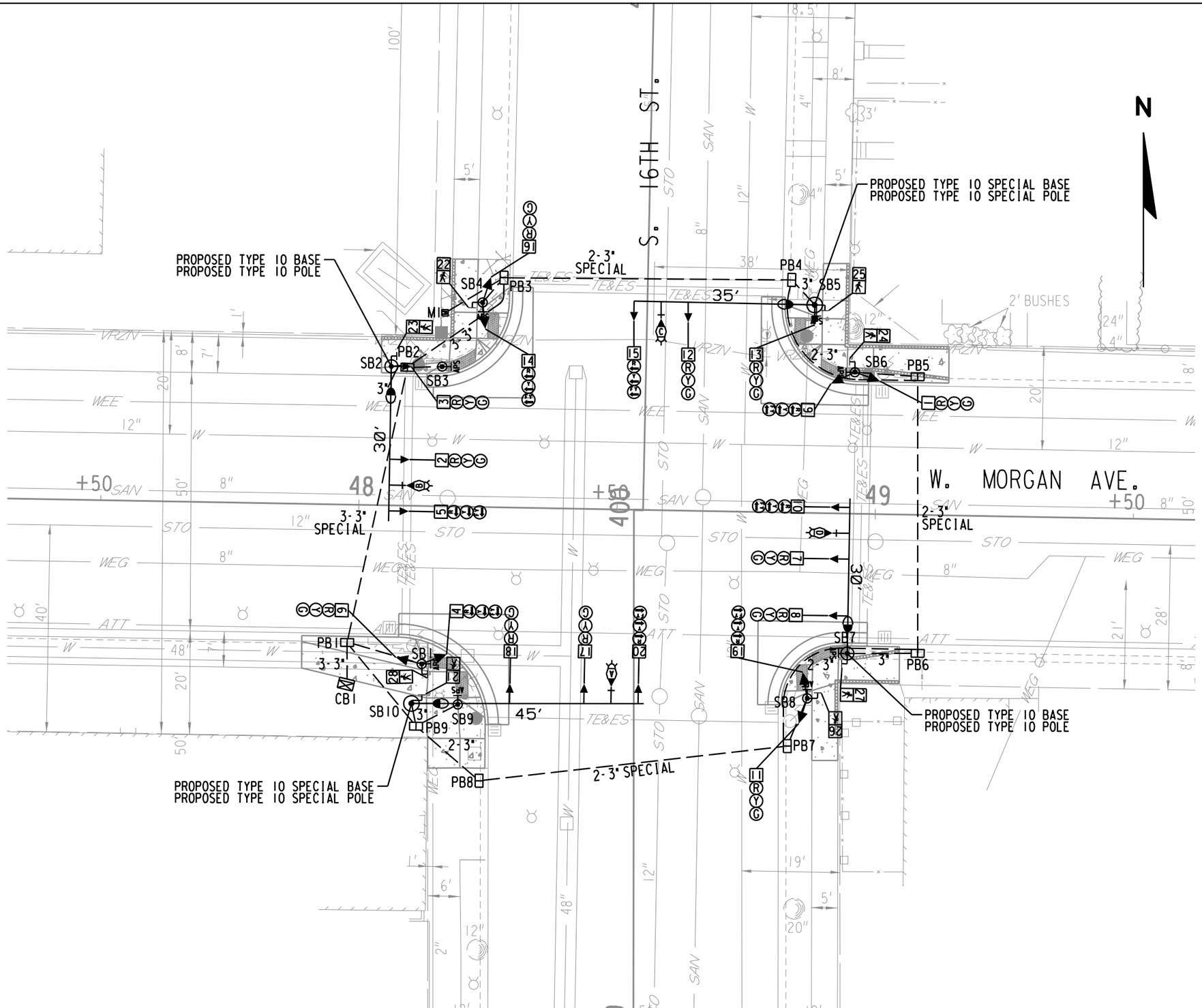

LEGEND

- CABINET
- (XX) MONOTUBE BASE, POLE, 15'-45' ARM
- CONCRETE POLYMER PULL BOX 17"X30"X24"
- NONMETALLIC CONDUIT 2", UNLESS OTHERWISE NOTED
- TRAFFIC SIGNAL STANDARD, PEDESTAL BASE
- LUMINAIRE
- M METER PEDESTAL
- APS PUSH BUTTON
- X SIGNAL HEAD NUMBER
- R RED CIRCULAR INDICATOR
- Y YELLOW CIRCULAR INDICATOR
- G GREEN CIRCULAR INDICATOR
- RED ARROWS
- YELLOW ARROWS
- GREEN ARROWS
- WALK-DON'T WALK INDICATOR 12" COUNTDOWN TIMER 12"
- CONFIRMATION LIGHT
- X EVP DESIGNATOR
- EVP DETECTOR HEAD

TRAFFIC CONTROL SIGNAL
W. MORGAN AVE. & S. 16TH ST.
CITY OF MILWAUKEE
MILWAUKEE COUNTY

SIGNAL NO.

CONTROLLER TYPE: ECONOLITE COBALT

DATE PAGE OF

STATE PROJECT NO: 2984-21-73	HWY: W. MORGAN AVE.	COUNTY: MILWAUKEE	TRAFFIC SIGNAL PLAN	SCALE FEET 0 20	SHEET 76	E

	HEAD NUMBERS	FLASH
Ø2	16.17.18	R
OLE	14.15	R
Ø4	1.2.3	R
OLF	9.10	R
Ø6	11.12.13	R
OLG	19.20	R
Ø8	6.7.8	R
OLH	4.5	R
Ø2P	21.22	R
Ø4P	23.24	R
Ø6P	25.26	R
Ø8P	27.28	R

SEQUENCE OF OPERATION

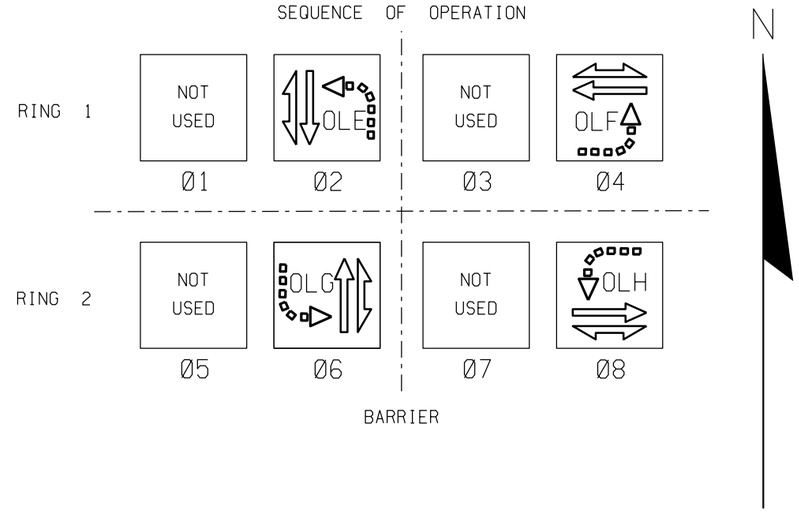

CONTROLLER LOGIC

PHASE NUMBER	PHASE LOCKING	DUAL ENTRY W/Ø	PHASE RECALL	PHASE ACTIVE
1				
2		6	COORD.	X
3				
4		8	PED.	X
5				
6		2	COORD.	X
7				
8		4	PED.	X

OVERLAPS

O.L.	"E"	=	NB	FYA
O.L.	"F"	=	EB	FYA
O.L.	"G"	=	SB	FYA
O.L.	"H"	=	WB	FYA

DETECTOR LOGIC

DETECTOR INPUT	3	1	7	5	11	9	15	13
PLAN LOOP DETECTOR								
CALLED PHASE								
CALL OPTION								
DELAY TIME								
EXTENTION OPTION								
EXTEND TIME								
USE ADDED INITIAL								
CROSS SWITCH PHASE								

DETECTOR INPUT	4	2	8	6	12	10	16	14
PLAN LOOP DETECTOR								
CALLED PHASE								
CALL OPTION								
DELAY TIME								
EXTENTION OPTION								
EXTEND TIME								
USE ADDED INITIAL								
CROSS SWITCH PHASE								

GENERAL NOTES:

1. ANY ACTUATED PHASE FOR WHICH THERE IS NO CALL SHALL BE SKIPPED.

TYPE OF INTERCONNECT COMMUNICATION	
NONE	
TBC	
CLOSED LOOP TWISTED PAIR*	
CLOSED LOOP FIBER OPTIC*	
FIBER OPTIC	
RADIO	X
*LOCATION OF MASTER CONTROLLER NO: S-	
SIGNAL SYSTEM #: SS- .	

TYPE OF PRE-EMPT	
NONE	
RAILROAD	
EMERGENCY VEHICLE	
GTT	X
TOMAR	
HARDWIRE	
OTHER	
LIFT BRIDGE	
QUEUE DETECTOR	

TYPE OF LIGHTING	
BY OTHER AGENCY	
IN TRAFFIC SIGNAL CABINET	
IN SEPARATE LIGHTING CABINET	X

EMERGENCY VEHICLE PREEMPTION SEQUENCE

EMERGENCY VEHICLE PREEMPTOR	CHANNEL	
	B/D	A/C
MOVEMENT	⇇	↓↑
PHASE	4-8	2-6

TRAFFIC CONTROL SIGNAL
W. MORGAN AVE. & S. 16TH ST.
CITY OF MILWAUKEE
MILWAUKEE COUNTY

SIGNAL NO.

CONTROLLER TYPE: ECONOLITE COBALT

DATE PAGE OF

PROJECT ID:	2984-21-73
INTERSECTION:	W. MORGAN AVE. & S. 16TH ST.

SIGNAL WIRE COLOR CODING			
	BLK-BLACK	RED-RED	GRN-GREEN
	WHT-WHITE	BLU-BLUE	ORG-ORANGE

DATE: 10/17/2024

CB1 TO	JUMPER	# OF COND.	HEAD NO.	PHASE	SIGNAL INDICATION WIRE COLOR RED	YELLOW	GREEN	<RED>	<YELLOW>	<FLASH YELLOW>	D/WALK	WALK	PED BUTTON	SERVICE
SB1		15	4	OLH				RED	ORG	GRN				
			6	8	RED/BLK	ORG/BLK	GRN/BLK							
			28	8							BLU	BLK		
			APS	2									BLK/WHT	
			PUSH BUTTON	2									WHT/BLK	
SB2		19	2	4	RED	ORG	GRN							
			3	4	RED/BLK	ORG/BLK	GRN/BLK							
			5	OLH				RED/WHT	BLU/WHT	GRN/WHT				
			23	4							BLU	BLK		
	SB3	5	APS	2									ORG	
			PUSH BUTTON	2									BLK	
SB4		15	14	OLE				RED	ORG	GRN				
			16	2	RED/BLK	ORG/BLK	GRN/BLK							
			22	2							BLU	BLK		
			APS	4									BLK/WHT	
			PUSH BUTTON	4									WHT/BLK	
SB5		19	12	6	RED	ORG	GRN							
			13	6	RED/BLK	ORG/BLK	GRN/BLK							
			15	OLE				RED/WHT	BLU/WHT	GRN/WHT				
			25	6							BLU	BLK		
		5	APS	4									BLK/WHT	
			PUSH BUTTON	4									WHT/BLK	
SB6		15	1	4	RED	ORG	GRN							
			9	OLF				RED/BLK	ORG/BLK	GRN/BLK				
			24	4							BLU	BLK		
			APS	6									BLK/WHT	
			PUSH BUTTON	6									WHT/BLK	
SB7		19	7	8	RED	ORG	GRN							
			8	8	RED/BLK	ORG/BLK	GRN/BLK							
			10	OLF				RED/WHT	BLU/WHT	GRN/WHT				
			27	8							BLU	BLK		
			APS	6									BLK/WHT	
			PUSH BUTTON	6									WHT/BLK	
SB8		15	11	6	RED	ORG	GRN							
			19	OLG				RED/BLK	ORG/BLK	GRN/BLK				
			26	6							BLU	BLK		
			APS	8									BLK/WHT	
			PUSH BUTTON	8									WHT/BLK	
SB9		5	APS	8									ORG	
			PUSH BUTTON	8									BLK	
SB10		19	17	2	RED	ORG	GRN							
			18	2	RED/BLK	ORG/BLK	GRN/BLK							
			20	OLG				RED/WHT	BLU/WHT	GRN/WHT				
			21	2							BLU	BLK		

EQUIPMENT GROUNDING CONDUCTOR 10 AWG GRN XLP	
FROM	TO
CB1	SB1
SB1	SB2
SB2	SB3
SB3	SB4
SB4	SB5
SB5	SB6
SB6	SB7
SB7	SB8
SB8	SB9
SB9	SB10
SB10	SB11
SB11	CB1

EMERGENCY VEHICLE PREEMPTION AND UF 2-12 CONFIRMATION	
FROM	TO
CB1	SB2
SB2	HEAD B
CB1	SB10
SB10	HEAD A
CB1	SB7
SB7	HEAD D
CB1	SB5
SB5	HEAD C

NOTES:
1. USE WHITE CONDUCTOR IN THE SIGNAL CABLE AS THE GROUNDED CONDUCTOR FOR ALL TRAFFIC SIGNAL INDICATIONS
2. ENSURE THE GROUNDED CONDUCTOR IN THE FEEDER CABLE AND THE POLE CABLES ARE BOTH 12" LONGER THAN THE UNGROUNDED CONDUCTORS.
3. AT THE SIGNAL BASES, CONNECT ONE TERMINAL FROM THE PEDESTRIAN PUSH BUTTONS. TO THE COLOR INDICATED IN THE CHART. CONNECT THE OTHER TERMINAL TO THE GROUNDED CONDUCTOR.
4. "OTHER" COLUMN MAY INCLUDE SHADOW BOX (BLANK OUT) SIGN.
5. SPV.0090.307 IS WIRED FROM CONTROLLER CABINET TO METER PEDESTAL

2

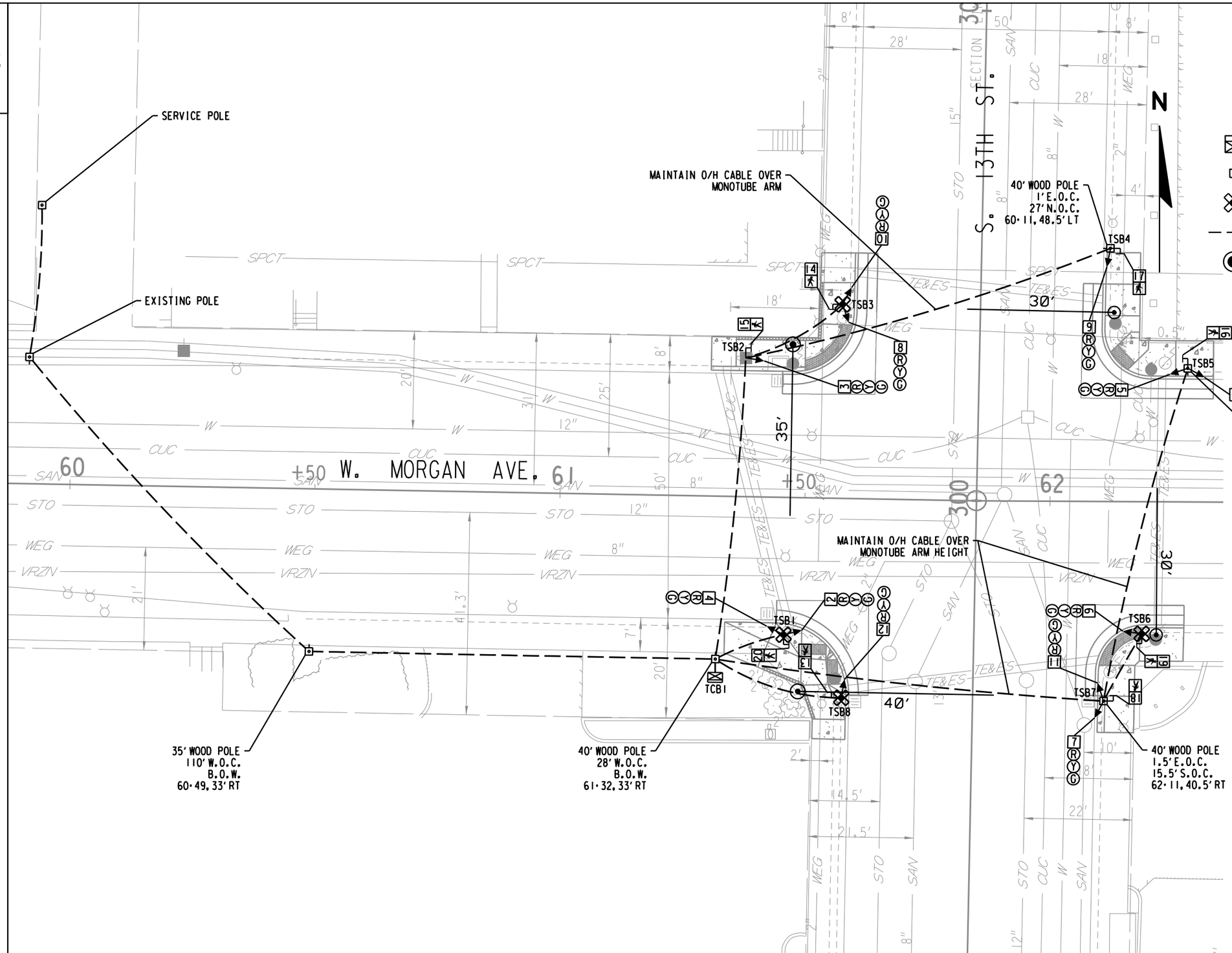

2

LEGEND

- CONTROL CABINET
- 40' CLASS 4 WOOD POLE
- MOVEABLE SIGNAL STANDARD
- OVERHEAD TRAFFIC SIGNAL CABLE
- PROPOSED MONOTUBE BASE

TRAFFIC CONTROL SIGNAL
W. MORGAN AVE. & S. 13TH ST.
CITY OF MILWAUKEE
MILWAUKEE COUNTY

SIGNAL NO.

CONTROLLER TYPE: ECONOLITE COBALT

DATE PAGE OF

STATE PROJECT NO: 2984-21-73	HWY: W.MORGAN AVE.	COUNTY: MILWAUKEE	TEMPORARY TRAFFIC SIGNAL PLAN	SCALE FEET 0 20	SHEET 79	E

2

	HEAD NUMBERS	FLASH
Ø2	10.11.12	R
Ø4	1.2.3	R
Ø6	7.8.9	R
Ø8	4.5.6	R
Ø2P	13.14	R
Ø4P	15.16	R
Ø6P	17.18	R
Ø8P	19.20	R

SEQUENCE OF OPERATION

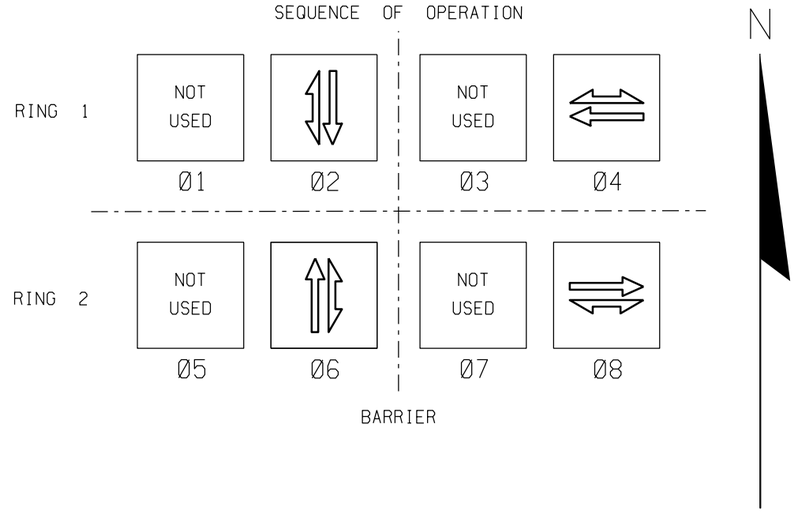

CONTROLLER LOGIC

PHASE NUMBER	PHASE LOCKING	DUAL ENTRY W/Ø	PHASE RECALL	PHASE ACTIVE
1				
2		6	COORD.	X
3				
4		8	PED.	X
5				
6		2	COORD.	X
7				
8		4	PED.	X

2

DETECTOR LOGIC

DETECTOR INPUT	3	1	7	5	11	9	15	13
PLAN LOOP DETECTOR								
CALLED PHASE								
CALL OPTION								
DELAY TIME								
EXTENTION OPTION								
EXTEND TIME								
USE ADDED INITIAL								
CROSS SWITCH PHASE								

DETECTOR INPUT	4	2	8	6	12	10	16	14
PLAN LOOP DETECTOR								
CALLED PHASE								
CALL OPTION								
DELAY TIME								
EXTENTION OPTION								
EXTEND TIME								
USE ADDED INITIAL								
CROSS SWITCH PHASE								

GENERAL NOTES:

1. ANY ACTUATED PHASE FOR WHICH THERE IS NO CALL SHALL BE SKIPPED.

TYPE OF INTERCONNECT COMMUNICATION	
NONE	X
TBC	
CLOSED LOOP TWISTED PAIR*	
CLOSED LOOP FIBER OPTIC*	
FIBER OPTIC	
RADIO	
*LOCATION OF MASTER CONTROLLER NO: S-	
SIGNAL SYSTEM *: SS- .	

TYPE OF PRE-EMPT	
NONE	
RAILROAD	
EMERGENCY VEHICLE	
GTT	X
TOMAR	
HARDWIRE	
OTHER	
LIFT BRIDGE	
QUEUE DETECTOR	

TYPE OF LIGHTING	
BY OTHER AGENCY	
IN TRAFFIC SIGNAL CABINET	
IN SEPARATE LIGHTING CABINET	X

TRAFFIC CONTROL SIGNAL
W. MORGAN AVE. & S. 13TH ST.
CITY OF MILWAUKEE
MILWAUKEE COUNTY

SIGNAL NO.

CONTROLLER TYPE: ECONOLITE COBALT

DATE PAGE OF

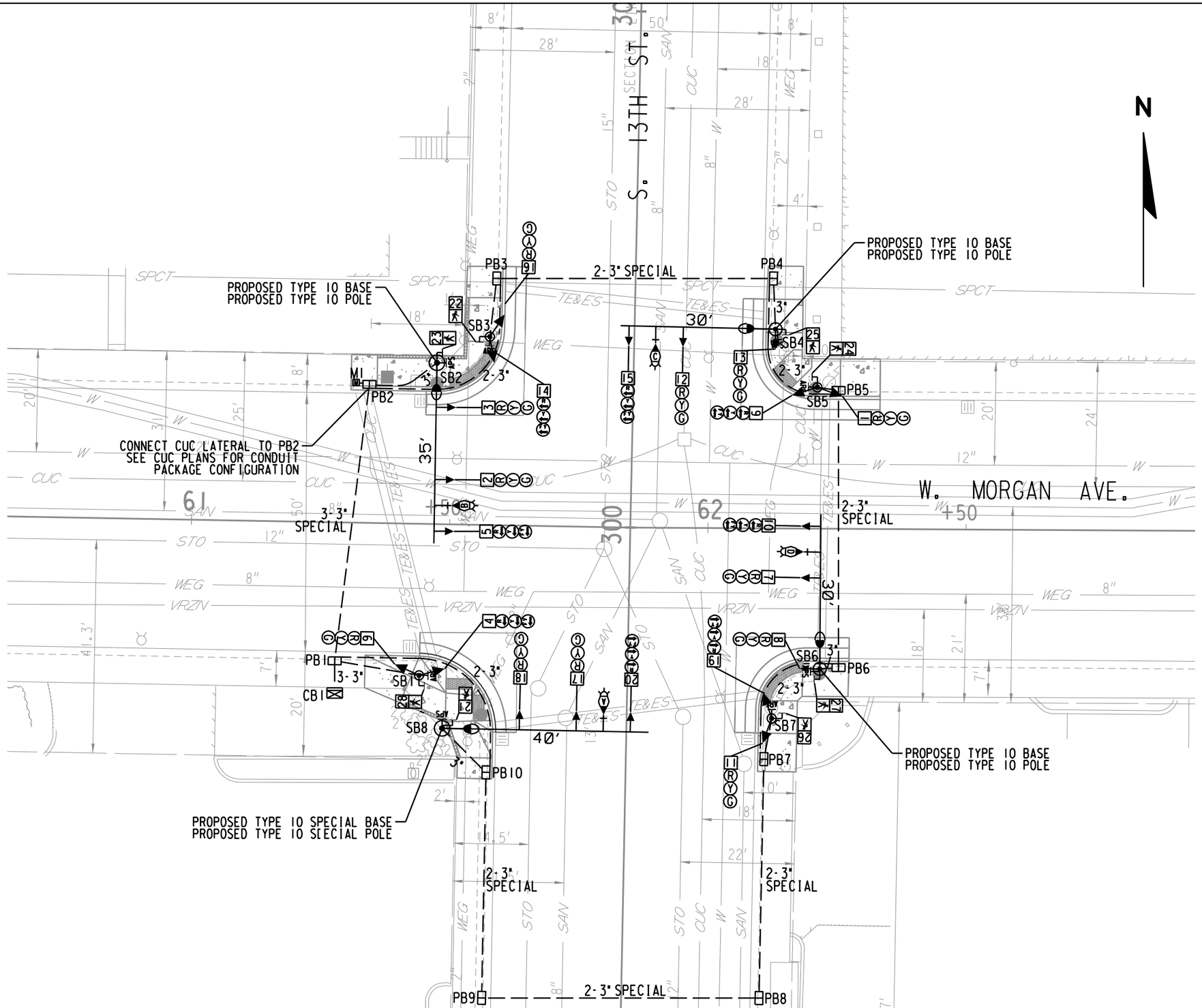

LEGEND

- CABINET
- (XX) MONOTUBE BASE, POLE, 15'-45' ARM
- CONCRETE POLYMER PULL BOX 17"X30"X24"
- NONMETALLIC CONDUIT 2", UNLESS OTHERWISE NOTED
- TRAFFIC SIGNAL STANDARD, PEDESTAL BASE
- LUMINAIRE
- M METER PEDESTAL
- APS PUSH BUTTON
- X SIGNAL HEAD NUMBER
- R RED CIRCULAR INDICATOR
- Y YELLOW CIRCULAR INDICATOR
- G GREEN CIRCULAR INDICATOR
- RED ARROWS
- YELLOW ARROWS
- GREEN ARROWS
- WALK-DON'T WALK INDICATOR 12" COUNTDOWN TIMER 12"
- CONFIRMATION LIGHT
- X EVP DESIGNATOR
- EVP DETECTOR HEAD

TRAFFIC CONTROL SIGNAL
W. MORGAN AVE. & S. 13TH ST.
CITY OF MILWAUKEE
MILWAUKEE COUNTY

SIGNAL NO.

CONTROLLER TYPE: ECONOLITE COBALT

DATE PAGE OF

STATE PROJECT NO: 2984-21-73	HWY: W. MORGAN AVE.	COUNTY: MILWAUKEE	TRAFFIC SIGNAL PLAN	SCALE FEET 0 20	SHEET 81	E

	HEAD NUMBERS	FLASH
Ø2	16.17.18	R
OLE	14.15	R
Ø4	1.2.3	R
OLF	9.10	R
Ø6	11.12.13	R
OLG	19.20	R
Ø8	6.7.8	R
OLH	4.5	R
Ø2P	21.22	R
Ø4P	23.24	R
Ø6P	25.26	R
Ø8P	27.28	R

SEQUENCE OF OPERATION

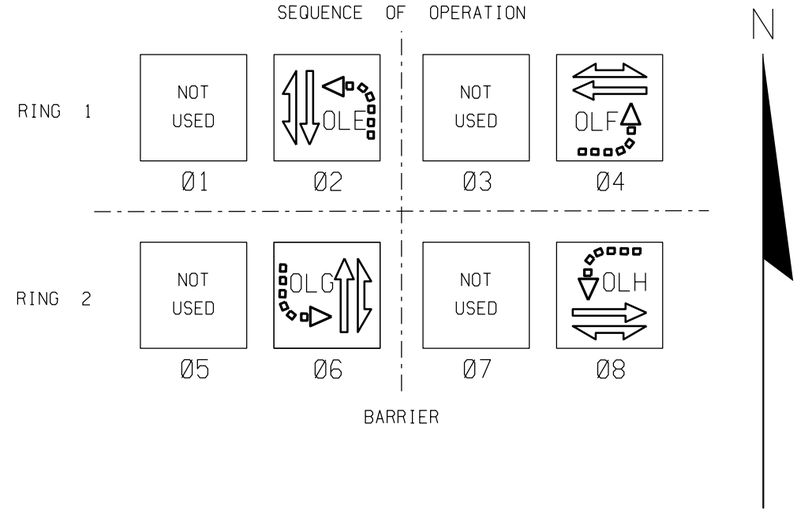

CONTROLLER LOGIC

PHASE NUMBER	PHASE LOCKING	DUAL ENTRY W/Ø	PHASE RECALL	PHASE ACTIVE
1				
2		6	COORD.	X
3				
4		8	PED.	X
5				
6		2	COORD.	X
7				
8		4	PED.	X

OVERLAPS

O.L.	"E"	-	NB	FYA
O.L.	"F"	-	EB	FYA
O.L.	"G"	-	SB	FYA
O.L.	"H"	-	WB	FYA

DETECTOR LOGIC

DETECTOR INPUT	3	1	7	5	11	9	15	13
PLAN LOOP DETECTOR								
CALLED PHASE								
CALL OPTION								
DELAY TIME								
EXTENTION OPTION								
EXTEND TIME								
USE ADDED INITIAL								
CROSS SWITCH PHASE								

DETECTOR INPUT	4	2	8	6	12	10	16	14
PLAN LOOP DETECTOR								
CALLED PHASE								
CALL OPTION								
DELAY TIME								
EXTENTION OPTION								
EXTEND TIME								
USE ADDED INITIAL								
CROSS SWITCH PHASE								

GENERAL NOTES:

1. ANY ACTUATED PHASE FOR WHICH THERE IS NO CALL SHALL BE SKIPPED.

TYPE OF INTERCONNECT COMMUNICATION	
NONE	
TBC	
CLOSED LOOP TWISTED PAIR*	
CLOSED LOOP FIBER OPTIC*	
FIBER OPTIC	
RADIO	X
*LOCATION OF MASTER CONTROLLER NO: S-	
SIGNAL SYSTEM #: SS- .	

TYPE OF PRE-EMPT	
NONE	
RAILROAD	
EMERGENCY VEHICLE	
GTT	X
TOMAR	
HARDWIRE	
OTHER	
LIFT BRIDGE	
QUEUE DETECTOR	

TYPE OF LIGHTING	
BY OTHER AGENCY	
IN TRAFFIC SIGNAL CABINET	
IN SEPARATE LIGHTING CABINET	X

EMERGENCY VEHICLE PREEMPTION SEQUENCE

EMERGENCY VEHICLE PREEMPTOR	CHANNEL	
	B/D	A/C
MOVEMENT	⇇	↓↑
PHASE	4-8	2-6

TRAFFIC CONTROL SIGNAL
W. MORGAN AVE. & S. 13TH ST.
CITY OF MILWAUKEE
MILWAUKEE COUNTY

SIGNAL NO.

CONTROLLER TYPE: ECONOLITE COBALT

DATE PAGE OF

PROJECT ID:	2984-21-73
INTERSECTION:	W. MORGAN AVE. & S. 13TH ST.

SIGNAL WIRE COLOR CODING	BLK-BLACK	RED-RED	GRN-GREEN
	WHT-WHITE	BLU-BLUE	ORG-ORANGE

DATE: 10/17/2024

CB1 TO	JUMPER	# OF COND.	HEAD NO.	PHASE	SIGNAL INDICATION WIRE COLOR RED	YELLOW	GREEN	<RED>	<YELLOW>	<FLASH YELLOW>	<GREEN>	D/WALK	WALK	PED BUTTON	SERVICE
SB1		15	4	OLH				RED	ORG	GRN					
			6	8	RED/BLK	ORG/BLK	GRN/BLK								
			28	8								BLU	BLK		
			APS	2										BLK/WHT	
			PUSH BUTTON	2										WHT/BLK	
SB2		19	2	4	RED	ORG	GRN								
			3	4	RED/BLK	ORG/BLK	GRN/BLK								
			5	OLH				RED/WHT	BLU/WHT	GRN/WHT					
			23	4								BLU	BLK		
			APS	2										BLK/WHT	
			PUSH BUTTON	2										WHT/BLK	
SB3		15	14	OLE				RED	ORG	GRN					
			16	2	RED/BLK	ORG/BLK	GRN/BLK								
			22	2								BLU	BLK		
			APS	4										BLK/WHT	
			PUSH BUTTON	4										WHT/BLK	
SB4		19	12	6	RED	ORG	GRN								
			13	6	RED/BLK	ORG/BLK	GRN/BLK								
			15	OLE				RED/WHT	BLU/WHT	GRN/WHT					
			25	6								BLU	BLK		
			APS	4										BLK/WHT	
			PUSH BUTTON	4										WHT/BLK	
SB5		15	1	4	RED	ORG	GRN								
			9	OLF				RED/BLK	ORG/BLK	GRN/BLK					
			24	4								BLU	BLK		
			APS	6										BLK/WHT	
			PUSH BUTTON	6										WHT/BLK	
SB6		19	7	8	RED	ORG	GRN								
			8	8	RED/BLK	ORG/BLK	GRN/BLK								
			10	OLF				RED/WHT	BLU/WHT	GRN/WHT					
			27	8								BLU	BLK		
			APS	6										BLK/WHT	
			PUSH BUTTON	6										WHT/BLK	
SB7		15	11	6	RED	ORG	GRN								
			19	OLG				RED/BLK	ORG/BLK	GRN/BLK					
			26	6								BLU	BLK		
			APS	8										BLK/WHT	
			PUSH BUTTON	8										WHT/BLK	
SB8		19	17	2	RED	ORG	GRN								
			18	2	RED/BLK	ORG/BLK	GRN/BLK								
			20	OLG				RED/WHT	BLU/WHT	GRN/WHT					
			21	2								BLU	BLK		
			APS	8										BLK/WHT	
			PUSH BUTTON	8										WHT/BLK	

EQUIPMENT GROUNDING CONDUCTOR 10 AWG GRN XLP

FROM	TO
CB1	SB1
SB1	SB2
SB2	SB3
SB3	SB4
SB4	SB5
SB5	SB6
SB6	SB7
SB7	SB8
SB8	SB9
SB9	SB10
SB10	SB11
SB11	CB1

EMERGENCY VEHICLE PREEMPTION AND UF 2-12 CONFIRMATION

FROM	TO
CB1	SB2
SB2	HEAD B
CB1	SB8
SB8	HEAD A
CB1	SB6
SB6	HEAD D
CB1	SB4
SB4	HEAD C

NOTES:
1. USE WHITE CONDUCTOR IN THE SIGNAL CABLE AS THE GROUNDED CONDUCTOR FOR ALL TRAFFIC SIGNAL INDICATIONS
2. ENSURE THE GROUNDED CONDUCTOR IN THE FEEDER CABLE AND THE POLE CABLES ARE BOTH 12" LONGER THAN THE UNGROUNDED CONDUCTORS.
3. AT THE SIGNAL BASES, CONNECT ONE TERMINAL FROM THE PEDESTRIAN PUSH BUTTONS. TO THE COLOR INDICATED IN THE CHART. CONNECT THE OTHER TERMINAL TO THE GROUNDED CONDUCTOR.
4. "OTHER" COLUMN MAY INCLUDE SHADOW BOX (BLANK OUT) SIGN.
5. SPV.0090.307 IS WIRED FROM CONTROLLER CABINET TO METER PEDESTAL

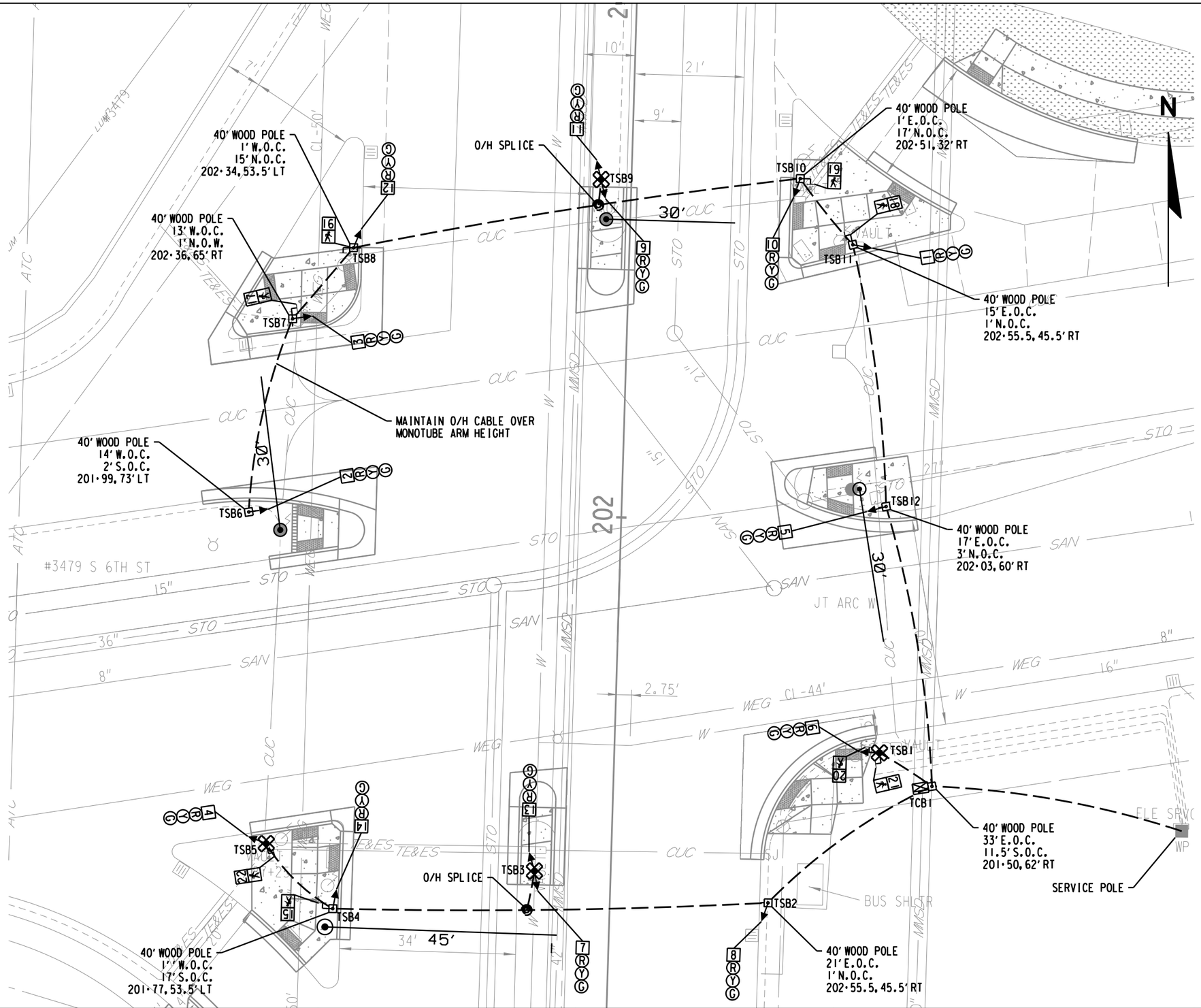

LEGEND

- CONTROL CABINET
- 40' CLASS 4 WOOD POLE
- MOVEABLE SIGNAL STANDARD
- OVERHEAD TRAFFIC SIGNAL CABLE
- PROPOSED MONOTUBE BASE

TRAFFIC CONTROL SIGNAL
W. MORGAN AVE., W. HOLT AVE.
& S. 6TH ST.
CITY OF MILWAUKEE
MILWAUKEE COUNTY

SIGNAL NO.

CONTROLLER TYPE: ECONOLITE COBALT

DATE PAGE OF

STATE PROJECT NO: 2984-21-73	HWY: W. MORGAN AVE.	COUNTY: MILWAUKEE	TEMPORARY TRAFFIC SIGNAL PLAN	SCALE FEET 0 20	SHEET	E

FILE NAME: W:\BTE\SIGNALS\PAVING AND DESIGN\STATE PROJECTS-LFA\PRELIMINARY ENGINEERING\2984-21-73 MORGAN AVE 20TH TO 6TH\2984-21-73 TEMP SIGNALS.DGN PLOT DATE : 17-OCT-2024 13:57 PLOT BY : JAORTIZ PLOT SCALE : 1:20 WISDOT/CADDS SHEET 42

2

	HEAD NUMBERS	FLASH
Ø2	11,12,13,14	R
Ø4	1,2,3	R
Ø6	7,8,9,10	R
Ø8	4,5,6	R
Ø2P	15,16	R
Ø4P	17,18	R
Ø6P	19,20	R
Ø8P	21,22	R

SEQUENCE OF OPERATION

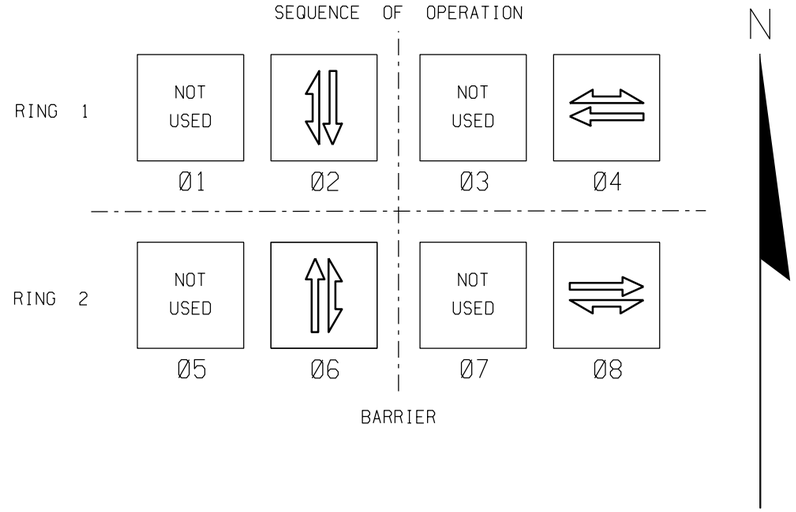

CONTROLLER LOGIC

PHASE NUMBER	PHASE LOCKING	DUAL ENTRY W/Ø	PHASE RECALL	PHASE ACTIVE
1				
2		6	COORD.	X
3				
4		8	PED.	X
5				
6		2	COORD.	X
7				
8		4	PED.	X

2

DETECTOR LOGIC

DETECTOR INPUT	3	1	7	5	11	9	15	13
PLAN LOOP DETECTOR								
CALLED PHASE								
CALL OPTION								
DELAY TIME								
EXTENTION OPTION								
EXTEND TIME								
USE ADDED INITIAL								
CROSS SWITCH PHASE								

DETECTOR INPUT	4	2	8	6	12	10	16	14
PLAN LOOP DETECTOR								
CALLED PHASE								
CALL OPTION								
DELAY TIME								
EXTENTION OPTION								
EXTEND TIME								
USE ADDED INITIAL								
CROSS SWITCH PHASE								

GENERAL NOTES:

1. ANY ACTUATED PHASE FOR WHICH THERE IS NO CALL SHALL BE SKIPPED.

TYPE OF INTERCONNECT COMMUNICATION	
NONE	X
TBC	
CLOSED LOOP TWISTED PAIR*	
CLOSED LOOP FIBER OPTIC*	
FIBER OPTIC	
RADIO	
*LOCATION OF MASTER CONTROLLER NO: S-	
SIGNAL SYSTEM *: SS- .	

TYPE OF PRE-EMPT	
NONE	
RAILROAD	
EMERGENCY VEHICLE	
GTT	X
TOMAR	
HARDWIRE	
OTHER	
LIFT BRIDGE	
QUEUE DETECTOR	

TYPE OF LIGHTING	
BY OTHER AGENCY	
IN TRAFFIC SIGNAL CABINET	
IN SEPARATE LIGHTING CABINET	X

TRAFFIC CONTROL SIGNAL
W. MORGAN AVE., W. HOLT AVE.
& S. 6TH ST.
CITY OF MILWAUKEE
MILWAUKEE COUNTY

SIGNAL NO.

CONTROLLER TYPE: ECONOLITE COBALT

DATE PAGE OF

STATE PROJECT NO: 2984-21-73 | HWY: W.MORGAN AVE. | COUNTY: MILWAUKEE | TEMPORARY SEQUENCE OF OPERATIONS | SHEET 85 | E

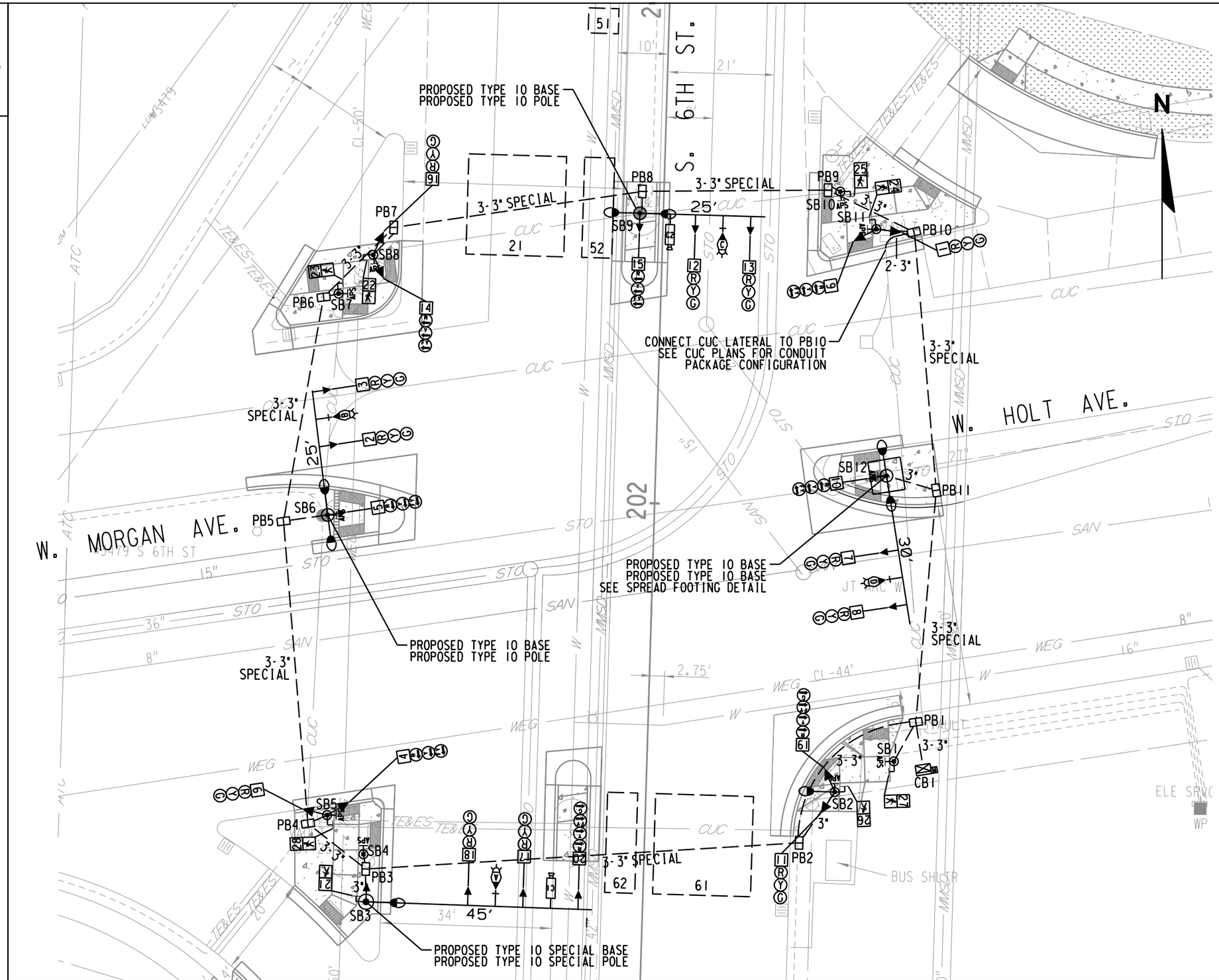

LEGEND

- CABINET
- (XX) MONOTUBE BASE, POLE, 15'-45' ARM
- CONCRETE POLYMER PULL BOX 17"X30"X24"
- NONMETALLIC CONDUIT 2", UNLESS OTHERWISE NOTED
- TRAFFIC SIGNAL STANDARD, PEDESTAL BASE
- LUMINAIRE
- M METER PEDESTAL
- APS PUSH BUTTON
- X SIGNAL HEAD NUMBER
- R RED CIRCULAR INDICATOR
- Y YELLOW CIRCULAR INDICATOR
- G GREEN CIRCULAR INDICATOR
- RED ARROWS
- YELLOW ARROWS
- GREEN ARROWS
- WALK-DON'T WALK INDICATOR 12" COUNTDOWN TIMER 12"
- CONFIRMATION LIGHT
- X EVP DESIGNATOR
- EVP DETECTOR HEAD

TRAFFIC CONTROL SIGNAL
W. MORGAN AVE., W. HOLT AVE.
& S. 6TH ST.
CITY OF MILWAUKEE
MILWAUKEE COUNTY

SIGNAL NO.

CONTROLLER TYPE: ECONOLITE COBALT

DATE PAGE OF

STATE PROJECT NO: 2984-21-73	HWY: W. MORGAN AVE.	COUNTY: MILWAUKEE	TRAFFIC SIGNAL PLAN	SCALE FEET 0 20	SHEET 86	E

	HEAD NUMBERS	FLASH
Ø2	16,17,18	R
OLE	14,15	R
Ø4	1,2,3	R
OLF	9,10	R
Ø5	19,20	R
Ø6	11,12,13	R
OLG	19,20	R
Ø8	6,7,8	R
OLH	4,5	R
Ø2P	21,22	R
Ø4P	23,24	R
Ø6P	25,26	R
Ø8P	27,28	R

SEQUENCE OF OPERATION

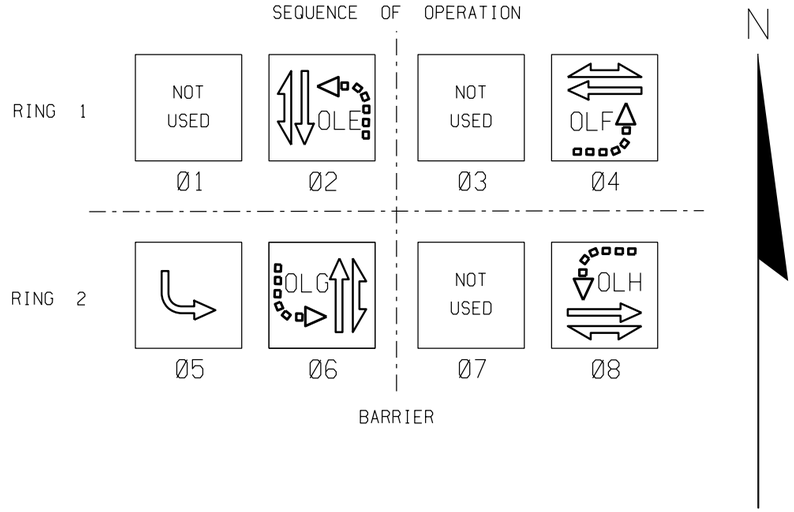

CONTROLLER LOGIC

PHASE NUMBER	PHASE LOCKING	DUAL ENTRY W/Ø	PHASE RECALL	PHASE ACTIVE
1				
2		6	VEH.	X
3				
4		8	COORD.	X
5				X
6		2	VEH.	X
7				
8		4	COORD.	X

OVERLAPS

O.L.	"E"	-	NB	FYA
O.L.	"F"	-	EB	FYA
O.L.	"G"	-	SB	FYA
O.L.	"H"	-	WB	FYA

DETECTOR LOGIC

DETECTOR INPUT	3	1	7	5	11	9	15	13
PLAN LOOP DETECTOR				51,52				
CALLED PHASE				5				
CALL OPTION				X				
DELAY TIME								
EXTENTION OPTION								
EXTEND TIME				X				
USE ADDED INITIAL								
CROSS SWITCH PHASE								

DETECTOR INPUT	4	2	8	6	12	10	16	14
PLAN LOOP DETECTOR		21		61,62				
CALLED PHASE		2		6				
CALL OPTION								
DELAY TIME								
EXTENTION OPTION								
EXTEND TIME		X		X				
USE ADDED INITIAL								
CROSS SWITCH PHASE								

GENERAL NOTES:

1. ANY ACTUATED PHASE FOR WHICH THERE IS NO CALL SHALL BE SKIPPED.

TYPE OF INTERCONNECT COMMUNICATION	
NONE	
TBC	
CLOSED LOOP TWISTED PAIR*	
CLOSED LOOP FIBER OPTIC*	
FIBER OPTIC	
RADIO	X
*LOCATION OF MASTER CONTROLLER NO: S-	
SIGNAL SYSTEM #: SS- .	

TYPE OF PRE-EMPT	
NONE	
RAILROAD	
EMERGENCY VEHICLE	
GTT	X
TOMAR	
HARDWIRE	
OTHER	
LIFT BRIDGE	
QUEUE DETECTOR	

TYPE OF LIGHTING	
BY OTHER AGENCY	
IN TRAFFIC SIGNAL CABINET	
IN SEPARATE LIGHTING CABINET	X

EMERGENCY VEHICLE PREEMPTION SEQUENCE

EMERGENCY VEHICLE PREEMPTOR	CHANNEL	
	B/D	A/C
MOVEMENT	⇇	↓↑
PHASE	4-8	2-6

TRAFFIC CONTROL SIGNAL
W. MORGAN AVE., W. HOLT AVE.
& S. 6TH ST.
CITY OF MILWAUKEE
MILWAUKEE COUNTY

SIGNAL NO.

CONTROLLER TYPE: ECONOLITE COBALT

DATE PAGE OF

PROJECT ID:	2984-21-73
INTERSECTION:	W. MORGAN AVE. & S. 6TH ST.

SIGNAL WIRE COLOR CODING	BLK-BLACK	RED-RED	GRN-GREEN
	WHT-WHITE	BLU-BLUE	ORG-ORANGE

DATE: 10/17/2024

CB1 TO	JUMPER	# OF COND.	HEAD NO.	PHASE	SIGNAL INDICATION WIRE COLOR RED	YELLOW	GREEN	<RED>	<YELLOW>	<FLASH YELLOW>	<GREEN>	D/WALK	WALK	PED BUTTON	OTHER
SB1		9	27	8								BLU	BLK		
			APS	6										ORG	
			PUSH BUTTON	6										WHT/BLK	
SB2		15	11	6	RED	ORG	GRN								
			19	5				RED/BLK	ORG/BLK	BLU/BLK	GRN/BLK				
			26	6								BLU	BLK		
			APS	8										BLK/WHT	
			PUSH BUTTON	8										WHT/BLK	
SB3		19	17	2	RED	ORG	GRN								
			18	2	RED/BLK	ORG/BLK	GRN/BLK								
			20	5				RED/WHT	BLU/WHT	BLK/WHT	GRN/WHT				
			21	2								BLU	BLK		
SB4		5	APS	8										ORG	
			PUSH BUTTON	8										BLK	
SB5		15	4	OLH				RED	ORG	GRN					
			6	8	RED/BLK	ORG/BLK	GRN/BLK								
			28	8								BLU	BLK		
			APS	2										BLK/WHT	
			PUSH BUTTON	2										WHT/BLK	
SB6		19	2	4	RED	ORG	GRN								
			3	4	RED/BLK	ORG/BLK	GRN/BLK								
			5	OLH				RED/WHT	BLU/WHT	GRN/WHT					
			APS	2										BLK/WHT	
			PUSH BUTTON	2										WHT/BLK	
SB7		9	23	4								BLU	BLK		
			APS	2										ORG	
			PUSH BUTTON	2										WHT/BLK	
SB8		15	14	OLE				RED	ORG	GRN					
			16	2	RED/BLK	ORG/BLK	GRN/BLK								
			22	2								BLU	BLK		
			APS	4										BLK/WHT	
			PUSH BUTTON	4										WHT/BLK	
SB9		19	12	6	RED	ORG	GRN								
			13	6	RED/BLK	ORG/BLK	GRN/BLK								
			15	OLE				RED/WHT	BLU/WHT	GRN/WHT					
SB10		9	25	6								BLU	BLK		
			APS	4										ORG	
			PUSH BUTTON	4										WHT/BLK	
SB11		15	1	4	RED	ORG	GRN								
			9	OLF				RED/BLK	ORG/BLK	GRN/BLK					
			24	4								BLU	BLK		
			APS	6										BLK/WHT	
			PUSH BUTTON	6										WHT/BLK	
SB12		19	7	8	RED	ORG	GRN								
			8	8	RED/BLK	ORG/BLK	GRN/BLK								
			10	OLF				RED/WHT	BLU/WHT	GRN/WHT					
			APS	6										BLK/WHT	
			PUSH BUTTON	6										WHT/BLK	

EQUIPMENT GROUNDING CONDUCTOR 10 AWG GRN XLP	
FROM	TO
CB1	SB1
SB1	SB2
SB2	SB3
SB3	SB4
SB4	SB5
SB5	SB6
SB6	SB7
SB7	SB8
SB8	SB9
SB9	SB10
SB10	SB11
SB11	SB12
SB12	CB1

EMERGENCY VEHICLE PREEMPTION AND UF 2-12 CONFIRMATION	
FROM	TO
CB1	SB6
SB6	HEAD B
CB1	SB3
SB3	HEAD A
CB1	SB12
SB12	HEAD D
CB1	SB9
SB9	HEAD C

NOTES:
1. USE WHITE CONDUCTOR IN THE SIGNAL CABLE AS THE GROUNDED CONDUCTOR FOR ALL TRAFFIC SIGNAL INDICATIONS
2. ENSURE THE GROUNDED CONDUCTOR IN THE FEEDER CABLE AND THE POLE CABLES ARE BOTH 12" LONGER THAN THE UNGROUNDED CONDUCTORS.
3. AT THE SIGNAL BASES, CONNECT ONE TERMINAL FROM THE PEDESTRIAN PUSH BUTTONS. TO THE COLOR INDICATED IN THE CHART. CONNECT THE OTHER TERMINAL TO THE GROUNDED CONDUCTOR.
4. "OTHER" COLUMN MAY INCLUDE SHADOW BOX (BLANK OUT) SIGN.
5. SPV.0090.307 IS WIRED FROM CONTROLLER CABINET TO METER PEDESTAL

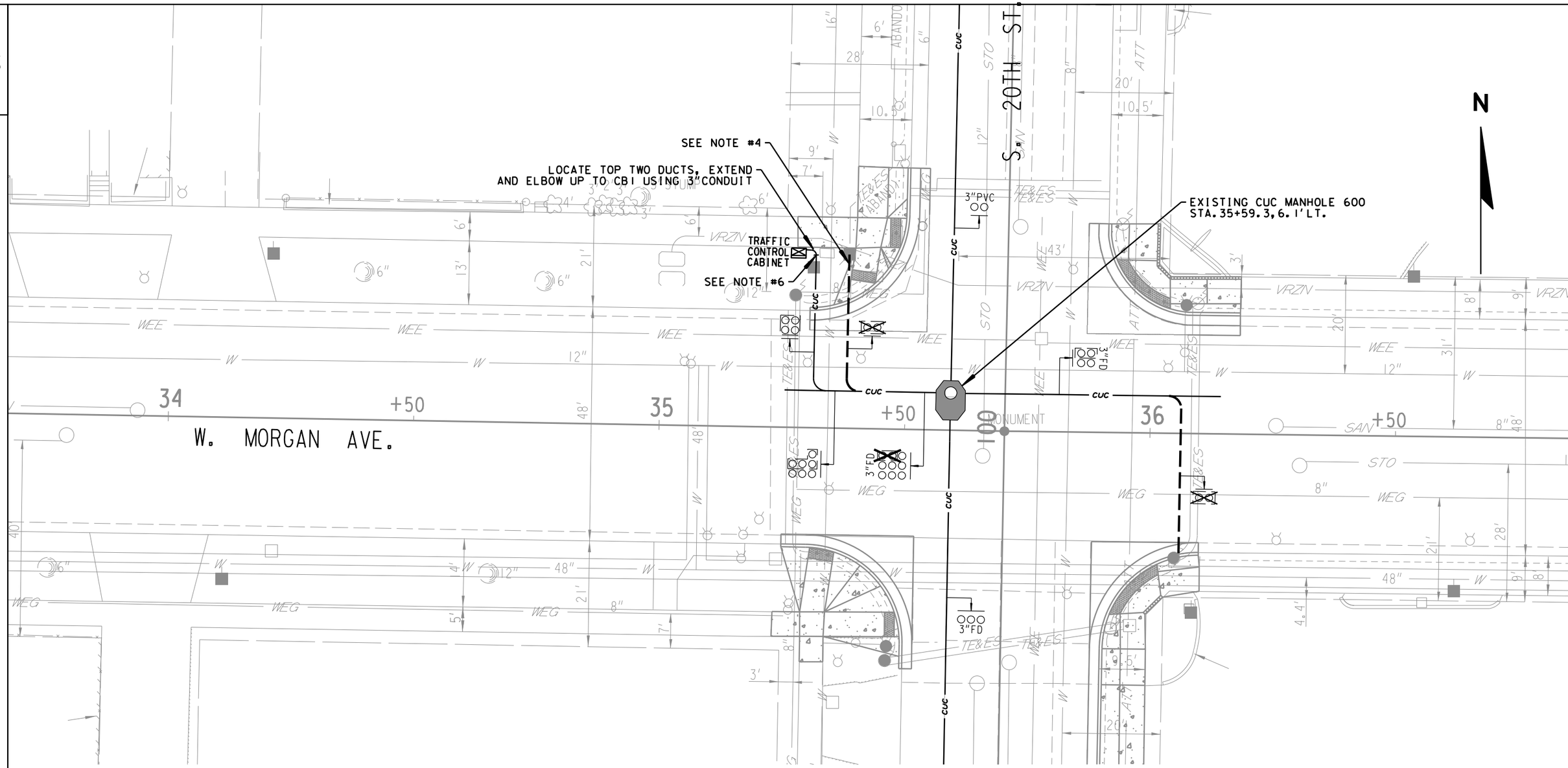

NOTES:

1) THE LOCATION OF EXISTING AND PROPOSED UTILITY INSTALLATIONS AS SHOWN ON THE PLANS IS APPROXIMATE. THERE MAY BE OTHER UTILITY INSTALLATIONS WITHIN THE PROJECT AREA WHICH ARE NOT SHOWN.
2) THE LOCATION OF THE EXISTING AND PROPOSED UTILITY INSTALLATIONS SHALL BE FIELD VERIFIED BY THE CONTRACTOR.
3) DIMENSIONS SHOWN ARE TO CENTER OF MANHOLE, DUCT PACKAGE OR UTILITY.
4) REMOVE ABANDONED CONDUIT AS NEEDED FOR PROPOSED INSTALLATION.
5) ATTACH PROPOSED 3" PVC TO EXISTING DUCTS USING APPROPRIATE ADAPTORS.
6) CONTRACTOR MUST REMOVE ALL TRAFFIC SIGNALS AND/OR STREET LIGHTING CABLES PRIOR TO LATERAL CONNECTION. THIS IS TO BE INCLUDED AND PAID FOR UNDER ITEM 674.0300

LEGEND

▣	EXISTING CUC MANHOLE
—— CUC ——	EXISTING CONDUIT
— — — —	CONDUIT TO BE ABANDONED

SHEET 1 OF 3

STATE PROJECT NO: 2984-21-73	HWY: W. MORGAN AVE.	COUNTY: MILWAUKEE	UNDERGROUND CONDUIT PLAN	SCALE FEET 0 20	SHEET 89	E

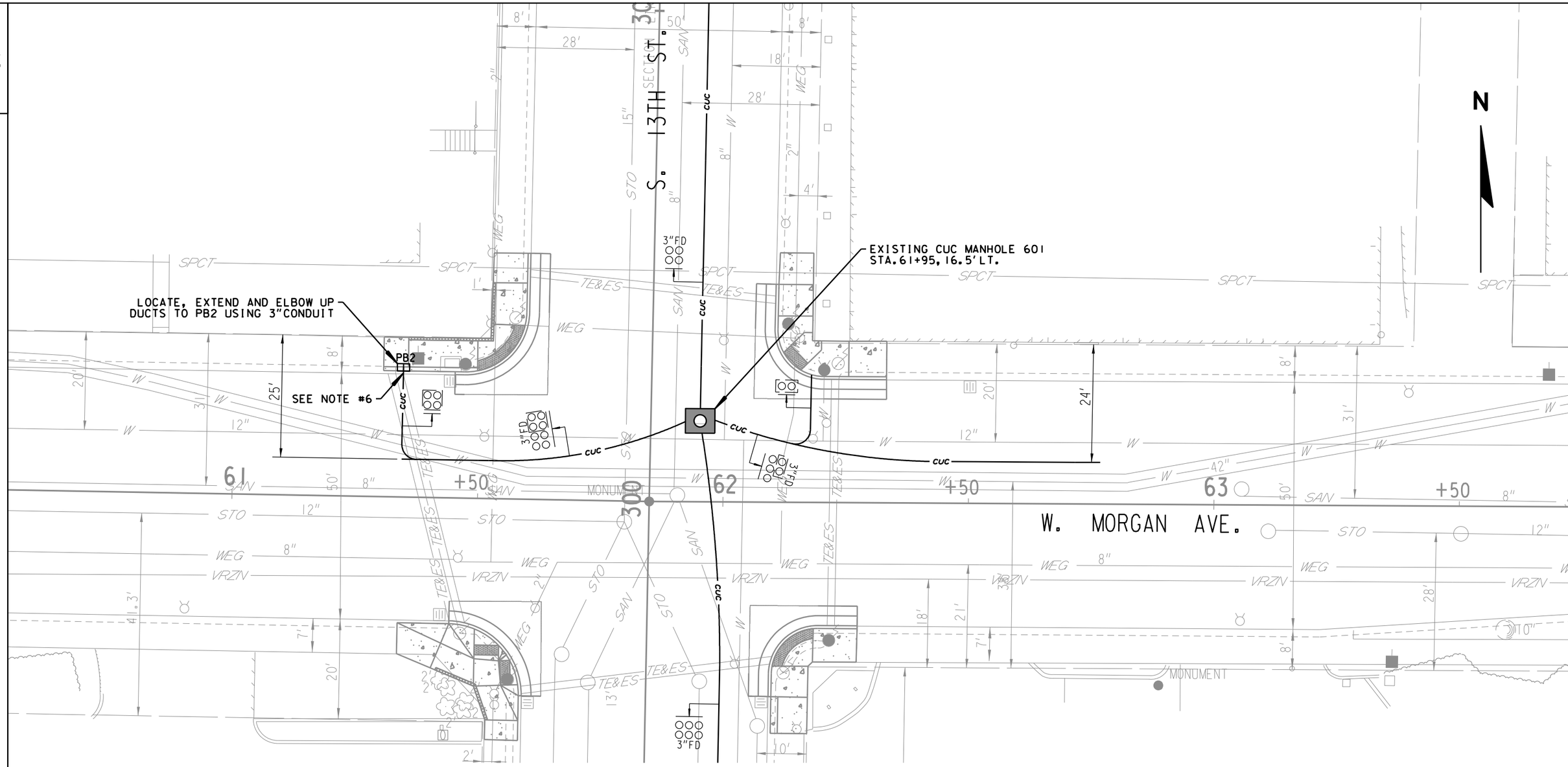

NOTES:

1) THE LOCATION OF EXISTING AND PROPOSED UTILITY INSTALLATIONS AS SHOWN ON THE PLANS IS APPROXIMATE. THERE MAY BE OTHER UTILITY INSTALLATIONS WITHIN THE PROJECT AREA WHICH ARE NOT SHOWN.
2) THE LOCATION OF THE EXISTING AND PROPOSED UTILITY INSTALLATIONS SHALL BE FIELD VERIFIED BY THE CONTRACTOR.
3) DIMENSIONS SHOWN ARE TO CENTER OF MANHOLE, DUCT PACKAGE OR UTILITY.
4) REMOVE ABANDONED CONDUIT AS NEEDED FOR PROPOSED INSTALLATION.
5) ATTACH PROPOSED 3" PVC TO EXISTING DUCTS USING APPROPRIATE ADAPTORS.
6) CONTRACTOR MUST REMOVE ALL TRAFFIC SIGNALS AND/OR STREET LIGHTING CABLES PRIOR TO LATERAL CONNECTION. THIS IS TO BE INCLUDED AND PAID FOR UNDER ITEM 674.0300

LEGEND

- EXISTING CUC MANHOLE
- CUC — EXISTING CONDUIT
- CONDUIT TO BE ABANDONED

SHEET 2 OF 3

STATE PROJECT NO: 2984-21-73	HWY: W. MORGAN AVE.	COUNTY: MILWAUKEE	UNDERGROUND CONDUIT PLAN	SCALE FEET 0 20	SHEET 90	E

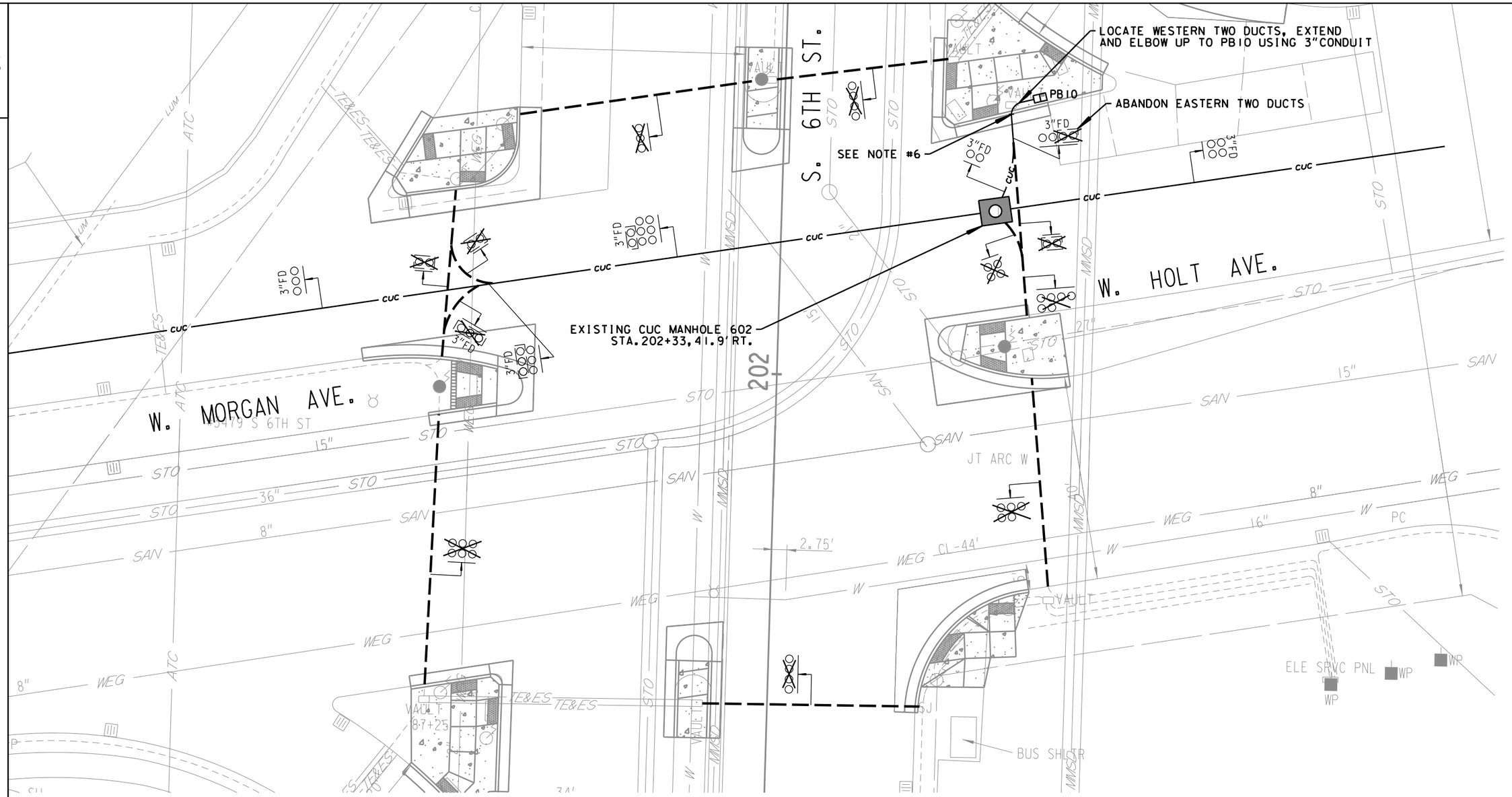

NOTES:

1) THE LOCATION OF EXISTING AND PROPOSED UTILITY INSTALLATIONS AS SHOWN ON THE PLANS IS APPROXIMATE. THERE MAY BE OTHER UTILITY INSTALLATIONS WITHIN THE PROJECT AREA WHICH ARE NOT SHOWN.
2) THE LOCATION OF THE EXISTING AND PROPOSED UTILITY INSTALLATIONS SHALL BE FIELD VERIFIED BY THE CONTRACTOR.
3) DIMENSIONS SHOWN ARE TO CENTER OF MANHOLE, DUCT PACKAGE OR UTILITY.
4) REMOVE ABANDONED CONDUIT AS NEEDED FOR PROPOSED INSTALLATION.
5) ATTACH PROPOSED 3" PVC TO EXISTING DUCTS USING APPROPRIATE ADAPTORS.
6) CONTRACTOR MUST REMOVE ALL TRAFFIC SIGNALS AND/OR STREET LIGHTING CABLES PRIOR TO LATERAL CONNECTION. THIS IS TO BE INCLUDED AND PAID FOR UNDER ITEM 674.0300

LEGEND

▣	EXISTING CUC MANHOLE
—— CUC ——	EXISTING CONDUIT
▬ ▬ ▬ ▬	CONDUIT TO BE ABANDONED

SHEET 3 OF 3

STATE PROJECT NO: 2984-21-73	HWY: W.MORGAN AVE.	COUNTY: MILWAUKEE	UNDERGROUND CONDUIT PLAN	SCALE FEET 0 20	SHEET	E

2

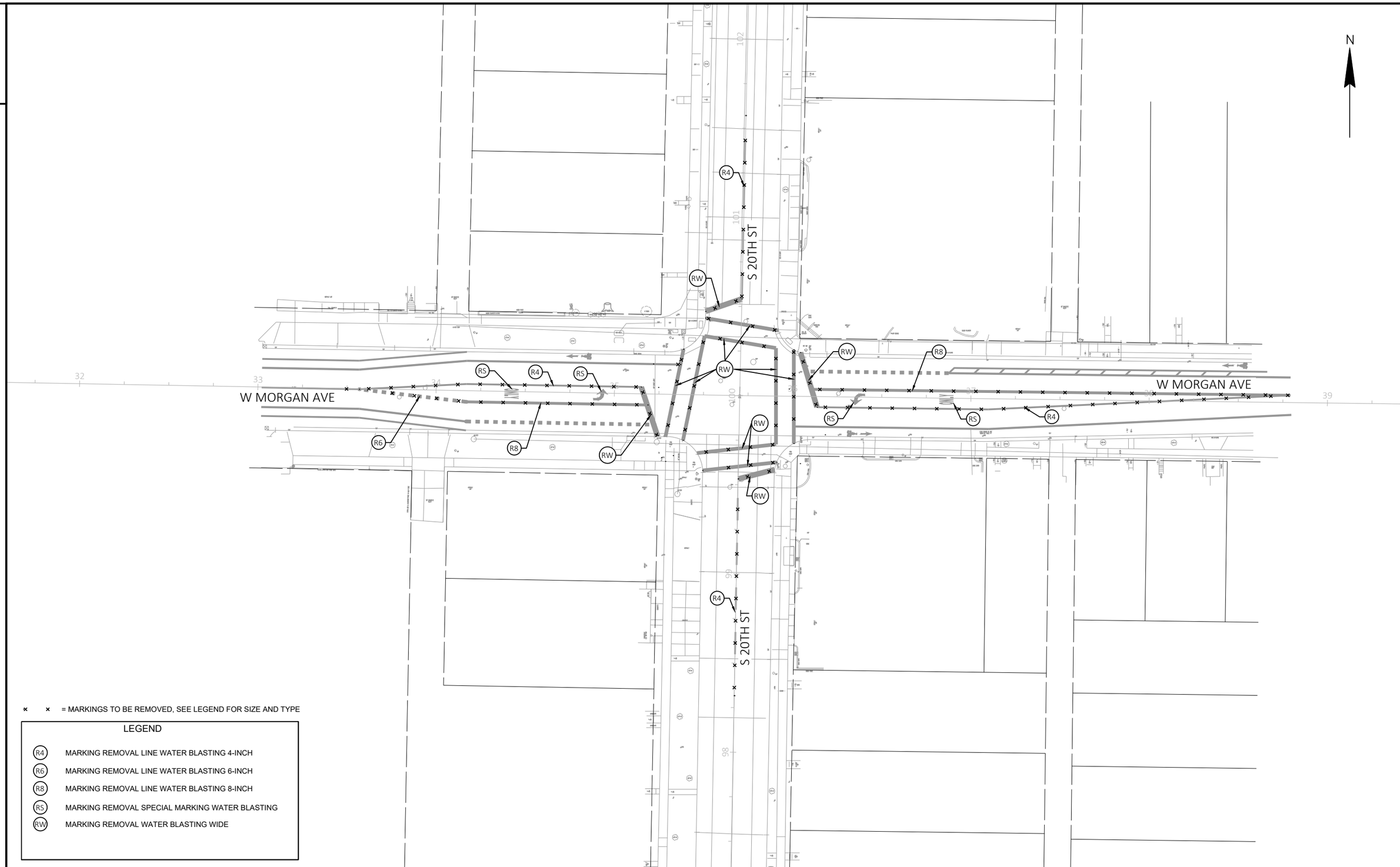

× × = MARKINGS TO BE REMOVED, SEE LEGEND FOR SIZE AND TYPE

LEGEND

R4	MARKING REMOVAL LINE WATER BLASTING 4-INCH
R6	MARKING REMOVAL LINE WATER BLASTING 6-INCH
R8	MARKING REMOVAL LINE WATER BLASTING 8-INCH
RS	MARKING REMOVAL SPECIAL MARKING WATER BLASTING
RW	MARKING REMOVAL WATER BLASTING WIDE

2

PROJECT NO: 2984-21-73	HWY: W. MORGAN AVE	COUNTY: MILWAUKEE	PAVEMENT MARKING REMOVAL PLAN	SHEET 92	E

FILE NAME : S:\MILW_CO\MILWCITY\GOV\230520 MORGAN AVENUE\C3D-MORGANAVE\SHEETS\024500-PM.DWG
LAYOUT NAME - PM1

PLOT DATE : 10/29/2024 10:06 AM PLOT BY : WALTER A. WOLAK II PLOT NAME : PLOT SCALE : 1 IN:50 FT

WISDOT/CADDS SHEET 42

2

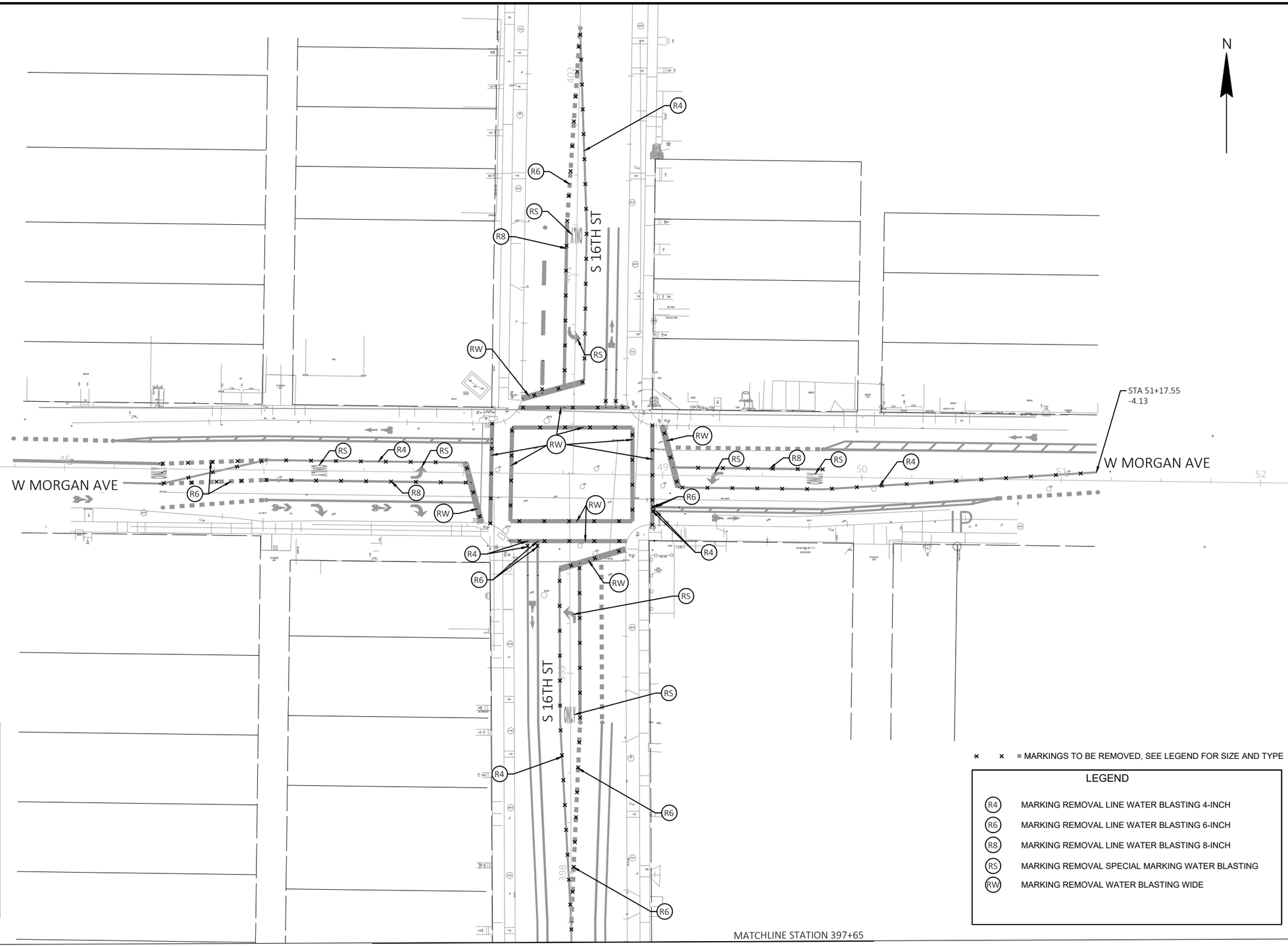

× × = MARKINGS TO BE REMOVED, SEE LEGEND FOR SIZE AND TYPE

LEGEND

R4	MARKING REMOVAL LINE WATER BLASTING 4-INCH
R6	MARKING REMOVAL LINE WATER BLASTING 6-INCH
R8	MARKING REMOVAL LINE WATER BLASTING 8-INCH
RS	MARKING REMOVAL SPECIAL MARKING WATER BLASTING
RW	MARKING REMOVAL WATER BLASTING WIDE

2

PROJECT NO: 2984-21-73	HWY: W. MORGAN AVE	COUNTY: MILWAUKEE	PAVEMENT MARKING REMOVAL PLAN	SHEET 93	E

FILE NAME : S:\MILW_CO\MILWCITY\GOV\230520 MORGAN AVENUE\C3D-MORGANAVE\SHEETS\024500-PM.DWG
LAYOUT NAME - PM3
PLOT DATE : 10/29/2024 10:06 AM PLOT BY : WALTER A. WOLAK II PLOT NAME : PLOT SCALE : 1 IN:50 FT

WISDOT/CADDS SHEET 42

2

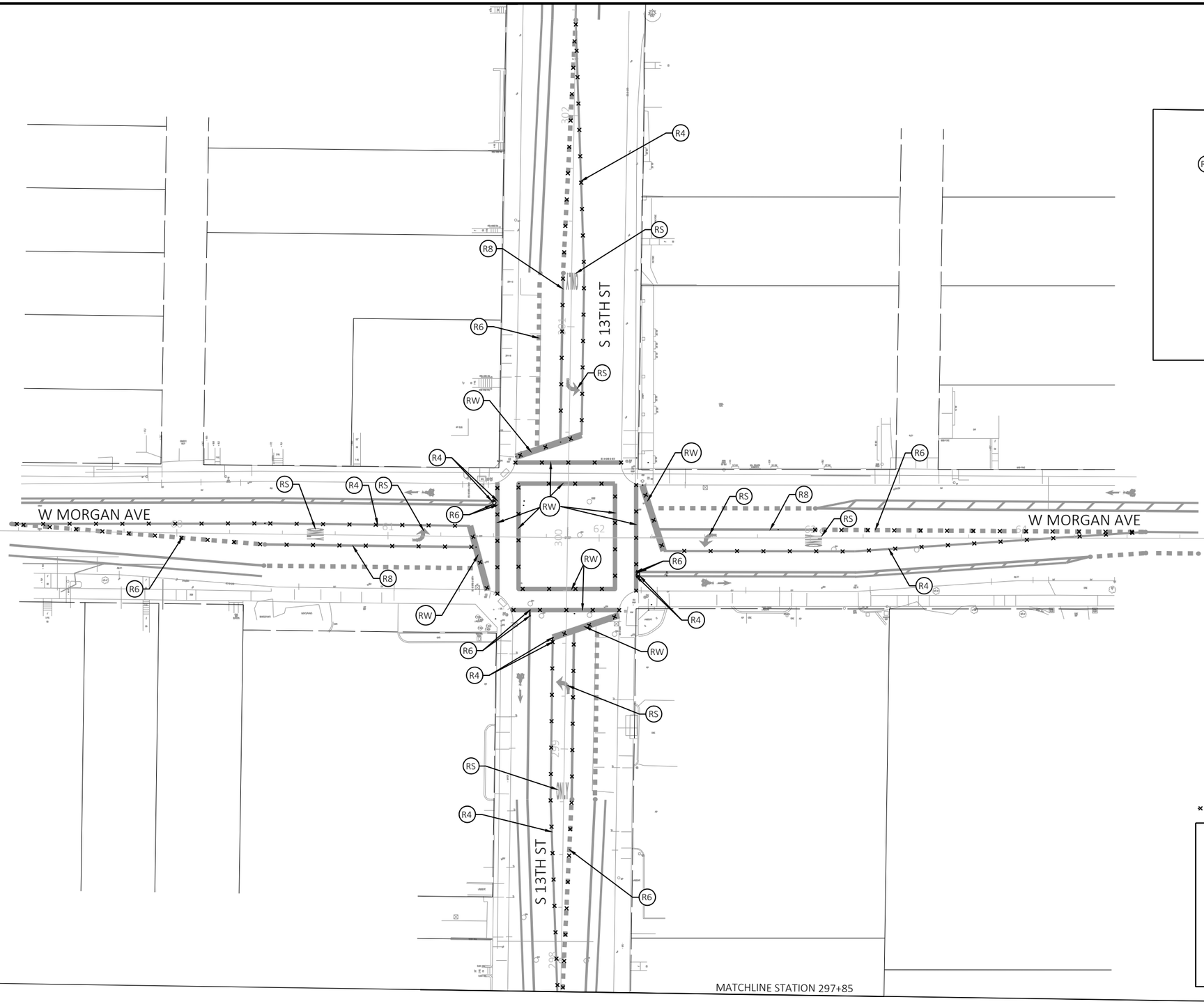

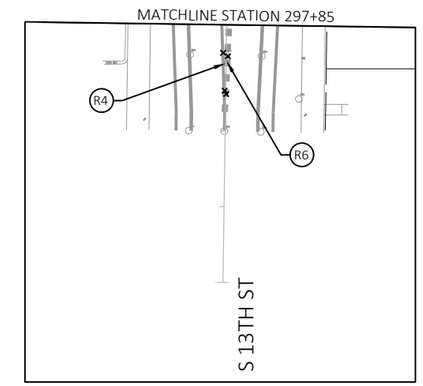

N

× × = MARKINGS TO BE REMOVED, SEE LEGEND FOR SIZE AND TYPE

LEGEND

R4	MARKING REMOVAL LINE WATER BLASTING 4-INCH
R6	MARKING REMOVAL LINE WATER BLASTING 6-INCH
R8	MARKING REMOVAL LINE WATER BLASTING 8-INCH
RS	MARKING REMOVAL SPECIAL MARKING WATER BLASTING
RW	MARKING REMOVAL WATER BLASTING WIDE

2

PROJECT NO: 2984-21-73	HWY: W. MORGAN AVE	COUNTY: MILWAUKEE	PAVEMENT MARKING REMOVAL PLAN	SHEET 94	E

FILE NAME : S:\MILW_CO\MILWCITY\GOV\230520 MORGAN AVENUE\C3D-MORGANAVE\SHEETS\024500-PM.DWG
LAYOUT NAME - PM5
PLOT DATE : 10/29/2024 10:06 AM PLOT BY : WALTER A. WOLAK II PLOT NAME : PLOT SCALE : 1 IN:50 FT

WISDOT/CADDS SHEET 42

2

× × = MARKINGS TO BE REMOVED, SEE LEGEND FOR SIZE AND TYPE

LEGEND

R4	MARKING REMOVAL LINE WATER BLASTING 4-INCH
R6	MARKING REMOVAL LINE WATER BLASTING 6-INCH
R8	MARKING REMOVAL LINE WATER BLASTING 8-INCH
RS	MARKING REMOVAL SPECIAL MARKING WATER BLASTING
RW	MARKING REMOVAL WATER BLASTING WIDE

N

S 6TH ST

W HOLT AVE

W MORGAN AVE

MATCHLINE STATION 199+75

85 86 87 88 89 90

200 201 202 203 204

MATCHLINE STATION 199+75

199

S 6TH ST

2

PROJECT NO: 2984-21-73	HWY: W. MORGAN AVE	COUNTY: MILWAUKEE	PAVEMENT MARKING REMOVAL PLAN	SHEET 95	E

FILE NAME : S:\MILW_CO\MILWCITY\GOV\230520 MORGAN AVENUE\C3D-MORGANAVE\SHEETS\024500-PM.DWG
LAYOUT NAME - PM8

PLOT DATE : 10/29/2024 10:06 AM PLOT BY : WALTER A. WOLAK II PLOT NAME : PLOT SCALE : 1 IN:50 FT

WISDOT/CADDS SHEET 42

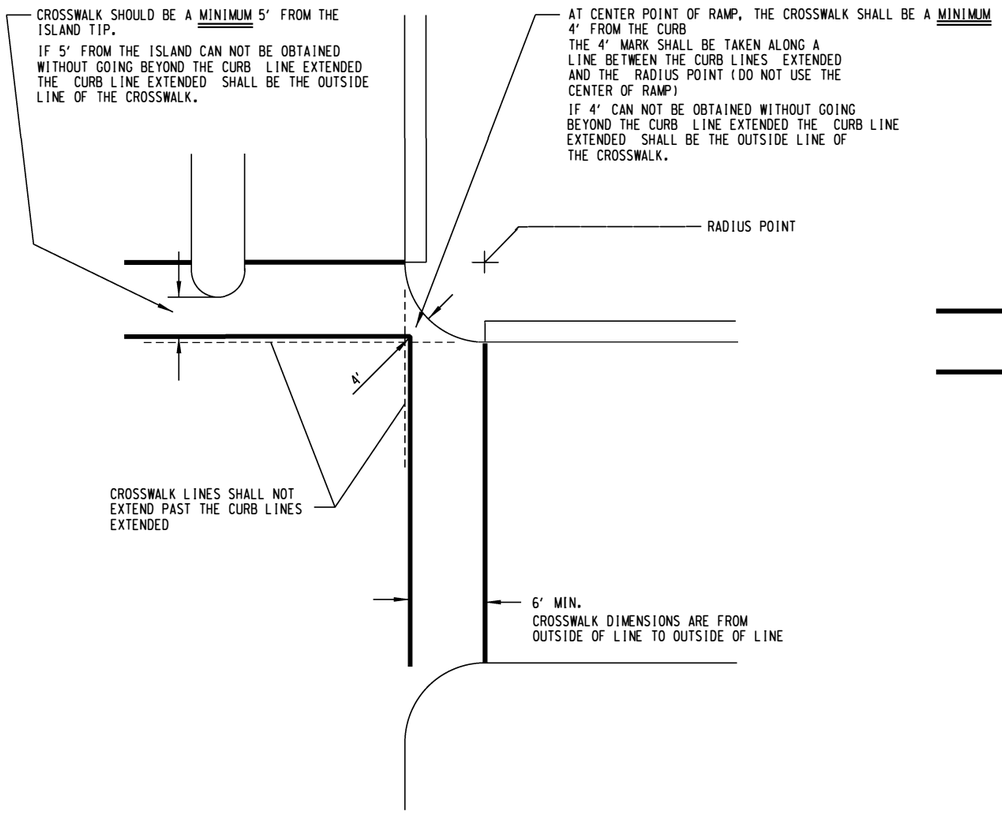

TYPICAL CROSS WALK INSTALLATION
WITH TYPE 1 RAMP
(PLASTIC, EPOXY, PAINT)

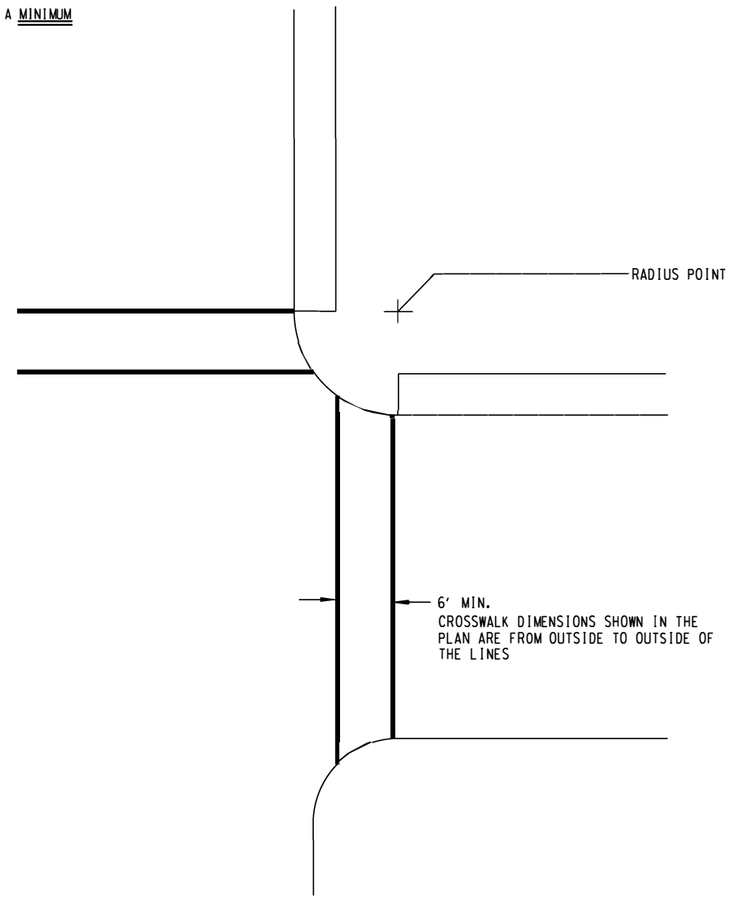

WITH TYPE 2 RAMP
(PLASTIC, EPOXY, PAINT)

STATE PROJECT NUMBER 2984-21-73	HWY: W. MORGAN AVE.	COUNTY: MILWAUKEE	PAVEMENT MARKING DETAILS	SCALE FEET 0' 20'	SHEET NO:	E

FILENAME: W:\SPR\MONOTUBE PROJECTS\SILVER SPRING DR MOMOTUBES - 2090-16-00\TRAFFIC & PAVEMARK\2090-16-70 - SILVER SPRING MONOTUBES - PAVEMENT MARKINGS.DGN

2

2

N

W MORGAN AVE

W MORGAN AVE

S 20TH ST

S 20TH ST

10' LINE 30' GAP

10' LINE 30' GAP

2' LINE, 6' GAP

2' LINE, 6' GAP

2' LINE, 6' GAP

2' LINE, 6' GAP

+57 +54 +44 +37 +55 +62 +53 +32 +49 +57 +17 +15 +03 +11 +87 +90 +66 +79 +50 +57 +17 +21 +31 +02 +10 +32 +80

LEGEND

A	MARKING LINE EPOXY, 4-INCH WHITE
B	MARKING LINE EPOXY, 6-INCH WHITE
C	MARKING LINE EPOXY, 4-INCH YELLOW
D	MARKING LINE EPOXY, 8-INCH WHITE
E	MARKING LINE EPOXY, 4-INCH DOUBLE YELLOW
F	MARKING WORD EPOXY, "ONLY"
G	MARKING ARROW EPOXY, TYPE 2 (LEFT TURN)
H	MARKING ARROW EPOXY, TYPE 2 (RIGHT TURN)
I	MARKING ARROW EPOXY, TYPE 1 (STRAIGHT)
J	MARKING LINE EPOXY, 12-INCH WHITE (PAID AS MARKING STOP LINE EPOXY 12-INCH)
K	MARKING STOPLINE EPOXY, 24-INCH WHITE
L	MARKING SYMBOL EPOXY, BIKE SYMBOL
M	MARKING ARROW EPOXY, BIKE ARROW
O	MARKING SYMBOL EPOXY, SHARROW SYMBOL
P	MARKING YIELD LINE EPOXY 18-INCH

PROJECT NO: 2984-21-73	HWY: W. MORGAN AVE	COUNTY: MILWAUKEE	PAVEMENT MARKING PLAN	SHEET 97	E

FILE NAME : S:\MILW_CO\MILWCITY\GOV\230520 MORGAN AVENUE\C3D-MORGANAVE\SHEETS\024501-PM.DWG
LAYOUT NAME - PM1
PLOT DATE : 1/27/2025 11:31 AM
PLOT BY : WALTER A. WOLAK II
PLOT NAME :
PLOT SCALE : 1 IN:50 FT
WISDOT/CADDS SHEET 42

2

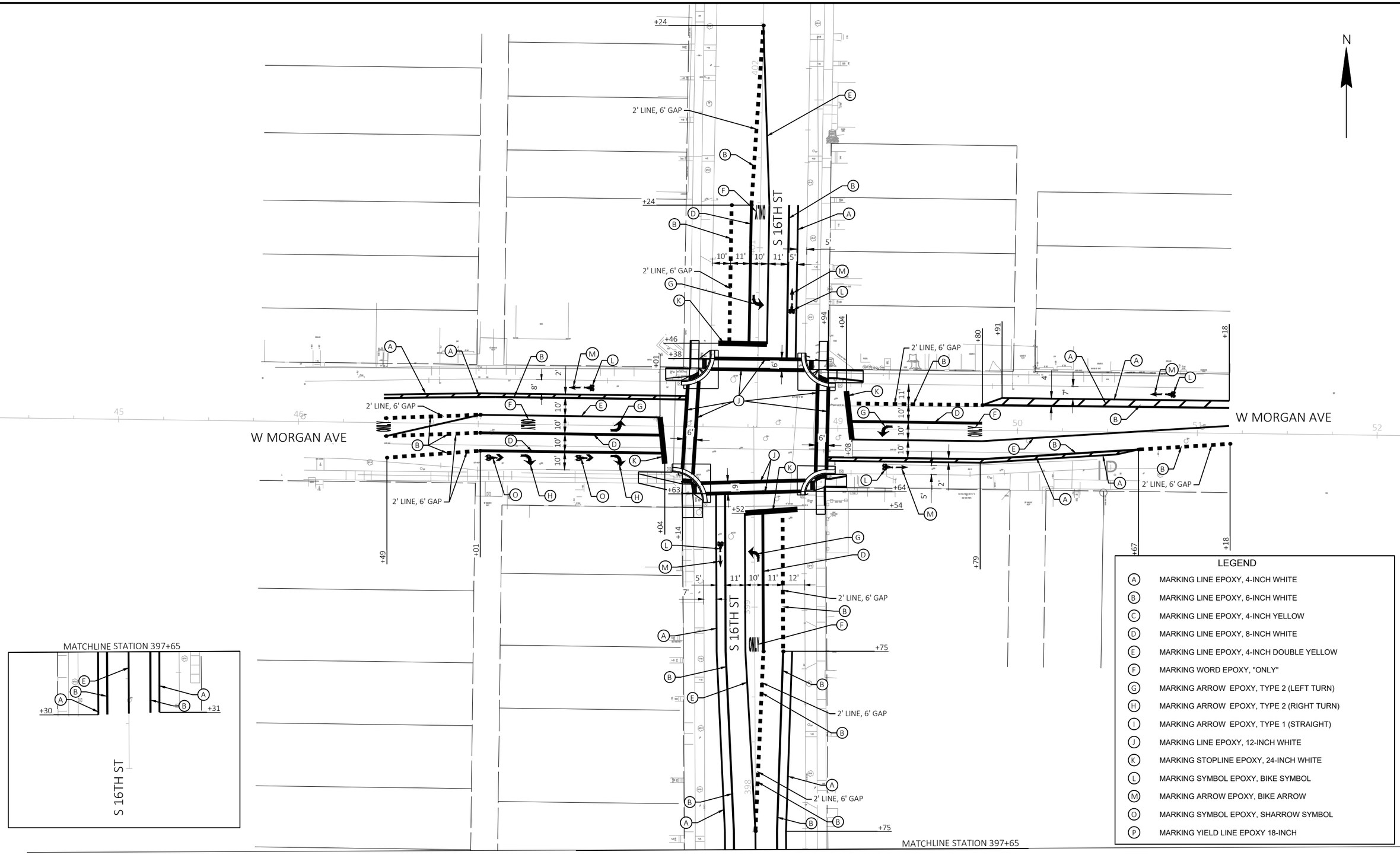

PROJECT NO: 2984-21-73	HWY: W. MORGAN AVE	COUNTY: MILWAUKEE	PAVEMENT MARKING PLAN	SHEET 98	E

FILE NAME : S:\MILW_CO\MILWCITY\GOV\230520 MORGAN AVENUE\C3D-MORGANAVE\SHEETS\024501-PM.DWG
LAYOUT NAME - PM3
PLOT DATE : 10/29/2024 10:07 AM
PLOT BY : WALTER A. WOLAK II
PLOT NAME :
PLOT SCALE : 1 IN:50 FT
WISDOT/CADDS SHEET 42

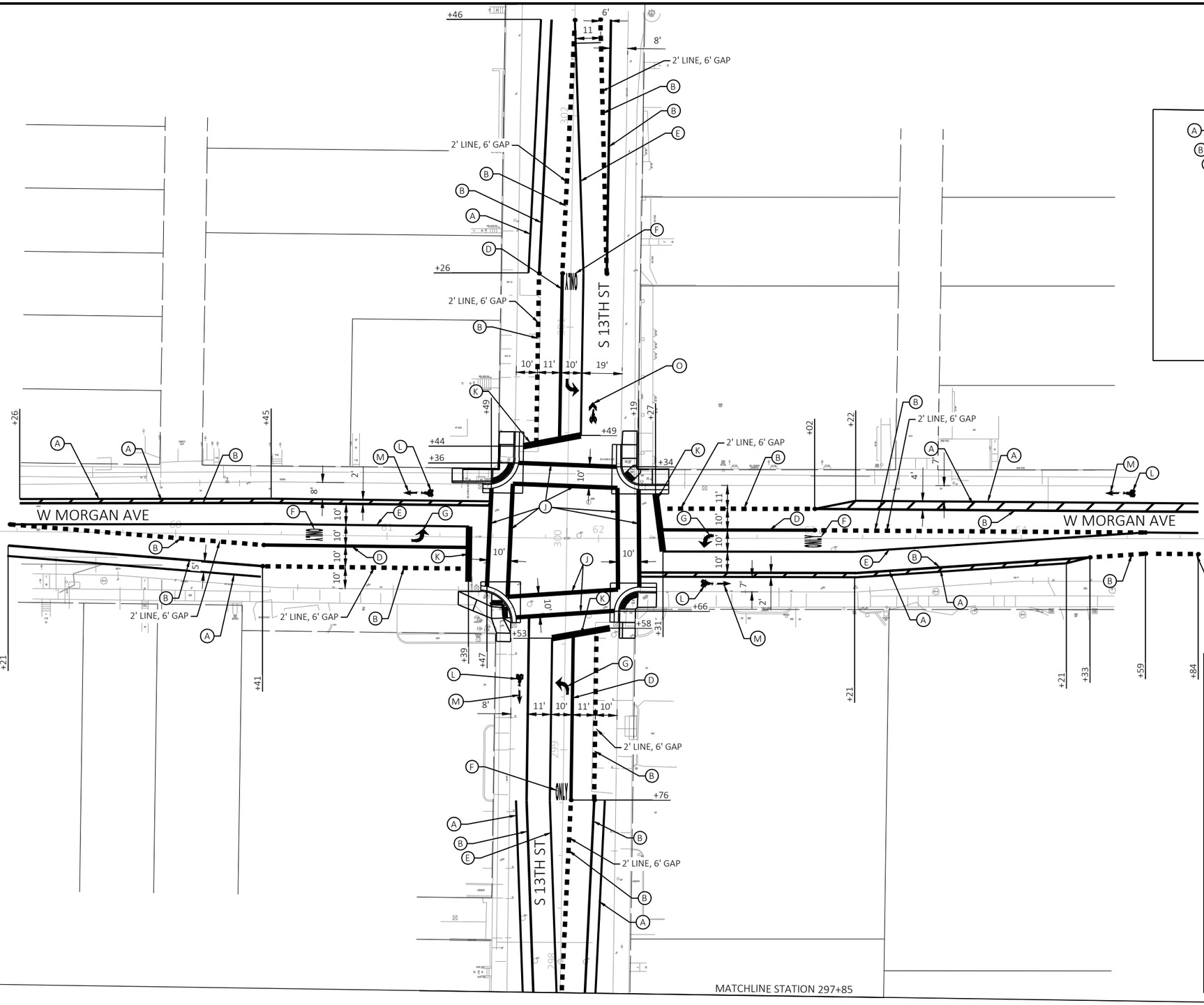

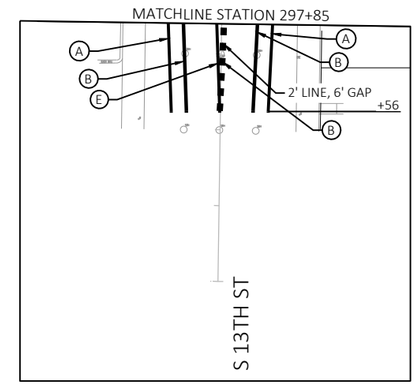

N

LEGEND

A	MARKING LINE EPOXY, 4-INCH WHITE
B	MARKING LINE EPOXY, 6-INCH WHITE
C	MARKING LINE EPOXY, 4-INCH YELLOW
D	MARKING LINE EPOXY, 8-INCH WHITE
E	MARKING LINE EPOXY, 4-INCH DOUBLE YELLOW
F	MARKING WORD EPOXY, "ONLY"
G	MARKING ARROW EPOXY, TYPE 2 (LEFT TURN)
H	MARKING ARROW EPOXY, TYPE 2 (RIGHT TURN)
I	MARKING ARROW EPOXY, TYPE 1 (STRAIGHT)
J	MARKING LINE EPOXY, 12-INCH WHITE
K	MARKING STOPLINE EPOXY, 24-INCH WHITE
L	MARKING SYMBOL EPOXY, BIKE SYMBOL
M	MARKING ARROW EPOXY, BIKE ARROW
O	MARKING SYMBOL EPOXY, SHARROW SYMBOL
P	MARKING YIELD LINE EPOXY 18-INCH

PROJECT NO: 2984-21-73	HWY: W. MORGAN AVE	COUNTY: MILWAUKEE	PAVEMENT MARKING PLAN	SHEET 99	E

FILE NAME : S:\MILW_CO\MILWCITY\GOV\230520 MORGAN AVENUE\C3D-MORGANAVE\SHEETS\024501-PM.DWG
LAYOUT NAME - PM5
PLOT DATE : 10/29/2024 10:07 AM PLOT BY : WALTER A. WOLAK II PLOT NAME : PLOT SCALE : 1 IN:50 FT

2

LEGEND

A	MARKING LINE EPOXY, 4-INCH WHITE
B	MARKING LINE EPOXY, 6-INCH WHITE
C	MARKING LINE EPOXY, 4-INCH YELLOW
D	MARKING LINE EPOXY, 8-INCH WHITE
E	MARKING LINE EPOXY, 4-INCH DOUBLE YELLOW
F	MARKING WORD EPOXY, "ONLY"
G	MARKING ARROW EPOXY, TYPE 2 (LEFT TURN)
H	MARKING ARROW EPOXY, TYPE 2 (RIGHT TURN)
I	MARKING ARROW EPOXY, TYPE 1 (STRAIGHT)
J	MARKING LINE EPOXY, 12-INCH WHITE
K	MARKING STOPLINE EPOXY, 24-INCH WHITE
L	MARKING SYMBOL EPOXY, BIKE SYMBOL
M	MARKING ARROW EPOXY, BIKE ARROW
O	MARKING SYMBOL EPOXY, SHARROW SYMBOL
P	MARKING YIELD LINE EPOXY 18-INCH

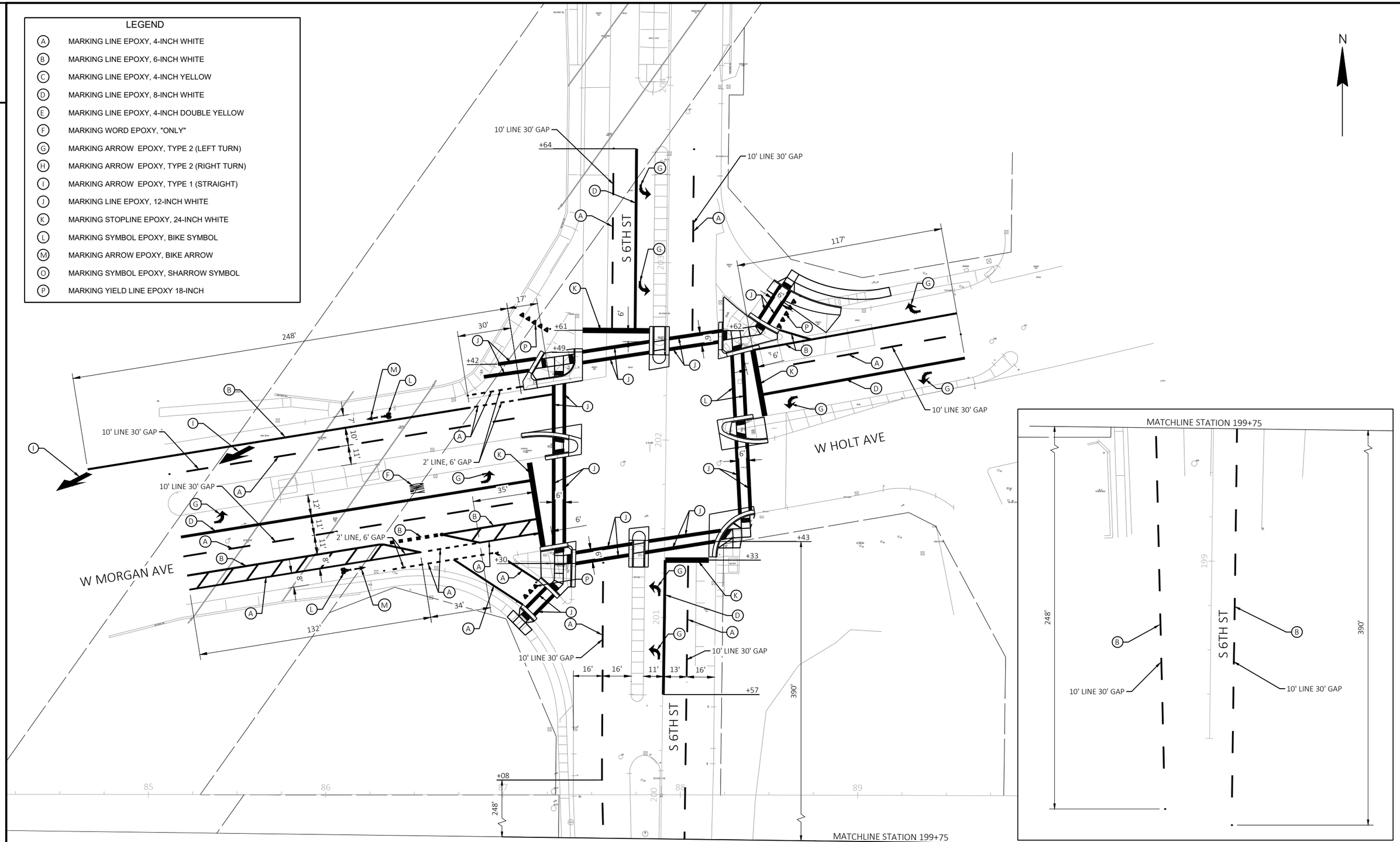

2

PROJECT NO: 2984-21-73	HWY: W. MORGAN AVE	COUNTY: MILWAUKEE	PAVEMENT MARKING PLAN	SHEET 100	E

FILE NAME : S:\MILW_CO\MILWCITY\GOV\230520 MORGAN AVENUE\C3D-MORGANAVE\SHEETS\024501-PM.DWG
LAYOUT NAME - PM8
PLOT DATE : 10/29/2024 10:07 AM
PLOT BY : WALTER A. WOLAK II
PLOT NAME :
PLOT SCALE : 1 IN:50 FT

WISDOT/CADDS SHEET 42

2

TRAFFIC CONTROL LEGEND

- TYPE II BARRICADE WITH ATTACHED SIGN
- TYPE III BARRICADE WITH ATTACHED SIGN AND TWO TYPE "A" WARNING LIGHTS
- TRAFFIC CONTROL DRUM
- TRAFFIC CONTROL DRUM WITH TYPE C STEADY BURN LIGHT
- SIGN ON PERMANENT SUPPORT
- SIGN ON TEMPORARY SUPPORT
- FLASHING ARROW BOARD
- WORK AREA
- DIRECTION OF TRAFFIC
- CR — TEMPORARY PEDESTRIAN CURB RAMP
- DWF — TEMPORARY PEDESTRIAN DETECTABLE WARNING FIELD
- TEMPORARY PEDESTRIAN SURFACE ASPHALT
- TEMPORARY PEDESTRIAN BARRICADE
- 4W — TEMPORARY MARKING LINE, REMOVABLE TAPE 4-INCH (WHITE)
- 4Y — TEMPORARY MARKING LINE, REMOVABLE TAPE 4-INCH (DOUBLE YELLOW)
- 6T — TEMPORARY MARKING LINE REMOVABLE TAPE 6-INCH

NOTES:

1) COVER SIGNS IN CONFLICT WITH TRAFFIC CONTROL.
2) REMOVE PAVEMENT MARKINGS IN CONFLICT WITH TRAFFIC CONTROL.
3) INSTALL PERMANENT MARKINGS AS NEEDED FOR STAGE 2 TRAFFIC CONTROL.
4) COORDINATE TEMPORARY BUS STOP RELOCATIONS WITH MCTS AS NEEDED.

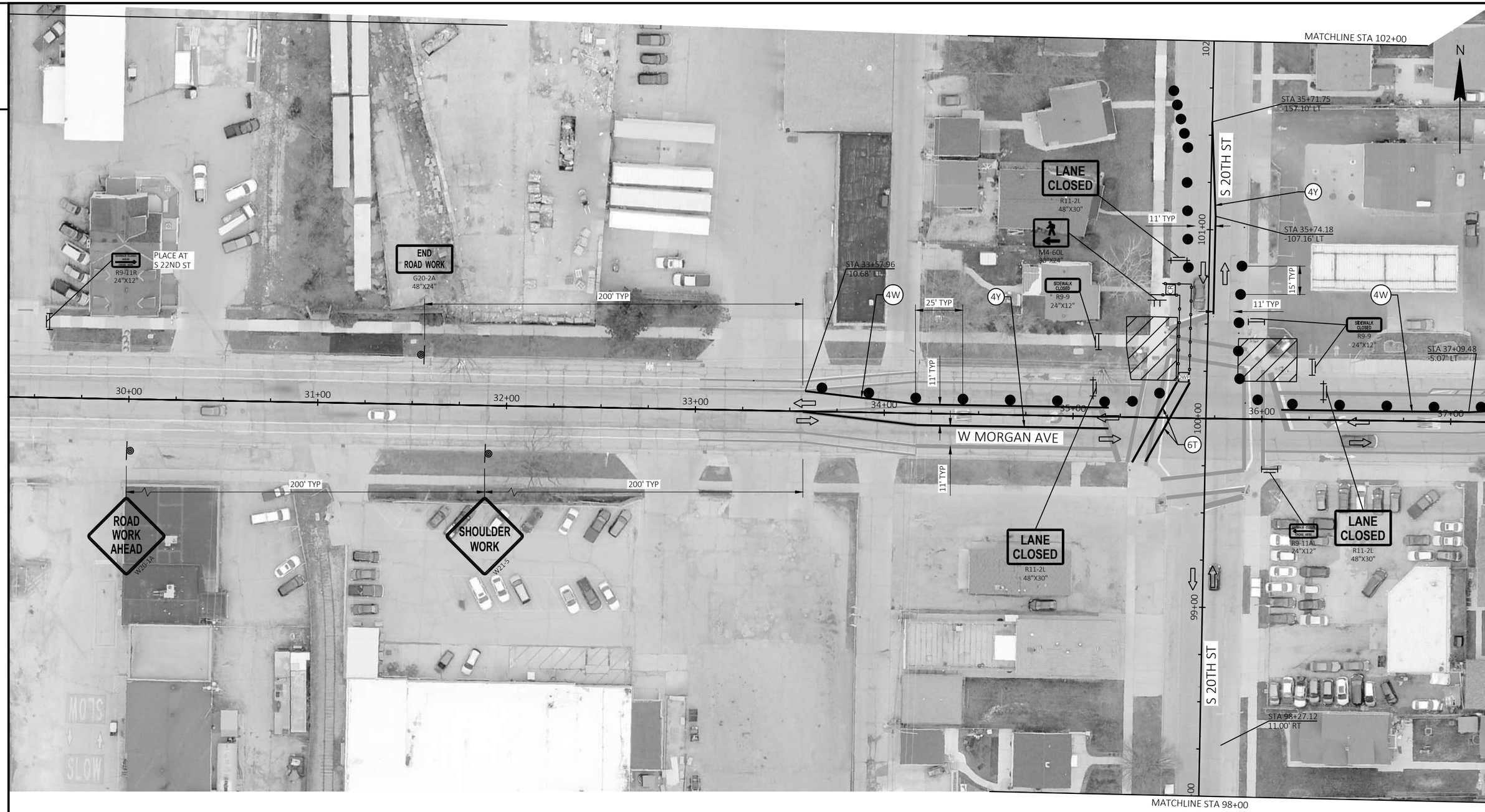

PROJECT NO: 2984-21-73	HWY: W. MORGAN AVE	COUNTY: MILWAUKEE	TRAFFIC CONTROL PLAN STAGE 1 - W. MORGAN AVE	SHEET 102	E

FILE NAME : S:\MILW_CO\MILWCITY\GOV\230520 MORGAN AVENUE\C3D-MORGANAVE\SHEETS\025101-TC1.DWG
LAYOUT NAME - TC1
PLOT DATE : 10/29/2024 10:08 AM
PLOT BY : WALTER A. WOLAK II
PLOT NAME :
PLOT SCALE : 1 IN:50 FT
WISDOT/CADDS SHEET 42

PROJECT NO: 2984-21-73	HWY: W. MORGAN AVE	COUNTY: MILWAUKEE	TRAFFIC CONTROL PLAN STAGE 1 - W. MORGAN AVE	SHEET 103	E

FILE NAME : S:\MILW_CO\MILWCITY\GOV\230520 MORGAN AVENUE\C3D-MORGANAVE\SHEETS\025101-TC1.DWG
LAYOUT NAME - TC2
PLOT DATE : 10/29/2024 10:08 AM
PLOT BY : WALTER A. WOLAK II
PLOT NAME :
PLOT SCALE : 1 IN:50 FT
WISDOT/CADDS SHEET 42

2

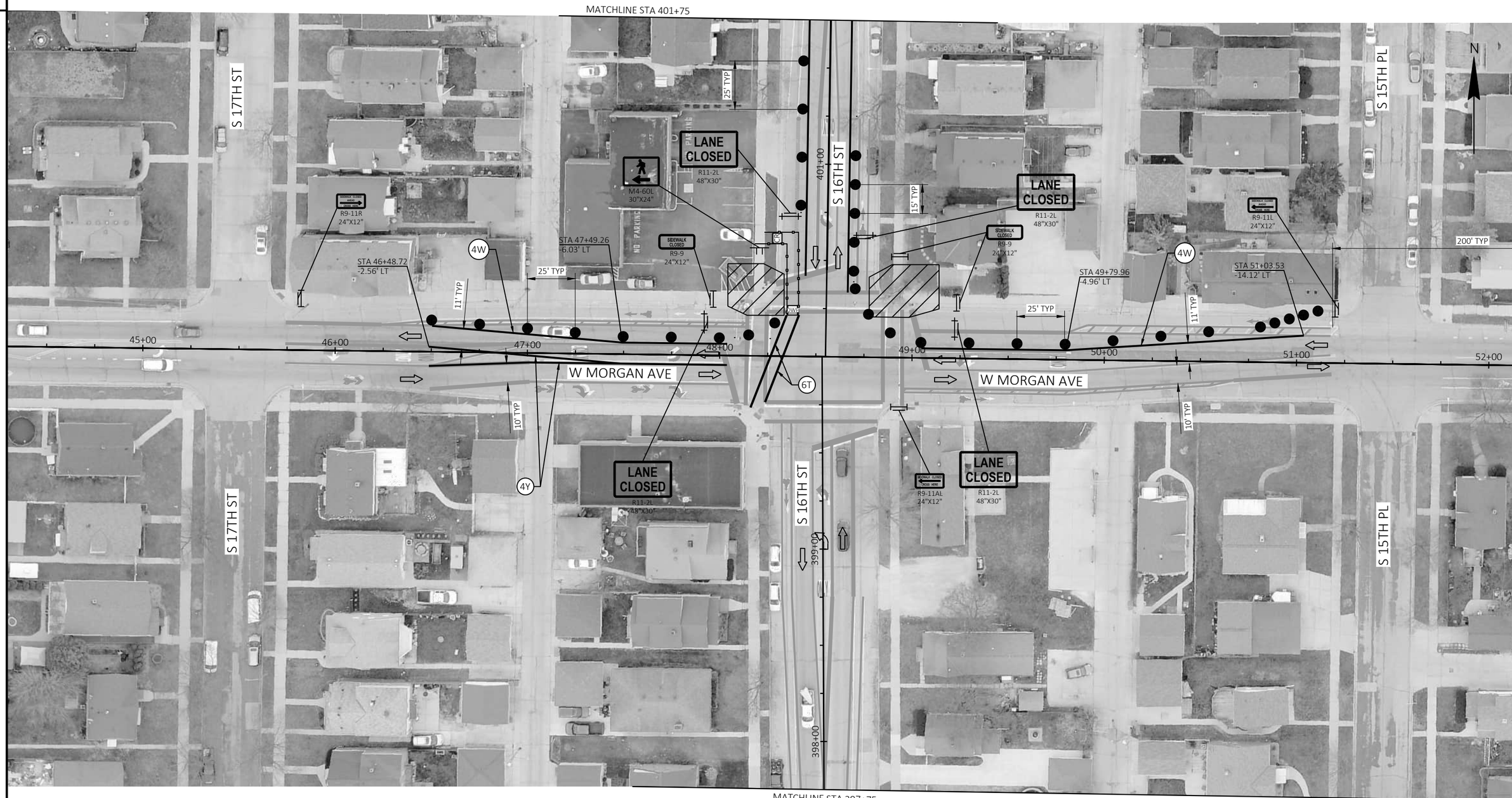

PROJECT NO: 2984-21-73	HWY: W. MORGAN AVE	COUNTY: MILWAUKEE	TRAFFIC CONTROL PLAN STAGE 1 - W. MORGAN AVE	SHEET 104	E

FILE NAME : S:\MILW_CO\MILWCITY\GOV\230520 MORGAN AVENUE\C3D-MORGANAVE\SHEETS\025101-TC1.DWG
LAYOUT NAME - TC3
PLOT DATE : 10/29/2024 10:08 AM PLOT BY : WALTER A. WOLAK II PLOT NAME : PLOT SCALE : 1 IN:50 FT

2

2

PROJECT NO: 2984-21-73	HWY: W. MORGAN AVE	COUNTY: MILWAUKEE	TRAFFIC CONTROL PLAN STAGE 1 - W. MORGAN AVE	SHEET 105	E

FILE NAME : S:\MILW_CO\MILWCITY\GOV\230520 MORGAN AVENUE\C3D-MORGANAVE\SHEETS\025101-TC1.DWG
LAYOUT NAME - TC4
PLOT DATE : 10/29/2024 10:08 AM
PLOT BY : WALTER A. WOLAK II
PLOT NAME :
PLOT SCALE : 1 IN:50 FT
WISDOT/CADDS SHEET 42

2

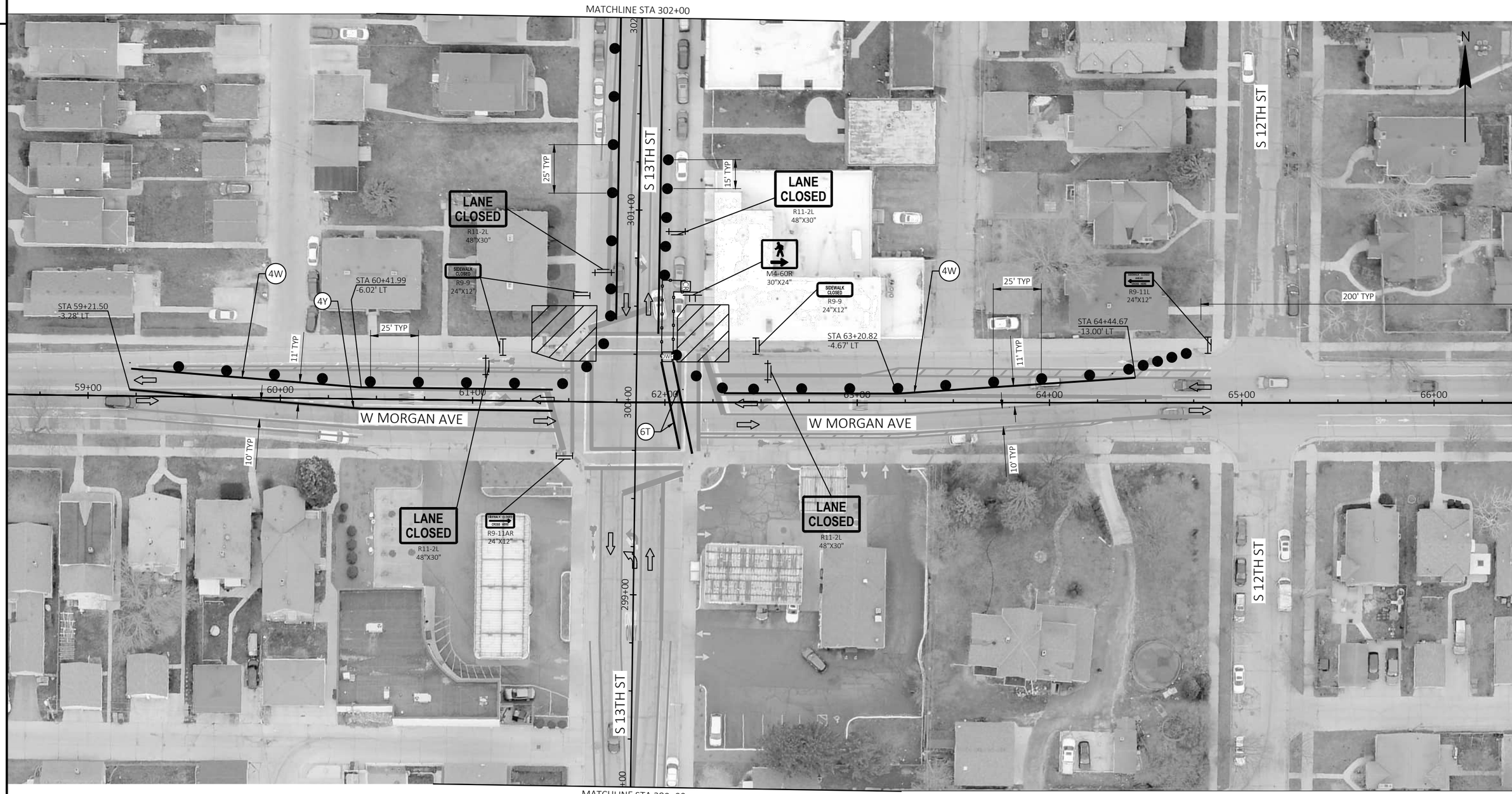

PROJECT NO: 2984-21-73	HWY: W. MORGAN AVE	COUNTY: MILWAUKEE	TRAFFIC CONTROL PLAN STAGE 1 - W. MORGAN AVE	SHEET 106	E

FILE NAME : S:\MILW_CO\MILWCITY\GOV\230520 MORGAN AVENUE\C3D-MORGANAVE\SHEETS\025101-TC1.DWG
LAYOUT NAME - TC5

PLOT DATE : 10/29/2024 10:08 AM PLOT BY : WALTER A. WOLAK II PLOT NAME : PLOT SCALE : 1 IN:50 FT

WISDOT/CADDS SHEET 42

2

PROJECT NO: 2984-21-73	HWY: W. MORGAN AVE	COUNTY: MILWAUKEE	TRAFFIC CONTROL PLAN STAGE 1 - W. MORGAN AVE	SHEET 107	E

FILE NAME : S:\MILW_CO\MILWCITY\GOV\230520 MORGAN AVENUE\C3D-MORGANAVE\SHEETS\025101-TC1.DWG
LAYOUT NAME - TC6

PLOT DATE : 10/29/2024 10:08 AM PLOT BY : WALTER A. WOLAK II PLOT NAME : PLOT SCALE : 1 IN:50 FT

WISDOT/CADDS SHEET 42

2

PROJECT NO: 2984-21-73	HWY: W. MORGAN AVE	COUNTY: MILWAUKEE	TRAFFIC CONTROL PLAN STAGE 1 - W. MORGAN AVE	SHEET 108	E

FILE NAME : S:\MILW_CO\MILWCITY\GOV\230520 MORGAN AVENUE\C3D-MORGANAVE\SHEETS\025101-TC1.DWG
LAYOUT NAME - TC7
PLOT DATE : 10/29/2024 10:08 AM
PLOT BY : WALTER A. WOLAK II
PLOT NAME :
PLOT SCALE : 1 IN:50 FT
WISDOT/CADDS SHEET 42

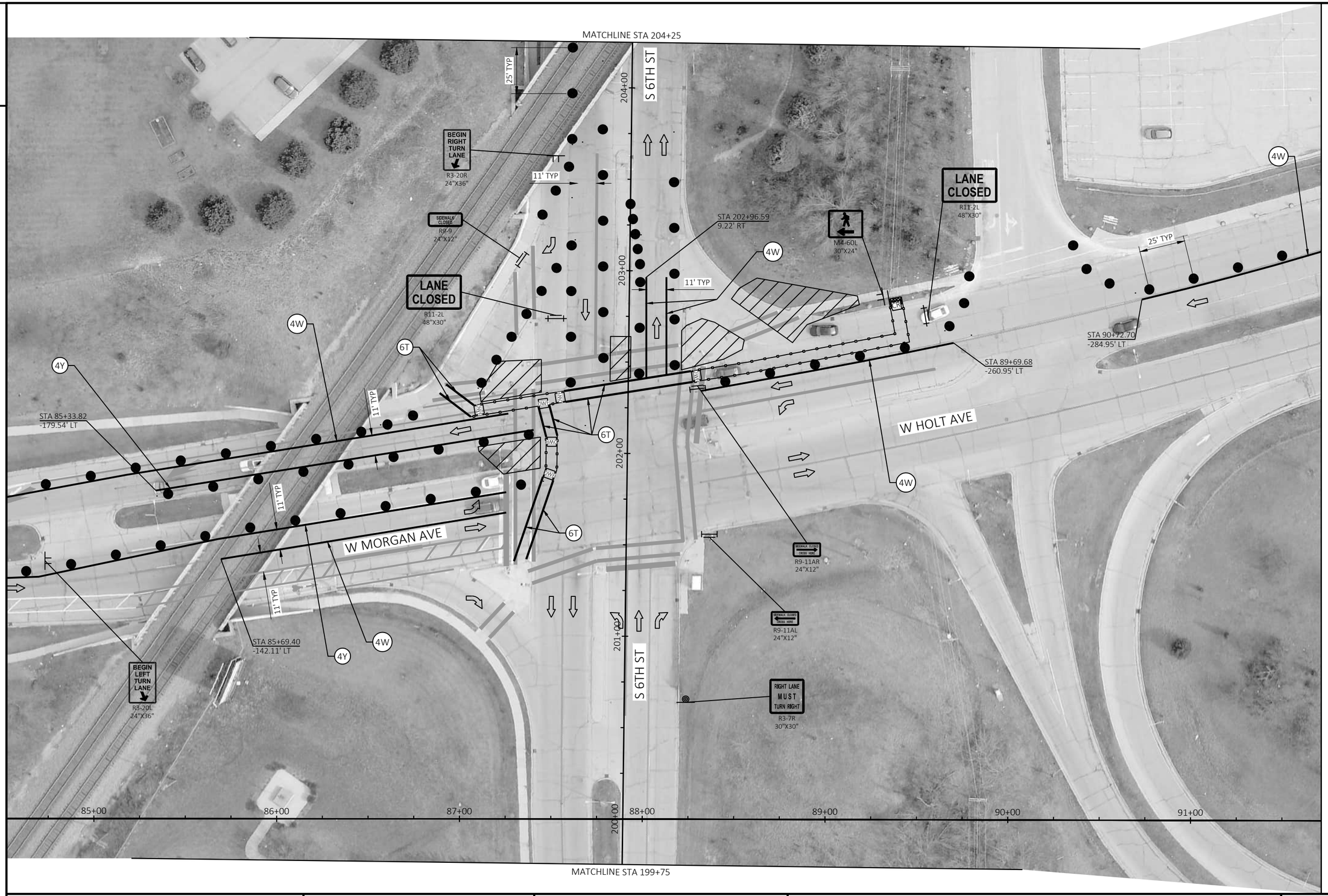

PROJECT NO: 2984-21-73	HWY: W. MORGAN AVE	COUNTY: MILWAUKEE	TRAFFIC CONTROL PLAN STAGE 1 - W. MORGAN AVE	SHEET 109	E

FILE NAME : S:\MILW_CO\MILWCITY\GOV\230520 MORGAN AVENUE\C3D-MORGANAVE\SHEETS\025101-TC1.DWG
LAYOUT NAME - TC8
PLOT DATE : 10/29/2024 10:08 AM
PLOT BY : WALTER A. WOLAK II
PLOT NAME :
PLOT SCALE : 1 IN:50 FT

WISDOT/CADDS SHEET 42

2

MATCHLINE "A"

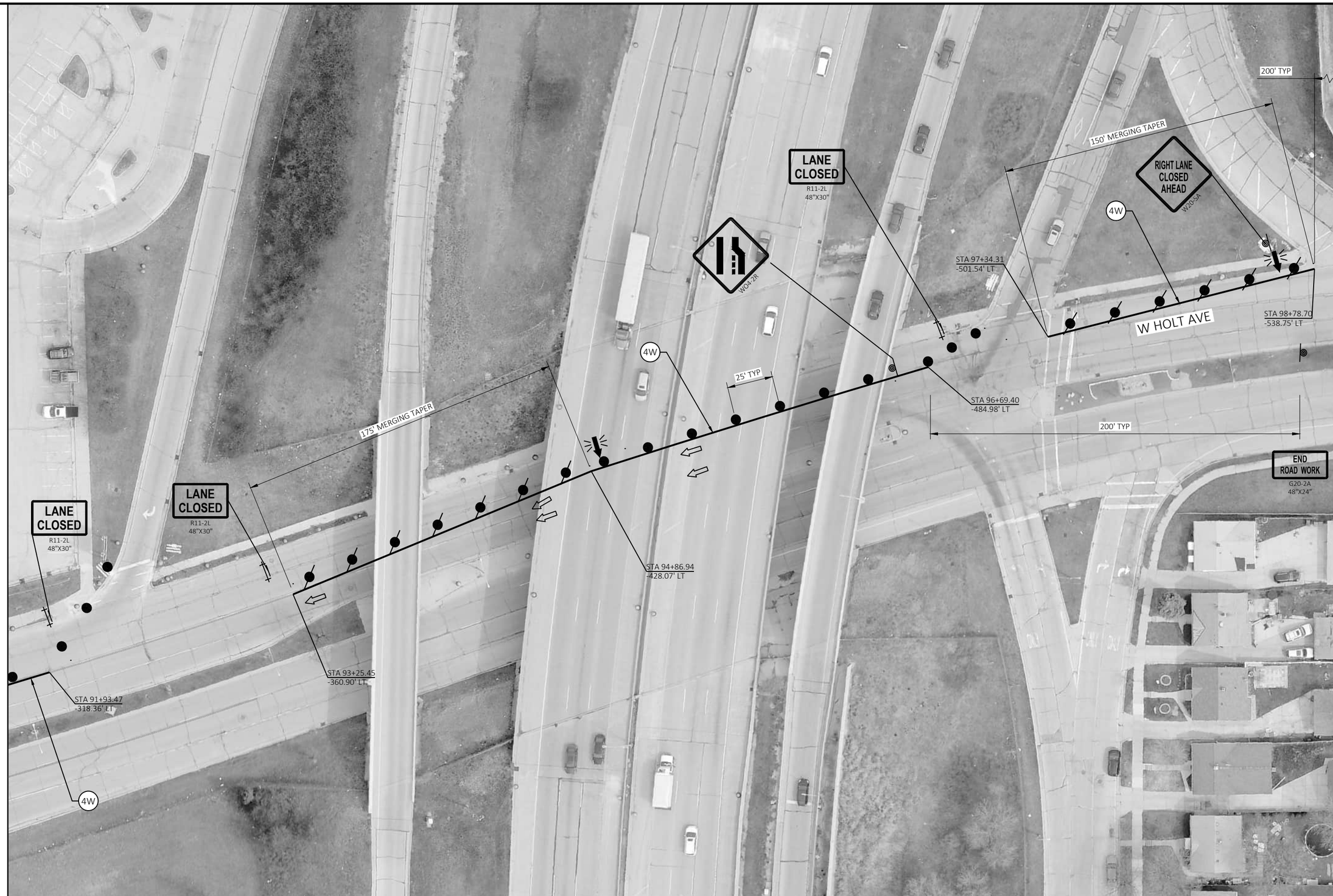

MATCHLINE "B"

2

PROJECT NO: 2984-21-73	HWY: W. MORGAN AVE	COUNTY: MILWAUKEE	TRAFFIC CONTROL PLAN STAGE 1 - W. MORGAN AVE	SHEET 110	E

FILE NAME : S:\MILW_CO\MILWCITY\GOV\230520 MORGAN AVENUE\C3D-MORGANAVE\SHEETS\025101-TC1.DWG
LAYOUT NAME - TC9
PLOT DATE : 10/29/2024 10:08 AM PLOT BY : WALTER A. WOLAK II PLOT NAME : PLOT SCALE : 1 IN:50 FT

WISDOT/CADDS SHEET 42

2

MATCHLINE "B"

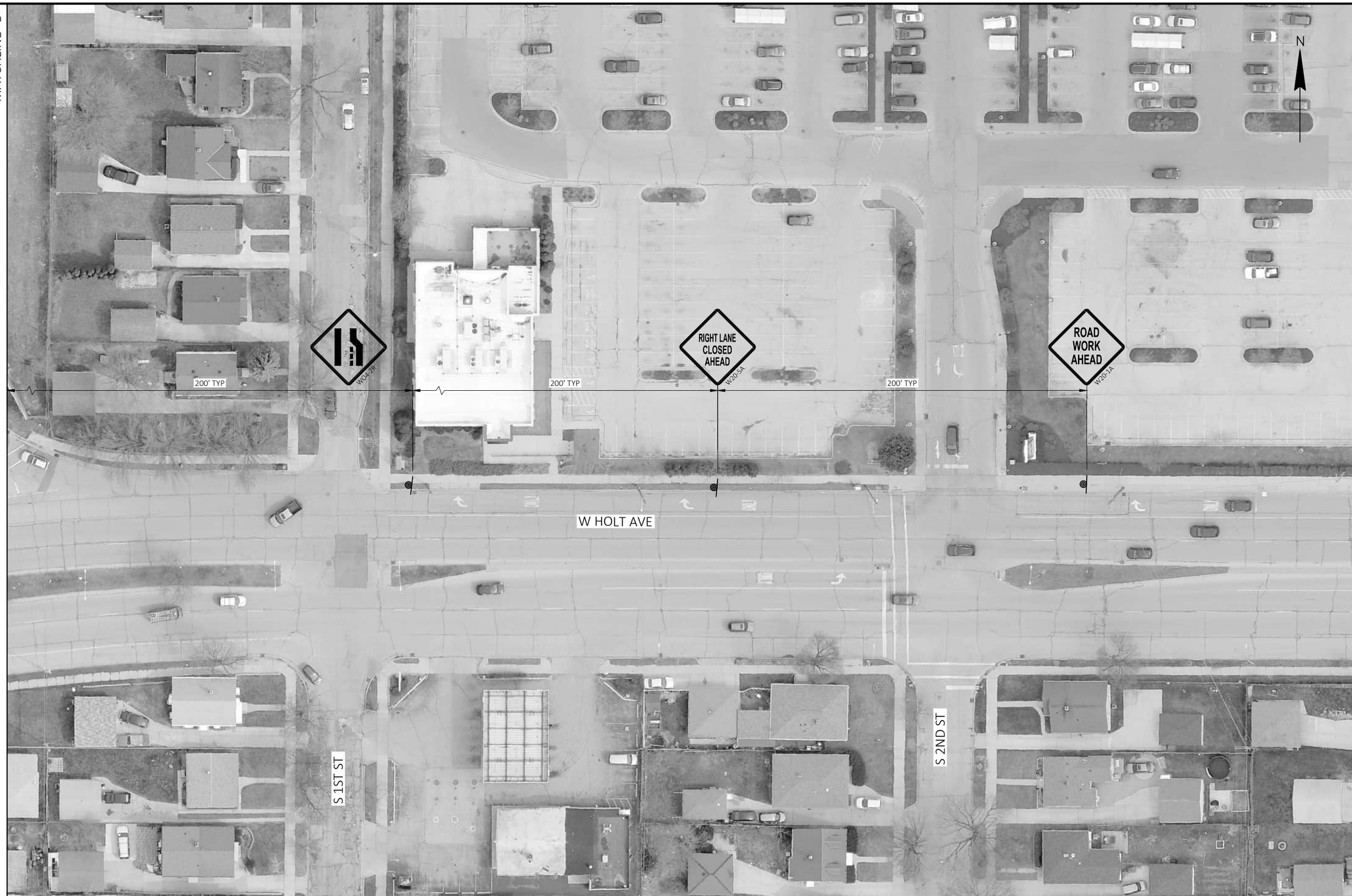

2

PROJECT NO: 2984-21-73	HWY: W. MORGAN AVE	COUNTY: MILWAUKEE	TRAFFIC CONTROL PLAN STAGE 1 - W. MORGAN AVE	SHEET 111	E

FILE NAME : S:\MILW_CO\MILWCITY\GOV\230520 MORGAN AVENUE\C3D-MORGANAVE\SHEETS\025101-TC1.DWG
LAYOUT NAME - TC10

PLOT DATE : 10/29/2024 10:08 AM PLOT BY : WALTER A. WOLAK II PLOT NAME : PLOT SCALE : 1 IN:50 FT

WISDOT/CADDS SHEET 42

2

2

PROJECT NO: 2984-21-73	HWY: W. MORGAN AVE	COUNTY: MILWAUKEE	TRAFFIC CONTROL PLAN STAGE 1 - S. 20TH ST	SHEET 112	E

FILE NAME : S:\MILW_CO\MILWCITY\GOV\230520 MORGAN AVENUE\C3D-MORGANAVE\SHEETS\025101-TC1.DWG
LAYOUT NAME - TC11
PLOT DATE : 10/29/2024 10:08 AM PLOT BY : WALTER A. WOLAK II PLOT NAME : PLOT SCALE : 1 IN:50 FT

WISDOT/CADDS SHEET 42

2

2

PROJECT NO: 2984-21-73	HWY: W. MORGAN AVE	COUNTY: MILWAUKEE	TRAFFIC CONTROL PLAN STAGE 1 - S. 16TH ST	SHEET 113	E

FILE NAME : S:\MILW_CO\MILWCITY\GOV\230520 MORGAN AVENUE\C3D-MORGANAVE\SHEETS\025101-TC1.DWG
LAYOUT NAME - TC12
PLOT DATE : 10/29/2024 10:09 AM
PLOT BY : WALTER A. WOLAK II
PLOT NAME :
PLOT SCALE : 1 IN:50 FT
WISDOT/CADDS SHEET 42

2

2

PROJECT NO: 2984-21-73	HWY: W. MORGAN AVE	COUNTY: MILWAUKEE	TRAFFIC CONTROL PLAN STAGE 1 - S. 13TH ST	SHEET 114	E

FILE NAME : S:\MILW_CO\MILWCITY\GOV\230520 MORGAN AVENUE\C3D-MORGANAVE\SHEETS\025101-TC1.DWG
LAYOUT NAME - TC13
PLOT DATE : 10/29/2024 10:09 AM
PLOT BY : WALTER A. WOLAK II
PLOT NAME :
PLOT SCALE : 1 IN:50 FT

WISDOT/CADDS SHEET 42

2

2

PROJECT NO: 2984-21-73	HWY: W. MORGAN AVE	COUNTY: MILWAUKEE	TRAFFIC CONTROL PLAN STAGE 1- S. 6TH ST	SHEET 115	E

FILE NAME : S:\MILW_CO\MILWCITY\GOV\230520 MORGAN AVENUE\C3D-MORGANAVE\SHEETS\025101-TC1.DWG
LAYOUT NAME - TC14
PLOT DATE : 10/29/2024 10:09 AM PLOT BY : WALTER A. WOLAK II PLOT NAME : PLOT SCALE : 1 IN:50 FT

WISDOT/CADDS SHEET 42

2

2

PROJECT NO: 2984-21-73	HWY: W. MORGAN AVE	COUNTY: MILWAUKEE	TRAFFIC CONTROL PLAN STAGE 1- S. 6TH ST	SHEET 116	E

FILE NAME : S:\MILW_CO\MILWCITY\GOV\230520 MORGAN AVENUE\C3D-MORGANAVE\SHEETS\025101-TC1.DWG
LAYOUT NAME - TC15
PLOT DATE : 10/29/2024 10:09 AM PLOT BY : WALTER A. WOLAK II PLOT NAME : PLOT SCALE : 1 IN:50 FT

WISDOT/CADDS SHEET 42

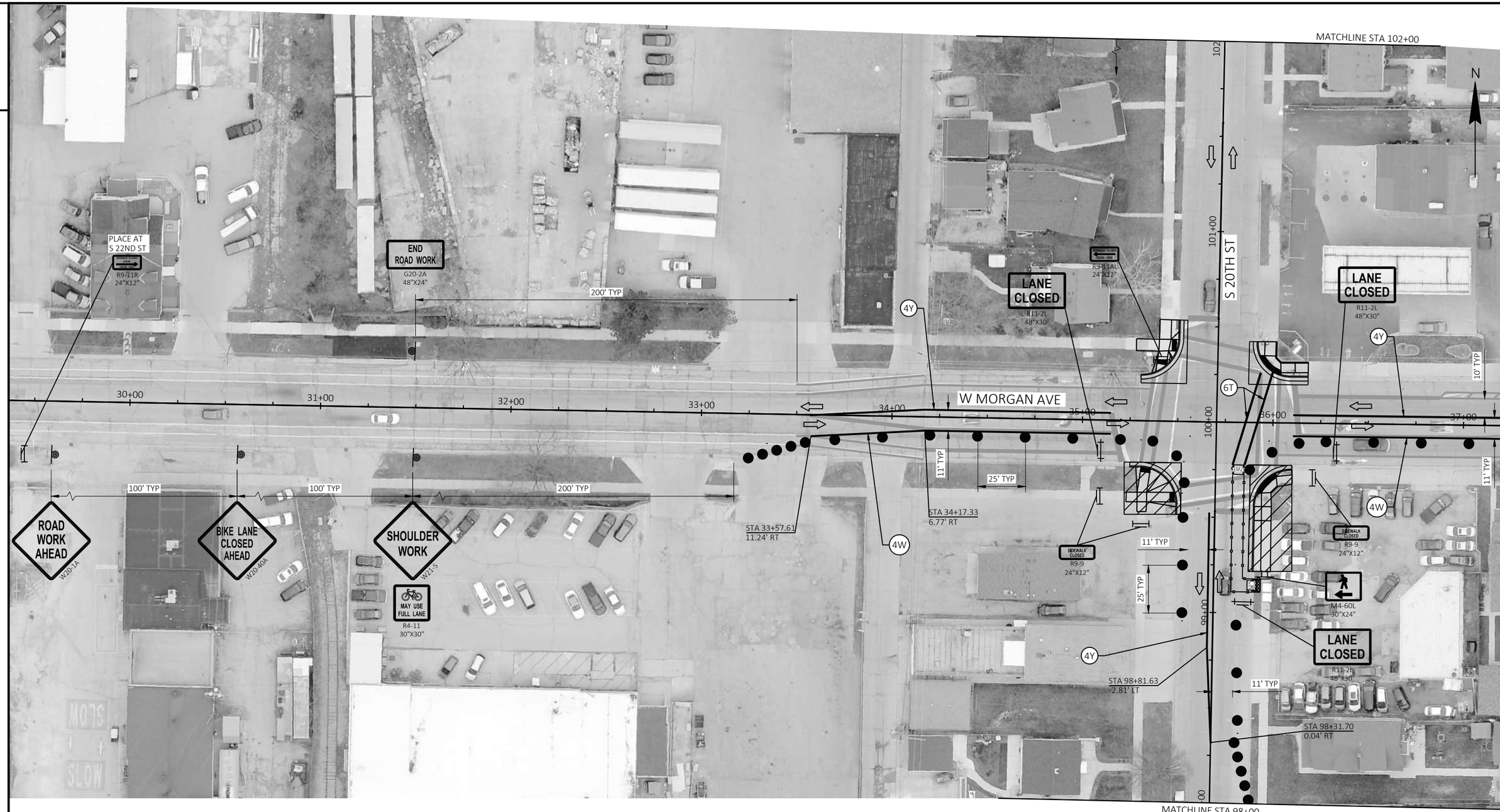
MATCHLINE STA 102+00
N
PLACE AT
S 22ND ST
R9-11R
24"X12"
END
ROAD WORK
G20-2A
48"X24"
200' TYP
LANE
CLOSED
R11-2L
48"X30"
R9-11AL
24"X12"
S 20TH ST
LANE
CLOSED
R11-2L
48"X30"
4Y
4Y
6T
10' TYP
W MORGAN AVE
30+00
31+00
32+00
33+00
34+00
35+00
36+00
37+00
102
101+00
100+00
99+00
98+00
100' TYP
100' TYP
200' TYP
ROAD
WORK
AHEAD
W20-1A
BIKE LANE
CLOSED
AHEAD
W20-40A
SHOULDER
WORK
W21-5
MAY USE
FULL LANE
R4-11
30"X30"
STA 33+57.61
11.24' RT
4W
11' TYP
25' TYP
STA 34+17.33
6.77' RT
SIDEWALK
CLOSED
R9-9
24"X12"
11' TYP
25' TYP
4Y
STA 98+81.63
-2.81' LT
11' TYP
11' TYP
4W
SIDEWALK
CLOSED
R9-9
24"X12"
M4-60L
30"X24"
LANE
CLOSED
R11-2L
48"X30"
STA 98+31.70
0.04' RT
SLOW
SLOW
MATCHLINE STA 98+00

2

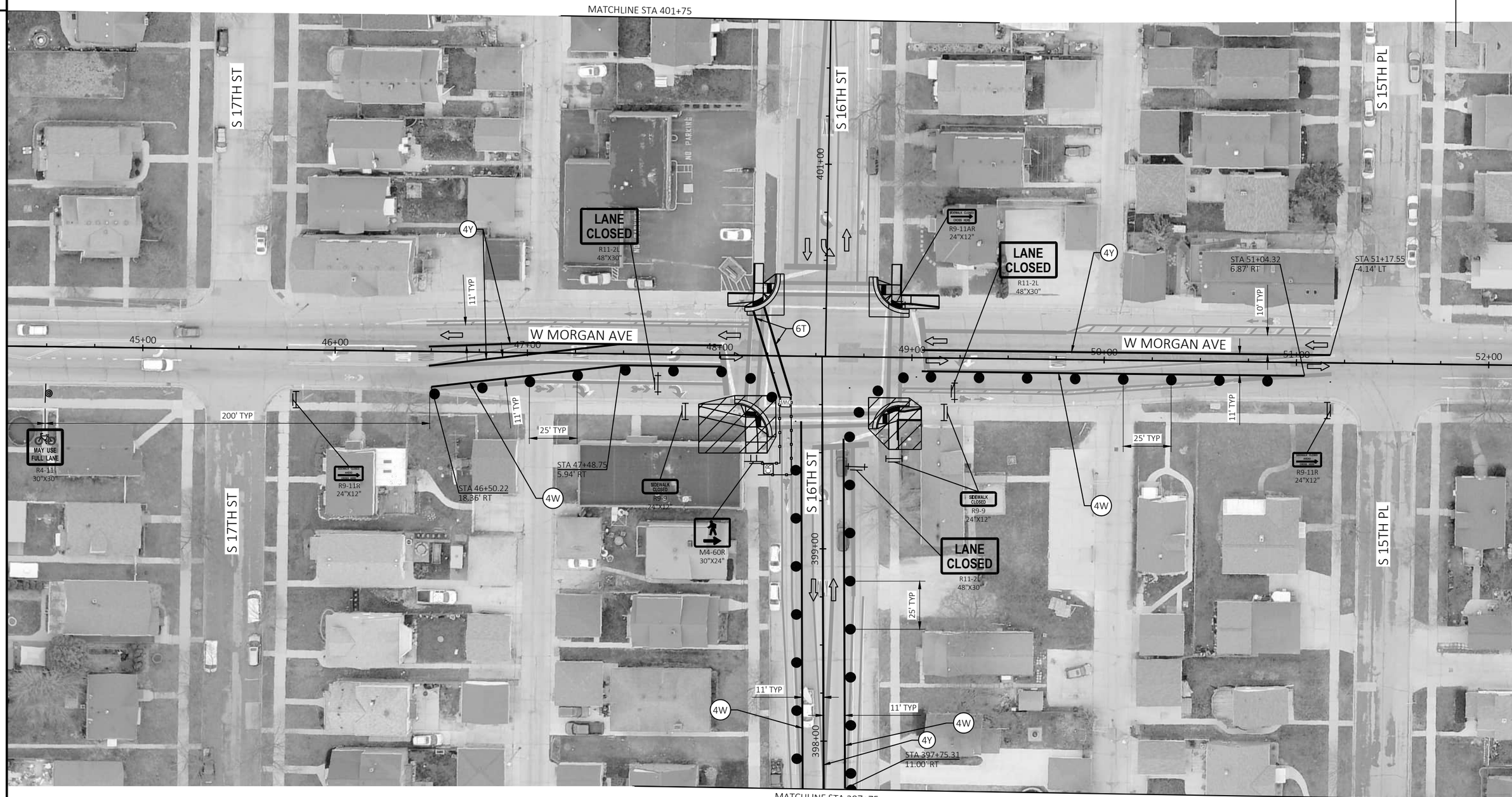

PROJECT NO: 2984-21-73	HWY: W. MORGAN AVE	COUNTY: MILWAUKEE	TRAFFIC CONTROL PLAN STAGE 2 - W. MORGAN AVE	SHEET 118	E

FILE NAME : S:\MILW_CO\MILWCITY\GOV\230520 MORGAN AVENUE\C3D-MORGANAVE\SHEETS\025201-TC2.DWG
LAYOUT NAME - TC3
PLOT DATE : 10/29/2024 10:09 AM PLOT BY : WALTER A. WOLAK II PLOT NAME : PLOT SCALE : 1 IN:50 FT

WISDOT/CADDS SHEET 42

PROJECT NO: 2984-21-73	HWY: W. MORGAN AVE	COUNTY: MILWAUKEE	TRAFFIC CONTROL PLAN STAGE 2 - W. MORGAN AVE	SHEET 119	E

FILE NAME : S:\MILW_CO\MILWCITY\GOV\230520 MORGAN AVENUE\C3D-MORGANAVE\SHEETS\025201-TC2.DWG
LAYOUT NAME - TC2

PLOT DATE : 10/29/2024 10:09 AM PLOT BY : WALTER A. WOLAK II PLOT NAME : PLOT SCALE : 1 IN:50 FT

WISDOT/CADDS SHEET 42

2

PROJECT NO: 2984-21-73	HWY: W. MORGAN AVE	COUNTY: MILWAUKEE	TRAFFIC CONTROL PLAN STAGE 2 - W. MORGAN AVE	SHEET 120	E

FILE NAME : S:\MILW_CO\MILWCITY\GOV\230520 MORGAN AVENUE\C3D-MORGANAVE\SHEETS\025201-TC2.DWG
LAYOUT NAME - TC4

PLOT DATE : 10/29/2024 10:09 AM PLOT BY : WALTER A. WOLAK II PLOT NAME : PLOT SCALE : 1 IN:50 FT

WISDOT/CADDS SHEET 42

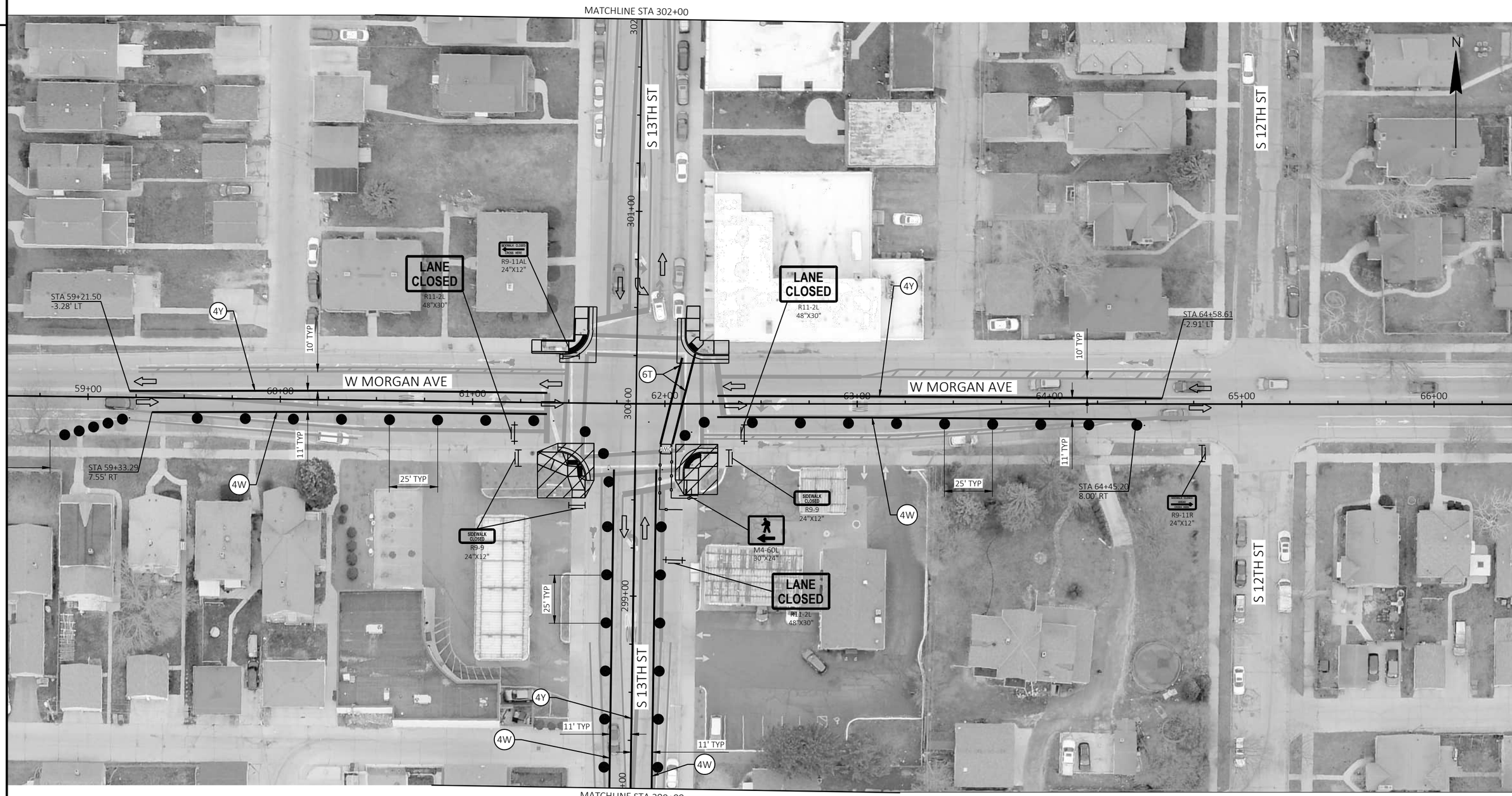

PROJECT NO: 2984-21-73	HWY: W. MORGAN AVE	COUNTY: MILWAUKEE	TRAFFIC CONTROL PLAN STAGE 2 - W. MORGAN AVE	SHEET 121	E

FILE NAME : S:\MILW_CO\MILWCITY\GOV\230520 MORGAN AVENUE\C3D-MORGANAVE\SHEETS\025201-TC2.DWG
LAYOUT NAME - TC5
PLOT DATE : 10/29/2024 10:10 AM PLOT BY : WALTER A. WOLAK II PLOT NAME : PLOT SCALE : 1 IN:50 FT

2

MATCHLINE STA 204+25

MATCHLINE "A"

N

2

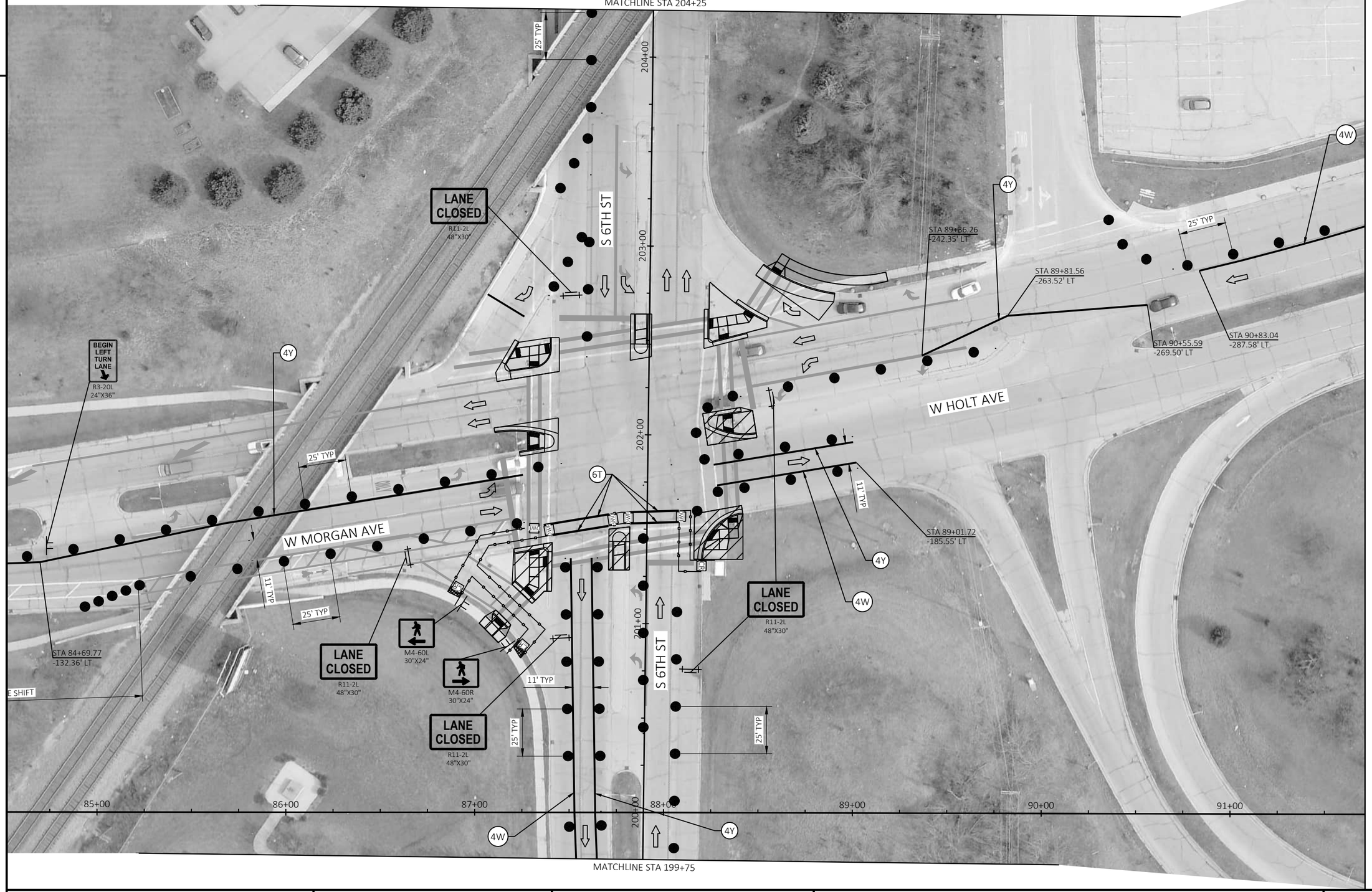

MATCHLINE STA 199+75

PROJECT NO: 2984-21-73	HWY: W. MORGAN AVE	COUNTY: MILWAUKEE	TRAFFIC CONTROL PLAN STAGE 2 - W. MORGAN AVE	SHEET 122	E

FILE NAME : S:\MILW_CO\MILWCITY\GOV\230520 MORGAN AVENUE\C3D-MORGANAVE\SHEETS\025201-TC2.DWG
LAYOUT NAME - TC8

PLOT DATE : 10/29/2024 10:10 AM PLOT BY : WALTER A. WOLAK II PLOT NAME : PLOT SCALE : 1 IN:50 FT

WISDOT/CADDS SHEET 42

2

2

PROJECT NO: 2984-21-73	HWY: W. MORGAN AVE	COUNTY: MILWAUKEE	TRAFFIC CONTROL PLAN STAGE 2 - W. MORGAN AVE	SHEET 123	E

FILE NAME : S:\MILW_CO\MILWCITY\GOV\230520 MORGAN AVENUE\C3D-MORGANAVE\SHEETS\025201-TC2.DWG
LAYOUT NAME - TC6

PLOT DATE : 10/29/2024 10:10 AM PLOT BY : WALTER A. WOLAK II PLOT NAME : PLOT SCALE : 1 IN:50 FT

WISDOT/CADDS SHEET 42

PROJECT NO: 2984-21-73	HWY: W. MORGAN AVE	COUNTY: MILWAUKEE	TRAFFIC CONTROL PLAN STAGE 2 - W. MORGAN AVE	SHEET 124	E

FILE NAME : S:\MILW_CO\MILWCITY\GOV\230520 MORGAN AVENUE\C3D-MORGANAVE\SHEETS\025201-TC2.DWG
LAYOUT NAME - TC7
PLOT DATE : 10/29/2024 10:10 AM PLOT BY : WALTER A. WOLAK II PLOT NAME : PLOT SCALE : 1 IN:50 FT

2

MATCHLINE "A"

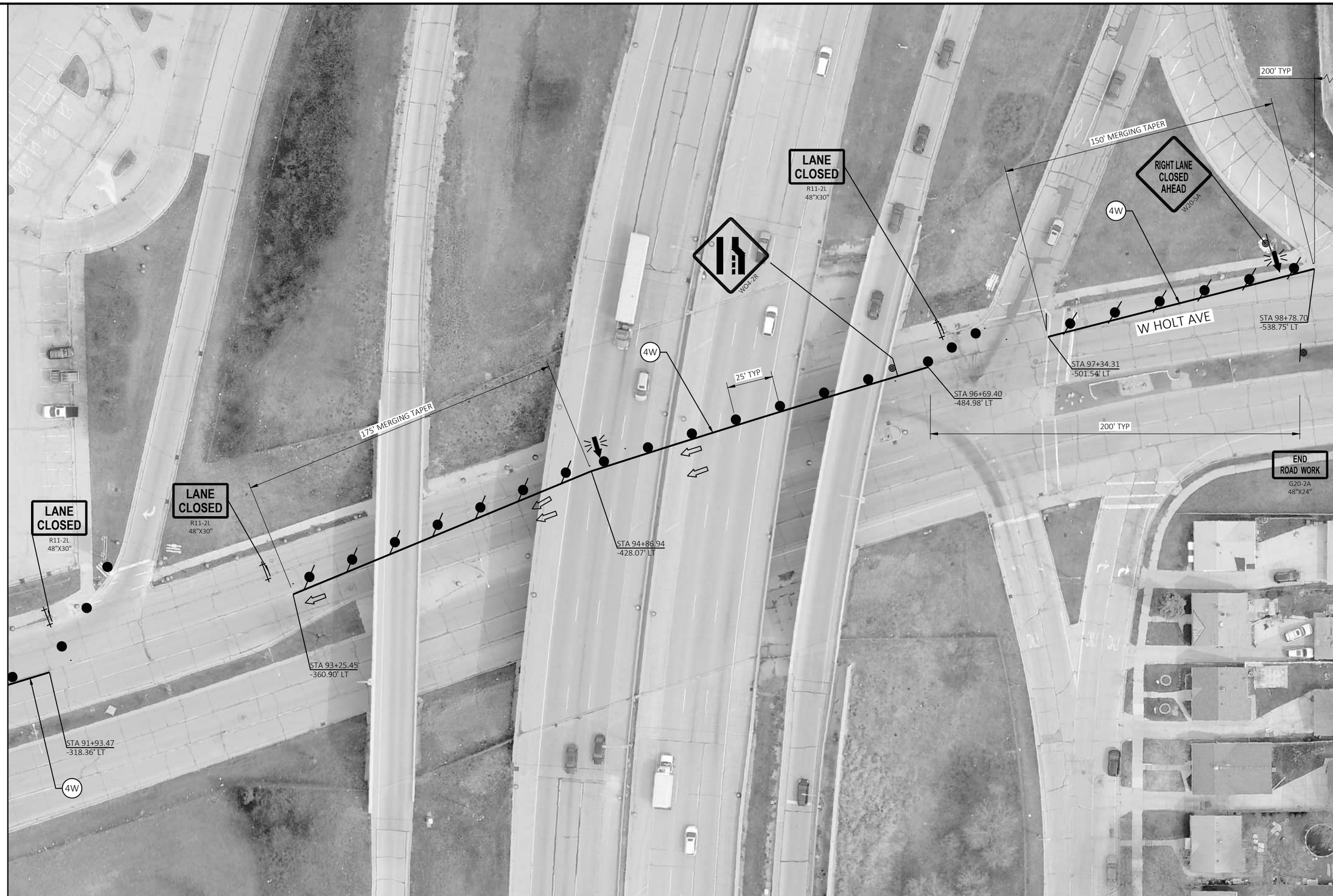

2

MATCHLINE "B"

PROJECT NO: 2984-21-73	HWY: W. MORGAN AVE	COUNTY: MILWAUKEE	TRAFFIC CONTROL PLAN STAGE 2 - W. MORGAN AVE	SHEET 125	E

FILE NAME : S:\MILW_CO\MILWCITY\GOV\230520 MORGAN AVENUE\C3D-MORGANAVE\SHEETS\025201-TC2.DWG
LAYOUT NAME - TC9
PLOT DATE : 10/29/2024 10:10 AM PLOT BY : WALTER A. WOLAK II PLOT NAME : PLOT SCALE : 1 IN:50 FT

WISDOT/CADDS SHEET 42

2

MATCHLINE "B"

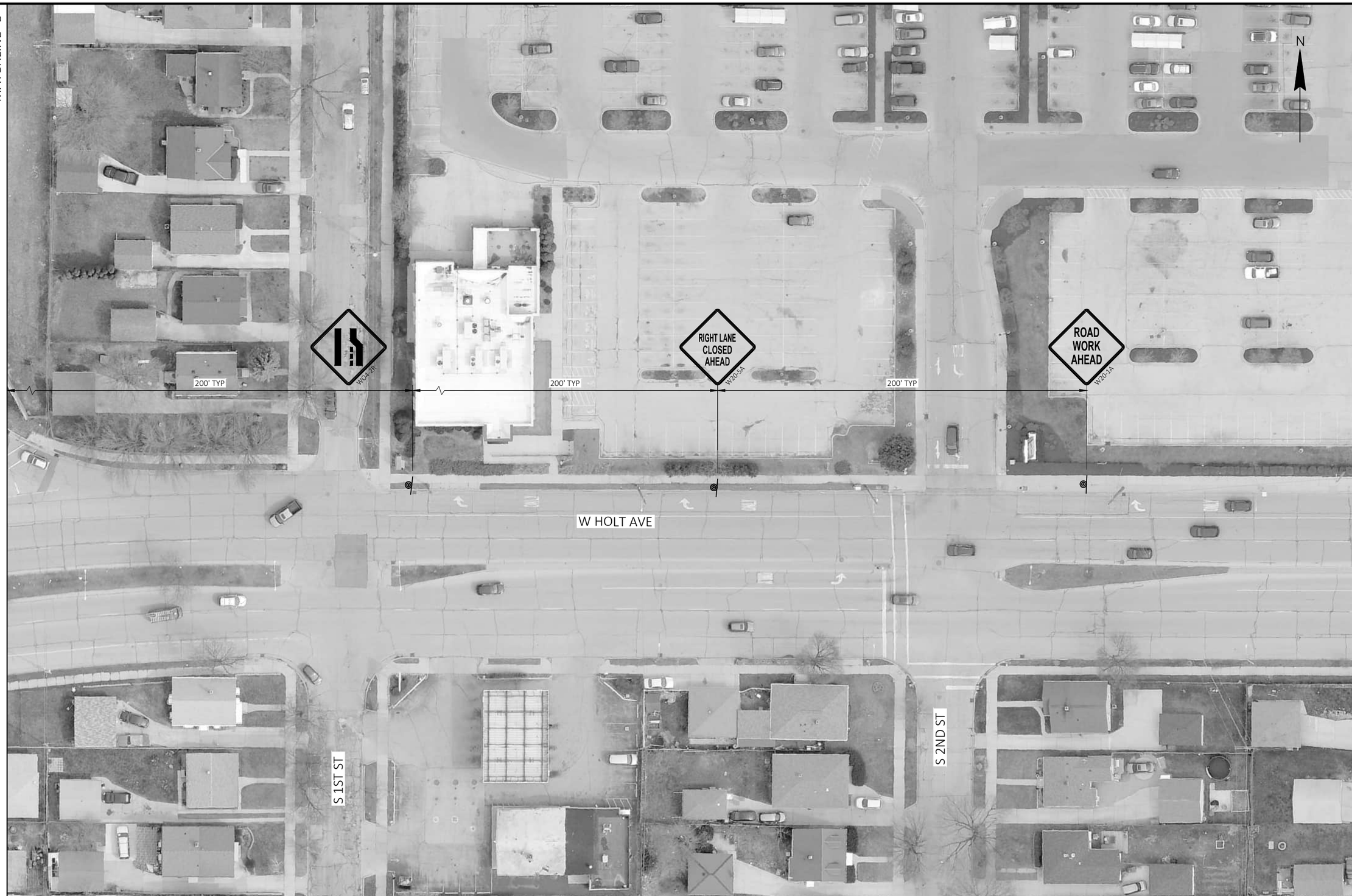

2

PROJECT NO: 2984-21-73	HWY: W. MORGAN AVE	COUNTY: MILWAUKEE	TRAFFIC CONTROL PLAN STAGE 2 - W. MORGAN AVE	SHEET 126	E

FILE NAME : S:\MILW_CO\MILWCITY\GOV\230520 MORGAN AVENUE\C3D-MORGANAVE\SHEETS\025201-TC2.DWG
LAYOUT NAME - TC10

PLOT DATE : 10/29/2024 10:10 AM PLOT BY : WALTER A. WOLAK II PLOT NAME : PLOT SCALE : 1 IN:50 FT

WISDOT/CADDS SHEET 42

2

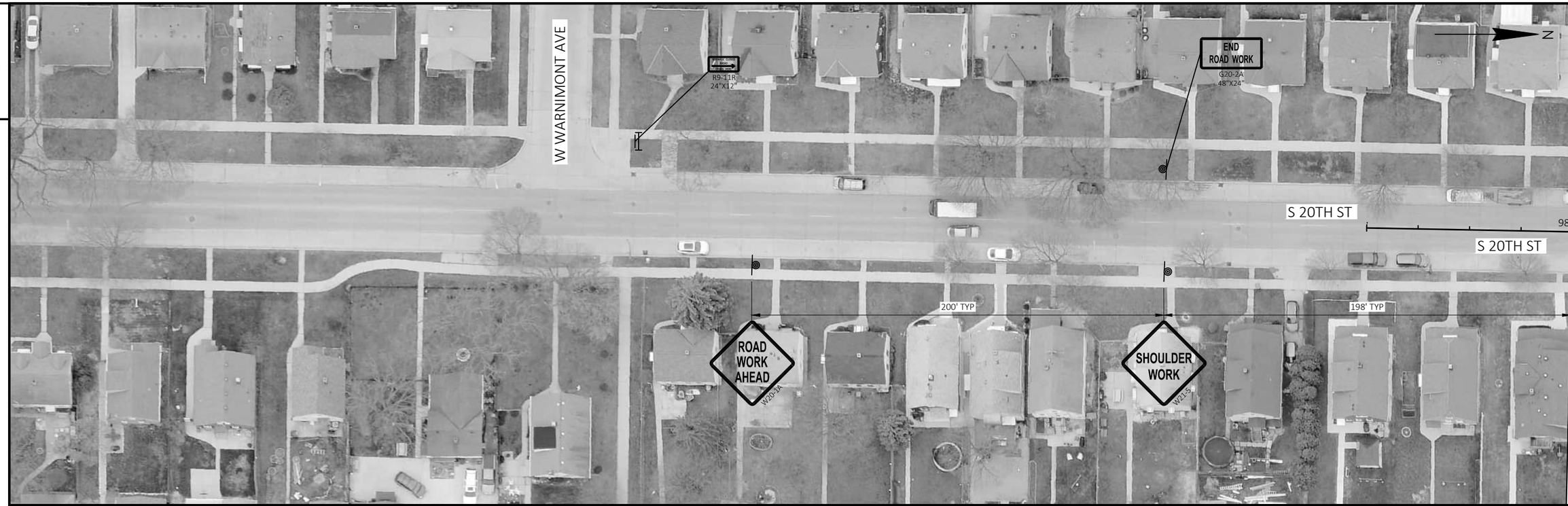

2

PROJECT NO: 2984-21-73	HWY: W. MORGAN AVE	COUNTY: MILWAUKEE	TRAFFIC CONTROL PLAN STAGE 2 - S. 20TH ST	SHEET 127	E

FILE NAME : S:\MILW_CO\MILWCITY\GOV\230520 MORGAN AVENUE\C3D-MORGANAVE\SHEETS\025201-TC2.DWG
LAYOUT NAME - TC11
PLOT DATE : 10/29/2024 10:10 AM
PLOT BY : WALTER A. WOLAK II
PLOT NAME :
PLOT SCALE : 1 IN:50 FT

WISDOT/CADDS SHEET 42

2

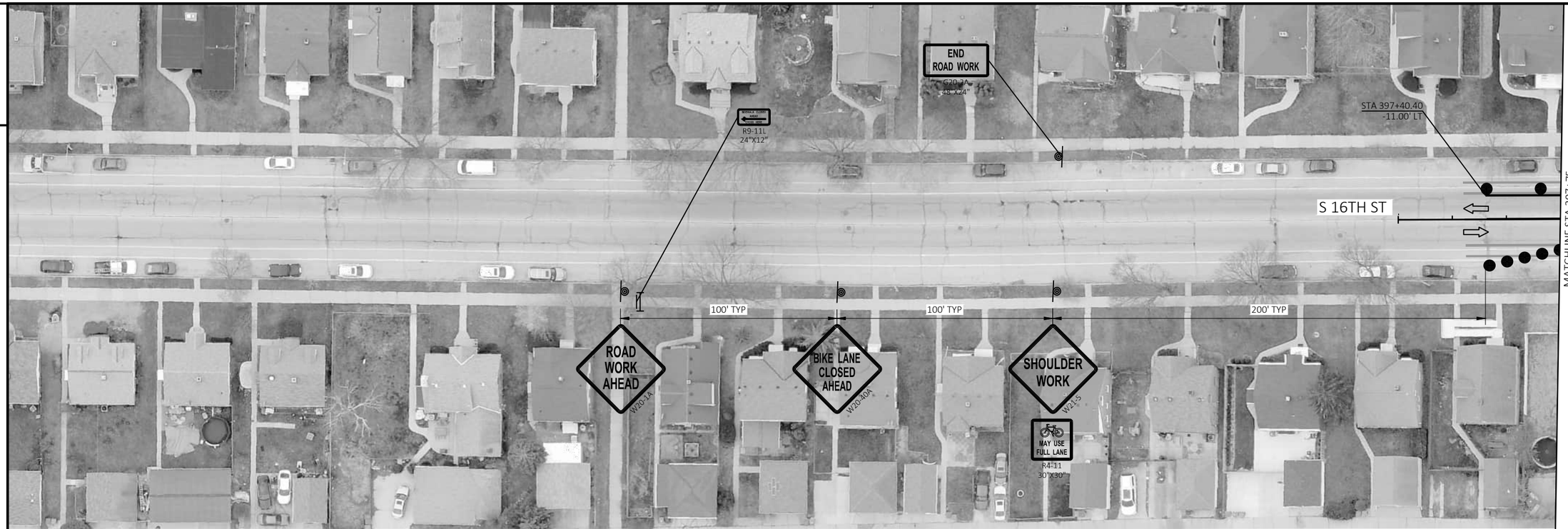

2

PROJECT NO: 2984-21-73	HWY: W. MORGAN AVE	COUNTY: MILWAUKEE	TRAFFIC CONTROL PLAN STAGE 2 - S. 16TH ST	SHEET 128	E

FILE NAME : S:\MILW_CO\MILWCITY\GOV\230520 MORGAN AVENUE\C3D-MORGANAVE\SHEETS\025201-TC2.DWG
LAYOUT NAME - TC12
PLOT DATE : 10/29/2024 10:10 AM
PLOT BY : WALTER A. WOLAK II
PLOT NAME :
PLOT SCALE : 1 IN:50 FT

2

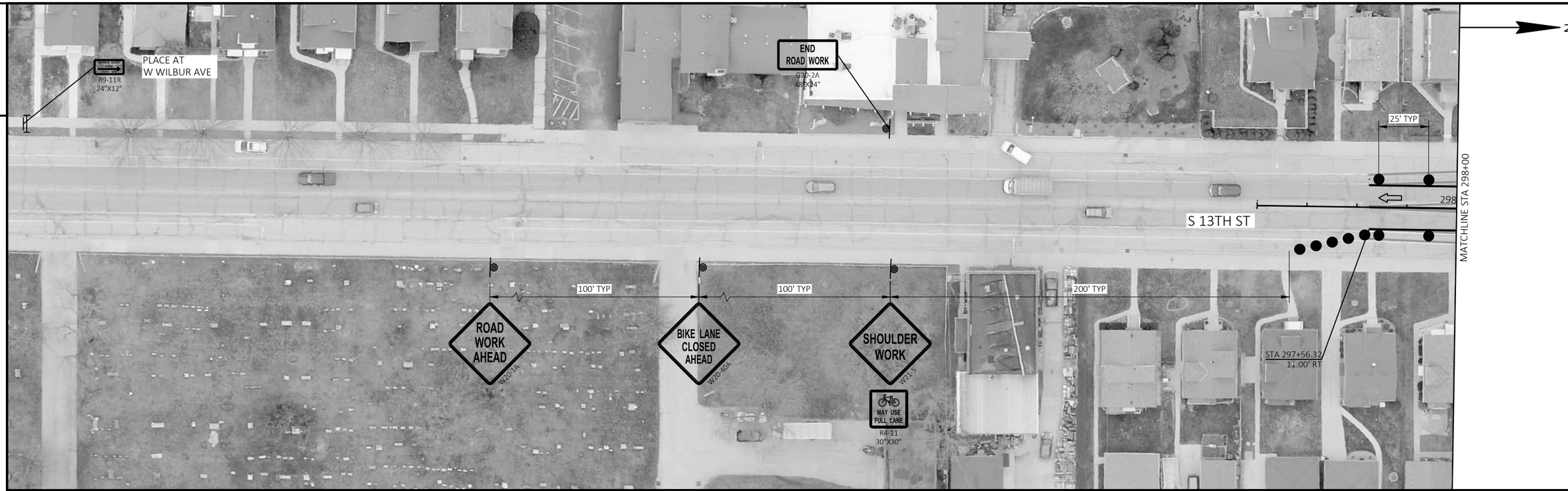

2

PROJECT NO: 2984-21-73	HWY: W. MORGAN AVE	COUNTY: MILWAUKEE	TRAFFIC CONTROL PLAN STAGE 2 - S. 13TH ST	SHEET 129	E

FILE NAME : S:\MILW_CO\MILWCITY\GOV\230520 MORGAN AVENUE\C3D-MORGANAVE\SHEETS\025201-TC2.DWG
LAYOUT NAME - TC13
PLOT DATE : 10/29/2024 10:10 AM PLOT BY : WALTER A. WOLAK II PLOT NAME : PLOT SCALE : 1 IN:50 FT

WISDOT/CADDS SHEET 42

2

2

PROJECT NO: 2984-21-73	HWY: W. MORGAN AVE	COUNTY: MILWAUKEE	TRAFFIC CONTROL PLAN STAGE 2 - S. 6TH ST	SHEET 130	E

FILE NAME : S:\MILW_CO\MILWCITY\GOV\230520 MORGAN AVENUE\C3D-MORGANAVE\SHEETS\025201-TC2.DWG
LAYOUT NAME - TC14
PLOT DATE : 10/29/2024 10:10 AM PLOT BY : WALTER A. WOLAK II PLOT NAME : PLOT SCALE : 1 IN:50 FT

WISDOT/CADDS SHEET 42

2

2

PROJECT NO: 2984-21-73	HWY: W. MORGAN AVE	COUNTY: MILWAUKEE	TRAFFIC CONTROL PLAN STAGE 2 - S. 6TH ST	SHEET 131	E

FILE NAME : S:\MILW_CO\MILWCITY\GOV\230520 MORGAN AVENUE\C3D-MORGANAVE\SHEETS\025201-TC2.DWG
LAYOUT NAME - TC15
PLOT DATE : 10/29/2024 10:10 AM PLOT BY : WALTER A. WOLAK II PLOT NAME : PLOT SCALE : 1 IN:50 FT

WISDOT/CADDS SHEET 42

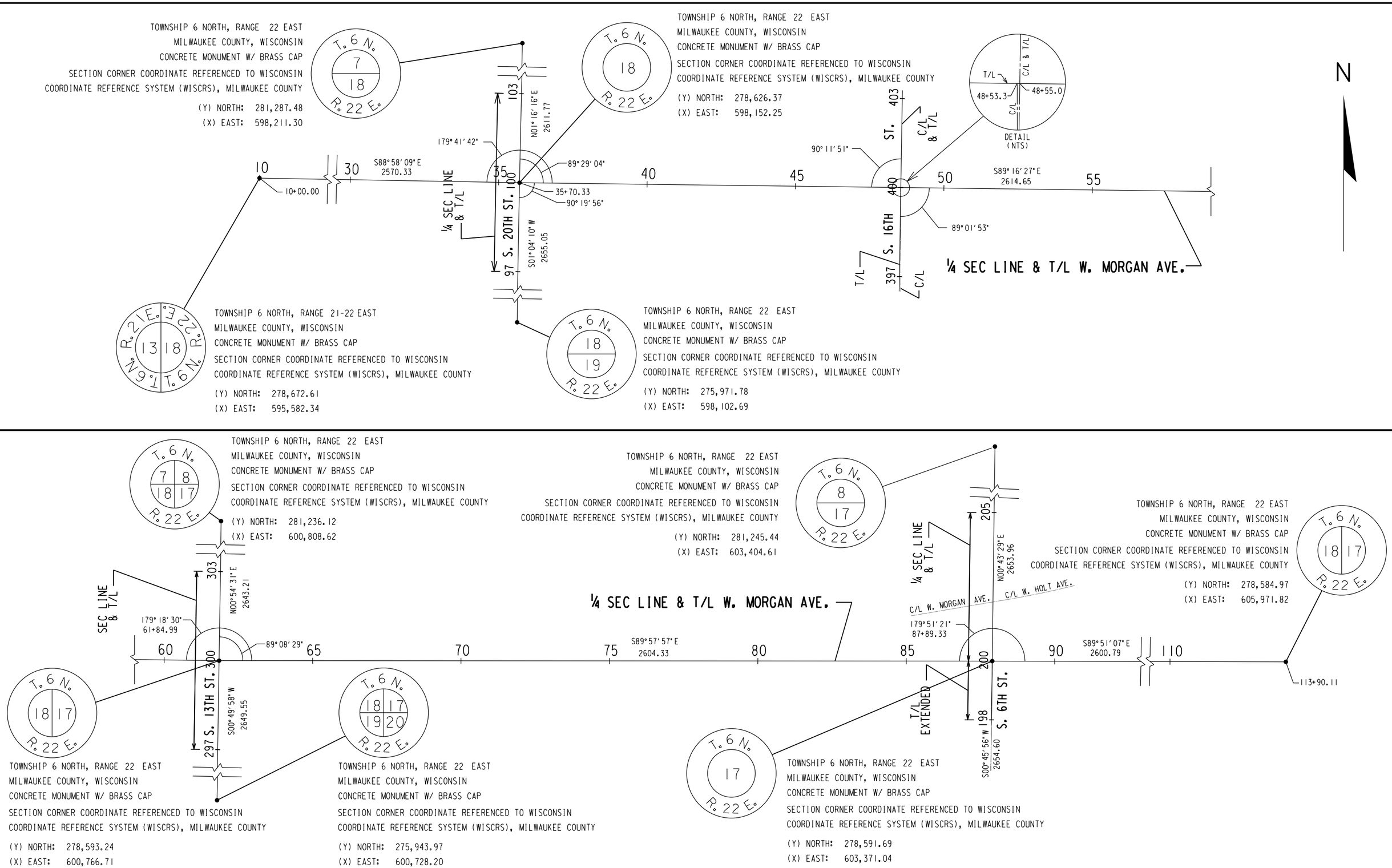
TOWNSHIP 6 NORTH, RANGE 22 EAST
MILWAUKEE COUNTY, WISCONSIN
CONCRETE MONUMENT W/ BRASS CAP
SECTION CORNER COORDINATE REFERENCED TO WISCONSIN
COORDINATE REFERENCE SYSTEM (WISCRS), MILWAUKEE COUNTY
(Y) NORTH: 281,287.48
(X) EAST: 598,211.30
T. 6 N. 7 18 R. 22 E.
TOWNSHIP 6 NORTH, RANGE 22 EAST
MILWAUKEE COUNTY, WISCONSIN
CONCRETE MONUMENT W/ BRASS CAP
SECTION CORNER COORDINATE REFERENCED TO WISCONSIN
COORDINATE REFERENCE SYSTEM (WISCRS), MILWAUKEE COUNTY
(Y) NORTH: 278,626.37
(X) EAST: 598,152.25
T. 6 N. 18 R. 22 E.
N
DETAIL (NTS)
T/L
C/L & T/L
C/L
48+53.3
48+55.0
10
30
S88°58'09"E 2570.33
10+00.00
179°41'42"
N01°16'16"E 2611.77
103
35
100
89°29'04"
35+70.33
90°19'56"
40
45
50
S89°16'27"E 2614.65
55
90°11'51"
403
ST.
C/L & T/L
480
89°01'53"
S. 16TH
397
T/L
C/L
¼ SEC LINE & T/L W. MORGAN AVE.
¼ SEC LINE & T/L
S. 20TH ST.
97
S01°04'10"W 2655.05
TOWNSHIP 6 NORTH, RANGE 21-22 EAST
MILWAUKEE COUNTY, WISCONSIN
CONCRETE MONUMENT W/ BRASS CAP
SECTION CORNER COORDINATE REFERENCED TO WISCONSIN
COORDINATE REFERENCE SYSTEM (WISCRS), MILWAUKEE COUNTY
(Y) NORTH: 278,672.61
(X) EAST: 595,582.34
T. 6 N. R. 21 E. 13 18 R. 22 E.
TOWNSHIP 6 NORTH, RANGE 22 EAST
MILWAUKEE COUNTY, WISCONSIN
CONCRETE MONUMENT W/ BRASS CAP
SECTION CORNER COORDINATE REFERENCED TO WISCONSIN
COORDINATE REFERENCE SYSTEM (WISCRS), MILWAUKEE COUNTY
(Y) NORTH: 275,971.78
(X) EAST: 598,102.69
T. 6 N. 18 19 R. 22 E.
TOWNSHIP 6 NORTH, RANGE 22 EAST
MILWAUKEE COUNTY, WISCONSIN
CONCRETE MONUMENT W/ BRASS CAP
SECTION CORNER COORDINATE REFERENCED TO WISCONSIN
COORDINATE REFERENCE SYSTEM (WISCRS), MILWAUKEE COUNTY
(Y) NORTH: 281,236.12
(X) EAST: 600,808.62
T. 6 N. 7 8 18 17 R. 22 E.
TOWNSHIP 6 NORTH, RANGE 22 EAST
MILWAUKEE COUNTY, WISCONSIN
CONCRETE MONUMENT W/ BRASS CAP
SECTION CORNER COORDINATE REFERENCED TO WISCONSIN
COORDINATE REFERENCE SYSTEM (WISCRS), MILWAUKEE COUNTY
(Y) NORTH: 281,245.44
(X) EAST: 603,404.61
T. 6 N. 8 17 R. 22 E.
TOWNSHIP 6 NORTH, RANGE 22 EAST
MILWAUKEE COUNTY, WISCONSIN
CONCRETE MONUMENT W/ BRASS CAP
SECTION CORNER COORDINATE REFERENCED TO WISCONSIN
COORDINATE REFERENCE SYSTEM (WISCRS), MILWAUKEE COUNTY
(Y) NORTH: 278,584.97
(X) EAST: 605,971.82
T. 6 N. 18 17 R. 22 E.
¼ SEC LINE & T/L
205
N00°43'29"E 2653.96
C/L W. MORGAN AVE.
C/L W. HOLT AVE.
179°51'21"
87+89.33
¼ SEC LINE & T/L W. MORGAN AVE.
SEC LINE & T/L
303
N00°54'31"E 2643.21
179°18'30"
61+84.99
89°08'29"
60
65
70
75
S89°57'57"E 2604.33
80
85
90
S89°51'07"E 2600.79
110
113+90.11
300
297
S. 13TH ST.
S00°49'58"W 2649.55
200
S. 6TH ST.
T/L EXTENDED
198
S00°45'56"W 2654.60
TOWNSHIP 6 NORTH, RANGE 22 EAST
MILWAUKEE COUNTY, WISCONSIN
CONCRETE MONUMENT W/ BRASS CAP
SECTION CORNER COORDINATE REFERENCED TO WISCONSIN
COORDINATE REFERENCE SYSTEM (WISCRS), MILWAUKEE COUNTY
(Y) NORTH: 278,593.24
(X) EAST: 600,766.71
T. 6 N. 18 17 R. 22 E.
TOWNSHIP 6 NORTH, RANGE 22 EAST
MILWAUKEE COUNTY, WISCONSIN
CONCRETE MONUMENT W/ BRASS CAP
SECTION CORNER COORDINATE REFERENCED TO WISCONSIN
COORDINATE REFERENCE SYSTEM (WISCRS), MILWAUKEE COUNTY
(Y) NORTH: 275,943.97
(X) EAST: 600,728.20
T. 6 N. 18 17 19 20 R. 22 E.
TOWNSHIP 6 NORTH, RANGE 22 EAST
MILWAUKEE COUNTY, WISCONSIN
CONCRETE MONUMENT W/ BRASS CAP
SECTION CORNER COORDINATE REFERENCED TO WISCONSIN
COORDINATE REFERENCE SYSTEM (WISCRS), MILWAUKEE COUNTY
(Y) NORTH: 278,591.69
(X) EAST: 603,371.04
T. 6 N. 17 R. 22 E.

2

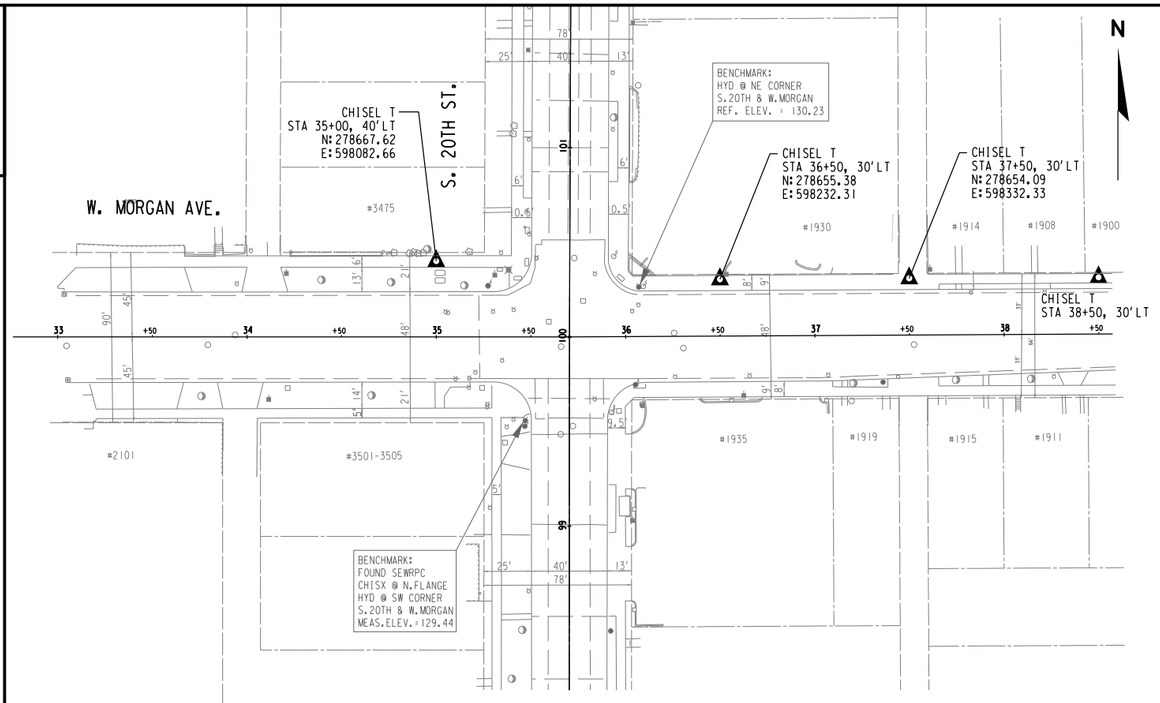

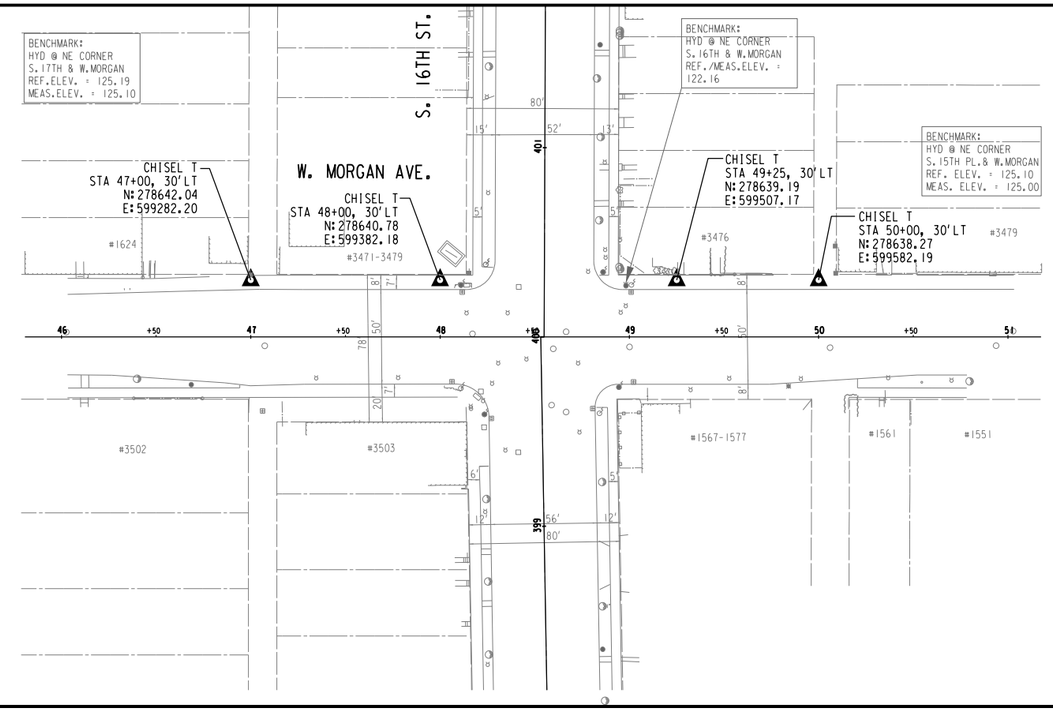

2

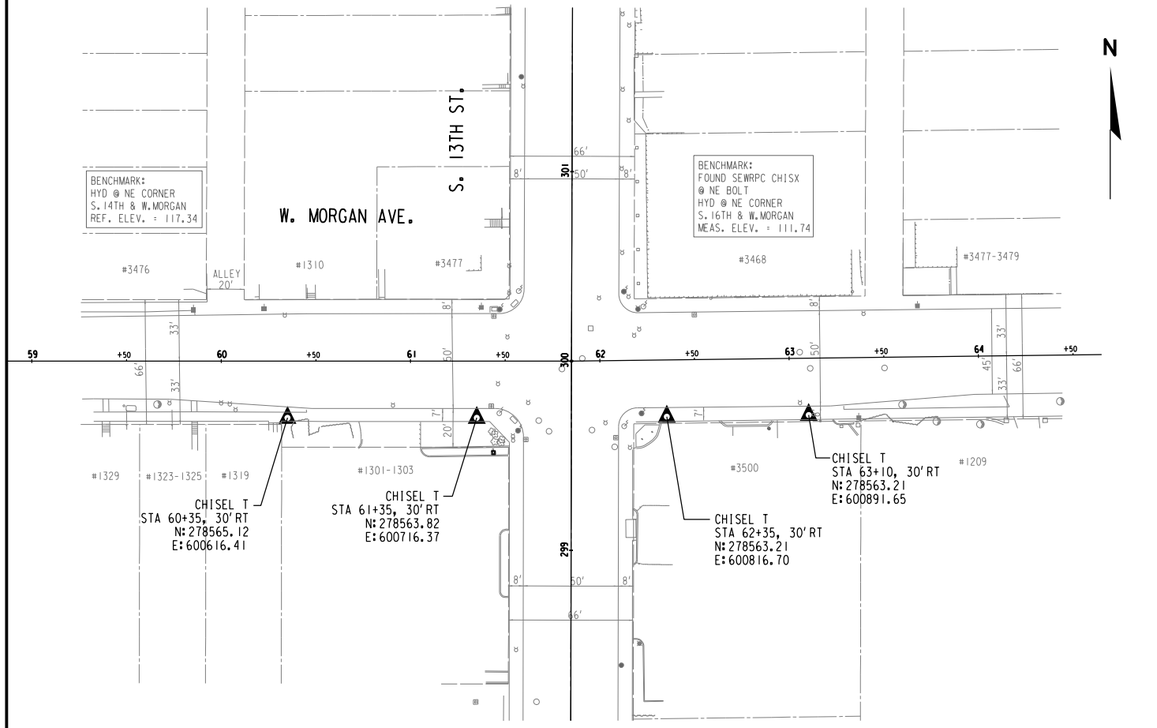

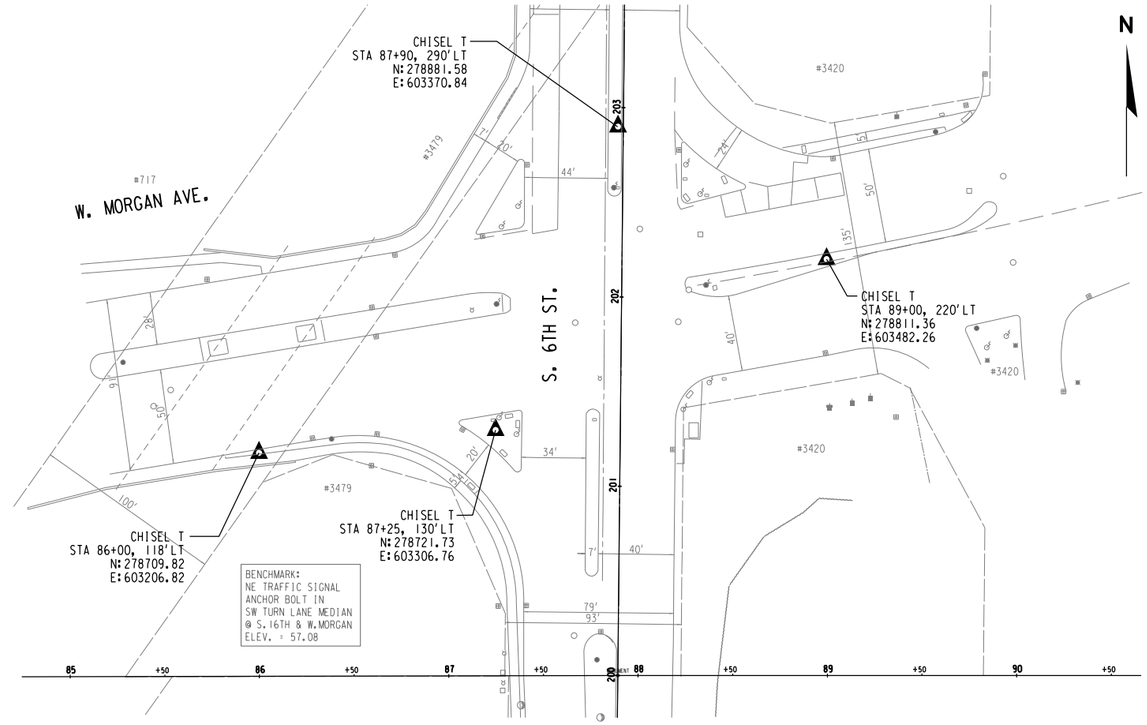

PROJECT NO: 2984-21-73	HWY: W. MORGAN AVE.	COUNTY: MILWAUKEE	ALIGNMENT LAYOUT - SURVEY CONTROL	SHEET 133	E

FILE NAME : W:\spr\MONOTUBE PROJECTS\2984-21-03 Morgan Ave_6th_13th_16th_20th\Misc\Alignment Morgan - Control Pts.dgn PLOT DATE : 2-FEB-2024 PLOT BY : BIEGANSKI, SCOTT PLOT NAME : PLOT SCALE : 1 IN:80 FT

Estimate Of Quantities

2984-21-73

Line	Item	Item Description	Unit	Total	Qty
0002	204.0100	Removing Concrete Pavement	SY	770.000	770.000
0004	204.0150	Removing Curb & Gutter	LF	180.000	180.000
0006	204.0155	Removing Concrete Sidewalk	SY	707.000	707.000
0008	204.0195	Removing Concrete Bases	EACH	24.000	24.000
0010	204.9060.S	Removing (item description) 301. Lighting Units	EACH	41.000	41.000
0012	205.0100	Excavation Common	CY	169.400	169.400
0014	205.0501.S	Excavation, Hauling, and Disposal of Petroleum Contaminated Soil	TON	30.500	30.500
0016	213.0100	Finishing Roadway (project) 001. 2984-21-73	EACH	1.000	1.000
0018	305.0120	Base Aggregate Dense 1 1/4-Inch	TON	225.000	225.000
0020	320.0145	Concrete Base 8-Inch	SY	206.000	206.000
0022	415.0080	Concrete Pavement 8-Inch	SY	41.000	41.000
0024	416.0610	Drilled Tie Bars	EACH	461.000	461.000
0026	416.0620	Drilled Dowel Bars	EACH	181.000	181.000
0028	465.0105	Asphaltic Surface	TON	27.000	27.000
0030	601.0331	Concrete Curb & Gutter 31-Inch	LF	861.000	861.000
0032	601.0600	Concrete Curb Pedestrian	LF	196.000	196.000
0034	602.0410	Concrete Sidewalk 5-Inch	SF	5,670.000	5,670.000
0036	602.0515	Curb Ramp Detectable Warning Field Natural Patina	SF	274.000	274.000
0038	602.0615	Curb Ramp Detectable Warning Field Radial Natural Patina	SF	158.000	158.000
0040	611.8115	Adjusting Inlet Covers	EACH	1.000	1.000
0042	619.1000	Mobilization	EACH	1.000	1.000
0044	620.0300	Concrete Median Sloped Nose	SF	401.000	401.000
0046	625.0100	Topsoil	SY	221.000	221.000
0048	628.1905	Mobilizations Erosion Control	EACH	2.000	2.000
0050	628.1910	Mobilizations Emergency Erosion Control	EACH	2.000	2.000
0052	628.7005	Inlet Protection Type A	EACH	3.000	3.000
0054	628.7020	Inlet Protection Type D	EACH	41.000	41.000
0056	631.1000	Sod Lawn	SY	221.000	221.000
0058	642.5201	Field Office Type C	EACH	1.000	1.000
0060	643.0300	Traffic Control Drums	DAY	33,300.000	33,300.000
0062	643.0410	Traffic Control Barricades Type II	DAY	2,700.000	2,700.000
0064	643.0420	Traffic Control Barricades Type III	DAY	1,980.000	1,980.000
0066	643.0705	Traffic Control Warning Lights Type A	DAY	3,960.000	3,960.000
0068	643.0715	Traffic Control Warning Lights Type C	DAY	1,560.000	1,560.000
0070	643.0800	Traffic Control Arrow Boards	DAY	240.000	240.000
0072	643.0900	Traffic Control Signs	DAY	11,220.000	11,220.000
0074	643.0920	Traffic Control Covering Signs Type II	EACH	5.000	5.000
0076	643.1050	Traffic Control Signs PCMS	DAY	56.000	56.000
0078	643.3150	Temporary Marking Line Removable Tape 4-Inch	LF	16,144.000	16,144.000
0080	643.3350	Temporary Marking Crosswalk Removable Tape 6-inch	LF	1,013.000	1,013.000
0082	643.5000	Traffic Control	EACH	1.000	1.000
0084	644.1410	Temporary Pedestrian Surface Asphalt	SF	98.000	98.000
0086	644.1601	Temporary Pedestrian Curb Ramp	DAY	540.000	540.000
0088	644.1605	Temporary Pedestrian Detectable Warning Field	SF	170.000	170.000
0090	644.1810	Temporary Pedestrian Barricade	LF	1,132.000	1,132.000
0092	646.1020	Marking Line Epoxy 4-Inch	LF	7,557.000	7,557.000
0094	646.2020	Marking Line Epoxy 6-Inch	LF	4,100.000	4,100.000
0096	646.3020	Marking Line Epoxy 8-Inch	LF	1,256.000	1,256.000
0098	646.5020	Marking Arrow Epoxy	EACH	36.000	36.000

Estimate Of Quantities

2984-21-73

Line	Item	Item Description	Unit	Total	Qty
0100	646.5120	Marking Word Epoxy	EACH	12.000	12.000
0102	646.5220	Marking Symbol Epoxy	EACH	17.000	17.000
0104	646.6020	Marking Stop Line Epoxy 12-Inch	LF	1,786.000	1,786.000
0106	646.6220	Marking Yield Line Epoxy 18-Inch	EACH	59.000	59.000
0108	646.9010	Marking Removal Line Water Blasting 4-Inch	LF	4,734.000	4,734.000
0110	646.9012	Marking Removal Line Water Blasting 6-Inch	LF	37.000	37.000
0112	646.9110	Marking Removal Line Water Blasting 8-Inch	LF	1,085.000	1,085.000
0114	646.9210	Marking Removal Line Water Blasting Wide	LF	2,744.000	2,744.000
0116	646.9310	Marking Removal Special Marking Water Blasting	EACH	22.000	22.000
0118	650.5500	Construction Staking Curb Gutter and Curb & Gutter	LF	861.000	861.000
0120	650.8501	Construction Staking Electrical Installations (project) 001. 2984-21-73	EACH	1.000	1.000
0122	650.9000	Construction Staking Curb Ramps	EACH	36.000	36.000
0124	650.9500	Construction Staking Sidewalk (project) 001. 2984-21-73	EACH	1.000	1.000
0126	650.9911	Construction Staking Supplemental Control (project) 001. 2984-21-73	EACH	1.000	1.000
0128	652.0225	Conduit Rigid Nonmetallic Schedule 40 2-Inch	LF	285.000	285.000
0130	652.0235	Conduit Rigid Nonmetallic Schedule 40 3-Inch	LF	1,545.000	1,545.000
0132	652.0615	Conduit Special 3-Inch	LF	2,895.000	2,895.000
0134	653.0905	Removing Pull Boxes	EACH	6.000	6.000
0136	654.0101	Concrete Bases Type 1	EACH	22.000	22.000
0138	654.0105	Concrete Bases Type 5	EACH	9.000	9.000
0140	654.0110	Concrete Bases Type 10	EACH	9.000	9.000
0142	654.0120	Concrete Bases Type 10-Special	EACH	6.000	6.000
0144	655.0230	Cable Traffic Signal 5-14 AWG	LF	3,720.000	3,720.000
0146	655.0240	Cable Traffic Signal 7-14 AWG	LF	90.000	90.000
0148	655.0250	Cable Traffic Signal 9-14 AWG	LF	595.000	595.000
0150	655.0260	Cable Traffic Signal 12-14 AWG	LF	185.000	185.000
0152	655.0270	Cable Traffic Signal 15-14 AWG	LF	2,065.000	2,065.000
0154	655.0280	Cable Traffic Signal 19-14 AWG	LF	1,850.000	1,850.000
0156	655.0305	Cable Type UF 2-12 AWG Grounded	LF	5,630.000	5,630.000
0158	655.0515	Electrical Wire Traffic Signals 10 AWG	LF	2,430.000	2,430.000
0160	655.0900	Traffic Signal EVP Detector Cable	LF	2,725.000	2,725.000
0162	657.0100	Pedestal Bases	EACH	22.000	22.000
0164	657.0255	Transformer Bases Breakaway 11 1/2-Inch Bolt Circle	EACH	9.000	9.000
0166	657.0345	Poles Type 9	EACH	1.000	1.000
0168	657.0350	Poles Type 10	EACH	9.000	9.000
0170	657.0352	Poles Type 10-Special	EACH	6.000	6.000
0172	657.0405	Traffic Signal Standards Aluminum 3.5-FT	EACH	3.000	3.000
0174	657.0420	Traffic Signal Standards Aluminum 13-FT	EACH	15.000	15.000
0176	657.0430	Traffic Signal Standards Aluminum 10-FT	EACH	4.000	4.000
0178	657.0515	Monotube Arms 15-FT	EACH	2.000	2.000
0180	657.0525	Monotube Arms 25-FT	EACH	2.000	2.000
0182	657.0530	Monotube Arms 30-FT	EACH	6.000	6.000
0184	657.0536	Monotube Arms 35-FT-Special	EACH	2.000	2.000
0186	657.0541	Monotube Arms 40-FT-Special	EACH	2.000	2.000
0188	657.0546	Monotube Arms 45-FT-Special	EACH	2.000	2.000
0190	658.0173	Traffic Signal Face 3S 12-Inch	EACH	74.000	74.000
0192	658.0174	Traffic Signal Face 4S 12-Inch	EACH	2.000	2.000
0194	658.0412	Pedestrian Signal Face 12-Inch	EACH	32.000	32.000
0196	658.5070	Signal Mounting Hardware (location) 001. S. 20th Street	EACH	1.000	1.000

2984-21-73

Line	Item	Item Description	Unit	Total	Qty
0198	658.5070	Signal Mounting Hardware (location) 002. S. 16th Street	EACH	1.000	1.000
0200	658.5070	Signal Mounting Hardware (location) 003. S. 13th Street	EACH	1.000	1.000
0202	658.5070	Signal Mounting Hardware (location) 004. S. 6th. Street	EACH	1.000	1.000
0204	659.5000.S	Lamp, Ballast, LED, Switch Disposal by Contractor	EACH	41.000	41.000
0206	661.0201	Temporary Traffic Signals for Intersections (location) 001. S.20th Street	EACH	1.000	1.000
0208	661.0201	Temporary Traffic Signals for Intersections (location) 002. S. 16th Street	EACH	1.000	1.000
0210	661.0201	Temporary Traffic Signals for Intersections (location) 003. S.13th. Street	EACH	1.000	1.000
0212	661.0201	Temporary Traffic Signals for Intersections (location) 004. S.6th. Street	EACH	1.000	1.000
0214	674.0300	Remove Cable	LF	4,830.000	4,830.000
0216	690.0150	Sawing Asphalt	LF	56.000	56.000
0218	690.0250	Sawing Concrete	LF	1,770.000	1,770.000
0220	ASP.1T0A	On-the-Job Training Apprentice at $5.00/HR	HRS	800.000	800.000
0222	ASP.1T0G	On-the-Job Training Graduate at $5.00/HR	HRS	3,000.000	3,000.000
0224	SPV.0060	Special 001. Adjusting Water Valve Boxes	EACH	2.000	2.000
0226	SPV.0060	Special 002. Adjusting Water Manhole	EACH	2.000	2.000
0228	SPV.0060	Special 003. Utility Line Opening (ULO)	EACH	20.000	20.000
0230	SPV.0060	Special 004. Section Corner Monuments	EACH	2.000	2.000
0232	SPV.0060	Special 201. Install City Precast Controller Base	EACH	4.000	4.000
0234	SPV.0060	Special 203. Concrete Bases Type 10 Spread Footing	EACH	1.000	1.000
0236	SPV.0060	Special 205. ATC Controller and Cabinet Installed	EACH	4.000	4.000
0238	SPV.0060	Special 215. Electrical Service Pedestal	EACH	3.000	3.000
0240	SPV.0060	Special 218. EVP1 Direction Detector	EACH	16.000	16.000
0242	SPV.0060	Special 221. EVP Phase Selector Card 4 Channel	EACH	4.000	4.000
0244	SPV.0060	Special 223. EVP Confirmation Light	EACH	16.000	16.000
0246	SPV.0060	Special 225. Vehicular Video Detection System 2 Cameras	EACH	1.000	1.000
0248	SPV.0060	Special 243. Remove Traffic Signals (20th Street)	EACH	1.000	1.000
0250	SPV.0060	Special 244. Remove Traffic Signals (16th Street)	EACH	1.000	1.000
0252	SPV.0060	Special 245 Remove Traffic Signals (13th Street)	EACH	1.000	1.000
0254	SPV.0060	Special 246 Remove Traffic Signals (6th Street)	EACH	1.000	1.000
0256	SPV.0060	Special 267. Pedestrian Countdown Signal Face 12-Inch	EACH	32.000	32.000
0258	SPV.0060	Special 268. Voice Instruction Audible Push Button	EACH	32.000	32.000
0260	SPV.0060	Special 269. Voice Instruction Audible Control Unit	EACH	4.000	4.000
0262	SPV.0060	Special 302. Fiberglass/Polymer Concrete Pull Box 13"X24"X24"	EACH	35.000	35.000
0264	SPV.0060	Special 303. Fiberglass/Polymer Concrete Pull Box 17"X30"X24"	EACH	38.000	38.000
0266	SPV.0060	Special 310. Remove Poles	EACH	19.000	19.000
0268	SPV.0060	Special 312. Poles Type A-26 (Gray Concrete, Direct Bury)	EACH	3.000	3.000
0270	SPV.0060	Special 325. Pole 30-FT Aluminum Bolt Down	EACH	9.000	9.000
0272	SPV.0060	Special 334. 40' Wood Poles	EACH	29.000	29.000
0274	SPV.0060	Special 338. Primary or Secondary Riser	EACH	23.000	23.000
0276	SPV.0060	Special 343. Submersible Multitap 4-Port Pre-Insulated Connector	EACH	69.000	69.000
0278	SPV.0060	Special 345. Luminaire Arm Single Member 6-Foot	EACH	23.000	23.000
0280	SPV.0060	Special 346. Luminaire Arm Single Member 6-Foot Wood Pole Mount	EACH	21.000	21.000
0282	SPV.0060	Special 347. Luminaire Arm Single Member 8-Foot (Special)	EACH	6.000	6.000
0284	SPV.0060	Special 353. Equipment Grounding Electrode	EACH	17.000	17.000
0286	SPV.0060	Special 355. A21-26 City Furnished Mounting Clamp (Single Bracket)	EACH	3.000	3.000
0288	SPV.0060	Special 375. Luminaire Utility 2LED	EACH	13.000	13.000
0290	SPV.0060	Special 376. Luminaire Utility 3LED	EACH	49.000	49.000
0292	SPV.0060	Special 881. Inline 5A Fast Acting Fuse with Holder	EACH	25.000	25.000
0294	SPV.0090	Special 002. Marking Line 24-Inch Epoxy Stop Line	LF	454.000	454.000

2984-21-73

Line	Item	Item Description	Unit	Total	Qty
0296	SPV.0090	Special 300. Cable Type 1#8 AWG 5kV Concentric City Furnished	LF	1,580.000	1,580.000
0298	SPV.0090	Special 301. Electrical Cable 1#6 Primary Linewire 5kv	LF	1,900.000	1,900.000
0300	SPV.0090	Special 302. Electrical Cable 3#6AL Triplex	LF	1,620.000	1,620.000
0302	SPV.0090	Special 304. Electrical Cable 2#2/1#4 AL Triplex	LF	3,260.000	3,260.000
0304	SPV.0090	Special 319. Liquidtight Flexible Nonmetallic Conduit 1 1/2inch	LF	900.000	900.000
0306	SPV.0090	Special 323. Electrical Cable Type 3#4/1#8 XLPE USE-2	LF	290.000	290.000
0308	SPV.0090	Special 324. Electrical Cable Type 4#2/1#8 XLPE USE-2	LF	3,110.000	3,110.000
0310	SPV.0090	Special 325. Conduit 3-Inch HDPE Schedule 40	LF	3,210.000	3,210.000
0312	SPV.0195	Special 001. Excavation, Hauling and Disposal of CVOC Contaminated Soil	TON	5.500	5.500

3

REMOVALS

CATEGORY 0010 ITEM NO.	204.0100	204.0150	204.0155	205.0100
	REMOVING CONCRETE PAVEMENT	REMOVING CURB & GUTTER	REMOVING CONCRETE SIDEWALK	EXCAVATION COMMON
LOCATION	SY	LF	SY	CY
MORGAN AVE & 20TH ST	110	80	151	24.2
MORGAN AVE & 16TH ST	90	-	134	19.8
MORGAN AVE & 13TH ST	95	-	127	20.9
MORGAN AVE & 6TH ST	475	100	295	104.5
TOTAL	770	180	707	169.4

FINISHING ROADWAY

CATEGORY 0010 ITEM NO.	213.0100
	FINISHING ROADWAY (PROJECT) 001. 2984-21-73
LOCATION	EACH
2984-21-73	1
TOTAL	1

3

CONTAMINATED SOILS

CATEGORY 0010 ITEM NO.			205.0501.S	SPV.0195.001
			EXCAVATION, HAULING, AND DISPOSAL OF PETROLEUM CONTAMINATED SOIL	EXCAVATION, HAULING, AND DISPOSALOF CHLORINATED VOLATILE ORGANIC COMPOUND (CVOC) CONTAMINATED SOIL
LOCATION	STATION	TO STATION	TON	TON
MORGAN AVE & 20TH ST	35+00	35+70	5.5	-
MORGAN AVE & 20TH ST	35+70	36+10	5.5	-
MORGAN AVE & 13TH ST	61+40	61+90	8.5	-
MORGAN AVE & 13TH ST	61+90	61+20	5.5	-
MORGAN AVE & 13TH ST	62+5.7	62+27.5	5.5	-
MORGAN AVE & 16TH ST	48+15	48+60	-	5.5
TOTAL			30.5	5.5

3

BASE AGGREGATE

CATEGORY 0010

ITEM NO.	305.0120
LOCATION	BASE AGGREGATE DENSE 1 1/4-INCH TON
MORGAN AVE & 20TH ST	57
MORGAN AVE & 16TH ST	51
MORGAN AVE & 13TH ST	44
MORGAN AVE & 6TH ST	73
TOTAL	225

CONCRETE BASES

CATEGORY 0010

ITEM NO.	320.0145
LOCATION	CONCRETE BASE 8-INCH SY
MORGAN AVE & 20TH ST	45
MORGAN AVE & 16TH ST	62
MORGAN AVE & 13TH ST	57
MORGAN AVE & 6TH ST	42
TOTAL	206

CONCRETE PAVEMENT

CATEGORY 0010

ITEM NO.	415.0080
LOCATION	CONCRETE PAVEMENT 8-INCH SY
MORGAN AVE & 20TH ST	23
MORGAN AVE & 6TH ST	18
TOTAL	41

DRILLED BAR ITEMS

CATEGORY 0010

ITEM NO.	416.0610	416.0620
LOCATION	DRILLED TIE BARS EACH	DRILLED DOWEL BARS EACH
MORGAN AVE & 20TH ST	98	31
MORGAN AVE & 16TH ST	65	37
MORGAN AVE & 13TH ST	71	37
MORGAN AVE & 6TH ST	227	76
TOTAL	461	181

3

ASPHALTIC SURFACE

CATEGORY 0010

ITEM NO.	465.0105
LOCATION	ASPHALTIC SURFACE TON
MORGAN AVE & 20TH ST	6
MORGAN AVE & 16TH ST	9
MORGAN AVE & 13TH ST	7
MORGAN AVE & 6TH ST	5
TOTAL	27

CURB AND GUTTER

CATEGORY 0010

ITEM NO.	601.0331	601.0600
LOCATION	CONCRETE CURB & GUTTER 31-INCH LF	CONCRETE CURB PEDESTRIAN LF
MORGAN AVE & 20TH ST	185	32
MORGAN AVE & 16TH ST	106	126
MORGAN AVE & 13TH ST	124	29
MORGAN AVE & 6TH ST	446	9
TOTAL	861	196

CONCRETE SIDEWALK

CATEGORY 0010

ITEM NO.	602.0410	602.0515	602.0615
LOCATION	CONCRETE SIDEWALK 5-INCH SF	CURB RAMP DETECTABLE WARNING FIELD NATURAL PATINA SF	CURB RAMP DETECTABLE WARNING FIELD RADIAL NATURAL PATINA SF
MORGAN AVE & 20TH ST	1,373	42	53
MORGAN AVE & 16TH ST	1,134	50	33
MORGAN AVE & 13TH ST	1,012	30	47
MORGAN AVE & 6TH ST	2,151	152	25
TOTAL	5,670	274	158

3

ADJUSTING INLET COVERS

CATEGORY 0010

ITEM NO.	611.8115 ADJUSTING INLET COVERS EACH
LOCATION	
MORGAN AVE & 6TH ST(SW CORNER)	1
TOTAL	1

MOBILIZATION

CATEGORY 0010

ITEM NO.	619.1000 MOBILIZATION EACH
LOCATION	
MORGAN AVE	1
TOTAL	1

MEDIAN NOSE

CATEGORY 0010

ITEM NO.	620.0300 CONCRETE MEDIAN SLOPED NOSE SF
LOCATION	
MORGAN AVE & 6TH ST	401
TOTAL	401

RESTORATION

CATEGORY 0010

ITEM NO.	625.0100 TOPSOIL	631.1000 SOD LAWN
LOCATION	SY	SY
MORGAN AVE & 20TH ST	59	59
MORGAN AVE & 16TH ST	32	32
MORGAN AVE & 13TH ST	12	12
MORGAN AVE & 6TH ST	118	118
TOTAL	221	221

3

EROSION CONTROL

CATEGORY 0010

ITEM NO.	628.7005 INLET PROTECTION TYPE A	628.7020 INLET PROTECTION TYPE D
LOCATION	EACH	EACH
MORGAN AVE & 20TH ST	--	8
MORGAN AVE & 16TH ST	--	8
MORGAN AVE & 13TH ST	--	9
MORGAN AVE & 6TH ST	3	16
TOTAL	3	41

MOBILIZATIONS EROSION CONTROL

CATEGORY 0010

ITEM NO.	628.1905 MOBILIZATIONS EROSION CONTROL	628.1910 MOBILIZATIONS EMERGENCY EROSION CONTROL
LOCATION	EACH	EACH
MORGAN AVE	2	2
TOTAL	2	2

FIELD OFFICE

CATEGORY 0010

ITEM NO.	642.5201 FIELD OFFICE TYPE C
LOCATION	EACH
2984-21-73	1
TOTAL	1

WATER VALVE BOXES

CATEGORY 0020

ITEM NO.	SPV.0060.001 ADJUSTING WATER VALVE BOXES	SPV.0060.002 ADJUSTING WATER MANHOLE
LOCATION	EACH	EACH
MORGAN AVE	2	2
PROJECT TOTAL	2	2

UTILITY LINE OPENING

CATEGORY 0020

ITEM NO.	SPV.0060.003 UTILITY LINE OPENING (ULO)
LOCATION	EACH
UNDISTRIBUTED	20
TOTAL	20

SECTION CORNER MONUMENTS

CATEGORY 0010

ITEM NO.	SPV.0060.004 SECTION CORNER MONUMENTS
LOCATION	EACH
MORGAN AVE	2
PROJECT TOTAL	2

3

TRAFFIC CONTROL

CATEGORY 0010

ITEM NO.			643.0300		643.0410		643.0420		643.0705		643.0715		643.0800		643.0900	
			TRAFFIC CONTROL DRUMS		TRAFFIC CONTROL BARRICADES TYPE II		TRAFFIC CONTROL BARRICADES TYPE III		TRAFFIC CONTROL WARNING LIGHTS TYPE A		TRAFFIC CONTROL WARNING LIGHTS TYPE C		TRAFFIC CONTROL ARROW BOARDS		TRAFFIC CONTROL SIGNS	
STAGE	STAGE DURATION DAYS	LOCATION	EACH	DAY	EACH	DAY	EACH	DAY	EACH	DAY	EACH	DAY	EACH	DAY	EACH	DAY
1	60	MORGAN AVE. & 20TH STREET	39	2,340	7	420	3	180	6	360	--	--	--	--	--	1,320
	60	MORGAN AVE. & 16TH STREET	40	2,400	7	420	4	240	8	480	--	--	--	--	24	1,440
	60	MORGAN AVE. & 13TH STREET	45	2,700	7	420	4	240	8	480	--	--	--	--	24	1,440
	60	MORGAN AVE. & 6TH STREET	135	8,100	3	180	5	300	10	600	13	780	2	120	24	1,440
		STAGE 1 SUBTOTAL		15,540		1,440		960		1,920		780		120		5,640
2	60	MORGAN AVE. & 20TH STREET	40	2,400	7	420	3	180	6	360	--	--	--	--	--	1,320
	60	MORGAN AVE. & 16TH STREET	40	2,520	7	420	3	180	6	360	--	--	--	--	12	1,380
	60	MORGAN AVE. & 13TH STREET	48	2,880	7	420	3	180	6	360	--	--	--	--	23	1,380
	60	MORGAN AVE. & 6TH STREET	166	9,960	--	--	8	480	16	960	13	780	2	120	25	1,500
		STAGE 2 SUBTOTAL		17,760		1,260		1,020		2,040		780		120		5,580
		TOTAL		33,300		2,700		1,980		3,960		1,560		240		11,220

TRAFFIC CONTROL

CATEGORY 0010

ITEM NO.	643.5000
	TRAFFIC CONTROL
LOCATION	EACH
2984-21-73	1
TOTAL	1

3

TEMPORARY PAVEMENT MARKINGS

CATEGORY 0010

ITEM NO.		643.3150		643.3350
		TEMPORARY MARKING LINE REMOVABLE TAPE 4-INCH		TEMPORARY MARKING CROSSWALK REMOVABLE TAPE 6-INCH
STAGE	LOCATION	(WHITE) LF	(YELLOW) LF	LF
1	MORGAN AVE & 20TH ST	413	528	97
1	MORGAN AVE & 16TH ST	765	948	100
1	MORGAN AVE & 13TH ST	846	860	95
1	MORGAN AVE & 6TH ST	1,748	938	311
2	MORGAN AVE & 20TH ST	426	1,096	102
2	MORGAN AVE & 16TH ST	758	1,380	95
2	MORGAN AVE & 13TH ST	843	1,316	95
2	MORGAN AVE & 6TH ST	1,423	1,856	118
	Subtotal	7,222	8,922	
	TOTAL	16,144		1,013

TRAFFIC CONTROL

CATEGORY 0010

ITEM NO.	643.0920	643.1050	
	TRAFFIC CONTROL COVERING SIGNS TYPE II	TRAFFIC CONTROL SIGNS PCMS	
	EACH	EACH	DAY
MORGAN AVE	5	8	7
	5	56	

TEMPORARY PEDESTRIAN ACCOMODATION

CATEGORY 0010

ITEM NO.			644.1410	644.1601	644.1605	644.1810
			TEMPORARY PEDESTRIAN SURFACE ASPHALT	TEMPORARY PEDESTRIAN CURB RAMP	TEMPORARY PEDESTRIAN DETECTABLE WARNING FIELD	TEMPORARY PEDESTRIAN BARRICADE
STAGE	DURATION	LOCATION	SF	DAY	SF	LF
1	60	MORGAN AVE & 20TH ST	-	60	10	129
1	60	MORGAN AVE & 16TH ST	-	60	10	115
1	60	MORGAN AVE & 13TH ST	-	60	10	105
1	60	MORGAN AVE & 6TH ST	24	60	60	427
2	60	MORGAN AVE & 20TH ST	27	60	10	-
2	60	MORGAN AVE & 16TH ST	-	60	10	-
2	60	MORGAN AVE & 13TH ST	-	-	10	-
2	60	MORGAN AVE & 6TH ST	47	180	50	356
		TOTAL	98	540	170	1132

3

PAVEMENT MARKINGS

CATEGORY 0010 ITEM NO.	646.1020 MARKING LINE EPOXY 4-INCH					646.2020 MARKING LINE EPOXY 6-INCH		646.3020 MARKING LINE EPOXY 8-INCH	646.5020 MARKING ARROW EPOXY			646.5120	646.5220 MARKING SYMBOL EPOXY		646.6020	646.6220	SPV.0090.002
LOCATION	DASHED YELLOW (10 FT LINE 30 FT SKIP)	(DOUBLE YELLOW)	(WHITE)	DASHED WHITE (10 FT LINE 30 FT SKIP)	DASHED WHITE (2 FT LINE 6 FT SKIP)	WHITE	DASHED WHITE (2 FT LINE 6 FT SKIP)	(WHITE)	RIGHT/LEFT TURN ARROW	TYPE 1 ARROW	BIKE ARROW	MARKING WORD EPOXY ("ONLY")	BIKE SYMBOL	SHARROW BIKE	MARKING STOP LINE EPOXY 12-INCH	MARKING YIELD LINE EPOXY 18-INCH	MARKING LINE 24-INCH EPOXY STOP LINE
	LF	LF	LF	LF	LF	LF	LF	LF	EACH	EACH	EACH	EACH	EACH	EACH	LF	EACH	LF
MORGAN AVE & 20TH ST	56	862	362	--	--	675	111	--	2	--	3	2	3	--	341	--	87
MORGAN AVE & 16TH ST	--	1,526	1,053	--	--	935	160	433	6	--	5	5	5	2	379	--	110
MORGAN AVE & 13TH ST	--	1,738	1,254	--	--	1,308	246	327	4	--	3	4	4	1	373	--	109
MORGAN AVE & 6TH ST	--	--	289	373	44	656	9	496	9	2	2	1	2	--	693	59	148
SUBTOTAL	56	4,126	2,958	373	44	3,574	526	1,256	21	2	13	12	14	3	1,786	59	454
TOTAL			7,557			4,100		1,256		36		12	17		1,786	59	454

PAVEMENT MARKING REMOVALS

CATEGORY 0010 ITEM NO.	646.9010	646.9012	646.9110	646.9210	646.9310
LOCATION	MARKING REMOVAL LINE WATER BLASTING 4-INCH	MARKING REMOVAL LINE WATER BLASTING 6-INCH	MARKING REMOVAL LINE WATER BLASTING 8-INCH	MARKING REMOVAL LINE WATER BLASTING WIDE	MARKING REMOVAL SPECIAL MARKING WATER BLASTING
	LF	LF	LF	LF	EACH
MORGAN AVE & 20TH ST	919	3	259	590	4
MORGAN AVE & 16TH ST	1542	16	414	561	8
MORGAN AVE & 13TH ST	1683	8	389	527	8
MORGAN AVE & 6TH ST	590	10	23	1066	2
TOTAL	4734	37	1085	2744	22

SAWING

CATEGORY 0010 ITEM NO.	690.0150 SAWING ASPHALT	690.0250 SAWING CONCRETE
LOCATION	LF	LF
MORGAN AVE & 20TH ST	15	357
MORGAN AVE & 16TH ST	41	303
MORGAN AVE & 13TH ST	--	342
MORGAN AVE & 6TH ST	--	768
TOTAL	56	1,770

CONSTRUCTION STAKING

CATEGORY 0010 ITEM NO.	650.5500 CONSTRUCTION STAKING CURB GUTTER AND CURB AND GUTTER	650.9000 CONSTRUCTION STAKING CURB RAMP
LOCATION	LF	EACH
MORGAN AVE & 20TH ST	185	6
MORGAN AVE & 16TH ST	106	8
MORGAN AVE & 13TH ST	124	5
MORGAN AVE & 6TH ST	446	17
TOTAL	861	36

CATEGORY 0010 ITEM NO.	650.8501 CONSTRUCTION STAKING ELECTRICAL INSTALLATIONS (PROJECT) 2984-21-73	650.9500 CONSTRUCTION STAKING SIDEWALK (PROJECT) 2984-21-73	650.9911 CONSTRUCTION STAKING SUPPLEMENTAL CONTROL (PROJECT) 2984-21-73
LOCATION	EACH	EACH	EACH
MORGAN AVE	1	1	1
TOTAL	1	1	1

3

3

STREET LIGHTING ITEMS

CATEGORY 0010 ITEM NO.	SPV.0060.302 FIBERGLASS/POLYMER CONCRETE PULL BOX 13"X24"X24"	SPV.0060.303* FIBERGLASS/POLYMER CONCRETE PULL BOX 17"X30"X24"	SPV.0060.345 LUMINAIRE ARM SINGLE MEMBER 6-FOOT	SPV.0060.347 LUMINAIRE ARM SINGLE MEMBER 8-FOOT (SPECIAL)
LOCATION	EACH	EACH	EACH	EACH
MORGAN AVE & 20TH ST	10	--	3	2
MORGAN AVE & 16TH ST	10	--	2	2
MORGAN AVE & 13TH ST	6	--	5	2
MORGAN AVE & 6TH ST	9	1	13	--
PROJECT TOTAL	35	1	23	6

CATEGORY 0010 ITEM NO.	SPV.0060.310 REMOVE POLES	SPV.0060.312 POLES TYPE A-26 (GRAY CONCRETE, DIRECT BURY)	SPV.0060.325 POLE 30FT. ALUMINUM BOLT DOWN	SPV.0060.343 WATERTIGHT SPLICES & CONNECTIONS	SPV.0060.353 EQUIPMENT GROUNDING ELECTRODE	SPV.0060.355 A21-A26 CITY FURNISHED MOUNTING CLAMP (SINGLE BRACKET)	SPV.0060.376 LUMINAIRE UTILITY 3LED	SPV.0060.881 INLINE 5A FAST ACTING FUSE WITH HOLDER
LOCATION	EACH	EACH	EACH	LF	EACH	EACH	EACH	EACH
MORGAN AVE & 20TH ST	3	1	2	--	3	1	9	--
MORGAN AVE & 16TH ST	2	--	--	--	4	--	9	--
MORGAN AVE & 13TH ST	6	2	1	24	5	2	8	10
MORGAN AVE & 6TH ST	8	--	6	45	5	--	23	15
PROJECT TOTAL	19	3	9	69	17	3	49	25

*Quantities shown elsewhere

3

STREET LIGHTING ITEMS

CATEGORY 0010 ITEM NO.	204.9060.S.301 REMOVING LIGHTING UNITS	654.0105 CONCRETE BASE TYPE 5	655.0305* CABLE TYPE UF 2#12 AWG GROUNDED	657.0255 TRANSFORMER BASE BREAKAWAY 11-INCH BOLT CIRCLE	659.5000.S LAMP, BALLAST, LED, SWITCH DISPOSAL BY CONTRACTOR	SPV.0090.300 CABLE TYPE 1#8 AWG 5kV CONCENTRIC CITY FURNISHED	SPV.0090.304 ELECTRICAL CABLE 2#2 /1#4 AL TRIPLEX	SPV.0090.324 ELECTRICAL CABLE TYPE 4#2/1#8 XLPE USE-2	SPV.0090.325 CONDUIT 3 INCH HDPE
LOCATION	EACH	EACH	LF	EACH	EACH	LF	LF	LF	LF
MORGAN AVE & 20TH ST	8	2	1480	2	8	910	--	--	840
MORGAN AVE & 16TH ST	8	--	500	--	8	670	--	--	450
MORGAN AVE & 13TH ST	10	1	400	1	10	--	2060	1350	970
MORGAN AVE & 6TH ST	15	6	525	6	15	--	1200	1760	950
PROJECT TOTAL	41	9	2,905	9	41	1,580	3,260	3,110	3,210

CATEGORY 0010 ITEM NO.	674.0300* REMOVE CABLE	SPV.0060.338 PRIMARY OR SECONDARY RISER	SPV.0060.375 LUMINAIRE UTILITY 2LED	SPV.0090.301 ELECTRICAL CABLE 1#6 PRIMARY LINEWIRE 5KV	SPV.0090.302 ELECTRICAL CABLE 3#6AL TRIPLEX	SPV.0090.319 LIQUIDTIGHT FLEXIBLE NONMETALLIC CONDUIT1 1/2"	SPV.0060.334 40' WOOD POLES	SPV.0060.346 LUMINAIRE ARM SINGLE MEMBER 6-FOOT WOOD POLE MOUNT
LOCATION	LF	EACH	EACH	LF	LF	LF	EACH	EACH
MORGAN AVE & 20TH ST	950	6	4	750	480	150	6	5
MORGAN AVE & 16TH ST	1150	6	4	1150	500	200	7	4
MORGAN AVE & 13TH ST	1200	4	5	--	400	200	6	4
MORGAN AVE & 6TH ST	990	7	--	--	240	350	10	8
PROJECT TOTAL	4,290	23	13	1,900	1,620	900	29	21

*Quantities shown elsewhere

3

TRAFFIC SIGNALS W. MORGAN AVE. & S. 20TH ST.

CATEGORY 0010 ITEM NO.		204.0195
SIGNAL BASE NO.	LOCATION	REMOVING CONCRETE BASES EACH
CB1A	35+32', 35.5' L	1
SB3A	35+95', 41' L	1
SB4A	36+08', 26' L	1
SB7A	35+94', 39' R	1
SB9A	35+29.5', 26' R	1
	SUBTOTAL	5

CATEGORY 0010 ITEM NO.	SPV.0060.215
LOCATION	ELECTRICAL SERVICE PEDESTAL EACH
35+27', 35.5' L	1
SUBTOTAL	1

CATEGORY 0010 ITEM NO.			652.0225	652.0235	652.0615
			CONDUIT RIGID NONMETALLIC SCHEDULE 40 2-INCH	CONDUIT RIGID NONMETALLIC SCHEDULE 40 3-INCH	CONDUIT SPECIAL 3-INCH
LOCATION	TO	LOCATION	LF	LF	LF
CB1	TO	PB1	-	20	-
CB1	TO	CUC LATERAL	-	20	-
CB1	TO	SP1	10	-	-
PB1	TO	SB1	5	-	-
PB1	TO	SB10	-	20	-
PB1	TO	PB2	-	50	-
PB2	TO	SB2	10	-	-
PB2	TO	PB3	-	-	100
PB3	TO	SB3	-	10	-
PB3	TO	PB4	-	60	-
PB4	TO	SB4	5	-	-
PB4	TO	PB5	-	-	110
PB5	TO	SB5	5	-	-
PB5	TO	PB6	-	60	-
PB6	TO	SB7	10	-	-
PB6	TO	SB6	-	15	-
PB6	TO	PB7	-	-	115
PB7	TO	SB8	-	20	-
PB7	TO	SB9	20	-	-
PB7	TO	PB1	-	-	140
		SUBTOTAL	65	275	465

CATEGORY 0010 ITEM NO.		658.0173	658.0412	SPV.0060.267
SIGNAL HEAD NUMBER	SIGNAL BASE NUMBER	TRAFFIC SIGNAL FACE 3S 12-INCH EACH	PEDESTRIAN SIGNAL FACE 12-INCH EACH	PEDESTRIAN COUNTDOWN SIGNAL FACE 12-INCH EACH
1	SB4	1	-	-
2	SB10	1	-	-
3	SB10	1	-	-
4	SB9	1	-	-
5	SB10	1	-	-
6	SB9	1	-	-
7	SB6	1	-	-
8	SB6	1	-	-
9	SB4	1	-	-
10	SB6	1	-	-
11	SB7	1	-	-
12	SB2	1	-	-
13	SB3	1	-	-
14	SB2	1	-	-
15	SB7	1	-	-
16	SB8	1	-	-
17	SB8	-	1	1
18	SB2	-	1	1
19	SB1	-	1	1
20	SB4	-	1	1
21	SB3	-	1	1
22	SB7	-	1	1
23	SB5	-	1	1
24	SB9	-	1	1
SUBTOTAL		16	8	8

CATEGORY 0010 ITEM NO.		SPV.0060.201	SPV.0060.205	SPV.0060.221	SPV.0060.269
SIGNAL BASE NUMBER	LOCATION	INSTALL CITY PRECAST CONTROLLER BASE EACH	ATC CONTROLLER AND CABINET INSTALLED EACH	EVP PHASE SELECTOR CARD 4 CHANNEL EACH	VOICE INSTRUCTION AUDIBLE CONTROL UNIT EACH
CB1	35+27', 35.5' L	1	1	1	1
	SUBTOTAL	1	1	1	1

3

3

TRAFFIC SIGNALS W. MORGAN AVE. & S. 20TH ST.

CATEGORY 0010 ITEM NO. / SIGNAL BASE NUMBER	657.0100 PEDESTAL BASES EACH	657.0345 POLES TYPE 9 EACH	657.0350 POLES TYPE 10 EACH	657.0352 POLES TYPE 10 SPECIAL EACH	657.0420 TRAFFIC SIGNAL STANDARDS ALUMINUM 13-FT EACH	657.0430 TRAFFIC SIGNAL STANDARDS ALUMINUM 10-FT EACH	657.0515 MONOTUBE ARMS 15-FT EACH	657.0530 MONOTUBE ARMS 30-FT EACH	657.0541 MONOTUBE ARMS 40-FT SPECIAL EACH	SPV.0060.218 EVP 1 DIRECTION DETECTOR EACH	SPV.0060.223 EVP CONFIRMATION LIGHT EACH	SPV.0060.268 VOICE INSTRUCTION AUDIBLE PUSH BUTTON EACH
SB1	1	-	-	-	-	1	-	-	-	-	-	1
SB2	-	-	-	-	-	-	-	-	-	-	-	1
SB3	-	1	-	-	-	-	1	-	-	1	1	1
SB4	1	-	-	-	1		-	-	-	-	-	1
SB5	1	-	-	-		1	-	-	-	-	-	1
SB6	-	-	-	1	-	-	-	-	1	1	1	-
SB7	1	-	-	-	1	-	-	-	-	-	-	1
SB8	-	-	1	-	-	-	1	-	-	1	1	1
SB9	1	-	-	-	1	-	-	-	-	-	-	1
SB10	-	-	1	-	-	-	-	1	-	1	1	-
SUBTOTAL	5	1	2	1	3	2	2	1	1	4	4	8

CATEGORY 0010 ITEM NO. / SIGNAL BASE NUMBER	LOCATION	654.0101 CONCRETE BASES TYPE 1 EACH	654.0110 CONCRETE BASES TYPE 10 EACH	654.0120 CONCRETE BASES TYPE 10 SPECIAL EACH
SB1	35+38.5', 36' L	1	-	-
SB3	36+0.5', 41' L	-	1	-
SB4	36+07', 26.5' L	1	-	-
SB5	36+04', 28' R	1	-	-
SB6	36+01.5', 38 R	-	-	1
SB7	35+94.5', 38' R	1	-	-
SB8	35+41.5', 49' R		1	-
SB9	35+28', 37' R	1	-	-
SB10	35+24', 26.5' L	-	1	-
	SUBTOTAL	5	3	1

CATEGORY 0010 ITEM NO.	658.5070.01 SIGNAL MOUNTING HARDWARE (S. 20TH ST.) EACH	661.0201.01 TEMPORARY TRAFFIC SIGNAL (S. 20TH ST.) EACH	SPV.0060.243.01 REMOVE TRAFFIC SIGNALS (S. 20TH ST.) EACH
	1	1	1
SUBTOTAL	1	1	1

SUMMARY OF MAJOR ITEMS FOR TRAFFIC SIGNAL CABLING

CATEGORY 0010 ITEM NO.	DESCRIPITON	L.F
655.0230	CABLE TRAFFIC SIGNAL 5-14 AWG	690
655.0250	CABLE TRAFFIC SIGNAL 9-14 AWG	180
655.0260	CABLE TRAFFIC SIGNAL 12-14 AWG	185
655.0270	CABLE TRAFFIC SIGNAL 15-14-AWG	390
655.0280	CABLE TRAFFIC SIGNAL 19-14-AWG	180
655.0305	CABLE TYPE UF 2-12 AWG GROUNDED	540
655.0515	ELECTRICAL WIRE TRAFFIC SIGNALS 10 AWG	520
655.0900	TRAFFIC SIGNAL EVP DETECTOR CABLE	545
674.0300	REMOVE CABLE	240
SPV.0090.323	ELECTRICAL CABLE 3#4/1#8 XLPE USE-2	40

CATEGORY 0010 ITEM NO. / PULL BOX NUMBER	LOCATION	SPV.0060.303 FIBERGLASS/ POLYMER CONCRETE PULL BOX 17"X30"X24" EACH
PB1	35+37', 33' L	1
PB2	35+48', 51' L	1
PB3	35+92.5', 41' L	1
PB4	36+12', 26' L	1
PB5	36+8.5', 26.5' R	1
PB6	35+92', 46' R	1
PB7	35+39', 34' R	1
	SUBTOTAL	7

3

3

TRAFFIC SIGNALS W. MORGAN AVE. & S. 16TH ST.

CATEGORY 0010 ITEM NO.		204.0195
SIGNAL BASE NUMBER	LOCATION	REMOVING CONCRETE BASES EACH
CB1A	48+14', 27' L	1
SB1A	48+12', 28' R	1
SB4A	48+24', 39' L	1
SB6A	48+98', 27' L	1
SB8A	48+85', 38' R	1
	SUBTOTAL	5

CATEGORY 0010 ITEM NO.	SPV.0060.215
LOCATION	ELECTRICAL SERVICE PEDESTAL EACH
48+16', 37' L	1
SUBTOTAL	1

CATEGORY 0010 ITEM NO.			652.0225	652.0235	652.0615
			CONDUIT RIGID NONMETALLIC SCHEDULE 40 2-INCH	CONDUIT RIGID NONMETALLIC SCHEDULE 40 3-INCH	CONDUIT SPECIAL 3-INCH
LOCATION	TO	LOCATION	LF	LF	LF
CB1	TO	PB1	-	25	-
PB1	TO	SB1	15	-	-
PB1	TO	PB2	-	-	175
PB2	TO	SB2	-	5	-
PB2	TO	SB3	15	-	-
PB2	TO	PB3	-	90	-
PB3	TO	SB4	10	-	-
PB3	TO	M1	15	-	-
PB3	TO	PB4	-	-	120
PB4	TO	SB5	-	10	-
PB4	TO	PB5	-	90	-
PB5	TO	SB6	15	-	-
PB5	TO	PB6	-	-	120
PB6	TO	SB7	-	15	-
PB6	TO	PB7	-	90	-
PB7	TO	SB8	15	-	-
PB7	TO	PB8	-	-	130
PB8	TO	PB9	-	40	-
PB9	TO	SB9	10	-	-
PB9	TO	SB10	-	10	-
PB9	TO	PB1	-	50	-
		SUBTOTAL	95	425	545

CATEGORY 0010 ITEM NO.		658.0173	658.0412	SPV.0060.267
SIGNAL HEAD NUMBER	SIGNAL BASE NUMBER	TRAFFIC SIGNAL FACE 3S 12-INCH EACH	PEDESTRIAN SIGNAL FACE 12-INCH EACH	PEDESTRIAN COUNTDOWN SIGNAL FACE 12-INCH EACH
1	SB6	1	-	-
2	SB2	1	-	-
3	SB2	1	-	-
4	SB1	1	-	-
5	SB2	1	-	-
6	SB1	1	-	-
7	SB7	1	-	-
8	SB7	1	-	-
9	SB6	1	-	-
10	SB7	1	-	-
11	SB8	1	-	-
12	SB5	1	-	-
13	SB5	1	-	-
14	SB4	1	-	-
15	SB5	1	-	-
16	SB4	1	-	-
17	SB10	1	-	-
18	SB10	1	-	-
19	SB8	1	-	-
20	SB10	1	-	-
21	SB10	-	1	1
22	SB4	-	1	1
23	SB2	-	1	1
24	SB6	-	1	1
25	SB5	-	1	1
26	SB8	-	1	1
27	SB7	-	1	1
28	SB1	-	1	1
	SUBTOTAL	20	8	8

CATEGORY 0010 ITEM NO.		SPV.0060.201	SPV.0060.205	SPV.0060.221	SPV.0060.269
SIGNAL BASE NUMBER	LOCATION	INSTALL CITY PRECAST CONTROLLER BASE EACH	ATC CONTROLLER AND CABINET INSTALLED EACH	EVP PHASE SELECTOR CARD 4 CHANNEL EACH	VOICE INSTRUCTION AUDIBLE CONTROL UNIT EACH
CB1	47+98', 35' R	1	1	1	1
	SUBTOTAL	1	1	1	1

3

3

TRAFFIC SIGNALS W. MORGAN AVE. & S. 16TH ST.

CATEGORY 0010 ITEM NO.	657.0100	657.0350	657.0352	657.0405	657.0420	657.0530	657.0535	657.0546	SPV.0060.218	SPV.0060.223	SPV.0060.268
	PEDESTAL BASES	POLES TYPE 10	POLES TYPE 10 SPECIAL	TRAFFIC SIGNAL STANDARDS ALUMINUM 3.5-FT	TRAFFIC SIGNAL STANDARDS ALUMINUM 13-FT	MONOTUBE ARMS 30-FT	MONOTUBE ARMS 35-FT SPECIAL	MONOTUBE ARMS 45-FT SPECIAL	EVP 1 DIRECTION DETECTOR	EVP CONFIRMATION LIGHT	VOICE INSTRUCTION AUDIBLE PUSH BUTTON
SIGNAL BASE NUMBER	EACH	EACH	EACH	EACH	EACH	EACH	EACH	EACH	EACH	EACH	EACH
SB1	1	-	-	-	1	-	-	-	-	-	1
SB2	-	1	--	-	-	1	-	-	1	1	-
SB3	1	-	-	1	-	-	-	-	-	-	1
SB4	1	-	-	-	1	-	-	-	-	-	1
SB5	-	-	1	-	-	-	1	-	1	1	1
SB6	1	-	-	-	1	-	-	-	-	-	1
SB7	-	-	-	-	-	1	-	-	1	1	1
SB8	1	-	-	-	1	-	-	-	-	-	1
SB9	1	-	-	1	-	-	-	-	-	-	1
SB10	-	1	1	-	-	-	-	1	1	1	-
SUBTOTAL	6	2	2	2	4	2	1	1	4	4	8

CATEGORY 0010 ITEM NO.		654.0101	654.0110	654.0120
		CONCRETE BASES TYPE 1	CONCRETE BASES TYPE 10	CONCRETE BASES TYPE 10 SPECIAL
SIGNAL BASE NUMBER	LOCATION	EACH	EACH	EACH
SB1	48+13', 30.5' R	1	-	-
SB2	48+06', 27' L	-	-	-
SB3	48+15.5', 27' L	1	-	-
SB4	48+23', 39.5' L	1	1	-
SB5	48+87.5', 40' L	-	-	1
SB6	48+95.5', 27.5' L	1	-	-
SB7	48+95', 27' R	-	1	-
SB8	48+87.5', 36' R	1	-	-
SB9	48+20', 38' R	1	-	-
SB10	48+11', 38' R	-	-	1
	SUBTOTAL	6	2	2

CATEGORY 0010 ITEM NO.	658.5070.02	661.0201.02	SPV.0060.243.02
	SIGNAL MOUNTING HARDWARE (S. 16TH ST.)	TEMPORARY TRAFFIC SIGNAL (S. 16TH ST.)	REMOVE TRAFFIC SIGNALS (S. 16TH ST.)
	EACH	EACH	EACH
	1	1	1
SUBTOTAL	1	1	1

SUMMARY OF MAJOR ITEMS FOR TRAFFIC SIGNAL CABLING

CATEGORY 0010 ITEM NO.	DESCRIPITON	L.F
655.0230	CABLE TRAFFIC SIGNAL 5-14 AWG	1100
655.0270	CABLE TRAFFIC SIGNAL 15-14-AWG	470
655.0280	CABLE TRAFFIC SIGNAL 19-14-AWG	440
655.0305	CABLE TYPE UF 2-12 AWG GROUNDED	665
655.0515	ELECTRICAL WIRE TRAFFIC SIGNALS 10 AWG	590
655.0900	TRAFFIC SIGNAL EVP DETECTOR CABLE	665
SPV.0090.323	ELECTRICAL CABLE 3#4/1#8 XLPE USE-2	130

CATEGORY 0010 ITEM NO.		SPV.0060.303
		FIBERGLASS/ POLYMER CONCRETE PULL BOX 17"X30"X24"
PULL BOX NUMBER	LOCATION	EACH
PB1	47+98', 27' R	1
PB2	48+09', 27' L	1
PB3	48+27', 44.5' L	1
PB4	48+83', 45' L	1
PB5	49+08', 27' L	1
PB6	49+08', 27' R	1
PB7	49+84', 45' R	1
PB8	48+24', 53' R	1
PB9	48+12', 42' R	1
	SUBTOTAL	9

3

TRAFFIC SIGNALS W. MORGAN AVE. & S. 13TH ST.

CATEGORY 0010 ITEM NO.		204.0195
SIGNAL BASE NUMBER	LOCATION	REMOVING CONCRETE BASES EACH
CB1A	61+44', 27' L	1
SB1A	61+48', 28' R	1
SB3A	61+57', 37' L	1
SB6A	62+213, 28' L	1
SB9A	62+11', 35' R	1
	SUBTOTAL	5

CATEGORY 0010 ITEM NO.	SPV.0060.215
LOCATION	ELECTRICAL SERVICE PEDESTAL EACH
61+31', 27' L	1
SUBTOTAL	1

CATEGORY 0010 ITEM NO.			652.0225	652.0235	652.0615
			CONDUIT RIGID NONMETALLIC SCHEDULE 40 2-INCH	CONDUIT RIGID NONMETALLIC SCHEDULE 40 3-INCH	CONDUIT SPECIAL 3-INCH
LOCATION	TO	LOCATION	LF	LF	LF
CB1	TO	PB1	-	30	-
PB1	TO	SB1	20	-	-
PB1	TO	PB2	-	-	175
PB2	TO	M1	15	-	-
PB2	TO	SB2	-	20	-
PB2	TO	PB3	-	85	-
PB3	TO	SB3	15	-	-
PB3	TO	PB4	-	-	110
PB4	TO	SB4	-	15	-
PB4	TO	PB5	-	65	-
PB5	TO	SB5	10	65	-
PB5	TO	PB6	-	-	110
PB6	TO	SB6	-	10	-
PB6	TO	PB7	-	55	-
PB7	TO	SB7	10	-	-
PB7	TO	PB8	-	-	95
PB8	TO	PB9	-	-	110
PB9	TO	PB10	-	-	85
PB10	TO	SB8	-	15	-
PB10	TO	PB1	-	95	-
		SUBTOTAL	70	455	685

CATEGORY 0010 ITEM NO.		658.0173	658.0412	SPV.0060.267
SIGNAL HEAD NUMBER	SIGNAL BASE NUMBER	TRAFFIC SIGNAL FACE 3S 12-INCH EACH	PEDESTRIAN SIGNAL FACE 12-INCH EACH	PEDESTRIAN COUNTDOWN SIGNAL FACE 12-INCH EACH
1	SB5	1	-	-
2	SB2	1	-	-
3	SB2	1	-	-
4	SB1	1	-	-
5	SB2	1	-	-
6	SB1	1	-	-
7	SB6	1	-	-
8	SB6	1	-	-
9	SB5	1	-	-
10	SB6	1	-	-
11	SB7	1	-	-
12	SB4	1	-	-
13	SB4	1	-	-
14	SB3	1	-	-
15	SB4	1	-	-
16	SB3	1	-	-
17	SB8	1	-	-
18	SB8	1	-	-
19	SB7	1	-	-
20	SB8	1	-	-
21	SB8	-	1	1
22	SB3	-	1	1
23	SB2	-	1	1
24	SB5	-	1	1
25	SB4	-	1	1
26	SB7	-	1	1
27	SB6	-	1	1
28	SB1	-	1	1
	SUBTOTAL	20	8	8

CATEGORY 0010 ITEM NO.		SPV.0060.201	SPV.0060.205	SPV.0060.221	SPV.0060.269
SIGNAL BASE NUMBER	LOCATION	INSTALL CITY PRECAST CONTROLLER BASE EACH	ATC CONTROLLER AND CABINET INSTALLED EACH	EVP PHASE SELECTOR CARD 4 CHANNEL EACH	VOICE INSTRUCTION AUDIBLE CONTROL UNIT EACH
CB1	61+28', 33.5' R	1	1	1	1
	SUBTOTAL	1	1	1	1

3

3

TRAFFIC SIGNALS W. MORGAN AVE. & S. 13TH ST.

CATEGORY 0010 ITEM NO. / SIGNAL BASE NUMBER	657.0100 PEDESTAL BASES EACH	657.0350 POLES TYPE 10 EACH	657.0352 POLES TYPE 10 SPECIAL EACH	657.0420 TRAFFIC SIGNAL STANDARDS ALUMINUM 13-FT EACH	657.0530 MONOTUBE ARMS 30-FT EACH	657.0535 MONOTUBE ARMS 35-FT SPECIAL EACH	657.0540 MONOTUBE ARMS 40-FT SPECIAL EACH	SPV.0060.218 EVP 1 DIRECTION DETECTOR EACH	SPV.0060.223 EVP CONFIRMATION LIGHT EACH	SPV.0060.268 VOICE INSTRUCTION AUDIBLE PUSH BUTTON EACH
SB1	1	-	-	1	-	-	-	-	-	1
SB2	-	-	1	-	1	1	-	1	1	1
SB3	1	-	-	1	-	-	-	-	-	1
SB4	-	1	-	-	-	-	-	1	1	1
SB5	1	-	-	1	-	-	-	-	-	1
SB6	-	1	-	-	1	-	-	1	1	1
SB7	1	-	-	1	-	-	-	-	-	1
SB8	-	-	1	-	-	-	1	1	1	1
SUBTOTAL	4	2	2	4	2	1	1	4	4	8

CATEGORY 0010 ITEM NO. / SIGNAL BASE NUMBER	LOCATION	654.0101 CONCRETE BASES TYPE 1 EACH	654.0110 CONCRETE BASES TYPE 10 EACH	654.0120 CONCRETE BASES TYPE 10 SPECIAL EACH
SB1	61+44.5', 29.5' R	1	-	-
SB2	61+47', 31.2' L	-	-	1
SB3	61+57.5', 36.5' L	1	-	-
SB4	62+12.5', 38.5' L	-	1	-
SB5	62+21', 27.5' L	1	-	-
SB6	62+21', 27.1' R	-	1	-
SB7	62+12.5', 36' R	1	-	-
SB8	61+49', 39.5' R	-	-	1
	SUBTOTAL	4	2	2

CATEGORY 0010 ITEM NO.	658.5070.03 SIGNAL MOUNTING HARDWARE (S.13TH ST.) EACH	661.0201.03 TEMPORARY TRAFFIC SIGNAL (S. 13TH ST.) EACH	SPV.0060.243.02 REMOVE TRAFFIC SIGNALS (S. 13TH ST.) EACH
	1	1	1
SUBTOTAL	1	1	1

SUMMARY OF MAJOR ITEMS FOR TRAFFIC SIGNAL CABLING

CATEGORY 0010 ITEM NO.	DESCRIPITON	L.F
655.0230	CABLE TRAFFIC SIGNAL 5-14 AWG	960
655.0270	CABLE TRAFFIC SIGNAL 15-14 AWG	610
655.0280	CABLE TRAFFIC SIGNAL 19-14-AWG	605
655.0305	CABLE TYPE UF 2-12 AWG GROUNDED	820
655.0515	ELECTRICAL WIRE TRAFFIC SIGNALS 10 AWG	685
655.0900	TRAFFIC SIGNAL EVP DETECTOR CABLE	820
674.0300	REMOVE CABLE	240
SPV.0090.323	ELECTRICAL CABLE 3#4/1#8 XLPE USE-2	105

CATEGORY 0010 ITEM NO. / PULL BOX NUMBER	LOCATION	SPV.0060.303 FIBERGLASS/ POLYMER CONCRETE PULL BOX 17"X30"X24" EACH
PB1	61+28', 27' R	1
PB2	61+34', 27' L	1
PB3	62+58', 48' L	1
PB4	62+12.5', 48' L	1
PB5	62+25', 27' L	1
PB6	62+25', 27' R	1
PB7	62+11', 27' R	1
PB8	62+10.5', 91' R	1
PB9	61+57.5', 91 R	1
PB10	61+57.5', 48' R	1
	SUBTOTAL	10

3

3

TRAFFIC SIGNALS W. MORGAN AVE. & S. 6TH ST.

CATEGORY 0010 ITEM NO.		653.0905
PULL BOX NUMBER	LOCATION	REMOVING PULL BOXES
PB2A	201+34', 31' R	1
PB2B	201+35', 14' L	1
PB4A	201+35', 67' L	1
PB8A	202+58' 3' L	1
PB9A	202+64', 33' R	1
PB10A	202+54', 44' R	1
	SUBTOTAL	6

CATEGORY 0010 ITEM NO.	SPV.0060.215
	ELECTRICAL SERVICE PEDESTAL
LOCATION	EACH
201+49', 55' R	1
SUBTOTAL	1

CATEGORY 0010 ITEM NO.	SPV.0060.225
	VEHICULAR VIDEO DETECTION SYSTEM-2 CAMERAS
	EACH
	1
SUBTOTAL	1

CATEGORY 0010 ITEM NO.			652.0225 CONDUIT RIGID NONMETALLIC SCHEDULE 40 2-INCH	652.0235 CONDUIT RIGID NONMETALLIC SCHEDULE 40 3-INCH	652.0615 CONDUIT SPECIAL 3-INCH
LOCATION	TO	LOCATION	LF	LF	LF
CB1	TO	PB1	-	30	-
PB1	TO	SB1	10	-	-
PB1	TO	PB2	-	120	-
PB2	TO	SB2	-	10	-
PB2	TO	PB3	-	-	270
PB3	TO	SB3	-	10	-
PB3	TO	SB4	5	-	-
PB3	TO	PB4	-	50	-
PB4	TO	SB5	5	-	-
PB4	TO	PB5	-	-	190
PB5	TO	SB6	-	10	-
PB5	TO	PB6	-	-	145
PB6	TO	SB7	5	-	-
PB6	TO	PB7	-	65	-
PB7	TO	SB8	15	-	-
PB7	TO	PB8	-	-	165
PB8	TO	SB9	-	10	-
PB8	TO	PB9	-	-	120
PB9	TO	SB10	5	-	-
PB9	TO	PB10	-	60	-
PB10	TO	SB11	10	-	-
PB10	TO	PB11	-	-	165
PB10	TO	CUC LATERAL	-	10	-
PB11	TO	SB12	-	15	-
PB11	TO	PB1	-	-	145
		SUBTOTAL	55	390	1200

CATEGORY 0010 ITEM NO.		658.0173 TRAFFIC SIGNAL FACE 3S 12-INCH	658.0174 TRAFFIC SIGNAL FACE 4S 12-INCH	658.0412 PEDESTRIAN SIGNAL FACE 12-INCH	SPV.0060.267 PEDESTRIAN COUNTDOWN SIGNAL FACE 12-INCH
SIGNAL HEAD NUMBER	SIGNAL BASE NUMBER	EACH	EACH	EACH	EACH
1	SB11	1	-	-	-
2	SB6	1	-	-	-
3	SB6	1	-	-	-
4	SB5	1	-	-	-
5	SB6	1	-	-	-
6	SB5	1	-	-	-
7	SB12	1	-	-	-
8	SB12	1	-	-	-
9	SB11	1	-	-	-
10	SB12	1	-	-	-
11	SB2	1	-	-	-
12	SB9	1	-	-	-
13	SB9	1	-	-	-
14	SB8	1	-	-	-
15	SB9	1	-	-	-
16	SB8	1	-	-	-
17	SB3	1	-	-	-
18	SB3	1	-	-	-
19	SB2	-	1	-	-
20	SB3	-	1	-	-
21	SB3	-	-	1	1
22	SB8	-	-	1	1
23	SB7	-	-	1	1
24	SB11	-	-	1	1
25	SB10	-	-	1	1
26	SB2	-	-	1	1
27	SB1	-	-	1	1
28	SB5	-	-	1	1
	SUBTOTAL	18	2	8	8

CATEGORY 0010 ITEM NO.		SPV.0060.201 INSTALL CITY PRECAST CONTROLLER BASE	SPV.0060.205 ATC CONTROLLER AND CABINET INSTALLED	SPV.0060.221 EVP PHASE SELECTOR CARD 4 CHANNEL	SPV.0060.269 VOICE INSTRUCTION AUDIBLE CONTROL UNIT
SIGNAL BASE NUMBER	LOCATION	EACH	EACH	EACH	EACH
CB1	201+49', 55' R	1	1	1	1
	SUBTOTAL	1	1	1	1

3

3

TRAFFIC SIGNALS W. MORGAN AVE. & S. 6TH ST.

CATEGORY 0010 ITEM NO. / SIGNAL BASE NUMBER	657.0100 PEDESTAL BASES EACH	657.0350 POLES TYPE 10 EACH	657.0352 POLES TYPE 10 SPECIAL EACH	657.0405 TRAFFIC SIGNAL STANDARDS ALUMINUM 3.5-FT EACH	657.0420 TRAFFIC SIGNAL STANDARDS ALUMINUM 13-FT EACH	657.0430 TRAFFIC SIGNAL STANDARDS ALUMINUM 10-FT EACH	657.0525 MONOTUBE ARMS 25-FT EACH	657.0530 MONOTUBE ARMS 30-FT EACH	657.0546 MONOTUBE ARMS 45-FT SPECIAL EACH	SPV.0060.218 EVP 1 DIRECTION DETECTOR EACH	SPV.0060.223 EVP CONFIRMATION LIGHT EACH	SPV.0060.268 VOICE INSTRUCTION AUDIBLE PUSH BUTTON EACH
SB1	1	-	-	-	-	1	-	-	-	-	-	1
SB2	-	-	-	-	-	-	-	-	-	-	-	1
SB3	-	-	1	-	-	-	-	-	1	1	1	-
SB4	1	-	-	1	-	-	-	-	-	-	-	1
SB5	1	-	-	-	1	-	-	-	-	-	-	1
SB6	-	1	-	-	-	-	1	-	-	1	1	1
SB7	1	-	-	-	-	1	-	-	-	-	-	1
SB8	1	-	-	-	1	-	-	-	-	-	-	1
SB9	-	1	-	-	-	-	1	-	-	1	1	-
SB10	1	-	-	-	1	-	-	-	-	-	-	1
SB11	1	-			1	-	-	-	-	-	-	1
SB12	-	1	-	-	-	-	-	1	-	1	1	1
SUBTOTAL	7	3	1	1	4	2	2	1	1	4	4	10

CATEGORY 0010 ITEM NO. / SIGNAL BASE NUMBER	LOCATION	654.0101 CONCRETE BASES TYPE 1 EACH	654.0110 CONCRETE BASES TYPE 10 EACH	654.0120 CONCRETE BASES TYPE 10 SPECIAL EACH	SPV.0060.243 CONCRETE BASES TYPE 10 SPREAD FOOTING EACH
SB1	201+51', 49' R	1	-	-	-
SB3	201+19', 55' L	-	-	1	-
SB4	201+24.5', 56' L	1	-	-	-
SB5	201+36', 63' L	1	-	-	-
SB6	201+96', 66' L	-	1	-	-
SB7	202+40', 64' L	1	-	-	-
SB8	202+48', 57.5' L	1	-	-	-
SB9	202+58', 4.5' L	-	1	-	-
SB10	202+63', 35' R	1	-	-	-
SB11	202+56', 42.5' R	1	-	-	-
SB12	202+7', 46' R	-	-	-	1
	SUBTOTAL	7	2	1	1

CATEGORY 0010 ITEM NO.	658.5070.04 SIGNAL MOUNTING HARDWARE (S. 6TH ST.) EACH	661.0201.04 TEMPORARY TRAFFIC SIGNAL (S. 6TH ST.) EACH	SPV.0060.243.02 REMOVE TRAFFIC SIGNALS (S. 6TH ST.) EACH
	1	1	1
SUBTOTAL	1	1	1

SUMMARY OF MAJOR ITEMS FOR TRAFFIC SIGNAL CABLING

CATEGORY 0010 ITEM NO.	DESCRIPITON	L.F
655.0230	CABLE TRAFFIC SIGNAL 5-14 AWG	970
655.0240	CABLE TRAFFIC SIGNAL 7-14 AWG	90
655.0250	CABLE TRAFFIC SIGNAL 9-14 AWG	415
655.0270	CABLE TRAFFIC SIGNAL 15-14 AWG	595
655.0280	CABLE TRAFFIC SIGNAL 19-14-AWG	625
655.0305	CABLE TYPE UF 2-12 AWG GROUNDED	700
655.0515	ELECTRICAL WIRE TRAFFIC SIGNALS 10 AWG	635
655.0900	TRAFFIC SIGNAL EVP DETECTOR CABLE	825
674.0300	REMOVE CABLE	60
SPV.0090.323	ELECTRICAL CABLE 3#4/1#8 XLPE USE-2	15

CATEGORY 0010 ITEM NO. / SIGNAL BASE NUMBER	LOCATION	204.0195 REMOVING CONCRETE BASES EACH
CB1A	202+05', 49' R	1
SB1A	201+41', 33' R	1
SB2A	201+55', 47' R	1
SB4A	201+18', 54' L	1
SB5A	201+36', 64' L	1
SB7A	202+38', 64' L	1
SB9A	202+48', 55' L	1
SB10A	202+70', 33' R	1
SB11A	202+55', 41' R	1
	SUBTOTAL	9

CATEGORY 0010 ITEM NO. / PULL BOX NUMBER	LOCATION	SPV.0060.303 FIBERGLASS/ POLYMER CONCRETE PULL BOX 17"X30"X24" EACH
PB1	201+58', 53' R	1
PB2	201+33', 31' R	1
PB3	201+25', 55' L	1
PB4	201+35', 67' L	1
PB5	201+94', 74' L	1
PB6	202+39', 66' L	1
PB7	202+62', 54' L	1
PB8	202+62' 4' L	1
PB9	202+64', 33' R	1
PB10	202+56', 50' R	1
PB11	202+04', 56' R	1
	SUBTOTAL	11

3

3

TRAFFIC SIGNALS TOTALS

CATEGORY 0010

ITEM NO.	204.0195 REMOVING CONCRETE BASES	653.0905 REMOVING PULL BOXES	654.0101 CONCRETE BASES TYPE 1	654.0110 CONCRETE BASES TYPE 10	654.0120 CONCRETE BASES TYPE 10 SPECIAL	657.0100 PEDESTAL BASES	657.0345 POLES TYPE 9	657.0350 POLES TYPE 10	657.0352 POLES TYPE 10 SPECIAL	657.0405 TRAFFIC SIGNAL STANDARDS ALUMINUM 3.5-FT	657.0420 TRAFFIC SIGNAL STANDARDS ALUMINUM 13-FT	SPV.0060.203 CONCRETE BASES TYPE 10 SPREAD FOOTING
	EACH	EACH	EACH	EACH	EACH	EACH	EACH	EACH	EACH	EACH	EACH	EACH
	24	6	22	9	6	22	1	9	6	3	15	1

ITEM NO.	657.0430 TRAFFIC SIGNAL STANDARDS ALUMINUM 10-FT	657.0515 MONOTUBE ARMS 15-FT	657.0525 MONOTUBE ARMS 25-FT	657.0530 MONOTUBE ARMS 30-FT	657.0536 MONOTUBE ARMS 35-FT SPECIAL	657.0541 MONOTUBE ARMS 40-FT SPECIAL	657.0546 MONOTUBE ARMS 45-FT SPECIAL	658.0173 TRAFFIC SIGNAL FACE 3S 12-INCH	658.0174 TRAFFIC SIGNAL FACE 4S 12-INCH	658.0412 PEDESTRIAN SIGNAL FACE 12-INCH	661.0201 TEMPORARY TRAFFIC SIGNAL FOR INTERSECTIONS	SPV.0060.243 REMOVING TRAFFIC SIGNALS (20TH STREET)	SPV.0060.244 REMOVING TRAFFIC SIGNALS (16TH STREET)	SPV.0060.245 REMOVING TRAFFIC SIGNALS (13TH STREET)	SPV.0060.246 REMOVING TRAFFIC SIGNALS (6TH STREET)
	EACH	EACH	EACH	EACH	EACH	EACH	EACH	EACH	EACH	EACH	EACH	EACH	EACH	EACH	EACH
	4	2	2	6	2	2	2	74	2	32	4	1	1	1	1

ITEM NO.	652.0225 CONDUIT RIGID NONMETALLIC SCHEDULE 40 2-INCH	652.0235 CONDUIT RIGID NONMETALLIC SCHEDULE 40 3-INCH	652.0615 CONDUIT SPECIAL 3-INCH	SPV.0060.201 INSTALL CITY PRECAST CONTROLLER BASE	SPV.0060.205 ATC CONTROLLER AND CABINET INSTALLED	SPV.0060.215 ELECTRICAL SERVICE PEDESTAL	SPV.0060.218 EVP 1 DIRECTION DETECTOR	SPV.0060.221 EVP PHASE SELECTOR CARD 4 CHANNEL	SPV.0060.223 EVP CONFIRMATION LIGHT	SPV.0060.225 VEHICULAR VIDEO DETECTION SYSTEM- 2 CAMERAS	SPV.0060.267 PEDESTRIAN COUNTDOWN SIGNAL FACE 12-INCH	SPV.0060.268 VOICE INSTRUCTION AUDIBLE PUSH BUTTON	SPV.0060.269 VOICE INSTRUCTION AUDIBLE CONTROL UNIT	SPV.0060.303* FIBERGLASS/ POLYMER CONCRETE PULLBOXES 17"X30"X24"
	LF	LF	LF	EACH	EACH	EACH	EACH	EACH	EACH	EACH	EACH	EACH	EACH	EACH
	285	1545	2895	4	4	3	16	4	16	1	32	32	4	37

ITEM NO.	655.0230 CABLE TRAFFIC SIGNAL 5-14 AWG	655.0240 CABLE TRAFFIC SIGNAL 7-14 AWG	655.0250 CABLE TRAFFIC SIGNAL 9-14 AWG	655.0260 CABLE TRAFFIC SIGNAL 12-14 AWG	655.0270 CABLE TRAFFIC SIGNAL 15-14 AWG	655.0280 CABLE TRAFFIC SIGNAL 19-14 AWG	655.0305* CABLE TYPE UF 2-12 AWG GROUNDED	655.0515 ELECTRICAL WIRE TRAFFIC SIGNALS 10 AWG	655.0900 TRAFFIC SIGNAL EVP DETECTOR CABLE	658.5070 SIGNAL MOUNTING HARDWARE	674.0300* REMOVE CABLE	SPV.0090.323 ELECTRICAL CABLE 3 #4/1#8 XLPE USE-2
	LF	LF	LF	LF	LF	LF	LF	LF	LF	EACH	LF	LF
	3720	90	595	185	2065	1850	2725	2430	2725	4	540	290

*Quantities shown elsewhere

Standard Detail Drawing List

08D05-21A	CURB RAMPS TYPES 1 AND 1-A
08D05-21B	CURB RAMPS TYPES 2 AND 3
08D05-21C	CURB RAMPS TYPES 4A AND 4A1
08D05-21D	CURB RAMPS TYPE 4B AND 4B1
08D05-21E	CURB RAMPS TYPES 5, 6, 7A, 7B & 8
08D05-21F	CURB RAMPS RADIAL DETECTABLE WARNING FIELD APPLICATIONS
08D05-21G	CURB RAMPS RECTANGULAR AND RADIAL DETECTABLE WARNING PLATES
08D16-11	CONCRETE GUTTER, CURB AND GUTTER AND PAVEMENT TIES
08E10-02	INLET PROTECTION TYPE A, B, C AND D
09C02-09	CONCRETE BASES, TYPES 1, 2, 5, & 6
09C03-04	TRANSFORMER/PEDESTAL BASES
09C11-10	CONCRETE BASE TYPE 10
09C15-01	CONCRETE BASE TYPE 10 SPECIAL
09D04-03	LIGHTING CONTROL CABINET 120/240 VOLT
09E01-15A	POLE MOUNTINGS FOR TRAFFIC SIGNALS TYPE 2
09E01-15B	POLE MOUNTINGS FOR TRAFFIC SIGNALS AND LIGHTING UNITS, TYPE 3 (HEAVY DUTY)
09E01-15C	POLE MOUNTINGS FOR TRAFFIC SIGNALS AND LIGHTING UNITS, TYPE 4
09E01-15D	POLE MOUNTINGS FOR LIGHTING UNITS, TYPE 5 (30 FEET)
09E01-15G	HARDWARE DETAILS FOR POLE MOUNTINGS
09E08-09A	TYPE 9 POLE 15'-30' MONOTUBE ARM
09E08-09E	TYPE 10 POLE 15'-30' MONOTUBE ARM
09E08-09F	TYPE 10 SPECIAL POLE 35' MONOTUBE ARM
09E12-02K	GENERAL NOTES AND HARDWARE FOR OVER HEIGHT TYPE 9, 10, 9/10 SPECIAL, 12 AND 13 POLES WITH MONOTUBE ARMS
11B02-02	CONCRETE MEDIAN NOSE
13C01-19	CONCRETE PAVEMENT LONGITUDINAL JOINTS AND TIES
13C15-08A	CONCRETE BASE
13C15-08B	CONCRETE BASE
15C05-05	TRAFFIC CONTROL, ADVANCE WARNING SIGNS 40 M.P.H. OR LESS
15C07-15A	PAVEMENT MARKING SYMBOLS
15C07-15B	PAVEMENT MARKING WORDS
15C07-15C	PAVEMENT MARKING ARROWS
15C07-15E	PAVEMENT MARKING FOR BIKE LANES
15C08-23A	PERMANENT LONGITUDINAL PAVEMENT MARKINGS
15C08-23B	TEMPORARY LONGITUDINAL PAVEMENT MARKING
15C08-23D	PAVEMENT MARKING (TURN LANES)
15C11-10B	CHANNELIZING DEVICES DRUMS, CONES, BARRICADES AND VERTICAL PANELS
15C18-09B	PAVEMENT MARKINGS, MEDIAN ISLAND NOSE
15C18-09C	MEDIAN PAVEMENT MARKINGS DOUBLE ARROW WARNING SIGN PLACEMENT
15C20-02	YIELD MARKING
15C29-08A	BICYCLE LANE MARKING
15C33-05	STOP LINE AND CROSSWALK PAVEMENT MARKING
15C35-06A	PAVEMENT MARKING (INTERSECTIONS)
15D30-09A	TRAFFIC CONTROL, PEDESTRIAN ACCOMMODATION
15D30-09B	TRAFFIC CONTROL, PEDESTRIAN ACCOMMODATION
15D30-09C	TRAFFIC CONTROL, PEDESTRIAN ACCOMMODATION

6

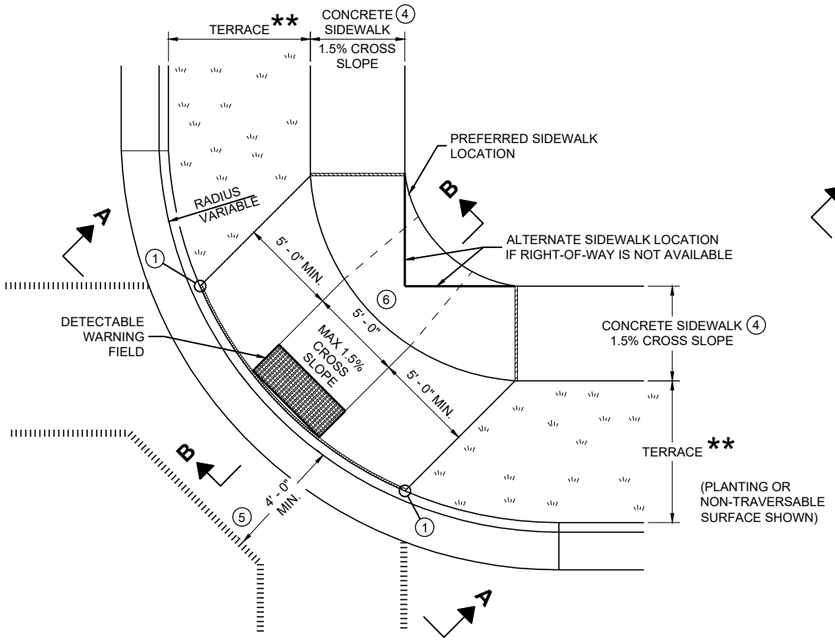

PLAN VIEW

CURB RAMP TYPE 1

(CENTER OF CORNER RADIUS)

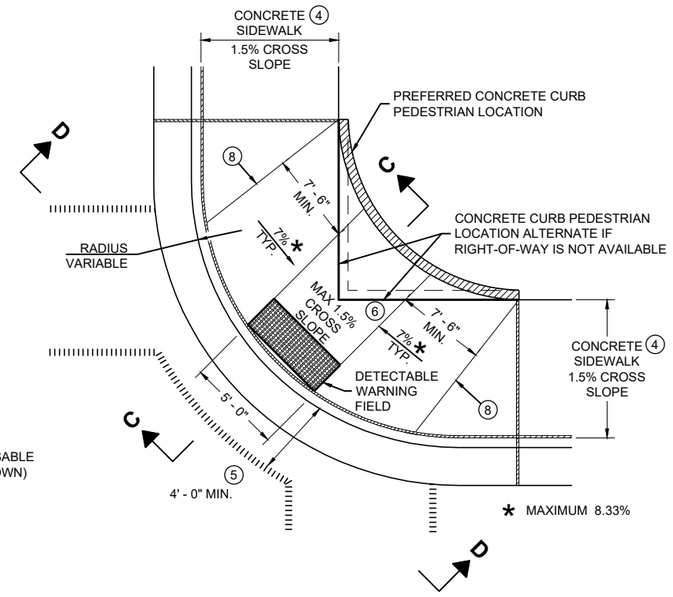

PLAN VIEW

CURB RAMP TYPE 1 - A

(NO TERRACE)

GENERAL NOTES

AVOID PLACING DRAINAGE STRUCTURES, JUNCTION BOXES OR OTHER OBSTRUCTIONS IN FRONT OF RAMP ACCESS AREAS.

DETAILS OF CONSTRUCTION, MATERIALS AND WORKMANSHIP NOT SHOWN ON THIS DRAWING SHALL CONFORM TO THE PERTINENT REQUIREMENTS OF THE STANDARD SPECIFICATIONS AND THE APPLICABLE SPECIAL PROVISIONS.

WHEN NECESSARY, THE SIDEWALK ELEVATION MAY BE LOWERED TO MEET THE HIGH POINT ON THE RAMP.

TYPE 1 CURB RAMPS SHALL HAVE A NORMAL SIDEWALK APRON AND CURB ON BOTH SIDES OF RAMP.

DETECTABLE WARNING FILED SHALL BE MEASURED AND PAID BY THE SQUARE FOOT AS "CURB RAMP DETECTABLE WARNING FIELD". THE CONCRETE PEDESTRIAN CURB, IF NEEDED, SHALL BE MEASURED AND PAID BY THE LINEAR FOOT AS "CONCRETE CURB PEDESTRIAN". CONCRETE SIDEWALK IN THE CURB RAMP AREA SHALL BE MEASURED AND PAID BY THE SQUARE FOOT AS CONCRETE SIDEWALK, INCLUDING THE AREA UNDER THE DETECTABLE WARNING FIELD.

SELECT CURB RAMP DETECTABLE WARNING FIELD MATERIALS AND DEVICES FROM THE DEPARTMENT'S APPROVED MATERIALS LIST. THE COLOR OF THE DETECTABLE WARNING FIELD IS SPECIFIED ELSEWHERE AND IS INCIDENTAL TO THE BID ITEM OF "CURB RAMP DETECTABLE WARNING FIELD"

DETECTABLE WARNING FIELDS THAT ARE INSTALLED AS A GROUP OR SIDE BY SIDE, SHALL BE FROM THE SAME MANUFACTURER.

SURFACE TEXTURE OF THE RAMP SHALL BE OBTAINED BY COARSE BROOMING TRANSVERSE TO THE SLOPE OF THE RAMP.

1. THIS POINT IS AN EXTENSION OF OUTSIDE EDGE OF APPROACHING SIDEWALK WHERE IT MEETS THE BACK OF CONCRETE CURB. POINT LOCATION MAY BE ADJUSTED TO ALIGN WITH BEGINNING OF FULL-HEIGHT CURB IF THIS DISTANCE IS SHORT.
2. GRADE CHANGE BETWEEN GUTTER FLAG SLOPE AND THE CURB RAMP SLOPE SHALL NOT EXCEED 11%. MAXIMUM GUTTER FLAG SLOPE IS 4%. PROVIDE LONGITUDINAL DRAINAGE AROUND CURB AND AWAY FROM CURB RAMP. NO VERTICAL LIPS OR DISCONTINUITIES GREATER THAN ¼ - INCH ARE ALLOWED. SLOPE OF CURB HEAD OPENING SHALL MATCH THE RAMP SLOPE, MINIMALLY 1.5% AND NOT TO EXCEED 7%. WHEN ADJACENT TO 1.5% LANDING, CONSTRUCT CURB HEAD OPENING AT 1.5% IN THE DIRECTION OF PEDESTRIAN TRAVEL.
3. MAXIMUM 8.33% CURB RAMP SLOPE IS ALLOWABLE WITH FLATTENED GUTTER FLAG SLOPE AND NOT TO EXCEED 11% GRADE CHANGE.
4. ±0.5% CONSTRUCTION TOLERANCE IN SIDEWALK CROSS SLOPE. THE SIDEWALK CROSS SLOPE SHALL NOT EXCEED 2% WITHOUT PRIOR APPROVAL FROM THE ENGINEER.
5. PROVIDE A LEVEL LANDING IN THE STREET AND GUTTER AREA (2% MAXIMUM SLOPE IN ANY DIRECTION). WHEN THE GUTTER SLOPE EXCEEDS 2%, CONSTRUCT THE LEVEL LANDING IN THE STREET AREA. 4 FOOT WIDTH IS MEASURED FROM THE FLANGE LINE
6. PROVIDE A LEVEL LANDING (MAXIMUM 2% SLOPE) IN ANY DIRECTION OF PEDESTRIAN TRAVEL. STANDARD LEVEL LANDING SIZE IS 5 FEET BY 5 FEET.
8. PROVIDE GRADE BREAK PERPENDICULAR TO DIRECTION OF WHEELCHAIR TRAVEL.

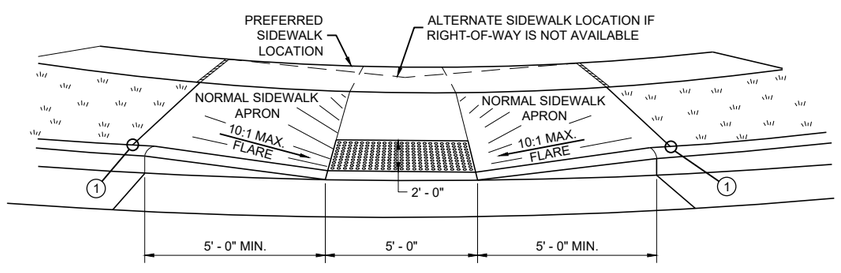

VIEW A - A FOR TYPE 1

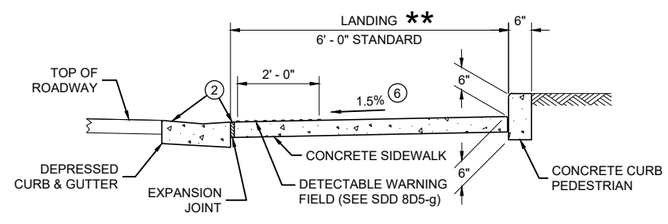

SECTION C - C FOR TYPE 1 - A

LEGEND

- ½" EXPANSION JOINT SIDEWALK
- CONTRACTION JOINT FIELD LOCATED
- PAVEMENT MARKING CROSSWALK (WHITE)

** WIDTH SHOWN ELSEWHERE IN THE PLANS

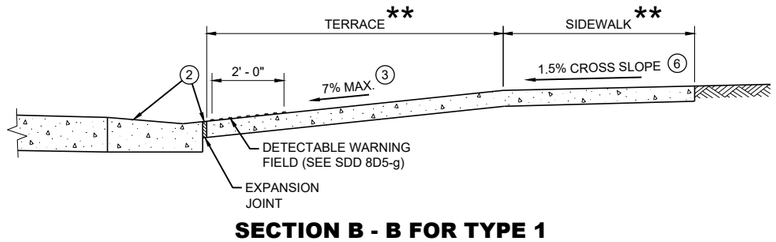

SECTION B - B FOR TYPE 1

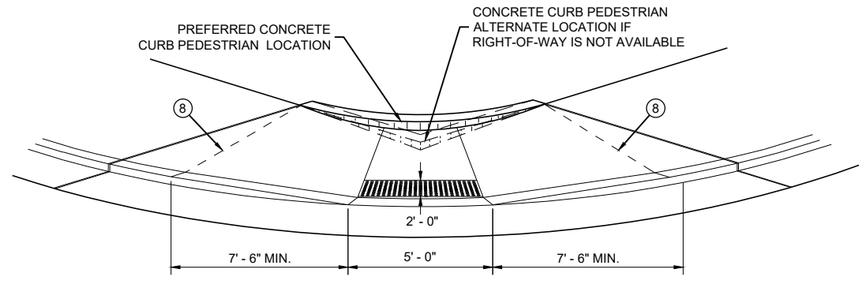

VIEW D - D FOR TYPE 1 - A

CURB RAMPS TYPE 1 AND 1-A

STATE OF WISCONSIN
DEPARTMENT OF TRANSPORTATION

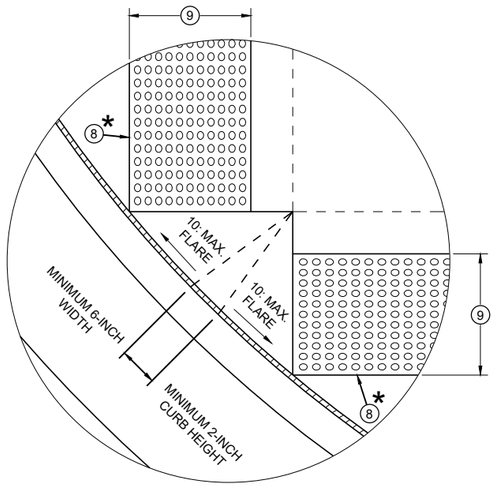

DETAIL A

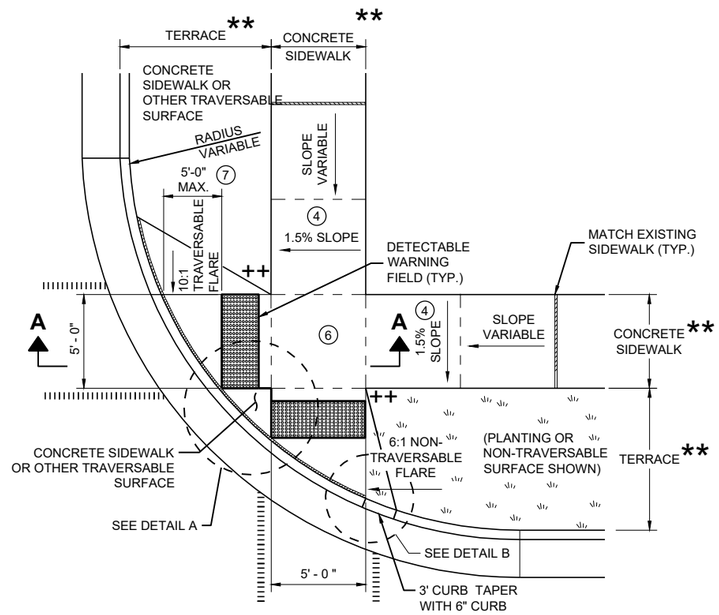

PLAN VIEW

CURB RAMP TYPE 2

(CENTER OF CORNER RADIUS)

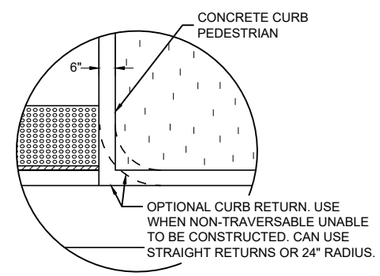

DETAIL B

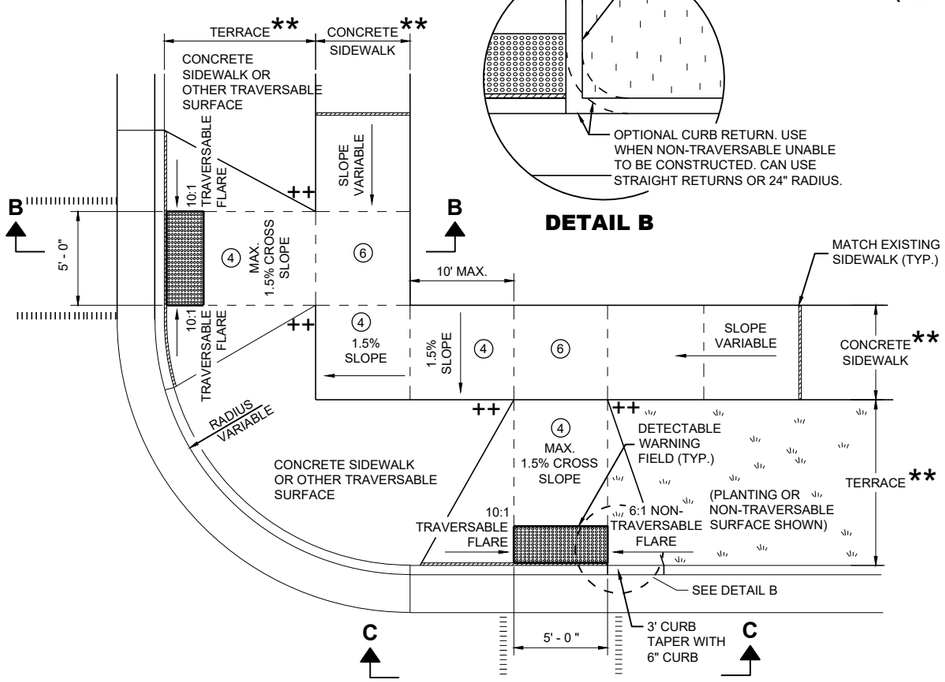

PLAN VIEW

CURB RAMP TYPE 3

(OUTSIDE OF CROSSWALK AREA)

GENERAL NOTES

AVOID PLACING DRAINAGE STRUCTURES, JUNCTION BOXES OR OTHER OBSTRUCTIONS IN FRONT OF RAMP ACCESS AREAS.

DETAILS OF CONSTRUCTION, MATERIALS AND WORKMANSHIP NOT SHOWN ON THIS DRAWING SHALL CONFORM TO THE PERTINENT REQUIREMENTS OF THE STANDARD SPECIFICATIONS AND THE APPLICABLE SPECIAL PROVISIONS.

DETECTABLE WARNING FIELDS THAT ARE INSTALLED AS A GROUP OR SIDE BY SIDE SHALL BE FROM THE SAME MANUFACTURER.

(2) GRADE CHANGE BETWEEN GUTTER FLAG SLOPE AND THE CURB RAMP SLOPE SHALL NOT EXCEED 11%. MAXIMUM GUTTER FLAG SLOPE IS 4%. PROVIDE LONGITUDINAL DRAINAGE AROUND CURB AND AWAY FROM CURB RAMP. NO VERTICAL LIPS OR DISCONTINUITIES GREATER THAN ¼ - INCH ARE ALLOWED. SLOPE OF CURB HEAD OPENING SHALL MATCH THE RAMP SLOPE, MINIMALLY 1.5% AND NOT TO EXCEED 7%. WHEN ADJACENT TO 1.5% LANDING, CONSTRUCT CURB HEAD OPENING AT 1.5% IN THE DIRECTION OF PEDESTRIAN TRAVEL.

(3) AN 8.33% CURB RAMP SLOPE IS ALLOWABLE WITH FLATTENED GUTTER FLAG SLOPE (2.67% OR LESS) AND NOT TO EXCEED 11% GRADE CHANGE.

(4) ±0.5% CONSTRUCTION TOLERANCE IN SIDEWALK CROSS SLOPE. THE SIDEWALK CROSS SLOPE SHALL NOT EXCEED 2% WITHOUT PRIOR APPROVAL FROM THE ENGINEER.

(6) PROVIDE A LEVEL LANDING (MAXIMUM 2% SLOPE) IN ANY DIRECTION OF PEDESTRIAN TRAVEL. STANDARD LEVEL LANDING SIZE IS 5 FEET X 5 FEET.

(7) WHEN GRADE BREAK DISTANCE EXCEEDS 5 FEET, USE RADIAL DETECTABLE WARNING FIELD PER SDD 8D5-f.

(8) PROVIDE GRADE BREAK PERPENDICULAR TO DIRECTION OF WHEELCHAIR TRAVEL.

(9) WHEN DISTANCE IS LESS THAN 6' - 0", IT MAY BE DIFFICULT TO ACHIEVE A 7% SLOPE OR FLATTER ALONG THE RAMP. REDUCE CURB HEIGHT IN TRIANGLE AREA TO ACHIEVE 7% SLOPE OR FLATTER ON RAMP. CONSTRUCT 2-INCH MINIMUM CURB HEIGHT BETWEEN 10:1 FLARES.

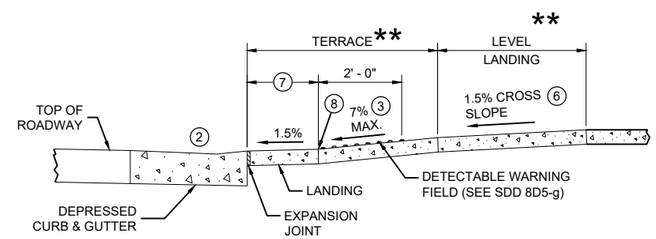

SECTION A - A FOR TYPE 2

* MAXIMUM 2.0% SLOPE IN ALL DIRECTIONS IN FRONT OF GRADE BREAK

** WIDTH SHOWN ELSEWHERE IN THE PLANS

++ CONSTRUCT 6" WEDGE TO AVOID CONCRETE BREAKAGE

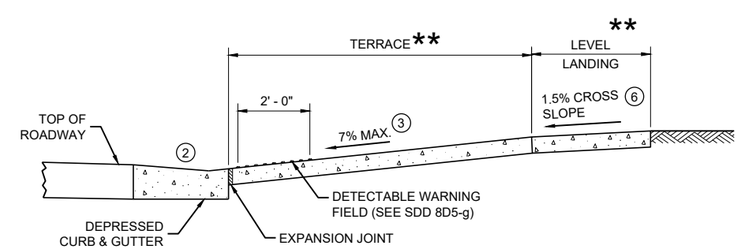

SECTION B - B FOR TYPE 3

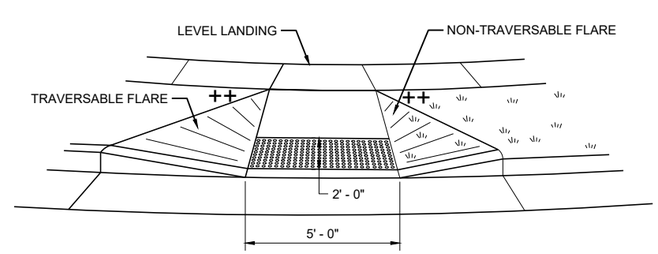

VIEW C - C FOR TYPE 3

LEGEND

- ½" EXPANSION JOINT SIDEWALK
- CONTRACTION JOINT SIDEWALK
- PAVEMENT MARKING CROSSWALK (WHITE)

CURB RAMPS TYPE 2 AND 3

STATE OF WISCONSIN
DEPARTMENT OF TRANSPORTATION

6

6

SDD 08D05-21b

SDD 08D05-21b

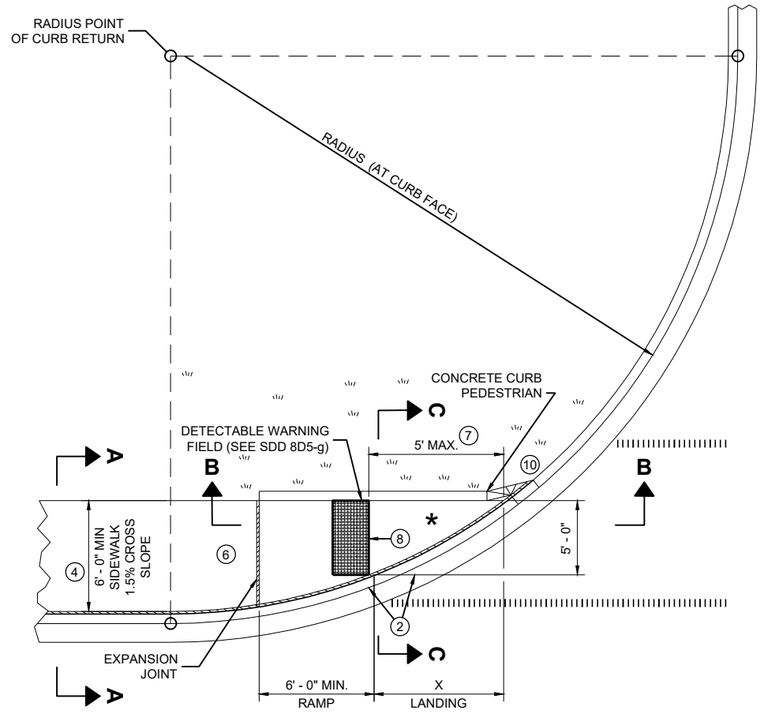

PLAN VIEW

CURB RAMP TYPE 4A

RADIUS (AT CURB FACE)	X
10 FEET	4' - 7"

INTERMEDIATE RADII CAN BE INTERPOLATED

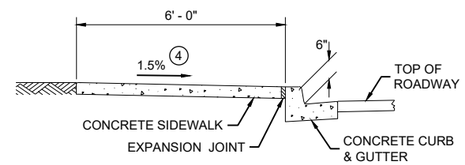

SECTION A - A FOR TYPE 4A

GENERAL NOTES

AVOID PLACING DRAINAGE STRUCTURES, JUNCTION BOXES OR OTHER OBSTRUCTIONS IN FRONT OF RAMP ACCESS AREAS.

DETAILS OF CONSTRUCTION, MATERIALS AND WORKMANSHIP NOT SHOWN ON THIS DRAWING SHALL CONFORM TO THE PERTINENT REQUIREMENTS OF THE STANDARD SPECIFICATIONS AND THE APPLICABLE SPECIAL PROVISIONS.

DETECTABLE WARNING FIELDS THAT ARE INSTALLED AS A GROUP OR SIDE BY SIDE, SHALL BE FROM THE SAME MANUFACTURER.

(2) GRADE CHANGE BETWEEN GUTTER FLAG SLOPE AND THE CURB RAMP SLOPE SHALL NOT EXCEED 11%. MAXIMUM GUTTER FLAG SLOPE IS 4%. PROVIDE LONGITUDINAL DRAINAGE AROUND CURB AND AWAY FROM CURB RAMP. NO VERTICAL LIPS OR DISCONTINUITIES GREATER THAN ¼ - INCH ARE ALLOWED. SLOPE OF CURB HEAD OPENING SHALL MATCH THE RAMP SLOPE, MINIMALLY 1.5% AND NOT TO EXCEED 7%. WHEN ADJACENT TO 1.5% LANDING, CONSTRUCT CURB HEAD OPENING AT 1.5% IN THE DIRECTION OF PEDESTRIAN TRAVEL.

(3) AN 8.33% CURB RAMP SLOPE IS ALLOWABLE WITH FLATTENED GUTTER FLAG SLOPE AND NOT TO EXCEED 11% GRADE CHANGE.

(4) ±0.5% CONSTRUCTION TOLERANCE IN SIDEWALK CROSS SLOPE. THE SIDEWALK CROSS SLOPE SHALL NOT EXCEED 2% WITHOUT PRIOR APPROVAL FROM THE ENGINEER.

(6) PROVIDE A LEVEL LANDING (MAXIMUM 2% SLOPE) IN ANY DIRECTION OF PEDESTRIAN TRAVEL. STANDARD LEVEL LANDING SIZE IS 5 FEET BY 5 FEET.

(7) WHEN THIS GRADE BREAK DISTANCE EXCEEDS 5 FEET, USE RADIAL DETECTABLE WARNING FIELD PER SDD 8D5-f.

(8) PROVIDE GRADE BREAK PERPENDICULAR TO DIRECTION OF WHEELCHAIR TRAVEL.

(10) INSTALL TRANSITION NOSE (INCIDENTAL TO OTHER PAY ITEMS). DO NOT MARK TRANSITION NOSE.

LEGEND

- ½" EXPANSION JOINT SIDEWALK
- CONTRACTION JOINT SIDEWALK
- PAVEMENT MARKING CROSSWALK (WHITE)

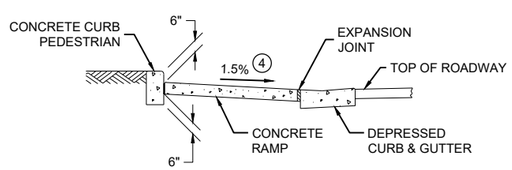

SECTION C - C FOR TYPE 4A

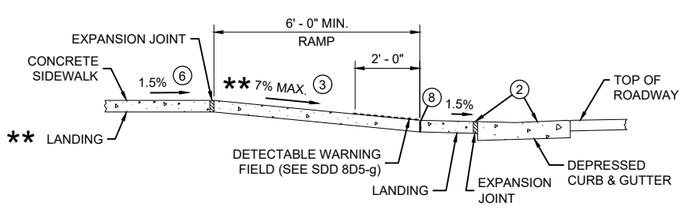

** IF RAMP SLOPE IS LESS THAN 5.0%, THEN NO ADJACENT UPHILL LANDING IS REQUIRED

SECTION B - B FOR TYPE 4A AND TYPE 4A1

* MAXIMUM 2.0% SLOPE IN ALL DIRECTIONS IF FRONT OF GRADE BREAK

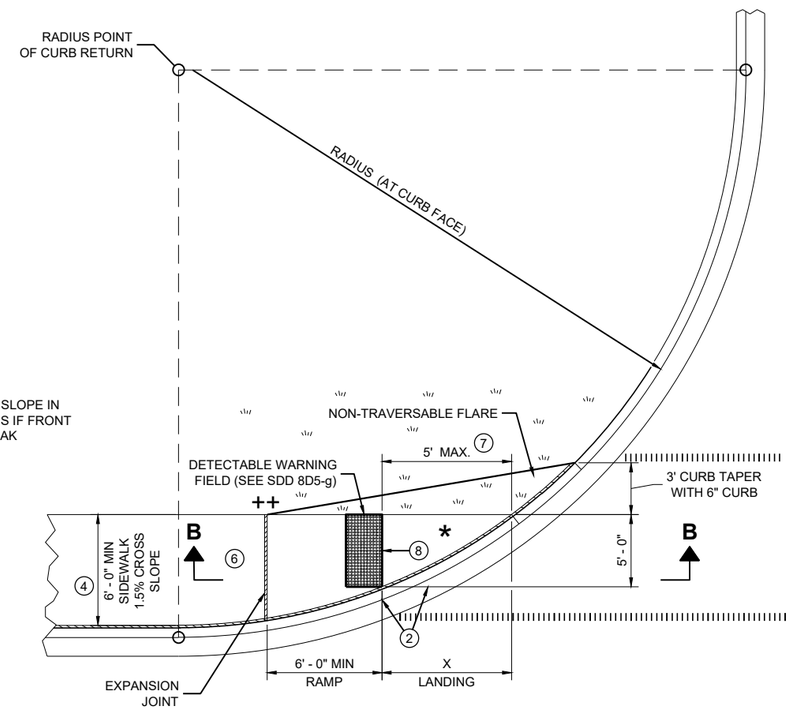

PLAN VIEW

CURB RAMP TYPE 4A1

++ CONSTRUCT 6" WEDGE TO AVOID CONCRETE BREAKAGE

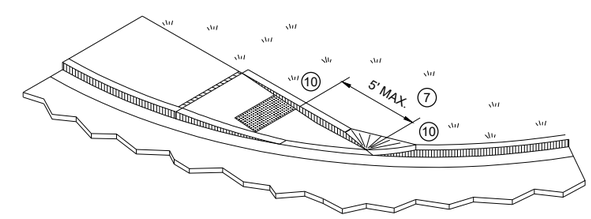

ISOMETRIC VIEW FOR TYPE 4A

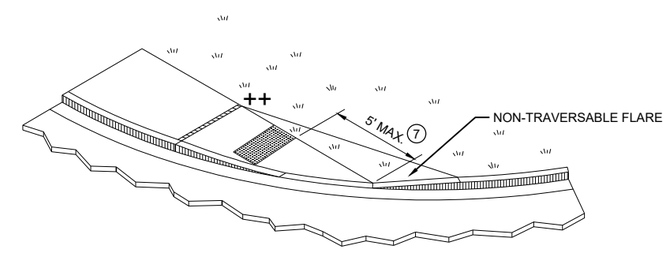

ISOMETRIC VIEW FOR TYPE 4A1

CURB RAMPS TYPE 4A AND 4A1

STATE OF WISCONSIN
DEPARTMENT OF TRANSPORTATION

6

6

SDD 08D05-21c

SDD 08D05-21c

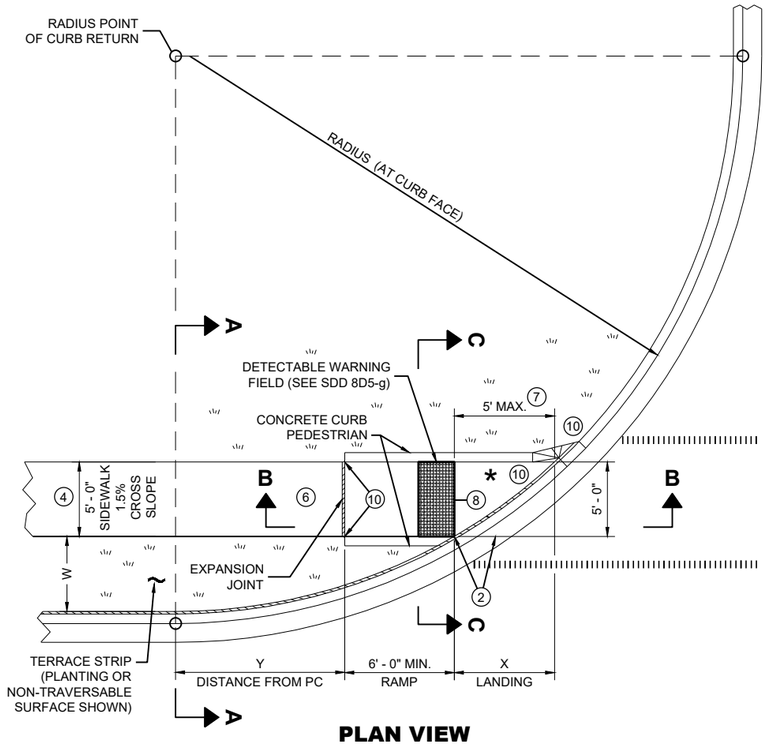

PLAN VIEW
CURB RAMP TYPE 4B

RADIUS (AT CURB FACE)	W = 3' - 0"		W = 4' - 0"		W = 5' - 0"		W = 6' - 0"		W = 7' - 0"		W = 8' - 0"		W = 9' - 0"		W = 10' - 0"	
	X	Y	X	Y	X	Y	X	Y	X	Y	X	Y	X	Y	X	Y
10 FEET	2' - 10 ¼"	0' - 5"	2' - 1"	1' - 4 ½"	1' - 5"	2' - 1"	0' - 10"	2' - 7 ½"	0' - 3 ¼"	3' - 0 ¼"						
15 FEET	4' - 6 ¾"	2' - 1 ¾"	3' - 9"	3' - 5 ¾"	3' - 1 ¼"	4' - 6"	2' - 6 ¾"	5' - 4 ½"	2' - 1"	6' - 1"	1' - 8"	6' - 8 ½"	1' - 3 ¼"	7' - 2 ½"	0' - 10 ¾"	7' - 7 ¼"
20 FEET			4' - 11 ½"	5' - 1 ¾"	4' - 3 ¼"	6' - 5 ½"	3' - 8 ¾"	7' - 7"	3' - 3"	8' - 6 ½"	2' - 10"	9' - 4 ½"	2' - 5 ½"	10' - 1 ¼"	2' - 1 ¼"	10' - 9"
30 FEET									4' - 10 ¾"	12' - 5 ¾"	4' - 5 ½"	13' - 7 ¾"	4' - 0 ¾"	14' - 8 ½"	3' - 8 ½"	15' - 8 ¼"
40 FEET															4' - 10 ¾"	19' - 8 ¼"

INTERMEDIATE RADII CAN BE INTERPOLATED
DIMENSION "Y" IS CALCULATED BASED ON 6'-0" RAMP LENGTH
DIMENSION "X" IS CALCULATED BASED ON 5'-0" SIDEWALK WIDTH

LEGEND

- ½" EXPANSION JOINT SIDEWALK
- CONTRACTION JOINT SIDEWALK
- PAVEMENT MARKING CROSSWALK (WHITE)

GENERAL NOTES

AVOID PLACING DRAINAGE STRUCTURES, JUNCTION BOXES OR OTHER OBSTRUCTIONS IN FRONT OF RAMP ACCESS AREAS.

DETAILS OF CONSTRUCTION, MATERIALS AND WORKMANSHIP NOT SHOWN ON THIS DRAWING SHALL CONFORM TO THE PERTINENT REQUIREMENTS OF THE STANDARD SPECIFICATIONS AND THE APPLICABLE SPECIAL PROVISIONS.

DETECTABLE WARNING FIELDS THAT ARE INSTALLED AS A GROUP OR SIDE BY SIDE, SHALL BE FROM THE SAME MANUFACTURER.

(2) GRADE CHANGE BETWEEN GUTTER FLAG SLOPE AND THE CURB RAMP SLOPE SHALL NOT EXCEED 11%. MAXIMUM GUTTER FLAG SLOPE IS 4%. PROVIDE LONGITUDINAL DRAINAGE AROUND CURB AND AWAY FROM CURB RAMP. NO VERTICAL LIPS OR DISCONTINUITIES GREATER THAN ¼ - INCH ARE ALLOWED. SLOPE OF CURB HEAD OPENING SHALL MATCH THE RAMP SLOPE, MINIMALLY 1.5% AND NOT TO EXCEED 7%. WHEN ADJACENT TO 1.5% LANDING, CONSTRUCT CURB HEAD OPENING AT 1.5% IN THE DIRECTION OF PEDESTRIAN TRAVEL.

(3) AN 8.33% CURB RAMP SLOPE IS ALLOWABLE WITH FLATTENED GUTTER FLAG SLOPE AND NOT TO EXCEED 11% GRADE CHANGE.

(4) ±0.5% CONSTRUCTION TOLERANCE IN SIDEWALK CROSS SLOPE. THE SIDEWALK CROSS SLOPE SHALL NOT EXCEED 2% WITHOUT PRIOR APPROVAL FROM THE ENGINEER.

(6) PROVIDE A LEVEL LANDING (MAXIMUM 2% SLOPE) IN ANY DIRECTION OF PEDESTRIAN TRAVEL. STANDARD LEVEL LANDING SIZE IS 5 FEET BY 5 FEET.

(7) WHEN THIS GRADE BREAK DISTANCE EXCEEDS 5 FEET, USE RADIAL DETECTABLE WARNING FIELD PER SDD 8D5-f.

(8) PROVIDE GRADE BREAK PERPENDICULAR TO DIRECTION OF WHEELCHAIR TRAVEL.

(10) INSTALL TRANSITION NOSE (INCIDENTAL TO OTHER PAY ITEMS). DO NOT MARK TRANSITION NOSE.

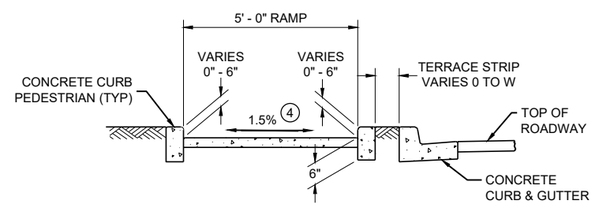

SECTION C - C FOR TYPE 4B

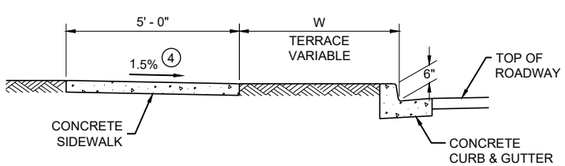

SECTION A - A FOR TYPE 4B

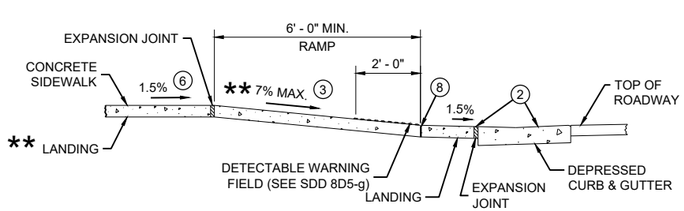

** IF RAMP SLOPE IS LESS THAN 5.0%, THEN NO ADJACENT UPHILL LANDING IS REQUIRED

SECTION B - B FOR TYPE 4B AND TYPE 4B1

* MAXIMUM 2.0% SLOPE IN ALL DIRECTIONS IF FRONT OF GRADE BREAK

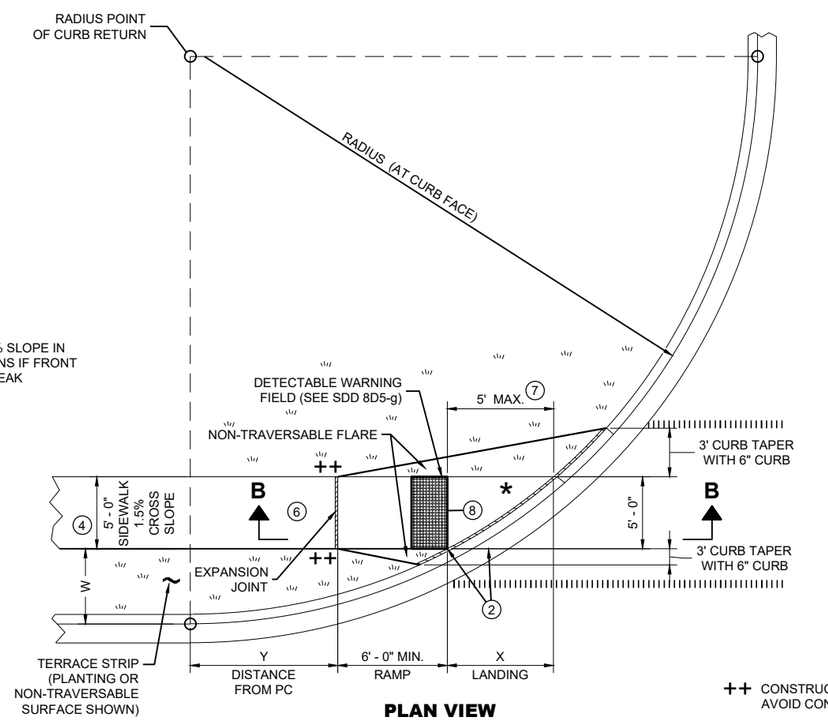

PLAN VIEW
CURB RAMP TYPE 4B1

++ CONSTRUCT 6" WEDGE TO AVOID CONCRETE BREAKAGE

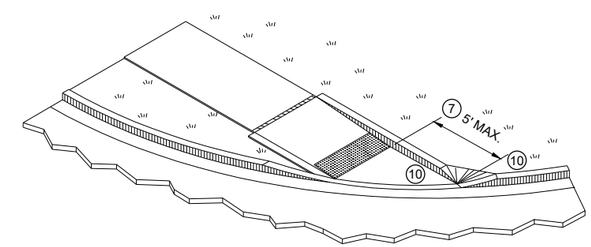

ISOMETRIC VIEW FOR TYPE 4B

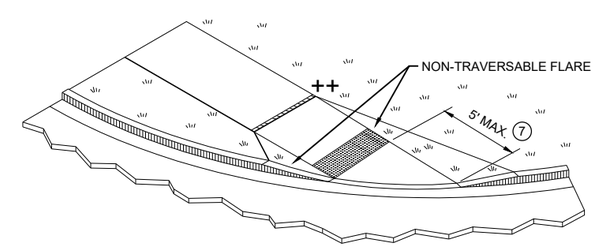

ISOMETRIC VIEW FOR TYPE 4B1

CURB RAMPS TYPE 4B AND 4B1

STATE OF WISCONSIN
DEPARTMENT OF TRANSPORTATION

6

SDD 08D05-21d

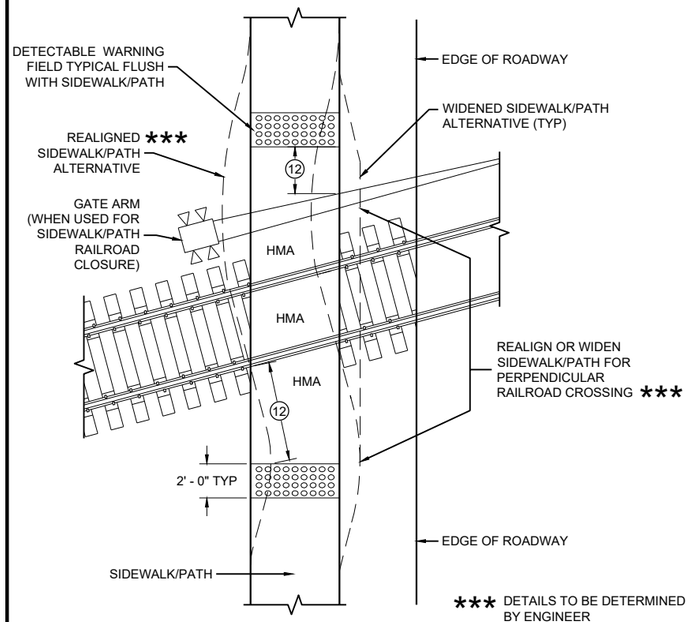

CURB RAMP TYPE 8

DETECTABLE WARNINGS FOR SIDEWALKS OR SHARED USE PATHS AT RAILROAD CROSSINGS

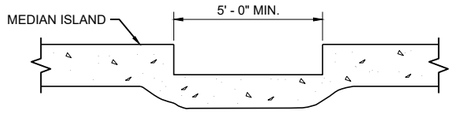

SECTION A - A FOR TYPE 5

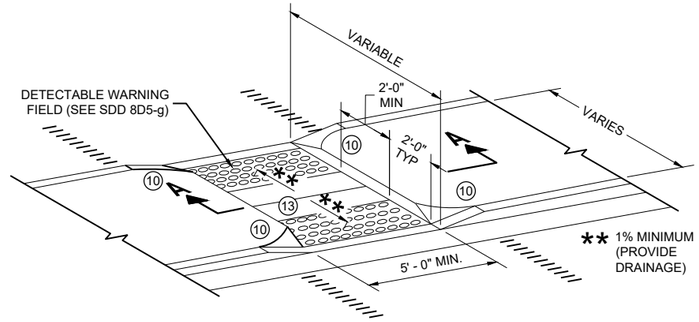

CURB RAMP TYPE 5

MEDIAN ISLAND NON-ELEVATED PEDESTRIAN CROSSING

GENERAL NOTES

AVOID PLACING DRAINAGE STRUCTURES, JUNCTION BOXES OR OTHER OBSTRUCTIONS IN FRONT OF RAMP ACCESS AREAS.

DETAILS OF CONSTRUCTION, MATERIALS AND WORKMANSHIP NOT SHOWN ON THIS DRAWING SHALL CONFORM TO THE PERTINENT REQUIREMENTS OF THE STANDARD SPECIFICATIONS AND THE APPLICABLE SPECIAL PROVISIONS.

SIDEWALK CROSS SLOPE SHALL NOT EXCEED 2%.

DETECTABLE WARNING FIELDS THAT ARE INSTALLED AS A GROUP OR SIDE BY SIDE, SHALL BE FROM THE SAME MANUFACTURER.

(2) GRADE CHANGE BETWEEN GUTTER FLAG SLOPE AND THE CURB RAMP SLOPE SHALL NOT EXCEED 11%. MAXIMUM GUTTER FLAG SLOPE IS 4%. PROVIDE LONGITUDINAL DRAINAGE AROUND CURB AND AWAY FROM CURB RAMP. NO VERTICAL LIPS OR DISCONTINUITIES GREATER THAN ¼ - INCH ARE ALLOWED. SLOPE OF CURB HEAD OPENING SHALL MATCH THE RAMP SLOPE, MINIMALLY 1.5% AND NOT TO EXCEED 7%. WHEN ADJACENT TO 1.5% LANDING, CONSTRUCT CURB HEAD OPENING AT 1.5% IN THE DIRECTION OF PEDESTRIAN TRAVEL.

(3) AN 8.33% CURB RAMP SLOPE IS ALLOWABLE WITH FLATTENED GUTTER FLAG SLOPE AND NOT TO EXCEED 11% GRADE CHANGE.

(4) ±0.5% CONSTRUCTION TOLERANCE IN SIDEWALK CROSS SLOPE. THE SIDEWALK CROSS SLOPE SHALL NOT EXCEED 2% WITHOUT PRIOR APPROVAL FROM THE ENGINEER.

(6) PROVIDE A LEVEL LANDING (MAXIMUM 2% SLOPE) IN ANY DIRECTION OF PEDESTRIAN TRAVEL. STANDARD LEVEL LANDING SIZE IS 5 FEET BY 5 FEET.

(10) INSTALL TRANSITION NOSE (INCIDENTAL TO OTHER PAY ITEMS). DO NOT MARK TRANSITION NOSE.

(11) SLOPE SIDEWALK TOWARD LANDING AS SHOWN WHERE THERE IS NO TERRACE OR WHERE THE TERRACE WIDTH IS LESS THAN 6 FEET WIDE.

(12) THE EDGE OF THE DETECTABLE WARNING FIELD NEAREST TO A RAILROAD CROSSING SHALL BE 1.5 FEET ±0.1' FROM THE FACE OF THE GATE ARM IF THE GATE ARM EXTENDS ACROSS THE SIDEWALK/PATH. WHERE THERE IS NO PEDESTRIAN GATE, THE EDGE OF THE DETECTABLE WARNING FIELD NEAREST TO THE RAILROAD TRACK IS 15 FEET MAXIMUM AND 12 FEET MINIMUM, 15 FEET TYPICAL FROM THE NEAREST RAIL.

(13) DO NOT INSTALL DETECTABLE WARNING FIELDS AT THE EDGES OF STEET-LEVEL PEDESTRIAN REFUGE ISLANDS IF A MINIMUM 2 FOOT CONCRETE SURFACE WITHOUT DETECTABLE WARNINGS (MEASURED IN THE DIRECTION OF PEDESTRIAN TRAVEL) CANNOT BE ACHIEVED.

LEGEND

- ½" EXPANSION JOINT SIDEWALK
- CONTRACTION JOINT FIELD LOCATED
- PAVEMENT MARKING CROSSWALK (WHITE)

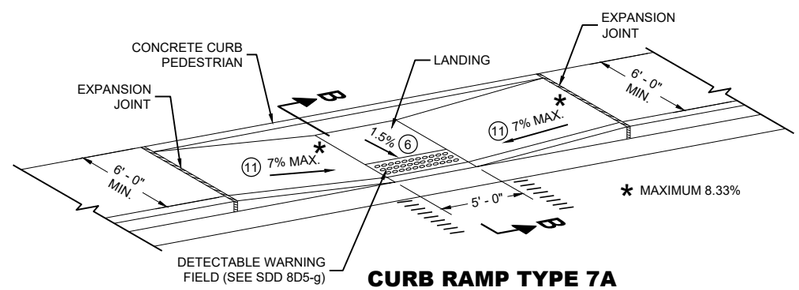

CURB RAMP TYPE 7A

FOR INTERSECTIONS AND MID BLOCK CROSSINGS

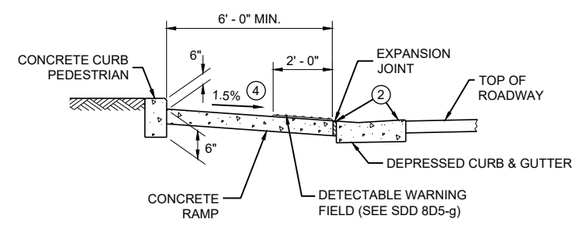

SECTION B - B FOR TYPE 7A

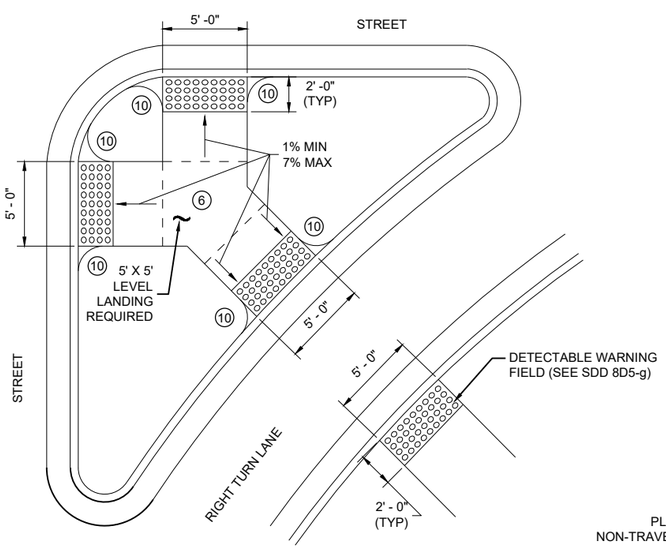

CURB RAMP TYPE 6

DETECTABLE WARNING AT ISLANDS

REFER TO GENERAL NOTES (2) AND (3) FOR ALL ISLAND CURB RAMPS

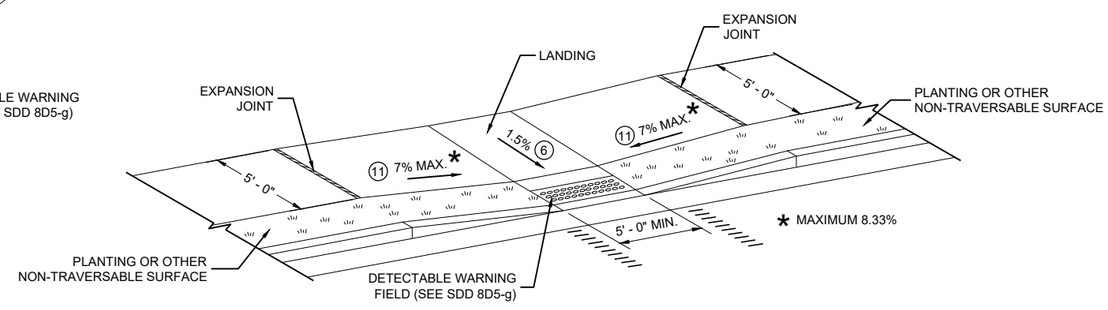

CURB RAMP TYPE 7B

FOR INTERSECTIONS AND MID BLOCK CROSSINGS

CURB RAMPS TYPE 5, 6, 7A, 7B & 8

STATE OF WISCONSIN
DEPARTMENT OF TRANSPORTATION

6

SDD 08D05-21e

RADIAL DETECTABLE WARNING FIELD PLACEMENT WHEN 5 FOOT GRADE BREAK DISTANCE PER SDD 8D5-c IS EXCEEDED

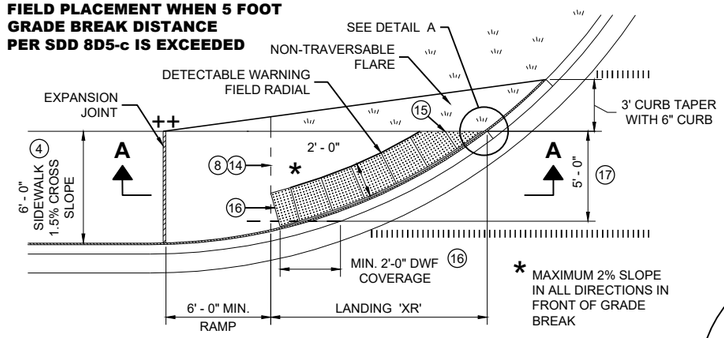

PLAN VIEW

CURB RAMP TYPE 4A1

(GRADE BREAK DISTANCE GREATER THAN 5 FEET)

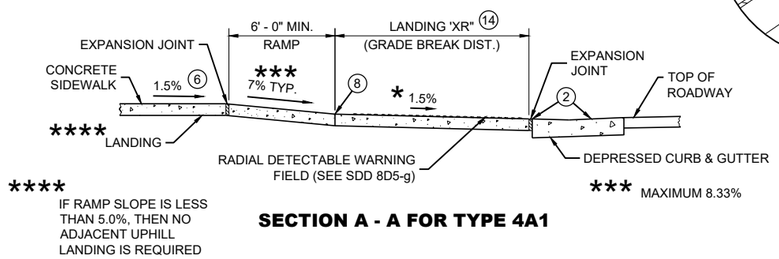

SECTION A - A FOR TYPE 4A1

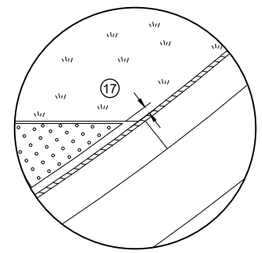

DETAIL A

LEGEND

- ½" EXPANSION JOINT SIDEWALK
- CONTRACTION JOINT SIDEWALK
- PAVEMENT MARKING CROSSWALK (WHITE)

GENERAL NOTES

AVOID PLACING DRAINAGE STRUCTURES, JUNCTION BOXES OR OTHER OBSTRUCTIONS IN FRONT OF RAMP ACCESS AREAS.

DETAILS OF CONSTRUCTION, MATERIALS AND WORKMANSHIP NOT SHOWN ON THIS DRAWING SHALL CONFORM TO THE PERTINENT REQUIREMENTS OF THE STANDARD SPECIFICATIONS AND THE APPLICABLE SPECIAL PROVISIONS.

DETECTABLE WARNING FIELDS THAT ARE INSTALLED AS A GROUP OR SIDE BY SIDE, SHALL BE FROM THE SAME MANUFACTURER.

APPLY RADIAL DETECTABLE WARNING PLACEMENT SIMILARLY FOR TYPE 4A AND 4A1 CURB RAMPS AND SIMILARLY FOR TYPE 4B AND 4B1 CURB RAMPS. TYPE 4A AND 4B CURB RAMPS ARE NOT SHOWN.

REFER TO SDD 8D5-g FOR ADDITIONAL RADIAL PLATE REQUIREMENTS.

FIELD CUTS AT INTERMEDIATE JOINTS WITHIN THE RADIAL DETECTABLE WARNING FILED ARE PROHIBITED.

DETERMINE FINAL RADIAL WARNING FIELD CONFIGURATION AD ITS INDIVIDUAL PLATE LOCATIONS. PERFORM PRE-LAYOUT PRIOR TO PLACEMENT IN PLASTIC CONCRETE. FOLLOW MANUFACTURER'S PRODUCT LIST AND INSTALLATION RECOMMENDATIONS.

(2) GRADE CHANGE BETWEEN GUTTER FLAG SLOPE AND THE CURB RAMP SLOPE SHALL NOT EXCEED 11%. MAXIMUM GUTTER FLAG SLOPE IS 4%. PROVIDE LONGITUDINAL DRAINAGE AROUND CURB AND AWAY FROM CURB RAMP. NO VERTICAL LIPS OR DISCONTINUITIES GREATER THAN ¼ - INCH ARE ALLOWED. SLOPE OF CURB HEAD OPENING SHALL MATCH THE RAMP SLOPE, MINIMALLY 1.5% AND NOT TO EXCEED 7%. WHEN ADJACENT TO 1.5% LANDING, CONSTRUCT CURB HEAD OPENING AT 1.5% IN THE DIRECTION OF PEDESTRIAN TRAVEL.

(3) AN 8.33% CURB RAMP SLOPE IS ALLOWABLE WITH FLATTENED GUTTER FLAG SLOPE AND NOT TO EXCEED 11% GRADE CHANGE.

(4) ±0.5% CONSTRUCTION TOLERANCE IN SIDEWALK CROSS SLOPE. THE SIDEWALK CROSS SLOPE SHALL NOT EXCEED 2% WITHOUT PRIOR APPROVAL FROM THE ENGINEER.

(6) PROVIDE A LEVEL LANDING (MAXIMUM 2% SLOPE) IN ANY DIRECTION OF PEDESTRIAN TRAVEL. STANDARD LANDING SIZE IS 5 FEET BY 5 FEET.

(8) PROVIDE GRADE BREAK PERPENDICULAR TO DIRECTION OF WHEELCHAIR TRAVEL.

(14) CONSULT ENGINEER IF GRADE BREAK LOCATION (END OF LANDING DIMENSION "XR") REQUIRES FIELD ADJUSTMENT WHEN ESTABLISHING FINAL RADIAL DETECTABLE WARNING FIELD LOCATION.

(15) FIELD SAW CUTS ALONG RADIAL DETECTABLE WARNING PLATES WILL BE NECESSARY TO MATCH EACH CURB RAMP EDGE. AVOID CUTTING THROUGH DOMES WHENEVER POSSIBLE. MAKE FIELD CUTS TRUE TO LINE AND WITHIN ⅛" DEVIATION. SMOOTH EDGES OF FIELD CUT PLATES.

(16) USE 1' X 2" RECTANGULAR END PLATE AT END OF TYPE 4A1 RAMP AND PROVIDE MINIMUM 2' - 0" DETECTABLE WARNING FIELD COVERAGE (IN DIRECTION OF PEDESTRIAN TRAVEL) ALONG THE ENTIRE CURB RAMP WIDTH.

(17) A MAXIMUM 3 INCH CONCRETE BORDER WIDTH IS ALLOWABLE IN FRONT OF RADIAL DETECTABLE WARNING FIELD FOR CONSTRUCTABILITY PURPOSES. CONCRETE BORDER WIDTH MAY VARY UP TO 1 INCH.

RADIAL DETECTABLE WARNING FIELD PLACEMENT WHEN 5 FOOT GRADE BREAK DISTANCE PER SDD 8D5-d IS EXCEEDED

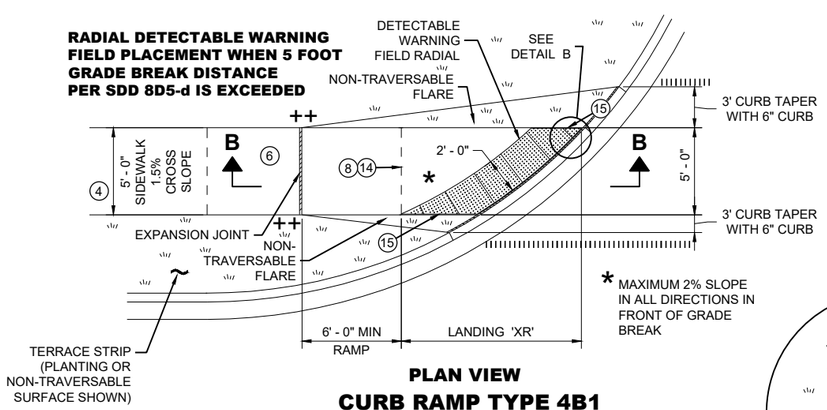

PLAN VIEW

CURB RAMP TYPE 4B1

(GRADE BREAK DISTANCE GREATER THAN 5 FEET)

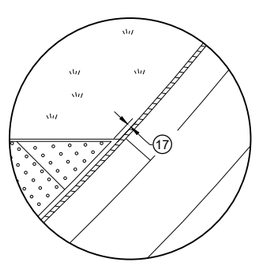

DETAIL B

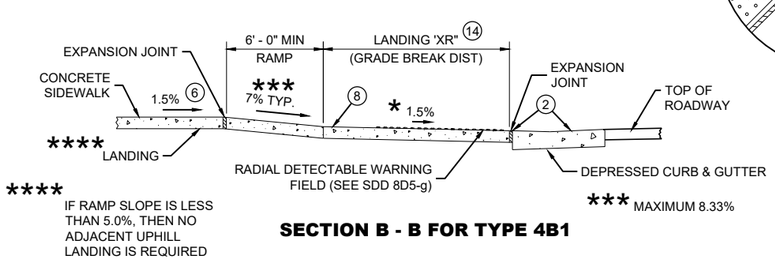

SECTION B - B FOR TYPE 4B1

RADIAL DETECTABLE WARNING FIELD PLACEMENT WHEN 5 FOOT GRADE BREAK DISTANCE PER SDD 8D5-b IS EXCEEDED

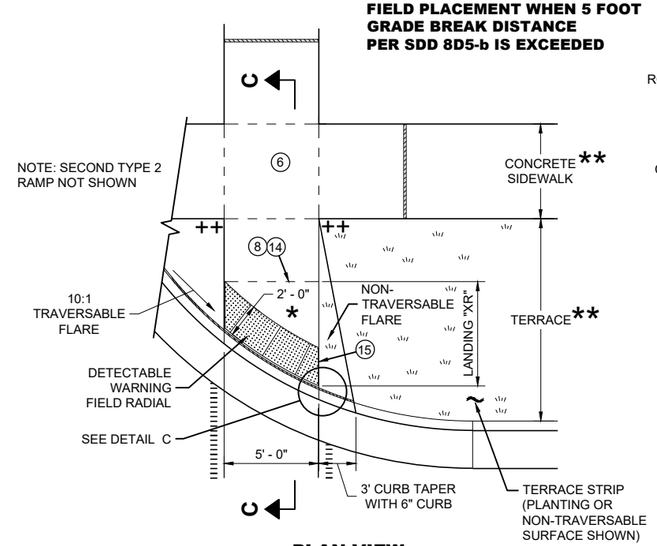

PLAN VIEW

CURB RAMP TYPE 2

(GRADE BREAK DISTANCE GREATER THAN 5 FEET)

(ON LINE WITH SIDEWALK)

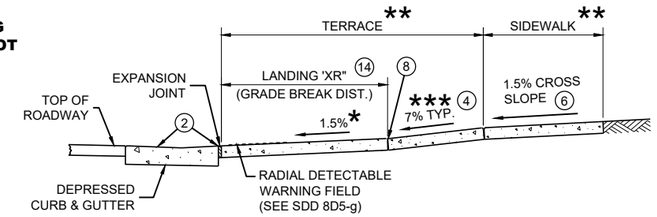

SECTION C - C FOR TYPE 2

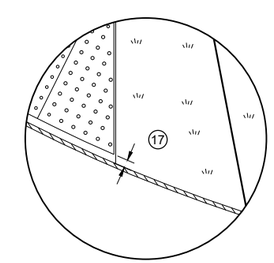

DETAIL C

* MAXIMUM 2% SLOPE IN ALL DIRECTIONS IN FRONT OF GRADE BREAK

** WIDTH SHOWN ELSEWHERE IN THE PLANS

*** MAXIMUM 8.33%

++ CONSTRUCT 6" WEDGE TO AVOID CONCRETE BREAKAGE

CURB RAMPS
RADIAL DETECTABLE WARNING

STATE OF WISCONSIN
DEPARTMENT OF TRANSPORTATION

6

6

SDD 08D05-21f

SDD 08D05-21f

	MIN.	MAX.
A	1.6"	2.4"
B	0.65"	1.5"
C	*	*
D	0.9"	1.4"

* THE C DIMENSION IS 50% TO 65% OF THE D DIMENSION.

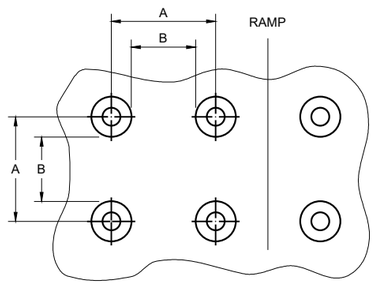

PLAN VIEW

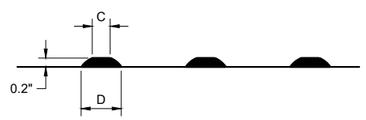

ELEVATION VIEW

TRUNCATED DOMES
DETECTABLE WARNING PATTERN DETAIL

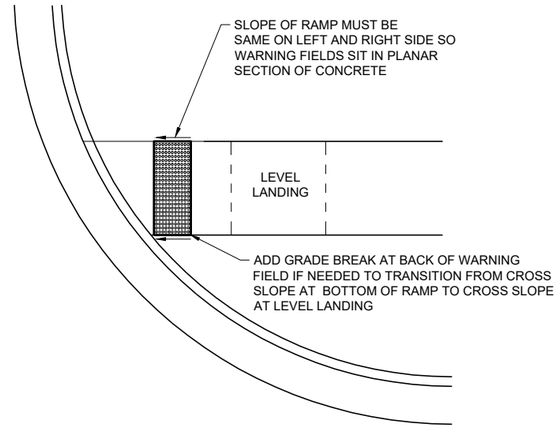

DETECTABLE WARNING FIELD
PLANAR INSTALLATION

GENERAL NOTES

DETECTABLE WARNING FIELDS THAT ARE INSTALLED AT A CURB RAMP SHALL BE FROM THE SAME MANUFACTURER.

PLACE ALL DETECTABLE WARNING FIELD SYSTEMS IN ACCORDANCE TO THE MANUFACTURER'S RECOMMENDATION.

FIELD CUTS AT INTERMEDIATE JOINTS WITHIN THE RADIAL DETECTABLE WARNING FILED ARE PROHIBITED.

DETERMINE FINAL RADIAL WARNING FIELD CONFIGURATION AND ITS INDIVIDUAL PLATE LOCATIONS. PERFORM PRE-LAYOUT PRIOR TO PLACEMENT IN PLASTIC CONCRETE. FOLLOW MANUFACTURER'S PRODUCT LIST AND INSTALLATION RECOMMENDATIONS.

FOR RADIAL DETECTABLE WARNING FIELD APPLICATIONS WHERE STANDARD RADIAL PLATES ARE NOT AVAILABLE AT AN INTERSECTION CURB RADIUS, A COMBINATION OF SQUARE OR RECTANGULAR PLATES AND RADIAL PLATES MAY BE USED TO FORM RADIAL CONFIGURATION. RADIAL WEDGE PLATES IN COMBINATION WITH SQUARE PLATES ARE ALSO ACCEPTABLE. FOLLOW MANUFACTURER'S RECOMMENDATIONS.

REFER TO CONTRACT AND STANDARD SPECIFICATIONS FOR FIELD CUTTING REQUIREMENTS.

DO NOT EMBED IN CONCRETE ANY FIELD-CUT PLATES WITH CUT EDGES SHORTER THAN 6 INCHES. CONSULT WITH MANUFACTURER FOR RE-DRILLING AND ANCHORING REQUIREMENTS OF FIELD-CUT PLATES.

(15) FIELD SAW CUTS ALONG RADIAL DETECTABLE WARNING PLATES WILL BE NECESSARY TO MATCH EACH CURB RAMP EDGE. AVOID CUTTING THROUGH DOMES WHENEVER POSSIBLE. MAKE FIELD CUTS TRUE TO LINE AND WITHIN ⅛" DEVIATION. SMOOTH EDGES OF FIELD CUT PLATES.

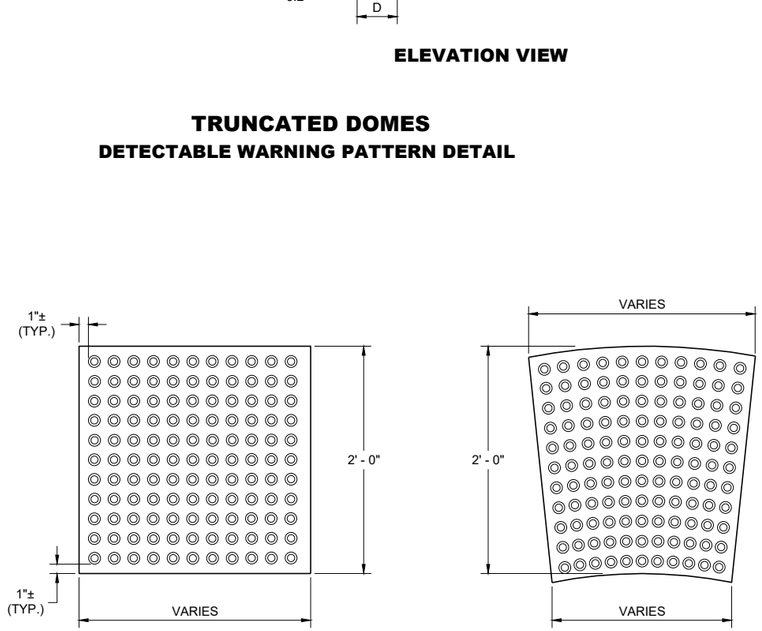

RECTANGULAR PLATES **RADIAL PLATES**

PLAN VIEW
DETECTABLE WARNING FIELDS (TYPICAL)

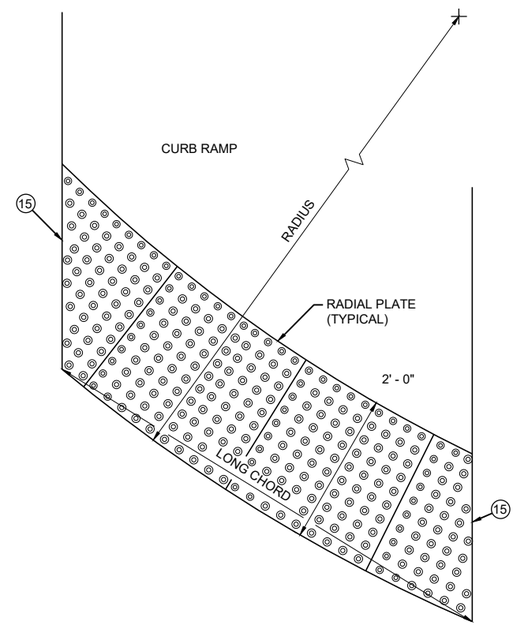

PLAN VIEW
RADIAL DETECTABLE WARNING FIELD ATTRIBUTES

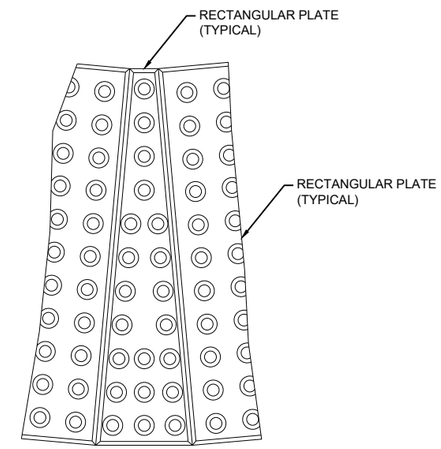

PLAN VIEW
RADIAL WEDGE PLATE CONNECTION DETAIL

6

SDD 08D05-21g

CURB RAMPS
RECTANGULAR AND RADIAL DETECTABLE WARNING PLATES

STATE OF WISCONSIN
DEPARTMENT OF TRANSPORTATION

APPROVED
July 2023 — DATE
/S/ Rodney Taylor — ROADWAY STANDARDS DEVELOPMENT UNIT SUPERVISOR
FHWA

6

SDD 08D05-21g

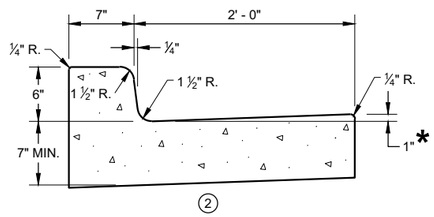

CONCRETE CURB AND GUTTER 31" ①

*TO BE MEASURED TO A MAXIMUM OF 3" WHERE DRAINAGE PROBLEMS EXIST.

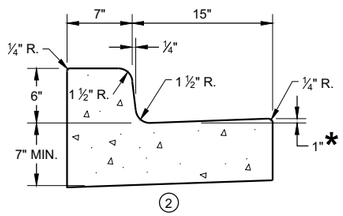

CONCRETE CURB AND GUTTER 22" ①

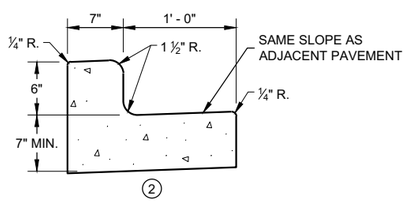

CONCRETE CURB AND GUTTER 19" ①

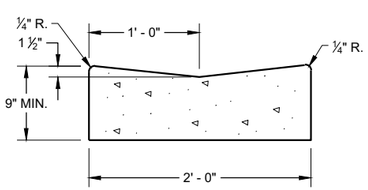

CONCRETE GUTTER 24" ①

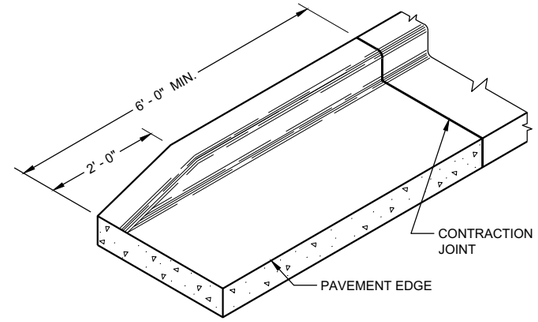

END SECTIONCURB AND GUTTER

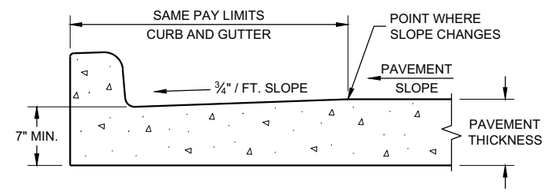

PARTIAL SECTION OF PAVEMENT WITH INTEGRAL CURB AND GUTTER

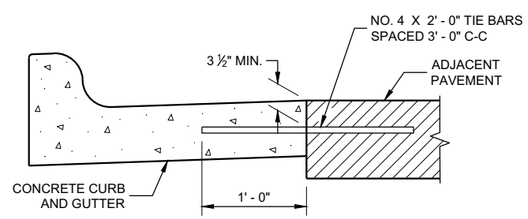

TYPICAL TIE BAR LOCATION ①

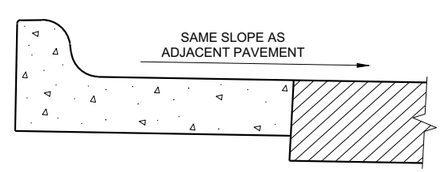

HIGH SIDE SECTION ③

(TYPICAL FOR ALL CURB & GUTTER TYPES)

GENERAL NOTES

DETAILS OF CONSTRUCTION AND WORKMANSHIP NOT SHOWN ON THIS DRAWING SHALL CONFORM TO THE PERTINENT REQUIREMENTS OF THE CONTRACT.

PAVEMENT TIES AND TIE BARS SHALL BE EPOXY COATED IN CONFORMANCE WITH SUBSECTION 505.2.6.2 OF THE STANDARD SPECIFICATIONS.

INTEGRAL CURB AND GUTTER SHALL CONFORM TO THE DETAILS SHOWN FOR CONCRETE CURB AND GUTTER INCLUDING THE TRANSVERSE GUTTER SLOPE. A LONGITUDINAL CONSTRUCTION JOINT IS NOT REQUIRED WITH INTEGRAL CURB AND GUTTER.

UNLESS OTHERWISE SHOWN ON THE TYPICAL CROSS SECTIONS, THE BASE COURSE AND UNCLASSIFIED EXCAVATION LIMITS ARE 2' - 0" BEHIND THE BACK OF CURBS.

① WHEN PLACED ADJACENT TO NEW CONCRETE, TIE BARS ARE REQUITED FOR CURB AND GUTTER 31", 22", 19" AND CONCRETE GUTTER 24".

② THE BOTTOM OF CURB AND GUTTER MAY BE CONSTRUCTED EITHER LEVEL OR PARALLEL TO THE SLOPE OF THE SUBGRADE OR BASE COURSE PROVIDED A 7" MINIMUM GUTTER THICKNESS IS MAINTAINED.

③ WHEN HIGH SIDE CURB SECTION IS REQUIRED, THE LOCATION(S) WILL BE NOTED ON THE PLANS

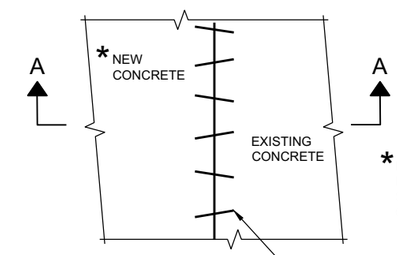

*EXISTING AND NEW CONCRETE MAY BE CURB AND GUTTER, SURFACE DRAINS, PAVEMENT OR OTHER CONCRETE STRUCTURE.

PLAN VIEW

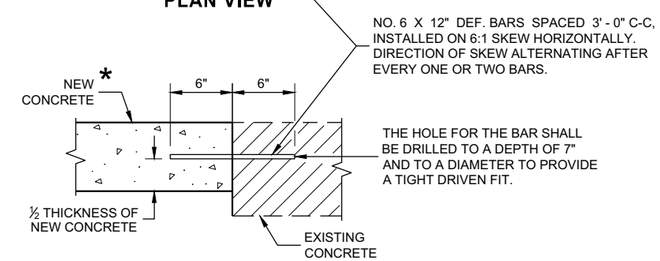

SECTION A - A

PAVEMENT TIES

CONCRETE GUTTER, CURB AND GUTTER AND PAVEMENT TIES

(For Optional use in Milwaukee Co. Only)

STATE OF WISCONSIN
DEPARTMENT OF TRANSPORTATION

APPROVED
February 2020 — DATE
/S/ Rodney Taylor — ROADWAY STANDARDS DEVE ENGINEER
FHWA

6

SDD 08D16 - 11

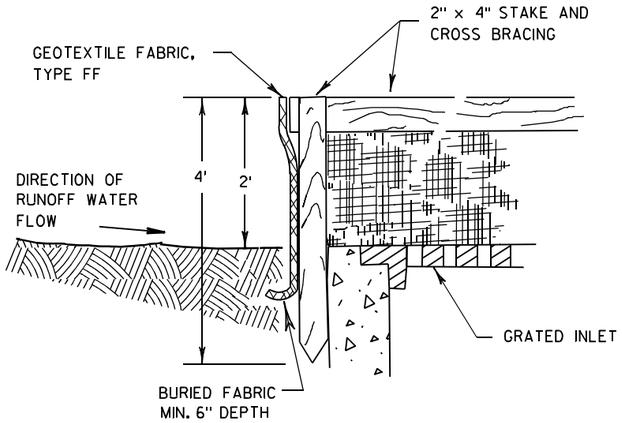

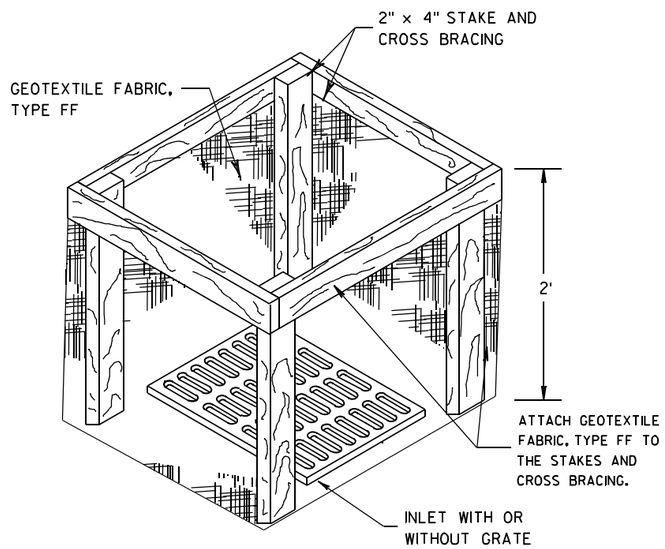

INLET PROTECTION, TYPE A

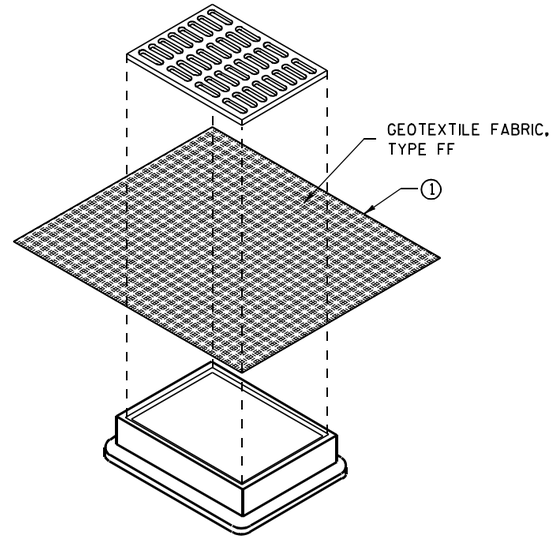

INLET PROTECTION, TYPE B
(WITHOUT CURB BOX)

(CAN BE INSTALLED IN ANY INLET WITHOUT A CURB BOX)

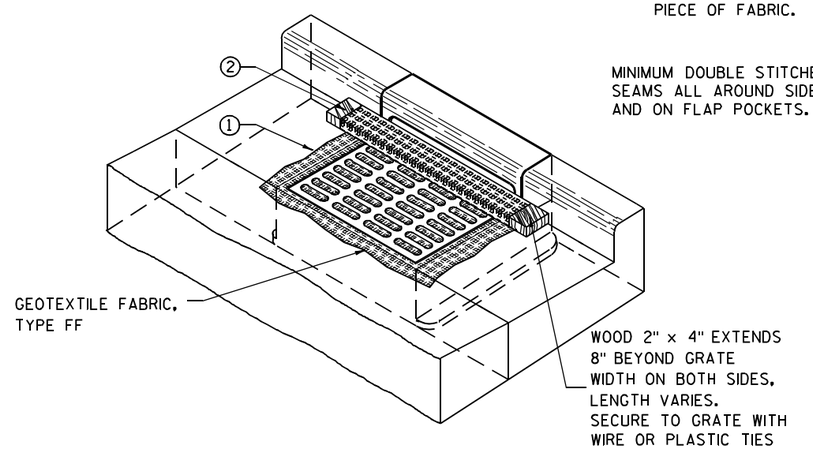

INLET PROTECTION, TYPE C (WITH CURB BOX)

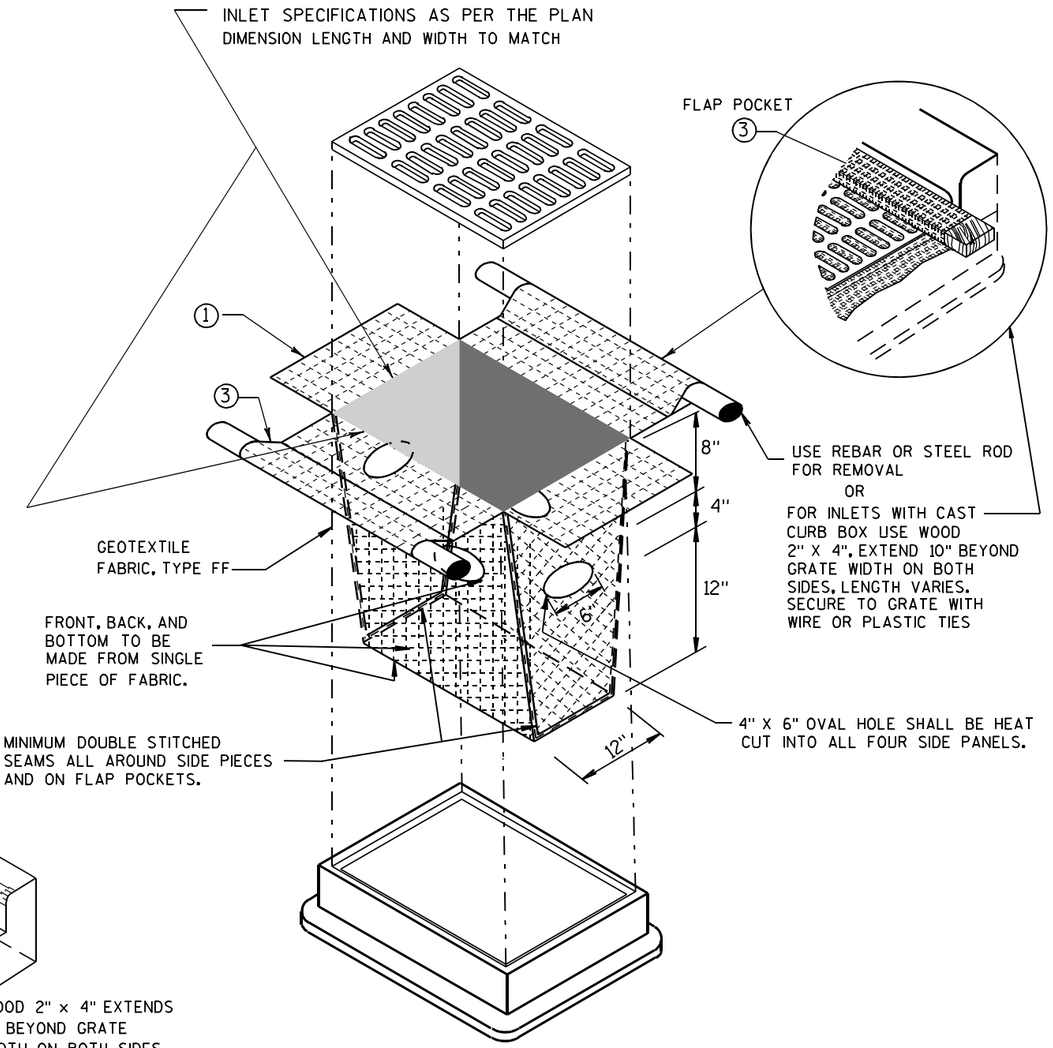

INLET PROTECTION, TYPE D

(CAN BE INSTALLED IN ANY INLET TYPE WITH
OR WITHOUT A CURB BOX AS PER NOTE ②)

GENERAL NOTES

INLET PROTECTION DEVICES SHALL BE MAINTAINED OR REPLACED AT THE DIRECTION OF THE ENGINEER.

MANUFACTURED ALTERNATIVES APPROVED AND LISTED ON THE DEPARTMENT'S EROSION CONTROL PRODUCT ACCEPTABILITY LIST MAY BE SUBSTITUTED.

WHEN REMOVING OR MAINTAINING INLET PROTECTION, CARE SHALL BE TAKEN SO THAT THE SEDIMENT TRAPPED ON THE GEOTEXTILE FABRIC DOES NOT FALL INTO THE INLET. ANY MATERIAL FALLING INTO THE INLET SHALL BE REMOVED IMMEDIATELY.

① FINISHED SIZE, INCLUDING FLAP POCKETS WHERE REQUIRED, SHALL EXTEND A MINIMUM OF 10" AROUND THE PERIMETER TO FACILITATE MAINTENANCE OR REMOVAL.

② FOR INLET PROTECTION, TYPE C (WITH CURB BOX), AN ADDITIONAL 18" OF FABRIC IS WRAPPED AROUND THE WOOD AND SECURED WITH STAPLES. THE WOOD SHALL NOT BLOCK THE ENTIRE HEIGHT OF THE CURB BOX OPENING.

③ FLAP POCKETS SHALL BE LARGE ENOUGH TO ACCEPT WOOD 2X4.

INSTALLATION NOTES

TYPE B & C

TRIM EXCESS FABRIC IN THE FLOW LINE TO WITHIN 3" OF THE GRATE.

THE CONTRACTOR SHALL DEMONSTRATE A METHOD OF MAINTENANCE, USING A SEWN FLAP, HAND HOLDS OR OTHER METHOD TO PREVENT ACCUMULATED SEDIMENT FROM ENTERING THE INLET.

TYPE D

DO NOT INSTALL INLET PROTECTION TYPE D IN INLETS SHALLOWER THAN 30", MEASURED FROM THE BOTTOM OF THE INLET TO THE TOP OF THE GRATE.

TRIM EXCESS FABRIC IN THE FLOW LINE TO WITHIN 3" OF THE GRATE.

THE INSTALLED BAG SHALL HAVE A MINIMUM SIDE CLEARANCE, BETWEEN THE INLET WALLS AND THE BAG, MEASURED AT THE BOTTOM OF THE OVERFLOW HOLES, OF 3". WHERE NECESSARY THE CONTRACTOR SHALL CINCH THE BAG, USING PLASTIC ZIP TIES, TO ACHIEVE THE 3" CLEARANCE. THE TIES SHALL BE PLACED AT A MAXIMUM OF 4" FROM THE BOTTOM OF THE BAG.

INLET PROTECTION
TYPE A, B, C, AND D

STATE OF WISCONSIN
DEPARTMENT OF TRANSPORTATION

APPROVED
10/16/02 — DATE
/S/ Beth Cannestra
CHIEF ROADWAY DEVELOPMENT ENGINEER
FHWA

6

S.D.D. 8 E 10-2

FORM DEPTH SHALL BE NO MORE THAN 6" BELOW GRADE ON THE LOWER SIDE OF BASE

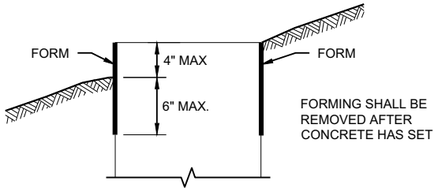

FORMING DETAIL

QUANTITY REQUIREMENTS	CONCRETE BASE TYPE		
	1	2	5 & 6
APPROX. CUBIC YARDS OF CONCRETE	0.40	0.57	0.40
LBS. OF HOOP BAR STEEL	NONE	23	16
LBS. OF VERTICAL BAR STEEL	NONE	60	18

GENERAL NOTES

DETAILS OF CONSTRUCTION, MATERIALS AND WORKMANSHIP NOT SHOWN ON THIS DRAWINGSHALL CONFORM TO THE PERTINENT REQUIREMENTS OF THE CONTRACT.

BASES SHALL BE EXCAVATED BY USE OF A CIRCULAR AUGER.

TOP SURFACES OF CONCRETE BASES SHALL BE TROWEL FINISHED SMOOTH AND LEVEL.

CONDUIT SIZES AND LOCATIONS SHALL BE SHOWN ON THE PLANS

THE FINAL OR TERMINATING CONCRETE BASE IN A CONDUIT RUN SHALL HAVE A 6" EXIT STUB INSTALLED FOR FUTURE CABLING USE. THE EXIT STUB SHALL BE SIZED AS USED THROUGHOUT THE CONDUIT RUN AS SHOWN A THE ENTRANCE OF THE BASE.

ENDS OF CONDUIT INSTALLED BELOW GRADE FRO FUTURE USE SHALL BE CAPPED IF METALLIC OR PLUGGED IF NON-METALLIC.

MINIMUM BENDING RADIUS OF CONDUIT IS EQUAL TO 6X THE DIAMETER.

CONDUIT HEIGHT ABOVE CONCRETE BASES SHALL BE 1 INCH. ALL METALLIC CONDUIT ENDS SHALL BE REAMED AND THREADED.

ALL CONDUIT ENDS AT THE TOP OF CONCRETE BASES SHALL BE CAPPED IF METALLIC OR PLUGGED IF NON-METALLIC IMMEDIATELY AFTER PLACEMENT AND BEFORE CONCRETE IS POURED. CONDUITS IN WHICH WIRE OR CABLE IS NOT INSTALLED SHALL REMAIN CAPPED OR PLUGGED.

BELL ENDS SHALL BE INSTALLED ON ALL PVC CONDUIT EXPOSED AT THE TOP OF CONCRETE BASES BEFORE INSTALLATION.

WHEN REQUIRED TO CONNECT NON-METALLIC CONDUIT TO METALLIC CONDUIT, ONLY ADAPTER FITTINGS, U.L. LISTED FOR ELECTRICAL USE, SHALL BE USED.

IF A BASE REQUIRES A DEEP FORM BECAUSE OF LOOSE DIRT OR FILL, THE FORM SHALL BE REMOVED BEFORE BACKFILLING AROUND THE BASE. BACKFILL SHALL BE TAMPED TIGHT AGAINST THE BARE CONCRETE BASE IN LAYERS OF 1 FOOT OR LESS.

A NO. 4 AWG STRANDED COPPER EQUIPMENT GROUNDING CONDUCTOR SHALL BE EXOTHERMICALLY WELDED TO THE EQUIPMENT GROUNDING ELECTRODE (GROUND ROD) FOR TYPE 2, TYPE 5 AND TYPE 6 BASES.

THE EQUIPMENT GROUNDING CONDUCTOR SHALL BE FURNISHED AND INSTALLED TO ENTER ALL BASE TYPES THROUGH A 1 INCH CONDUIT INSTALLED FOR GROUNDING PURPOSES, LEAVING A 4 FOOT COIL OF WIRE ABOVE THE CONCRETE BASE. THE EQUIPMENT GROUNDING CONDUCTOR SHALL BE NEATLY COILED AND THE COILS TIED TOGETHER.

ANCHOR RODS SHALL BE THREADED 12" IN LENGTH ON EACH END OF THE ROD. ANCHOR RODS SHALL BE MANUFACTURED IN ACCORDANCE WITH SECTION 654.2.1 OF THE STANDARD SPECIFICATIONS.

WASHERS AND LOCK WASHERS ARE REQUIRED ON ALL ANCHOR RODS.

WHEN ANCHOR RODS USING THE ALTERNATE "L" BEND ARE FURNISHED, THE 4 INCH"L" BEND SHALL BE IN ADDITION TO THE SPECIFIED ANCHOR ROD BAR LENGTH. THE "L" BEND SHALL NOT BE THREADED.

ANCHOR RODS SHALL BE INSTALLED WITH MISALIGNMENTS OF LESS THAN 1:40 FROM VERTICAL.

WELDING OF THE ANCHOR RODS TO THE CAGE IS UNACCEPTABLE. TIE WIRES SHALL BE USED.

BAR STEEL REINFORCEMENT SHALL BE COATED WITH POWDERED EPOXY RESIN IN ACCORDANCE WITH SECTION 505 OF THE STANDARD SPECIFICATIONS (LATEST EDITION).

(1) THE MINIMUM DEPTH OF CONDUIT EXITING THE CONCRETE BASE AND INSTALLED BELOW THE TRAVELED WAY SHALL BE 24 INCHES. THE MINIMUM DEPTH OF CONDUIT EXITING THE CONCRETE BASE THAT IS NOT INSTALLED BELOW THE TRAVELED WAY SHALL BE 18 INCHES. THE MAXIMUM DEPTH OF ALL CONDUIT SHALL BE 36 INCHES EXCEPT WITH WRITTEN APPROVAL OF THE ENGINEER.

(2) (4) 1" DIA. X 3' - 6" ANCHOR RODS.

(3) (4) 1" DIA. X 5' - 0" ANCHOR RODS.

(4) (6) NO. 6 X 6' - 8" BAR STEEL REINFORCEMENT.

(5) (7) NO. 4 X 5' - 1" BAR STEEL REINFORCEMENT @ 1' - 0" C - C.

(6) (4) 1" DIA. X 3' - 6" ANCHOR RODS.

(7) (6) NO. 4 X 4' - 8" BAR STEEL REINFORCEMENT.

(8) (5) NO. 4 X 5' - 1" BAR STELL REINFORCEMENT @ 1' - 0" C -C.

(9) EXOTHERMIC CONNECTION TO EUIPMENT GROUNDING CONDUCTOR

(10) ⅝" DIA. X 8' -0" COPPERCLAD EQUIPMENT GROUNDING ELECTRODE REQUIRED

(11) ANY ANCHOR ROD PROJECTION SHORTER THAN 2 ¾" OR LONGER THAN 3 ¼" SHALL REQUIRE THE BASE TO BE REMOVED AND REPLACED AT THE CONTRACTORS EXPENSE.

(12) FOR NON - BREAKAWAY INSTALLATIONS, 4 ½" ± ANCHOR ROD PROJECTION WITH THE USE OF LEVELING NUTS. RODENT SCREEN REQUIRED.

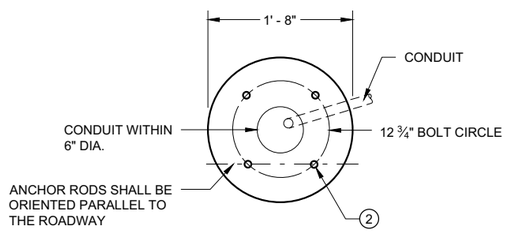

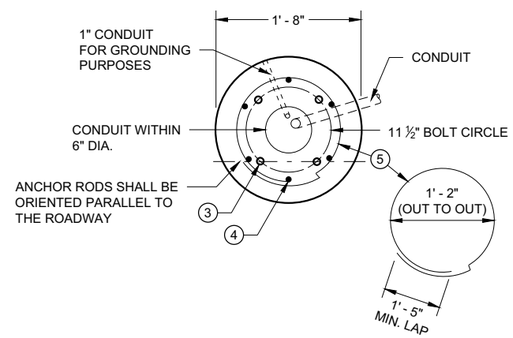

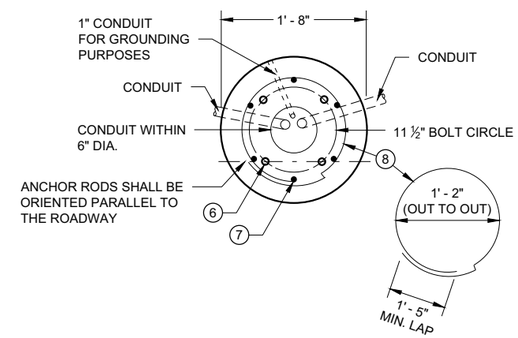

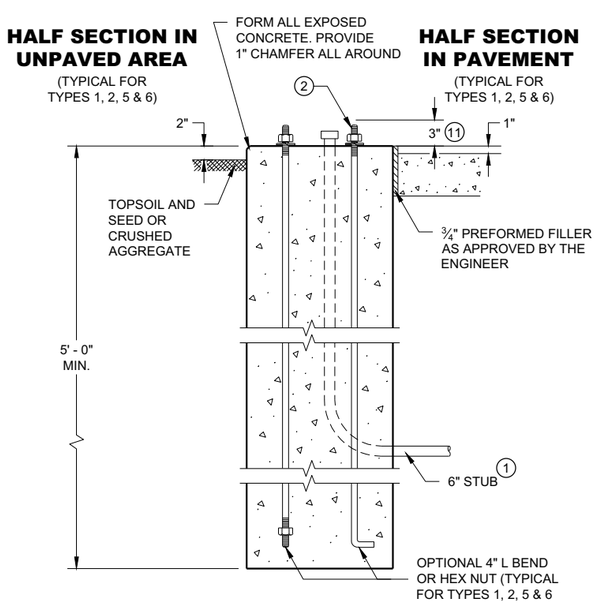

TYPE 1

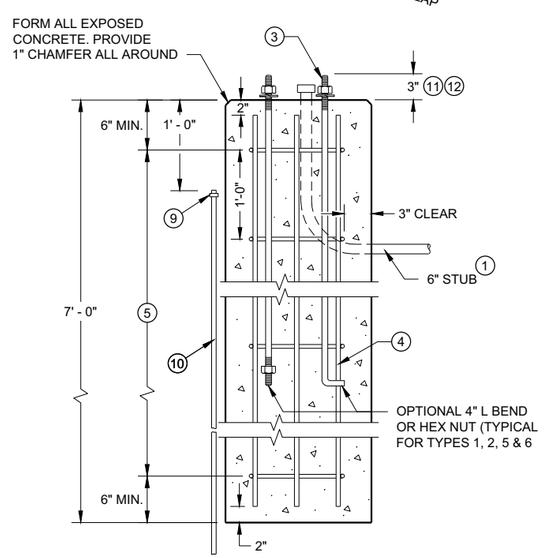

TYPE 2

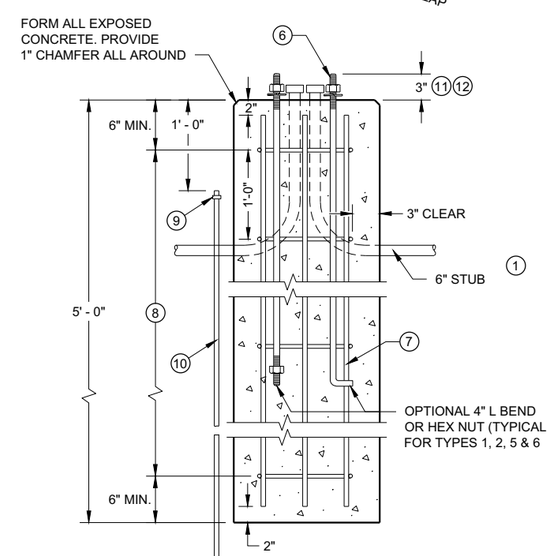

TYPE 5 & 6

CONCRETE BASES

CONCRETE BASES TYPES 1, 2, 5, & 6

STATE OF WISCONSIN
DEPARTMENT OF TRANSPORTATION

APPROVED
May 2019 — DATE
/S/ Ahmet Demirbilek — STATE ELECTRICAL ENGI
FHWA

6

SDD 09C02 - 09

GENERAL NOTES

DETAILS OF CONSTRUCTION, MATERIALS AND WORKMANSHIP NOT SHOWN ON THIS DRAWING SHALL CONFORM TO THE PERTINENT REQUIREMENTS OF THE CONTRACT.

FOUR (4) BOLTS SHALL BE FURNISHED WITH EACH TRANSFORMER BASE. BOLTS SHALL BE 1" DIAMETER, 4" IN LENGTH, WITH WASHERS, LOCK WASHERS AND NUTS. BOLTS, NUTS AND WASHERS SHALL BE MANUFACTURED IN ACCORDANCE WITH SECTION 531.2.2 OF THE STANDARD SPECIFICATIONS.

LEVELING SHIMS, IF NEEDED, SHALL BE DESIGNED FOR THE PURPOSE AND USED UNDER CAST BASES WHEN PLUMBING POLES OR STANDARDS DURING INSTALLATION. THE USE OF WASHERS IN LIEU OF PROPER LEVELING SHIMS IS NOT ACCEPTABLE.

SHIM LENGTH SHALL BE LONG ENOUGH TO COMPLETELY COVER THE AREA UNDER THE LENGTH AND WIDTH OF THE BASE MOUNTING FLANGE.

DOUBLE NUTTING IS NOT ACCEPTABLE FOR LEVELING OR MOUNTING PURPOSES.

A NEMA APPROVED, U.L. LISTED, COPPER WITH BRASS OR STAINLESS STEEL SET SCREW, DIRECT BURY RATED, MECHANICAL CONNECTOR (LUG), SIZED TO ACCEPT AWG. #10 TO #4 COPPER STRANDED WIRE SHALL BE FURNISHED AND INSTALLED IN THE PEDESTAL AND TRANSFORMER BASES.

THE MECHANICAL CONNECTOR SHALL BE INSTALLED USING A 1/4" - 20 (TPI) STAINLESS STEEL HEX HEAD BOLT OF SUFFICIENT LENGTH TO FIRMLY ATTACH THE LUG TO THE BASE.

SHOULD THE MANNER OF ATTACHMENT OF THE LUG REQUIRE WASHERS, HEX NUTS, LOCK WASHER - THEY SHALL BE STAINLESS STEEL AS IS THE BOLT. THE MANNER OF ATTACHMENT SHALL NOT BLOCK ACCESSIBILITY TO WIRE PLACEMENT IN THE CONNECTOR.

PEDESTAL BASE COLLAR THREADING SHALL BE TAPERED AND IN ACCORDANCE WITH NATIONAL PIPE THREADING DIMENSIONS.

BASE COLLAR THREADING SHALL EXTEND INTO THE BASE COLLAR WITH SUFFICIENT DEPTH TO ACCEPT THE INSTALLATION OF TRAFFIC SIGNAL STANDARDS TO A DEPTH OF 1 1/2", THEN TIGHTENING TO A POINT OF BEING IMMOVABLE.

THE ACCESS DOOR SHALL BE OF THE SAME MATERIAL AS THE BASE.

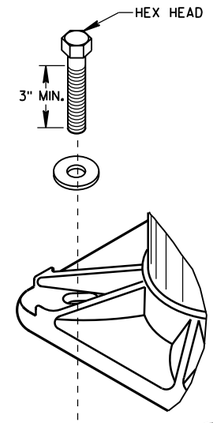

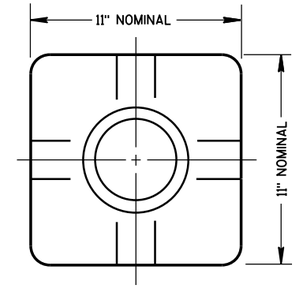

TOP VIEW
(PEDESTAL BASE)

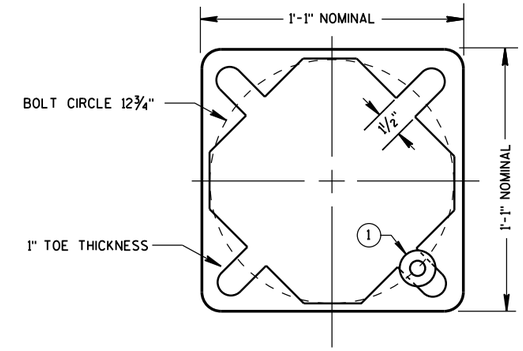

BOTTOM VIEW
(PEDESTAL BASE)

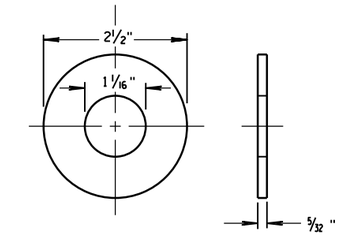

ZINC COATED STEEL WASHER
TO BE PROVIDED BY THE CONTRACTOR

PEDESTAL BASE WASHER (1)

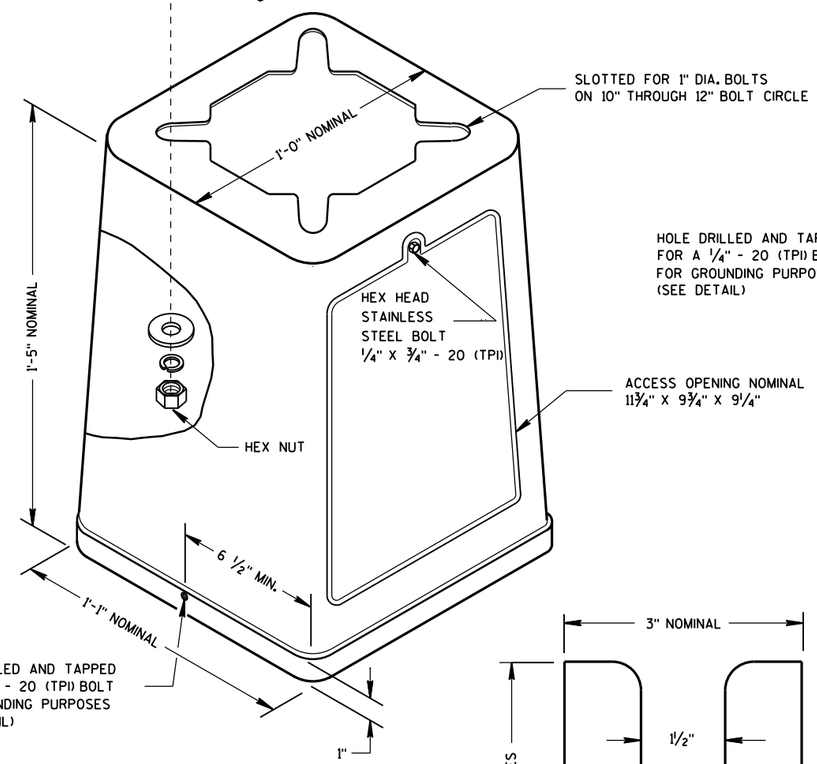

ISOMETRIC VIEW

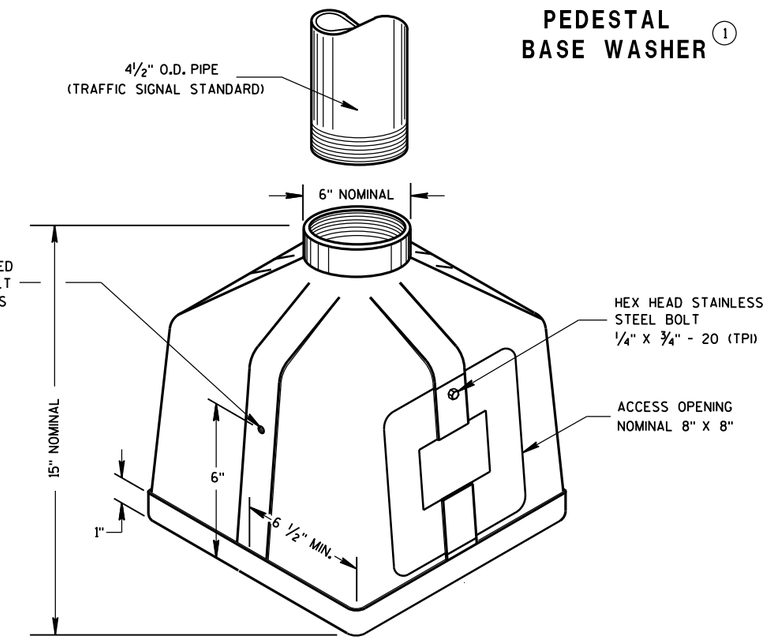

ISOMETRIC VIEW
PEDESTAL BASE

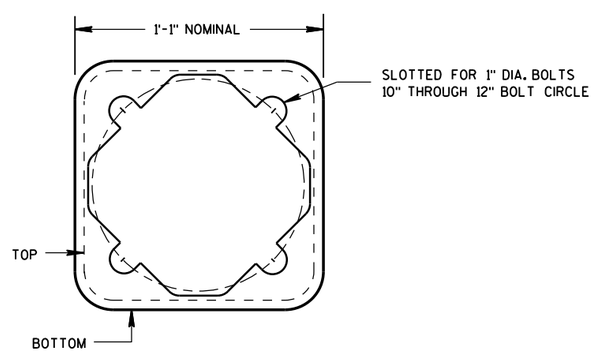

BOTTOM VIEW
(TRANSFORMER BASE)

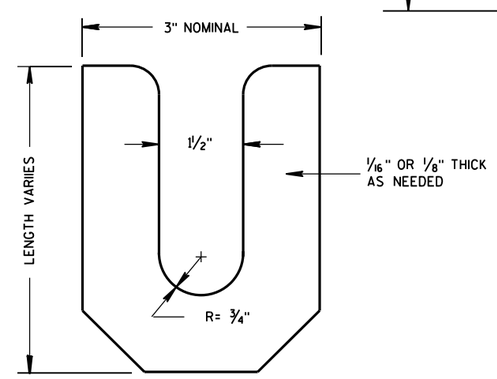

LEVELING SHIM

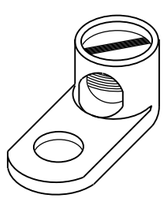

TYPICAL MECHANICAL CONNECTOR LUG

TO BE FURNISHED WITH EACH BASE

TRANSFORMER BASE

INTENDED FOR USE WITH TYPE 2, 3, 4, 5 & 6 POLES

TRANSFORMER/PEDESTAL BASES	
STATE OF WISCONSIN DEPARTMENT OF TRANSPORTATION	
APPROVED Sept. 2014 DATE	/S/ Ahmet Demirbilek STATE ELECTRICAL
FHWA	

6

6

S.D.D. 9 C 3-4

S.D.D. 9 C 3-4

GENERAL NOTES

DETAILS OF CONSTRUCTION, MATERIALS AND WORKMANSHIP NOT SHOWN ON THIS DRAWING SHALL CONFORM TO THE PERTINENT REQUIREMENTS OF THE CONTRACT.

BASES (SHAFT) SHALL BE EXCAVATED BY THE USE OF A CIRCULAR AUGER. IF BASE REQUIRES A DEEP FORM BECAUSE OF LOOSE SOIL, THE FORM SHALL BE REMOVED BEFORE BACKFILLING. A STEEL CASING OR CORRUGATED METAL PIPE IS ALLOWED TO REMAIN. BACKFILL SHALL BE TAMPED TIGHT AGAINST THE BASE IN LAYERS OF ONE FOOT OR LESS.

TOP SURFACE OF THE CONCRETE BASE SHALL BE TROWEL FINISHED AND LEVEL.

ANCHOR RODS SHALL BE INSTALLED WITH MISALIGNMENTS OF LESS THAN 1:40 FROM VERTICAL.

BAR STEEL REINFORCEMENT SHALL BE COATED WITH POWDERED EPOXY RESIN IN ACCORDANCE WITH SECTION 505 OF THE STANDARD SPECIFICATIONS (LATEST EDITION).

WELDING OF ANCHOR RODS TO THE CAGE IS UNACCEPTABLE. TEMPLATES SHALL BE USED.

CONDUIT SIZES AND LOCATIONS SHALL BE SHOWN ON THE PLANS.

MINIMUM BENDING RADIUS OF CONDUIT IS EQUAL TO 6 TIMES THE DIAMETER.

CONDUIT HEIGHT ABOVE CONCRETE BASES SHALL BE 4" INCHES. ALL METALLIC CONDUIT ENDS SHALL BE REAMED AND THREADED. NON-METALLIC CONDUIT SHALL HAVE BELL ENDS INSTALLED. ALL CONDUIT SHALL SLOPE TO PULL BOX.

ALL CONDUIT ENDS AT THE TOP OF CONCRETE BASES SHALL BE CAPPED IF METALLIC OR PLUGGED IF NON-METALLIC IMMEDIATELY AFTER PLACEMENT AND BEFORE CONCRETE IS POURED. CONDUITS IN WHICH WIRE OR CABLE IS NOT INSTALLED SHALL REMAIN CAPPED OR PLUGGED.

BELL ENDS SHALL BE INSTALLED ON ALL PVC CONDUIT EXPOSED AT THE TOP OF CONCRETE BASES BEFORE INSTALLATION OF CABLE OR WIRE.

WHEN REQUIRED TO CONNECT NON-METALLIC CONDUIT TO METALLIC CONDUIT, ONLY ADAPTER FITTINGS, U.L. LISTED FOR ELECTRICAL USE, SHALL BE USED.

ENDS OF CONDUIT INSTALLED BELOW GRADE FOR FUTURE USE SHALL BE CAPPED IF METALLIC OR PLUGGED IF NONMETALLIC.

A NO. 4 AWG STRANDED COPPER EQUIPMENT GROUNDING CONDUCTOR SHALL BE EXOTHERMICALLY WELDED TO THE EQUIPMENT GROUNDING ELECTRODE (GROUND ROD).

THE EQUIPMENT GROUNDING CONDUCTOR SHALL BE FURNISHED AND INSTALLED TO ENTER THE BASE THROUGH A 1 INCH CONDUIT INSTALLED FOR GROUNDING PURPOSES, LEAVING A 4 FOOT COIL OF WIRE ABOVE THE CONCRETE BASE. THE EQUIPMENT GROUNDING CONDUCTOR SHALL BE NEATLY COILED AND THE COILS TIED TOGETHER.

THE FINAL OR TERMINATING CONCRETE BASE IN A CONDUIT RUN SHALL HAVE A 6" EXIT STUB INSTALLED FOR FUTURE CABLING USE. THE EXIT STUB SHALL BE SIZED AS USED THROUGHOUT THE CONDUIT RUN AS SHOWN A THE ENTRANCE OF THE BASE.

(1) THE MINIMUM DEPTH OF CONDUIT EXITING THE CONCRETE BASE AND INSTALLED BELOW THE TRAVELED WAY SHALL BE 24 INCHES. THE MINIMUM DEPTH OF CONDUIT EXITING THE CONCRETE BASE THAT IS NOT INSTALLED BELOW THE TRAVELED WAY SHALL BE 18 INCHES. THE MAXIMUM DEPTH OF ALL CONDUIT SHALL BE 36 INCHES (GREATER THAN 36 INCHES IF INSTALLED IN BREAKER RUN) EXCEPT WITH WRITTEN APPROVAL OF THE ENGINEER.

(2) (6) 1 ½ DIA. X 4' - 4" ANCHOR RODS

(3) (6) NO. 6 X 13' - 7" BAR STEEL REINFORCEMENT.

(4) (21) NO. 5 X 7'-10" BAR STEEL REINFORCEMENT @ 8" MAX. C-C.

CONCRETE MASONRY.....fc = 3,500 p.s.i
HIGH STRENGTH BAR STEEL REINFORCEMENT, GRADE 60.....fy = 60,000 p.s.i.
ANCHOR RODS, ASTM F1554 GRADE 55 (IN ACCORDANCE .....fy = 55,000 p.s.i.
WITH SECTION 531.2.2 OF THE STANDARD SPECIFICATION)
TEMPLATES, ASTM A709, GRADE 36.....fy = 36,000 p.s.i.

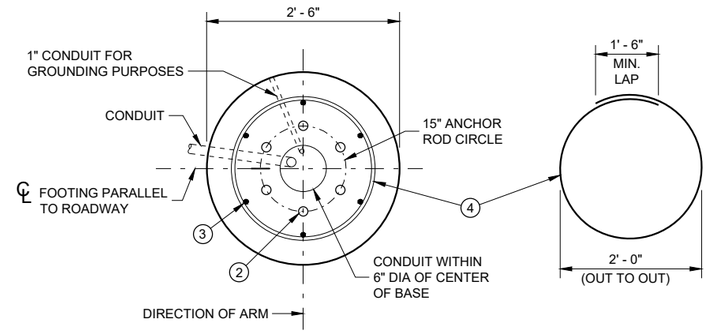

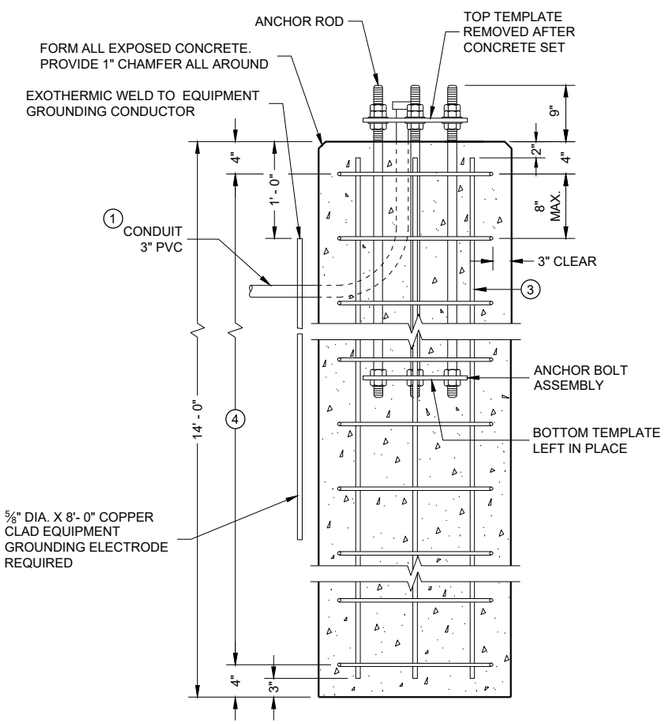

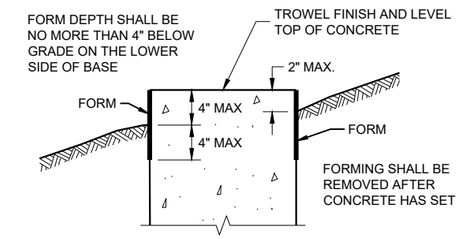

FORMING DETAIL

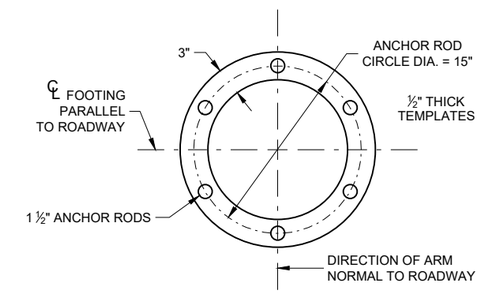

TOP AND BOTTOM TEMPLATE

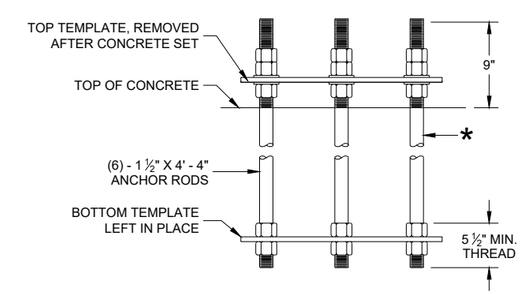

ANCHOR ROD ASSEMBLY DETAILS

* THREAD TOP 10" OF ANCHOR ROD FOR 3 NUTS AND 2 WASHERS AND BOTTOM 5 ½" FOR 2 NUTS PER ANCHOR ROD. HOT DIP GALVANIZE THE ENTIRE LENGTH OF THE ANCHOR ROD (ASTM A123) AND HOT DIP NUTS AND WASHERS (ASTM A153. USE ZINC COATED NUTS MANUFACTURED WITH SUFFICIENT ALLOWANCE TO ALLOW NUTS TO RUN FREELY ON THE THREADS.

QUANTITY REQUIREMENTS	
APPROX. CUBIC YARDS OF CONCRETE	2.5
LBS. OF HOOP BAR STEEL	172
LBS. OF VERTICAL BAR STEEL	122

CONCRETE BASE, TYPE 10
(FOR TYPE 9, TYPE 10 AND OVER HEIGHT (OH) POLES)

TO BE USED WHEN GROUND ELEVATION AT BASE EQUALS OR IS GREATER THAN HIGH POINT OF ROADWAY ELEVATION. SEE SDD 9C13 WHEN GROUND ELEVATION AT BASE IS LOWER THAN HIGH POINT OF ROADWAY ELEVATION.

CONCRETE BASE TYPE 10

STATE OF WISCONSIN
DEPARTMENT OF TRANSPORTATION

APPROVED
May 2017 — DATE
/S/ Ahmet Demerbilek — WIND LOADED STRUCTU PROGRAM LEADER
FHWA

6

SDD 09C11 - 10

GENERAL NOTES

DETAILS OF CONSTRUCTION, MATERIALS AND WORKMANSHIP NOT SHOWN ON THIS DRAWING SHALL CONFORM TO THE PERTINENT REQUIREMENTS OF THE CONTRACT.

THE CONTRACTOR IS RESPONSIBLE FOR MAKING THEIR OWN DETERMINATION AS TO THE TYPE AND LOCATION OF UNDERGROUND UTILITIES AS MAY BE NECESSARY TO AVOID DAMAGE THERETO.

BASES (SHAFT) SHALL BE EXCAVATED BY THE USE OF A CIRCULAR AUGER. IF BASE REQUIRES A DEEP FORM BECAUSE OF LOOSE SOIL, THE FORM SHALL BE REMOVED BEFORE BACKFILLING. A STEEL CASING OR CORRUGATED METAL PIPE IS ALLOWED TO REMAIN. BACKFILL SHALL BE TAMPED TIGHT AGAINST THE BASE IN LAYERS OF ONE FOOT OR LESS.

TOP SURFACE OF THE CONCRETE BASE SHALL BE TROWEL FINISHED AND LEVEL.

ANY DAMAGE TO THE CONCRETE BASE AND ANCHOR RODS DURING CONSTRUCTION OPERATIONS SHALL BE REPAIRED AT THE ENGINEER'S DIRECTION, AT THE EXPENSE OF THE CONTRACTOR.

THE REINFORCEMENT AND ANCHOR RODS SHALL BE ADEQUATELY SUPPORTED IN THE PROPER POSITIONS SO NO MOVEMENT OCCURS DURING CONCRETE PLACEMENT.

ORIENT ANCHOR RODS IN FOOTING AND PROVIDE ANCHOR RODS STICK OUT ABOVE TOP OF CONCRETE FOOTING BASE PER THIS SHEET.

ANCHOR RODS SHALL BE INSTALLED WITH MISALIGNMENTS OF LESS THAN 1:40 FROM VERTICAL.

BAR STEEL REINFORCEMENT SHALL BE COATED WITH POWDERED EPOXY RESIN IN ACCORDANCE WITH SECTION 505 OF THE STANDARD SPECIFICATIONS (LATEST EDITION).

BENDING DIMENSIONS FOR REINFORCING BARS ARE OUT TO OUT.

WELDING OF ANCHOR RODS TO THE CAGE IS UNACCEPTABLE. TEMPLATES SHALL BE USED.

USE 3" CLEAR FOR ALL REINFORCEMENT UNLESS NOTED OTHERWISE.

FORM ALL EXPOSED CONCRETE CORNERS WITH 1" CHAMFER ALL AROUND. TOP OF THE CONCRETE BASE SHALL BE TROWEL FINISHED AND LEVEL.

CONDUIT SIZES AND LOCATIONS SHALL BE SHOWN ON THE PLANS.

MINIMUM BENDING RADIUS OF CONDUIT IS EQUAL TO 6 TIMES THE DIAMETER.

CONDUIT HEIGHT ABOVE CONCRETE BASES SHALL BE 4 ½" INCHES. ALL METALLIC CONDUIT ENDS SHALL BE REAMED AND THREADED. NON-METALLIC CONDUIT SHALL HAVE BELL ENDS INSTALLED. ALL CONDUIT SHALL SLOPE TO PULL BOX.

ALL CONDUIT ENDS AT THE TOP OF CONCRETE BASES SHALL BE CAPPED IF METALLIC OR PLUGGED IF NON-METALLIC IMMEDIATELY AFTER PLACEMENT AND BEFORE CONCRETE IS POURED. CONDUITS IN WHICH WIRE OR CABLE IS NOT INSTALLED SHALL REMAIN CAPPED OR PLUGGED.

BELL ENDS SHALL BE INSTALLED ON ALL PVC CONDUIT EXPOSED AT THE TOP OF CONCRETE BASES BEFORE INSTALLATION OF CABLE OR WIRE.

WHEN REQUIRED TO CONNECT NON-METALLIC CONDUIT TO METALLIC CONDUIT, ONLY ADAPTER FITTINGS, U.L. LISTED FOR ELECTRICAL USE, SHALL BE USED.

A NO. 4 AWG STRANDED COPPER EQUIPMENT GROUNDING CONDUCTOR SHALL BE EXOTHERMICALLY WELDED TO THE EQUIPMENT GROUNDING ELECTRODE (GROUND ROD).

THE EQUIPMENT GROUNDING CONDUCTOR SHALL BE FURNISHED AND INSTALLED TO ENTER THE BASE THROUGH A 1 INCH CONDUIT INSTALLED FOR GROUNDING PURPOSES, LEAVING A 4 FOOT COIL OF WIRE ABOVE THE CONCRETE BASE. THE EQUIPMENT GROUNDING CONDUCTOR SHALL BE NEATLY COILED AND THE COILS TIED TOGETHER.

THE FINAL OR TERMINATING CONCRETE BASE IN A CONDUIT RUN SHALL HAVE A 6" EXIT STUB INSTALLED FOR FUTURE CABLING USE. THE EXIT STUB SHALL BE SIZED AS USED THROUGHOUT THE CONDUIT RUN AS SHOWN A THE ENTRANCE OF THE BASE.

(1) THE MINIMUM DEPTH OF CONDUIT EXITING THE CONCRETE BASE AND INSTALLED BELOW THE TRAVELED WAY SHALL BE 24 INCHES. THE MINIMUM DEPTH OF CONDUIT EXITING THE CONCRETE BASE THAT IS NOT INSTALLED BELOW THE TRAVELED WAY SHALL BE 18 INCHES. THE MAXIMUM DEPTH OF ALL CONDUIT SHALL BE 36 INCHES (GREATER THAN 36 INCHES IF INSTALLED IN BREAKER RUN) EXCEPT WITH WRITTEN APPROVAL OF THE ENGINEER.

CONCRETE MASONRY.....fc = 3,500 p.s.i
HIGH STRENGTH BAR STEEL REINFORCEMENT, GRADE 60.....fy = 60,000 p.s.i.
ANCHOR RODS, ASTM F1554 GRADE 55 (IN ACCORDANCE .....fy = 55,000 p.s.i.
WITH SECTION 531.2.2 OF THE STANDARD SPECIFICATION)
TEMPLATES, ASTM A709, GRADE 36.....fy = 36,000 p.s.i.

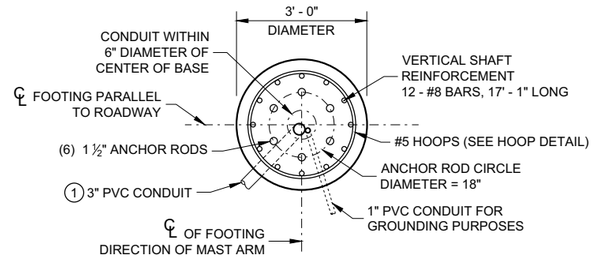

PLAN VIEW

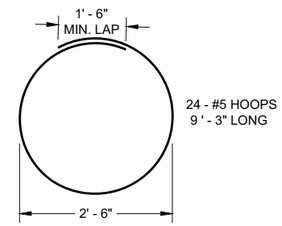

HOOP DETAIL

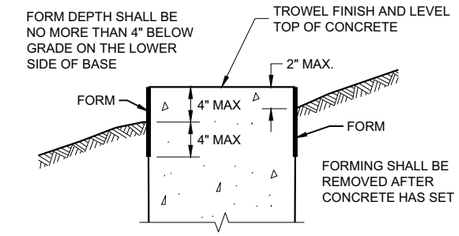

FORMING DETAIL

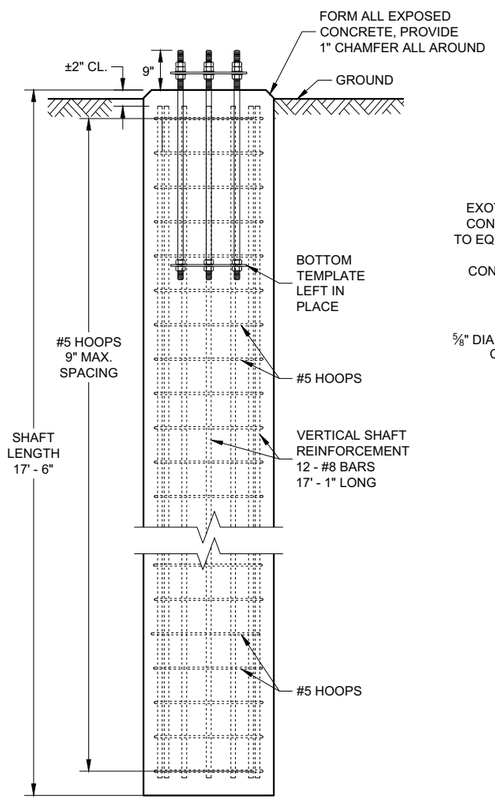

ELEVATION VIEW
(CONDUITS NOT SHOWN ON THIS VIEW FOR CLARITY)

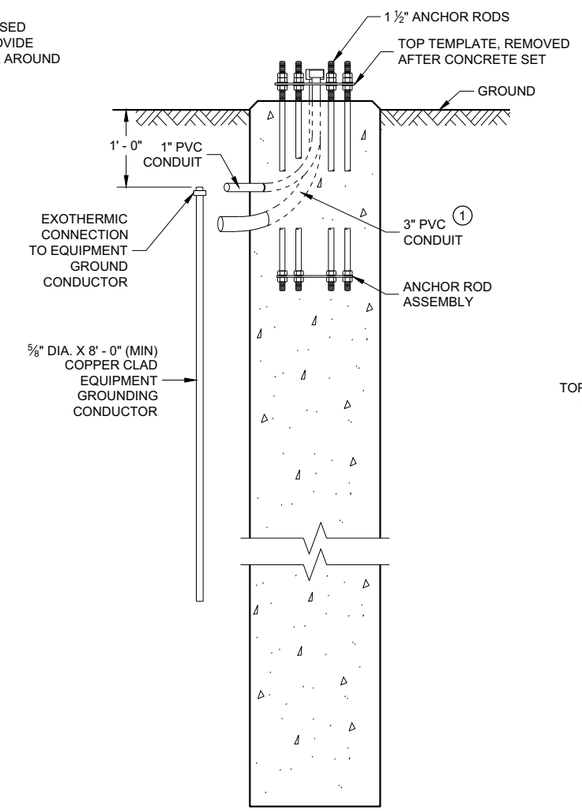

SIDE VIEW
(HOOPS AND VERTICAL SHAFT REINFORCEMENT NOT SHOWN ON THIS VIEW FOR CLARITY)

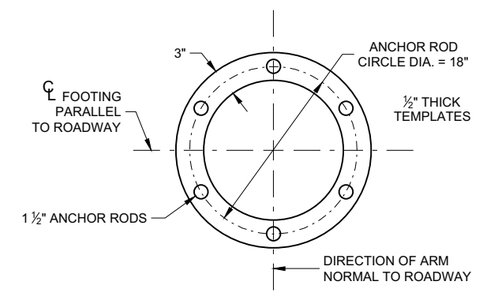

TOP AND BOTTOM TEMPLATE

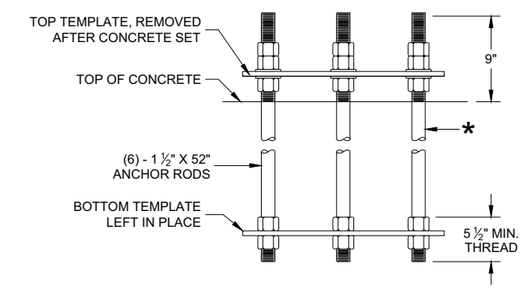

ANCHOR ROD ASSEMBLY DETAILS

* THREAD TOP 10" OF ANCHOR ROD FOR 3 NUTS AND 2 WASHERS AND BOTTOM 5 ½" FOR 2 NUTS PER ANCHOR ROD. HOT DIP GALVANIZE THE ENTIRE LENGTH OF THE ANCHOR ROD (ASTM A123) AND HOT DIP NUTS AND WASHERS (ASTM A153. USE ZINC COATED NUTS MANUFACTURED WITH SUFFICIENT ALLOWANCE TO ALLOW NUTS TO RUN FREELY ON THE THREADS.

CONCRETE BASE, TYPE 10 SPECIAL
(FOR TYPE 9 SPECIAL AND TYPE 10 SPECIAL POLES)

CONCRETE = 4.6 CUBIC YARD
H.S. REINFORCEMENT = 779 LBS.

FOR USE WHEN GROUND ELEVATION AT BASE EQUALS OR IS GREATER THAN HIGH POINT OF ROADWAY ELEVATION.

CONCRETE BASE TYPE 10 SPECIAL

STATE OF WISCONSIN
DEPARTMENT OF TRANSPORTATION

APPROVED
August 2020 — DATE
/S/ Alex Crabtree — WIND LOADED STRUCTU PROGRAM LEADER
FHWA

6

SDD 09C15 - 01

GENERAL NOTES

DETAILS OF CONSTRUCTION, MATERIALS AND WORKMANSHIP NOT SHOWN ON THIS DRAWING SHALL CONFORM TO THE PERTINENT REQUIREMENTS OF THE STANDARD SPECIFICATIONS AND APPLICABLE SPECIAL PROVISIONS.

ALL INTERNAL ELECTRICAL COMPONENTS WILL BE PRE - WIRED BY THE CABINENT MANUFACTURER.

ALL CONDUIT ENTRIES SHALL BE SEALED WITH AN APPROPRIATE DUCT SEALING COMPOUND.

ORIENT PHOTOCELL AWAY FROM AMBIENT LIGHT SOURCES AND ONCOMING TRAFFIC HEADLIGHTS, UNLESS OTHERWISE CALLED FOR IN THE SPECIAL PROVISION.

THE CONTRACTOR SHALL TOUCH UP ANY DAMAGE TO THE ANODIZED FINISH CAUSED BY THE INSTALLATION PROCESS. COLOR MATCH PAINT SHALL BE USED.

A COMPLETE LIGHTING OR ELECTRICAL PLAN SHALL BE SECURELY PLACED IN THE DOCUMENT HOLDER ATTACHED TO THE DOOR.

FRONT INTERIOR ELEVATION

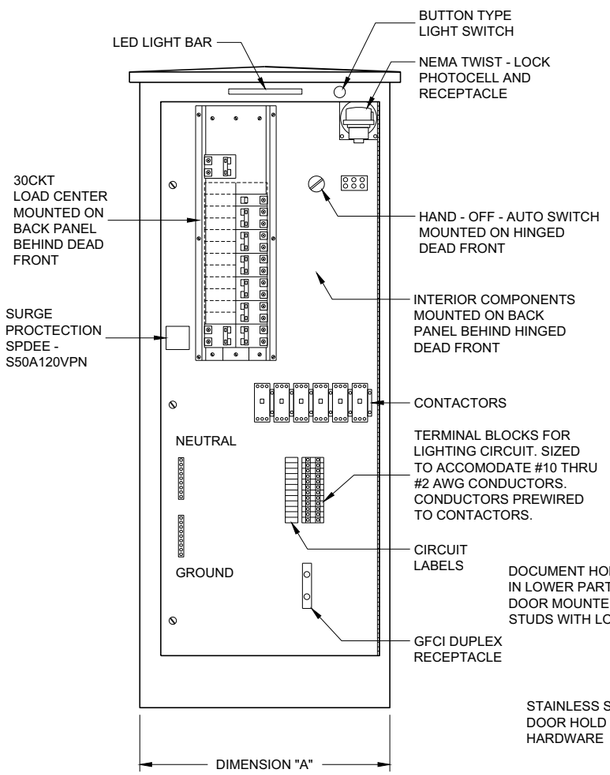

SIDE VIEW

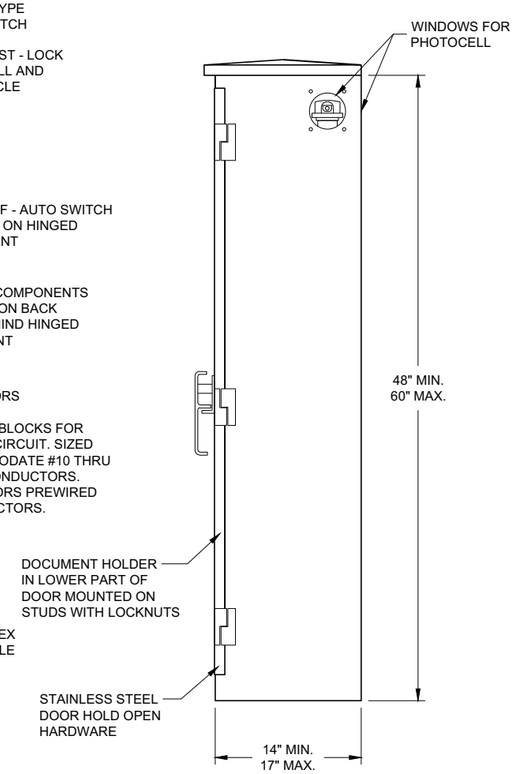

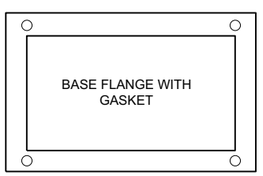

TABLE OF DIMENSIONS (INCHES)		
CONCRETE BASE TYPE	CABINET WIDTH	DIMENSION "A"
L24	24"	24"
L30	30"	30"

LIGHTING CONTROL CABINET

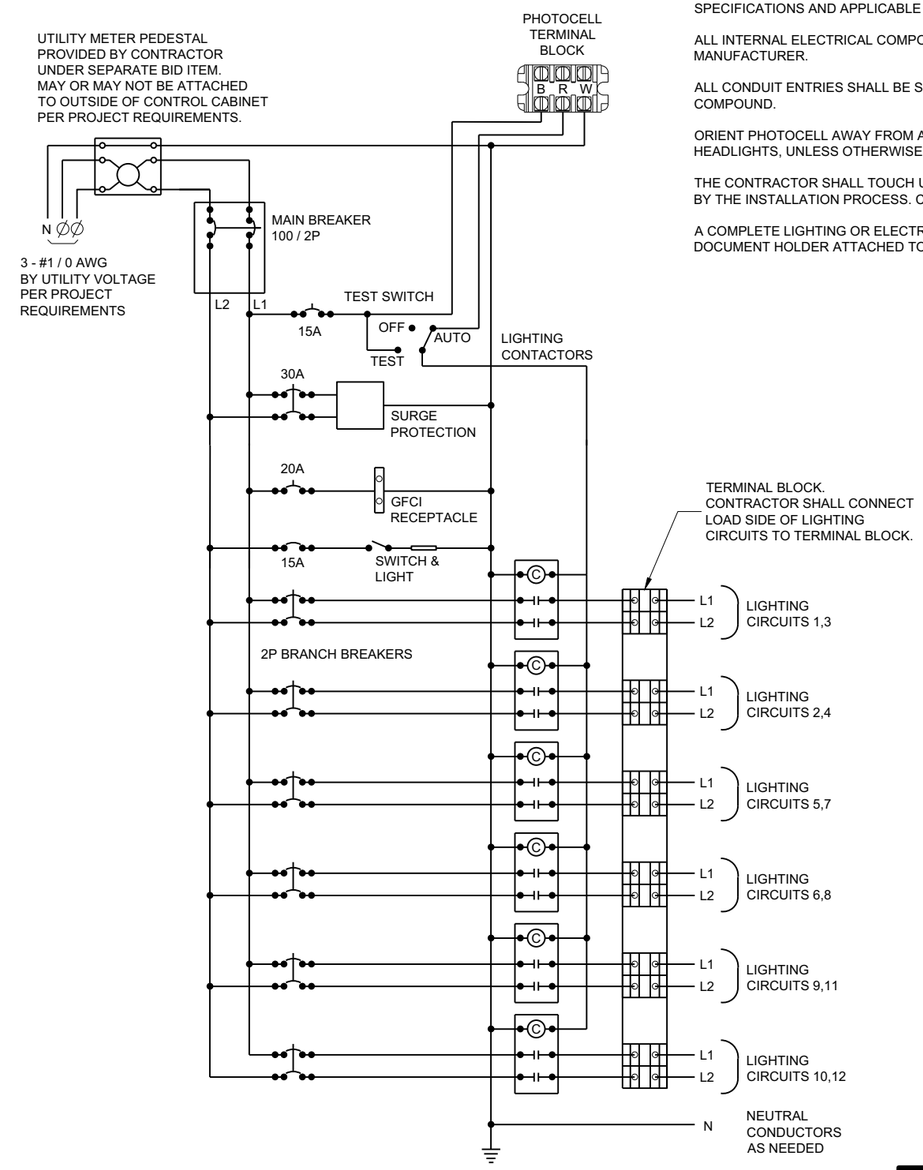

CONTROL CABINET SCHEMATIC

LIGHTING CONTROL CABINET
120 / 240 VOLT

STATE OF WISCONSIN
DEPARTMENT OF TRANSPORTATION

APPROVED
November 2018 — /S/ Ahmet Demirbilek
DATE — STATE ELECTRICAL ENGI
FHWA

6
SDD 09D04 - 03

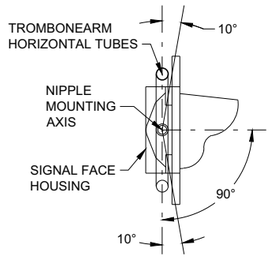

SECTION A-A

(10 DEGREES TILT REQUIREMENT OF FACE(S) IN THE TROMBONE MOUNTING)

FOR MANUFACTURERS USE ONLY

WELD TO BE 100% R.T. OR U.T. TESTED AS PER THE REQUIREMENTS OF AWS D 1.5-88. RECORDS OF COMPLIANCE OF SUCH TESTING SHALL BE FURNISHED TO THE OFFICE OF DESIGN / BRIDGE FOR VERIFICATION AND APPROVAL.

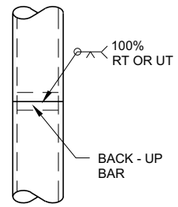

POLE SPLICE DETAIL

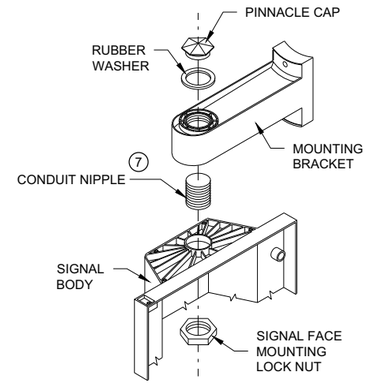

SIGNAL FACE MOUNTING DETAIL

(BANDED)

GENERAL NOTES

DETAILS OF CONSTRUCTION, MATERIALS AND WORKMANSHIP NOT SHOWN ON THIS DRAWING SHALL CONFORM TO THEPERTINENT REQUIREMENTS OF THE CONTRACT.

POLES SHALL BE EITHER ALUMINUM OR GALVANIZED STEEL AS CALLED FOR IN THE CONTRACT.

SECTION 657, POLES, OF THE STANDARD SPECIFICATIONS SHALL APPLY TO THIS DRAWING.

A PULL WIRE / ROPE SHALL BE INSTALLED IN EACH TROMBONE ARM RACEWAY DURING THE MANUFACTURING PROCESS.

TYPE 2 ALUMINUM POLES SHALL BE CONSTRUCTED OF 6063 - T6 ALUMINUM ALLOY. SLEEVING INSIDE THE POLE IS NOT ACCEPTABLE.

WHEN TRANSFORMER BASES ARE USED, WIRE CONNECTIONS SHALL BE MADE IN THE TRANSFORMER BASE.

1. 4" X 6" REINFORCED HANDHOLE AND COVER ASSEMBLY WITH TWO (2) ¼" X ¾" - 20 TPI , STAINLESS STEEL, HEX HEAD BOLTS.
2. SIGNAL FACE MOUNTING BRACKETS. MOUNT WITH CAP SCREWS AND BANDING.
3. GROMMETS. 1" CHASE NIPPLES OR 1" CLOSE CONDUIT NIPPLES WITH BUSHINGS SHALL BE PROVIDED FOR 1 ⅜" HOLE IN POLE SHAFT FOR WIRING.
4. SECURELY MOUNT DULL BLACK POLYCARBONATE BACKPLATES, PROJECTING 5" BEYOND ALL SIDES OF THE SIGNAL FACE HOUSING,PER MANUFACTURER'S RECOMMENDATIONS.
5. POLE MOUNTED SIGNAL FACES SHALL REQUIRE ONE OR MORE MOUNTING SPACERS UNDER THE TOP MOUNTING BRACKET(S) ASREQUIRED, TO PLUMB THE SIGNAL FACES.
6. CAST ALUMINUM TRANSFORMER BASE, WHEN REQUIRED.
7. USE 1 ½" ID NIPPLES ZINC-COATED RIGID METAL CONDUIT, LONG ENOUGH TO ACCOMMODATE FULL DEPTH THREADING INTO THE HEAD MOUNTING LOCK NUT IN ORDER TO TIGHTEN THE FACE, BUT THAT DO NOTINTERFERE WITH REFLECTOR CLOSURE. THREAD THE NIPPLE INTO THE MOUNTING BRACKET/ELBOW UNTIL TIGHT. USE APPROVED PINNACLE TYPE HARDWARE FROM A DEPARTMENT APPROVED MANUFACTURER TO CLOSE THE UNUSED 1 ½" OPENING IN SIGNAL FACES AND BRACKET ENDS.
8. VERTICAL STRUT (ADJUSTABLE). ONE (1) SET SCREW (¼" X ¾" - 20 TPI STAINLESS STEEL, HEX HEAD) INTO EACH ARM MEMBER IF STRUTIS THE SLIDING TYPE.
9. FURNISH AND INSTALL VENTILATED, CAST METALLIC (ALUMINUM ALLOY) CAPS. FASTEN CAPS WITH ONE (1) ¼" X ¾" - 20 TPI STAINLESS STEEL, HEX HEAD BOLT.
10. SHIMMING, IF NEEDED, SHALL BE LOCATED BETWEEN THE CONCRETE FOUNDATION AND THE TRANSFORMER BASE.
11. USE SERRATED LOCK WASHERS WITH NOTCHES BETWEEN END TEE AND SIGNAL HEAD.

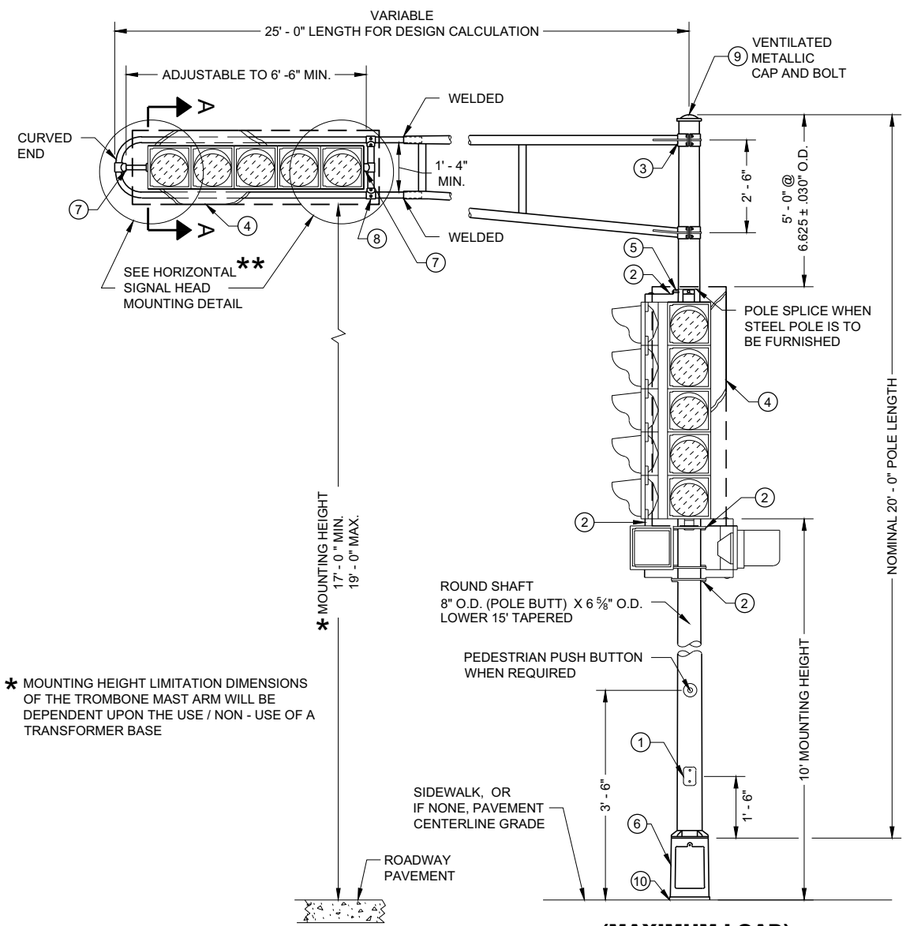

* MOUNTING HEIGHT LIMITATION DIMENSIONS OF THE TROMBONE MAST ARM WILL BE DEPENDENT UPON THE USE / NON - USE OF A TRANSFORMER BASE

(MAXIMUM LOAD)

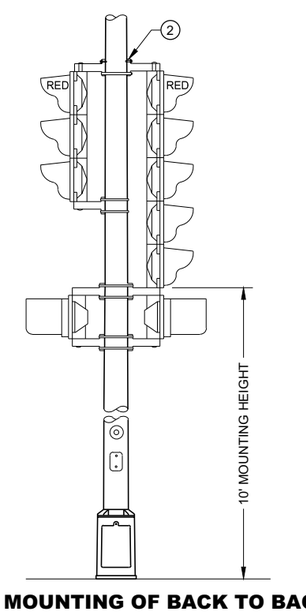

TYPICAL MOUNTING OF BACK TO BACK 3 AND 5 SECTION SIGNAL FACES

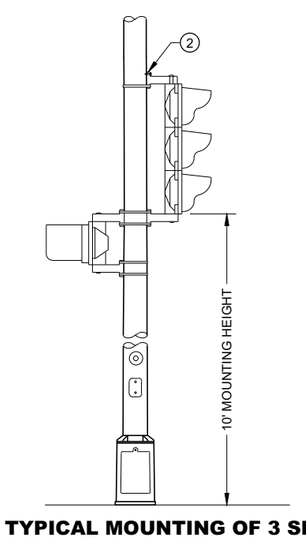

TYPICAL MOUNTING OF 3 SECTION SIGNAL FACE

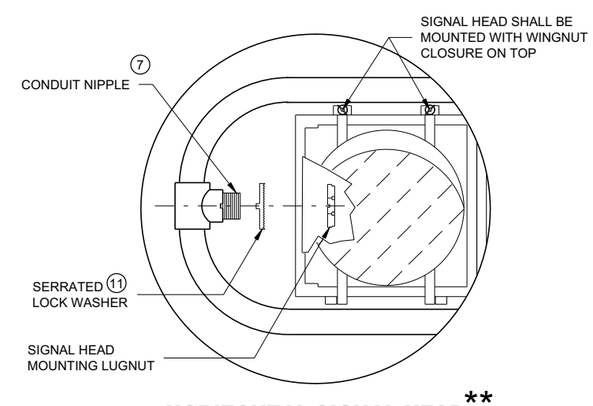

HORIZONTAL SIGNAL HEAD ** MOUNTING DETAIL

** SIGNAL HEAD ATTACHMENT ALSO APPLIES TO MOUNTING AT CROSS BAR

TYPE 2 POLE MOUNTING CONFIGURATION

POLE MOUNTINGS FOR TRAFFIC SIGNALS TYPE 2

STATE OF WISCONSIN
DEPARTMENT OF TRANSPORTAT

6

SDD 09E01 - 15a

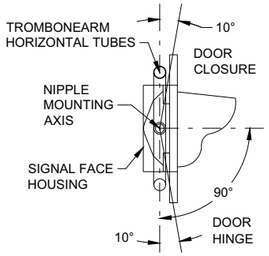

SECTION A-A

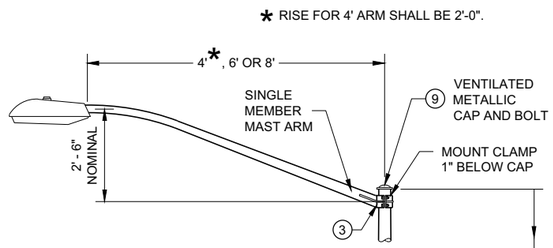

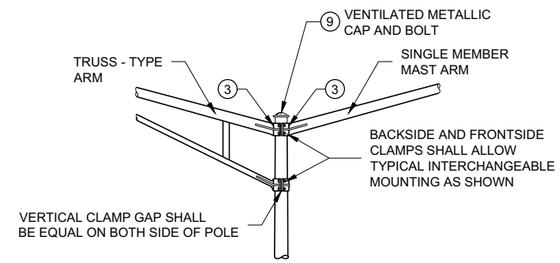

INTERCHANGEABLE MOUNTING DETAIL

GENERAL NOTES

DETAILS OF CONSTRUCTION, MATERIALS AND WORKMANSHIP NOT SHOWN ON THIS DRAWING SHALL CONFORM TO THE PERTINENT REQUIREMENTS OF THE CONTRACT.

ALL TYPE 3 POLE MOUNTINGS SHALL BE DESIGNED TO INCLUDE TWIN 15' ARMS WITH LUMINAIRES.

POLES SHALL BE GALVANIZED STEEL.

SECTION 657, POLES, OF THE STANDARD SPECIFICATIONS SHALL APPLY TO THIS DRAWING.

A PULL WIRE / ROPE SHALL BE INSTALLED IN EACH TROMBONE ARM RACEWAY DURING THE MANUFACTURING PROCESS.

THE SLIPFITTER END OF THE LUMINAIRE MAST ARM SHALL BE A NOMINAL 2 ⅜ INCHES IN OUTSIDE DIAMETER. THE STRAIGHT PORTION OF THE SLIPFITTER END OF THE LUMINAIRE MAST ARM SHALL BE A NOMINAL 12 INCHES IN LENGTH.

WHEN TRANSFORMER BASES ARE USED, WIRE CONNECTIONS SHALL BE MADE IN THE TRANSFORMER BASE.

1. 4" X 6" REINFORCED HANDHOLE AND COVER ASSEMBLY WITH TWO (2) ¼" X ¾" - 20 TPI , STAINLESS STEEL, HEX HEAD BOLTS.
2. SIGNAL FACE MOUNTING BRACKETS. MOUNT WITH CAP SCREWS AND BANDING.
3. GROMMETS. 1" CHASE NIPPLES OR 1" CLOSE CONDUIT NIPPLES WITH BUSHINGS SHALL BE PROVIDED FOR 1 ⅜" HOLE IN POLE SHAFT FOR WIRING.
4. SECURELY MOUNT DULL BLACK POLYCARBONATE BACKPLATES, PROJECTING 5" BEYOND ALL SIDES OF THE SIGNAL FACE HOUSING, PER MANUFACTURER'S RECOMMENDATIONS.
5. POLE MOUNTED SIGNAL FACES SHALL REQUIRE ONE OR MORE MOUNTING SPACERS UNDER THE TOP MOUNTING BRACKET(S) AS REQUIRED, TO PLUMB THE SIGNAL FACE.
6. CAST ALUMINUM TRANSFORMER BASE, WHEN REQUIRED. UNDER MAX LOADING, TYPE 3 POLE SHALL BE MOUNTED DIRECTLY TO ITS CONCRETE BASE.
7. USE 1 ½" ID NIPPLES ZINC-COATED RIGID METAL CONDUIT, LONG ENOUGH TO ACCOMMODATE FULL DEPTH THREADING INTO THE HEAD MOUNTING LOCK NUT IN ORDER TO TIGHTEN THE FACE, BUT THAT DO NOT INTERFERE WITH REFLECTOR CLOSURE. THREAD THE NIPPLE INTO THE MOUNTING BRACKET/ELBOW UNTIL TIGHT. USE APPROVED PINNACLE TYPE HARDWARE FROM A DEPARTMENT APPROVED MANUFACTURER TO CLOSE THE UNUSED 1 ½" OPENING IN SIGNAL FACES AND BRACKET ENDS.
8. VERTICAL STRUT (ADJUSTABLE). ONE (1) SET SCREW (¼" X ¾" - 20 TPI STAINLESS STEEL, HEX HEAD) INTO EACH ARM MEMBER IF STRUT IS THE SLIDING TYPE.
9. FURNISH AND INSTALL VENTILATED, CAST METALLIC (ALUMINUM ALLOY) CAPS. FASTEN CAPS WITH ONE (1) ¼" X ¾" - 20 TPI STAINLESS STEEL, HEX HEAD BOLT.
10. SHIMMING, IF NEEDED, SHALL BE LOCATED BETWEEN THE CONCRETE FOUNDATION AND POLE.
11. USE SERRATED LOCK WASHERS WITH NOTCHES BETWEEN END TEE AND SIGNAL HEAD.

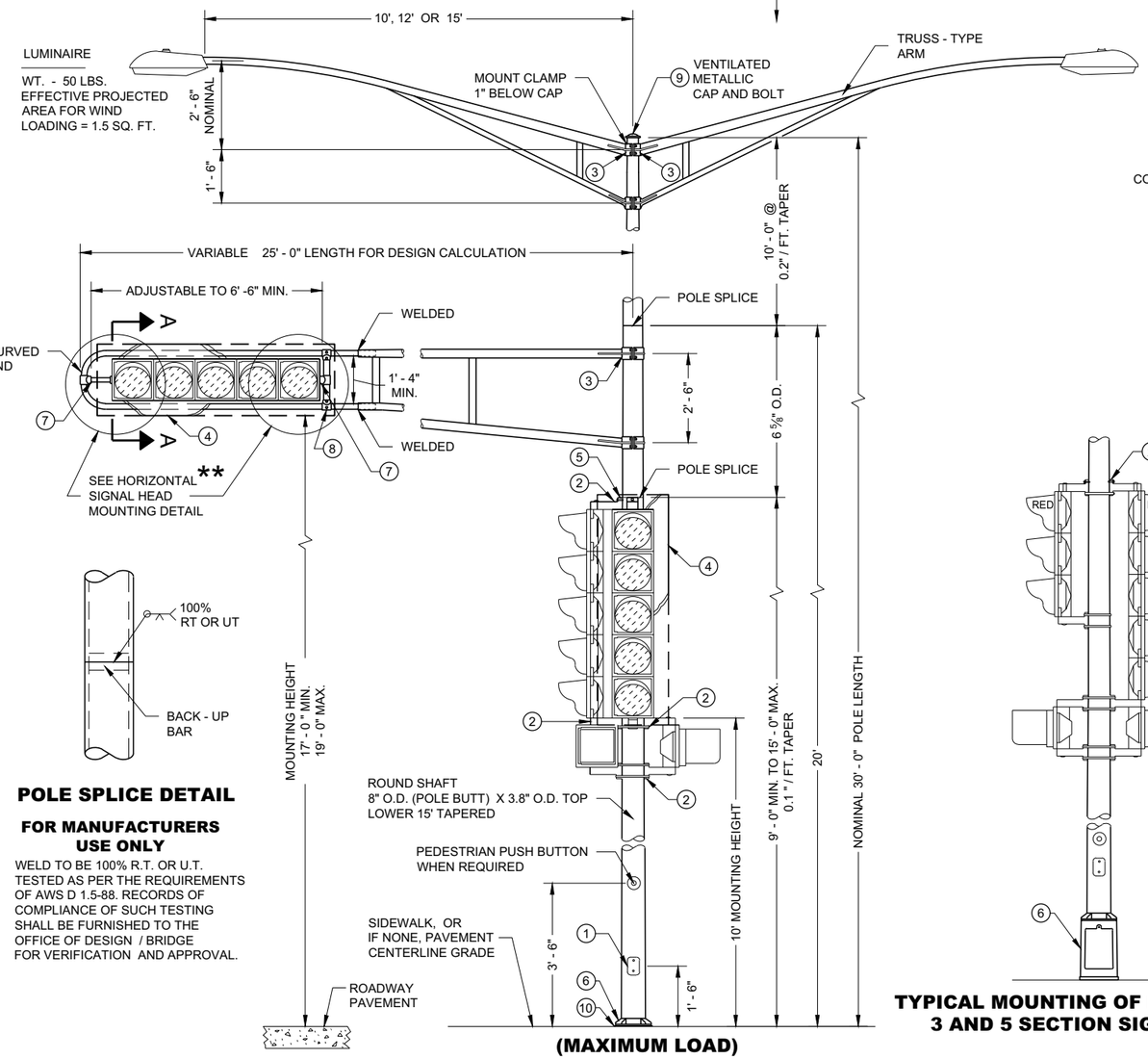

POLE SPLICE DETAIL

FOR MANUFACTURERS USE ONLY

WELD TO BE 100% R.T. OR U.T. TESTED AS PER THE REQUIREMENTS OF AWS D 1.5-88. RECORDS OF COMPLIANCE OF SUCH TESTING SHALL BE FURNISHED TO THE OFFICE OF DESIGN / BRIDGE FOR VERIFICATION AND APPROVAL.

(MAXIMUM LOAD)

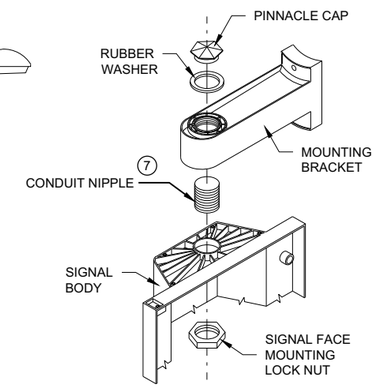

SIGNAL FACE MOUNTING DETAIL

(BANDED)

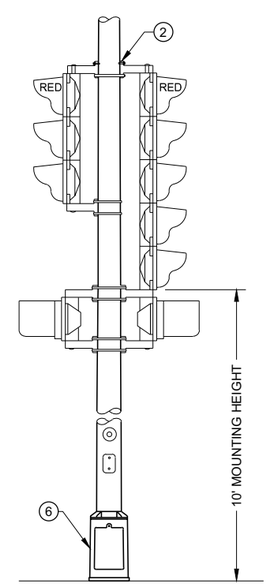

TYPICAL MOUNTING OF BACK TO BACK 3 AND 5 SECTION SIGNAL FACES

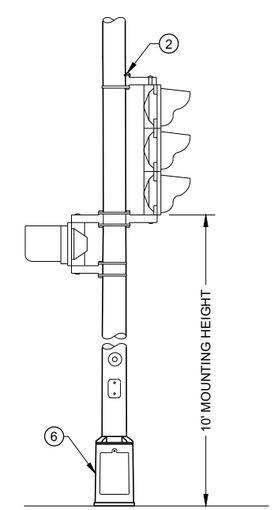

TYPICAL MOUNTING OF 3 SECTION SIGNAL FACE

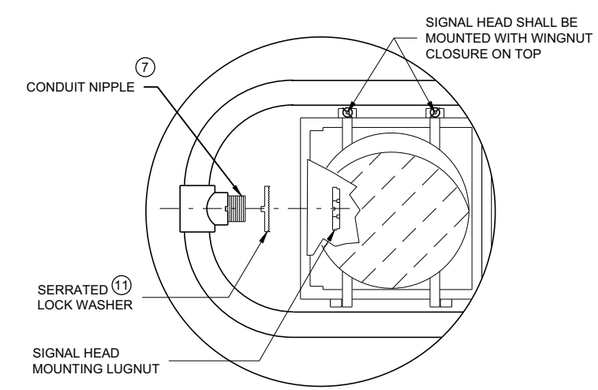

HORIZONTAL SIGNAL HEAD ** MOUNTING DETAIL

** SIGNAL HEAD ATTACHMENT ALSO APPLIES TO MOUNTING AT CROSS BAR

TYPE 3 POLE MOUNTING CONFIGURATION

POLE MOUNTINGS FOR TRAFFIC SIGNALS AND LIGHTING UNITS TYPE 3 (HEAVY DUTY)

STATE OF WISCONSIN
DEPARTMENT OF TRANSPORTA

6

SDD 09E01 - 15b

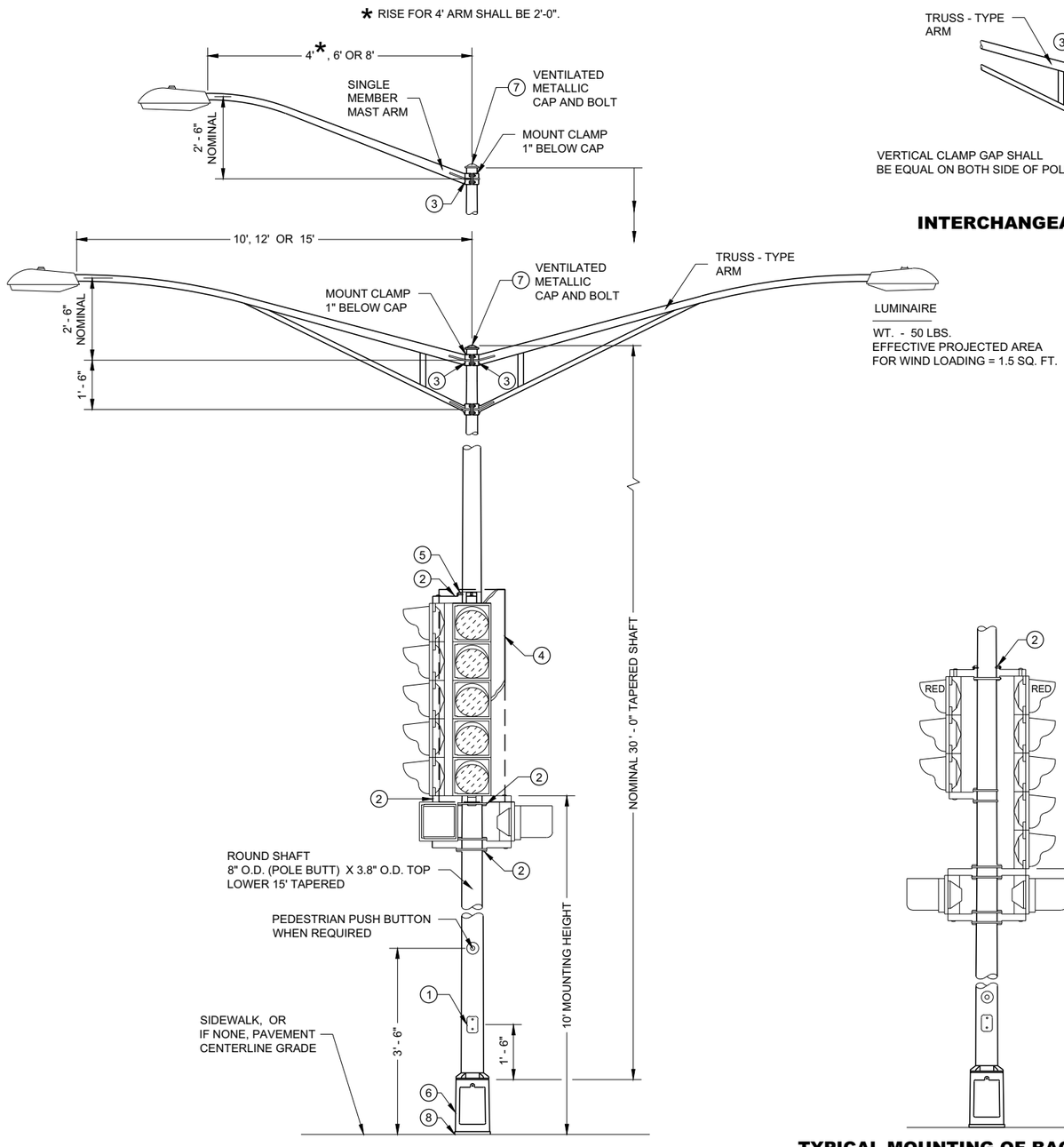

(MAXIMUM LOAD)

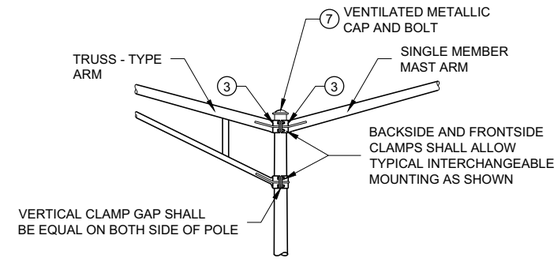

INTERCHANGEABLE MOUNTING DETAIL

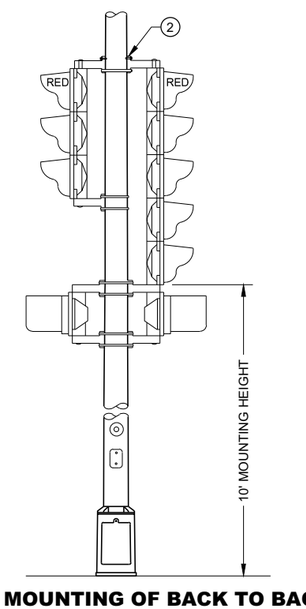

TYPICAL MOUNTING OF BACK TO BACK 3 AND 5 SECTION SIGNAL FACES

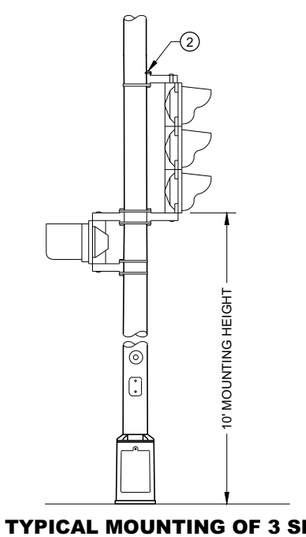

TYPICAL MOUNTING OF 3 SECTION SIGNAL FACE

TYPE 4 POLE MOUNTING CONFIGURATION

GENERAL NOTES

DETAILS OF CONSTRUCTION, MATERIALS AND WORKMANSHIP NOT SHOWN ON THIS DRAWING SHALL CONFORM TO THE PERTINENT REQUIREMENTS OF THE CONTRACT.

ALL TYPE 4 POLE MOUNTINGS SHALL BE DESIGNED TO INCLUDE TWIN 15' ARMS WITH LUMINAIRES.

POLES SHALL BE GALVANIZED STEEL WITH A MINIMUM WALL THICKNESS OF U.S. STANDARD 11 GAGE (.1196").

SECTION 657, POLES, OF THE STANDARD SPECIFICATIONS SHALL APPLY TO THIS DRAWING.

A PULL WIRE / ROPE SHALL BE INSTALLED IN EACH TROMBONE ARM RACEWAY DURING THE MANUFACTURING PROCESS.

THE SLIPFITTER END OF THE LUMINAIRE MAST ARM SHALL BE A NOMINAL 2 ⅜ INCHES IN OUTSIDE DIAMETER. THE STRAIGHT PORTION OF THE SLIPFITTER END OF THE LUMINAIRE MAST ARM SHALL BE A NOMINAL 12 INCHES IN LENGTH.

WHEN TRANSFORMER BASES ARE USED, WIRE CONNECTIONS SHALL BE MADE IN THE TRANSFORMER BASE.

1. 4" X 6" REINFORCED HANDHOLE AND COVER ASSEMBLY WITH TWO (2) ¼" X ¾" - 20 TPI , STAINLESS STEEL, HEX HEAD BOLTS.
2. SIGNAL FACE MOUNTING BRACKETS. MOUNT WITH CAP SCREWS AND BANDING.
3. GROMMETS. 1" CHASE NIPPLES OR 1" CLOSE CONDUIT NIPPLES WITH BUSHINGS SHALL BE PROVIDED FOR 1 ⅜" HOLE IN POLE SHAFT FOR WIRING.
4. SECURELY MOUNT DULL BLACK POLYCARBONATE BACKPLATES, PROJECTING 5" BEYOND ALL SIDES OF THE SIGNAL FACE HOUSING, PER MANUFACTURER'S RECOMMENDATIONS.
5. POLE MOUNTED SIGNAL FACES SHALL REQUIRE ONE OR MORE MOUNTING SPACERS UNDER THE TOP MOUNTING BRACKET(S) AS REQUIRED, TO PLUMB THE SIGNAL FACE.
6. CAST ALUMINUM TRANSFORMER BASE, WHEN REQUIRED.
7. FURNISH AND INSTALL VENTILATED, CAST METALLIC (ALUMINUM ALLOY) CAPS. FASTEN CAPS WITH ONE (1) ¼" X ¾" - 20 TPI STAINLESS STEEL, HEX HEAD BOLT.
8. SHIMMING, IF NEEDED, SHALL BE LOCATED BETWEEN THE CONCRETE FOUNDATION AND POLE.
9. USE 1 ½" ID NIPPLES ZINC-COATED RIGID METAL CONDUIT, LONG ENOUGH TO ACCOMMODATE FULL DEPTH THREADING INTO THE HEAD MOUNTING LOCK NUT IN ORDER TO TIGHTEN THE FACE, BUT THAT DO NOT INTERFERE WITH REFLECTOR CLOSURE. THREAD THE NIPPLE INTO THE MOUNTING BRACKET/ELBOW UNTIL TIGHT. USE APPROVED PINNACLE TYPE HARDWARE FROM A DEPARTMENT APPROVED MANUFACTURER TO CLOSE THE UNUSED 1 ½" OPENING IN SIGNAL FACES AND BRACKET ENDS.

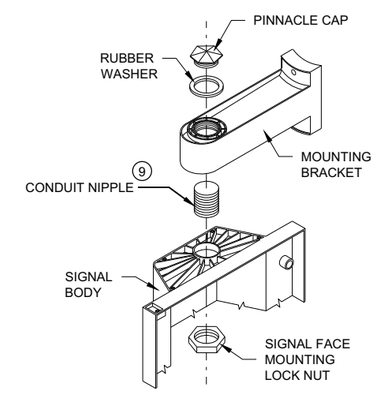

SIGNAL FACE MOUNTING DETAIL
(BANDED)

POLE MOUNTINGS FOR TRAFFIC SIGNALS AND LIGHTING UNITS, TYPE 4

STATE OF WISCONSIN
DEPARTMENT OF TRANSPORTATION

6

6

SDD 09E01 - 15c

SDD 09E01 - 15c

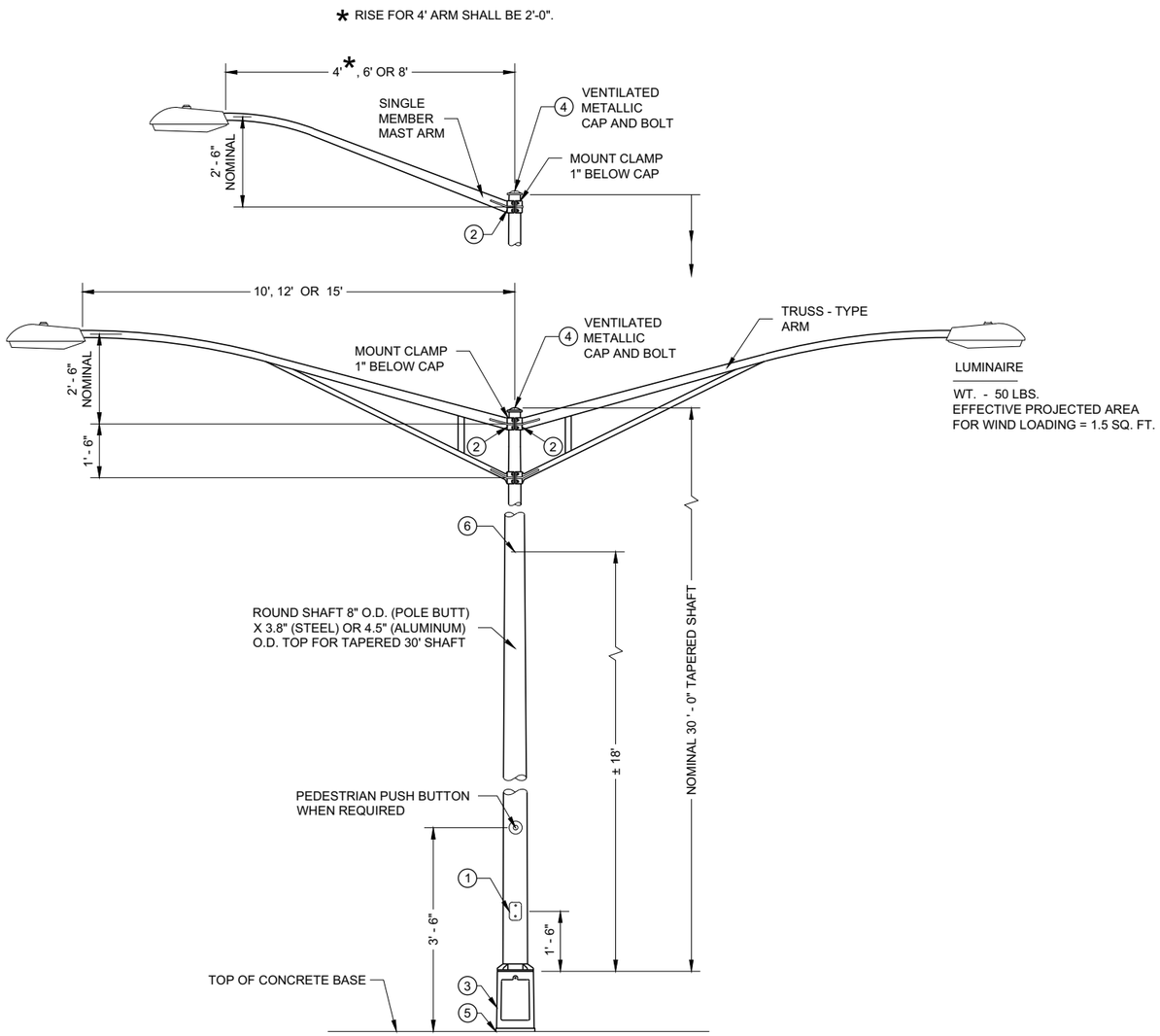

TYPE 5 POLE MOUNTING CONFIGURATION

(MAXIMUM LOAD)

LIGHTING ONLY

GENERAL NOTES

DETAILS OF CONSTRUCTION, MATERIALS AND WORKMANSHIP NOT SHOWN ON THIS DRAWING SHALL CONFORM TO THE PERTINENT REQUIREMENTS OF THE CONTRACT.

SECTION 657, POLES, OF THE STANDARD SPECIFICATIONS SHALL APPLY TO THIS DRAWING.

ALL TYPE 5 POLE MOUNTINGS SHALL BE DESIGNED TO INCLUDE TWIN 15' ARMS WITH LUMINAIRES.

POLES SHALL BE GALVANIZED STEEL OR ALUMINUM, AS CALLED FOR IN THE CONTRACT.

TYPE 5 ALUMINUM POLES SHALL BE CONSTRUCTED OF 6063 - T6 ALUMINUM ALLOY. SLEEVING INSIDE THE POLE IS NOT ACCEPTABLE.

TYPE 5 ALUMINUM POLES SHALL HAVE A MINIMUM WALL THICKNESS OF 0.1888".

TYPE 5 STEEL POLES SHALL HAVE A MINIMUM WALL THICKNESS OF U.S. STANDARD 11 GAGE (0.1196").

THE SLIPFITTER END OF THE LUMINAIRE MAST ARM SHALL BE A NOMINAL 2 ⅜ INCHES IN OUTSIDE DIAMETER. THE STRAIGHT PORTION OF THE SLIPFITTER END OF THE LUMINAIRE MAST ARM SHALL BE A NOMINAL 12 INCHES IN LENGTH.

WHEN TRANSFORMER BASES ARE USED, WIRE CONNECTIONS SHALL BE MADE IN THE TRANSFORMER BASE.

1. 4" X 6" REINFORCED HANDHOLE AND COVER ASSEMBLY WITH TWO (2) ¼" X ¾" - 20 TPI , STAINLESS STEEL, HEX HEAD BOLTS.
2. GROMMETS. 1" CHASE NIPPLES OR 1" CLOSE CONDUIT NIPPLES WITH BUSHINGS SHALL BE PROVIDED FOR 1 ⅜" HOLE IN POLE SHAFT FOR WIRING.
3. CAST ALUMINUM TRANSFORMER BASE, WHEN REQUIRED.
4. FURNISH AND INSTALL VENTILATED, CAST METALLIC (ALUMINUM ALLOY) CAPS. FASTEN CAPS WITH ONE (1) ¼" X ¾" - 20 TPI STAINLESS STEEL, HEX HEAD BOLT.
5. SHIMMING, IF NEEDED, SHALL BE LOCATED BETWEEN THE CONCRETE FOUNDATION AND POLE.
6. INTERNAL DUMBBELL - TYPE VIBRATION DAMPER.

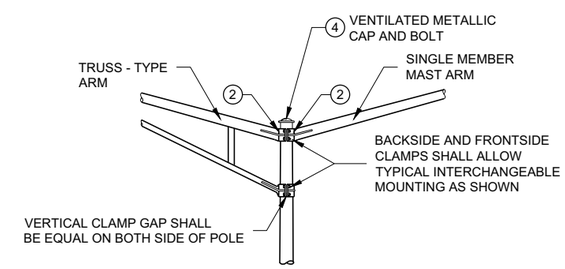

INTERCHANGEABLE MOUNTING DETAIL

6

6

SDD 09E01 - 15d

SDD 09E01 - 15d

POLE MOUNTINGS FOR LIGHTING UNITS, TYPE 5 (30 FEET)

STATE OF WISCONSIN
DEPARTMENT OF TRANSPORTAT

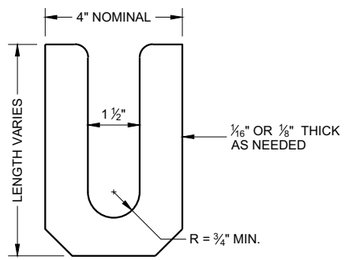

LEVELING SHIM (1)
SHALL BE ALUMINUM

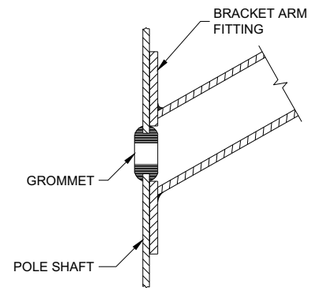

TYPICAL APPLICATION OF GROMMET IN POLE SHAFT

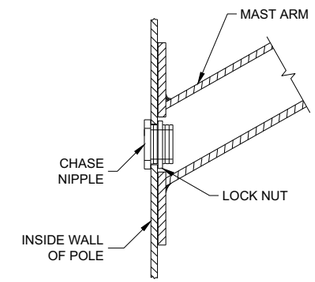

TYPICAL APPLICATION OF CHASE NIPPLE IN POLE SHAFT

GENERAL NOTES

CLAMP BOLT-NUT TIGHTENING TORQUE SHALL BE INDICATED BY INDENT STAMPING (1/2 INCH NUMERALS AND LETTERS) OR WEATHERPROOF PRINTING ON THE INSIDE OF THE CLAMP THAT IS WELDED TO THE ARM MEMBER.

(1) 4.5" I.D. FOR LUMINAIRE MAST ARM CLAMP. 6.625" I.D. FOR TROMBONE MAST ARM CLAMP.

(2) INDIVIDUAL BASE PLATE ANCHOR ROD COVERS. (4 REQUIRED)

(3) BASE PLATE SLOTTED TO ACCEPT 11" THROUGH 12" BOLT CIRCLE USING 1" DIAMETER ANCHOR RODS.

(4) LEVELING SHIMS, DESIGNED FOR THE PURPOSE, SHALL BE USED WHEN PLUMBING POLES. THE USE OF WASHERS IN LIEU OF PROPER LEVELING SHIMS IS NOT ACCEPTABLE. LEVELING SHIMS SHALL BE USED ONLY BETWEEN THE TOP OF THE CONCRETE BASE AND A METALLIC BASE PLATE.

SHIMS SHALL BE LONG ENOUGH AND WIDE ENOUGH TO COMPLETELY COVER THE AREA UNDER THE LENGTH AND WIDTH OF THE BASE MOUNTING FLANGE.

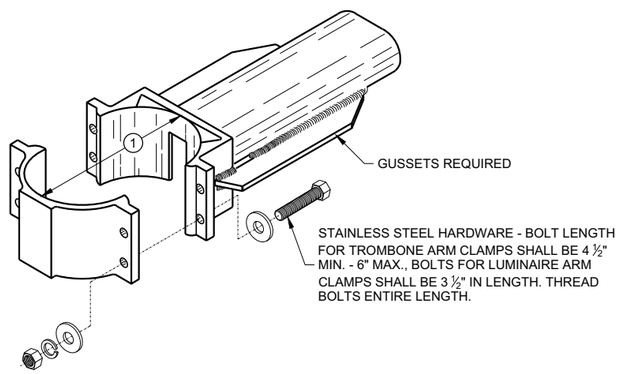

TYPICAL TROMBONE MAST ARM AND SINGLE LUMINAIRE MAST ARM MOUNTING CLAMP

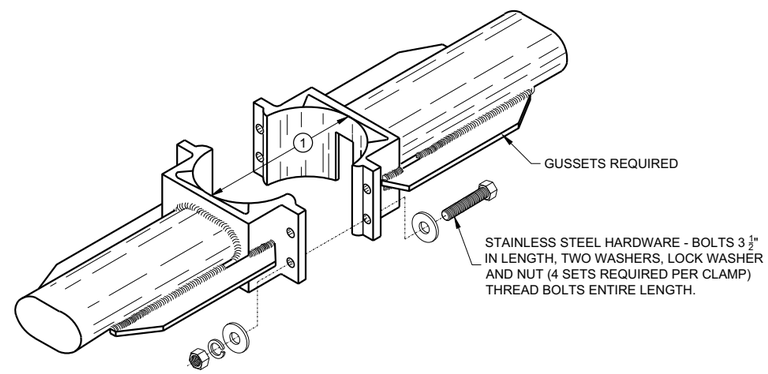

TYPICAL LUMINAIRE MAST ARM (DOUBLE) MOUNTING BRACKETS

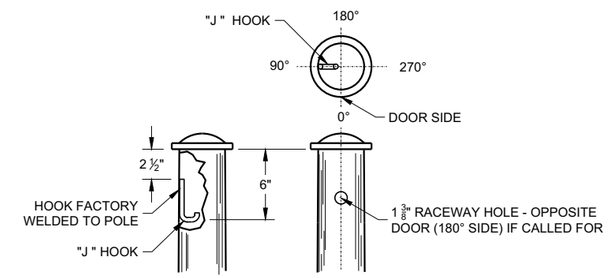

TYPICAL "J" HOOK LOCATION

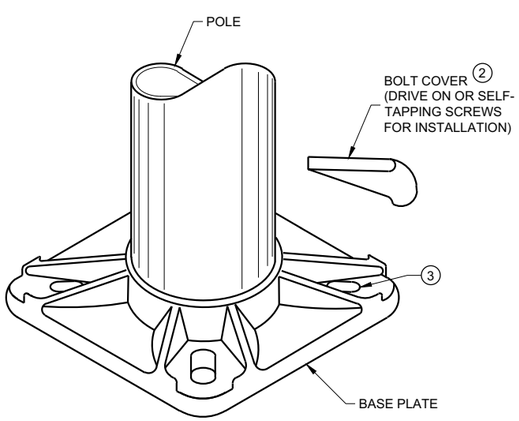

BASE PLATE

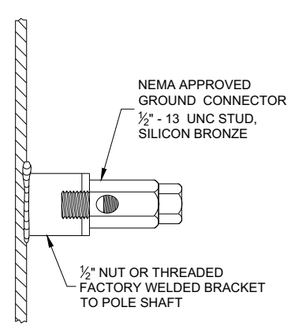

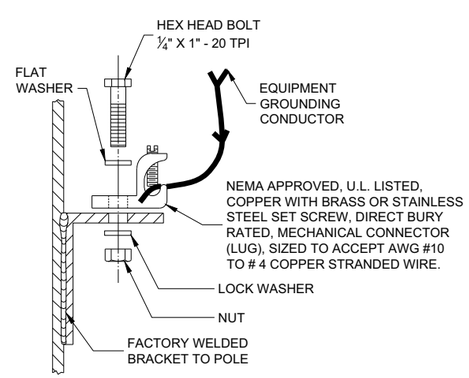

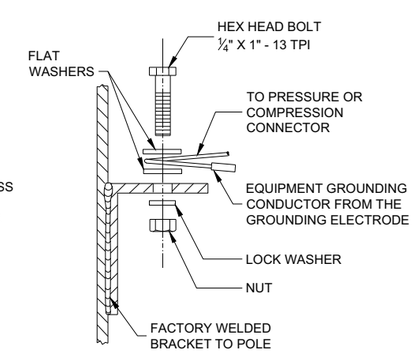

TYPICAL GROUNDING CONNECTIONS
NUT, BOLT AND WASHERS SHALL BE STAINLESS STEEL

HARDWARE DETAILS FOR POLE MOUNTING

STATE OF WISCONSIN
DEPARTMENT OF TRANSPORTATION

APPROVED
November 2018 /S/ Ahmet Demirbilek
DATE STATE ELECTRICAL ENGI

FHWA

6

SDD 09E01 - 15g

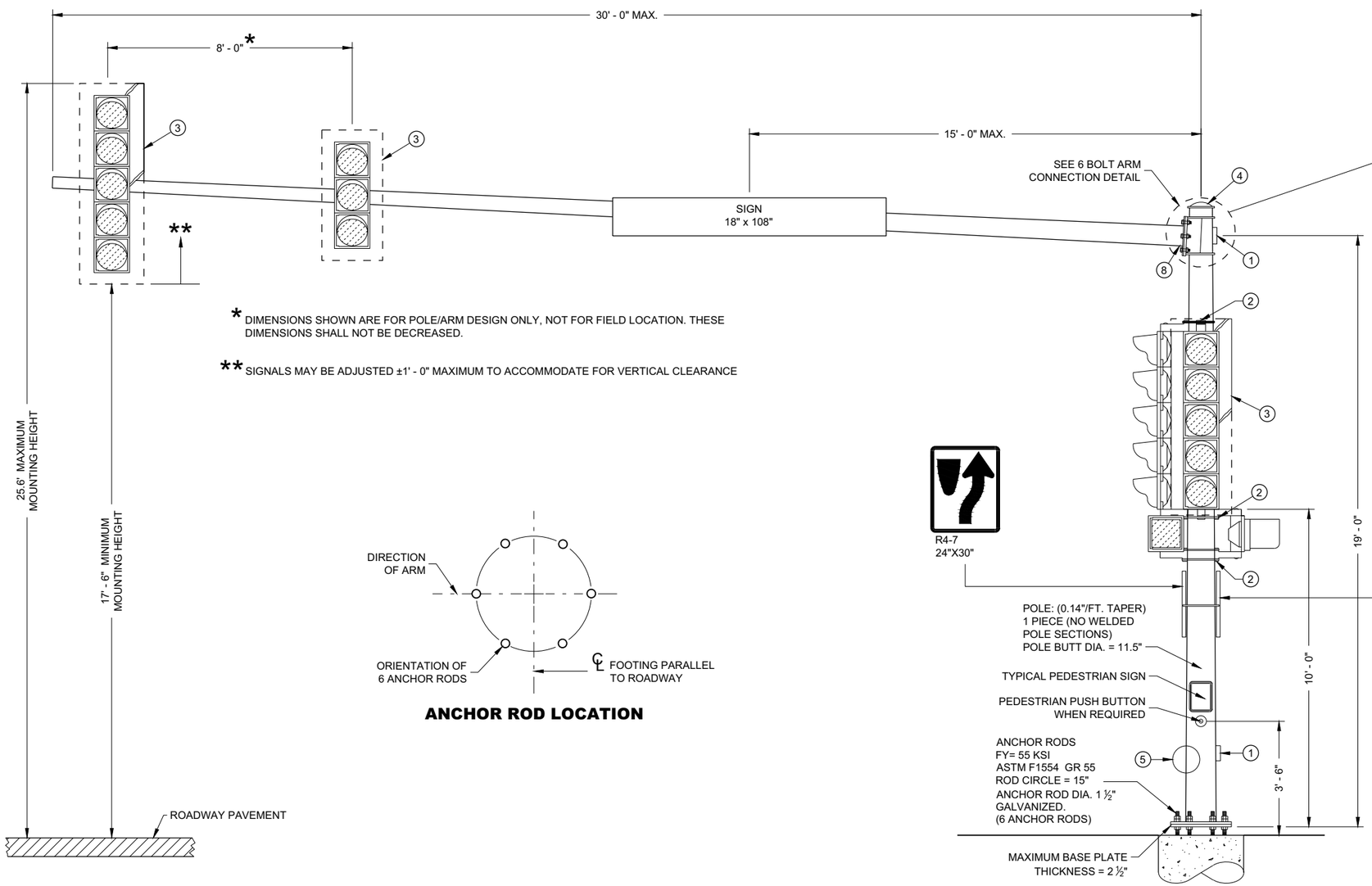

* DIMENSIONS SHOWN ARE FOR POLE/ARM DESIGN ONLY, NOT FOR FIELD LOCATION. THESE DIMENSIONS SHALL NOT BE DECREASED.

** SIGNALS MAY BE ADJUSTED ±1' - 0" MAXIMUM TO ACCOMMODATE FOR VERTICAL CLEARANCE

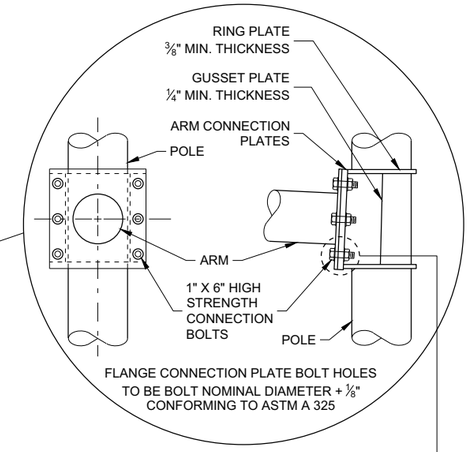

6 BOLT ARM CONNECTION DETAIL

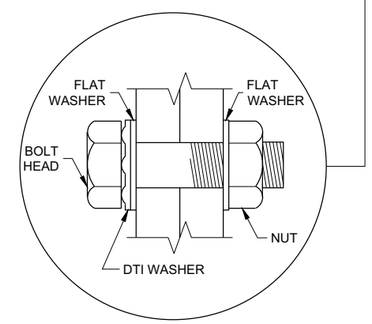

RECOMMENDED BOLT ASSEMBLY DETAIL

ANCHOR ROD LOCATION

TYPE 9 POLE
15' - 30' MONOTUBE ARM
(MAXIMUM LOAD)

6

6

SDD 09E08 - 09a

SDD 09E08 - 09a

TYPE 9 POLE
15' - 30' MONOTUBE ARM

STATE OF WISCONSIN
DEPARTMENT OF TRANSPORTATION

APPROVED
August 2020 — DATE
/S/ Ahmet Demirbilek — STATE ELECTRICAL ENGI
FHWA

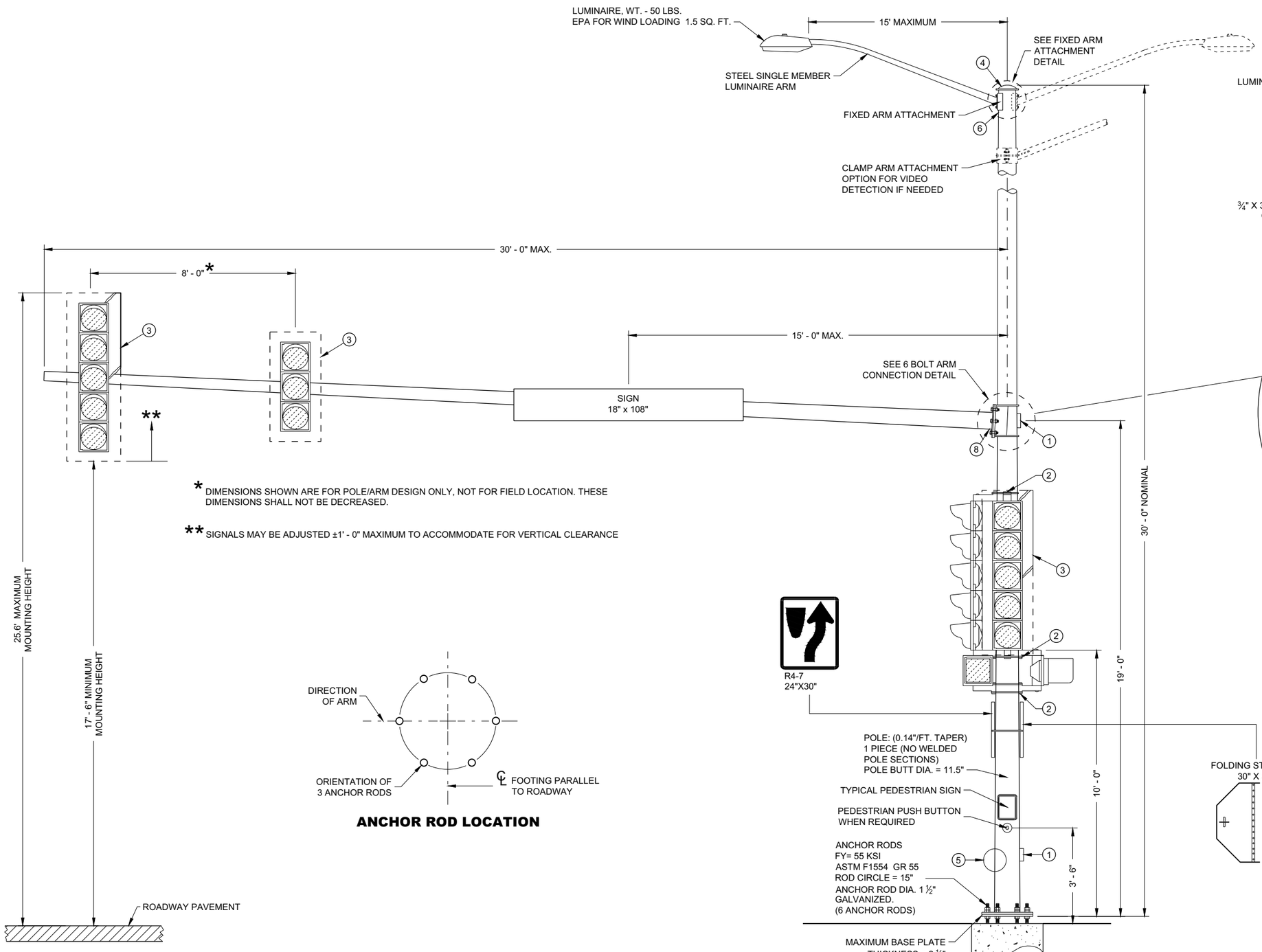

* DIMENSIONS SHOWN ARE FOR POLE/ARM DESIGN ONLY, NOT FOR FIELD LOCATION. THESE DIMENSIONS SHALL NOT BE DECREASED.

** SIGNALS MAY BE ADJUSTED ±1' - 0" MAXIMUM TO ACCOMMODATE FOR VERTICAL CLEARANCE

ANCHOR ROD LOCATION

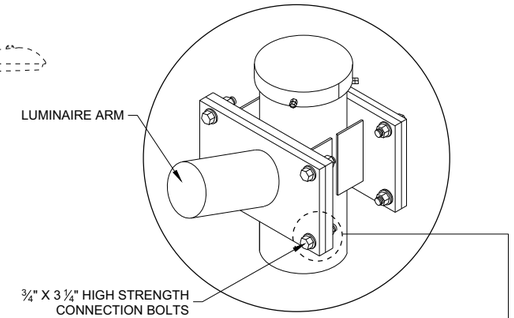

FIXED ARM ATTACHMENT DETAIL

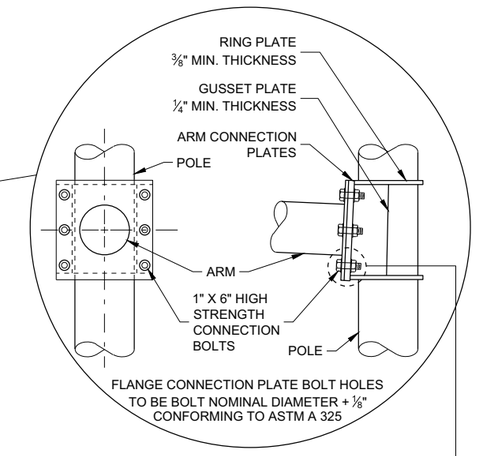

6 BOLT ARM CONNECTION DETAIL

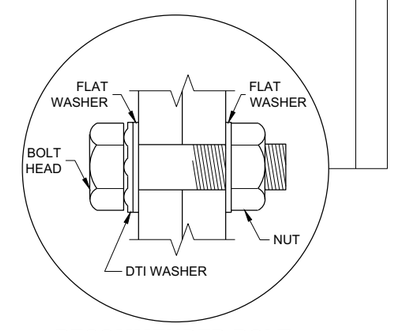

RECOMMENDED BOLT ASSEMBLY DETAIL

TYPE 10 POLE
15' - 30' MONOTUBE ARM
(MAXIMUM LOAD)

TYPE 10 POLE
15' - 30 MONOTUBE ARM

STATE OF WISCONSIN
DEPARTMENT OF TRANSPORTATION

APPROVED
August 2020 /S/ Ahmet Demirbilek
DATE STATE ELECTRICAL ENGI
FHWA

6

6

SDD 09E08 - 09e

SDD 09E08 - 09e

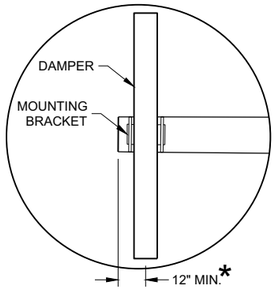

DUMBBELL VIBRATION DAMPER

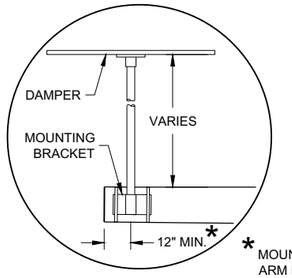

FLAT VIBRATION DAMPER

* MOUNT AS CLOSE TO END OF MAST ARM FOR MAXIMUM DAMPING PER MANUFACTURER'S RECOMMENDATIONS.

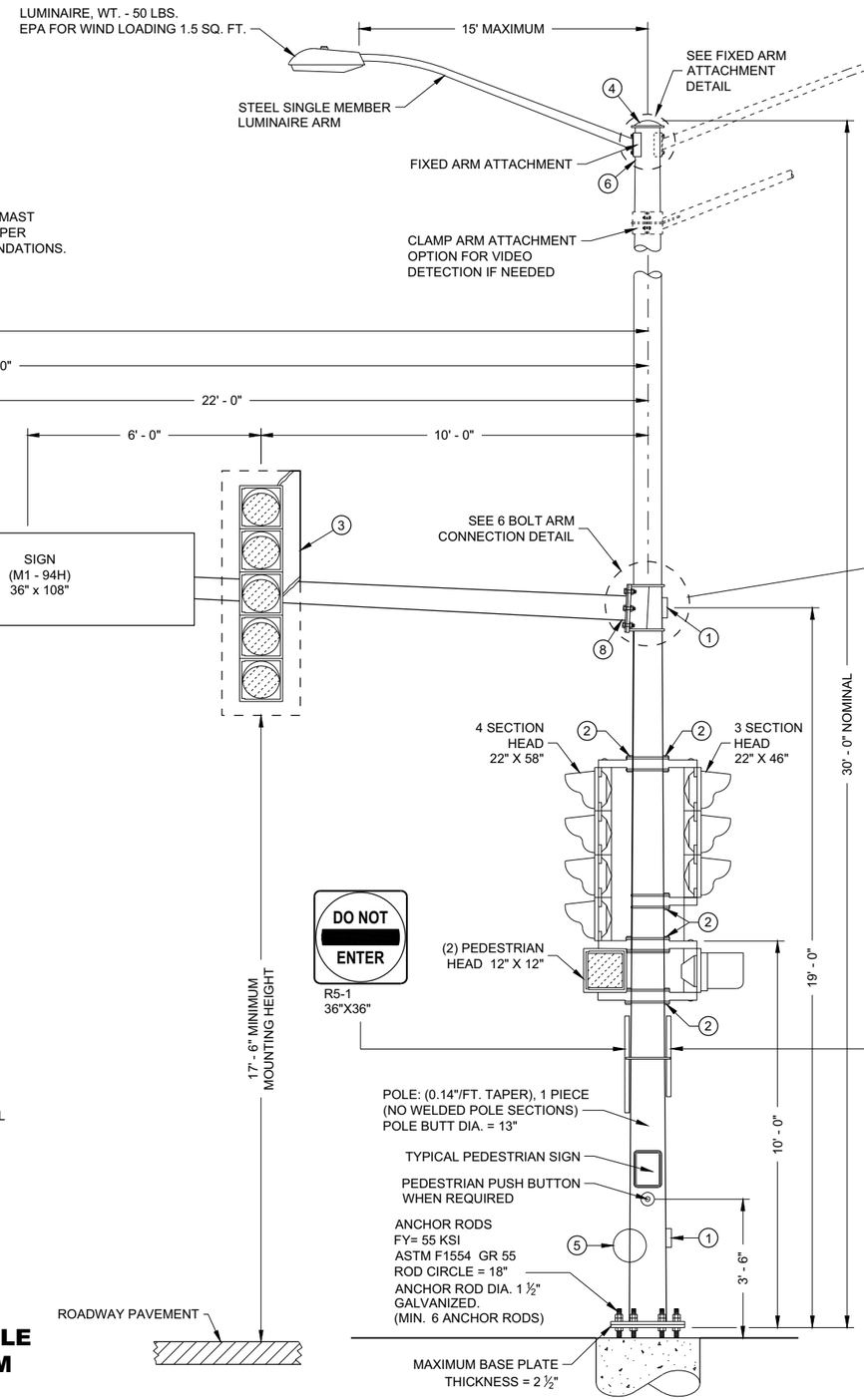

TYPE 10 SPECIAL POLE
35' MONOTUBE ARM
(MAXIMUM LOAD)

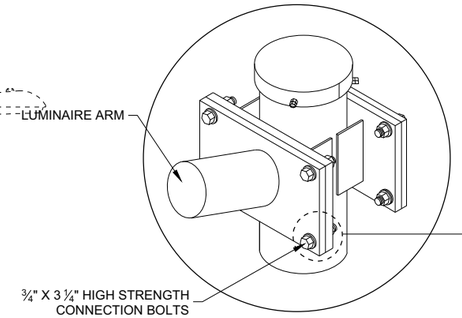

FIXED ARM ATTACHMENT DETAIL

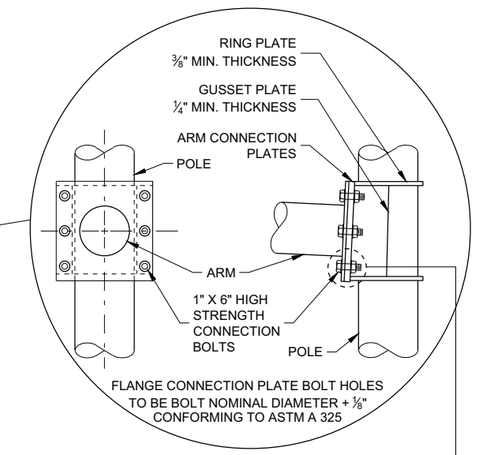

6 BOLT ARM CONNECTION DETAIL

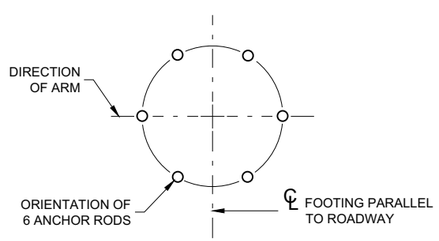

ANCHOR ROD LOCATION

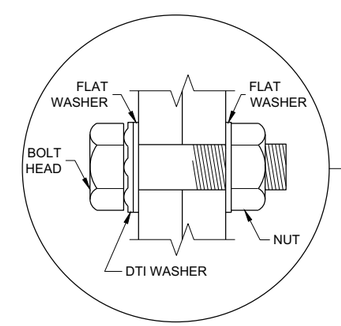

RECOMMENDED BOLT ASSEMBLY DETAIL

TYPE 10 SPECIAL POLE
35' MONOTUBE ARM

STATE OF WISCONSIN
DEPARTMENT OF TRANSPORTATION

APPROVED
August 2020 — DATE
/S/ Ahmet Demirbilek — STATE ELECTRICAL ENGI
FHWA

6

6

SDD 09E08 - 09f

SDD 09E08 - 09f

GENERAL NOTES

DETAILS OF CONSTRUCTION NOT SHOWN ON THIS DRAWING SHALL CONFORM TO THE PERTINENT REQUIREMENTS OF THE CONTRACT.

OVER HEIGHT POLE TYPES 9 AND 10 ARE FOR ARM LENGTHS 15 FOOT TO 30 FOOT.

OVER HEIGHT POLE TYPES 9 SPECIAL AND 10 SPECIAL ARE FOR ARM LENGTHS 35 FOOT, 40 FOOT, AND 45 FOOT

OVER HEIGHT POLE TYPES 12 AND 13 ARE FOR ARM LENGTHS 35 FOOT TO 55 FOOT.

MONOTUBE POLES AND ARMS SHALL BE GALVANIZED STEEL.

RING STIFFENED BUILT UP BOX TYPE OF ATTACHMENT FOR TRAFFIC SIGNAL ARM.

ONE (1) PIECE POLE CONSTRUCTION (NO WELDED POLE SECTIONS).

STANDARD STRAIGHT ARM DESIGN (3% ± RISE).

SECTION 657, POLES OF THE STANDARD SPECIFICATION SHALL APPLY TO THIS DRAWING.

PROVIDE WIREWAY THRU POLE WALL AND ARM CONNECTION PLATES. PROVIDE ROUND, SMOOTH INSIDE SURFACE.

MANUFACTURER'S SUBMITTED POLE DESIGNS AND DRAWINGS SHALL BE SIGNED AND STAMPED BY A REGISTERED PROFESSIONAL ENGINEER AND CERTIFIED AS BEING IN COMPLIANCE WITH THE AASHTO "LRFD SPECIFICATIONS FOR STRUCTURAL SUPPORTS FOR HIGHWAY SIGNS, LUMINAIRES AND TRAFFIC SIGNAL 2015 1ST EDITION (INCLUDING INTERIM REVISIONS)" AND ALL PERTINENT WISDOT SPECIFICATIONS AND DRAWINGS FOR THE LIGHTING STRUCTURES AS FOLLOWS:

CATEGORY III FATIGUE LOADS OF GALLOPING, TRUCK GUSTS (AT 45 MPH VEHICLE VELOCITY) AND NATURAL WIND GUSTS FOR DESIGN OF OVER HEIGHT TYPE 9 AND TYPE 10 STRUCTURES.

CATEGORY II FATIGUE LOADS OF TRUCK GUSTS (AT 45 MPH VEHICLE VELOCITY) AND NATURAL WIND GUSTS FOR DESIGN OF OVER HEIGHT TYPE 9 SPECIAL AND TYPE 10 SPECIAL STRUCTURES. IN LIEU OF DESIGNING FOR GALLOPING, A VIBRATION DAMPER MITIGATION DEVICE IS REQUIRED TO BE SUPPLIED AND INSTALLED AT THE END OF THE MAST ARM.

CATEGORY II FATIGUE FATIGUE LOADS OF GALLOPING, TRUCK GUSTS (AT 45 MPH VEHICLE VELOCITY) AND NATURAL WIND GUSTS FOR DESIGN OF OVER HEIGHT TYPE 12 AND TYPE 13 STRUCTURES.

115 MPH (700 YEAR MRI BASIC WIND SPEED).

SECURE THE OPENING BELOW THE BASE PLATE WITH STAINLESS STEEL OR GALVANIZED STEEL MESH AND SECURE THE MESH WITH ¾" STAINLESS STEEL BANDING AROUND THE LEVELING NUTS.

INDENT PRINT (NOMINAL ½" HIGH) THE POLE LENGTH AND FIRST TWO LETTERS OF THE MANUFACTURERS NAME ON TWO SIDES OF THE BASE PLATE 180 DEGREES APART, BEFORE GALVANIZING. THE ARM SHALL BE IDENTIFIED WITH THE SAME INFORMATION BY INDENT PRINT.

SIGNAL FACE SHALL BE MOUNTED 6 INCHES (NOMINAL) FROM THE END OF THE MONOTUBE ARM OR AS SHOWN ON THE PLAN CONSTRUCTION DETAIL OR AS DIRECTED BY THE PROJECT ENGINEER/ELECTRICAL OPERATIONS PERSONNEL. MOUNT ALL LIKE HEADS AT SAME ELEVATION.

SIGN MOUNTING BRACKETS SHALL BE FURNISHED IN ACCORDANCE WITH SECTION 637 OF THE STANDARD SPECIFICATIONS FOR HIGHWAY AND STRUCTURE CONSTRUCTION.

1. DESIGN FOR MAXIMUM ALLOWABLE HAND HOLE WITH COVER ASSEMBLY WITH TWO ¼" X ¾" - 20 TPI STAINLESS STEEL HEX HEAD BOLTS.
2. SIGNAL MOUNTING BRACKETS FOR POLE MOUNTING, MOUNT WITH CAP SCREW AND BANDING (SEE SPECIFICATION SECTION 658).
3. SECURELY MOUNT BACK PLATES, PROJECTING 5" BEYOND ALL SIDES OF THE SIGNAL FACE HOUSING, PER MANUFACTURERS RECOMMENDATIONS.
4. THE TOP OF THE POLE SHAFT AND THE MONOTUBE ARM SHALL BE EQUIPPED WITH A REMOVABLE, VENTILATED CAP HELD SECURELY IN PLACE WITH SET SCREWS.
5. FACTORY WELDED BRACKET FOR GROUNDING LUG, OPPOSITE HAND HOLD, (LUG AND HARDWARE PAID UNDER SEPARATE ITEM). PROVIDE HOLE IN BRACKET FOR ¼" X ¾" - 20 TPI STAINLESS STEEL HEX HEAD BOLT.
6. FACTORY WELDED "J" HOOK FOR STRAIN RELIEF FOR POLE LUMINAIRE WIRE.
7. INSTALL STRUCTURAL IDENTIFICATION PLAQUES.

   STRUCTURAL IDENTIFICATION PLAQUES SHALL BE PLACED ON THE POLES IN THE SAME DIRECTION AS THE ARM.

   MOUNTING HEIGHT SHALL BE 6' - 0" ABOVE THE CURB OR SHOULDER. ADJUST IF IT IS KNOWN THAT REQUIRED TRAFFIC SIGNS WILL BE OBSTRUCTED.
8. FACTORY DRILLED ½" DRAIN HOLE 2" FROM FLANGE CONNECTION PLATE.

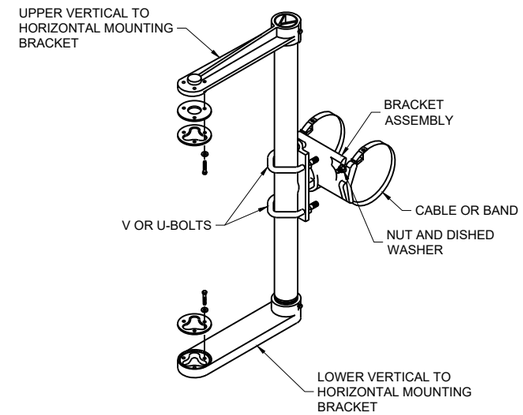

SIGNAL FACE MOUNTING BRACKET DETAIL FOR MONOTUBE ARM

(MOUNT PER MANFACTURER'S RECOMMENDATION)

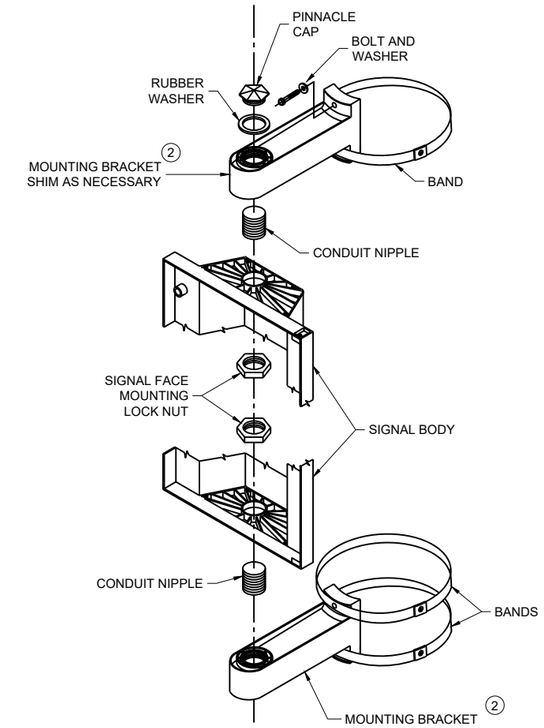

SIGNAL FACE VERTICAL MOUNTING DETAIL

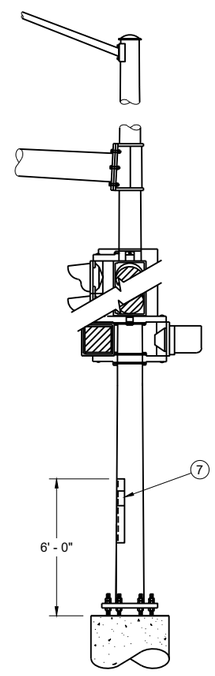

STRUCTURAL IDENTIFICATION PLAQUE PLACEMENT

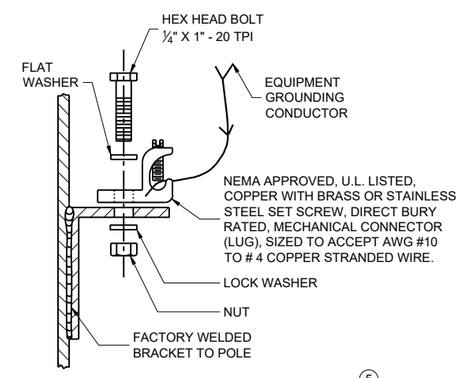

TYPICAL GROUNDING CONNECTIONS 5

NUT, BOLT AND WASHERS SHALL BE STAINLESS STEEL

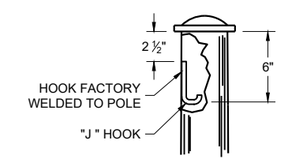

TYPICAL "J" HOOK WIRE SUPPORT 6

GENERAL NOTES AND HARDWARE FOR OVER HEIGHT TYPE 9, 10, 9/10 SPECIAL, 12 AND 13 POLES WITH MONOTUBE ARMS

STATE OF WISCONSIN
DEPARTMENT OF TRANSPORTATION

APPROVED
AUGUST 2024 — DATE
/S/ Ahmet Demirbilek — STATE ELECTRICAL ENGINEER
FHWA

6

SDD 09E12-02k

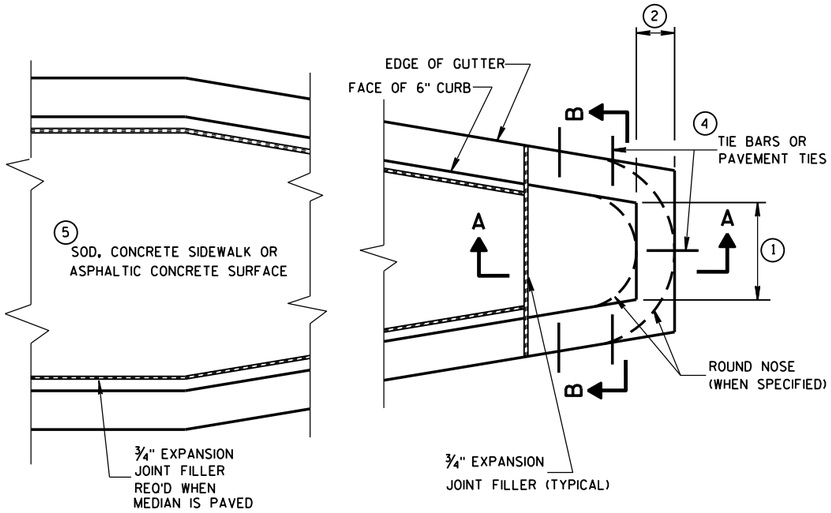

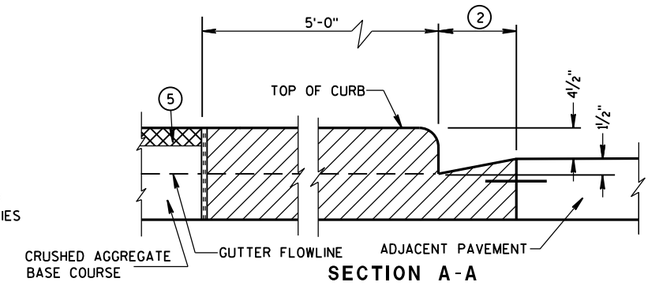

SECTION A-A

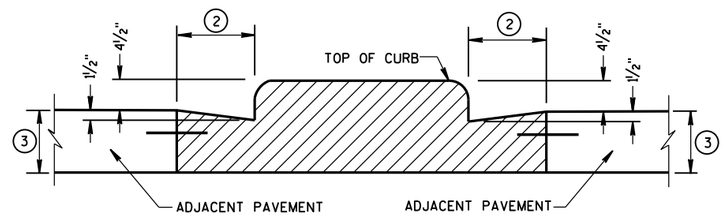

SECTION B-B

CONCRETE MEDIAN BLUNT NOSE DETAIL

GENERAL NOTES

DETAILS OF CONSTRUCTION, MATERIALS AND WORKMANSHIP NOT SHOWN ON THIS DRAWING SHALL CONFORM TO THE PERTINENT REQUIREMENTS OF THE STANDARD SPECIFICATIONS AND THE APPLICABLE SPECIAL PROVISIONS.

1. SEE PLAN FOR MEDIAN NOSE WIDTH AND RADIUS (FOR ROUND NOSE ALTERNATE).
2. WIDTH OF GUTTER TO MATCH EXISTING ADJACENT GUTTER OR AS SPECIFIED ELSEWHERE IN THE PLAN.
3. DEPTH EQUAL TO ADJACENT PAVEMENT. ADJACENT PAVEMENT STRUCTURE DETAILS ARE SHOWN ON THE PLAN. TYPICAL OPTIONS ARE:
   (1) NEW OR EXISTING CONCRETE PAVEMENT.
   (2) ASPHALTIC CONCRETE PAVEMENT OVER NEW OR EXISTING CONCRETE BASE COURSE.
   (3) ASPHALTIC CONCRETE PAVEMENT OVER CRUSHED AGGREGATE BASE COURSE.
4. TIE BARS OR PAVEMENT TIES REQUIRED IN NEW CONCRETE PAVEMENT OR CONCRETE BASE COURSE. TIE BARS SHALL BE NO. 4 X 2'-0" SPACED AT 2'-0" C-C.

   PAVEMENT TIES REQUIRED IN EXISTING CONCRETE BASE COURSE. PAVEMENT TIES SHALL BE NO. 6 X 1'-0" SPACED AT 3'-0" C-C INSTALLED ON A HORIZONTAL SKEW OF 6:1. THE DIRECTION OF SKEW SHALL ALTERNATE AFTER EVERY ONE OR TWO BARS.
5. SURFACE TYPE AND DETAILS ARE SHOWN ELSEWHERE IN THE PLAN.

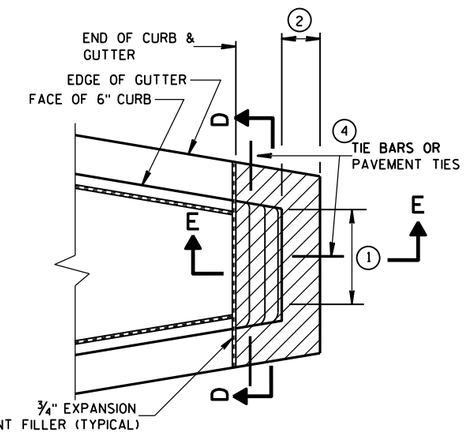

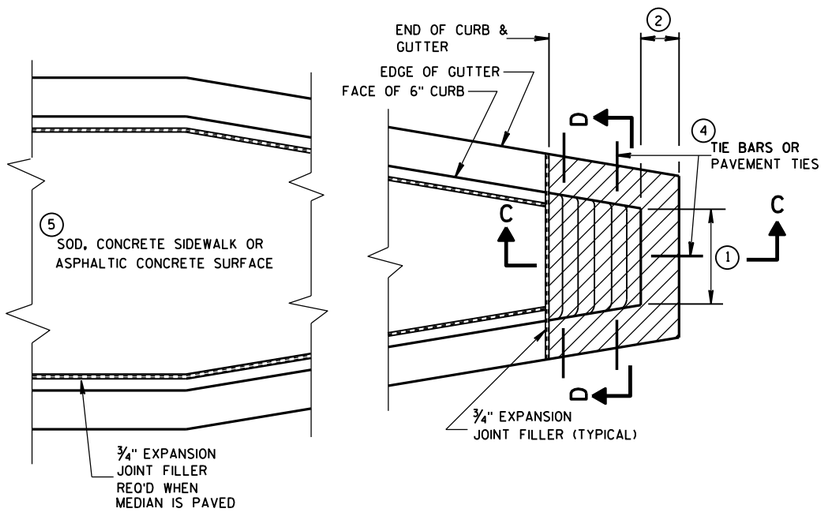

CONCRETE MEDIAN SLOPED NOSE TYPE 1

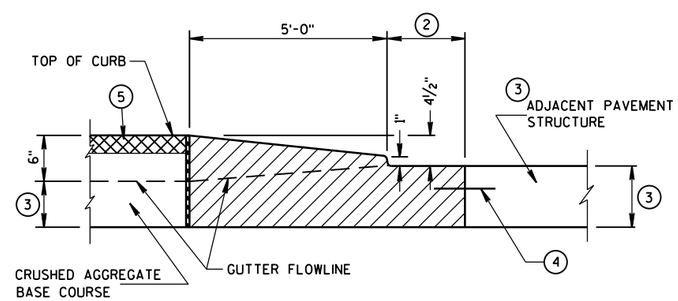

SECTION C-C

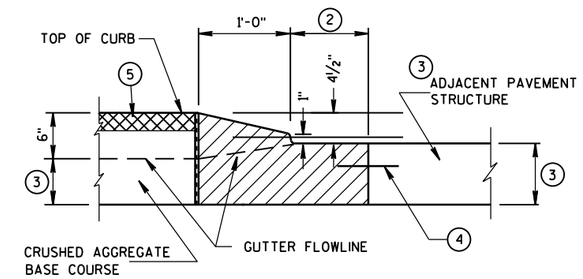

SECTION E-E

CONCRETE MEDIAN SLOPED NOSE TYPE 2

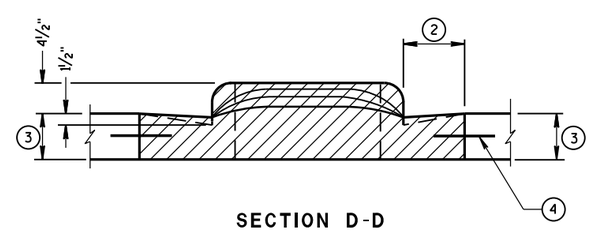

SECTION D-D

CONCRETE MEDIAN NOSE

STATE OF WISCONSIN
DEPARTMENT OF TRANSPORTATION

APPROVED
6/8/2006 — DATE
/S/ Jerry H. Zogg — ROADWAY STANDARDS DEVELOPMENT ENGINEER
FHWA

6

S.D.D. 11 B 2-2

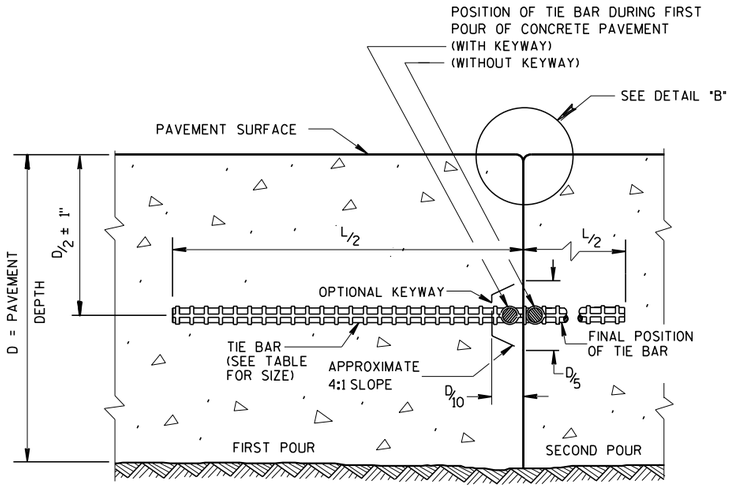

CONSTRUCTION JOINT

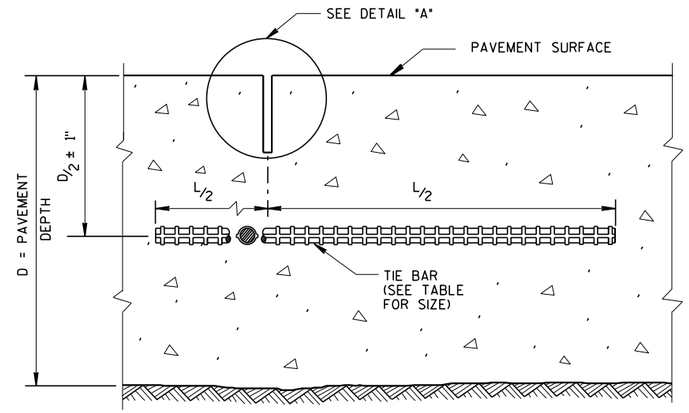

SAWED JOINT

GENERAL NOTES

CREATE A LONGITUDINAL JOINT FOR PAVEMENT WIDTHS GREATER THAN 15 FEET.

CORRELATE LONGITUDINAL JOINTS WITH LANE LINES WHEN POSSIBLE.

1. ANCHOR TIE BARS INTO DRILLED HOLES WITH AN EPOXY.
2. PAVEMENT THAT WAS IN PLACE PRIOR TO THE CONTRACT.

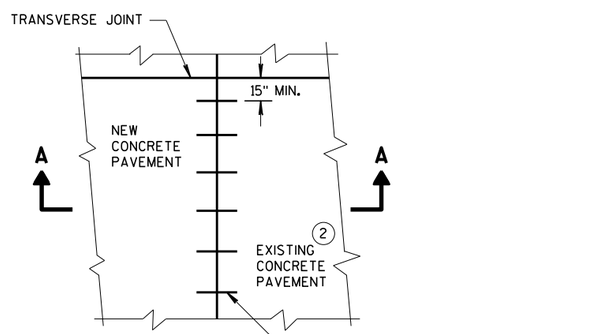

PLAN VIEW

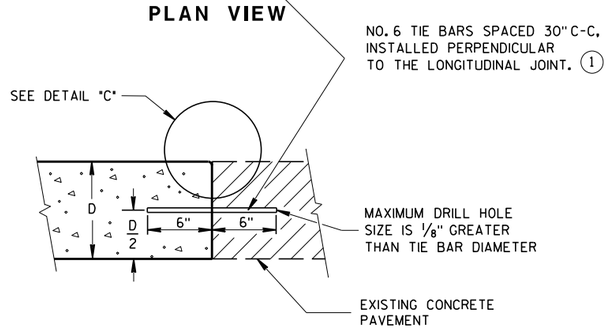

SECTION A-A
LONGITUDINAL CONSTRUCTION JOINT TIE BARS ANCHORED INTO EXISTING PAVEMENT

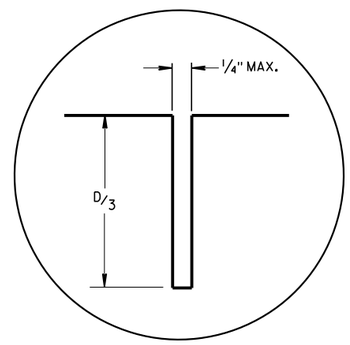

DETAIL "A"

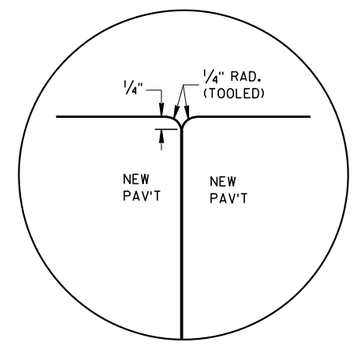

DETAIL "B"

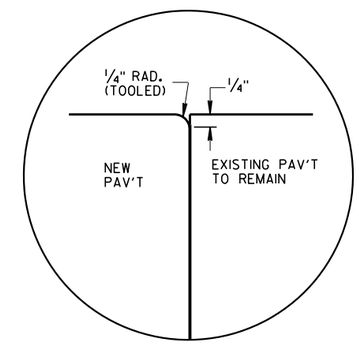

DETAIL "C"

TIE BAR TABLE

PAVEMENT DEPTH (D)	TIE BAR SIZE	TIE BAR LENGTH (L)	MAX. TIE BAR SPACING
< 10 1/2"	NO. 4	30"	36"
≥ 10 1/2"	NO. 5	36"	36"
	NO. 4 *	30"	24" **

* SUBSTITUTE BENT BARS AT LONGITUDINAL JOINTS WHEN EQUIPMENT LIMITATIONS DURING CONSTRUCTION WARRANT (e.g. AUXILIARY LANES OR TURN LANES)

** CONFORM TO 15" MINUMUM SPACING FROM TRANSVERSE JOINTS; SPACING BETWEEN TIE BARS WILL BE 30" AT TRANSVERSE JOINTS.

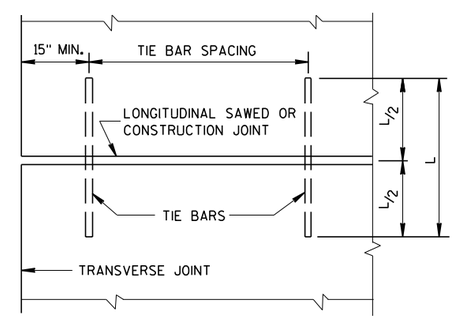

PLAN VIEW
SHOWING LOCATION OF TIE BARS

CONCRETE PAVEMENT
LONGITUDINAL JOINTS AND TIES

STATE OF WISCONSIN
DEPARTMENT OF TRANSPORTATION

APPROVED
March 2018 — DATE
/S/ Peter Kerr — PAVEMENT SUPE
FHWA

6

S.D.D. 13 C 1-19

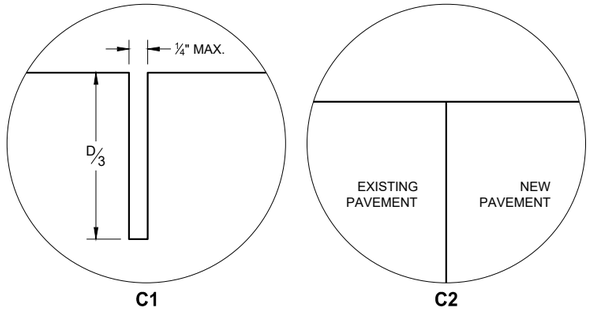

TRANSVERSE JOINTS

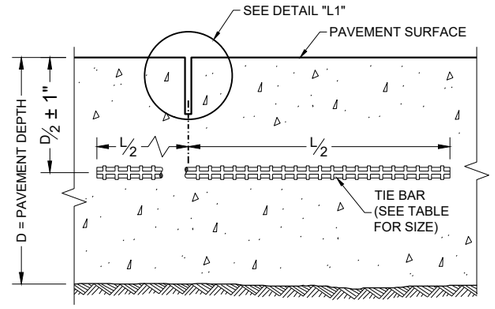

SECTION C - C
SAWED JOINT

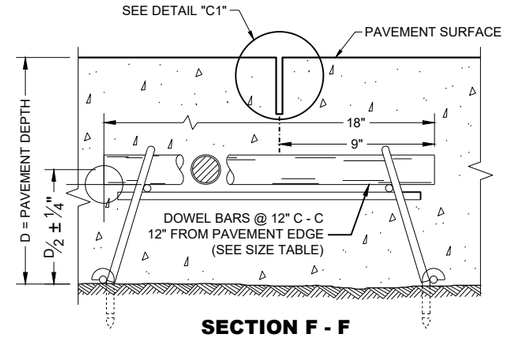

SECTION F - F
CONTRACTION JOINT

GENERAL NOTES

ANCHOR DOWEL BARS AND TIE BARS INTO DRILLED HOLES WITH AN EPOXY.

PROVIDE A MIMIMUM DISTANCE OF 15 INCHES FROM AN EXISTING TRANSVERSE JOINT OR EDGE OF REPLACEMENT TO THE CENTER OF THE TIE BAR NEAREST THAT JOINT OR EDGE.

1. INSTALL DOWEL BARS PARALLEL TO THE PAVEMENT CENTERLINE AND PAVEMENT SURFACE.
2. APPLY A THIN UNIFORM COATING OF SURFACE TREATMENT TO THE FREE END OF DOWEL BARS TO PREVENT BONDING.

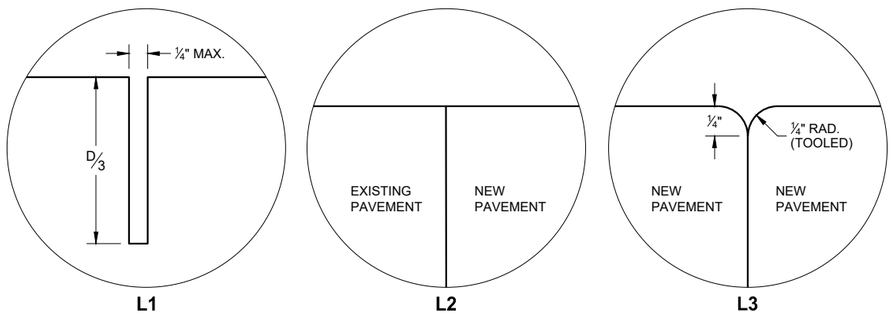

LONGITUDINAL JOINTS

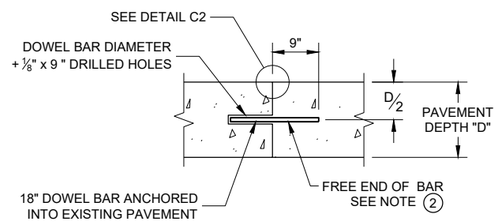

SECTION D - D

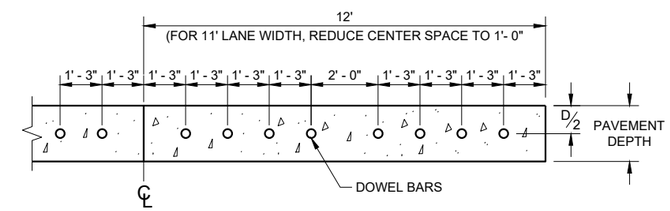

SECTION E - E
SPACING OF DOWEL BARS ANCHORED INTO EXISTING PAVEMENT

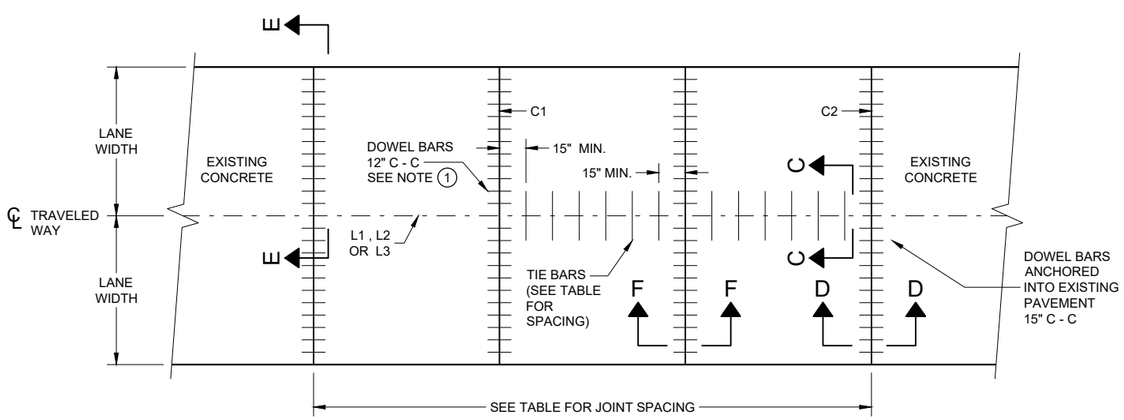

PLAN VIEW
CONCRETE BASE
CONTRACTION JOINT LOCATIONS

TIE BAR TABLE

PAVEMENT DEPTH (D)	TIE BAR SIZE	TIE BAR LENGTH (L)	MAX. TIE BAR SPACING
< 10 ½"	NO. 4	30"	36"
≥ 10 ½"	NO. 5	36"	36"
	NO. 4*	30"	24"**

* SUBSTITUTE BENT BARS AT LONGITUDINAL JOINTS WHEN EQUIPMENT LIMITATIONS DURING CONSTRUCTION WARRANT (e.g. AUXILIARY LANES OR TURN LANES)

** CONFORM TO 15" MINIMUM SPACING FROM TRANSVERSE JOINTS; SPACING BETWEEN TIE BARS WILL BE 30" AT TRANSVERSE JOINTS.

PAVEMENT DEPTH, DOWEL BAR SIZE AND JOINT SPACING TABLE

PAVEMENT DEPTH (D)	DOWEL BAR DIAMETER	CONTRACTION JOINT SPACING
6", 6 ½"	NONE	12'
7", 7 ½"	1"	14'
8" & ABOVE	1 ¼"	15'

CONCRETE BASE

STATE OF WISCONSIN
DEPARTMENT OF TRANSPORTA

6

SDD 13C15 - 08a

GENERAL NOTES

1. USE AN ENGINEER APPROVED BOND BREAKER (E.G. RELEASE AGENT, CURING COMPOUND) AT THE LONGITUDINAL JOINT IN LIEU OF TIE BARS FOR SINGLE LANE CONCRETE BASE REPAIRS UP TO 15 FEET IN LENGTH.
2. ANCHOR TIE BARS INTO DRILLED HOLES WITH AN EPOXY.
3. PAVEMENT THAT WAS IN PLACE PRIOR TO THE CONTRACT.

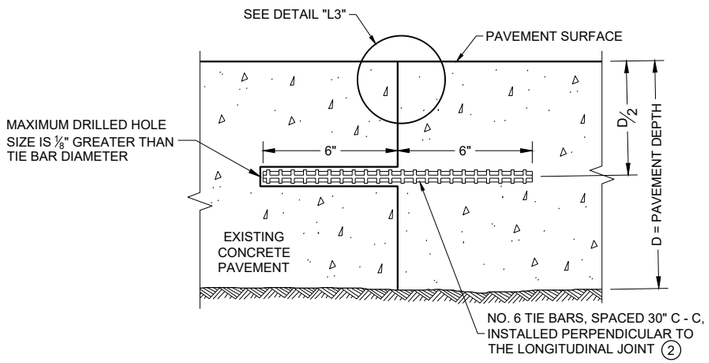

SECTION G - G

TIE BARS ANCHORED INTO EXISTING PAVEMENT

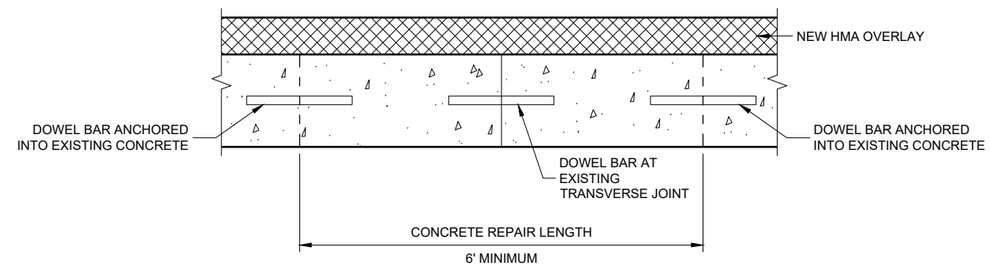

SECTION H - H

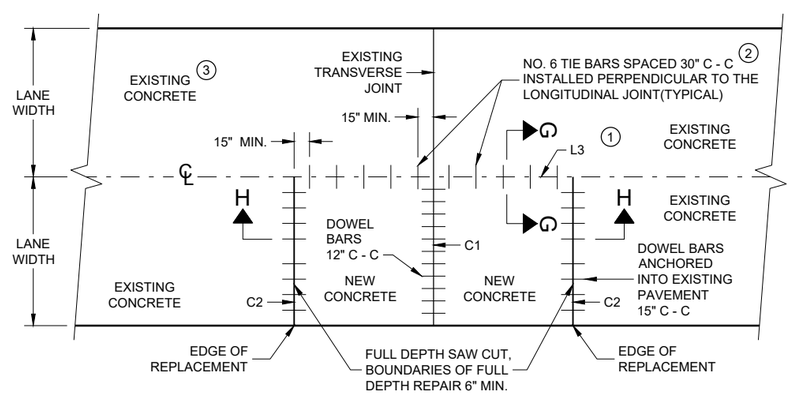

PLAN VIEW

SINGLE LANE CONCRETE BASE REPAIR

CONCRETE BASE

STATE OF WISCONSIN
DEPARTMENT OF TRANSPORTATION

APPROVED
November 2022 /S/ Peter Kemp P.E.
DATE PAVEMENT SUPERVISO
FHWA

6

SDD 13C15 - 08b

GENERAL NOTES

THE EXACT NUMBER, LOCATION, AND SPACING OF ALL SIGNS AND DEVICES SHALL BE ADJUSTED TO FIT FIELD CONDITIONS.

THE SPACING BETWEEN TRAFFIC CONTROL SIGNS SHOULD BE ADJUSTED TO NOT CONFLICT WITH AND SHOULD PROVIDE A MINIMUM OF 200 FEET (500 FEET DESIRABLE) CLEARANCE TO EXISTING SIGNS THAT WILL REMAIN IN PLACE.

ALL SIGNS ARE 48" X 48" UNLESS OTHERWISE NOTED. IF NECESSARY DUE TO SPACE CONSTRAINTS, 36"X36" SIGNS MAY BE USED INSTEAD OF 48" X 48" SIGNS.

SIGNS THAT WILL BE IN PLACE LESS THAN SEVEN CONTINUOUS DAYS AND NIGHTS MAY BE MOUNTED ON PORTABLE SUPPORTS.

IF A "STOP" SIGN MUST BE REMOVED FOR A WORK OPERATION, A TEMPORARY "STOP" SIGN SHALL BE PLACED PRIOR TO THE SIGN REMOVAL, OR A FLAGGER SHALL BE PROVIDED UNTIL THE SIGN IS REESTABLISHED.

* THE THIRD W20-1 SIGN IS REQUIRED ONLY IF THERE IS AN INTERSECTION BETWEEN THE "ROAD WORK 500 FEET" SIGN AND THE WORK ZONE. ADJUST THE PLACEMENT OF THIS SIGN BASED ON INTERSECTION LOCATION AND OTHER FIELD CONDITIONS.

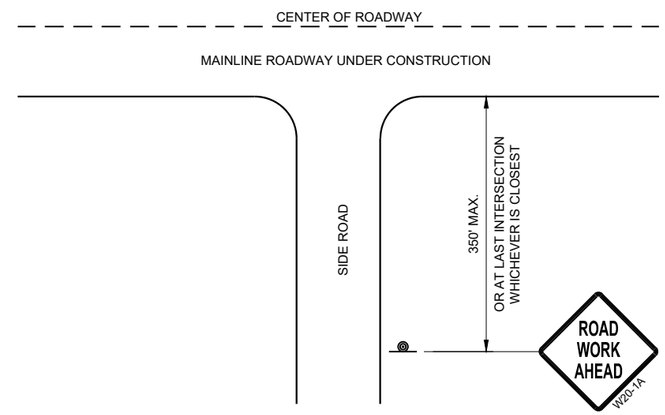

TYPICAL SIDE ROAD APPROACH WARNING SIGN DETAIL

LEGEND

- SIGN ON PERMANENT SUPPORT
- DIRECTION OF TRAFFIC
- WORK AREA

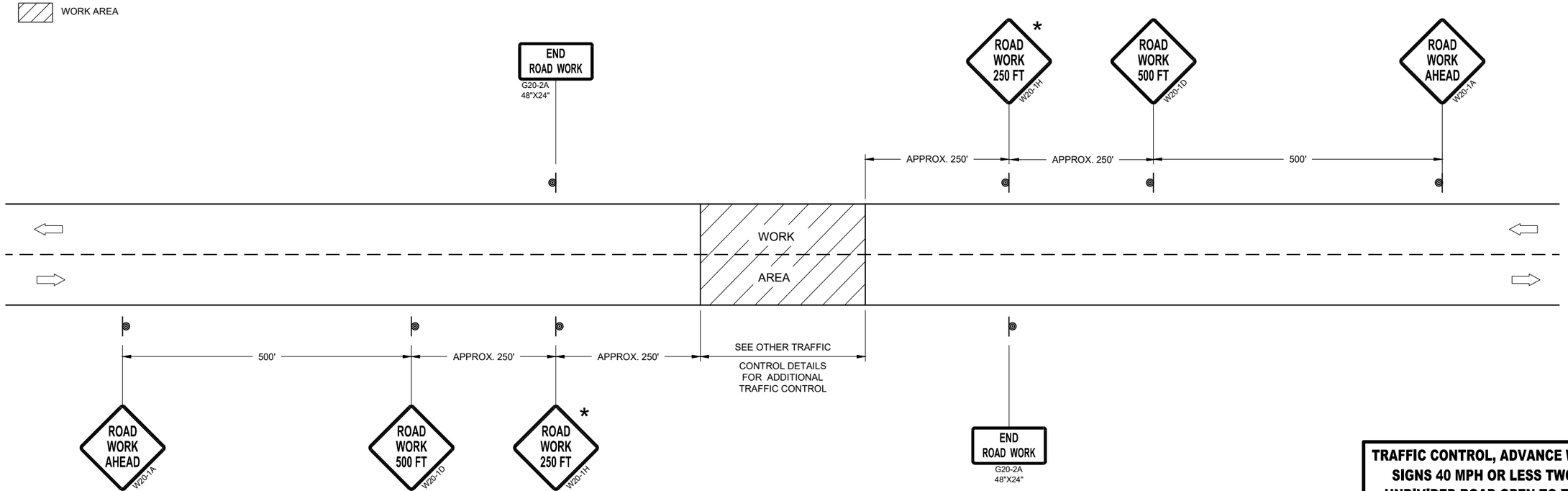

TRAFFIC CONTROL, ADVANCE WARNING SIGNS 40MPH OR LESS

TRAFFIC CONTROL, ADVANCE WARNING SIGNS 40 MPH OR LESS TWO-WAY UNDIVIDED ROAD OPEN TO TRAFFIC

STATE OF WISCONSIN
DEPARTMENT OF TRANSPORTATION

APPROVED
July 2018 — DATE
/S/ Andrew Heidtke — WORK ZONE ENGINEE
FHWA

6
SDD 15C05 - 05

GENERAL NOTES

DETAILS OF INSTALLATION, MATERIALS AND WORKMANSHIP NOT SHOWN ON THIS DRAWING SHALL CONFORM TO THE PERTINENT REQUIREMENTS OF THE STANDARD SPECIFICATIONS AND APPLICABLE SPECIAL PROVISIONS.

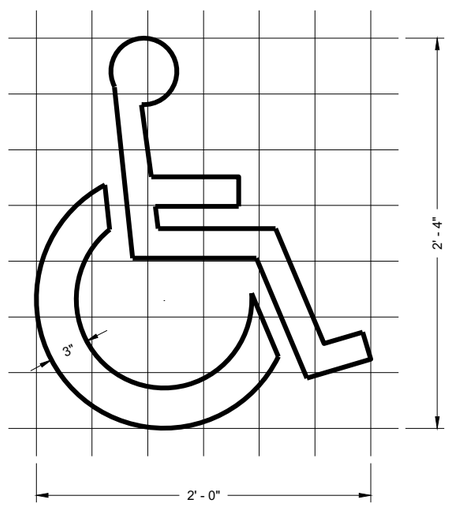

HANDICAP SYMBOL

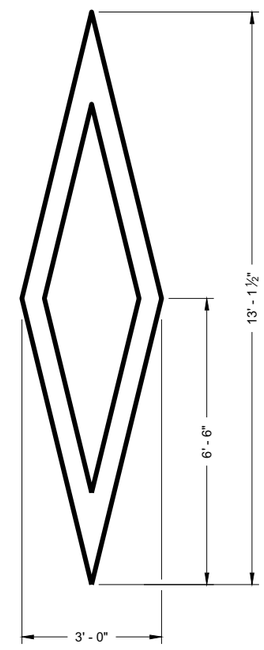

PREFERENTIAL LANE SYMBOL

6

6

SDD 15C07 - 15a

SDD 15C07 - 15a

PAVEMENT MARKING SYMBOLS

STATE OF WISCONSIN
DEPARTMENT OF TRANSPORTATION

APPROVED
November 2019 — DATE
/S/ Matthew Rauch — STATE SIGNING AND MAR ENGINEER
FHWA

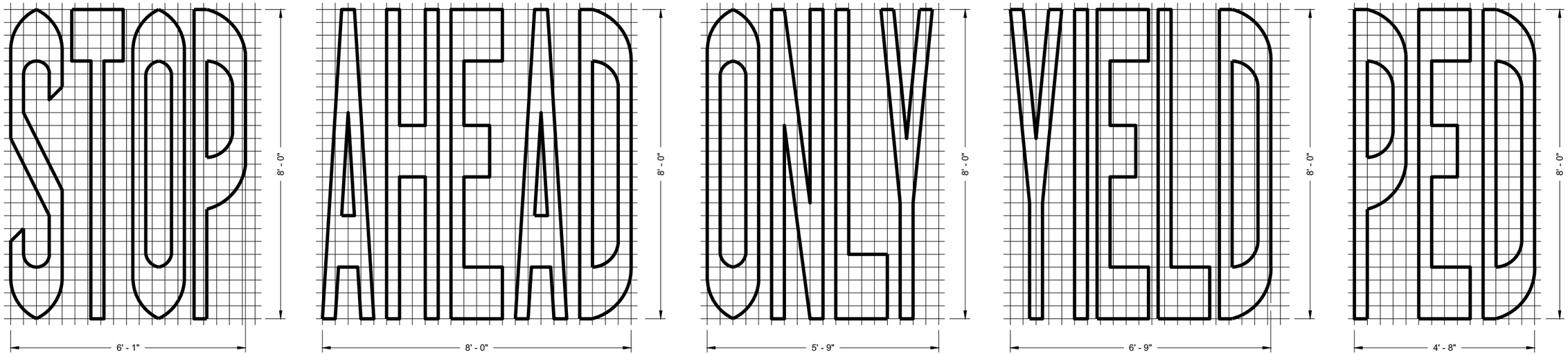

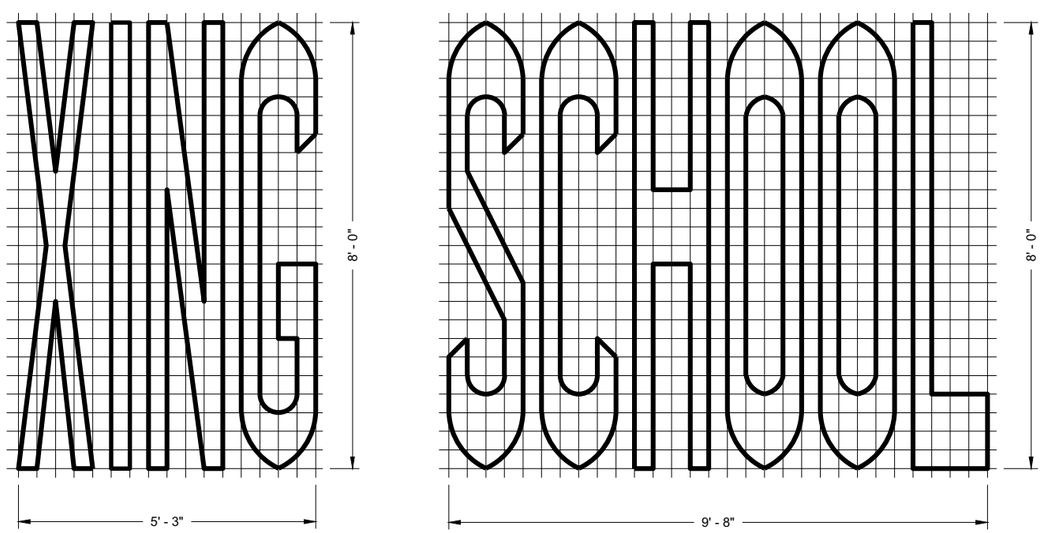

SINGLE LANE

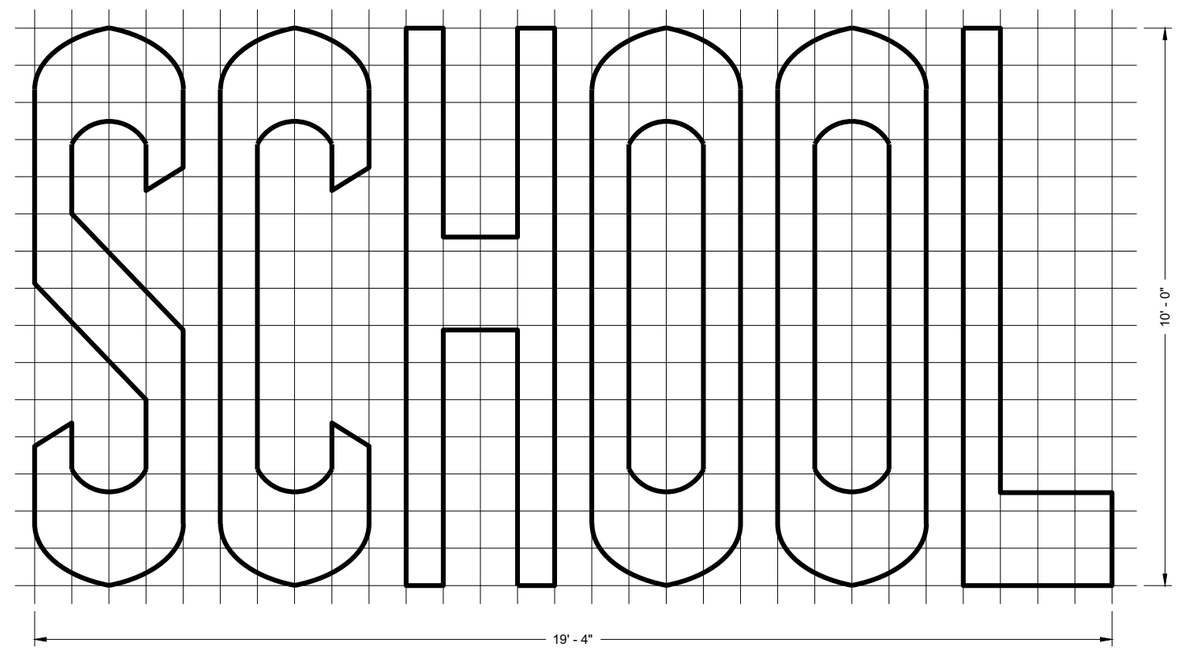

TWO - LANE

6

6

GENERAL NOTES

DETAILS OF INSTALLATION, MATERIALS AND WORKMANSHIP NOT SHOWN ON THIS DRAWING SHALL CONFORM TO THE PERTINENT REQUIREMENTS OF THE STANDARD SPECIFICATIONS AND APPLICABLE SPECIAL PROVISIONS.

PAVEMENT MARKING WORDS

STATE OF WISCONSIN
DEPARTMENT OF TRANSPORTATION

APPROVED

November 2019 — DATE

/S/ Matthew Rauch — STATE SIGNING AND MAR ENGINEER

FHWA

SDD 15C07 - 15b

SDD 15C07 - 15b

GENERAL NOTES

DETAILS OF INSTALLATION, MATERIALS AND WORKMANSHIP NOT SHOWN ON THIS DRAWING SHALL CONFORM TO THE PERTINENT REQUIREMENTS OF THE STANDARD SPECIFICATIONS AND APPLICABLE SPECIAL PROVISIONS.

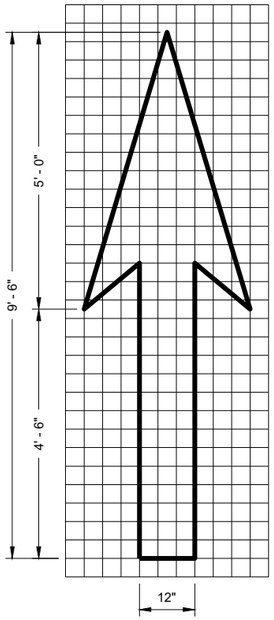

TYPE 1

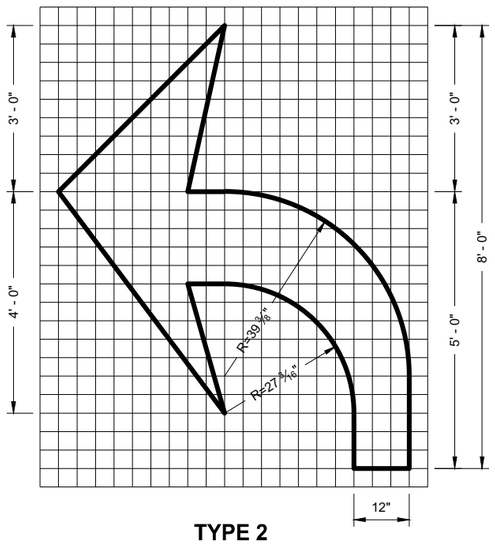

TYPE 2

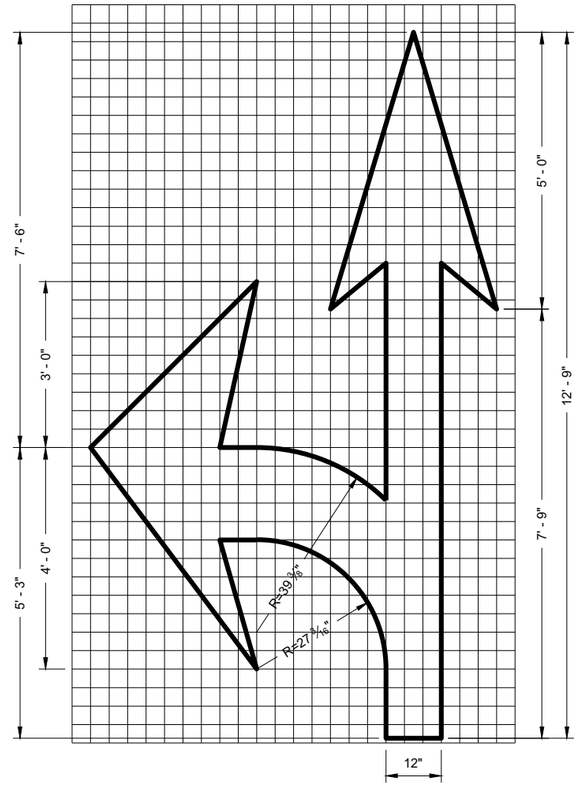

TYPE 3

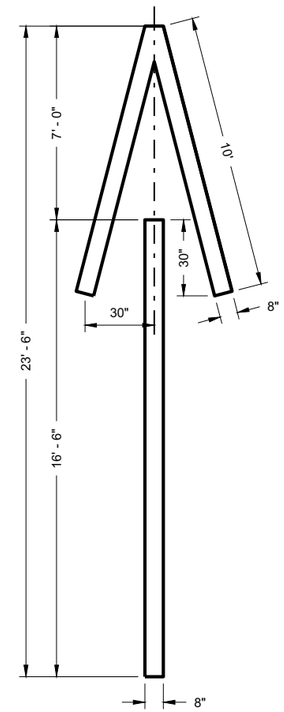

TYPE 4

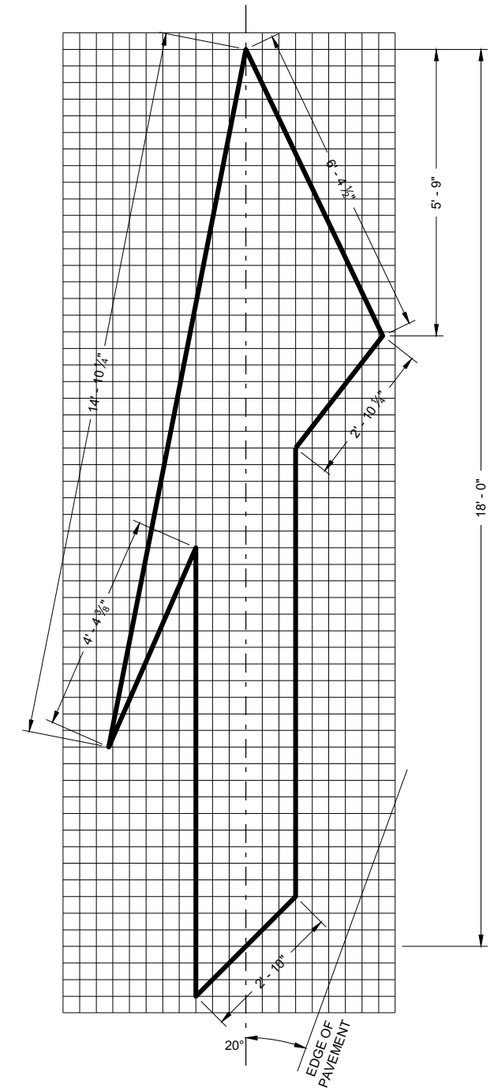

TYPE 5 LANE DROP ARROW

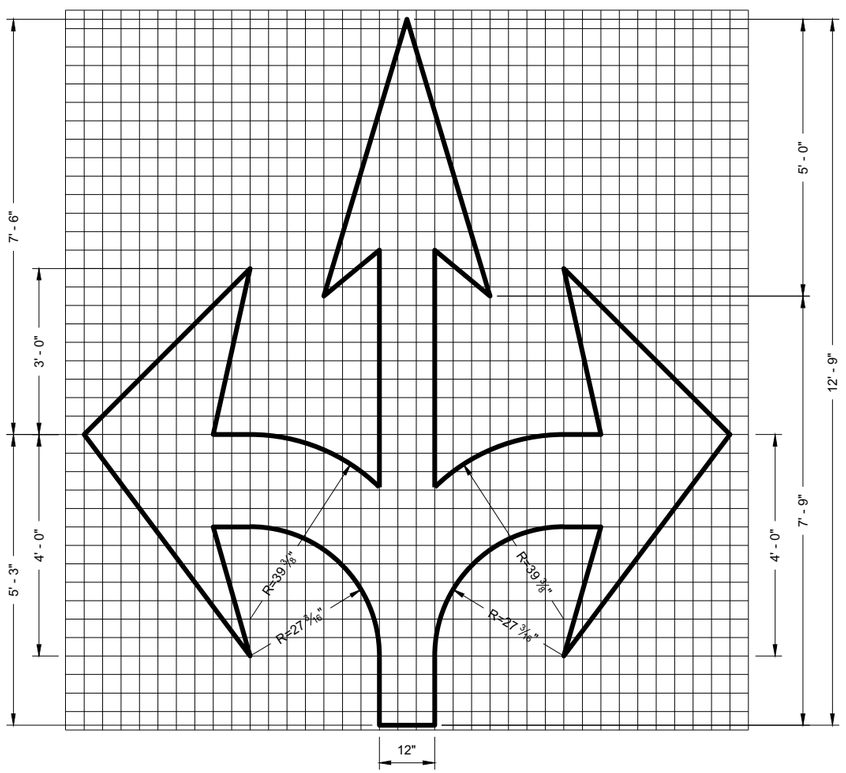

TYPE 6

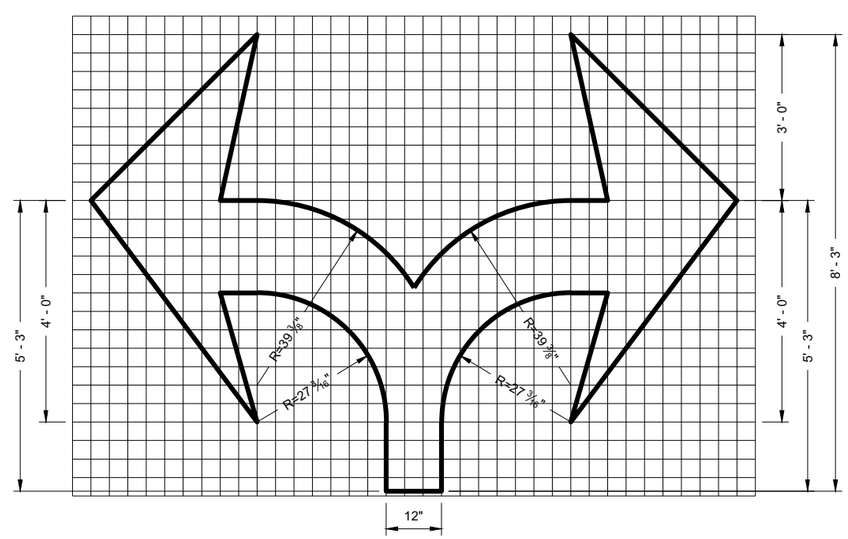

TYPE 7

PAVEMENT MARKING ARROWS

STATE OF WISCONSIN
DEPARTMENT OF TRANSPORTATION

APPROVED
November 2019 — DATE
/S/ Matthew Rauch — STATE SIGNING AND MAR ENGINEER
FHWA

6

SDD 15C07 - 15c

SDD 15C7-e Pavement Marking For Bike Lanes

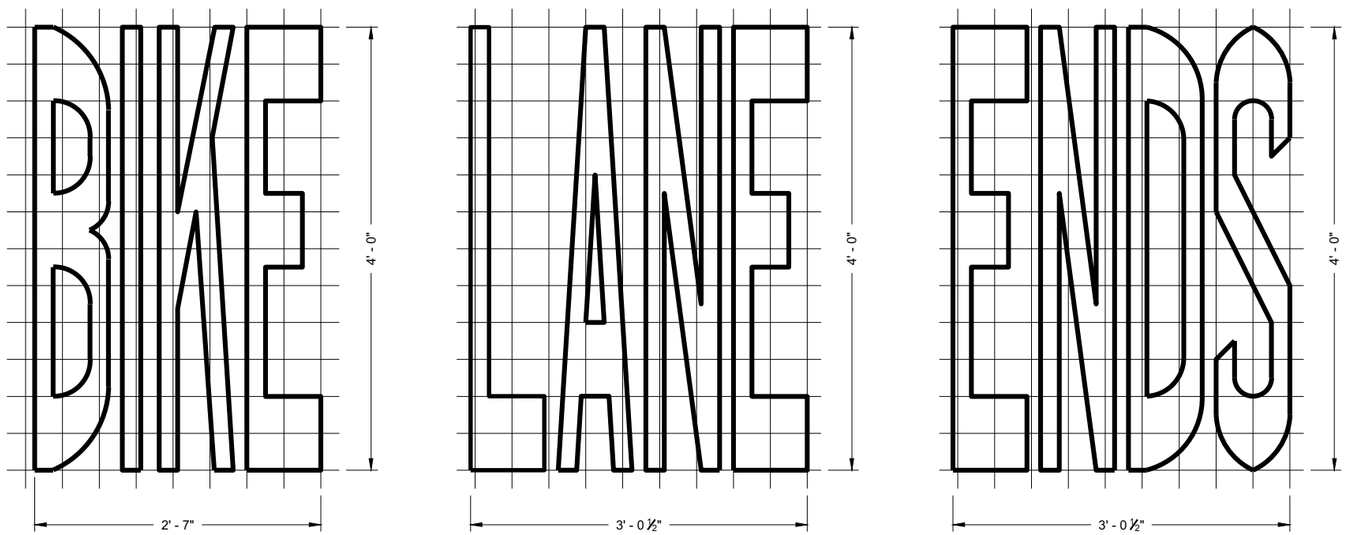

BIKE LANE WORDS

GENERAL NOTES

DETAILS OF INSTALLATION, MATERIALS AND WORKMANSHIP NOT SHOWN ON THIS DRAWING SHALL CONFORM TO THE PERTINENT REQUIREMENTS OF THE STANDARD SPECIFICATIONS AND APPLICABLE SPECIAL PROVISIONS.

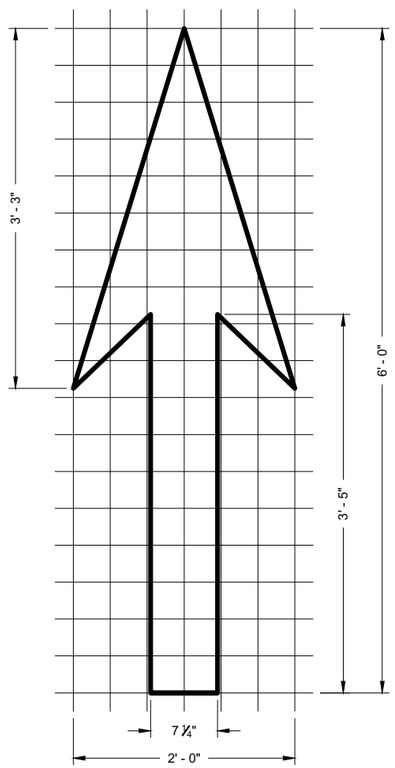

BIKE LANE ARROW

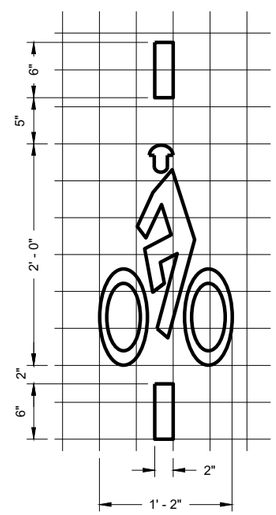

BICYCLE DETECTOR PAVEMENT MARKING

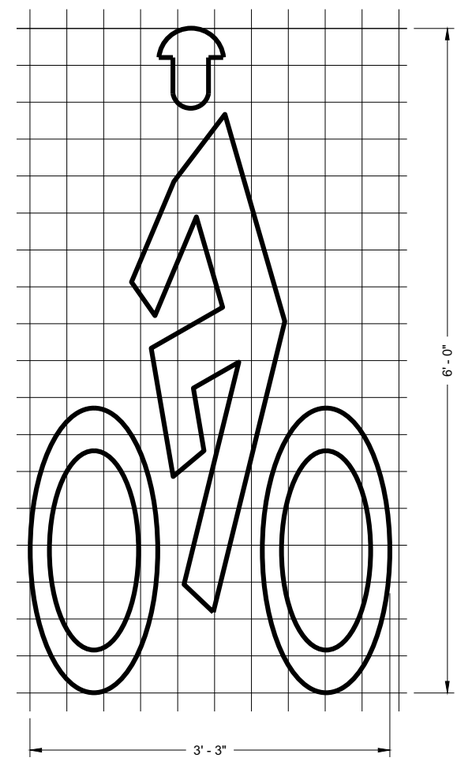

BIKE LANE SYMBOL

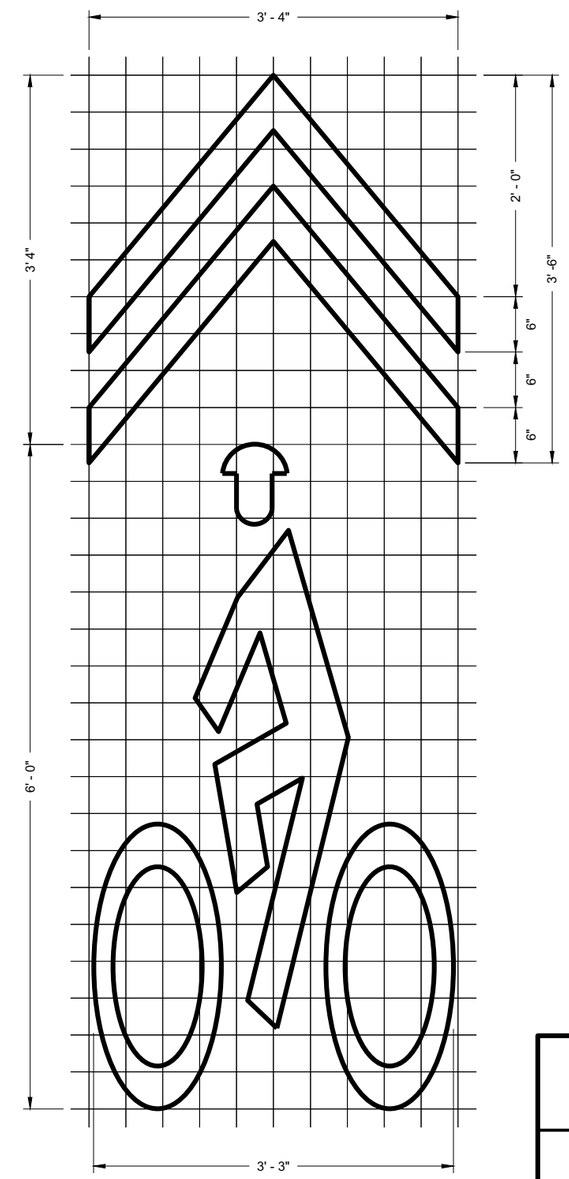

BIKE LANE SYMBOL FOR SHARED LANE

PAVEMENT MARKING FOR BIKE LANES

STATE OF WISCONSIN
DEPARTMENT OF TRANSPORTATION

APPROVED
November 2019 — DATE
/S/ Matthew Rauch — STATE SIGNING AND MAR ENGINEER
FHWA

6

SDD 15C07 - 15e

6

SDD 15C07 - 15e

*CONFIRM MARKING LINE WIDTH WITH THE MISCELLANEOUS QUANTITIES

GENERAL NOTES

DETAILS OF CONSTRUCTION NOT SHOWN ON THIS DRAWING SHALL CONFORM TO STANDARD SPECIFICATIONS AND SPECIAL PROVISIONS.

1. LOCATE THE NO PASSING ZONE W14-3 SIGN WITHIN 50 FEET OF THE "T" MARKING
2. MEASURE FROM EDGE OF MARKING TO JOINT LINE. THIS DOES NOT INCLUDE SPACE NEEDED FOR GROOVING OPERATIONS.

LEGEND

"T" MARKING

SIGN ON PERMANENT SUPPORT

DIRECTION OF TRAFFIC

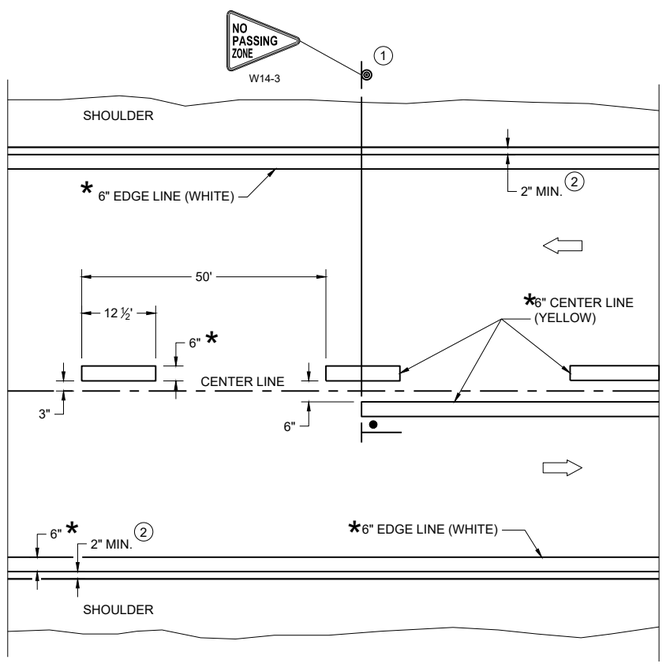

TWO WAY TRAFFIC

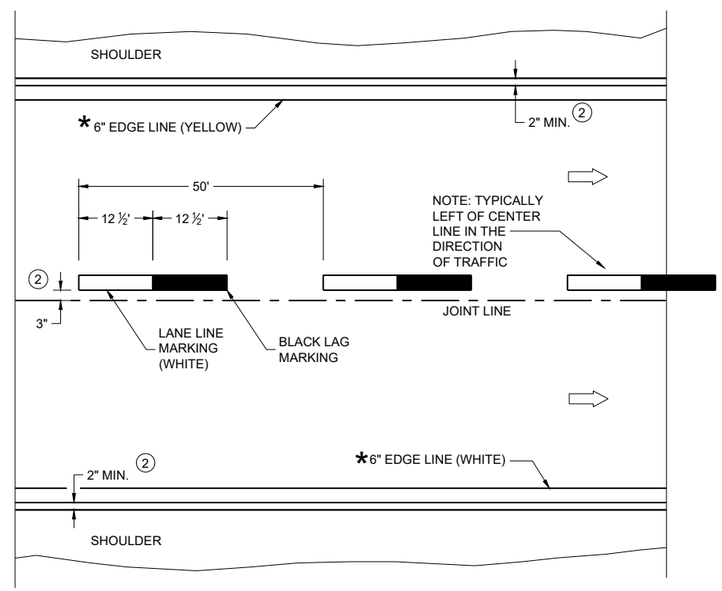

ONE WAY TRAFFIC

PERMANENT PAVEMENT MARKING

6

SDD 15C08-23a

PERMANENT LONGITUDINAL PAVEMENT MARKINGS

STATE OF WISCONSIN
DEPARTMENT OF TRANSPORTATION

APPROVED
May 2023 — DATE
/S/ Jeannie Silver — Statewide Pavement Marking Engineer
FHWA

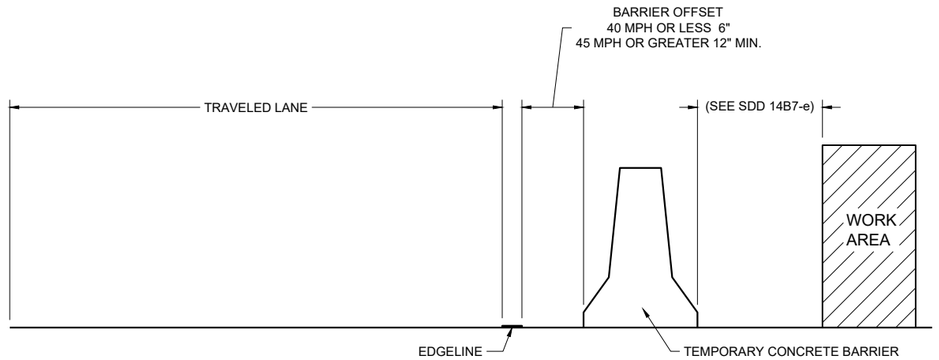

TEMPORARY BARRIER OFFSET FROM EDGELINE

GENERAL NOTES

DETAILS OF CONSTRUCTION NOT SHOWN ON THIS DRAWING SHALL CONFORM TO STANDARD SPECIFICATIONS AND SPECIAL PROVISIONS.

LEGEND

⇨ DIRECTION OF TRAFFIC

*CONFIRM MARKING LINE WIDTH WITH THE MISCELLANEOUS QUANTITIES

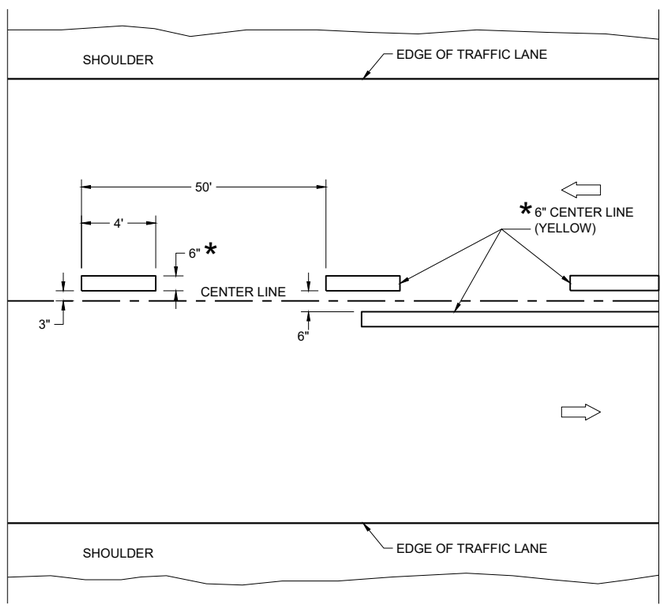

TWO WAY TRAFFIC

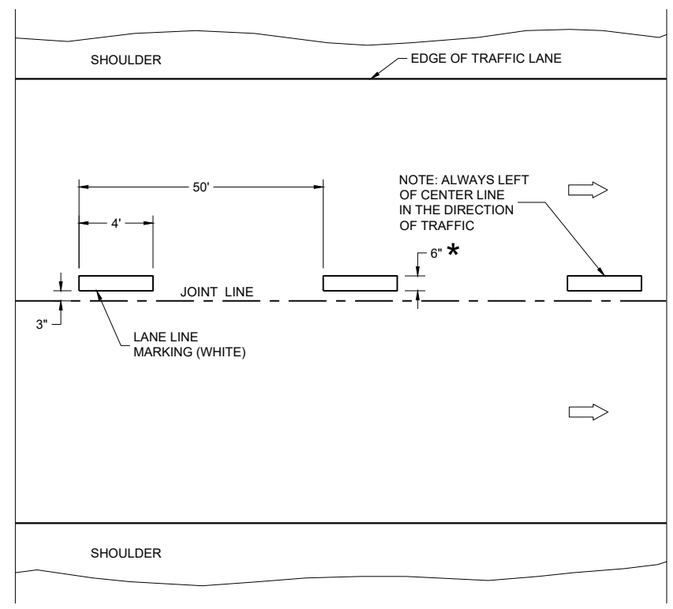

ONE WAY TRAFFIC

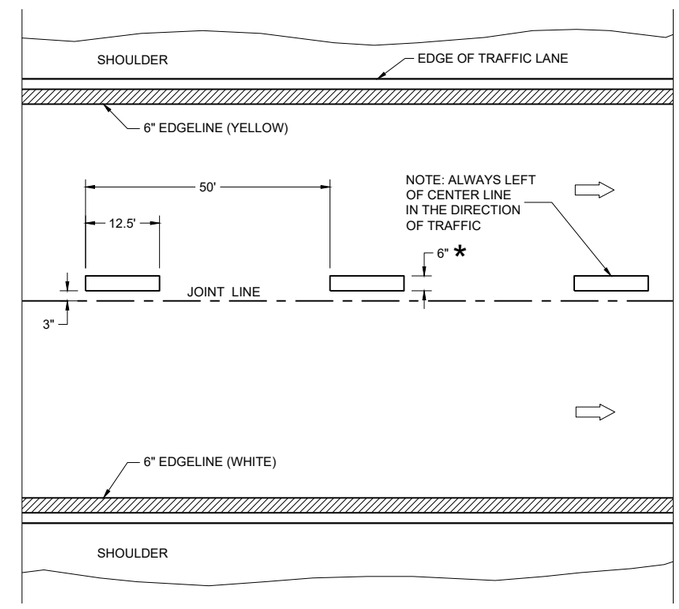

FREEWAYS AND EXPRESSWAYS

TEMPORARY PAVEMENT MARKING

TEMPORARY LONGITUDINAL PAVEMENT MARKING	
STATE OF WISCONSIN DEPARTMENT OF TRANSPORTATION	
APPROVED May 2023 DATE	/S/ Jeannie Silver Statewide Pavement Marking Engineer
FHWA	

6
SDD 15C08-23b

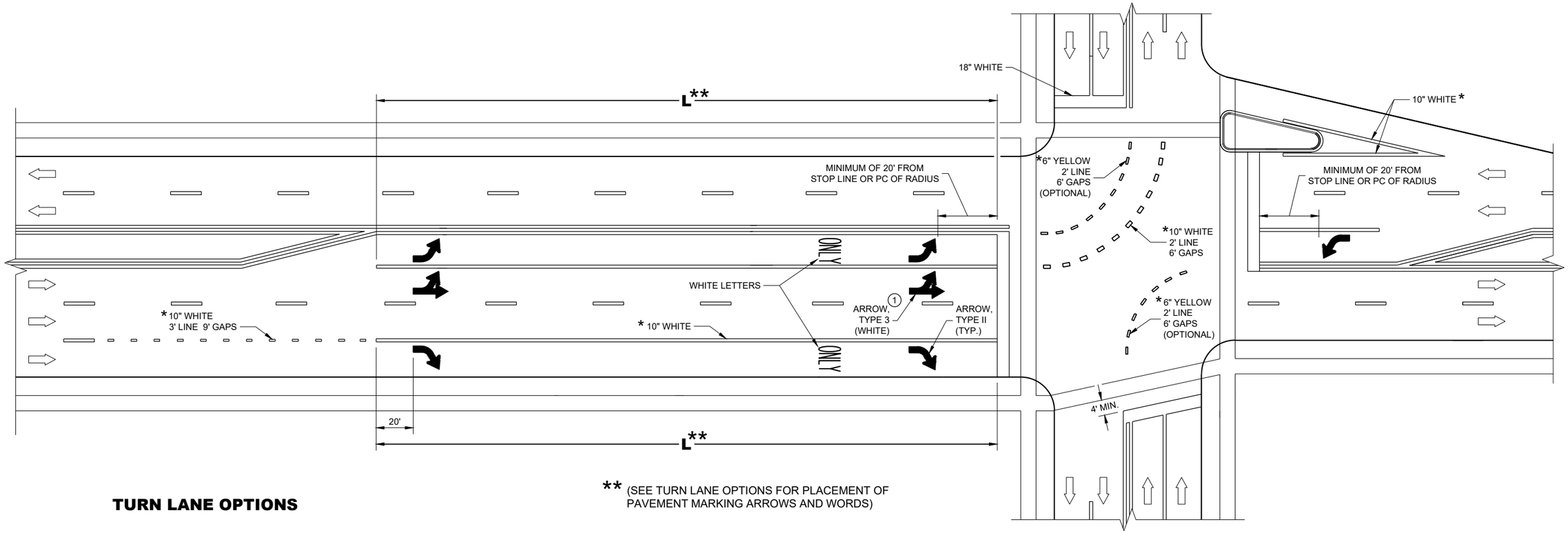

** (SEE TURN LANE OPTIONS FOR PLACEMENT OF PAVEMENT MARKING ARROWS AND WORDS)

TURN LANE OPTIONS

LENGTH OF TURN BAY (L) OF 0 - 47' DOES NOT REQUIRE PAVEMENT MARKING ARROWS OR WORDS

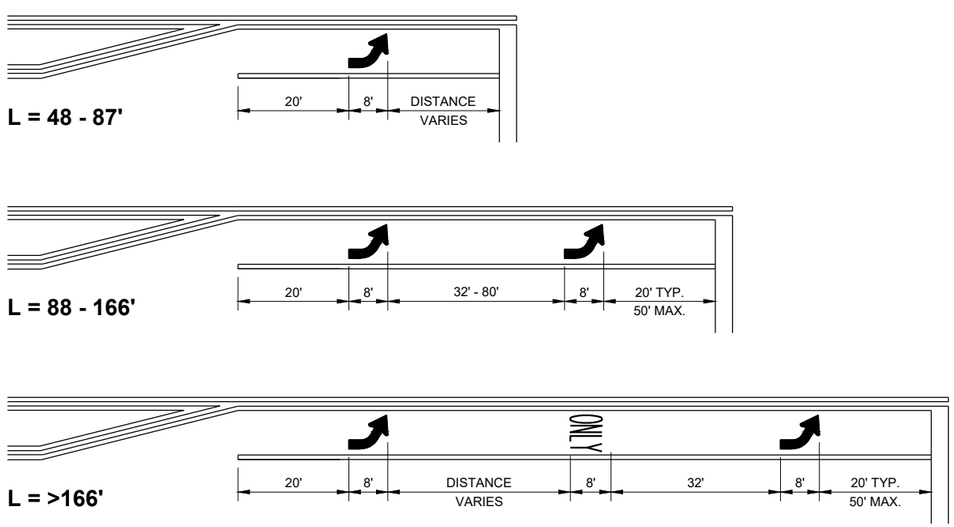

GENERAL NOTES

1. QUANTITY AND LOCATION OF TYPE 3 ARROWS ARE THE SAME AS THE TYPE II ARROWS IN THE ADJACENT TURN LANE. FOR TURN LANES WITH A PHYSICAL SEPARATION IN THE SAME DIRECTION OF TRAVEL, THE ARROWS AND "ONLY" MARKING MAY BE ELIMINATED.

⇨ DIRECTION OF TRAFFIC

L = LENGTH OF TURN BAY

* CONFIRM MARKING LINE WIDTH WITH THE MISCELLANEOUS QUANTITIES

PAVEMENT MARKING (TURN LANES)

STATE OF WISCONSIN
DEPARTMENT OF TRANSPORTAT

6

SDD 15C08-23d

GENERAL NOTES

1. REFLECTIVE SHEETING SHALL FOLLOW THE REQUIREMENTS IN THE APPROVED PRODUCTS LISTING FOR SIGN SHEETING.
2. LOCATION OF WARNING LIGHTS WHEN SHOWN ON THE PLAN.

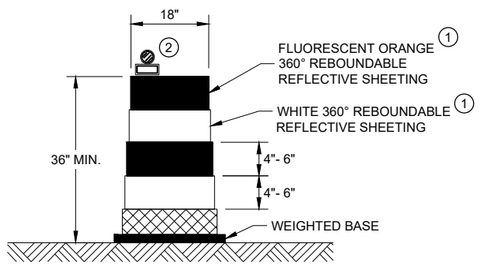

DRUM

BALLAST WIDTHS
RANGE FROM 24"-36"

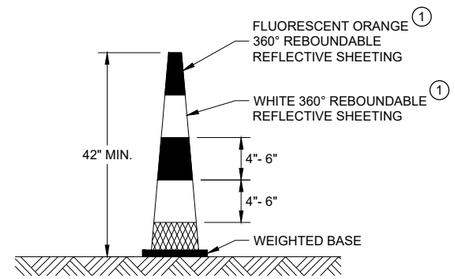

42" CONE

DO NOT USE IN TAPERS
½ SPACING OF DRUMS

BALLAST WIDTHS
RANGE FROM 14"-20"

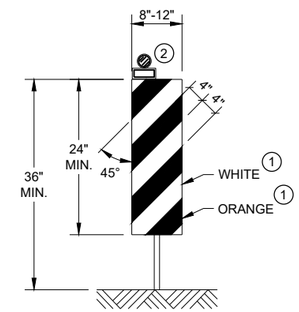

VERTICAL PANEL

THE STRIPES SHALL SLOPE DOWNWARD TO
THE TRAFFIC SIDE FOR CHANNELIZATION.

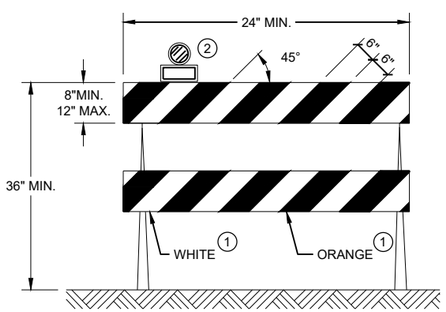

TYPE II BARRICADE

FOR RAILS LESS THAN 36" LONG, 4" WIDE STRIPES
MAY BE USED. ALL STRIPES SHALL SLOPE DOWNWARD
TO THE TRAFFIC SIDE FOR CHANNELIZATION.

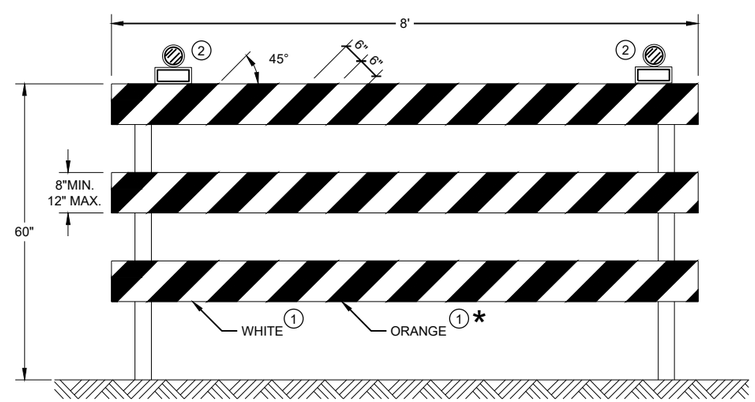

TYPE III BARRICADE

IF SIGN MOUNTED, DO NOT COVER MORE THAN 50% OF THE TOP
TWO RAILS OR 33% OF THE TOTAL AREA OF THE THREE RAILS.

* IF USED FOR A PERMANENT APPLICATION USE RED SHEETING.

CHANNELIZING DEVICES
DRUMS, CONES, BARRICADES
AND VERTICAL PANELS

STATE OF WISCONSIN
DEPARTMENT OF TRANSPORTATION

APPROVED
November 2022 /S/ Andrew Heidtke
DATE WORK ZONE ENGINEE
FHWA

6

6

SDD 15C11 - 10b

SDD 15C11 - 10b

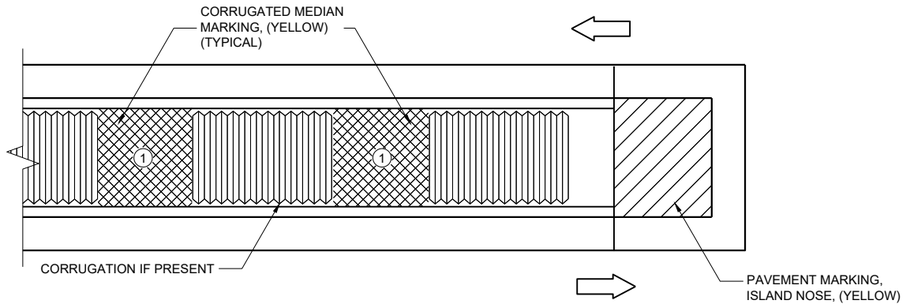

MEDIAN ISLAND WITH SQUARE BLUNT NOSE

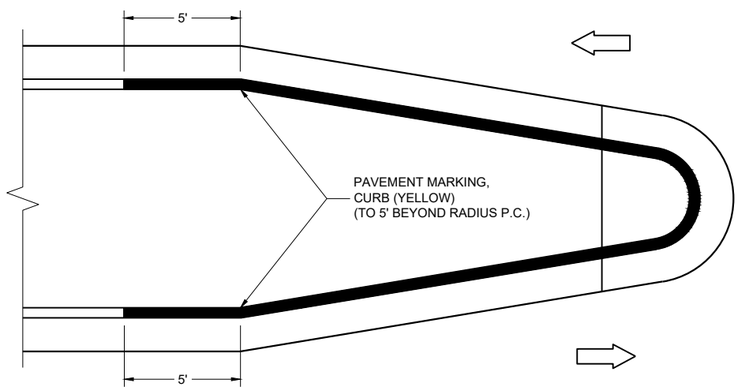

MEDIAN ISLAND WITH ROUND BLUNT NOSE

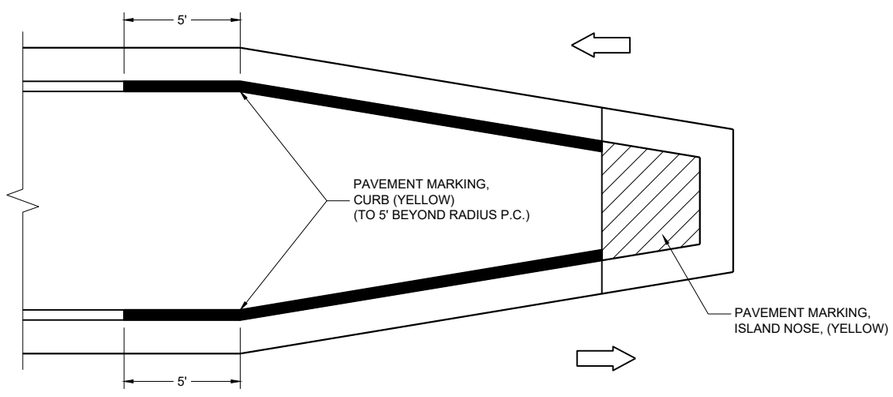

MEDIAN ISLAND WITH SLOPED NOSE

**TYPICAL PLACEMENT OF
PAVEMENT MARKING ON MEDIAN ISLANDS**

GENERAL NOTES

WHEN CONCRETE CORRUGATED MEDIAN IS CONSTRUCTED TO SEPARATE TRAFFIC OPERATING IN THE OPPOSING DIRECTION, YELLOW PAVEMENT MARKING SHALL BE APPLIED TO THE FLAT PORTION OF THE CONCRETE CORRUGATED MEDIAN. THE ITEM OF PAVEMENT MARKING, CONCRETE CORRUGATED MEDIAN, WILL BE MEASURED IN PLACE AND ACCEPTED IN ACCORDANCE WITH THE CONTRACT AND PAID FOR AT THE CONTRACT UNIT PRICE PER SQUARE FOOT.

(1) APPLY PAVEMENT MARKING TO THE FLAT PORTION OF CORRUGATED MEDIAN.

ISLAND NOSE MARKING

CURB MARKING

CORRUGATED MEDIAN MARKING

DIRECTION OF TRAVEL

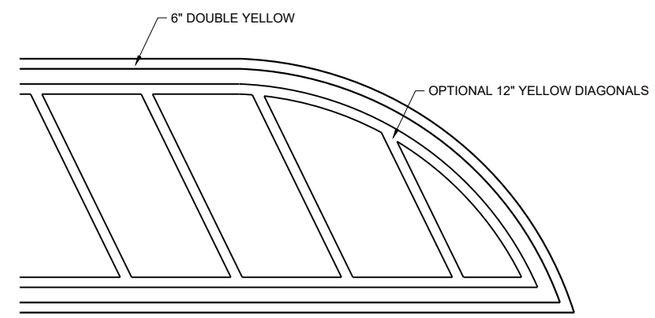

FLUSH MEDIAN ISLAND NOSE

6

6

SDD 15C18-09b

SDD 15C18-09b

**PAVEMENT MARKINGS,
MEDIAN ISLAND NOSE**

STATE OF WISCONSIN
DEPARTMENT OF TRANSPORTATION

APPROVED
August 2024 /S/ Jeannie Silver
DATE Statewide Pavement Marking Engineer
FHWA

REQUIREMENTS FOR EDGE LINES		
POSTED SPEED	IS THERE CONTINUOUS LIGHTING?	
	YES	NO
≤ 30 MPH	NO	OPTIONAL
35 OR 40 MPH	OPTIONAL	RECOMMENDED
≥ 45 MPH	RECOMMENDED	REQUIRED

GENERAL NOTES

APPLIES TO ISLANDS AT LEFT TURNS AT ONE WAY ROADWAYS AS WELL.

SEE MISCELLANEOUS QUANTITIES FOR SIGN SIZE.

1. MARK CURB NOSES YELLOW.
2. MARK ACCORDING TO TABLE.
3. CHEVRON MAY BE OMITTED IF LESS THAN 4" WIDE

DIRECTION OF TRAVEL

*CONFIRM MARKING LINE WIDTH WITH THE MISCELLANEOUS QUANTITIES

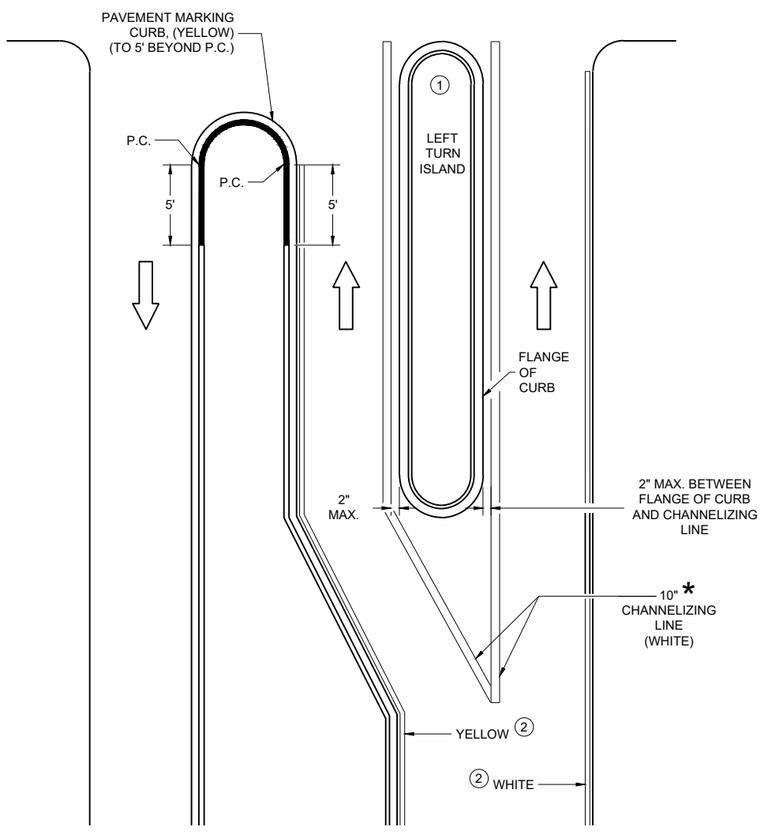

LEFT TURN & MEDIAN ISLAND

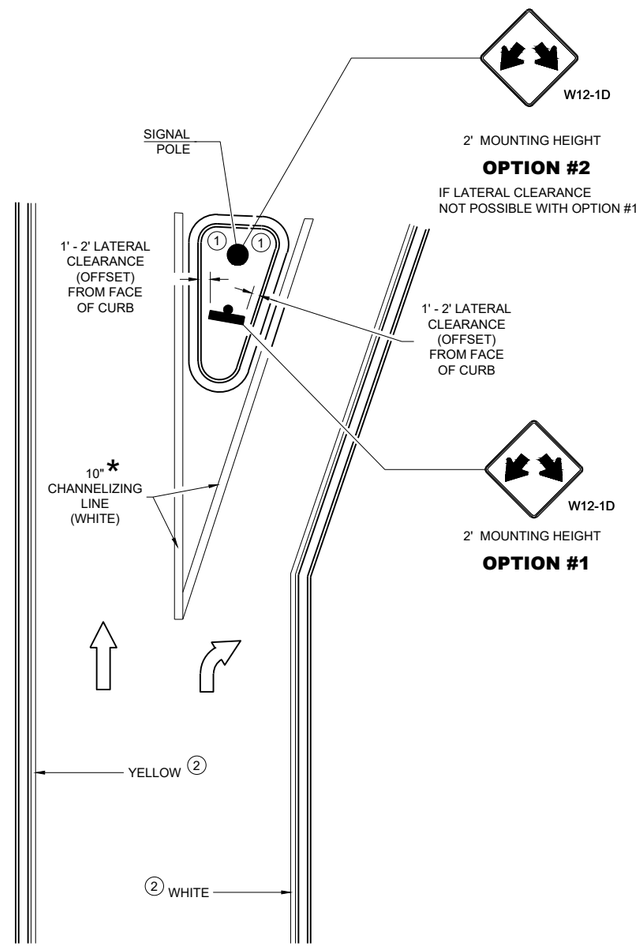

RIGHT TURN ISLAND

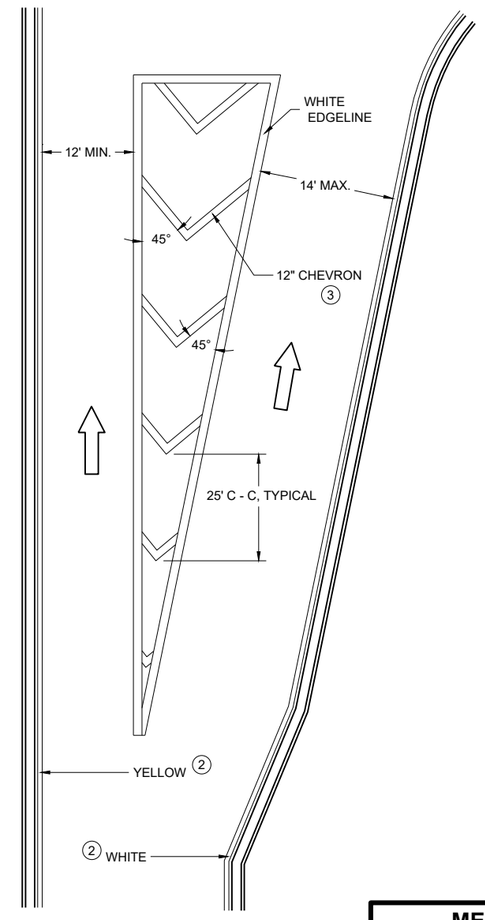

TURN LANE DETAIL

MEDIAN PAVEMENT MARKINGS, DOUBLE ARROW WARNING SIGN PLACEMENT

STATE OF WISCONSIN
DEPARTMENT OF TRANSPORTATION

APPROVED
August 2024 — DATE
/S/ Jeannie Silver — Statewide Pavement Marking Engineer
FHWA

6

SDD 15C18-09c

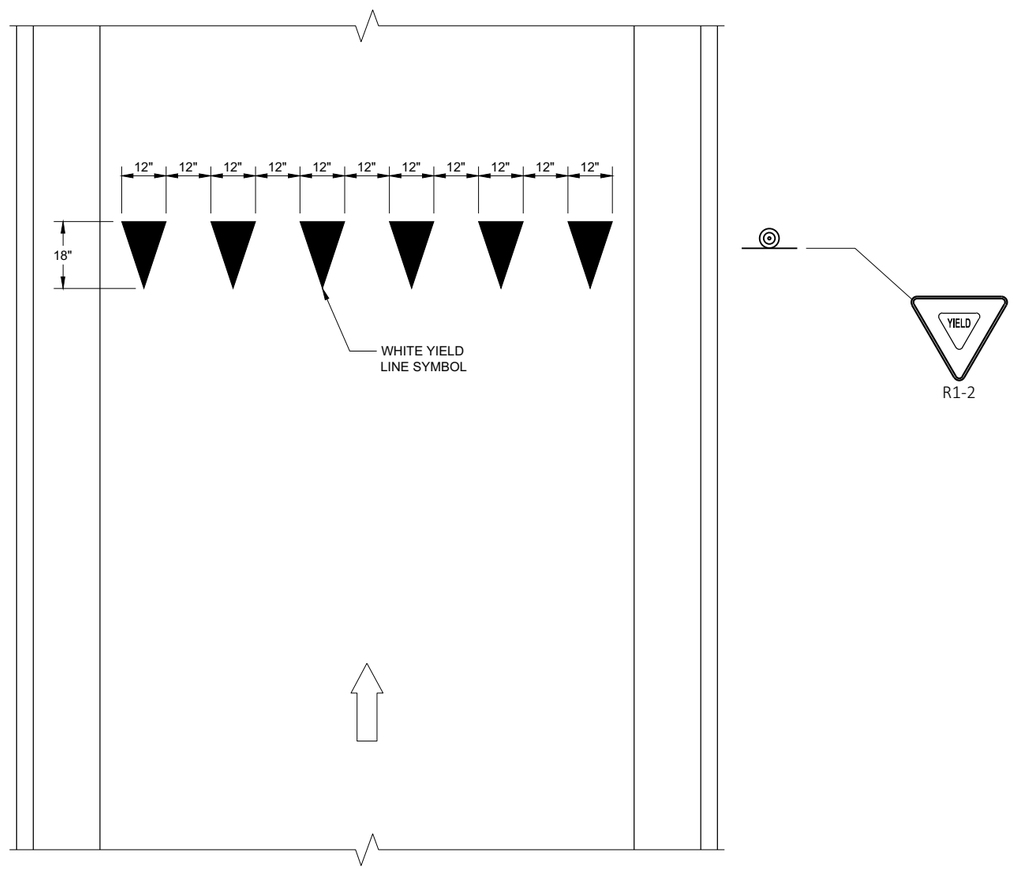

YIELD LINE

LEGEND

SIGN ON PERMANENT SUPPORT

DIRECTION OF TRAVEL

6

SDD 15C20 - 02

YIELD MARKINGS

STATE OF WISCONSIN
DEPARTMENT OF TRANSPORTATION

APPROVED
4-81-2016
DATE

/S/ Matthew R. Rauch
STATE SIGNING AND MAR
ENGINEER

FHWA

6

SDD 15C20 - 02

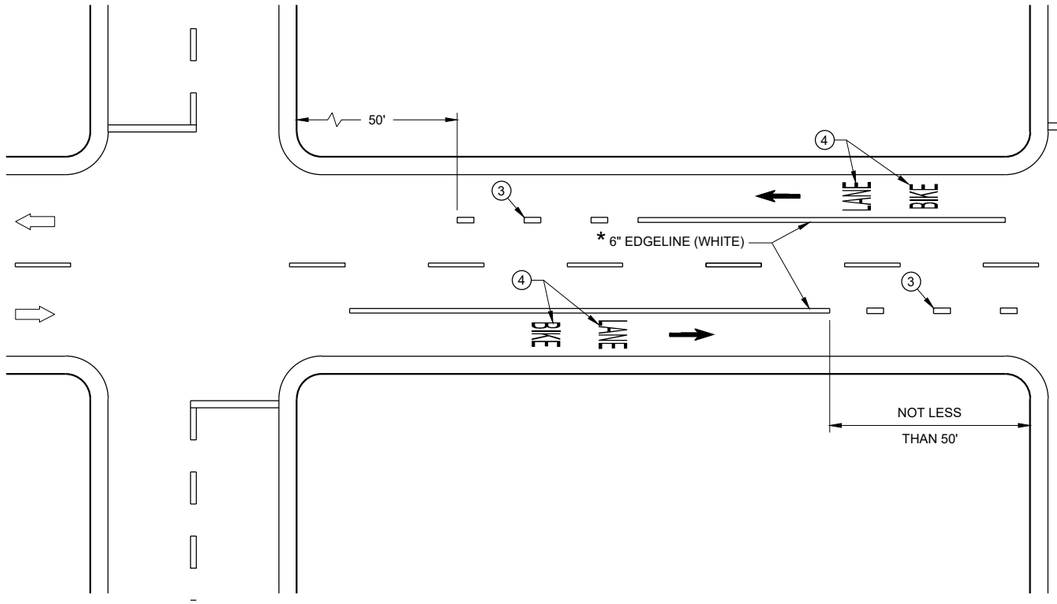

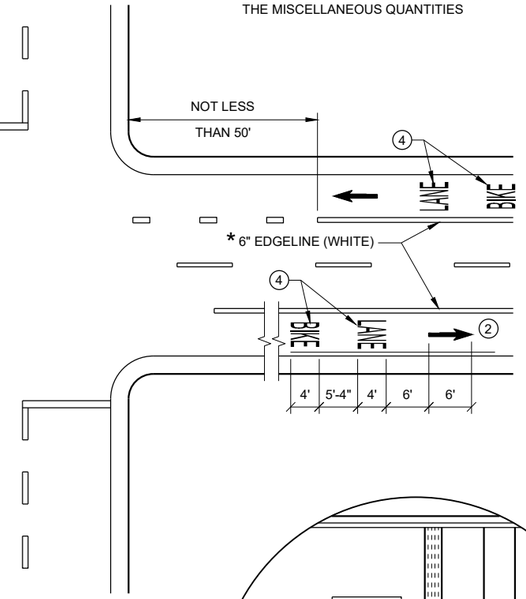

* CONFIRM MARKING LINE WIDTH WITH THE MISCELLANEOUS QUANTITIES

GENERAL NOTES

1. DETAILS OF CONSTRUCTION NOT SHOWN ON THIS DRAWING SHALL CONFORM TO STANDARD SPECIFICATIONS AND SPECIAL PROVISIONS.
2. MINIMUM OF ONE PER BLOCK. MAXIMUM OF 250 FEET.
3. DOTTED LINES (3' LINE, 9' GAP) SHOULD BE USED 50 FEET TO 200 FEET IN ADVANCE OF AN INTERSECTION WHERE THERE IS NO RIGHT TURN ONLY LANE AND THERE IS HEAVY RIGHT TURN TRAFFIC OR THERE IS A NEAR-SIDE BUS STOP. AT OTHER INTERSECTIONS WHERE RIGHT TURN TRAFFIC IS LIGHT TO MODERATE, A SOLID LINE CAN BE USED UP TO THE INTERSECTION.
4. BIKE SYMBOLS OR WORDS MAY BE USED.
5. BIKE ACCOMMODATION IS TYPICAL 5 FEET WIDE AND MINIMUM OF 4 FEET FROM A LONGITUDINAL JOINT. USE 5 FEET AT ≥ 45 MPH.
6. OMIT THESE MARKINGS FOR WIDER TURN LANE APPLICATIONS (MINIMUM OF 15 FOOT WIDE TURN LANE).
7. REFER TO CONTRACT PLANS FOR LANE WIDTH.

DIRECTION OF TRAVEL

DESIGNATED BIKE LANE - NO PARKING

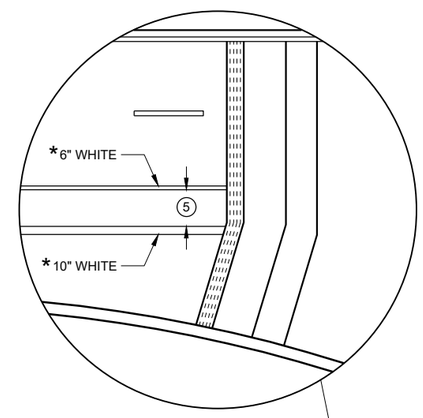

4 LANE DIVIDED WITHOUT ISLAND

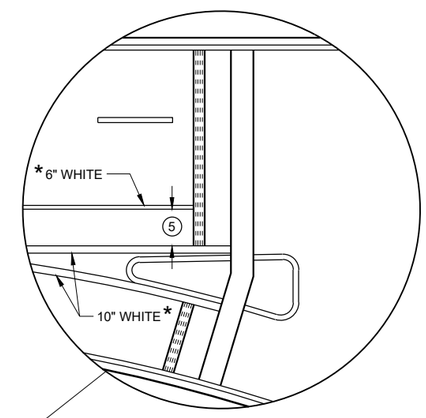

4 LANE DIVIDED WITH ISLAND

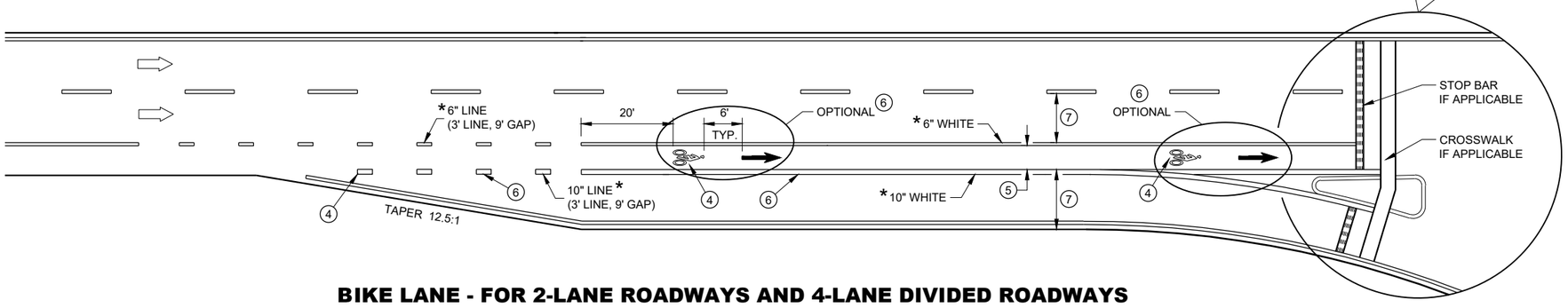

BIKE LANE - FOR 2-LANE ROADWAYS AND 4-LANE DIVIDED ROADWAYS (4-LANE DIVIDED WITH RIGHT TURN LANE SHOWN)

BIKE LANE MARKING

STATE OF WISCONSIN
DEPARTMENT OF TRANSPORTATION

APPROVED
May 2023 — DATE
/S/ Matthew Rauch — STATE SIGNING AND MAF ENGINEER
FHWA

6

SDD 15C29-08a

GENERAL NOTES

STOP SIGN SHALL BE PLACED A MINIMUM OF 6 FEET TO A MAXIMUM OF 50 FEET FROM THE EDGELINE LOCATION.

1. 18-INCH STOP LINES MAY BE DELETED OR ADDED BY THE REGION MARKING ENGINEER BASED ON VISIBILITY AND SIGHT LINES.
2. NO STOP LINE IS REQUIRED IF STOP SIGN IS LESS THAN OR EQUAL TO 40 FEET FROM THE EDGELINE.
3. NO STOP LINE IS REQUIRED IF STOP SIGN IS LESS THAN OR EQUAL TO 30 FEET FROM THE FLANGE LINE EXTENSION.
4. MOVE CLOSER TO THE EDGE OF TRAVEL LINE AS NEEDED FOR VISIBILITY AND SIGHT LINES (NO CLOSER THAN 4 FEET).
5. LADDER BAR CROSSWALKS SHOULD ONLY BE USED FOR MID BLOCK CROSSINGS. USE 2 - 6" TRANSVERSE LINES.
6. POSTED SPEED LIMITS OF 40 MPH OR GREATER USE A MINIMUM WIDTH OF 8' FOR MIDBLOCK CROSSWALKS

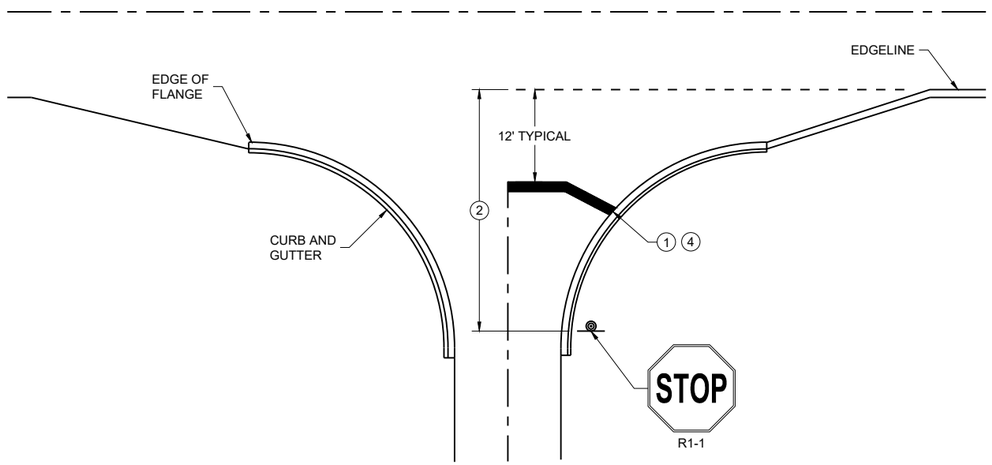

TYPICAL STOP LINE PAVEMENT MARKING WITH CURB AND GUTTER

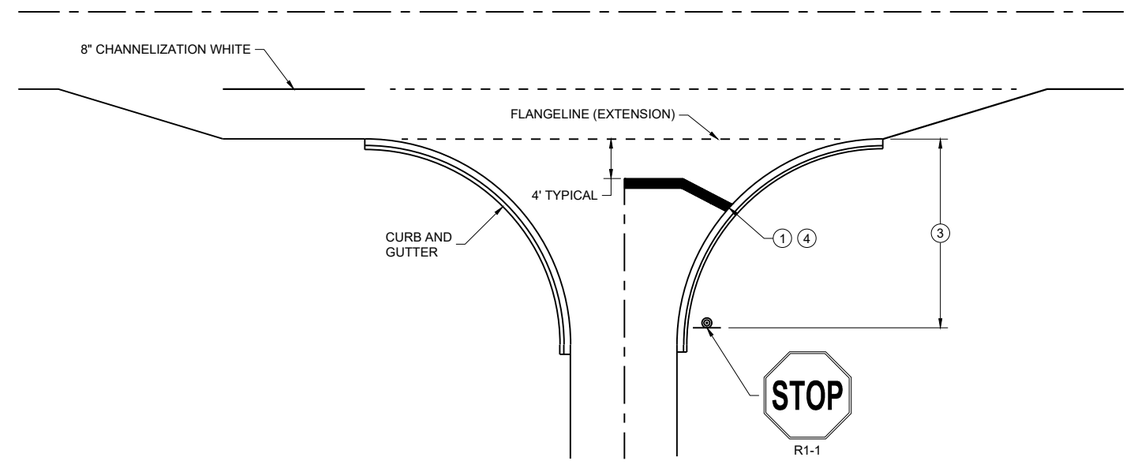

TYPICAL STOP LINE PAVEMENT MARKING FOR SIDE ROADS WITH RIGHT TURN LANE

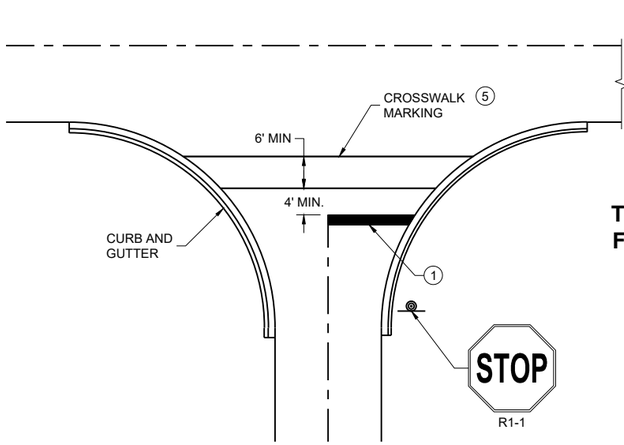

TYPICAL STOP LINE PAVEMENT MARKING FOR SIDE ROADS WITH CROSSWALK MARKING

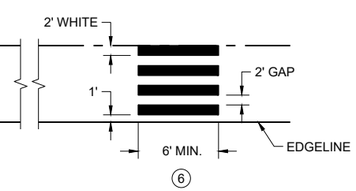

TYPICAL PAVEMENT MARKING FOR MID-BLOCK CROSSWALK 5

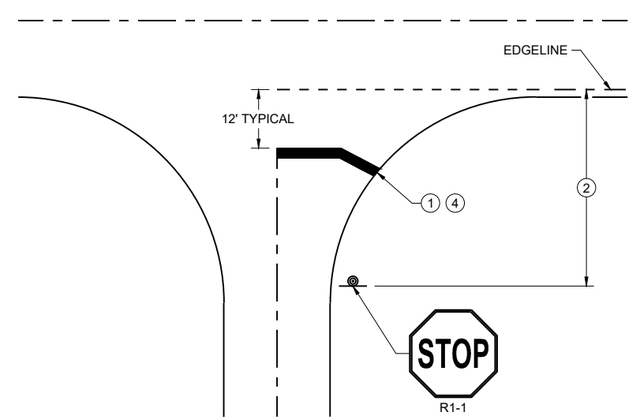

TYPICAL STOP LINE PAVEMENT MARKING WITHOUT CURB AND GUTTER

STOP LINE AND CROSSWALK PAVEMENT MARKING

STATE OF WISCONSIN
DEPARTMENT OF TRANSPORTATION

APPROVED
March 2024 — DATE
/S/ Matthew Rauch — STATE SIGNING AND MARKING ENGINEER

FHWA

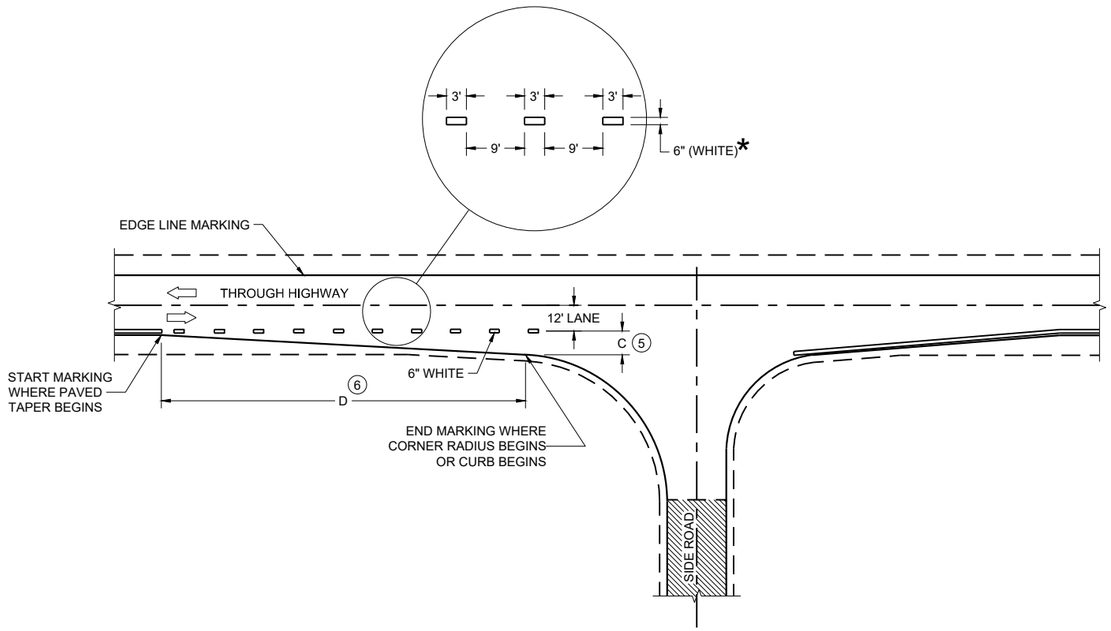

MINOR INTERSECTION

*CONFIRM MARKING LINE WIDTH WITH THE MISCELLANEOUS QUANTITIES

GENERAL NOTES

OMIT EDGE LINES THROUGH INTERSECTIONS. CONTINUE EDGE LINES THROUGH DRIVEWAYS.

1. WHEN DISTANCE "A" IS LESS THAN 250 FEET, OMIT LANE LINE.
2. WHEN DISTANCE "B" IS LESS THAN 100 FEET, OMIT CHANNELIZING LANE LINE.
3. BARRIER LINE ENDS AT SIDE ROAD PAVEMENT / SURFACE EDGE EXTENSION.
4. BARRIER LINE STARTS 500 FEET PRIOR TO THE BYPASS TAPER.
5. WHEN DISTANCE "C" IS LESS THAN 4 FEET, OMIT DOTTED EXTENSION.
6. WHEN DISTANCE "D" IS LESS THAN 50 FEET, OMIT DOTTED EXTENSION.

LEGEND

⇨ DIRECTION OF TRAVEL

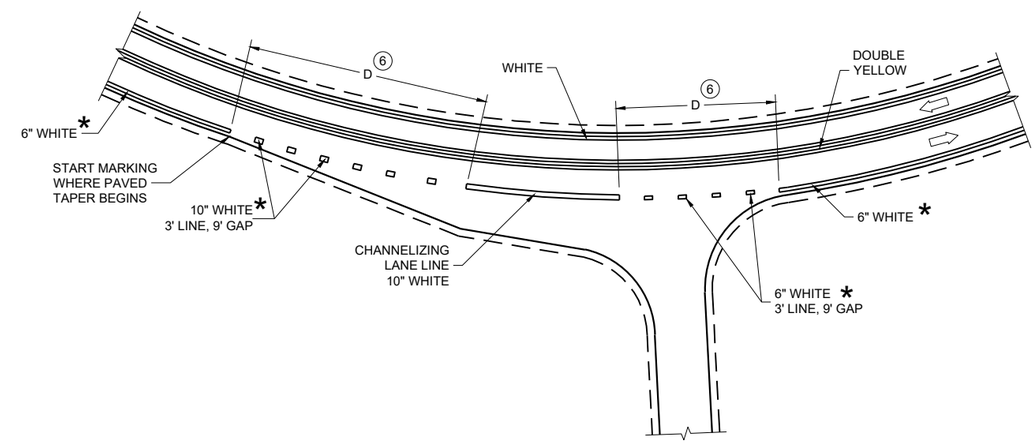

INTERSECTION ON OUTSIDE OF CURVE

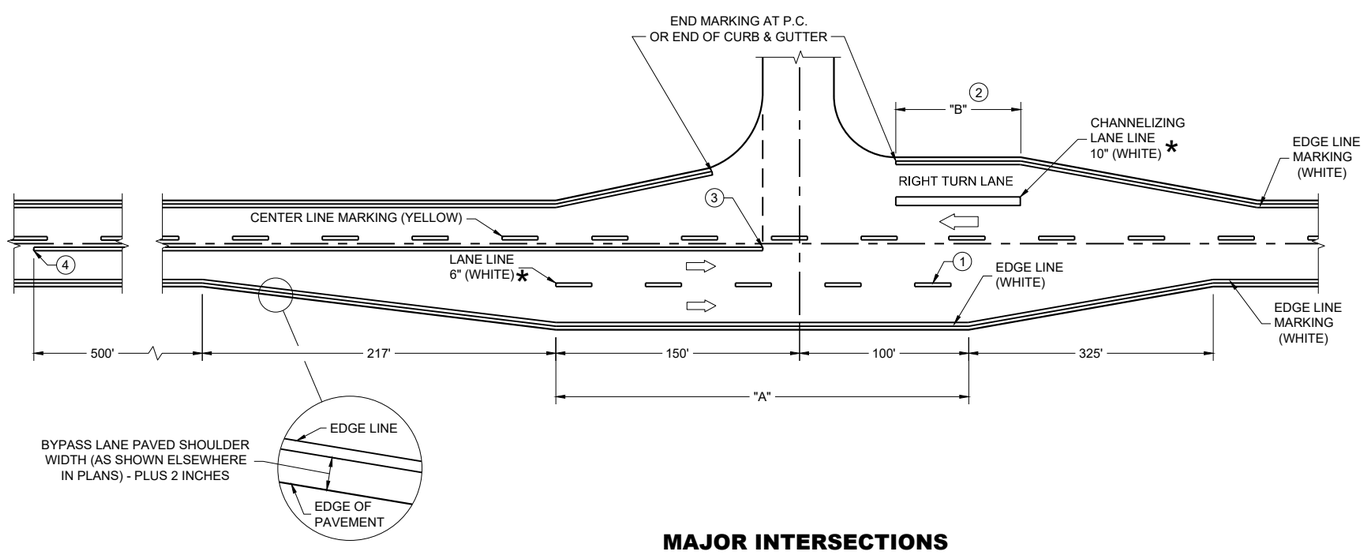

MAJOR INTERSECTIONS

(INTERSECTION WITH FULL RIGHT TURN LANE OR BYPASS LANE)

PAVEMENT MARKING (INTERSECTIONS)

STATE OF WISCONSIN
DEPARTMENT OF TRANSPORTATION

GENERAL NOTES

BARRICADE DEVICE SELECTED FROM APPROVED PRODUCT LIST

1. REFLECTIVE SHEETING SHALL FOLLOW THE REQUIREMENTS IN THE APPROVED PRODUCTS LISTING FOR SIGN SHEETING.
2. SHEETING REQUIRED ON MORE THAN 50% OF BARRICADE WIDTH.
3. PLACE SHEETING ON BOTH SIDES OF THE BARRICADE.

* USE THIS DETAIL FOR SHEETING PLACEMENT REFERENCE.

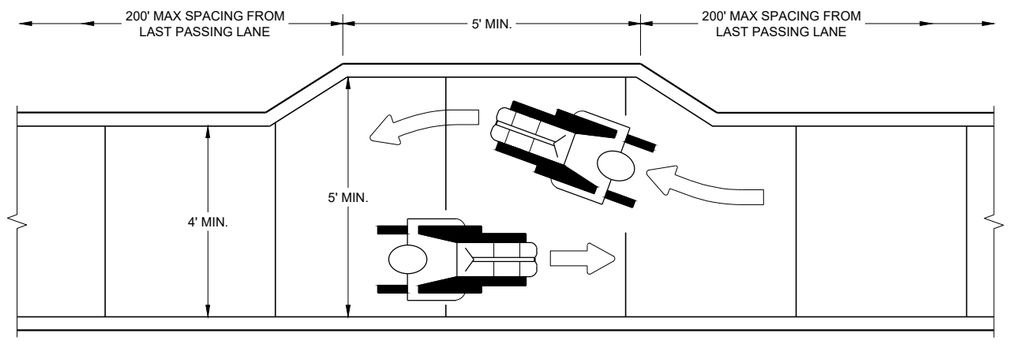

NARROW SIDEWALK PASSING DETAIL

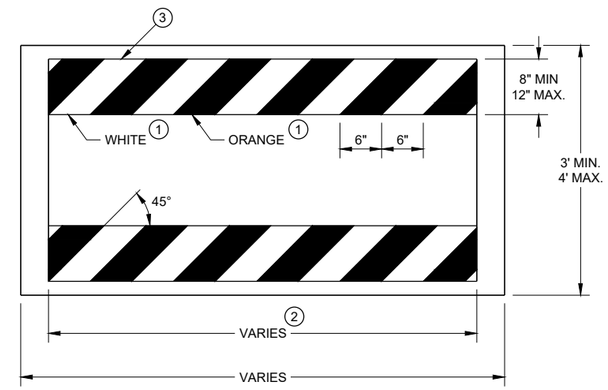

TEMPORARY PEDESTRIAN BARRICADE*

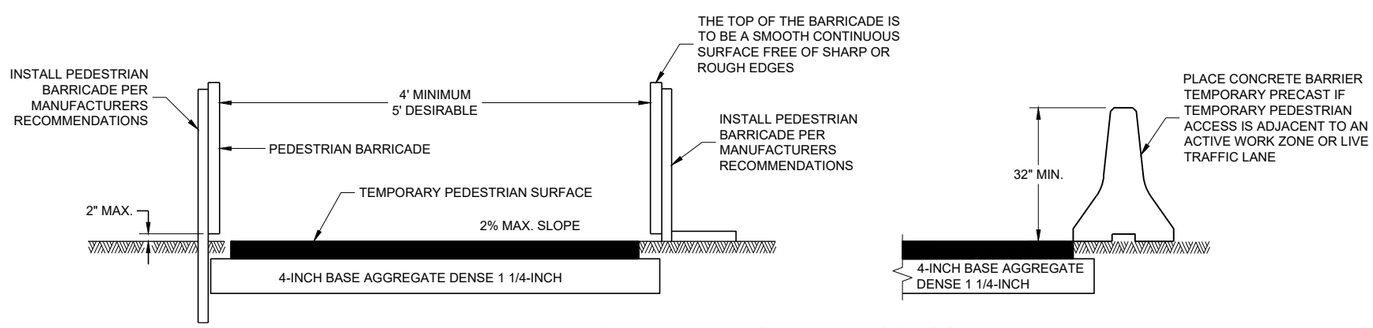

TEMPORARY PEDESTRIAN ACCESS

6

SDD 15D30 - 09a

TRAFFIC CONTROL, PEDESTRIAN ACCOMMODATION

STATE OF WISCONSIN
DEPARTMENT OF TRANSPORTAT

6

SDD 15D30 - 09a

GENERAL NOTES

CURB RAMPS SHALL BE 48" MIN. WIDTH WITH A FIRM, STABLE AND SLIP RESISTANT SURFACE.

CURB RAMPS AND LANDINGS SHALL HAVE A 1:50 (2%) MAX. CROSS-SLOPE.

CLEAR SPACE OF 48" X 48" SHALL BE PROVIDED ABOVE AND BELOW THE CURB RAMP.
LATERAL JOINTS OR GAPS BETWEEN SURFACES SHALL BE LESS THAN ½" WIDTH.

CHANGES BETWEEN SURFACE HEIGHTS SHALL NOT EXCEED ½". LATERAL EDGES MAY BE VERTICAL UP TO ¼" HIGH AND SHALL BE BEVELED AT 1:2 BETWEEN ¼" AND ½".

1. INSTALL CONTRASTING TEMPORARY DETECTABLE WARNING FIELD AT PEDESTRIAN STREET CROSSINGS, AS SHOWN IN THE PLANS.
2. PROTECTIVE EDGING WITH A 2" MIN. HEIGHT SHALL BE INSTALLED WHEN A CURB RAMP OR LANDING PLATFORM HAS A VERTICAL DROP OF 6" OR GREATER OR HAS A SIDE APRON SLOPE STEEPER THAN 1:3 (33%). PROTECTIVE EDGING SHOULD BE CONSIDERED WHEN CURB RAMPS OR LANDING PLATFORMS HAVE A VERTICAL DROP OF 3" OR MORE.
3. DETECTABLE EDGING WITH 6" MIN. HEIGHT AND CONTRASTING COLOR SHALL BE INSTALLED ON ALL CURB RAMP LANDINGS WHERE THE WALKWAY CHANGES DIRECTION (TURNS).
4. DO NOT RESTRICT WATER FLOW IN THE GUTTER SYSTEM.
5. ENSURE CURB RAMP IS OUT OF THE GUTTER PAN.
6. IF ONLY PART OF THE END PANEL OF TEMPORARY PEDESTRIAN BARRICADE PANEL IS NEEDED, EXTEND EXCESS PORTION OF TEMPORARY PEDESTRIAN BARRICADE PANEL HERE.

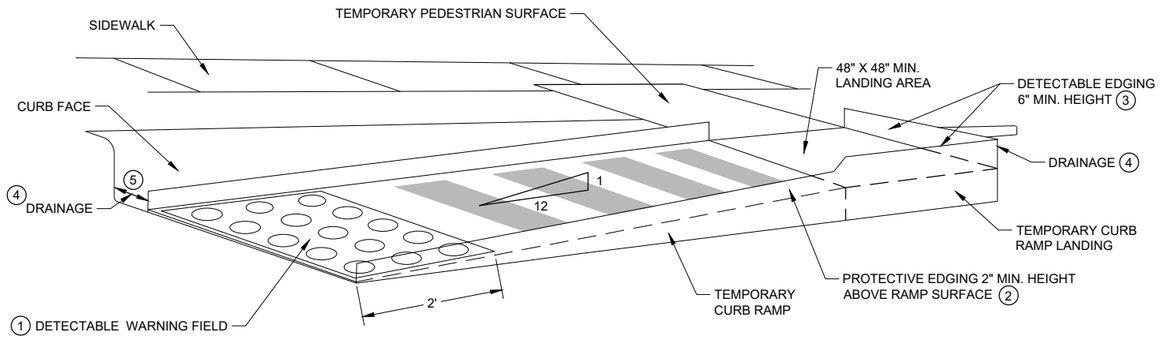

PERSPECTIVE VIEW

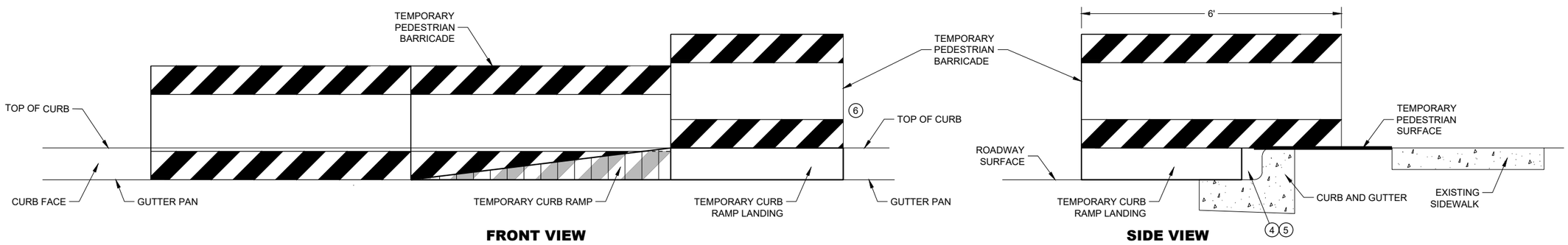

FRONT VIEW **SIDE VIEW**

TEMPORARY CURB RAMP PARALLEL TO CURB

6

6

SDD 15D30 - 09b

SDD 15D30 - 09b

TRAFFIC CONTROL, PEDESTRIAN ACCOMMODATION

STATE OF WISCONSIN
DEPARTMENT OF TRANSPORTAT

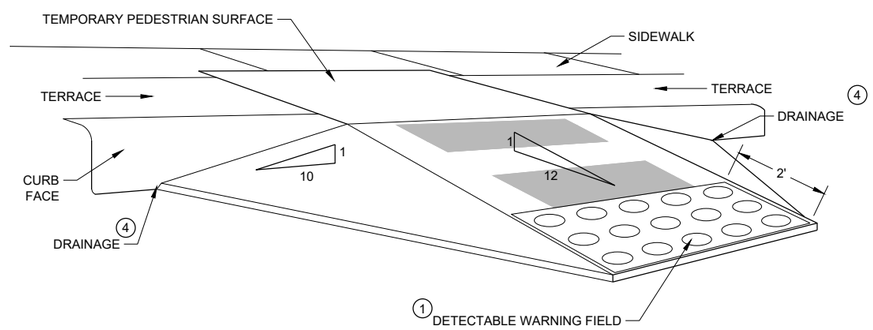

WITH SIDE APRON 5

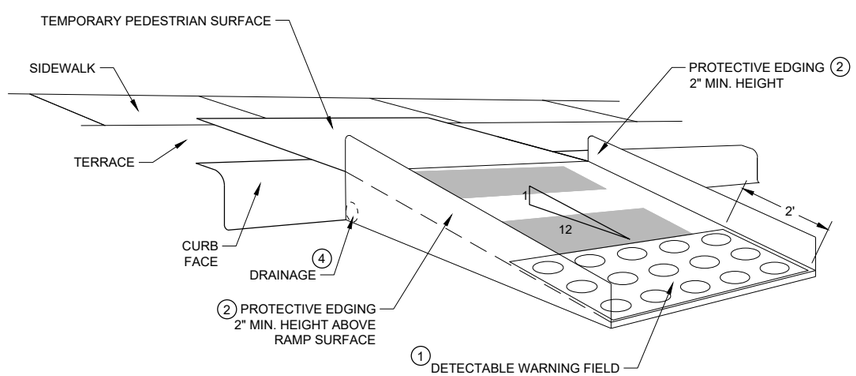

WITH PROTECTIVE EDGE

TEMPORARY CURB RAMP PERPENDICULAR TO CURB

GENERAL NOTES

CURB RAMPS SHALL BE 48" MINIMUM WIDTH WITH A FIRM, STABLE AND SLIP RESISTANT SURFACE.

ALTERNATE SIDEWALK WORK BETWEEN LEFT AND RIGHT SIDE OF ROADWAY TO MAINTAIN PEDESTRIAN ACCESS.

CURB RAMPS AND LANDINGS SHALL HAVE A 1:50 (2%) MAX. CROSS-SLOPE.

CLEAR SPACE OF 48" X 48" SHALL BE PROVIDED ABOVE AND BELOW THE CURB RAMP.

LATERAL JOINTS OR GAPS BETWEEN SURFACES SHALL BE LESS THAN ½" WIDTH.

CHANGES BETWEEN SURFACE HEIGHTS SHALL NOT EXCEED ½". LATERAL EDGES MAY BE VERTICAL UP TO ¼" HIGH AND SHALL BE BEVELED AT 1:2 BETWEEN ¼" AND ½".

1. INSTALL CONTRASTING TEMPORARY DETECTABLE WARNING FIELD AT PEDESTRIAN STREET CROSSINGS, AS SHOWN IN THE PLANS
2. PROTECTIVE EDGING WITH A 2" MIN. HEIGHT SHALL BE INSTALLED WHEN A CURB RAMP OR LANDING PLATFORM HAS A VERTICAL DROP OF 6" OR GREATER OR HAS A SIDE APRON SLOPE STEEPER THAN 1:3 (33%). PROTECTIVE EDGING SHOULD BE CONSIDERED WHEN CURB RAMPS OR LANDING PLATFORMS HAVE A VERTICAL DROP OF 3" OR MORE.
3. DETECTABLE EDGING WITH 6" MIN. HEIGHT AND CONTRASTING COLOR SHALL BE INSTALLED ON ALL CURB RAMP LANDINGS WHERE THE WALKWAY CHANGES DIRECTION (TURNS).
4. DO NOT RESTRICT WATER FLOW IN THE GUTTER SYSTEM.
5. CAN ONLY BE USED FOR RAMPS WITH 6" OR LESS OF VERTICAL CHANGE.

6

SDD 15D30 - 09c

TRAFFIC CONTROL, PEDESTRIAN ACCOMMODATION

STATE OF WISCONSIN
DEPARTMENT OF TRANSPORTAT

URBAN AREA

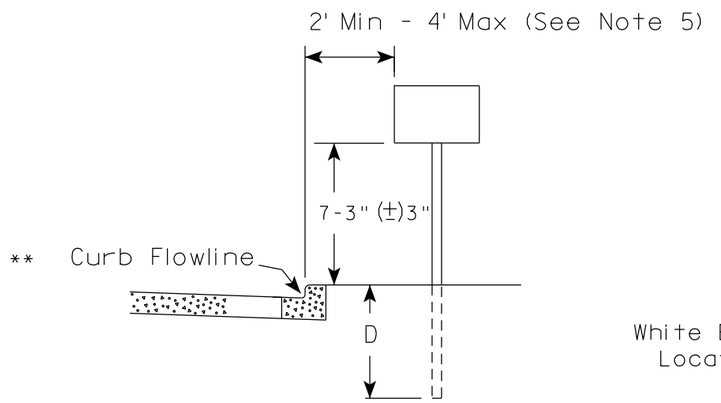

RURAL AREA (See Note 2)

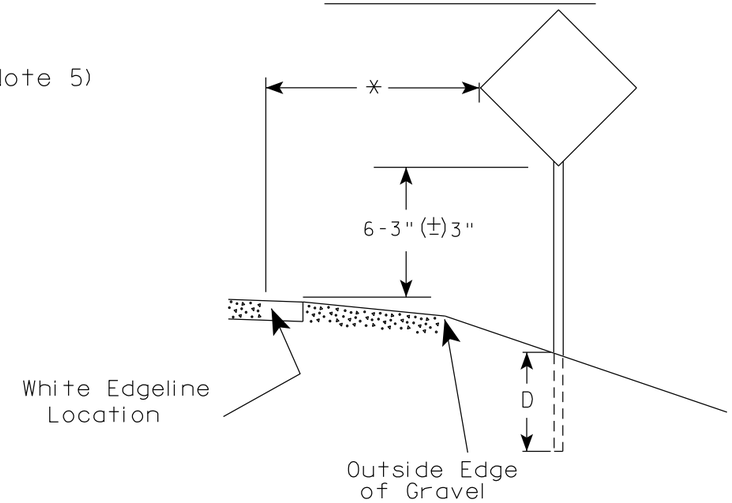

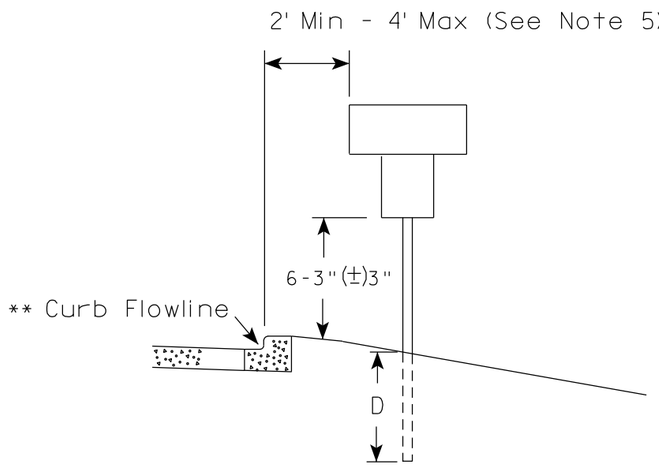

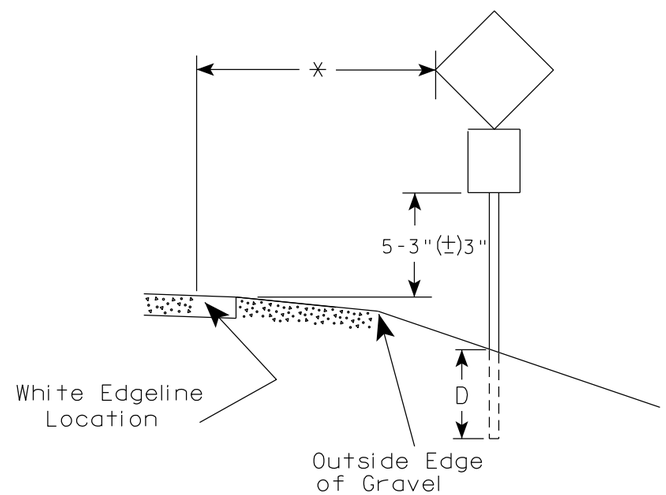

** The existence of curb and gutter does not in itself mandate the vertical clearance illustrated. That height is typically measured where there is sidewalk adjacent to the roadway or parking is permitted. In the absence of sidewalk vertical clearance is measured from the top of the curb. Offset of signs is measured from the flow line.

* 6 feet from edge of a paved shoulder or 12 feet from the edge of pavement (edge line location) or 2 feet from outside edge of gravel, whichever is greater unless directed by project engineer.

GENERAL NOTES

1. Signs wider than 4 feet or 20 sq.ft or larger, shall be mounted on multiple posts. Refer to plate A4-4.
2. If signs are mounted on or behind barrier wall, see A4-10 sign plate.
   The Double Arrow sign (W12-1D) shall be mounted at a height of 2'-3" (±) 3". The Chevron sign (W1-8), Roundabout Chevron panel (R6-4B), Enhanced Reference Markers, Clearance Markers (W5-52), Mile Markers (D10 series), In Road Object Markers (W5-54) & End of Road Markers (W5-56) shall be mounted at a height of 4'-3" (±) 3".
3. For expressways and freeways, mounting height is 7'- 3" (±) 3" or 6'-3" (±) 3" depending upon existence of a sub-sign.
4. Minimum mounting height for signs mounted on traffic signal poles is 5'- 3" (±) 3".
5. Offset distance shall be consistent with existing signs or consistent throughout length of project.
6. Folding signs shall be mounted at a height of 5'-3" (±) 3" or as directd by the Engineer.

POST EMBEDMENT DEPTH

Area of Sign Installation (Sq. Ft.)	D (Min)
20 or Less	4'
Greater than 20	5'

TYPICAL INSTALLATION OF PERMANENT TYPE II SIGNS ON SINGLE POSTS

WISCONSIN DEPT OF TRANSPORTATION

APPROVED Matthew R Rauch
for State Traffic Engineer

DATE 12/6/23 PLATE NO. A4-3.23

7 7

PROJECT NO:	HWY:	COUNTY:		SHEET NO: 200	E

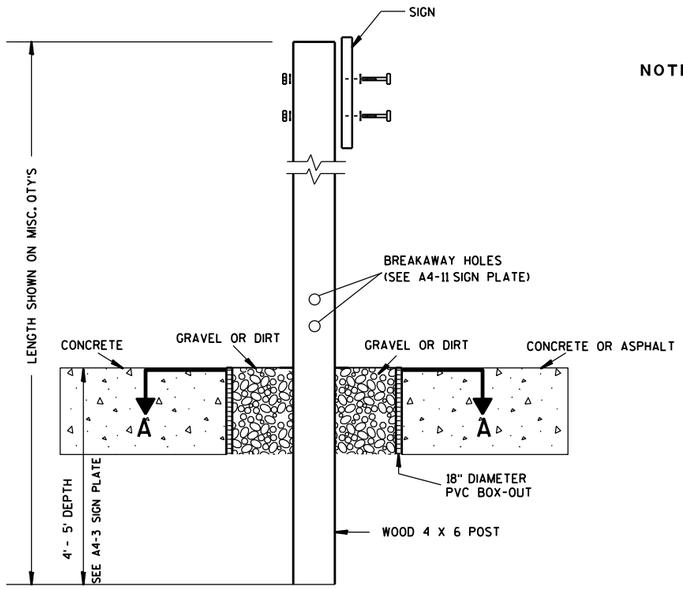

ELEVATION VIEW

DETAIL OF WOOD 4 X 6 SIGN POST IN BOX-OUT

NOTES:
1. ALL MATERIAL TO BE APPROVED BY ENGINEER PRIOR TO INSTALLATION
2. SEE SIGN PLATE A4-8 FOR SIGN HARDWARE REQUIREMENTS
3. 18 INCH X 18 INCH SQUARE BOX-OUTS MAY BE USED FOR INSTALLATIONS IN EXISTING CONCRETE OR ASPHALT LOCATIONS.

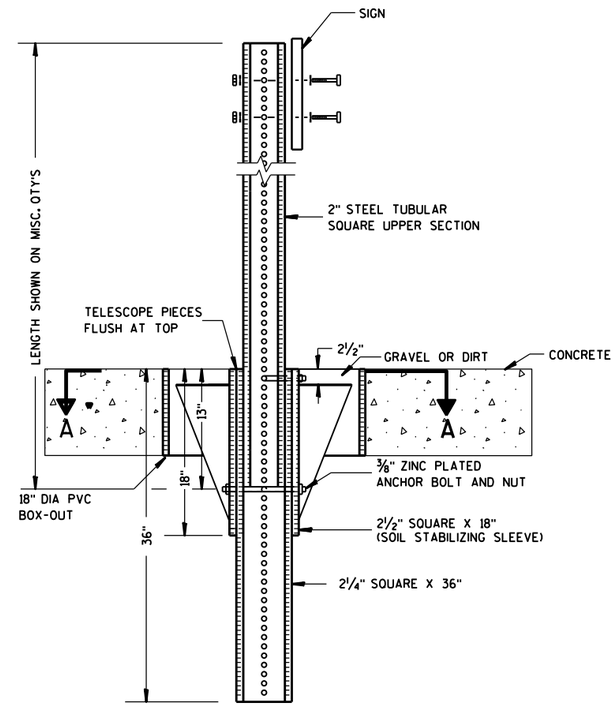

ELEVATION VIEW

DETAIL OF STEEL 2 X 2 SIGN POST IN BOX-OUT

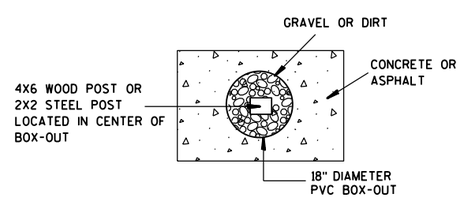

PLAN VIEW

FOR NEW CONCRETE/ASPHALT INSTALLATIONS

SIGN POST
BOX-OUTS
A4-3B

WISCONSIN DEPT OF TRANSPORTATION

APPROVED Matthew R Rauch
for State Traffic Engineer

DATE 1/27/14 PLATE NO. A4-3B.1

PROJECT NO:	HWY:	COUNTY:		SHEET NO:	E

URBAN AREA

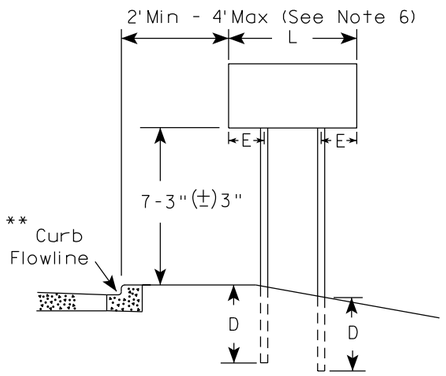

RURAL AREA (See Note 3)

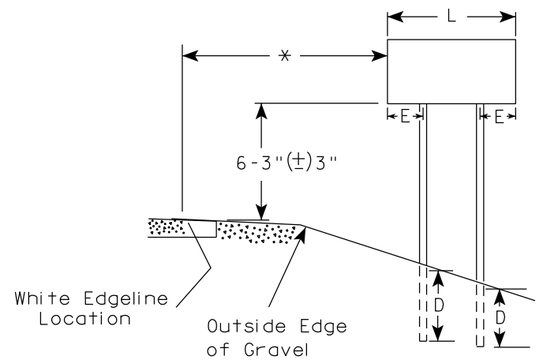

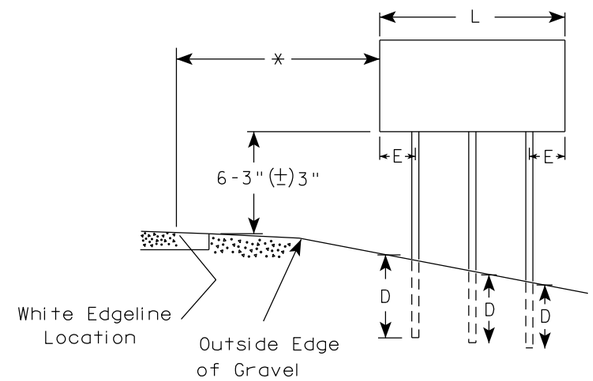

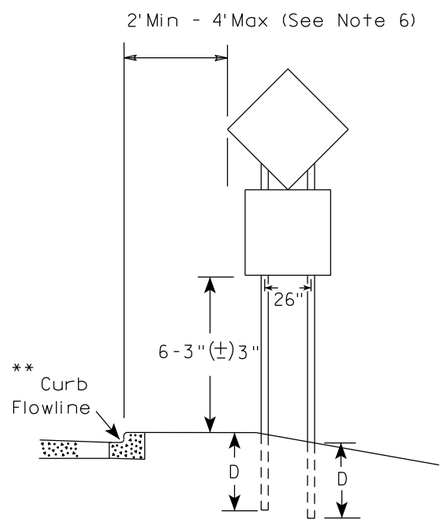

48" DIAMOND WARNING SIGN

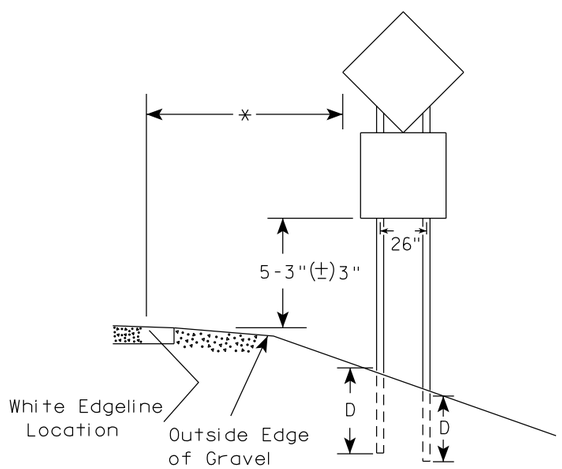

48" DIAMOND WARNING SIGN

GENERAL NOTES

1. For 3 or 4 post installations, individual post spacing shall be greater than 3'-6".
2. See tables below for required number of posts.
3. For expressways and freeways, mounting height is 7'-3" (±) 3" or 6'-3" (±) 3" depending upon existence of sub-sign.
4. The (±) tolerance for mounting height is 3 inches.
5. J-Assemblies are considered to be one sign for mounting height.
6. Offset distance shall be consistent with existing signs or consistent throughout length of project.
7. Folding signs shall be mounted at a height of 5'-3" (±) 3" or as directed by the engineer.
8. The Double Arrow sign (W12-1) shall be mounted at a height of 2'-3" (±) 3". The Chevron sign (W1-8), Roundabout Chevron panel (R6-4B), Clearance Markers (W5-52), Mile Markers (D10 series), In Road Object Markers (W5-54) & End of Road Markers (W5-56) shall be mounted at a height of 4"-3" (±) 3".

* 6 feet from edge of a paved shoulder or 12 feet from the edge of pavement (edge line location) or 2 feet from outside edge of gravel, whichever is greater unless directed by project engineer.

** The existence of curb and gutter does not in itself mandate the vertical clearance illustrated. That height is typically measured where there is sidewalk adjacent to the roadway or parking is permitted. In the absence of sidewalk vertical clearance is measured from the top of the curb. Offset of signs is measured from the flow line.

*** See A4-3 sign plate for signs 4' or less in width and less than 20 S.F. in area.

SIGN SHAPE OTHER THAN DIAMOND (TWO POSTS REQUIRED)	
L	E
*** Greater than 48" Less than 60"	12"
60" to 108"	L/5

SIGN SHAPE OTHER THAN DIAMOND (THREE POSTS REQUIRED)	
L	E
Greater than 108" to 144"	12"

POST EMBEDMENT DEPTH

Area of Sign Installation (Sq. Ft.)	D (Min)
20 or Less	4'
Greater than 20	5'

TYPICAL INSTALLATION OF TYPE II SIGNS ON MULTIPLE POSTS

WISCONSIN DEPT OF TRANSPORTATION

APPROVED Matthew R Rauch
for State Traffic Engineer

DATE 12/6/23 PLATE NO. A4-4.16

PROJECT NO:	HWY:	COUNTY:		SHEET NO: 202	E

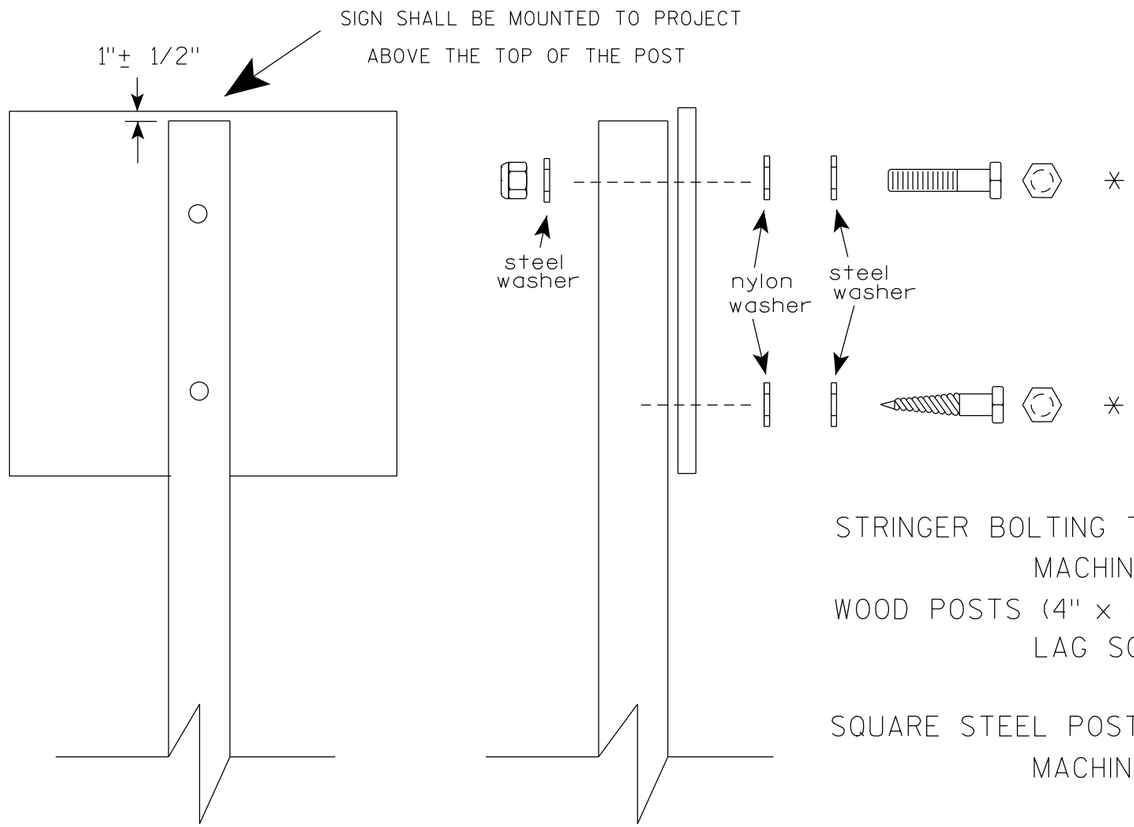

Nuts, bolts and lags used for mounting signs shall have hexagonal heads and shall be either :

a. Hot dip galvanized in accordance with ASTM Designation: A 153, Class D, or SC 3

b. Electro-galvanized in accordance with ASTM Designation : B 633, TYPE III, SC 3.

Threads on bolts and nuts shall be manufactured with sufficient allowance for the cadmium plate or galvanized coating to permit the nuts to run freely on the bolts.

STRINGER BOLTING TO ALUMINUM SIGNS (SEE SIGN PLATE A4-18)

MACHINE BOLTS - 5/16" X 1-3/4" Length w/ lock nuts

WOOD POSTS (4" x 6")

LAG SCREWS - 3/8" X 3" (NO STRINGERS ON BACK OF SIGN)
3/8" X 4" (STRINGERS ON BACK OF SIGN)

SQUARE STEEL POSTS (2" x 2")

MACHINE BOLTS - 3/8" X 3-1/4" Length w/ nuts (NO STRINGER ON BACK OF SIGN)
3/8" X 5" Length w/ nuts (STRINGERS ON BACK OF SIGN)

RIVETS - 9/32" (6605-9-6) BULB-TITE, TRI-FOLD, ALUMINUM BODY/MANDREL
O.D. FLANGE .720-.765 INCH, GRIP RANGE .042-.375 INCH

WASHERS (ALL POSTS) -

1-1/4" O.D. X 3/8" I.D. X 1/16" STEEL
1-1/4" O.D. X 3/8" I.D. X .080 NYLON

* Two different fastening systems are shown for illustration purposes. On any individual sign, either one or the other system shall be used. Actual number of fasteners per sign varies with the sign area, but normally there are two. For a single post installation, all signs greater than 9 sq. ft. require the use of 3 fasteners.

ATTACHMENT OF SIGNS TO POSTS

WISCONSIN DEPT OF TRANSPORTATION

APPROVED Matthew R Rauch
for State Traffic Engineer

DATE 4/1/2020 PLATE NO. A4-8.9

TELESCOPIC TUBING ANCHORS
TWO PIECE SYSTEM

2 1/4" SQUARE
12 GAUGE
PERFORATED
GALVANIZED FINISH

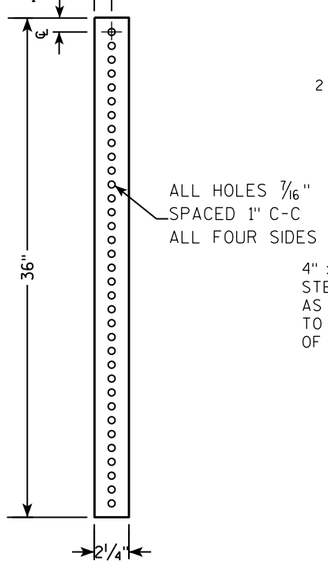

2 1/2" SQUARE
12 GAUGE
OMNI-DIRECTIONAL
PERFORATED
SOIL STABILIZING SLEEVE
GALVANIZED FINISH

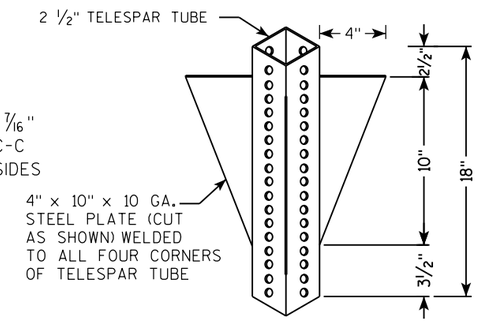

DETAIL OF TUBULAR STEEL SIGN POST
(IN POURED CONCRETE OR ASPHALT)

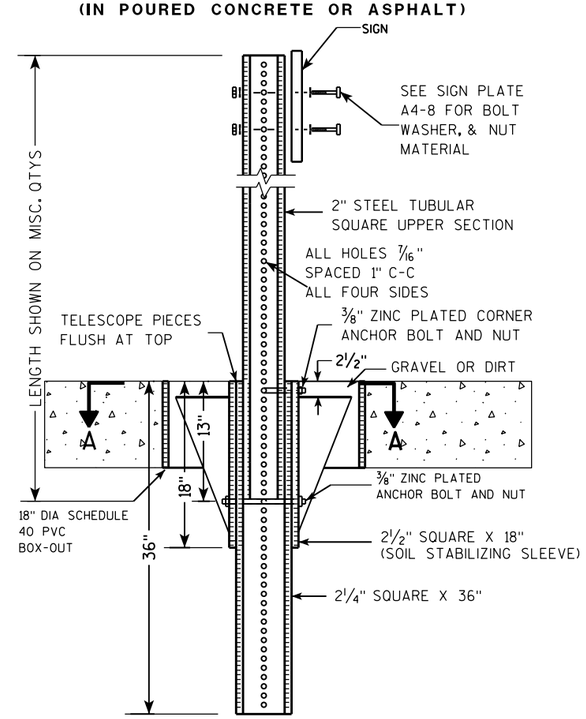

DETAIL OF TUBULAR STEEL SIGN POST
(IN LOCATIONS OTHER THAN POURED CONCRETE OR ASPHALT)

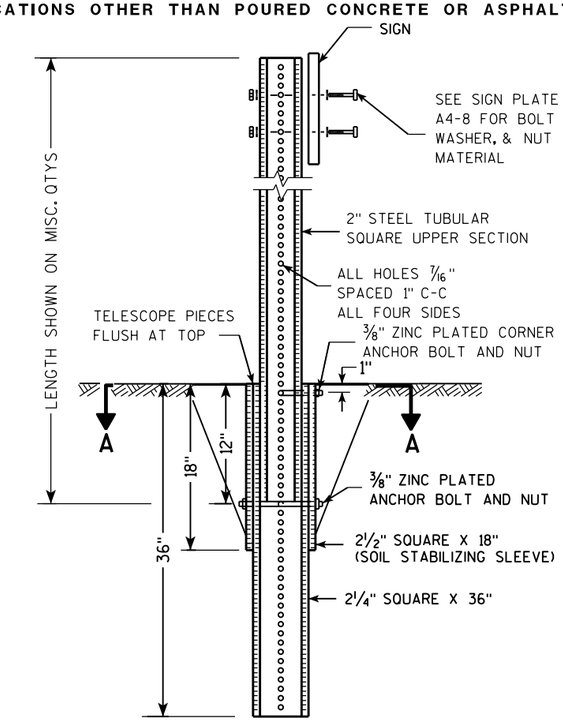

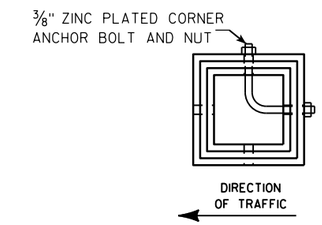

SECTION A-A

Area of Sign Installation (Sq. Ft.)	Number of Required Posts
9 or less	1
Greater than 9 less than or equal to 18	2
Greater than 18 less than or equal to 27	3

Signs wider than 3 feet or larger than 9 sq. ft shall be mounted on multiple posts (see above table).

TUBULAR STEEL
SIGN POST
A4-9

WISCONSIN DEPT OF TRANSPORTATION

APPROVED Matthew R Rauch
for State Traffic Engineer

DATE 2/05/15 PLATE A4-9.9

7 7

PROJECT NO:	HWY:	COUNTY:		SHEET NO:	E

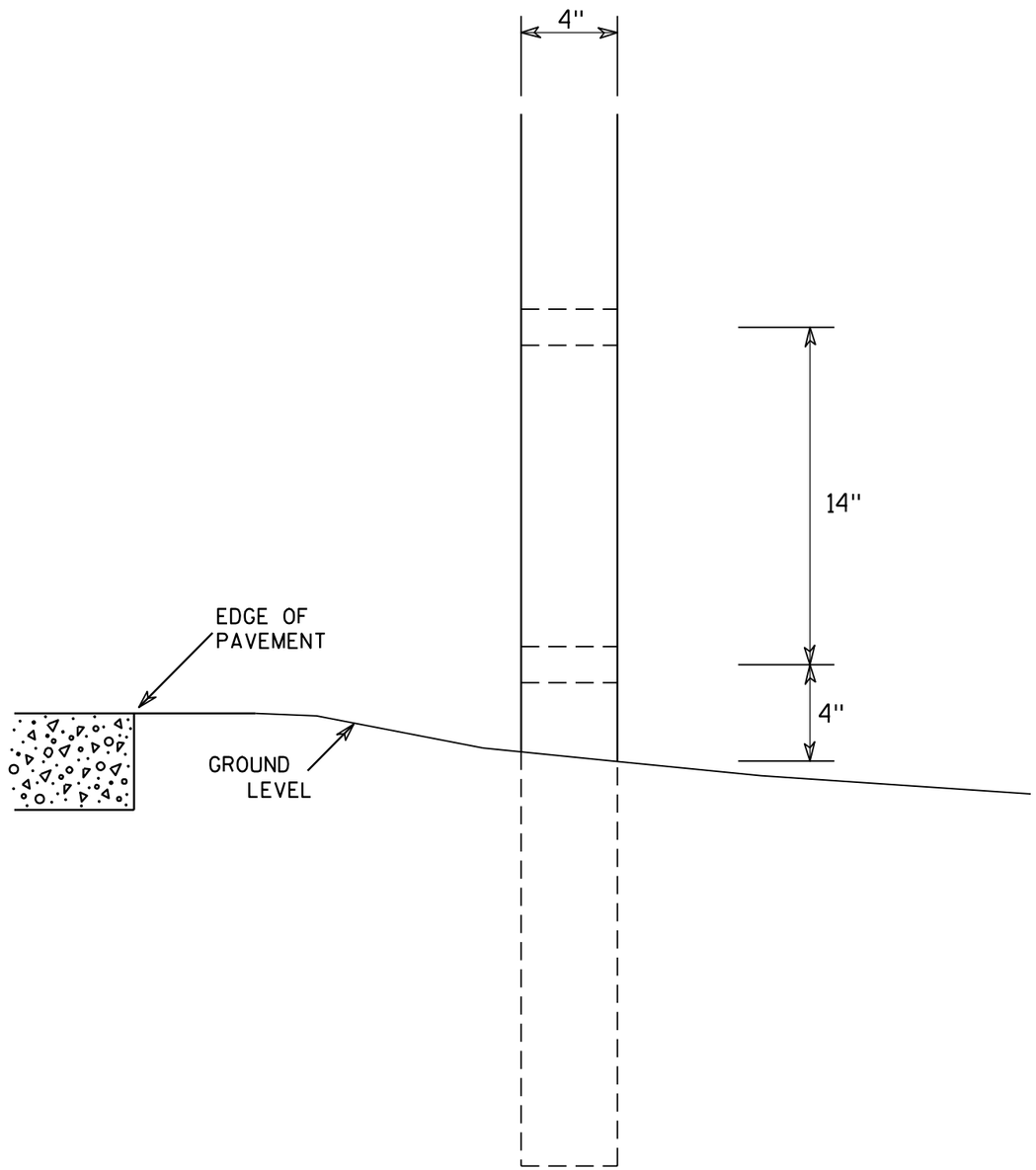

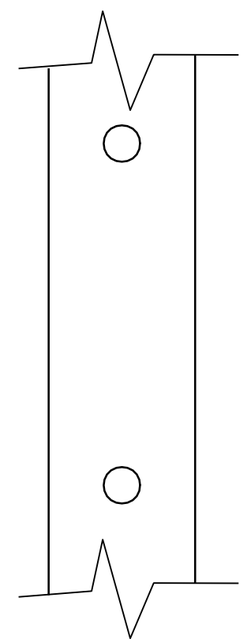

SIDE VIEW

GENERAL NOTES

1. All 4 x 6 Wood Posts shall be modified by having two 1½" diameter holes drilled perpendicular to the roadway centerline.

7

7

4 X 6 WOOD POST MODIFICATIONS

WISCONSIN DEPT OF TRANSPORTATION

APPROVED Chester J Spang for State Traffic Engineer

DATE 3/27/97 PLATE NO. A4-11.2

PROJECT NO:	HWY:	COUNTY:		SHEET NO: 205	E

BANDING

SINGLE SIGN

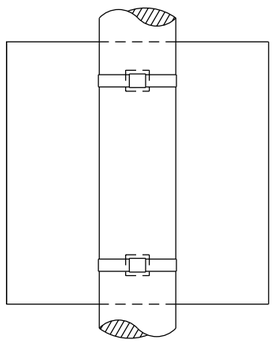

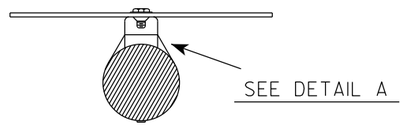

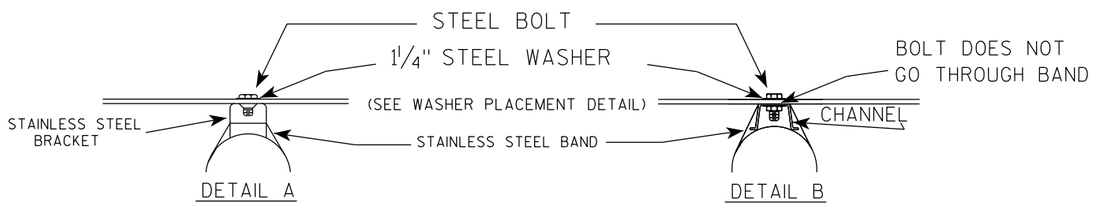

WASHER PLACEMENT

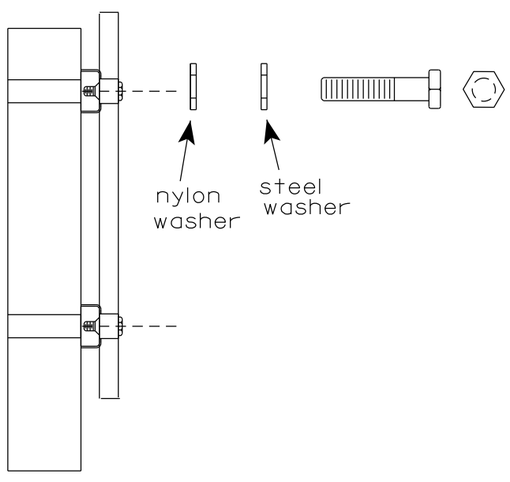

WASHERS (ALL POSTS) -
1-1/4" O.D. X 3/8" I.D. X 1/16" STEEL
1-1/4" O.D. X 3/8" I.D. X .080 NYLON
FOR ALL TYPE H SIGNS

GENERAL NOTES

1. Any sign over 3 feet in width shall use the V-Block banding method. See A5-10 standard plate.
2. Signs 3 feet or greater in height shall have three bracket bands installed. Signs less than 3 feet in height shall have two bracket bands installed.
3. Banding and assembly bracket shall be stainless steel. All bands shall be 3/4" in width and 0.025" thickness.
4. ALL SIGN MOUNTING BOLTS AND WASHERS SHALL BE EITHER:
   a. Hot dip or mechanically galvanized in accordance with ASTM Designation: A 153, Class D
   b. Electro-galvanized in accordance with ASTM designation: B 633, Type III, SC 3

"J" ASSEMBLY

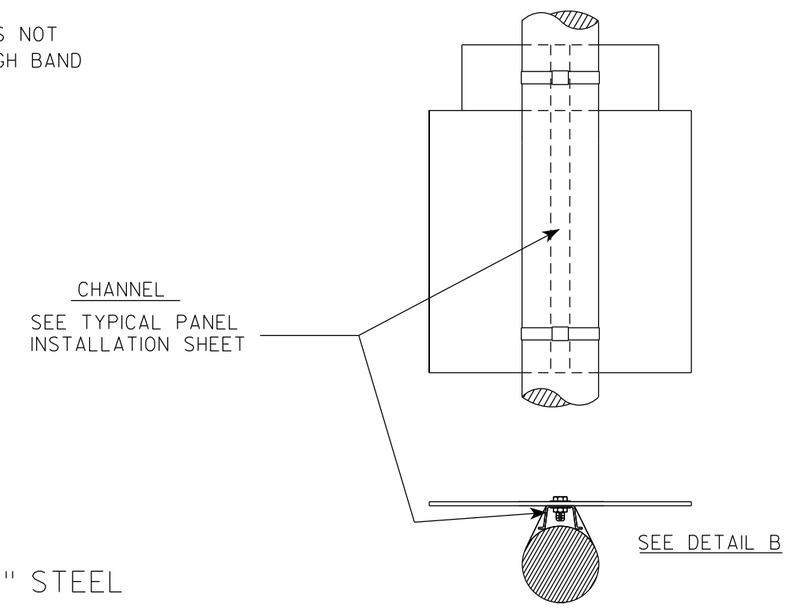

STANDARD SIGN
SIGN BANDING DETAILS

WISCONSIN DEPT OF TRANSPORTATION

APPROVED Matthew R Rauch for State Traffic Engineer

DATE 6/10/19 PLATE NO. A5-9.4

PROJECT NO:	HWY:	COUNTY:		SHEET NO: 206	E

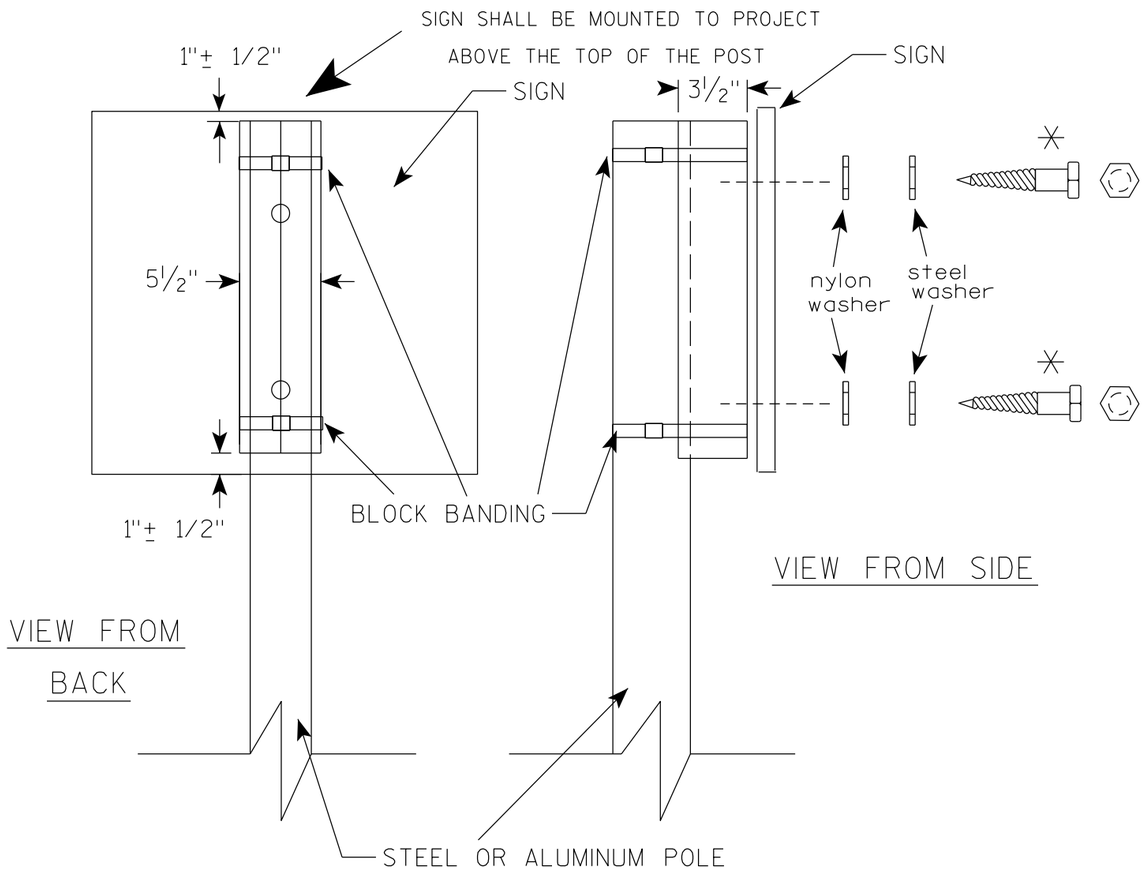

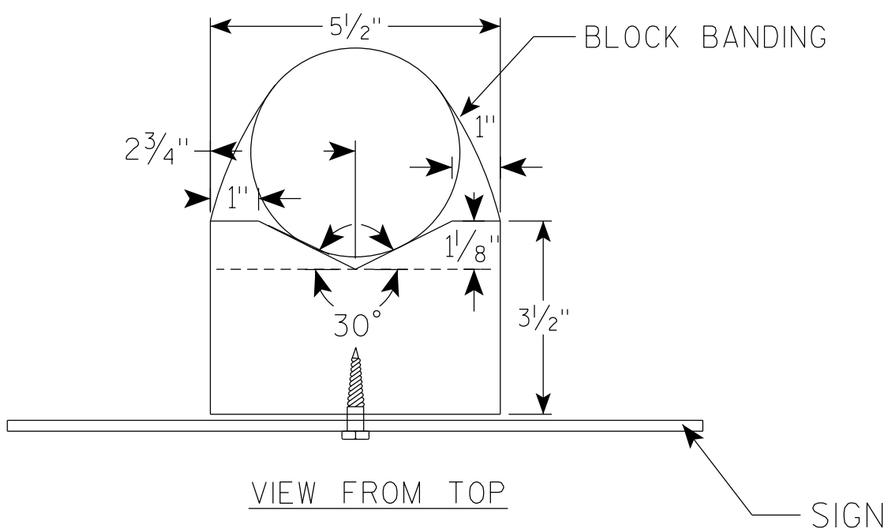

GENERAL NOTES

1. WOOD 4"X6" POST MATERIAL SHALL CONFORM TO 507.2.2 OF THE WisDOT STANDARD SPECIFICATIONS
2. BLOCK BANDING AND CLIPS SHALL BE STAINLESS STEEL, 3/4" WIDTH AND 0.025" THICKNESS
3. SIGNS 3' OR GREATER IN HEIGHT SHALL UTILIZE 3 BLOCK BANDS. SIGNS UNDER 3' IN HEIGHT SHALL UTILIZE 2 BLOCK BANDS
4. ACTUAL NUMBER OF FASTENERS PER SIGN VARIES WITH THE SIGN AREA, BUT NORNALLY THERE ARE TWO. FOR SIGNS GREATER THAN 9 S.F. 3 FASTENERS SHALL BE USED.
5. ALL SIGN MOUNTING BOLTS AND WASHERS SHALL BE EITHER:
   a. Hot dip or mechanically galvanized in accordance with ASTM Designation: A 153, Class D
   b. Electro-galvanized in accordance with ASTM Designation : B 633, TYPE III, SC 3
6. ALL BOLTS SHALL HAVE HEXAGONAL HEADS.
7. STEEL WASHERS SHALL BE 1 1/4" O.D. X 3/8" I.D. X 1/16"
8. NYLON WASHERS SHALL BE 1 1/4" O.D. X 3/8" I.D. X .080 FOR TYPE H OR TYPE F FACE SIGN

✳ LAG BOLTS SHALL BE 3/8" X 2 1/2"

7

7

BLOCK BANDING DETAIL
(V-BLOCK OPTION)

WISCONSIN DEPT OF TRANSPORTATION

APPROVED Matthew R Rauch
for State Traffic Engineer

DATE 4/19/2022 PLATE NO. A5-10.3

PROJECT NO:				SHEET NO: 207	E

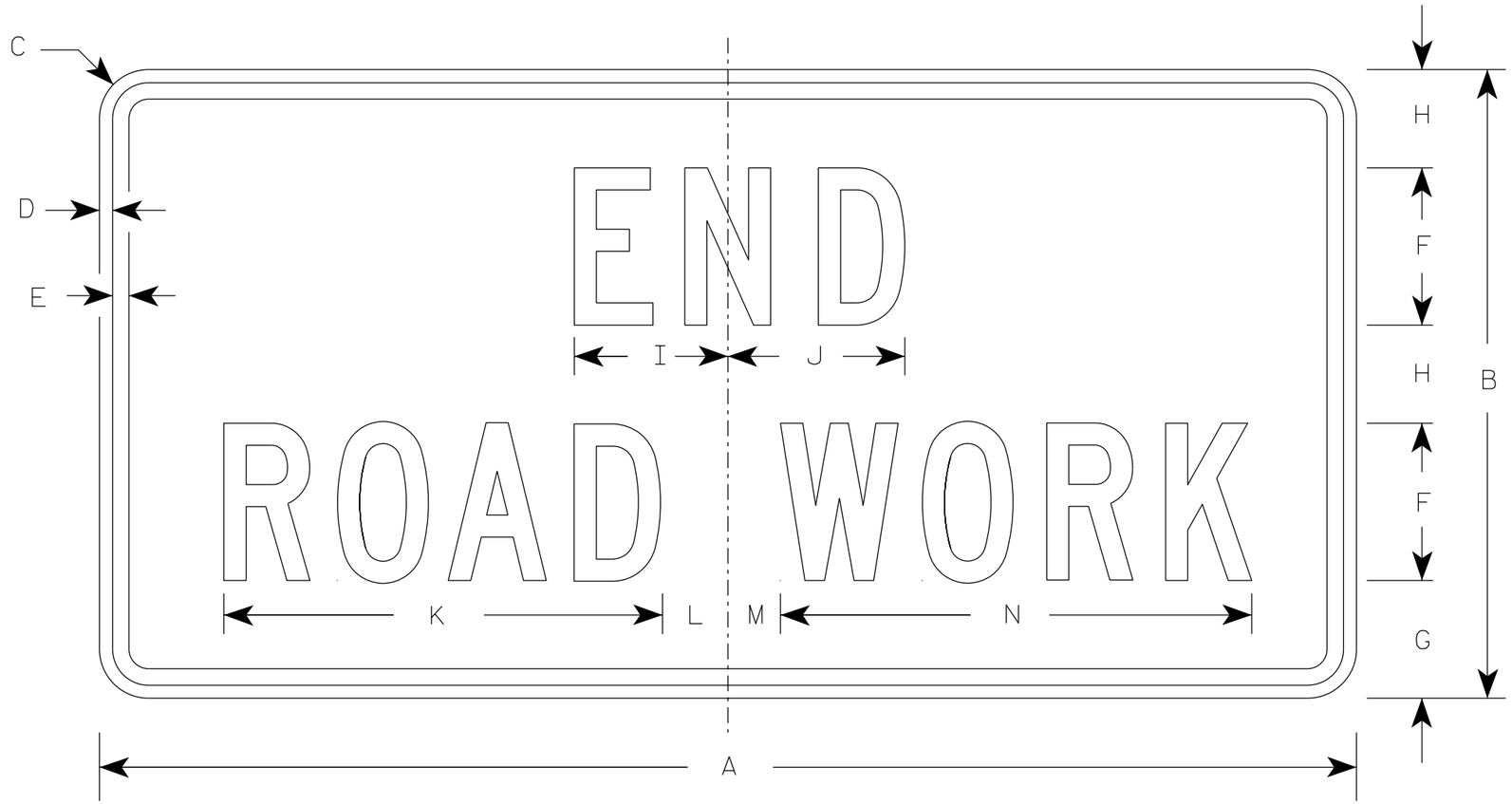

G20-2A

NOTES

1. Sign is Type II - Type F Reflective
2. Color:
   Background - Orange
   Message - Black
3. Message Series - C
4. Corners may be square or rounded when base material is plywood but borders shall be rounded as shown. When base material is metal, the corners and borders shall be rounded.

SIZE	A	B	C	D	E	F	G	H	I	J	K	L	M	N	O	P	Q	R	S	T	U	V	W	X	Y	Z	Area sq. ft.
1	36	18	1 1/2	3/8	1/2	4	3 3/4	2 1/2	4 1/8	4 1/8	11 1/8	2	1	12 1/8													4.5
2	48	24	1 7/8	1/2	5/8	6	4 1/2	3 3/4	5 7/8	6 3/4	16 3/4	2 1/2	1 3/4	18 1/2													8.0
2M	48	24	1 7/8	1/2	5/8	6	4 1/2	3 3/4	5 7/8	6 3/4	16 3/4	2 1/2	1 3/4	18 1/2													8.0
3	48	24	1 7/8	1/2	5/8	6	4 1/2	3 3/4	5 7/8	6 3/4	16 3/4	2 1/2	1 3/4	18 1/2													8.0
4	48	24	1 7/8	1/2	5/8	6	4 1/2	3 3/4	5 7/8	6 3/4	16 3/4	2 1/2	1 3/4	18 1/2													8.0
5	48	24	1 7/8	1/2	5/8	6	4 1/2	3 3/4	5 7/8	6 3/4	16 3/4	2 1/2	1 3/4	18 1/2													8.0

STANDARD SIGN

G20-2A

WISCONSIN DEPT OF TRANSPORTATION

APPROVED Matthew R Rauch
for State Traffic Engineer

DATE 1/26/2023 PLATE NO. G20-2A.10

PROJECT NO: | HWY: | COUNTY: | SHEET NO: 208 | E

NOTES

1. Sign is Type II- Type F Reflective
2. Color:
   Background - Orange
   Message - Black
3. Corners may be square or rounded when base material is plywood but borders shall be rounded as shown. When base material is metal, the corners and borders shall be rounded.
4. M4-60L is the same as M4-60R except the arrow is reversed.

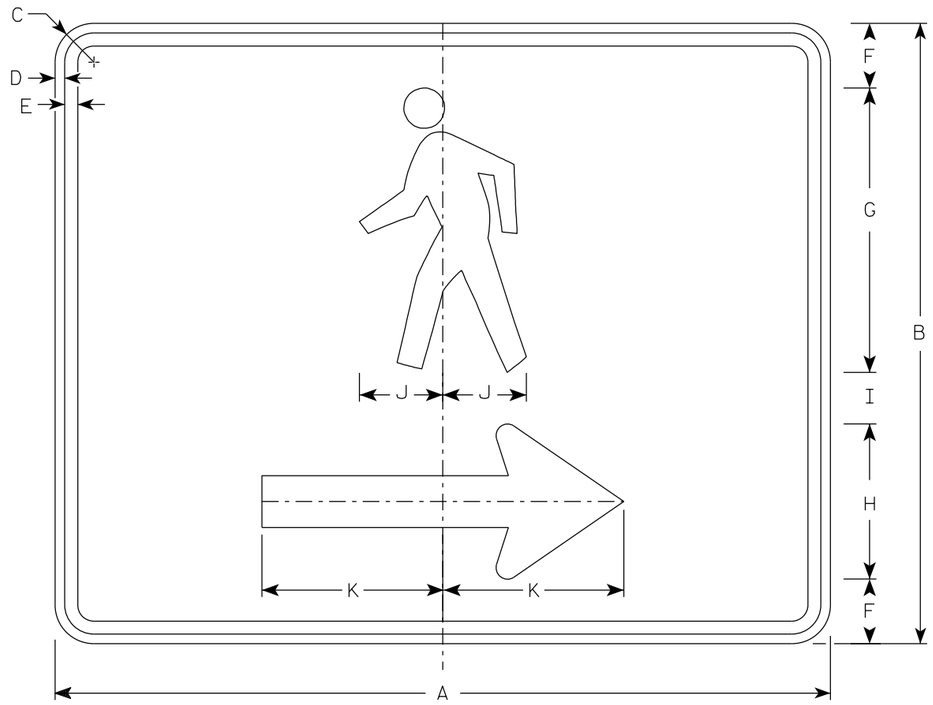

M4-60R

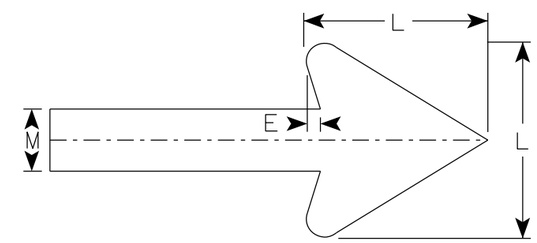

Arrow Detail

SIZE	A	B	C	D	E	F	G	H	I	J	K	L	M	N	O	P	Q	R	S	T	U	V	W	X	Y	Z	Area sq. ft.
1																											
2S	30	24	1 1/2	3/8	1/2	2 1/2	11	6	2	3 1/4	7	6	2														5.00
2M	30	24	1 1/2	3/8	1/2	2 1/2	11	6	2	3 1/4	7	6	2														5.00
3																											
4																											
5																											

STANDARD SIGN
M4-60 L&R

WISCONSIN DEPT OF TRANSPORTATION

APPROVED Matthew R Rauch
For State Traffic Engineer

DATE 2/14/2023 PLATE NO. M4-60.2

PROJECT NO: | HWY: | COUNTY: | SHEET NO: 209 | E

NOTES

1. Sign is Type II - Type H Reflective
2. Color:
   Background - White
   Message - Black
3. Message Series - Line 1 is Series B.
   Line 2 is Series C.
   Line 3 on plate R3-7R is Series B and Series C on plate R3-7L.

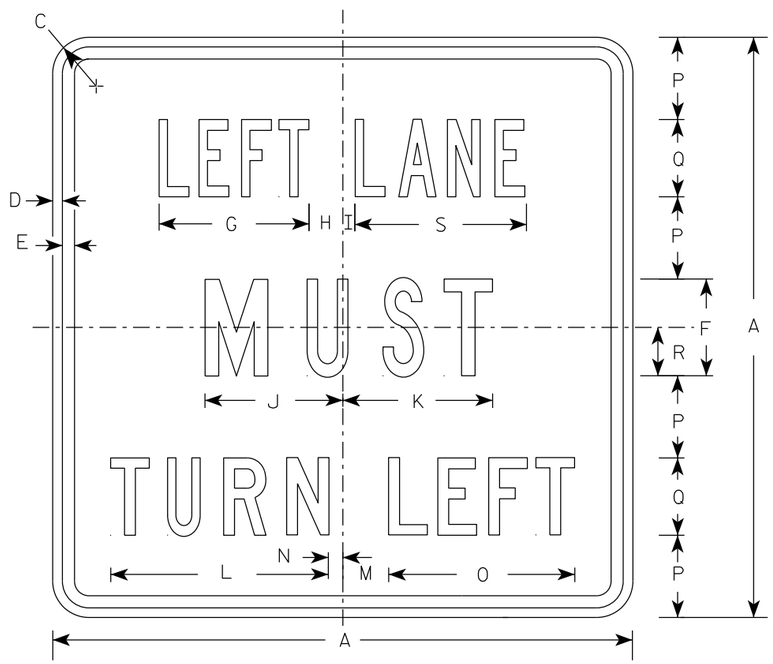

R3-7L

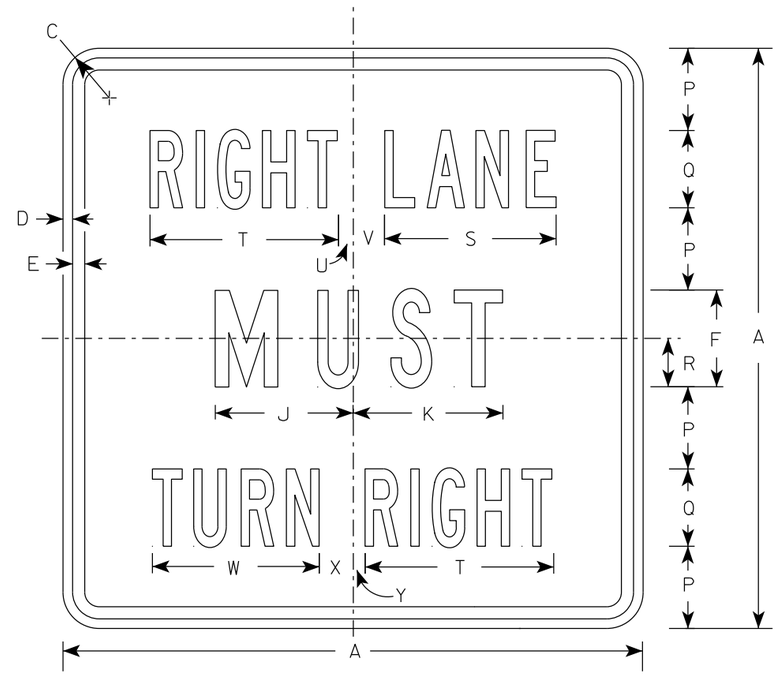

R3-7R

SIZE	A	B	C	D	E	F	G	H	I	J	K	L	M	N	O	P	Q	R	S	T	U	V	W	X	Y	Z	Area sq. ft.
1	30		1 7/8	1/2	5/8	5	7 3/4	1 3/4	5/8	7 1/8	7 3/4	11 1/4	2 3/8	3/4	9 5/8	4 1/4	4	2 1/2	8 7/8	9 3/4	3/4	1 5/8	8 5/8	1 5/8	5/8		6.25
2S	30		1 7/8	1/2	5/8	5	7 3/4	1 3/4	5/8	7 1/8	7 3/4	11 1/4	2 3/8	3/4	9 5/8	4 1/4	4	2 1/2	8 7/8	9 3/4	3/4	1 5/8	8 5/8	1 5/8	5/8		6.25
2M	30		1 7/8	1/2	5/8	5	7 3/4	1 3/4	5/8	7 1/8	7 3/4	11 1/4	2 3/8	3/4	9 5/8	4 1/4	4	2 1/2	8 7/8	9 3/4	3/4	1 5/8	8 5/8	1 5/8	5/8		6.25
3	36		2 1/4	5/8	3/4	6	9 5/8	2	1 1/8	8 3/4	9	13 1/2	3 7/8	1 1/2	12 1/2	5	5	3	10 5/8	12	7/8	2 1/4	10 5/8	2 1/8	1		9.00
4	48		2 1/4	3/4	1	8	13 1/2	2 3/8	1 1/2	11 1/2	11 7/8	17 3/4	3 5/8	2 1/2	16 3/8	6 1/2	7	4	14 3/8	16 7/8	5/8	3 1/4	15 1/8	2 3/4	1 1/8		16.00
5																											

STANDARD SIGN
R3-7L & R3-7R

WISCONSIN DEPT OF TRANSPORTATION

APPROVED Matthew R Rauch
for State Traffic Engineer

DATE 2/13/23 PLATE NO. R3-7.4

PROJECT NO: | HWY: | COUNTY: | SHEET NO: 210 | E

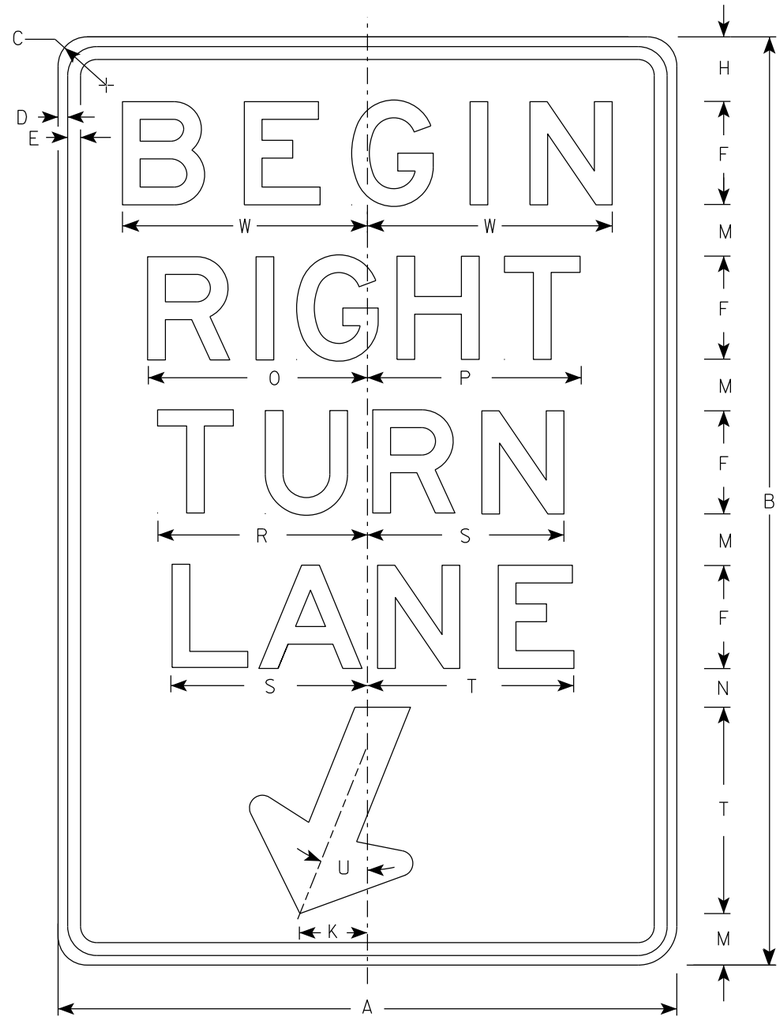

R3-20R

NOTES

1. Sign is Type II - Type H Reflective
2. Color:
   Background - White
   Message - Black
3. Message Series - E

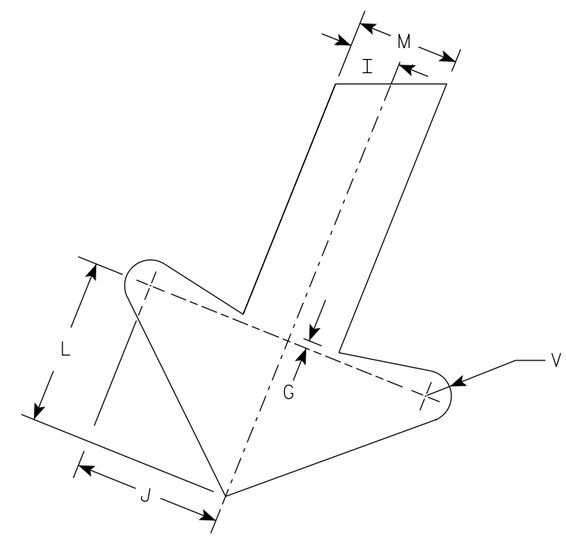

ARROW DETAIL

SIZE	A	B	C	D	E	F	G	H	I	J	K	L	M	N	O	P	Q	R	S	T	U	V	W	X	Y	Z	Area sq. ft.
1																											
2S	24	36	1 1/2	3/8	1/2	4	1/4	2 1/2	1	2 7/8	2 5/8	3 1/4	2	1 1/2	8 1/2	8 1/4		8 1/8	7 5/8	8	22°	1/2	9 1/2				6.0
2M	24	36	1 1/2	3/8	1/2	4	1/4	2 1/2	1	2 7/8	2 5/8	3 1/4	2	1 1/2	8 1/2	8 1/4		8 1/8	7 5/8	8	22°	1/2	9 1/2				6.0
3	36	54	1 7/8	1/2	5/8	6	3/8	3 3/4	1 1/2	4 1/4	4	4 7/8	3	2 1/4	12 3/4	12 1/2		12 1/4	11 1/2	12	22°	3/4	13 1/4				13.5
4																											
5																											

STANDARD SIGN
R3-20R

WISCONSIN DEPT OF TRANSPORTATION

APPROVED Matthew R Rauch
For State Traffic Engineer

DATE 2/23/23 PLATE NO. R3-20R.7

PROJECT NO: | HWY: | COUNTY: | SHEET NO: 211 | E

NOTES

1. Sign is Type II - Type H Reflective
2. Color:
   Background - White
   Message - Black
3. Message Series - C

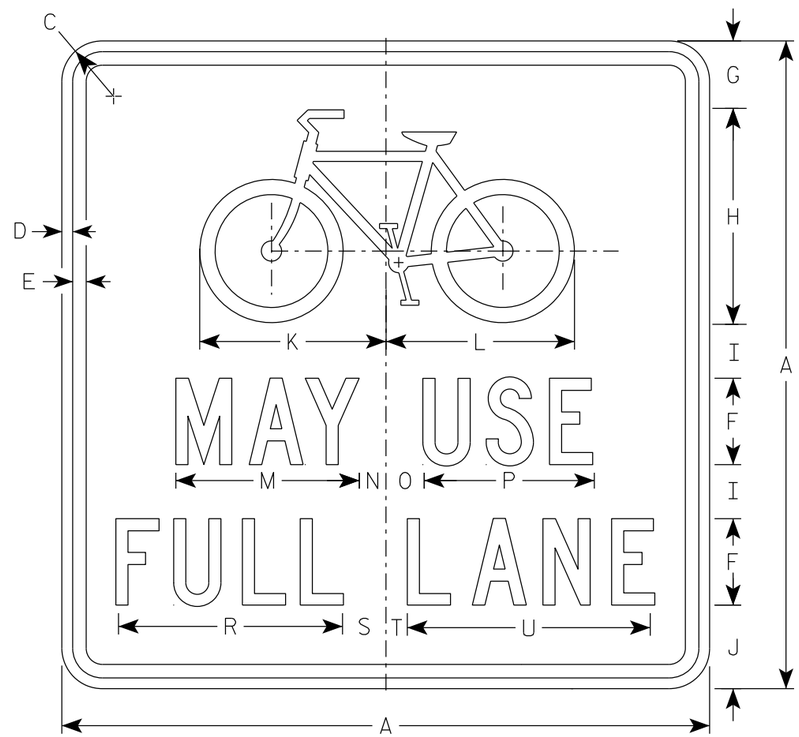

R4-11

SIZE	A	B	C	D	E	F	G	H	I	J	K	L	M	N	O	P	Q	R	S	T	U	V	W	X	Y	Z	Area sq. ft.
1																											
2S	30		1 7/8	1/2	5/8	4	3 1/8	10	2 1/2	3 7/8	8 5/8	8 3/4	8 1/2	1 1/4	1 3/4	7 7/8		10 3/8	2	1	11 1/4						6.25
2M	30		1 7/8	1/2	5/8	4	3 1/8	10	2 1/2	3 7/8	8 5/8	8 3/4	8 1/2	1 1/4	1 3/4	7 7/8		10 3/8	2	1	11 1/4						6.25
3																											
4																											
5																											

STANDARD SIGN

R4-11

WISCONSIN DEPT OF TRANSPORTATION

APPROVED Matthew R Rauch
for State Traffic Engineer

DATE 8/17/23 PLATE NO. R4-11.2

PROJECT NO: | HWY: | COUNTY: | SHEET NO: 212 | E

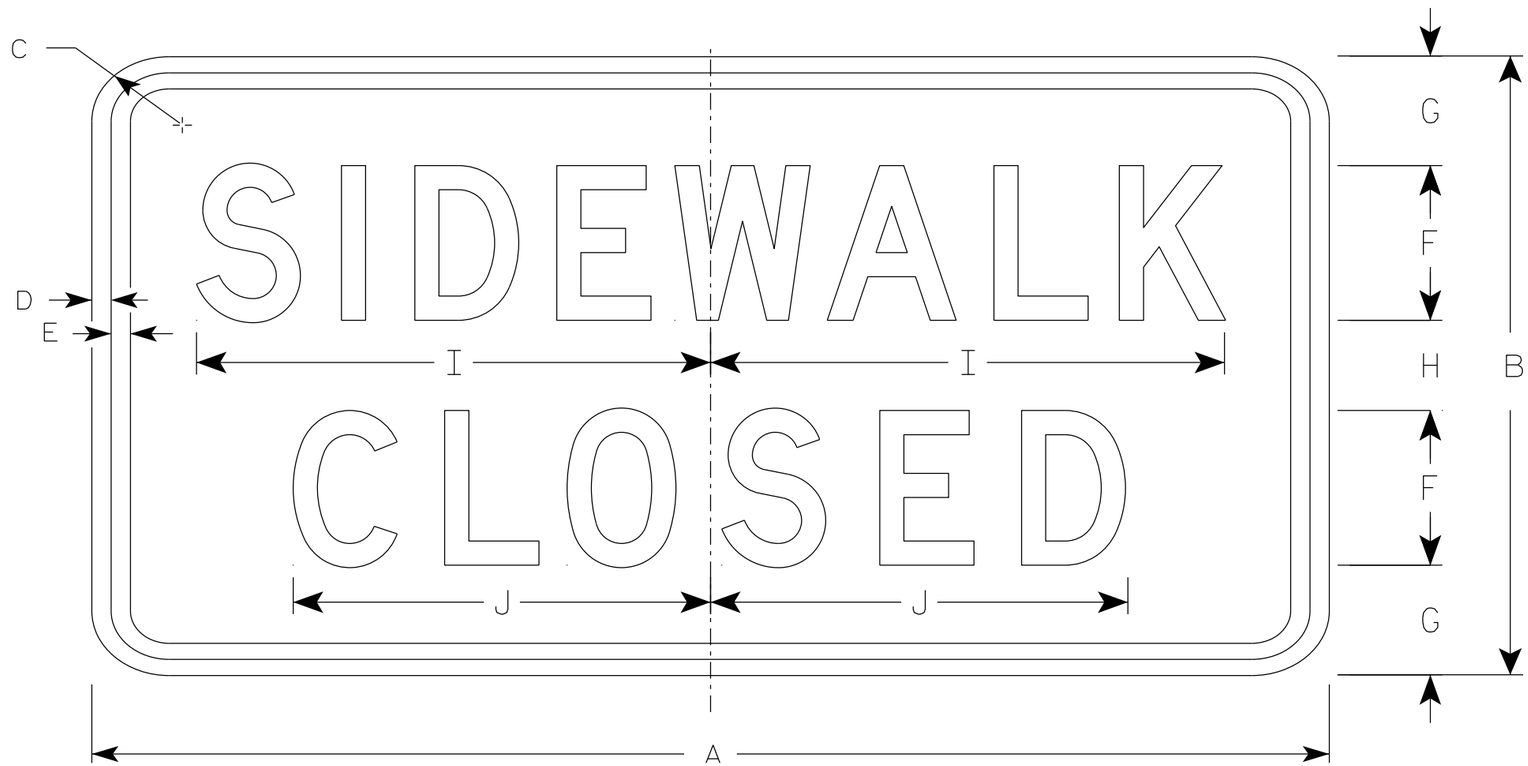

R9-9

NOTES

1. Sign is Type II - Type H Reflective
2. Color:
   Background - White
   Message - Black
3. Message Series - C
4. Use Size 2 for Sidewalks. Use Size 3 for Paths and Trails.

SIZE	A	B	C	D	E	F	G	H	I	J	K	L	M	N	O	P	Q	R	S	T	U	V	W	X	Y	Z	Area sq. ft.
1																											
2S	24	12	1 1/2	1/2	1/2	3	2 1/8	1 3/4	10	8 1/8																	2.0
2M	24	12	1 1/2	1/2	1/2	3	2 1/8	1 3/4	10	8 1/8																	2.0
3	30	18	1 1/2	1/2	1/2	4	3 1/2	3	12 1/2	10 1/4																	3.75
4																											
5																											

STANDARD SIGN
R9-9

WISCONSIN DEPT OF TRANSPORTATION

APPROVED Matthew R Rauch
for State Traffic Engineer

DATE 1/24/24 PLATE NO. R9-9.7

PROJECT NO: | HWY: | COUNTY: | SHEET NO: 213 | E

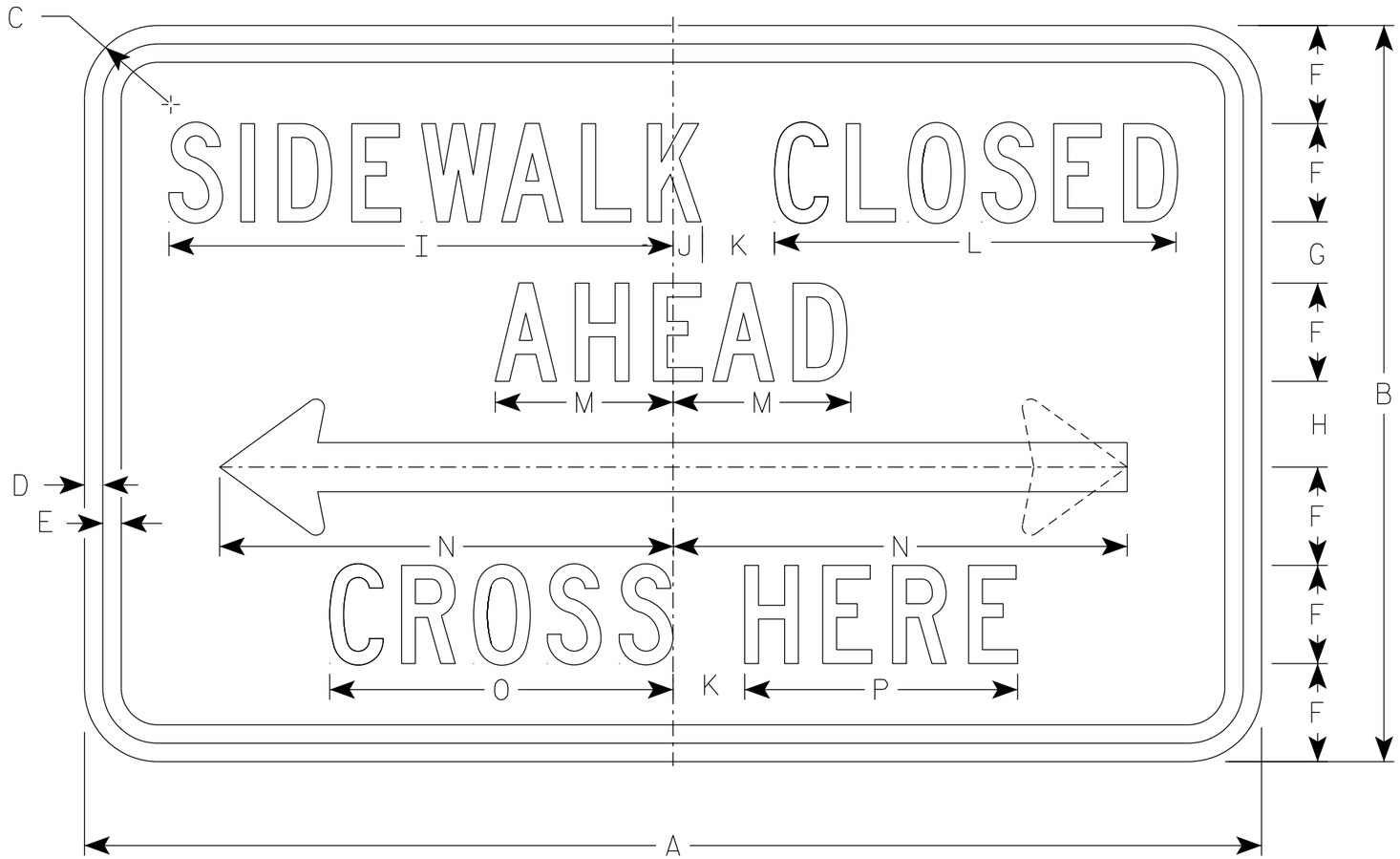

R9-11

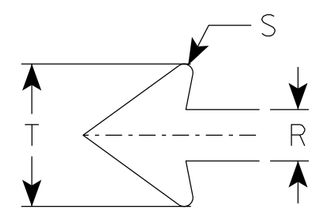

NOTES

1. Sign is Type II - Type H Reflective
2. Color:
   Background - White
   Message - Black
3. Message Series - C except Size 1 is Series D
4. Use Size 2 for Sidewalks. Use Size 3 for Paths and Trails.
5. R9-11 D (double arrow)
   R9-11 L (left arrow)
   R9-11 R (right arrow)

SIZE	A	B	C	D	E	F	G	H	I	J	K	L	M	N	O	P	Q	R	S	T	U	V	W	X	Y	Z	Area sq. ft.
1																											
2S	24	12	1 1/2	3/8	3/8	1 1/2	1 1/2	1 1/2	9 3/4	5/8	1 1/2	7 5/8	3 1/2	9 1/4	6 5/8	5 1/8		1	1/8	2 3/4							2.0
2M	24	12	1 1/2	3/8	3/8	1 1/2	1 1/2	1 1/2	9 3/4	5/8	1 1/2	7 5/8	3 1/2	9 1/4	6 5/8	5 1/8		1	1/8	2 3/4							2.0
3	30	15	1 1/2	3/8	1/2	2	1 1/2	1 1/2	13	3/4	2	10 1/4	4 5/8	12 3/8	8 7/8	6 7/8		1 1/4	1/4	3 5/8							3.125
4																											
5																											

STANDARD SIGN
R9-11

WISCONSIN DEPT OF TRANSPORTATION

APPROVED Matthew R Rauch
for State Traffic Engineer

DATE 1/24/24 PLATE NO. R9-11.5

PROJECT NO: | HWY: | COUNTY: | SHEET NO: 214 | E

NOTES

1. Sign is Type II - Type H Reflective
2. Color:
   Background - White
   Message - Black
3. Message Series - C
4. Use Size 2 for Sidewalks. Use Size 3 for paths and Trails.
5. R9-11AD (double arrow)
   R9-11AL (left arrow)
   R9-11AR (right arrow)

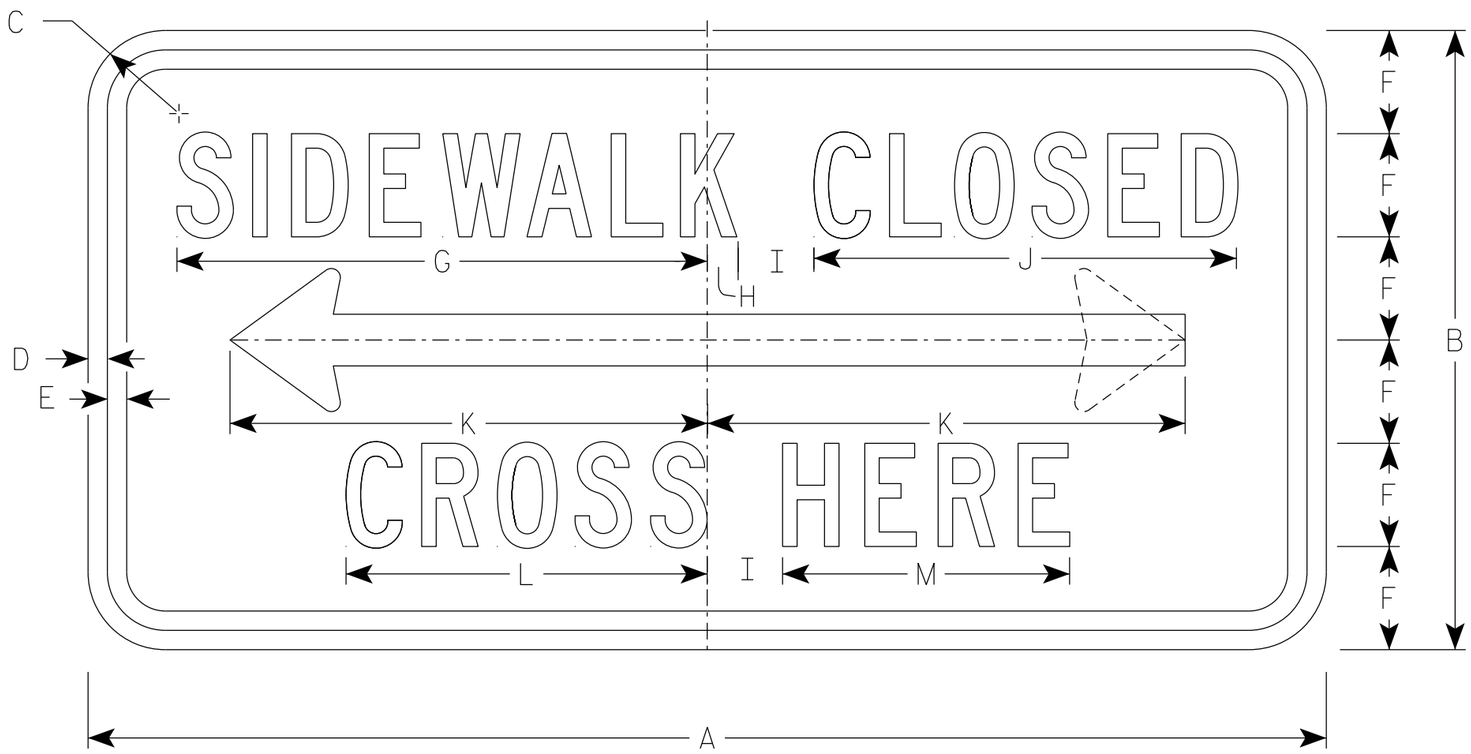

R9-11A

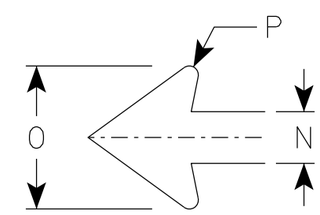

ARROW DETAIL

SIZE	A	B	C	D	E	F	G	H	I	J	K	L	M	N	O	P	Q	R	S	T	U	V	W	X	Y	Z	Area sq. ft.
1																											
2S	24	12	1 1/2	3/8	3/8	2	10 1/4	5/8	1 1/2	8 1/4	9 1/4	7	5 5/8	1	2 3/4	1/8											2.0
2M	24	12	1 1/2	3/8	3/8	2	10 1/4	5/8	1 1/2	8 1/4	9 1/4	7	5 5/8	1	2 3/4	1/8											2.0
3	30	15	1 1/2	3/8	1/2	2 1/2	12 3/4	1/2	2	10 1/4	12 3/8	8 5/8	6 3/4	1 1/4	3 5/8	1/4											3.125
4																											
5																											

STANDARD SIGN
R9-11A

WISCONSIN DEPT OF TRANSPORTATION

APPROVED Matthew R Rauch for State Traffic Engineer

DATE 1/24/24 PLATE NO. R9-11A.6

PROJECT NO: | HWY: | COUNTY: | SHEET NO: 215 | E

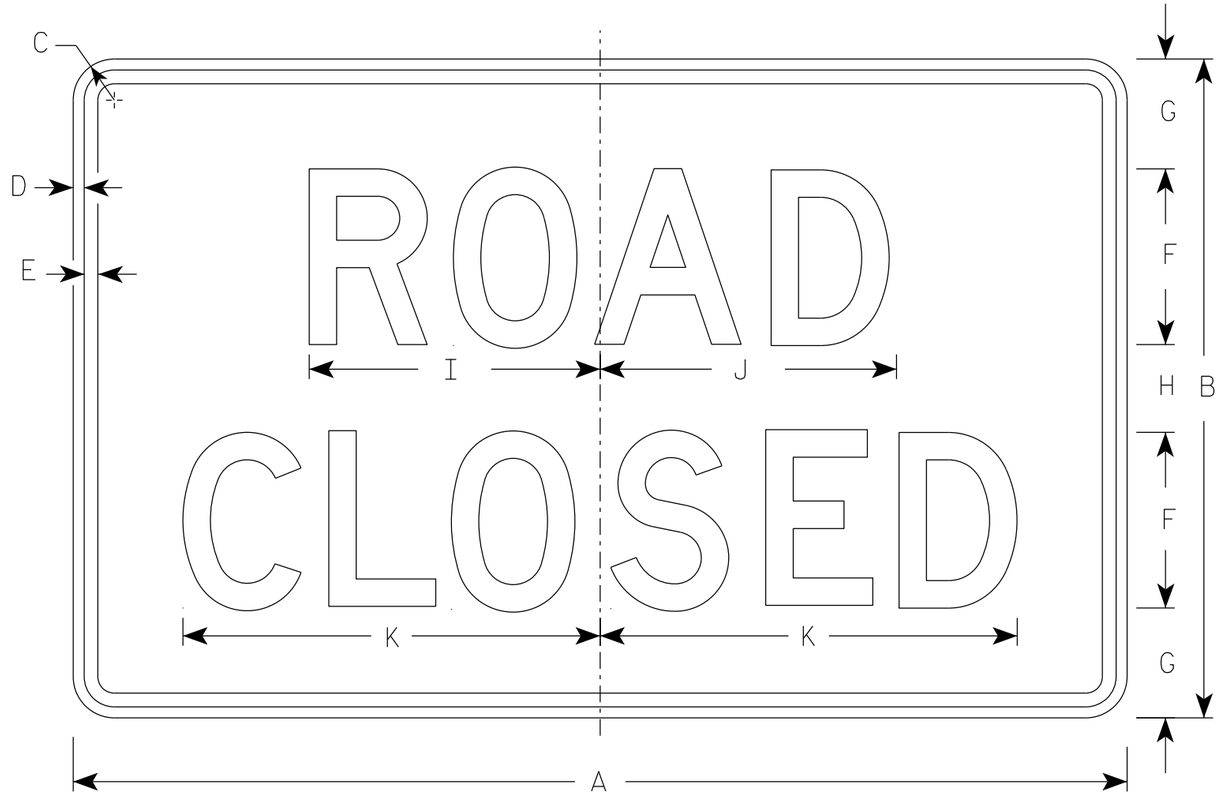

R11-2

NOTES

1. Sign is Type II - Type H Reflective
2. Color:
   Background - White
   Message - Black
3. Message Series - D
4. Corners may be square or rounded when base material is plywood but borders shall be rounded as shown. When base material is metal, the corners and borders shall be rounded.
5. Modify the message as required.

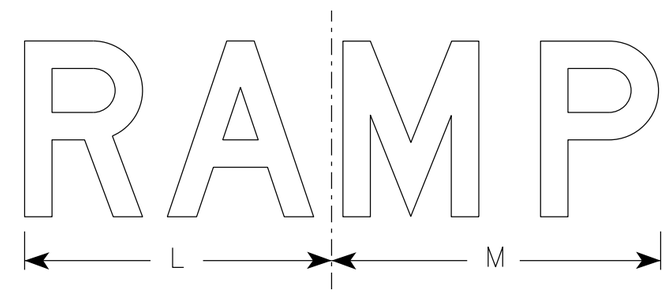

R11-2R

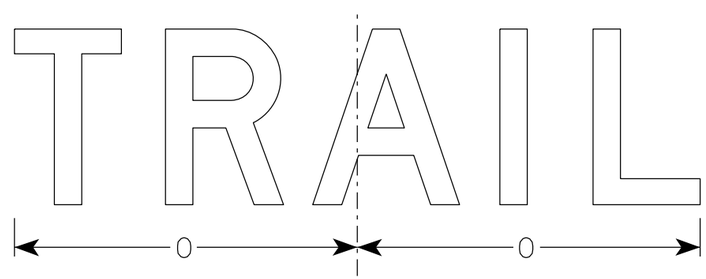

R11-2T

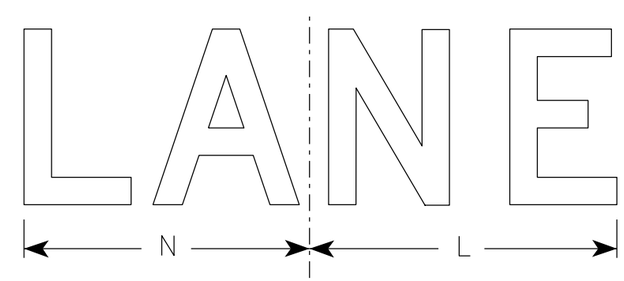

R11-2L

SIZE	A	B	C	D	E	F	G	H	I	J	K	L	M	N	O	P	Q	R	S	T	U	V	W	X	Y	Z	Area sq. ft.
1																											
2S	48	30	1 7/8	1/2	5/8	8	5	4	13 1/4	13 1/2	19	14	15	13	15 5/8												10.0
2M	48	30	1 7/8	1/2	5/8	8	5	4	13 1/4	13 1/2	19	14	15	13	15 5/8												10.0
3	48	30	1 7/8	1/2	5/8	8	5	4	13 1/4	13 1/2	19	14	15	13	15 5/8												10.0
4	48	30	1 7/8	1/2	5/8	8	5	4	13 1/4	13 1/2	19	14	15	13	15 5/8												10.0
5	48	30	1 7/8	1/2	5/8	8	5	4	13 1/4	13 1/2	19	14	15	13	15 5/8												10.0

STANDARD SIGN
R11-2

WISCONSIN DEPT OF TRANSPORTATION

APPROVED Matthew R Rauch
for State Traffic Engineer

DATE 2/5/24 PLATE NO. R11-2.12

PROJECT NO: | HWY: | COUNTY: | SHEET NO: E

NOTES

1. Sign is Type II - Type F Reflective
2. Color:
   Background - Orange
   Message - Black
3. Message Series - C
4. Corners may be square or rounded when base material is plywood but borders shall be rounded as shown. When base material is metal, the corners and borders shall be rounded.

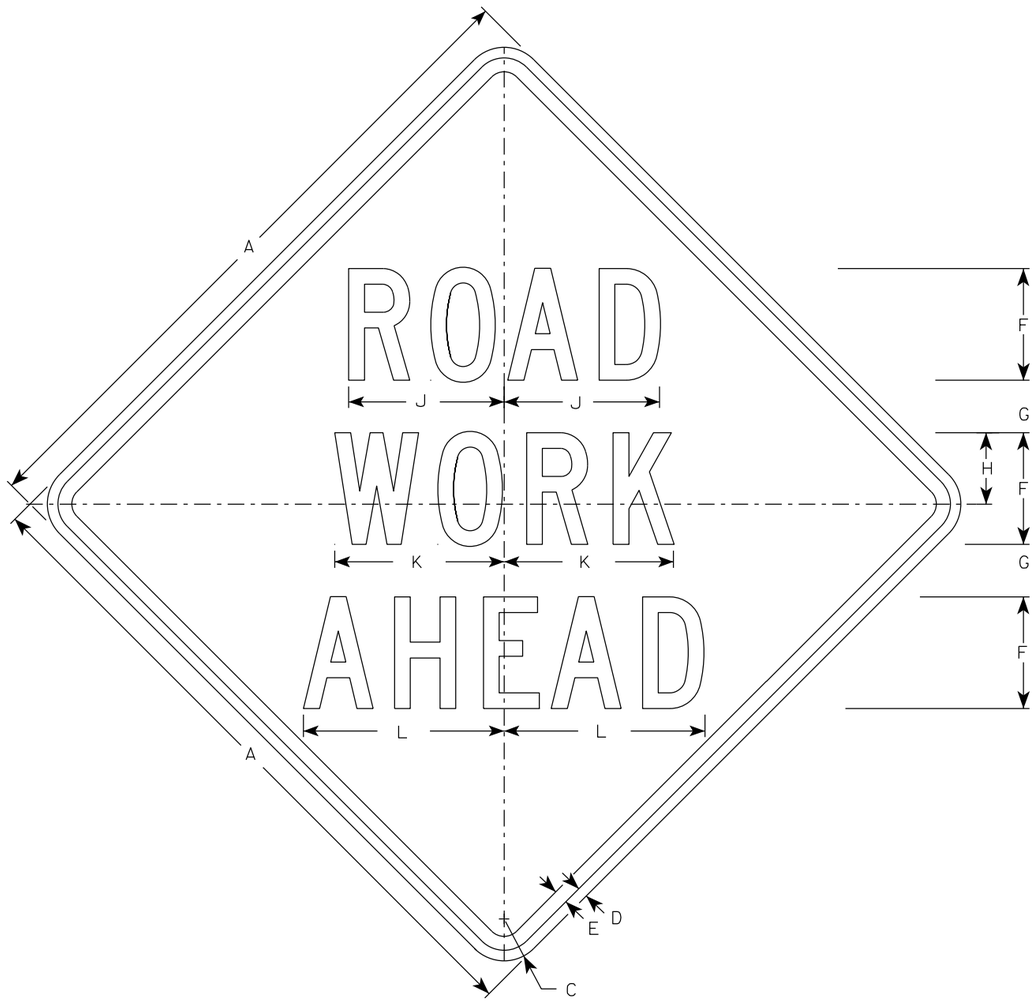

W20-1A

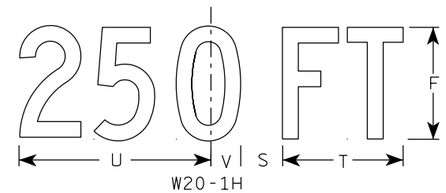

W20-1H

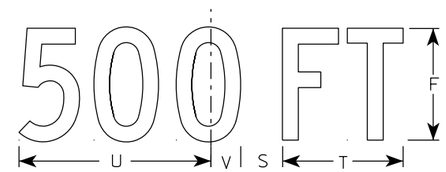

W20-1D

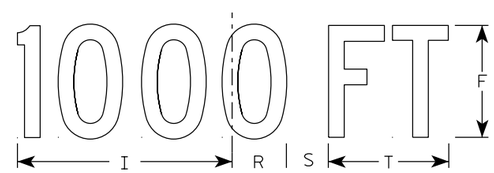

W20-1C

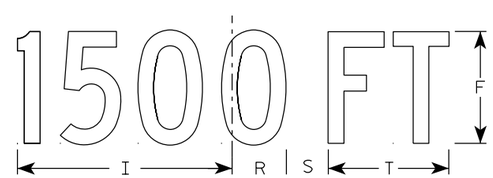

W20-1B

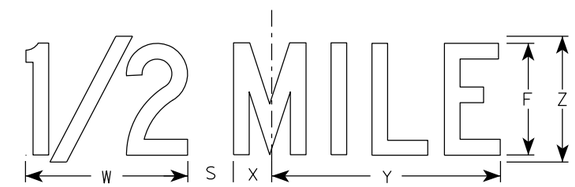

W20-1G

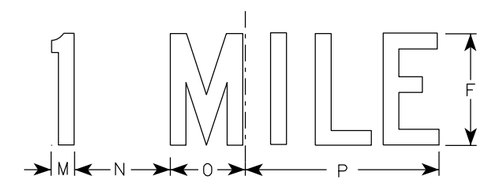

W20-1F

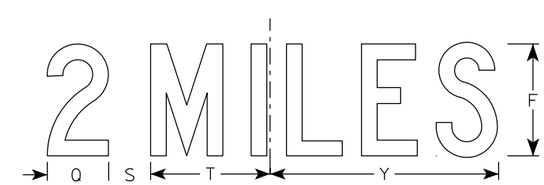

W20-1E

SIZE	A	B	C	D	E	F	G	H	I	J	K	L	M	N	O	P	Q	R	S	T	U	V	W	X	Y	Z	Area sq. ft.
1	36		2 1/4	5/8	3/4	5	2 5/8	3 1/4	10 1/8	7	7 5/8	8 7/8	1 1/8	4 1/2	3 1/2	9	3 1/4	2 1/2	2 1/4	5 5/8	9	1 3/8	8	1 3/4	10 3/4	6	9.0
2S	48		3	3/4	1	8	3 3/4	5 1/8	15 3/8	11 1/8	12 1/8	14 3/8	1 5/8	6 7/8	5 3/8	13 7/8	4 3/8	3 7/8	3	8 5/8	13 3/4	2 1/8	11 7/8	2 3/4	16 3/8	9	16.0
2M	48		3	3/4	1	8	3 3/4	5 1/8	15 3/8	11 1/8	12 1/8	14 3/8	1 5/8	6 7/8	5 3/8	13 7/8	4 3/8	3 7/8	3	8 5/8	13 3/4	2 1/8	11 7/8	2 3/4	16 3/8	9	16.0
3	48		3	3/4	1	8	3 3/4	5 1/8	15 3/8	11 1/8	12 1/8	14 3/8	1 5/8	6 7/8	5 3/8	13 7/8	4 3/8	3 7/8	3	8 5/8	13 3/4	2 1/8	11 7/8	2 3/4	16 3/8	9	16.0
4	48		3	3/4	1	8	3 3/4	5 1/8	15 3/8	11 1/8	12 1/8	14 3/8	1 5/8	6 7/8	5 3/8	13 7/8	4 3/8	3 7/8	3	8 5/8	13 3/4	2 1/8	11 7/8	2 3/4	16 3/8	9	16.0
5	48		3	3/4	1	8	3 3/4	5 1/8	15 3/8	11 1/8	12 1/8	14 3/8	1 5/8	6 7/8	5 3/8	13 7/8	4 3/8	3 7/8	3	8 5/8	13 3/4	2 1/8	11 7/8	2 3/4	16 3/8	9	16.0

STANDARD SIGN
W20-1A, B, C, D, E, F, G & H

WISCONSIN DEPT OF TRANSPORTATION

APPROVED Matthew R Rauch
For State Traffic Engineer

DATE 1/10/2024 PLATE NO. W20-1.12

PROJECT NO:

SHEET NO: 217 E

W20-56A

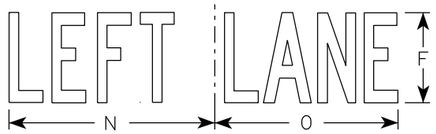

W20-55A

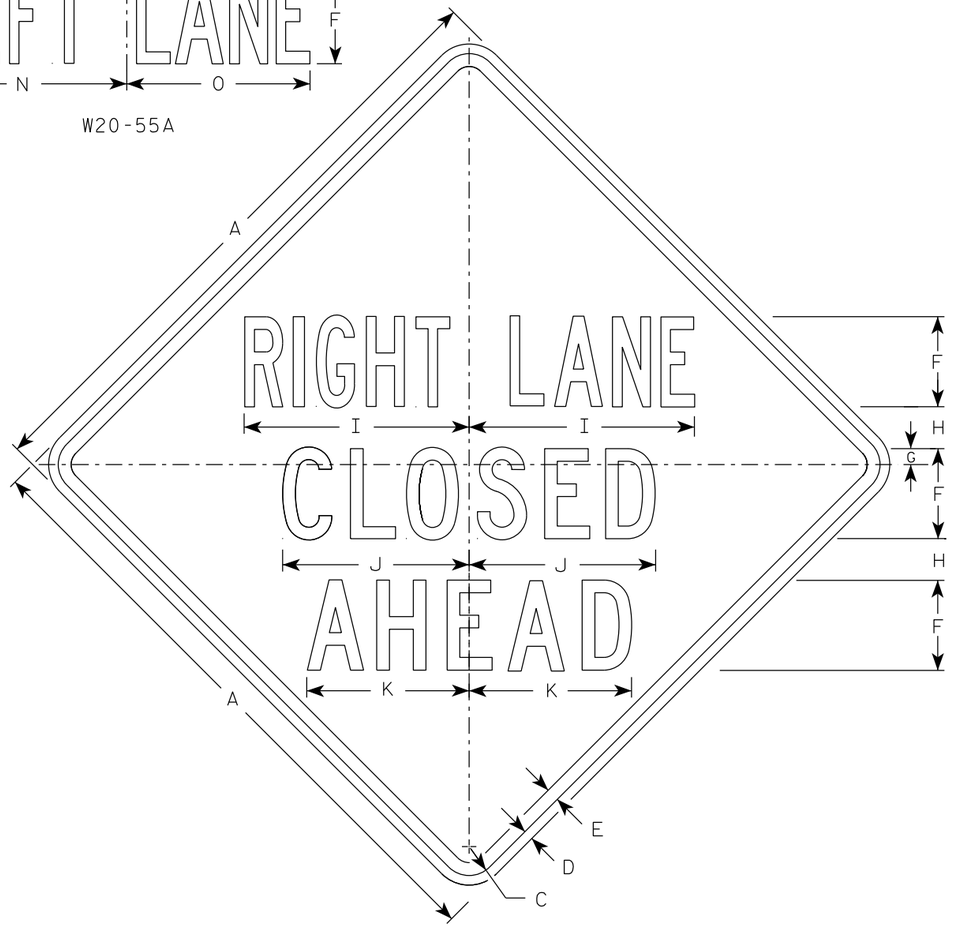

W20-5A

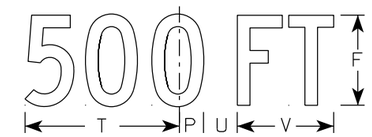

W20-5D

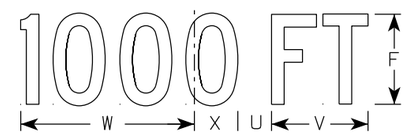

W20-5C

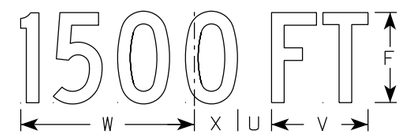

W20-5B

W20-5G

W20-5F

NOTES

1. Sign is Type II - Type F Reflective
2. Color:
   Background - Orange
   Message - Black
3. Message Series - See Note 5
4. Corners may be square or rounded when base material is plywood but borders shall be rounded as shown. When base material is metal, the corners and borders shall be rounded.
5. " _____ LANE" is Series B.
   All other copy is Series C.

SIZE	A	B	C	D	E	F	G	H	I	J	K	L	M	N	O	P	Q	R	S	T	U	V	W	X	Y	Z	Area sq. ft.
1	36	6	2 1/4	5/8	3/4	5	7/8	2 1/2	13 1/8	10 3/4	9 1/2	14 1/4	13 5/8	12	12	1 3/8	1 1/8	4 1/2	3 1/2	9	1 7/8	5 5/8	10 1/8	2 1/2	1 3/4	8	9.0
2S	48	8	3	3/4	1	7	1 1/4	3 1/4	17 1/2	14 3/8	12 5/8	19	18 3/8	16	14 1/4	1 7/8	1 1/2	6	4 5/8	12	2 5/8	7 1/2	13 1/2	3 3/8	2 3/8	10 5/8	16.0
2M	48	8	3	3/4	1	7	1 1/4	3 1/4	17 1/2	14 3/8	12 5/8	19	18 3/8	16	14 1/4	1 7/8	1 1/2	6	4 5/8	12	2 5/8	7 1/2	13 1/2	3 3/8	2 3/8	10 5/8	16.0
3	48	8	3	3/4	1	7	1 1/4	3 1/4	17 1/2	14 3/8	12 5/8	19	18 3/8	16	14 1/4	1 7/8	1 1/2	6	4 5/8	12	2 5/8	7 1/2	13 1/2	3 3/8	2 3/8	10 5/8	16.0
4	48	8	3	3/4	1	7	1 1/4	3 1/4	17 1/2	14 3/8	12 5/8	19	18 3/8	16	14 1/4	1 7/8	1 1/2	6	4 5/8	12	2 5/8	7 1/2	13 1/2	3 3/8	2 3/8	10 5/8	16.0
5	48	8	3	3/4	1	7	1 1/4	3 1/4	17 1/2	14 3/8	12 5/8	19	18 3/8	16	14 1/4	1 7/8	1 1/2	6	4 5/8	12	2 5/8	7 1/2	13 1/2	3 3/8	2 3/8	10 5/8	16.0

STANDARD SIGN
W20-5A, B, C, D, F & G

WISCONSIN DEPT OF TRANSPORTATION

APPROVED Matthew R Rauch
for State Traffic Engineer

DATE 3/27/24 PLATE NO. W20-5.12

PROJECT NO: | HWY: | COUNTY: | SHEET NO: 218 | E

NOTES

1. Sign is Type II - Type F Reflective
2. Color:
   Background - Orange
   Message - Black
3. Message Series - C

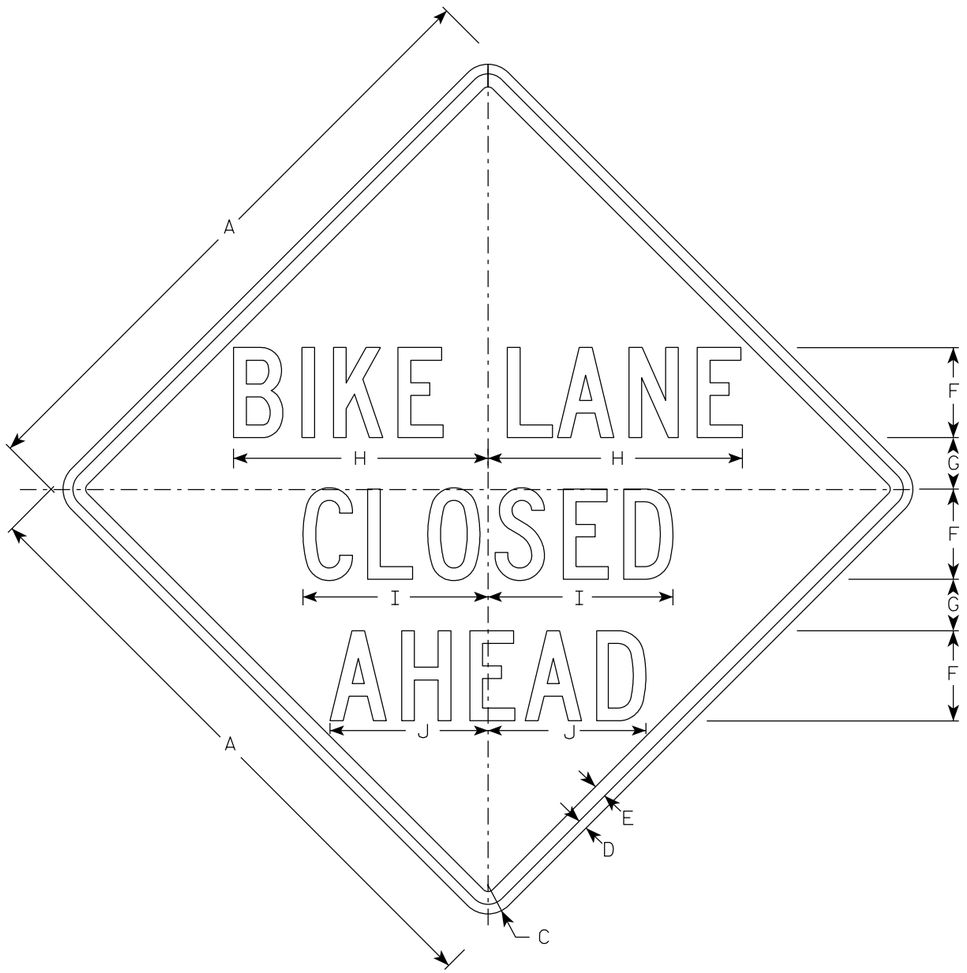

W20-40A

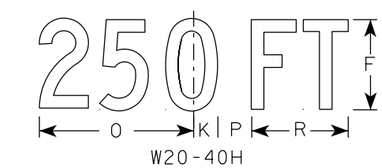

W20-40H

W20-5B

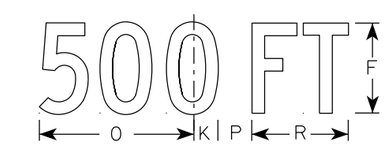

W20-5D

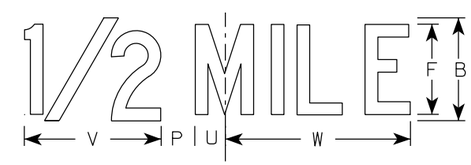

W20-5G

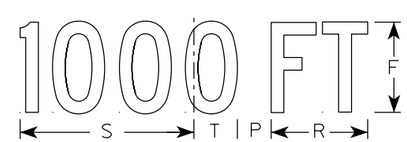

W20-5C

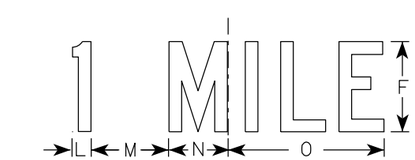

W20-5F

SIZE	A	B	C	D	E	F	G	H	I	J	K	L	M	N	O	P	Q	R	S	T	U	V	W	X	Y	Z	Area sq. ft.
1	36	6	2 1/4	5/8	3/4	5	3	14 3/8	10 1/4	8 3/4	1 3/8	1 1/8	4 1/2	3 1/2	9	1 7/8		5 5/8	10 1/8	2 1/2	1 3/4	8	10 1/4				9.0
2S	48	8	3	3/4	1	7	4	19 3/4	14 3/8	12 1/2	1 7/8	1 1/2	6	4 5/8	12	2 5/8		7 1/2	13 1/2	3 3/8	2 3/8	10 5/8	14 3/8				16.0
2M	48	8	3	3/4	1	7	4	19 3/4	14 3/8	12 1/2	1 7/8	1 1/2	6	4 5/8	12	2 5/8		7 1/2	13 1/2	3 3/8	2 3/8	10 5/8	14 3/8				16.0
3	48	8	3	3/4	1	7	4	19 3/4	14 3/8	12 1/2	1 7/8	1 1/2	6	4 5/8	12	2 5/8		7 1/2	13 1/2	3 3/8	2 3/8	10 5/8	14 3/8				16.0
4	48	8	3	3/4	1	7	4	19 3/4	14 3/8	12 1/2	1 7/8	1 1/2	6	4 5/8	12	2 5/8		7 1/2	13 1/2	3 3/8	2 3/8	10 5/8	14 3/8				16.0
5	48	8	3	3/4	1	7	4	19 3/4	14 3/8	12 1/2	1 7/8	1 1/2	6	4 5/8	12	2 5/8		7 1/2	13 1/2	3 3/8	2 3/8	10 5/8	14 3/8				16.0

STANDARD SIGN
W20-40A, B, C, D, F, G & H

WISCONSIN DEPT OF TRANSPORTATION

APPROVED Matthew R Rauch
for State Traffic Engineer

DATE 3/12/2024 PLATE NO. W20-40.2

PROJECT NO: | HWY: | COUNTY: | SHEET NO: 219 | E

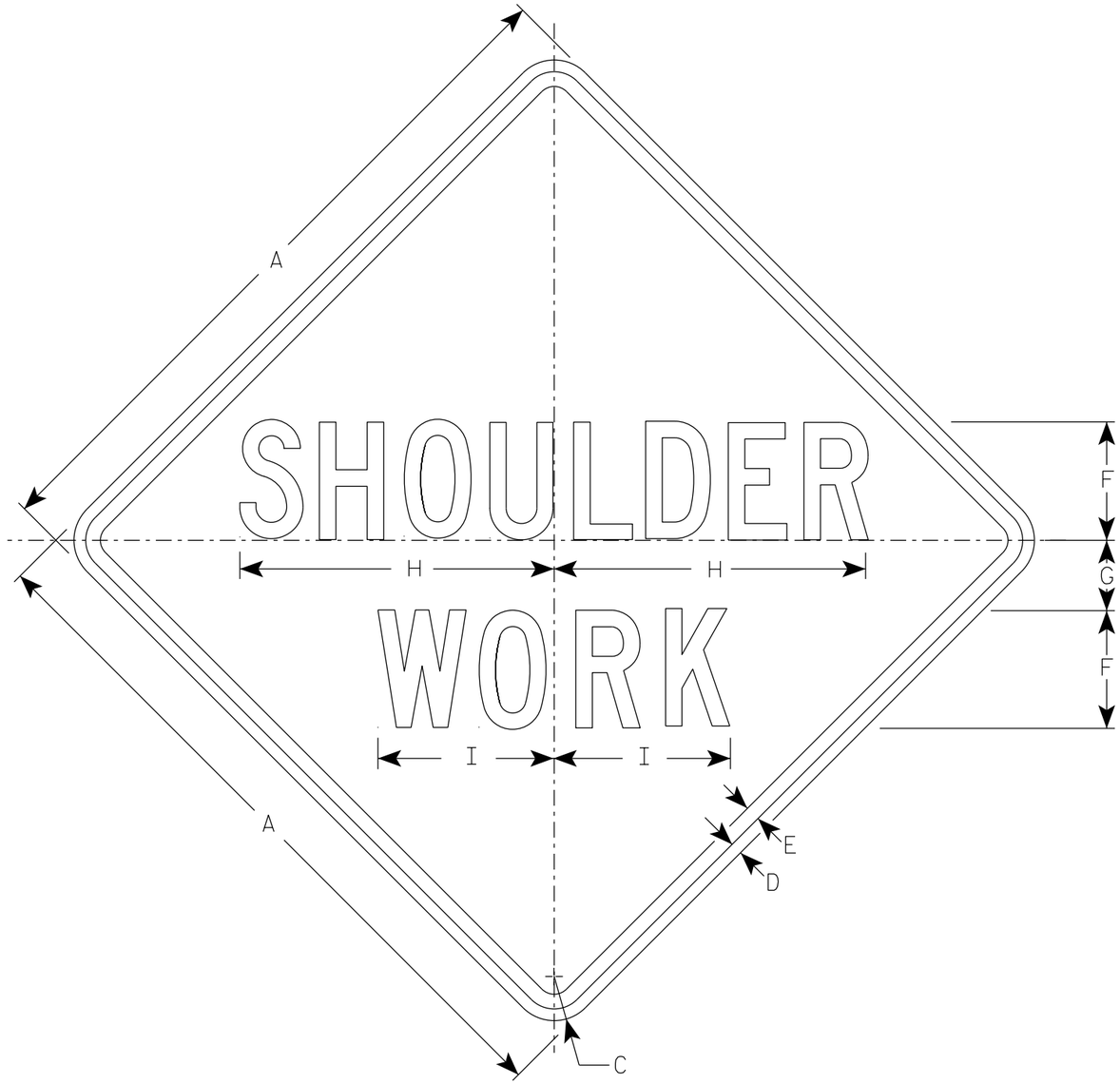

W21-5

NOTES

1. Sign is Type II - Type F Reflective
2. Color:
   Background - Orange
   Message - Black
3. Message Series - C

SIZE	A	B	C	D	E	F	G	H	I	J	K	L	M	N	O	P	Q	R	S	T	U	V	W	X	Y	Z	Area sq. ft.
1	36		2 1/4	5/8	3/4	6	3 1/2	16	9																		9.0
2S	48		3	3/4	1	8	5	21 3/8	11 1/4																		16.0
2M	48		3	3/4	1	8	5	21 3/8	11 1/4																		16.0
3	48		3	3/4	1	8	5	21 3/8	11 1/4																		16.0
4	48		3	3/4	1	8	5	21 3/8	11 1/4																		16.0
5	48		3	3/4	1	8	5	21 3/8	11 1/4																		16.0

STANDARD SIGN
W21-5

WISCONSIN DEPT OF TRANSPORTATION

APPROVED Matthew R Rauch
for State Traffic Engineer

DATE 1/11/2024 PLATE NO. W21-5.7

PROJECT NO: | HWY: | COUNTY: | SHEET NO: 220 | E

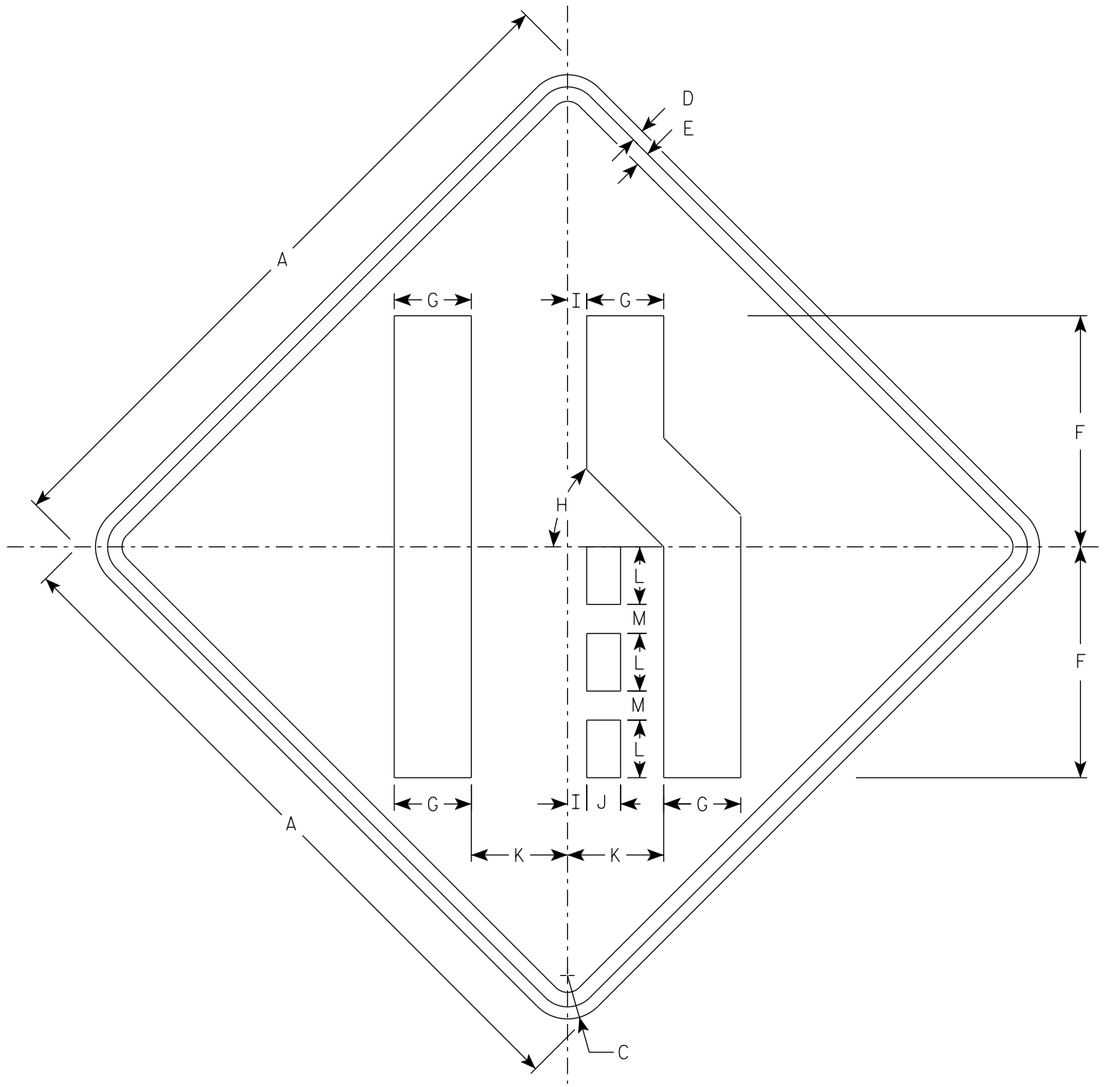

W04-2R

NOTES

1. Sign is Type II - Type F Reflective
2. Color:
   Background - Orange
   Message - Black
3. Corners may be square or rounded when base material is plywood but borders shall be rounded as shown. When base material is metal, the corners and borders shall be rounded.
4. W04-2L is the same as W04-2R except the symbol is reversed along the vertical centerline.

SIZE	A	B	C	D	E	F	G	H	I	J	K	L	M	N	O	P	Q	R	S	T	U	V	W	X	Y	Z	Area sq. ft.
1	36		2 1/4	5/8	3/4	12	4	45°	1	1 3/4	5	3	1 1/2														9.0
2S	48		3	3/4	1	16	5 3/8	45°	1 1/4	2 3/8	6 3/4	4	2														16.0
2M	48		3	3/4	1	16	5 3/8	45°	1 1/4	2 3/8	6 3/4	4	2														16.0
3	48		3	3/4	1	16	5 3/8	45°	1 1/4	2 3/8	6 3/4	4	2														16.0
4	48		3	3/4	1	16	5 3/8	45°	1 1/4	2 3/8	6 3/4	4	2														16.0
5	48		3	3/4	1	16	5 3/8	45°	1 1/4	2 3/8	6 3/4	4	2														16.0

STANDARD SIGN
W04-2

WISCONSIN DEPT OF TRANSPORTATION

APPROVED Matthew R Rauch
for State Traffic Engineer

DATE 1/25/2024 PLATE NO. W04-2.2

PROJECT NO:

SHEET NO: 221 E

Wisconsin Department of Transportation

Dedicated people creating transportation solutions through innovation and exceptional service.

http://www.dot.wisconsin.gov