GRE

DECEMBER 2025

PROJECT ID: 4986-00-65

WITH: N/A

COUNTY: FOND DU LAC

ORDER OF SHEETS

Section No.	1	Title
Section No.	2	Typical Sections and Details
Section No.	3	Estimate of Quantities
Section No.	3	Miscellaneous Quantities
Section No.	4	Right of Way Plat
Section No.	5	Plan and Profile
Section No.	6	Standard Detail Drawings
Section No.	7	Sign Plates
Section No.	8	~~Structure Plans~~
Section No.	9	Computer Earthwork Data
Section No.	9	Cross Sections

TOTAL SHEETS = 146

STATE OF WISCONSIN
DEPARTMENT OF TRANSPORTATION

PLAN OF PROPOSED IMPROVEMENT

V NORTH FOND DU LAC, MINNESOTA AVE

CHAPLEAU STREET TO ANNE STREET

LOC STR

FOND DU LAC COUNTY

STATE PROJECT	FEDERAL PROJECT	
	PROJECT	CONTRACT
4986-00-65	WISC2026083	1

STATE PROJECT NUMBER

4986-00-65

21

N

DESIGN DESIGNATION

A.A.D.T.	2026	=	580
A.A.D.T.	2046	=	780
D.H.V.		=	49
D.D.		=	50/50
T.		=	7.0%
DESIGN SPEED		=	30 MPH
ESALS		=	95,000 (HMA)

CONVENTIONAL SYMBOLS

PLAN

CORPORATE LIMITS
PROPERTY LINE
LOT LINE
LIMITED HIGHWAY EASEMENT
EXISTING RIGHT OF WAY
PROPOSED OR NEW R/W LINE
SLOPE INTERCEPT
REFERENCE LINE (300'FR')
EXISTING CULVERT
PROPOSED CULVERT (Box or Pipe)
COMBUSTIBLE FLUIDS (CAUTION)
MARSH AREA
WOODED OR SHRUB AREA

PROFILE

GRADE LINE
ORIGINAL GROUND
MARSH OR ROCK PROFILE (To be noted as such) (ROCK)
SPECIAL DITCH (LABEL)
GRADE ELEVATION (95.36)
CULVERT (Profile View)

UTILITIES

ELECTRIC — E —
FIBER OPTIC — FO —
GAS — G —
SANITARY SEWER — SAN —
STORM SEWER — SS —
TELEPHONE — T —
WATER — W —
UTILITY PEDESTAL
POWER POLE
TELEPHONE POLE

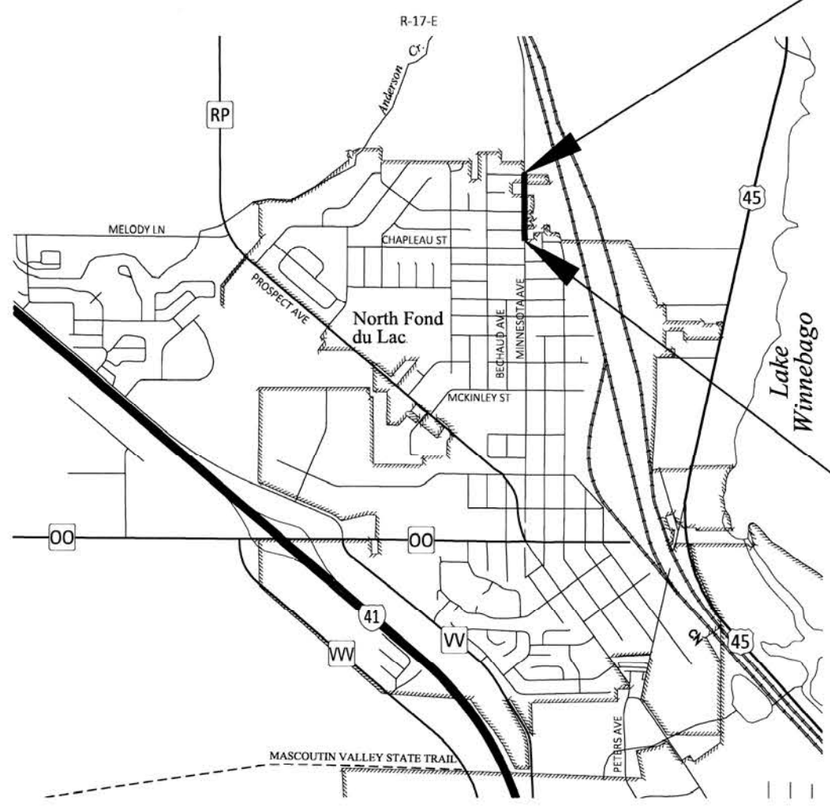

LAYOUT

SCALE 0 — 0.5 MI

TOTAL NET LENGTH OF CENTERLINE = 0.252 MI

HORIZONTAL POSITIONS SHOWN ON THIS PLAN ARE WISCONSIN COORDINATE REFERENCE SYSTEM (WISCRS), FOND DU LAC COUNTY, NAD83 (2011), IN U.S. SURVEY FEET. POSITIONS SHOWN ARE GRID COORDINATES, GRID BEARINGS, AND GRID DISTANCES. GRID DISTANCES ARE THE SAME AS GROUND DISTANCES.

ELEVATIONS ARE REFERENCED TO NAVD 88 (2012). GPS DERIVED ELEVATIONS ARE BASED ON GEOID 18.

ACCEPTED FOR

VILLAGE OF NORTH FOND DU LAC

Date 7/16/25 — MITCHELL VIS, DIRECTOR OF PUBLIC WORKS

ORIGINAL PLANS PREPARED BY

GREMMER & ASSOCIATES, INC. CONSULTING ENGINEERS

WISCONSIN JEFFREY A. CHVOSTA E-39047 SLINGER, WI PROFESSIONAL ENGINEER

DATE: 7/15/25 — JEFFREY A. CHVOSTA, PE

STATE OF WISCONSIN
DEPARTMENT OF TRANSPORTATION

PREPARED BY

Surveyor	GREMMER & ASSOCIATES, INC.
Designer	GREMMER & ASSOCIATES, INC.
Project Manager	KATIE SCHWARTZ
Regional Examiner	NORTHEAST REGION
Regional Supervisor	KIMBERLY SLEZAK

APPROVED FOR THE DEPARTMENT

DATE: 7/16/2025 — (Signature)

E

GENERAL NOTES

THE LOCATIONS OF EXISTING AND PROPOSED UTILITY INSTALLATIONS AS SHOWN ON THE PLANS ARE APPROXIMATE. THERE MAY BE OTHER UTILITY INSTALLATIONS WITHIN THE PROJECT AREA THAT ARE NOT SHOWN.

SAWCUT LOCATIONS SHOWN ON THE PLANS ARE SUBJECT TO ADJUSTMENT BY THE ENGINEER IN THE FIELD.

THE EXACT LOCATION AND LAYOUT OF PRIVATE ENTRANCES IS TO BE DETERMINED IN THE FIELD BY THE ENGINEER.

NO TREES OR SHRUBS ARE TO BE REMOVED WITHOUT THE APPROVAL OF THE ENGINEER.

PROPOSED SECTIONS AS SHOWN ON THE CROSS SECTION SHEETS SHOW THE FINISHED SURFACE OF TOPSOIL WHERE REQUIRED.

CONTRACTOR SHALL VERIFY EXISTING PIPE SIZES, MATERIALS AND INVERT ELEVATIONS WHEN CONNECTING NEW STORM SEWER INTO EXISTING PIPES PRIOR TO MANUFACTURING INLETS AND MANHOLES.

ROTATE MANHOLE COVERS TO MATCH LANE LINES OR CENTER OF LANE AS DIRECTED BY THE ENGINEER IN THE FIELD.

ORDER OF SECTION 2 SHEETS

GENERAL NOTES
PROJECT OVERVIEW
TYPICAL SECTIONS
CONSTRUCTION DETAILS
PLAN DETAILS
CURB RAMP DETAILS
EROSION CONTROL PLAN
STORM SEWER LAYOUT
SIGNING PLAN
TRAFFIC CONTROL
DETOUR

ABBREVIATIONS

A.A.D.T.	ANNUAL AVERAGE DAILY TRAFFIC
A.D.T.	AVERAGE DAILY TRAFFIC
AE, AEW	APRON ENDWALL
AGG	AGGREGATE
ASPH	ASPHALT
BAD	BASE AGGREGATE DENSE
BM	BENCHMARK
CABC	CRUSHED AGGREGATE BASE COURSE
CC	CENTER OF CURVATURE
CE	COMMERCIAL ENTRANCE
C/L	CENTER LINE
CONC	CONCRETE
CMCP	CORRUGATED METAL CULVERT PIPE
CMP	CORRUGATED METAL PIPE
D	DEGREE OF CURVE
Δ	DELTA
D.H.V.	DESIGN HOURLY VOLUME
E	EXTERNAL DISTANCE FROM MIDPOINT OF CIRCULAR CURVE FROM ANGLE INTERSECTION
EL, ELEV	ELEVATION
ESALS	EQUIVALENT SINGLE AXLE LOADS
EXC	EXCAVATION
FE	FIELD ENTRANCE
F/L, FL	FLOW LINE
HT	HEIGHT
INTER	INTERSECTION
INV	INVERT
L	LENGTH OF CURVE
LHF	LEFT HAND FORWARD
MP	MARKER POST
NC	NORMAL CROWN
NOM	NOMINAL
NOR, NORM	NORMAL
PAVT	PAVEMENT
PC	POINT OF CURVE
PCC	POINT OF COMPOUND CURVE
PE	PRIVATE ENTRANCE
PI	POINT OF INTERSECTION
P.L.	PROPERTY LINE
PLE	PERMANENT LIMITED EASEMENT
PT	POINT OF TANGENT
R	RADIUS OF CURVE
R/L	REFERENCE LINE
R/W	RIGHT OF WAY
RC	REVERSE CROWN
RCP	REINFORCED CONCRETE PIPE
REQ'D	REQUIRED
RO	RUN OFF LENGTH
SALV	SALVAGED
SDD	STANDARD DETAIL DRAWING(S)
SE	SUPERELEVATION
SEG	SEGMENT
SHLD	SHOULDER
S/L	SURVEY LINE
T.	PERCENT TRUCKS
T	TANGENT LENGTH
TEMP	TEMPORARY
TER	TERRACE
TLE	TEMPORARY LIMITED EASEMENT
TYP	TYPICAL
V	VELOCITY OR DESIGN SPEED
VAR	VARIABLE
VC	VERTICAL CURVE
VCL	VERTICAL CURVE LENGTH
VPC	VERTICAL POINT OF CURVATURE
VPI	VERTICAL POINT OF INTERSECTION
VPRC	VERTICAL POINT OF REVERSE CURVATURE
VPT	VERTICAL POINT OF TANGENCY

DESIGN CONTACT

GREMMER & ASSOCIATES, INC.
W175 N11117 STONEWOOD DRIVE, SUITE 200
GERMANTOWN, WI 53022
ATTN: JEFFREY A. CHVOSTA, PE
PHONE: (262) 578-5800
EMAIL: j.chvosta@gremmerassociates.com

DNR AREA LIAISON

WISCONSIN DEPT. OF NATURAL RESOURCES
OSHKOSH SERVICE CENTER
625 EAST COUNTY ROAD Y, SUITE 70
OSHKOSH, WI 54901-9731
ATTN: MARTY DILLENBURG
PHONE: (920)-410-7428
EMAIL: marty.dillenburg@wisconsin.gov

WISDOT CONTACT

WISCONSIN DEPARTMENT OF TRANSPORTATION
NORTHEAST REGION
944 VANDERPERREN WAY
GREEN BAY, WI 54304
ATTN: KATIE SCHWARTZ
PHONE: (920) 492-5652
EMAIL: katiea.schwartz@dot.wi.gov

UTILITIES

COMMUNICATIONS

AT&T
70 EAST DIVISION STREET
FOND DU LAC, WI 54935
PHONE: (920) 929-1013
ATTN: CHARLES BARTELT
MOBILE: (920) 410-5104
EMAIL: cb1461@att.com

ELECTRIC

ALLIANT ENERGY CORPORATION
883 WEST SCOTT STREET
FOND DU LAC, WI 54937
ATTN: JOSH COLLIEN
PHONE: (920) 322-6646
MOBILE: (608) 393-5695
EMAIL: JoshuaCollien@alliantenergy.com

GAS

ALLIANT ENERGY CORPORATION
883 WEST SCOTT STREET
FOND DU LAC, WI 54937
ATTN: JOSH COLLIEN
PHONE: (920) 322-6646
MOBILE: (608) 393-5695
EMAIL: JoshuaCollien@alliantenergy.com

COMMUNICATIONS

SPECTRUM
165 KNIGHTS WAY
FOND DU LAC, WI 54935
ATTN: TODD HILDEBRANDT
PHONE: (920) 907-9924
MOBILE: (920) 794-4946
EMAIL: todd.hildebrandt@charter.com

WATER

VILLAGE OF NORTH FOND DU LAC
16 GARFIELD STREET
NORTH FOND DU LAC, WI 54937
ATTN: MITCH VIS
PHONE: (920) 929-3765
EMAIL: mvis@nfdl.org

SEWER

VILLAGE OF NORTH FOND DU LAC
16 GARFIELD STREET
NORTH FOND DU LAC, WI 54937
ATTN: MITCH VIS
PHONE: (920) 929-3765
EMAIL: mvis@nfdl.org

DIGGERS HOTLINE
Dial 811 or (800)242-8511
www.DiggersHotline.com

RUNOFF COEFFICIENT TABLE

	HYDROLOGIC SOIL GROUP											
	A			B			C			D		
	SLOPE RANGE (PERCENT)			SLOPE RANGE (PERCENT)			SLOPE RANGE (PERCENT)			SLOPE RANGE (PERCENT)		
LAND USE:	0-2	2-6	6 & OVER	0-2	2-6	6 & OVER	0-2	2-6	6 & OVER	0-2	2-6	6 & OVER
ROW CROPS	.08	.16	.22	.12	.20	.27	.15	.24	.33	.19	.28	.38
	.22	.30	.38	.26	.34	.44	.30	.37	.50	.34	.41	.56
MEDIAN STRIP-	.19	.20	.24	.19	.22	.26	.20	.23	.30	.20	.25	.30
TURF	.24	.26	.30	.25	.28	.33	.26	.30	.37	.227	.32	.40
SIDE SLOPE-			.25			.27			.28			.25
TURF			.32			.34			.36			.38
PAVEMENT:												
ASPHALT	.70 - .95											
CONCRETE	.80 - .95											
BRICK	.70 - .80											
DRIVES, WALKS	.75 - .85											
ROOFS	.75 - .95											
GRAVEL ROADS SHOULDERS	.40 - .60											

TOTAL PROJECT AREA = 2.259 ACRES

TOTAL AREA EXPECTED TO BE DISTURBED BY CONSTRUCTION ACTIVITIES = 2.337 ACRES

N
CHAPMAN AVENUE
NORTH STREET
CHAPLEAU STREET
ROSE STREET
BLACKBIRD STREET
ANNE STREET
CONSTRUCTION LIMITS
STA 199+25.00
CONSTRUCTION LIMITS
STA 299+25.00
CONSTRUCTION LIMITS
STA 399+25.00
BEGIN PROJECT
STA 10+70.00
Y=401450.054
X=807312.437
END PROJECT
STA 24+00.00
MINNESOTA AVENUE
CENTER STREET
NORTH STREET
CANADIAN NATION RAILROAD

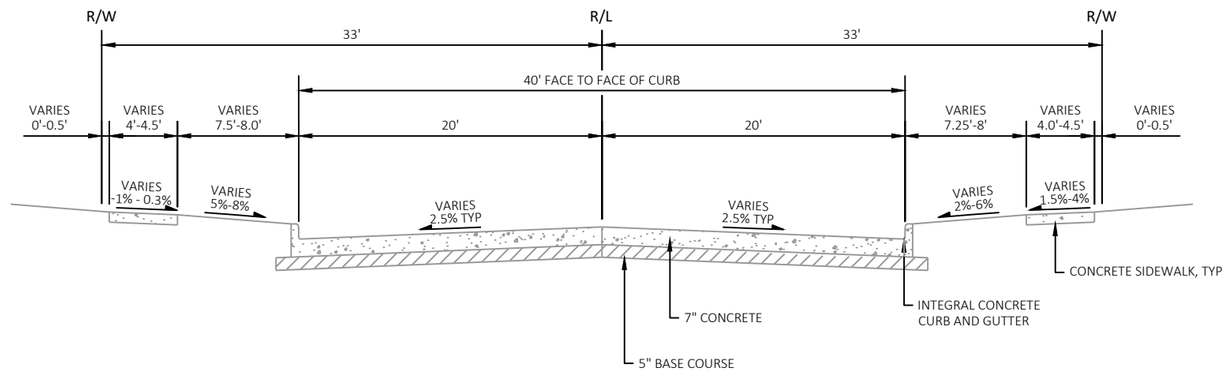

TYPICAL EXISTING SECTION

MINNESOTA AVENUE

STA 10+70.00 - STA 10+89.45

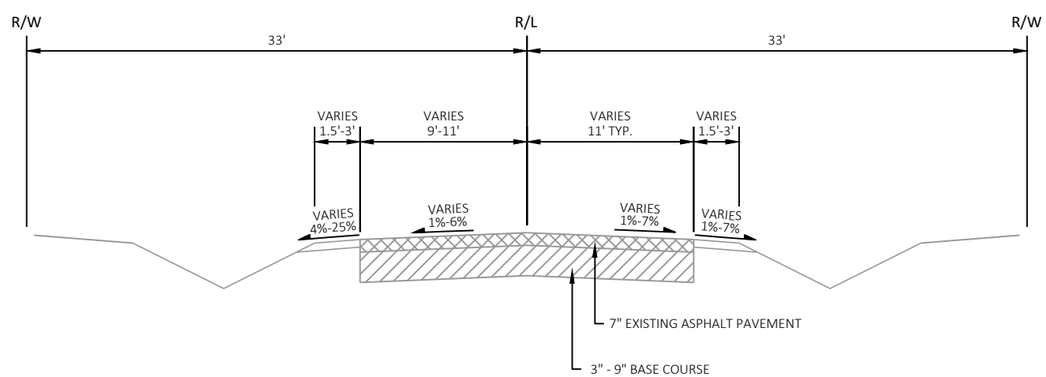

TYPICAL EXISTING SECTION

MINNESOTA AVENUE

STA 10+89.45 - STA 24+00.00

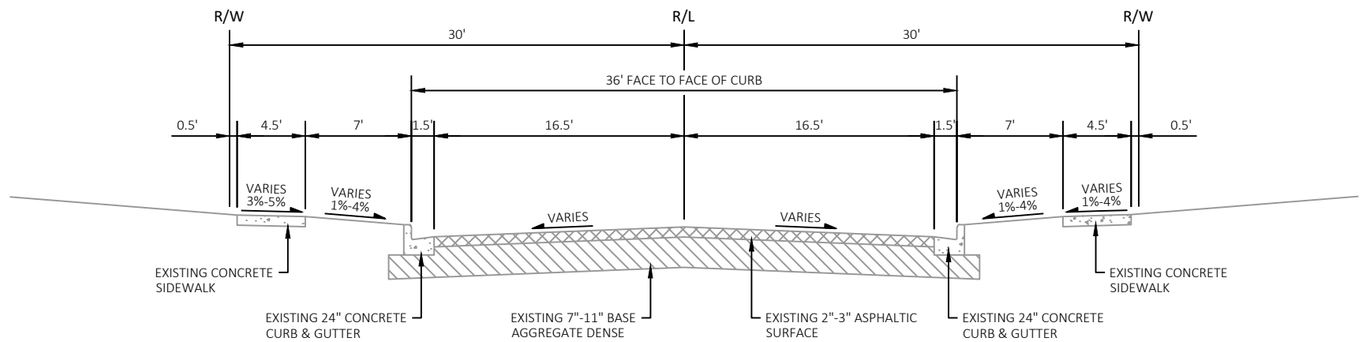

TYPICAL EXISTING SECTION

ROSE STREET
STA 199+25 - STA 200+00
BLACKBIRD STREET
STA 299+25 - STA 300+00

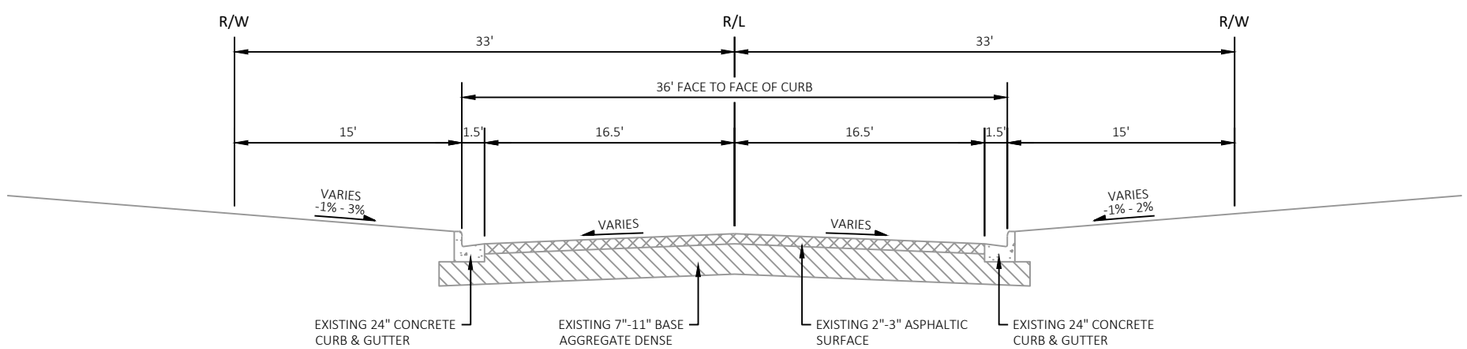

TYPICAL EXISTING SECTION

ANNE STREET
STA 399+25 - STA 400+00

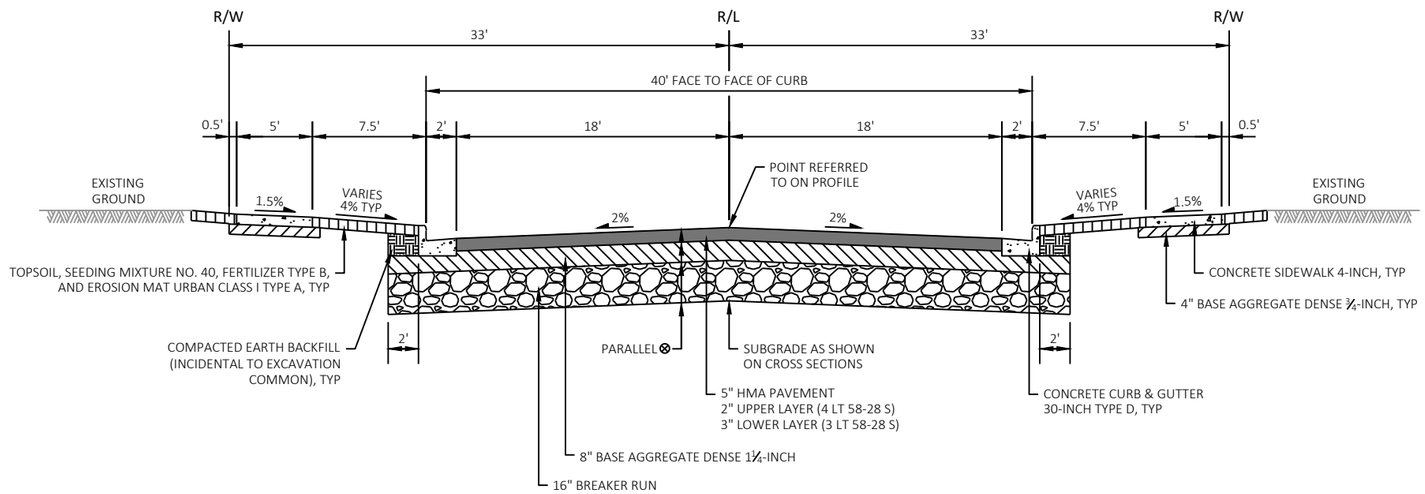

TYPICAL FINISHED SECTION

MINNESOTA AVENUE
STA 10+70.00 - STA 22+50.00

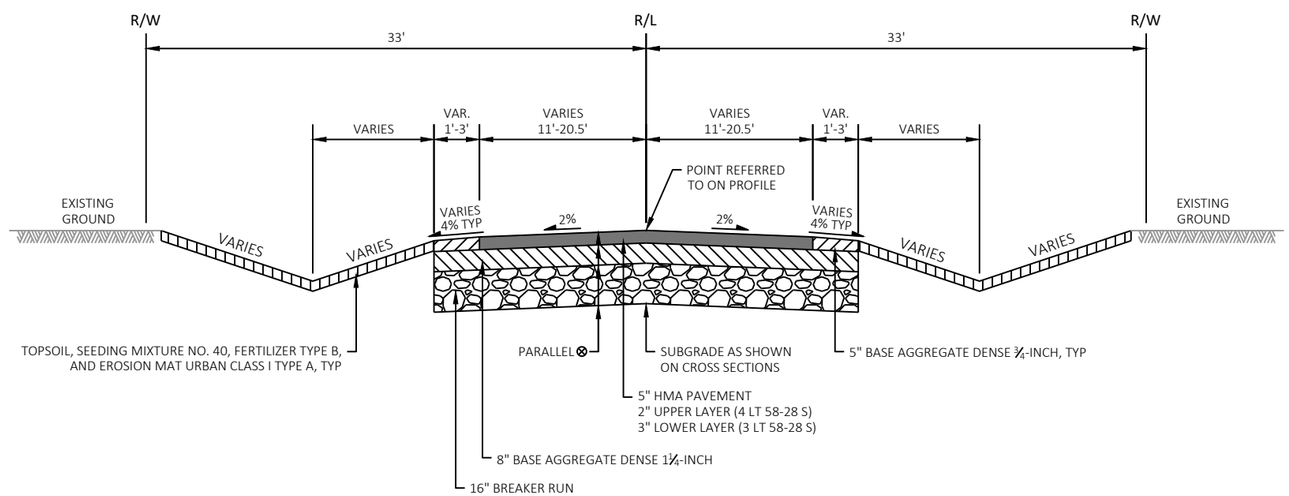

NOTES:

⊗ SUBGRADE SLOPES ARE PARALLEL TO TRAVEL LANE.

TYPICAL FINISHED SECTION

MINNESOTA AVENUE
STA 22+50.00 - STA 24+00.00

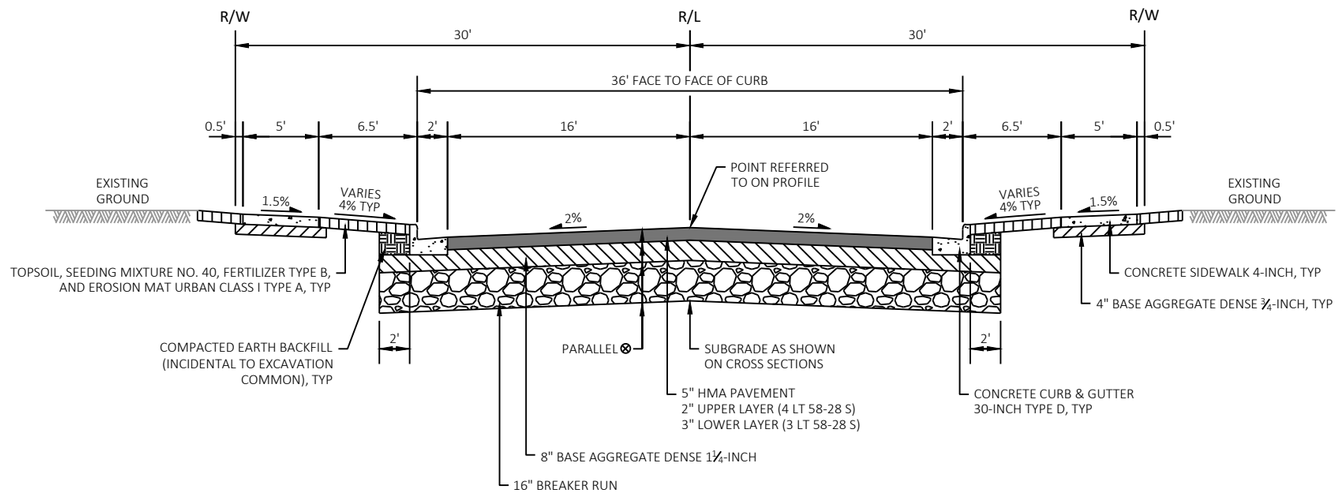

TYPICAL FINISHED SECTION

ROSE STREET
STA 199+25 - STA 200+00
BLACKBIRD STREET
STA 299+25 - STA 300+00

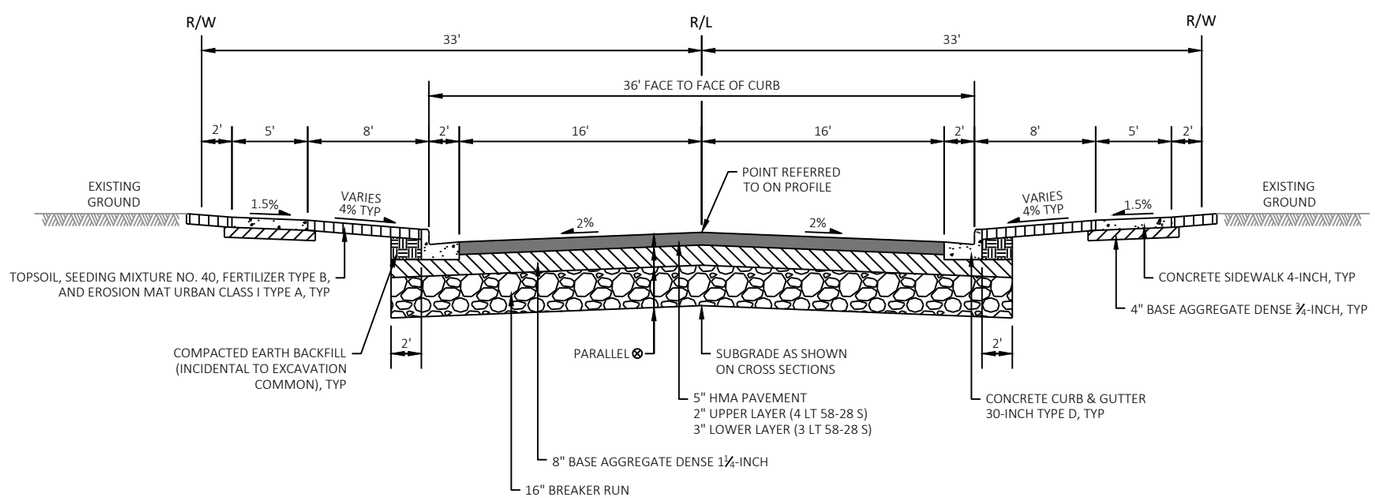

TYPICAL FINISHED SECTION

ANNE STREET
STA 399+25 - STA 400+00

NOTES:

STORM SEWER LATERALS SHALL BE INSTALLED WITH 4-FEET OF DESIRABLE COVER AND 3-FEET OF MINIMUM COVER.

STORM SEWER LATERALS WHEN CONNECTED DIRECTLY TO THE STORM SEWER PIPE SHALL BE AT AN ELEVATION NO LOWER THAN THE SPRING LINE.

STORM SEWER LATERAL DEPTHS SHALL BE ADJUSTED TO AVOID UTILITY CONFLICTS.

STORM SEWER LATERALS SHALL BE CAPPED AT A POINT BEYOND THE RIGHT-OF-WAY LINE OR SHALL BE CONNECTED TO AN EXISTING PIPE.

STORM SEWER LATERAL LOCATIONS SHALL BE VERIFIED BY THE ENGINEER IN THE FIELD.

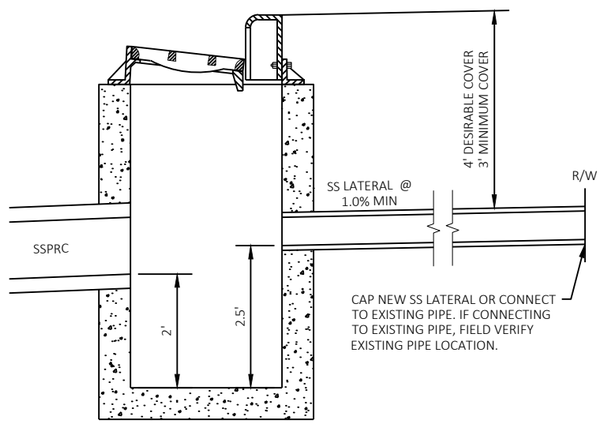

CATCH BASIN CONNECTION

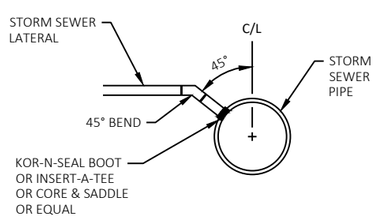

STORM SEWER PIPE CONNECTION

STORM SEWER LATERAL CONNECTION

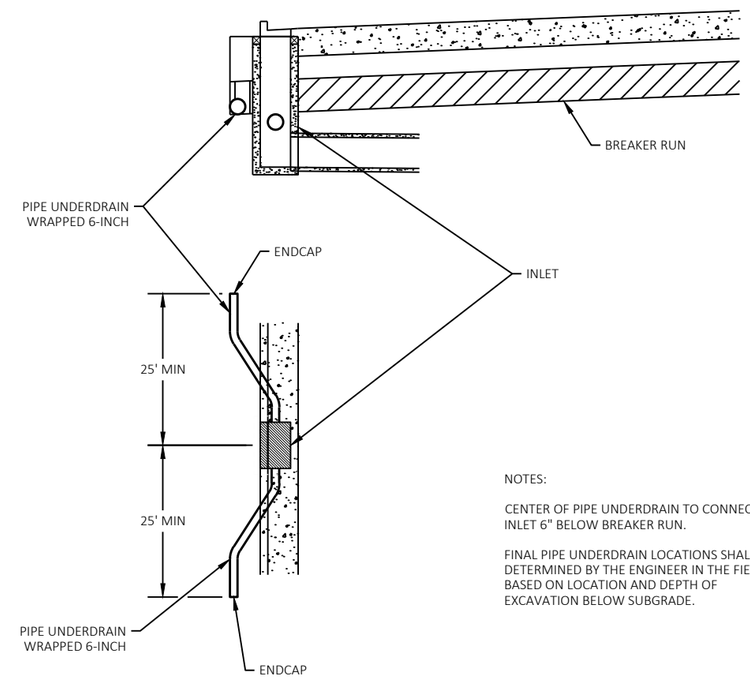

NOTES:

CENTER OF PIPE UNDERDRAIN TO CONNECT TO INLET 6" BELOW BREAKER RUN.

FINAL PIPE UNDERDRAIN LOCATIONS SHALL BE DETERMINED BY THE ENGINEER IN THE FIELD BASED ON LOCATION AND DEPTH OF EXCAVATION BELOW SUBGRADE.

DETAIL FOR PIPE UNDERDRAIN AT CURB & GUTTER INLETS

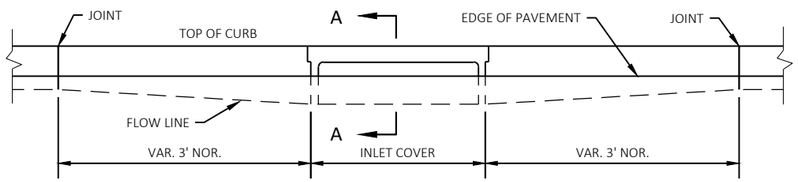

ELEVATION

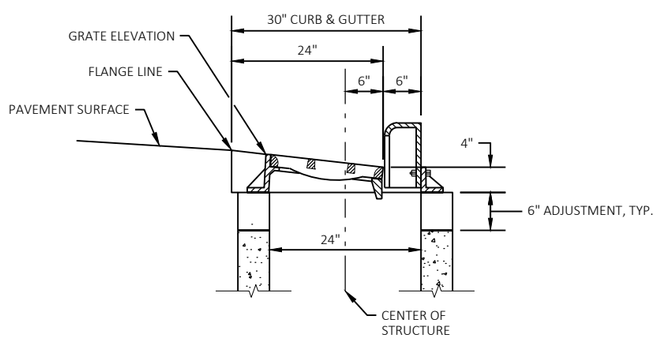

(INLETS 2'X3'-H & 2'X3'-HS)
SECTION A-A

CURB AND GUTTER DETAIL AT INLETS

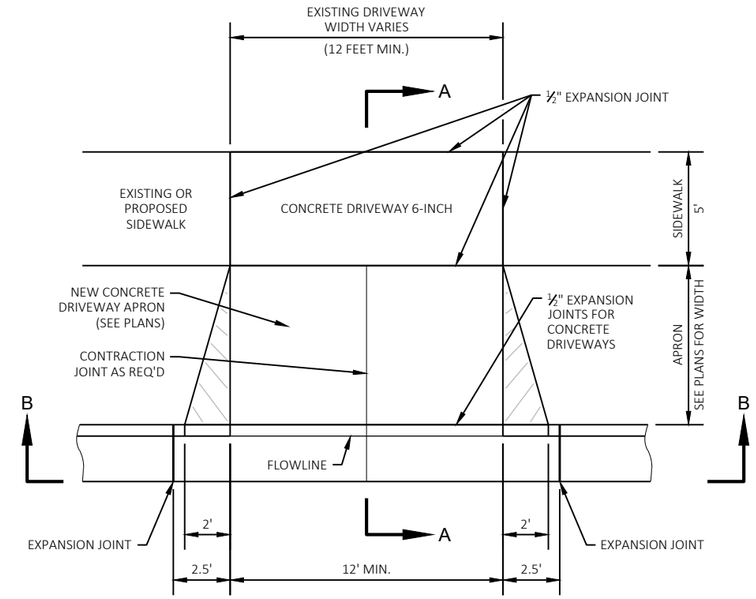

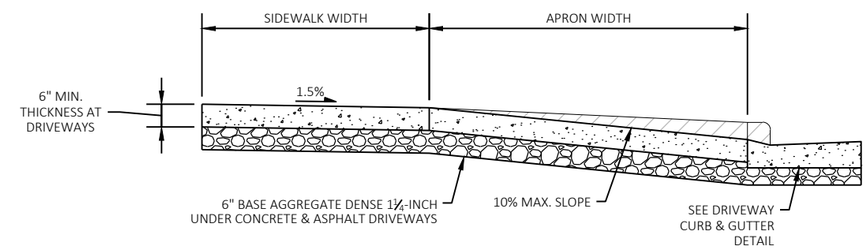

SECTION A-A

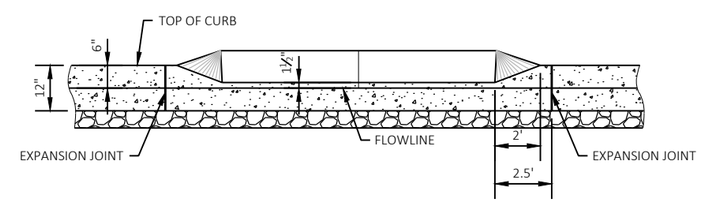

SECTION B-B

DRIVEWAY DETAIL

2

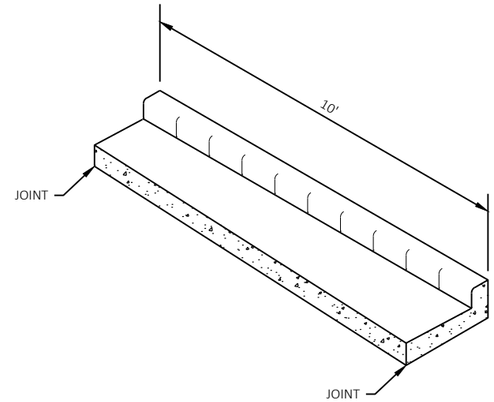

CONCRETE CURB & GUTTER
30-INCH TYPE D TO CONCRETE
CURB & GUTTER 24-INCH TYPE D
(TO BE MEASURED AND PAID FOR
AS CONCRETE CURB & GUTTER
30-INCH TYPE D)

ISOMETRIC VIEW

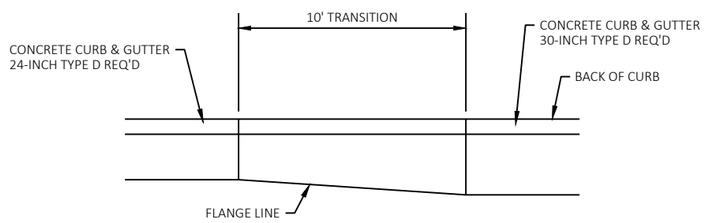

PLAN VIEW

DETAIL OF CURB & GUTTER TRANSITION

NOTES:

ALL RISERS SHALL BE SAME HEIGHT. RISER HEIGHT SHALL BE 4" MINIMUM AND 8" MAXIMUM.

ALL TREADS SHALL BE SAME DEPTH. TREAD DEPTH SHALL BE 11" MINIMUM AND 12" MAXIMUM.

ACTUAL HEIGHT AND NUMBER OF STEPS MAY VARY DUE TO FIELD CONDITIONS.

STEEL REINFORCEMENT AND PIPE RAILING NOT REQUIRED ON STEPS WITH 2 RISERS OR LESS. ALL STEEL TO 2" CLEAR.

MINIMUM WIDTH OF STEP SHALL BE 4 FEET.

NUMBER OF STEPS LISTED IN PLANS EQUALS NUMBER OF RISERS.

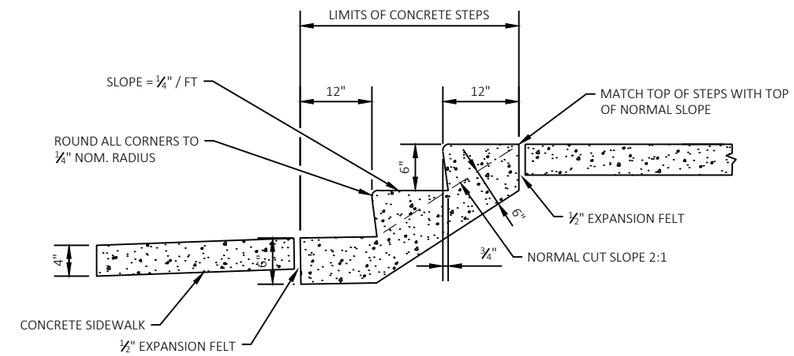

CONCRETE STEPS DETAIL

SEE PLAN SHEETS FOR LOCATIONS

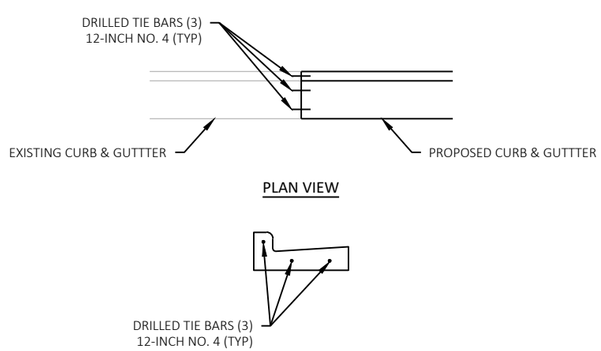

PLAN VIEW

SECTION VIEW

DETAIL FOR CURB AND GUTTER CONNECTION TO EXISTING

NOTE:

SEE STANDARD DETAIL DRAWING
"CONCRETE CURB AND GUTTER" FOR
ALL OTHER PERTINENT INFORMATION
NOT SHOWN ON THIS DETAIL.

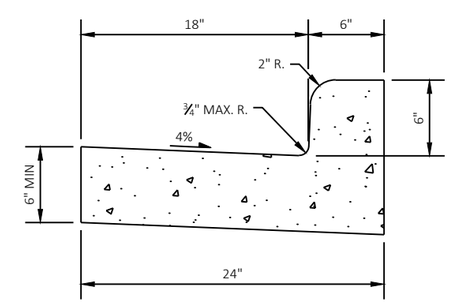

CONCRETE CURB & GUTTER 24-INCH DETAIL

SEE PLAN SHEETS FOR LOCATIONS

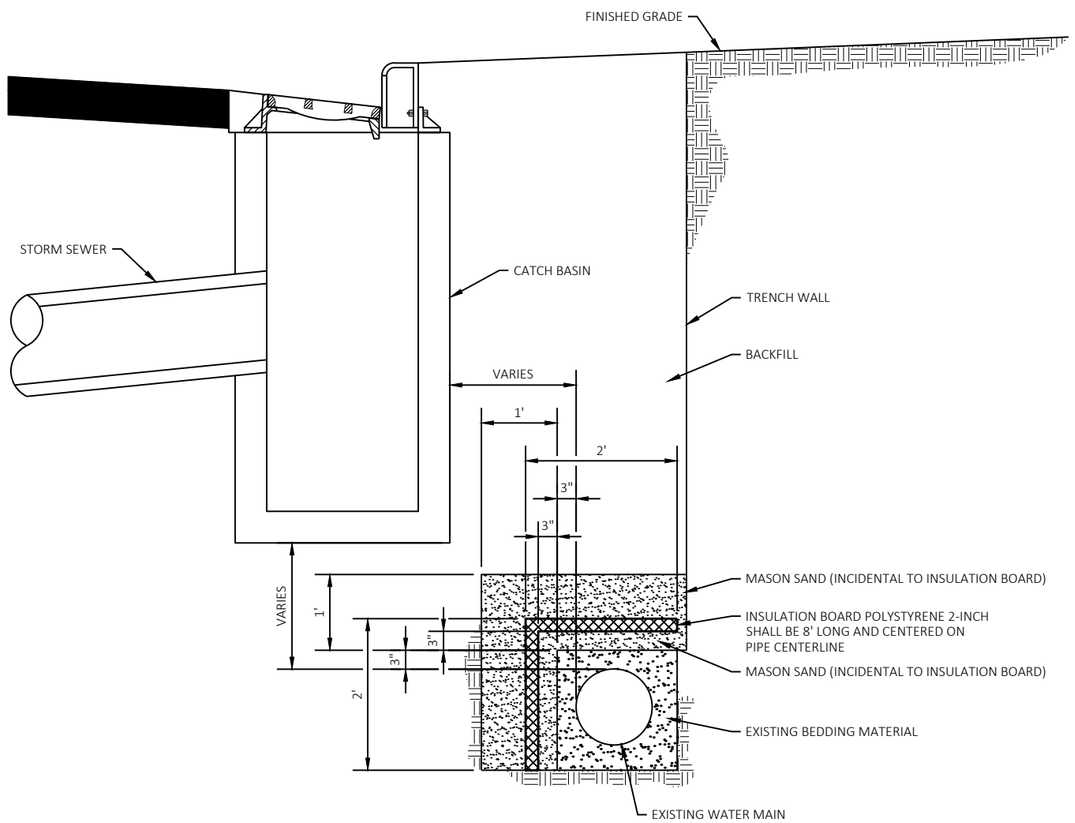

WATER MAIN INSULATION AT CATCH BASINS

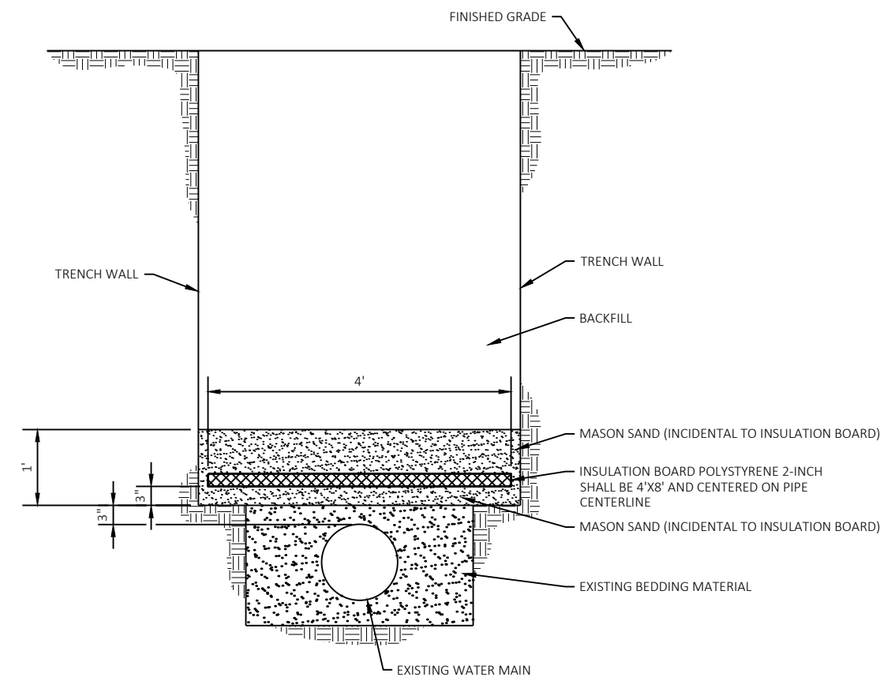

WATER MAIN INSULATION DETAIL

2

NOTES

- ALL CURB RADII ARE TO FLANGE OF CURB.
- ALL ROADWAY DIMENSIONS ARE TO FLANGE OF CURB OR JOINT LINE.
- PAVEMENT GRADES ARE SHOWN AT FLANGE OF CURB OR JOINT LINE.
- PAVEMENT GRADES ARE GENERALLY SHOWN AT 25' INTERVALS.
- ALL DATA POINT STATION AND OFFSETS ARE TO THE FLANGE OF CURB.
- * SEE CURB RAMP DETAIL SHEETS FOR ADDITIONAL CURB RAMP, CURB & GUTTER QUARTER POINTS, AND SPLITTER ISLAND INFORMATION.

RADIUS POINT TABLE

NUMBER	ALIGNMENT	STATION	OFFSET	RADIUS
R1.01	Minnesota	12+14.51	-38.00' LT	20.0'
R1.02	Minnesota	12+86.51	-38.00' LT	20.0'

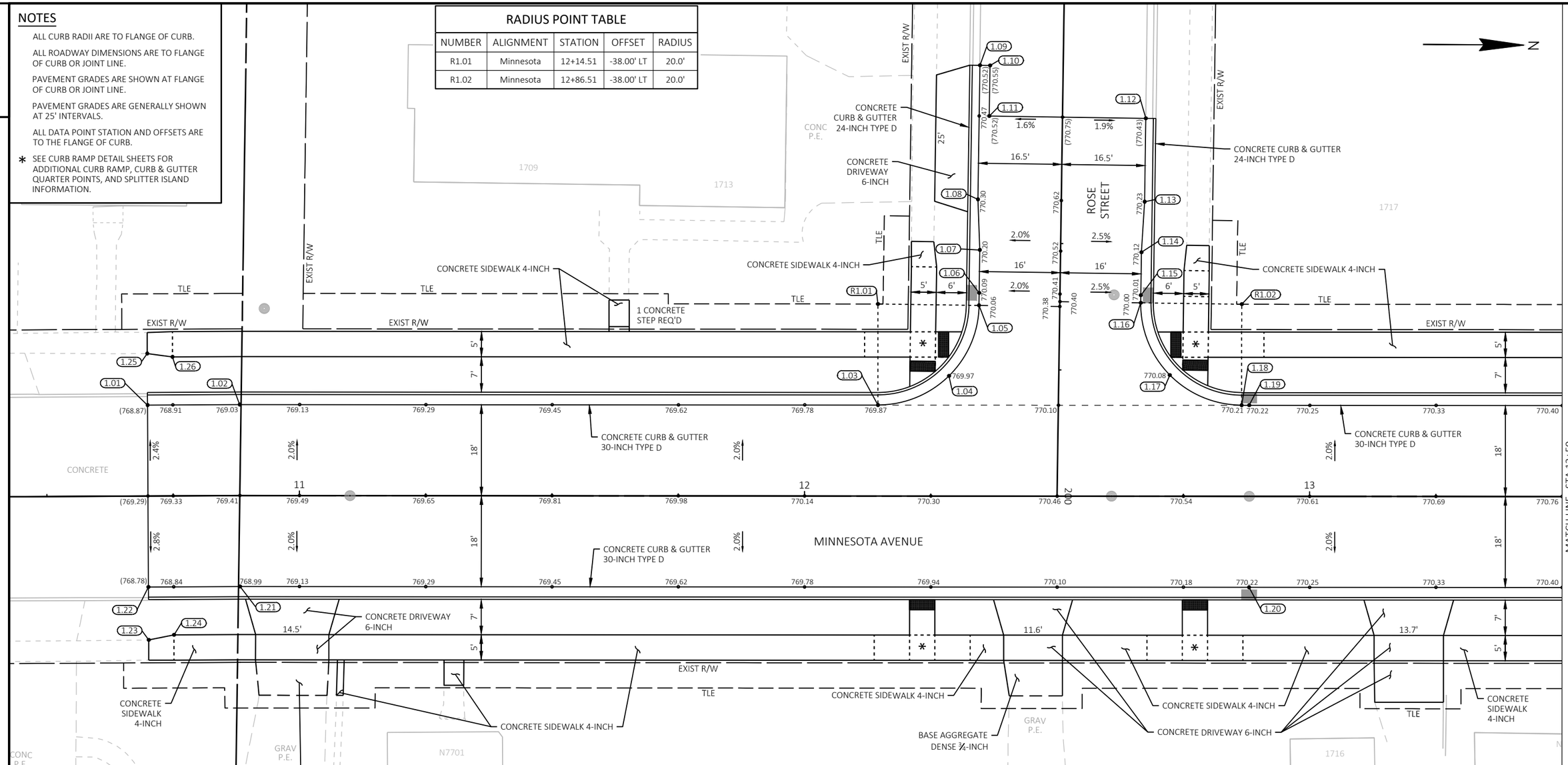

TERRACE SLOPES

STATION	TERRACE LT	TERRACE RT
10+70	4.00%	4.00%
11+00	4.00%	4.00%
11+25	8.00%	4.00%
12+00	8.00%	4.00%
12+25	4.00%	4.00%
13+00	4.00%	4.00%
13+25	2.00%	4.00%

DATA TABLE

NUMBER	ALIGNMENT	STATION	OFFSET	DESCRIPTION
1.01	Minnesota	10+70.00	18.0' LT	MATCH EXISTING
1.02	Minnesota	10+88.19	18.0' LT	C & G PI
1.03	Minnesota	12+14.51	18.0' LT	C & G PC
1.04	Minnesota	12+28.55	23.8' LT	RADIUS MID POINT
1.05	Rose	199+62.48	16.0' RT	C & G PC
1.06	Rose	199+60.01	16.0' RT	INLET
1.07	Rose	199+51.51	16.0' RT	C & G PI
1.08	Rose	199+41.51	16.5' RT	C & G PI
1.09	Rose	199+14.99	16.5' RT	MATCH EXISTING

DATA TABLE

NUMBER	ALIGNMENT	STATION	OFFSET	DESCRIPTION
1.10	Rose	199+14.99	14.5' RT	MATCH EXISTING
1.11	Rose	199+25.00	14.5' RT	MATCH EXISTING
1.12	Rose	199+25.00	16.5' LT	MATCH EXISTING
1.13	Rose	199+41.51	16.5' LT	C & G PI
1.14	Rose	199+51.51	16.0' LT	C & G PI
1.15	Rose	199+60.01	16.0' LT	INLET
1.16	Rose	199+61.51	16.0' LT	C & G PC
1.17	Minnesota	12+72.28	24.0' LT	RADIUS MID POINT
1.18	Minnesota	12+86.51	18.0' LT	C & G PC

DATA TABLE

NUMBER	ALIGNMENT	STATION	OFFSET	DESCRIPTION
1.19	Minnesota	12+88.01	18.0' LT	INLET
1.20	Minnesota	12+88.01	18.0' RT	INLET
1.21	Minnesota	10+88.13	18.0' RT	C & G PI
1.22	Minnesota	10+70.00	18.0' RT	MATCH EXISTING
1.23	Minnesota	10+70.00	28.5' RT	MATCH EXISTING SIDEWALK PI
1.24	Minnesota	10+75.00	27.5' RT	SIDEWALK PI
1.25	Minnesota	10+70.00	28.2' LT	MATCH EXISTING SIDEWALK PI
1.26	Minnesota	10+75.00	27.5' LT	SIDEWALK PI

LEGEND

- PROPOSED CATCH BASIN/ INLET
- PROPOSED STORM SEWER MANHOLE
- PROPOSED ENDWALL
- DATA POINT

PROJECT NO: 4986-00-65	HWY: MINNESOTA AVENUE	COUNTY: FOND DU LAC	PLAN DETAILS	SHEET 12	E

2

NOTES

- ALL CURB RADII ARE TO FLANGE OF CURB.
- ALL ROADWAY DIMENSIONS ARE TO FLANGE OF CURB OR JOINT LINE.
- PAVEMENT GRADES ARE SHOWN AT FLANGE OF CURB OR JOINT LINE.
- PAVEMENT GRADES ARE GENERALLY SHOWN AT 25' INTERVALS.
- ALL DATA POINT STATION AND OFFSETS ARE TO THE FLANGE OF CURB.
- * SEE CURB RAMP DETAIL SHEETS FOR ADDITIONAL CURB RAMP, CURB & GUTTER QUARTER POINTS, AND SPLITTER ISLAND INFORMATION.

RADIUS POINT TABLE

NUMBER	ALIGNMENT	STATION	OFFSET	RADIUS
R2.01	Minnesota	15+26.95	-38.00' LT	20.0'
R2.02	Minnesota	15+98.96	-38.00' LT	20.0'

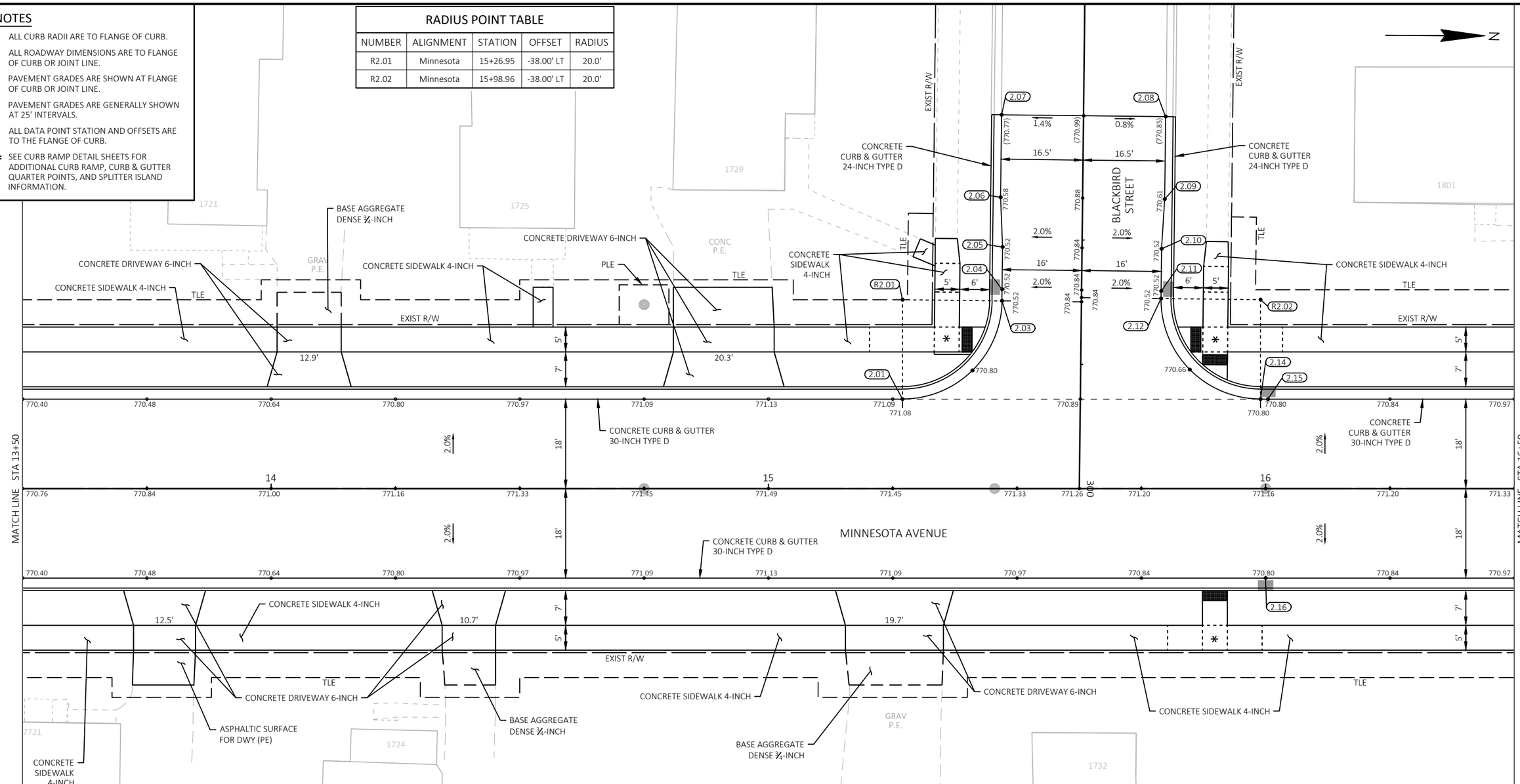

TERRACE SLOPES

STATION	TERRACE LT	TERRACE RT
13+75	2.00%	4.00%
14+00	4.00%	4.00%
14+75	4.00%	4.00%
15+00	2.00%	4.00%
15+50	2.00%	4.00%
15+75	4.00%	4.00%

DATA TABLE

NUMBER	ALIGNMENT	STATION	OFFSET	DESCRIPTION
2.01	Minnesota	15+26.95	18.0' LT	C & G PC
2.02	Minnesota	15+41.01	23.8' LT	RADIUS MID POINT
2.03	Blackbird	299+62.41	16.0' RT	C & G PC
2.04	Blackbird	299+60.09	16.0' RT	INLET
2.05	Blackbird	299+51.59	16.0' RT	C & G PI
2.06	Blackbird	299+41.59	16.5' RT	C & G PI

DATA TABLE

NUMBER	ALIGNMENT	STATION	OFFSET	DESCRIPTION
2.07	Blackbird	299+25.00	16.5' RT	MATCH EXISTING
2.08	Blackbird	299+25.00	16.5' LT	MATCH EXISTING
2.09	Blackbird	299+41.59	16.5' LT	C & G PI
2.10	Blackbird	299+51.59	16.0' LT	C & G PI
2.11	Blackbird	299+60.09	16.0' LT	INLET
2.12	Blackbird	299+61.59	16.0' LT	C & G PC

DATA TABLE

NUMBER	ALIGNMENT	STATION	OFFSET	DESCRIPTION
2.13	Minnesota	15+84.74	23.9' LT	RADIUS MID POINT
2.14	Minnesota	15+98.96	18.0' LT	C & G PC
2.15	Minnesota	16+00.46	18.0' LT	INLET
2.16	Minnesota	16+00.00	18.0' RT	INLET

LEGEND

- PROPOSED CATCH BASIN/ INLET
- PROPOSED STORM SEWER MANHOLE
- PROPOSED ENDWALL
- DATA POINT

2

NOTES

ALL CURB RADII ARE TO FLANGE OF CURB.

ALL ROADWAY DIMENSIONS ARE TO FLANGE OF CURB OR JOINT LINE.

PAVEMENT GRADES ARE SHOWN AT FLANGE OF CURB OR JOINT LINE.

PAVEMENT GRADES ARE GENERALLY SHOWN AT 25' INTERVALS.

ALL DATA POINT STATION AND OFFSETS ARE TO THE FLANGE OF CURB.

* SEE CURB RAMP DETAIL SHEETS FOR ADDITIONAL CURB RAMP, CURB & GUTTER QUARTER POINTS, AND SPLITTER ISLAND INFORMATION.

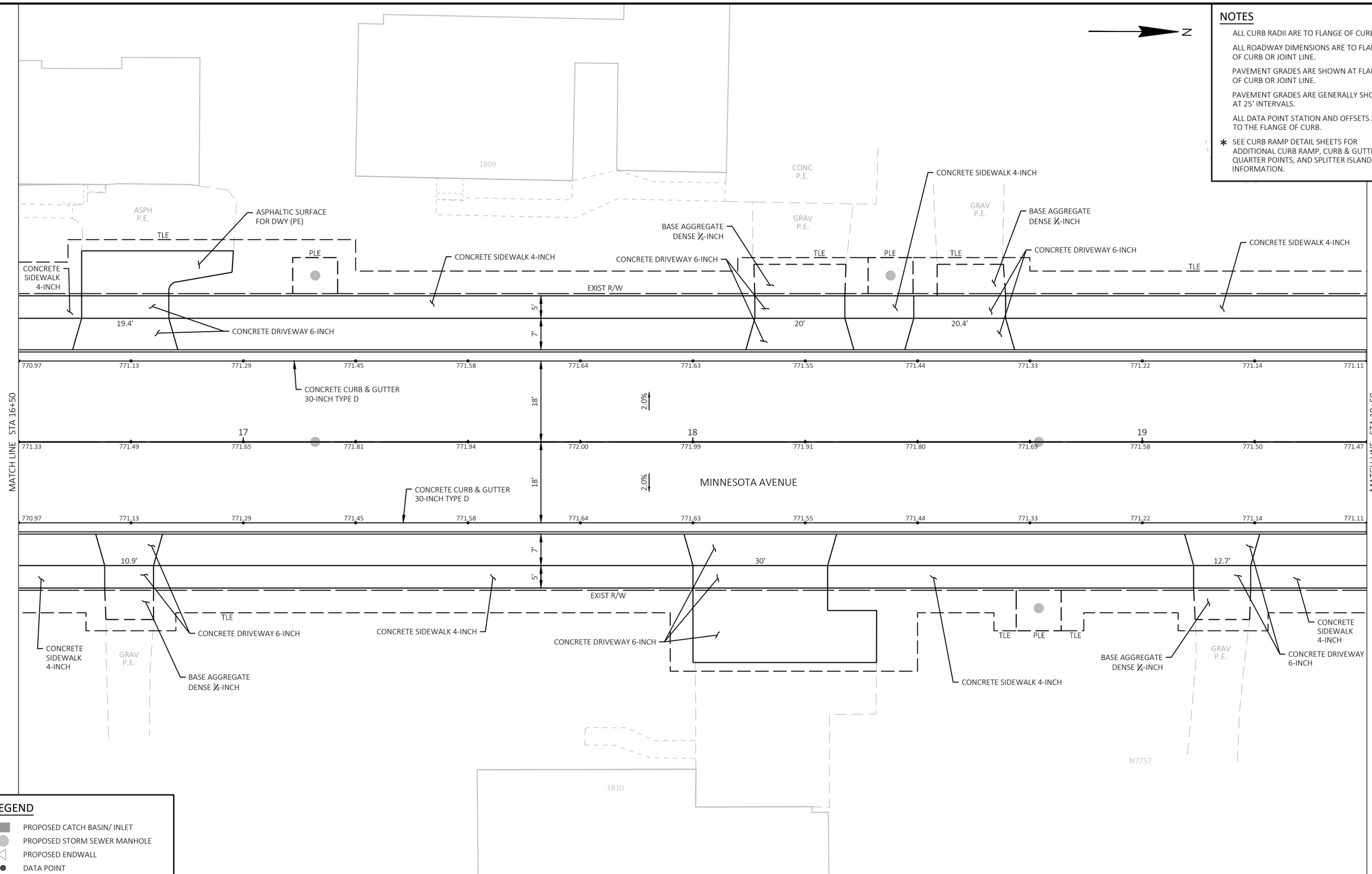

LEGEND

- PROPOSED CATCH BASIN/ INLET
- PROPOSED STORM SEWER MANHOLE
- PROPOSED ENDWALL
- DATA POINT

PROJECT NO: 4986-00-65	HWY: MINNESOTA AVENUE	COUNTY: FOND DU LAC	PLAN DETAILS	SHEET 14	E

FILE NAME : S:\CURRPROJ\FONDDUCO\NORTH FDL, VILLAGE OF\MINNESOTA AVE\CIVIL3D\49860064\SHEETS\49860065-021201-PD.DWG
LAYOUT NAME - Sheet-03
PLOT DATE : 7/29/2025 1:19 PM PLOT BY : AARON SARAUER PLOT NAME : PLOT SCALE : 1 IN:20 FT

WISDOT/CADDS SHEET 42

2

NOTES

ALL CURB RADII ARE TO FLANGE OF CURB.

ALL ROADWAY DIMENSIONS ARE TO FLANGE OF CURB OR JOINT LINE.

PAVEMENT GRADES ARE SHOWN AT FLANGE OF CURB OR JOINT LINE.

PAVEMENT GRADES ARE GENERALLY SHOWN AT 25' INTERVALS.

ALL DATA POINT STATION AND OFFSETS ARE TO THE FLANGE OF CURB.

* SEE CURB RAMP DETAIL SHEETS FOR ADDITIONAL CURB RAMP, CURB & GUTTER QUARTER POINTS, AND SPLITTER ISLAND INFORMATION.

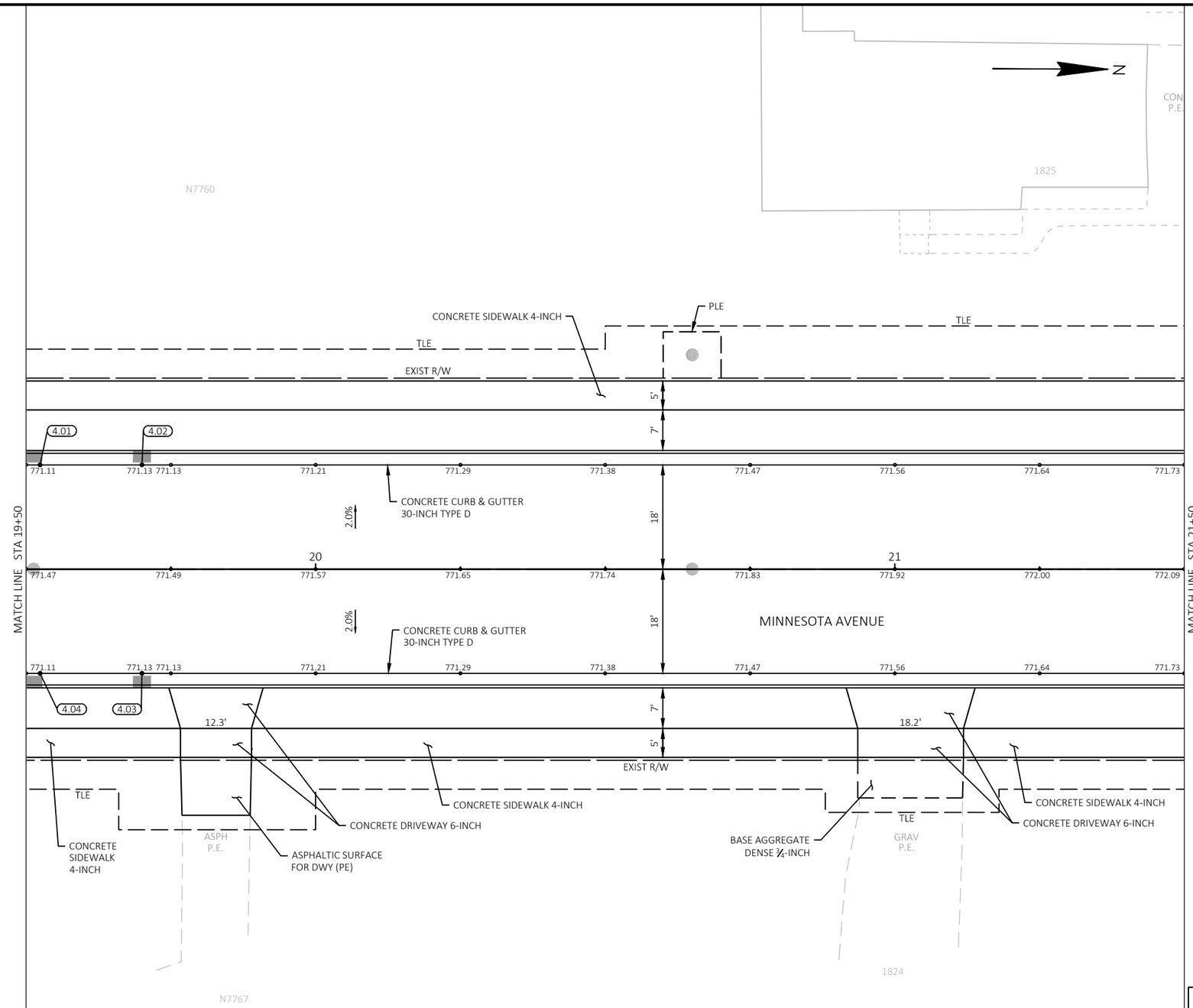

LEGEND

- PROPOSED CATCH BASIN/ INLET
- PROPOSED STORM SEWER MANHOLE
- PROPOSED ENDWALL
- DATA POINT

DATA TABLE

NUMBER	ALIGNMENT	STATION	OFFSET	DESCRIPTION
4.01	Minnesota	19+52.38	18.0' LT	INLET
4.02	Minnesota	19+70.00	18.0' LT	INLET
4.03	Minnesota	19+70.00	18.0' RT	INLET
4.04	Minnesota	19+52.38	18.0' RT	INLET

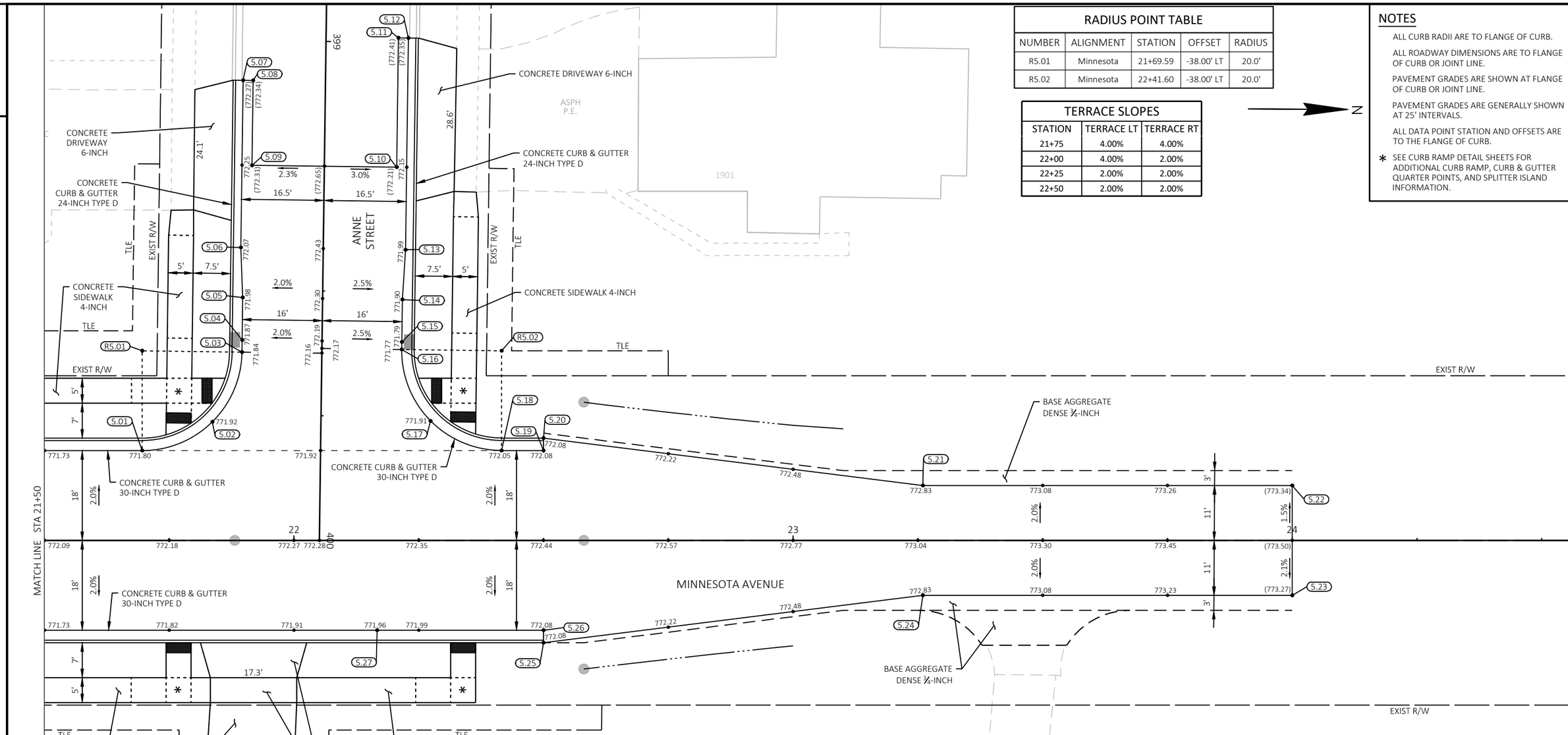

RADIUS POINT TABLE

NUMBER	ALIGNMENT	STATION	OFFSET	RADIUS
R5.01	Minnesota	21+69.59	-38.00' LT	20.0'
R5.02	Minnesota	22+41.60	-38.00' LT	20.0'

TERRACE SLOPES

STATION	TERRACE LT	TERRACE RT
21+75	4.00%	4.00%
22+00	4.00%	2.00%
22+25	2.00%	2.00%
22+50	2.00%	2.00%

N

NOTES

ALL CURB RADII ARE TO FLANGE OF CURB.

ALL ROADWAY DIMENSIONS ARE TO FLANGE OF CURB OR JOINT LINE.

PAVEMENT GRADES ARE SHOWN AT FLANGE OF CURB OR JOINT LINE.

PAVEMENT GRADES ARE GENERALLY SHOWN AT 25' INTERVALS.

ALL DATA POINT STATION AND OFFSETS ARE TO THE FLANGE OF CURB.

* SEE CURB RAMP DETAIL SHEETS FOR ADDITIONAL CURB RAMP, CURB & GUTTER QUARTER POINTS, AND SPLITTER ISLAND INFORMATION.

2

LEGEND

- PROPOSED CATCH BASIN/ INLET
- PROPOSED STORM SEWER MANHOLE
- PROPOSED ENDWALL
- DATA POINT

DATA TABLE

NUMBER	ALIGNMENT	STATION	OFFSET	DESCRIPTION
5.01	Minnesota	21+69.59	18.0' LT	C & G PC
5.02	Minnesota	21+83.64	23.8' LT	RADIUS MID POINT
5.03	Anne	399+62.47	16.0' RT	C & G PC
5.04	Anne	399+60.02	16.0' RT	INLET
5.05	Anne	399+51.52	16.0' RT	C & G PI
5.06	Anne	399+41.52	16.5' RT	C & G PI
5.07	Anne	399+08.00	16.5' RT	MATCH EXISTING
5.08	Anne	399+08.00	14.5' RT	MATCH EXISTING
5.09	Anne	399+25.00	14.5' RT	MATCH EXISTING

DATA TABLE

NUMBER	ALIGNMENT	STATION	OFFSET	DESCRIPTION
5.10	Anne	399+25.00	14.5' LT	MATCH EXISTING
5.11	Anne	398+99.09	14.5' LT	MATCH EXISTING
5.12	Anne	398+99.09	16.5' LT	MATCH EXISTING
5.13	Anne	399+41.52	16.5' LT	C & G PI
5.14	Anne	399+51.52	16.0' LT	C & G PI
5.15	Anne	399+60.02	16.0' LT	INLET
5.16	Anne	399+61.52	16.0' LT	C & G PC
5.17	Minnesota	22+27.36	24.0' LT	RADIUS MID POINT
5.18	Minnesota	22+41.60	18.0' LT	C & G PC

DATA TABLE

NUMBER	ALIGNMENT	STATION	OFFSET	DESCRIPTION
5.19	Minnesota	22+50.00	18.0' LT	C & G END
5.20	Minnesota	22+50.00	20.5' LT	C & G END PAVT PI
5.21	Minnesota	23+26.00	11.0' LT	PAVT PI
5.22	Minnesota	24+00.00	11.0' LT	MATCH EXISTING
5.23	Minnesota	24+00.00	11.0' RT	MATCH EXISTING
5.24	Minnesota	23+26.00	11.0' RT	PAVT PI
5.25	Minnesota	22+50.00	20.5' RT	C & G END PAVT PI
5.26	Minnesota	22+50.00	18.0' RT	C & G END
5.27	Minnesota	22+16.67	18.0' RT	INLET

2

NOTES:

CONTRACTOR TO FIELD VERIFY ELEVATION, SLOPES, LENGTHS, AND MATCH POINTS PRIOR TO CURB RAMP AND SIDEWALK INSTALLATION.

THE ENGINEER MAY ADJUST ELEVATIONS TO FIT FIELD CONDITIONS.

REFER TO SDD 8D5 "CURB RAMPS" FOR JOINT LOCATIONS AND ADDITIONAL DETAILS.

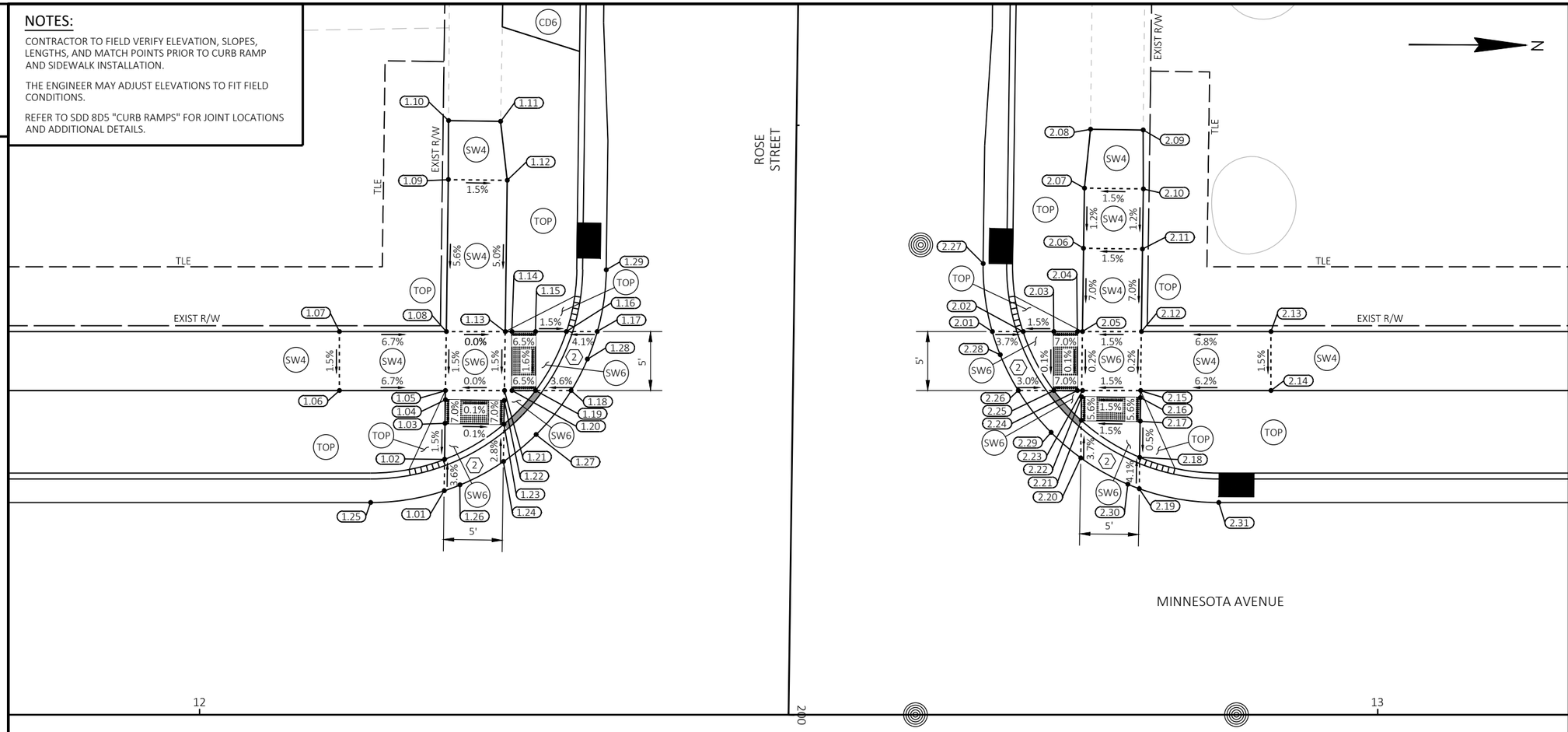

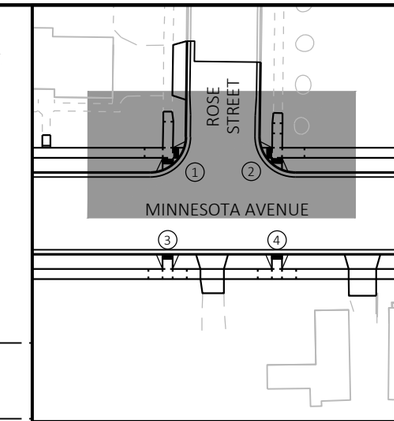

2

LEGEND

- X — CURB RAMP TYPE
- ASP — 3" ASPHALTIC SURFACE
- BAD — 6" BASE AGGREGATE DENSE ¾-INCH
- CD6 — CONCRETE DRIVEWAY 6-INCH
- PED — CONCRETE CURB PEDESTRIAN
- SW4 — CONCRETE SIDEWALK 4-INCH
- SW6 — CONCRETE SIDEWALK 6-INCH
- TOP — TOPSOIL, SEED, FERTILIZER, AND EMAT
- CURB HEAD HEIGHT TRANSITION
- 2" CURB HEAD HEIGHT
- CURB RAMP DETECTABLE WARNING FIELD (2'x5')
- REVERSE SLOPE GUTTER PAN

CURB RAMP - 1						
POINT NO.	ALIGNMENT	STATION	OFFSET	ELEVATION	NORTHING	EASTING
1.01	MINNESOTA	12+20.75	19.00' LT	769.91	401600.69	807292.46
1.02	MINNESOTA	12+20.79	21.67' LT	769.86	401600.71	807289.80
1.03	MINNESOTA	12+20.83	24.72' LT	769.90	401600.74	807286.74
1.04	MINNESOTA	12+20.86	26.72' LT	770.04	401600.75	807284.74
1.05	MINNESOTA	12+20.87	27.50' LT	770.10	401600.76	807283.96
1.06	MINNESOTA	12+11.87	27.50' LT	770.70	401591.76	807284.01
1.07	MINNESOTA	12+11.87	32.50' LT	770.78	401591.73	807279.01
1.08	MINNESOTA	12+20.93	32.50' LT	770.17	401600.80	807278.96
1.09	MINNESOTA	12+21.11	45.39' LT	770.89	401600.90	807266.07
1.10	MINNESOTA	12+21.13	50.39' LT	770.96	401600.89	807261.07
1.11	MINNESOTA	12+25.55	50.33' LT	770.90	401605.31	807261.10
1.12	MINNESOTA	12+26.11	45.32' LT	770.82	401605.90	807266.11
1.13	MINNESOTA	12+25.93	32.50' LT	770.17	401605.80	807278.93
1.14	MINNESOTA	12+26.51	32.50' LT	770.14	401606.37	807278.93
1.15	MINNESOTA	12+28.51	32.50' LT	770.01	401608.37	807278.92
1.16	MINNESOTA	12+31.12	32.50' LT	769.97	401610.98	807278.90

CURB RAMP - 1						
POINT NO.	ALIGNMENT	STATION	OFFSET	ELEVATION	NORTHING	EASTING
1.17	MINNESOTA	12+33.74	32.50' LT	770.03	401613.60	807278.89
1.18	MINNESOTA	12+31.53	27.50' LT	770.00	401611.42	807283.90
1.19	MINNESOTA	12+28.51	27.50' LT	769.93	401608.40	807283.92
1.20	MINNESOTA	12+26.51	27.50' LT	770.06	401606.40	807283.93
1.21	MINNESOTA	12+25.87	27.50' LT	770.10	401605.76	807283.93
1.22	MINNESOTA	12+25.86	26.66' LT	770.04	401605.75	807284.78
1.23	MINNESOTA	12+25.83	24.66' LT	769.90	401605.74	807286.78
1.24	MINNESOTA	12+25.79	21.48' LT	769.95	401605.71	807289.95
1.25	MINNESOTA	12+14.51	18.00' LT	769.87	401594.45	807293.50
1.26	MINNESOTA	12+22.10	19.50' LT	769.92	401602.04	807291.96
1.27	MINNESOTA	12+28.55	23.76' LT	769.97	401608.47	807287.65
1.28	MINNESOTA	12+32.91	30.16' LT	770.02	401612.78	807281.23
1.29	MINNESOTA	12+34.51	37.73' LT	770.06	401614.34	807273.65

CURB RAMP - 2						
POINT NO.	ALIGNMENT	STATION	OFFSET	ELEVATION	NORTHING	EASTING
2.01	MINNESOTA	12+67.28	32.50' LT	770.03	401647.15	807278.69
2.02	MINNESOTA	12+69.90	32.50' LT	769.97	401649.76	807278.68
2.03	MINNESOTA	12+72.51	32.50' LT	770.01	401652.38	807278.66
2.04	MINNESOTA	12+74.51	32.50' LT	770.15	401654.38	807278.65
2.05	MINNESOTA	12+74.94	32.50' LT	770.18	401654.80	807278.65
2.06	MINNESOTA	12+75.03	39.57' LT	770.67	401654.85	807271.58
2.07	MINNESOTA	12+75.10	44.67' LT	770.74	401654.89	807266.48
2.08	MINNESOTA	12+75.62	49.66' LT	770.81	401655.38	807261.49
2.09	MINNESOTA	12+80.09	49.60' LT	770.88	401659.86	807261.52
2.10	MINNESOTA	12+80.10	44.60' LT	770.81	401659.89	807266.52
2.11	MINNESOTA	12+80.03	39.50' LT	770.75	401659.85	807271.62
2.12	MINNESOTA	12+79.94	32.50' LT	770.26	401659.80	807278.62
2.13	MINNESOTA	12+90.94	32.50' LT	771.00	401670.80	807278.56
2.14	MINNESOTA	12+90.94	27.50' LT	770.93	401670.83	807283.56
2.15	MINNESOTA	12+79.87	27.50' LT	770.24	401659.76	807283.62
2.16	MINNESOTA	12+79.86	26.90' LT	770.21	401659.76	807284.22

CURB RAMP - 2						
POINT NO.	ALIGNMENT	STATION	OFFSET	ELEVATION	NORTHING	EASTING
2.17	MINNESOTA	12+79.84	24.90' LT	770.10	401659.74	807286.22
2.18	MINNESOTA	12+79.80	21.84' LT	770.08	401659.72	807289.28
2.19	MINNESOTA	12+79.76	19.17' LT	770.15	401659.70	807291.95
2.20	MINNESOTA	12+74.79	21.79' LT	770.11	401654.72	807289.36
2.21	MINNESOTA	12+74.84	24.96' LT	770.03	401654.74	807286.19
2.22	MINNESOTA	12+74.86	26.96' LT	770.14	401654.76	807284.19
2.23	MINNESOTA	12+74.94	27.50' LT	770.17	401654.83	807283.65
2.24	MINNESOTA	12+74.51	27.50' LT	770.14	401654.40	807283.65
2.25	MINNESOTA	12+72.51	27.50' LT	770.00	401652.40	807283.66
2.26	MINNESOTA	12+69.49	27.50' LT	770.05	401649.38	807283.68
2.27	MINNESOTA	12+66.52	38.27' LT	770.00	401646.34	807272.93
2.28	MINNESOTA	12+67.96	30.53' LT	770.04	401647.83	807280.66
2.29	MINNESOTA	12+72.28	23.95' LT	770.08	401652.19	807287.21
2.30	MINNESOTA	12+78.80	19.55' LT	770.14	401658.73	807291.58
2.31	MINNESOTA	12+86.51	18.00' LT	770.21	401666.46	807293.08

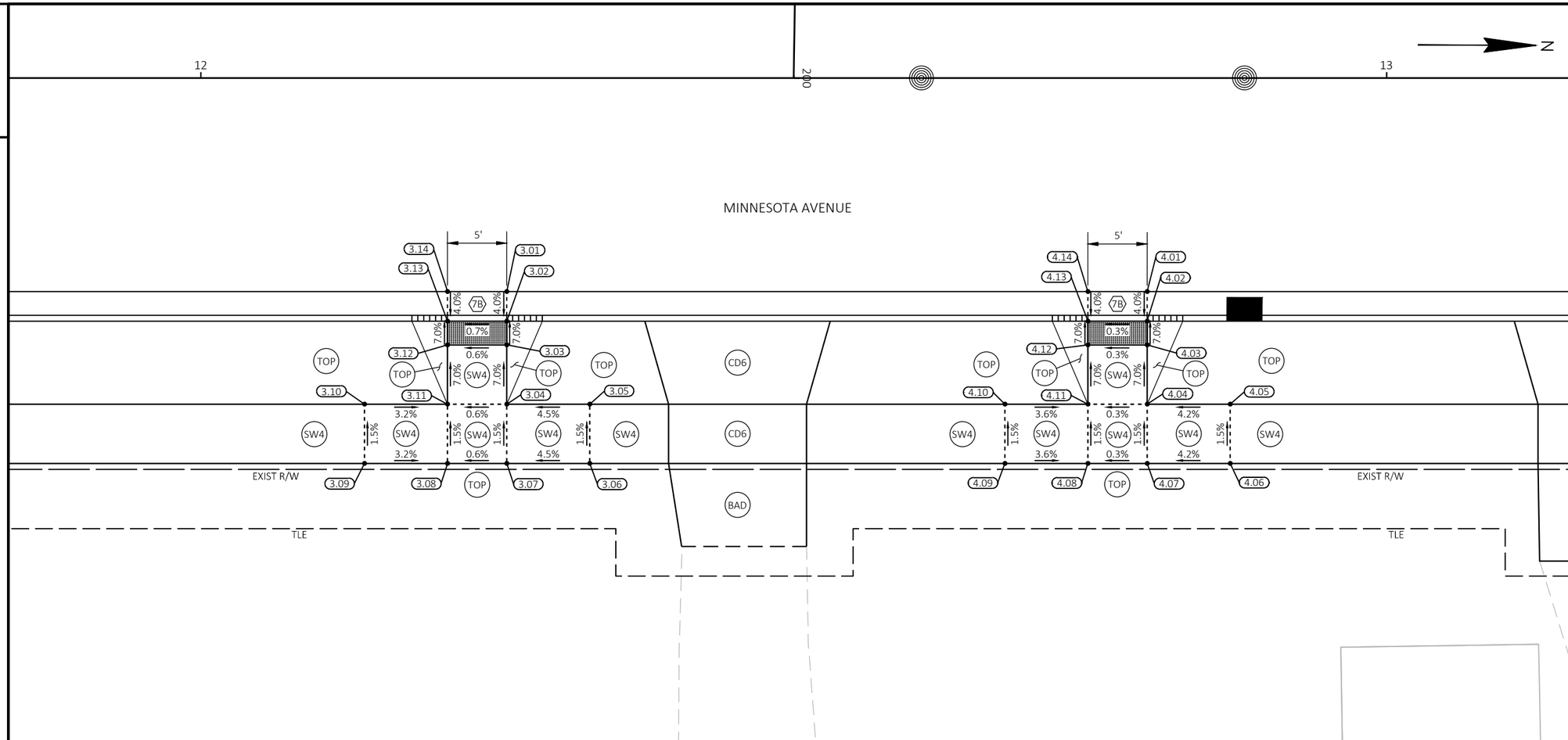

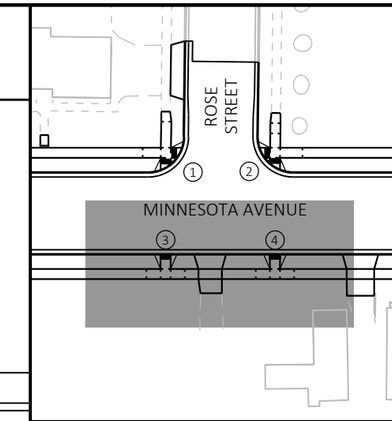

LEGEND

- X — CURB RAMP TYPE
- ASP — 3" ASPHALTIC SURFACE
- BAD — 6" BASE AGGREGATE DENSE ¾-INCH
- CD6 — CONCRETE DRIVEWAY 6-INCH
- PED — CONCRETE CURB PEDESTRIAN
- SW4 — CONCRETE SIDEWALK 4-INCH
- SW6 — CONCRETE SIDEWALK 6-INCH
- TOP — TOPSOIL, SEED, FERTILIZER, AND EMAT
- CURB HEAD HEIGHT TRANSITION
- 2" CURB HEAD HEIGHT
- CURB RAMP DETECTABLE WARNING FIELD (2'x5')
- REVERSE SLOPE GUTTER PAN

NOTES:

CONTRACTOR TO FIELD VERIFY ELEVATION, SLOPES, LENGTHS, AND MATCH POINTS PRIOR TO CURB RAMP AND SIDEWALK INSTALLATION.

THE ENGINEER MAY ADJUST ELEVATIONS TO FIT FIELD CONDITIONS.

REFER TO SDD 8D5 "CURB RAMPS" FOR JOINT LOCATIONS AND ADDITIONAL DETAILS.

CURB RAMP - 3

POINT NO.	ALIGNMENT	STATION	OFFSET	ELEVATION	NORTHING	EASTING
3.01	MINNESOTA	12+25.80	18.00' RT	769.95	401605.95	807329.43
3.02	MINNESOTA	12+25.80	20.50' RT	769.89	401605.97	807331.93
3.03	MINNESOTA	12+25.80	22.50' RT	770.03	401605.98	807333.93
3.04	MINNESOTA	12+25.80	27.50' RT	770.38	401606.01	807338.93
3.05	MINNESOTA	12+32.80	27.50' RT	770.69	401613.01	807338.89
3.06	MINNESOTA	12+32.80	32.50' RT	770.77	401613.03	807343.89
3.07	MINNESOTA	12+25.80	32.50' RT	770.45	401606.03	807343.93
3.08	MINNESOTA	12+20.80	32.50' RT	770.42	401601.03	807343.96
3.09	MINNESOTA	12+13.80	32.50' RT	770.64	401594.03	807344.00
3.10	MINNESOTA	12+13.80	27.50' RT	770.57	401594.01	807339.00
3.11	MINNESOTA	12+20.80	27.50' RT	770.34	401601.01	807338.96
3.12	MINNESOTA	12+20.80	22.50' RT	769.99	401600.98	807333.96
3.13	MINNESOTA	12+20.80	20.50' RT	769.85	401600.97	807331.96
3.14	MINNESOTA	12+20.80	18.00' RT	769.91	401600.95	807329.46

CURB RAMP - 4

POINT NO.	ALIGNMENT	STATION	OFFSET	ELEVATION	NORTHING	EASTING
4.01	MINNESOTA	12+79.80	18.00' RT	770.19	401659.96	807329.12
4.02	MINNESOTA	12+79.80	20.50' RT	770.13	401659.97	807331.62
4.03	MINNESOTA	12+79.80	22.50' RT	770.27	401659.98	807333.62
4.04	MINNESOTA	12+79.80	27.50' RT	770.62	401660.01	807338.62
4.05	MINNESOTA	12+86.80	27.50' RT	770.91	401667.01	807338.58
4.06	MINNESOTA	12+86.80	32.50' RT	770.99	401667.04	807343.58
4.07	MINNESOTA	12+79.80	32.50' RT	770.70	401660.04	807343.62
4.08	MINNESOTA	12+74.80	32.50' RT	770.68	401655.04	807343.65
4.09	MINNESOTA	12+67.80	32.50' RT	770.93	401648.04	807343.69
4.10	MINNESOTA	12+67.80	27.50' RT	770.86	401648.01	807338.69
4.11	MINNESOTA	12+74.80	27.50' RT	770.61	401655.01	807338.65
4.12	MINNESOTA	12+74.80	22.50' RT	770.26	401654.98	807333.65
4.13	MINNESOTA	12+74.80	20.50' RT	770.12	401654.97	807331.65
4.14	MINNESOTA	12+74.80	18.00' RT	770.18	401654.96	807329.15

2

NOTES:

CONTRACTOR TO FIELD VERIFY ELEVATION, SLOPES, LENGTHS, AND MATCH POINTS PRIOR TO CURB RAMP AND SIDEWALK INSTALLATION.

THE ENGINEER MAY ADJUST ELEVATIONS TO FIT FIELD CONDITIONS.

REFER TO SDD 8D5 "CURB RAMPS" FOR JOINT LOCATIONS AND ADDITIONAL DETAILS.

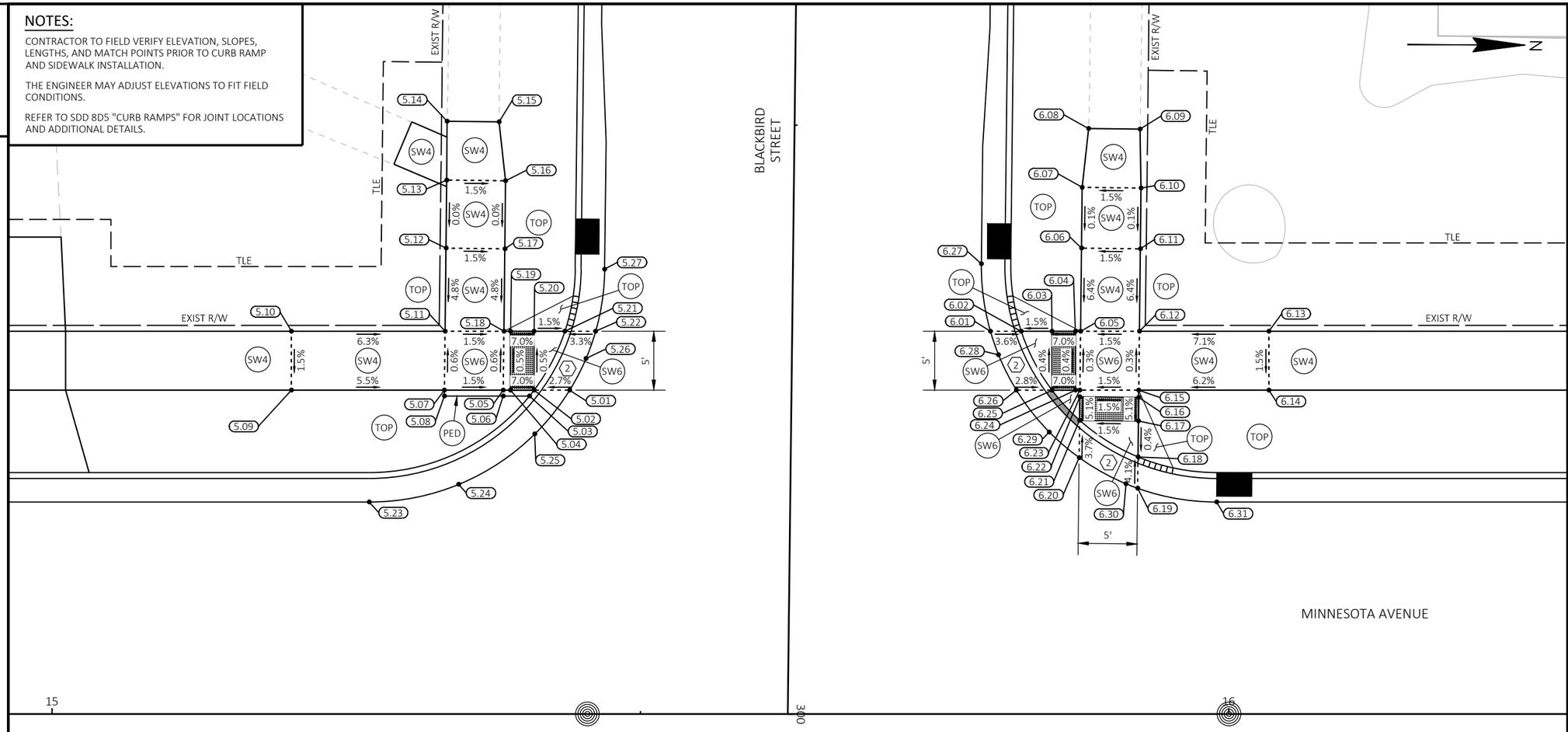

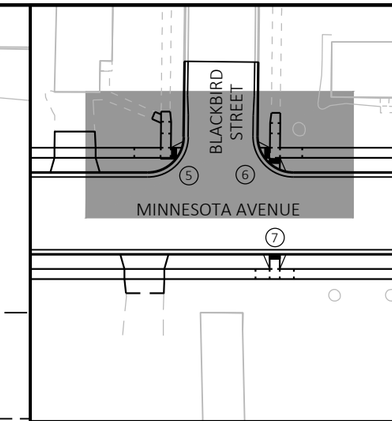

2

LEGEND

- X — CURB RAMP TYPE
- ASP — 3" ASPHALTIC SURFACE
- BAD — 6" BASE AGGREGATE DENSE ¾-INCH
- CD6 — CONCRETE DRIVEWAY 6-INCH
- PED — CONCRETE CURB PEDESTRIAN
- SW4 — CONCRETE SIDEWALK 4-INCH
- SW6 — CONCRETE SIDEWALK 6-INCH
- TOP — TOPSOIL, SEED, FERTILIZER, AND EMAT
- CURB HEAD HEIGHT TRANSITION
- 2" CURB HEAD HEIGHT
- CURB RAMP DETECTABLE WARNING FIELD (2'x5')
- REVERSE SLOPE GUTTER PAN

CURB RAMP - 5						
POINT NO.	ALIGNMENT	STATION	OFFSET	ELEVATION	NORTHING	EASTING
5.01	MINNESOTA	15+43.98	27.50' LT	770.73	401923.86	807282.10
5.02	MINNESOTA	15+40.95	27.50' LT	770.69	401920.84	807282.12
5.03	MINNESOTA	15+40.56	27.00' LT	771.18	401920.45	807282.62
5.04	MINNESOTA	15+38.95	27.50' LT	770.83	401918.84	807282.13
5.05	MINNESOTA	15+38.33	27.50' LT	770.87	401918.22	807282.13
5.06	MINNESOTA	15+38.33	27.00' LT	771.24	401918.22	807282.63
5.07	MINNESOTA	15+33.33	27.50' LT	770.94	401913.22	807282.16
5.08	MINNESOTA	15+33.33	27.00' LT	771.01	401913.22	807282.66
5.09	MINNESOTA	15+20.33	27.50' LT	771.66	401900.22	807282.24
5.10	MINNESOTA	15+20.33	32.50' LT	771.73	401900.19	807277.24
5.11	MINNESOTA	15+33.39	32.50' LT	770.91	401913.25	807277.16
5.12	MINNESOTA	15+33.47	39.56' LT	771.25	401913.29	807270.10
5.13	MINNESOTA	15+33.54	45.33' LT	771.25	401913.32	807264.32
5.14	MINNESOTA	15+33.56	50.33' LT	771.28	401913.32	807259.32
5.15	MINNESOTA	15+37.98	50.28' LT	771.21	401917.73	807259.35
5.16	MINNESOTA	15+38.54	45.28' LT	771.18	401918.32	807264.35

CURB RAMP - 5						
POINT NO.	ALIGNMENT	STATION	OFFSET	ELEVATION	NORTHING	EASTING
5.17	MINNESOTA	15+38.47	39.50' LT	771.18	401918.29	807270.13
5.18	MINNESOTA	15+38.39	32.50' LT	770.84	401918.25	807277.13
5.19	MINNESOTA	15+38.95	32.50' LT	770.80	401918.81	807277.13
5.20	MINNESOTA	15+40.95	32.50' LT	770.66	401920.81	807277.12
5.21	MINNESOTA	15+43.57	32.50' LT	770.62	401923.42	807277.10
5.22	MINNESOTA	15+46.18	32.50' LT	770.67	401926.04	807277.09
5.23	MINNESOTA	15+26.95	18.00' LT	771.08	401906.89	807291.70
5.24	MINNESOTA	15+34.55	19.50' LT	770.94	401914.49	807290.15
5.25	MINNESOTA	15+41.01	23.78' LT	770.80	401920.92	807285.84
5.26	MINNESOTA	15+45.36	30.19' LT	770.70	401925.24	807279.40
5.27	MINNESOTA	15+46.95	37.77' LT	770.52	401926.78	807271.81

CURB RAMP - 6						
POINT NO.	ALIGNMENT	STATION	OFFSET	ELEVATION	NORTHING	EASTING
6.01	MINNESOTA	15+79.73	32.50' LT	770.57	401959.59	807276.89
6.02	MINNESOTA	15+82.34	32.50' LT	768.11	401962.20	807276.88
6.03	MINNESOTA	15+84.96	32.50' LT	770.56	401964.81	807276.86
6.04	MINNESOTA	15+86.96	32.50' LT	770.70	401966.81	807276.85
6.05	MINNESOTA	15+87.39	32.50' LT	770.73	401967.25	807276.85
6.06	MINNESOTA	15+87.47	39.56' LT	771.18	401967.29	807269.79
6.07	MINNESOTA	15+87.53	44.72' LT	771.18	401967.32	807264.63
6.08	MINNESOTA	15+88.08	49.71' LT	771.21	401967.84	807259.63
6.09	MINNESOTA	15+92.45	49.66' LT	771.27	401972.21	807259.66
6.10	MINNESOTA	15+92.53	44.66' LT	771.25	401972.32	807264.66
6.11	MINNESOTA	15+92.47	39.50' LT	771.25	401972.29	807269.82
6.12	MINNESOTA	15+92.39	32.50' LT	770.80	401972.25	807276.82
6.13	MINNESOTA	16+03.39	32.50' LT	771.58	401983.25	807276.76
6.14	MINNESOTA	16+03.39	27.50' LT	771.51	401983.28	807281.76
6.15	MINNESOTA	15+92.34	27.50' LT	770.82	401972.22	807281.82
6.16	MINNESOTA	15+92.33	26.88' LT	770.79	401972.22	807282.44

CURB RAMP - 6						
POINT NO.	ALIGNMENT	STATION	OFFSET	ELEVATION	NORTHING	EASTING
6.17	MINNESOTA	15+92.31	24.88' LT	770.68	401972.21	807284.44
6.18	MINNESOTA	15+92.27	21.83' LT	770.67	401972.19	807287.49
6.19	MINNESOTA	15+92.24	19.16' LT	770.74	401972.18	807290.16
6.20	MINNESOTA	15+87.27	21.77' LT	770.69	401967.19	807287.58
6.21	MINNESOTA	15+87.31	24.94' LT	770.61	401967.21	807284.41
6.22	MINNESOTA	15+87.33	26.94' LT	770.71	401967.22	807282.41
6.23	MINNESOTA	15+87.34	27.50' LT	768.15	401967.22	807281.85
6.24	MINNESOTA	15+86.96	27.50' LT	768.15	401966.84	807281.85
6.25	MINNESOTA	15+84.96	27.50' LT	770.57	401964.84	807281.86
6.26	MINNESOTA	15+81.94	27.50' LT	770.62	401961.82	807281.88
6.27	MINNESOTA	15+78.96	38.23' LT	768.10	401958.78	807271.17
6.28	MINNESOTA	15+80.42	30.51' LT	770.59	401960.28	807278.88
6.29	MINNESOTA	15+84.74	23.94' LT	770.66	401964.64	807285.42
6.30	MINNESOTA	15+91.25	19.54' LT	770.73	401971.18	807289.78
6.31	MINNESOTA	15+98.96	18.00' LT	770.80	401978.90	807291.28

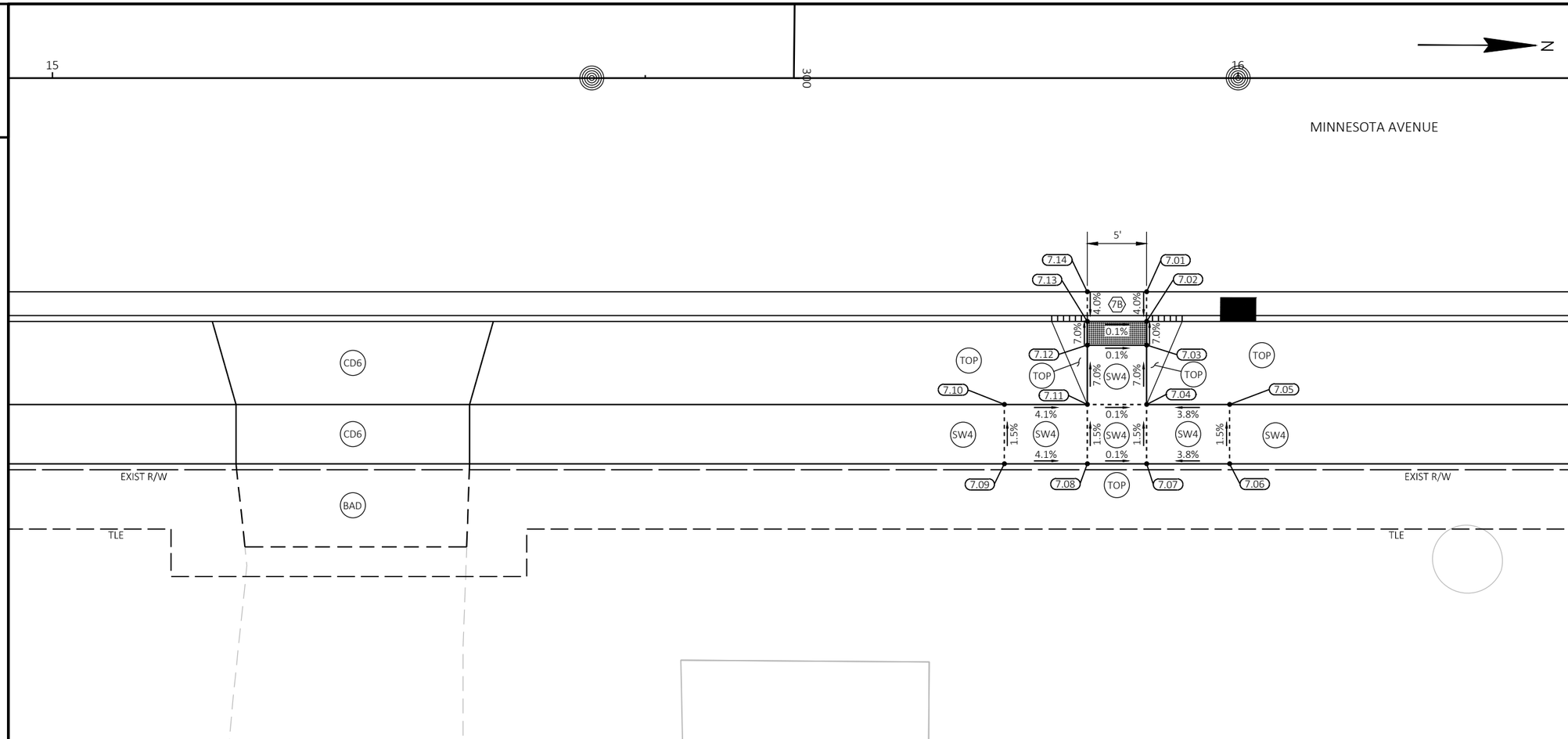

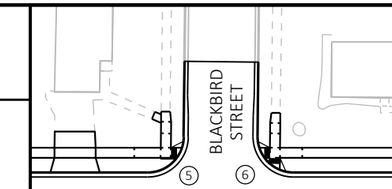

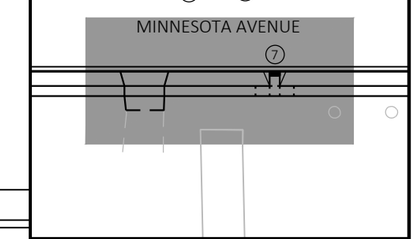

LEGEND

- X — CURB RAMP TYPE
- ASP — 3" ASPHALTIC SURFACE
- BAD — 6" BASE AGGREGATE DENSE ¾-INCH
- CD6 — CONCRETE DRIVEWAY 6-INCH
- PED — CONCRETE CURB PEDESTRIAN
- SW4 — CONCRETE SIDEWALK 4-INCH
- SW6 — CONCRETE SIDEWALK 6-INCH
- TOP — TOPSOIL, SEED, FERTILIZER, AND EMAT
- CURB HEAD HEIGHT TRANSITION
- 2" CURB HEAD HEIGHT
- CURB RAMP DETECTABLE WARNING FIELD (2'x5')
- REVERSE SLOPE GUTTER PAN

NOTES:

CONTRACTOR TO FIELD VERIFY ELEVATION, SLOPES, LENGTHS, AND MATCH POINTS PRIOR TO CURB RAMP AND SIDEWALK INSTALLATION.

THE ENGINEER MAY ADJUST ELEVATIONS TO FIT FIELD CONDITIONS.

REFER TO SDD 8D5 "CURB RAMPS" FOR JOINT LOCATIONS AND ADDITIONAL DETAILS.

CURB RAMP - 7

POINT NO.	ALIGNMENT	STATION	OFFSET	ELEVATION	NORTHING	EASTING
7.01	MINNESOTA	15+92.28	18.00' RT	770.81	401972.43	807327.32
7.02	MINNESOTA	15+92.28	20.50' RT	770.75	401972.44	807329.82
7.03	MINNESOTA	15+92.28	22.50' RT	770.89	401972.45	807331.82
7.04	MINNESOTA	15+92.28	27.50' RT	771.24	401972.48	807336.82
7.05	MINNESOTA	15+99.28	27.50' RT	771.50	401979.48	807336.78
7.06	MINNESOTA	15+99.28	32.50' RT	771.58	401979.51	807341.78
7.07	MINNESOTA	15+92.28	32.50' RT	771.31	401972.51	807341.82
7.08	MINNESOTA	15+87.28	32.50' RT	771.32	401967.51	807341.85
7.09	MINNESOTA	15+80.28	32.50' RT	771.61	401960.51	807341.89
7.10	MINNESOTA	15+80.28	27.50' RT	771.53	401960.48	807336.89
7.11	MINNESOTA	15+87.28	27.50' RT	771.24	401967.48	807336.85
7.12	MINNESOTA	15+87.28	22.50' RT	770.89	401967.45	807331.85
7.13	MINNESOTA	15+87.28	20.50' RT	770.75	401967.44	807329.85
7.14	MINNESOTA	15+87.28	18.00' RT	770.81	401967.43	807327.35

2

NOTES:

CONTRACTOR TO FIELD VERIFY ELEVATION, SLOPES, LENGTHS, AND MATCH POINTS PRIOR TO CURB RAMP AND SIDEWALK INSTALLATION.

THE ENGINEER MAY ADJUST ELEVATIONS TO FIT FIELD CONDITIONS.

REFER TO SDD 8D5 "CURB RAMPS" FOR JOINT LOCATIONS AND ADDITIONAL DETAILS.

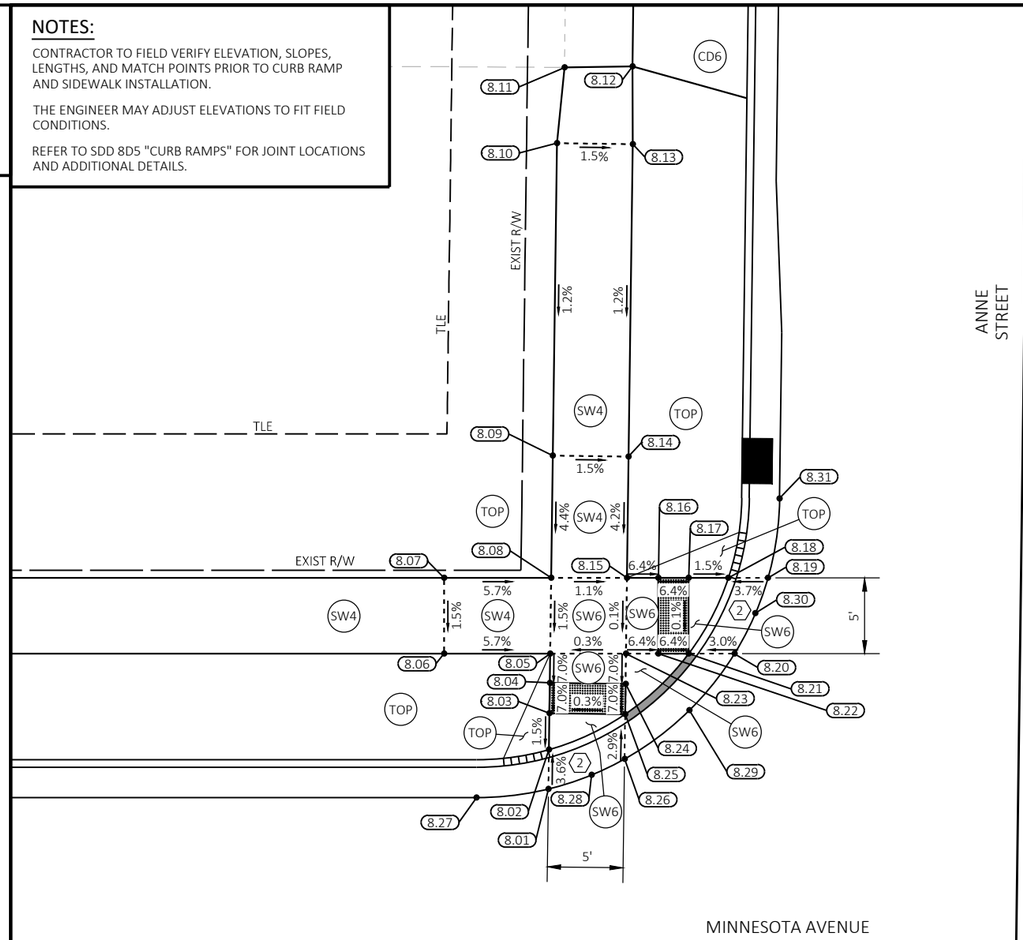

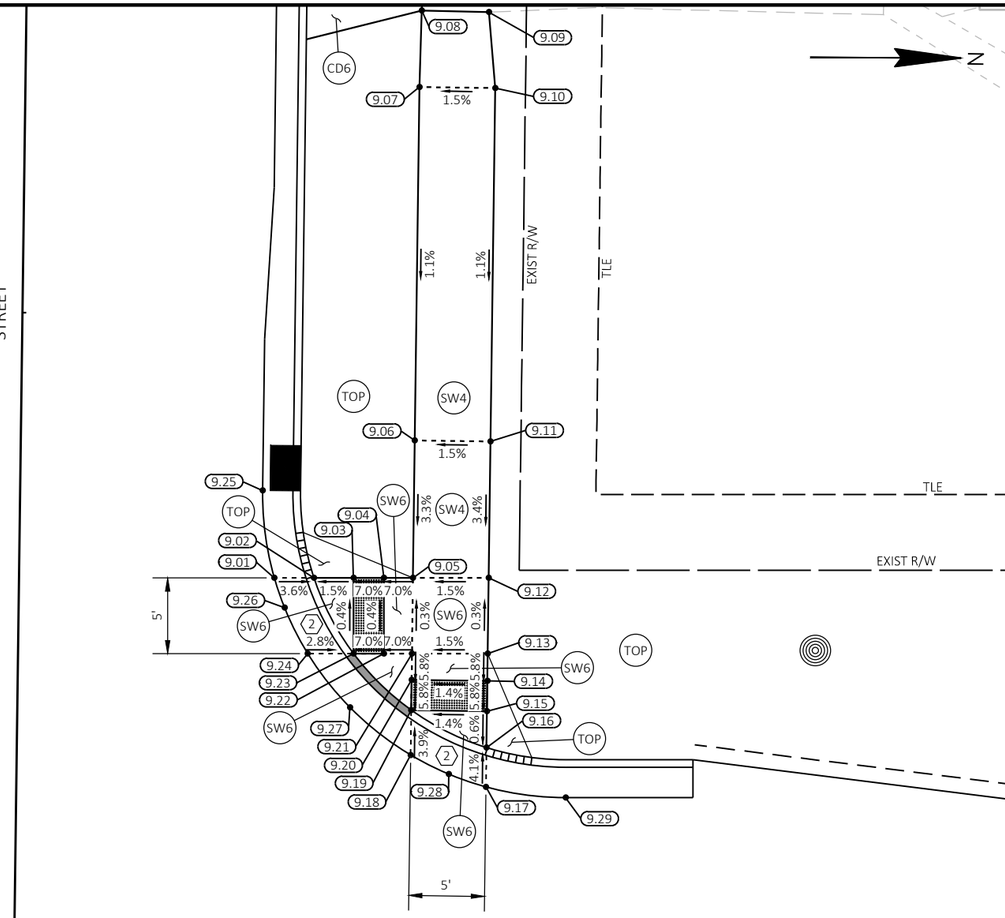

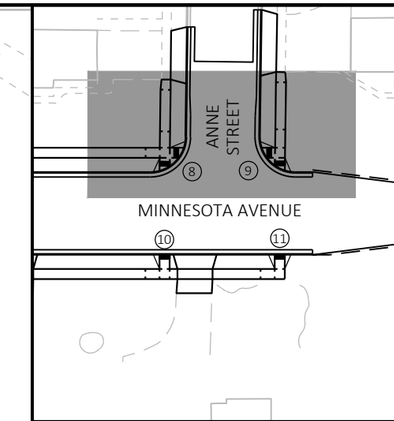

2

LEGEND

- X — CURB RAMP TYPE
- ASP — 3" ASPHALTIC SURFACE
- BAD — 6" BASE AGGREGATE DENSE ¾-INCH
- CD6 — CONCRETE DRIVEWAY 6-INCH
- PED — CONCRETE CURB PEDESTRIAN
- SW4 — CONCRETE SIDEWALK 4-INCH
- SW6 — CONCRETE SIDEWALK 6-INCH
- TOP — TOPSOIL, SEED, FERTILIZER, AND EMAT
- CURB HEAD HEIGHT TRANSITION
- 2" CURB HEAD HEIGHT
- CURB RAMP DETECTABLE WARNING FIELD (2'x5')
- REVERSE SLOPE GUTTER PAN

CURB RAMP - 8

POINT NO.	ALIGNMENT	STATION	OFFSET	ELEVATION	NORTHING	EASTING
8.01	MINNESOTA	21+74.33	18.57' LT	769.42	402554.26	807287.39
8.02	MINNESOTA	21+74.37	21.17' LT	769.38	402554.28	807284.80
8.03	MINNESOTA	21+74.40	23.57' LT	771.82	402554.30	807282.39
8.04	MINNESOTA	21+74.43	25.57' LT	771.96	402554.31	807280.39
8.05	MINNESOTA	21+74.45	27.50' LT	772.09	402554.33	807278.46
8.06	MINNESOTA	21+67.45	27.50' LT	772.49	402547.33	807278.50
8.07	MINNESOTA	21+67.45	32.50' LT	772.57	402547.30	807273.50
8.08	MINNESOTA	21+74.52	32.50' LT	772.17	402554.36	807273.46
8.09	MINNESOTA	21+74.62	40.57' LT	772.52	402554.42	807265.40
8.10	MINNESOTA	21+74.90	61.18' LT	772.76	402554.58	807244.78
8.11	MINNESOTA	21+75.40	66.17' LT	772.42	402555.05	807239.78
8.12	MINNESOTA	21+79.88	66.25' LT	772.81	402559.53	807239.68
8.13	MINNESOTA	21+79.89	61.11' LT	772.69	402559.58	807244.82
8.14	MINNESOTA	21+79.62	40.50' LT	772.45	402559.42	807265.43
8.15	MINNESOTA	21+79.52	32.50' LT	771.87	402559.36	807273.43
8.16	MINNESOTA	21+81.59	32.50' LT	771.86	402561.44	807273.42

CURB RAMP - 8

POINT NO.	ALIGNMENT	STATION	OFFSET	ELEVATION	NORTHING	EASTING
8.17	MINNESOTA	21+83.59	32.50' LT	771.85	402563.44	807273.41
8.18	MINNESOTA	21+86.20	32.50' LT	769.41	402566.05	807273.40
8.19	MINNESOTA	21+88.82	32.50' LT	769.45	402568.67	807273.38
8.20	MINNESOTA	21+86.61	27.50' LT	769.48	402566.49	807278.39
8.21	MINNESOTA	21+83.59	27.50' LT	769.44	402563.47	807278.41
8.22	MINNESOTA	21+81.59	27.50' LT	769.41	402561.47	807278.42
8.23	MINNESOTA	21+79.45	27.50' LT	772.11	402559.33	807278.43
8.24	MINNESOTA	21+79.43	25.51' LT	769.40	402559.31	807280.43
8.25	MINNESOTA	21+79.40	23.51' LT	769.42	402559.30	807282.43
8.26	MINNESOTA	21+79.36	20.55' LT	769.46	402559.28	807285.39
8.27	MINNESOTA	21+69.59	18.00' LT	769.38	402549.52	807287.99
8.28	MINNESOTA	21+77.18	19.50' LT	769.44	402557.10	807286.45
8.29	MINNESOTA	21+83.64	23.77' LT	769.50	402563.54	807282.15
8.30	MINNESOTA	21+87.99	30.16' LT	769.46	402567.85	807275.72
8.31	MINNESOTA	21+89.59	37.74' LT	769.42	402569.40	807268.14

CURB RAMP - 9

POINT NO.	ALIGNMENT	STATION	OFFSET	ELEVATION	NORTHING	EASTING
9.01	MINNESOTA	22+22.37	32.50' LT	769.41	402602.21	807273.19
9.02	MINNESOTA	22+24.98	32.50' LT	769.37	402604.83	807273.17
9.03	MINNESOTA	22+27.60	32.50' LT	771.81	402607.44	807273.16
9.04	MINNESOTA	22+29.60	32.50' LT	771.95	402609.44	807273.15
9.05	MINNESOTA	22+31.52	32.50' LT	772.09	402611.37	807273.13
9.06	MINNESOTA	22+31.64	41.57' LT	772.39	402611.44	807264.07
9.07	MINNESOTA	22+31.95	64.88' LT	772.64	402611.61	807240.75
9.08	MINNESOTA	22+32.10	69.93' LT	772.63	402611.73	807235.70
9.09	MINNESOTA	22+36.53	69.82' LT	772.35	402616.16	807235.79
9.10	MINNESOTA	22+36.95	64.81' LT	772.72	402616.61	807240.79
9.11	MINNESOTA	22+36.64	41.50' LT	772.46	402616.44	807264.11
9.12	MINNESOTA	22+36.52	32.50' LT	772.16	402616.37	807273.11
9.13	MINNESOTA	22+36.46	27.50' LT	772.17	402616.33	807278.11
9.14	MINNESOTA	22+36.43	25.71' LT	772.07	402616.32	807279.90
9.15	MINNESOTA	22+36.41	23.71' LT	771.95	402616.30	807281.90
9.16	MINNESOTA	22+36.38	21.30' LT	769.53	402616.29	807284.31

CURB RAMP - 9

POINT NO.	ALIGNMENT	STATION	OFFSET	ELEVATION	NORTHING	EASTING
9.17	MINNESOTA	22+36.34	18.70' LT	769.59	402616.27	807286.90
9.18	MINNESOTA	22+31.37	20.81' LT	769.54	402611.28	807284.82
9.19	MINNESOTA	22+31.41	23.77' LT	769.48	402611.30	807281.86
9.20	MINNESOTA	22+31.43	25.77' LT	769.43	402611.32	807279.86
9.21	MINNESOTA	22+31.46	27.50' LT	772.10	402611.33	807278.14
9.22	MINNESOTA	22+29.60	27.50' LT	769.41	402609.47	807278.15
9.23	MINNESOTA	22+27.60	27.50' LT	769.42	402607.47	807278.16
9.24	MINNESOTA	22+24.57	27.50' LT	769.46	402604.45	807278.17
9.25	MINNESOTA	22+21.60	38.26' LT	769.36	402601.41	807267.43
9.26	MINNESOTA	22+23.04	30.53' LT	769.43	402602.90	807275.15
9.27	MINNESOTA	22+27.36	23.95' LT	769.50	402607.26	807281.71
9.28	MINNESOTA	22+33.88	19.55' LT	769.57	402613.80	807286.07
9.29	MINNESOTA	22+41.60	18.00' LT	769.64	402621.53	807287.58

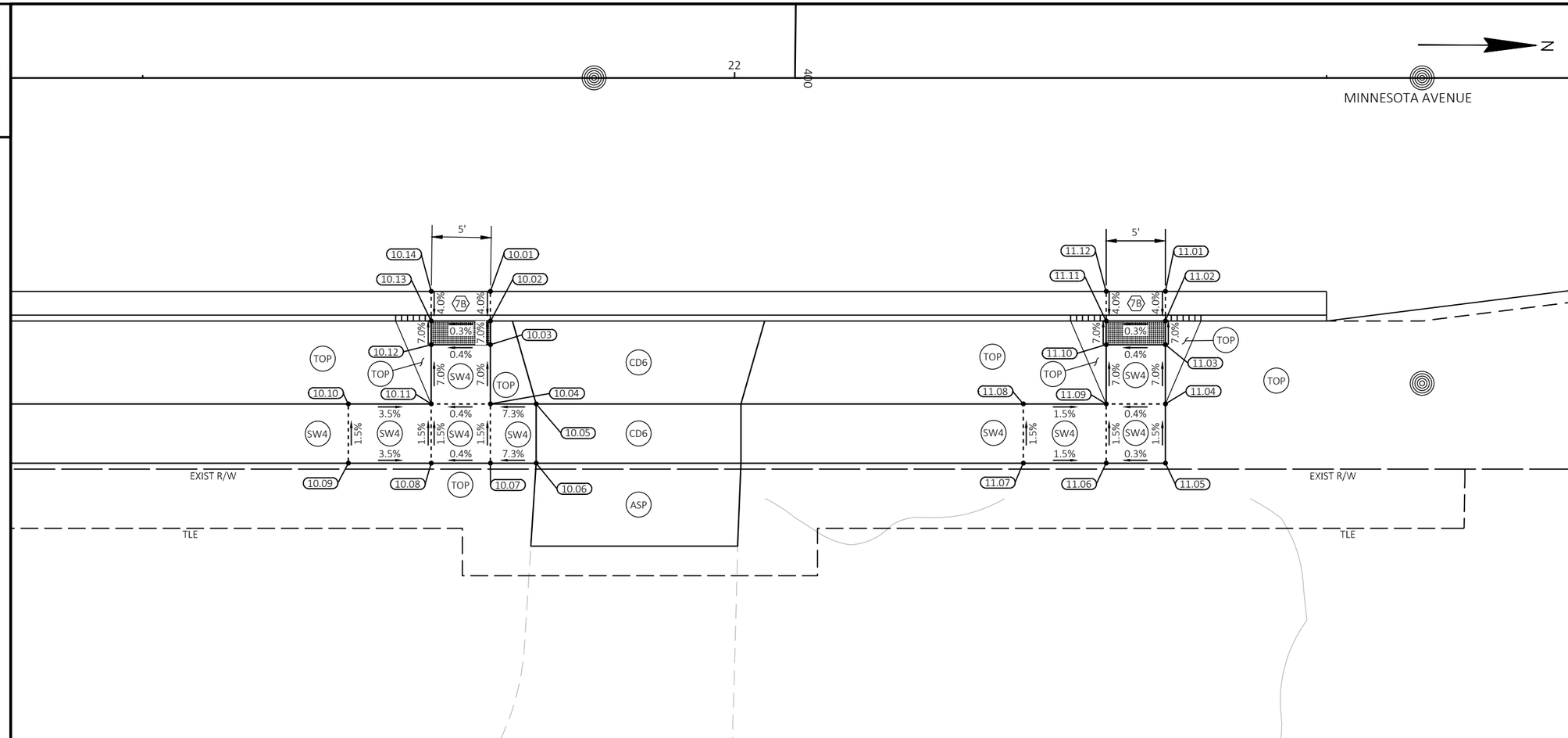

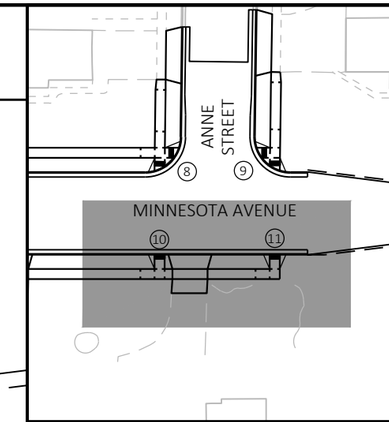

LEGEND

- X — CURB RAMP TYPE
- ASP — 3" ASPHALTIC SURFACE
- BAD — 6" BASE AGGREGATE DENSE ¾-INCH
- CD6 — CONCRETE DRIVEWAY 6-INCH
- PED — CONCRETE CURB PEDESTRIAN
- SW4 — CONCRETE SIDEWALK 4-INCH
- SW6 — CONCRETE SIDEWALK 6-INCH
- TOP — TOPSOIL, SEED, FERTILIZER, AND EMAT
- CURB HEAD HEIGHT TRANSITION
- 2" CURB HEAD HEIGHT
- CURB RAMP DETECTABLE WARNING FIELD (2'x5')
- REVERSE SLOPE GUTTER PAN

NOTES:

CONTRACTOR TO FIELD VERIFY ELEVATION, SLOPES, LENGTHS, AND MATCH POINTS PRIOR TO CURB RAMP AND SIDEWALK INSTALLATION.

THE ENGINEER MAY ADJUST ELEVATIONS TO FIT FIELD CONDITIONS.

REFER TO SDD 8D5 "CURB RAMPS" FOR JOINT LOCATIONS AND ADDITIONAL DETAILS.

CURB RAMP - 10

POINT NO.	ALIGNMENT	STATION	OFFSET	ELEVATION	NORTHING	EASTING
10.01	MINNESOTA	21+79.37	18.00' RT	771.83	402559.51	807323.93
10.02	MINNESOTA	21+79.37	20.50' RT	771.77	402559.53	807326.43
10.03	MINNESOTA	21+79.37	22.50' RT	771.91	402559.54	807328.43
10.04	MINNESOTA	21+79.37	27.50' RT	772.26	402559.57	807333.43
10.05	MINNESOTA	21+83.24	27.50' RT	772.55	402563.43	807333.41
10.06	MINNESOTA	21+83.24	32.50' RT	772.62	402563.46	807338.41
10.07	MINNESOTA	21+79.37	32.50' RT	772.34	402559.59	807338.43
10.08	MINNESOTA	21+74.37	32.50' RT	772.32	402554.59	807338.46
10.09	MINNESOTA	21+67.37	32.50' RT	772.57	402547.60	807338.50
10.10	MINNESOTA	21+67.37	27.50' RT	772.49	402547.57	807333.50
10.11	MINNESOTA	21+74.37	27.50' RT	772.25	402554.57	807333.46
10.12	MINNESOTA	21+74.37	22.50' RT	771.90	402554.54	807328.46
10.13	MINNESOTA	21+74.37	20.50' RT	771.76	402554.53	807326.46
10.14	MINNESOTA	21+74.37	18.00' RT	771.82	402554.51	807323.96

CURB RAMP - 11

POINT NO.	ALIGNMENT	STATION	OFFSET	ELEVATION	NORTHING	EASTING
11.01	MINNESOTA	22+36.38	18.00' RT	772.03	402616.52	807323.61
11.02	MINNESOTA	22+36.38	20.50' RT	771.97	402616.53	807326.11
11.03	MINNESOTA	22+36.38	22.50' RT	772.11	402616.54	807328.11
11.04	MINNESOTA	22+36.38	27.50' RT	772.46	402616.57	807333.11
11.05	MINNESOTA	22+36.38	32.50' RT	772.54	402616.60	807338.11
11.06	MINNESOTA	22+31.38	32.50' RT	772.52	402611.60	807338.13
11.07	MINNESOTA	22+24.38	32.50' RT	772.63	402604.60	807338.17
11.08	MINNESOTA	22+24.38	27.50' RT	772.55	402604.57	807333.18
11.09	MINNESOTA	22+31.38	27.50' RT	772.45	402611.57	807333.13
11.10	MINNESOTA	22+31.38	22.50' RT	772.10	402611.54	807328.13
11.11	MINNESOTA	22+31.38	20.50' RT	771.96	402611.53	807326.13
11.12	MINNESOTA	22+31.38	18.00' RT	772.02	402611.52	807323.63

2

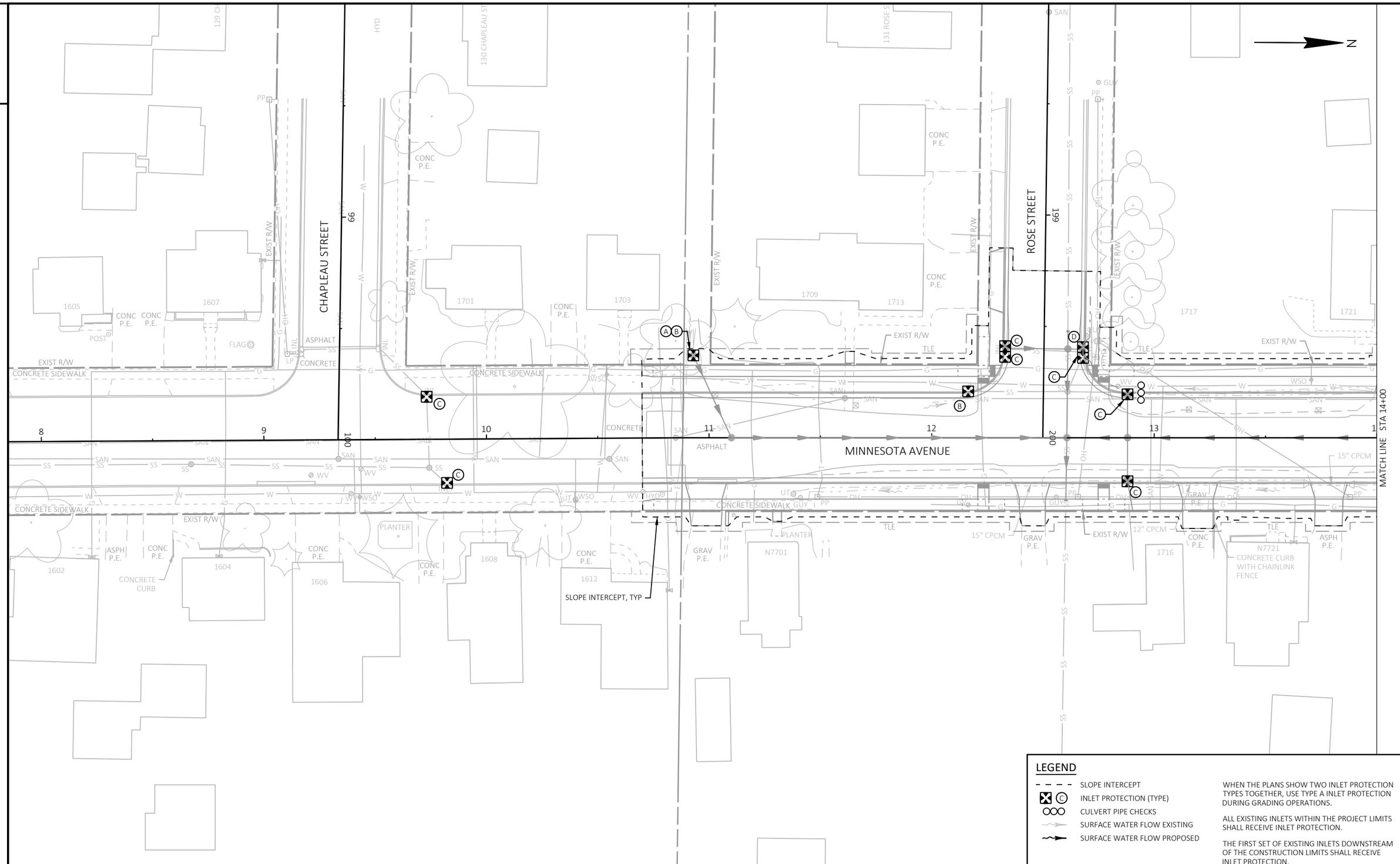

LEGEND

- SLOPE INTERCEPT
- INLET PROTECTION (TYPE)
- CULVERT PIPE CHECKS
- SURFACE WATER FLOW EXISTING
- SURFACE WATER FLOW PROPOSED

WHEN THE PLANS SHOW TWO INLET PROTECTION TYPES TOGETHER, USE TYPE A INLET PROTECTION DURING GRADING OPERATIONS.

ALL EXISTING INLETS WITHIN THE PROJECT LIMITS SHALL RECEIVE INLET PROTECTION.

THE FIRST SET OF EXISTING INLETS DOWNSTREAM OF THE CONSTRUCTION LIMITS SHALL RECEIVE INLET PROTECTION.

PROJECT NO: 4986-00-65	HWY: MINNESOTA AVENUE	COUNTY: FOND DU LAC	EROSION CONTROL PLAN	SHEET 23	E

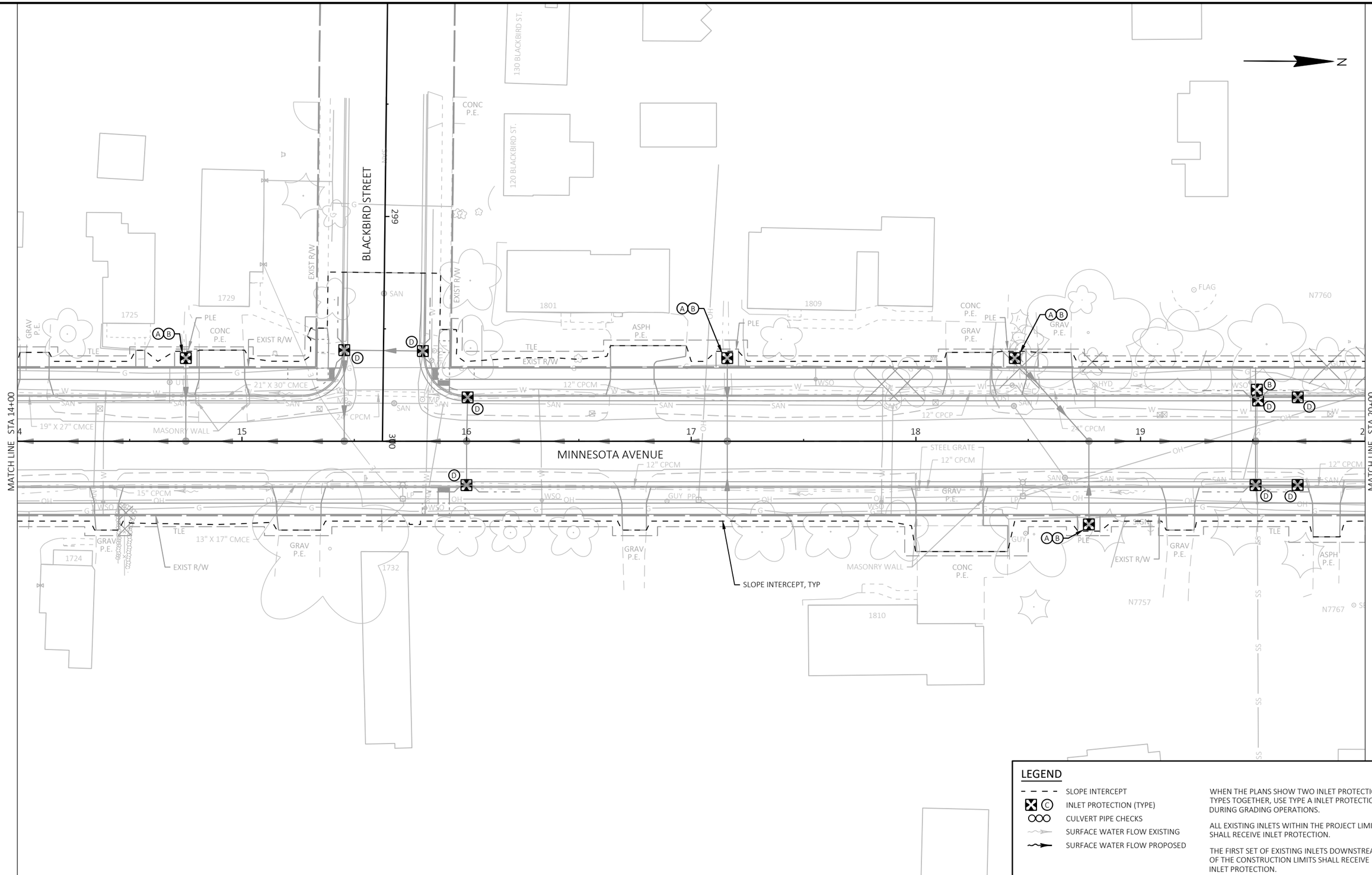

LEGEND

- SLOPE INTERCEPT
- INLET PROTECTION (TYPE)
- CULVERT PIPE CHECKS
- SURFACE WATER FLOW EXISTING
- SURFACE WATER FLOW PROPOSED

WHEN THE PLANS SHOW TWO INLET PROTECTION TYPES TOGETHER, USE TYPE A INLET PROTECTION DURING GRADING OPERATIONS.

ALL EXISTING INLETS WITHIN THE PROJECT LIMITS SHALL RECEIVE INLET PROTECTION.

THE FIRST SET OF EXISTING INLETS DOWNSTREAM OF THE CONSTRUCTION LIMITS SHALL RECEIVE INLET PROTECTION.

PROJECT NO: 4986-00-65	HWY: MINNESOTA AVENUE	COUNTY: FOND DU LAC	EROSION CONTROL PLAN	SHEET 24	E

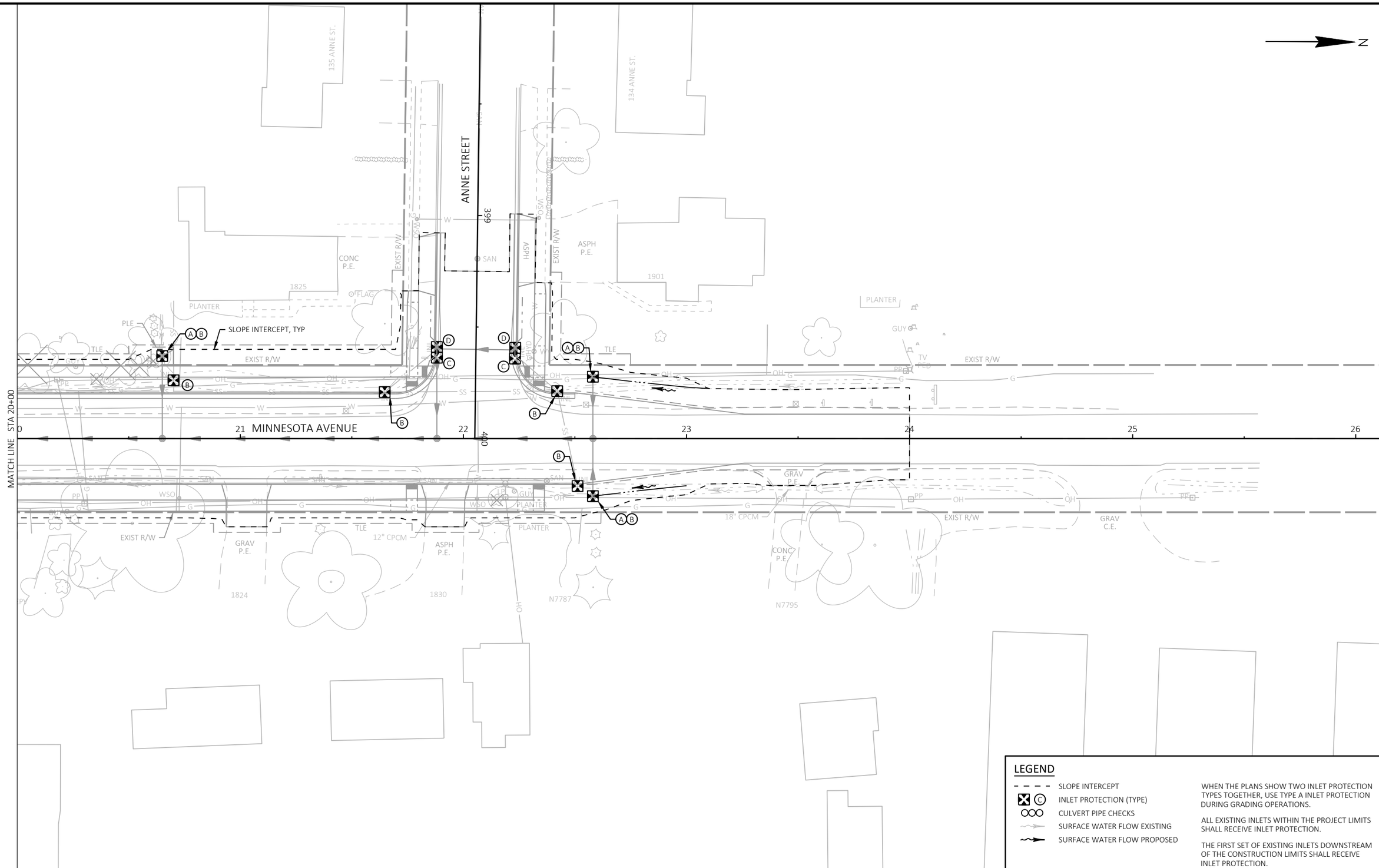

PROJECT NO: 4986-00-65	HWY: MINNESOTA AVENUE	COUNTY: FOND DU LAC	EROSION CONTROL PLAN	SHEET 25	E

FILE NAME : S:\CURRPROJ\FONDDUCO\NORTH FDL, VILLAGE OF\MINNESOTA AVE\CIVIL3D\49860064\SHEETS\49860065-022001-EC.DWG
LAYOUT NAME - Sheet-03
PLOT DATE : 7/29/2025 1:20 PM PLOT BY : AARON SARAUER PLOT NAME : PLOT SCALE : 1 IN:40 FT

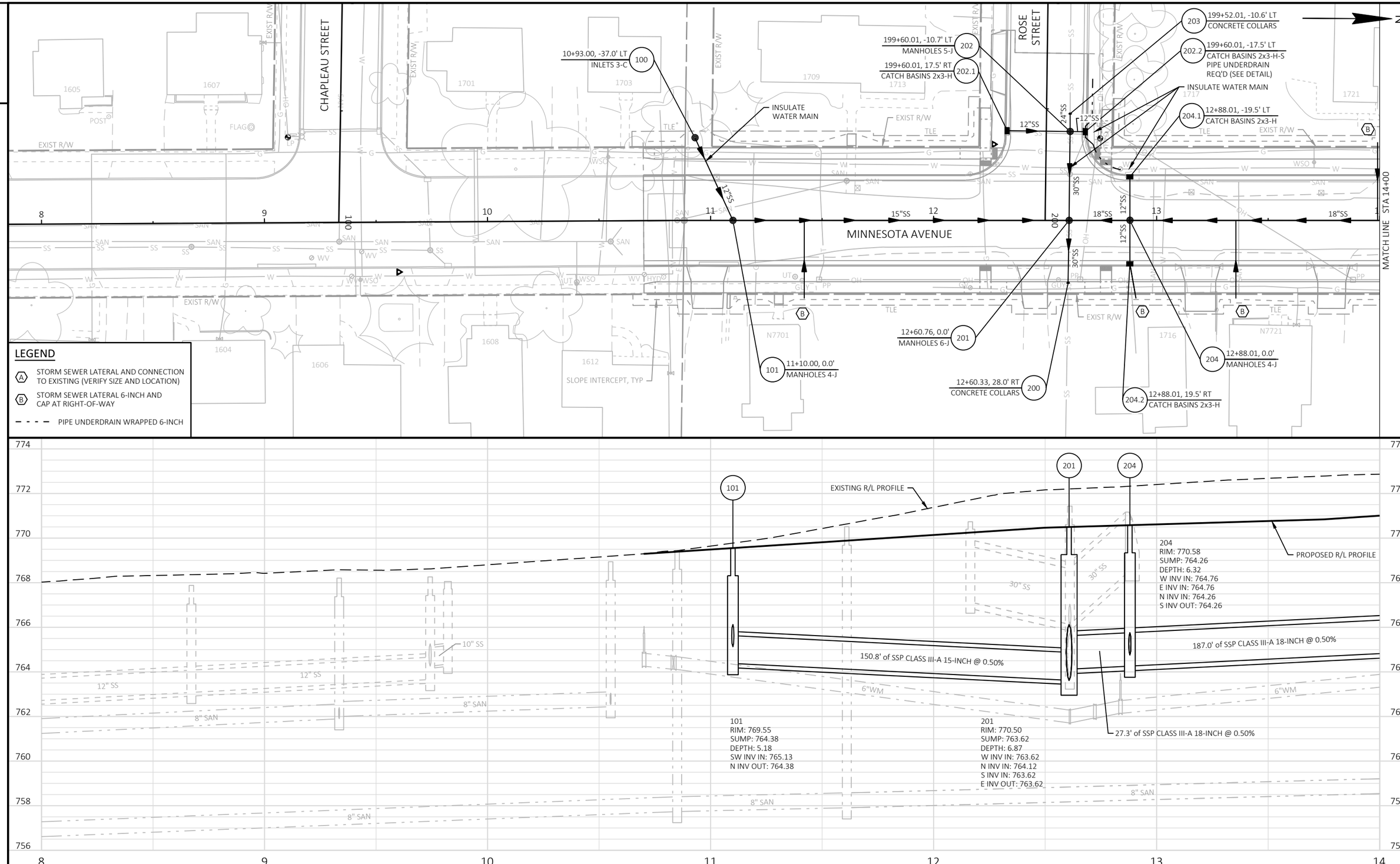

PROJECT NO: 4986-00-65	HWY: MINNESOTA AVENUE	COUNTY: FOND DU LAC	STORM SEWER LAYOUT: MINNESOTA AVENUE	SHEET 26	E

FILE NAME : S:\CURRPROJ\FONDDUCO\NORTH FDL, VILLAGE OF\MINNESOTA AVE\CIVIL3D\49860064\SHEETS\49860065-022501-SS.DWG
LAYOUT NAME - Sheet-01
PLOT DATE : 7/29/2025 1:42 PM PLOT BY : AARON SARAUER PLOT NAME : PLOT SCALE : 1 IN:40 FT

2

299+59.66, 17.5' RT
CATCH BASINS 2x3-H-S
PIPE UNDERDRAIN
REQ'D (SEE DETAIL)
207.2

14+75.00, -37.0' LT
INLETS 3-C
206

INSULATE WATER MAIN
STA 14+50 - STA 16+10

299+59.66, -17.5' LT
CATCH BASINS 2x3-H-S
PIPE UNDERDRAIN
REQ'D (SEE DETAIL)
207.1

INSULATE WATER MAIN

16+00.46, -19.5' LT
CATCH BASINS 2x3-H
208.1

17+16.00, -37.0' LT
INLETS 3-C
210

18+44.00, -37.0' LT
INLETS 3-C
302

19+51.25, -19.5' LT
CATCH BASINS 2x3-H-S
PIPE UNDERDRAIN
REQ'D (SEE DETAIL)
305.2

19+70.00, -19.5' LT
CATCH BASINS 2x3-H-S
305.1

19+51.25, 0.0'
MANHOLES 5-J
305

N

BLACKBIRD STREET

MINNESOTA AVENUE

SLOPE INTERCEPT, TYP

MATCH LINE STA 14+00

MATCH LINE STA 20+00

14+75.00, 0.0'
MANHOLES 4-J
205

15+45.48, 0.0'
MANHOLES 4-J
207

16+00.00, 0.0'
MANHOLES 4-J
208

16+00.00, 19.5' RT
CATCH BASINS 2x3-H-S
PIPE UNDERDRAIN
REQ'D (SEE DETAIL)
208.2

17+16.00, 0.0'
MANHOLES 4-J
209

18+77.00, 0.0'
MANHOLES 4-J
300

18+77.00, 37.0' RT
INLETS 3-C
301

19+51.25, 19.5' RT
INLETS 4-H-S
PIPE UNDERDRAIN
REQ'D (SEE DETAIL)
304

19+52.05, 27.5' RT
CONCRETE COLLARS
303

19+70.00, 19.5' RT
CATCH BASINS 2x3-H-S
304.1

LEGEND

- (A) STORM SEWER LATERAL AND CONNECTION TO EXISTING (VERIFY SIZE AND LOCATION)
- (B) STORM SEWER LATERAL 6-INCH AND CAP AT RIGHT-OF-WAY
- PIPE UNDERDRAIN WRAPPED 6-INCH

INSULATE WATER MAIN STA 14+50 - STA 16+10

EXISTING R/L PROFILE

PROPOSED R/L PROFILE

70.5' of SSP CLASS III-A 18-INCH @ 0.50%

54.5' of SSP CLASS III-A 18-INCH @ 0.50%

116.0' of SSP CLASS III-A 18-INCH @ 0.50%

74.3' of SSP CLASS III-A 18-INCH @ 0.50%

205
RIM: 771.45
SUMP: 765.19
DEPTH: 6.25
W INV IN: 766.19
N INV IN: 765.19
S INV OUT: 765.19

207
RIM: 771.35
SUMP: 765.55
DEPTH: 5.81
N INV IN: 765.55
W INV IN: 766.30
S INV OUT: 765.55

208
RIM: 771.16
SUMP: 765.82
DEPTH: 5.35
W INV IN: 766.32
E INV IN: 766.32
N INV IN: 765.82
S INV OUT: 765.82

209
RIM: 771.76
SUMP: 766.40
DEPTH: 5.36
W INV IN: 767.15
E INV IN: 766.90
S INV OUT: 766.40

300
RIM: 771.68
SUMP: 765.11
DEPTH: 6.57
SW INV IN: 766.36
E INV IN: 765.61
N INV OUT: 765.11

305
RIM: 771.47
SUMP: 764.24
DEPTH: 7.23
W INV IN: 764.99
S INV IN: 764.74
N INV IN: 764.74
E INV OUT: 764.24

PROJECT NO: 4986-00-65	HWY: MINNESOTA AVENUE	COUNTY: FOND DU LAC	STORM SEWER LAYOUT: MINNESOTA AVENUE	SHEET 27	E

FILE NAME : S:\CURRPROJ\FONDDUCO\NORTH FDL, VILLAGE OF\MINNESOTA AVE\CIVIL3D\49860064\SHEETS\49860065-022501-SS.DWG
LAYOUT NAME - Sheet-02
PLOT DATE : 7/29/2025 1:42 PM PLOT BY : AARON SARAUER PLOT NAME : PLOT SCALE : 1 IN:40 FT
WISDOT/CADDS SHEET 41

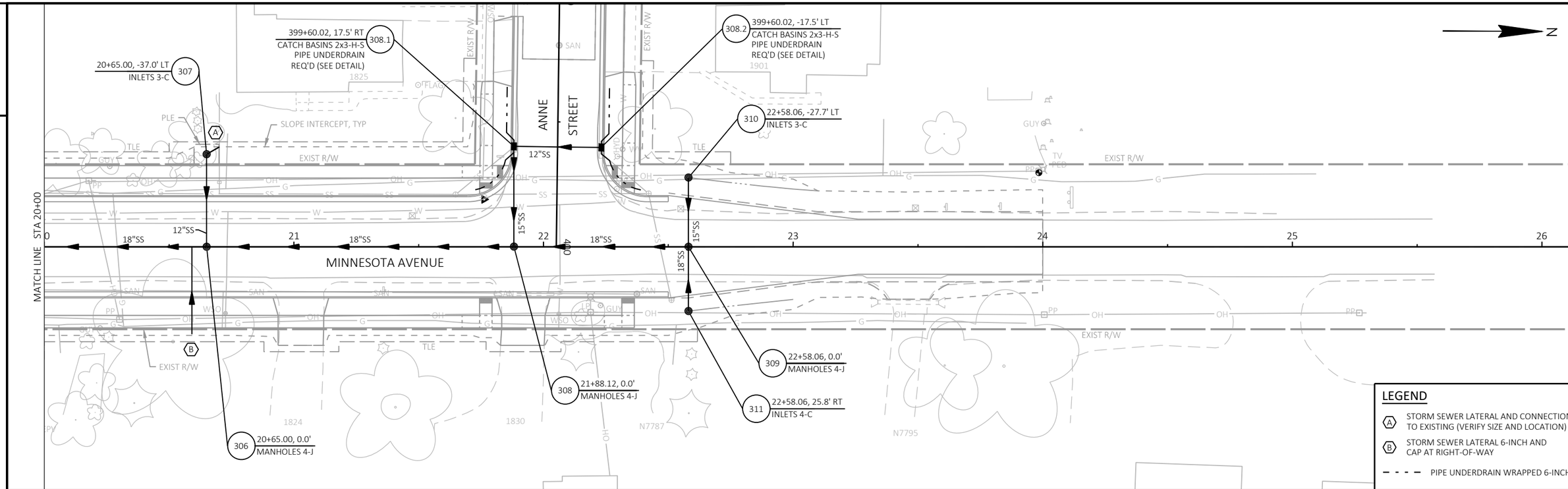

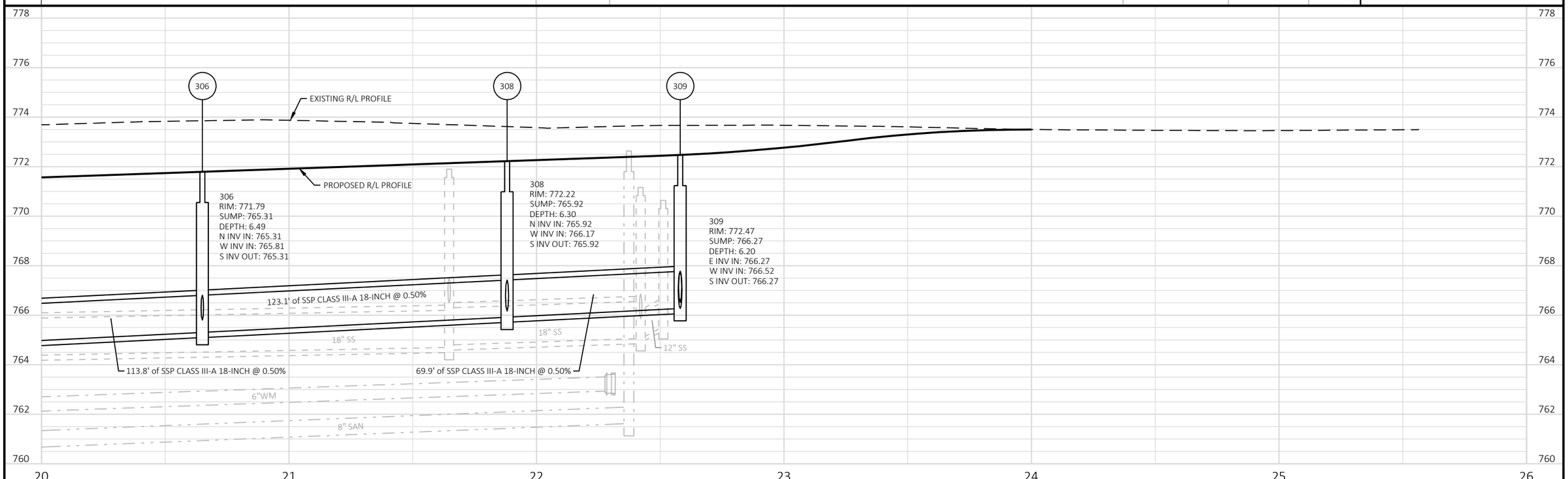

PROJECT NO: 4986-00-65	HWY: MINNESOTA AVENUE	COUNTY: FOND DU LAC	STORM SEWER LAYOUT: MINNESOTA AVENUE	SHEET 28	E

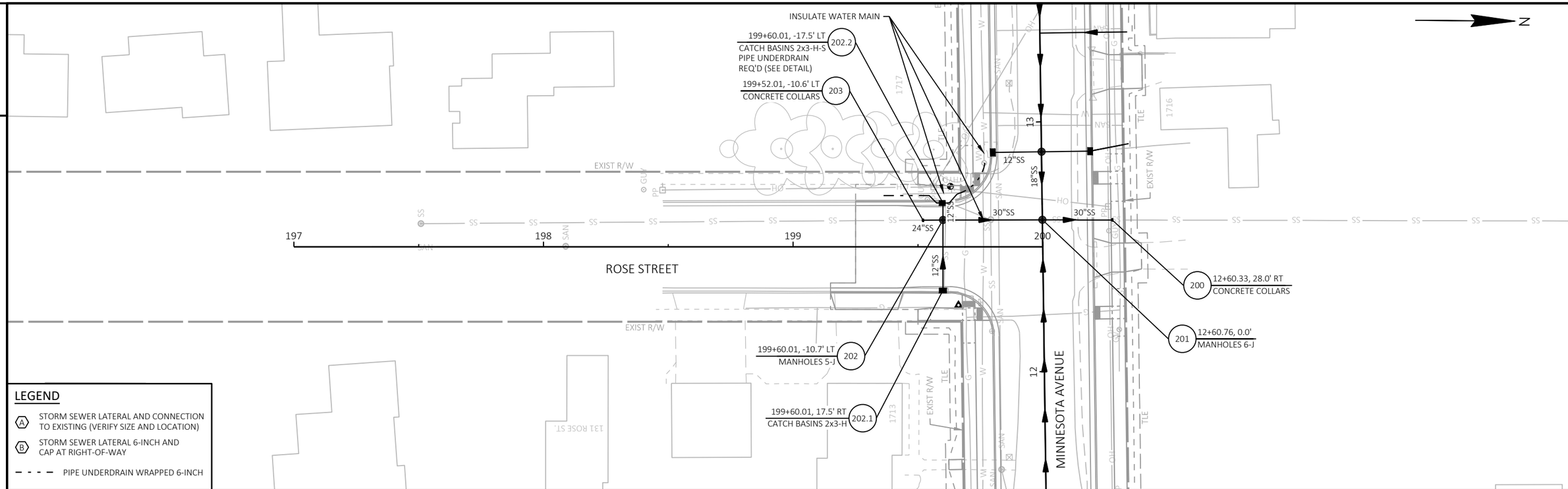

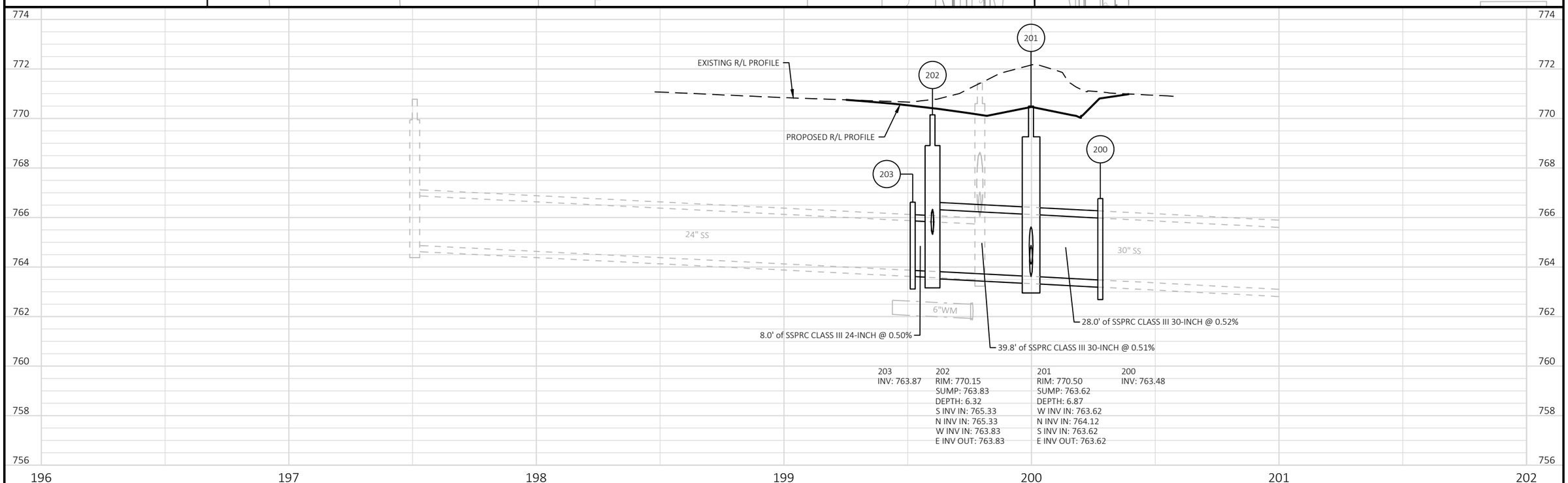

PROJECT NO: 4986-00-65	HWY: MINNESOTA AVENUE	COUNTY: FOND DU LAC	STORM SEWER LAYOUT: ROSE STREET	SHEET 29	E

FILE NAME : S:\CURRPROJ\FONDDUCO\NORTH FDL, VILLAGE OF\MINNESOTA AVE\CIVIL3D\49860064\SHEETS\49860065-022502-SS.DWG
LAYOUT NAME - Sheet-01
PLOT DATE : 7/29/2025 1:42 PM PLOT BY : AARON SARAUER PLOT NAME : PLOT SCALE : 1 IN:40 FT

2

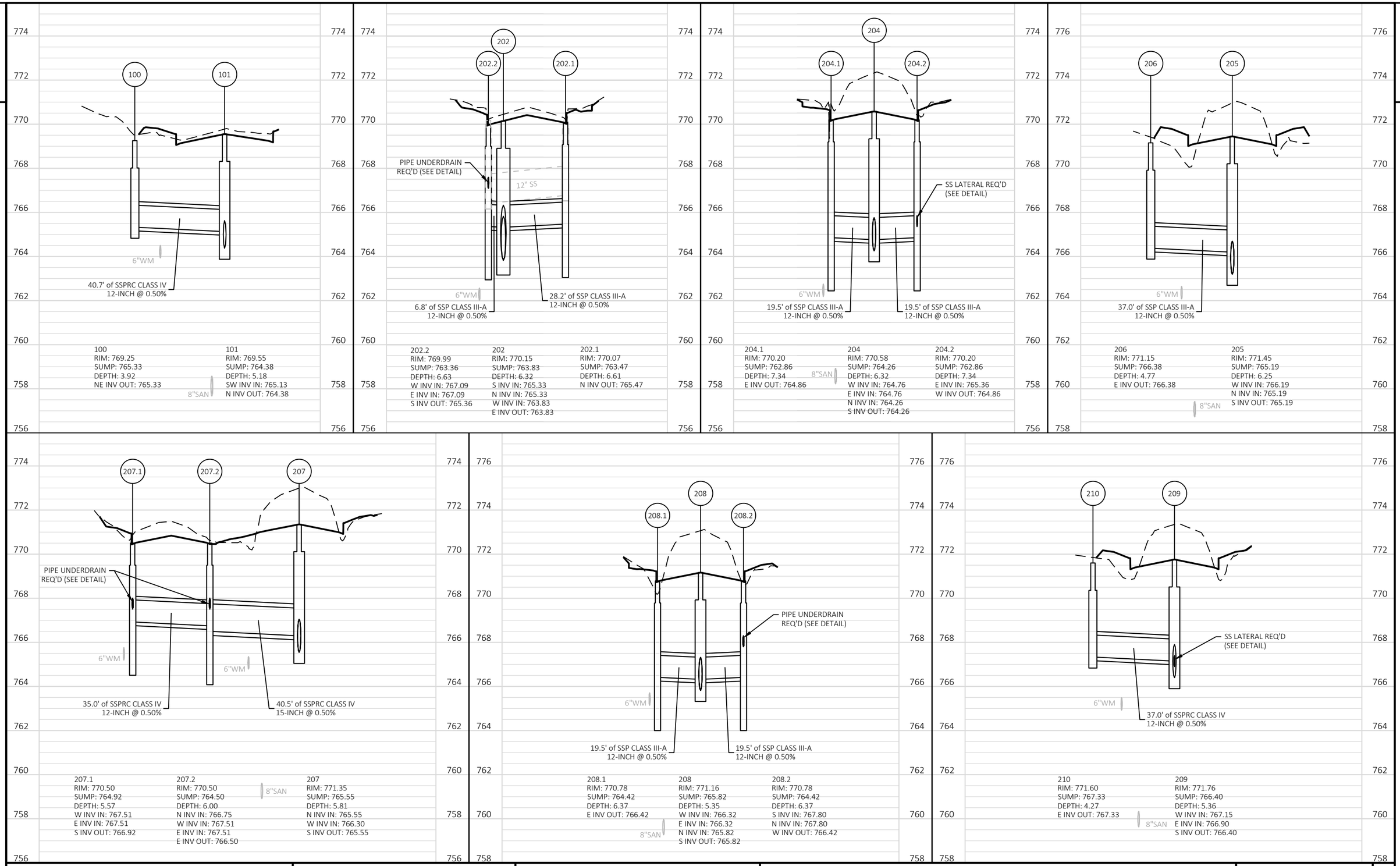

2

PROJECT NO: 4986-00-65	HWY: MINNESOTA AVENUE	COUNTY: FOND DU LAC	STORM SEWER PROFILES	SHEET 30	E

FILE NAME : S:\CURRPROJ\FONDDUCO\NORTH FDL, VILLAGE OF\MINNESOTA AVE\CIVIL3D\49860064\SHEETS\49860065-022511-SS.DWG
LAYOUT NAME - Sheet-01
PLOT DATE : 7/29/2025 1:42 PM PLOT BY : AARON SARAUER PLOT NAME : PLOT SCALE : 1 IN:40 FT

2

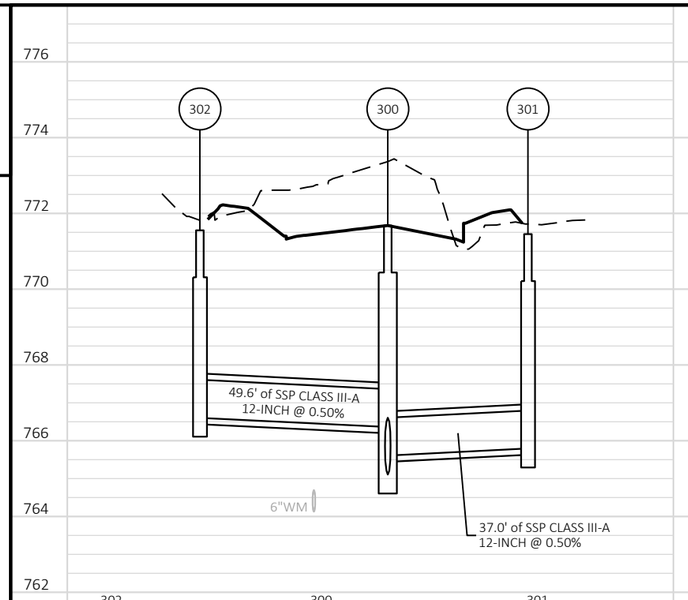

302
RIM: 771.55
SUMP: 766.61
DEPTH: 4.94
NE INV OUT: 766.61

300
RIM: 771.68
SUMP: 765.11
DEPTH: 6.57
SW INV IN: 766.36
E INV IN: 765.61
N INV OUT: 765.11

301
RIM: 771.45
SUMP: 765.79
DEPTH: 5.66
W INV OUT: 765.79

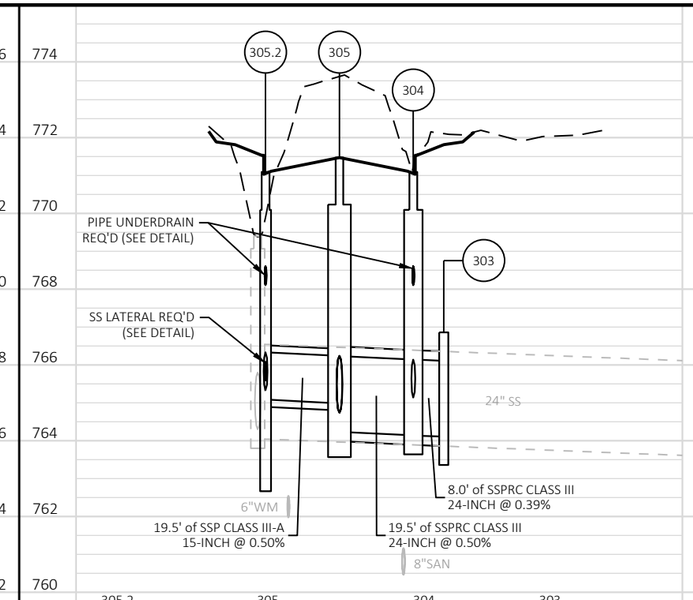

305.2
RIM: 771.09
SUMP: 763.08
DEPTH: 8.01
N INV IN: 765.33
S INV IN: 768.11
N INV IN: 768.11
W INV IN: 765.58
E INV OUT: 765.08

305
RIM: 771.47
SUMP: 764.24
DEPTH: 7.23
W INV IN: 764.99
S INV IN: 764.74
N INV IN: 764.74
E INV OUT: 764.24

304
RIM: 771.09
SUMP: 764.14
DEPTH: 6.95
N INV IN: 765.14
W INV IN: 764.14
S INV IN: 768.11
N INV IN: 768.11
E INV OUT: 764.14

303
INV: 764.11

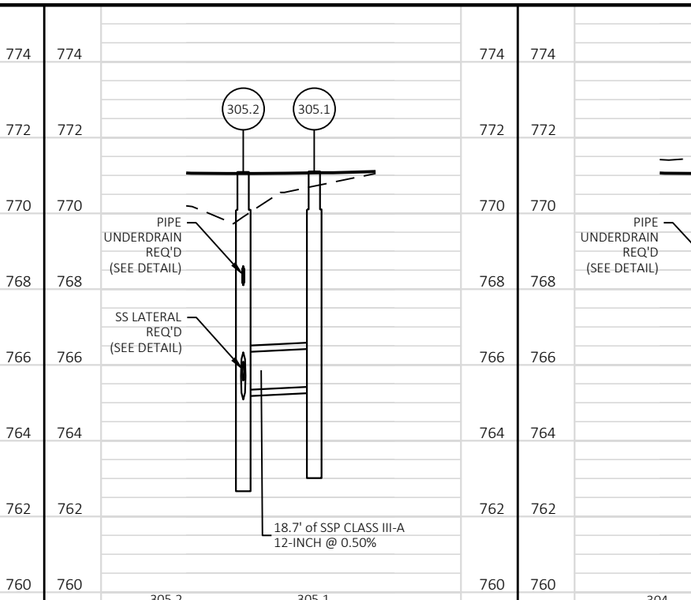

305.2
RIM: 771.09
SUMP: 763.08
DEPTH: 8.01
N INV IN: 765.33
S INV IN: 768.11
N INV IN: 768.11
W INV IN: 765.58
E INV OUT: 765.08

305.1
RIM: 771.11
SUMP: 763.43
DEPTH: 7.68
S INV OUT: 765.43

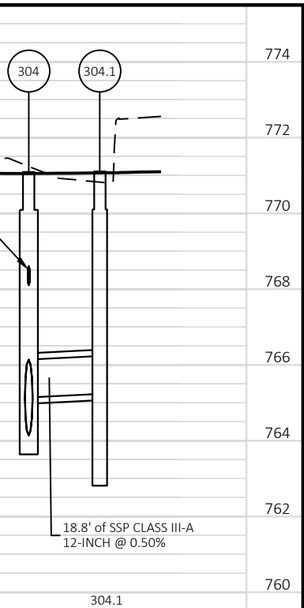

304
RIM: 771.09
SUMP: 764.14
DEPTH: 6.95
N INV IN: 765.14
W INV IN: 764.14
S INV IN: 768.11
N INV IN: 768.11
E INV OUT: 764.14

304.1
RIM: 771.11
SUMP: 763.23
DEPTH: 7.87
S INV OUT: 765.23

2

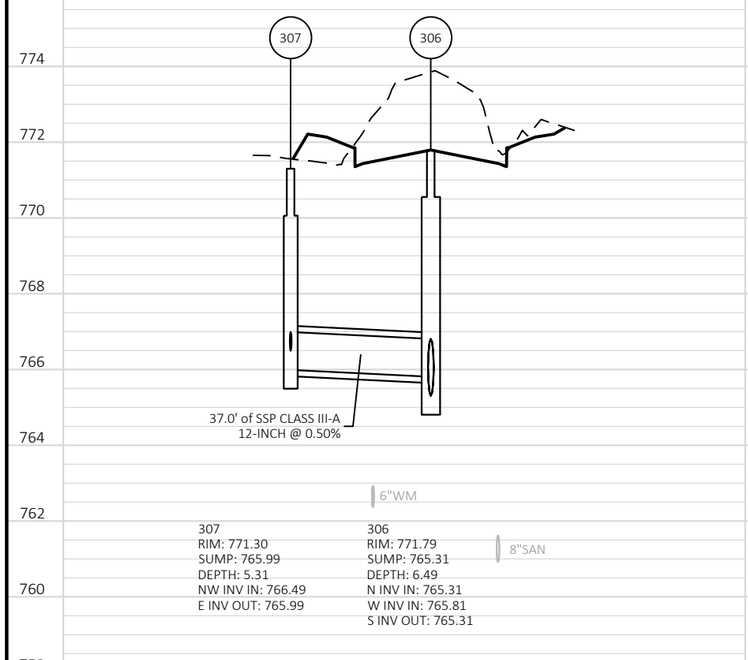

307
RIM: 771.30
SUMP: 765.99
DEPTH: 5.31
NW INV IN: 766.49
E INV OUT: 765.99

306
RIM: 771.79
SUMP: 765.31
DEPTH: 6.49
N INV IN: 765.31
W INV IN: 765.81
S INV OUT: 765.31

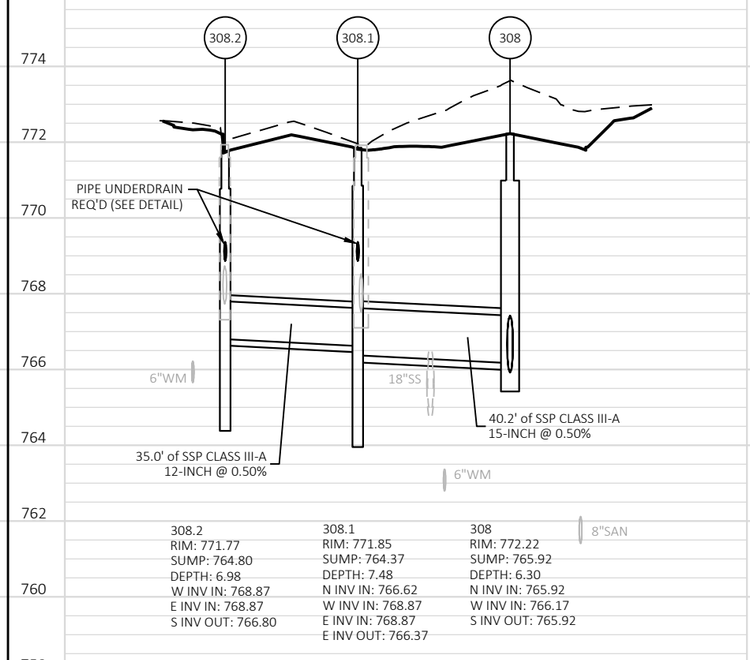

308.2
RIM: 771.77
SUMP: 764.80
DEPTH: 6.98
W INV IN: 768.87
E INV IN: 768.87
S INV OUT: 766.80

308.1
RIM: 771.85
SUMP: 764.37
DEPTH: 7.48
N INV IN: 766.62
W INV IN: 768.87
E INV IN: 768.87
E INV OUT: 766.37

308
RIM: 772.22
SUMP: 765.92
DEPTH: 6.30
N INV IN: 765.92
W INV IN: 766.17
S INV OUT: 765.92

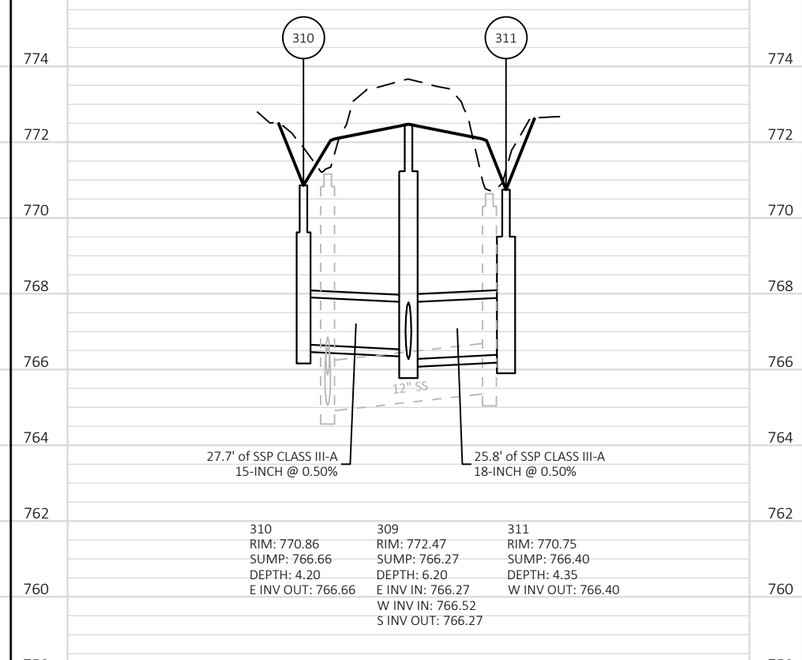

310
RIM: 770.86
SUMP: 766.66
DEPTH: 4.20
E INV OUT: 766.66

309
RIM: 772.47
SUMP: 766.27
DEPTH: 6.20
E INV IN: 766.27
W INV IN: 766.52
S INV OUT: 766.27

311
RIM: 770.75
SUMP: 766.40
DEPTH: 4.35
W INV OUT: 766.40

PROJECT NO: 4986-00-65	HWY: MINNESOTA AVENUE	COUNTY: FOND DU LAC	STORM SEWER PROFILES	SHEET 31	E

FILE NAME : S:\CURRPROJ\FONDDUCO\NORTH FDL, VILLAGE OF\MINNESOTA AVE\CIVIL3D\49860064\SHEETS\49860065-022511-SS.DWG
LAYOUT NAME - Sheet-02
PLOT DATE : 7/29/2025 2:07 PM
PLOT BY : AARON SARAUER
PLOT NAME :
PLOT SCALE : 1 IN:40 FT
WISDOT/CADDS SHEET 41

2

STORM SEWER STRUCTURE DATA

STRUCTURE NUMBER	ALIGNMENT	STATION	OFFSET	LOCATION	TYPE	RIM/GRATE ELEVATION	STRUCTURE INV ELEV	TOTAL DEPTH	SUMP DEPTH	CONNECTING PIPES	PIPE DIRECTION	PIPE SIZE & TYPE	PIPE INVERT	PIPE ROUTE	PIPE LENGTH	PIPE SLOPE	REMARKS
100	MINNESOTA	10+93.00	-37.00	LT	INLETS 3-C	769.25	765.33	3.92	0.00	100-101 OUT	NE	SSPRC CLASS IV 12-INCH	765.33	TO STR: 101	40.72'	0.50%	
101	MINNESOTA	11+10.00	0.00		MANHOLES 4-J	769.55	764.38	5.18	0.00	100-101 IN 101-201 OUT	SW N	SSPRC CLASS IV 12-INCH SSP CLASS III-A 15-INCH	765.13 764.38	FROM STR: 100 TO STR: 201	-- 150.76'	-- 0.50%	
200	MINNESOTA	12+60.33	28.00	RT	CONCRETE COLLARS					201-200 IN	W	SSPRC CLASS III 30-INCH	763.48	FROM STR: 201	--	--	
201	MINNESOTA	12+60.76	0.00		MANHOLES 6-J	770.50	763.62	6.87	0.00	202-201 IN 204-201 IN 101-201 IN 201-200 OUT	W N S E	SSPRC CLASS III 30-INCH SSP CLASS III-A 18-INCH SSP CLASS III-A 15-INCH SSPRC CLASS III 30-INCH	763.62 764.12 763.62 763.62	FROM STR: 202 FROM STR: 204 FROM STR: 101 TO STR: 200	-- -- -- 28.00'	-- -- -- 0.52%	
202	ROSE	199+60.01	-10.67	LT	MANHOLES 5-J	770.15	763.83	6.32	0.00	202.1-202 IN 202.2-202 IN 203-202 IN 202-201 OUT	S N W E	SSP CLASS III-A 12-INCH SSP CLASS III-A 12-INCH SSPRC CLASS III 24-INCH SSPRC CLASS III 30-INCH	765.33 765.33 763.83 763.83	FROM STR: 202.1 FROM STR: 202.2 FROM STR: 203 TO STR: 201	-- -- -- 39.84'	-- -- -- 0.51%	
202.1	ROSE	199+60.01	17.50	RT	CATCH BASINS 2X3-H	770.07	763.47	6.61	2.00	202.1-202 OUT	N	SSP CLASS III-A 12-INCH	765.47	TO STR: 202	28.17'	0.50%	
202.2	ROSE	199+60.01	-17.50	LT	CATCH BASINS 2X3-H-S	769.99	763.36	6.63	2.00	202.2.1 IN 202.2.2 IN 202.2-202 OUT	W E S	PIPE UNDERDRAIN WRAPPED 6-INCH PIPE UNDERDRAIN WRAPPED 6-INCH SSP CLASS III-A 12-INCH	767.09 767.09 765.36	FROM STR: FROM STR: TO STR: 202	-- -- 6.83'	-- -- 0.50%	CONNECT TO PIPE UNDERDRAIN
203	ROSE	199+52.01	-10.62	LT	CONCRETE COLLARS					203-202 OUT	E	SSPRC CLASS III 24-INCH	763.87	TO STR: 202	8.00'	0.50%	
204	MINNESOTA	12+88.01	0.00		MANHOLES 4-J	770.58	764.26	6.32	0.00	204.1-204 IN 204.2-204 IN 205-204 IN 204-201 OUT	W E N S	SSP CLASS III-A 12-INCH SSP CLASS III-A 12-INCH SSP CLASS III-A 18-INCH SSP CLASS III-A 18-INCH	764.76 764.76 764.26 764.26	FROM STR: 204.1 FROM STR: 204.2 FROM STR: 205 TO STR: 201	-- -- -- 27.25'	-- -- -- 0.50%	
204.1	MINNESOTA	12+88.01	-19.50	LT	CATCH BASINS 2X3-H	770.20	762.86	7.34	2.00	204.1-204 OUT	E	SSP CLASS III-A 12-INCH	764.86	TO STR: 204	19.50'	0.50%	
204.2	MINNESOTA	12+88.01	19.50	RT	CATCH BASINS 2X3-H	770.20	762.86	7.34	2.00	LATERAL-204.2 IN 204.2-204 OUT	E W	SS LATERAL SSP CLASS III-A 12-INCH	765.36 764.86	FROM STR: TO STR: 204	-- 19.50'	-- 0.50%	
205	MINNESOTA	14+75.00	0.00		MANHOLES 4-J	771.45	765.19	6.25	0.00	206-205 IN 207-205 IN 205-204 OUT	W N S	SSP CLASS III-A 12-INCH SSP CLASS III-A 18-INCH SSP CLASS III-A 18-INCH	766.19 765.19 765.19	FROM STR: 206 FROM STR: 207 TO STR: 204	-- -- 186.99'	-- -- 0.50%	
206	MINNESOTA	14+75.00	-37.00	LT	INLETS 3-C	771.15	766.38	4.77	0.00	206-205 OUT	E	SSP CLASS III-A 12-INCH	766.38	TO STR: 205	37.00'	0.50%	
207	MINNESOTA	15+45.48	0.00		MANHOLES 4-J	771.35	765.55	5.81	0.00	208-207 IN 207.2-207 IN 207-205 OUT	N W S	SSP CLASS III-A 18-INCH SSPRC CLASS IV 15-INCH SSP CLASS III-A 18-INCH	765.55 766.30 765.55	FROM STR: 208 FROM STR: 207.2 TO STR: 205	-- -- 70.48'	-- -- 0.50%	
207.1	BLACKBIRD	299+59.66	-17.50	LT	CATCH BASINS 2X3-H-S	770.50	764.92	5.57	2.00	207.1.1 IN 207.1.2 IN 207.1-207.2 OUT	W E S	PIPE UNDERDRAIN WRAPPED 6-INCH PIPE UNDERDRAIN WRAPPED 6-INCH SSPRC CLASS IV 12-INCH	767.51 767.51 766.92	FROM STR: FROM STR: TO STR: 207.2	-- -- 35.00'	-- -- 0.50%	CONNECT TO PIPE UNDERDRAIN
207.2	BLACKBIRD	299+59.66	17.50	RT	CATCH BASINS 2X3-H-S	770.50	764.50	6.00	2.00	207.1-207.2 IN 207.2.1 IN 207.2.2 IN 207.2-207 OUT	N W E E	SSPRC CLASS IV 12-INCH PIPE UNDERDRAIN WRAPPED 6-INCH PIPE UNDERDRAIN WRAPPED 6-INCH SSPRC CLASS IV 15-INCH	766.75 767.51 767.51 766.50	FROM STR: 207.1 FROM STR: FROM STR: TO STR: 207	-- -- -- 40.54'	-- -- -- 0.50%	CONNECT TO PIPE UNDERDRAIN
208	MINNESOTA	16+00.00	0.00		MANHOLES 4-J	771.16	765.82	5.35	0.00	208.1-208 IN 208.2-208 IN 209-208 IN 208-207 OUT	W E N S	SSP CLASS III-A 12-INCH SSP CLASS III-A 12-INCH SSP CLASS III-A 18-INCH SSP CLASS III-A 18-INCH	766.32 766.32 765.82 765.82	FROM STR: 208.1 FROM STR: 208.2 FROM STR: 209 TO STR: 207	-- -- -- 54.52'	-- -- -- 0.50%	
208.1	MINNESOTA	16+00.46	-19.50	LT	CATCH BASINS 2X3-H	770.78	764.42	6.37	2.00	208.1-208 OUT	E	SSP CLASS III-A 12-INCH	766.42	TO STR: 208	19.51'	0.50%	
208.2	MINNESOTA	16+00.00	19.50	RT	CATCH BASINS 2X3-H-S	770.78	764.42	6.37	2.00	208.2.1 IN 208.2.2 IN 208.2-208 OUT	S N W	PIPE UNDERDRAIN WRAPPED 6-INCH PIPE UNDERDRAIN WRAPPED 6-INCH SSP CLASS III-A 12-INCH	767.80 767.80 766.42	FROM STR: FROM STR: TO STR: 208	-- -- 19.50'	-- -- 0.50%	CONNECT TO PIPE UNDERDRAIN
209	MINNESOTA	17+16.00	0.00		MANHOLES 4-J	771.76	766.40	5.36	0.00	210-209 IN LATERAL-209 IN 209-208 OUT	W E S	SSPRC CLASS IV 12-INCH SS LATERAL SSP CLASS III-A 18-INCH	767.15 766.90 766.40	FROM STR: 210 FROM STR: TO STR: 208	-- -- 116.00'	-- -- 0.50%	

NOTES:
1. TOTAL DEPTH = RIM/GRATE ELEVATION - STRUCTURE INVERT ELEVATION.
2. MANHOLES SHALL BE CONSTRUCTED IN A WAY THAT WILL ALLOW THE CASTING TO BE ALIGNED IN THE MIDDLE OF A LANE OR ON A JOINT LINE.
3. CONTRACTOR SHALL VERIFY EXISTING PIPE SIZES, MATERIALS AND INVERT ELEVATION WHEN CONNECTING NEW STORM SEWER INTO EXISTING PIPES PRIOR TO MANUFACTURING INLETS AND MANHOLES.
4. STATION/ OFFSET OF STORM SEWER STRUCTURES ARE TO THE CENTER OF STRUCTURE EXCEPT FOR CONCRETE APRON ENDWALLS WHICH ARE TO PIPE END.
5. RIM ELEVATION GIVEN AT THE INLET COVER FLANGE LOCATION
6. FOR STRUCTURES WITH SUMPS, THE INVERT ELEVATION IS THE ELEVATION OF THE SUMP. FOR STRUCTURES WITHOUT SUMPS, THE INVERT ELEVATION IS THE ELEVATION OF THE LOWEST PIPE FLOW LINE

2

STORM SEWER STRUCTURE DATA

STRUCTURE NUMBER	ALIGNMENT	STATION	OFFSET	LOCATION	TYPE	RIM/GRATE ELEVATION	STRUCTURE INV ELEV	TOTAL DEPTH	SUMP DEPTH	CONNECTING PIPES	PIPE DIRECTION	PIPE SIZE & TYPE	PIPE INVERT	PIPE ROUTE	PIPE LENGTH	PIPE SLOPE	REMARKS
210	MINNESOTA	17+16.00	-37.00	LT	INLETS 3-C	771.60	767.33	4.27	0.00	210-209 OUT	E	SSPRC CLASS IV 12-INCH	767.33	TO STR: 209	37.00'	0.50%	
300	MINNESOTA	18+77.00	0.00		MANHOLES 4-J	771.68	765.11	6.57	0.00	302-300 IN 301-300 IN 300-305 OUT	SW E N	SSP CLASS III-A 12-INCH SSP CLASS III-A 12-INCH SSP CLASS III-A 18-INCH	766.36 765.61 765.11	FROM STR: 302 FROM STR: 301 TO STR: 305	-- -- 74.25'	-- -- 0.50%	
301	MINNESOTA	18+77.00	37.00	RT	INLETS 3-C	771.45	765.79	5.66	0.00	301-300 OUT	W	SSP CLASS III-A 12-INCH	765.79	TO STR: 300	37.00'	0.50%	
302	MINNESOTA	18+44.00	-37.00	LT	INLETS 3-C	771.55	766.61	4.94	0.00	302-300 OUT	NE	SSP CLASS III-A 12-INCH	766.61	TO STR: 300	49.58'	0.50%	
303	MINNESOTA	19+52.05	27.50	RT	CONCRETE COLLARS					304-303 IN	W	SSPRC CLASS III 24-INCH	764.11	FROM STR: 304	--	--	
304	MINNESOTA	19+51.25	19.50	RT	INLETS 4-H-S	771.09	764.14	6.95	0.00	304.1-304 IN 305-304 IN 304.1 IN 304.2 IN 304-303 OUT	N W S N E	SSP CLASS III-A 12-INCH SSPRC CLASS III 24-INCH PIPE UNDERDRAIN WRAPPED 6-INCH PIPE UNDERDRAIN WRAPPED 6-INCH SSPRC CLASS III 24-INCH	765.14 764.14 768.11 768.11 764.14	FROM STR: 304.1 FROM STR: 305 FROM STR: FROM STR: TO STR: 303	-- -- -- -- 8.04'	-- -- -- -- 0.39%	CONNECT TO PIPE UNDERDRAIN
304.1	MINNESOTA	19+70.00	19.50	RT	CATCH BASINS 2X3-H-S	771.11	763.23	7.87	2.00	304.1-304 OUT	S	SSP CLASS III-A 12-INCH	765.23	TO STR: 304	18.75'	0.50%	
305	MINNESOTA	19+51.25	0.00		MANHOLES 5-J	771.47	764.24	7.23	0.00	305.2-305 IN 300-305 IN 306-305 IN 305-304 OUT	W S N E	SSP CLASS III-A 15-INCH SSP CLASS III-A 18-INCH SSP CLASS III-A 18-INCH SSPRC CLASS III 24-INCH	764.99 764.74 764.74 764.24	FROM STR: 305.2 FROM STR: 300 FROM STR: 306 TO STR: 304	-- -- -- 19.50'	-- -- -- 0.50%	
305.1	MINNESOTA	19+70.00	-19.50	LT	CATCH BASINS 2X3-H-S	771.11	763.43	7.68	2.00	305.1-305.2 OUT	S	SSP CLASS III-A 12-INCH	765.43	TO STR: 305.2	18.75'	0.50%	
305.2	MINNESOTA	19+51.25	-19.50	LT	CATCH BASINS 2X3-H-S	771.09	763.08	8.01	2.00	305.1-305.2 IN 305.2.1 IN 305.2.2 IN LATERAL-305.2 IN 305.2-305 OUT	N S N W E	SSP CLASS III-A 12-INCH PIPE UNDERDRAIN WRAPPED 6-INCH PIPE UNDERDRAIN WRAPPED 6-INCH SS LATERAL SSP CLASS III-A 15-INCH	765.33 768.11 768.11 765.58 765.08	FROM STR: 305.1 FROM STR: FROM STR: FROM STR: TO STR: 305	-- -- -- -- 19.50'	-- -- -- -- 0.50%	CONNECT TO PIPE UNDERDRAIN
306	MINNESOTA	20+65.00	0.00		MANHOLES 4-J	771.79	765.31	6.49	0.00	308-306 IN 307-306 IN 306-305 OUT	N W S	SSP CLASS III-A 18-INCH SSP CLASS III-A 12-INCH SSP CLASS III-A 18-INCH	765.31 765.81 765.31	FROM STR: 308 FROM STR: 307 TO STR: 305	-- -- 113.75'	-- -- 0.50%	
307	MINNESOTA	20+65.00	-37.00	LT	INLETS 3-C	771.30	765.99	5.31	0.00	LATERAL-307 IN 307-306 OUT	NW E	SS LATERAL SSP CLASS III-A 12-INCH	766.49 765.99	FROM STR: TO STR: 306	-- 37.00'	-- 0.50%	
308	MINNESOTA	21+88.12	0.00		MANHOLES 4-J	772.22	765.92	6.30	0.00	309-308 IN 308.1-308 IN 308-306 OUT	N W S	SSP CLASS III-A 18-INCH SSP CLASS III-A 15-INCH SSP CLASS III-A 18-INCH	765.92 766.17 765.92	FROM STR: 309 FROM STR: 308.1 TO STR: 306	-- -- 123.12'	-- -- 0.50%	
308.1	ANNE	399+60.02	17.50	RT	CATCH BASINS 2X3-H-S	771.85	764.37	7.48	2.00	308.2-308.1 IN 308.1.1 IN 308.1.2 IN 308.1-308 OUT	N W E E	SSP CLASS III-A 12-INCH PIPE UNDERDRAIN WRAPPED 6-INCH PIPE UNDERDRAIN WRAPPED 6-INCH SSP CLASS III-A 15-INCH	766.62 768.87 768.87 766.37	FROM STR: 308.2 FROM STR: FROM STR: TO STR: 308	-- -- -- 40.20'	-- -- -- 0.50%	CONNECT TO PIPE UNDERDRAIN
308.2	ANNE	399+60.02	-17.50	LT	CATCH BASINS 2X3-H-S	771.77	764.80	6.98	2.00	308.2.1 IN 308.2.2 IN 308.2-308.1 OUT	W E S	PIPE UNDERDRAIN WRAPPED 6-INCH PIPE UNDERDRAIN WRAPPED 6-INCH SSP CLASS III-A 12-INCH	768.87 768.87 766.80	FROM STR: FROM STR: TO STR: 308.1	-- -- 35.00'	-- -- 0.50%	CONNECT TO PIPE UNDERDRAIN
309	MINNESOTA	22+58.06	0.00		MANHOLES 4-J	772.47	766.27	6.20	0.00	311-309 IN 310-309 IN 309-308 OUT	E W S	SSP CLASS III-A 18-INCH SSP CLASS III-A 15-INCH SSP CLASS III-A 18-INCH	766.27 766.52 766.27	FROM STR: 311 FROM STR: 310 TO STR: 308	-- -- 69.94'	-- -- 0.50%	
310	MINNESOTA	22+58.06	-27.70	LT	INLETS 3-C	770.86	766.66	4.20	0.00	310-309 OUT	E	SSP CLASS III-A 15-INCH	766.66	TO STR: 309	27.70'	0.50%	
311	MINNESOTA	22+58.06	25.76	RT	INLETS 4-C	770.75	766.40	4.35	0.00	311-309 OUT	W	SSP CLASS III-A 18-INCH	766.40	TO STR: 309	25.76'	0.50%	

NOTES:
1. TOTAL DEPTH = RIM/GRATE ELEVATION - STRUCTURE INVERT ELEVATION.
2. MANHOLES SHALL BE CONSTRUCTED IN A WAY THAT WILL ALLOW THE CASTING TO BE ALIGNED IN THE MIDDLE OF A LANE OR ON A JOINT LINE.
3. CONTRACTOR SHALL VERIFY EXISTING PIPE SIZES, MATERIALS AND INVERT ELEVATION WHEN CONNECTING NEW STORM SEWER INTO EXISTING PIPES PRIOR TO MANUFACTURING INLETS AND MANHOLES.
4. STATION/ OFFSET OF STORM SEWER STRUCTURES ARE TO THE CENTER OF STRUCTURE EXCEPT FOR CONCRETE APRON ENDWALLS WHICH ARE TO PIPE END.
5. RIM ELEVATION GIVEN AT THE INLET COVER FLANGE LOCATION
6. FOR STRUCTURES WITH SUMPS, THE INVERT ELEVATION IS THE ELEVATION OF THE SUMP. FOR STRUCTURES WITHOUT SUMPS, THE INVERT ELEVATION IS THE ELEVATION OF THE LOWEST PIPE FLOW LINE

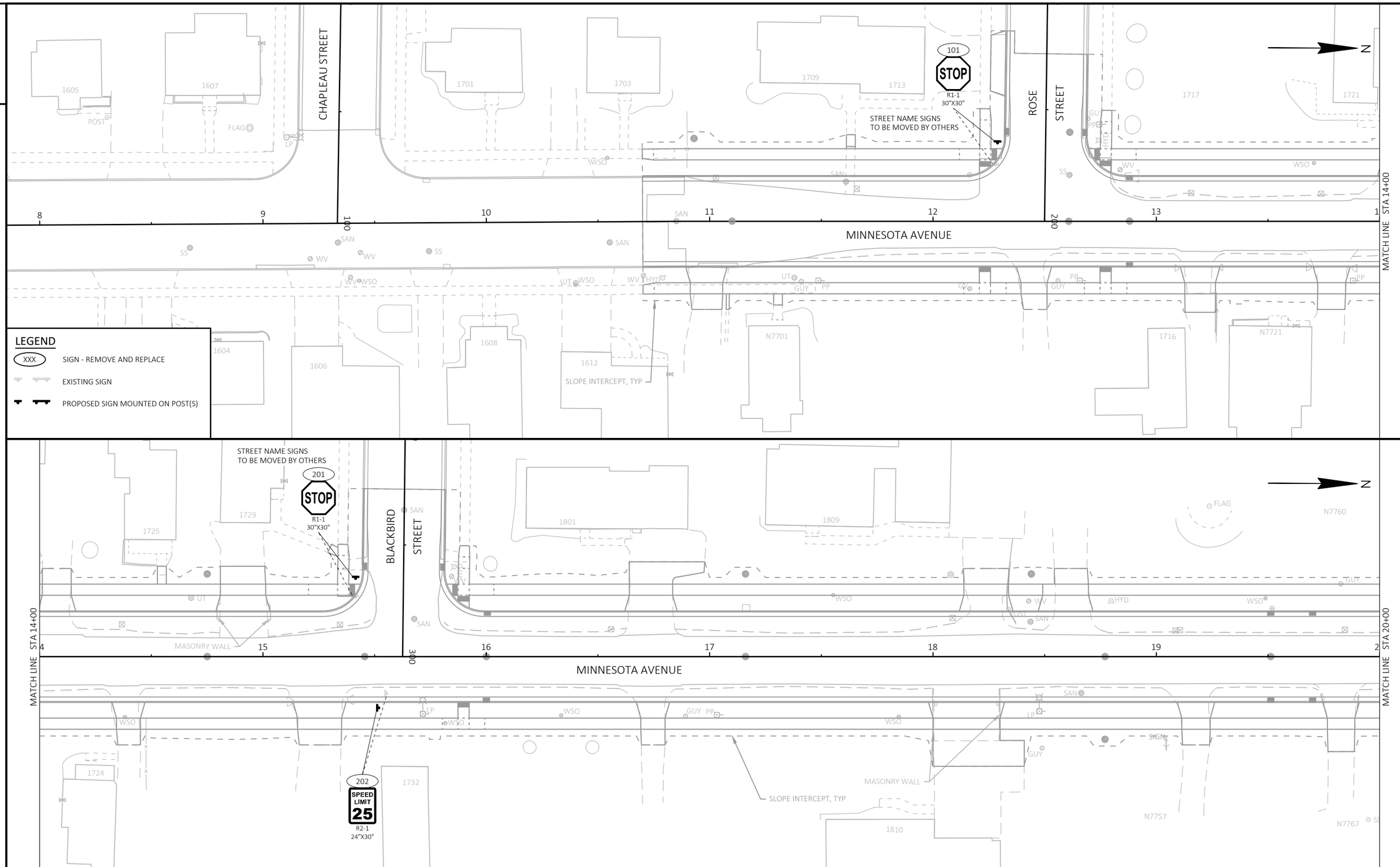

PROJECT NO: 4986-00-65	HWY: MINNESOTA AVENUE	COUNTY: FOND DU LAC	SIGNING PLAN	SHEET 34	E

FILE NAME : S:\CURRPROJ\FONDDUCO\NORTH FDL, VILLAGE OF\MINNESOTA AVE\CIVIL3D\49860064\SHEETS\49860065-023201-PS.DWG
LAYOUT NAME - Sheet-01
PLOT DATE : 7/29/2025 1:21 PM PLOT BY : AARON SARAUER PLOT NAME : PLOT SCALE : 1 IN:40 FT

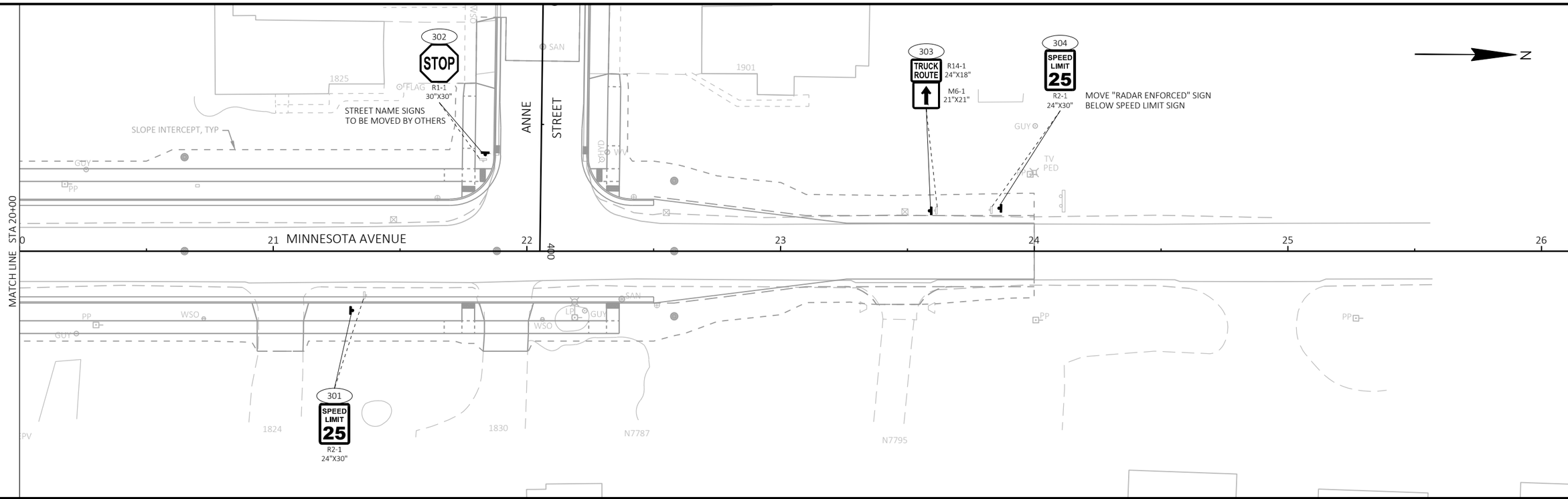

LEGEND

XXX	SIGN - REMOVE AND REPLACE
	EXISTING SIGN
	PROPOSED SIGN MOUNTED ON POST(S)

LEGEND

- MB — PORTABLE CHANGEABLE MESSAGE BOARD
- WORK AREA
- (B) — PLACE TRAFFIC CONTROL SIGNS PER "DETAIL B" IN SDD "BARRICADES AND SIGNS FOR MAINLINE CLOSURES"
- (E) — PLACE TRAFFIC CONTROL SIGNS PER "DETAIL E" IN SDD "BARRICADES AND SIGNS FOR MAINLINE CLOSURES"
- (4) — PLACE TRAFFIC CONTROL SIGNS PER "DETAIL 4" IN SDD "BARRICADES AND SIGNS FOR SIDEROAD CLOSURES"

GENERAL NOTES

SEE S.D.D. "BARRICADES AND SIGNS FOR MAINLINE CLOSURES", "BARRICADES AND SIGNS FOR VARIOUS CLOSURES", "DETOUR SIGNING FOR MAINLINE CLOSURES", AND "BARRICADES AND SIGNS FOR SIDEROAD CLOSURES" FOR GENERAL NOTES AND SIGN SPACING REQUIREMENTS.

DRAWINGS SHOW TRAFFIC CONTROL FOR A TYPICAL SITUATION. ADDITIONAL TRAFFIC CONTROL DEVICES MAY BE REQUIRED AND/OR LAYOUT DETAILS MODIFIED DEPENDING ON FIELD CONDITIONS AND THE CONTRACTOR'S METHODS OR SEQUENCE OF OPERATION.

MAP SHOWN IS NOT TO SCALE.

PCMS MESSAGES

	7 DAYS PRIOR TO PROJECT STARTUP	
LOCATION	PHASE 1 (2 SEC.)	PHASE 2 (2 SEC.)
MINN AVE NB	ROAD CLOSED BEGINS	{DAY} {DATE XX}
MINN AVE SB	ROAD CLOSED BEGINS	{DAY} {DATE XX}

PROJECT NO: 4986-00-65	HWY: MINNESOTA AVENUE	COUNTY: FOND DU LAC	TRAFFIC CONTROL: DETOUR OVERVIEW	SHEET 36	E

2

LEGEND

- WORK AREA
- TYPE III BARRICADE WITH SIGN
- FLAGGER, EQUIPPED WITH STOP/SLOW PADDLE FASTENED ON SUPPORT STAFF
- (B) PLACE TRAFFIC CONTROL SIGNS PER "DETAIL B" IN SDD "BARRICADES AND SIGNS FOR MAINLINE CLOSURES"
- (E) PLACE TRAFFIC CONTROL SIGNS PER "DETAIL E" IN SDD "BARRICADES AND SIGNS FOR MAINLINE CLOSURES"
- (4) PLACE TRAFFIC CONTROL SIGNS PER "DETAIL 4" IN SDD "BARRICADES AND SIGNS FOR SIDEROAD CLOSURES"

GENERAL NOTES

SEE S.D.D. "TRAFFIC CONTROL, ADVANCE WARNING SIGNS 40 MPH OR LESS TWO-WAY UNDIVIDED ROAD OPEN TO TRAFFIC", "BARRICADES AND SIGNS FOR MAINLINE CLOSURES", "BARRICADES AND SIGNS FOR VARIOUS CLOSURES", "DETOUR SIGNING FOR MAINLINE CLOSURES", AND "BARRICADES AND SIGNS FOR SIDEROAD CLOSURES" FOR GENERAL NOTES AND SIGN SPACING REQUIREMENTS.

DRAWINGS SHOW TRAFFIC CONTROL FOR A TYPICAL SITUATION. ADDITIONAL TRAFFIC CONTROL DEVICES MAY BE REQUIRED AND/OR LAYOUT DETAILS MODIFIED DEPENDING ON FIELD CONDITIONS AND THE CONTRACTOR'S METHODS OR SEQUENCE OF OPERATION.

MAP SHOWN IS NOT TO SCALE.

LEGEND

SIGN ON TEMPORARY SUPPORT

WORK AREA

(A) TEMPORARY CROSSWALK SIDEROAD OUTSIDE CONSTRUCTION LIMITS. (SEE DETAIL)

SIDEWALK CLOSED

R9-9
24"X12"
(1)

GENERAL NOTES - PEDESTRIAN ACCOMMODATIONS

REFER TO SDD "TRAFFIC CONTROL, PEDESTRIAN ACCOMMODATION" FOR DETAILS.

POST MOUNTED SIGNS LOCATED NEAR OR ADJACENT TO THE SIDEWALK SHALL HAVE A 7-FT MINIMUM CLEARANCE FROM THE BOTTOM OF THE SIGN TO THE EXISTING OR NEW SIDEWALK.

FURNISH AND INSTALL TEMPORARY CURB RAMPS WHEN EXISTING OR FINISHED CURB RAMPS ARE NOT IN PLACE.

DRAWINGS SHOW TRAFFIC CONTROL FOR A TYPICAL SITUATION. ADDITIONAL TRAFFIC CONTROL DEVICES MAY BE REQUIRED AND/OR LAYOUT DETAILS MODIFIED DEPENDING ON FIELD CONDITIONS AND THE CONTRACTOR'S METHODS OR SEQUENCE OF OPERATION.

MAP SHOWN IS NOT TO SCALE.

PROJECT NO: 4986-00-65	HWY: MINNESOTA AVENUE	COUNTY: FOND DU LAC	PEDESTRIAN ACCOMMODATIONS	SHEET 38	E

LEGEND

- TEMPORARY CURB RAMP
- TEMPORARY PEDESTRIAN SURFACE
- EXISTING PAVEMENT
- WORK AREA

NOTES:

REFER TO STANDARD DETAIL DRAWING "TRAFFIC CONTROL, PEDESTRIAN ACCOMMODATIONS" FOR ALL OTHER PERTINENT INFORMATION NOT SHOWN ON THIS DETAIL.

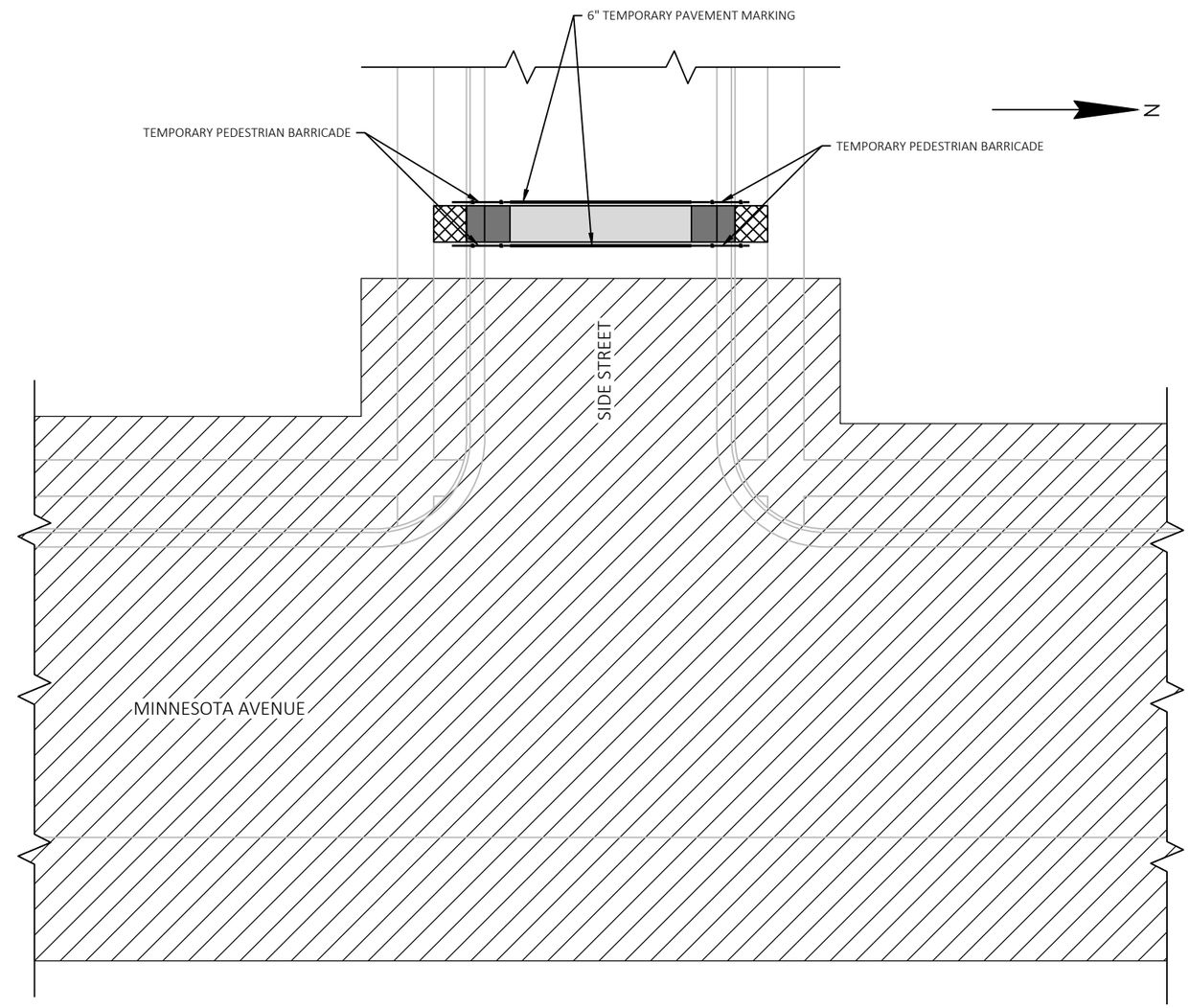

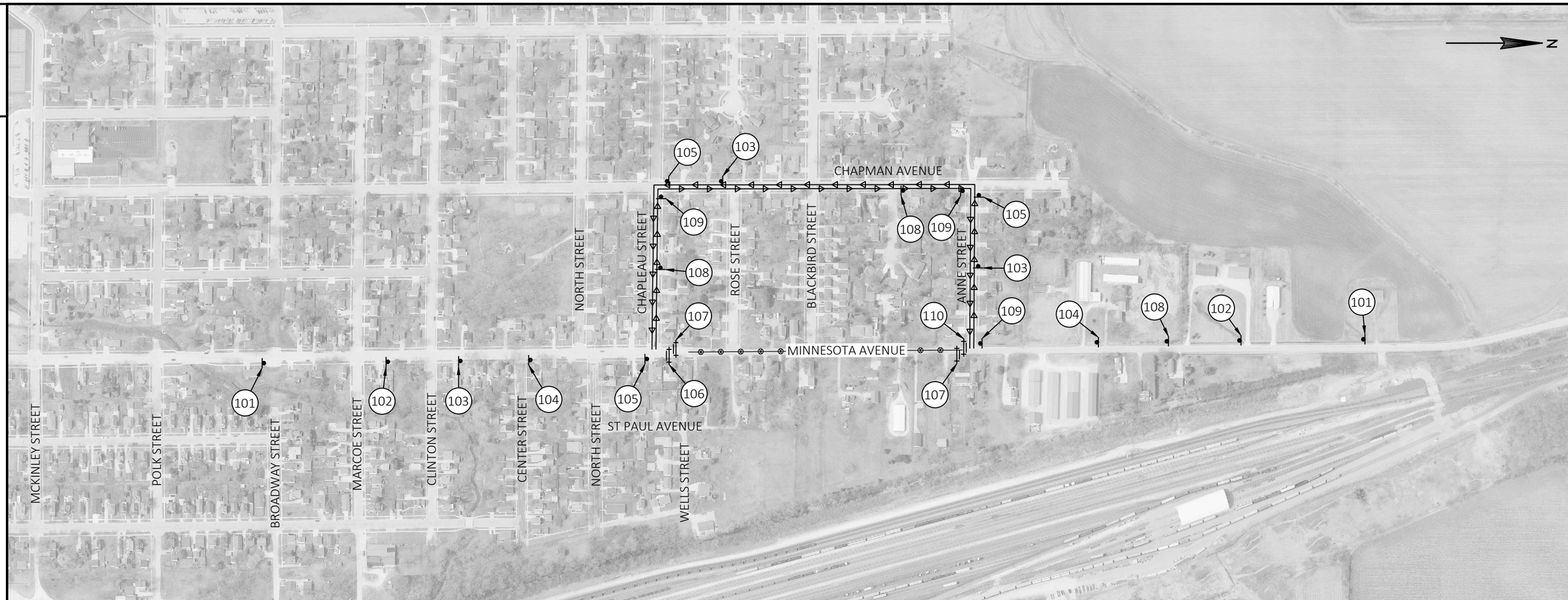

LEGEND

- SIGN LOCATION
- TYPE III BARRICADE WITH SIGN
- PROPOSED DETOUR ROUTE
- WORK AREA

GENERAL NOTES - DETOUR

SEE S.D.D. "BARRICADES AND SIGNS FOR MAINLINE CLOSURES", "BARRICADES AND SIGNS FOR VARIOUS CLOSURES", "DETOUR SIGNING FOR MAINLINE CLOSURES", AND "BARRICADES AND SIGNS FOR SIDEROAD CLOSURES" FOR GENERAL NOTES AND SIGN SPACING REQUIREMENTS.

DRAWINGS SHOW TRAFFIC CONTROL FOR A TYPICAL SITUATION. ADDITIONAL TRAFFIC CONTROL DEVICES MAY BE REQUIRED AND/OR LAYOUT DETAILS MODIFIED DEPENDING ON FIELD CONDITIONS AND THE CONTRACTOR'S METHODS OR SEQUENCE OF OPERATION.

ALL EXISTING OR TEMPORARY SIGN MESSAGES THAT CONFLICT WITH THE DETOUR SHALL BE COVERED OR REMOVED.

MAP SHOWN IS NOT TO SCALE.

101

W20-3A
48"X48"

102

W20-2A
48"X48"

103

M4-59L
30"X30"

104

W20-3D
48"X48"

105

M4-9L
30"X24"

106

M4-9L
30"X24"

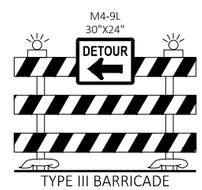

TYPE III BARRICADE

107

R11-4
60" X 30"

TYPE III BARRICADE

108

M4-59R
30"X30"

109

M4-9R
30"X24"

110

M4-9R
30"X24"

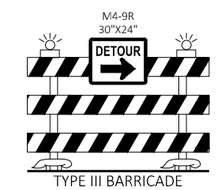

TYPE III BARRICADE

PROJECT NO: 4986-00-65	HWY: MINNESOTA AVENUE	COUNTY: FOND DU LAC	DETOUR	SHEET 40	E

FILE NAME : S:\CURRPROJ\FONDDUCO\NORTH FDL, VILLAGE OF\MINNESOTA AVE\CIVIL3D\49860064\SHEETS\49860065-027001-DT.DWG
LAYOUT NAME - Sheet-01
PLOT DATE : 7/29/2025 1:22 PM PLOT BY : AARON SARAUER PLOT NAME : PLOT SCALE : NTS

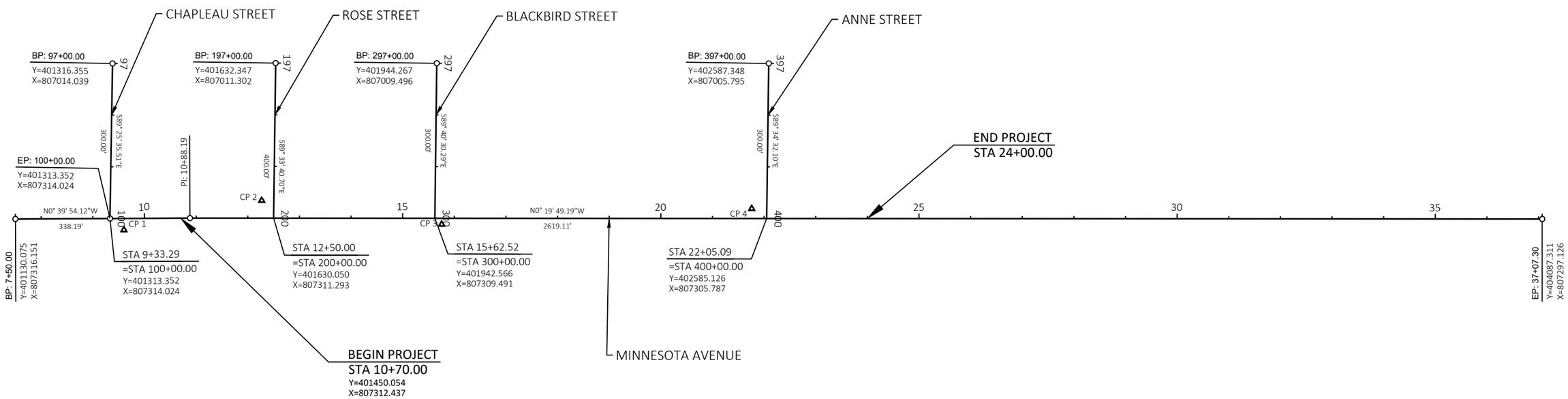

SURVEY CONTROL TABLE

POINT #	POINT NAME	Y	X	ELEVATION
1	CP - 1" IP WITH RED CAP IN TERRACE, EAST SIDE OF MINNESOTA AVENUE, 27' NORTH OF C/L OF CHAPLEAU STREET, 2' BEHIND BACK OF CURB	401340.414	807336.125	768.52
2	CP - 1" IP WITH RED CAP IN TERRACE, SOUTHWEST CORNER OF MINNESOTA AVENUE AND ROSE STREET, 1.5' NORTH AND WEST OF SIDEWALK	401606.855	807277.353	770.56
3	CP - MAG NAIL IN ASPHALT, EAST SIDE OF MINNESOTA AVENUE, 12' NORTH OF C/L OF BLACKBIRD STREET	401955.809	807321.203	772.62
4	CP - 1" IP WITH RED CAP IN LAWN, SOUTHWEST CORNER OF MINNESOTA AVENUE AND ANNE STREET, 18' WEST OF C/L OF MINNESOTA AVENUE, 27' SOUTH OF C/L OF ANNE STREET	402556.086	807286.964	772.66

Estimate Of Quantities

4986-00-65

Line	Item	Item Description	Unit	Total	Qty
0002	201.0205	Grubbing	STA	4.000	4.000
0004	203.0100	Removing Small Pipe Culverts	EACH	15.000	15.000
0006	204.0100	Removing Concrete Pavement	SY	250.000	250.000
0008	204.0150	Removing Curb & Gutter	LF	290.000	290.000
0010	204.0155	Removing Concrete Sidewalk	SY	94.000	94.000
0012	204.0170	Removing Fence	LF	24.000	24.000
0014	204.0185	Removing Masonry	CY	4.000	4.000
0016	204.0210	Removing Manholes	EACH	6.000	6.000
0018	204.0220	Removing Inlets	EACH	5.000	5.000
0020	204.0245	Removing Storm Sewer (size) 01. 4-Inch	LF	5.000	5.000
0022	204.0245	Removing Storm Sewer (size) 02. 12-Inch	LF	153.000	153.000
0024	204.0245	Removing Storm Sewer (size) 03. 18-Inch	LF	291.000	291.000
0026	204.0245	Removing Storm Sewer (size) 04. 24-Inch	LF	77.000	77.000
0028	204.0245	Removing Storm Sewer (size) 05. 30-Inch	LF	125.000	125.000
0030	205.0100	Excavation Common	CY	8,725.000	8,725.000
0032	213.0100	Finishing Roadway (project) 01. 4986-00-65	EACH	1.000	1.000
0034	305.0110	Base Aggregate Dense 3/4-Inch	TON	440.000	440.000
0036	305.0120	Base Aggregate Dense 1 1/4-Inch	TON	3,590.000	3,590.000
0038	311.0110	Breaker Run	TON	6,700.000	6,700.000
0040	416.0610	Drilled Tie Bars	EACH	24.000	24.000
0042	455.0605	Tack Coat	GAL	310.000	310.000
0044	460.2000	Incentive Density HMA Pavement	DOL	1,110.000	1,110.000
0046	460.5223	HMA Pavement 3 LT 58-28 S	TON	1,030.000	1,030.000
0048	460.5224	HMA Pavement 4 LT 58-28 S	TON	690.000	690.000
0050	465.0120	Asphaltic Surface Driveways and Field Entrances	TON	12.000	12.000
0052	520.8000	Concrete Collars for Pipe	EACH	3.000	3.000
0054	601.0411	Concrete Curb & Gutter 30-Inch Type D	LF	2,437.000	2,437.000
0056	601.0600	Concrete Curb Pedestrian	LF	8.000	8.000
0058	602.0405	Concrete Sidewalk 4-Inch	SF	10,340.000	10,340.000
0060	602.0415	Concrete Sidewalk 6-Inch	SF	430.000	430.000
0062	602.0515	Curb Ramp Detectable Warning Field Natural Patina	SF	160.000	160.000
0064	602.0810	Concrete Driveway 6-Inch	SY	564.000	564.000
0066	602.1500	Concrete Steps	SF	8.000	8.000
0068	608.0324	Storm Sewer Pipe Reinforced Concrete Class III 24-Inch	LF	36.000	36.000
0070	608.0330	Storm Sewer Pipe Reinforced Concrete Class III 30-Inch	LF	68.000	68.000
0072	608.0412	Storm Sewer Pipe Reinforced Concrete Class IV 12-Inch	LF	113.000	113.000
0074	608.0415	Storm Sewer Pipe Reinforced Concrete Class IV 15-Inch	LF	41.000	41.000
0076	608.3012	Storm Sewer Pipe Class III-A 12-Inch	LF	349.000	349.000
0078	608.3015	Storm Sewer Pipe Class III-A 15-Inch	LF	211.000	211.000
0080	608.3018	Storm Sewer Pipe Class III-A 18-Inch	LF	836.000	836.000
0082	611.0530	Manhole Covers Type J	EACH	13.000	13.000
0084	611.0612	Inlet Covers Type C	EACH	8.000	8.000
0086	611.0624	Inlet Covers Type H	EACH	4.000	4.000
0088	611.0639	Inlet Covers Type H-S	EACH	10.000	10.000
0090	611.1230	Catch Basins 2x3-FT	EACH	13.000	13.000
0092	611.2004	Manholes 4-FT Diameter	EACH	10.000	10.000
0094	611.2005	Manholes 5-FT Diameter	EACH	2.000	2.000
0096	611.2006	Manholes 6-FT Diameter	EACH	1.000	1.000
0098	611.3003	Inlets 3-FT Diameter	EACH	7.000	7.000

Estimate Of Quantities

4986-00-65

Line	Item	Item Description	Unit	Total	Qty
0100	611.3004	Inlets 4-FT Diameter	EACH	2.000	2.000
0102	612.0406	Pipe Underdrain Wrapped 6-Inch	LF	400.000	400.000
0104	619.1000	Mobilization	EACH	1.000	1.000
0106	624.0100	Water	MGAL	140.000	140.000
0108	625.0100	Topsoil	SY	3,400.000	3,400.000
0110	627.0200	Mulching	SY	850.000	850.000
0112	628.1504	Silt Fence	LF	200.000	200.000
0114	628.1520	Silt Fence Maintenance	LF	200.000	200.000
0116	628.1905	Mobilizations Erosion Control	EACH	7.000	7.000
0118	628.1910	Mobilizations Emergency Erosion Control	EACH	5.000	5.000
0120	628.2006	Erosion Mat Urban Class I Type A	SY	3,400.000	3,400.000
0122	628.7005	Inlet Protection Type A	EACH	10.000	10.000
0124	628.7010	Inlet Protection Type B	EACH	18.000	18.000
0126	628.7015	Inlet Protection Type C	EACH	11.000	11.000
0128	628.7020	Inlet Protection Type D	EACH	14.000	14.000
0130	628.7555	Culvert Pipe Checks	EACH	6.000	6.000
0132	629.0210	Fertilizer Type B	CWT	2.700	2.700
0134	630.0140	Seeding Mixture No. 40	LB	60.000	60.000
0136	630.0200	Seeding Temporary	LB	25.000	25.000
0138	630.0500	Seed Water	MGAL	95.000	95.000
0140	634.0814	Posts Tubular Steel 2x2-Inch X 14-FT	EACH	7.000	7.000
0142	637.2210	Signs Type II Reflective H	SF	36.600	36.600
0144	638.2102	Moving Signs Type II	EACH	1.000	1.000
0146	638.2602	Removing Signs Type II	EACH	7.000	7.000
0148	638.3000	Removing Small Sign Supports	EACH	7.000	7.000
0150	642.5001	Field Office Type B	EACH	1.000	1.000
0152	643.0300	Traffic Control Drums	DAY	3,738.000	3,738.000
0154	643.0420	Traffic Control Barricades Type III	DAY	890.000	890.000
0156	643.0705	Traffic Control Warning Lights Type A	DAY	1,780.000	1,780.000
0158	643.0900	Traffic Control Signs	DAY	4,005.000	4,005.000
0160	643.1050	Traffic Control Signs PCMS	DAY	14.000	14.000
0162	643.3350	Temporary Marking Crosswalk Removable Tape 6-inch	LF	200.000	200.000
0164	643.5000	Traffic Control	EACH	1.000	1.000
0166	644.1440	Temporary Pedestrian Surface Matting	SF	210.000	210.000
0168	644.1601	Temporary Pedestrian Curb Ramp	DAY	534.000	534.000
0170	644.1605	Temporary Pedestrian Detectable Warning Field	SF	60.000	60.000
0172	644.1810	Temporary Pedestrian Barricade	LF	240.000	240.000
0174	645.0140	Geotextile Type SAS	SY	695.000	695.000
0176	650.4000	Construction Staking Storm Sewer	EACH	38.000	38.000
0178	650.4500	Construction Staking Subgrade	LF	1,555.000	1,555.000
0180	650.5000	Construction Staking Base	LF	1,555.000	1,555.000
0182	650.5500	Construction Staking Curb Gutter and Curb & Gutter	LF	2,590.000	2,590.000
0184	650.9000	Construction Staking Curb Ramps	EACH	16.000	16.000
0186	650.9500	Construction Staking Sidewalk (project) 01. 4986-00-65	EACH	1.000	1.000
0188	650.9911	Construction Staking Supplemental Control (project) 01. 4986-00-65	EACH	1.000	1.000
0190	650.9920	Construction Staking Slope Stakes	LF	1,591.000	1,591.000
0192	690.0150	Sawing Asphalt	LF	250.000	250.000
0194	690.0250	Sawing Concrete	LF	220.000	220.000
0196	ASP.1T0A	On-the-Job Training Apprentice at $5.00/HR	HRS	300.000	300.000

Estimate Of Quantities

4986-00-65

Line	Item	Item Description	Unit	Total	Qty
0198	ASP.1T0G	On-the-Job Training Graduate at $5.00/HR	HRS	600.000	600.000
0200	SPV.0060	Special 01. Remove and Temporary Relocate Mailbox	EACH	21.000	21.000
0202	SPV.0060	Special 02. Reconstructing Sanitary Manholes	EACH	4.000	4.000
0204	SPV.0060	Special 03. Adjusting Sanitary Manholes	EACH	3.000	3.000
0206	SPV.0060	Special 04. Adjusting Water Valve Box	EACH	5.000	5.000
0208	SPV.0060	Special 05. Adjusting Water Curb Box	EACH	9.000	9.000
0210	SPV.0075	Special 01. Street Sweeping	HRS	35.000	35.000
0212	SPV.0090	Special 01. Concrete Curb & Gutter 24-Inch Type D	LF	153.000	153.000
0214	SPV.0090	Special 02. Storm Sewer Lateral	LF	339.000	339.000
0216	SPV.0165	Special 01. Insulation Board Polystyrene 2-Inch	SF	800.000	800.000

3

GRUBBING

STATION - STATION	LOCATION	201.0205 STA
CATEGORY CODE 0010		
17+00-21+00	LT	4
	TOTALS	**4**

REMOVING SMALL PIPE CULVERTS

STATION	LOCATION	203.0100 EACH	COMMENTS
CATEGORY CODE 0010			
12+42	RT	1	REMOVE 18 LF OF CMCP 15-INCH
13+19	RT	1	REMOVE 19 LF OF CMCP 12-INCH
13+79	RT	1	REMOVE 18 LF OF CMCP 15-INCH
14+08	LT	1	REMOVE 20 LF OF CMCE 19X27-INCH
14+38	RT	1	REMOVE 20 LF OF CMCP 15-INCH
14+91	LT	1	REMOVE 24 LF OF CMCE 21X30-INCH
15+26	RT	1	REMOVE 24 LF OF CMCE 13X17-INCH
15+64	LT	1	REMOVE 34 LF OF CMCP 24-INCH
16+72	LT	1	REMOVE 29 LF OF CMCP 12-INCH
16+74	RT	1	REMOVE 20 LF OF CMCP 12-INCH
18+15	RT	1	REMOVE 31 LF OF CMCP 12-INCH
18+22	LT	1	REMOVE 22 LF OF CPCP 12-INCH
18+63	LT	1	REMOVE 21 LF OF CMCP 24-INCH
19+83	RT	1	REMOVE 18 LF OF CMCP 12-INCH
21+92	RT	1	REMOVE 24 LF OF CMCP 12-INCH
	TOTAL	**15**	

REMOVING ITEMS

STATION	LOCATION	204.0100 REMOVING CONCRETE PAVEMENT SY	204.0150 REMOVING CURB & GUTTER LF	204.0155 REMOVING CONCRETE SIDEWALK SY	204.0170 REMOVING FENCE LF	204.0185 REMOVING MASONRY CY	COMMENTS
CATEGORY CODE 0010							
10+70-11+47	LT & RT	75	23	37	--	--	ROADWAY
10+90	LT	--	--	--	16	--	--
11+63	LT	--	--	12	--	--	SERVICE WALK
13+20	RT	13	--	--	--	--	DRIVEWAY W/ CURB
14+48	RT	--	--	--	8	--	--
14+91	LT	74	--	--	--	2	DRIVEWAY
18+15	RT	52	--	--	--	2	DRIVEWAY
199+15 - 199+72	LT & RT	19	85	27	--	--	ROADWAY
299+25 - 299+61	LT & RT	--	62	18	--	--	ROADWAY
398+99 - 399+65	LT & RT	17	120	--	--	--	ROADWAY
	TOTALS	**250**	**290**	**94**	**24**	**4**	

3

REMOVING STORM SEWER ITEMS

STATION - STATION	LOCATION	204.0210 REMOVING MANHOLES EACH	204.0220 REMOVING INLETS EACH	204.0245.01 REMOVING STORM SEWER 4-INCH LF	204.0245.02 REMOVING STORM SEWER 12-INCH LF	204.0245.03 REMOVING STORM SEWER 18-INCH LF	204.0245.04 REMOVING STORM SEWER 24-INCH LF	204.0245.05 REMOVING STORM SEWER 30-INCH LF
CATEGORY CODE 0010								
12+00-13+00	LT & RT	2	2	--	55	--	27	125
19+50-22+50	LT & RT	4	3	5	98	291	50	--
	TOTALS	**6**	**5**	**5**	**153**	**291**	**77**	**125**

BASE AGGREGATE DENSE, BREAKER RUN, AND WATER ITEMS

STATION - STATION	LOCATION	305.0110 BASE AGGREGATE DENSE 3/4-INCH TON	305.0120 BASE AGGREGATE DENSE 1 1/4-INCH TON	311.0110* BREAKER RUN TON	624.0100 WATER MGAL
CATEGORY CODE 0010					
10+70 - 24+00	LT & RT	440	3,590	6,300	140
	TOTALS	**440**	**3,590**	**6,300**	**140**

BASE AGGREGATE DENSE 3/4-INCH WEIGHT CALCULATIONS BASED ON 2.1 TONS/CY.
BASE AGGREGATE DENSE 1 1/4-INCH WEIGHT CALCULATIONS BASED ON 2.0 TONS/CY.
BREAKER RUN WEIGHT CALCULATIONS BASED ON 1.8 TONS/CY.
*ADDITIONAL QUANTITIES SHOWN ELSEWHERE IN PLANS

3

DIVISION	FROM/TO STATION	LOCATION	205.0100 COMMON EXCAVATION (1) CUT (2)	EBS EXCAVATION (3)	SALVAGED/UNUSABLE PAVEMENT MATERIAL (4)	AVAILABLE MATERIAL (5)	UNEXPANDED FILL	EXPANDED FILL (13) FACTOR 1.30	MASS ORDINATE +/- (14)	WASTE
DIVISION 1										
MINNESOTA AVENUE	10+70/24+00	MINNESOTA AVENUE	7,718	214	711	7,007	140	182	6,825	6,825
ROSE STREET	199+25/199+82	ROSE STREET	271	0	40	231	0	0	231	231
BLACKBIRD STREET	299+25/299+82	BLACKBIRD STREET	263	0	29	234	0	0	234	234
ANNE STREET	399+25/399+82	ANNE STREET	259	0	34	225	0	0	225	225
DIVISION 1 SUBTOTAL			8,511	214	814	7,697	140	182	7,515	7,515
GRAND TOTAL			8,511	214	814	7,697	140	182	7,515	7,515
TOTAL COMMON EXC			8,725							

3

NOTES:
(1) COMMON EXCAVATION IS THE SUM OF THE CUT AND EBS EXCAVATION COLUMNS. ITEM NUMBER 205.0100
(2) SALVAGED/UNSUABLE PAVEMENT MATERIAL IS INCLUDED IN CUT.
(3) EBS EXCAVATION TO BE BACKFILLED WITH BREAKER RUN.
(4) SALVAGED/UNUSABLE PAVEMENT MATERIAL
(5) AVAILABLE MATERIAL = CUT - SALVAGED/UNUSUABLE PAVEMENT MATERIAL
(6) NOT USED
(7) NOT USED
(8) NOT USED
(9) NOT USED
(10) NOT USED
(11) NOT USED
(12) NOT USED
(13) EXPANDED FILL FACTOR = 1.30. EXPANDED FILL = UNEXPANDED FILL * FILL FACTOR
(14) THE MASS ORDINATE + OR - QTY CALCULATED FOR THE DIVISION. PLUS QUANTITY INDICATES AN EXCESS OF MATERIAL WITHIN THE DIVISION. MINUS INDICATES A SHORTAGE OF MATERIAL WITHIN THE DIVISION.
(15) FACTORS USED TO COMPUTE ANTICIPATED WASTE AND THE COMPUTED WASTE VOLUME IDENTIFIED ARE FOR GENERAL INFORMATION ONLY.

BREAKER RUN & GEOSYNTHETICS

LOCATION	311.0110* BREAKER RUN TON	645.0140 GEOTEXTILE TYPE SAS SY
CATEGORY CODE 0010		
UNDISTRIBUTED EBS	400	695
TOTALS	**400**	**695**

BREAKER RUN WEIGHT CALCULATIONS BASED ON 1.8 TONS/ CY.
* ADDITIONAL QUANTITIES SHOWN ELSEWHERE IN PLANS

DRILLED TIE BARS

STATION - STATION	LOCATION	416.0610 EACH
CATEGORY CODE 0010		
10+70	LT & RT	6
199+15	RT	3
199+25	LT	3
299+25	LT & RT	6
398+99	LT	3
399+08	RT	3
	TOTAL	**24**

ASPHALTIC ITEMS

STATION - STATION	LOCATION	455.0605 TACK COAT GAL	460.5223 HMA PAVEMENT 3 LT 58-28 S TON	460.5224 HMA PAVEMENT 4 LT 58-28 S TON
CATEGORY CODE 0010				
10+70 - 24+00	LT & RT	310	1,030	690
	TOTALS	**310**	**1,030**	**690**

HMA PAVEMENT WEIGHT CALCULATIONS BASED ON 112 LB/SY/IN.
TACK COAT CALCULATIONS BASED ON 0.050 GAL/SY

3

DRIVEWAY ITEMS

STATION	LOCATION	465.0120 ASPHALTIC SURFACE DRIVEWAYS AND FIELD ENTRANCES TON	602.0810 CONCRETE DRIVEWAY 6-INCH SY
CATEGORY CODE 0010			
10+99	RT	--	21
12+45	RT	--	17
13+20	RT	--	32
13+79	RT	2	18
14+08	LT	--	19
14+40	RT	--	16
14+91	LT	--	46
15+25	RT	--	28
16+74	LT	6	27
16+75	RT	--	16
18+15	RT	--	111
18+24	LT	--	28
18+59	LT	--	29
19+18	RT	--	19
19+83	RT	2	18
21+03	RT	--	26
21+92	RT	2	25
199+29	RT	--	20
399+15	LT	--	22
399+22	RT	--	26
	TOTALS	**12**	**564**

ITEMS FOR GRAVEL DRIVEWAYS SHOWN UNDER THE BASE AGGREGATE DENSE TABLE

CONCRETE CURB AND GUTTER ITEMS

STATION - STATION	601.0411 CONCRETE CURB & GUTTER 30-INCH TYPE D LF	601.0600 CONCRETE CURB PEDESTRIAN LF	650.5500 CONSTRUCTION STAKING CURB GUTTER AND CURB & GUTTER LF	SPV.0090.01 CONCRETE CURB & GUTTER 24-INCH TYPE D LF
CATEGORY CODE 0010				
10+70 LT - 199+15 RT	194	--	221	27
199+25 LT - 299+25 RT	338	8	371	33
299+25 LT - 399+08 RT	668	--	718	50
398+99 LT - 22+50 LT	57	--	100	43
10+70 RT - 22+50 RT	1,180	--	1,180	--
TOTALS	**2,437**	**8**	**2,590**	**153**

CONCRETE SIDEWALK ITEMS

STATION - STATION	602.0405 CONCRETE SIDEWALK 4-INCH SF	602.0415 CONCRETE SIDEWALK 6-INCH SF	602.0515 CURB RAMP DETECTABLE WARNING FIELD NATURAL PATINA SF	602.1500 CONCRETE STEPS SF
CATEGORY CODE 0010				
10+70 RT - 22+36 RT	5,112	--	50	--
10+70 LT - 199+50 RT	858	72	20	8
199+50 LT - 299+50 RT	1,321	114	30	--
299+50 LT - 399+34 RT	2,863	158	40	--
399+30 LT - 22+36 LT	186	86	20	--
TOTALS	**10,340**	**430**	**160**	**8**

3

3

STORM SEWER PIPES

FROM - TO	LOCATION	608.0324 STORM SEWER PIPE REINFORCED CONCRETE CLASS III 24-INCH LF	608.0330 STORM SEWER PIPE REINFORCED CONCRETE CLASS III 30-INCH LF	608.0412 STORM SEWER PIPE REINFORCED CONCRETE CLASS IV 12-INCH LF	608.0415 STORM SEWER PIPE REINFORCED CONCRETE CLASS IV 15-INCH LF	608.3012 STORM SEWER PIPE CLASS III-A 12-INCH LF	608.3015 STORM SEWER PIPE CLASS III-A 15-INCH LF	608.3018 STORM SEWER PIPE CLASS III-A 18-INCH LF
CATEGORY CODE 0010								
100 - 101	MINNESOTA	--	--	41	--	--	--	--
101 - 201	MINNESOTA	--	--	--	--	--	151	--
201 - 200	MINNESOTA	--	28	--	--	--	--	--
202 - 201	ROSE	--	40	--	--	--	--	--
202.1 - 202	ROSE	--	--	--	--	28	--	--
202.2 - 202	ROSE	--	--	--	--	7	--	--
203 - 202	ROSE	8	--	--	--	--	--	--
204 - 201	MINNESOTA	--	--	--	--	--	--	27
204.1 - 204	MINNESOTA	--	--	--	--	20	--	--
204.2 - 204	MINNESOTA	--	--	--	--	20	--	--
205 - 204	MINNESOTA	--	--	--	--	--	--	187
206 - 205	MINNESOTA	--	--	--	--	37	--	--
207 - 205	MINNESOTA	--	--	--	--	--	--	70
207.1 - 207.2	BLACKBIRD	--	--	35	--	--	--	--
207.2 - 207	BLACKBIRD	--	--	--	41	--	--	--
208 - 207	MINNESOTA	--	--	--	--	--	--	55
208.1 - 208	MINNESOTA	--	--	--	--	20	--	--
208.2 - 208	MINNESOTA	--	--	--	--	20	--	--
209 - 208	MINNESOTA	--	--	--	--	--	--	116
210 - 209	MINNESOTA	--	--	37	--	--	--	--
300 - 305	MINNESOTA	--	--	--	--	--	--	74
301 - 300	MINNESOTA	--	--	--	--	37	--	--
302 - 300	MINNESOTA	--	--	--	--	50	--	--
304 - 303	MINNESOTA	8	--	--	--	--	--	--
304.1 - 304	MINNESOTA	--	--	--	--	19	--	--
305 - 304	MINNESOTA	20	--	--	--	--	--	--
305.1 - 305.2	MINNESOTA	--	--	--	--	19	--	--
305.2 - 305	MINNESOTA	--	--	--	--	--	20	--
306 - 305	MINNESOTA	--	--	--	--	--	--	114
307 - 306	MINNESOTA	--	--	--	--	37	--	--
308 - 306	MINNESOTA	--	--	--	--	--	--	123
308.1 - 308	ANNE	--	--	--	--	--	40	--
308.2 - 308.1	ANNE	--	--	--	--	35	--	--
309 - 308	MINNESOTA	--	--	--	--	--	--	70
310 - 309	MINNESOTA	--	--	--	--	--	28	--
311 - 309	MINNESOTA	--	--	--	--	--	--	26
	TOTALS	**36**	**68**	**113**	**41**	**349**	**211**	**836**

3

PIPE UNDERDRAIN WRAPPED 6-INCH

STATION	LOCATION	612.0406 LF	COMMENTS
CATEGORY CODE 0010			
16+00	RT	50	CONNECT TO STRUCTURE 208.2
19+51	LT	50	CONNECT TO STRUCTURE 305.2
19+51	RT	50	CONNECT TO STRUCTURE 304
199+60	LT	50	CONNECT TO STRUCTURE 202.2
299+60	LT	50	CONNECT TO STRUCTURE 207.1
299+60	RT	50	CONNECT TO STRUCTURE 207.2
399+60	LT	50	CONNECT TO STRUCTURE 308.1
399+60	RT	50	CONNECT TO STRUCTURE 308.2
	TOTAL	**400**	

3

STORM SEWER STRUCTURES

STRUCTURE	STATION	OFFSET*	LOCATION	520.8000 CONCRETE COLLARS FOR PIPE EACH	611.0530 MANHOLE COVERS TYPE J EACH	611.0612 INLET COVERS TYPE C EACH	611.0624 INLET COVERS TYPE H EACH	611.0639 INLET COVERS TYPE H-S EACH	611.1230 CATCH BASINS 2X3-FT EACH	611.2004 MANHOLES 4-FT DIAMETER EACH	611.2005 MANHOLES 5-FT DIAMETER EACH	611.2006 MANHOLES 6-FT DIAMETER EACH	611.3003 INLETS 3-FT DIAMETER EACH	611.3004 INLETS 4-FT DIAMETER EACH	650.4000 CONSTRUCTION STAKING STORM SEWER EACH
CATEGORY CODE 0010															
100	10+93.00	37.00' LT	MINNESOTA	--	--	1	--	--	--	--	--	--	1	--	1
101	11+10.00	0.00	MINNESOTA	--	1	--	--	--	--	1	--	--	--	--	1
200	12+60.33	28.00' RT	MINNESOTA	1	--	--	--	--	--	--	--	--	--	--	1
201	12+60.76	0.00	MINNESOTA	--	1	--	--	--	--	--	--	1	--	--	1
202	199+60.01	10.67' LT	ROSE	--	1	--	--	--	--	--	1	--	--	--	1
202.1	199+60.01	17.50' RT	ROSE	--	--	--	1	--	1	--	--	--	--	--	1
202.2	199+60.01	17.50' LT	ROSE	--	--	--	--	1	1	--	--	--	--	--	1
203	199+52.01	10.62' LT	ROSE	1	--	--	--	--	--	--	--	--	--	--	1
204	12+88.01	0.00	MINNESOTA	--	1	--	--	--	--	1	--	--	--	--	1
204.1	12+88.01	19.50' LT	MINNESOTA	--	--	--	1	--	1	--	--	--	--	--	1
204.2	12+88.01	19.50' RT	MINNESOTA	--	--	--	1	--	1	--	--	--	--	--	1
205	14+75.00	0.00	MINNESOTA	--	1	--	--	--	--	1	--	--	--	--	1
206	14+75.00	37.00' LT	MINNESOTA	--	--	1	--	--	--	--	--	--	1	--	1
207	15+45.48	0.00	MINNESOTA	--	1	--	--	--	--	1	--	--	--	--	1
207.1	299+59.66	17.50' LT	BLACKBIRD	--	--	--	--	1	1	--	--	--	--	--	1
207.2	299+59.66	17.50' RT	BLACKBIRD	--	--	--	--	1	1	--	--	--	--	--	1
208	16+00.00	0.00	MINNESOTA	--	1	--	--	--	--	1	--	--	--	--	1
208.1	16+00.46	19.50' LT	MINNESOTA	--	--	--	1	--	1	--	--	--	--	--	1
208.2	16+00.00	19.50' RT	MINNESOTA	--	--	--	--	1	1	--	--	--	--	--	1
209	17+16.00	0.00	MINNESOTA	--	1	--	--	--	--	1	--	--	--	--	1
210	17+16.00	37.00' LT	MINNESOTA	--	--	1	--	--	--	--	--	--	1	--	1
300	18+77.00	0.00	MINNESOTA	--	1	--	--	--	--	1	--	--	--	--	1
301	18+77.00	37.00' RT	MINNESOTA	--	--	1	--	--	--	--	--	--	1	--	1
302	18+44.00	37.00' LT	MINNESOTA	--	--	1	--	--	--	--	--	--	1	--	1
303	19+52.05	27.50' RT	MINNESOTA	1	--	--	--	--	--	--	--	--	--	--	1
304	19+51.25	19.50' RT	MINNESOTA	--	--	--	--	1	--	--	--	--	--	1	1
304.1	19+70.00	19.50' RT	MINNESOTA	--	--	--	--	1	1	--	--	--	--	--	1
305	19+51.25	0.00	MINNESOTA	--	1	--	--	--	--	--	1	--	--	--	1
305.1	19+70.00	19.50' LT	MINNESOTA	--	--	--	--	1	1	--	--	--	--	--	1
305.2	19+51.25	19.50' LT	MINNESOTA	--	--	--	--	1	1	--	--	--	--	--	1
306	20+65.00	0.00	MINNESOTA	--	1	--	--	--	--	1	--	--	--	--	1
307	20+65.00	37.00' LT	MINNESOTA	--	--	1	--	--	--	--	--	--	1	--	1
308	21+88.12	0.00	MINNESOTA	--	1	--	--	--	--	1	--	--	--	--	1
308.1	399+60.02	17.50' RT	ANNE	--	--	--	--	1	1	--	--	--	--	--	1
308.2	399+60.02	17.50' LT	ANNE	--	--	--	--	1	1	--	--	--	--	--	1
309	22+58.06	0.00	MINNESOTA	--	1	--	--	--	--	1	--	--	--	--	1
310	22+58.06	27.70' LT	MINNESOTA	--	--	1	--	--	--	--	--	--	1	--	1
311	22+58.06	25.76' RT	MINNESOTA	--	--	1	--	--	--	--	--	--	--	1	1
			TOTALS	**3**	**13**	**8**	**4**	**10**	**13**	**10**	**2**	**1**	**7**	**2**	**38**

REMARKS:
*STATIONS AND OFFSETS ARE TO CENTER OF STRUCTURE

3

3

RESTORATION ITEMS

STATION - STATION	625.0100 TOPSOIL SY	627.0200 MULCHING SY	628.2006 EROSION MAT URBAN CLASS I TYPE A SY	629.0210 FERTILIZER TYPE B CWT	630.0140 SEEDING MIXTURE NO. 40 LB	630.0200 SEEDING TEMPORARY LB	630.0500 SEED WATER MGAL
CATEGORY CODE 0010							
10+70 RT - 24+00 RT	1,229	--	1,229	0.80	22.1	--	27.6
10+70 LT - 199+15 RT	202	--	202	0.10	3.6	--	4.5
199+25 LT - 299+25 RT	322	--	322	0.20	5.8	--	7.2
299+25 LT - 399+08 RT	739	--	739	0.50	13.3	--	16.6
398+99 LT - 24+00 LT	228	--	228	0.10	4.1	--	5.1
UNDISTRIBUTED	680	850	680	1.00	11.1	25.0	34.0
TOTALS	**3,400**	**850**	**3,400**	**2.70**	**60.0**	**25.0**	**95.0**

TRAFFIC CONTROL ITEMS

	NUMBER OF DAYS IN SERVICE	643.0420 TRAFFIC CONTROL BARRICADES TYPE III NO. REQ'D	TOTAL DAY	643.0705 TRAFFIC CONTROL WARNING LIGHTS TYPE A NO. REQ'D	TOTAL DAY	643.0900* TRAFFIC CONTROL SIGNS NO. REQ'D	TOTAL DAY	643.1050 TRAFFIC CONTROL SIGNS PCMS NO. REQ'D	NO. DAYS	TOTAL DAY
CATEGORY CODE 0010										
PROJECT 4986-00-65	89	*6*	534	*12*	1,068	*15*	1,335	*2*	*7*	14
DETOUR	89	*4*	356	*8*	712	*22*	1,958	--	--	--
TOTALS			**890**		**1,780**		**3,293**			**14**

*ADDITIONAL QUANTITIES SHOWN ELSEWHERE IN PLANS

EROSION CONTROL ITEMS

STATION	LOCATION	628.1504 SILT FENCE LF	628.1520 SILT FENCE MAINTENANCE LF	628.1905 MOBILIZATIONS EROSION CONTROL EACH	628.1910 MOBILIZATIONS EMERGENCY EROSION CONTROL EACH	628.7005 INLET PROTECTION TYPE A EACH	628.7010 INLET PROTECTION TYPE B EACH	628.7015 INLET PROTECTION TYPE C EACH	628.7020 INLET PROTECTION TYPE D EACH	628.7555 CULVERT PIPE CHECKS EACH
CATEGORY CODE 0010										
9+73	LT	--	--	--	--	--	--	1	--	--
9+82	RT	--	--	--	--	--	--	1	--	--
10+93	LT	--	--	--	--	1	1	--	--	--
12+16	LT	--	--	--	--	--	1	--	--	--
12+86	LT	--	--	--	--	--	--	--	--	5
12+88	LT & RT	--	--	--	--	--	--	2	--	--
14+75	LT	--	--	--	--	1	1	--	--	--
16+00	LT & RT	--	--	--	--	--	--	--	2	--
17+16	LT	--	--	--	--	1	1	--	--	--
18+44	LT	--	--	--	--	1	1	--	--	--
18+77	RT	--	--	--	--	1	1	--	--	--
19+52	LT & RT	--	--	--	--	--	1	--	2	--
19+70	LT & RT	--	--	--	--	--	--	--	2	--
20+65	LT	--	--	--	--	1	1	--	--	--
20+70	LT	--	--	--	--	--	1	--	--	--
21+65	LT	--	--	--	--	--	1	--	--	--
22+42	LT	--	--	--	--	--	1	--	--	--
22+51	RT	--	--	--	--	--	1	--	--	--
22+58	LT & RT	--	--	--	--	2	2	--	--	--
199+60	LT & RT	--	--	--	--	--	--	3	1	--
299+60	LT & RT	--	--	--	--	--	--	--	2	--
399+60	LT & RT	--	--	--	--	--	--	2	2	--
UNDISTRIBUTED		200	200	7	5	2	4	2	3	1
	TOTALS	**200**	**200**	**7**	**5**	**10**	**18**	**11**	**14**	**6**

3

TEMPORARY PEDESTRIAN ACCOMMODATION ITEMS

LOCATION	643.0300 TRAFFIC CONTROL DRUMS NO. REQ'D	NO. DAYS	DAY	643.0900* TRAFFIC CONTROL SIGNS NO. REQ'D	NO. DAYS	DAY	643.3350 TEMPORARY MARKING CROSSWALK REMOVABLE TAPE 6-INCH LF	644.1440 TEMPORARY PEDESTRIAN SURFACE MATTING SF	644.1601 TEMPORARY PEDESTRIAN CURB RAMP NO. REQ'D	NO. DAYS	DAY	644.1605 TEMPORARY PEDESTRIAN DETECTABLE WARNING FIELD SF	644.1810 TEMPORARY PEDESTRIAN BARRICADE LF
CATEGORY CODE 0010													
MINNESOTA AVENUE	--	--	--	2	89	178	--	--	--	--	--	--	24
ROSE STREET	14	89	1,246	2	89	178	66	66	2	89	178	20	72
BLACKBIRD STREET	14	89	1,246	2	89	178	66	66	2	89	178	20	72
ANNE STREET	14	89	1,246	2	89	178	68	78	2	89	178	20	72
TOTALS			**3,738**			**712**	**200**	**210**			**534**	**60**	**240**

*ADDITIONAL QUANTITIES SHOWN ELSEWHERE IN PLANS

3

SIGNING ITEMS

SIGN NUMBER	EXISTING STATION	EXISTING LOCATION	PROPOSED STATION	PROPOSED LOCATION	ROADWAY	SIGN CODE	SIZE	634.0814 POSTS TUBULAR STEEL 2x2X14 EACH	637.2210 SIGNS TYPE II REFLECTIVE H SF	638.2102 MOVING SIGNS TYPE II EACH	638.2602 REMOVING SIGNS TYPE II EACH	638.3000 REMOVING SMALL SIGN SUPPORTS EACH	COMMENTS
CATEGORY CODE 0010													
101	19+75	RT	199+65	RT	ROSE ST	R1-1	30X30	1	5.18	--	1	1	--
201	299+74	RT	299+65	RT	BLACKBIRD ST	R1-1	30X30	1	5.18	--	1	1	--
202	15+55	RT	15+52	RT	MINNESOTA AVE	R2-1	24X30	1	5.00	--	1	1	[25]
301	21+37	RT	21+31	RT	MINNESOTA AVE	R2-1	24X30	1	5.00	--	1	1	[25]
302	399+65	RT	399+62	RT	ANNE ST	R1-1	30X30	1	5.18	--	1	1	--
303	23+61	LT	23+59	LT	MINNESOTA AVE	R14-1	24X18	1	3.00	--	1	1	--
						M6-1	21X21	--	3.06	--	--	--	[UA]
304	23+82	LT	23+86	LT	MINNESOTA AVE	R2-1	24X30	1	5.00	--	1	1	--
								--	--	1	--	--	MOVE "RADAR ENFORCED" SIGN, MOUNT BELOW SPEED LIMIT SIGN
							TOTALS	**7**	**36.60**	**1**	**7**	**7**	

CONSTRUCTION STAKING ITEMS

STATION - STATION	LOCATION	650.4500 CONSTRUCTION STAKING SUBGRADE LF	650.5000 CONSTRUCTION STAKING BASE LF	650.9000 CONSTRUCTION STAKING CURB RAMPS EACH	650.9500 CONSTRUCTION STAKING SIDEWALK EACH	650.9911 CONSTRUCTION STAKING SUPPLEMENTAL CONTROL EACH	650.9920 CONSTRUCTION STAKING SLOPE STAKES LF
CATEGORY CODE 0010							
PROJECT 4986-00-65		--	--	16	1	1	--
10+70 - 24+00	MINNESOTA AVE	1,330	1,330	--	--	--	1,330
199+15 - 200+00	ROSE ST	75	75	--	--	--	85
299+25 - 300+00	BLACKBIRD ST	75	75	--	--	--	75
398+99 - 400+00	ANNE ST	75	75	--	--	--	101
	TOTALS	**1,555**	**1,555**	**16**	**1**	**1**	**1,591**

STAKING ITEMS FOR STORM SEWER, AND CURB & GUTTER SHOWN ELSEWHERE

SAWING PAVEMENT ITEMS

STATION - STATION	LOCATION	690.0150 SAWING ASPHALT LF	690.0250 SAWING CONCRETE LF	COMMENTS
CATEGORY CODE 0010				
10+70	LT & RT	--	50	MINNESOTA AVE
11+08	RT	--	2	SERVICE WALK
11+31	RT	--	4	SERVICE WALK
11+63	LT	--	4	SERVICE WALK
13+20	RT	--	14	DRIVEWAY
13+79	RT	12	--	DRIVEWAY
14+55	LT	--	5	SERVICE WALK
14+91	LT	--	20	DRIVEWAY
16+74	LT	34	--	DRIVEWAY
18+15	RT	--	41	DRIVEWAY
19+83	RT	12	--	DRIVEWAY
21+92	RT	18	--	DRIVEWAY
24+00	LT & RT	22	--	MINNESOTA AVE
199+15 - 199+25	LT & RT	43	4	ROSE ST
199+29	RT	--	25	DRIVEWAY
199+50	LT & RT	--	9	SIDEWALK
299+25	LT & RT	33	4	BLACKBIRD ST
299+50	LT & RT	--	9	SIDEWALK
299+52	RT	--	4	SERVICE WALK
398+99 - 399+25	LT & RT	76	4	ANNE ST
399+22	RT	--	21	DRIVEWAY
	TOTALS	**250**	**220**	

3

REMOVE AND TEMPORARY RELOCATE MAILBOX

STATION	LOCATION	HOUSE NUMBER	SPV.0060.01 EACH
CATEGORY CODE 0010			
11+03	LT	N7701	1
11+66	LT	1,709	1
11+66	LT	1,713	1
13+16	LT	1,716	1
13+74	LT	N7721	1
13+74	LT	1,721	1
14+37	LT	1,724	1
14+37	LT	1,725	1
14+37	LT	1,729	1
15+34	LT	1,732	1
16+56	LT	1,801	1
18+09	LT	1,810	1
18+11	LT	1,809	1
19+09	LT	N7757	1
19+11	LT	N7760	1
1,985	LT	N7767	1
21+47	LT	1,824	1
21+47	LT	1,825	1
21+47	LT	1,830	1
22+55	LT	1,901	1
23+49	LT	N7749	1
		TOTAL	**21**

ADJUSTING SANITARY MANHOLES

STATION	LOCATION	EXISTING ELEVATION	FINISHED ELEVATION	SPV.0060.02 RECONSTRUCTING SANITARY MANHOLES EACH	SPV.0060.03 ADJUSTING SANITARY MANHOLES EACH	COMMENTS
CATEGORY CODE 0020						
10+85	C/L	769.44	769.39	--	1	0.05' ADJUSTMENT DOWN
11+61	LT	770.51	769.53	1	--	0.98' ADJUSTMENT DOWN
15+68	LT	772.29	770.89	1	--	1.4' ADJUSTMENT DOWN
18+44	LT	772.45	771.52	1	--	0.93' ADJUSTMENT DOWN
18+66	RT	772.14	771.40	1	--	0.74' ADJUSTMENT DOWN
22+37	RT	772.63	772.00	--	1	0.63' ADJUSTMENT DOWN
299+34	C/L	771.01	770.92	--	1	0.09' ADJUSTMENT DOWN
			TOTALS	**4**	**3**	

ADJUSTING WATER MAIN ITEMS

STATION	LOCATION	SPV.0060.04 ADJUSTING WATER VALVE BOX EACH	SPV.0060.05 ADJUSTING WATER CURB BOX EACH
CATEGORY CODE 0020			
10+70	24' RT	1	--
12+84	23' LT	1	--
13+71	26' LT	--	1
14+38	27' RT	--	1
15+82	30' RT	--	1
16+33	26' RT	--	1
17+55	28' LT	--	1
17+85	27' RT	--	1
18+43	25' LT	1	--
19+49	26' LT	--	1
20+73	27' RT	--	1
22+06	27' RT	--	1
299+64	22' LT	1	--
399+61	26' LT	1	--
	TOTALS	**5**	**9**

3

STREET SWEEPING

LOCATION	SPV.0075.01 HRS
CATEGORY CODE 0010	
PROJECT 4986-00-65	35
TOTAL	**35**

STORM SEWER LATERAL

LOCATION	HOUSE NUMBER	SPV.0090.02 LF
CATEGORY CODE 0020		
RT	N7701	35
RT	1716	16
RT	N7721	35
LT	1721	35
RT	1724	35
RT	1732	35
RT	1810	35
RT	1810	56
LT	N7760	16
RT	1824	35
LT	1825	6
TOTAL		**339**

INSULATION BOARD POLYSTYRENE 2-INCH

STATION	LOCATION	SPV.0165.01 SF
CATEGORY CODE 0020		
10+98	LT	32
12+61	LT	32
12+88	LT	32
14+50 - 16+10	LT	640
199+60	LT	32
299+60	LT	32
TOTAL		**800**

R/W PROJECT NUMBER 4986-00-64	SHEET NUMBER	TOTAL SHEETS
FEDERAL PROJECT NUMBER	4.01	7

PLAT OF RIGHT OF WAY REQUIRED FOR

V NORTH FOND DU LAC, MINNESOTA AVE CHAPLEAU STREET - ANNE STREET

LOCAL STREET	FOND DU LAC COUNTY

CONSTRUCTION PROJECT NUMBER
4986-00-65

CONVENTIONAL SYMBOLS

SECTION LINE
QUARTER LINE
SIXTEENTH LINE
NEW REFERENCE LINE
NEW R/W LINE
EXISTING R/W OR HE LINE
PROPERTY LINE (P.L.)
LOT, TIE & OTHER MINOR LINES
SLOPE INTERCEPT
CORPORATE LIMITS
UNDERGROUND FACILITY (COMMUNICATIONS, ELECTRIC, ETC) (W) (TYPE)
NEW R/W (FEE OR HE) (HATCHING VARIES BY OWNER)
TEMPORARY LIMITED EASEMENT AREA
EASEMENT AREA (PERMANENT LIMITED OR RESTRICTED DEVELOPMENT)
TRANSMISSION STRUCTURES
BUILDING
TO BE REMOVED
BRIDGE
CULVERT

SECTION CORNER SYMBOL (18, 23, 24, 26, 25, 35)
SECTION CORNER MONUMENT
GEODETIC SURVEY MONUMENT
SIXTEENTH CORNER MONUMENT
SIGN
R/W MONUMENT (TO BE SET)
NON-MONUMENTED R/W POINT
FOUND IRON PIN (1-INCH UNLESS NOTED) IP
OFF-PREMISE SIGN (#1-25)

	COMPENSABLE	NON-COMPENSABLE
ELECTRIC POLE		
TELEPHONE POLE		
PEDESTAL (LABEL TYPE) (TV, TEL, ELEC, ETC.)		

ACCESS RESTRICTED BY ACQUISITION
NO ACCESS (BY STATUTORY AUTHORITY)
ACCESS RESTRICTED (BY PREVIOUS PROJECT OR CONTROL)
NO ACCESS (NEW HIGHWAY)
PARCEL NUMBER 25
UTILITY NUMBER 40
PARALLEL OFFSETS

CONVENTIONAL UTILITY SYMBOLS

WATER — W —
GAS — G —
TELEPHONE — T —
OVERHEAD TRANSMISSION LINES — OH —
ELECTRIC — E —
CABLE TELEVISION — TV —
FIBER OPTIC — FO —
SANITARY SEWER — SAN —
STORM SEWER — SS —
ELECTRIC TOWER ⊠

CONVENTIONAL ABBREVIATIONS

ACCESS RIGHTS	AR	POINT OF COMPOUND CURVE	PCC
ACRES	AC	POINT OF INTERSECTION	PI
AHEAD	AH	PROPERTY LINE	PL
ALUMINUM	ALUM	RECORDED AS	(100')
AND OTHERS	ET AL	REEL / IMAGE	R/I
BACK	BK	REFERENCE LINE	R/L
BLOCK	BLK	REMAINING	REM
CENTERLINE	C/L	RESTRICTIVE DEVELOPMENT EASEMENT	RDE
CERTIFIED SURVEY MAP	CSM	RIGHT	RT
CONCRETE	CONC	RIGHT OF WAY	R/W
COUNTY	CO	SECTION	SEC
COUNTY TRUNK HIGHWAY	CTH	SEPTIC VENT	SEPV
DISTANCE	DIST	SQUARE FEET	SF
CORNER	COR	STATE TRUNK HIGHWAY	STH
DOCUMENT NUMBER	DOC	STATION	STA
EASEMENT	EASE	TELEPHONE PEDESTAL	TP
EXISTING	EX	TEMPORARY LIMITED EASEMENT	TLE
GAS VALVE	GV	TRANSPORTATION PROJECT PLAT	TPP
GRID NORTH	GN	UNITED STATES HIGHWAY	USH
HIGHWAY EASEMENT	HE	VOLUME	V
IDENTIFICATION	ID		
LAND CONTRACT	LC		
LEFT	LT		
MONUMENT	MON		
NATIONAL GEODETIC SURVEY	NGS		
NUMBER	NO		
OUTLOT	OL		
PAGE	P		
POINT OF TANGENCY	PT		
PERMANENT LIMITED EASEMENT	PLE		
POINT OF BEGINNING	POB		
POINT OF CURVATURE	PC		

CURVE DATA ABBREVIATIONS

LONG CHORD	LCH
LONG CHORD BEARING	LCB
RADIUS	R
DEGREE OF CURVE	D
CENTRAL ANGLE	Δ /DELTA
LENGTH OF CURVE	L
TANGENT	T
DIRECTION AHEAD	DA
DIRECTION BACK	DB

END RELOCATION ORDER
22+75.00
Y 402655.03
X 807305.38
1186.79' NORTH AND 6.84' WEST OF THE SOUTHEAST CORNER OF SECTION 29, T16N, R17E

BEGIN RELOCATION ORDER
10+65.00
Y 401445.05
X 807312.50
23.18' SOUTH AND 0.27' EAST OF THE NORTHWEST CORNER OF SECTION 33, T16N, R17E

LAYOUT
SCALE 0 — 1 MI.

TOTAL NET LENGTH OF CENTERLINE = 0.229 MI.

NOTES:

POSITIONS SHOWN ON THIS PLAT ARE WISCONSIN COORDINATE REFERENCE SYSTEM COORDINATES (WISCRS), FOND DU LAC COUNTY, NAD83(2011), IN U.S. SURVEY FEET. VALUES ARE GRID COORDINATES, GRID BEARINGS, AND GRID DISTANCES. GRID DISTANCES MAY BE USED AS GROUND DISTANCES.

ALL NEW RIGHT-OF-WAY MONUMENTS WILL BE TYPE 2 (TYPICALLY 1" X 24" IRON PIPES), UNLESS OTHERWISE NOTED, AND WILL BE PLACED PRIOR TO THE COMPLETION OF THE PROJECT.

ALL RIGHT-OF-WAY LINES DEPICTED IN THE NON-ACQUISITION AREAS ARE INTENDED TO RE-ESTABLISH EXISTING RIGHT-OF-WAY LINES AS DETERMINED FROM PREVIOUS PROJECTS, OTHER RECORDED DOCUMENTS, CENTERLINE OF EXISTING PAVEMENTS AND/OR EXISTING OCCUPATIONAL LINES.

RIGHT-OF-WAY BOUNDARIES ARE DEFINED WITH COURSES OF THE PERIMETER OF THE HIGHWAY LANDS REFERENCED TO THE U.S. PUBLIC LAND SURVEY SYSTEM OR OTHER SURVEYS OF PUBLIC RECORD.

DIMENSIONING FOR THE NEW RIGHT-OF-WAY IS MEASURED ALONG AND PERPENDICULAR TO THE NEW REFERENCE LINES.

A PERMANENT LIMITED EASEMENT (PLE) IS A RIGHT FOR CONSTRUCTION AND MAINTENANCE PURPOSES, AS DEFINED HEREIN, INCLUDING THE RIGHT TO OPERATE NECESSARY EQUIPMENT THEREON AND THE RIGHT OF INGRESS AND EGRESS, AS LONG AS REQUIRED FOR SUCH PUBLIC PURPOSE, INCLUDING THE RIGHT TO PRESERVE, PROTECT, REMOVE, OR PLANT THEREON ANY VEGETATION THAT THE HIGHWAY AUTHORITIES MAY DEEM DESIRABLE, BUT WITHOUT PREJUDICE TO THE OWNER'S RIGHTS TO MAKE OR CONSTRUCT IMPROVEMENTS ON SAID LANDS OR TO FLATTEN THE SLOPES, PROVIDING SAID ACTIVITIES WILL NOT IMPAIR OR OTHERWISE ADVERSELY AFFECT THE HIGHWAY FACILITIES.

A TEMPORARY LIMITED EASEMENT (TLE) IS A RIGHT FOR CONSTRUCTION PURPOSES, AS DEFINED HEREIN, INCLUDING THE RIGHT TO OPERATE NECESSARY EQUIPMENT THEREON, THE RIGHT OF INGRESS AND EGRESS, AS LONG AS REQUIRED FOR SUCH PUBLIC PURPOSE, INCLUDING THE RIGHT TO PRESERVE, PROTECT, REMOVE, OR PLANT THEREON ANY VEGETATION THAT THE HIGHWAY AUTHORITIES MAY DEEM DESIRABLE. ALL (TLEs) ON THIS PLAT EXPIRE AT THE COMPLETION OF THE CONSTRUCTION PROJECT FOR WHICH THIS INSTRUMENT IS GIVEN.

PROPERTY LINES SHOWN ON THIS PLAT FOR PROPERTIES BEING IMPACTED ARE DRAWN FROM DATA DERIVED FROM FILED/RECORDED MAPS AND DOCUMENTS OF PUBLIC RECORD. THIS PLAT MAY NOT BE A TRUE REPRESENTATION OF EXISTING PROPERTY LINES, EXCLUDING RIGHT-OF-WAY, AND SHOULD NOT BE USED AS A SUBSTITUTE FOR AN ACCURATE FIELD SURVEY.

FOR THE CURRENT ACCESS/DRIVEWAY INFORMATION, CONTACT THE PLANNING UNIT OF THE WISCONSIN DEPARTMENT OF TRANSPORTATION OFFICE IN GREEN BAY.

PARCEL AND UTILITY IDENTIFICATION NUMBERS MAY NOT POINT TO ALL AREAS OF ACQUISITION, AS NOTED ON THE DETAIL PAGES.

INFORMATION FOR THE BASIS OF EXISTING HIGHWAY RIGHT-OF-WAY POINTS OF REFERENCE AND ACCESS CONTROL ARE LISTED ON THE DETAIL PAGES.

THIS PLAT IS A GRAPHIC REPRESENTATION AND IS FOR REFERENCE PURPOSES ONLY. DEEDS MUST BE CHECKED TO DETERMINE PROPERTY BOUNDARIES AND ACCESS RIGHTS.

ACCEPTED FOR
TOWN OF FRIENDSHIP
Date 11-14-2024
JEROME MEISENBURG
CHAIRPERSON

ACCEPTED FOR
VILLAGE OF NORTH FOND DU LAC
Date 11/18/24
MITCH VIS
DIRECTOR OF PUBLIC WORKS

ORIGINAL PLAT PREPARED BY
GREMMER & ASSOCIATES, INC.
CONSULTING ENGINEERS
Stevens Point • Fond du Lac
93 South Pioneer Road, Suite 300 • Fond du Lac, WI 54935
(920) 924-5720 • fax (920) 924-5725
11/1/24
DATE
JAY W. PANETTI, PLS

WISCONSIN
JAY W. PANETTI
S-2747
WAUPUN, WI
LAND SURVEYOR

REVISION DATE

FILE NAME : S:\CURRPROJ\FONDDUCO\NORTH FDL, VILLAGE OF\MINNESOTA AVE\CIVIL3D\49860064\RW\DWG\040101-RP.DWG PLOT DATE : 11/1/2024 7:40 AM PLOT BY : JAY PANETTI PLOT NAME :

SCHEDULE OF LANDS & INTERESTS REQUIRED

AREAS SHOWN IN THE TOTAL ACRES COLUMN MAY BE APPROXIMATE AND ARE DERIVED FROM TAX ROLLS OR OTHER AVAILABLE SOURCES AND MAY NOT INCLUDE LANDS OF THE OWNER WHICH ARE NOT CONTIGUOUS TO THE AREA TO BE ACQUIRED. OWNER'S NAMES ARE SHOWN FOR REFERENCE PURPOSES ONLY AND ARE SUBJECT TO CHANGE PRIOR TO THE TRANSFER OF LAND INTERESTS TO THE DEPARTMENT.

PARCEL NUMBER	SHEET NUMBER	OWNER(S)	INTEREST REQUIRED	R/W S.F. REQUIRED NEW	EXISTING	TOTAL	P.L.E. S.F. PERM.	T.L.E. S.F. TEMP.	TAX KEY NUMBER
1	4.04	STEVEN L. SCHUMACHER	TLE	0	0	0	0	167	V05-16-17-99-BF-010-00
2	4.04	CATHY L. MCARTHUR	TLE	0	0	0	0	122	V05-16-17-99-MC-060-00
3	4.04	J&S KAISER PLUS 5 LLC	TLE	0	0	0	0	408	T11-16-17-99-MA-010-00
4	4.04	JASON J. WIRTZ	TLE	0	0	0	0	831	V05-16-17-99-BL-380-00
6	4.04	JOSEPH J. WHITE AND ELIZABETH M. WHITE (ALSO SEE PARCEL 9)	TLE	0	0	0	0	300	T11-16-17-99-MA-020-00
	4.04		TLE	0	0	0	0	379	T11-16-17-99-MA-030-00
			TOTALS:	0	0	0	0	679	
7	4.04	KATHRYN RENEE MORALES	TLE	0	0	0	0	371	V05-16-17-99-MC-100-00
8	4.04	RICHARD S. BACCUS AND JACQUELINE M. BACCUS	TLE	0	0	0	0	383	V05-16-17-99-BL-370-00
	4.04		TLE	0	0	0	0	366	V05-16-17-99-BL-360-00
			TOTALS:	0	0	0	0	749	
9	4.04	JOSEPH J. WHITE AND ELIZABETH M. WHITE (ALSO SEE PARCEL 6)	TLE	0	0	0	0	388	T11-16-17-99-MA-050-00
11	4.04	JACKSON L. ROESEL	TLE	0	0	0	0	372	V05-16-17-99-MC-120-00
12	4.04, 4.05	MICHAEL A. MEYER AND LINDA S. MEYER	PLE, TLE	0	0	0	23	444	V05-16-17-99-BL-220-00
13	4.04, 4.05	ROBERT J. PIETRZYK AND TRISHA L. PIETRZYK	TLE	0	0	0	0	310	T11-16-17-99-MA-070-00
	4.05		TLE	0	0	0	0	80	V05-16-17-28-11-009-00
	4.05		TLE	0	0	0	0	540	V05-16-17-28-11-002-00
			TOTALS:	0	0	0	0	930	
14	4.05	CLARE WOLF	PLE, TLE	0	0	0	57	459	V05-16-17-99-BL-210-00
16	4.05	MEGAN J. INTRIBUS AND DARREN R. INTRIBUS	PLE, TLE	0	0	0	15	1157	V05-16-17-99-BL-010-00
17	4.05	ZITA KELLING, JEFFERY BEAHM, GEORGE BEAHM, AND NANCY SCHUMACHER	TLE	0	0	0	0	580	V05-16-17-28-11-003-00
	4.05		TLE	0	0	0	0	1309	V05-16-17-28-11-004-00
			TOTALS:	0	0	0	0	1889	
18	4.05	HAZEL A. PALMER	PLE, TLE	0	0	0	145	739	V05-16-17-99-WI-110-00
19	4.05, 4.06	BONNIE K. CARDINAL (1/2 INTEREST) AND STEVEN J. CARDINAL (1/2 INTEREST)	PLE, TLE	0	0	0	90	776	T11-16-17-28-11-006-00
21	4.06	JOHN K. CHRISTIE REVOCABLE TRUST DATED APRIL 1, 2022	TLE	0	0	0	0	80	T11-16-17-29-16-003-00
22	4.05, 4.06	MICHAEL JOHN BARNES	PLE, TLE	0	0	0	74	1101	T11-16-17-29-16-002-00
23	4.06	WALTER W. HENNING AND RONDA HENNING	TLE	0	0	0	0	534	T11-16-17-28-11-005-00
24	4.06	BRANDON HOWARD AND KRISTINE HOWARD	TLE	0	0	0	0	564	V05-16-17-28-11-005-00
26	4.06	GLENN L. MATHES AND PAULA L. MATHES	PLE, TLE	0	0	0	6	1091	V05-16-17-99-WI-230-00
27	4.06	WILLIAM R. SUNDERLIN AND EDITH M. SUNDERLIN	TLE	0	0	0	0	626	V05-16-17-28-11-001-00
	4.06		TLE	0	0	0	0	225	T11-16-17-28-11-011-00
			TOTALS:	0	0	0	0	851	
28	4.06	MICHAEL L. FERGE OR SHARON L. FERGE, TRUSTEE(S), OR SUCCESSOR TRUSTEE(S), OF THE FERGE TRUST DATED JUNE 13, 1997	TLE	0	0	0	0	365	V05-16-17-99-WI-240-00
101	4.04, 4.05, 4.06	ALLIANT ENERGY	RELEASE OF RIGHTS						
102	4.04, 4.05, 4.06	AT&T WISCONSIN	RELEASE OF RIGHTS						
103	4.05, 4.06	SPECTRUM	RELEASE OF RIGHTS						

4

4

SHEET 2 OF 7 SHEETS

REVISED: 11/1/2024

REVISION DATE

DATE 11/18/2024

GRID FACTOR

SCALE, FEET 0

HWY: MINNESOTA AVENUE

COUNTY: FOND DU LAC

STATE R/W PROJECT NUMBER 4986-00-64

CONSTRUCTION PROJECT NUMBER 4986-00-65

PLAT SHEET 4.02

PS&E SHEET

E

FILE NAME : 040102-RP.DWG
LAYOUT NAME - RW 1 IN 100 FT

PLOT DATE : 11/1/2024 7:41 AM PLOT BY : JAY PANETTI PLOT NAME : PLOT SCALE : 1 IN:100 FT

WISDOT/CADDS SHEET 75

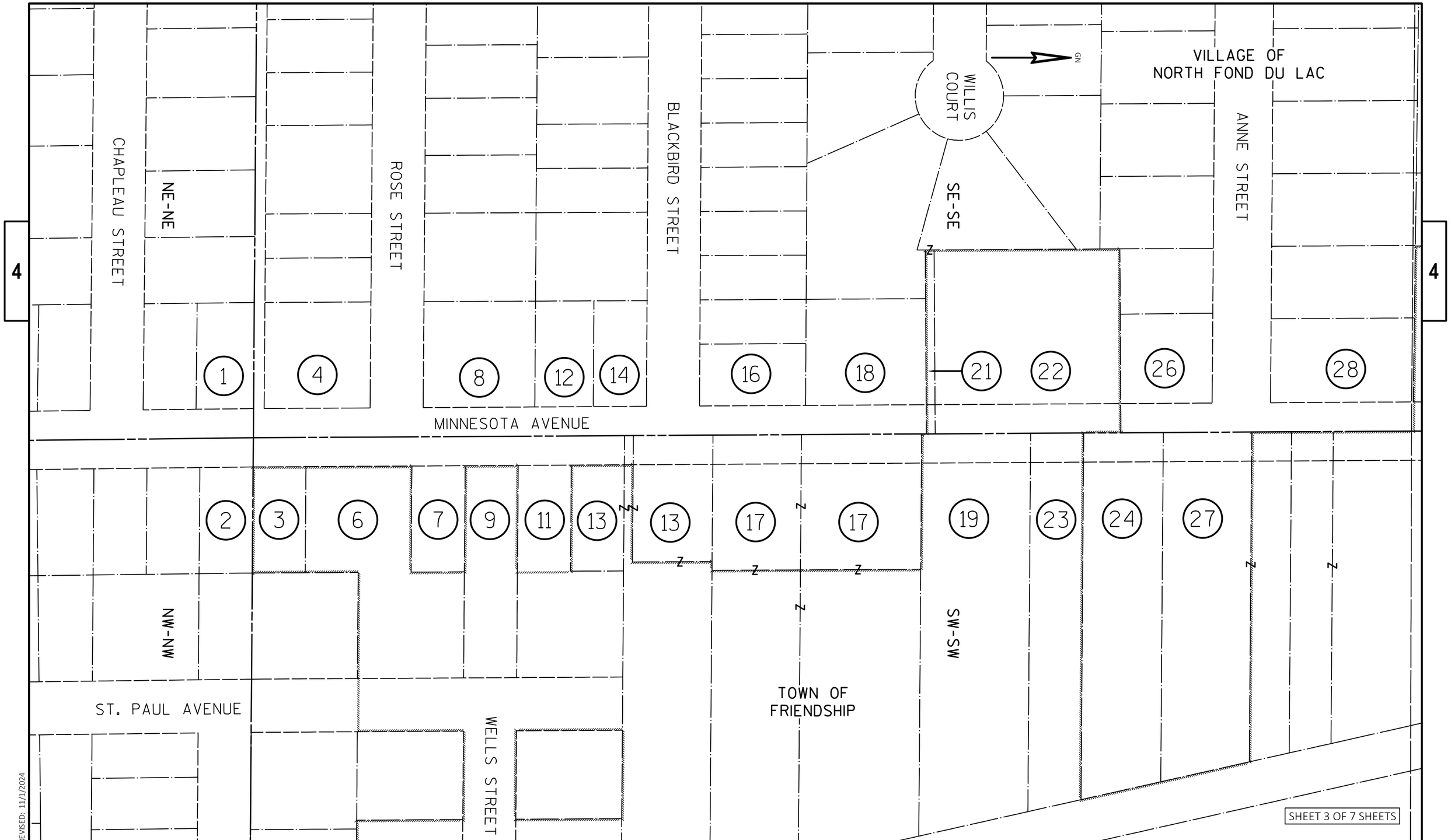

REVISED: 11/1/2024

REVISION DATE	DATE 11/18/2024	SCALE, FEET 0 50 100	HWY: MINNESOTA AVENUE	STATE R/W PROJECT NUMBER 4986-00-64	PLAT SHEET 4.03	
	GRID FACTOR		COUNTY: FOND DU LAC	CONSTRUCTION PROJECT NUMBER 4986-00-65	PS&E SHEET 55	E

FILE NAME : 040103-RP.DWG
LAYOUT NAME - RW 1 IN 100 FT
PLOT DATE : 11/1/2024 7:41 AM PLOT BY : JAY PANETTI PLOT NAME : PLOT SCALE : 1 IN:100 FT

WISDOT/CADDS SHEET 75

NOTE: SEE SHEET 7 FOR COURSE TABLES AND COORDINATE TABLES

VILLAGE OF NORTH FOND DU LAC

NE-NE | SE-SE | NW-NW | SW-SW

CHAPLEAU STREET | ROSE STREET | ALLEY | MINNESOTA AVENUE

BLOCK 1 — BECHAUD'S SECOND ADDITION TO NORTH FOND DU LAC

BLOCK 3 — BLACKBIRD'S ADDITION TO NORTH FOND DU LAC

BLOCK 2 — BLACKBIRD'S ADDITION TO NORTH FOND DU LAC

BLOCK 1 — MARCOU'S 3RD ADDITION TO NORTH FOND DU LAC

TOWN OF FRIENDSHIP

ALUMINUM MONUMENT FOUND Y 401488.093 X 804664.222

SECTION LINE S89°33'14"E 2648.08'

SECTION LINE S89°34'36"E 2633.49'

6' UTILITY EASEMENT DOC. #259501

JOINT DRIVEWAY AGREEMENT DOC. #507784

101 ALLIANT ENERGY RELEASE OF RIGHTS

1 V05-16-17-99-BF-010-00 STEVEN L. SCHUMACHER

4 V05-16-17-99-BL-380-00 JASON J. WIRTZ

102 AT&T WISCONSIN RELEASE OF RIGHTS

8 V05-16-17-99-BL-370-00 RICHARD S. BACCUS AND JACQUELINE M. BACCUS

8 V05-16-17-99-BL-360-00 RICHARD S. BACCUS AND JACQUELINE M. BACCUS

12 V05-16-17-99-BL-220-00 MICHAEL A. MEYER AND LINDA S. MEYER

2 V05-16-17-99-MC-060-00 CATHY L. MCARTHUR

3 T11-16-17-99-MA-010-00 J&S KAISER PLUS 5 LLC

6 T11-16-17-99-MA-020-00 JOSEPH J. WHITE AND ELIZABETH M. WHITE

6 T11-16-17-99-MA-030-00 JOSEPH J. WHITE AND ELIZABETH M. WHITE

7 V05-16-17-99-MC-100-00 KATHRYN RENEE MORALES

9 T11-16-17-99-MA-050-00 JOSEPH J. WHITE AND ELIZABETH M. WHITE

11 V05-16-17-99-MC-120-00 JACKSON L. ROESEL

13 T11-16-17-99-MA-070-00 ROBERT J. PIETRZYK AND TRISHA L. PIETRZYK

BEGIN RELOCATION ORDER 10+65.00
Y 401445.05
X 807312.50
23.18' SOUTH AND 0.27' EAST OF NORTHWEST CORNER OF SECTION 33, T16N, R17E

ALUMINUM CAP FOUND Y 398832.454 X 807342.821

R/L = SECTION LINE, R/L N00°39'54"W

R/L = SECTION LINE R/L N00°19'49"W

MAG NAIL FOUND Y 401468.378 X 807312.292 =PI 10+88.19

MAG NAIL FOUND Y 404087.311 X 807297.126

STA 12+50.00 =STA 200+00.00

R/L S89°33'14"E

TLE FOR DRIVEWAYS AND SLOPES

SLOPE INTERCEPT, TYP.

ALLIANT ENERGY RELEASE OF RIGHTS

ALUMINUM MONUMENT FOUND Y 401448.786 X 809945.649

SEE SHEET 4.05 MATCH LINE

SHEET 4 OF 7 SHEETS

BASIS OF EXISTING R/W

ROUTE	BASIS	YEAR	WIDTH
CHAPLEAU STREET	BECHAUD'S SECOND ADDITION	1901	60'
ROSE STREET	BLACKBIRD'S ADDITION	1902	60'
MINNESOTA AVENUE	BECHAUD'S SECOND ADDITION	1901	66'
	MARCOU'S 3RD ADDITION	1902	66'
	BLACKBIRD'S ADDITION	1902	66'

REVISED: 11/1/2024

REVISION DATE	DATE 11/18/2024	HWY: MINNESOTA AVENUE	STATE R/W PROJECT NUMBER 4986-00-64
	GRID FACTOR	COUNTY: FOND DU LAC	CONSTRUCTION PROJECT NUMBER 4986-00-65

SCALE, FEET 0 20 40

PLAT SHEET 4.04

PS&E SHEET

E

FILE NAME : 040104-RP.DWG
LAYOUT NAME - RW 1 IN 40 FT

PLOT DATE : 11/1/2024 7:42 AM PLOT BY : JAY PANETTI PLOT NAME : PLOT SCALE : 1 IN:40 FT

WISDOT/CADDS SHEET 75

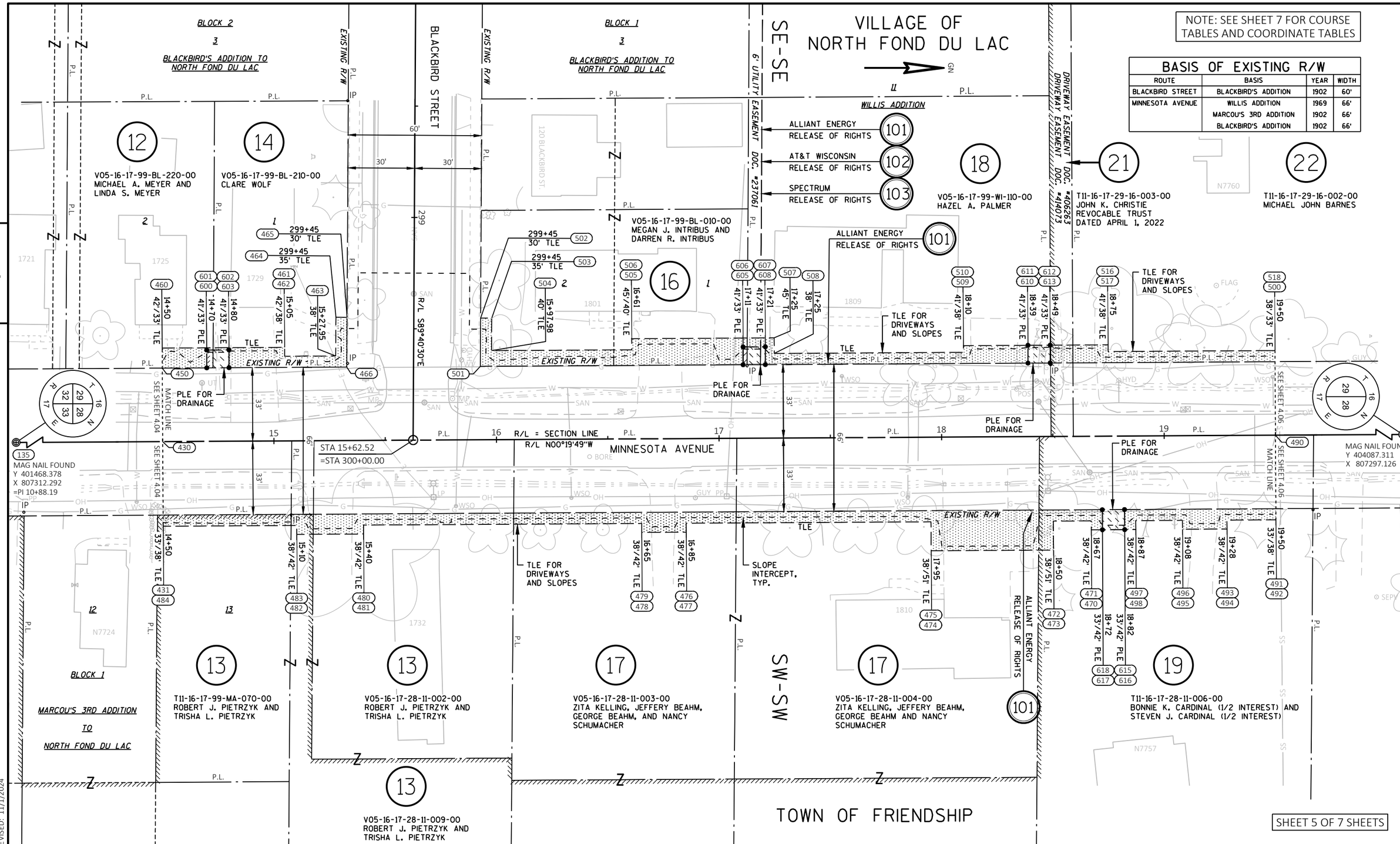

REVISED: 11/1/2024

REVISION DATE	DATE 11/18/2024	SCALE, FEET 0 20 40	HWY: MINNESOTA AVENUE	STATE R/W PROJECT NUMBER 4986-00-64	PLAT SHEET 4.05	
	GRID FACTOR		COUNTY: FOND DU LAC	CONSTRUCTION PROJECT NUMBER 4986-00-65	PS&E SHEET	E

FILE NAME : 040105-RP.DWG
LAYOUT NAME - RW 1 IN 40 FT
PLOT DATE : 11/1/2024 7:43 AM PLOT BY : JAY PANETTI PLOT NAME : PLOT SCALE : 1 IN:40 FT

WISDOT/CADDS SHEET 75

NOTE: SEE SHEET 7 FOR COURSE TABLES AND COORDINATE TABLES

BASIS OF EXISTING R/W			
ROUTE	BASIS	YEAR	WIDTH
ANNE STREET	WILLIS ADDITION	1969	66'
MINNESOTA AVENUE	WILLIS ADDITION	1969	66'

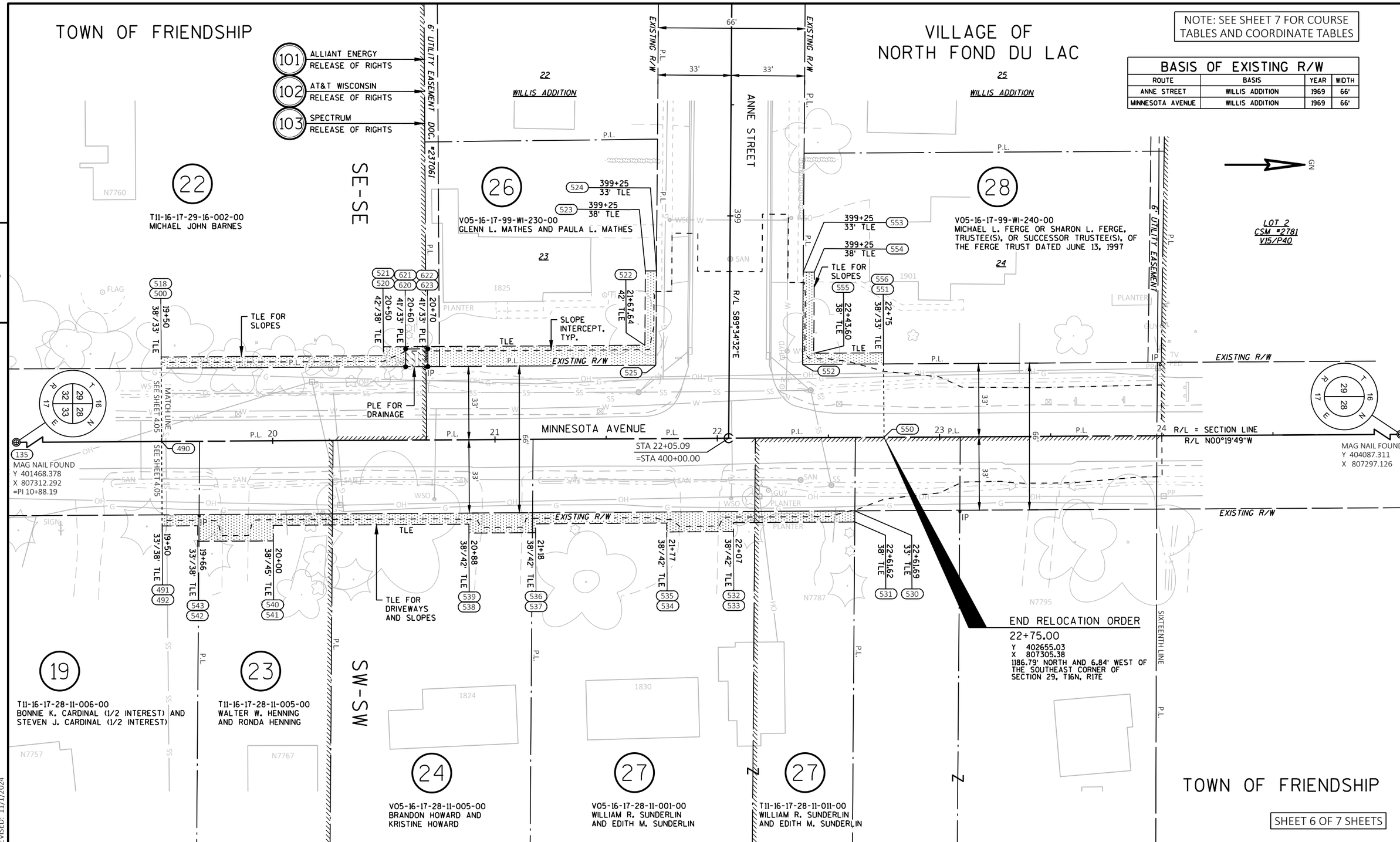

SHEET 6 OF 7 SHEETS

REVISED: 11/1/2024

REVISION DATE	DATE 11/18/2024	SCALE, FEET 0 20 40	HWY: MINNESOTA AVENUE	STATE R/W PROJECT NUMBER 4986-00-64	PLAT SHEET 4.06	
	GRID FACTOR		COUNTY: FOND DU LAC	CONSTRUCTION PROJECT NUMBER 4986-00-65	PS&E SHEET	E

FILE NAME : 040106-RP.DWG
LAYOUT NAME - RW 1 IN 40 FT
PLOT DATE : 11/1/2024 7:45 AM PLOT BY : JAY PANETTI PLOT NAME : PLOT SCALE : 1 IN:40 FT

WISDOT/CADDS SHEET 75

4

COORDINATE TABLE		
POINT	Y (NORTHING)	X (EASTING)
400	401468.488	807279.221
401	401444.671	807279.497
402	401444.590	807272.498
403	401468.540	807272.220
405	401467.996	807345.231
406	401467.930	807354.245
407	401465.561	807354.260
408	401465.494	807350.260
409	401445.495	807350.493
410	401445.437	807345.493
415	401480.241	807312.157
416	401480.488	807279.155
417	401480.541	807272.154
418	401552.820	807271.738
419	401552.832	807273.738
420	401595.338	807273.493
421	401595.472	807256.027
422	401600.472	807256.065
423	401600.300	807278.464
430	401830.046	807310.140
431	401830.237	807343.140
432	401830.289	807352.139
433	401810.289	807352.255
434	401810.266	807348.255
435	401768.267	807348.497
436	401768.290	807352.497
437	401748.290	807352.612
438	401748.267	807348.612
439	401710.268	807348.831
440	401710.291	807352.831
441	401690.291	807352.946
442	401690.268	807348.947
443	401635.269	807349.264
444	401635.292	807353.264
445	401615.292	807353.379
446	401615.269	807349.379
447	401495.271	807350.071
448	401495.294	807354.071
450	401829.856	807277.141
451	401660.305	807278.118
452	401660.470	807256.524
453	401665.470	807256.563
454	401665.343	807273.089
455	401777.828	807272.440
456	401777.805	807268.440
457	401797.805	807268.325
458	401797.828	807272.325

COORDINATE TABLE		
POINT	Y (NORTHING)	X (EASTING)
459	401829.827	807272.141
460	401829.804	807268.141
461	401884.803	807267.824
462	401884.826	807271.824
463	401907.779	807271.691
464	401907.878	807254.294
465	401912.878	807254.322
466	401912.751	807276.663
470	402247.282	807349.738
471	402247.259	807345.735
472	402230.259	807345.833
473	402230.334	807358.833
474	402175.335	807359.150
475	402175.260	807346.150
476	402065.262	807346.785
477	402065.285	807350.784
478	402045.285	807350.900
479	402045.262	807346.900
480	401920.264	807347.620
481	401920.287	807351.620
482	401890.288	807351.793
483	401890.264	807347.794
484	401830.266	807348.139
490	402330.038	807307.257
491	402330.228	807340.257
492	402330.257	807345.257
493	402308.258	807345.384
494	402308.281	807349.384
495	402288.281	807349.499
496	402288.258	807345.499
497	402267.255	807345.620
498	402267.278	807349.622
500	402329.848	807274.258
501	401972.754	807276.317
502	401972.877	807254.662
503	401977.877	807254.691
504	401977.794	807269.288
505	402040.812	807268.924
506	402040.784	807263.924
507	402104.782	807263.555
508	402104.823	807270.555
509	402189.821	807270.065
510	402189.804	807267.065
516	402254.803	807266.690
517	402254.820	807269.690
518	402329.819	807269.258
520	402429.817	807268.682

COORDINATE TABLE		
POINT	Y (NORTHING)	X (EASTING)
521	402429.794	807264.682
522	402547.434	807264.003
523	402547.682	807230.507
524	402552.682	807230.544
525	402552.368	807272.975
530	402641.910	807338.460
531	402641.874	807343.460
532	402587.253	807343.775
533	402587.276	807347.775
534	402557.276	807347.948
535	402557.253	807343.948
536	402498.254	807344.288
537	402498.278	807348.288
538	402468.278	807348.461
539	402468.255	807344.461
540	402380.256	807344.968
541	402380.297	807351.968
542	402346.297	807352.164
543	402346.257	807345.164
550	402655.033	807305.384
551	402654.842	807272.384
552	402618.373	807272.594
553	402618.680	807231.033
554	402623.680	807231.070
555	402623.410	807267.565
556	402654.814	807267.384
600	401849.856	807277.025
601	401849.810	807269.025
602	401859.810	807268.968
603	401859.856	807276.968
605	402090.852	807275.636
606	402090.806	807267.636
607	402100.806	807267.578
608	402100.852	807275.578
610	402218.850	807274.898
611	402218.804	807266.898
612	402228.803	807266.840
613	402228.850	807274.840
615	402262.227	807340.649
616	402262.278	807349.651
617	402252.279	807349.709
618	402252.227	807340.706
620	402439.846	807273.624
621	402439.800	807265.624
622	402449.800	807265.566
623	402449.846	807273.566

TLE - PARCEL 1			
FROM PT #	TO PT #	BEARING	DISTANCE
135	400	N89° 34' 14"W	33.01'
400	401	S00° 39' 54"E	23.82'
401	402	S89° 20' 06"W	7.00'
402	403	N00° 39' 54"W	23.95'
403	400	S89° 34' 14"E	7.00'

TLE - PARCEL 2			
FROM PT #	TO PT #	BEARING	DISTANCE
135	405	S89° 34' 36"E	33.01'
405	406	S89° 34' 36"E	9.01'
406	407	S00° 21' 53"E	2.37'
407	408	S89° 20' 06"W	4.00'
408	409	S00° 39' 54"E	20.00'
409	410	S89° 20' 06"W	5.00'
410	405	N00° 39' 54"W	22.56'

TLE - PARCELS 3, 6, 7, 9, 11 & 13			
FROM PT #	TO PT #	BEARING	DISTANCE
135	430	N00° 19' 49"W	361.81'
430	431	N89° 40' 11"E	33.00'
431	432	N89° 40' 11"E	9.00'
432	433	S00° 19' 49"E	20.00'
433	434	S89° 40' 11"W	4.00'
434	435	S00° 19' 49"E	42.00'
435	436	N89° 40' 11"E	4.00'
436	437	S00° 19' 49"E	20.00'
437	438	S89° 40' 11"W	4.00'
438	439	S00° 19' 49"E	38.00'
439	440	N89° 40' 11"E	4.00'
440	441	S00° 19' 49"E	20.00'
441	442	S89° 40' 11"W	4.00'
442	443	S00° 19' 49"E	55.00'
443	444	N89° 40' 11"E	4.00'
444	445	S00° 19' 49"E	20.00'
445	446	S89° 40' 11"W	4.00'
446	447	S00° 19' 49"E	120.00'
447	448	N89° 40' 11"E	4.00'
448	406	S00° 21' 53"E	27.37'
406	405	N89° 34' 36"W	9.01'
405	431	N00° 19' 49"W	362.25'

TLE - PARCEL 4			
FROM PT #	TO PT #	BEARING	DISTANCE
135	415	N00° 19' 49"W	12.00'
415	416	N89° 34' 14"W	33.00'
416	417	N89° 34' 14"W	7.00'
417	418	N00° 19' 49"W	72.28'
418	419	N89° 40' 11"E	2.00'
419	420	N00° 19' 49"W	42.51'
420	421	N89° 33' 41"W	17.47'
421	422	N00° 26' 19"E	5.00'
422	423	S89° 33' 41"E	22.40'
423	416	S00° 19' 49"E	119.81'

TLE - PARCELS 8 & 12			
FROM PT #	TO PT #	BEARING	DISTANCE
135	430	N00° 19' 49"W	361.81'
430	450	S89° 40' 11"W	33.00'
450	451	S00° 19' 49"E	169.55'
451	452	N89° 33' 41"W	21.59'
452	453	N00° 26' 19"E	5.00'
453	454	S89° 33' 41"E	16.53'
454	455	N00° 19' 49"W	112.49'
455	456	S89° 40' 11"W	4.00'
456	457	N00° 19' 49"W	20.00'
457	458	N89° 40' 11"E	4.00'
458	459	N00° 19' 49"W	32.00'
459	450	N89° 40' 11"E	5.00'

TLE - PARCELS 12 & 14			
FROM PT #	TO PT #	BEARING	DISTANCE
135	430	N00° 19' 49"W	361.81'
430	450	S89° 40' 11"W	33.00'
450	460	S89° 40' 11"W	9.00'
460	461	N00° 19' 49"W	55.00'
461	462	N89° 40' 11"E	4.00'
462	463	N00° 19' 49"W	22.95'
463	464	N89° 40' 30"W	17.40'
464	465	N00° 19' 30"E	5.00'
465	466	S89° 40' 30"E	22.34'
466	603	S00° 19' 49"E	52.90'
603	602	S89° 40' 11"W	8.00'
602	601	S00° 19' 49"E	10.00'
601	600	N89° 40' 11"E	8.00'
600	450	S00° 19' 49"E	20.00'

PLE - PARCELS 12 & 14			
FROM PT #	TO PT #	BEARING	DISTANCE
135	430	N00° 19' 49"W	361.81'
430	450	S89° 40' 11"W	33.00'
450	600	N00° 19' 49"W	20.00'
600	601	S89° 40' 11"W	8.00'
601	602	N00° 19' 49"W	10.00'
602	603	N89° 40' 11"E	8.00'
603	600	S00° 19' 49"E	10.00'

TLE - PARCELS 13, 17 & 19			
FROM PT #	TO PT #	BEARING	DISTANCE
135	430	N00° 19' 49"W	361.81'
430	431	N89° 40' 11"E	33.00'
431	618	N00° 19' 49"W	422.00'
618	617	N89° 40' 11"E	9.00'
617	470	S00° 19' 49"E	5.00'
470	471	S89° 40' 11"W	4.00'
471	472	S00° 19' 49"E	17.00'
472	473	N89° 40' 11"E	13.00'
473	474	S00° 19' 49"E	55.00'
474	475	S89° 40' 11"W	13.00'
475	476	S00° 19' 49"E	110.00'
476	477	N89° 40' 11"E	4.00'
477	478	S00° 19' 49"E	20.00'
478	479	S89° 40' 11"W	4.00'
479	480	S00° 19' 49"E	125.00'
480	481	N89° 40' 11"E	4.00'
481	482	S00° 19' 49"E	30.00'
482	483	S89° 40' 11"W	4.00'
483	484	S00° 19' 49"E	60.00'
484	431	S89° 40' 11"W	5.00'

TLE - PARCELS 16 & 18			
FROM PT #	TO PT #	BEARING	DISTANCE
135	490	N00° 19' 49"W	861.81'
490	500	S89° 40' 11"W	33.00'
500	610	S00° 19' 49"E	111.00'
610	608	S00° 19' 49"E	118.00'
608	607	S89° 40' 11"W	8.00'
607	606	S00° 19' 49"E	10.00'
606	605	N89° 40' 11"E	8.00'
605	501	S00° 19' 49"E	118.10'
501	502	N89° 40' 30"W	21.65'
502	503	N00° 19' 30"E	5.00'
503	504	S89° 40' 30"E	14.60'
504	505	N00° 19' 49"W	63.02'
505	506	S89° 40' 11"W	5.00'
506	507	N00° 19' 49"W	64.00'
507	508	N89° 40' 11"E	7.00'
508	509	N00° 19' 49"W	85.00'
509	510	S89° 40' 11"W	3.00'
510	611	N00° 19' 49"W	29.00'
611	610	N89° 40' 11"E	8.00'

PLE - PARCELS 16 & 18			
FROM PT #	TO PT #	BEARING	DISTANCE
135	490	N00° 19' 49"W	861.81'
490	500	S89° 40' 11"W	33.00'
500	608	S00° 19' 49"E	229.00'
608	605	S00° 19' 49"E	10.00'
605	606	S89° 40' 11"W	8.00'
606	607	N00° 19' 49"W	10.00'
607	608	N89° 40' 11"E	8.00'

PLE - PARCEL 18			
FROM PT #	TO PT #	BEARING	DISTANCE
135	490	N00° 19' 49"W	861.81'
490	500	S89° 40' 11"W	33.00'
500	613	S00° 19' 49"E	101.00'
613	610	S00° 19' 49"E	10.00'
610	611	S89° 40' 11"W	8.00'
611	612	N00° 19' 49"W	10.00'
612	613	N89° 40' 11"E	8.00'

PLE - PARCEL 19			
FROM PT #	TO PT #	BEARING	DISTANCE
135	490	N00° 19' 49"W	861.81'
490	491	N89° 40' 11"E	33.00'
491	615	S00° 19' 49"E	68.00'
615	616	N89° 40' 11"E	9.00'
616	617	S00° 19' 49"E	10.00'
617	618	S89° 40' 11"W	9.00'
618	615	N00° 19' 49"W	10.00'

TLE - PARCEL 19			
FROM PT #	TO PT #	BEARING	DISTANCE
135	490	N00° 19' 49"W	861.81'
490	491	N89° 40' 11"E	33.00'
491	492	N89° 40' 11"E	5.00'
492	493	S00° 19' 49"E	22.00'
493	494	N89° 40' 11"E	4.00'
494	495	S00° 19' 49"E	20.00'
495	496	S89° 40' 11"W	4.00'
496	497	S00° 19' 49"E	21.00'
497	498	N89° 40' 11"E	4.00'
498	616	S00° 19' 49"E	5.00'
616	615	S89° 40' 11"W	9.00'
615	491	N00° 19' 49"W	68.00'

TLE - PARCELS 18, 21 & 22			
FROM PT #	TO PT #	BEARING	DISTANCE
135	490	N00° 19' 49"W	861.81'
490	500	S89° 40' 11"W	33.00'
500	613	S00° 19' 49"E	101.00'
613	612	S89° 40' 11"W	8.00'
612	516	N00° 19' 49"W	26.00'
516	517	N89° 40' 11"E	3.00'
517	518	N00° 19' 49"W	75.00'
518	500	N89° 40' 11"E	5.00'

TLE - PARCELS 19, 23, 24 & 27			
FROM PT #	TO PT #	BEARING	DISTANCE
135	490	N00° 19' 49"W	861.81'
490	491	N89° 40' 11"E	33.00'
491	530	N00° 19' 49"W	311.69'
530	531	S89° 34' 49"E	5.00'
531	532	S00° 19' 49"E	54.62'
532	533	N89° 40' 11"E	4.00'
533	534	S00° 19' 49"E	30.00'
534	535	S89° 40' 11"W	4.00'
535	536	S00° 19' 49"E	59.00'
536	537	N89° 40' 11"E	4.00'
537	538	S00° 19' 49"E	30.00'
538	539	S89° 40' 11"W	4.00'
539	540	S00° 19' 49"E	88.00'
540	541	N89° 40' 11"E	7.00'
541	542	S00° 19' 49"E	34.00'
542	543	S89° 40' 11"W	7.00'
543	492	S00° 19' 49"E	16.00'
492	491	S89° 40' 11"W	5.00'

TLE - PARCELS 22 & 26			
FROM PT #	TO PT #	BEARING	DISTANCE
135	490	N00° 19' 49"W	861.81'
490	500	S89° 40' 11"W	33.00'
500	518	S89° 40' 11"W	5.00'
518	520	N00° 19' 49"W	100.00'
520	521	S89° 40' 11"W	4.00'
521	522	N00° 19' 49"W	117.64'
522	523	N89° 34' 32"W	33.50'
523	524	N00° 25' 28"E	5.00'
524	525	S89° 34' 32"E	42.43'
525	623	S00° 19' 49"E	102.52'
623	622	S89° 40' 11"W	8.00'
622	621	S00° 19' 49"E	10.00'
621	620	N89° 40' 11"E	8.00'
620	500	S00° 19' 49"E	110.00'

PLE - PARCELS 22 & 26			
FROM PT #	TO PT #	BEARING	DISTANCE
135	490	N00° 19' 49"W	861.81'
490	500	S89° 40' 11"W	33.00'
500	620	N00° 19' 49"W	110.00'
620	621	S89° 40' 11"W	8.00'
621	622	N00° 19' 49"W	10.00'
622	623	N89° 40' 11"E	8.00'
623	620	S00° 19' 49"E	10.00'

TLE - PARCEL 28			
FROM PT #	TO PT #	BEARING	DISTANCE
135	550	N00° 19' 49"W	1186.81'
550	551	S89° 40' 11"W	33.00'
551	552	S00° 19' 49"E	36.47'
552	553	N89° 34' 32"W	41.56'
553	554	N00° 25' 28"E	5.00'
554	555	S89° 34' 32"E	36.50'
555	556	N00° 19' 49"W	31.40'
556	551	N89° 40' 11"E	5.00'

4

SHEET 7 OF 7 SHEETS

REVISED: 11/1/2024

REVISION DATE

DATE 11/18/2024

GRID FACTOR

HWY: MINNESOTA AVENUE

COUNTY: FOND DU LAC

STATE R/W PROJECT NUMBER 4986-00-64

CONSTRUCTION PROJECT NUMBER 4986-00-65

PLAT SHEET 4.07

PS&E SHEET

E

FILE NAME : 040107-RP.DWG
LAYOUT NAME - RW 1 IN 40 FT

PLOT DATE : 11/1/2024 7:45 AM PLOT BY : JAY PANETTI PLOT NAME : PLOT SCALE : ##########

WISDOT/CADDS SHEET 75

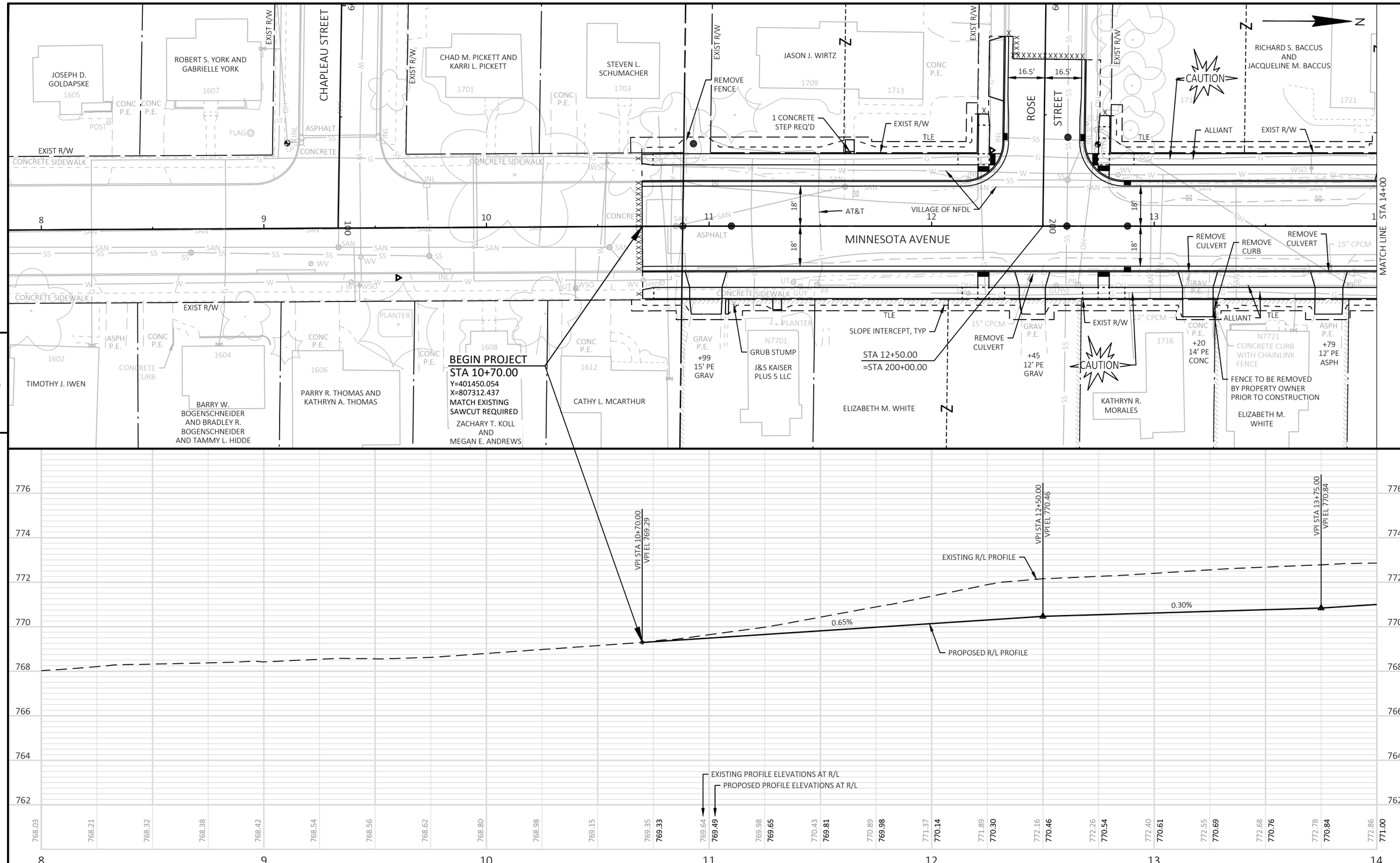

PROJECT NO: 4986-00-65	HWY: MINNESOTA AVENUE	COUNTY: FOND DU LAC	PLAN AND PROFILE: MINNESOTA AVENUE	SHEET 60	E

FILE NAME : S:\CURRPROJ\FONDDUCO\NORTH FDL, VILLAGE OF\MINNESOTA AVE\CIVIL3D\49860064\SHEETS\49860065-050101-PP.DWG
LAYOUT NAME - Sheet-01
PLOT DATE : 7/29/2025 1:23 PM
PLOT BY : AARON SARAUER
PLOT NAME :
PLOT SCALE : 1 IN:40 FT
WISDOT/CADDS SHEET 44

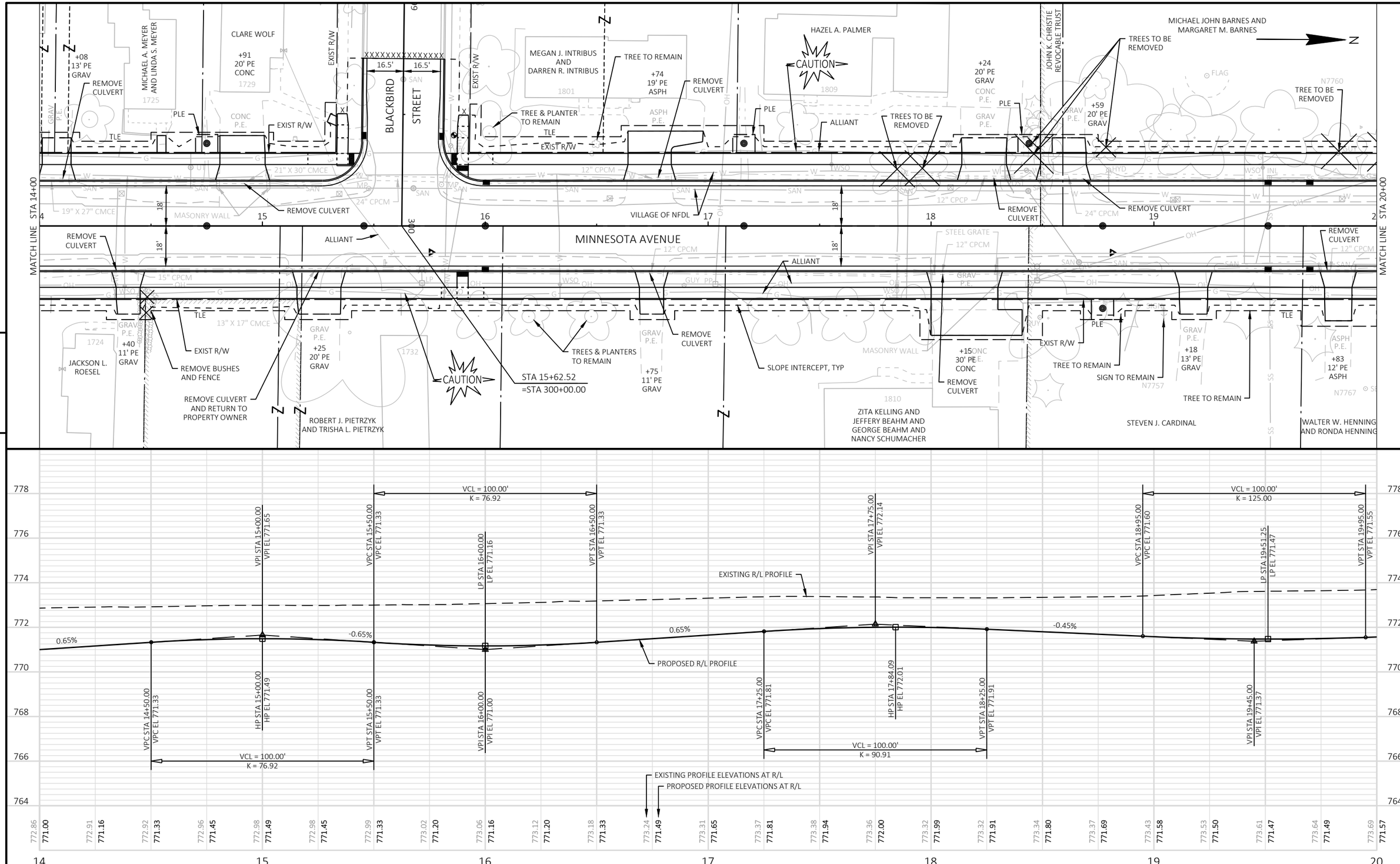

PROJECT NO: 4986-00-65	HWY: MINNESOTA AVENUE	COUNTY: FOND DU LAC	PLAN AND PROFILE: MINNESOTA AVENUE	SHEET 61	E

FILE NAME : S:\CURRPROJ\FONDDUCO\NORTH FDL, VILLAGE OF\MINNESOTA AVE\CIVIL3D\49860064\SHEETS\49860065-050101-PP.DWG
LAYOUT NAME - Sheet-02
PLOT DATE : 7/29/2025 1:23 PM PLOT BY : AARON SARAUER PLOT NAME : PLOT SCALE : 1 IN:40 FT
WISDOT/CADDS SHEET 44

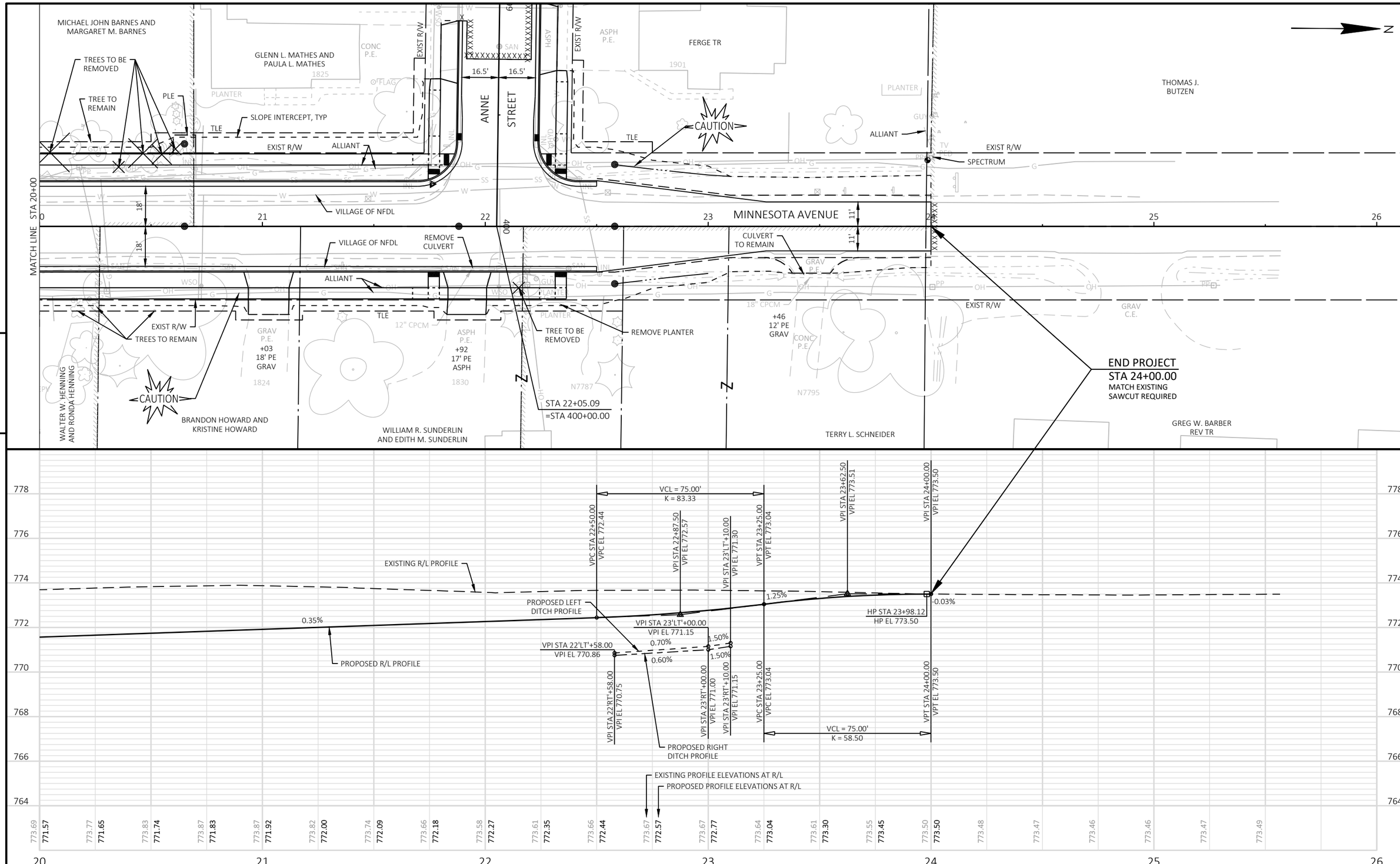

PROJECT NO: 4986-00-65	HWY: MINNESOTA AVENUE	COUNTY: FOND DU LAC	PLAN AND PROFILE: MINNESOTA AVENUE	SHEET 62	E

FILE NAME : S:\CURRPROJ\FONDDUCO\NORTH FDL, VILLAGE OF\MINNESOTA AVE\CIVIL3D\49860064\SHEETS\49860065-050101-PP.DWG
LAYOUT NAME - Sheet-03
PLOT DATE : 7/29/2025 1:23 PM PLOT BY : AARON SARAUER PLOT NAME : PLOT SCALE : 1 IN:40 FT

WISDOT/CADDS SHEET 44

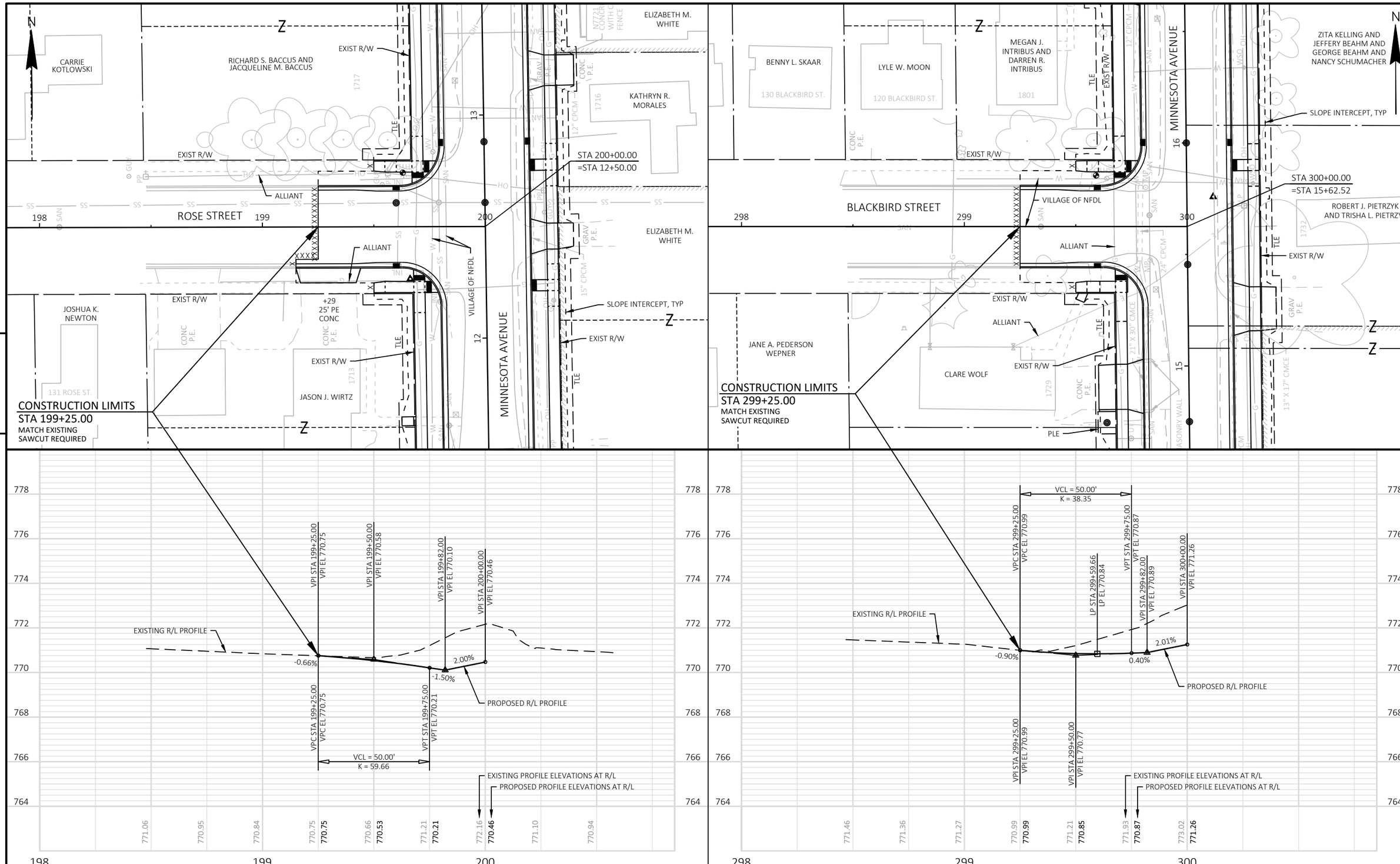

PROJECT NO: 4986-00-65	HWY: MINNESOTA AVENUE	COUNTY: FOND DU LAC	PLAN AND PROFILE: ROSE STREET & BLACKBIRD STREET	SHEET 63	E

FILE NAME : S:\CURRPROJ\FONDDUCO\NORTH FDL, VILLAGE OF\MINNESOTA AVE\CIVIL3D\49860064\SHEETS\49860065-050102-PP.DWG
LAYOUT NAME - Sheet-01
PLOT DATE : 7/29/2025 1:23 PM PLOT BY : AARON SARAUER PLOT NAME : PLOT SCALE : ##########

WISDOT/CADDS SHEET 44

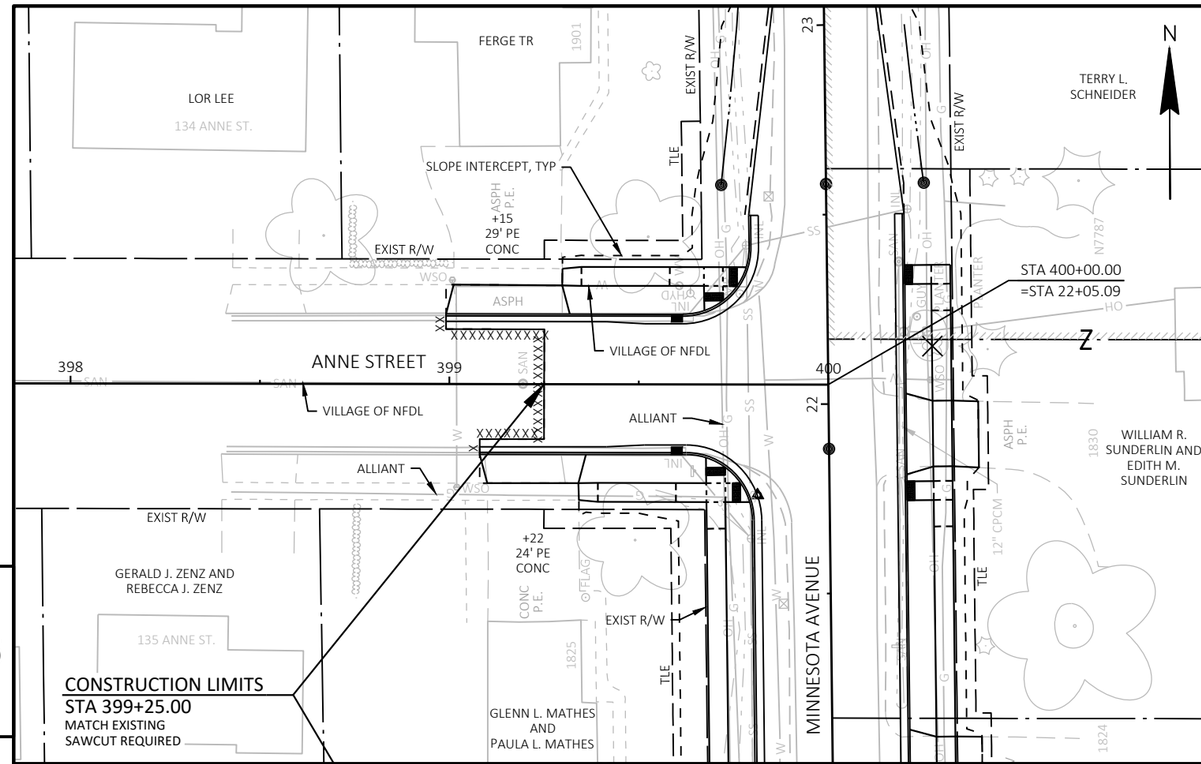

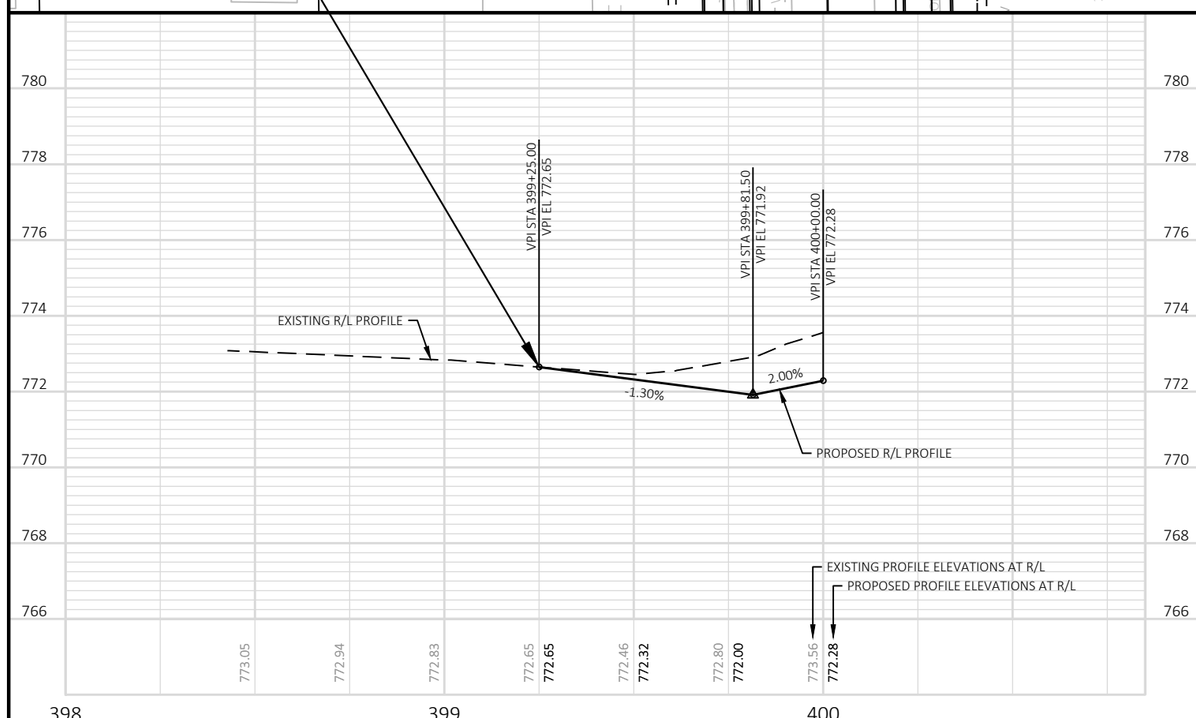

5

5

PROJECT NO: 4986-00-65	HWY: MINNESOTA AVENUE	COUNTY: FOND DU LAC	PLAN AND PROFILE: ANNE STREET	SHEET 64	E

FILE NAME : S:\CURRPROJ\FONDDUCO\NORTH FDL, VILLAGE OF\MINNESOTA AVE\CIVIL3D\49860064\SHEETS\49860065-050102-PP.DWG
LAYOUT NAME - Sheet-02
PLOT DATE : 7/29/2025 1:23 PM PLOT BY : AARON SARAUER PLOT NAME : PLOT SCALE : ##########
WISDOT/CADDS SHEET 44

Standard Detail Drawing List

08A05-22A	INLET COVERS TYPE A, H, A-S, H-S & Z
08A05-22B	INLET COVERS TYPE B, B-A, C, MS, MS-A, DW & WM
08A05-22E	INLET COVER TYPE BW, MANHOLE COVERS, TYPE K, J, J-S, L & M
08A09-03	CATCH BASINS 2X3-FT AND 2.5X3-FT
08B09-04	MANHOLES 3-FT, 4-FT, 5-FT, 6-FT, 7-FT, 8-FT, 9-FT, 10-FT DIAMETER
08C06-03	INLETS 3-FT AND 4-FT DIAMETER
08D01-24A	CONCRETE CURB & GUTTER
08D01-24B	CONCRETE CURB, TIES AND CURB AND GUTTER APPLICATIONS
08D05-22A	CURB RAMPS TYPES 1 AND 1-A
08D05-22B	CURB RAMPS TYPES 2 AND 3
08D05-22C	CURB RAMPS TYPES 4A AND 4A1
08D05-22D	CURB RAMPS TYPE 4B AND 4B1
08D05-22E	CURB RAMPS TYPES 5, 6, 7A, 7B & 8
08D05-22F	CURB RAMPS RADIAL DETECTABLE WARNING FIELD APPLICATIONS
08D05-22G	CURB RAMPS RECTANGULAR AND RADIAL DETECTABLE WARNING PLATES
08E09-06	SILT FENCE
08E10-02	INLET PROTECTION TYPE A, B, C AND D
08E15-01	CULVERT PIPE CHECK
08F04-08	JOINT TIES FOR CONCRETE PIPE AND CONCRETE COLLAR DETAIL
13C19-03	HMA LONGITUDINAL JOINTS
15C02-09A	BARRICADES AND SIGNS FOR MAINLINE CLOSURES
15C02-09B	BARRICADES AND SIGNS FOR VARIOUS CLOSURES
15C02-09C	DETOUR SIGNING FOR MAINLINE CLOSURES
15C02-09H	MODIFIED ROUTE ASSEMBLY FOR DETOUR SIGNING
15C03-05	BARRICADES AND SIGNS FOR SIDEROAD CLOSURES
15C05-05	TRAFFIC CONTROL, ADVANCE WARNING SIGNS 40 M.P.H. OR LESS
15C11-10B	CHANNELIZING DEVICES DRUMS, CONES, BARRICADES AND VERTICAL PANELS
15C12-09A	TRAFFIC CONTROL FOR LANE CLOSURE WITH FLAGGING OPERATION
15D28-04	TRAFFIC CONTROL, WORK ON SHOULDER OR PARKING LANE, UNDIVIDED ROADWAY
15D30-11A	TRAFFIC CONTROL, PEDESTRIAN ACCOMMODATION
15D30-11B	TRAFFIC CONTROL, PEDESTRIAN ACCOMMODATION
15D30-11C	TRAFFIC CONTROL, PEDESTRIAN ACCOMMODATION
15D30-11L	TRAFFIC CONTROL, PEDESTRIAN ACCOMMODATION
15D45-03	TRAFFIC CONTROL, SIGNING ON ROADWAYS WITH LOOSE GRAVEL

6

6

GENERAL NOTES

DETAILS OF CONSTRUCTION, MATERIALS AND WORKMANSHIP NOT SHOWN ON THIS DRAWING SHALL CONFORM TO THE PERTINENT REQUIREMENTS OF THE STANDARD SPECIFICATIONS AND THE APPLICABLE SPECIAL PROVISIONS.

DETAIL DRAWINGS FOR PROPOSED ALTERNATE DESIGNS FOR CATCH BASIN, MANHOLE AND INLET COVERS SHALL BE SUBMITTED TO THE ENGINEER FOR APPROVAL PROVIDING THAT SUCH ALTERNATE DESIGNS MAKE PROVISION FOR EQUIVALENT CAPACITY AND STRENGTH.

ROUND FRAMES AND COVERS SHALL HAVE CONTINUOUSLY MACHINED BEARING SURFACES TO PREVENT ROCKING AND RATTLING.

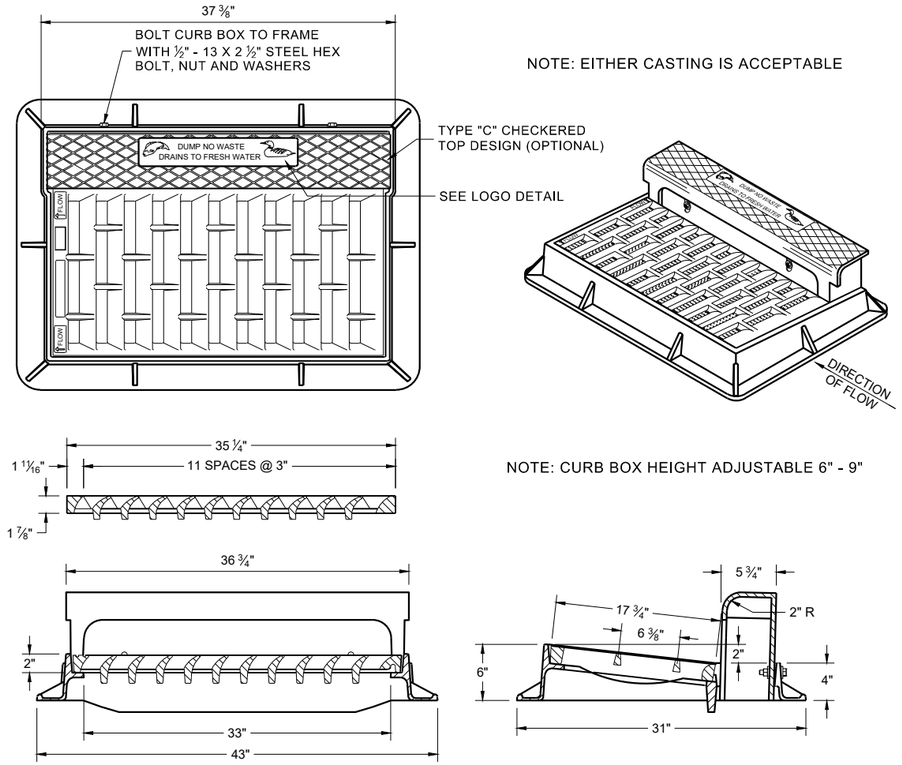

NOTE: EITHER CASTING IS ACCEPTABLE

NOTE: CURB BOX HEIGHT ADJUSTABLE 6" - 9"

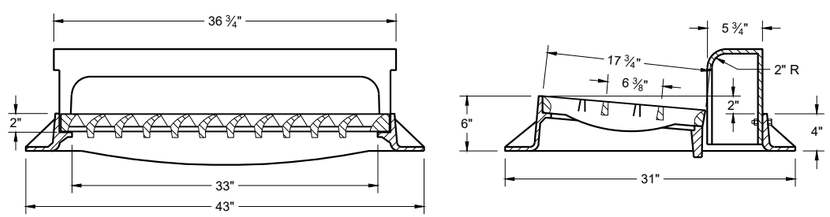

TYPE "H"

NOTE: EITHER CASTING IS ACCEPTABLE

1 ⅛" DIAGONAL BARS WITH 1 ⅝" OPENINGS

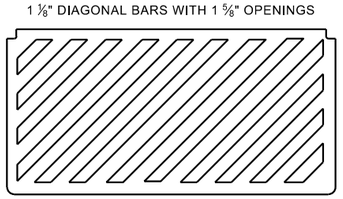

SPECIAL GRATE FOR TYPE "H" COVER

(MEASURES 35" X 17 ¾" X 2")

(NOTED AS TYPE H-S ON DRAINAGE TABLE)

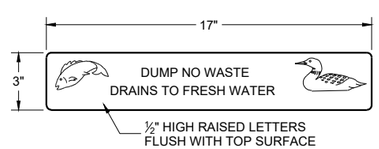

LOGO DETAIL

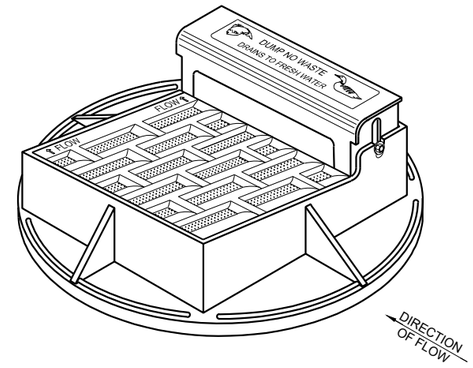

NOTE: CURB BOX HEIGHT ADJUSTABLE 6" - 9"

NOTE: EITHER CASTING IS ACCEPTABLE

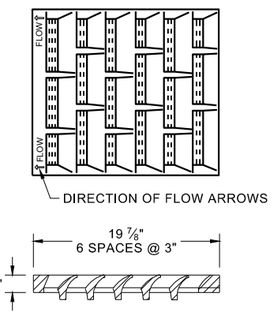

1" DIAGONAL BARS WITH 1 ½" OPENINGS

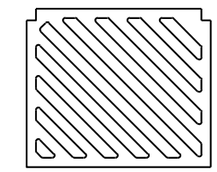

SPECIAL GRATE FOR TYPE "A" COVER

(MEASURES 19 ¾" X 17" X 1 ⅞")

(NOTED AS TYPE A-S ON DRAINAGE TABLE)

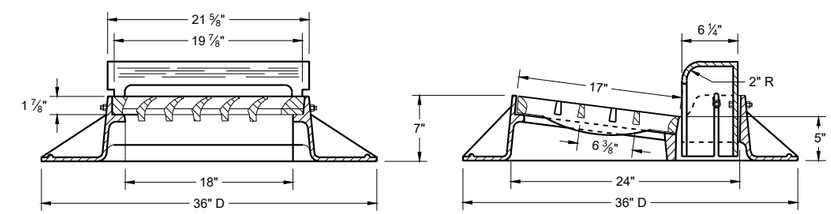

TYPE "A"

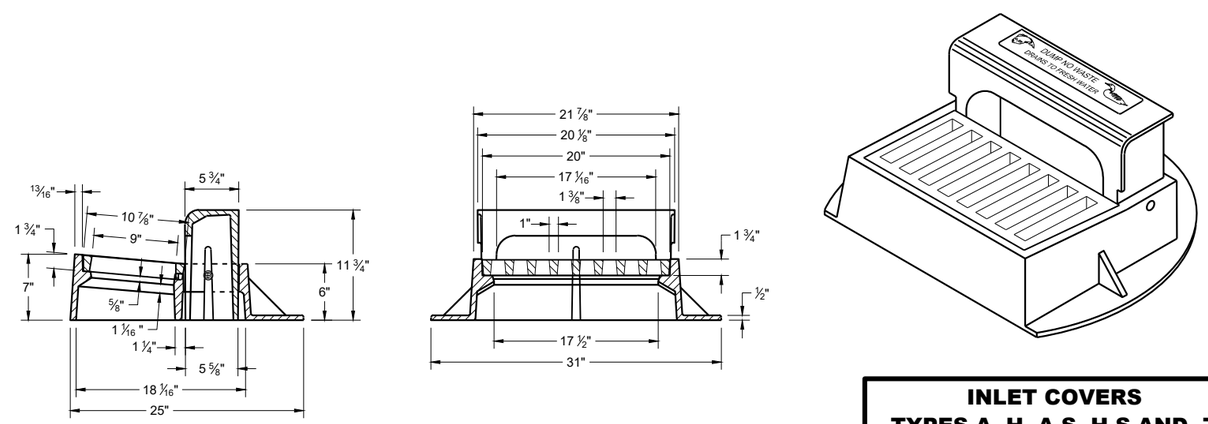

TYPE "Z"

INLET COVERS
TYPES A, H, A-S, H-S AND Z

STATE OF WISCONSIN
DEPARTMENT OF TRANSPORTATION

APPROVED
February 2025 — DATE
/S/ Rodney Taylor — ROADWAY STANDARDS DEVELOPMENT UNIT SUPERVISOR

FHWA

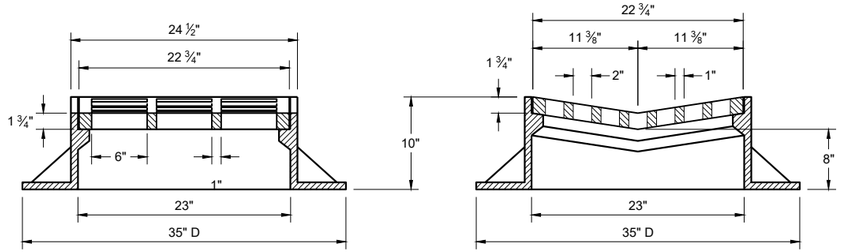

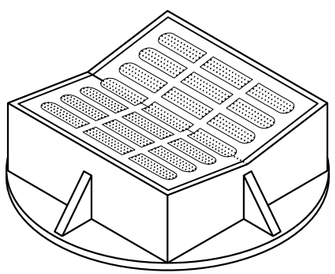

TYPE "B"

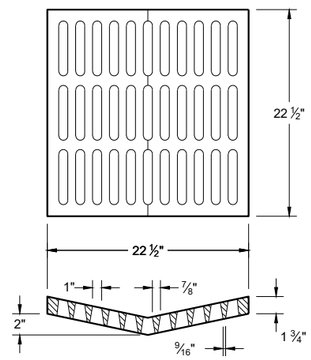

ALTERNATIVE GRATE FOR TYPE "B" COVER

USE WHERE PEDESTRIAN OF BICYCLE TRAFFIC IS POSSIBLE

NOTED AS TYPE B - A ON THE DRAINAGE TABLE

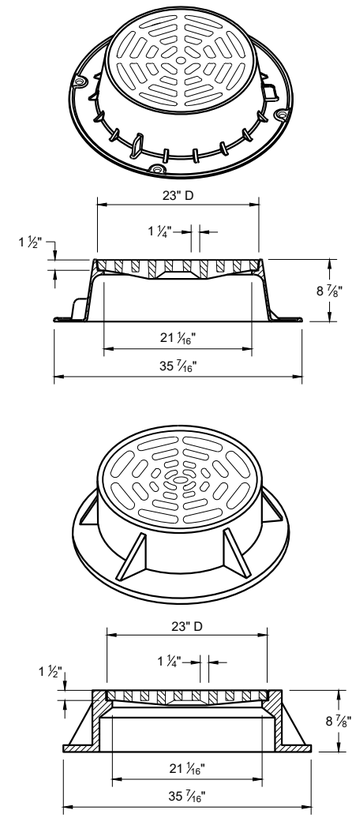

TYPE "C"

NOTE: EITHER CASTING IS ACCEPTABLE

GENERAL NOTES

DETAILS OF CONSTRUCTION, MATERIALS AND WORKMANSHIP NOT SHOWN ON THIS DRAWING SHALL CONFORM TO THE PERTINENT REQUIREMENTS OF THE STANDARD SPECIFICATIONS AND THE APPLICABLE SPECIAL PROVISIONS.

DETAIL DRAWINGS FOR PROPOSED ALTERNATE DESIGNS FOR CATCH BASIN, MANHOLE AND INLET COVERS SHALL BE SUBMITTED TO THE ENGINEER FOR APPROVAL PROVIDING THAT SUCH ALTERNATE DESIGNS MAKE PROVISION FOR EQUIVALENT CAPACITY AND STRENGTH.

ROUND FRAMES AND COVERS SHALL HAVE CONTINUOUSLY MACHINED BEARING SURFACES TO PREVENT ROCKING AND RATTLING.

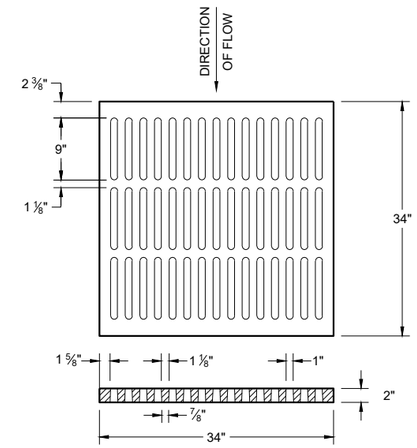

ALTERNATIVE TYPE "MS"

USE WHERE PEDESTRIAN OF BICYCLE TRAFFIC IS PERMITTED

NOTED AS TYPE MS-A ON THE DRAINAGE TABLE

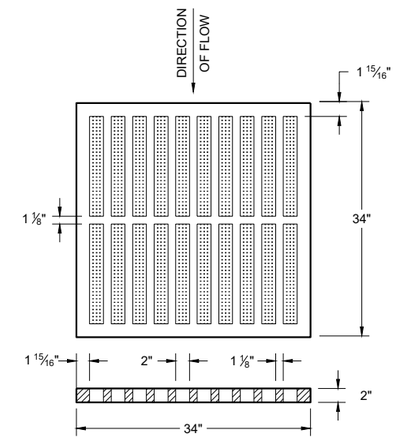

TYPE "MS"

USE ON FREEWAYS AND EXPRESSWAYS

NOTED AS TYPE MS ON THE DRAINAGE TABLE

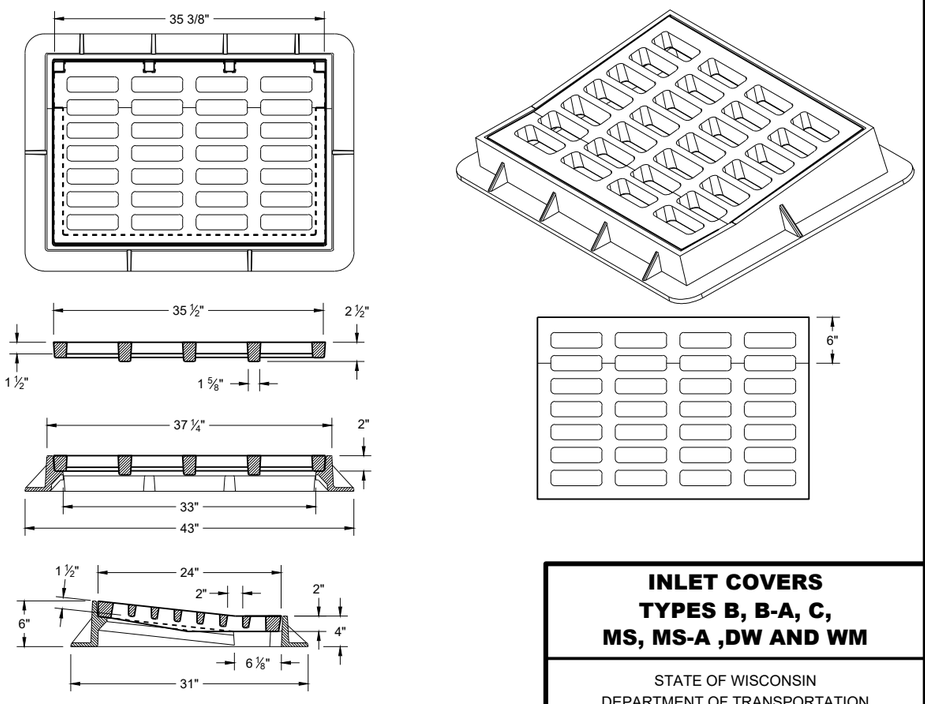

TYPE "DW"

NOTES: FOR USE IN A SUMP CONDITION. THIS OPTION IS ONLY TO BE USED IF NO OTHER INLETS ARE APPLICABLE.

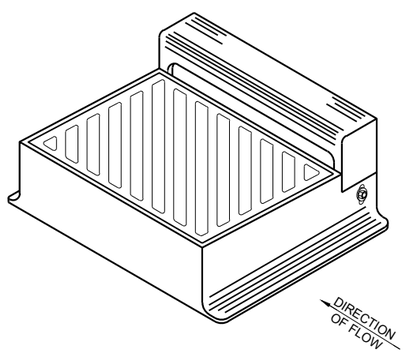

DIAGONAL SLOTS SHALL BE ORIENTEDTO THE DIRECTION OF FLOW AS ILLUSTRATED.
GRATES ARE MANUFACTURED TO BE REVERSIBLE.

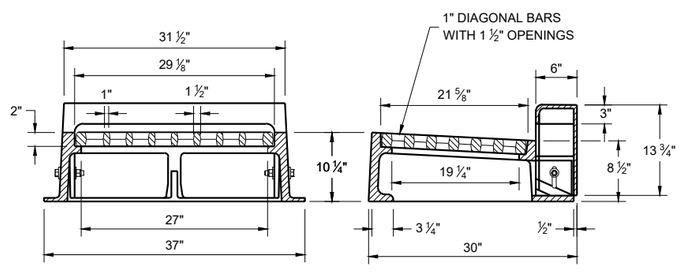

TYPE "WM"

NOTE: CURB BOX HEIGHT ADJUSTABLE 6" - 9"

INLET COVERS TYPES B, B-A, C, MS, MS-A ,DW AND WM

STATE OF WISCONSIN
DEPARTMENT OF TRANSPORTATION

APPROVED
February 2025 — DATE
/S/ Rodney Taylor — ROADWAY STANDARDS DEVELOPMENT UNIT SUPERVISOR

FHWA

6

SDD 08A05-22b

GENERAL NOTES

DETAILS OF CONSTRUCTION, MATERIALS AND WORKMANSHIP NOT SHOWN ON THIS DRAWING SHALL CONFORM TO THE PERTINENT REQUIREMENTS OF THE STANDARD SPECIFICATIONS AND THE APPLICABLE SPECIAL PROVISIONS.

DETAIL DRAWINGS FOR PROPOSED ALTERNATE DESIGNS FOR MANHOLE COVERS SHALL BE SUBMITTED TO THE ENGINEER FOR APPROVAL PROVIDING THAT SUCH ALTERNATE DESIGNS MAKE PROVISION FOR EQUIVALENT CAPACITY AND STRENGTH.

ROUND FRAMES AND COVERS SHALL HAVE CONTINUOUSLY MACHINED BEARING SURFACES TO PREVENT ROCKING AND RATTLING.

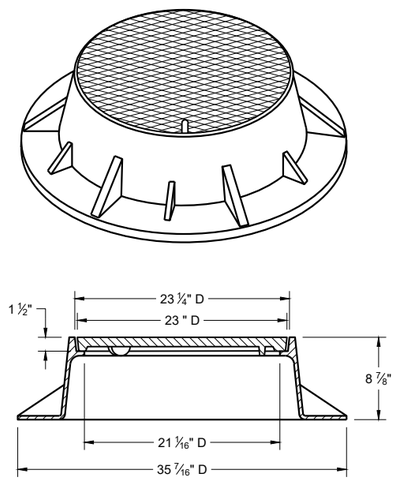

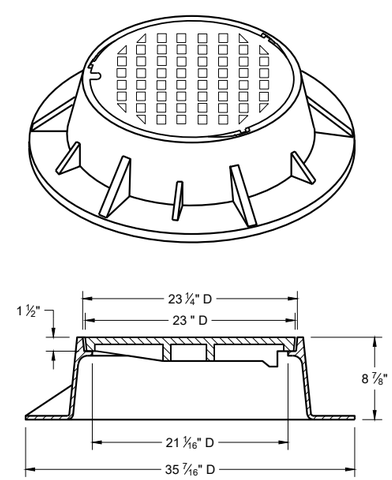

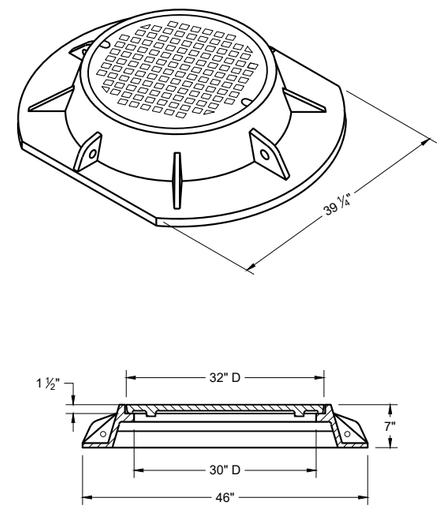

TYPE "K"

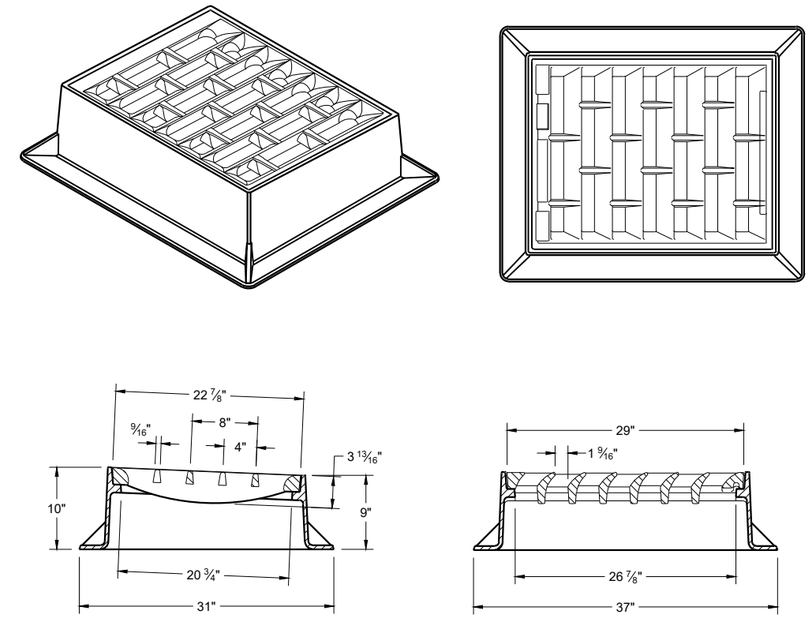

INLET COVER TYPE "BW"

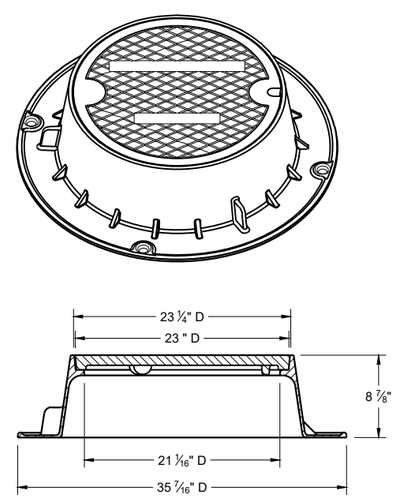

TYPE "J"

NOTE: EITHER CASTING IS ACCEPTABLE

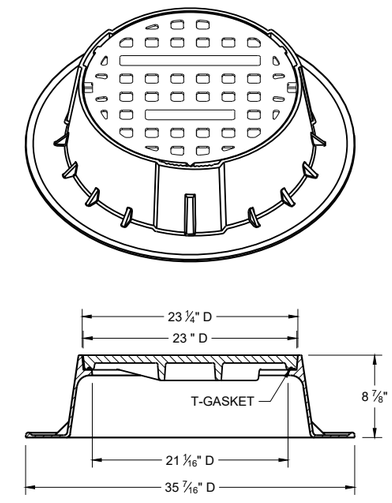

TYPE "J" SPECIAL

TYPE "B" NON-ROCKING SELF-SEAL LID
(NOTED AS TYPE J-S ON THE DRAINAGE TABLE)

NOTE: EITHER CASTING IS ACCEPTABLE

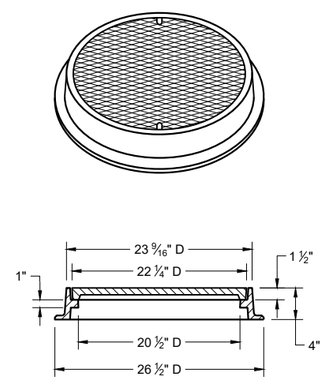

TYPE "L"

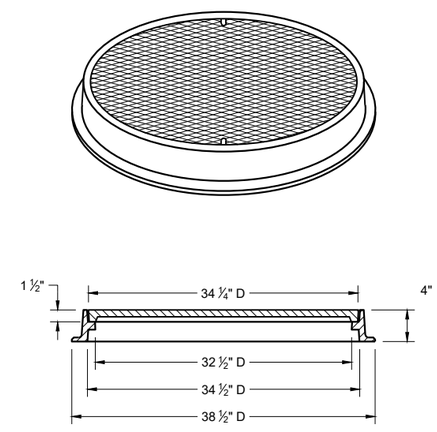

TYPE "M"

INLET COVERS TYPES BW
MANHOLE COVERS TYPES K, J, J-S, L, AND M

STATE OF WISCONSIN
DEPARTMENT OF TRANSPORTATION

APPROVED
February 2025 — DATE
/S/ Rodney Taylor — ROADWAY STANDARDS DEVELOPMENT UNIT SUPERVISOR

FHWA

6

SDD 08A05-22e

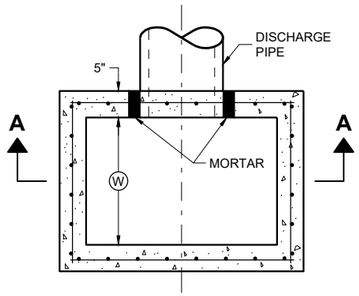

PLAN VIEW

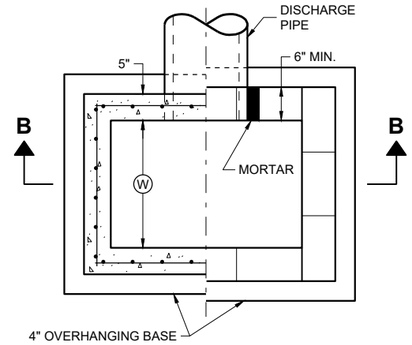

PLAN VIEW

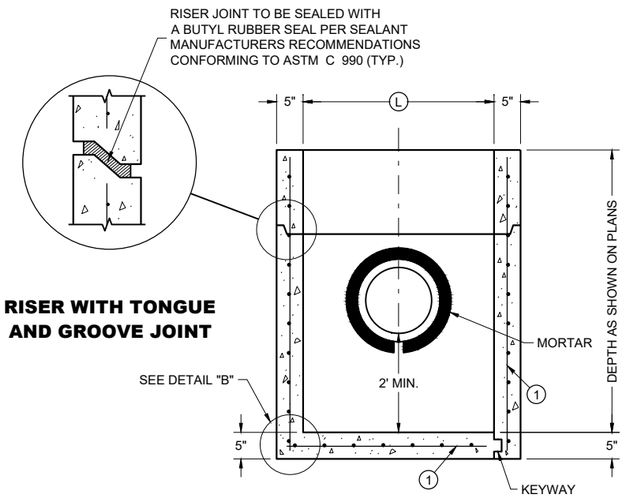

RISER WITH TONGUE AND GROOVE JOINT

PRECAST REINFORCED CONCRETE WITH MONOLITHIC BASE

PRECAST REINFORCED CONCRETE WITH INTEGRAL BASE

SECTION A - A

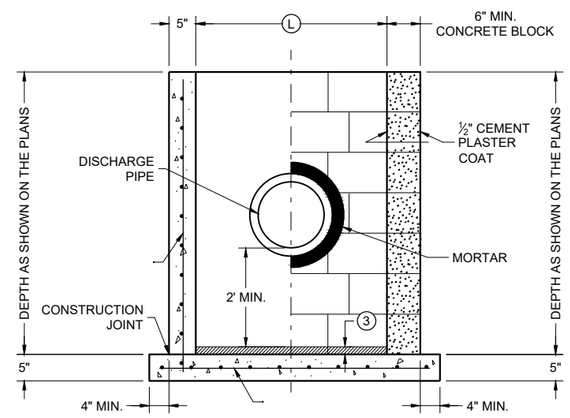

CAST IN PLACE REINFORCED CONCRETE

CONCRETE BLOCK ON CAST IN PLACE OR PRECAST REINFORCED CONCRETE BASE (1)

SECTION B - B

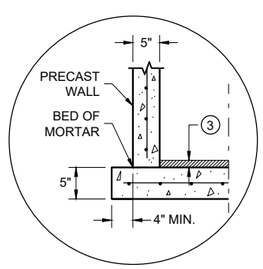

SEPARATE PRECAST REINFORCED CONCRETE BASE OPTION

DETAIL "B"

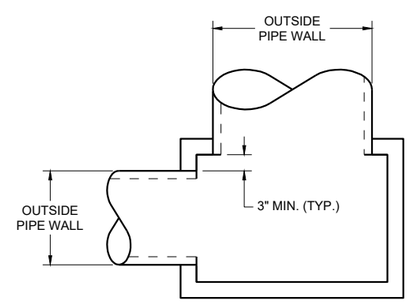

DETAIL "A"

GENERAL NOTES

DETAILS OF CONSTRUCTION, MATERIALS AND WORKMANSHIP N0T SHOWN ON THIS DRAWING SHALL CONFORM TO THE PERTINENT REQUIREMENTS OF THE STANDARD SPECIFICATIONS AND THE APPLICABLE SPECIAL PROVISIONS.

UNLESS OTHERWISE AUTHORIZED IN WRITING BY THE ENGINEER, THE CONTRACTOR SHALL NOT ORDER AND DELIVER PRECAST CATCH BASIN UNITS REQUIRED FOR THE PROJECT UNTIL A LIST OF SIZES IS FURNISHED BY THE ENGINEER.

DETAILED DRAWINGS FOR PROPOSED ALTERNATE DESIGNS FOR UNDERGROUND DRAINAGE STRUCTURES SHALL BE SUBMITTED TO THE ENGINEER FOR APPROVAL PROVIDING THAT SUCH ALTERNATE DESIGNS MAKE PROVISION FOR EQUIVALENT CAPACITY AND STRENGTH.

ALL PRECAST CATCH BASIN UNITS SHALL CONFORM TO THE PERTINENT REQUIREMENTS OF ASTM C 913.

ALL DRAINAGE STRUCTURES ARE DESIGNATED ON THE PLANS AS "MANHOLES 3X3-L", "CATCH BASINS 4-B", "INLETS 2X3-H", ETC. THE FIRST NUMBERS DESIGNATES THE SIZE OF THE STRUCTURE, AND THE FOLLOWING LETTER DESIGNATES THE TYPE OF COVER TO BE USED TO COMPRISE THE COMPLETE UNIT.

BASES SHALL BE PLACED ON A BED OF MATERIAL AT LEAST 6 INCHES IN DEPTH, WHICH MEETS THE REQUIREMENTS OF FOUNDATION BACKFILL. THIS BEDDING SHALL BE COMPACTED AND PROVIDE UNIFORM SUPPORT FOR THE ENTIRE AREA OF THE BASE.

ALL BAR STEEL REINFORCEMENT SHALL BE EMBEDDED 2 INCHES CLEAR UNLESS OTHERWISE SHOWN OR NOTED.

PRECAST REINFORCED RISERS SHALL HAVE A TONGUE AND GROOVE JOINT WITH TONGUE UP OR DOWN.

4" OVERHANGING BASES ARE REQUIRED FOR CAST-IN-PLACE REINFORCED CONCRETE AND CONCRETE BLOCK INSTALLATIONS. 4" OVERHANG IS REQUIRED WHEN SEPARATE PRECAST BASE IS PROVIDED. OVERHANG IS NOT REQUIRED ON PRECAST STRUCTURES WITH AN INTEGRAL OR MONOLITHIC BASE.

MAXIMUM INSIDE PIPE DIAMETER DETERMINED BY 3" CLEARANCE ON EACH SIDE OF THE OUTSIDE WALL OF THE PIPE. SEE DETAIL "A". ASSUMES PIPE ENTERS PERPENDICULAR TO THE STRUCTURE.

(1) FOR PRECAST CATCH BASINS AND REINFORCED CONCRETE BASES PROVIDE REINFORCING STEEL IN ACCORDANCE TO ASTM C 913.

(2) CONTRACTOR TO PROVIDE DRAWING(S) STAMPED BY A PROFESSIONAL ENGINEER FOR STEEL REINFORCING DESIGN FOR CAST-IN-PLACE STRUCTURES.

(3) 1" CONCRETE KEY POURED AFTER INSTALLATION. 2' SUMP MEASURED FROM TOP OF KEY.

CATCH BASIN COVER MATRIX

CATCH BASIN SIZE	WIDTH (W) (FT.)	LENGTH (L) (FT.)	INLET COVER TYPE	
			F	ALL H'S
2 X 3-FT	2	3		X
2.5 X 3-FT	2.5	3	X	

PIPE MATRIX

CATCH BASIN SIZE	MAXIMUM INSIDE PIPE DIAMETER (IN)	
	WIDTH (W)(IN)	LENGTH (L)(IN)
2 X 3-FT	12	24
2.5 X 3-FT	18	24

CATCH BASINS 2X3-FT AND 2.5X3-FT

CATCH BASINS
2 X 3-FT AND 2.5 X 3-FT

STATE OF WISCONSIN
DEPARTMENT OF TRANSPORTATION

APPROVED
December 2023 — DATE
/S/ RODNEY TAYLOR — ROADWAY STANDARDS DEVELOPMENT UNIT SUPERVISOR
FHWA

6
SDD 08A09-03

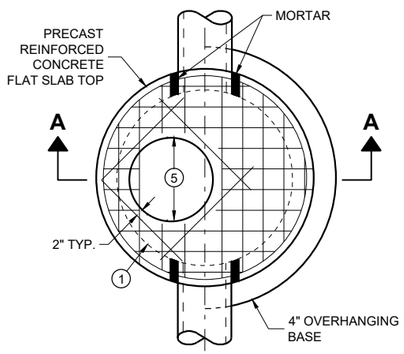

PLAN VIEW
CIRCULAR OPENING

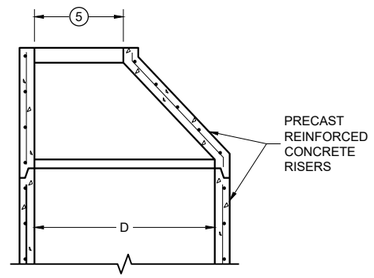

OPTIONAL PRECAST REINFORCED CONCRETE ECCENTRIC TOP

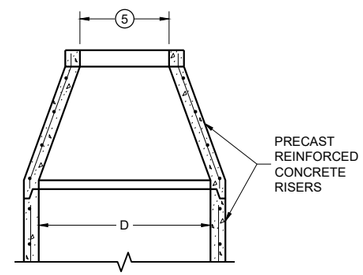

OPTIONAL PRECAST REINFORCED CONCRETE CONCENTRIC TOP

MANHOLE COVER OPENING MATRIX

OPENING SIZE (FT.) (5) \ MANHOLE COVER TYPE	C	ALL J'S	K	L	M
2 DIA.	X	X		X	
3 DIA.			X		X

PIPE MATRIX

MANHOLE SIZE (DIA.)	MAXIMUM INSIDE PIPE DIAMETER FOR TWO PIPES		MINIMUM WALL THICKNESS (IN)	MINIMUM PRECAST FLAT SLAB TOP AND BASE THICKNESS
	180° SEPARATION (IN)	90° SEPARATION (IN)		
3-FT	15	12	4	6
4-FT	24	18	4	6
5-FT	36	24	5	8
6-FT	42	36	6	8
7-FT	48	36/42 *	7	8
8-FT	60	42	8	8
9-FT	66	54	9	10
10-FT	72	60	10	10

*A 36" PIPE AND A 42" PIPE CAN BE PLACED WITHIN 90 DEGREES. SEE MINIMUM HORIZONTAL PIPE SEPARATION DETAIL.

GENERAL NOTES

DETAILS OF CONSTRUCTION, MATERIALS AND WORKMANSHIP NOT SHOWN ON THIS DRAWING SHALL CONFORM TO THE PERTINENT REQUIREMENTS OF THE STANDARD SPECIFICATIONS AND THE APPLICABLE SPECIAL PROVISIONS.

UNLESS OTHERWISE AUTHORIZED IN WRITING BY THE ENGINEER, THE CONTRACTOR SHALL NOT ORDER AND DELIVER PRECAST MANHOLE UNITS REQUIRED FOR THE PROJECT UNTIL A LIST OF SIZES IS FURNISHED BY THE ENGINEER.

DETAILED DRAWINGS FOR PROPOSED ALTERNATE DESIGNS FOR UNDERGROUND DRAINAGE STRUCTURES SHALL BE SUBMITTED TO THE ENGINEER FOR APPROVAL PROVIDING THAT SUCH ALTERNATE DESIGNS MAKE PROVISION FOR EQUIVALENT CAPACITY AND STRENGTH.

ALL DRAINAGE STRUCTURES ARE DESIGNATED ON THE PLANS AS "MANHOLES 3X3-L", "CATCH BASINS 4-B", "INLETS 2X3-H", ETC. THE FIRST NUMBERS DESIGNATE THE SIZE OF THE STRUCTURE, AND THE FOLLOWING LETTER DESIGNATES THE TYPE OF COVER TO BE USED TO COMPRISE THE COMPLETE UNIT.

BASES SHALL BE PLACED ON A BED OF MATERIAL AT LEAST 6 INCHES IN DEPTH, WHICH MEETS THE REQUIREMENTS OF FOUNDATION BACKFILL. THIS BEDDING SHALL BE COMPACTED AND PROVIDE UNIFORM SUPPORT FOR THE ENTIRE AREA OF THE BASE.

PRECAST REINFORCED CONCRETE CONE TOPS (ECCENTRIC OR CONCENTRIC) OR PRECAST REINFORCED CONCRETE FLAT SLAB TOPS MAY BE USED ON CONCRETE BLOCK STRUCTURES.

ECCENTRIC CONE TOPS MAY BE USED ON ALL STRUCTURES. CONCENTRIC CONE TOPS SHALL BE USED ONLY ON STRUCTURES 5 FEET OR LESS IN DEPTH UNLESS OTHERWISE DIRECTED BY THE ENGINEER.

STEPS MEETING AASHTO M199 AND THE FOLLOWING REQUIREMENTS SHALL BE INSTALLED IN ALL STRUCTURES OVER 5 FEET IN DEPTH: 16 INCH C-C MAXIMUM SPACING; PROJECT A MINIMUM CLEAR DISTANCE OF 4 INCHES FROM THE WALL AT THE POINT OF EMBEDMENT; MINIMUM LENGTH OF 10 INCHES; MINIMUM WALL EMBEDMENT OF 3 INCHES. FERROUS METAL STEPS NOT PAINTED OR TREATED TO RESIST CORROSION SHALL HAVE A MINIMUM CROSS SECTIONAL IMENSION OF 1 INCH.

STEPS OF APPROVED POLYPROPYLENE PLASTIC COATED REINFORCEMENT BAR ARE ACCEPTABLE. REINFORCING BAR MUST BE A MINIMUM OF ½ INCH AND MEET THE REQUIREMENTS OF ASTM A615.

CERTIFICATION SHALL BE PROVIDED THAT INSTALLED STEPS WHEN TESTED IN ACCORDANCE WITH SECTION 10 OF AASHTO T280 CAN WITHSTAND A VERTICAL LOAD OF 800 LBS. AND A HORIZONTAL LOAD OF 400 LBS.

ALL BAR STEEL REINFORCEMENT SHALL BE EMBEDDED 2 INCHES CLEAR UNLESS OTHERWISE SHOWN OR NOTED.

ALL PRECAST MANHOLE UNITS SHALL CONFORM TO THE PERTINENT REQUIREMENTS OF AASHTO DESIGNATION M199.

PRECAST REINFORCED RISERS SHALL HAVE A TONGUE AND GROOVE JOINT WITH TONGUE UP OR DOWN.

CONCRETE BLOCK WILL NOT BE PERMITTED FOR STRUCTURES GREATER THAN 4 FEET IN DIAMETER.

4" OVERHANGING BASES ARE REQUIRED FOR ALL CONCRETE BLOCK INSTALLATIONS. 4" OVERHANG IS REQUIRED WHEN SEPARATE PRECAST BASE IS PROVIDED. OVERHANG IS NOT REQUIRED ON PRECAST STRUCTURES WITH AN INTEGRAL OR MONOLITHIC BASE.

FOR ADDITIONAL CONFIGURATIONS, MAINTAIN A MINIMUM OF 12 INCHES AS MEASURED FROM THE INSIDE OF THE STRUCTURE WALL BETWEEN THE OUTSIDE PIPE WALLS OF ADJACENT PIPES. SEE DETAIL "D".

(1) FOR PRECAST MANHOLES AND REINFORCED CONCRETE BASES PROVIDE REINFORCING STEEL IN ACCORDANCE TO AASHTO M199.

(2) SEE PIPE MATRIX TABLE FOR MINIMUM WALL THICKNESS FOR PRECAST MANHOLES

(3) SEE PIPE MATRIX TABLE FOR MINIMUM THICKNESS OF PRECAST FLAT SLAB TOPS AND BASES.

(4) JOINTS TO BE SEALED WITH A BUTYL RUBBER SEAL PER SEALANT MANUFACTURERS RECOMMENDATIONS CONFORMING TO ASTM C 990 OR RUBBER GASKETS CONFORMING TO ASTM C443.

(5) SEE MANHOLE COVER OPENING MATRIX.

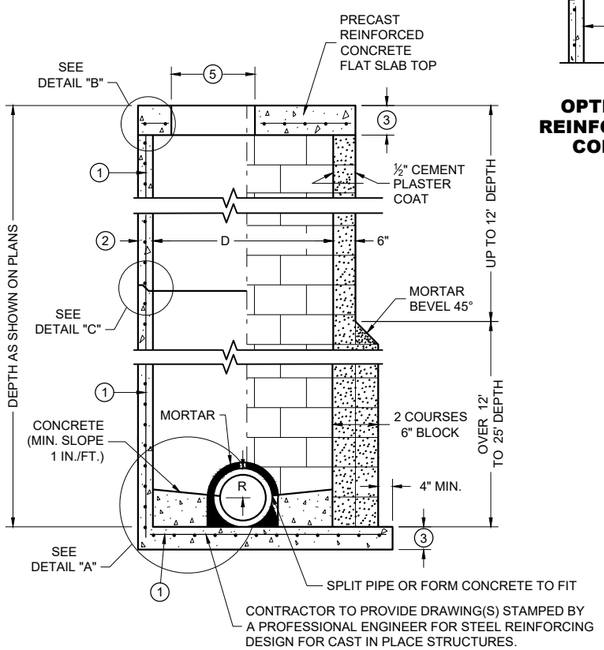

SECTION A - A

PRECAST REINFORCED CONCRETE WITH MONOLITHIC BASE

CONCRETE BLOCK WITH CAST IN PLACE OR PRECAST REINFORCED CONCRETE BASE (1)

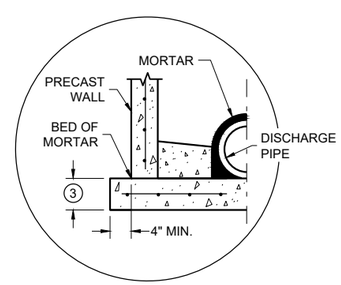

SEPARATE PRECAST REINFORCED CONCRETE BASE OPTION

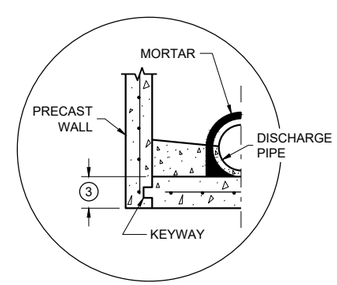

PRECAST REINFORCED CONCRETE WITH INTEGRAL BASE OPTION

DETAIL "A"

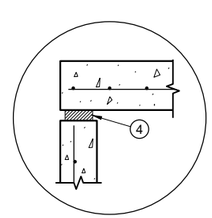

TOP WITH PLAIN END JOINT

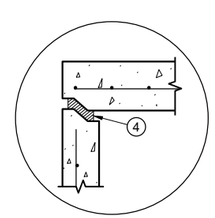

TOP WITH TONGUE AND GROOVE JOINT

DETAIL "B"

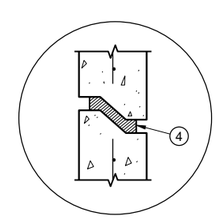

RISER WITH TONGUE AND GROOVE JOINT

DETAIL "C"

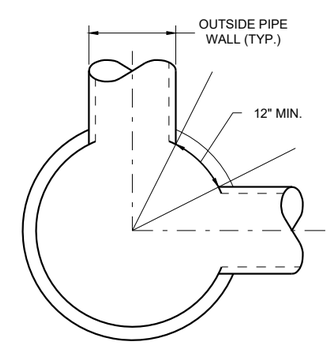

MINIMUM HORIZONTAL PIPE SEPARATION

DETAIL "D"

MANHOLES 3-FT, 4-FT, 5-FT, 6-FT, 7-FT, 8-FT, 9-FT AND 10-FT DIAMETER

MANHOLES, 3-FT, 4-FT 5-FT, 6-FT, 7-FT, 8-FT, 9-FT AND 10-FT DIAMETER

STATE OF WISCONSIN
DEPARTMENT OF TRANSPORTATION

APPROVED
December 2023 — DATE
/S/ Rodney Taylor — ROADWAY STANDARDS DEVELOPMENT UNIT SUPERVISOR
FHWA

6

SDD 08B09-04

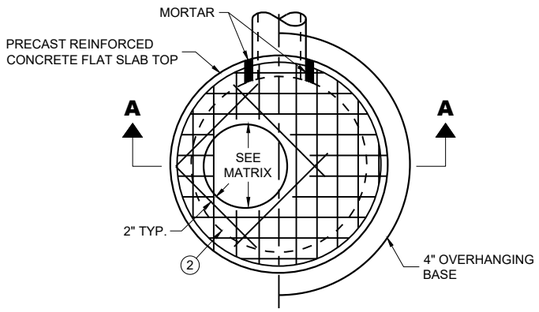

PLAN VIEW CIRCULAR OPENING

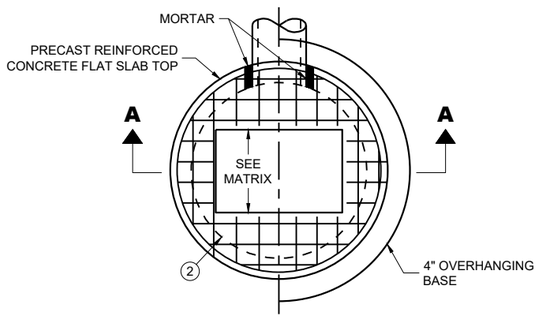

PLAN VIEW RECTANGULAR OPENING

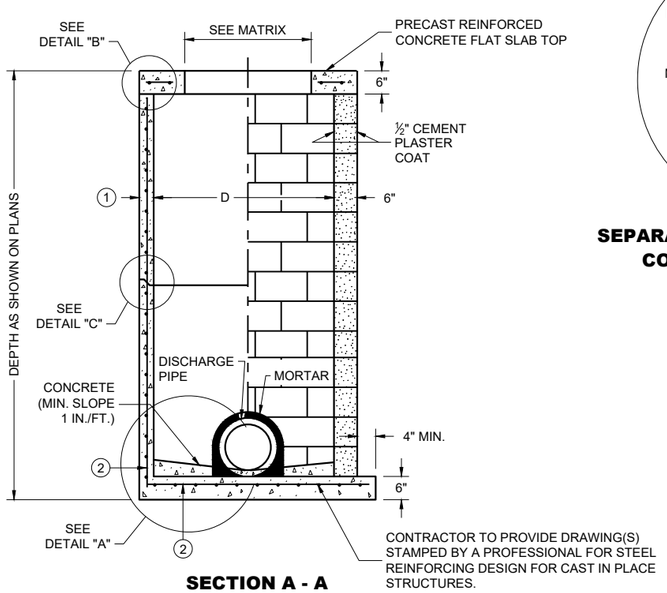

SECTION A - A

PRECAST REINFORCED CONCRETE WITH MONOLITHIC BASE

CONCRETE BLOCK WITH CAST IN PLACE OR PRECAST REINFORCED CONCRETE BASE (2)

CIRCULAR INLETS WITH FLAT TOP

CATCH BASIN COVER OPENING MATRIX

INLET SIZE	INLET COVER TYPE	ALL A'S	ALL B'S	BW	C	F	ALL H'S	S	T	V	WM	Z
	OPENING SIZE (FT.)											
3-FT	2 DIA.				X							X
	2 X 2	X	X					X		X		
4-FT	2 DIA.				X							X
	2 X 2	X	X					X		X		
	2 X 2.5			X				X	X	X	X	
	2 X 3						X					
	2.5 X 3					X						

PIPE MATRIX

INLET SIZE	MAXIMUM INSIDE PIPE DIAMETER FOR TWO PIPES	
	180° SEPARATION (IN)	90° SEPARATION (IN)
3-FT	15	12
4-FT	24	18

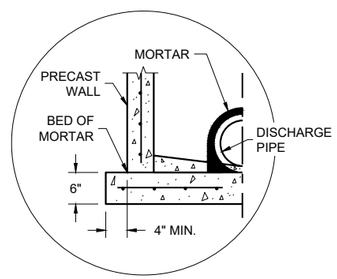

SEPARATE PRECAST REINFORCED CONCRETE BASE OPTION

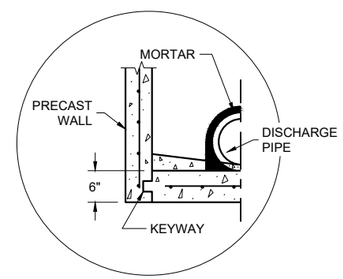

PRECAST REINFORCED CONCRETE WITH INTEGRAL BASE OPTION

DETAIL "A"

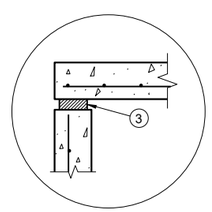

TOP WITH PLAIN END JOINT

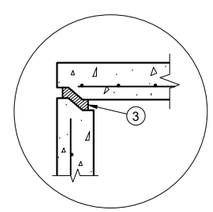

TOP WITH TONGUE AND GROOVE JOINT

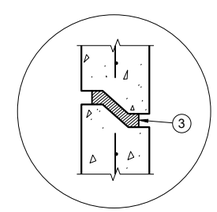

RISER WITH TONGUE AND GROOVE JOINT

DETAIL "B"

DETAIL "C"

INLETS 3-FT AND 4-FT DIAMETER

GENERAL NOTES

DETAILS OF CONSTRUCTION, MATERIALS AND WORKMANSHIP NOT SHOWN ON THIS DRAWING SHALL CONFORM TO THE PERTINENT REQUIREMENTS OF THE STANDARD SPECIFICATIONS AND THE APPLICABLE SPECIAL PROVISIONS.

UNLESS OTHERWISE AUTHORIZED IN WRITING BY THE ENGINEER, THE CONTRACTOR SHALL NOT ORDER AND DELIVER PRECAST INLET UNITS REQUIRED FOR THE PROJECT UNTIL A LIST OF SIZES IS FURNISHED BY THE ENGINEER.

DETAILED DRAWINGS FOR PROPOSED ALTERNATE DESIGNS FOR UNDERGROUND DRAINAGE STRUCTURES SHALL BE SUBMITTED TO THE ENGINEER FOR APPROVAL PROVIDING THAT SUCH ALTERNATE DESIGNS MAKE PROVISION FOR EQUIVALENT CAPACITY AND STRENGTH.

ALL DRAINAGE STRUCTURES ARE DESIGNATED ON THE PLANS AS "MANHOLES 3X3-L", "CATCH BASINS 4-B", "INLETS 2X3-H", ETC. THE FIRST NUMBERS DESIGNATE THE SIZE OF THE STRUCTURE, AND THE FOLLOWING LETTER DESIGNATES THE TYPE OF COVER TO BE USED TO COMPRISE THE COMPLETE UNIT.

BASES SHALL BE PLACED ON A BED OF MATERIAL AT LEAST 6 INCHES IN DEPTH, WHICH MEETS THE REQUIREMENTS OF FOUNDATION BACKFILL. THIS BEDDING SHALL BE COMPACTED AND PROVIDE UNIFORM SUPPORT FOR THE ENTIRE AREA OF THE BASE.

ALL BAR STEEL REINFORCEMENT SHALL BE EMBEDDED 2 INCHES CLEAR UNLESS OTHERWISE SHOWN OR NOTED.

ALL PRECAST INLET UNITS SHALL CONFORM TO THE PERTINENT REQUIREMENTS OF AASHTO DESIGNATION M199.

PRECAST REINFORCED RISERS SHALL HAVE A TONGUE AND GROOVE JOINT WITH TONGUE UP OR DOWN.

4" OVERHANGING BASES ARE REQUIRED FOR ALL CONCRETE BLOCK INSTALLATIONS. 4" OVERHANG IS REQUIRED WHEN SEPARATE PRECAST BASE IS PROVIDED. OVERHANG IS NOT REQUIRED ON PRECAST STRUCTURES WITH AN INTEGRAL OR MONOLITHIC BASE.

FOR ADDITIONAL CONFIGURATIONS, MAINTAIN A MINIMUM OF 12 INCHES AS MEASURED FROM THE INSIDE OF THE STRUCTURE WALL BETWEEN THE OUTSIDE PIPE WALLS OF ADJACENT PIPES. SEE DETAIL "D".

(1) MINIMUM WALL THICKNESS SHALL BE 4 INCHES FOR 3-FT DIAMETER AND 5 INCHES FOR 4-FT DIAMTER PRECAST INLETS.

(2) FOR PRECAST INLETS AND REINFORCED CONCRETE BASES PROVIDE REINFORCING STEEL IN ACCORDANCE TO AASHTO M199.

(3) JOINTS TO BE SEALED WITH A BUTYL RUBBER SEAL PER SEALANT MANUFACTURERS RECOMMENDATIONS CONFORMING TO ASTM C 990 OR RUBBER GASKETS CONFORMING TO ASTM C443.

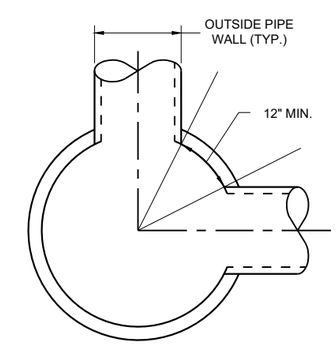

MINIMUM HORIZONTAL PIPE SEPARATION

DETAIL "D"

INLETS 3-FT AND 4-FT DIAMETER

STATE OF WISCONSIN
DEPARTMENT OF TRANSPORTATION

APPROVED
December 2023 — DATE
/S/ Rodney Taylor — ROADWAY STANDARDS DEVELOPMENT UNIT SUPERVISOR
FHWA

6

SDD 08C06-03

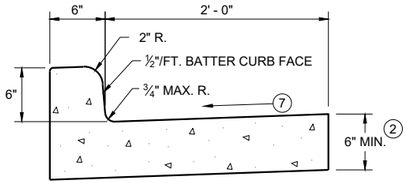

TYPES A (1) & D

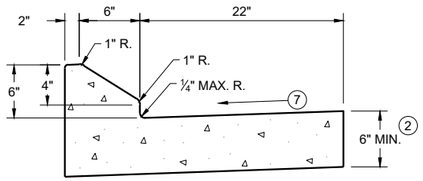

6" SLOPED CURB TYPES G (1) & J

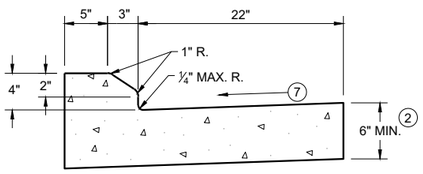

4" SLOPED CURB TYPES G (1) & J

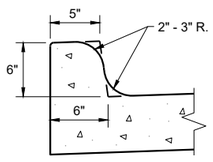

TYPES K (1) & L
(OPTIONAL CURB SHAPE)

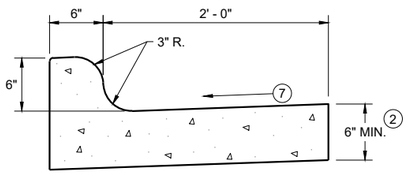

TYPES K (1) & L

CONCRETE CURB AND GUTTER 30"

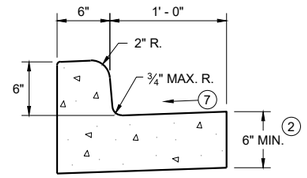

TYPES A (1) & D

CONCRETE CURB AND GUTTER 18"

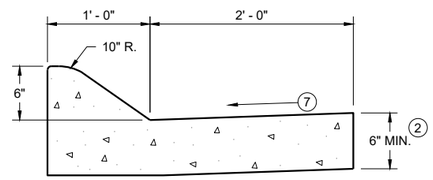

6" SLOPED CURB TYPES A (1) & D

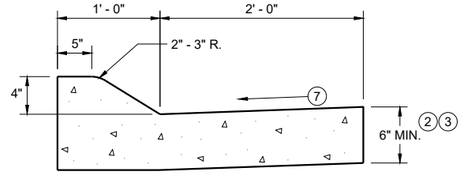

4" SLOPED CURB TYPES A (1) & D

CONCRETE CURB AND GUTTER 36"

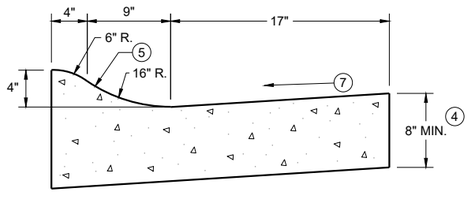

4" SLOPED CURB TYPES R (1) & T
CONCRETE CURB AND GUTTER 30"

TBT & TBTT	X
30"	22"
36"	28"

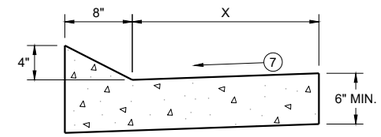

TYPES TBT & TBTT (1)

CONCRETE CURB AND GUTTER

PAVEMENT THICKNESS AND MAXIMUM CONCRETE PANEL WIDTH TABLE

PAVEMENT THICKNESS	MAXIMUM PANEL WIDTH
LESS THAN 10"	12'
10" & ABOVE	15'

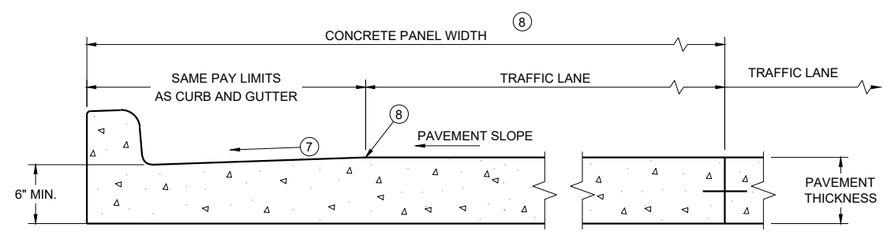

PARTIAL SECTION OF PAVEMENT WITH INTEGRAL CURB AND GUTTER *

* BIKE LANE IS NOT SHOWN

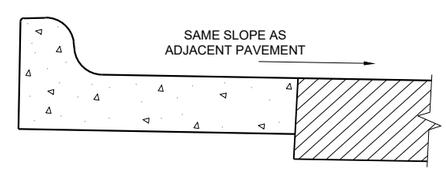

REVERSE SLOPE GUTTER (6)
(TYPICAL FOR ALL CURB & GUTTER TYPES)

GENERAL NOTES

DETAILS OF CONSTRUCTION AND WORKMANSHIP NOT SHOWN ON THIS DRAWING SHALL CONFORM TO THE PERTINENT REQUIREMENTS OF THE CONTRACT.

PAVEMENT TIES AND TIE BARS SHALL BE EPOXY COATED IN CONFORMANCE WITH SUBSECTION 505.2.6.2 OF THE STANDARD SPECIFICATIONS.

INTEGRAL CURB AND GUTTER SHALL CONFORM TO THE DETAILS SHOWN FOR CONCRETE CURB AND GUTTER INCLUDING THE TRANSVERSE GUTTER SLOPE.

UNLESS OTHERWISE SHOWN ON THE TYPICAL CROSS SECTIONS, THE BASE AGGREGATE AND COMMON EXCAVATION LIMITS ARE 2' - 0" BEHIND THE BACK OF CURBS.

(1) TIE BARS ARE REQUIRED FOR CURB AND GUTTERS TYPES A, G, K, R, AND TBTT.

(2) THE BOTTOM OF CURB AND GUTTER MAY BE CONSTRUCTED EITHER LEVEL OR PARALLEL TO THE SLOPE OF THE SUBGRADE OR BASE AGGREGATE PROVIDED A 6" MINIMUM GUTTER THICKNESS IS MAINTAINED.

(3) USE 8" MINIMUM GUTTER THICKNESS WHEN USED WITH AN ADJACENT CONCRETE TRUCK APRON PLACED BEHIND BACK OF CURB.

(4) THE BOTTOM OF CURB AND GUTTER MAY BE CONSTRUCTED EITHER LEVEL OR PARALLEL TO THE SLOPE OF THE SUBGRADE OR BASE AGGREGATE PROVIDED A 8" MINIMUM GUTTER THICKNESS IS MAINTAINED.

(5) UNLESS OTHERWISE NOTED, FOR STAKING PURPOSES THE FACE OF CURB IS 6" FROM THE BACK OF CURB.

(6) WHEN REVERSE SLOPE GUTTER IS REQUIRED, THE LOCATION(S) WILL BE SHOWN ELSEWHERE IN THE PLAN.

(7) USE 4% GUTTER CROSS SLOPE UNLESS OTHERWISE NOTED IN THE PLANS.

(8) INCLUDE LONGITUDINAL JOINT AND TIE BARS ALONG LANE EDGE WHEN CONCRETE PANEL WIDTH EXCEEDS THE MAXIMUM WIDTH PER TABLE BELOW. LONGITUDINAL JOINT(S) ARE NOT ALLOWED WITHIN TRAFFIC LANES AND BIKE LANES. LONGITUDINAL JOINT MAY BE SAWED.

(9) SLOPE TO BE REVERSE SLOPE MATCHING THE SLOPE OF THE PAVEMENT AND THE CIRCULATORY ROADWAY

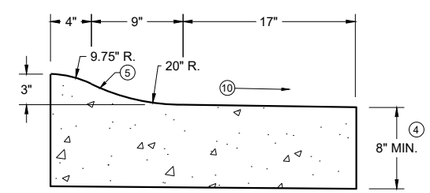

3" SLOPED CURB TYPES R (1) & T

CONCRETE CURB AND GUTTER

STATE OF WISCONSIN
DEPARTMENT OF TRANSPORTATION

6

SDD 08D01-24a

6

SDD 08D01-24a

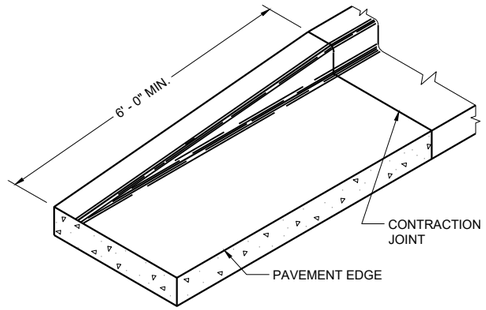

END SECTION CURB AND GUTTER

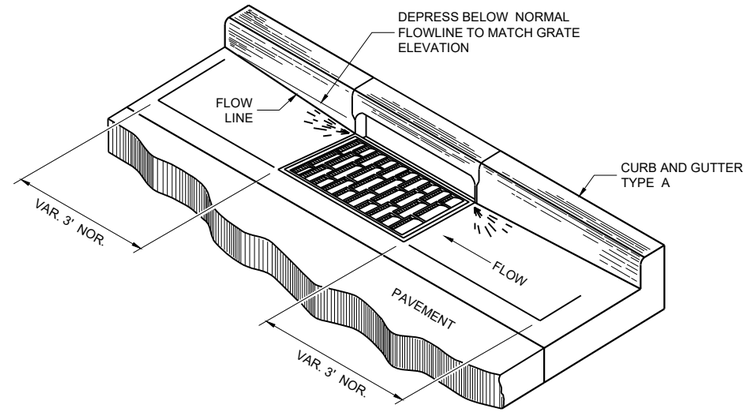

DETAIL OF CURB AND GUTTER AT INLETS

(TYPICAL H INLET COVER SHOWN)

GENERAL NOTES

DETAILS OF CONSTRUCTION AND WORKMANSHIP NOT SHOWN ON THIS DRAWING SHALL CONFORM TO THE PERTINENT REQUIREMENTS OF THE CONTRACT.

PAVEMENT TIES AND TIE BARS SHALL BE EPOXY COATED IN CONFORMANCE WITH SUBSECTION 505.2.6.2 OF THE STANDARD SPECIFICATIONS.

UNLESS OTHERWISE SHOWN ON THE TYPICAL CROSS SECTIONS, THE BASE AGGREGATE AND COMMON EXCAVATION LIMITS ARE 2' - 0" BEHIND THE BACK OF CURBS.

(1) TIE BARS ARE REQUIRED FOR CURB AND GUTTERS TYPES A, G, K, R, AND TBTT.

(2) THE BOTTOM OF CURB AND GUTTER MAY BE CONSTRUCTED EITHER LEVEL OR PARALLEL TO THE SLOPE OF THE SUBGRADE OR BASE AGGREGATE PROVIDED A 6" MINIMUM GUTTER THICKNESS IS MAINTAINED.

(10) REFER TO SDD 08D18 AND 08D19 FOR ADDITIONAL DRIVEWAY ENTRANCE CURB DETAILS.

(11) PLACE 1" THICK EXPANSION JOINT MATERIAL BETWEEN VERTICAL FACE CURB TYPES EXTENDING FROM THE TOP OF CURB TO 1 INCH BELOW THE ADJOINING CONCRETE SURFACE. RIGID CONCRETE STRUCTURES INCLUDE RAISED CONCRETE MEDIANS, CONCRETE SAFETY ISLANDS, SPLITTER ISLANDS, OR LOCATIONS IDENTIFIED ON THE PLANS.

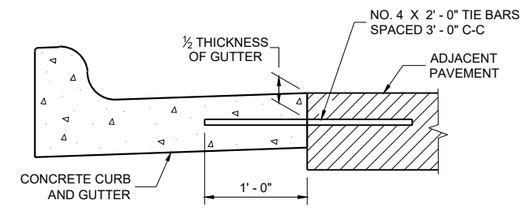

TYPICAL TIE BAR LOCATION (1)

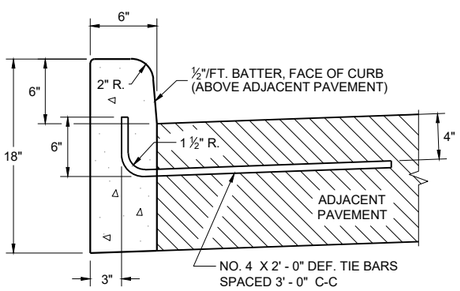

TYPES A (1) & D

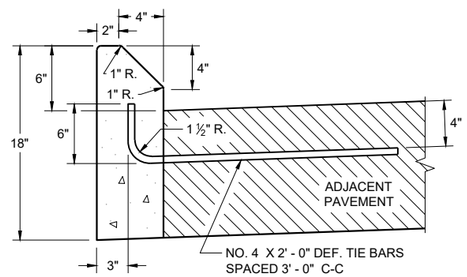

TYPES G (1) & J

CONCRETE CURB

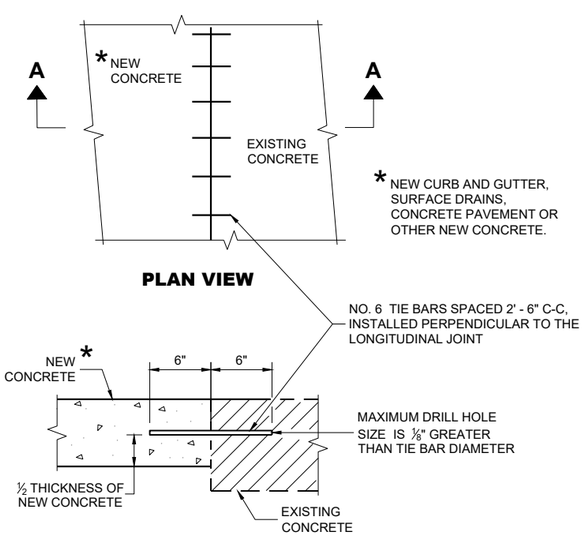

PLAN VIEW

SECTION A - A

TIE BARS DRILLED INTO EXISTING PAVEMENT

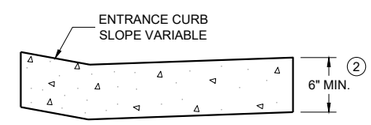

DRIVEWAY ENTRANCE CURB (10)

(WHEN DIRECTED BY THE ENGINEER)

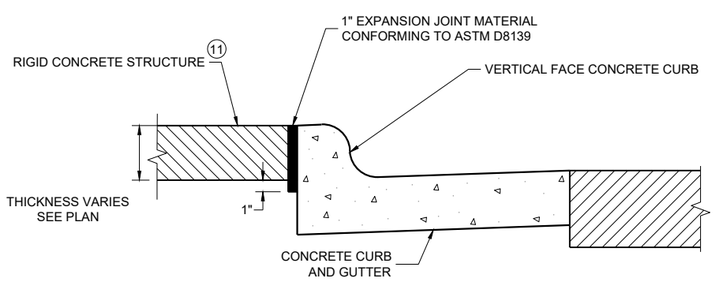

EXPANSION JOINT DETAIL FOR VERTICAL CURB ABUTTING A RIGID STRUCTURE (11)

CONCRETE CURB, TIES AND CURB AND GUTTER APPLICATIONS

STATE OF WISCONSIN
DEPARTMENT OF TRANSPORTATION

APPROVED
February 2025 — DATE
/S/ Rodnery Taylor — ROADWAY STANDARDS DEVELOPMENT UNIT SUPERVISOR
FHWA

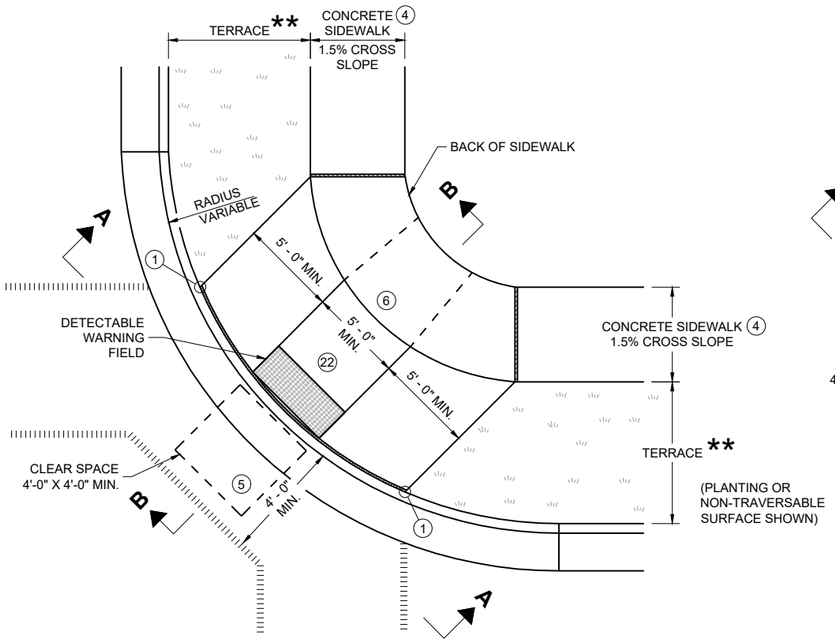

PLAN VIEW

CURB RAMP TYPE 1

(CENTER OF CORNER RADIUS)

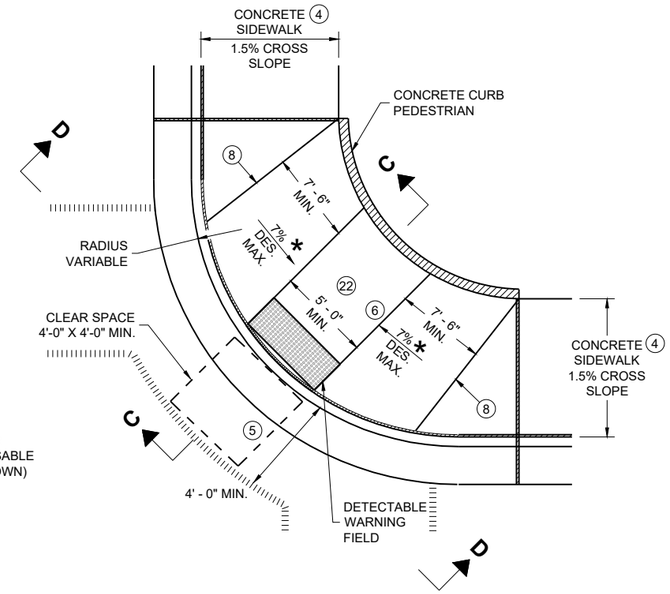

PLAN VIEW

CURB RAMP TYPE 1 - A

(NO TERRACE)

GENERAL NOTES

AVOID PLACING DRAINAGE STRUCTURES, JUNCTION BOXES OR OTHER OBSTRUCTIONS IN FRONT OF CURB RAMP ACCESS AREAS.

DETAILS OF CONSTRUCTION, MATERIALS AND WORKMANSHIP NOT SHOWN ON THIS DRAWING SHALL CONFORM TO THE PERTINENT REQUIREMENTS OF THE STANDARD SPECIFICATIONS AND THE APPLICABLE SPECIAL PROVISIONS.

WHEN NECESSARY, THE SIDEWALK ELEVATION MAY BE LOWERED TO MEET THE HIGH POINT ON THE CURB RAMP.

TYPE 1 CURB RAMPS SHALL HAVE A NORMAL SIDEWALK APRON AND CURB ON BOTH SIDES OF CURB RAMP.

DETECTABLE WARNING FILED SHALL BE MEASURED AND PAID BY THE SQUARE FOOT AS "CURB RAMP DETECTABLE WARNING FIELD". THE CONCRETE PEDESTRIAN CURB, IF NEEDED, SHALL BE MEASURED AND PAID BY THE LINEAR FOOT AS "CONCRETE CURB PEDESTRIAN". CONCRETE SIDEWALK IN THE CURB RAMP AREA SHALL BE MEASURED AND PAID BY THE SQUARE FOOT AS CONCRETE SIDEWALK, INCLUDING THE AREA UNDER THE DETECTABLE WARNING FIELD.

SELECT CURB RAMP DETECTABLE WARNING FIELD MATERIALS AND DEVICES FROM THE DEPARTMENT'S APPROVED MATERIALS LIST. THE COLOR OF THE DETECTABLE WARNING FIELD IS SPECIFIED ELSEWHERE AND IS INCIDENTAL TO THE BID ITEM OF "CURB RAMP DETECTABLE WARNING FIELD"

DETECTABLE WARNING FIELDS THAT ARE INSTALLED AS A GROUP OR SIDE BY SIDE, SHALL BE FROM THE SAME MANUFACTURER.

SURFACE TEXTURE OF THE RAMP SHALL BE OBTAINED BY COARSE BROOMING TRANSVERSE TO THE SLOPE OF THE CURB RAMP.

(1) THIS POINT IS AN EXTENSION OF OUTSIDE EDGE OF APPROACHING SIDEWALK WHERE IT MEETS THE BACK OF CONCRETE CURB. POINT LOCATION MAY BE ADJUSTED TO ALIGN WITH BEGINNING OF FULL-HEIGHT CURB IF THIS DISTANCE IS SHORT.

(2) GRADE CHANGE BETWEEN GUTTER COUNTER SLOPE AND THE CURB RAMP SLOPE IS DESIRABLY 11% OR LESS AND SHALL NOT EXCEED 13.3%. TYPICAL GUTTER COUNTER SLOPE IS 4% BUT MAY BE MODIFIED TO FIT FIELD CONDITIONS. PROVIDE LONGITUDINAL DRAINAGE AROUND CURB AND AWAY FROM CURB RAMP. NO VERTICAL LIPS OR DISCONTINUITIES ARE ALLOWED. SLOPE OF CURB HEAD OPENING SHALL MATCH THE RAMP SLOPE, MINIMALLY 1.5%, DESIRABLY 7% OR LESS, AND SHALL NOT EXCEED A MAXIMUM OF 8.3%. WHEN ADJACENT TO 1.5% LANDING, CONSTRUCT CURB HEAD OPENING AT 1.5% IN THE DIRECTION OF PEDESTRIAN TRAVEL.

(3) MAXIMUM 8.3% CURB RAMP SLOPE IS ALLOWABLE WITH GUTTER COUNTER SLOPE OF 5% MAXIMUM AND A 13.3% MAXIMUM GRADE CHANGE.

(4) ±0.5% CONSTRUCTION TOLERANCE IN SIDEWALK CROSS SLOPE. THE SIDEWALK CROSS SLOPE SHALL NOT EXCEED 2.1% WITHOUT PRIOR APPROVAL FROM THE ENGINEER.

(5) PROVIDE A CLEAR SPACE IN THE STREET AND GUTTER AREA. WHEN THE GUTTER CROSS SLOPE EXCEEDS 2.1%, CONSTRUCT THE CLEAR SPACE IN THE STREET AREA AND THE 4 FOOT WIDTH IS MEASURED FROM THE FLANGE LINE. FOR RECONSTRUCTION AND MODERNIZATION PROJECTS THE CLEAR SPACE SLOPE PARALLEL TO THE CURBLINE SHOULD BE 2.1% MAX FOR CROSSINGS THAT ARE STOP AND YIELD CONTROLLED, AND 5% MAX FOR THOSE THAT ARE SIGNAL CONTROLLED. FOR PERPETUATION AND REHABILITATION PROJECTS THE SLOPE OF THE CLEAR SPACE PARALLEL TO THE CURBLINE WILL MATCH THE ROADWAY LONGITUDINAL SLOPE. THE SLOPE OF THE CLEAR SPACE PERPENDICULAR TO THE CURBLINE WILL MATCH THE ROADWAY CROSS SLOPE BUT SHOULD NOT EXCEED 5% UNLESS THE ROADWAY IS SUPERELEVATED (WHEN SUPERELEVATED THE ROADWAY CROSS SLOPE SHOULD MATCH THE SUPERELEVATION).

(6) PROVIDE A 5 FOOT BY 5 FOOT LANDING. SLOPE PERPENDICULAR TO CURB SHALL BE 2.1% MAXIMUM. SLOPE PARALLEL TO CURB SHALL MATCH THE CURB AND GUTTER LONGITUDINAL SLOPE.

(8) PROVIDE GRADE BREAK PERPENDICULAR TO DIRECTION OF WHEELCHAIR TRAVEL.

(17) A MAXIMUM 2-INCH CONCRETE BORDER IS PERMITTED ALONG ALL SIDES OF THE DETECTABLE WARNING FIELD SURFACE.

(22) THE ENTIRE RAMP SHALL BE A PLANAR SURFACE. DO NOT WARP THE RUNNING SLOPE OR CROSS SLOPE OF THE RAMP. WARPING OF THE SIDEWALK CROSS SLOPE SHALL TAKE PLACE BETWEEN THE LANDING AND MATCH POINT.

LEGEND

- ½" EXPANSION JOINT SIDEWALK
- CONTRACTION JOINT FIELD LOCATED
- PAVEMENT MARKING CROSSWALK (WHITE)
- * MAXIMUM 8.3%
- ** WIDTH SHOWN ELSEWHERE IN THE PLANS

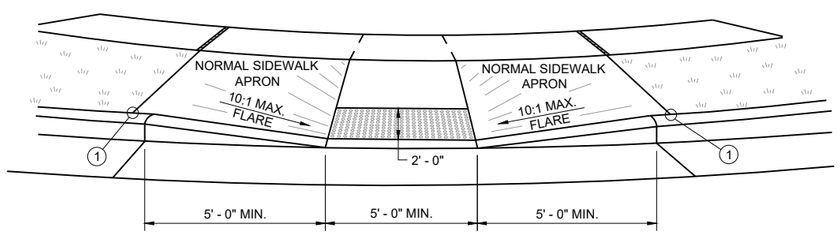

VIEW A - A FOR TYPE 1

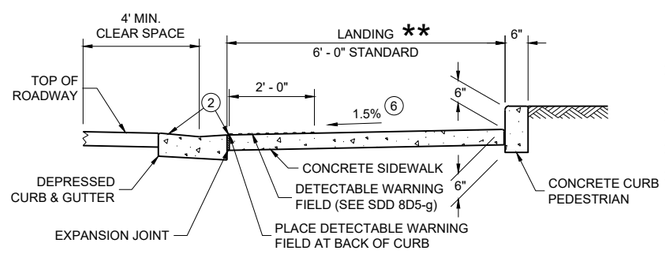

SECTION C - C FOR TYPE 1 - A

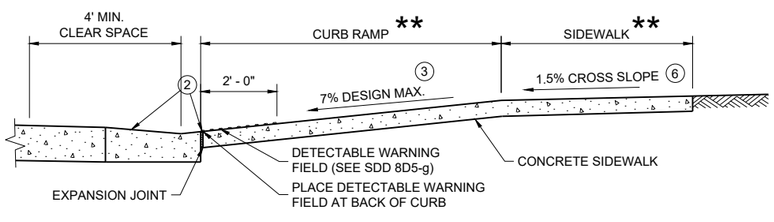

SECTION B - B FOR TYPE 1

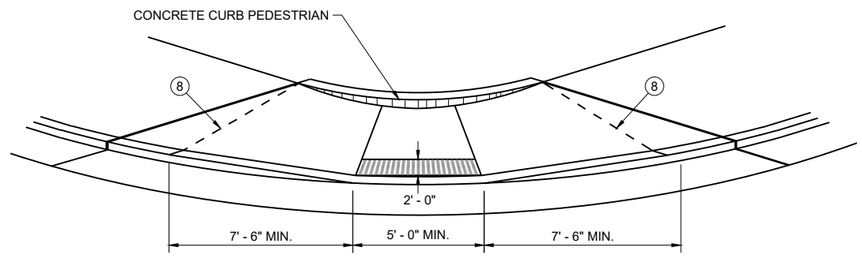

VIEW D - D FOR TYPE 1 - A

CURB RAMPS TYPE 1 AND 1-A

STATE OF WISCONSIN
DEPARTMENT OF TRANSPORTATION

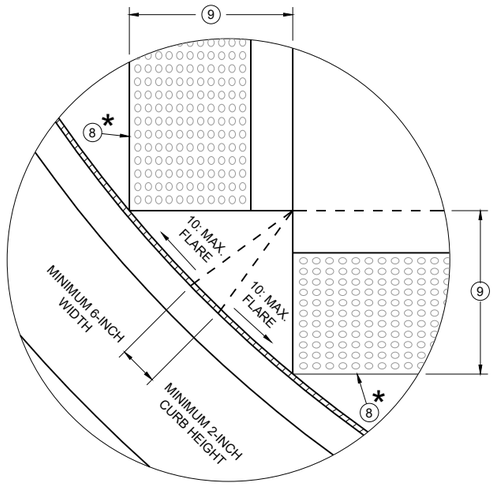

DETAIL A

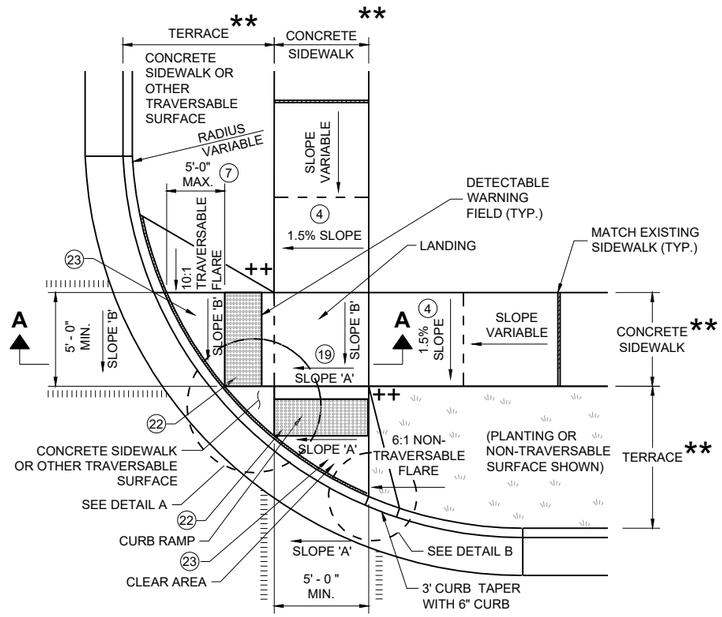

PLAN VIEW

CURB RAMP TYPE 2

(CENTER OF CORNER RADIUS)

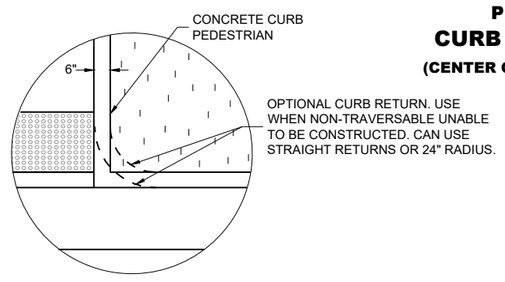

DETAIL B

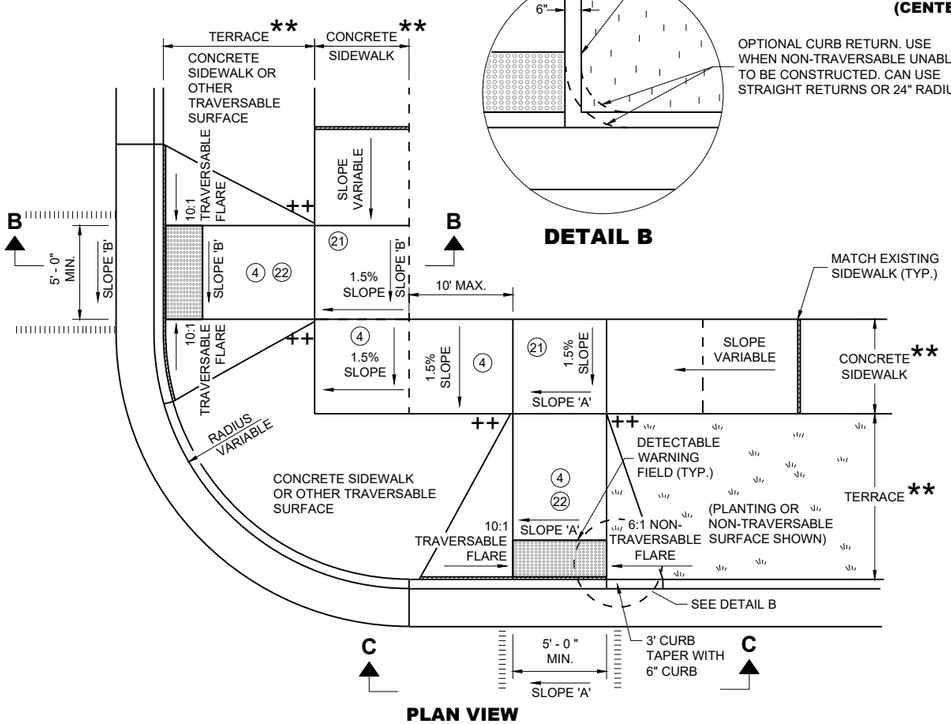

PLAN VIEW

CURB RAMP TYPE 3

(OUTSIDE OF CROSSWALK AREA)

GENERAL NOTES

AVOID PLACING DRAINAGE STRUCTURES, JUNCTION BOXES OR OTHER OBSTRUCTIONS IN FRONT OF CURB RAMP ACCESS AREAS.

DETAILS OF CONSTRUCTION, MATERIALS AND WORKMANSHIP NOT SHOWN ON THIS DRAWING SHALL CONFORM TO THE PERTINENT REQUIREMENTS OF THE STANDARD SPECIFICATIONS AND THE APPLICABLE SPECIAL PROVISIONS.

DETECTABLE WARNING FIELDS THAT ARE INSTALLED AS A GROUP OR SIDE BY SIDE SHALL BE FROM THE SAME MANUFACTURER.

(2) GRADE CHANGE BETWEEN GUTTER COUNTER SLOPE AND THE CURB RAMP SLOPE IS DESIRABLY 11% OR LESS AND SHALL NOT EXCEED 13.3%. TYPICAL GUTTER COUNTER SLOPE IS 4% BUT MAY BE MODIFIED TO FIT FIELD CONDITIONS. PROVIDE LONGITUDINAL DRAINAGE AROUND CURB AND AWAY FROM CURB RAMP. NO VERTICAL LIPS OR DISCONTINUITIES ARE ALLOWED. SLOPE OF CURB HEAD OPENING SHALL MATCH THE RAMP SLOPE, MINIMALLY 1.5%, DESIRABLY 7% OR LESS, AND SHALL NOT EXCEED A MAXIMUM OF 8.3%. WHEN ADJACENT TO 1.5% LANDING, CONSTRUCT CURB HEAD OPENING AT 1.5% IN THE DIRECTION OF PEDESTRIAN TRAVEL.

(3) MAXIMUM 8.3% CURB RAMP SLOPE IS ALLOWABLE WITH GUTTER COUNTER SLOPE OF 5% MAXIMUM AND A 13.3% MAXIMUM GRADE CHANGE.

(4) ±0.5% CONSTRUCTION TOLERANCE IN SIDEWALK CROSS SLOPE. THE SIDEWALK CROSS SLOPE SHALL NOT EXCEED 2.1% WITHOUT PRIOR APPROVAL FROM THE ENGINEER.

(7) WHEN GRADE BREAK DISTANCE EXCEEDS 5 FEET, USE RADIAL DETECTABLE WARNING FIELD PER SDD 8D5-f.

(8) PROVIDE GRADE BREAK PERPENDICULAR TO DIRECTION OF WHEELCHAIR TRAVEL.

(9) WHEN DISTANCE IS LESS THAN 6' - 0", IT MAY BE DIFFICULT TO ACHIEVE A 7% DESIGN MAXIMUM SLOPE OR FLATTER ALONG THE RAMP. REDUCE CURB HEIGHT IN TRIANGLE AREA TO ACHIEVE 7% DESIGN MAXIMUM SLOPE OR FLATTER ON RAMP. CONSTRUCT 2-INCH MINIMUM CURB HEIGHT BETWEEN 10:1 FLARES.

(17) A MAXIMUM 2-INCH CONCRETE BORDER IS PERMITTED ALONG ALL SIDES OF THE DETECTABLE WARNING FIELD SURFACE.

(19) WHERE A LANDING SERVES TWO CURB RAMPS, THE LANDING SLOPE SHALL NOT EXCEED THE CROSS SLOPE AT THE BOTTOM OF THE RAMP OR WITHIN THE CROSSWALK PARALLEL TO THE DIRECTION OF TRAVEL.

(21) PROVIDE A LANDING WITH A SLOPE PARALLEL TO ROADWAY THAT MATCHES SLOPE AT THE BOTTOM OF THE ADJACENT RAMP. SLOPE PERPENDICULAR TO ROADWAY SHALL BE 2.1% MAXIMUM. STANDARD LANDING SIZE IS 5 FEET BY 5 FEET.

(22) THE ENTIRE RAMP SHALL BE A PLANAR SURFACE. DO NOT WARP THE RUNNING SLOPE OR CROSS SLOPE OF THE RAMP. WARPING OF THE SIDEWALK CROSS SLOPE SHALL TAKE PLACE BETWEEN THE LANDING AND MATCH POINT.

(23) THE CLEAR AREA BETWEEN THE BOTTOM OF RAMP AND BACK OF CURB SHALL BE SLOPED SO THAT WATER DRAINS OUT OF ONE SIDE OR BOTH SIDES OF THE CURB OPENING.

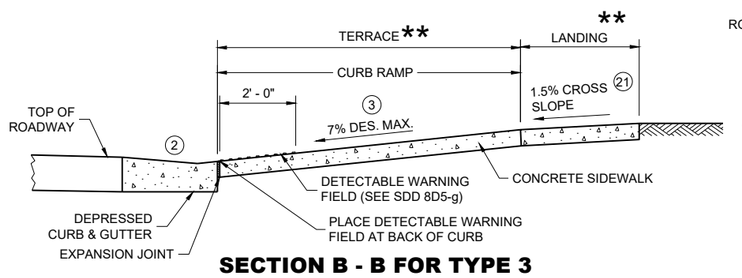

SECTION B - B FOR TYPE 3

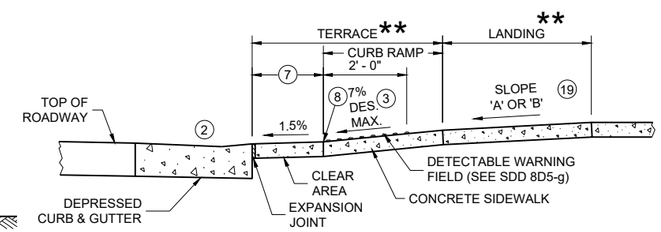

SECTION A - A FOR TYPE 2

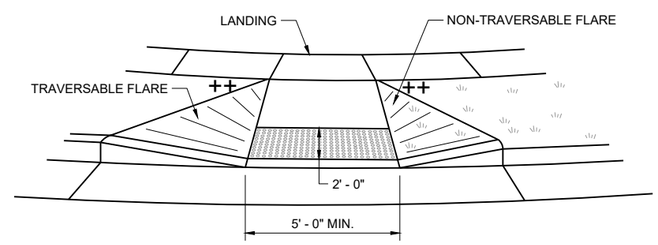

VIEW C - C FOR TYPE 3

LEGEND

▬▬▬	½" EXPANSION JOINT SIDEWALK
– – – –	CONTRACTION JOINT SIDEWALK
|||||||||||	PAVEMENT MARKING CROSSWALK (WHITE)
*	MAXIMUM 2.1% SLOPE IN ALL DIRECTIONS IN FRONT OF GRADE BREAK
**	WIDTH SHOWN ELSEWHERE IN THE PLANS
++	CONSTRUCT 6" WEDGE TO AVOID CONCRETE BREAKAGE

CURB RAMPS TYPE 2 AND 3

STATE OF WISCONSIN
DEPARTMENT OF TRANSPORTATION

6

SDD 08D05-22b

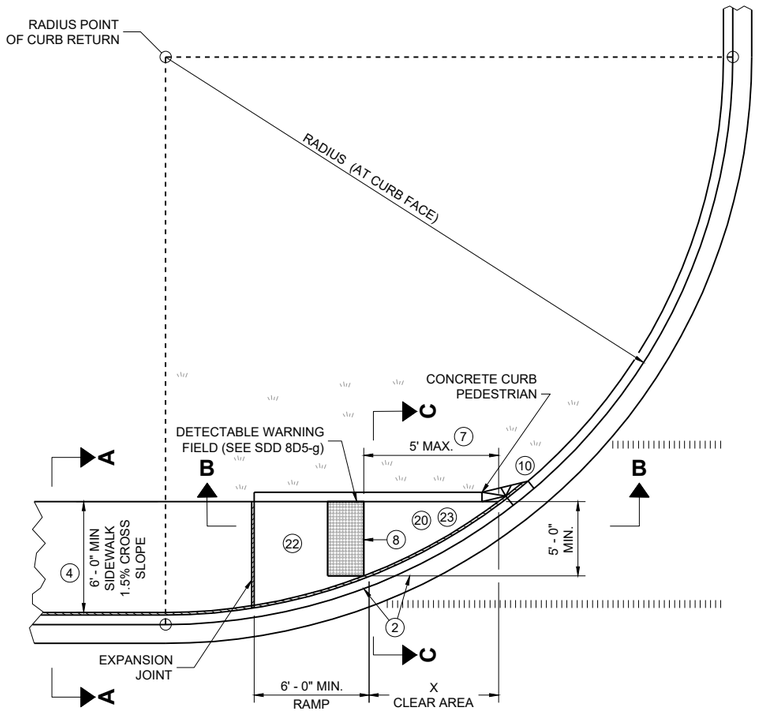

PLAN VIEW

CURB RAMP TYPE 4A

LEGEND

- ½" EXPANSION JOINT SIDEWALK
- CONTRACTION JOINT SIDEWALK
- PAVEMENT MARKING CROSSWALK (WHITE)
- ++ CONSTRUCT 6" WEDGE TO AVOID CONCRETE BREAKAGE

RADIUS (AT CURB FACE)	X
10 FEET	4' - 7"

INTERMEDIATE RADII CAN BE INTERPOLATED

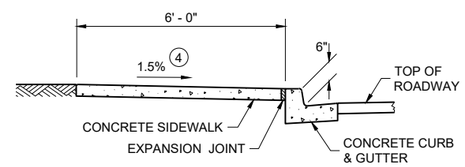

SECTION A - A FOR TYPE 4A

GENERAL NOTES

AVOID PLACING DRAINAGE STRUCTURES, JUNCTION BOXES OR OTHER OBSTRUCTIONS IN FRONT OF CURB RAMP ACCESS AREAS.

DETAILS OF CONSTRUCTION, MATERIALS AND WORKMANSHIP NOT SHOWN ON THIS DRAWING SHALL CONFORM TO THE PERTINENT REQUIREMENTS OF THE STANDARD SPECIFICATIONS AND THE APPLICABLE SPECIAL PROVISIONS.

DETECTABLE WARNING FIELDS THAT ARE INSTALLED AS A GROUP OR SIDE BY SIDE, SHALL BE FROM THE SAME MANUFACTURER.

(2) GRADE CHANGE BETWEEN GUTTER COUNTER SLOPE AND THE CURB RAMP SLOPE IS DESIRABLY 11% OR LESS AND SHALL NOT EXCEED 13.3%. TYPICAL GUTTER COUNTER SLOPE IS 4% BUT MAY BE MODIFIED TO FIT FIELD CONDITIONS. PROVIDE LONGITUDINAL DRAINAGE AROUND CURB AND AWAY FROM CURB RAMP. NO VERTICAL LIPS OR DISCONTINUITIES ARE ALLOWED. SLOPE OF CURB HEAD OPENING SHALL MATCH THE RAMP SLOPE, MINIMALLY 1.5%, DESIRABLY 7% OR LESS, AND SHALL NOT EXCEED A MAXIMUM OF 8.3%. WHEN ADJACENT TO 1.5% LANDING, CONSTRUCT CURB HEAD OPENING AT 1.5% IN THE DIRECTION OF PEDESTRIAN TRAVEL.

(3) MAXIMUM 8.3% CURB RAMP SLOPE IS ALLOWABLE WITH GUTTER COUNTER SLOPE OF 5% MAXIMUM AND A 13.3% MAXIMUM GRADE CHANGE.

(4) ±0.5% CONSTRUCTION TOLERANCE IN SIDEWALK CROSS SLOPE. THE SIDEWALK CROSS SLOPE SHALL NOT EXCEED 2.1% WITHOUT PRIOR APPROVAL FROM THE ENGINEER.

(7) WHEN THIS GRADE BREAK DISTANCE EXCEEDS 5 FEET, USE RADIAL DETECTABLE WARNING FIELD PER SDD 8D5-f.

(8) PROVIDE GRADE BREAK PERPENDICULAR TO DIRECTION OF WHEELCHAIR TRAVEL.

(10) INSTALL TRANSITION NOSE (INCIDENTAL TO OTHER PAY ITEMS). DO NOT MARK TRANSITION NOSE.

(17) A MAXIMUM 2-INCH CONCRETE BORDER IS PERMITTED ALONG ALL SIDES OF THE DETECTABLE WARNING FIELD SURFACE.

(20) MAXIMUM 1.5% DESIGN MAXIMUM AND 2.1% PROWAG MAXIMUM RUNNING SLOPE ON CLEAR AREA. CROSS SLOPE OF CLEAR AREA SHALL MATCH THE CROSS SLOPE OF THE ADJACENT CROSSWALK.

(22) THE ENTIRE RAMP SHALL BE A PLANAR SURFACE. DO NOT WARP THE RUNNING SLOPE OR CROSS SLOPE OF THE RAMP. WARPING OF THE SIDEWALK CROSS SLOPE SHALL TAKE PLACE BETWEEN THE LANDING AND MATCH POINT.

(23) THE CLEAR AREA BETWEEN THE BOTTOM OF RAMP AND BACK OF CURB SHALL BE SLOPED SO THAT WATER DRAINS OUT OF ONE SIDE OR BOTH SIDES OF THE CURB OPENING.

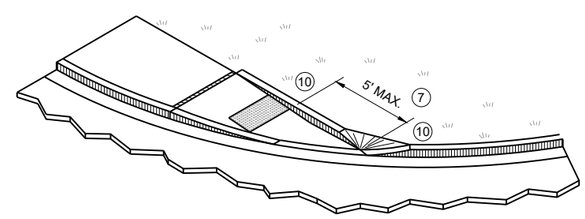

ISOMETRIC VIEW FOR TYPE 4A

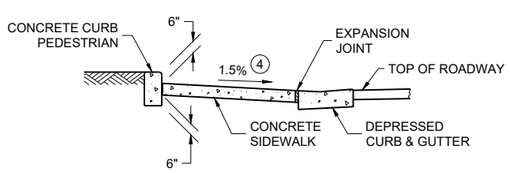

SECTION C - C FOR TYPE 4A

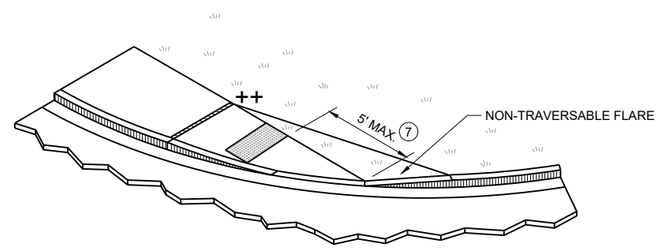

ISOMETRIC VIEW FOR TYPE 4A1

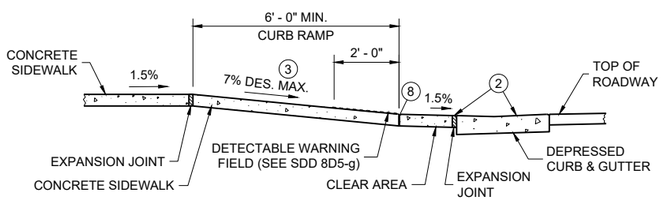

SECTION B - B FOR TYPE 4A AND TYPE 4A1

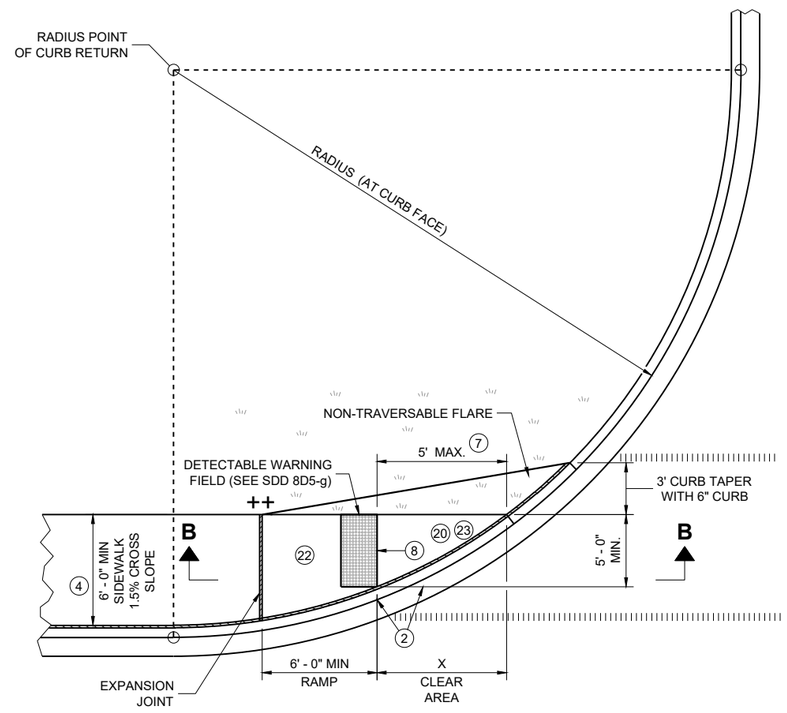

PLAN VIEW

CURB RAMP TYPE 4A1

CURB RAMPS
TYPE 4A AND 4A1

STATE OF WISCONSIN
DEPARTMENT OF TRANSPORTATION

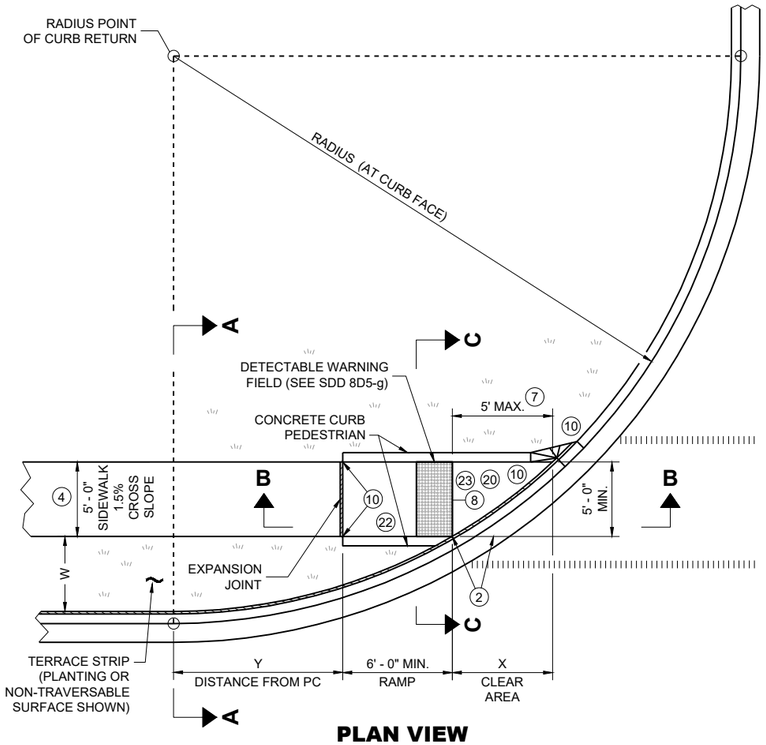

PLAN VIEW
CURB RAMP TYPE 4B

RADIUS (AT CURB FACE)	W = 3' - 0"		W = 4' - 0"		W = 5' - 0"		W = 6' - 0"		W = 7' - 0"		W = 8' - 0"		W = 9' - 0"		W = 10' - 0"	
	X	Y	X	Y	X	Y	X	Y	X	Y	X	Y	X	Y	X	Y
10 FEET	2' - 10 ¼"	0' - 5"	2' - 1"	1' - 4 ½"	1' - 5"	2' - 1"	0' - 10"	2' - 7 ½"	0' - 3 ¼"	3' - 0 ¼"						
15 FEET	4' - 6 ¾"	2' - 1 ¾"	3' - 9"	3' - 5 ¾"	3' - 1 ¼"	4' - 6"	2' - 6 ¾"	5' - 4 ½"	2' - 1"	6' - 1"	1' - 8"	6' - 8 ½"	1' - 3 ¼"	7' - 2 ½"	0' - 10 ¾"	7' - 7 ¼"
20 FEET			4' - 11 ½"	5' - 1 ¾"	4' - 3 ¼"	6' - 5 ½"	3' - 8 ¾"	7' - 7"	3' - 3"	8' - 6 ½"	2' - 10"	9' - 4 ½"	2' - 5 ½"	10' - 1 ¼"	2' - 1 ¼"	10' - 9"
30 FEET									4' - 10 ¾"	12' - 5 ¾"	4' - 5 ½"	13' - 7 ¾"	4' - 0 ¾"	14' - 8 ½"	3' - 8 ½"	15' - 8 ¼"
40 FEET															4' - 10 ¾"	19' - 8 ¼"

INTERMEDIATE RADII CAN BE INTERPOLATED
DIMENSION "Y" IS CALCULATED BASED ON 6'-0" RAMP LENGTH
DIMENSION "X" IS CALCULATED BASED ON 5'-0" SIDEWALK WIDTH

LEGEND

- ½" EXPANSION JOINT SIDEWALK
- CONTRACTION JOINT SIDEWALK
- PAVEMENT MARKING CROSSWALK (WHITE)
- * MAXIMUM 2.1% SLOPE IN ALL DIRECTIONS IF FRONT OF GRADE BREAK
- ++ CONSTRUCT 6" WEDGE TO AVOID CONCRETE BREAKAGE

GENERAL NOTES

AVOID PLACING DRAINAGE STRUCTURES, JUNCTION BOXES OR OTHER OBSTRUCTIONS IN FRONT OF CURB RAMP ACCESS AREAS.

DETAILS OF CONSTRUCTION, MATERIALS AND WORKMANSHIP NOT SHOWN ON THIS DRAWING SHALL CONFORM TO THE PERTINENT REQUIREMENTS OF THE STANDARD SPECIFICATIONS AND THE APPLICABLE SPECIAL PROVISIONS.

DETECTABLE WARNING FIELDS THAT ARE INSTALLED AS A GROUP OR SIDE BY SIDE, SHALL BE FROM THE SAME MANUFACTURER.

(2) GRADE CHANGE BETWEEN GUTTER COUNTER SLOPE AND THE CURB RAMP SLOPE IS DESIRABLY 11% OR LESS AND SHALL NOT EXCEED 13.3%. TYPICAL GUTTER COUNTER SLOPE IS 4% BUT MAY BE MODIFIED TO FIT FIELD CONDITIONS. PROVIDE LONGITUDINAL DRAINAGE AROUND CURB AND AWAY FROM CURB RAMP. NO VERTICAL LIPS OR DISCONTINUITIES ARE ALLOWED. SLOPE OF CURB HEAD OPENING SHALL MATCH THE RAMP SLOPE, MINIMALLY 1.5%, DESIRABLY 7% OR LESS, AND SHALL NOT EXCEED A MAXIMUM OF 8.3%. WHEN ADJACENT TO 1.5% LANDING, CONSTRUCT CURB HEAD OPENING AT 1.5% IN THE DIRECTION OF PEDESTRIAN TRAVEL.

(3) MAXIMUM 8.3% CURB RAMP SLOPE IS ALLOWABLE WITH GUTTER COUNTER SLOPE OF 5% MAXIMUM AND A 13.3% MAXIMUM GRADE CHANGE.

(4) ±0.5% CONSTRUCTION TOLERANCE IN SIDEWALK CROSS SLOPE. THE SIDEWALK CROSS SLOPE SHALL NOT EXCEED 2.1% WITHOUT PRIOR APPROVAL FROM THE ENGINEER.

(7) WHEN THIS GRADE BREAK DISTANCE EXCEEDS 5 FEET, USE RADIAL DETECTABLE WARNING FIELD PER SDD 8D5-f.

(8) PROVIDE GRADE BREAK PERPENDICULAR TO DIRECTION OF WHEELCHAIR TRAVEL.

(10) INSTALL TRANSITION NOSE (INCIDENTAL TO OTHER PAY ITEMS). DO NOT MARK TRANSITION NOSE.

(17) A MAXIMUM 2-INCH CONCRETE BORDER IS PERMITTED ALONG ALL SIDES OF THE DETECTABLE WARNING FIELD SURFACE.

(20) MAXIMUM 1.5% DESIGN MAXIMUM AND 2.1% PROWAG MAXIMUM RUNNING SLOPE ON CLEAR AREA. CROSS SLOPE OF CLEAR AREA SHALL MATCH THE CROSS SLOPE OF THE ADJACENT CROSSWALK.

(22) THE ENTIRE RAMP SHALL BE A PLANAR SURFACE. DO NOT WARP THE RUNNING SLOPE OR CROSS SLOPE OF THE RAMP. WARPING OF THE SIDEWALK CROSS SLOPE SHALL TAKE PLACE BETWEEN THE LANDING AND MATCH POINT.

(23) THE CLEAR AREA BETWEEN THE BOTTOM OF RAMP AND BACK OF CURB SHALL BE SLOPED SO THAT WATER DRAINS OUT OF ONE SIDE OR BOTH SIDES OF THE CURB OPENING.

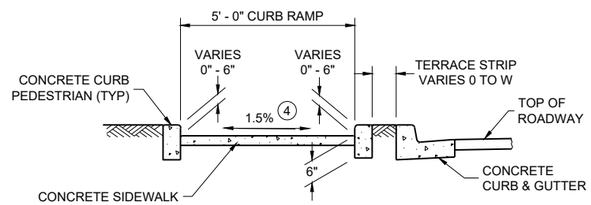

SECTION C - C FOR TYPE 4B

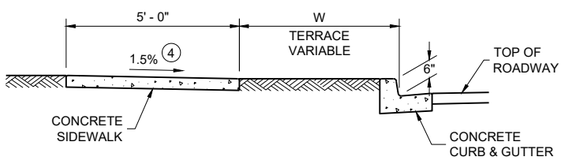

SECTION A - A FOR TYPE 4B

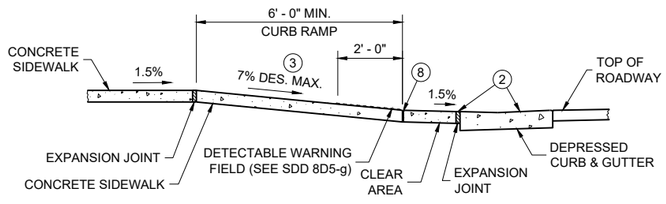

SECTION B - B FOR TYPE 4B AND TYPE 4B1

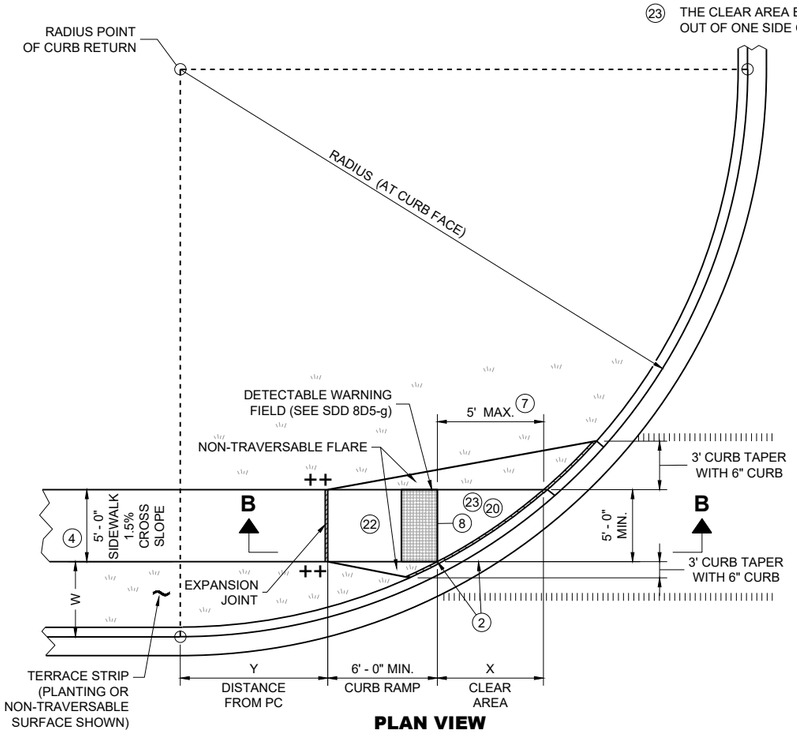

PLAN VIEW
CURB RAMP TYPE 4B1

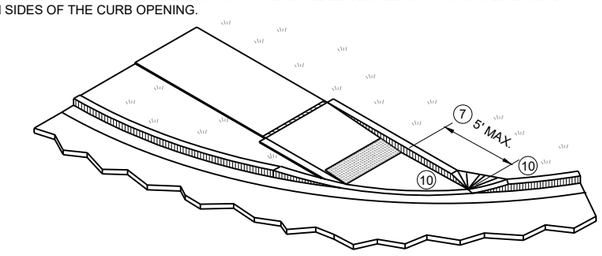

ISOMETRIC VIEW FOR TYPE 4B

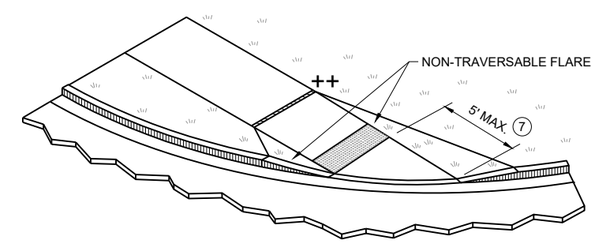

ISOMETRIC VIEW FOR TYPE 4B1

CURB RAMPS TYPE 4B AND 4B1

STATE OF WISCONSIN
DEPARTMENT OF TRANSPORTATION

6

SDD 08D05-22d

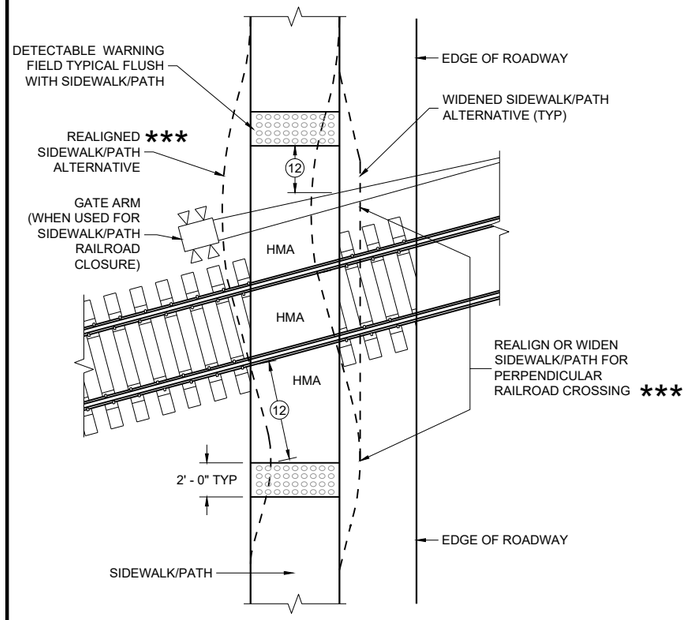

CURB RAMP TYPE 8

DETECTABLE WARNINGS FOR SIDEWALKS OR SHARED USE PATHS AT RAILROAD CROSSINGS

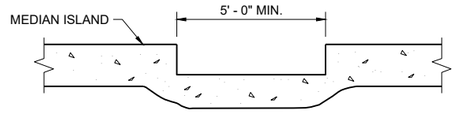

SECTION A - A FOR TYPE 5

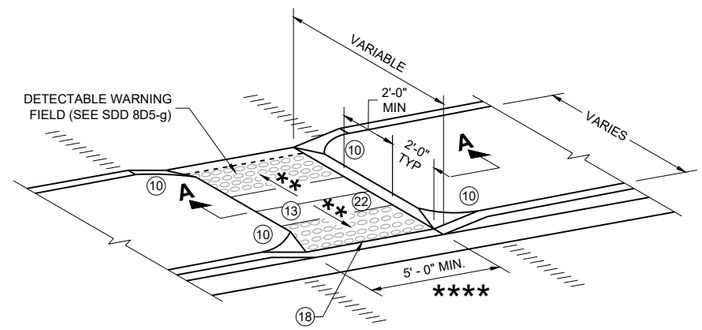

CURB RAMP TYPE 5

MEDIAN ISLAND NON-ELEVATED PEDESTRIAN CROSSING

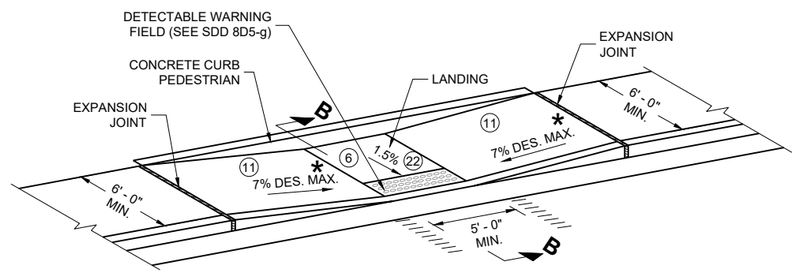

CURB RAMP TYPE 7A

FOR INTERSECTIONS AND MID BLOCK CROSSINGS

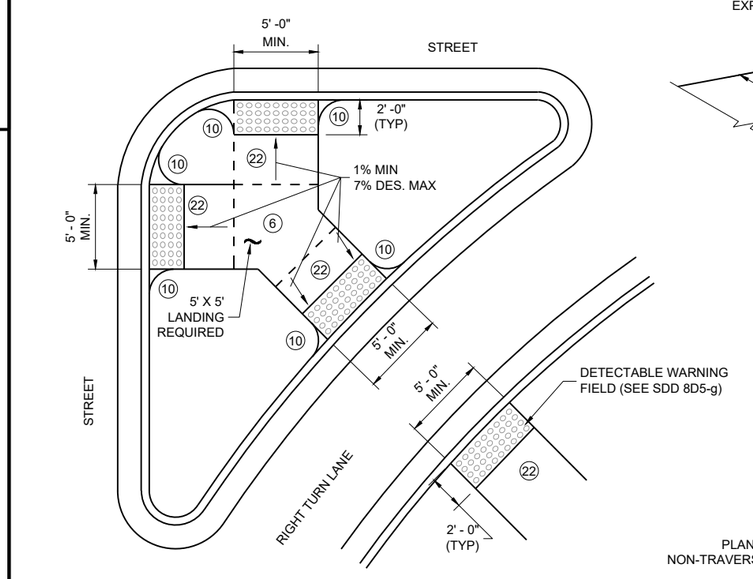

CURB RAMP TYPE 6

DETECTABLE WARNING AT ISLANDS

REFER TO GENERAL NOTES (2) AND (3) FOR ALL ISLAND CURB RAMPS

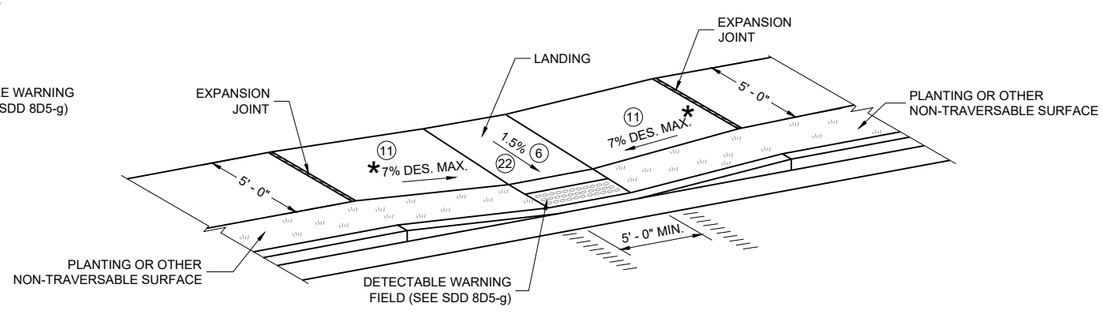

CURB RAMP TYPE 7B

FOR INTERSECTIONS AND MID BLOCK CROSSINGS

GENERAL NOTES

AVOID PLACING DRAINAGE STRUCTURES, JUNCTION BOXES OR OTHER OBSTRUCTIONS IN FRONT OF CURB RAMP ACCESS AREAS.

DETAILS OF CONSTRUCTION, MATERIALS AND WORKMANSHIP NOT SHOWN ON THIS DRAWING SHALL CONFORM TO THE PERTINENT REQUIREMENTS OF THE STANDARD SPECIFICATIONS AND THE APPLICABLE SPECIAL PROVISIONS.

SIDEWALK CROSS SLOPE SHALL NOT EXCEED 2.1%.

DETECTABLE WARNING FIELDS THAT ARE INSTALLED AS A GROUP OR SIDE BY SIDE, SHALL BE FROM THE SAME MANUFACTURER.

(2) GRADE CHANGE BETWEEN GUTTER COUNTER SLOPE AND THE CURB RAMP SLOPE IS DESIRABLY 11% OR LESS AND SHALL NOT EXCEED 13.3%. TYPICAL GUTTER COUNTER SLOPE IS 4% BUT MAY BE MODIFIED TO FIT FIELD CONDITIONS. PROVIDE LONGITUDINAL DRAINAGE AROUND CURB AND AWAY FROM CURB RAMP. NO VERTICAL LIPS OR DISCONTINUITIES ARE ALLOWED. SLOPE OF CURB HEAD OPENING SHALL MATCH THE RAMP SLOPE, MINIMALLY 1.5%, DESIRABLY 7% OR LESS, AND SHALL NOT EXCEED A MAXIMUM OF 8.3%. WHEN ADJACENT TO 1.5% LANDING, CONSTRUCT CURB HEAD OPENING AT 1.5% IN THE DIRECTION OF PEDESTRIAN TRAVEL.

(3) MAXIMUM 8.3% CURB RAMP SLOPE IS ALLOWABLE WITH GUTTER COUNTER SLOPE OF 5% MAXIMUM AND A 13.3% MAXIMUM GRADE CHANGE.

(4) ±0.5% CONSTRUCTION TOLERANCE IN SIDEWALK CROSS SLOPE. THE SIDEWALK CROSS SLOPE SHALL NOT EXCEED 2.1% WITHOUT PRIOR APPROVAL FROM THE ENGINEER.

(6) PROVIDE A 5 FOOT BY 5 FOOT LANDING. SLOPE PERPENDICULAR TO CURB SHALL BE 2.1% MAXIMUM. SLOPE PARALLEL TO CURB SHALL MATCH THE CURB AND GUTTER LONGITUDINAL SLOPE.

(10) INSTALL TRANSITION NOSE (INCIDENTAL TO OTHER PAY ITEMS). DO NOT MARK TRANSITION NOSE.

(11) SLOPE SIDEWALK TOWARD LANDING AS SHOWN WHERE THERE IS NO TERRACE OR WHERE THE TERRACE WIDTH IS LESS THAN 6 FEET WIDE.

(12) THE EDGE OF THE DETECTABLE WARNING FIELD NEAREST TO A RAILROAD CROSSING SHALL BE 1.5 FEET ±0.1' FROM THE FACE OF THE GATE ARM IF THE GATE ARM EXTENDS ACROSS THE SIDEWALK/PATH. WHERE THERE IS NO PEDESTRIAN GATE, THE EDGE OF THE DETECTABLE WARNING FIELD NEAREST TO THE RAILROAD TRACK IS 15 FEET MAXIMUM AND 12 FEET MINIMUM, 15 FEET TYPICAL FROM THE NEAREST RAIL.

(13) DO NOT INSTALL DETECTABLE WARNING FIELDS AT THE EDGES OF STEET-LEVEL PEDESTRIAN REFUGE ISLANDS IF A MINIMUM 2 FOOT CONCRETE SURFACE WITHOUT DETECTABLE WARNINGS (MEASURED IN THE DIRECTION OF PEDESTRIAN TRAVEL) CANNOT BE ACHIEVED.

(17) A MAXIMUM 2-INCH CONCRETE BORDER IS PERMITTED ALONG ALL SIDES OF THE DETECTABLE WARNING FIELD SURFACE.

(18) WHEN THE DISTANCE BETWEEN THE BACK OF CURBS IS LESS THAN 6 FEET BUT THE FACE OF CURB TO FACE OF CURB DISTANCE IS 6 FEET OR GREATER THEN THE DETECTABLE WARNING FIELDS MAY BE MOVED SO THAT THE EDGE OF THE WARNING FIELD IS PLACED AT THE GUTTER FLOWLINE. MAINTAIN A MINIMUM OF TWO FEET BETWEEN DETECTABLE WARNING FIELD PANELS.

(22) THE ENTIRE RAMP SHALL BE A PLANAR SURFACE. DO NOT WARP THE RUNNING SLOPE OR CROSS SLOPE OF THE RAMP. WARPING OF THE SIDEWALK CROSS SLOPE SHALL TAKE PLACE BETWEEN THE LANDING AND MATCH POINT.

LEGEND

- ½" EXPANSION JOINT SIDEWALK
- CONTRACTION JOINT FIELD LOCATED
- PAVEMENT MARKING CROSSWALK (WHITE)
- * MAXIMUM 8.3%
- ** 1% MINIMUM (PROVIDE DRAINAGE)
- *** DETAILS TO BE DETERMINED BY ENGINEER
- **** FOR SHARED USE PATHS, WIDTH MUST BE AS WIDE AS THE CROSSWALK

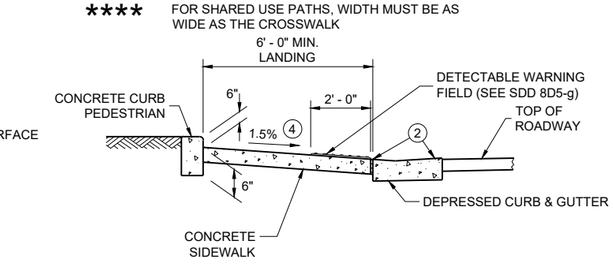

SECTION B - B FOR TYPE 7A

CURB RAMPS TYPE 5, 6, 7A, 7B & 8

STATE OF WISCONSIN
DEPARTMENT OF TRANSPORTATION

6

6

SDD 08D05-22e

SDD 08D05-22e

RADIAL DETECTABLE WARNING FIELD PLACEMENT WHEN 5 FOOT GRADE BREAK DISTANCE PER SDD 8D5-c IS EXCEEDED

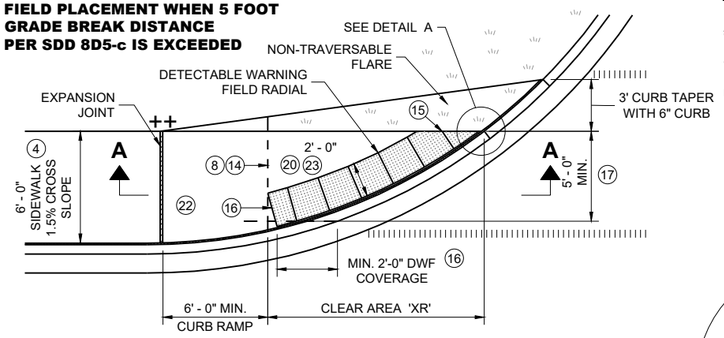

PLAN VIEW

CURB RAMP TYPE 4A1

(GRADE BREAK DISTANCE GREATER THAN 5 FEET)

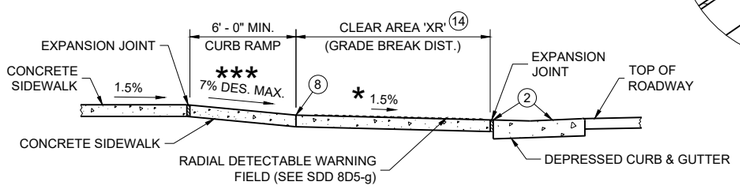

SECTION A - A FOR TYPE 4A1

LEGEND

- ½" EXPANSION JOINT SIDEWALK
- CONTRACTION JOINT SIDEWALK
- PAVEMENT MARKING CROSSWALK (WHITE)
- ** WIDTH SHOWN ELSEWHERE IN THE PLANS
- *** MAXIMUM 8.3%
- ++ CONSTRUCT 6" WEDGE TO AVOID CONCRETE BREAKAGE

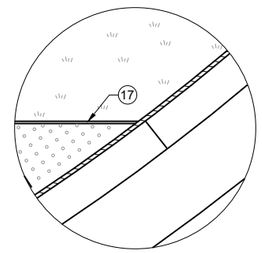

DETAIL A

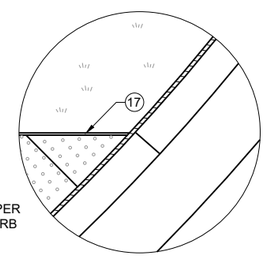

DETAIL B

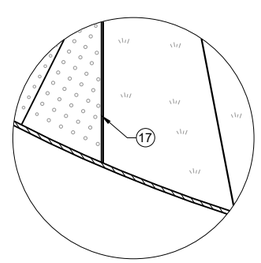

DETAIL C

GENERAL NOTES

AVOID PLACING DRAINAGE STRUCTURES, JUNCTION BOXES OR OTHER OBSTRUCTIONS IN FRONT OF CURB RAMP ACCESS AREAS.

DETAILS OF CONSTRUCTION, MATERIALS AND WORKMANSHIP NOT SHOWN ON THIS DRAWING SHALL CONFORM TO THE PERTINENT REQUIREMENTS OF THE STANDARD SPECIFICATIONS AND THE APPLICABLE SPECIAL PROVISIONS.

DETECTABLE WARNING FIELDS THAT ARE INSTALLED AS A GROUP OR SIDE BY SIDE, SHALL BE FROM THE SAME MANUFACTURER.

APPLY RADIAL DETECTABLE WARNING PLACEMENT SIMILARLY FOR TYPE 4A AND 4A1 CURB RAMPS AND SIMILARLY FOR TYPE 4B AND 4B1 CURB RAMPS. TYPE 4A AND 4B CURB RAMPS ARE NOT SHOWN.

REFER TO SDD 8D5-g FOR ADDITIONAL RADIAL PLATE REQUIREMENTS.

FIELD CUTS AT INTERMEDIATE JOINTS WITHIN THE RADIAL DETECTABLE WARNING FILED ARE PROHIBITED.

DETERMINE FINAL RADIAL WARNING FIELD CONFIGURATION AD ITS INDIVIDUAL PLATE LOCATIONS. PERFORM PRE-LAYOUT PRIOR TO PLACEMENT IN PLASTIC CONCRETE. FOLLOW MANUFACTURER'S PRODUCT LIST AND INSTALLATION RECOMMENDATIONS.

(2) GRADE CHANGE BETWEEN GUTTER COUNTER SLOPE AND THE CURB RAMP SLOPE IS DESIRABLY 11% OR LESS AND SHALL NOT EXCEED 13.3%. TYPICAL GUTTER COUNTER SLOPE IS 4% BUT MAY BE MODIFIED TO FIT FIELD CONDITIONS. PROVIDE LONGITUDINAL DRAINAGE AROUND CURB AND AWAY FROM CURB RAMP. NO VERTICAL LIPS OR DISCONTINUITIES ARE ALLOWED. SLOPE OF CURB HEAD OPENING SHALL MATCH THE RAMP SLOPE, MINIMALLY 1.5%, DESIRABLY 7% OR LESS, AND SHALL NOT EXCEED A MAXIMUM OF 8.3%. WHEN ADJACENT TO 1.5% LANDING, CONSTRUCT CURB HEAD OPENING AT 1.5% IN THE DIRECTION OF PEDESTRIAN TRAVEL.

(3) MAXIMUM 8.3% CURB RAMP SLOPE IS ALLOWABLE WITH GUTTER COUNTER SLOPE OF 5% MAXIMUM AND A 13.3% MAXIMUM GRADE CHANGE.

(4) ±0.5% CONSTRUCTION TOLERANCE IN SIDEWALK CROSS SLOPE. THE SIDEWALK CROSS SLOPE SHALL NOT EXCEED 2.1% WITHOUT PRIOR APPROVAL FROM THE ENGINEER.

(6) PROVIDE A 5 FOOT BY 5 FOOT LANDING. SLOPE PERPENDICULAR TO CURB SHALL BE 2.1% MAXIMUM. SLOPE PARALLEL TO CURB SHALL MATCH THE CURB AND GUTTER LONGITUDINAL SLOPE.

(8) PROVIDE GRADE BREAK PERPENDICULAR TO DIRECTION OF WHEELCHAIR TRAVEL.

(14) CONSULT ENGINEER IF GRADE BREAK LOCATION (END OF LANDING DIMENSION "XR") REQUIRES FIELD ADJUSTMENT WHEN ESTABLISHING FINAL RADIAL DETECTABLE WARNING FIELD LOCATION.

(15) FIELD SAW CUTS ALONG RADIAL DETECTABLE WARNING PLATES WILL BE NECESSARY TO MATCH EACH CURB RAMP EDGE. AVOID CUTTING THROUGH DOMES WHENEVER POSSIBLE. MAKE FIELD CUTS TRUE TO LINE AND WITHIN ⅛" DEVIATION. SMOOTH EDGES OF FIELD CUT PLATES.

(16) USE 1' X 2" RECTANGULAR END PLATE AT END OF TYPE 4A1 RAMP AND PROVIDE MINIMUM 2' - 0" DETECTABLE WARNING FIELD COVERAGE (IN DIRECTION OF PEDESTRIAN TRAVEL) ALONG THE ENTIRE CURB RAMP WIDTH.

(17) A MAXIMUM 2-INCH CONCRETE BORDER IS PERMITTED ALONG ALL SIDES OF THE DETECTABLE WARNING FIELD SURFACE.

(19) WHERE A LANDING SERVES TWO CURB RAMPS, THE LANDING SLOPE SHALL NOT EXCEED THE CROSS SLOPE AT THE BOTTOM OF THE RAMP OR WITHIN THE CROSSWALK PARALLEL TO THE DIRECTION OF TRAVEL.

(20) MAXIMUM 1.5% DESIGN MAXIMUM AND 2.1% PROWAG MAXIMUM RUNNING SLOPE ON CLEAR AREA. CROSS SLOPE OF CLEAR AREA SHALL MATCH THE CROSS SLOPE OF THE ADJACENT CROSSWALK.

(22) THE ENTIRE RAMP SHALL BE A PLANAR SURFACE. DO NOT WARP THE RUNNING SLOPE OR CROSS SLOPE OF THE RAMP. WARPING OF THE SIDEWALK CROSS SLOPE SHALL TAKE PLACE BETWEEN THE LANDING AND MATCH POINT.

(23) THE CLEAR AREA BETWEEN THE BOTTOM OF RAMP AND BACK OF CURB SHALL BE SLOPED SO THAT WATER DRAINS OUT OF ONE SIDE OR BOTH SIDES OF THE CURB OPENING.

RADIAL DETECTABLE WARNING FIELD PLACEMENT WHEN 5 FOOT GRADE BREAK DISTANCE PER SDD 8D5-d IS EXCEEDED

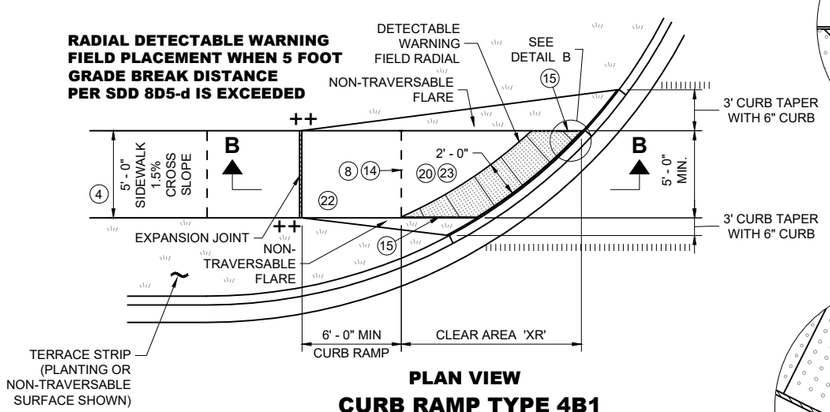

PLAN VIEW

CURB RAMP TYPE 4B1

(GRADE BREAK DISTANCE GREATER THAN 5 FEET)

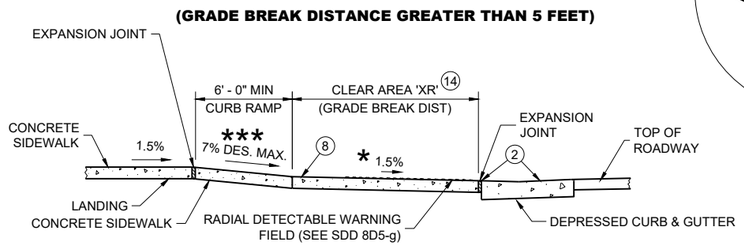

SECTION B - B FOR TYPE 4B1

RADIAL DETECTABLE WARNING FIELD PLACEMENT WHEN 5 FOOT GRADE BREAK DISTANCE PER SDD 8D5-b IS EXCEEDED

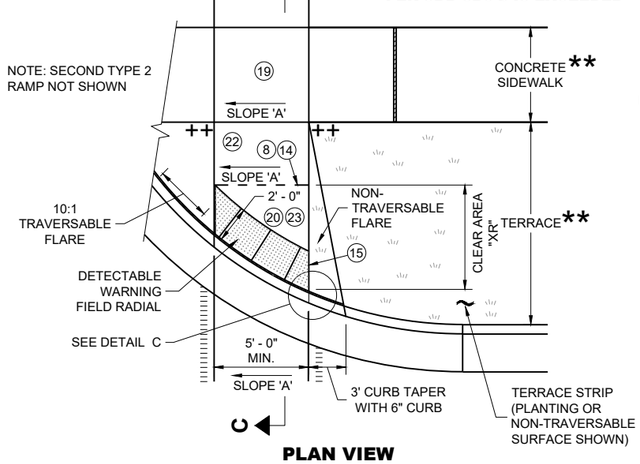

PLAN VIEW

CURB RAMP TYPE 2

(GRADE BREAK DISTANCE GREATER THAN 5 FEET)

(ON LINE WITH SIDEWALK)

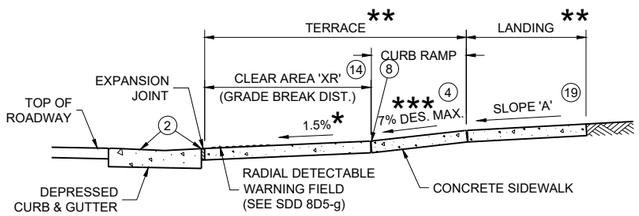

SECTION C - C FOR TYPE 2

CURB RAMPS
RADIAL DETECTABLE WARNING

STATE OF WISCONSIN
DEPARTMENT OF TRANSPORTATION

6

6

SDD 08D05-22f

SDD 08D05-22f

	MIN.	MAX.
A	1.6"	2.4"
B	0.65"	1.5"
C	*	*
D	0.9"	1.4"

* THE C DIMENSION IS 50% TO 65% OF THE D DIMENSION.

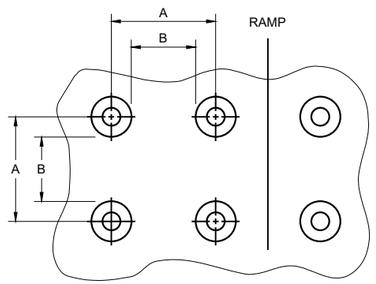

PLAN VIEW

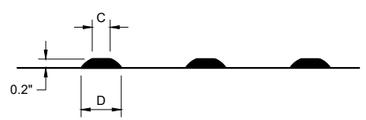

ELEVATION VIEW

TRUNCATED DOMES
DETECTABLE WARNING PATTERN DETAIL

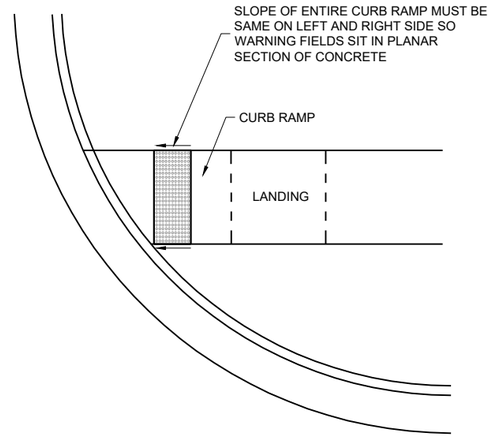

DETECTABLE WARNING FIELD
PLANAR INSTALLATION

GENERAL NOTES

DETECTABLE WARNING FIELDS THAT ARE INSTALLED AT A CURB RAMP SHALL BE FROM THE SAME MANUFACTURER.

PLACE ALL DETECTABLE WARNING FIELD SYSTEMS IN ACCORDANCE TO THE MANUFACTURER'S RECOMMENDATION.

FIELD CUTS AT INTERMEDIATE JOINTS WITHIN THE RADIAL DETECTABLE WARNING FILED ARE PROHIBITED.

DETERMINE FINAL RADIAL WARNING FIELD CONFIGURATION AND ITS INDIVIDUAL PLATE LOCATIONS. PERFORM PRE-LAYOUT PRIOR TO PLACEMENT IN PLASTIC CONCRETE. FOLLOW MANUFACTURER'S PRODUCT LIST AND INSTALLATION RECOMMENDATIONS.

FOR RADIAL DETECTABLE WARNING FIELD APPLICATIONS WHERE STANDARD RADIAL PLATES ARE NOT AVAILABLE AT AN INTERSECTION CURB RADIUS, A COMBINATION OF SQUARE OR RECTANGULAR PLATES AND RADIAL PLATES MAY BE USED TO FORM RADIAL CONFIGURATION. RADIAL WEDGE PLATES IN COMBINATION WITH SQUARE PLATES ARE ALSO ACCEPTABLE. FOLLOW MANUFACTURER'S RECOMMENDATIONS.

REFER TO CONTRACT AND STANDARD SPECIFICATIONS FOR FIELD CUTTING REQUIREMENTS.

DO NOT EMBED IN CONCRETE ANY FIELD-CUT PLATES WITH CUT EDGES SHORTER THAN 6 INCHES. CONSULT WITH MANUFACTURER FOR RE-DRILLING AND ANCHORING REQUIREMENTS OF FIELD-CUT PLATES.

(15) FIELD SAW CUTS ALONG RADIAL DETECTABLE WARNING PLATES WILL BE NECESSARY TO MATCH EACH CURB RAMP EDGE. AVOID CUTTING THROUGH DOMES WHENEVER POSSIBLE. MAKE FIELD CUTS TRUE TO LINE AND WITHIN ⅛" DEVIATION. SMOOTH EDGES OF FIELD CUT PLATES.

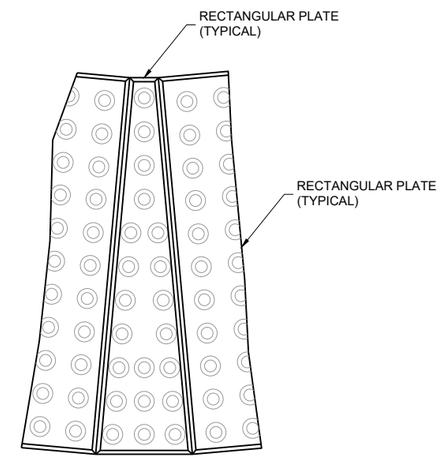

PLAN VIEW
RADIAL WEDGE PLATE CONNECTION DETAIL

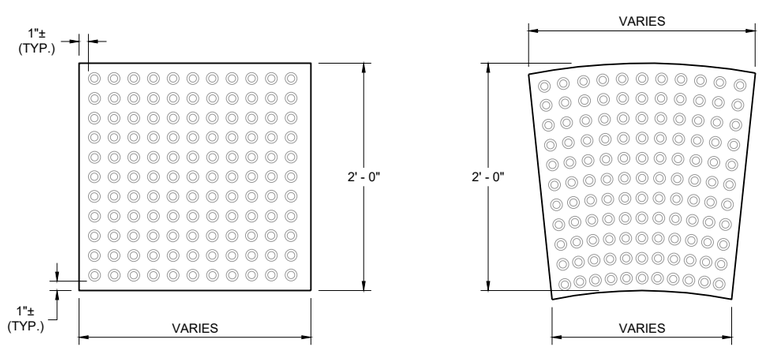

RECTANGULAR PLATES **RADIAL PLATES**

PLAN VIEW
DETECTABLE WARNING FIELDS (TYPICAL)

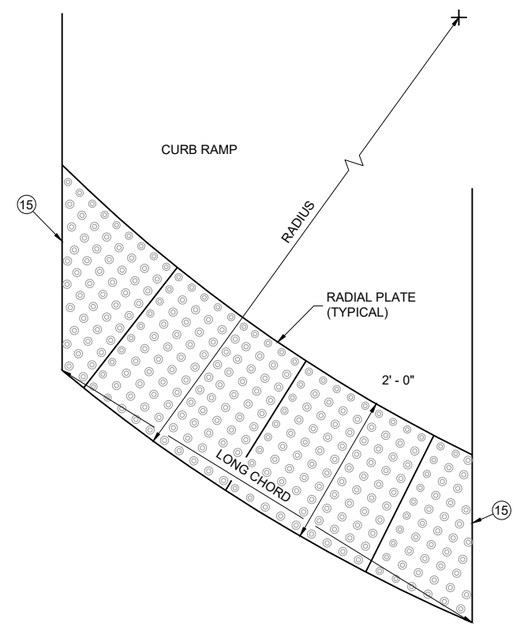

PLAN VIEW
RADIAL DETECTABLE WARNING FIELD ATTRIBUTES

CURB RAMPS
RECTANGULAR AND RADIAL DETECTABLE WARNING PLATES

STATE OF WISCONSIN
DEPARTMENT OF TRANSPORTATION

APPROVED
February 2025 — DATE
/S/ Rodney Taylor — <position>
FHWA

6

SDD 08D05-22g

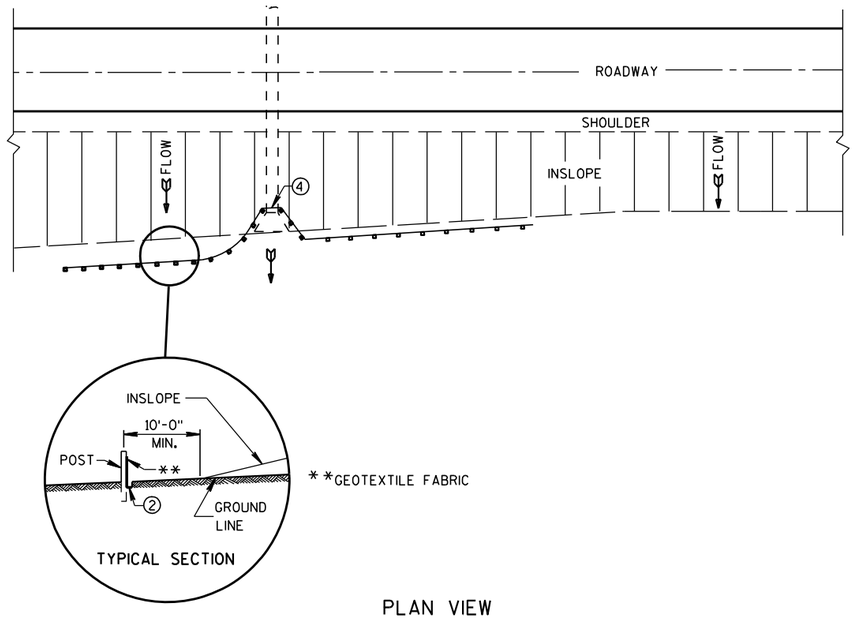

PLAN VIEW

TYPICAL APPLICATION OF SILT FENCE

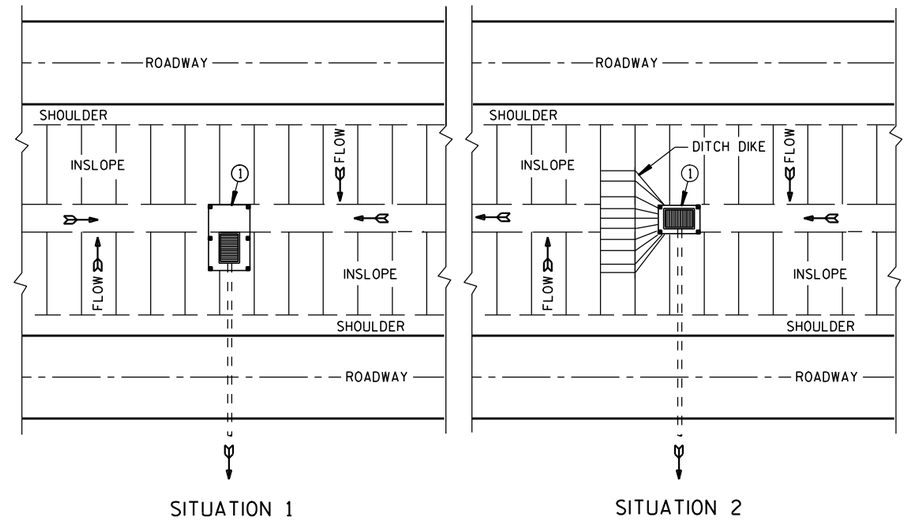

PLAN VIEW

SILT FENCE AT MEDIAN SURFACE DRAINS

GENERAL NOTES

DETAILS OF CONSTRUCTION NOT SHOWN ON THIS DRAWING SHALL CONFORM TO THE PERTINENT REQUIREMENTS OF THE STANDARD SPECIFICATIONS AND APPLICABLE SPECIAL PROVISIONS.

① HORIZONTAL BRACE REQUIRED WITH 2" X 4" WOODEN FRAME OR EQUIVALENT AT TOP OF POSTS.

② FOR MANUAL INSTALLATIONS THE TRENCH SHALL BE A MINIMUM OF 4" WIDE & 6" DEEP TO BURY AND ANCHOR THE GEOTEXTILE FABRIC. FOLD MATERIAL TO FIT TRENCH AND BACKFILL & COMPACT TRENCH WITH EXCAVATED SOIL.

③ WOOD POSTS SHALL BE A MINIMUM SIZE OF 1⅛" X 1⅛" OF OAK OR HICKORY.

④ SILT FENCE TO EXTEND ACROSS THE TOP OF THE PIPE.

⑤ CONSTRUCT SILT FENCE FROM A CONTINUOUS ROLL IF POSSIBLE BY CUTTING LENGTHS TO AVOID JOINTS. IF A JOINT IS NECESSARY USE ONE OF THE FOLLOWING TWO METHODS; A) OVERLAP THE END POSTS AND TWIST, OR ROTATE, AT LEAST 180 DEGREES. B) HOOK THE END OF EACH SILT FENCE LENGTH.

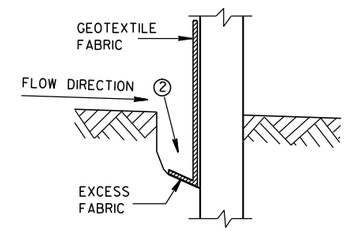

TRENCH DETAIL

NOTE: ADDITIONAL POST DEPTH OR TIE BACKS MAY BE REQUIRED IN UNSTABLE SOILS

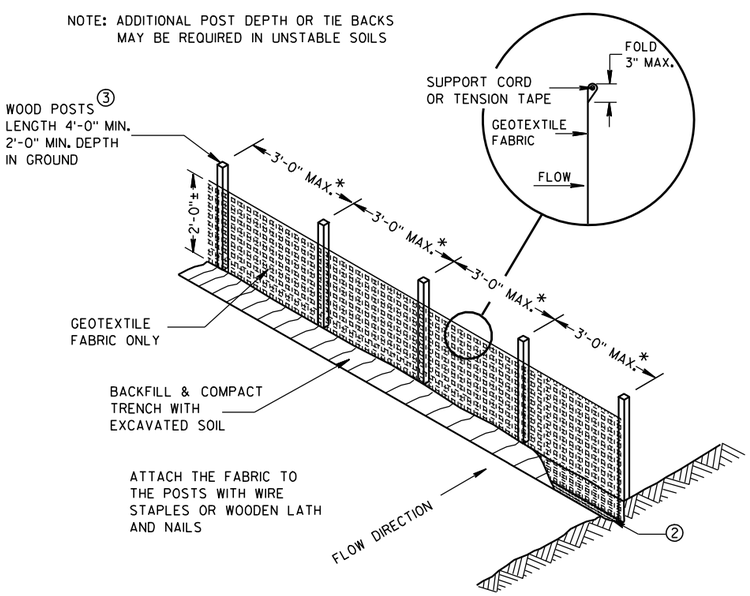

*NOTE: 8'-0" POST SPACING ALLOWED IF A WOVEN GEOTEXTILE FABRIC IS USED.

SILT FENCE

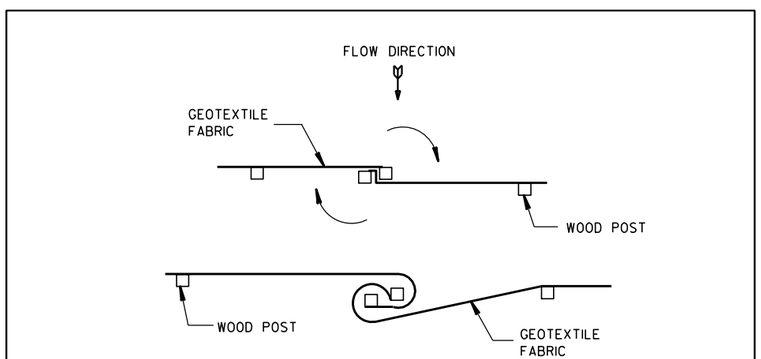

TWIST METHOD

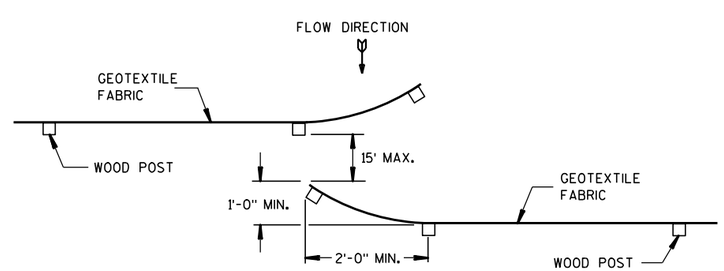

HOOK METHOD

JOINING TWO LENGTHS OF SILT FENCE ⑤

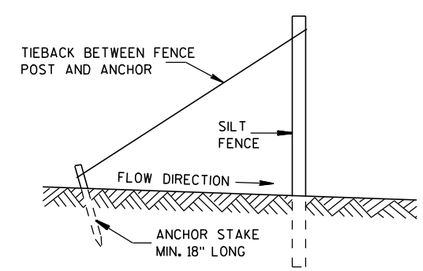

SILT FENCE TIE BACK

(WHEN REQUIRED BY THE ENGINEER)

SILT FENCE	
STATE OF WISCONSIN DEPARTMENT OF TRANSPORTATION	
APPROVED 4-29-05 DATE	/S/ Beth Cann-- CHIEF ROADWAY DEVELOP ENGINEER
FHWA	

6

6

S.D.D. 8 E 9-6

S.D.D. 8 E 9-6

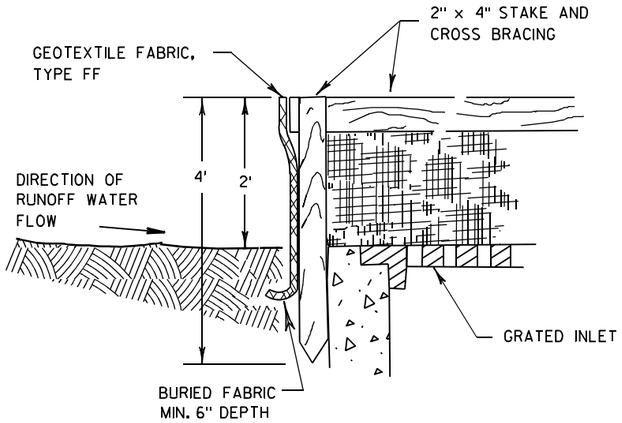

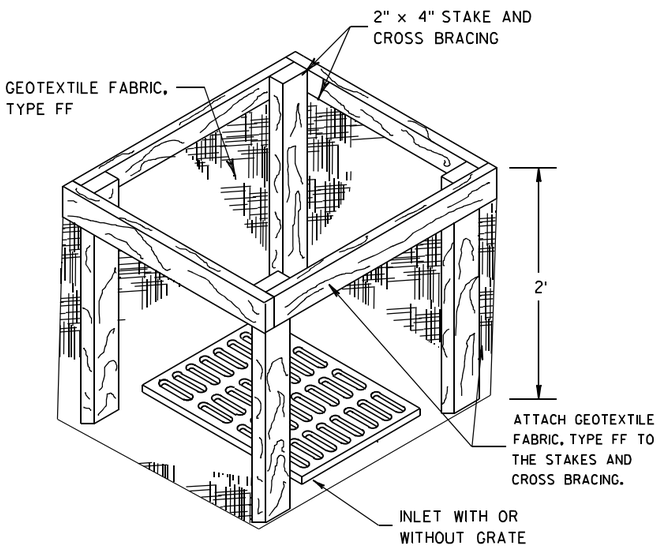

INLET PROTECTION, TYPE A

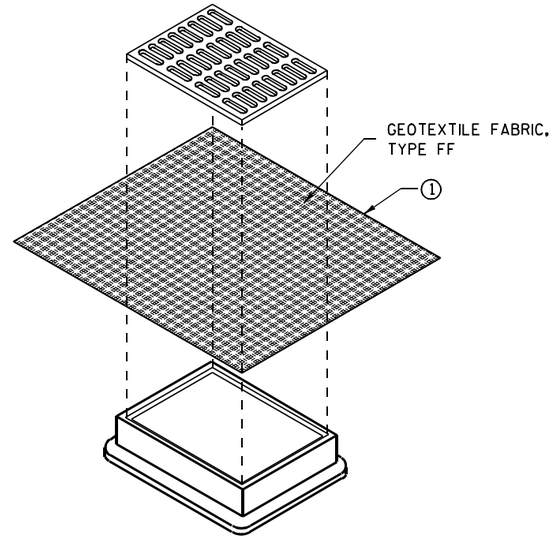

INLET PROTECTION, TYPE B (WITHOUT CURB BOX)

(CAN BE INSTALLED IN ANY INLET WITHOUT A CURB BOX)

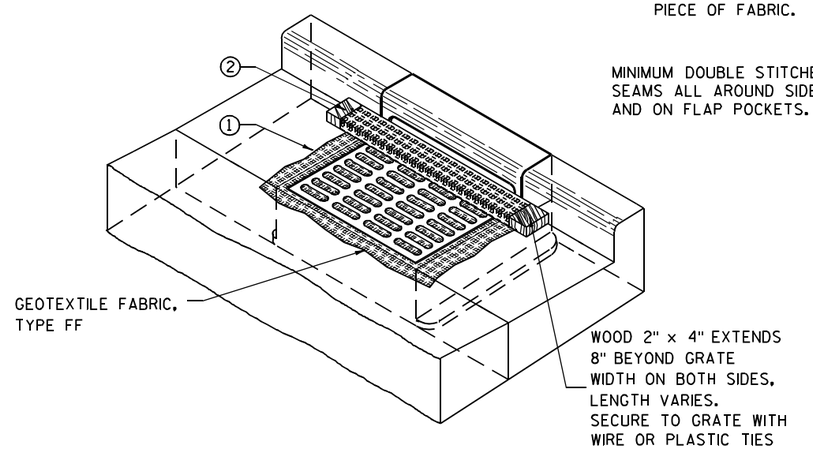

INLET PROTECTION, TYPE C (WITH CURB BOX)

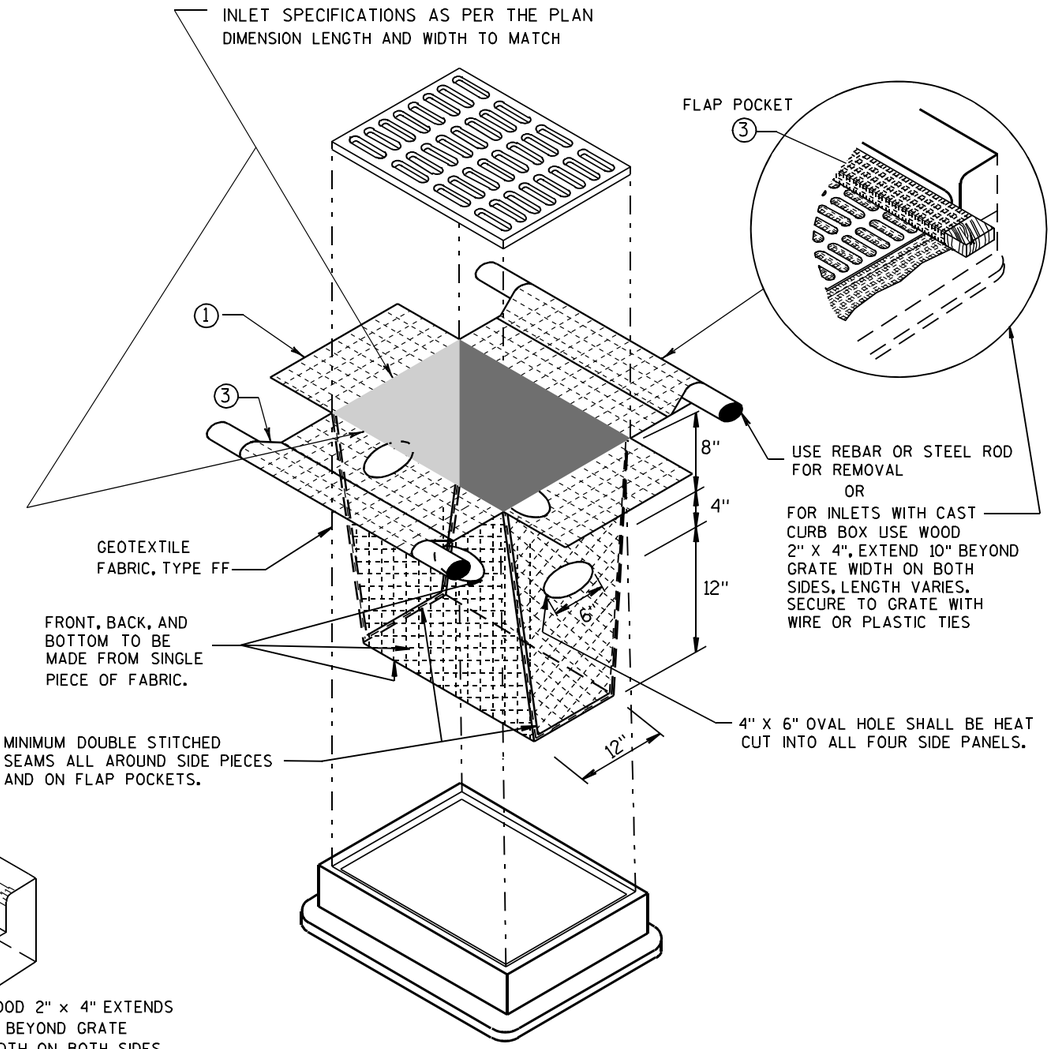

INLET PROTECTION, TYPE D

(CAN BE INSTALLED IN ANY INLET TYPE WITH OR WITHOUT A CURB BOX AS PER NOTE ②)

GENERAL NOTES

INLET PROTECTION DEVICES SHALL BE MAINTAINED OR REPLACED AT THE DIRECTION OF THE ENGINEER.

MANUFACTURED ALTERNATIVES APPROVED AND LISTED ON THE DEPARTMENT'S EROSION CONTROL PRODUCT ACCEPTABILITY LIST MAY BE SUBSTITUTED.

WHEN REMOVING OR MAINTAINING INLET PROTECTION, CARE SHALL BE TAKEN SO THAT THE SEDIMENT TRAPPED ON THE GEOTEXTILE FABRIC DOES NOT FALL INTO THE INLET. ANY MATERIAL FALLING INTO THE INLET SHALL BE REMOVED IMMEDIATELY.

① FINISHED SIZE, INCLUDING FLAP POCKETS WHERE REQUIRED, SHALL EXTEND A MINIMUM OF 10" AROUND THE PERIMETER TO FACILITATE MAINTENANCE OR REMOVAL.

② FOR INLET PROTECTION, TYPE C (WITH CURB BOX), AN ADDITIONAL 18" OF FABRIC IS WRAPPED AROUND THE WOOD AND SECURED WITH STAPLES. THE WOOD SHALL NOT BLOCK THE ENTIRE HEIGHT OF THE CURB BOX OPENING.

③ FLAP POCKETS SHALL BE LARGE ENOUGH TO ACCEPT WOOD 2X4.

INSTALLATION NOTES

TYPE B & C

TRIM EXCESS FABRIC IN THE FLOW LINE TO WITHIN 3" OF THE GRATE.

THE CONTRACTOR SHALL DEMONSTRATE A METHOD OF MAINTENANCE, USING A SEWN FLAP, HAND HOLDS OR OTHER METHOD TO PREVENT ACCUMULATED SEDIMENT FROM ENTERING THE INLET.

TYPE D

DO NOT INSTALL INLET PROTECTION TYPE D IN INLETS SHALLOWER THAN 30", MEASURED FROM THE BOTTOM OF THE INLET TO THE TOP OF THE GRATE.

TRIM EXCESS FABRIC IN THE FLOW LINE TO WITHIN 3" OF THE GRATE.

THE INSTALLED BAG SHALL HAVE A MINIMUM SIDE CLEARANCE, BETWEEN THE INLET WALLS AND THE BAG, MEASURED AT THE BOTTOM OF THE OVERFLOW HOLES, OF 3". WHERE NECESSARY THE CONTRACTOR SHALL CINCH THE BAG, USING PLASTIC ZIP TIES, TO ACHIEVE THE 3" CLEARANCE. THE TIES SHALL BE PLACED AT A MAXIMUM OF 4" FROM THE BOTTOM OF THE BAG.

INLET PROTECTION
TYPE A, B, C, AND D

STATE OF WISCONSIN
DEPARTMENT OF TRANSPORTATION

APPROVED
10/16/02 — DATE
/S/ Beth Cannestra — CHIEF ROADWAY DEVELOPMENT ENGINEER
FHWA

6

S.D.D. 8 E 10-2

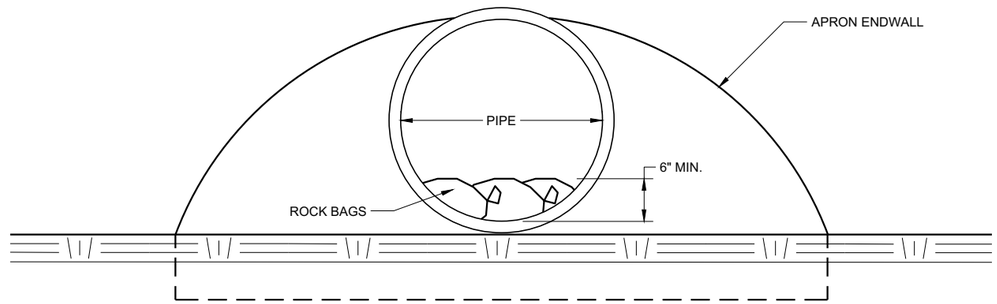

END VIEW

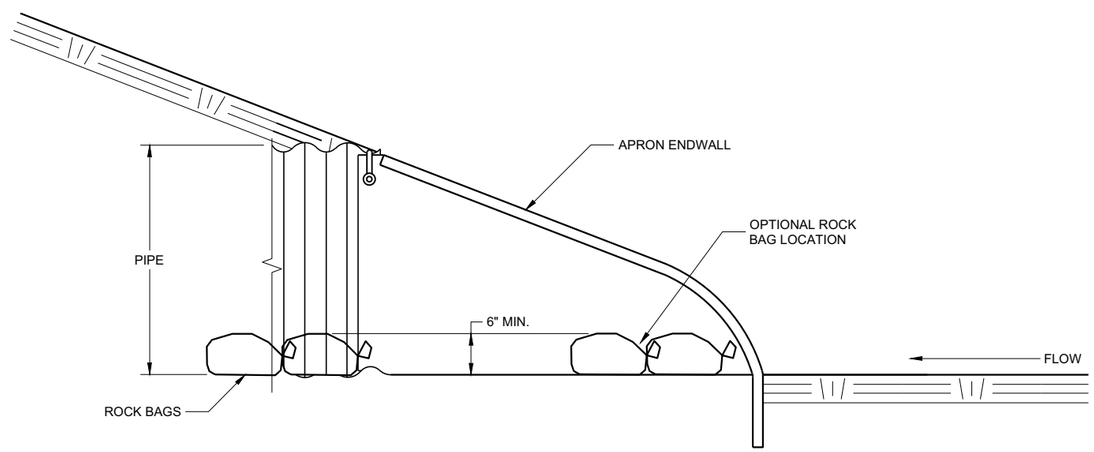

SIDE VIEW

CULVERT PIPE CHECK

(INSTALL ON INLET END ONLY)

CULVERT PIPE CHECK

STATE OF WISCONSIN
DEPARTMENT OF TRANSPORTATION

APPROVED
May 2019 — DATE
/S/ Daniel Schave — EROSION CONTROL ENGI
FHWA

6

6

SDD 08E15 - 01

SDD 08E15 - 01

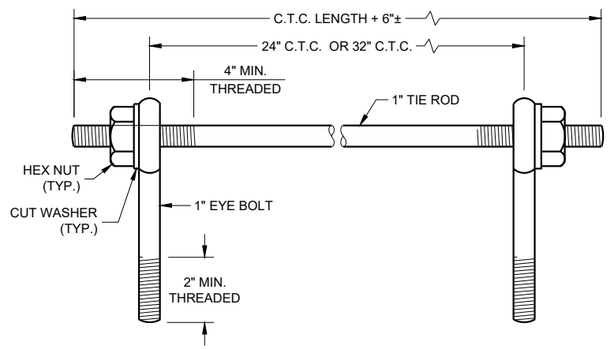

EYE BOLTS AND TIE ROD

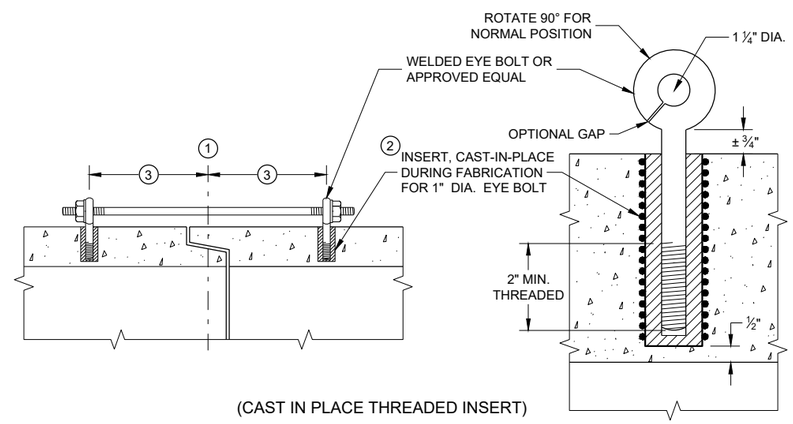

(CAST IN PLACE THREADED INSERT)

LONGITUDINAL SECTIONS

EYE BOLT AND TIE ROD ASSEMBLY (ALTERNATE NO. 1)

GENERAL NOTES

DETAILS OF CONSTRUCTION, MATERIALS, AND WORKMANSHIP NOT SHOWN ON THIS DRAWING SHALL CONFORM TO THE PERTINENT REQUIREMENTS OF THE STANDARD SPECIFICATIONS AND APPLICABLE SPECIAL PROVISIONS.

CONCRETE CULVERT AND STORM SEWER PIPE SHALL BE TIED TOGETHER IN THE MANNER ILLUSTRATED BY THIS DETAIL AT LOCATIONS DESIGNATED IN THE STANDARD SPECIFICATIONS AND THE PLAN. THE CONTRACTOR MAY USE EITHER ALTERNATE 1, 2 OR 3 FOR DRAINAGE STRUCTURES. ONLY ALTERNATE 1 AND 3 MAY BE USED FOR CATTLE PASSES, UNLESS OTHERWISE STATED IN THE CONTRACT. THE MATERIALS, FABRICATION AND WORK NECESSARY TO TIE THE PIPE BY THIS DETAIL WILL BE CONSIDERED INCIDENTAL TO THE PIPE AND APRON ENDWALLS IF REQUIRED.

DETAILED DRAWINGS FOR PROPOSED ALTERNATE DESIGNS FOR JOINT TIES SHALL BE SUBMITTED TO THE ENGINEER FOR APPROVAL.

JOINT TIES TO BE HOT-DIP GALVANIZED PER ASTM A 153.

1. CENTER LINE OF TONGUE AND GROOVE OR BELL AND SPIGOT JOINTS.
2. THE INSIDE OF THE THREADED INSERTS SHALL BE CLEAN TO ALLOW THE INSERTION OF THREADED EYE BOLTS.
3. HOLES SHALL BE CAST-IN-PLACE OR DRILLED PER THE APPLICABLE DETAIL, AND EQUAL DISTANCE FROM THE CENTERLINE OF THE JOINT.
4. BOLT PROJECTION INSIDE OF PIPE SHALL NOT EXCEED 2 INCHES.
5. OPENING TO BE ROD DIAMETER PLUS 1 INCH.
6. LENGTH ADEQUATE TO EXTEND TO WITHIN ½ INCH OF THE INNER SURFACE OF THE PIPE.
7. EYE BOLT LENGTH DETERMINED BY WALL THICKNESS, BELL THICKNESS AND BOLT PROJECTION INSIDE PIPE.

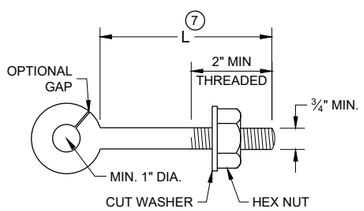

EYE BOLT 7

NOTE: TWO EYE BOLTS MAY BE USED WITH A 30" OR 38" LONG THREADED ROD IN LIEU OF THE 90° BENT TIE ROD.

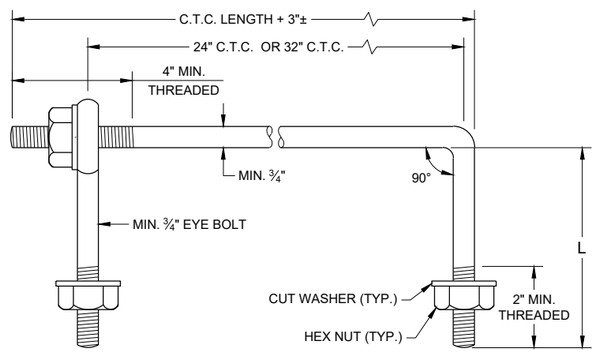

EYE BOLT AND TIE ROD

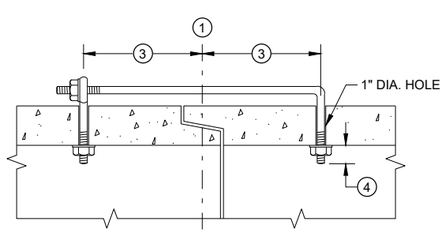

(TONGUE AND GROOVE PIPE)

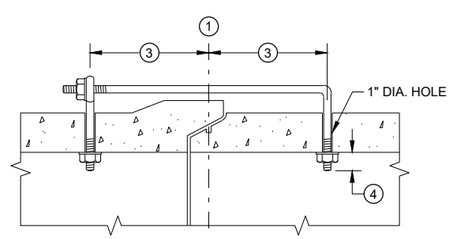

(MODIFIED BELL PIPE)

LONGITUDINAL SECTION

(JOINT TIES FOR 18" TO 66" DIA. CONCRETE PIPE)

EYE BOLT AND TIE ROD ASSEMBLY (ALTERNATE NO. 2)

ADJUSTABLE TIE ROD TABLE

PIPE DIAMETER	TIE ROD DIAMETER	D	L_1	N
12 - 60	⅝	⅝	5	½
66 - 84	¾	¾	5	½
90 - 144	1	1	7	1 7/16

DIMENSIONS SHOWN ARE IN INCHES

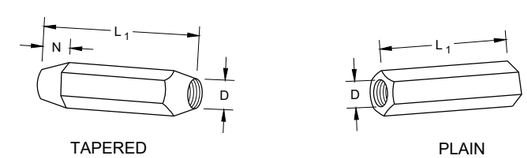

RIGHT AND LEFT THREADS

SLEEVE NUTS

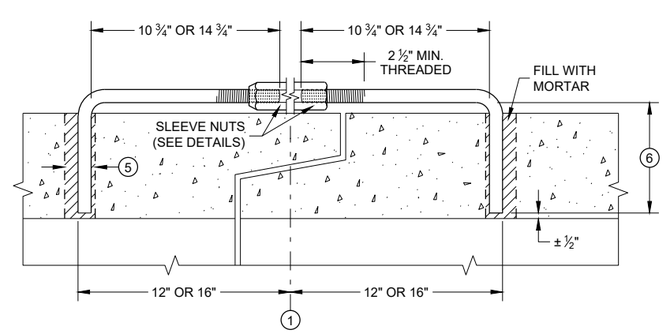

LONGITUDINAL SECTION

ADJUSTABLE TIE ROD (ALTERNATE NO. 3)

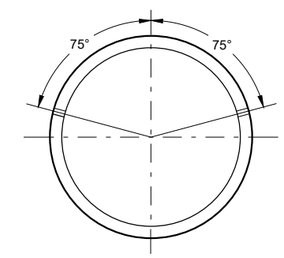

PLACEMENT OF (2) CAST-IN-PLACE INSERTS OR HOLES DURING FABRICATION FOR PIPE SECTIONS REQUIRING TIE RODS

TRANSVERSE SECTION

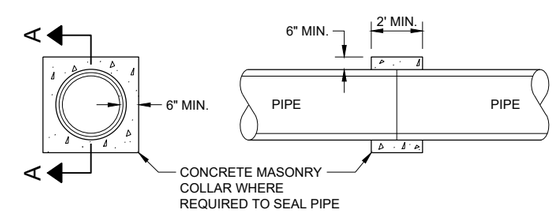

SECTION A - A

CONCRETE COLLAR DETAIL

JOINT TIES FOR CONCRETE PIPE AND CONCRETE COLLAR DETAIL

STATE OF WISCONSIN
DEPARTMENT OF TRANSPORTATION

APPROVED
November 2021 — DATE
/S/ Rodney Taylor — ROADWAY STANDARDS DEVE ENGINEER
FHWA

6

SDD 08F04 - 08

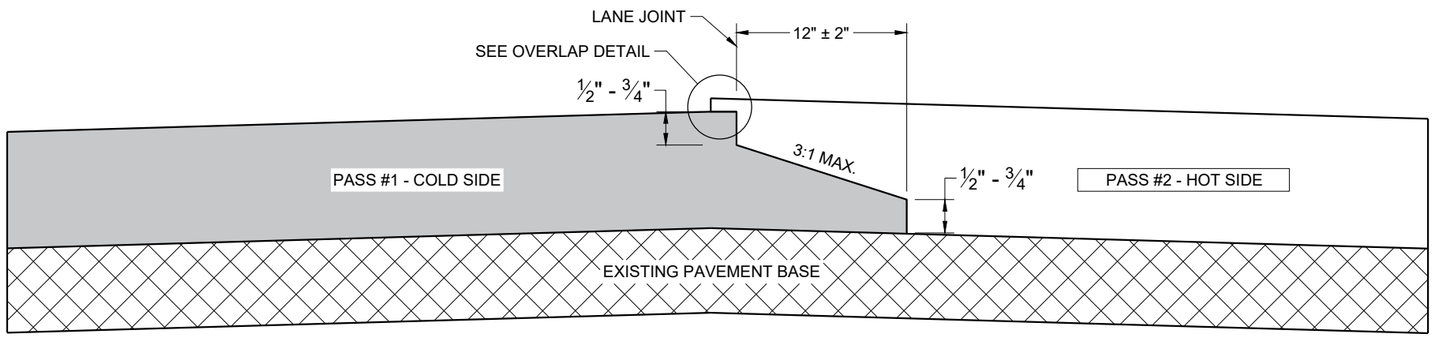

TYPICAL PAVEMENT CROSS SECTION
NOTCHED WEDGE JOINT

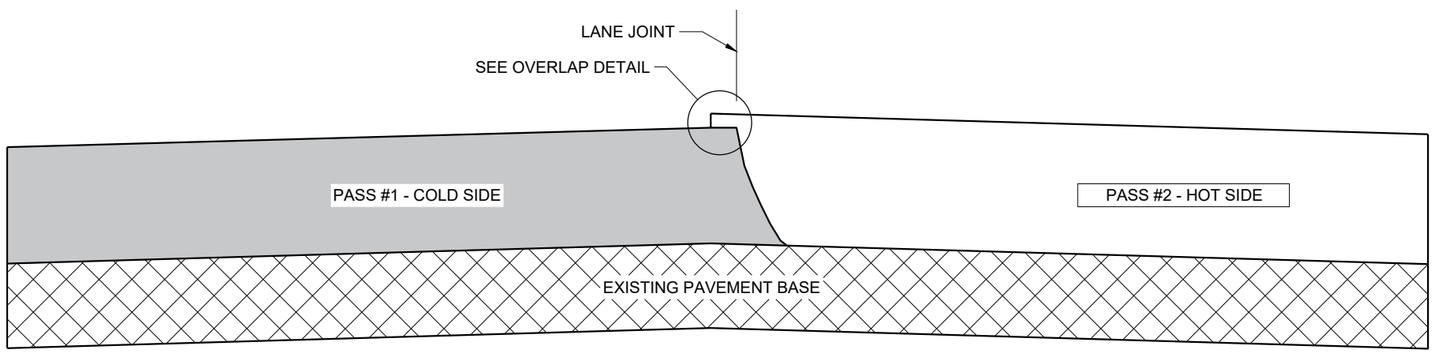

TYPICAL PAVEMENT CROSS SECTION
VERTICAL JOINT

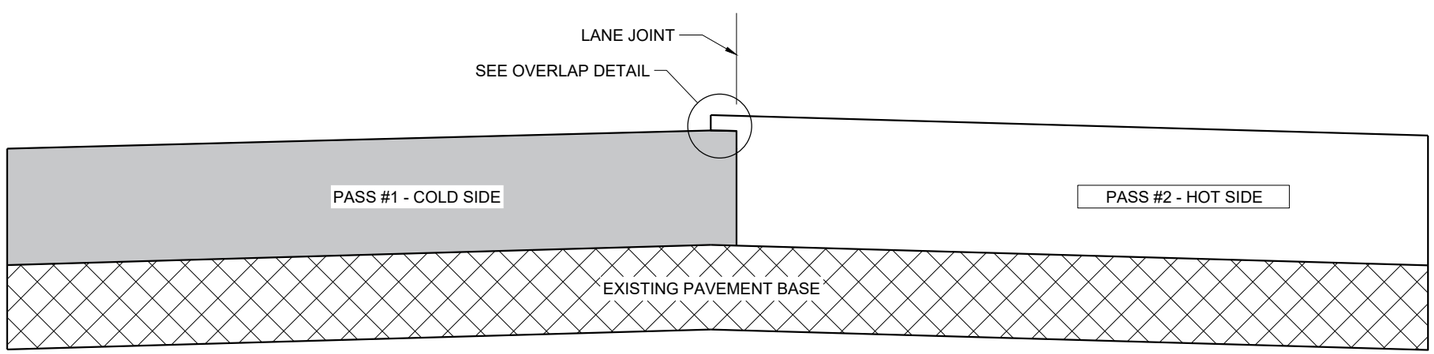

TYPICAL PAVEMENT CROSS SECTION
VERTICAL JOINT (MILLED)

GENERAL NOTES

IN ADDITION TO THE DETAILS PROVIDED IN THIS DRAWING, CONFORM TO STANDARD SPECIFICATION 450.3.2.8 FOR WHEN A NOTCHED WEDGE JOINT IS REQUIRED AND FOR GENERAL JOINT CONSTRUCTION REQUIREMENTS.

FOR ALL LONGITUDINAL JOINTS, ENSURE THE PAVER SCREED OVERLAPS THE PREVIOUSLY PLACED PAVEMENT BY 1" ± 0.5" AND THE HOT SIDE OF THE JOINT REMAINS HIGHER THAN THE COLD SIDE BY APPROXIMATELY 0.1" AFTER FINAL COMPACTION. (IT WILL BE FLUSH WHEN PAVING IN ECHELON.)

ONLY REMOVE THE LONGITUDINAL NOTCHED WEDGE JOINT FOR SMA PAVEMENT OR AS DIRECTED BY THE ENGINEER TO ADDRESS SPECIFIC LENGTHS OF JOINT DAMAGED BY TRAFFIC.

WHEN MILLING BACK OR REMOVING ANY LONGITUDINAL JOINT, LIMIT THE MATERIAL REMOVED TO 2" FROM THE TOP NOTCH OR FROM THE VERTICAL JOINT EDGE ON THE COLD SIDE OF THE JOINT.

USE LONGITUDINAL MILLED JOINT AS PLANS SHOW OR THE AS THE ENGINEER DIRECTS.

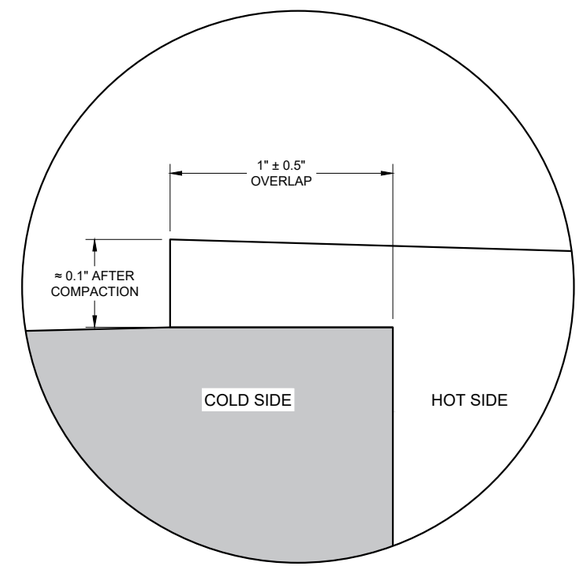

OVERLAP DETAIL (TYPICAL)

6

6

SDD 13C19 - 03

SDD 13C19 - 03

HMA LONGITUDINAL JOINTS

STATE OF WISCONSIN
DEPARTMENT OF TRANSPORTATION

APPROVED
November 2020 /S/ Steven Hefel
DATE HMA PAVEMENT ENGIN
FHWA

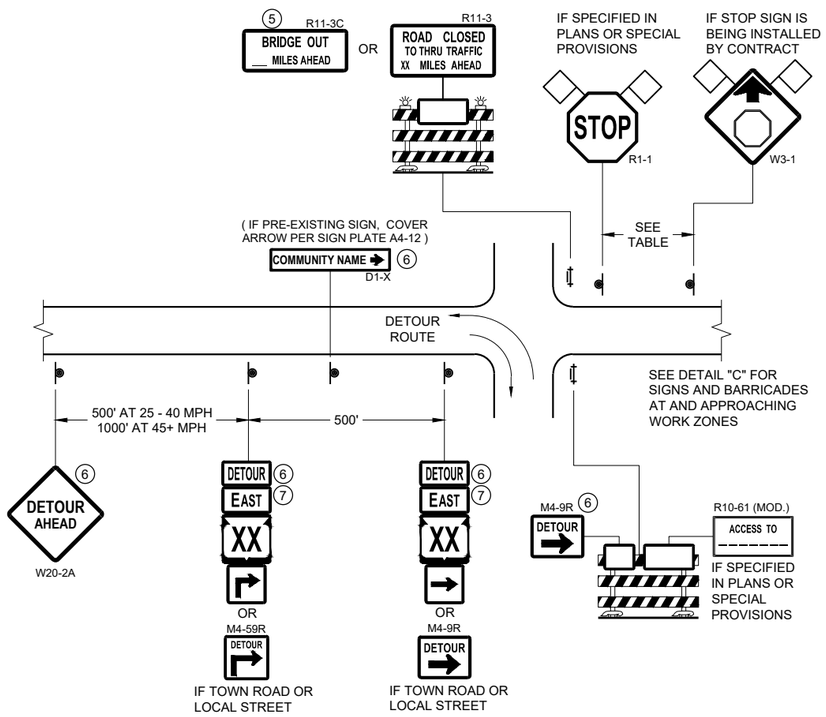

DETAIL A
MAINLINE CLOSURE WITH POSTED DETOUR
WORK ZONE GREATER THAN OR EQUAL TO ½ MILE FROM DETOUR ROUTE (1000 FEET IF URBAN)

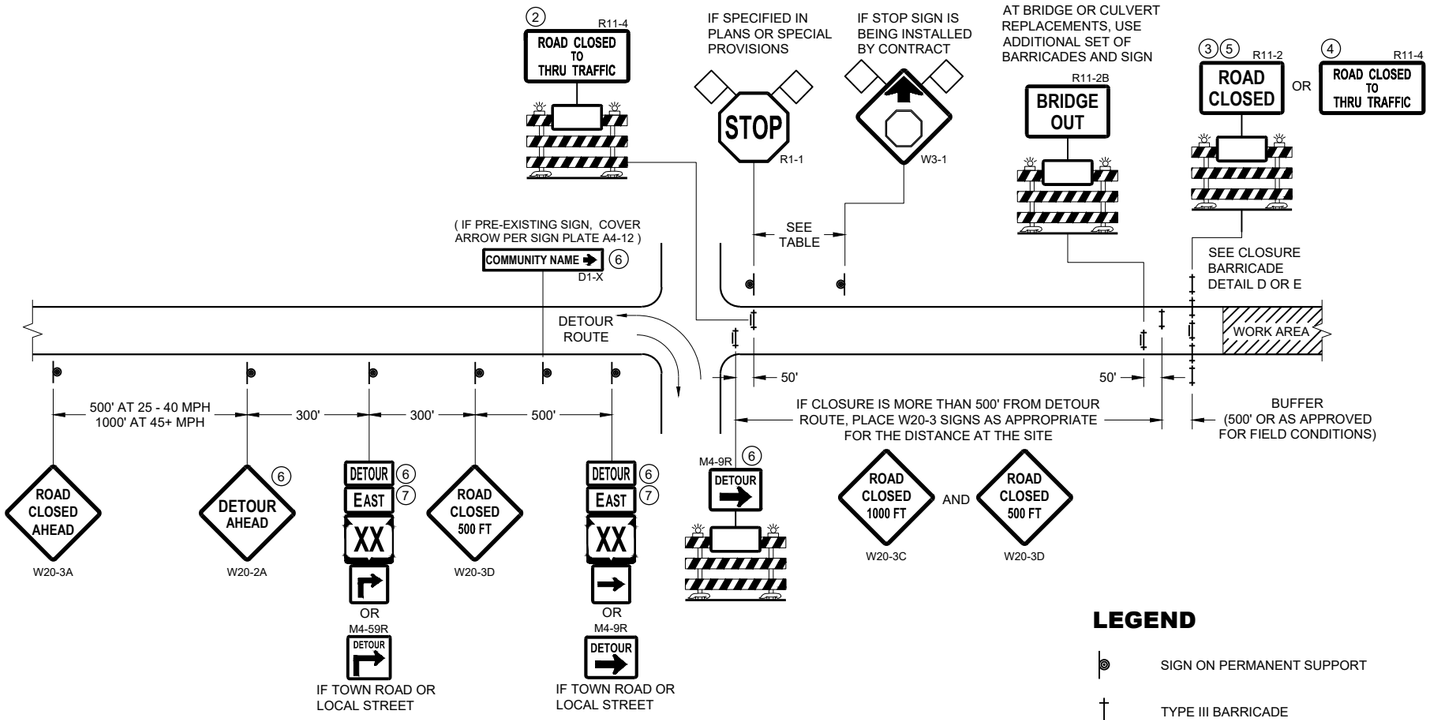

DETAIL B
MAINLINE CLOSURE WITH POSTED DETOUR
WORK ZONE LESS THAN ½ MILE FROM DETOUR ROUTE (1000 FEET IF URBAN)

LEGEND

- SIGN ON PERMANENT SUPPORT
- TYPE III BARRICADE
- TYPE III BARRICADE WITH ATTACHED SIGN
- TYPE "A" WARNING LIGHT (FLASHING)
- WORK AREA
- FLAGS, 16" X 16" MIN. (ORANGE)
- DETOUR — M4 - 8
- EAST — M3 - X
- XX (M1 - 4) OR XX (M1 - 6) OR COUNTY X (M1 - 5A)
- M05 - 1 OR M06 - 1

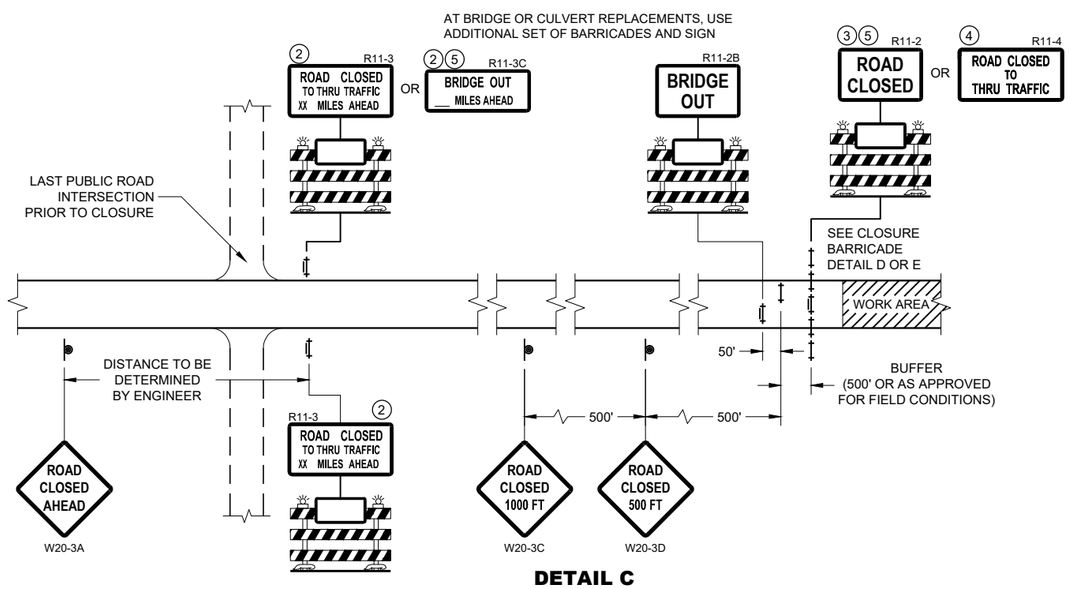

DETAIL C
MAINLINE CLOSURE, NO POSTED DETOUR

SPEED LIMIT (MPH)	"STOP AHEAD" ADVANCE WARNING DISTANCE (FT)
25	200
30	200
35	350
40	350
45	500
50	550
55	750

SEE SDD 15C2-SHEET "b" FOR GENERAL NOTES AND FOOTNOTES 1 THROUGH 7

BARRICADES AND SIGNS FOR MAINLINE CLOSURES

STATE OF WISCONSIN
DEPARTMENT OF TRANSPORTATION

APPROVED
May 2023 — DATE
/S/ Andrew Heidtke — WORK ZONE ENGINEER
FHWA

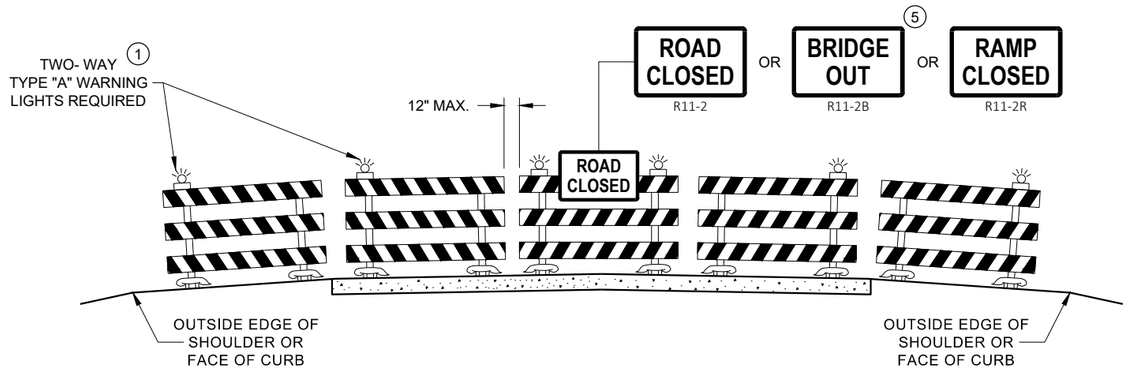

DETAIL D
ROAD CLOSURE BARRICADE DETAIL
APPROACH VIEW

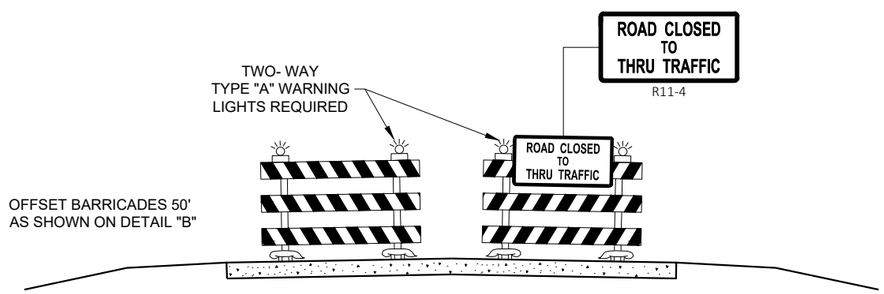

DETAIL E
LANE CLOSURE BARRICADE DETAIL
APPROACH VIEW

SEE SDD 15C2 - SHEET "a" FOR LEGEND

GENERAL NOTES

THE EXACT NUMBER, LOCATION, AND SPACING OF ALL SIGNS AND BARRICADES SHALL BE ADJUSTED TO FIT FIELD CONDITIONS AS APPROVED BY THE ENGINEER.

ANY SIGNS TEMPORARY OR EXISTING, WHICH CONFLICT WITH TRAFFIC CONTROL "IN USE", SHALL BE REMOVED OR COVERED AS NEEDED AND AS APPROVED BY THE ENGINEER.

THE SPACING BETWEEN TRAFFIC CONTROL SIGNS SHOULD BE ADJUSTED TO NOT CONFLICT WITH AND SHOULD PROVIDE A DESIRABLE MINIMUM OF 200 FEET CLEARANCE TO EXISTING SIGNS THAT WILL REMAIN IN PLACE.

BARRICADES THAT MUST BE MOVED FOR A WORK OPERATION SHALL BE IMMEDIATELY RE-ESTABLISHED UPON COMPLETION OF THE OPERATION, OR FOR CONTINUING OPERATIONS, AT THE END OF EACH WORKING DAY.

SIGNS THAT WILL BE IN PLACE LESS THAN 7 CONTINUOUS DAYS AND NIGHTS MAY BE MOUNTED ON PORTABLE SUPPORTS.

ALL TYPE III BARRICADES SHALL HAVE RAILS REFLECTORIZED ON BOTH FACES. STRIPES SHALL BE PROPERLY SLOPED DOWN TOWARD THE TRAFFIC SIDE OR AS SHOWN IN THE ROAD CLOSURE BARRICADE DETAIL "D" FOR FULL ROAD CLOSURES.

TYPE "A" LOW - INTENSITY FLASHING WARNING LIGHTS SHALL BE VISIBLE ON BOTH SIDES OF THE BARRICADE.

THE R11 - 2, R11 - 3, M4 - 9, R11 - 4, AND R10 - 61 SIGNS PLACED ON THE BARRICADES SHALL COVER NO MORE THAN THE TOP RAIL. THE SIGNS SHALL NOT COVER ANY PORTION OF THE MIDDLE RAIL OR BOTTOM RAILS.

"WO" AND "MO" SIGNS ARE THE SAME AS "W" AND "M" SIGNS EXCEPT THE BACKGROUND IS ORANGE.

ALL SIGNS SHALL BE 48" X 48" UNLESS OTHERWISE NOTED BELOW:
- R11 - 2 SHALL BE 48" X 30"
- R11 - 3 SHALL, R11 - 4 AND R10 - 61 SHALL BE 60 " X 30"
- M4 - 9 SHALL BE 30" X 24"
- M3 - X SHALL BE 24" X 12" (36" X 18" IF NEEDED TO MATCH EXISTING SIGNS)
- M4 - 8 SHALL BE 24" X 12" (36" X 18" IF NEEDED TO MATCH EXISTING SIGNS)
- M1 - 4, M1 - 5A AND M1 - 6 SHALL BE 24" X 24" (36" X 36" IF NEEDED TO MATCH EXISTING SIGNS)
- MO5 - 1 AND MO6 - 1 SHALL BE 21" X 21" (30" X 30" IF NEEDED TO MATCH EXISTING SIGNS)
- D1 - X SHALL BE AS SHOWN ON SPECIFIC PROJECT SIGNING DETAIL SHEETS.
- R1 - 1 SHALL BE 36" X 36"

1. TWO WARNING LIGHTS SHALL BE PROVIDED ON THE CENTER BARRICADE AND A MINIMUM OF ONE WARNING LIGHT SHALL BE PROVIDED ON EACH OF THE OTHER BARRICADES WITHIN THE ROADWAY LIMITS. SPACING OF THE WARNING LIGHTS SHALL BE UNIFORM TO THE EDGE OF ROADWAY AS SHOWN (APPROX. 8 FOOT LIGHT SPACING.
2. THESE SIGNS AND BARRICADES ARE NOT REQUIRED IF ROAD CLOSURE BEGINS AT AN INTERSECTION.
3. FOR ROAD CLOSURE WITHOUT LOCAL ACCESS TO PROJECT, SEE ROAD CLOSURE BARRICADE DETAIL "D".
4. FOR ROAD CLOSURE WITH LOCAL ACCESS TO PROJECT, SEE ROAD CLOSURE BARRICADE DETAIL "E".
5. FOR BRIDGE OR CULVERT REPLACEMENTS, SUBSTITUTE "BRIDGE OUT" INSTEAD OF "ROAD CLOSED" ON R11 - 2 AND R11 - 3 SIGNS.
6. INSTALL DETOUR AND COMMUNITY GUIDE SIGNS AND ARROWS ONLY IF SPECIFIED IN THE CONTRACT. IF THERE ARE EXISTING ROUTE MARKER ASSEMBLIES THAT WILL REMAIN IN PLACE, ADJUST THE LOCATION OF THE DETOUR ROUTE SIGNS TO CORRESPOND WITH THE EXISTING ASSEMBLIES. MODIFY EXISTING SIGNS WHERE POSSIBLE. SEE SPECIFIC PROJECT DETOUR SIGNING DETAIL SHEETS. IF DETOUR SIGNS ARE BEING INSTALLED BY OTHERS, PLACE THE CONTRACTED TRAFFIC CONTROL SIGNS TO ALLOW FOR PLACEMENT OF ALL WARNING, DETOUR AND GUIDE SIGNS AS SHOWN.
7. "EAST" CARDINAL DIRECTION MARKERS AND RIGHT TURN ARROWS ARE SHOWN. USE OTHER CARDINAL DIRECTIONS AND ARROWS AS APPROPRIATE.

BARRICADES AND SIGNS FOR VARIOUS CLOSURES

STATE OF WISCONSIN
DEPARTMENT OF TRANSPORTATION

APPROVED
May 2023 — DATE
/S/ Andrew Heidtke — WORK ZONE ENGINEE
FHWA

6
SDD 15C02 - 09b

THIS DRAWING PROVIDES GENERAL GUIDANCE ON TYPICAL DETOUR SIGN LAYOUT AND SPACING. SEE PROJECT DETOUR SIGNING SHEETS FOR SPECIFIC DETAILS FOR EACH PROJECT.

LEGEND

- SIGN ON PERMANENT SUPPORT
- WORK AREA
- DETOUR — M4 - 8
- EAST — M3 - X
- XX — M1 - 4 OR XX — M1 - 6 OR COUNTY X — M1 - 5A
- M05 - 1 OR M06 - 1 OR M06 - 1

GENERAL NOTES

THE EXACT NUMBER, LOCATION AND SPACING OF ALL SIGNS SHALL BE ADJUSTED TO FIT FIELD CONDITIONS AS APPROVED BY THE ENGINEER.

IF THERE ARE EXISTING ROUTE MARKER ASSEMBLIES THAT WILL REMAIN IN PLACE, ADJUST THE LOCATION OF THE DETOUR ROUTE SIGNS TO CORRESPOND WITH THE EXISTING ASSEMBLIES. SEE SPECIFIC PROJECT DETOUR SIGNING DETAIL SHEETS. MODIFY EXISTING SIGNS WHERE POSSIBLE.

THE SPACING BETWEEN TRAFFIC CONTROL AND DETOUR SIGNS SHOULD BE ADJUSTED TO NOT CONFLICT WITH AND TO PROVIDE A DESIRABLE MINIMUM OF 200 FEET CLEARANCE TO EXISTING SIGNS THAT WILL REMAIN IN PLACE.

ANY SIGNS TEMPORARY OR EXISTING, WHICH CONFLICT WITH TRAFFIC CONTROL "IN USE" SHALL BE REMOVED OR COVERED AS NEEDED AND AS APPROVED BY THE ENGINEER.

SIGNS THAT WILL BE IN PLACE LESS THAN 7 CONTINUOUS DAYS AND NIGHTS MAY BE MOUNTED ON PORTABLE SUPPORTS.

"MO" SIGNS ARE THE SAME AS "M" SIGNS EXCEPT THE BACKGROUND IS ORANGE.

SIGN SIZES SHALL BE AS FOLLOWS:

- M3-X SHALL BE 24" X 12" (36" X 18" IF NEEDED TO MATCH EXISTING SIGNS)
- M4-8 SHALL BE 24" X 12" (36" X 18" IF NEEDED TO MATCH EXISTING SIGNS)
- M1-4, M1-5A AND M1-6 SHALL BE 24" X 24" (36" X 36" IF NEEDED TO MATCH EXISTING SIGNS)
- M05-1 AND M06-1 SHALL BE 21" X 21" (30" X 30" IF NEEDED TO MATCH EXISTING SIGNS)
- M4-9 AND M4-59 SHALL BE 30" X 24"
- M4-8a SHALL BE 24" X 18"
- G20-51 SHALL BE 60" X 24"
- W20-2A SHALL BE 48" X 48"
- D1-X SHALL BE AS SHOWN ON SPECIFIC PROJECT SIGNING DETAIL SHEETS.

* OPTIONAL SIGNS. SEE SPECIFIC PROJECT DETOUR SIGNING DETAIL SHEETS.

** FOR A TOWN ROAD OR LOCAL STREET DETOURED ONTO A STATE TRUNK HIGHWAY, PLACE A ROAD NAME PLAQUE ABOVE THE M4-9 SIGN AS SPECIFIED IN THE CONTRACT.

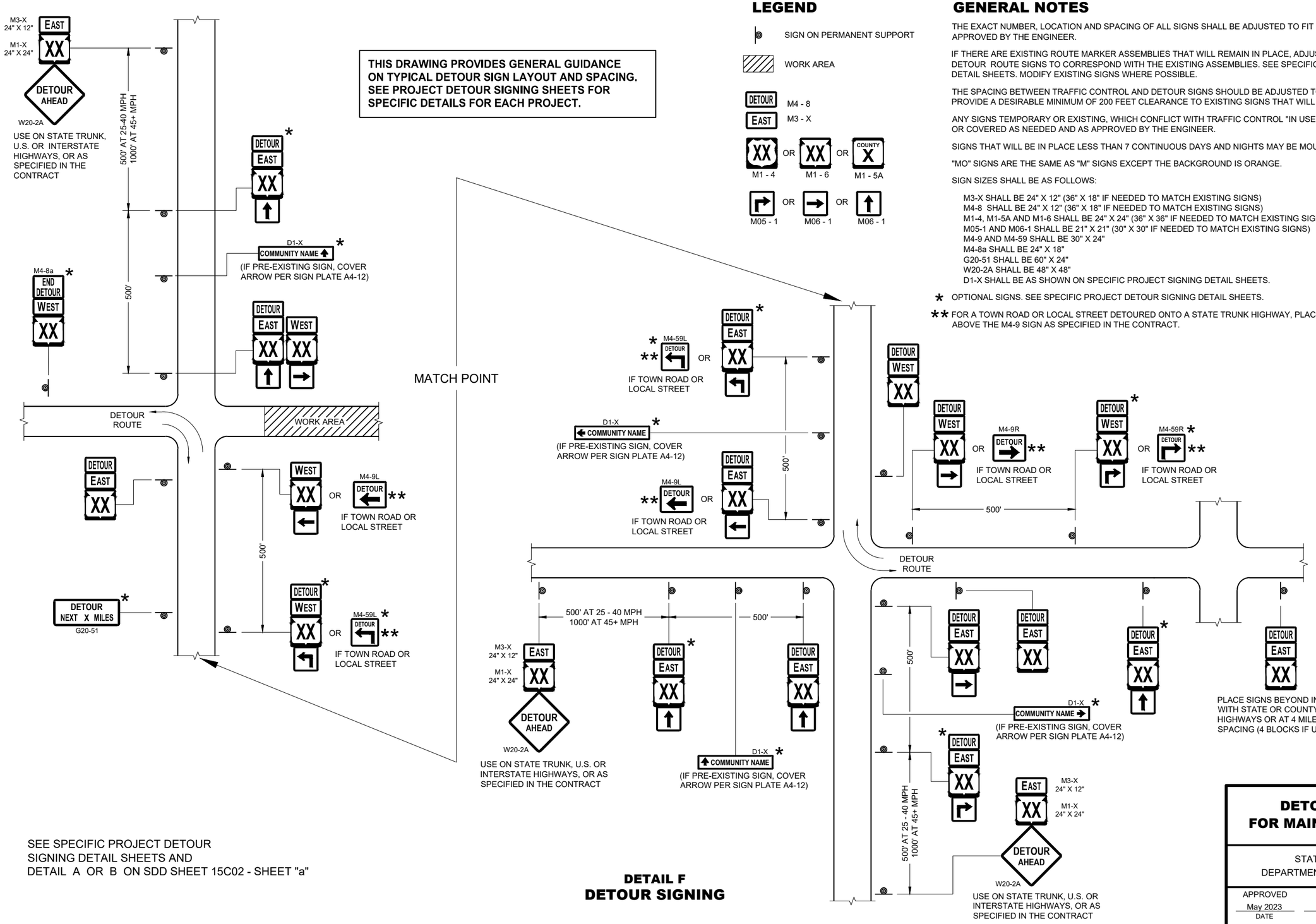

SEE SPECIFIC PROJECT DETOUR SIGNING DETAIL SHEETS AND DETAIL A OR B ON SDD SHEET 15C02 - SHEET "a"

DETAIL F
DETOUR SIGNING

DETOUR SIGNING FOR MAINLINE CLOSURES

STATE OF WISCONSIN
DEPARTMENT OF TRANSPORTATION

APPROVED
May 2023 — DATE
/S/ Andrew Heidtke — WORK ZONE ENGINEER
FHWA

6

SDD 15C02 - 09c

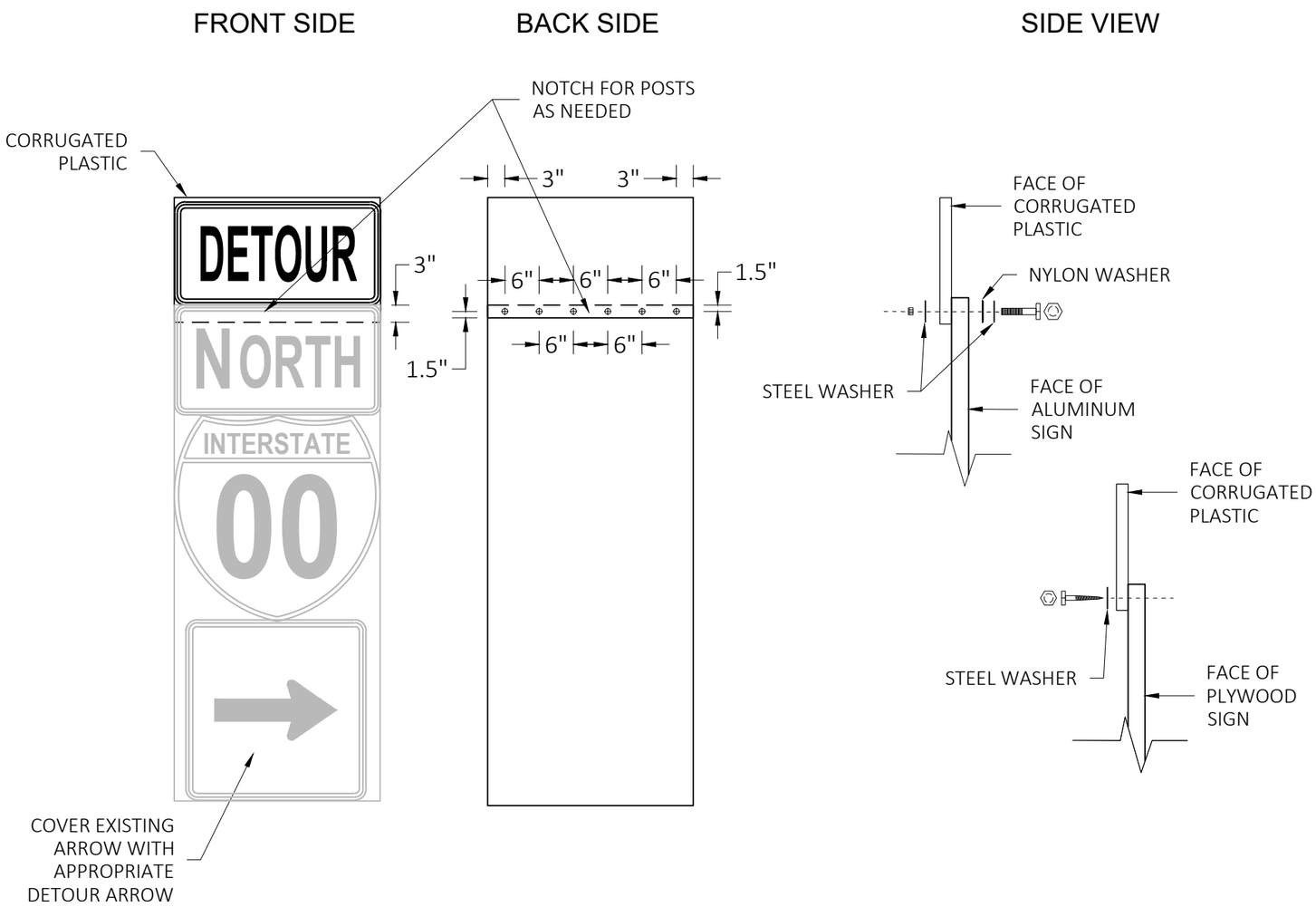

GENERAL NOTES

CELLS OF CORRUGATED PLASTIC SHALL BE VERTICALLY ORIENTED.

PROVIDE A 0.4-INCH THICK BASE CORRUGATED PLASTIC WITH A 0.035-INCH WALL THICKNESS AND 0.4-INCH CELL SIZE.

FOR 36" WIDE SIGNS: USE 6 FASTENERS AS SHOWN.

FOR 24" WIDE SIGNS: USE 4 FASTENERS WITH EDGE SPACING AS SHOWN AND 6" SPACING BETWEEN FASTENERS.

METAL WASHERS, NUTS, BOLTS AND LAGS SHALL HAVE HEXAGONAL HEADS AND SHALL BE EITHER:

A. HOT DIP GALVANIZED IN ACCORDANCE WITH ASTM DESIGNATION: A 153, CLASS D, OR SC 3.

B. ELECTRO-GALVANIZED IN ACCORDANCE WITH ASTM DESIGNATION: B 633, TYPE III, SC3

THREADS ON BOLTS AND NUTS SHALL BE MANUFACTURED WITH SUFFICIENT ALLOWANCE FOR THE CADMIUM PLATE OR GALVANIZED COATING TO PERMIT THE NUTS TO RUN FREELY ON THE BOLTS.

PLYWOOD SIGNS:
LAG SCREWS - 5/16" x 1"
ALUMINUM SIGNS:
MACHINE BOLTS - 5/16" x 1-1/4" LENGTH W/NUTS
WASHERS:
1-1/4" O.D. x 3/8" I.D. x 1/16" STEEL
1-1/4" O.D. x 3/8" I.D. x .080 NYLON

MODIFIED ROUTE ASSEMBLY FOR DETOUR SIGNING

MODIFIED ROUTE ASSEMBLY FOR DETOUR SIGNING

STATE OF WISCONSIN
DEPARTMENT OF TRANSPORTATION

APPROVED
May 2023 — DATE
/S/ Andrew Heidtke — ROADWAY STANDARDS DEVEL ENGINEER
FHWA

6
SDD 15C02-09h

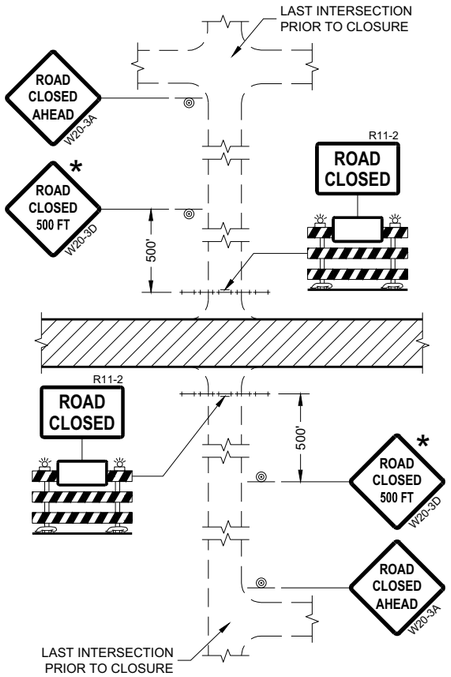

DETAIL 1
(NO ACCESS TO PROJECT)

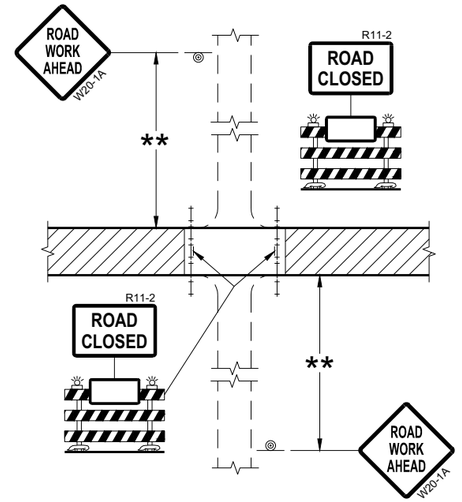

DETAIL 2
(PUBLIC CROSS-TRAFFIC MAINTAINED.
NO ACCESS TO PROJECT)

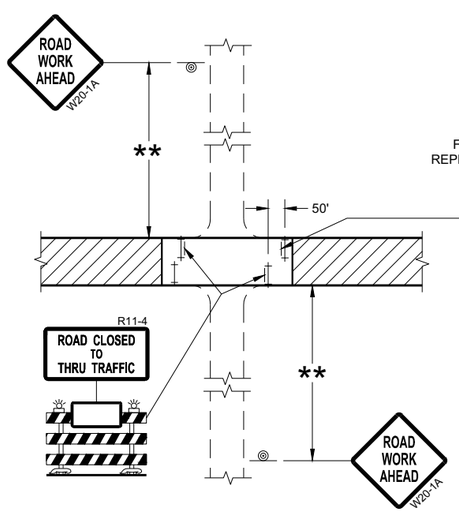

DETAIL 3
(PUBLIC CROSS-TRAFFIC MAINTAINED.
CONTRACTOR, LOCAL BUSINESS AND
RESIDENT ACCESS TO PROJECT)

FOR BRIDGE OR CULVERT
REPLACEMENT, USE ADDITIONAL
SIGN ON BARRICADE

BRIDGE OUT
XX MILES AHEAD
R11-3C

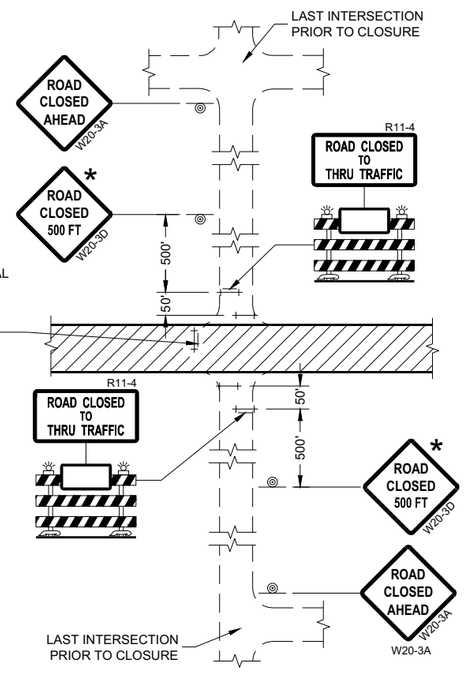

DETAIL 4
(CONTRACTOR, LOCAL BUSINESS AND
RESIDENT ACCESS TO PROJECT)

GENERAL NOTES

THE EXACT NUMBER, LOCATION, AND SPACING OF ALL SIGNS AND BARRICADES SHALL BE ADJUSTED TO FIT FIELD CONDITIONS AS APPROVED BY THE ENGINEER.

ANY SIGNS TEMPORARY OR EXISTING, WHICH CONFLICT WITH TRAFFIC CONTROL "IN USE" SHALL BE REMOVED OR COVERED AS NEEDED AND AS APPROVED BY THE ENGINEER.

THE SPACING BETWEEN TRAFFIC CONTROL SIGNS SHOULD BE ADJUSTED TO NOT CONFLICT WITH AND SHOULD PROVIDE A DESIRABLE MINIMUM OF 200 FEET CLEARANCE (500 FEET DESIRABLE) TO EXISTING SIGNS THAT WILL REMAIN IN PLACE.

IF A "STOP" SIGN MUST BE REMOVED FOR A WORK OPERATION, A TEMPORARY "STOP" SIGN SHALL BE PLACED PRIOR TO THE SIGN REMOVAL, OR A FLAGGER SHALL BE PROVIDED UNTIL THE SIGN IS REESTABLISHED.

BARRICADES THAT MUST BE MOVED FOR A WORK OPERATION SHALL BE IMMEDIATELY REESTABLISHED UPON COMPLETION OF THE OPERATION OR FOR CONTINUING OPERATIONS, AT THE END OF EACH WORKING DAY.

SIGNS THAT WILL BE IN PLACE LESS THAN SEVEN CONTINUOUS DAYS AND NIGHTS MAY BE MOUNTED ON PORTABLE SUPPORTS.

ALL TYPE III BARRICADES SHALL HAVE RAILS REFLECTORIZED ON BOTH FACES. STRIPES SHALL BE PROPERLY SLOPED DOWN TOWARD THE TRAFFIC SIDE OR AS SHOWN IN THE ROAD CLOSURE BARRICADE DETAIL "D" FOR FULL ROAD CLOSURES.

TYPE "A" LOW-INTENSITY FLASHING WARNING LIGHTS SHALL BE VISIBLE ON BOTH SIDES OF THE BARRICADE.

THE R11-2, R11-3, AND R11-4 SIGNS PLACED ON BARRICADES SHALL COVER NO MORE THAN THE TOP RAIL. THE SIGNS SHALL NOT COVER ANY PORTION OF THE MIDDLE OR BOTTOM RAILS.

ALL SIGNS SHALL BE 48" X 48" UNLESS OTHERWISE NOTED BELOW:
R11-2 SHALL BE 48" X 30".
R11-4 AND R11-3 SHALL BE 60" X 30".

* OMIT THE "ROAD CLOSED 500 FT." SIGN IF THE LAST INTERSECTION IS 500 FEET OR LESS FROM THE WORK ZONE.

** 500' MAX. OR AT LAST INTERSECTION, WHICHEVER IS CLOSEST.

LEGEND

- SIGN ON PERMANENT SUPPORT
- TYPE III BARRICADE
- TYPE III BARRICADE WITH ATTACHED SIGN
- TYPE "A" WARNING LIGHT (FLASHING)
- WORK AREA

BARRICADES AND SIGNS FOR SIDEROAD CLOSURES

STATE OF WISCONSIN
DEPARTMENT OF TRANSPORTATION

APPROVED
July 2018 — DATE
/S/ Andrew Heidtke — WORK ZONE ENGINEE
FHWA

6
SDD 15C03 - 05

GENERAL NOTES

THE EXACT NUMBER, LOCATION, AND SPACING OF ALL SIGNS AND DEVICES SHALL BE ADJUSTED TO FIT FIELD CONDITIONS.

THE SPACING BETWEEN TRAFFIC CONTROL SIGNS SHOULD BE ADJUSTED TO NOT CONFLICT WITH AND SHOULD PROVIDE A MINIMUM OF 200 FEET (500 FEET DESIRABLE) CLEARANCE TO EXISTING SIGNS THAT WILL REMAIN IN PLACE.

ALL SIGNS ARE 48" X 48" UNLESS OTHERWISE NOTED. IF NECESSARY DUE TO SPACE CONSTRAINTS, 36"X36" SIGNS MAY BE USED INSTEAD OF 48" X 48" SIGNS.

SIGNS THAT WILL BE IN PLACE LESS THAN SEVEN CONTINUOUS DAYS AND NIGHTS MAY BE MOUNTED ON PORTABLE SUPPORTS.

IF A "STOP" SIGN MUST BE REMOVED FOR A WORK OPERATION, A TEMPORARY "STOP" SIGN SHALL BE PLACED PRIOR TO THE SIGN REMOVAL, OR A FLAGGER SHALL BE PROVIDED UNTIL THE SIGN IS REESTABLISHED.

* THE THIRD W20-1 SIGN IS REQUIRED ONLY IF THERE IS AN INTERSECTION BETWEEN THE "ROAD WORK 500 FEET" SIGN AND THE WORK ZONE. ADJUST THE PLACEMENT OF THIS SIGN BASED ON INTERSECTION LOCATION AND OTHER FIELD CONDITIONS.

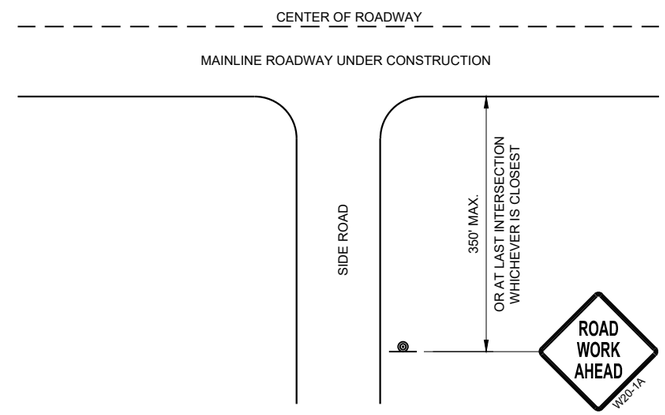

TYPICAL SIDE ROAD APPROACH WARNING SIGN DETAIL

LEGEND

- SIGN ON PERMANENT SUPPORT
- DIRECTION OF TRAFFIC
- WORK AREA

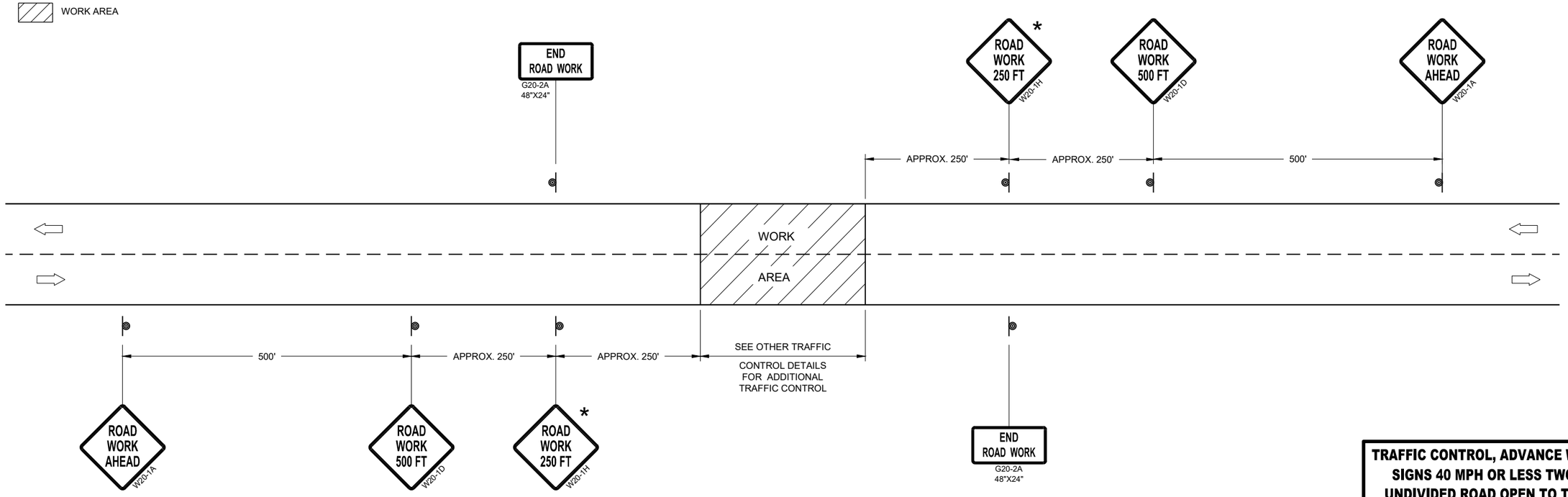

TRAFFIC CONTROL, ADVANCE WARNING SIGNS 40MPH OR LESS

TRAFFIC CONTROL, ADVANCE WARNING SIGNS 40 MPH OR LESS TWO-WAY UNDIVIDED ROAD OPEN TO TRAFFIC

STATE OF WISCONSIN
DEPARTMENT OF TRANSPORTATION

APPROVED
July 2018 — DATE
/S/ Andrew Heidtke — WORK ZONE ENGINEE
FHWA

6

SDD 15C05 - 05

6

SDD 15C05 - 05

GENERAL NOTES

1. REFLECTIVE SHEETING SHALL FOLLOW THE REQUIREMENTS IN THE APPROVED PRODUCTS LISTING FOR SIGN SHEETING.
2. LOCATION OF WARNING LIGHTS WHEN SHOWN ON THE PLAN.

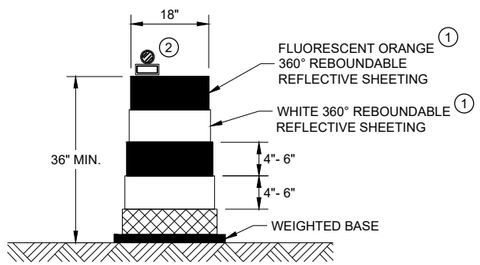

DRUM

BALLAST WIDTHS
RANGE FROM 24"-36"

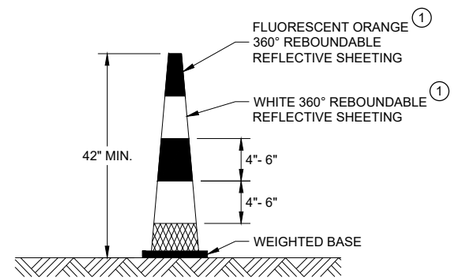

42" CONE

DO NOT USE IN TAPERS
½ SPACING OF DRUMS

BALLAST WIDTHS
RANGE FROM 14"-20"

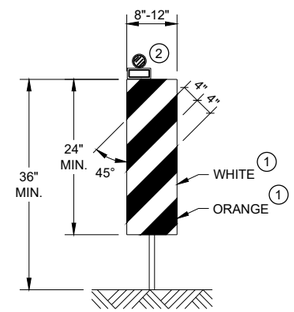

VERTICAL PANEL

THE STRIPES SHALL SLOPE DOWNWARD TO
THE TRAFFIC SIDE FOR CHANNELIZATION.

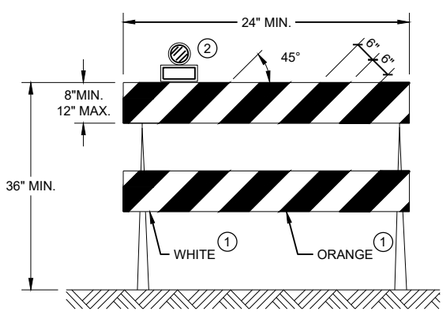

TYPE II BARRICADE

FOR RAILS LESS THAN 36" LONG, 4" WIDE STRIPES
MAY BE USED. ALL STRIPES SHALL SLOPE DOWNWARD
TO THE TRAFFIC SIDE FOR CHANNELIZATION.

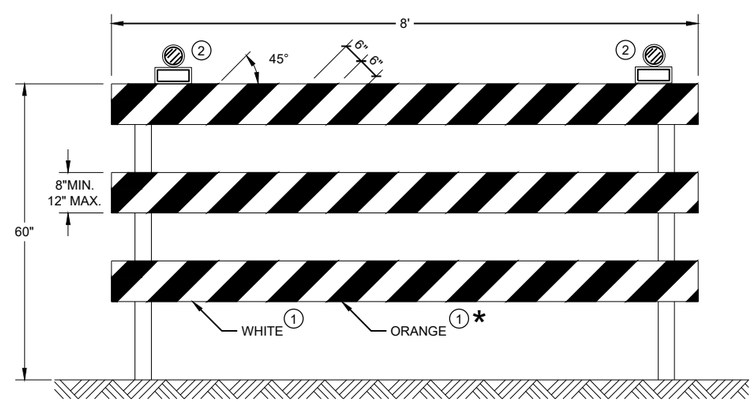

TYPE III BARRICADE

IF SIGN MOUNTED, DO NOT COVER MORE THAN 50% OF THE TOP
TWO RAILS OR 33% OF THE TOTAL AREA OF THE THREE RAILS.

* IF USED FOR A PERMANENT APPLICATION USE RED SHEETING.

CHANNELIZING DEVICES
DRUMS, CONES, BARRICADES
AND VERTICAL PANELS

STATE OF WISCONSIN
DEPARTMENT OF TRANSPORTATION

APPROVED
November 2022 — /S/ Andrew Heidtke
DATE — WORK ZONE ENGINEE
FHWA

6

6

SDD 15C11 - 10b

SDD 15C11 - 10b

LEGEND

SIGN ON PORTABLE OR PERMANENT SUPPORT

TEMPORARY PORTABLE RUMBLE STRIP ARRAY

DIRECTION OF TRAFFIC

WORK AREA

FLAGGER, EQUIPPED WITH STOP/SLOW PADDLE FASTENED ON SUPPORT STAFF

GENERAL NOTES

DETAILS OF TRAFFIC CONTROL DEVICES AND INSTALLATION NOT SHOWN ON THIS DRAWING SHALL CONFORM TO THE PERTINENT REQUIREMENTS OF THE STANDARD SPECIFICATIONS, THE SPECIAL PROVISIONS, AND THE MANUAL ON UNIFORM TRAFFIC CONTROL DEVICES.

ALL SIGNS ARE 48" X 48" UNLESS OTHERWISE NOTED.

"WO" SIGNS ARE THE SAME AS "W" SIGNS EXCEPT THE BACKGROUND IS ORANGE.

THE EXACT NUMBER, LOCATION AND SPACING OF ALL SIGNS, DEVICES, AND LOCATION OF ALL FLAGGERS SHALL BE ADJUSTED TO FIT FIELD CONDITIONS AS APPROVED BY THE ENGINEER.

THE FIRST ADVANCE WARNING SIGN SHOULD TYPICALLY BE LOCATED IN ADVANCE OF THE ANTICIPATED TRAFFIC BACKUP OR QUEUE.

WHEN A SIDE ROAD OR RAMP INTERSECTS THE FACILITY ON WHICH THE WORK IS BEING PERFORMED, ADDITIONAL TRAFFIC CONTROLS SHALL BE PROVIDED AS SPECIFIED IN THE PLANS AND/OR THE SPECIAL PROVISIONS OR AS APPROVED BY THE ENGINEER.

FLAGGING

FLAGGERS SHALL BE IN SIGHT OF EACH OTHER OR IN DIRECT COMMUNICATION AT ALL TIMES. THEY SHALL BE EQUIPPED WITH STOP/SLOW PADDLES FASTENED ON SUPPORT STAFFS. WHEN THE FLAGGING OPERATION IS NOT IN EFFECT REMOVE TEMPORARY PORTABLE RUMBLE STRIPS PRIOR TO COVERING OR REMOVING ALL ADVANCE SIGNING.

(1) FOR MOVING WORK OPERATIONS, POST ADDITIONAL W20-7A FLAGGER SIGNS AT APPROXIMATELY 3,500' INTERVALS IN THE MOVING WORK OPERATION OR AS APPROVED BY THE ENGINEER.

(2) SIGN NOT REQUIRED IF FLAGGING OPERATION OCCURS WITHIN A SIGNED ROAD WORK ZONE AREA.

WHEN THE DISTANCE BETWEEN FLAGGERS EXCEEDS 2 MILES, A PILOT CAR IS REQUIRED. WHEN CURVES REDUCE SIGHT DISTANCE BELOW 400', A PILOT CAR IS REQUIRED.

TEMPORARY PORTABLE RUMBLE STRIPS

UTILIZE TEMPORARY PORTABLE RUMBLE STRIPS ON ALL FLAGGING OPERATIONS.

(3) EACH TEMPORARY PORTABLE RUMBLE STRIP ARRAY CONSISTS OF THREE RUMBLE STRIPS PLACED TRANSVERSE ACROSS THE LANE AT THE LOCATIONS SHOWN. WITHIN EACH ARRAY, SPACING BETWEEN RUMBLE STRIPS SHALL BE 15 FEET ON CENTER

ONLY USE TEMPORARY PORTABLE RUMBLE STRIPS FROM THE APPROVED PRODUCTS LIST.

INSTALL TEMPORARY RUMBLE STRIPS PER MANUFACTURER'S RECOMMENDATIONS.

PLACE ADVANCE SIGNING PRIOR TO INSTALLING TEMPORARY RUMBLE STRIPS.

DO NOT INSTALL TEMPORARY PORTABLE RUMBLE STRIPS ON GRAVEL, MILLED SURFACES, OR ASPHALT THAT HAS BEEN PAVED LESS THAN 12 HOURS.

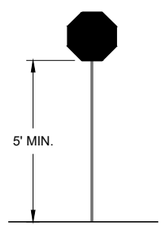

STOP/SLOW PADDLE ON SUPPORT STAFF

SIGN AND TEMPORARY RUMBLE STRIP ARRAY SPACING TABLE

SPEED LIMIT	SPACING "A"
25-30 MPH	200'
35-40 MPH	350'
45-55 MPH	500'

USE OF WO3-4 SIGN IS OPTIONAL. WHEN USED, THIS SIGN SHALL BE LOCATED BETWEEN THE W20-7A AND W20-4A SIGNS, USING SPACING "A".

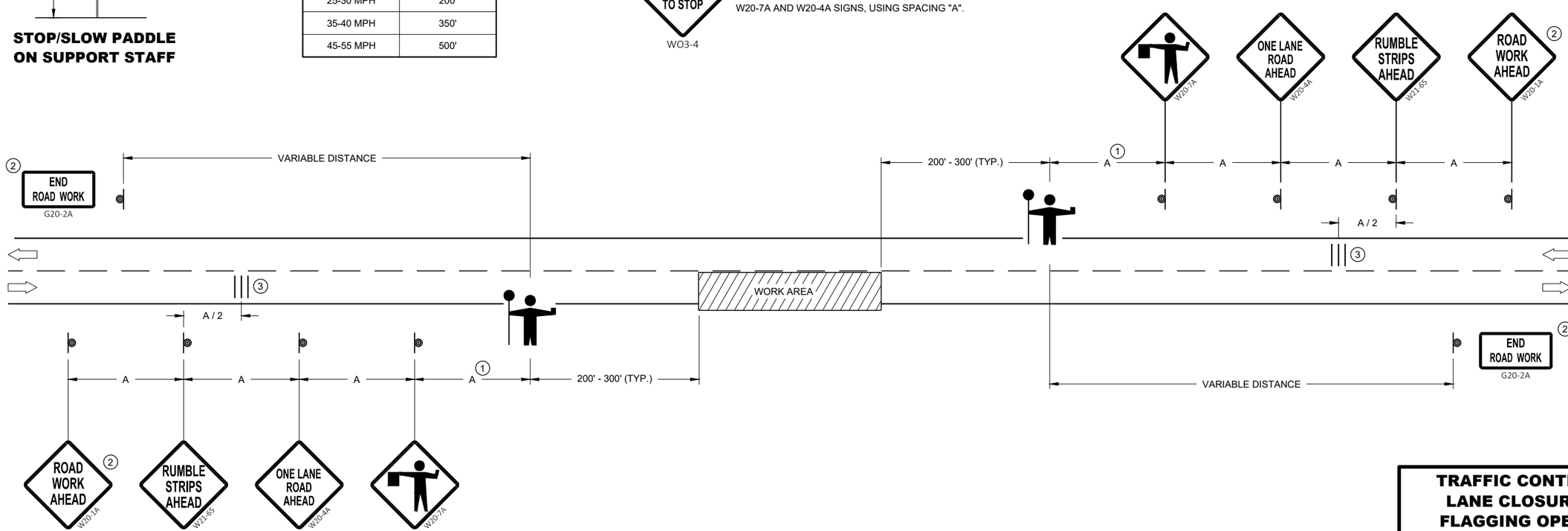

TRAFFIC CONTROL FOR LANE CLOSURE WITH FLAGGING OPERATION

STATE OF WISCONSIN
DEPARTMENT OF TRANSPORTATION

APPROVED
May 2022 — DATE
/S/ Andrew Heidtke — WORK ZONE ENGINEE
FHWA

6

SDD 15C12 - 09a

LEGEND

- SIGN ON PERMANENT SUPPORT
- TRAFFIC CONTROL DRUM
- DIRECTION OF TRAFFIC
- WORK ZONE

GENERAL NOTES

ALL SIGNS ARE 48"X48" UNLESS OTHERWISE NOTED. IF NECESSARY DUE TO SPACE CONSTRAINTS IN URBAN AREAS, 36" X 36" SIGNS MAY BE USED IF APPROVED BY THE REGIONAL TRAFFIC UNIT.

"WO" SIGN IS THE SAME AS "W" SIGN EXCEPT THE BACKGROUND IS ORANGE.

ANY SIGNS TEMPORARY OR EXISTING, WHICH CONFLICT WITH THE TRAFFIC CONTROL "IN USE" SHALL BE REMOVED OR COVERED AS NEEDED AND AS APPROVED BY THE ENGINEER.

THE EXACT NUMBER, LOCATION, AND SPACING OF ALL SIGNS AND DEVICES SHALL BE ADJUSTED TO FIT FIELD CONDITIONS AS APPROVED BY THE ENGINEER.

CHANNELIZING DEVICES PLACED ADJACENT TO WORK AREA SHALL BE PULLED BACK FROM THE TRAVEL LANE WHEN WORK IS NOT IN PROGRESS.

SIGNS THAT WILL BE IN PLACE LESS THAN 7 CONTINUOUS DAYS AND NIGHTS MAY BE MOUNTED ON PORTABLE SUPPORTS.

W20-1A AND G20-2A SIGNS ARE NOT REQUIRED IF THE WORK AREA IS WITHIN A LARGER WORK ZONE WHERE THESE SIGNS ARE ALREADY PRESENT. G20-2A SIGNS MAY ALSO BE OMITTED IF DURATION OF WORK IS LESS THAN 7 CONTINUOUS DAYS AND NIGHTS.

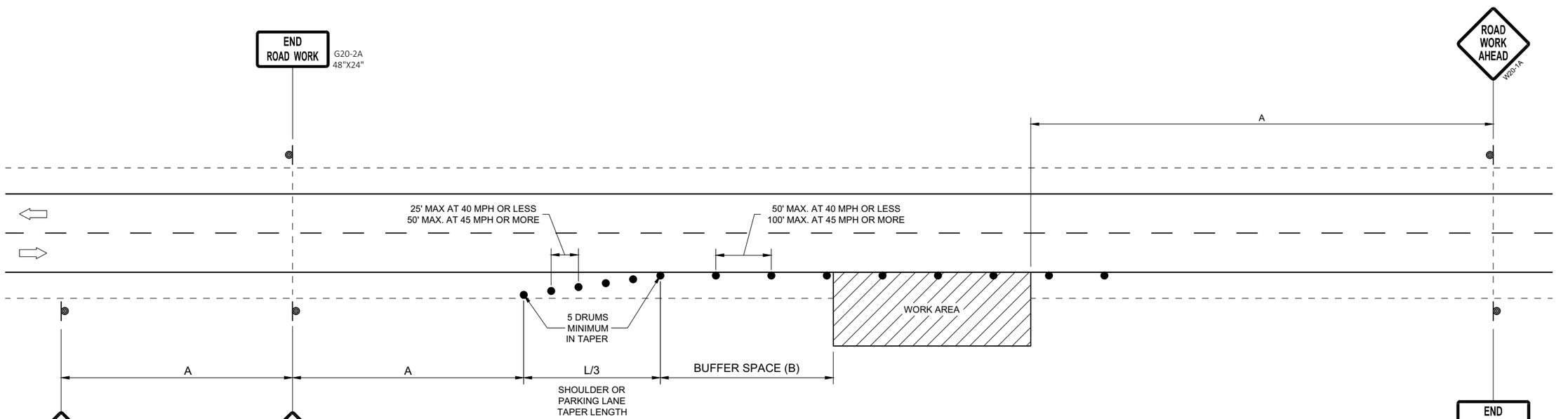

OR
IF TRAFFIC CONTROL DEVICES
ENCROACH ONTO TRAVELED WAY, USE

POSTED SPEED LIMIT PRIOR TO WORK STARTING (MPH)	ADVANCE WARNING SIGN SPACING (A) FEET	SHOULDER TAPER L / 3 W, LATERAL OFFSET (FT)						BUFFER SPACE (B) FEET
		3	4	5	6	7	8	
25	200'	10	14	17	21	24	28	55
30	200'	15	20	25	30	35	40	85
35	350'	20	27	34	40	47	54	120
40	350'	26	35	44	53	62	70	170
45	500'	45	59	74	89	104	119	220
50	500'	50	66	83	99	116	132	280
55	500'	54	73	91	109	127	145	335'

TRAFFIC CONTROL, WORK ON SHOULDER OR PARKING LANE, UNDIVIDED ROADWAY

STATE OF WISCONSIN
DEPARTMENT OF TRANSPORTATION

APPROVED
May 2020 — DATE
/S/ Andrew Heidtke — STATEWIDE WORK ZONE T SAFETY ENGINEER
FHWA

6

SDD 15D28 - 04

GENERAL NOTES

BARRICADE DEVICE SELECTED FROM APPROVED PRODUCT LIST

1. REFLECTIVE SHEETING SHALL FOLLOW THE REQUIREMENTS IN THE APPROVED PRODUCTS LISTING FOR SIGN SHEETING.
2. SHEETING REQUIRED ON MORE THAN 50% OF BARRICADE WIDTH.
3. PLACE SHEETING ON BOTH SIDES OF THE BARRICADE.

* USE THIS DETAIL FOR SHEETING PLACEMENT REFERENCE.

4. WHEN THE TEMPORARY PEDESTRIAN ACCESS ROUTE RUNS PARALLEL ON THE ROADWAY SURFACE, THE MAXIMUM CROSS SLOPE WILL MATCH THE EXISTING ROADWAY CROSS SLOPE.

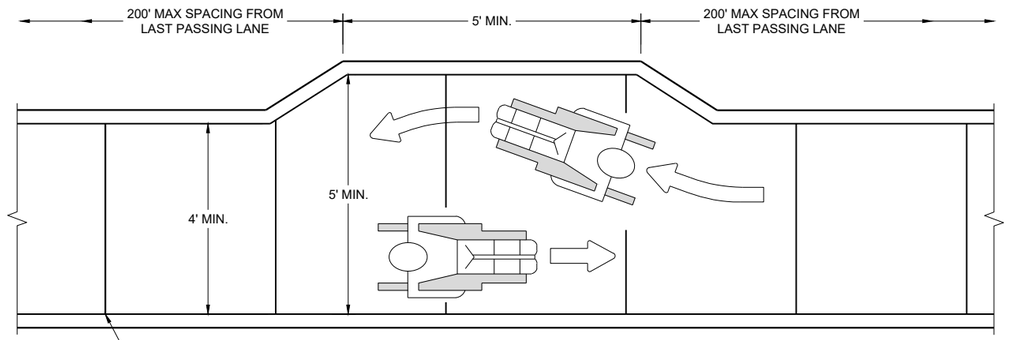

NARROW SIDEWALK PASSING DETAIL

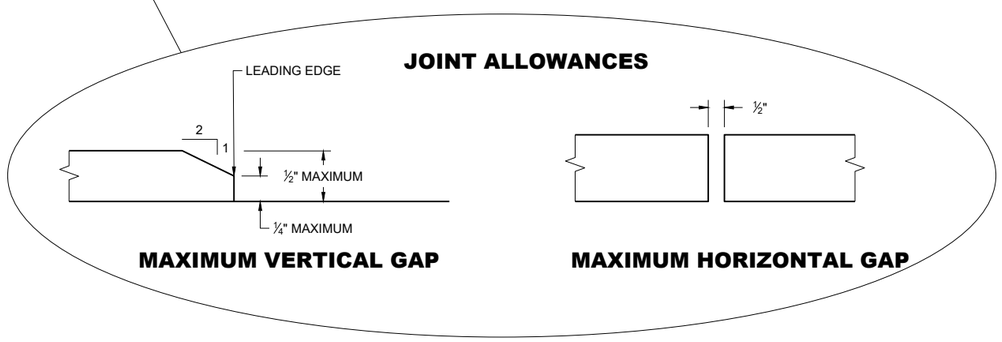

MAXIMUM VERTICAL GAP **MAXIMUM HORIZONTAL GAP**

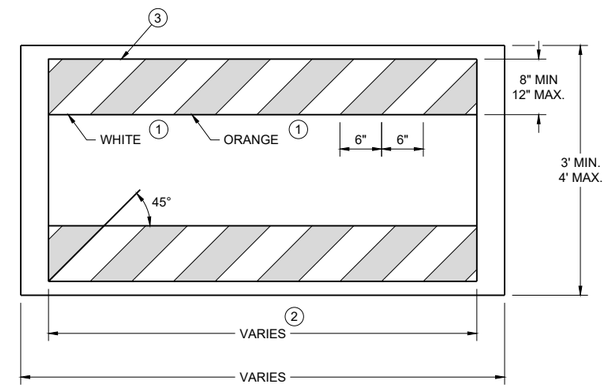

TEMPORARY PEDESTRIAN BARRICADE *

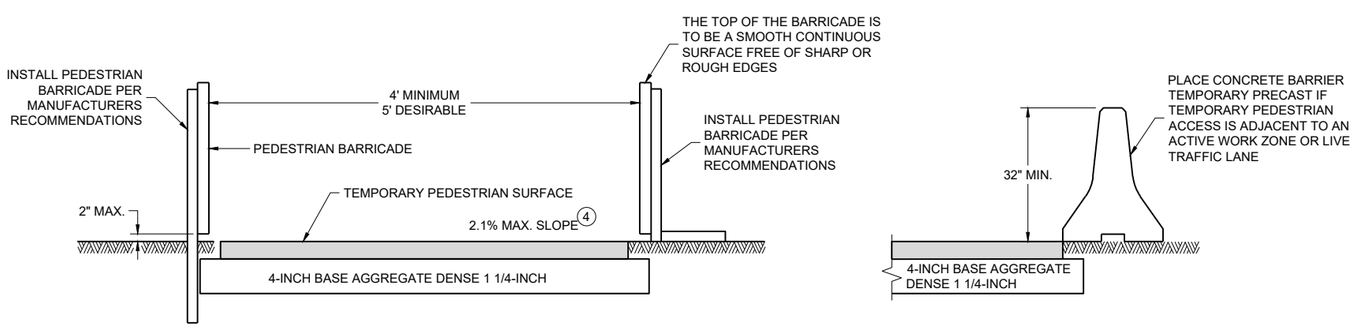

TEMPORARY PEDESTRIAN ACCESS

TRAFFIC CONTROL, PEDESTRIAN ACCOMMODATION

STATE OF WISCONSIN
DEPARTMENT OF TRANSPORTATION

6
SDD 15D30-11a

GENERAL NOTES

CURB RAMPS SHALL BE 48" MIN. WIDTH WITH A FIRM, STABLE AND SLIP RESISTANT SURFACE.

CURB RAMPS AND LANDINGS SHALL HAVE A 1:48 (2.1%) MAX. CROSS-SLOPE.

CLEAR SPACE OF 48" X 48" SHALL BE PROVIDED ABOVE AND BELOW THE CURB RAMP.
LATERAL JOINTS OR GAPS BETWEEN SURFACES SHALL BE LESS THAN ½" WIDTH.

CHANGES BETWEEN SURFACE HEIGHTS SHALL NOT EXCEED ½". LATERAL EDGES MAY BE VERTICAL UP TO ¼" HIGH AND SHALL BE BEVELED AT 1:2 BETWEEN ¼" AND ½".

1. INSTALL CONTRASTING TEMPORARY DETECTABLE WARNING FIELD AT PEDESTRIAN STREET CROSSINGS, AS SHOWN IN THE PLANS.
2. PROTECTIVE EDGING WITH A 2" MIN. HEIGHT SHALL BE INSTALLED WHEN A CURB RAMP OR LANDING PLATFORM HAS A VERTICAL DROP OF 6" OR GREATER OR HAS A SIDE APRON SLOPE STEEPER THAN 1:3 (33%). PROTECTIVE EDGING SHOULD BE CONSIDERED WHEN CURB RAMPS OR LANDING PLATFORMS HAVE A VERTICAL DROP OF 3" OR MORE.
3. DETECTABLE EDGING WITH 6" MIN. HEIGHT AND CONTRASTING COLOR SHALL BE INSTALLED ON ALL CURB RAMP LANDINGS WHERE THE WALKWAY CHANGES DIRECTION (TURNS).
4. DO NOT RESTRICT WATER FLOW IN THE GUTTER SYSTEM.
5. ENSURE CURB RAMP IS OUT OF THE GUTTER PAN.
6. IF ONLY PART OF THE END PANEL OF TEMPORARY PEDESTRIAN BARRICADE PANEL IS NEEDED, EXTEND EXCESS PORTION OF TEMPORARY PEDESTRIAN BARRICADE PANEL HERE.
7. LANDING TO BE SLOPED A MAXIMUM OF 2.1% IN ALL DIRECTIONS OF PEDESTRIAN TRAVEL.

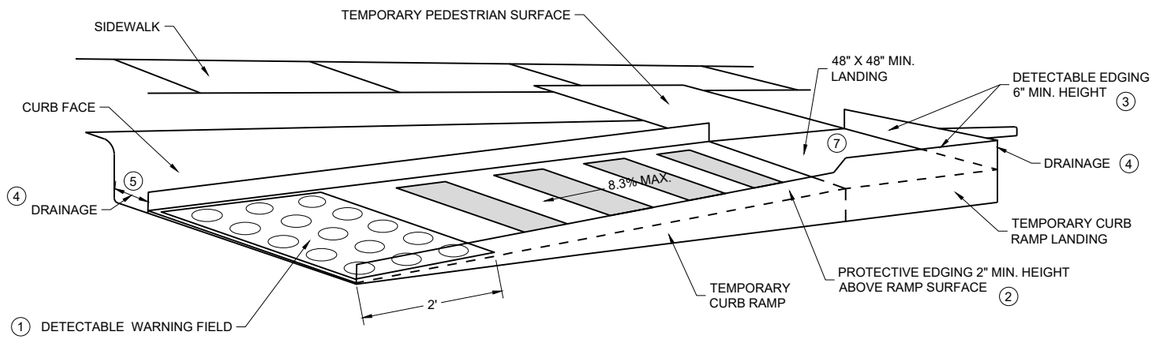

PERSPECTIVE VIEW

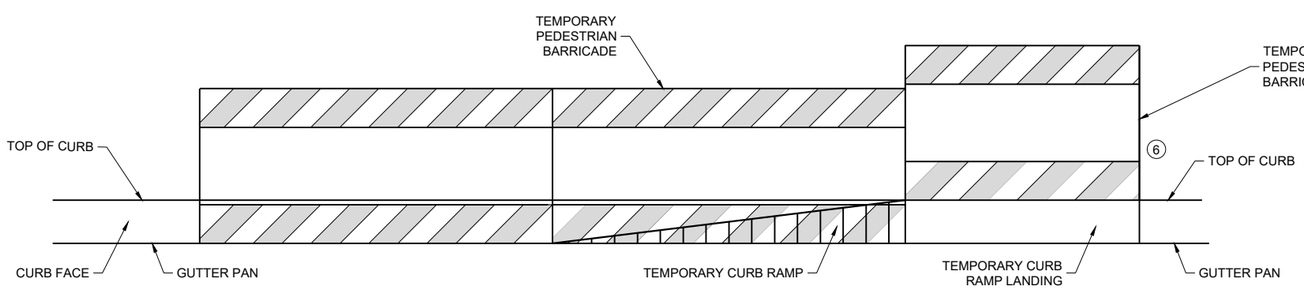

FRONT VIEW

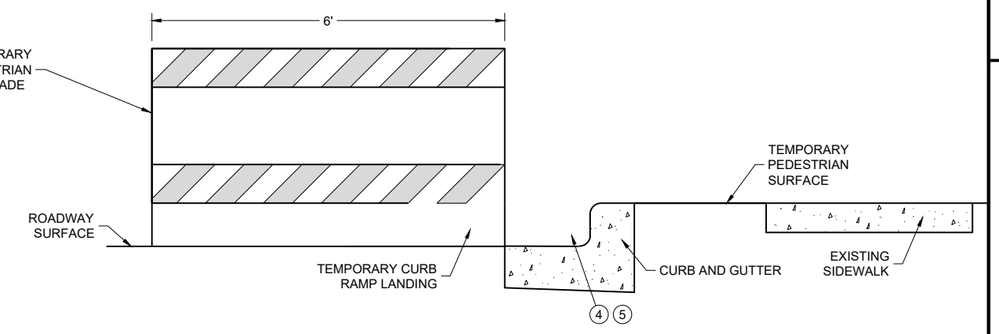

SIDE VIEW

TEMPORARY CURB RAMP PARALLEL TO CURB

6

6

SDD 15D30-11b

SDD 15D30-11b

TRAFFIC CONTROL, PEDESTRIAN ACCOMMODATION

STATE OF WISCONSIN
DEPARTMENT OF TRANSPORTATION

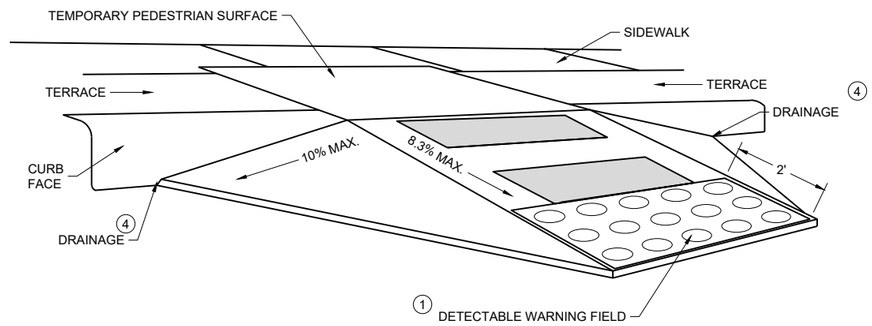

WITH SIDE APRON 5

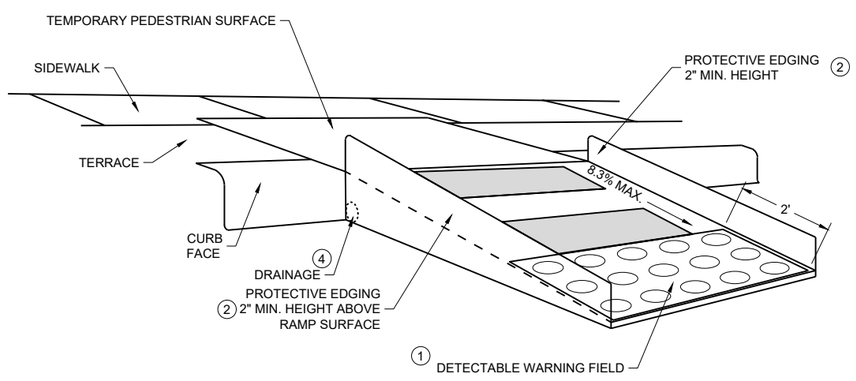

WITH PROTECTIVE EDGE

TEMPORARY CURB RAMP PERPENDICULAR TO CURB

GENERAL NOTES

CURB RAMPS SHALL BE 48" MINIMUM WIDTH WITH A FIRM, STABLE AND SLIP RESISTANT SURFACE.

ALTERNATE SIDEWALK WORK BETWEEN LEFT AND RIGHT SIDE OF ROADWAY TO MAINTAIN PEDESTRIAN ACCESS.

CURB RAMPS AND LANDINGS SHALL HAVE A 1:48 (2.1%) MAX. CROSS-SLOPE.

CLEAR SPACE OF 48" X 48" SHALL BE PROVIDED ABOVE AND BELOW THE CURB RAMP.

LATERAL JOINTS OR GAPS BETWEEN SURFACES SHALL BE LESS THAN ½" WIDTH.

CHANGES BETWEEN SURFACE HEIGHTS SHALL NOT EXCEED ½". LATERAL EDGES MAY BE VERTICAL UP TO ¼" HIGH AND SHALL BE BEVELED AT 1:2 BETWEEN ¼" AND ½".

1. INSTALL CONTRASTING TEMPORARY DETECTABLE WARNING FIELD AT PEDESTRIAN STREET CROSSINGS, AS SHOWN IN THE PLANS
2. PROTECTIVE EDGING WITH A 2" MIN. HEIGHT SHALL BE INSTALLED WHEN A CURB RAMP OR LANDING PLATFORM HAS A VERTICAL DROP OF 6" OR GREATER OR HAS A SIDE APRON SLOPE STEEPER THAN 1:3 (33%). PROTECTIVE EDGING SHOULD BE CONSIDERED WHEN CURB RAMPS OR LANDING PLATFORMS HAVE A VERTICAL DROP OF 3" OR MORE.
3. DETECTABLE EDGING WITH 6" MIN. HEIGHT AND CONTRASTING COLOR SHALL BE INSTALLED ON ALL CURB RAMP LANDINGS WHERE THE WALKWAY CHANGES DIRECTION (TURNS).
4. DO NOT RESTRICT WATER FLOW IN THE GUTTER SYSTEM.
5. CAN ONLY BE USED FOR RAMPS WITH 6" OR LESS OF VERTICAL CHANGE.

6

SDD 15D30-11c

TRAFFIC CONTROL, PEDESTRIAN ACCOMMODATION

STATE OF WISCONSIN
DEPARTMENT OF TRANSPORTATION

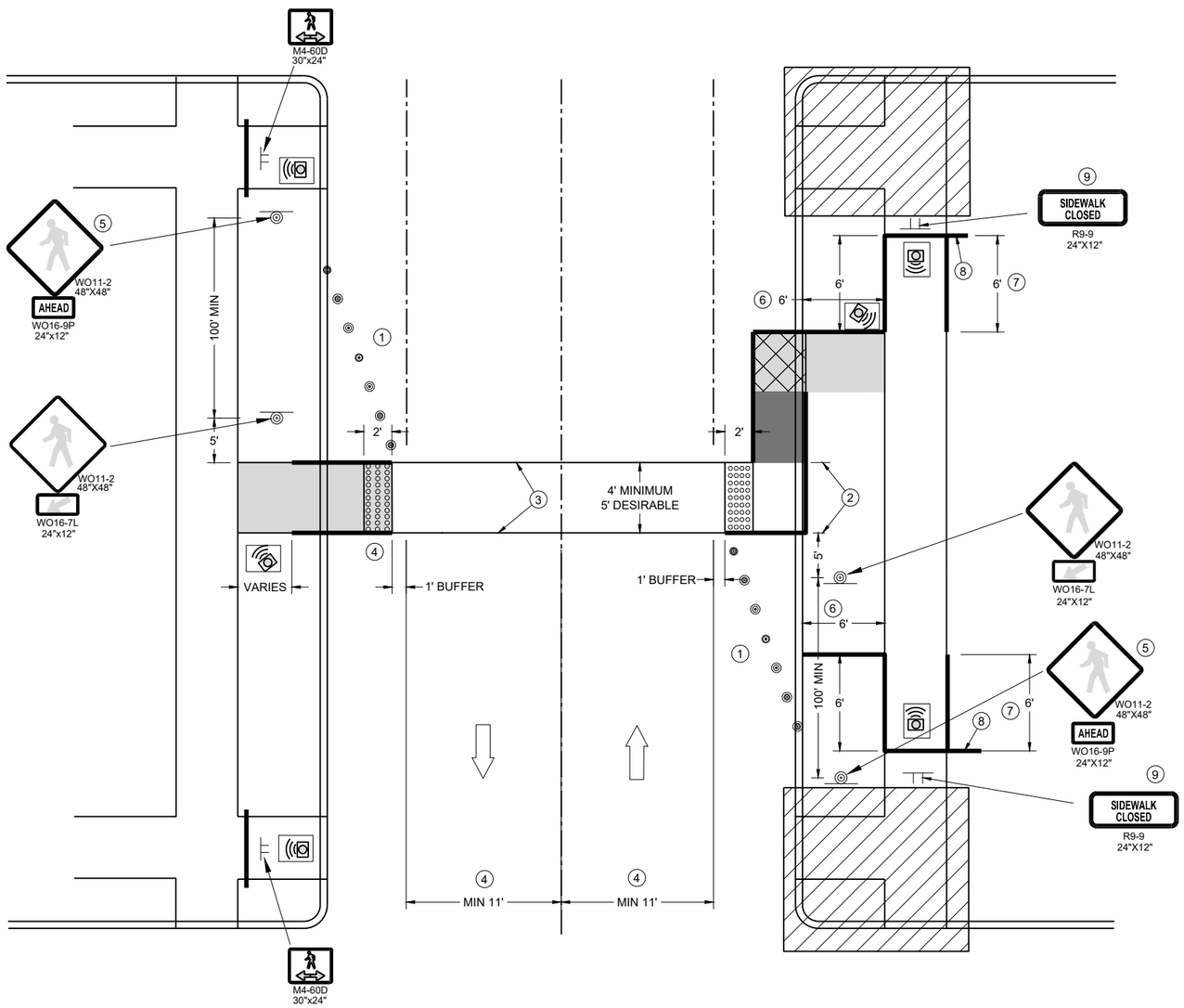

TEMPORARY PEDESTRIAN CROSSING

GENERAL NOTES

TYPICAL TEMPORARY PEDESTRIAN BARRICADE PANEL IS 6 FEET LONG.

SEE OTHER PEDESTRIAN ACCOMMODATION DETAILS FOR SIGNING AND DEVICES FOR DIFFERENT PEDESTRIAN FACILITIES CLOSURES.

WHEN THE TEMPORARY PEDESTRIAN ACCESS ROUTE RUNS PARALLEL ON THE ROADWAY SURFACE, THE MAXIMUM CROSS SLOPE WILL MATCH THE EXISTING ROADWAY CROSS SLOPE.

1. SHOULDER OR LANE CLOSURE ADVANCED WARNING AND PROPER BUFFER SPACE REQUIRED.
2. 4 FEET MINIMUM, 5 FEET DESIRABLE.
3. WHITE 6" TEMPORARY PAVEMENT MARKING.
4. IF MINIMUM LANE WIDTHS CAN'T BE ATTAINED, PERPENDICULAR CURB RAMPS MAY NEED TO BE UTILIZED.
5. IF MINIMUM 100' SPACING FROM THE MID-BLOCK CROSSING CANNOT BE ATTAINED BEFORE THE INTERSECTION, REMOVE THIS SIGN ASSEMBLY.
6. IF TERRACE IS LESS THAN 6 FEET WIDE, OMIT TEMPORARY PEDESTRIAN BARRICADE FROM THE SIDEWALK TO THE CURB.
7. PLACE BARRICADE CLOSURE SO THAT THE TEMPORARY PEDESTRIAN BARRICADE END IS AT THE LAST OPEN SIDEWALK ACCESS TO RESIDENCES OR BUSINESSES BEFORE THE SIDEWALK CLOSURE.
8. IF TEMPORARY PEDESTRIAN BARRICADE PANEL IS WIDER THAN THE SIDEWALK WIDTH, THE PORTION OF THE EXCESS PANEL SHOULD EXTEND INTO THE TERRACE.
9. MOUNTING HEIGHT OF 5 FEET FROM THE SURFACE TO THE BOTTOM OF THE SIGN.

LEGEND

- TRAFFIC CONTROL DRUM
- SIGN ON TEMPORARY SUPPORT
- TEMPORARY CURB RAMP
- TEMPORARY DETECTABLE WARNING FIELD
- TEMPORARY PEDESTRIAN SURFACE "A"
- TEMPORARY PEDESTRIAN SURFACE "B"
- WORK AREA
- TEMPORARY PEDESTRIAN BARRICADE
- DIRECTION OF TRAFFIC
- TEMPORARY AUDIBLE MESSAGE DEVICE (EXACT PLACEMENT BASED UPON FIELD CONDITIONS)

TRAFFIC CONTROL, PEDESTRIAN ACCOMMODATION

STATE OF WISCONSIN
DEPARTMENT OF TRANSPORTATION

6
SDD 15D30-11I

GENERAL NOTES

DRAWING NOT TO SCALE. ALL SIGNS AND POSTS ON THIS SHEET SHALL BE PAID FOR WITH 'TRAFFIC CONTROL SIGNS' BID ITEM. ALL SIDE ROADS WHICH ARE UNDER CONSTRUCTION OF CURB AND GUTTER AND/OR GRADING SHALL BE ADEQUATELY SIGNED.

ALL SIGNS AND DEVICES SHALL BE IN CONFORMANCE WITH THE WISCONSIN MANUAL OF UNIFORM TRAFFIC CONTROL DEVICES (WMUTCD). SIGN LAYOUTS SHALL BE IN ACCORDANCE WITH THE WISDOT STANDARD SIGN PLATES.

"WO" SIGNS ARE THE SAME AS "W" SIGNS EXCEPT THAT THE BACKGROUND IS ORANGE.

ALL SIGNS ARE 48" X 48" UNLESS OTHERWISE NOTED.

THE EXACT NUMBER, LOCATION AND SPACING OF ALL SIGNS AND DEVICES SHALL BE ADJUSTED TO FIT FIELD CONDITIONS AS DIRECTED BY THE ENGINEER.

ALL SIGNS INAPPROPRIATE TO THE STATUS OF THE CONTROL ZONE, INCLUDING PRE-EXISTING SIGNS IN THE VICINITY, SHALL BE COVERED OR REMOVED AS DIRECTED BY THE ENGINEER.

SEE 15C34 FOR ADDITIONAL TRAFFIC CONTROL SIGNING WHEN CENTERLINE PAVEMENT MAKINGS ARE MISSING. 'DO NOT PASS' SIGNS MUST BE INSTALLED ON THE SAME DAY AS MILLING OPERATIONS.

1. PLACE SIGNS 350' IN ADVANCE OF CHIP SEALED OR LOOSE GRAVEL SURFACES AND AT 1 MILE INTERVALS, OR AS DIRECTED BY THE ENGINEER.
2. PLACE SIGN 200' MIN. FROM INTERSECTION AND 200' MIN. AFTER ADVANCE WARNING SIGN SHOWN IN SDD 15C04.
3. ADD WO8-1 OR WO8-2 SIGN WHEN THE CONDITION IS PRESENT.

LEGEND

SIGN ON TEMPORARY SUPPORT

DIRECTION OF TRAFFIC

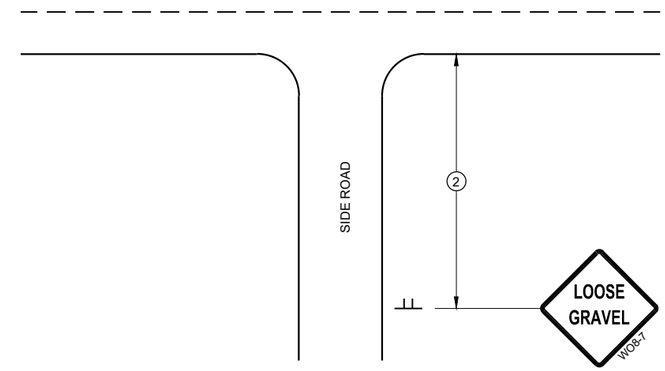

TYPICAL SIDE ROAD APPROACH SIGN DETAIL

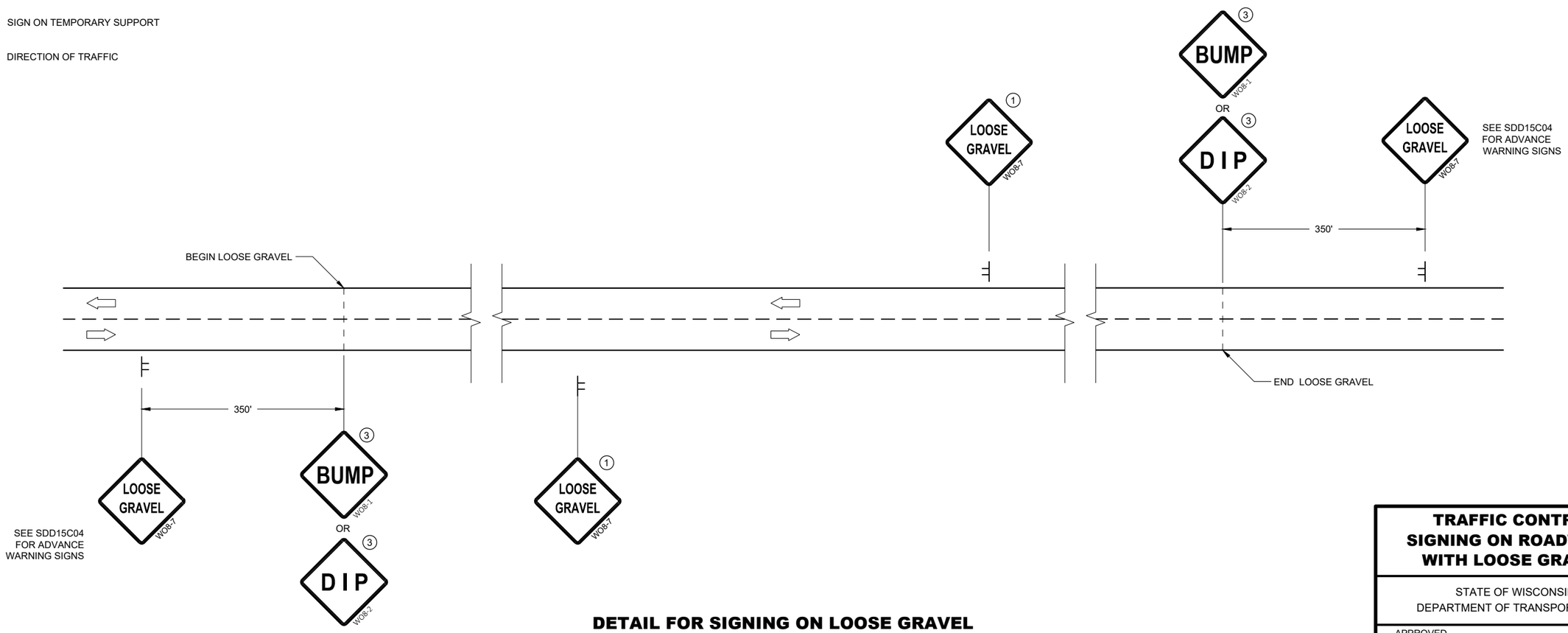

DETAIL FOR SIGNING ON LOOSE GRAVEL OR CHIP SEALED SURFACES

TRAFFIC CONTROL SIGNING ON ROADWAYS WITH LOOSE GRAVEL

STATE OF WISCONSIN
DEPARTMENT OF TRANSPORTATION

APPROVED
February 2021 — DATE
/S/ Andrew Heidtke — WORK ZONE ENGINEE
FHWA

6
SDD 15D45 - 03

URBAN AREA

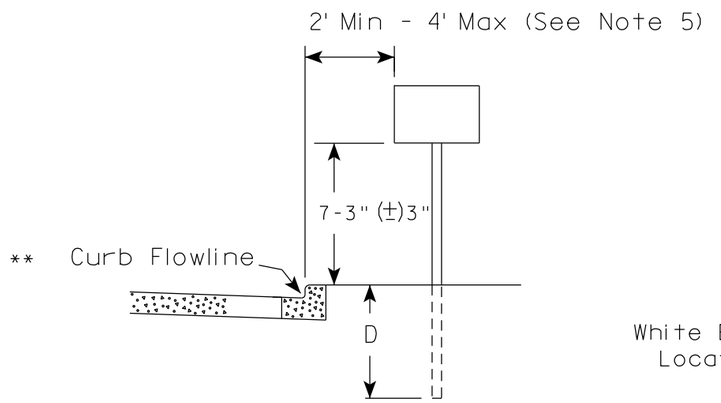

RURAL AREA (See Note 2)

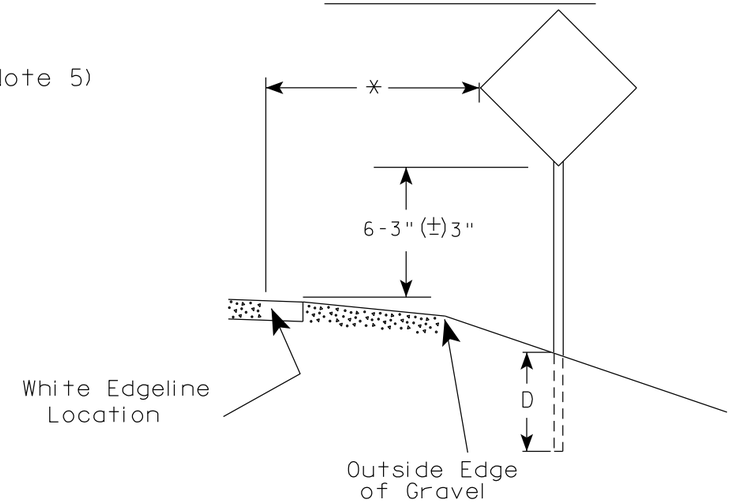

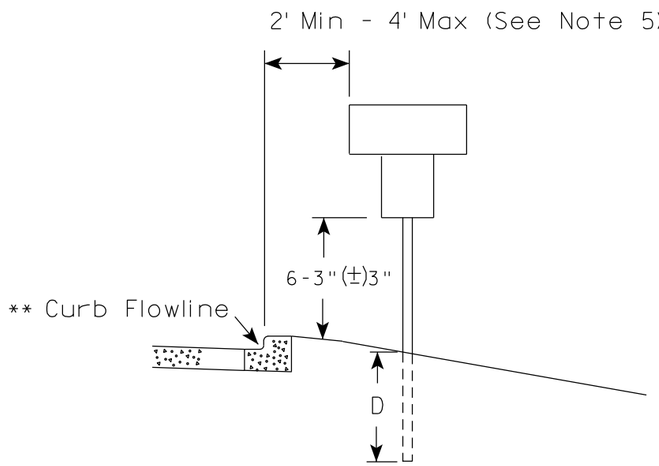

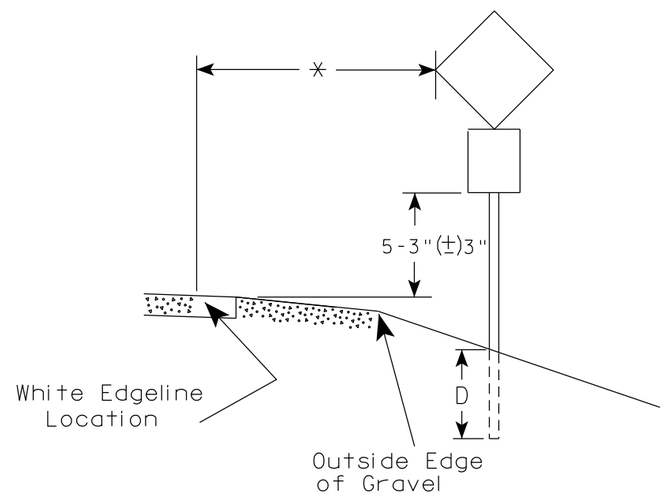

** The existence of curb and gutter does not in itself mandate the vertical clearance illustrated. That height is typically measured where there is sidewalk adjacent to the roadway or parking is permitted. In the absence of sidewalk vertical clearance is measured from the top of the curb. Offset of signs is measured from the flow line.

* 6 feet from edge of a paved shoulder or 12 feet from the edge of pavement (edge line location) or 2 feet from outside edge of gravel, whichever is greater unless directed by project engineer.

GENERAL NOTES

1. Signs wider than 4 feet or 20 sq.ft or larger, shall be mounted on multiple posts. Refer to plate A4-4.
2. If signs are mounted on or behind barrier wall, see A4-10 sign plate.
   The Double Arrow sign (W12-1D) shall be mounted at a height of 2'-3" (±) 3". The Chevron sign (W1-8), Roundabout Chevron panel (R6-4B), Enhanced Reference Markers, Clearance Markers (W5-52), Mile Markers (D10 series), In Road Object Markers (W5-54) & End of Road Markers (W5-56) shall be mounted at a height of 4'-3" (±) 3".
3. For expressways and freeways, mounting height is 7'- 3" (±) 3" or 6'-3" (±) 3" depending upon existence of a sub-sign.
4. Minimum mounting height for signs mounted on traffic signal poles is 5'- 3" (±) 3".
5. Offset distance shall be consistent with existing signs or consistent throughout length of project.
6. Folding signs shall be mounted at a height of 5'-3" (±) 3" or as directd by the Engineer.

POST EMBEDMENT DEPTH

Area of Sign Installation (Sq. Ft.)	D (Min)
20 or Less	4'
Greater than 20	5'

TYPICAL INSTALLATION OF PERMANENT TYPE II SIGNS ON SINGLE POSTS

WISCONSIN DEPT OF TRANSPORTATION

APPROVED Matthew R Rauch
for State Traffic Engineer

DATE 12/6/23 PLATE NO. A4-3.23

7 7

PROJECT NO:	HWY:	COUNTY:		SHEET NO: 100	E

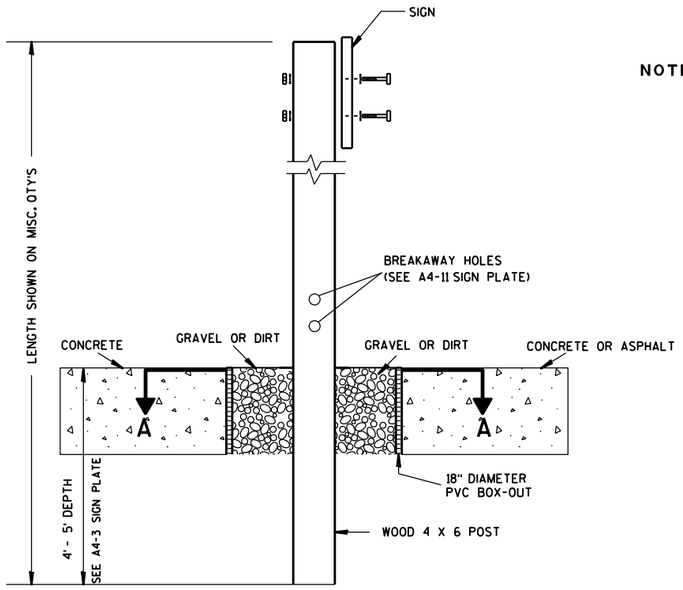

ELEVATION VIEW

DETAIL OF WOOD 4 X 6 SIGN POST IN BOX-OUT

NOTES:
1. ALL MATERIAL TO BE APPROVED BY ENGINEER PRIOR TO INSTALLATION
2. SEE SIGN PLATE A4-8 FOR SIGN HARDWARE REQUIREMENTS
3. 18 INCH X 18 INCH SQUARE BOX-OUTS MAY BE USED FOR INSTALLATIONS IN EXISTING CONCRETE OR ASPHALT LOCATIONS.

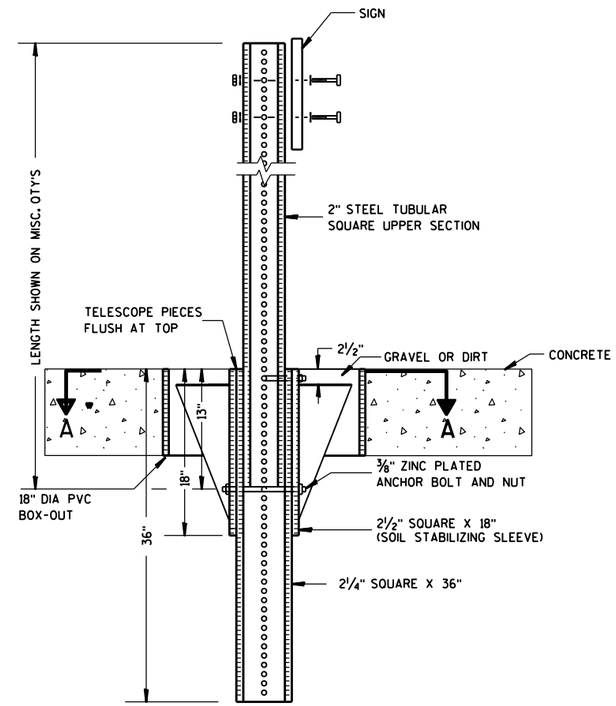

ELEVATION VIEW

DETAIL OF STEEL 2 X 2 SIGN POST IN BOX-OUT

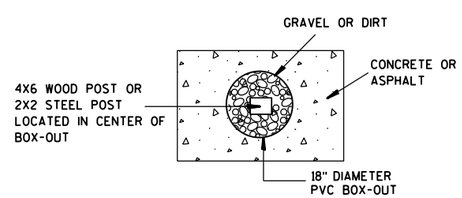

PLAN VIEW

FOR NEW CONCRETE/ASPHALT INSTALLATIONS

SIGN POST
BOX-OUTS
A4-3B

WISCONSIN DEPT OF TRANSPORTATION

APPROVED Matthew R Rauch
for State Traffic Engineer

DATE 1/27/14 PLATE NO. A4-3B.1

PROJECT NO:	HWY:	COUNTY:		SHEET NO:	E

URBAN AREA

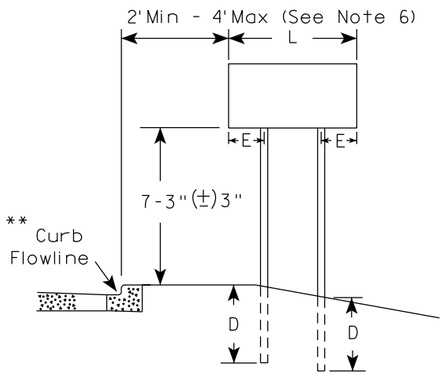

RURAL AREA (See Note 3)

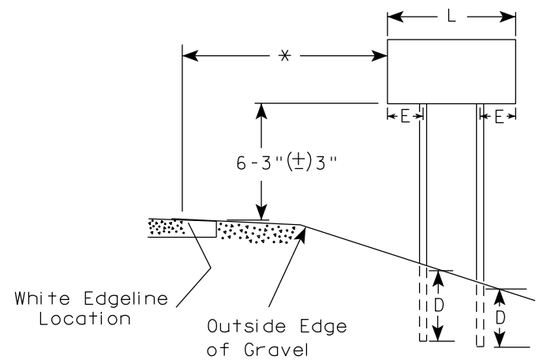

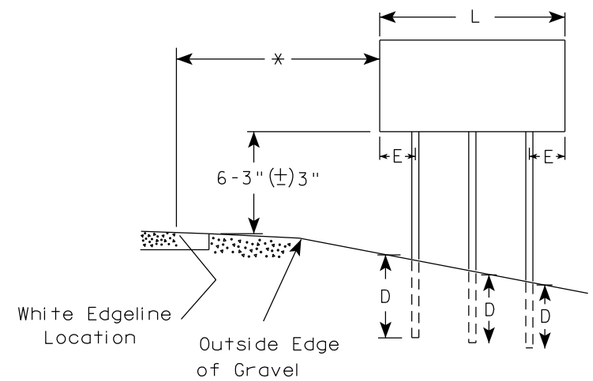

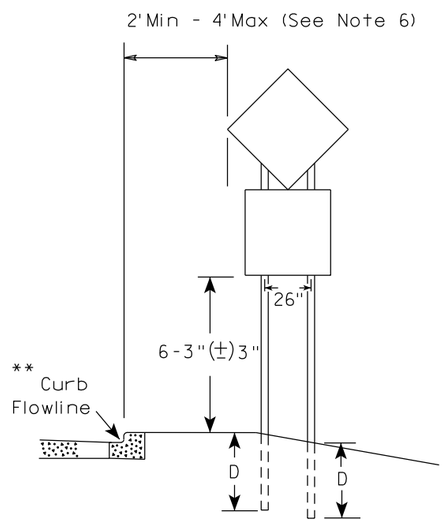

48" DIAMOND WARNING SIGN

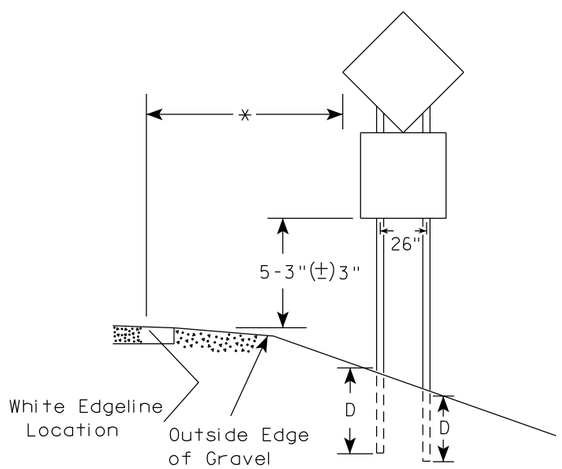

48" DIAMOND WARNING SIGN

GENERAL NOTES

1. For 3 or 4 post installations, individual post spacing shall be greater than 3'-6".
2. See tables below for required number of posts.
3. For expressways and freeways, mounting height is 7'-3" (±) 3" or 6'-3" (±) 3" depending upon existence of sub-sign.
4. The (±) tolerance for mounting height is 3 inches.
5. J-Assemblies are considered to be one sign for mounting height.
6. Offset distance shall be consistent with existing signs or consistent throughout length of project.
7. Folding signs shall be mounted at a height of 5'-3" (±) 3" or as directed by the engineer.
8. The Double Arrow sign (W12-1) shall be mounted at a height of 2'-3" (±) 3". The Chevron sign (W1-8), Roundabout Chevron panel (R6-4B), Clearance Markers (W5-52), Mile Markers (D10 series), In Road Object Markers (W5-54) & End of Road Markers (W5-56) shall be mounted at a height of 4"-3" (±) 3".

* 6 feet from edge of a paved shoulder or 12 feet from the edge of pavement (edge line location) or 2 feet from outside edge of gravel, whichever is greater unless directed by project engineer.

** The existence of curb and gutter does not in itself mandate the vertical clearance illustrated. That height is typically measured where there is sidewalk adjacent to the roadway or parking is permitted. In the absence of sidewalk vertical clearance is measured from the top of the curb. Offset of signs is measured from the flow line.

*** See A4-3 sign plate for signs 4' or less in width and less than 20 S.F. in area.

SIGN SHAPE OTHER THAN DIAMOND (TWO POSTS REQUIRED)	
L	E
*** Greater than 48" Less than 60"	12"
60" to 108"	L/5

SIGN SHAPE OTHER THAN DIAMOND (THREE POSTS REQUIRED)	
L	E
Greater than 108" to 144"	12"

POST EMBEDMENT DEPTH

Area of Sign Installation (Sq. Ft.)	D (Min)
20 or Less	4'
Greater than 20	5'

TYPICAL INSTALLATION OF TYPE II SIGNS ON MULTIPLE POSTS

WISCONSIN DEPT OF TRANSPORTATION

APPROVED Matthew R Rauch
for State Traffic Engineer

DATE 12/6/23 PLATE NO. A4-4.16

PROJECT NO:	HWY:	COUNTY:		SHEET NO: 102	E

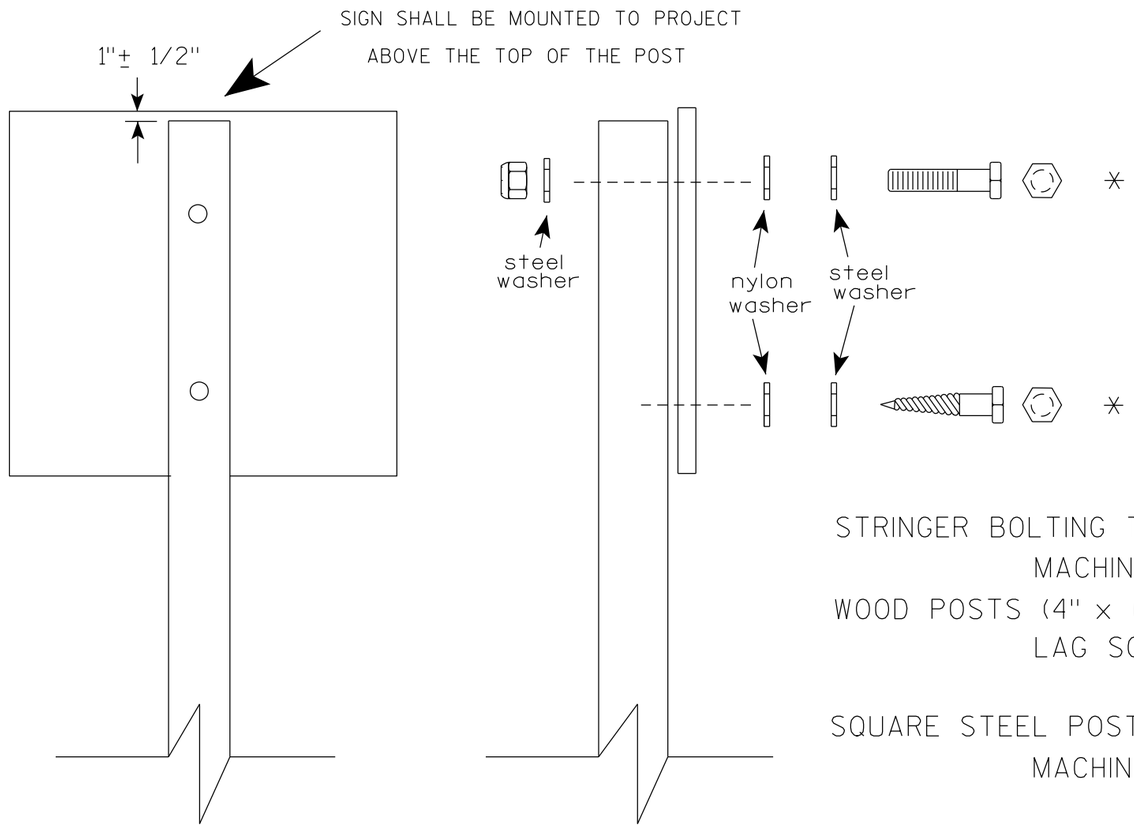

Nuts, bolts and lags used for mounting signs shall have hexagonal heads and shall be either :

a. Hot dip galvanized in accordance with ASTM Designation: A 153, Class D, or SC 3

b. Electro-galvanized in accordance with ASTM Designation : B 633, TYPE III, SC 3.

Threads on bolts and nuts shall be manufactured with sufficient allowance for the cadmium plate or galvanized coating to permit the nuts to run freely on the bolts.

STRINGER BOLTING TO ALUMINUM SIGNS (SEE SIGN PLATE A4-18)

MACHINE BOLTS - 5/16" X 1-3/4" Length w/ lock nuts

WOOD POSTS (4" x 6")

LAG SCREWS - 3/8" X 3" (NO STRINGERS ON BACK OF SIGN)
3/8" X 4" (STRINGERS ON BACK OF SIGN)

SQUARE STEEL POSTS (2" x 2")

MACHINE BOLTS - 3/8" X 3-1/4" Length w/ nuts (NO STRINGER ON BACK OF SIGN)
3/8" X 5" Length w/ nuts (STRINGERS ON BACK OF SIGN)

RIVETS - 9/32 " (6605-9-6) BULB-TITE, TRI-FOLD, ALUMINUM BODY/MANDREL
O.D. FLANGE .720-.765 INCH, GRIP RANGE .042-.375 INCH

WASHERS (ALL POSTS) -

1-1/4" O.D. X 3/8" I.D. X 1/16" STEEL
1-1/4" O.D. X 3/8" I.D. X .080 NYLON

* Two different fastening systems are shown for illustration purposes. On any individual sign, either one or the other system shall be used. Actual number of fasteners per sign varies with the sign area, but normally there are two. For a single post installation, all signs greater than 9 sq. ft. require the use of 3 fasteners.

ATTACHMENT OF SIGNS TO POSTS

WISCONSIN DEPT OF TRANSPORTATION

APPROVED Matthew R Rauch
for State Traffic Engineer

DATE 4/1/2020 PLATE NO. A4-8.9

TELESCOPIC TUBING ANCHORS
TWO PIECE SYSTEM

2 1/4" SQUARE
12 GAUGE
PERFORATED
GALVANIZED FINISH

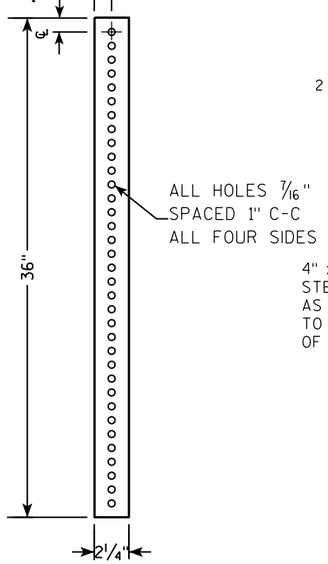

2 1/2" SQUARE
12 GAUGE
OMNI-DIRECTIONAL
PERFORATED
SOIL STABILIZING SLEEVE
GALVANIZED FINISH

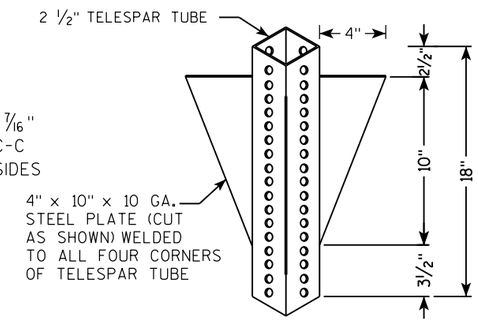

DETAIL OF TUBULAR STEEL SIGN POST
(IN POURED CONCRETE OR ASPHALT)

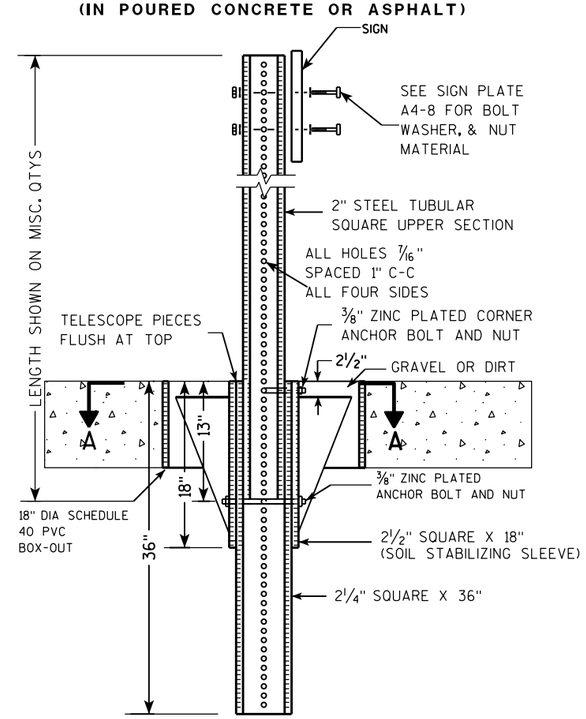

DETAIL OF TUBULAR STEEL SIGN POST
(IN LOCATIONS OTHER THAN POURED CONCRETE OR ASPHALT)

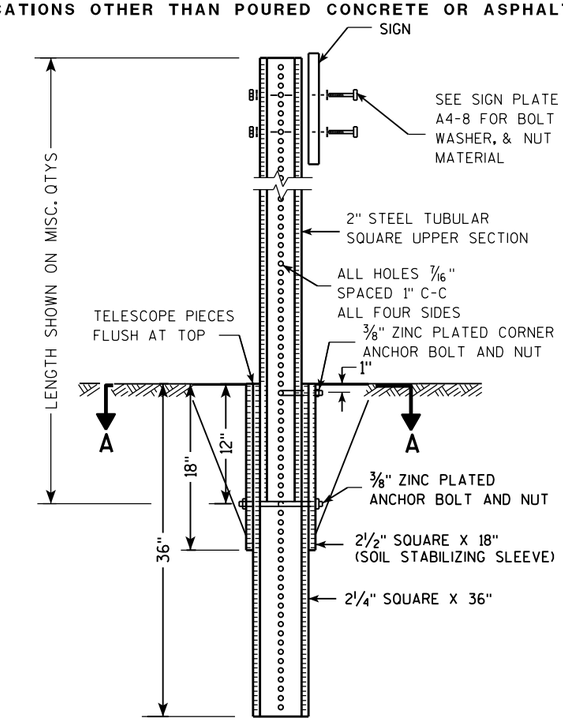

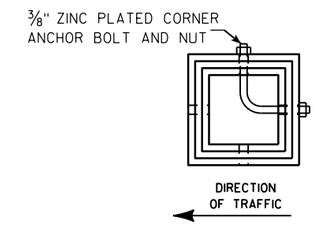

SECTION A-A

Area of Sign Installation (Sq. Ft.)	Number of Required Posts
9 or less	1
Greater than 9 less than or equal to 18	2
Greater than 18 less than or equal to 27	3

Signs wider than 3 feet or larger than 9 sq. ft shall be mounted on multiple posts (see above table).

TUBULAR STEEL
SIGN POST
A4-9

WISCONSIN DEPT OF TRANSPORTATION

APPROVED Matthew R Rauch
for State Traffic Engineer

DATE 2/05/15 PLATE A4-9.9

PROJECT NO:	HWY:	COUNTY:		SHEET NO:	E

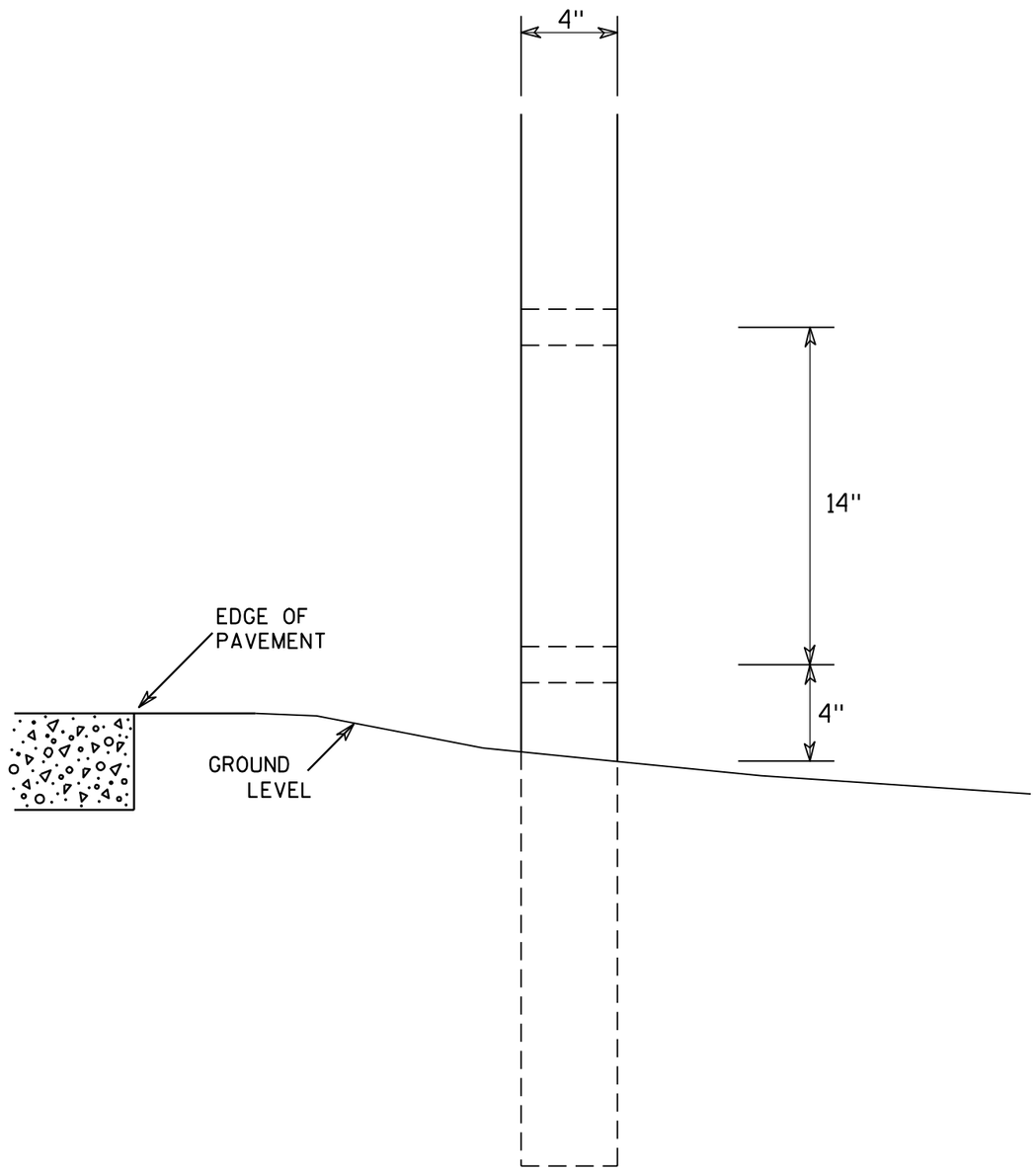

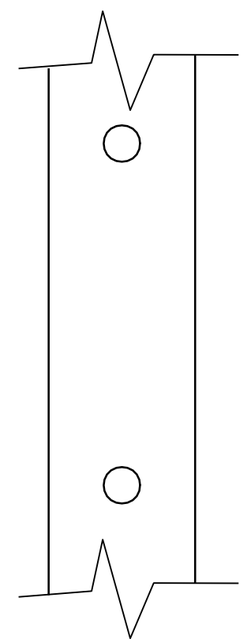

SIDE VIEW

GENERAL NOTES

1. All 4 x 6 Wood Posts shall be modified by having two 1½" diameter holes drilled perpendicular to the roadway centerline.

4 X 6 WOOD POST MODIFICATIONS

WISCONSIN DEPT OF TRANSPORTATION

APPROVED Chester J Spang for State Traffic Engineer

DATE 3/27/97 PLATE NO. A4-11.2

PROJECT NO:	HWY:	COUNTY:		SHEET NO: 105	E

BANDING

SINGLE SIGN

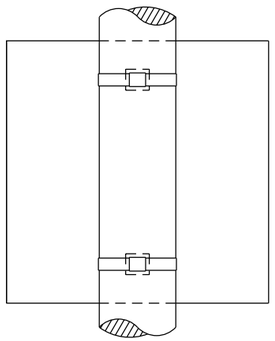

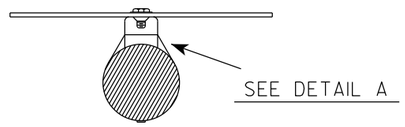

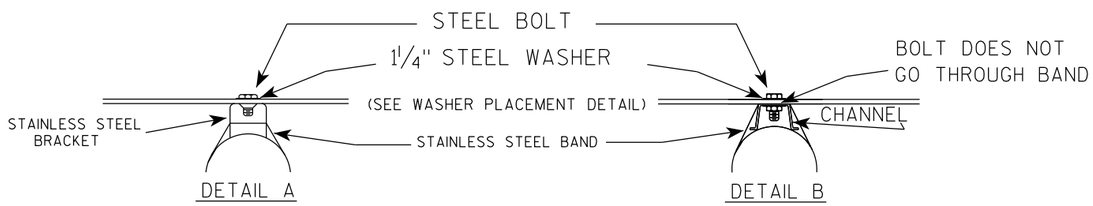

WASHER PLACEMENT

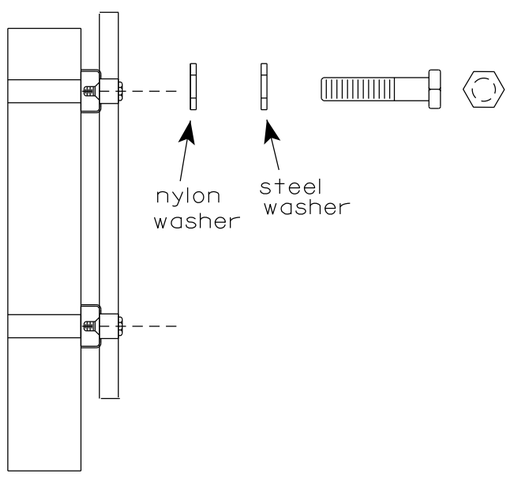

WASHERS (ALL POSTS) -
1-1/4" O.D. X 3/8" I.D. X 1/16" STEEL
1-1/4" O.D. X 3/8" I.D. X .080 NYLON
FOR ALL TYPE H SIGNS

GENERAL NOTES

1. Any sign over 3 feet in width shall use the V-Block banding method. See A5-10 standard plate.
2. Signs 3 feet or greater in height shall have three bracket bands installed. Signs less than 3 feet in height shall have two bracket bands installed.
3. Banding and assembly bracket shall be stainless steel. All bands shall be 3/4" in width and 0.025" thickness.
4. ALL SIGN MOUNTING BOLTS AND WASHERS SHALL BE EITHER:
   a. Hot dip or mechanically galvanized in accordance with ASTM Designation: A 153, Class D
   b. Electro-galvanized in accordance with ASTM designation: B 633, Type III, SC 3

"J" ASSEMBLY

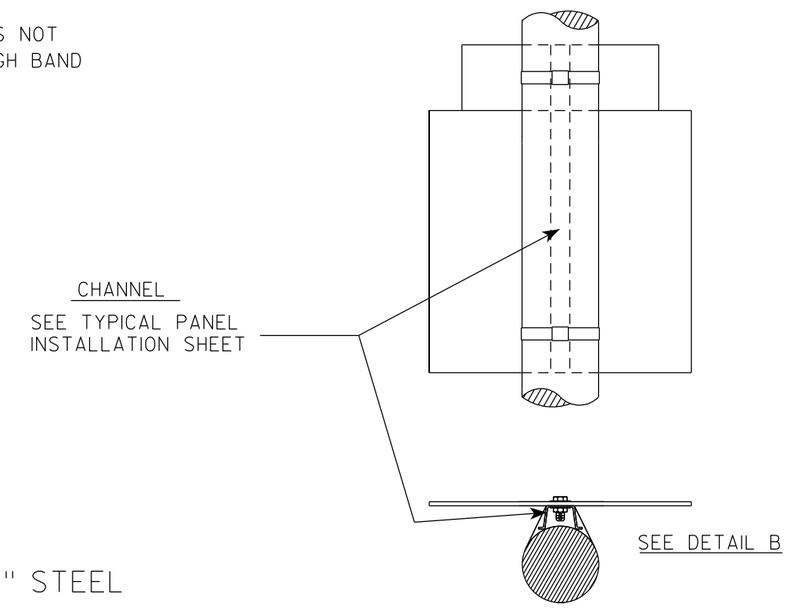

STANDARD SIGN
SIGN BANDING DETAILS

WISCONSIN DEPT OF TRANSPORTATION

APPROVED Matthew R Rauch for State Traffic Engineer

DATE 6/10/19 PLATE NO. A5-9.4

PROJECT NO:	HWY:	COUNTY:		SHEET NO: 106	E

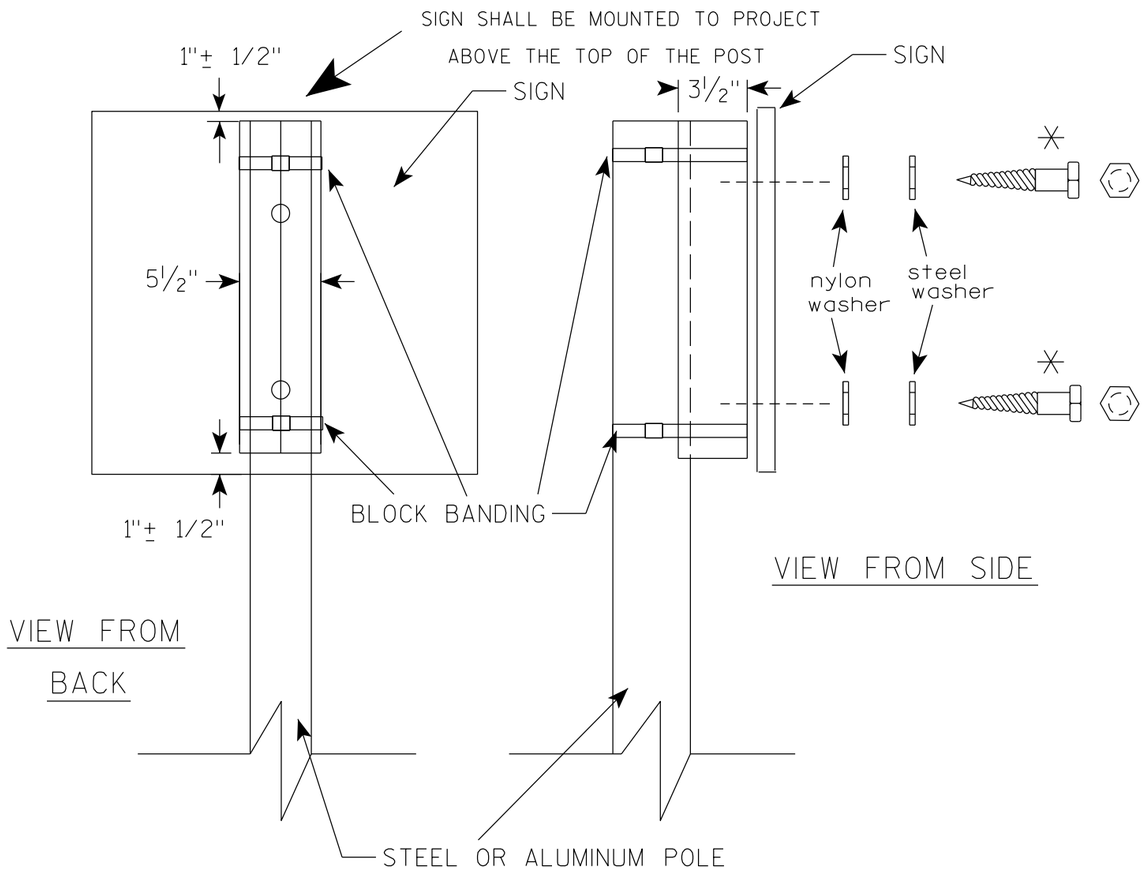

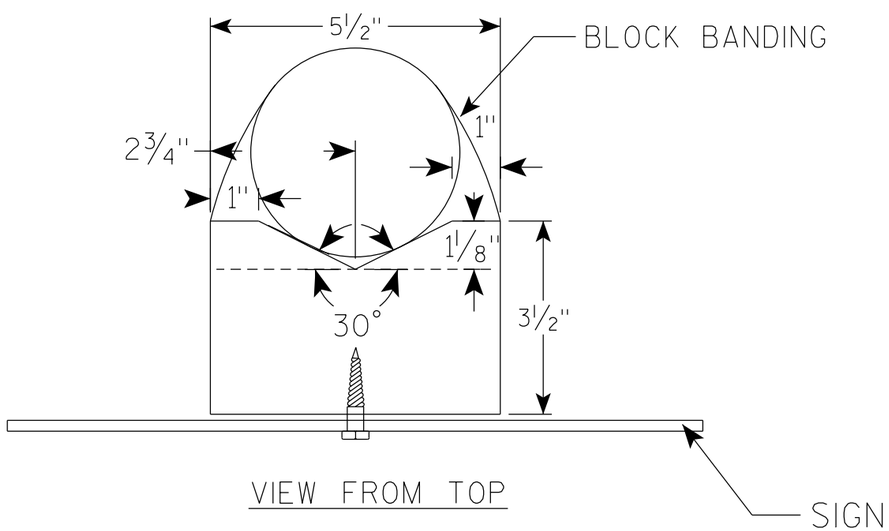

GENERAL NOTES

1. WOOD 4"X6" POST MATERIAL SHALL CONFORM TO 507.2.2 OF THE WisDOT STANDARD SPECIFICATIONS
2. BLOCK BANDING AND CLIPS SHALL BE STAINLESS STEEL, 3/4" WIDTH AND 0.025" THICKNESS
3. SIGNS 3' OR GREATER IN HEIGHT SHALL UTILIZE 3 BLOCK BANDS. SIGNS UNDER 3' IN HEIGHT SHALL UTILIZE 2 BLOCK BANDS
4. ACTUAL NUMBER OF FASTENERS PER SIGN VARIES WITH THE SIGN AREA, BUT NORNALLY THERE ARE TWO. FOR SIGNS GREATER THAN 9 S.F. 3 FASTENERS SHALL BE USED.
5. ALL SIGN MOUNTING BOLTS AND WASHERS SHALL BE EITHER:
   a. Hot dip or mechanically galvanized in accordance with ASTM Designation: A 153, Class D
   b. Electro-galvanized in accordance with ASTM Designation : B 633, TYPE III, SC 3
6. ALL BOLTS SHALL HAVE HEXAGONAL HEADS.
7. STEEL WASHERS SHALL BE 1 1/4" O.D. X 3/8" I.D. X 1/16"
8. NYLON WASHERS SHALL BE 1 1/4" O.D. X 3/8" I.D. X .080 FOR TYPE H OR TYPE F FACE SIGN

✳ LAG BOLTS SHALL BE 3/8" X 2 1/2"

7

7

BLOCK BANDING DETAIL
(V-BLOCK OPTION)

WISCONSIN DEPT OF TRANSPORTATION

APPROVED Matthew R Rauch
for State Traffic Engineer

DATE 4/19/2022 PLATE NO. A5-10.3

PROJECT NO:				SHEET NO: 107	E

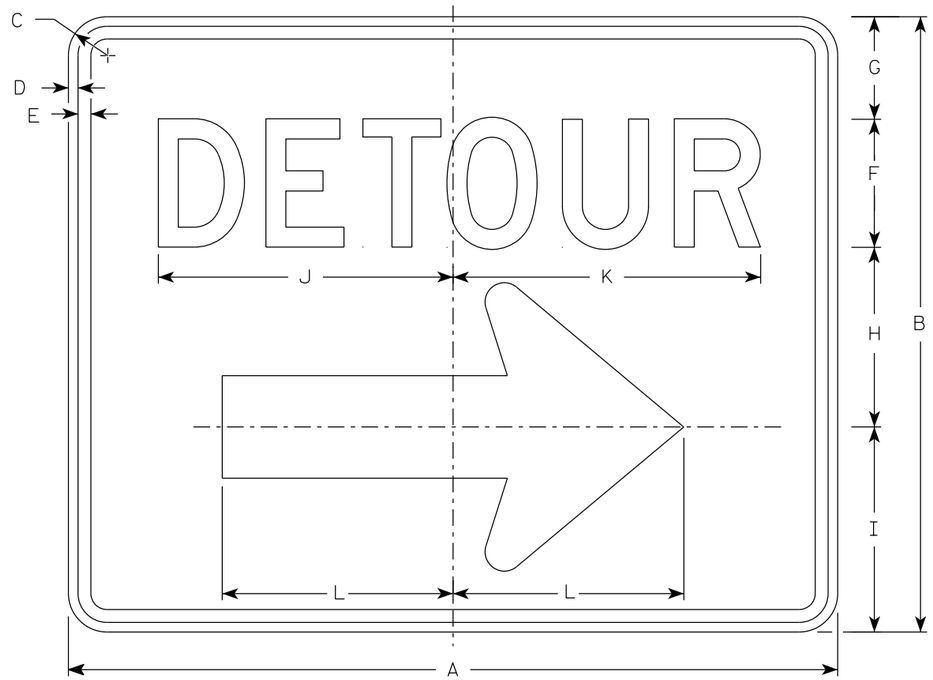

M4-9R

NOTES

1. Sign is Type II - Type F Reflective
2. Color:
   Background - Orange
   Message - Black
3. Message Series - D
4. Corners may be square or rounded when base material is plywood but borders shall be rounded as shown. When base material is metal, the corners and borders shall be rounded.
4. M4-9L is the same as M4-9R except the arrow is reversed.

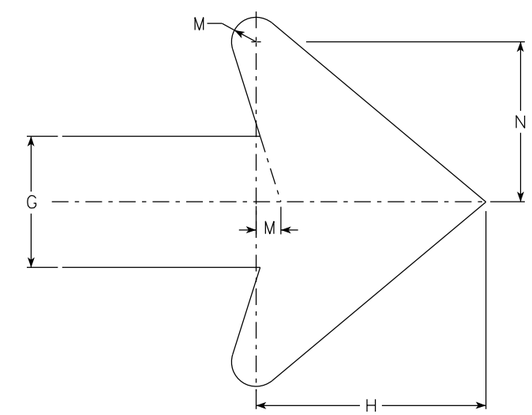

Arrow Detail

SIZE	A	B	C	D	E	F	G	H	I	J	K	L	M	N	O	P	Q	R	S	T	U	V	W	X	Y	Z	Area sq. ft.
1																											
2	30	24	1 1/2	3/8	1/2	5	4	7	8	11 1/2	12	9	3/4	4 7/8													5.00
2M	30	24	1 1/2	3/8	1/2	5	4	7	8	11 1/2	12	9	3/4	4 7/8													5.00
3	30	24	1 1/2	3/8	1/2	5	4	7	8	11 1/2	12	9	3/4	4 7/8													5.00
4	48	36	1 7/8	1/2	5/8	8	6	10 1/2	11 5/8	20 5/8	20 1/2	13 1/4	1 1/8	6 7/8													12.0
5	48	36	1 7/8	1/2	5/8	8	6	10 1/2	11 5/8	20 5/8	20 1/2	13 1/4	1 1/8	6 7/8													12.0

STANDARD SIGN
M4-9 R & L

WISCONSIN DEPT OF TRANSPORTATION

APPROVED Matthew R Rauch
For State Traffic Engineer

DATE 2/9/2023 PLATE NO. M4-9R.6

PROJECT NO: | HWY: | COUNTY: | SHEET NO: E

FILE NAME : C:\CAEfiles\Projects\tr_stdplate\M49R.dgn PLOT DATE : 21-MARCH 2023 1:40 PLOT BY : dotc4c PLOT NAME : PLOT SCALE : $$.....plotscale.....$$ WISDOT/CADDS SHEET 42

NOTES

1. Sign is Type II - Type F Reflective
2. Color:
   Background - Orange
   Message - Black
3. Message Series - D
4. Corners may be square or rounded when base material is plywood but borders shall be rounded as shown when base material is metal.
5. M4-59L is the same as M4-59R except the arrow is reversed.

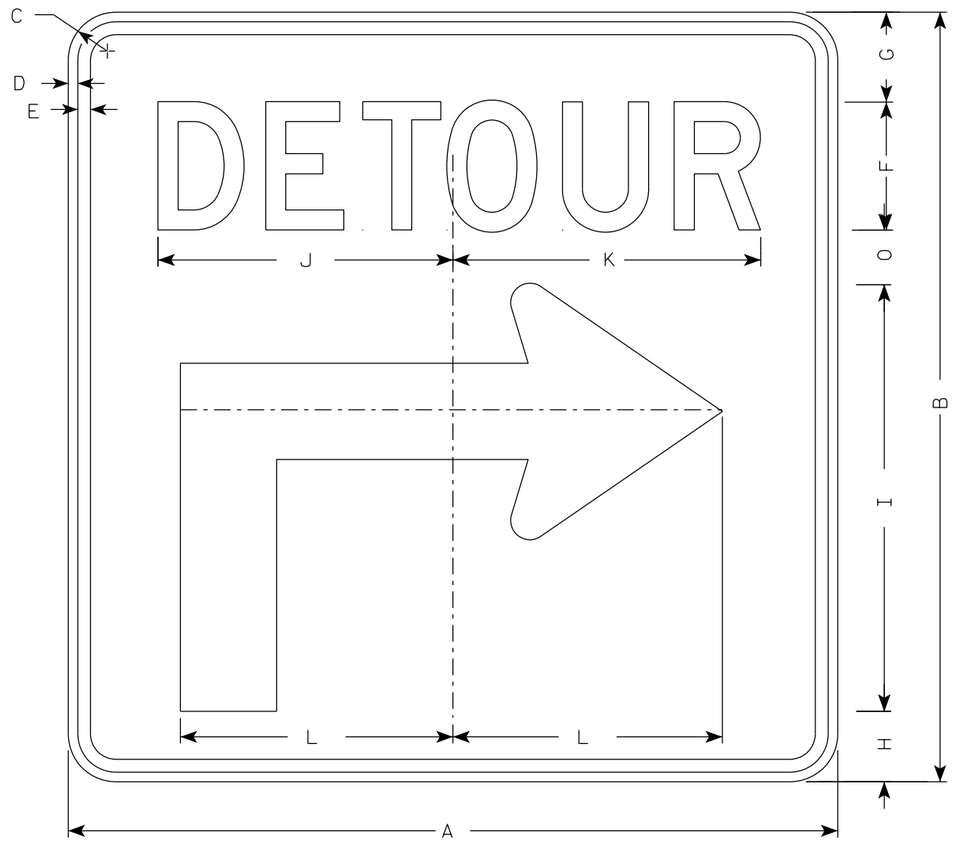

M4-59R

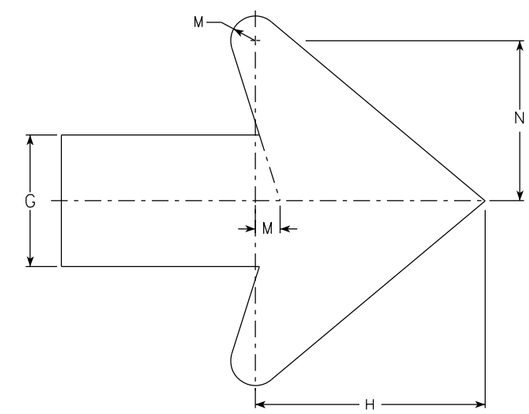

Arrow Detail

SIZE	A	B	C	D	E	F	G	H	I	J	K	L	M	N	O	P	Q	R	S	T	U	V	W	X	Y	Z	Area sq. ft.
1																											
2S	30	30	1 7/8	3/8	1/2	5	3 1/2	2 3/4	16 5/8	11 1/2	12	10 1/2	3/4	4 7/8	2 1/8												6.25
2M	30	30	1 7/8	3/8	1/2	5	3 1/2	2 3/4	16 5/8	11 1/2	12	10 1/2	3/4	4 7/8	2 1/8												6.25
3	30	30	1 7/8	3/8	1/2	5	3 1/2	2 3/4	16 5/8	11 1/2	12	10 1/2	3/4	4 7/8	2 1/8												6.25
4	48	48	2 1/4	1/2	5/8	8	5 5/8	4 3/8	26 5/8	20 5/8	20 1/2	17	1 1/8	6 7/8	3 3/8												16.0
5	48	48	2 1/4	1/2	5/8	8	5 5/8	4 3/8	26 5/8	20 5/8	20 1/2	17	1 1/8	6 7/8	3 3/8												16.0

STANDARD SIGN
M4-59 L&R

WISCONSIN DEPT OF TRANSPORTATION

APPROVED Matthew R Rauch
for State Traffic Engineer

DATE 2/13/2023 PLATE NO. M4-59.2

PROJECT NO: | HWY: | COUNTY: | SHEET NO: | E

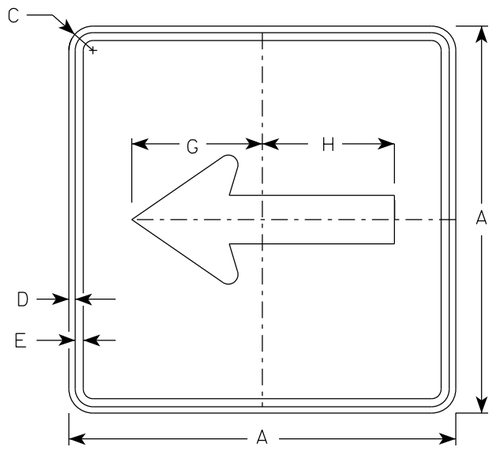

M6-1
MM6-1
MO6-1
MP6-1

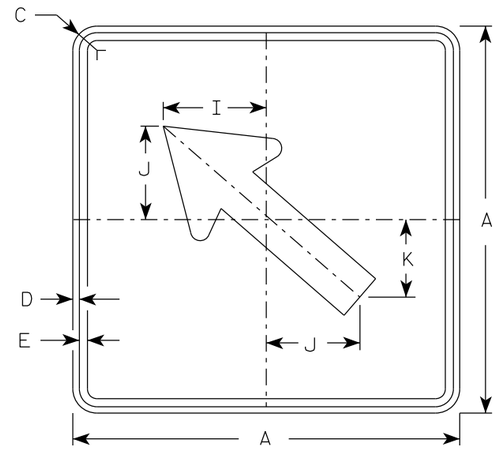

M6-2
MM6-2
MO6-2
MP6-2

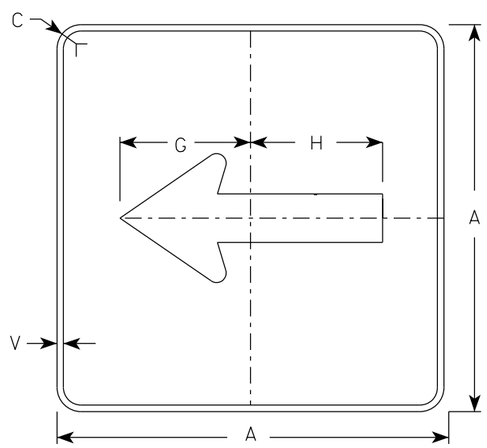

MB6-1
MK6-1
MN6-1
MR6-1

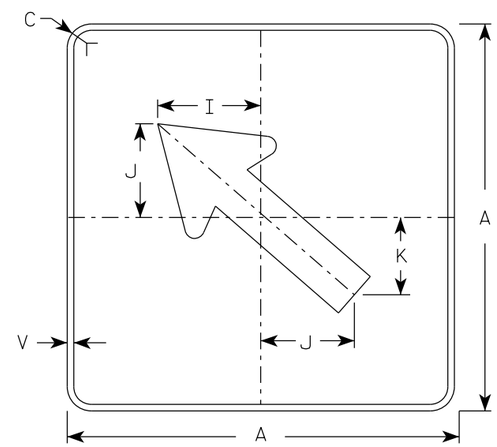

MB6-2
MK6-2
MN6-2
MR6-2

NOTES

1. Signs are Type II - Type H Reflective except as Shown
2. Color:
   Background - See note 4
   Message - See note 4
3. Corners may be square or rounded when base material is plywood but borders shall be rounded as shown. When base material is metal, the corners and borders shall be rounded.
4. M6-1 and M6-2 Background - White
   Message - Black
   MB6-1 and MB6-2 Background - Blue
   Message - White
   MK6-1 and MK6-2 Background - Green
   Message - White
   MM6-1 and MM6-2 Background - White
   Message - Green
   MN6-1 and MN6-2 Background - Brown
   Message - White
   MO6-1 and MO6-2 Background - Orange - Type F Reflective
   Message - Black
   MP6-1 and MP6-2 Background - White
   Message - Blue
   MR6-1 and MR6-2 Background - Brown
   Message - Yellow

ARROW DETAIL

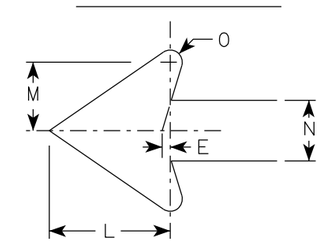

SIZE	A	B	C	D	E	F	G	H	I	J	K	L	M	N	O	P	Q	R	S	T	U	V	W	X	Y	Z	Area sq. ft.
1																											
2S	21		1 1/2	3/8	3/8		7 1/2	7 1/8	5 5/8	5	4 1/4	5 1/4	3	2 5/8	1/2							1/2					3.06
2M	21		1 1/2	3/8	3/8		7 1/2	7 1/8	5 5/8	5	4 1/4	5 1/4	3	2 5/8	1/2							1/2					3.06
3	30		1 7/8	1/2	5/8		10 3/4	10 1/4	8	7 1/4	6	7 1/2	4 1/4	3 3/4	3/4							1/2					6.25
4	30		1 7/8	1/2	5/8		10 3/4	10 1/4	8	7 1/4	6	7 1/2	4 1/4	3 3/4	3/4							1/2					6.25
5	30		1 7/8	1/2	5/8		10 3/4	10 1/4	8	7 1/4	6	7 1/2	4 1/4	3 3/4	3/4							1/2					6.25

STANDARD SIGN
M6-1 & M6-2
SERIES

WISCONSIN DEPT OF TRANSPORTATION

APPROVED Matthew R Rauch
for State Traffic Engineer

DATE 2/13/2023 PLATE NO. M6-1.16

PROJECT NO: | HWY: | COUNTY: | SHEET NO: 110 | E

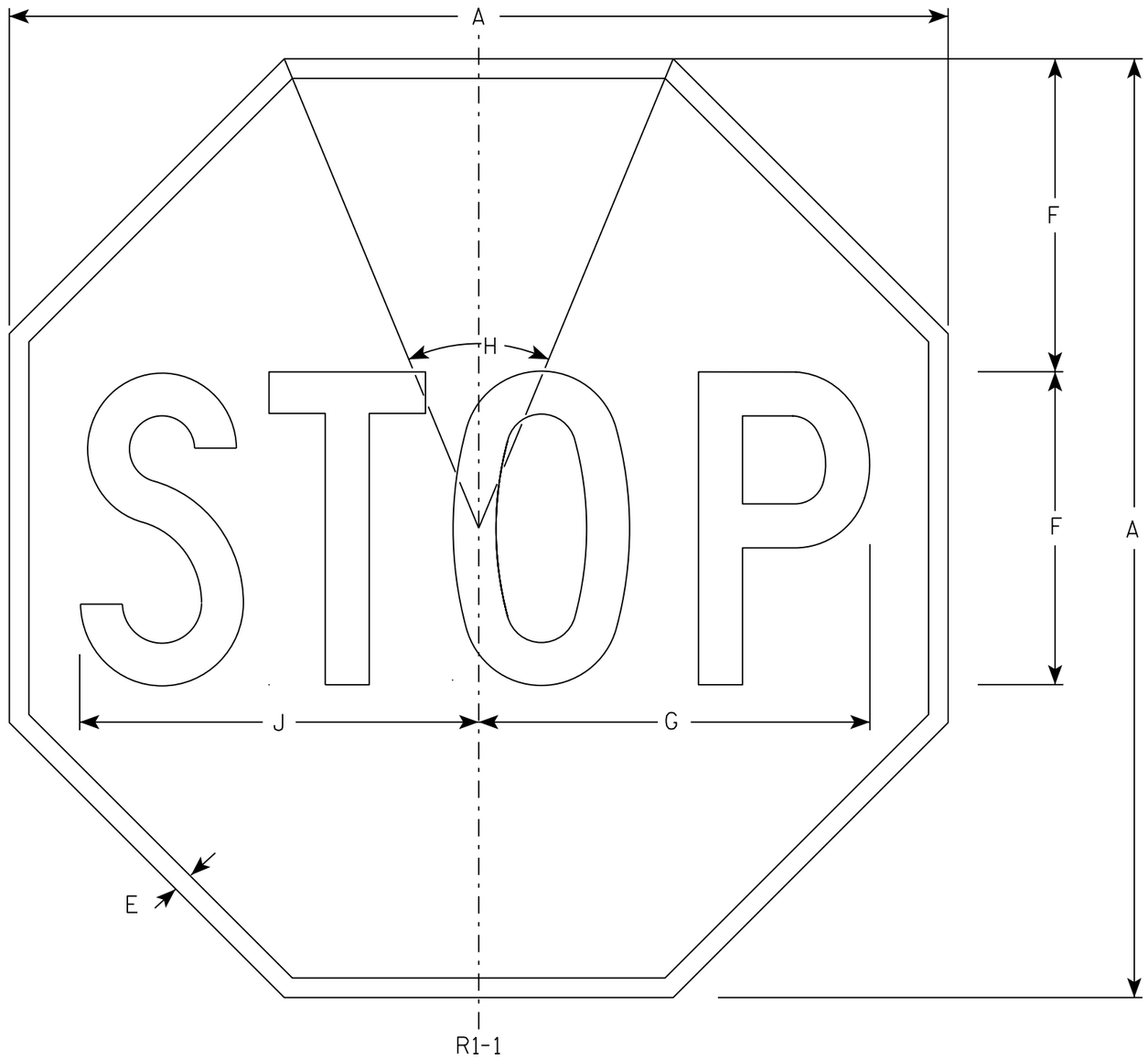

NOTES

1. Sign is Type II - Type H Reflective - reference WIS DOT Standard Specification for HIGHWAY and STRUCTURE CONSTRUCTION latest edition.
2. Color:
   Background - Red
   Message - White
3. Message Series - C

SIZE	A	B	C	D	E	F	G	H	I	J	K	L	M	N	O	P	Q	R	S	T	U	V	W	X	Y	Z	Area sq. ft.
1	30				5/8	10	12 1/2	45°		12 3/4																	5.18
2S	30				5/8	10	12 1/2	45°		12 3/4																	5.18
2M	36				3/4	12	15	45°		15 3/8																	7.46
3	36				3/4	12	15	45°		15 3/8																	7.46
4	48				1	16	20	45°		20 1/2																	13.25
5	48				1	16	20	45°		20 1/2																	13.25
6	18				3/8	6	7 3/4	45°		7 3/4																	1.86
7	12				1/4	4	5	45°		5 1/8																	0.78

STANDARD SIGN
R1-1

WISCONSIN DEPT OF TRANSPORTATION

APPROVED Matthew R Rauch
for State Traffic Engineer

DATE 11/12/15 PLATE NO. R1-1.13

PROJECT NO: | HWY: | COUNTY: | SHEET NO: 111 | E

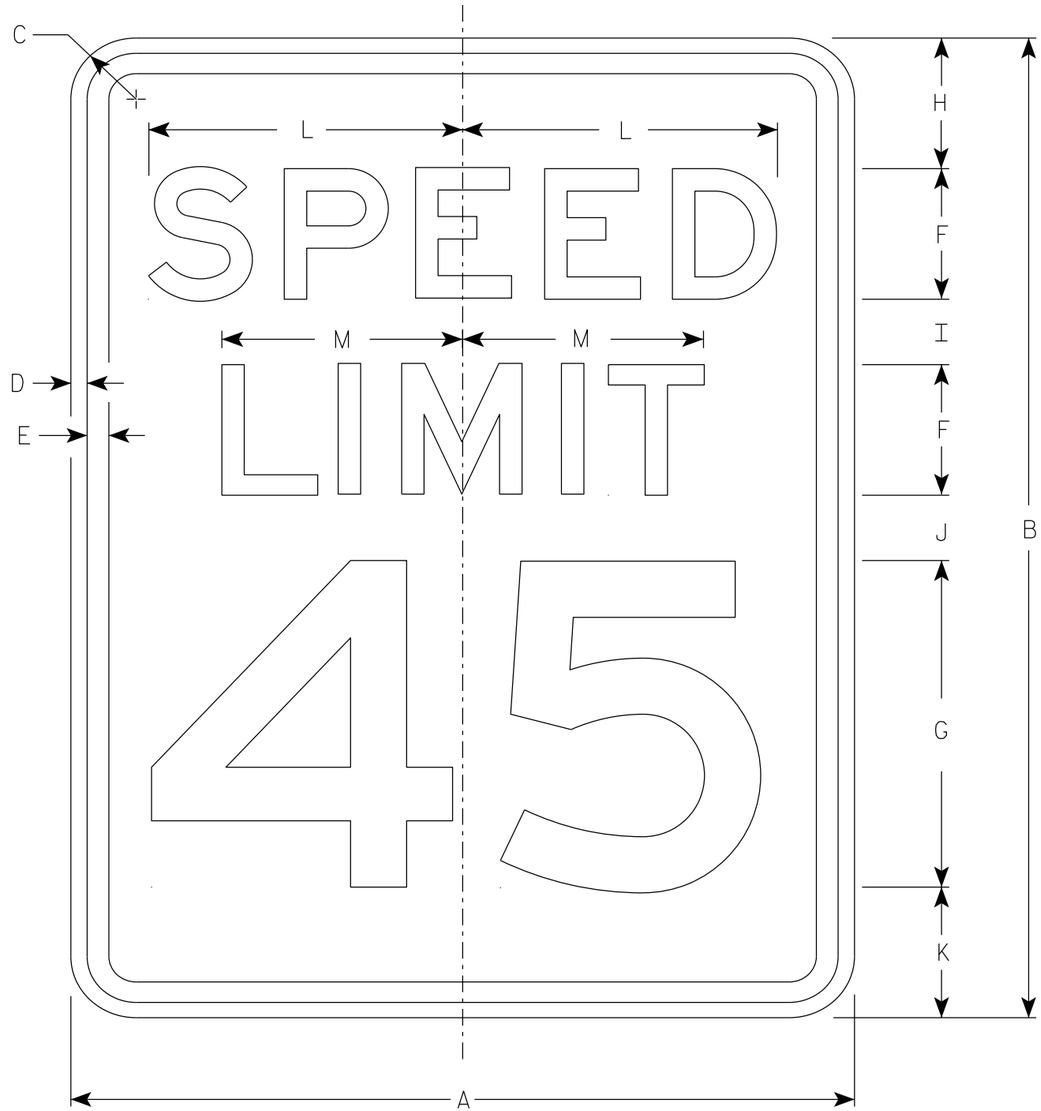

R2-1

NOTES

1. Sign is Type II - Type H Reflective
2. Color:
   Background - White
   Message - Black
3. Message Series - E
4. Substitute appropriate numerals and optically adjust spacing to achieve proper balance.

SIZE	A	B	C	D	E	F	G	H	I	J	K	L	M	N	O	P	Q	R	S	T	U	V	W	X	Y	Z	Area sq. ft.
1	18	24	1 1/2	3/8	1/2	3	8	3	2	2	3	7 1/4	5 1/2														3.0
2S	24	30	1 1/2	3/8	1/2	4	10	3	2 1/4	3 3/8	3 3/8	9 5/8	7 3/8														5.0
2M	30	36	1 7/8	1/2	5/8	5	12	5	2 1/2	2 1/2	4	12	9 1/4														7.5
3	36	48	1 7/8	1/2	5/8	6	14	6	5	5	6	14 3/8	11														12.0
4	36	48	1 7/8	1/2	5/8	6	14	6	5	5	6	14 3/8	11														12.0
5	48	60	3	3/4	1	8	20	6	4 1/2	6 3/4	6 3/4	19 1/4	14 5/8														20.0

STANDARD SIGN
R2-1

WISCONSIN DEPT OF TRANSPORTATION

APPROVED Matthew R Rauch
for State Traffic Engineer

DATE 2/1/23 PLATE NO. R2-1.14

PROJECT NO: | HWY: | COUNTY: | SHEET NO: 112 | E

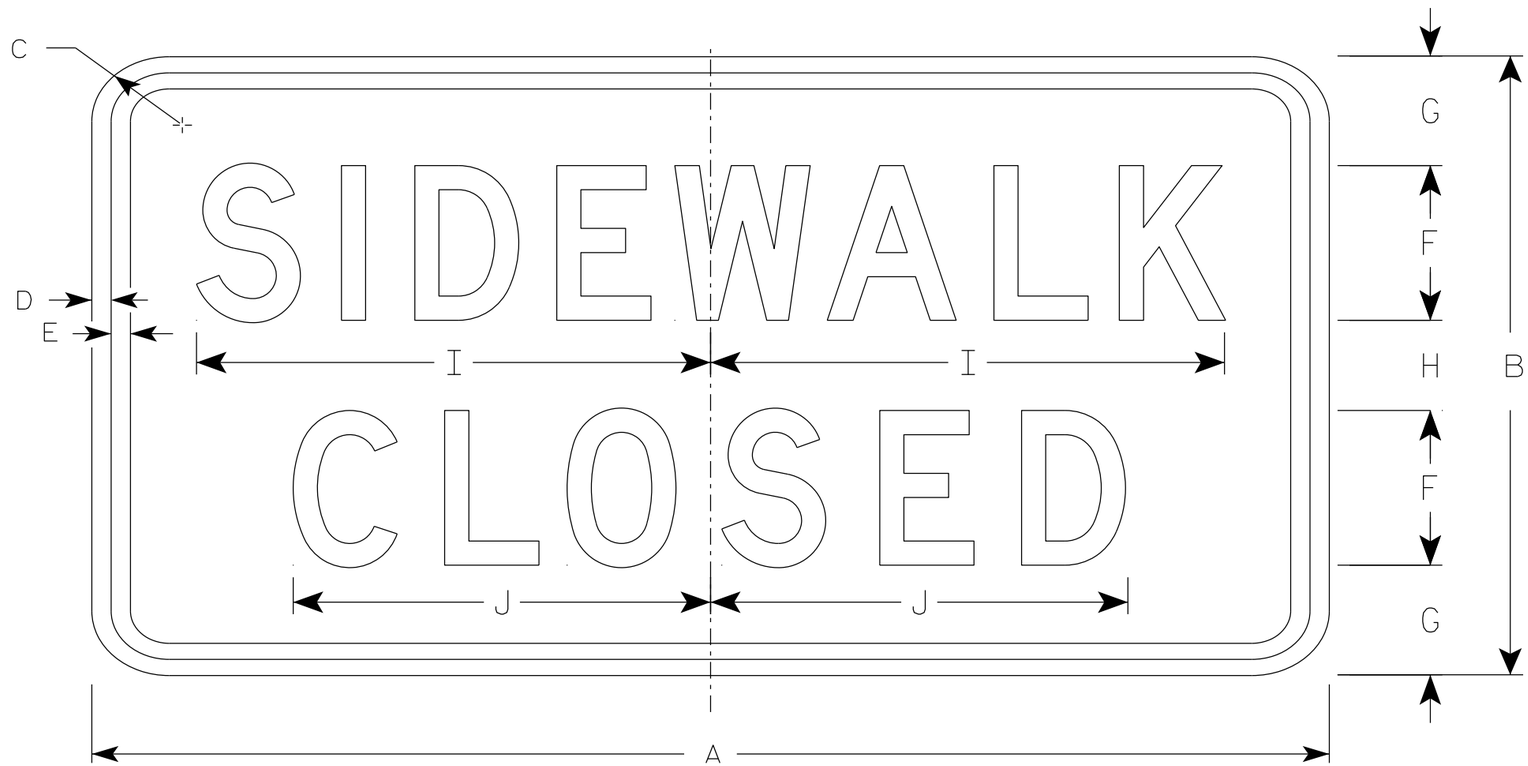

R9-9

NOTES

1. Sign is Type II - Type H Reflective
2. Color:
   Background - White
   Message - Black
3. Message Series - C
4. Use Size 2 for Sidewalks. Use Size 3 for Paths and Trails.

SIZE	A	B	C	D	E	F	G	H	I	J	K	L	M	N	O	P	Q	R	S	T	U	V	W	X	Y	Z	Area sq. ft.
1																											
2S	24	12	1 1/2	1/2	1/2	3	2 1/8	1 3/4	10	8 1/8																	2.0
2M	24	12	1 1/2	1/2	1/2	3	2 1/8	1 3/4	10	8 1/8																	2.0
3	30	18	1 1/2	1/2	1/2	4	3 1/2	3	12 1/2	10 1/4																	3.75
4																											
5																											

STANDARD SIGN
R9-9

WISCONSIN DEPT OF TRANSPORTATION

APPROVED Matthew R Rauch
for State Traffic Engineer

DATE 1/24/24 PLATE NO. R9-9.7

PROJECT NO: | HWY: | COUNTY: | SHEET NO: 113 | E

NOTES

1. Sign is Type II - Type H Reflective
2. Color:
   Background - White
   Message - Black
3. Message Series - C
4. Corners may be square or rounded when base material is plywood but borders shall be rounded as shown. When base material is metal, the corners and borders shall be rounded.
5. Substitute appropriate numerals to nearest quarter mile and optically adjust spacing to achieve proper balance.

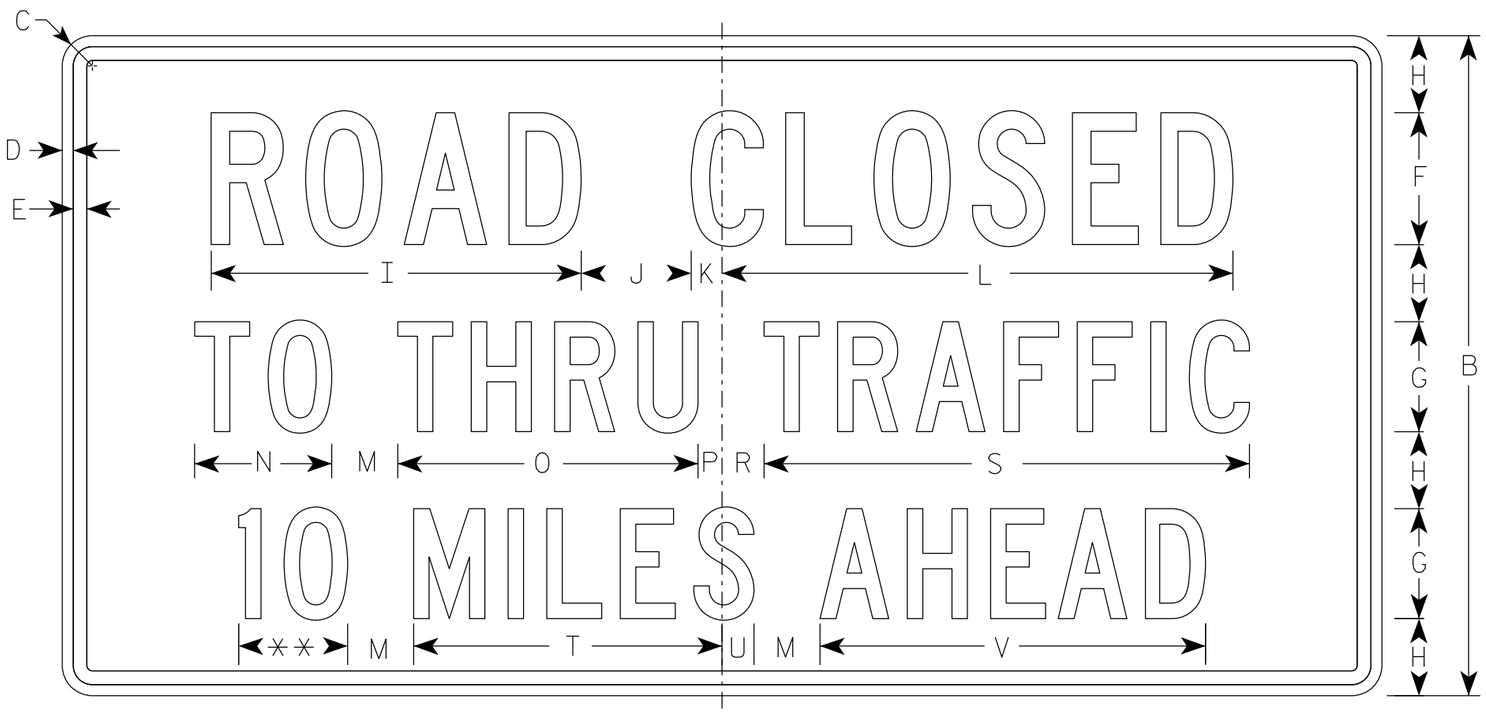

R11-3

** See Note 5

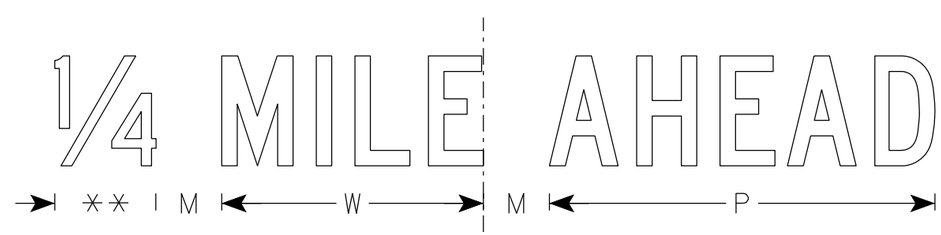

SIZE	A	B	C	D	E	F	G	H	I	J	K	L	M	N	O	P	Q	R	S	T	U	V	W	X	Y	Z	Area sq. ft.
1	36	18	1 1/2	3/8	3/8	4	3	2	11 1/4	3	1 1/8	15 3/8	2	3 3/4	8 1/4	5/8		1 3/8	13 1/4	8 3/8	7/8	10 1/2	7 1/8				4.5
2S	60	30	1 7/8	1/2	5/8	6	5	3 1/2	16 7/8	5	1 3/8	23 1/4	3	6 1/4	13 5/8	1 1/8		1 7/8	22 1/8	14	1 1/2	17 1/2	11 7/8				12.5
2M	60	30	1 7/8	1/2	5/8	6	5	3 1/2	16 7/8	5	1 3/8	23 1/4	3	6 1/4	13 5/8	1 1/8		1 7/8	22 1/8	14	1 1/2	17 1/2	11 7/8				12.5
3																											
4																											
5																											

STANDARD SIGN
R11-3

WISCONSIN DEPT OF TRANSPORTATION

APPROVED Matthew R Rauch
for State Traffic Engineer

DATE 2/5/24 PLATE NO. R11-3.10

PROJECT NO: | HWY: | COUNTY: | SHEET NO: 114 | E

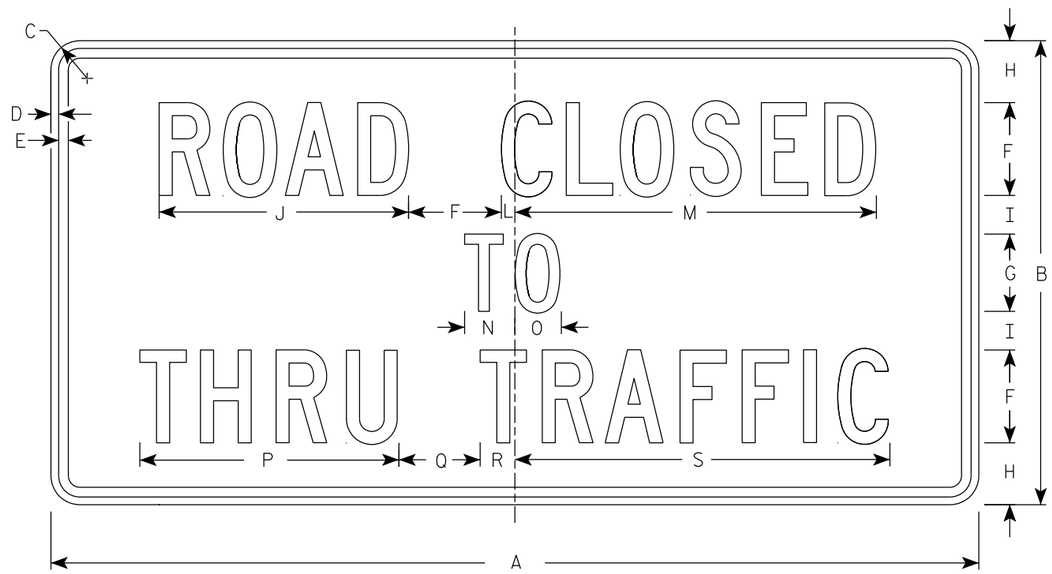

R11-4

NOTES

1. Sign is Type II - Type H Reflective
2. Color:
   Background - White
   Message - Black
3. Message Series - C
4. Corners may be square or rounded when base material is plywood but borders shall be rounded as shown. When base material is metal, the corners and borders shall be rounded.

SIZE	A	B	C	D	E	F	G	H	I	J	K	L	M	N	O	P	Q	R	S	T	U	V	W	X	Y	Z	Area sq. ft.
1																											
2S	60	30	1 7/8	1/2	5/8	6	5	4	2 1/2	16 1/8		7/8	23 3/8	3 1/4	3	16 3/4	5 1/4	2 1/4	24 1/4								12.5
2M	60	30	1 7/8	1/2	5/8	6	5	4	2 1/2	16 1/8		7/8	23 3/8	3 1/4	3	16 3/4	5 1/4	2 1/4	24 1/4								12.5
3																											
4																											
5																											

STANDARD SIGN
R11 - 4

WISCONSIN DEPT OF TRANSPORTATION

APPROVED Matthew R Rauch for State Traffic Engineer

DATE 2/5/24 PLATE NO. R11-4.4

PROJECT NO: | HWY: | COUNTY: | SHEET NO: 115 | E

NOTES

1. Sign is Type II - Type H Reflective
2. Color:
   Background - White
   Message - Black
3. Message Series - D

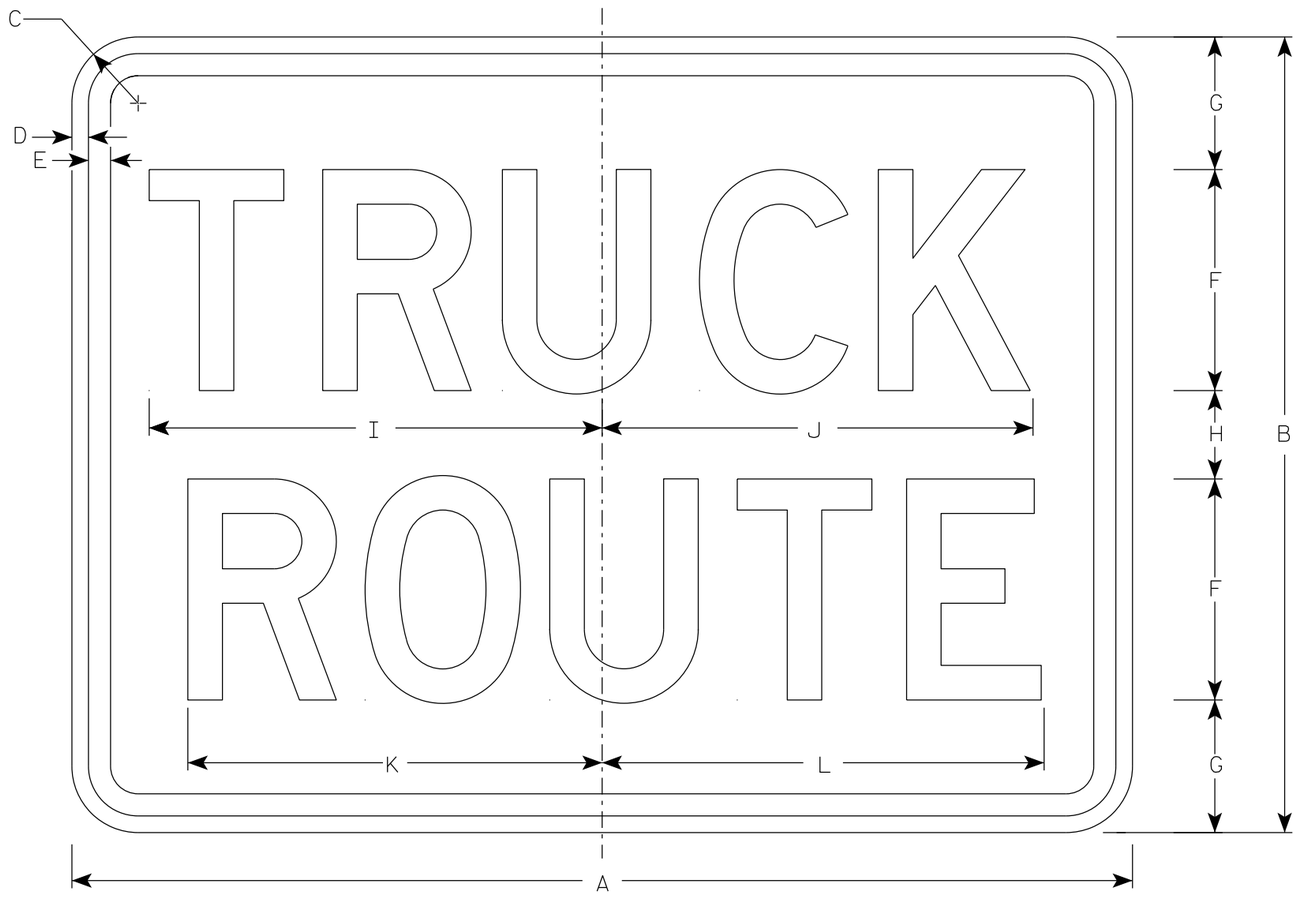

R14-1

SIZE	A	B	C	D	E	F	G	H	I	J	K	L	M	N	O	P	Q	R	S	T	U	V	W	X	Y	Z	Area sq. ft.
1																											
2S	24	18	1 1/2	3/8	1/2	5	3	2	10 1/4	9 3/4	9 3/8	10															3.0
2M	24	18	1 1/2	3/8	1/2	5	3	2	10 1/4	9 3/4	9 3/8	10															3.0
3	30	24	1 1/2	3/8	1/2	6	4	4	12 1/4	11 3/4	11 1/4	12															5.0
4																											
5																											

STANDARD SIGN

R14-1

WISCONSIN DEPT OF TRANSPORTATION

APPROVED Matthew R Rauch
for State Traffic Engineer

DATE 2/9/24 PLATE NO. R14-1.7

PROJECT NO: | HWY: | COUNTY: | SHEET NO: 116 | E

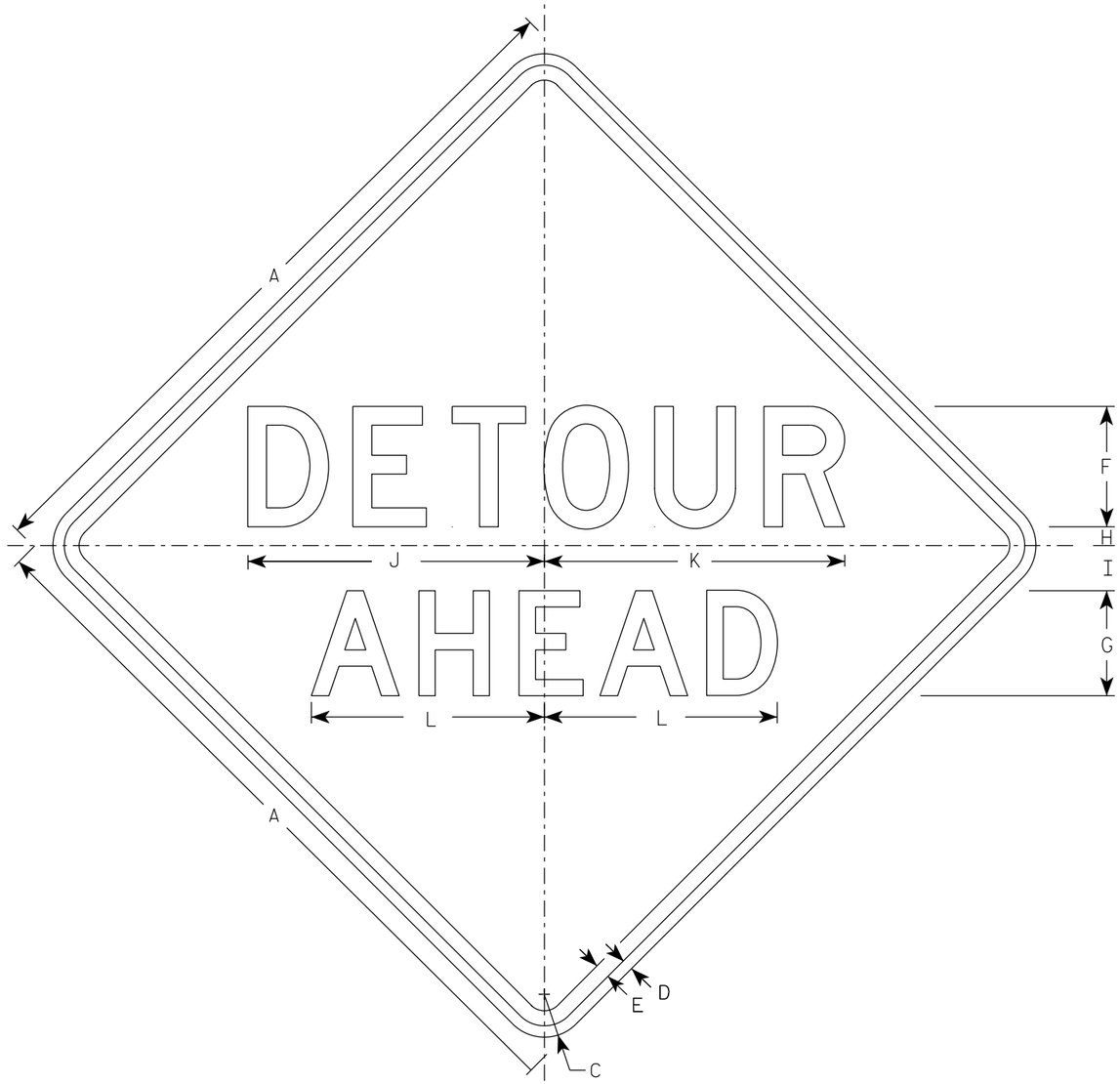

W20-2A

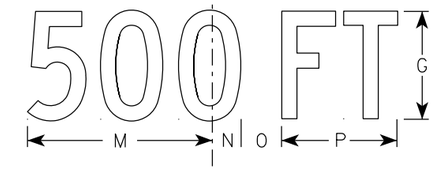

W20-2D

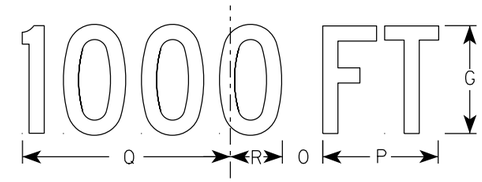

W20-2C

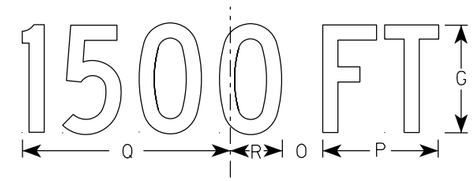

W20-2B

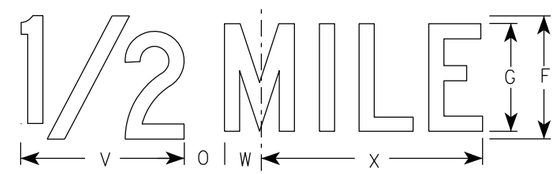

W20-2G

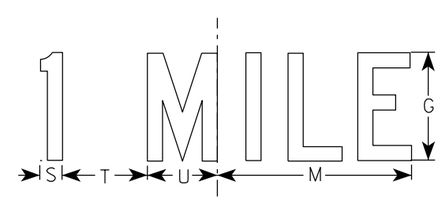

W20-2F

NOTES

1. Sign is Type II - Type F Reflective
2. Color:
   Background - Orange
   Message - Black
3. Message Series - See note 5
4. Corners may be square or rounded when base material is plywood but borders shall be rounded as shown. When base material is metal, the corners and borders shall be rounded.
5. Line 1 is Series D.
   Line 2 is Series D for AHEAD and Series C for all other distances.

SIZE	A	B	C	D	E	F	G	H	I	J	K	L	M	N	O	P	Q	R	S	T	U	V	W	X	Y	Z	Area sq. ft.
1	36		2 1/4	5/8	3/4	6	5	1	2 1/4	14 3/4	15	11 5/8	9	1 3/8	1 7/8	5 5/8	10 1/8	2 1/2	1 1/8	4 1/2	3 1/2	8	1 3/4	10 3/4			9.0
2S	48		3	3/4	1	8	7	1 1/4	3	19 3/4	20	15 1/2	12	1 7/8	2 5/8	7 1/2	13 1/2	3 3/8	1 1/2	6	4 5/8	10 5/8	2 3/8	14 3/8			16.0
2M	48		3	3/4	1	8	7	1 1/4	3	19 3/4	20	15 1/2	12	1 7/8	2 5/8	7 1/2	13 1/2	3 3/8	1 1/2	6	4 5/8	10 5/8	2 3/8	14 3/8			16.0
3	48		3	3/4	1	8	7	1 1/4	3	19 3/4	20	15 1/2	12	1 7/8	2 5/8	7 1/2	13 1/2	3 3/8	1 1/2	6	4 5/8	10 5/8	2 3/8	14 3/8			16.0
4	48		3	3/4	1	8	7	1 1/4	3	19 3/4	20	15 1/2	12	1 7/8	2 5/8	7 1/2	13 1/2	3 3/8	1 1/2	6	4 5/8	10 5/8	2 3/8	14 3/8			16.0
5	48		3	3/4	1	8	7	1 1/4	3	19 3/4	20	15 1/2	12	1 7/8	2 5/8	7 1/2	13 1/2	3 3/8	1 1/2	6	4 5/8	10 5/8	2 3/8	14 3/8			16.0

STANDARD SIGN
W20-2A,B,C,D,F & G

WISCONSIN DEPT OF TRANSPORTATION

APPROVED Matthew R Rauch
For State Traffic Engineer

DATE 1/10/2024 PLATE NO. W20-2.7

PROJECT NO: | HWY: | COUNTY: | SHEET NO: E

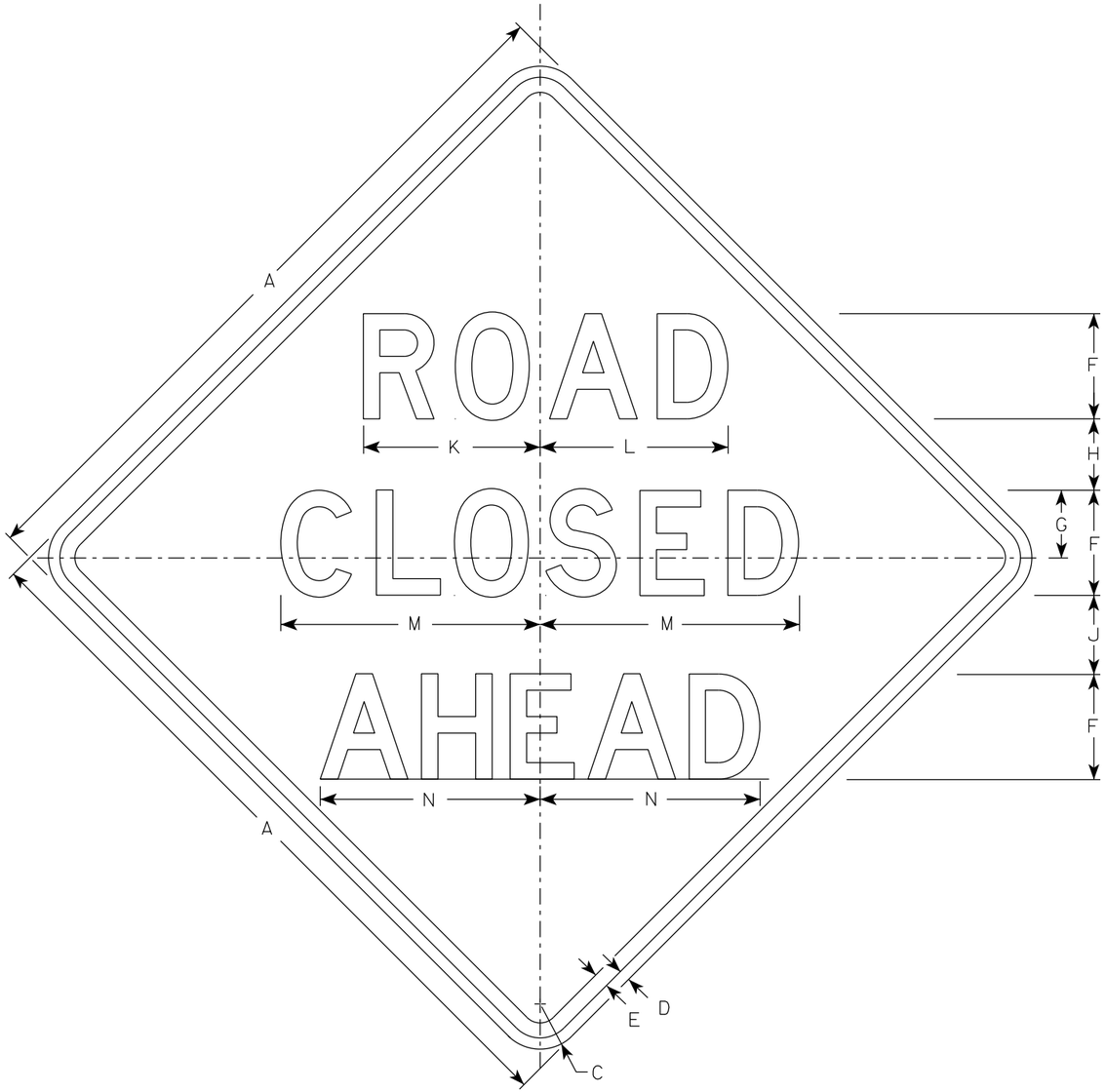

W20-3A

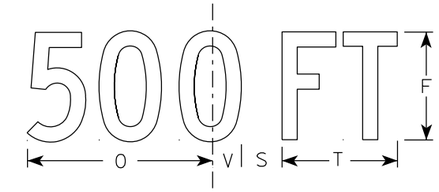

W20-3D

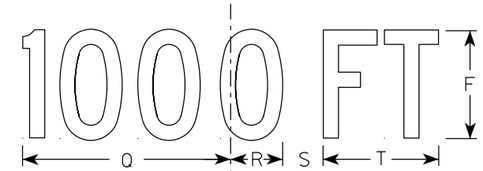

W20-3C

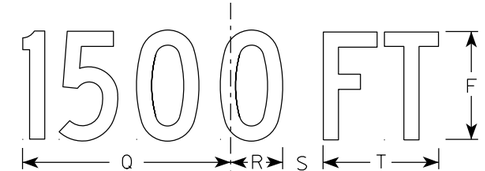

W20-3B

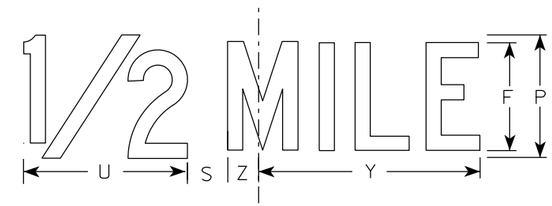

W20-3G

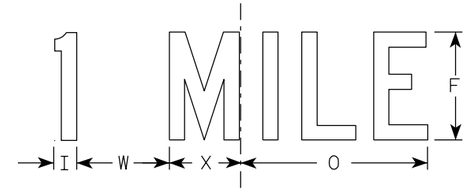

W20-3F

NOTES

1. Sign is Type II - Type F Reflective
2. Color:
   Background - Orange
   Message - Black
3. Message Series - see note 5
4. Corners may be square or rounded when base material is plywood but borders shall be rounded as shown. When base material is metal, the corners and borders shall be rounded.
5. Lines 1 and 2 are Series D.
   Line 3 is Series D for AHEAD and Series C for all other distances.

SIZE	A	B	C	D	E	F	G	H	I	J	K	L	M	N	O	P	Q	R	S	T	U	V	W	X	Y	Z	Area sq. ft.
1	36		2 1/4	5/8	3/4	5	3 3/8	3 1/2	1 1/8	4	8 3/8	8 7/8	12 1/2	11	9	6	10 1/8	2 1/2	1 7/8	5 5/8	8	1 3/8	4 1/2	3 1/2	10 3/4	1 3/4	9.0
2S	48		3	3/4	1	7	4 1/2	4 3/4	1 1/2	5 1/4	11 3/4	12 1/2	17 1/4	14 5/8	12	8	13 1/2	3 3/8	2 5/8	7 1/2	10 5/8	1 7/8	6	4 5/8	14 3/8	2 3/8	16.0
2M	48		3	3/4	1	7	4 1/2	4 3/4	1 1/2	5 1/4	11 3/4	12 1/2	17 1/4	14 5/8	12	8	13 1/2	3 3/8	2 5/8	7 1/2	10 5/8	1 7/8	6	4 5/8	14 3/8	2 3/8	16.0
3	48		3	3/4	1	7	4 1/2	4 3/4	1 1/2	5 1/4	11 3/4	12 1/2	17 1/4	14 5/8	12	8	13 1/2	3 3/8	2 5/8	7 1/2	10 5/8	1 7/8	6	4 5/8	14 3/8	2 3/8	16.0
4	48		3	3/4	1	7	4 1/2	4 3/4	1 1/2	5 1/4	11 3/4	12 1/2	17 1/4	14 5/8	12	8	13 1/2	3 3/8	2 5/8	7 1/2	10 5/8	1 7/8	6	4 5/8	14 3/8	2 3/8	16.0
5	48		3	3/4	1	7	4 1/2	4 3/4	1 1/2	5 1/4	11 3/4	12 1/2	17 1/4	14 5/8	12	8	13 1/2	3 3/8	2 5/8	7 1/2	10 5/8	1 7/8	6	4 5/8	14 3/8	2 3/8	16.0

STANDARD SIGN
W20-3A, B, C, D, F & G

WISCONSIN DEPT OF TRANSPORTATION

APPROVED Matthew R Rauch
for State Traffic Engineer

DATE 1/10/2024 PLATE NO. W20-3.8

PROJECT NO: | HWY: | COUNTY: | SHEET NO: E

DIVISION 1 - MINNESOTA AVENUE

STATION	DISTANCE	AREA (SF)		INCREMENTAL VOL (CY) (UNADJUSTED)		CUMULATIVE VOL (CY)		
		CUT	FILL	CUT	FILL	CUT 1.00	EXPANDED FILL 1.30	MASS ORDINATE
				NOTE 1	NOTE 3	NOTE 1		NOTE 8
10+70	0.00	122.02	0.00	0	0	0	0	0
11+00	30.00	120.90	1.80	135	1	135	1	134
11+50	50.00	147.92	0.16	249	2	384	4	380
12+00	50.00	167.90	0.82	292	1	676	5	671
12+50	50.00	167.89	0.00	311	1	987	7	981
13+00	50.00	165.83	2.20	309	2	1,296	9	1,287
13+50	50.00	174.14	2.20	315	4	1,611	14	1,597
14+00	50.00	187.04	3.03	334	5	1,945	21	1,924
14+50	50.00	156.14	4.75	318	7	2,263	30	2,233
15+00	50.00	171.54	5.26	303	9	2,566	42	2,524
15+50	50.00	150.87	0.99	299	6	2,865	49	2,816
16+00	50.00	166.52	2.27	294	3	3,159	53	3,106
16+50	50.00	174.87	1.87	316	4	3,475	59	3,417
17+00	50.00	160.10	3.46	310	5	3,785	65	3,720
17+50	50.00	148.59	6.84	286	10	4,071	78	3,993
18+00	50.00	167.55	4.29	293	10	4,364	91	4,273
18+50	50.00	155.85	6.57	299	10	4,663	104	4,559
19+00	50.00	163.63	5.59	296	11	4,959	118	4,841
19+50	50.00	171.53	6.13	310	11	5,269	133	5,136
20+00	50.00	179.39	1.84	325	7	5,594	142	5,452
20+50	50.00	180.71	2.50	333	4	5,927	147	5,780
21+00	50.00	197.62	1.52	350	4	6,277	152	6,125
21+50	50.00	169.10	1.74	340	3	6,617	156	6,461
22+00	50.00	149.95	0.00	295	2	6,912	159	6,753
22+50	50.00	143.43	8.30	272	8	7,184	169	7,015
23+00	50.00	104.16	0.00	229	8	7,413	179	7,234
23+50	50.00	79.05	0.16	170	0	7,583	179	7,404
24+00	50.00	67.17	1.73	135	2	7,718	182	7,536
			TOTAL	7,718	140			

NOTES:	
1 - CUT	CUT INCLUDES SALVAGED/UNUSABLE PAVEMENT MATERIAL
2 - FILL	DOES NOT INCLUDE UNUSABLE PAVEMENT EXC VOLUME
3 - MASS ORDINATE	CUT - (FILL * FILL FACTOR)

DIVISION 1 - ROSE STREET

STATION	DISTANCE	AREA (SF)		INCREMENTAL VOL (CY) (UNADJUSTED)		CUMULATIVE VOL (CY)		
		CUT	FILL	CUT	FILL	CUT 1.00	EXPANDED FILL 1.30	MASS ORDINATE
				NOTE 1	NOTE 3	NOTE 1		NOTE 8
199+25	0.00	100.73	0.21	0	0	0	0	0
199+50	25.00	115.19	0.08	100	0	100	0	100
199+75	25.00	141.09	0.00	119	0	219	0	219
199+82	7.00	262.83	0.00	52	0	271	0	271
			TOTAL	271	0			

DIVISION 1 - BLACKBIRD STREET

STATION	DISTANCE	AREA (SF)		INCREMENTAL VOL (CY) (UNADJUSTED)		CUMULATIVE VOL (CY)		
		CUT	FILL	CUT	FILL	CUT 1.00	EXPANDED FILL 1.30	MASS ORDINATE
				NOTE 1	NOTE 3	NOTE 1		NOTE 8
299+25	0.00	101.67	0.38	0	0	0	0	0
299+50	25.00	120.57	0.00	103	0	103	0	103
299+75	25.00	130.38	0.00	116	0	219	0	219
299+82	7.00	211.34	0.00	44	0	263	0	263
			TOTAL	263	0			

DIVISION 1 - ANNE STREET

STATION	DISTANCE	AREA (SF)		INCREMENTAL VOL (CY) (UNADJUSTED)		CUMULATIVE VOL (CY)		
		CUT	FILL	CUT	FILL	CUT 1.00	EXPANDED FILL 1.30	MASS ORDINATE
				NOTE 1	NOTE 3	NOTE 1		NOTE 8
399+25	0.00	100.26	0.00	0	0	0	0	0
399+50	25.00	114.90	0.43	100	0	100	0	100
399+75	25.00	128.67	0.00	113	0	213	0	213
399+82	7.00	227.60	0.00	46	0	259	0	259
			TOTAL	259	0			

NOTES:	
1 - CUT	CUT INCLUDES SALVAGED/UNUSABLE PAVEMENT MATERIAL
2 - FILL	DOES NOT INCLUDE UNUSABLE PAVEMENT EXC VOLUME
3 - MASS ORDINATE	CUT - (FILL * FILL FACTOR)

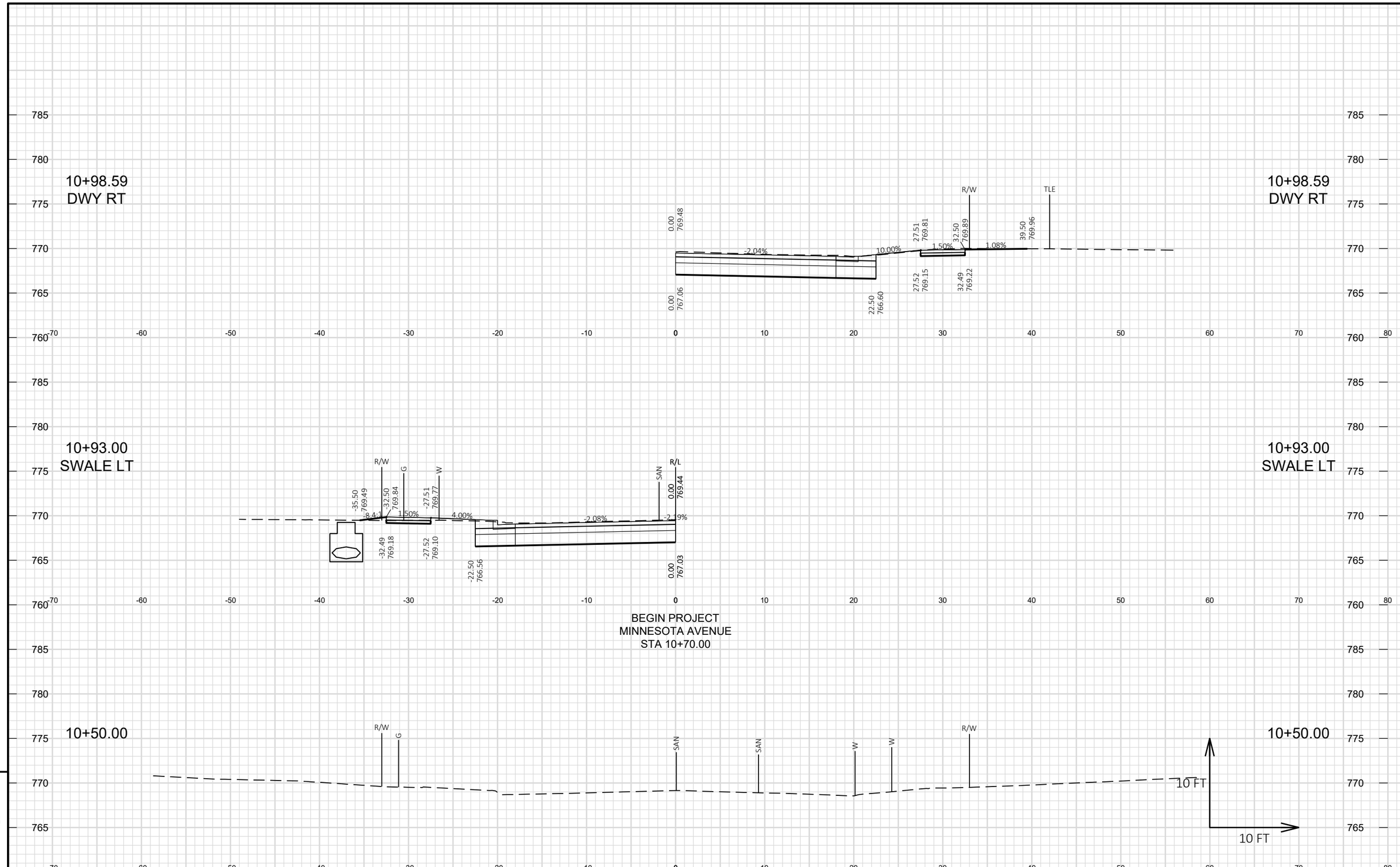

PROJECT NO: 4986-00-65	HWY: MINNESOTA AVENUE	COUNTY: FOND DU LAC	CROSS SECTIONS: MINNESOTA AVENUE	SHEET 121	E

FILE NAME : S:\CURRPROJ\FONDDUCO\NORTH FDL, VILLAGE OF\MINNESOTA AVE\CIVIL3D\49860064\SHEETS\49860065-090201-XS.DWG
LAYOUT NAME - 100-Minnesota
PLOT DATE : 7/29/2025 1:31 PM
PLOT BY : AARON SARAUER
PLOT NAME :
PLOT SCALE : 1 IN:10 FT HORZ. / 1 IN:10 FT VERT.
WISDOT/CADDS SHEET 49

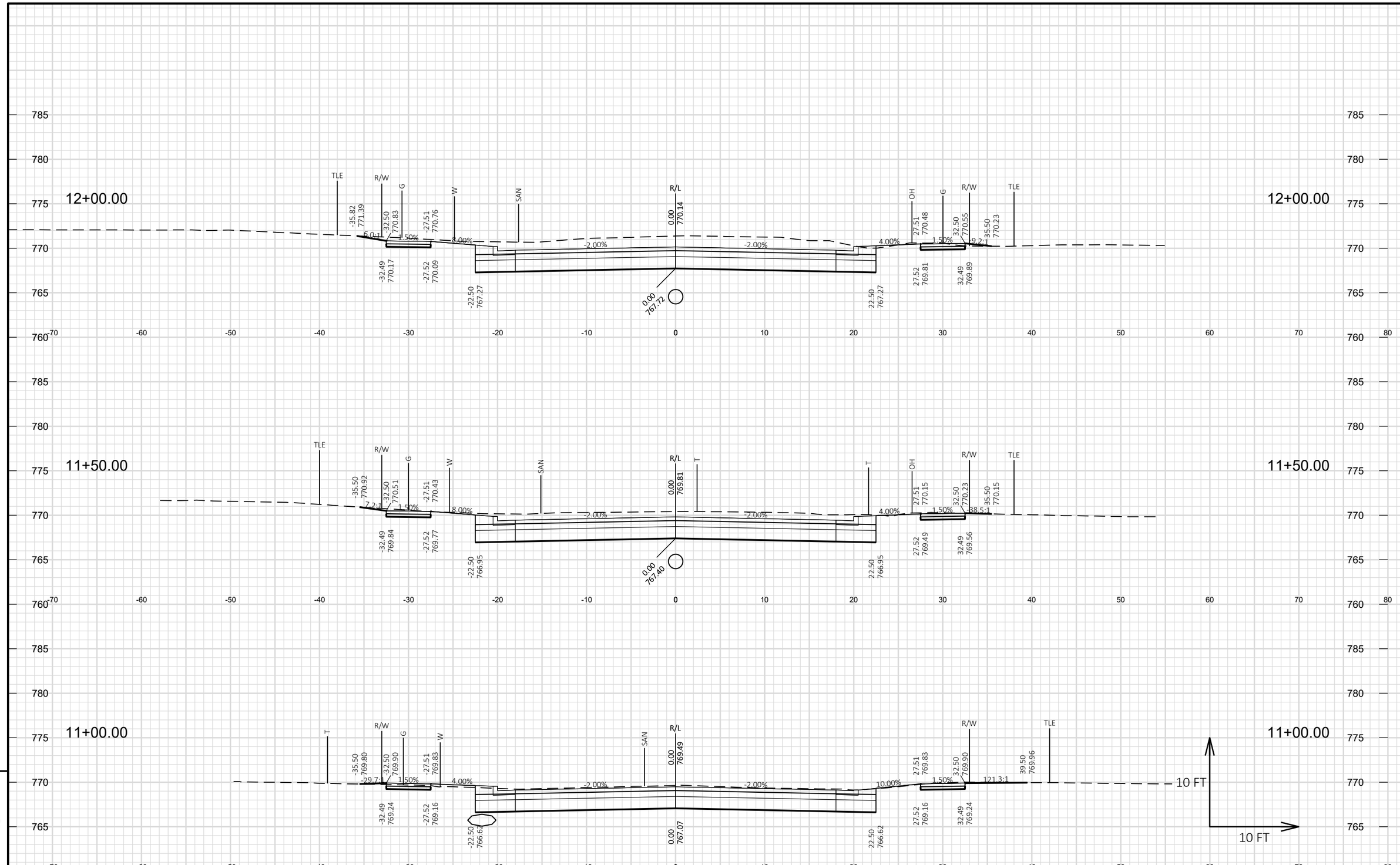

9

9

PROJECT NO: 4986-00-65	HWY: MINNESOTA AVENUE	COUNTY: FOND DU LAC	CROSS SECTIONS: MINNESOTA AVENUE	SHEET 122	E

FILE NAME : S:\CURRPROJ\FONDDUCO\NORTH FDL, VILLAGE OF\MINNESOTA AVE\CIVIL3D\49860064\SHEETS\49860065-090201-XS.DWG
LAYOUT NAME - 101-Minnesota

PLOT DATE : 7/29/2025 1:31 PM PLOT BY : AARON SARAUER PLOT NAME : **PLOT SCALE :** 1 IN:10 FT HORZ. / 1 IN:10 FT VERT.

WISDOT/CADDS SHEET 49

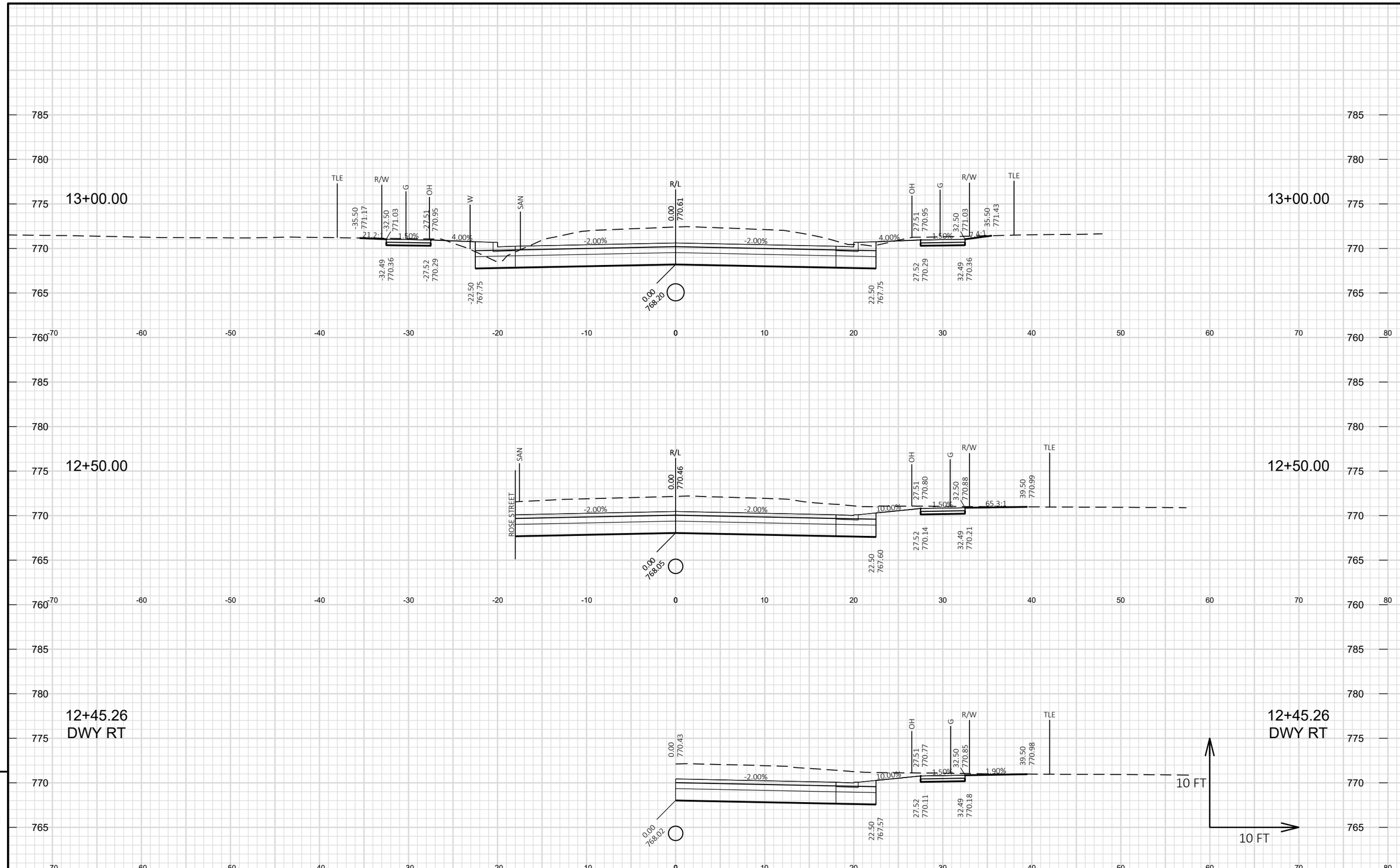

9

9

PROJECT NO: 4986-00-65	HWY: MINNESOTA AVENUE	COUNTY: FOND DU LAC	CROSS SECTIONS: MINNESOTA AVENUE	SHEET 123	E

FILE NAME : S:\CURRPROJ\FONDDUCO\NORTH FDL, VILLAGE OF\MINNESOTA AVE\CIVIL3D\49860064\SHEETS\49860065-090201-XS.DWG
LAYOUT NAME - 102-Minnesota

PLOT DATE : 7/29/2025 1:31 PM PLOT BY : AARON SARAUER PLOT NAME : **PLOT SCALE :** 1 IN:10 FT HORZ. / 1 IN:10 FT VERT.

WISDOT/CADDS SHEET 49

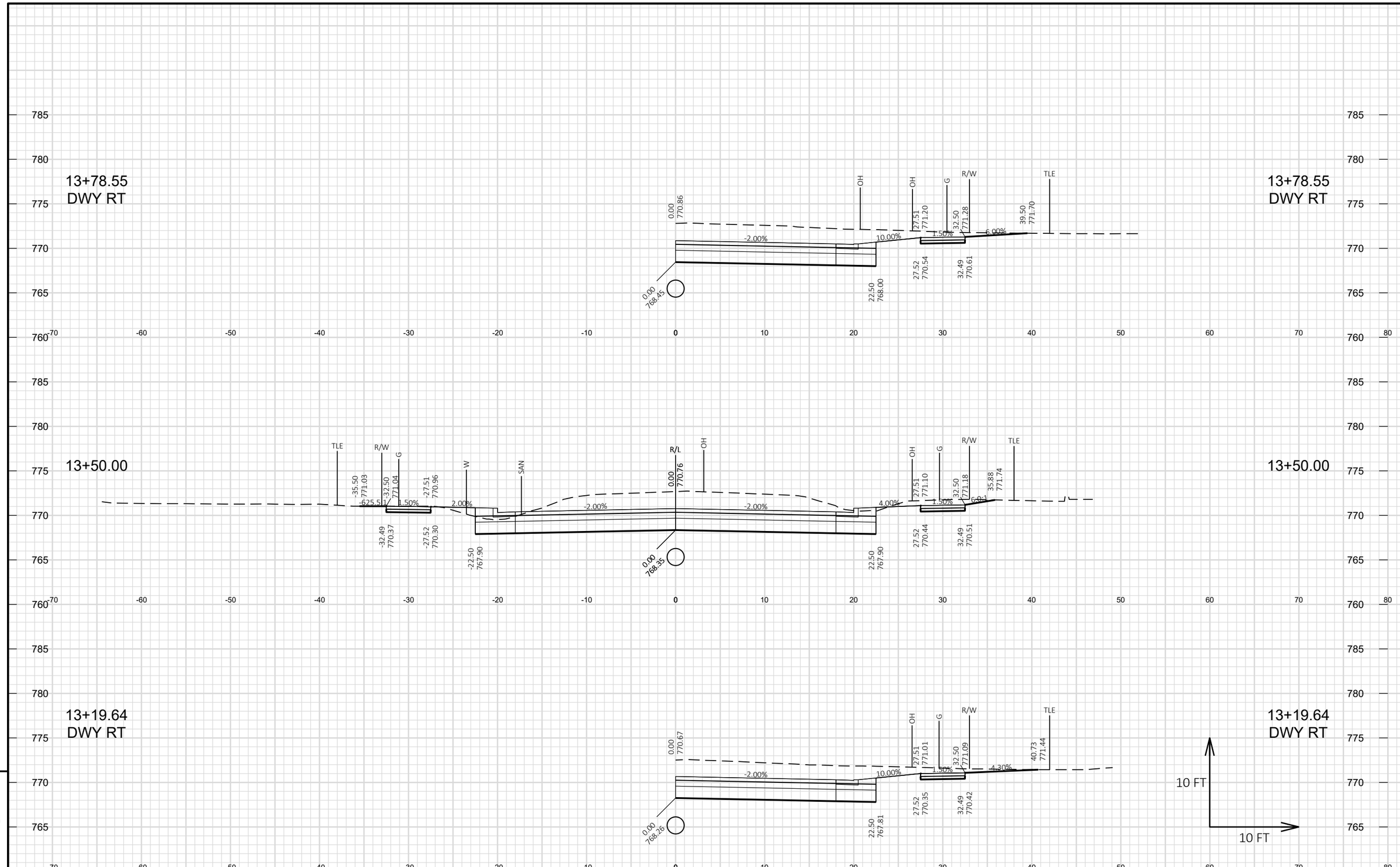

9

9

PROJECT NO: 4986-00-65	HWY: MINNESOTA AVENUE	COUNTY: FOND DU LAC	CROSS SECTIONS: MINNESOTA AVENUE	SHEET 124	E

FILE NAME : S:\CURRPROJ\FONDDUCO\NORTH FDL, VILLAGE OF\MINNESOTA AVE\CIVIL3D\49860064\SHEETS\49860065-090201-XS.DWG
LAYOUT NAME - 103-Minnesota

PLOT DATE : 7/29/2025 1:31 PM PLOT BY : AARON SARAUER PLOT NAME : **PLOT SCALE :** 1 IN:10 FT HORZ. / 1 IN:10 FT VERT.

WISDOT/CADDS SHEET 49

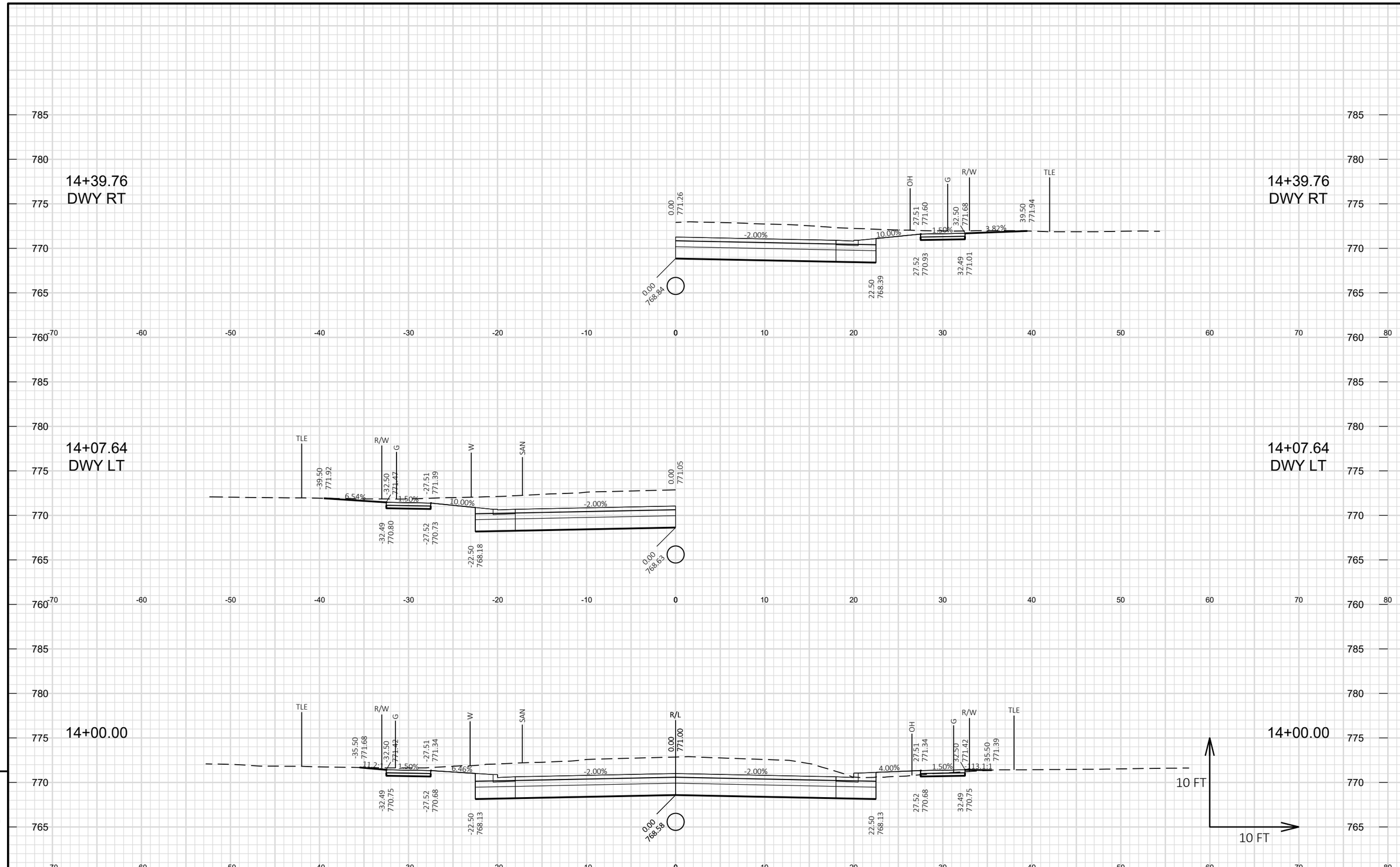

PROJECT NO: 4986-00-65	HWY: MINNESOTA AVENUE	COUNTY: FOND DU LAC	CROSS SECTIONS: MINNESOTA AVENUE	SHEET 125	E

FILE NAME : S:\CURRPROJ\FONDDUCO\NORTH FDL, VILLAGE OF\MINNESOTA AVE\CIVIL3D\49860064\SHEETS\49860065-090201-XS.DWG
LAYOUT NAME - 104-Minnesota
PLOT DATE : 7/29/2025 1:31 PM PLOT BY : AARON SARAUER PLOT NAME : PLOT SCALE : 1 IN:10 FT HORZ. / 1 IN:10 FT VERT.
WISDOT/CADDS SHEET 49

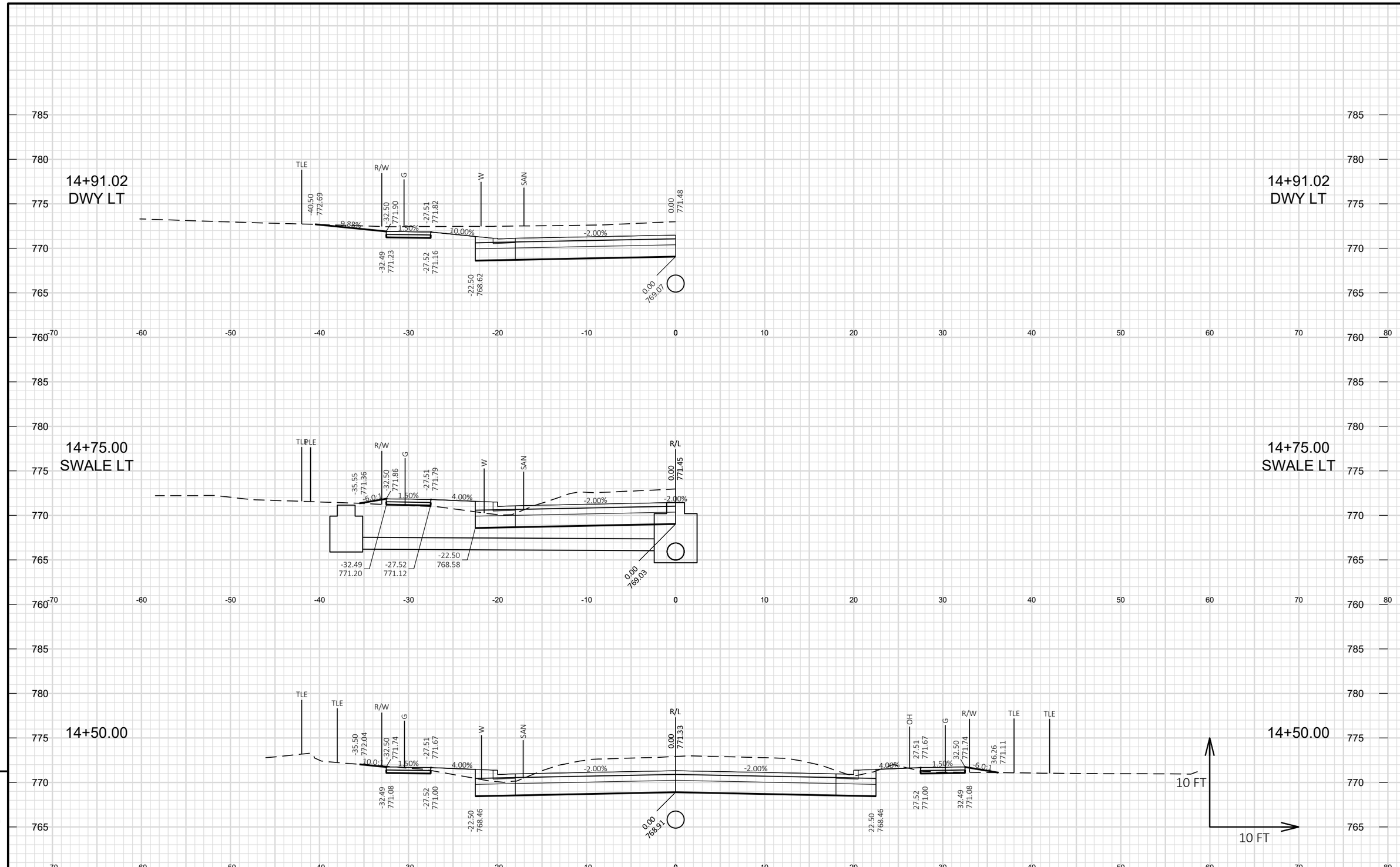

PROJECT NO: 4986-00-65	HWY: MINNESOTA AVENUE	COUNTY: FOND DU LAC	CROSS SECTIONS: MINNESOTA AVENUE	SHEET 126	E

FILE NAME : S:\CURRPROJ\FONDDUCO\NORTH FDL, VILLAGE OF\MINNESOTA AVE\CIVIL3D\49860064\SHEETS\49860065-090201-XS.DWG
LAYOUT NAME - 105-Minnesota
PLOT DATE : 7/29/2025 1:31 PM PLOT BY : AARON SARAUER PLOT NAME : PLOT SCALE : 1 IN:10 FT HORZ. / 1 IN:10 FT VERT.
WISDOT/CADDS SHEET 49

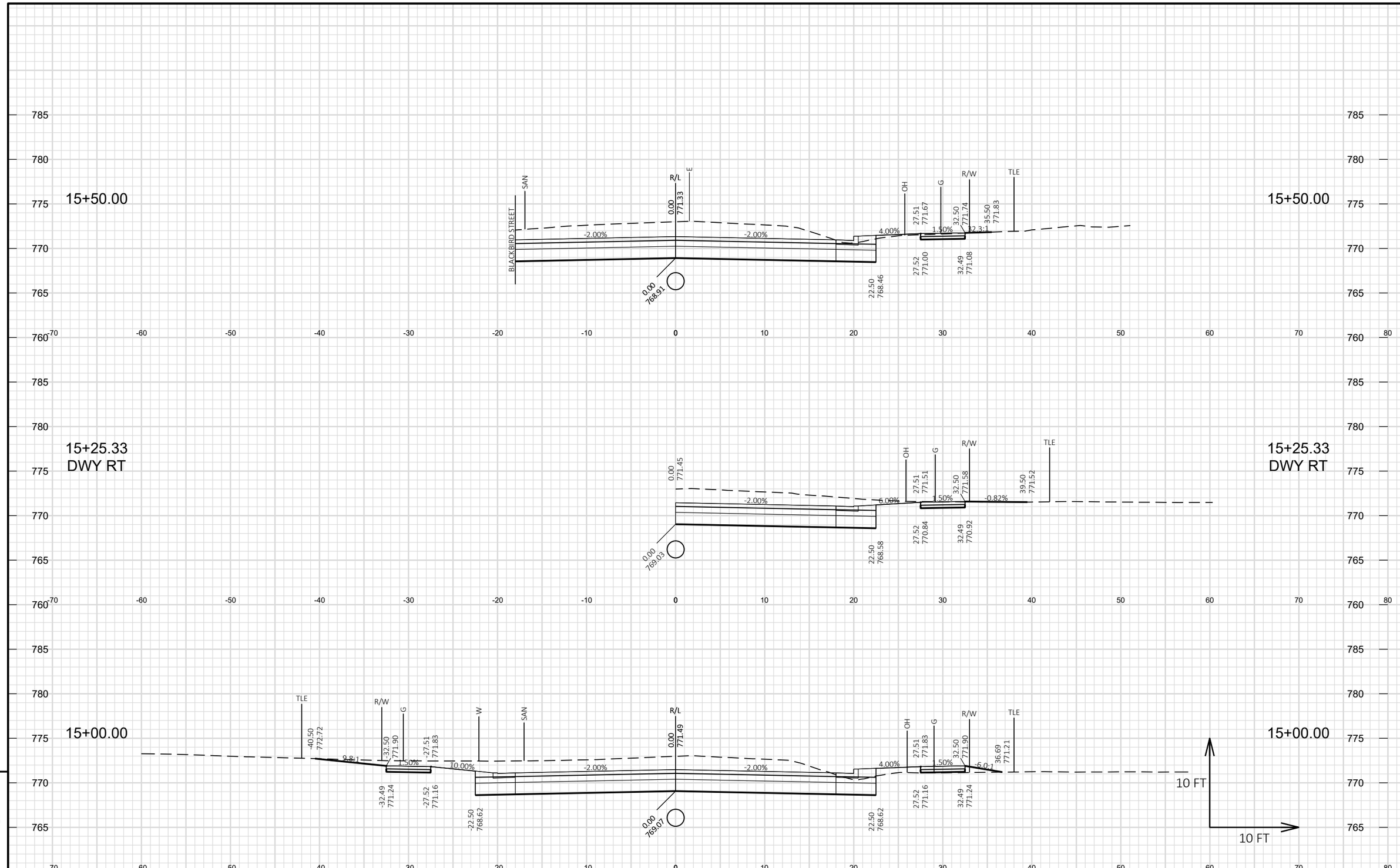

PROJECT NO: 4986-00-65	HWY: MINNESOTA AVENUE	COUNTY: FOND DU LAC	CROSS SECTIONS: MINNESOTA AVENUE	SHEET 127	E

FILE NAME : S:\CURRPROJ\FONDDUCO\NORTH FDL, VILLAGE OF\MINNESOTA AVE\CIVIL3D\49860064\SHEETS\49860065-090201-XS.DWG
LAYOUT NAME - 106-Minnesota
PLOT DATE : 7/29/2025 1:31 PM
PLOT BY : AARON SARAUER
PLOT NAME :
PLOT SCALE : 1 IN:10 FT HORZ. / 1 IN:10 FT VERT.
WISDOT/CADDS SHEET 49

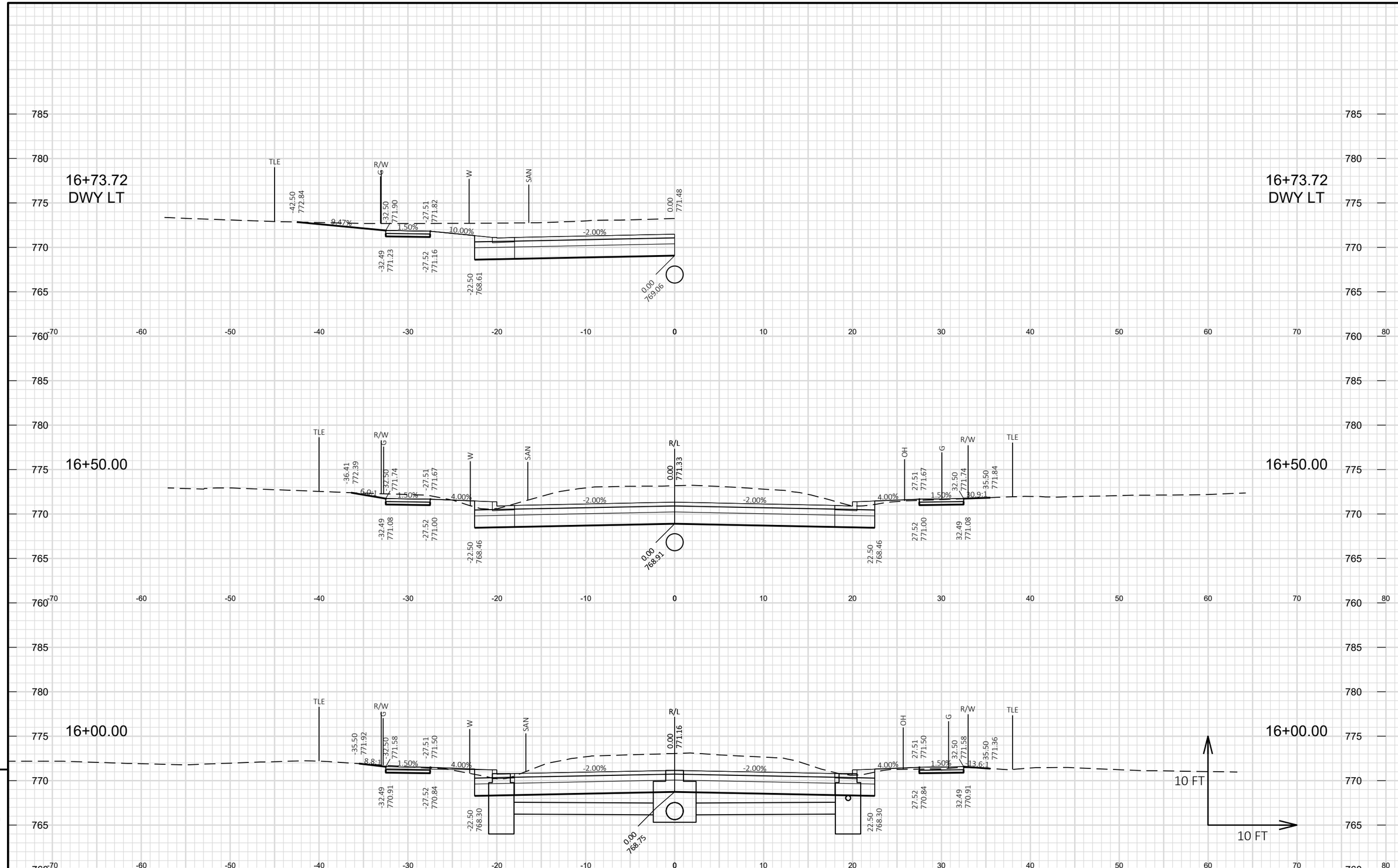

9

9

PROJECT NO: 4986-00-65	HWY: MINNESOTA AVENUE	COUNTY: FOND DU LAC	CROSS SECTIONS: MINNESOTA AVENUE	SHEET 128	E

FILE NAME : S:\CURRPROJ\FONDDUCO\NORTH FDL, VILLAGE OF\MINNESOTA AVE\CIVIL3D\49860064\SHEETS\49860065-090201-XS.DWG
LAYOUT NAME - 107-Minnesota

PLOT DATE : 7/29/2025 1:31 PM PLOT BY : AARON SARAUER PLOT NAME : **PLOT SCALE :** 1 IN:10 FT HORZ. / 1 IN:10 FT VERT.

WISDOT/CADDS SHEET 49

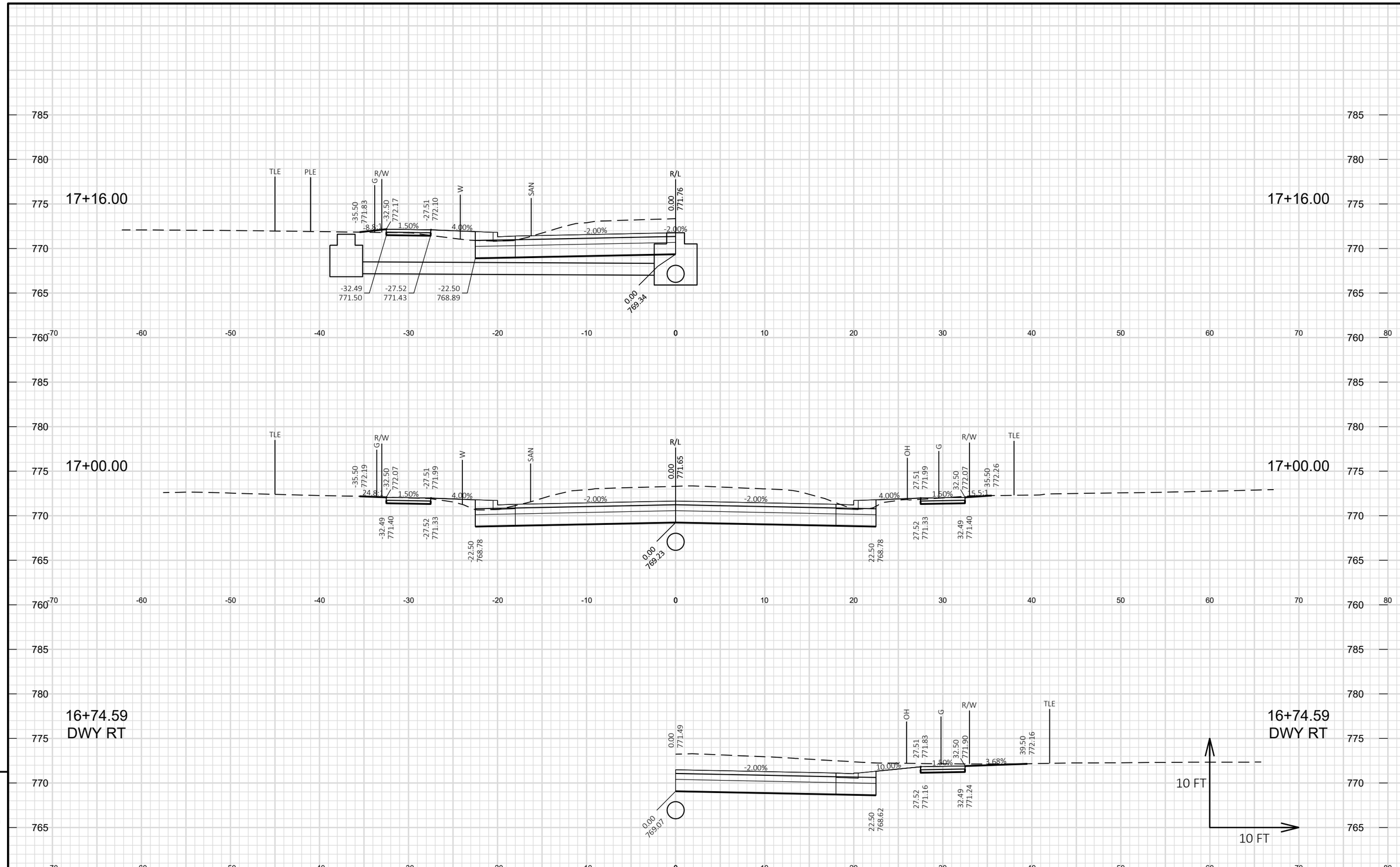

PROJECT NO: 4986-00-65	HWY: MINNESOTA AVENUE	COUNTY: FOND DU LAC	CROSS SECTIONS: MINNESOTA AVENUE	SHEET 129	E

FILE NAME : S:\CURRPROJ\FONDDUCO\NORTH FDL, VILLAGE OF\MINNESOTA AVE\CIVIL3D\49860064\SHEETS\49860065-090201-XS.DWG
LAYOUT NAME - 108-Minnesota
PLOT DATE : 7/29/2025 1:31 PM PLOT BY : AARON SARAUER PLOT NAME : PLOT SCALE : 1 IN:10 FT HORZ. / 1 IN:10 FT VERT.
WISDOT/CADDS SHEET 49

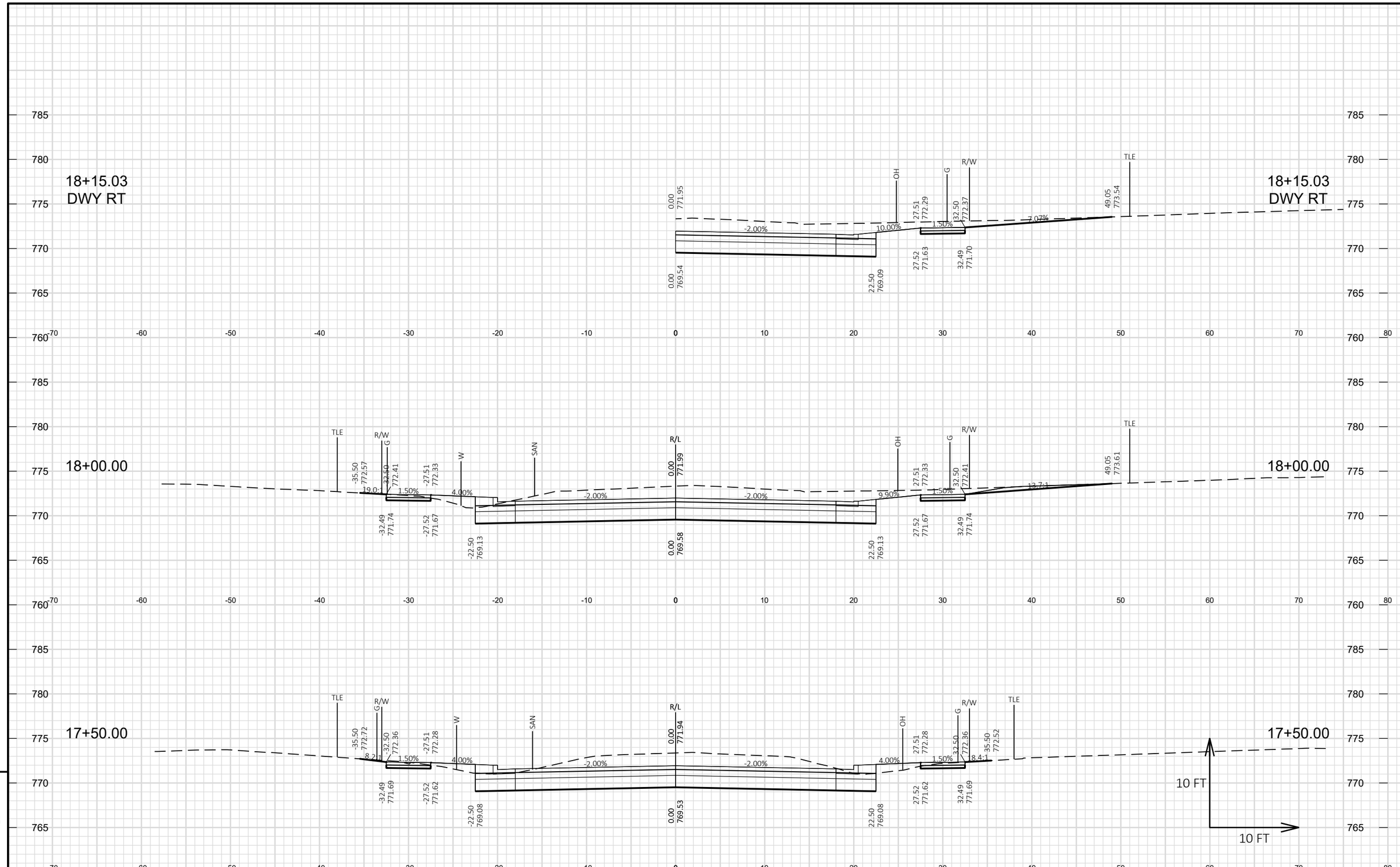

9

9

PROJECT NO: 4986-00-65	HWY: MINNESOTA AVENUE	COUNTY: FOND DU LAC	CROSS SECTIONS: MINNESOTA AVENUE	SHEET 130	E

FILE NAME : S:\CURRPROJ\FONDDUCO\NORTH FDL, VILLAGE OF\MINNESOTA AVE\CIVIL3D\49860064\SHEETS\49860065-090201-XS.DWG
LAYOUT NAME - 109-Minnesota
PLOT DATE : 7/29/2025 1:31 PM
PLOT BY : AARON SARAUER
PLOT NAME :
PLOT SCALE : 1 IN:10 FT HORZ. / 1 IN:10 FT VERT.
WISDOT/CADDS SHEET 49

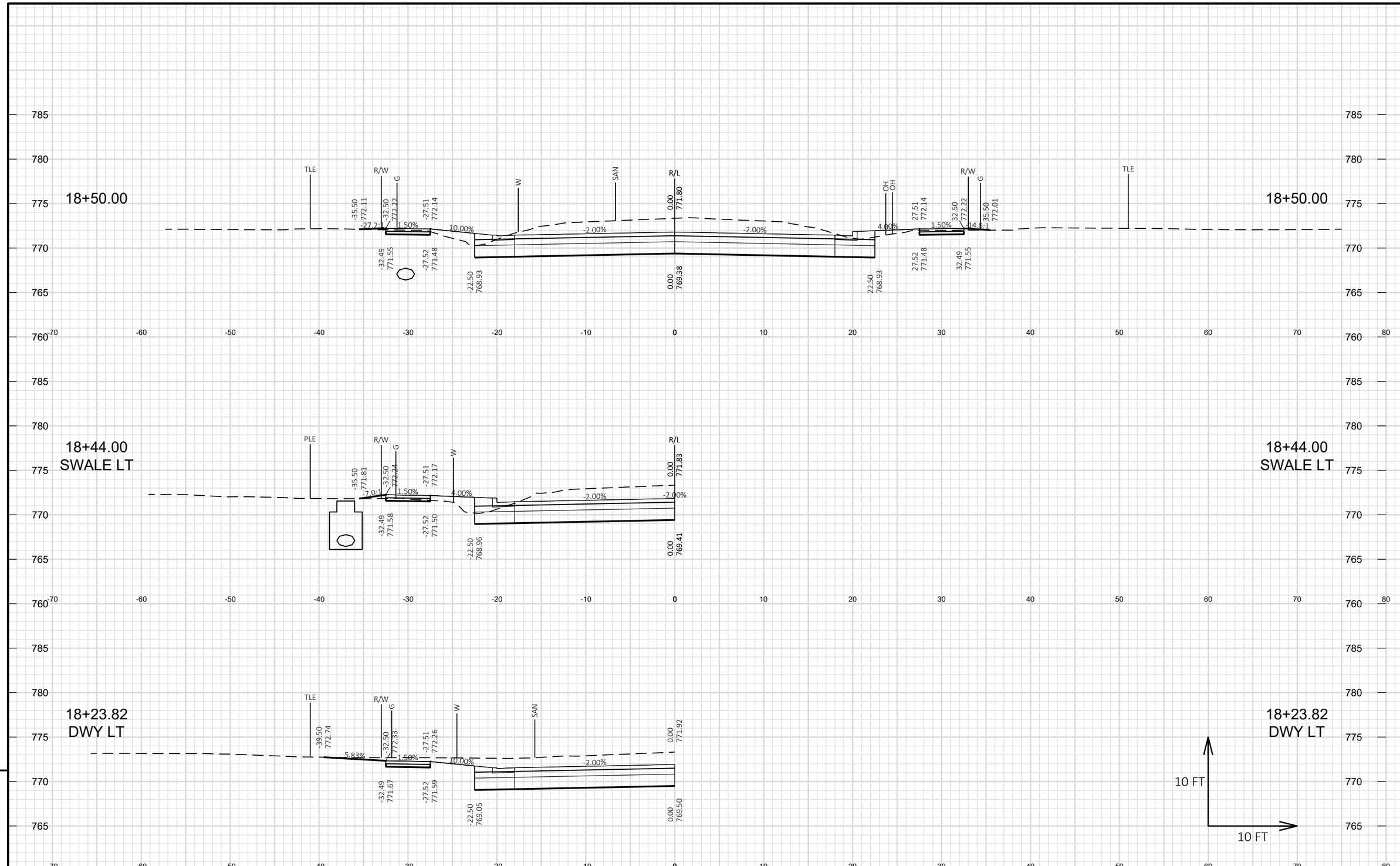

9

9

PROJECT NO: 4986-00-65	HWY: MINNESOTA AVENUE	COUNTY: FOND DU LAC	CROSS SECTIONS: MINNESOTA AVENUE	SHEET 131	E

FILE NAME : S:\CURRPROJ\FONDDUCO\NORTH FDL, VILLAGE OF\MINNESOTA AVE\CIVIL3D\49860064\SHEETS\49860065-090201-XS.DWG
LAYOUT NAME - 110-Minnesota

PLOT DATE : 7/29/2025 1:31 PM PLOT BY : AARON SARAUER PLOT NAME : **PLOT SCALE :** 1 IN:10 FT HORZ. / 1 IN:10 FT VERT.

WISDOT/CADDS SHEET 49

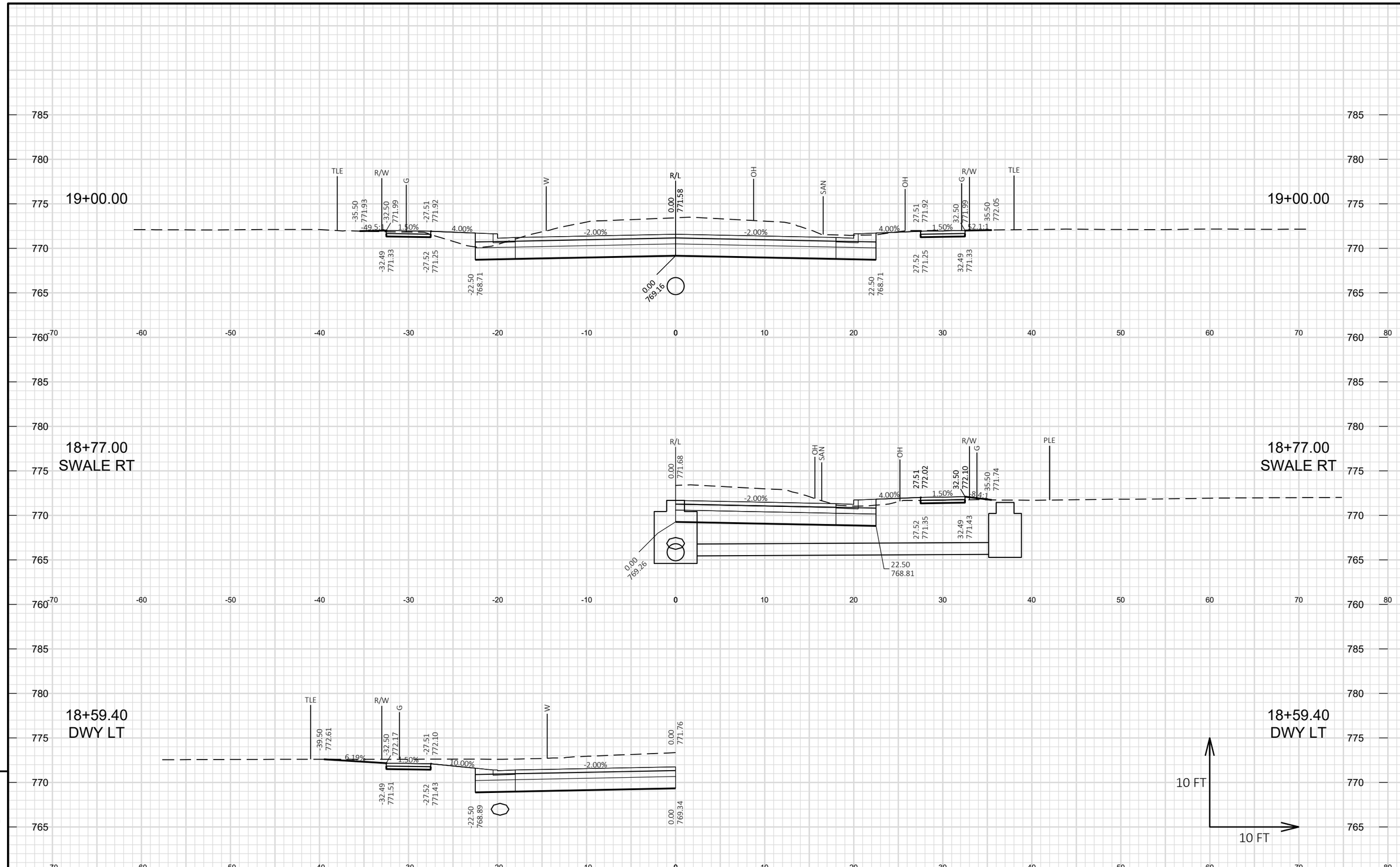

9

9

PROJECT NO: 4986-00-65	HWY: MINNESOTA AVENUE	COUNTY: FOND DU LAC	CROSS SECTIONS: MINNESOTA AVENUE	SHEET 132	E

FILE NAME : S:\CURRPROJ\FONDDUCO\NORTH FDL, VILLAGE OF\MINNESOTA AVE\CIVIL3D\49860064\SHEETS\49860065-090201-XS.DWG
LAYOUT NAME - 111-Minnesota

PLOT DATE : 7/29/2025 1:31 PM PLOT BY : AARON SARAUER PLOT NAME : **PLOT SCALE :** 1 IN:10 FT HORZ. / 1 IN:10 FT VERT.

WISDOT/CADDS SHEET 49

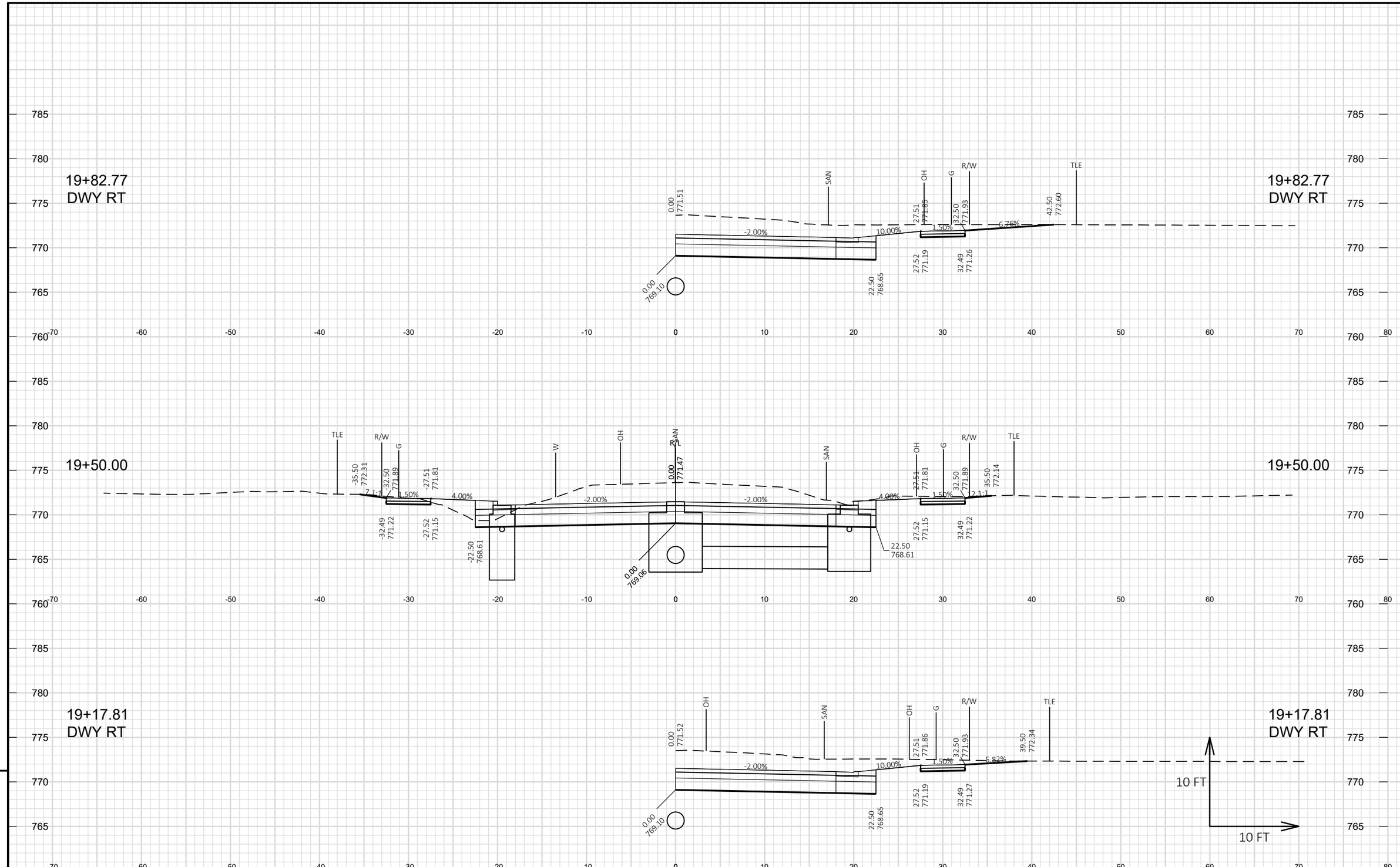

9

9

PROJECT NO: 4986-00-65	HWY: MINNESOTA AVENUE	COUNTY: FOND DU LAC	CROSS SECTIONS: MINNESOTA AVENUE	SHEET 133	E

FILE NAME : S:\CURRPROJ\FONDDUCO\NORTH FDL, VILLAGE OF\MINNESOTA AVE\CIVIL3D\49860064\SHEETS\49860065-090201-XS.DWG
LAYOUT NAME - 112-Minnesota

PLOT DATE : 7/29/2025 1:31 PM PLOT BY : AARON SARAUER PLOT NAME : **PLOT SCALE :** 1 IN:10 FT HORZ. / 1 IN:10 FT VERT.

WISDOT/CADDS SHEET 49

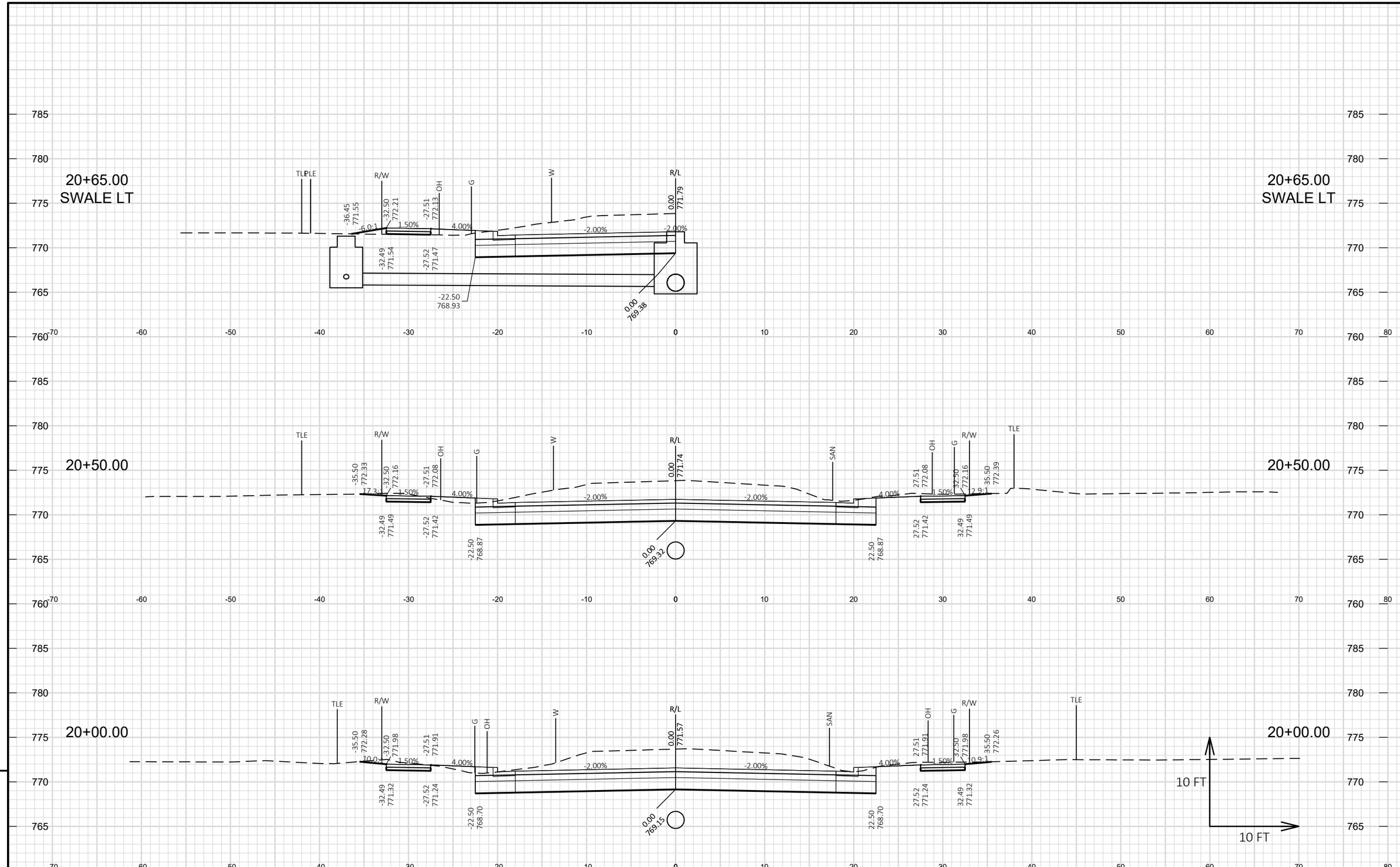

9

9

PROJECT NO: 4986-00-65	HWY: MINNESOTA AVENUE	COUNTY: FOND DU LAC	CROSS SECTIONS: MINNESOTA AVENUE	SHEET 134	E

FILE NAME : S:\CURRPROJ\FONDDUCO\NORTH FDL, VILLAGE OF\MINNESOTA AVE\CIVIL3D\49860064\SHEETS\49860065-090201-XS.DWG
LAYOUT NAME - 113-Minnesota

PLOT DATE : 7/29/2025 2:09 PM PLOT BY : AARON SARAUER PLOT NAME : **PLOT SCALE :** 1 IN:10 FT HORZ. / 1 IN:10 FT VERT.

WISDOT/CADDS SHEET 49

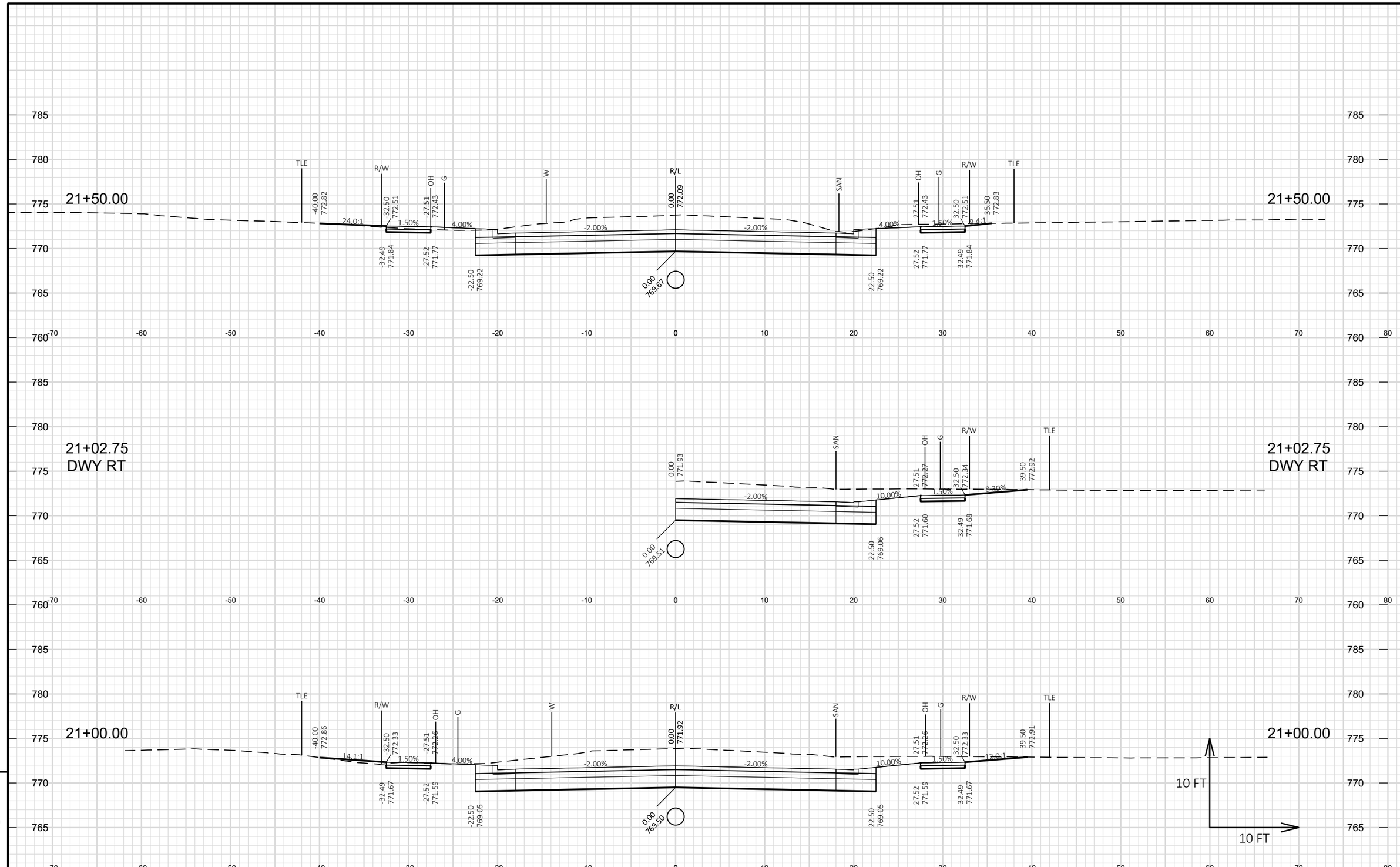

9

9

PROJECT NO: 4986-00-65	HWY: MINNESOTA AVENUE	COUNTY: FOND DU LAC	CROSS SECTIONS: MINNESOTA AVENUE	SHEET 135	E

FILE NAME : S:\CURRPROJ\FONDDUCO\NORTH FDL, VILLAGE OF\MINNESOTA AVE\CIVIL3D\49860064\SHEETS\49860065-090201-XS.DWG
LAYOUT NAME - 114-Minnesota

PLOT DATE : 7/29/2025 1:31 PM PLOT BY : AARON SARAUER PLOT NAME : **PLOT SCALE :** 1 IN:10 FT HORZ. / 1 IN:10 FT VERT.

WISDOT/CADDS SHEET 49

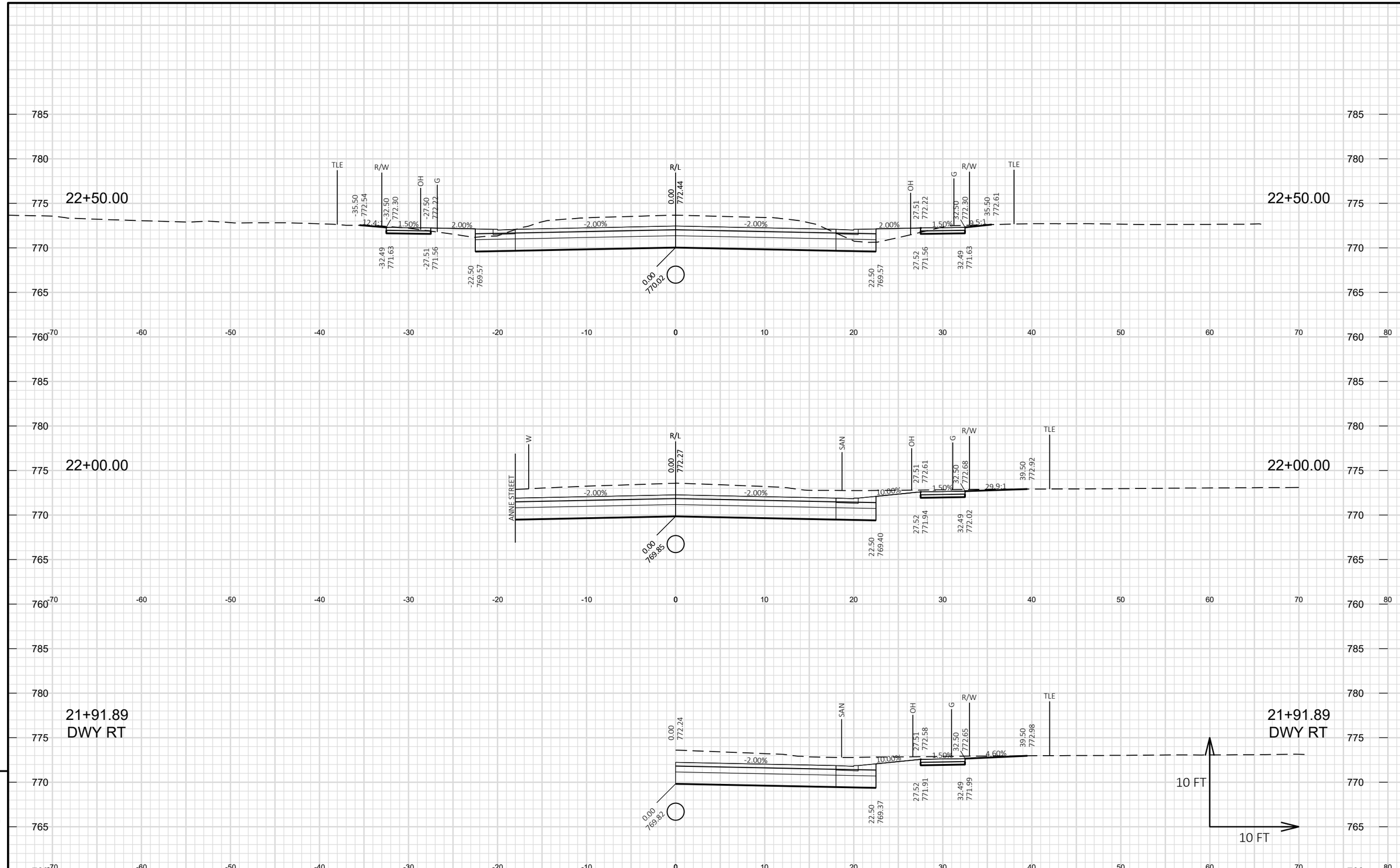

9

9

PROJECT NO: 4986-00-65	HWY: MINNESOTA AVENUE	COUNTY: FOND DU LAC	CROSS SECTIONS: MINNESOTA AVENUE	SHEET 136	E

FILE NAME : S:\CURRPROJ\FONDDUCO\NORTH FDL, VILLAGE OF\MINNESOTA AVE\CIVIL3D\49860064\SHEETS\49860065-090201-XS.DWG
LAYOUT NAME - 115-Minnesota
PLOT DATE : 7/29/2025 1:31 PM
PLOT BY : AARON SARAUER
PLOT NAME :
PLOT SCALE : 1 IN:10 FT HORZ. / 1 IN:10 FT VERT.
WISDOT/CADDS SHEET 49

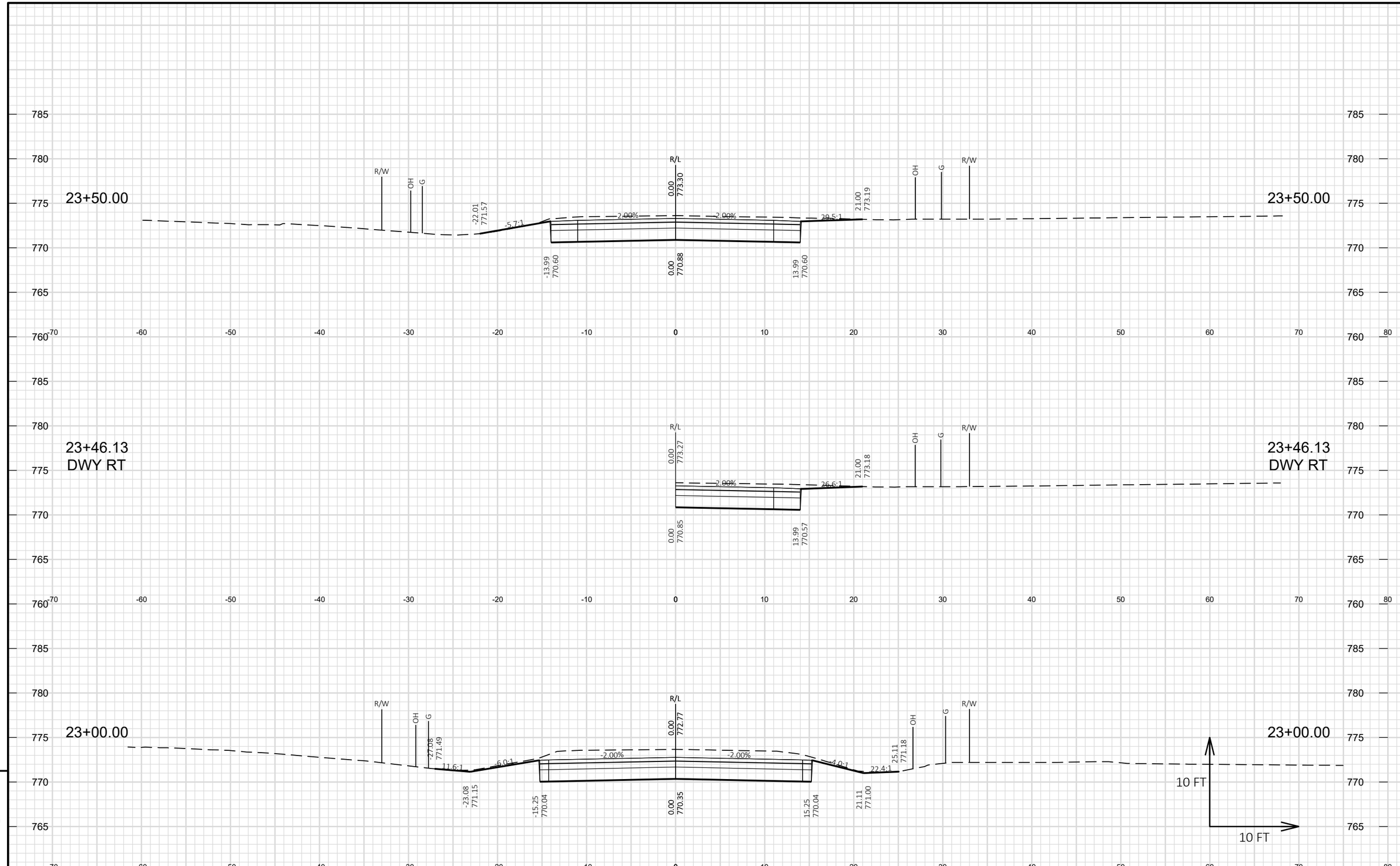

9

9

PROJECT NO: 4986-00-65	HWY: MINNESOTA AVENUE	COUNTY: FOND DU LAC	CROSS SECTIONS: MINNESOTA AVENUE	SHEET 137	E

FILE NAME : S:\CURRPROJ\FONDDUCO\NORTH FDL, VILLAGE OF\MINNESOTA AVE\CIVIL3D\49860064\SHEETS\49860065-090201-XS.DWG
LAYOUT NAME - 116-Minnesota
PLOT DATE : 7/29/2025 1:31 PM PLOT BY : AARON SARAUER PLOT NAME : PLOT SCALE : 1 IN:10 FT HORZ. / 1 IN:10 FT VERT.
WISDOT/CADDS SHEET 49

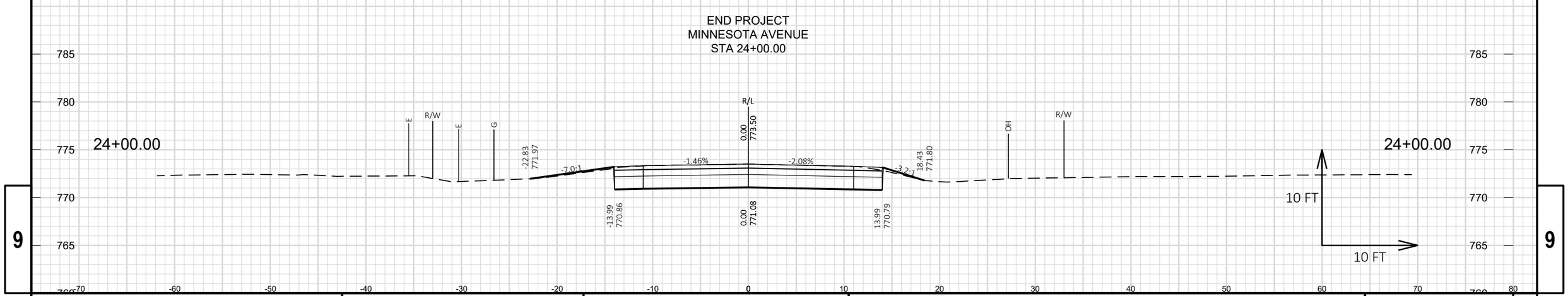

PROJECT NO: 4986-00-65	HWY: MINNESOTA AVENUE	COUNTY: FOND DU LAC	CROSS SECTIONS: MINNESOTA AVENUE	SHEET 138	E

FILE NAME : S:\CURRPROJ\FONDDUCO\NORTH FDL, VILLAGE OF\MINNESOTA AVE\CIVIL3D\49860064\SHEETS\49860065-090201-XS.DWG
LAYOUT NAME - 117-Minnesota
PLOT DATE : 7/29/2025 1:31 PM
PLOT BY : AARON SARAUER
PLOT NAME :
PLOT SCALE : 1 IN:10 FT HORZ. / 1 IN:10 FT VERT.
WISDOT/CADDS SHEET 49

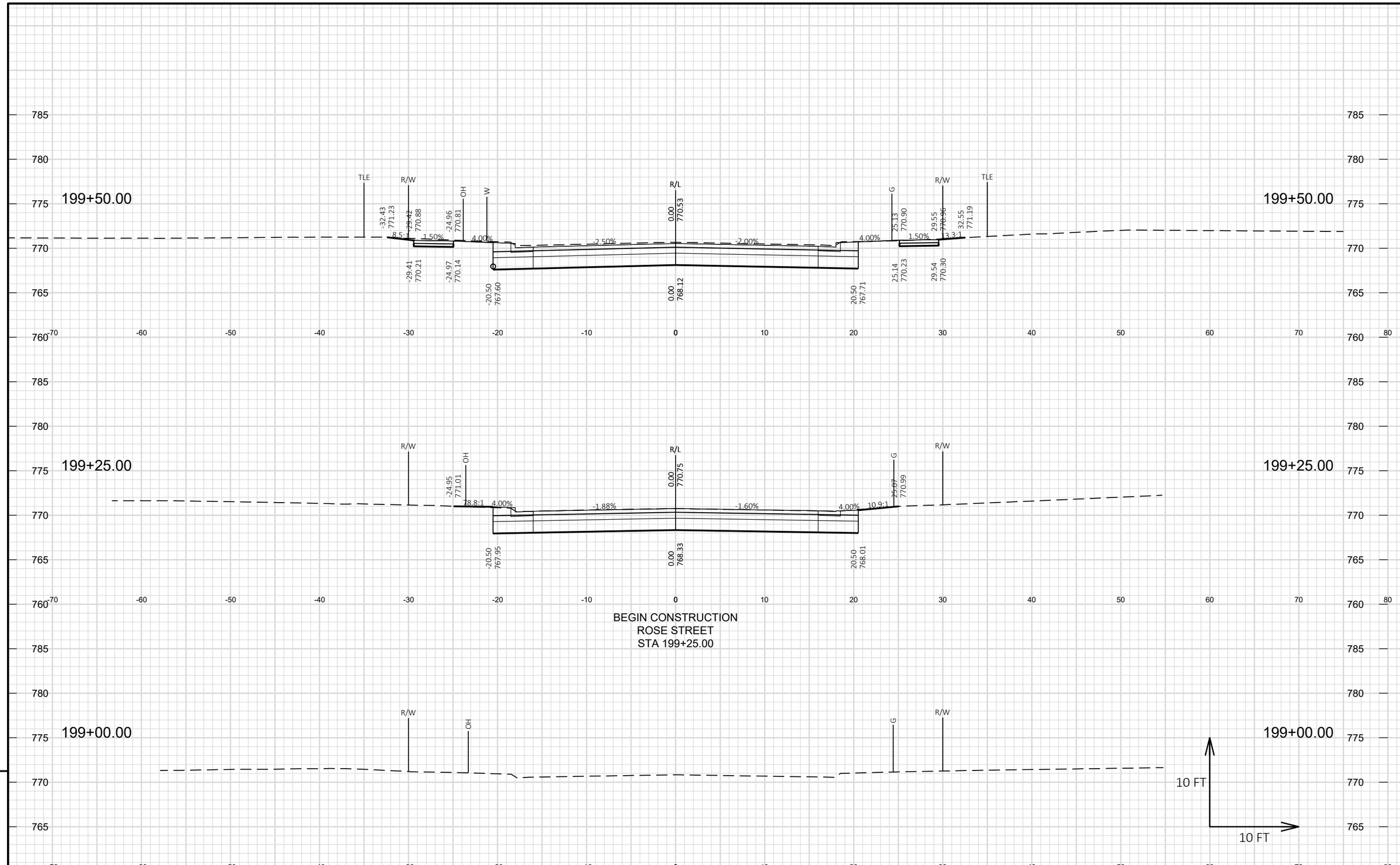

PROJECT NO: 4986-00-65	HWY: MINNESOTA AVENUE	COUNTY: FOND DU LAC	CROSS SECTIONS: ROSE STREET	SHEET 139	E

FILE NAME : S:\CURRPROJ\FONDDUCO\NORTH FDL, VILLAGE OF\MINNESOTA AVE\CIVIL3D\49860064\SHEETS\49860065-090201-XS.DWG
LAYOUT NAME - 300-Rose
PLOT DATE : 7/29/2025 1:31 PM
PLOT BY : AARON SARAUER
PLOT NAME :
PLOT SCALE : 1 IN:10 FT HORZ. / 1 IN:10 FT VERT.
WISDOT/CADDS SHEET 49

END CONSTRUCTION
ROSE STREET
STA 200+00.00

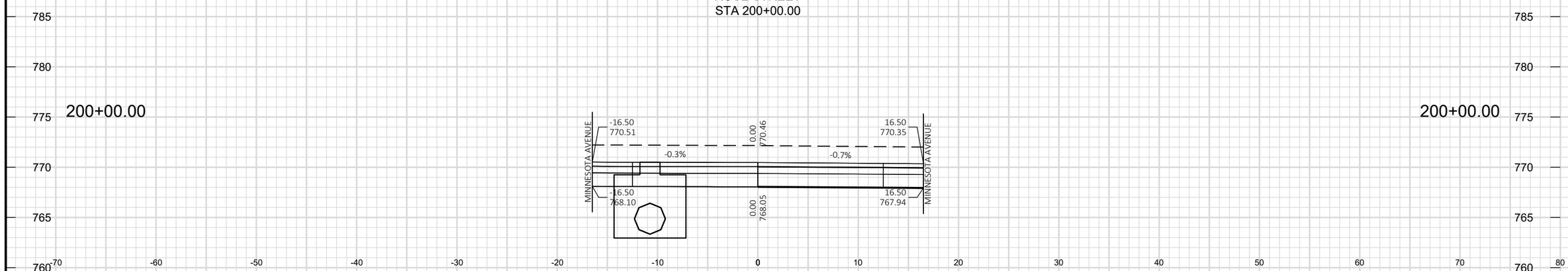

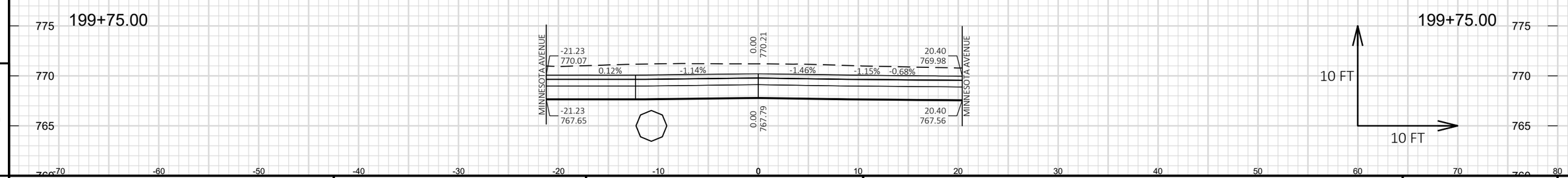

9

9

PROJECT NO: 4986-00-65	HWY: MINNESOTA AVENUE	COUNTY: FOND DU LAC	CROSS SECTIONS: ROSE STREET	SHEET 140	E

FILE NAME : S:\CURRPROJ\FONDDUCO\NORTH FDL, VILLAGE OF\MINNESOTA AVE\CIVIL3D\49860064\SHEETS\49860065-090201-XS.DWG
LAYOUT NAME - 301-Rose
PLOT DATE : 7/29/2025 1:31 PM PLOT BY : AARON SARAUER PLOT NAME : **PLOT SCALE :** 1 IN:10 FT HORZ. / 1 IN:10 FT VERT.

WISDOT/CADDS SHEET 49

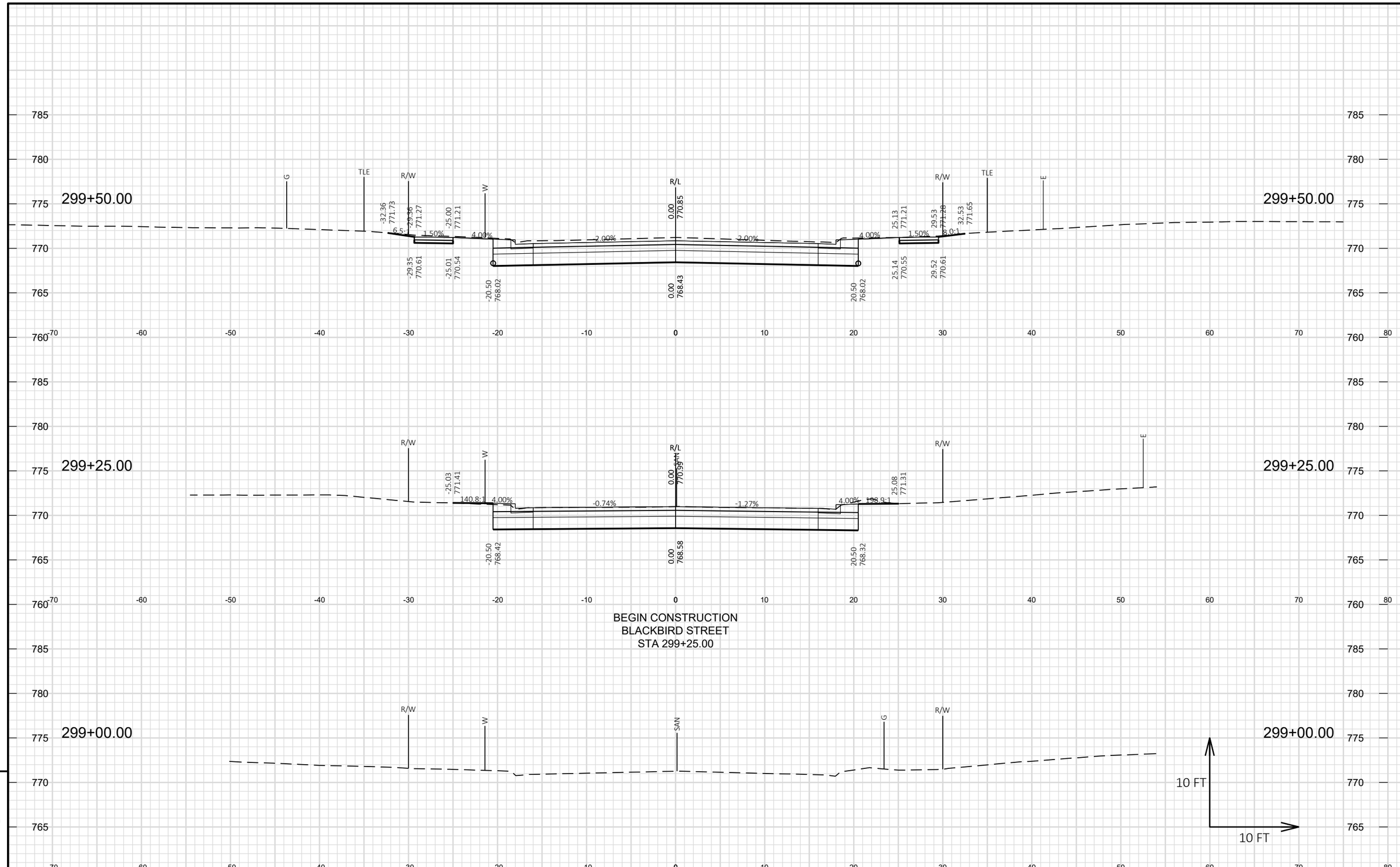

9

9

PROJECT NO: 4986-00-65	HWY: MINNESOTA AVENUE	COUNTY: FOND DU LAC	CROSS SECTIONS: BLACKBIRD STREET	SHEET 141	E

FILE NAME : S:\CURRPROJ\FONDDUCO\NORTH FDL, VILLAGE OF\MINNESOTA AVE\CIVIL3D\49860064\SHEETS\49860065-090201-XS.DWG
LAYOUT NAME - 400-Blackbird
PLOT DATE : 7/29/2025 1:31 PM
PLOT BY : AARON SARAUER
PLOT NAME :
PLOT SCALE : 1 IN:10 FT HORZ. / 1 IN:10 FT VERT.
WISDOT/CADDS SHEET 49

END CONSTRUCTION
BLACKBIRD STREET
STA 300+00.00

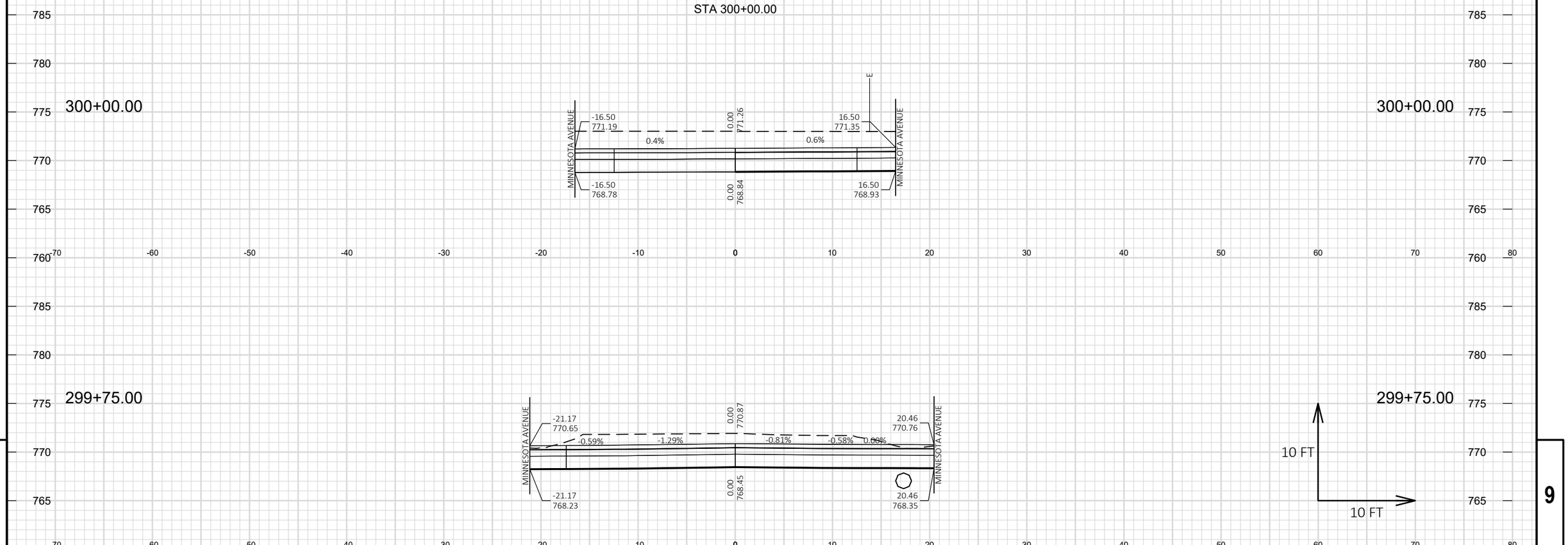

9

9

PROJECT NO: 4986-00-65	HWY: MINNESOTA AVENUE	COUNTY: FOND DU LAC	CROSS SECTIONS: BLACKBIRD STREET	SHEET 142	E

FILE NAME : S:\CURRPROJ\FONDDUCO\NORTH FDL, VILLAGE OF\MINNESOTA AVE\CIVIL3D\49860064\SHEETS\49860065-090201-XS.DWG
LAYOUT NAME - 401-Blackbird
PLOT DATE : 7/29/2025 1:31 PM
PLOT BY : AARON SARAUER
PLOT NAME :
PLOT SCALE : 1 IN:10 FT HORZ. / 1 IN:10 FT VERT.
WISDOT/CADDS SHEET 49

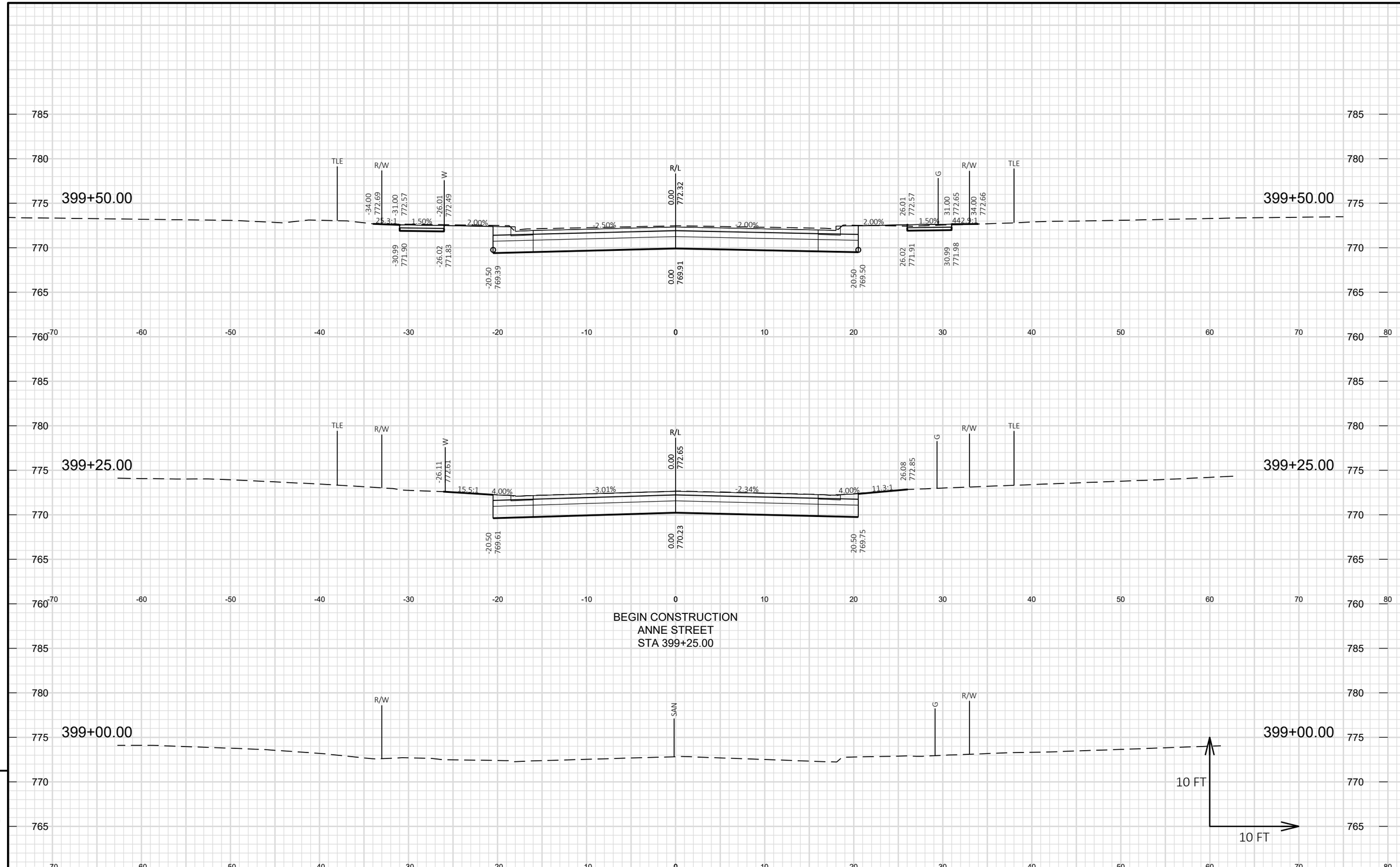

9

PROJECT NO: 4986-00-65	HWY: MINNESOTA AVENUE	COUNTY: FOND DU LAC	CROSS SECTIONS: ANNE STREET	SHEET 143	E

FILE NAME : S:\CURRPROJ\FONDDUCO\NORTH FDL, VILLAGE OF\MINNESOTA AVE\CIVIL3D\49860064\SHEETS\49860065-090201-XS.DWG
LAYOUT NAME - 500-Anne
PLOT DATE : 7/29/2025 1:31 PM
PLOT BY : AARON SARAUER
PLOT NAME :
PLOT SCALE : 1 IN:10 FT HORZ. / 1 IN:10 FT VERT.
WISDOT/CADDS SHEET 49

END CONSTRUCTION
ANNE STREET
STA 400+00.00

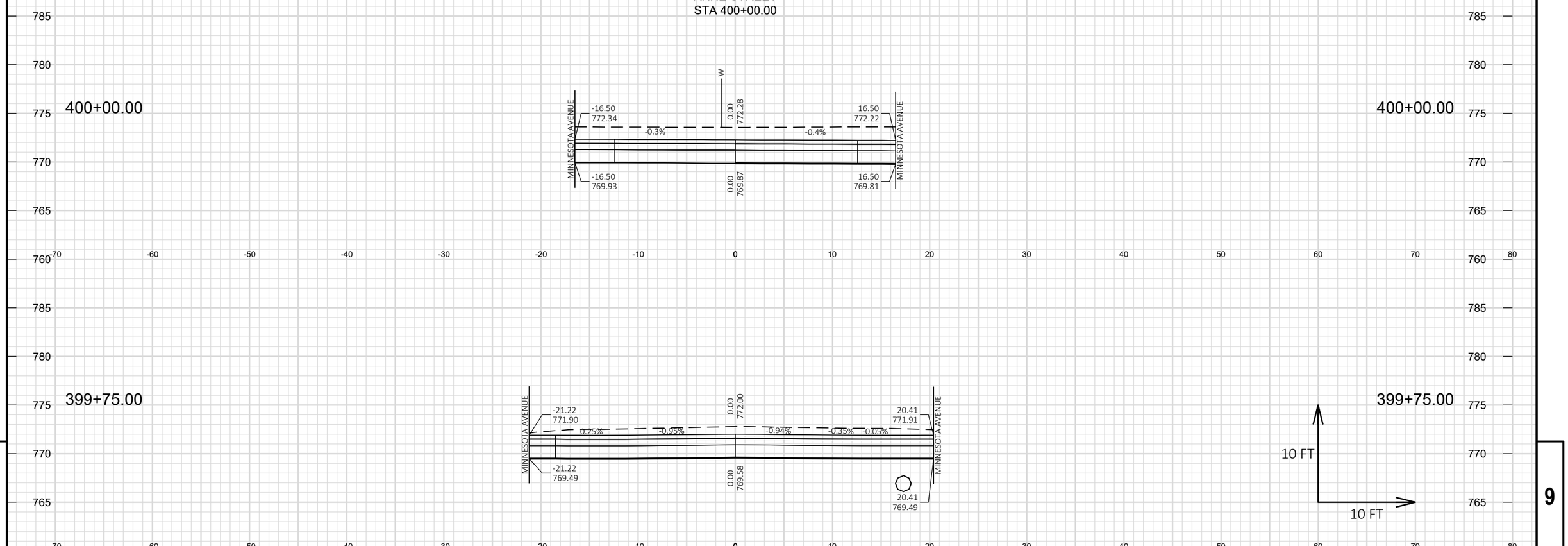

PROJECT NO: 4986-00-65	HWY: MINNESOTA AVENUE	COUNTY: FOND DU LAC	CROSS SECTIONS: ANNE STREET	SHEET 144	E

FILE NAME : S:\CURRPROJ\FONDDUCO\NORTH FDL, VILLAGE OF\MINNESOTA AVE\CIVIL3D\49860064\SHEETS\49860065-090201-XS.DWG
LAYOUT NAME - 501-Anne
PLOT DATE : 7/29/2025 1:31 PM PLOT BY : AARON SARAUER PLOT NAME : PLOT SCALE : 1 IN:10 FT HORZ. / 1 IN:10 FT VERT.
WISDOT/CADDS SHEET 49

Notes

Wisconsin Department of Transportation

Dedicated people creating transportation solutions through innovation and exceptional service.

http://www.dot.wisconsin.gov