MAD

PROJECT ID: 5760-00-72

WITH: 5760-00-73

COUNTY: RICHLAND & SAUK

JANUARY 2026

ORDER OF SHEETS

TOTAL SHEETS = 140

STATE PROJECT	FEDERAL PROJECT	
	PROJECT	CONTRACT
5760-00-72	WISC 2026135	1

STATE OF WISCONSIN
DEPARTMENT OF TRANSPORTATION

PLAN OF PROPOSED IMPROVEMENT

LONE ROCK - STH 154

WEST JUNCTION CTH B TO STH 154

STH 130
SAUK COUNTY

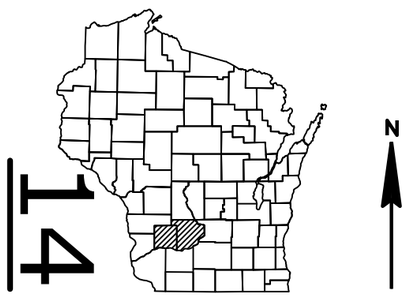

N

STATE PROJECT NUMBER

5760-00-72

END PROJECT

STA. 622+52.62

STRUCTURE B-56-103

STRUCTURE B-52-021

BEGIN PROJECT

STA. 10+00

Y = 164,896.04

X = 521,805.62

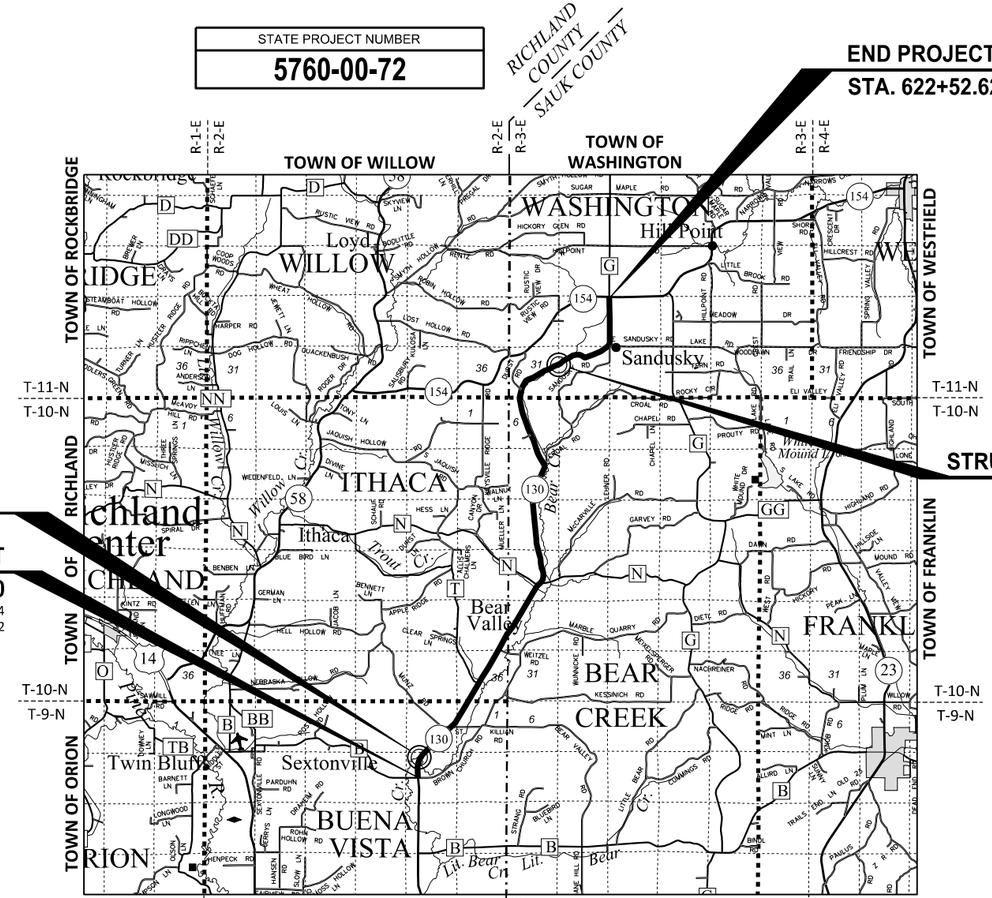

LAYOUT

SCALE 0 3 MI

TOTAL NET LENGTH OF CENTERLINE = 11.601 MI

HORIZONTAL POSITIONS SHOWN ON THIS PLAN ARE WISCONSIN COUNTY COORDINATES, SAUK COUNTY, NAD83 (2011), IN U.S. SURVEY FEET. VALUES ARE GRID COORDINATES, GRID BEARINGS, AND GRID DISTANCES. GRID DISTANCE MAY BE USED AS GROUND DISTANCES.

ELEVATION SHOWN ON THIS PLAN ARE REFERENCE TO THE NORTH AMERICAN VERTICAL DATUM OF 1988, NAVD88 (2012).

DESIGN DESIGNATION

A.A.D.T.	(2026)	=	520
A.A.D.T.	(2046)	=	580
D.H.V.		=	54
D.D.		=	60/40
T.		=	12.6%
DESIGN SPEED		=	55 MPH (STA. 10+00 - STA. 163+95) 35 MPH (STA. 163+95 - STA. 178+65) 55 MPH (STA. 178+65 - STA. 622+52.62)
ESALS		=	140,000

CONVENTIONAL SYMBOLS

PLAN

CORPORATE LIMITS

PROPERTY LINE

LOT LINE

LIMITED HIGHWAY EASEMENT

EXISTING RIGHT OF WAY

PROPOSED OR NEW R/W LINE

SLOPE INTERCEPT

REFERENCE LINE (300'EB')

EXISTING CULVERT

PROPOSED CULVERT (Box or Pipe)

COMBUSTIBLE FLUIDS (CAUTION)

MARSH AREA

WOODED OR SHRUB AREA

PROFILE

GRADE LINE

ORIGINAL GROUND

MARSH OR ROCK PROFILE (To be noted as such) (ROCK)

SPECIAL DITCH (LABEL)

GRADE ELEVATION (95.36)

CULVERT (Profile View)

UTILITIES

ELECTRIC — E

FIBER OPTIC — FO

GAS — G

SANITARY SEWER — SAN

STORM SEWER — SS

TELEPHONE — T

WATER — W

UTILITY PEDESTAL

POWER POLE

TELEPHONE POLE

ORIGINAL PLANS PREPARED BY

JEWELL associates engineers, inc

Engineers - Architects - Surveyors

WISCONSIN DANIEL J. TRACY E-47578-6 MUSCODA, WI PROFESSIONAL ENGINEER

7/14/2025

STATE OF WISCONSIN
DEPARTMENT OF TRANSPORTATION

PREPARED BY

Surveyor	JEWELL ASSOCIATES ENGINEERS, INC.
Designer	JEWELL ASSOCIATES ENGINEERS, INC.
Project Manager	JOSHUA KOEBERNICK, P.E.
Regional Examiner	SW REGION
Regional Supervisor	MARC SCHWEIGER, P.E.

APPROVED FOR THE DEPARTMENT

DATE: 7/14/2025 Joshua Koebernick P.E. (Signature)

E

2

GENERAL NOTES

NO TREES OR SHRUBS ARE TO BE REMOVED UNLESS SUCH TREES OR SHRUBS HAVE FIRST BEEN INDICATED FOR REMOVAL BY THE ENGINEER IN THE FIELD.

EROSION CONTROL ITEMS IN THE MISC. QUAN. ARE SUGGESTED. EXACT LOCATIONS WILL BE DETERMINED BY THE ENGINEER IN THE FIELD. MAINTAIN EROSION CONTROL ITEMS UNTIL SUCH TIME AS THE ENGINEER DETERMINES THE MEASURE IS NO LONGER NECESSARY. PROTECT WETLANDS AND OTHER WATERWAYS THAT ARE PRESENT WITHIN THE PROJECT LIMITS.

DISTURBED AREAS SHOWN WITHIN THE RIGHT-OF-WAY, EXCEPT THE AREAS WITHIN THE FINISHED SHOULDER POINTS ARE TO BE FERTILIZED (TYPE B), SEEDED (USE SEED MIX NO. 30 IN RURAL AREAS AND USE SEED MIX NO. 40 IN URBAN AREAS), AND EROSION MAT URBAN CLASS I TYPE B OR MULCH AS DIRECTED BY THE ENGINEER. ALL POST CONSTRUCTION WET AREAS SHALL BE SEEDED WITH SEEDING MIX NO. 60. DO NOT FERTILIZE WET AREAS.

EXISTING SHOULDER AGGREGATE SHALL BE INCORPORATED INTO THE NEW SHOULDERS UNLESS OTHERWISE DIRECTED BY THE ENGINEER IN THE FIELD.

WHEN THE QUANTITY OF THE ITEM OF BASE AGGREGATE DENSE OR HMA PAVEMENT IS MEASURED FOR PAYMENT BY THE TON, THE DEPTH OR THICKNESS OF THE LAYER SHOWN ON THE PLANS IS APPROXIMATE, AND THE ACTUAL THICKNESS WILL DEPEND ON THE DISTRIBUTION OF THE MATERIAL AS DIRECTED BY THE ENGINEER IN THE FIELD.

REMOVAL OF ASPHALTIC SURFACES WHERE AN ABUTTING ASPHALTIC SURFACE IS TO REMAIN IN PLACE SHALL REQUIRE A VERTICAL EDGE MEETING THE APPROVAL OF THE ENGINEER IN THE FIELD.

HMA PAVEMENT QUANTITIES WERE CALCULATED USING 112 LB/SY/IN.

3.5-INCHES OF HMA PAVEMENT SHALL BE CONSTRUCTED WITH TWO 1.75-INCH LAYERS OF HMA PAVEMENT 4 LT 58-28 S.

PRIOR TO MILL AND REPLAY OPERATION, CUT OUT SHOULDER AGGREGATE TO MILL AND RELAY DEPTH.

PAVING LIMITS AT INTERSECTIONS ARE TO BE DETERMINED IN THE FIELD BY THE ENGINEER.

THE EXACT LOCATIONS AND LIMITS OF PRIVATE ENTRANCES, COMMERCIAL, AND FIELD ENTRANCES SHALL BE DETERMINED BY THE ENGINEER IN THE FIELD.

APPLY TACK COAT AT A RATE OF 0.05 GAL/SY BETWEEN LAYERS OF HMA PAVEMENT AND AT A RATE OF 0.07 GAL/SY TO THE MILLED SURFACE.

THE CONTRACTOR'S PAVING OPERATIONS SHALL BE CONSISTENT WITH THE PLAN TYPICAL SECTIONS AND CONSTRUCTED TO PREVENT HMA LONGITUDINAL JOINTS FROM BEING LOCATED WITHIN A DRIVING, TURNING, PASSING OR PARKING LANE.

THE LOW SIDE SHOULDER SLOPE ON SUPERELEVATED SECTIONS EQUALS THE SUPERELEVATION WHEN THE SUPERELEVATION IS GREATER THAN 0.04 FT./FT. IF THE SUPERELEVATION IS LESS THAN OR EQUALS 0.04 FT./FT., THEN THE LOW SIDE SHOULDER SLOPE IS 0.04 FT./FT. THE HIGH SIDE SHOULDER SLOPE ON THE SUPERELEVATED SECTION EQUALS THE SUPERELEVATION.

CURVE DATA IS BASED ON THE ARC DEFINITION.

FLAGGERS SHALL BE IN SIGHT OF EACH OTHER OR IN DIRECT COMMUNICATION AT ALL TIMES. THEY SHALL BE EQUIPPED WITH STOP/SLOW PADDLES FASTENED ON SUPPORT STAFFS. WHEN THE FLAGGING OPERATION IS NOT IN EFFECT, ALL SIGNS RELATING TO THIS OPERATION SHALL BE COVERED OR REMOVED AND FACILITY RESTORED TO NORMAL OPERATIONS.

THERE ARE UTILITY FACILITIES WITHIN THE PROJECT AREA THAT ARE NOT SHOWN ON THE PLANS. THE CONTRACTOR SHALL COORDINATE THEIR CONSTRUCTION ACTIVITIES WITH A CALL TO DIGGERS HOTLINE AND/OR A DIRECT CALL TO THE UTILITIES THAT HAVE FACILITIES IN THE AREA. NOT ALL UTILITIES ARE MEMBERS OF DIGGERS HOTLINE.

IF THERE ARE UTILITY CONFLICTS WITH SIGNS OR OTHER WORK UNDER THIS PROJECT, THE CONTRACTOR WILL WORK AROUND THE UTILITY FACILITIES. UTILITY FACILITIES SHOWN ON THE PLAN ARE APPROXIMATE.

JACOB ROCKWEILER, P.E., WISCONSIN HEIGHT MODERNIZATION PROGRAM MANAGER WITH THE WISCONSIN DEPARTMENT OF TRANSPORTATION WHOSE PHONE NUMBER IS (608) 516-6362 AND EMAIL IS JACOB.ROCKWEILER@DOT.WI.GOV.

MILL AND PAVE ADJACENT TO MONUMENT WITHOUT DAMAGING THE MONUMENT.

CONTACTS

WISCONSIN DEPARTMENT OF TRANSPORTATION:

WisDOT PROJECT MANAGER
2101 WRIGHT STREET
MADISON, WI 53704
ATTN: JOSHUA KOEBERNICK, P.E.
OFFICE: (608) 246-3859
CELL: (608) 516-6542
EMAIL: Joshua.Koebernick@dot.wi.gov

DESIGN CONSULTANT:

JEWELL ASSOCIATES ENGINEERS, INC.
560 SUNRISE DRIVE
SPRING GREEN, WI 53588
ATTN: DAN TRACY, P.E.
PH: (608) 459-6052
CELL: (608) 604-6905
EMAIL: dan.tracy@jewellassoc.com

WDNR LIAISON:

STATE OF WISCONSIN
DNR SOUTH CENTRAL REGION HQ
3911 FISH HATCHERY ROAD
FITCHBURG, WI 53711
ATTN: ANDY BARTA
PH: (608) 275-3308
CELL: (608) 235-2955
EMAIL: Andrew.Barta@wisconsin.gov

UTILITIES

ELECTRICITY

ALLIANT ENERGY
ATTN: MIKE LONG
520 COMMERCE AVE.
BARABOO, WI 53913
OFFICE: (608) 356-0608
CELL: (608) 778-0038
EMAIL: michaellong@alliantenergy.com

COMMUNICATION LINE

FRONTIER COMMUNICATIONS
ATTN: CHRISTOPHER POLLACK
521 N 4TH ST.
WAUSAU, WI 54403
PH: (715) 847-1240
EMAIL: christopher.pollack@ftr.com

REEDSBURG UTILITY COMMISSION
ATTN: KEN LAS
501 UTILITY COURT
REEDSBURG, WI 53959
OFFICE: (608) 768-6450
CELL: (608) 415-9924
EMAIL: klas@rucls.net

WICONNECT
ATTN: DAVE BANGERT
2670F EAST MAIN ST
REEDSBURG, WI 53959
PH: (608) 524-2610
EMAIL: dave@ccwis.com

DIGGERS HOTLINE
Dial 811 or (800) 242-8511
www.DiggersHotline.com

* DENOTES UTILITY IS NOT A MEMBER OF DIGGERS HOTLINE

LIST OF STANDARD ABBREVIATIONS

ABUT	Abutment
AC	Acre
AGG	Aggregate
AH	Ahead
<	Angle
ASPH	Asphaltic
AVG	Average
ADT	Average Daily Traffic
BAD	Base Aggregate Dense
BK	Back
BF	Back Face
BM	Bench Mark
BR	Bridge
C or C/L	Center Line
CC	Center to Center
C.E.	Commercial Entrance
CTH	County Trunk Highway
CR	Creek
CR	Crushed
CY or CU YD	Cubic Yard
CP	Culvert Pipe
C & G	Curb and Gutter
D	Degree of Curve
DHV	Design Hour Volume
DIA	Diameter
E	East
X	East Grid Coordinate
ELEC	Electric (al)
EL or ELEV	Elevation
ESALS	Equivalent Single Axle Loads
EBS	Excavation Below Subgrade
FF	Face to Face
F.E.	Field Entrance
F	Fill
FG	Finished Grade
FL or F/L	Flow Line
FT	Foot
FTG	Footing
GN	Grid North
HT	Height
CWT	Hundredweight
HYD	Hydrant
INL	Inlet
ID	Inside Diameter
INV	Invert
IP	Iron Pipe or Pin
IRS	Iron Rod Set
JT	Joint
JCT	Junction
LHF	Left-Hand Forward
L	Length of Curve
LIN FT or LF	Linear Foot
LC	Long Chord of Curve
MH	Manhole
MB	Mailbox
ML or M/L	Match Line
N	North
Y	North Grid Coordinate
OD	Outside Diameter
PLE	Permanent Limited Easement
PT	Point
PC	Point of Curvature
PI	Point of Intersection
PRC	Point of Reverse Curvature
PT	Point of Tangency
POC	Point On Curve
POT	Point on Tangent
PVC	Polyvinyl Chloride
PCC	Portland Cement Concrete
LB	Pound
PSI	Pounds Per Square Inch
P.E.	Private Entrance
R	Radius
RR	Railroad
R	Range
RL or R/L	Reference Line
RP	Reference Point
RCCP	Reinforced Concrete Culvert Pipe
REQD	Required
RES	Residence or Residential
RW	Retaining Wall
RT	Right
RHF	Right-Hand Forward
R/W	Right-of-Way
RD	Road
R	River
RDWY	Roadway
SALV	Salvaged
SAN S	Sanitary Sewer
SEC	Section
SHLDR	Shoulder
SHR	Shrinkage
SW	Sidewalk
S	South
SQ	Square
SF or SQ FT	Square Feet
SY or SQ YD	Square Yard
STD	Standard
SDD	Standard Detail Drawings
STH	State Trunk Highways
STA	Station
SS	Storm Sewer
SG	Subgrade
SE	Superelevation
SL or S/L	Survey Line
SV	Septic Vent
T	Tangent
TEL	Telephone
TEMP	Temporary
TI	Temporary Interest
TLE	Temporary Limited Easement
t	Ton
T or TN	Town
TRANS	Transition
TL or T/L	Transit Line
T	Trucks (percent of)
TYP	Typical
UNCL	Unclassified
UG	Underground Cable
USH	United States Highway
VAR	Variable
V	Velocity or Design Speed
VERT	Vertical
VC	Vertical Curve
VOL	Volume
WM	Water Main
WV	Water Valve
W	West
WB	Westbound
YD	Yard

	HYDROLOGIC SOIL GROUP											
	A			B			C			D		
	SLOPE RANGE (PERCENT)			SLOPE RANGE (PERCENT)			SLOPE RANGE (PERCENT)			SLOPE RANGE (PERCENT)		
LAND USE	0-2	2-6	6 & OVER	0-2	2-6	6 & OVER	0-2	2-6	6 & OVER	0-2	2-6	6 & OVER
ROW CROPS	.08 .22	.16 .30	.22 .38	.12 .26	.20 .34	.27 .44	.15 .30	.24 .37	.33 .50	.19 .34	.28 .41	.38 .56
MEDIAN STRIP TURF	.19 .24	.20 .26	.24 .30	.19 .25	.22 .28	.26 .33	.20 .26	.23 .30	.30 .37	.20 .27	.25 .32	.30 .40
SIDE SLOPE TURF			.25 .32			.27 .34			.28 .36			.30 .38
PAVEMENT												
ASPHALT	.70 - .95											
CONCRETE	.80 - .95											
BRICK	.70 - .80											
DRIVES, WALKS	.75 - .85											
ROOFS	.75 - .95											
GRAVEL ROADS, SHOULDERS	.40 - .60											

TOTAL PROJECT AREA= 92.81 ACRES
TOTAL AREA EXPECTED TO BE DISTURBED BY CONSTRUCTION ACTIVITIES = 1.25 ACRES

ORDER OF SECTION 2 SHEETS:

- WRITTEN MATERIAL
- PROJECT OVERVIEW
- TYPICAL SECTIONS
- CONSTRUCTION DETAILS (INCLUDES EROSION CONTROL PLAN)
- INTERSECTION DETAILS
- PAVING DETAILS
- STORM SEWER
- CONTROL POINTS
- SIGNING DETAILS
- DETOUR PLAN
- PLAN DETAILS

CONTROL POINTS

NO.	STA.	DESCRIPTION	Y	X	Z
1	28+24	¾" I.R.S., 21.9' LT.	166,701.03	521,950.16	741.88
2	169+28	¾" I.R.S., 25.2' RT.	178,007.32	530,208.48	771.36
3	175+76	¾" I.R.S., 23.3' LT.	178,595.49	530,486.10	768.71
4	253+06	¾" I.R.S., 55.0' RT.	185,061.38	534,647.05	768.96
5	393+20	¾" I.R.S., 30.5' LT.	198,504.95	534,438.12	847.66
6	496+92	¾" I.R.S., 31.1' RT.	207,259.45	535,026.62	959.87

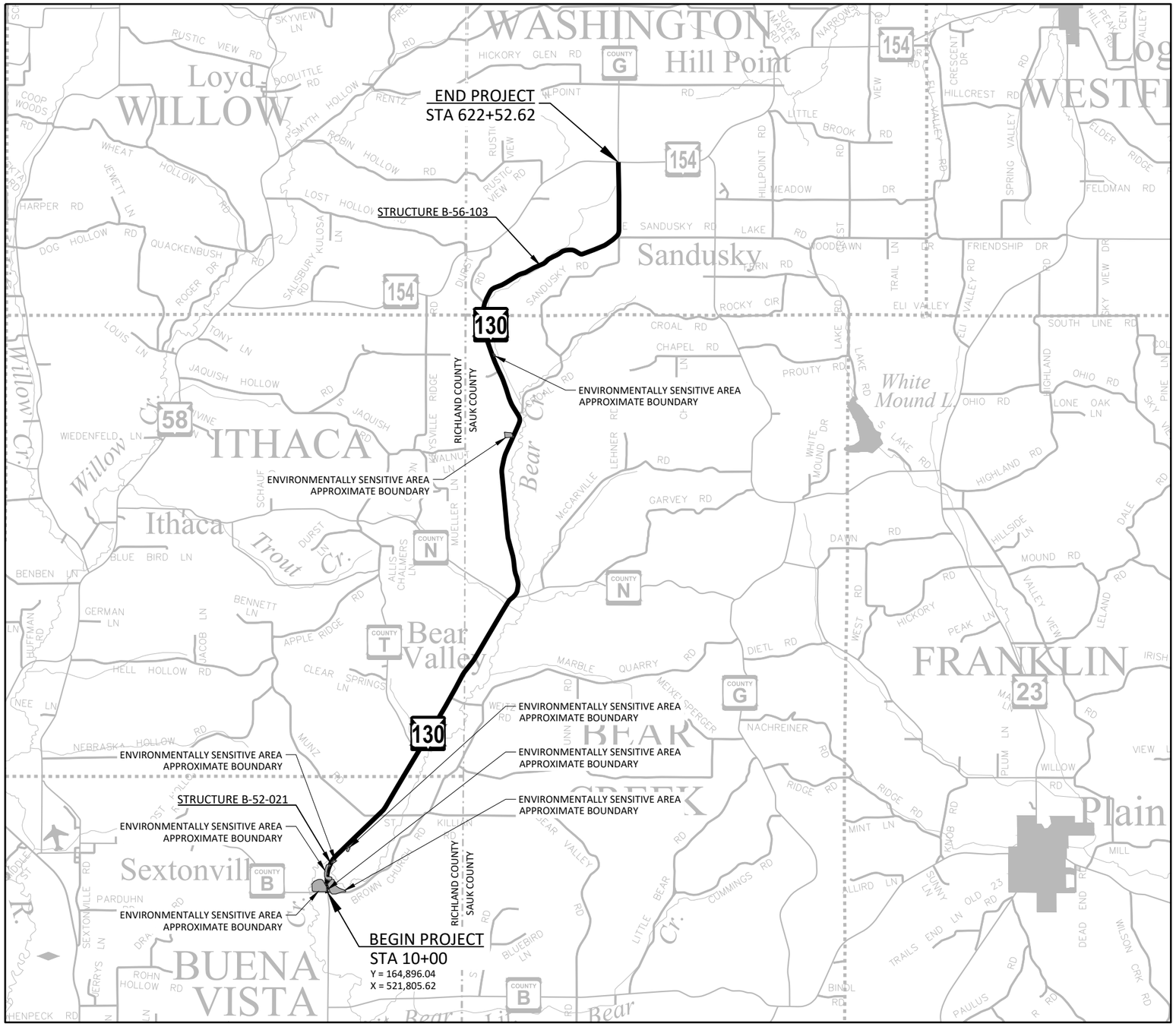

N

PROJECT NO: 5760-00-72	HWY: STH 130	COUNTY: SAUK	PROJECT OVERVIEW	SHEET 3	E

FILE NAME : S:\PROJECTS\W11633 WISDOT - STH 130 RICHLAND AND SAUK CO\SHEETSPLAN\DETAILS\W11633_PROJECT OVERVIEW.DWG PLOT DATE : 7/8/2025 2:09:38 PM PLOT BY : CODY KINTZ PLOT SCALE : 1 IN:1.5 MI LAYOUT : LAYOUT1

2

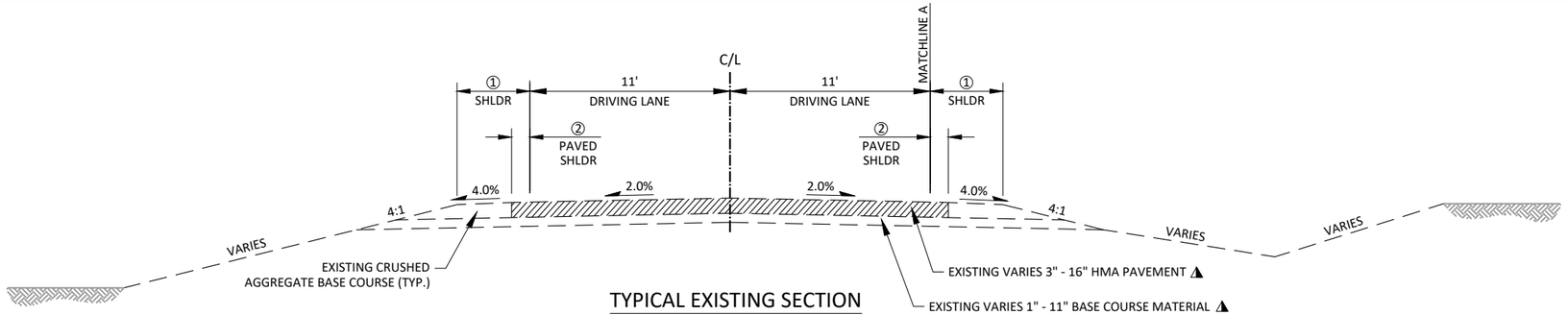

TYPICAL EXISTING SECTION

FILL **CUT**

STA. - STA.	①	②
STA. 10+00 - STA. 13+23, LT.	4'	VARIES 0' - 10'
STA. 13+23 - STA. 40+00	4'	0'
STA. 40+00 - STA. 168+69	3'	0'
STA. 168+69 - STA. 169+80, LT.	3'	0'
STA. 174+27 - STA. 176+96, LT.	3'	0'
STA. 176+96 - STA. 209+00	2'	0'
STA. 209+00 - STA. 254+50	3'	1'
STA. 254+50 - STA. 262+00	3'	0'
STA. 262+00 - STA. 283+00	1'	0'
STA. 283+00 - STA. 373+00	3'	0'
STA. 373+00 - STA. 383+00	1'	0'
STA. 383+00 - STA. 515+50	2'	0'
STA. 515+50 - STA. 530+00	2'	1'
STA. 530+00 - STA. 622+52.62	3'	1'

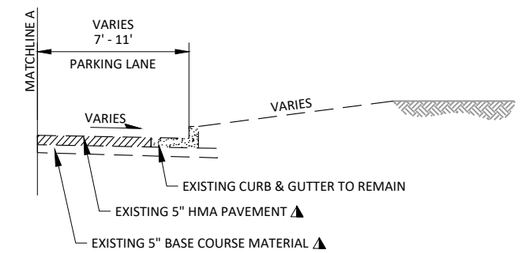

TYPICAL PARTIAL EXISTING SECTION

STA. 10+00 - STA. 13+23, RT.

2

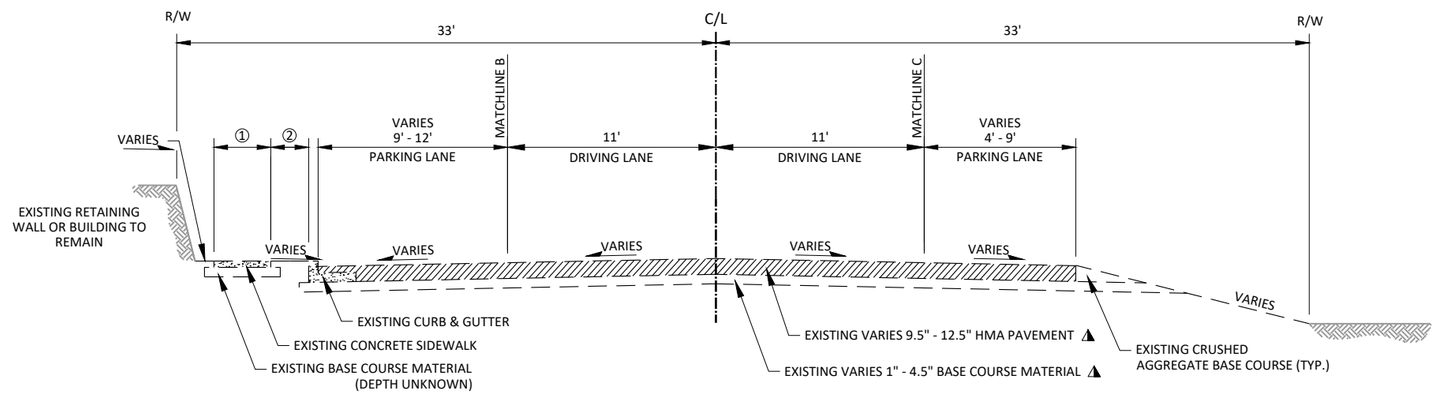

① VARIES 2' - 3' SIDEWALK

② VARIES 0' - 1' TERRACE

◭ SEE SOIL BORING TABLE FOR ADDITIONAL INFORMATION

TYPICAL EXISTING SECTION

STA. - STA.
STA. 168+69 - STA. 170+03, RT.
STA. 169+80 - STA. 171+82, LT.
STA. 171+17 - STA. 176+96, RT.
STA. 173+50 - STA. 174+27, LT.

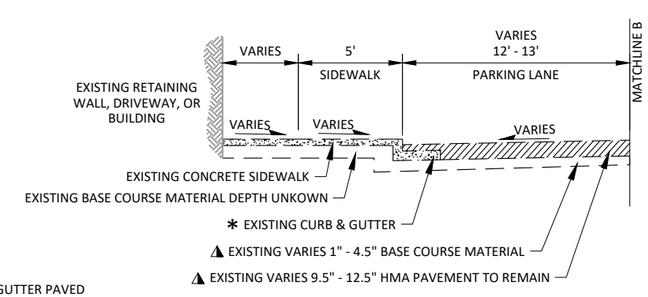

∗ NOTE: EXISTING CURB & GUTTER PAVED MONOLITHICALLY WITH CONCRETE SIDEWALK

TYPICAL PARTIAL EXISTING SECTION

STA. 171+82 - STA. 173+50, LT.

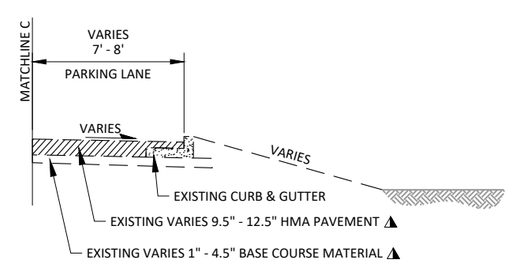

TYPICAL PARTIAL EXISTING SECTION

STA. 170+03 - STA. 171+17, RT.

PROJECT NO: 5760-00-72	HWY: STH 130	COUNTY: SAUK	TYPICAL EXISTING SECTIONS	SHEET 4	E

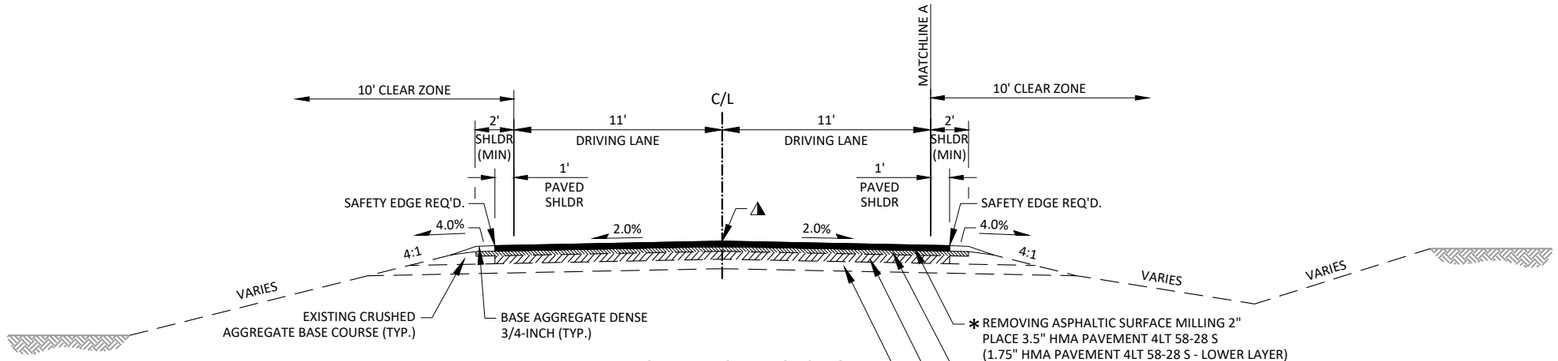

TYPICAL FINISHED SECTION

STA. - STA.	
STA. 10+00 - STA. 13+23, LT.	STA. 426+14 - STA. 437+15
STA. 13+23 - STA. 78+25	STA. 444+56 - STA. 452+44
STA. 85+14 - STA. 168+60	STA. 459+96 - STA. 460+41
STA. 176+64 - STA. 186+83	STA. 470+59 - STA. 470+71
STA. 194+99 - STA. 198+09	STA. 479+54 - STA. 481+83
STA. 203+84 - STA. 247+27	STA. 487+17 - STA. 494+43
STA. 276+10 - STA. 277+15	STA. 504+78 - STA. 505+15
STA. 284+08 - STA. 292+27	STA. 512+23 - STA. 513+49
STA. 298+86 - STA. 338+58	STA. 541+62 - STA. 542+56
STA. 356+55 - STA. 374+61	STA. 548+99 - STA. 558+95
STA. 383+73 - STA. 387+33	STA. 566+33 - STA. 569+80
STA. 396+61 - STA. 405+23	STA. 577+97 - STA. 622+52.62
STA. 414+73 - STA. 417+51	

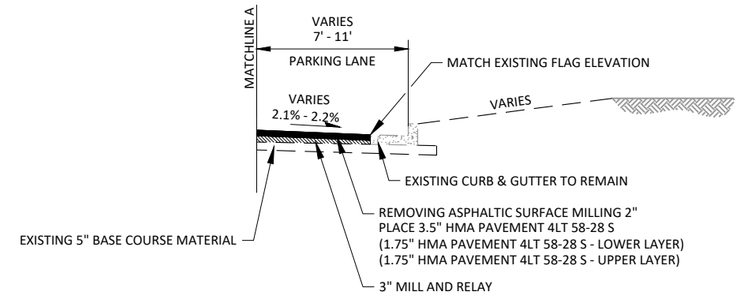

TYPICAL PARTIAL EXISTING SECTION

STA. - STA.
STA. 10+00 - STA. 13+23, RT.

* SEQUENCE OF OPERATIONS
-REMOVING ASPHALTIC SURFACE MILLING 2" (22' - 24' WIDTH)
-MILL 3" OF EXISTING REMAINING ASPHALTIC SURFACE AND RELAY TO NEW WIDTH AS DETAILED (26' WIDTH)
-PLACE 3.5" HMA PAVEMENT 4LT 58-28 S (24' WIDTH)
-PLACE AND GRADE BASE AGGREGATE DENSE 3/4-INCH SHOULDERS (1' WIDTH EACH SIDE)

◭ ASPHALTIC RUMBLE STRIPS, CENTERLINE REQ'D.

EXISTING SUPERELEVATION TABLE

(FOR INFORMATION ONLY)

CURVE NO.	EXISTING SUPERELEVATION (%)
2	5.5
3	5.7
4	3.1
5	N.C.
6	3.8
7	2.6
8	5.9
9	5.4
10	N.C.
11	4.5
12	1.6
13	6.6
14	1.6
15	N.C.
16	3.8
17	5.5
18	8.3
19	3.0
20	N.C.
21	2.5
22	2.2
23	6.0
24	N.C.
25	2.9
26	5.2
27	N.C.
28	2.9
29	N.C.
30	4.0
31	6.1
32	0.7
33	1.5
34	3.4
35	4.0
36	6.6
37	1.4
38	2.9
39	4.7
40	5.8

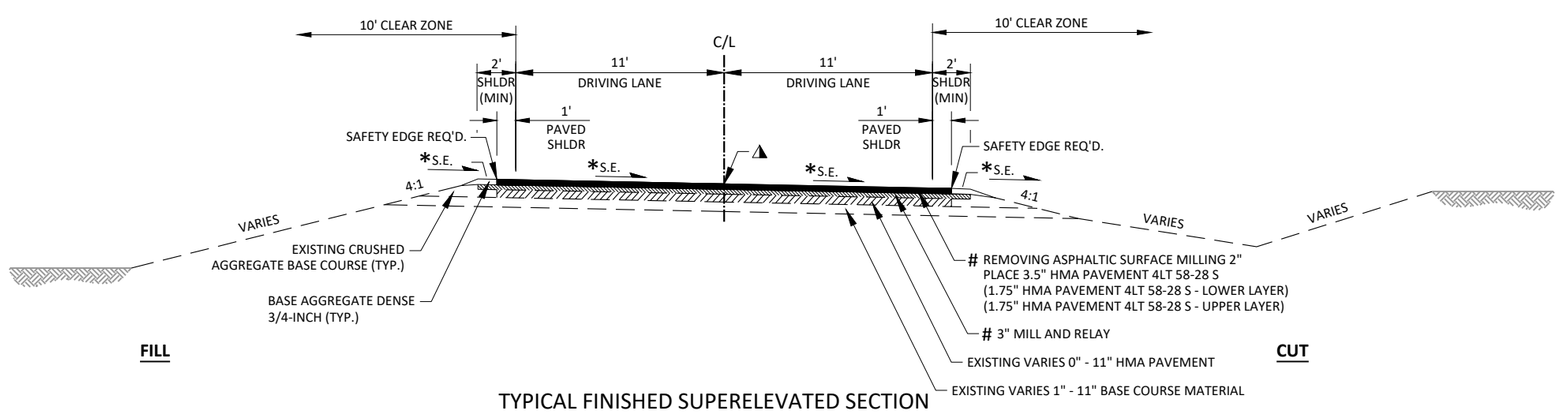

TYPICAL FINISHED SUPERELEVATED SECTION

STA. - STA.	
STA. 16+55 - STA. 38+38	STA. 437+15 - STA. 444+56
STA. 78+25 - STA. 85+14	STA. 452+44 - STA. 459+96
STA. 186+83 - STA. 194+99	STA. 460+41 - STA. 470+59
STA. 198+09 - STA. 203+84	STA. 470+71 - STA. 479+54
STA. 247+27 - STA. 276+10	STA. 481+83 - STA. 487+17
STA. 277+15 - STA. 284+08	STA. 494+43 - STA. 504+78
STA. 292+27 - STA. 298+86	STA. 505+15 - STA. 512+23
STA. 338+58 - STA. 356+55	STA. 513+49 - STA. 541+62
STA. 374+61 - STA. 383+73	STA. 542+56 - STA. 548+99
STA. 387+33 - STA. 396+61	STA. 558+95 - STA. 566+33
STA. 405+23 - STA. 414+73	STA. 569+80 - STA. 577+97
STA. 417+51 - STA. 426+14	

◭ ASPHALTIC RUMBLE STRIPS, CENTERLINE REQ'D.

* MATCH EXISTING SUPERELEVATION

\# SEQUENCE OF OPERATIONS
-REMOVING ASPHALTIC SURFACE MILLING 2" (22' - 24' WIDTH)
-MILL 3" OF EXISTING REMAINING ASPHALTIC SURFACE AND RELAY TO NEW WIDTH AS DETAILED (26' WIDTH)
-PLACE 3.5" HMA PAVEMENT 4LT 58-28 S (24' WIDTH)
-PLACE AND GRADE BASE AGGREGATE DENSE 3/4-INCH SHOULDERS (1' WIDTH EACH SIDE)

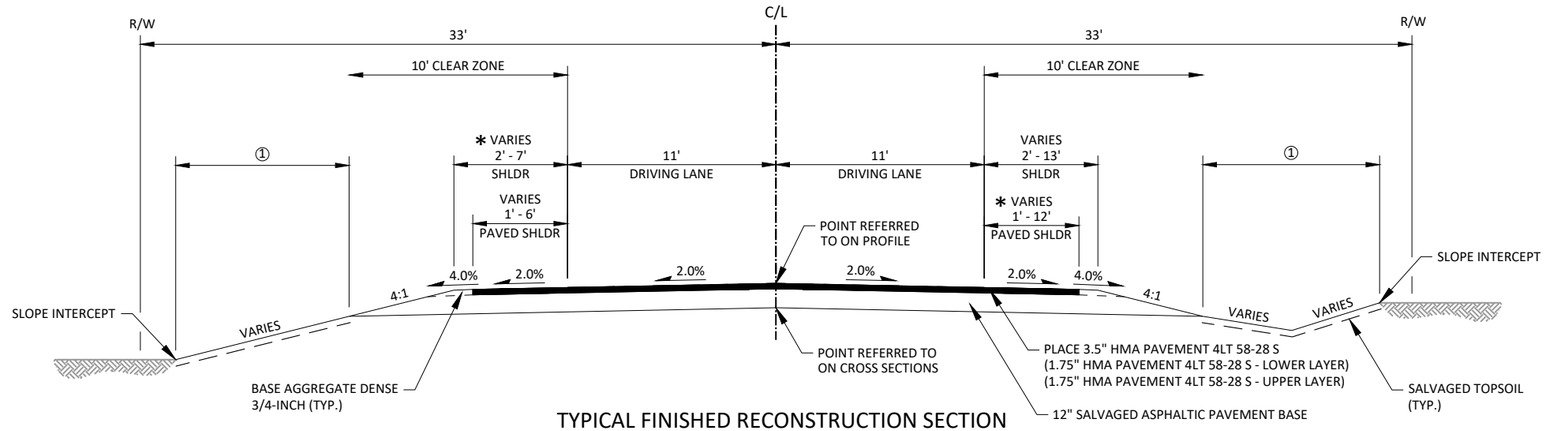

TYPICAL FINISHED RECONSTRUCTION SECTION

FILL **CUT**

STA. - STA.
STA. 168+60 - STA. 169+52
STA. 169+52 - STA. 170+07, RT.
STA. 171+56 - STA. 172+51, RT.

① VARIES - LIMITS OF SEEDING MIXTURE NO. 40, FERTILIZER TYPE B, EROSION MAT, & TOPSOIL (AS DIRECTED BY ENGINEER)

* SAFETY EDGE REQ'D ON PAVED SHOULDERS 3' AND LESS

SUPERELEVATION TABLE

STATION	LEFT(%)	RIGHT(%)
168+60	2.0	2.0
169+00	2.0	2.0
169+50	2.0	2.0
169+82	3.3	2.0
170+00	2.8	2.0
170+50	1.3	2.0
171+00	2.5	2.0
171+20	3.0	2.0
171+50	1.8	2.0
172+00	0.3	2.0
172+17	1.0	2.0
172+50	1.0	2.0
172+51	MATCH EXISTING	MATCH EXISTING

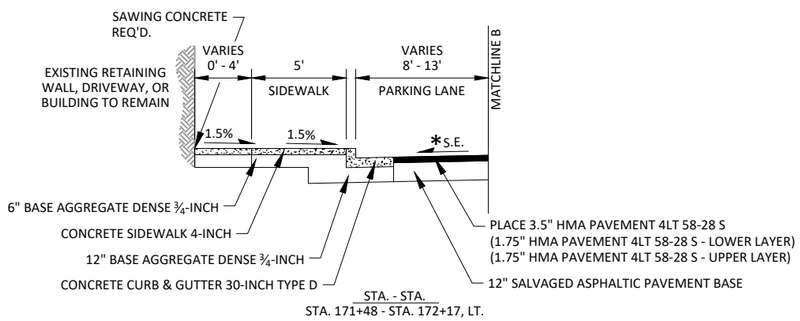

STA. - STA.
STA. 171+48 - STA. 172+17, LT.

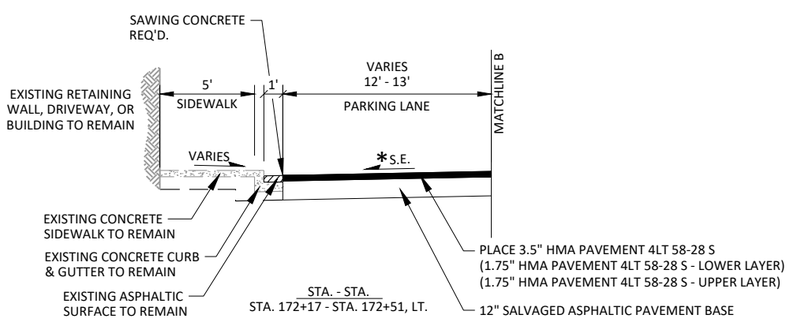

STA. - STA.
STA. 172+17 - STA. 172+51, LT.

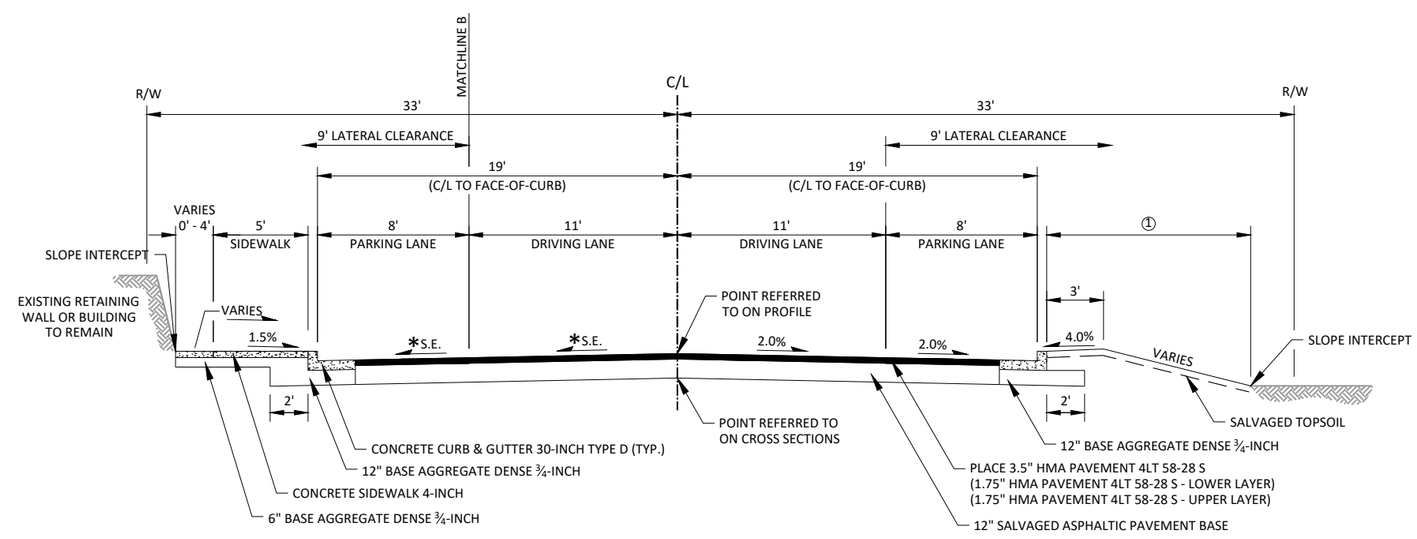

TYPICAL FINISHED RECONSTRUCTION SECTION

STA. - STA.
STA. 169+52 - STA. 171+48, LT.
STA. 170+07 - STA. 171+56, RT.

* SEE SUPERELEVATION TABLE (THIS SHEET)

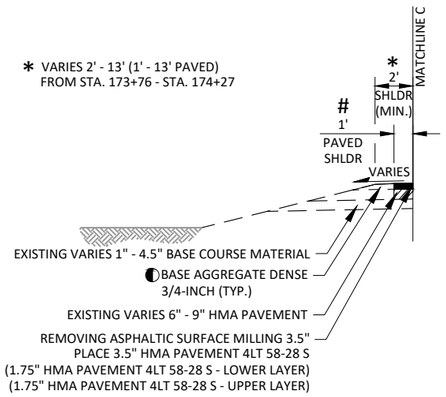

STA. - STA.
STA. 173+76 - STA. 176+64, LT.

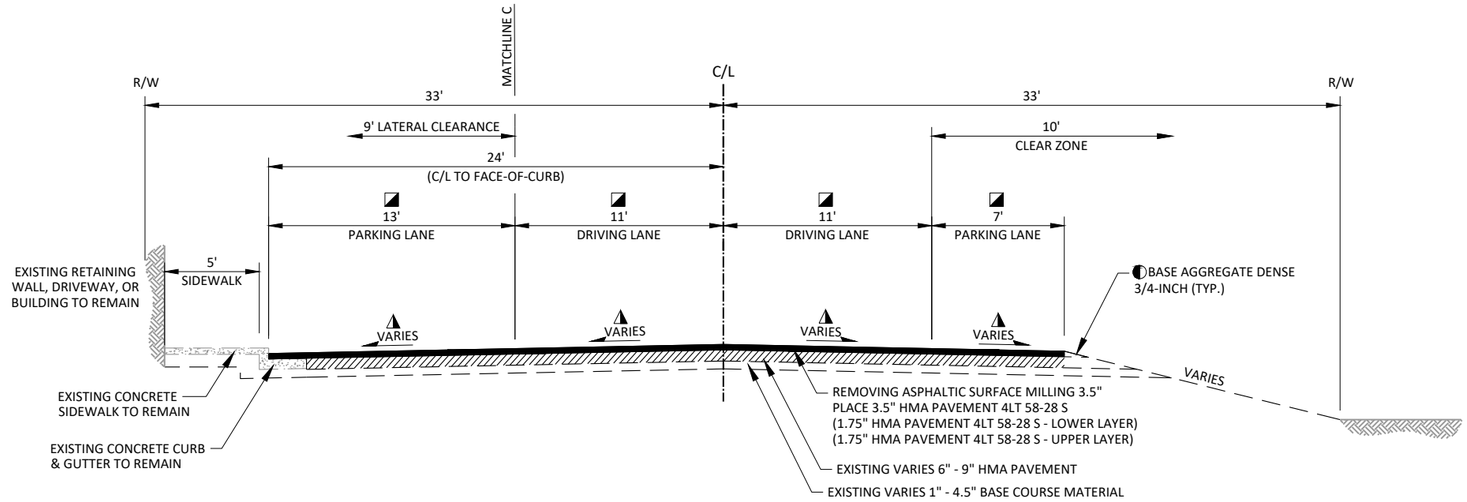

◐ INCORPORATE EXISTING SHOULDER AGGREGATE TO THE GREATEST EXTENT PRACTICABLE PRIOR TO PLACEMENT OF BASE AGGREGATE DENSE 3/4-INCH

PREPARE FOUNDATION FOR ASPHALTIC SHOULDERS

◪ PREPARE FOUNDATION FOR ASPHALTIC PAVING

◭ MATCH EXISTING CROSS SLOPES

TYPICAL FINISHED RESURFACING SECTION

STA. - STA.
STA. 172+51 - STA. 173+76
STA. 173+76 - STA. 176+64, RT.

SOIL BORING TABLE

BORING NUMBER	STATION	OFFSET	ASPHALT DEPTH	BASE DEPTH	BORING NUMBER	STATION	OFFSET	ASPHALT DEPTH	BASE DEPTH
B-1	13+52	6' RT	4.75"	5"	B-24	313+96	9' LT	12.5"	2"
B-2	23+56	9' RT	8"	6.5"	B-25	326+63	6' RT	13.5"	4"
B-3	36+23	3' RT	9"	7.5"	B-26	339+83	9' RT	13.5"	2"
B-4	49+96	12' RT	4"	5.5" RAP/6" BAD	B-27	353+03	3' RT	12.5"	5.5"
B-5	62+10	6' LT	8"	11"	B-28	366+76	6' RT	11.5"	3.5"
B-6	75+30	9' LT	8.5"	8"	B-29	378+37	6' LT	9.5"	4"
B-7	91+14	3' LT	7.75"	9"	B-30	392+10	3' LT	12.5"	4.5"
B-8	101+70	12' LT	8.5"	4" RAP/4" BAD	B-31	404+77	9' LT	11.25"	2.5"
B-9	114+90	6' LT	9"	6"	B-32	420+08	3' LT	10.5"	4"
B-10	128+10	9' RT	11"	4"	B-33	430+64	6' RT	12"	3.5"
B-11	141+30	3' RT	12.5	2.5"	B-34	444+37	9' RT	12.25"	4"
B-12	155+56	12' RT	11"	6"	B-35	455+99	3' RT	8.5"	3.5"
B-13	167+70	6' LT	12.5"	1"	B-36	467+60	12' RT	9"	5" RAP/4" BAD
B-14	181+43	9' LT	9.5"	4.5"	B-37	481+33	6' LT	16"	8"
B-15	194+63	3' LT	13"	4"	B-38	501+40	3' LT	7.25"	6"
B-16	208+36	9' LT	6.5"	5" RAP/3" BAD	B-39	518+29	9' LT	4.5"	8"
B-17	220+50	6' RT	15.5"	6.5"	B-40	534+13	3' RT	8.5"	6" RAP/4" BAD
B-18	234+23	9' RT	14.75"	8.5"	B-41	548+92	6' RT	4"	8" RAP/3" BAD
B-19	246+90	3' RT	15.5"	3"	B-42	566+34	9' RT	5"	8" RAP/5" BAD
B-20	260+63	9' RT	9.5"	1.5"	B-43	583+24	3' LT	3"	9" RAP/6.5" BAD
B-21	273+83	6' LT	11"	3"	B-44	600+66	9' LT	12"	7"
B-22	287+03	9' LT	12.5"	2"	B-45	615+97	6' RT	4"	11"
B-23	299+70	3' LT	12.5"	5"					

NOTE: ASPHALT DEPTHS MAY CONTAIN RAP MATERIAL.

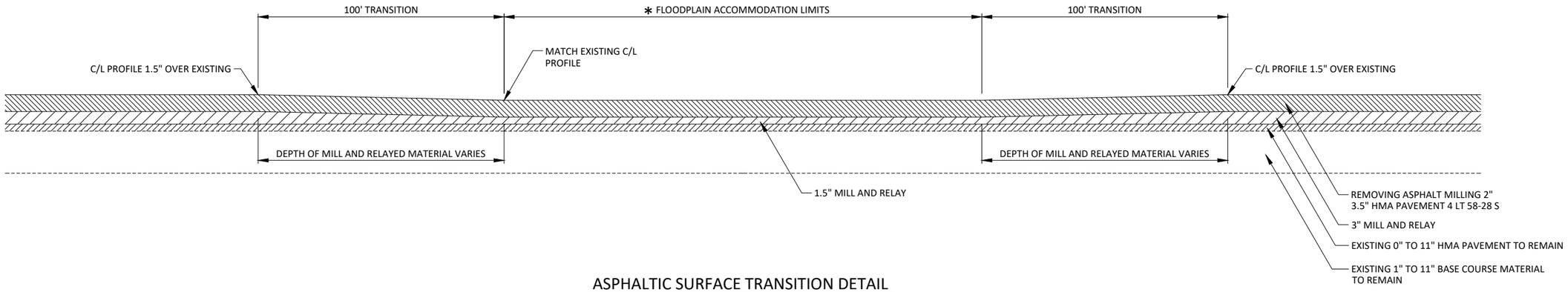

ASPHALTIC SURFACE TRANSITION DETAIL FOR FLOODPLAIN ACCOMMODATION

STA. 50+00 - STA. 54+00
STA. 135+00 - STA. 140+00
STA. 238+00 - STA. 245+00

* REMOVAL OF MILL AND RELAYED MATERIAL TO BE INCIDENTAL TO MILL AND RELAY BID ITEM.

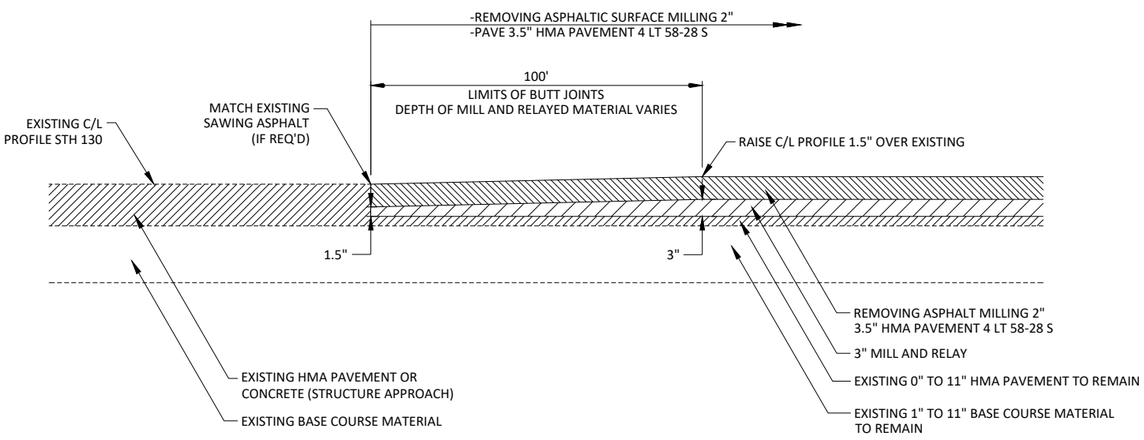

BUTT JOINTS DETAIL

STA. 10+00 - STA. 11+00
STA. 28+50 - STA. 29+49.52
STA. 30+22.30 - STA. 31+22
STA. 167+60 - STA. 168+60
STA. 172+51.03 - STA. 173+50
STA. 621+50 - STA. 622+52.62

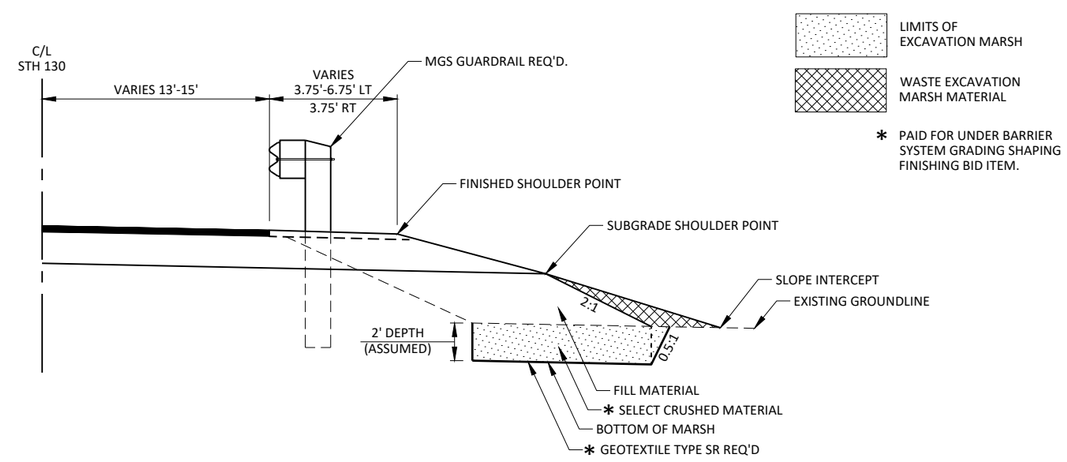

TYPICAL EXCAVATION MARSH

STA. 27+94 - STA. 31+15, RT.
STA. 30+50 - STA. 31+26, LT.

NOTE: FINAL LIMITS TO BE ADJUSTED IN THE FIELD AS DETERMINED BY THE ENGINEER.

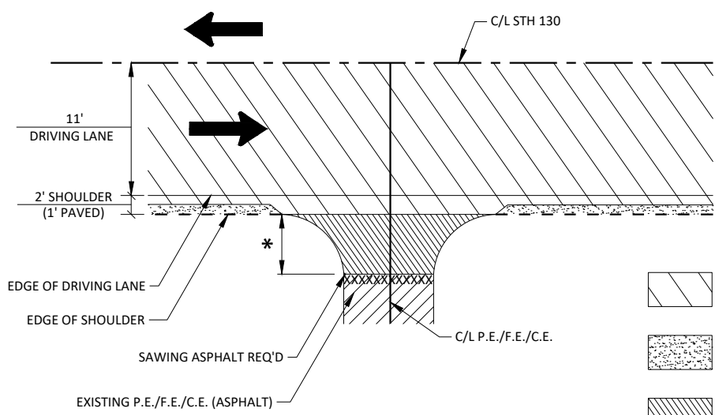

LIMITS OF REMOVING ASPHALTIC SURFACE MILLING 2", MILL AND RELAY 3", AND PLACE 3.5" HMA PAVEMENT 4 LT 58-28 S

LIMITS OF BASE AGGREGATE DENSE 3/4-INCH

LIMITS OF REMOVING ASPHALTIC SURFACE MILLING 2.5" AND PLACE 2.5" ASPHALTIC SURFACE DRIVEWAYS AND FIELD ENTRANCES

LIMITS OF EXISTING ASPHALTIC SURFACE P.E./F.E./C.E. TO REMAIN

* REPLACE IN KIND TO THE RADIUS POINTS OF EACH DRIVEWAY (OR AS DIRECTED BY ENGINEER)

** MATCH EXISTING SUPERELEVATION

P.E./F.E./C.E. (EXISTING ASPHALT) DRIVEWAY DETAIL-RURAL

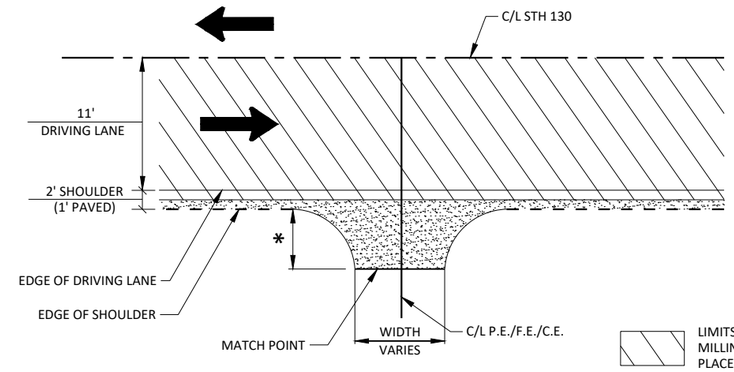

LIMITS OF REMOVING ASPHALTIC SURFACE MILLING 2", MILL AND RELAY 3", AND PLACE 3.5" HMA PAVEMENT 4 LT 58-28 S

LIMITS OF BASE AGGREGATE DENSE 3/4-INCH

* REPLACE IN KIND TO THE RADIUS POINTS OF EACH DRIVEWAY (OR AS DIRECTED BY ENGINEER)

** MATCH EXISTING SUPERELEVATION

P.E./F.E./C.E. (EXISTING B.A.D.) DRIVEWAY DETAIL-RURAL

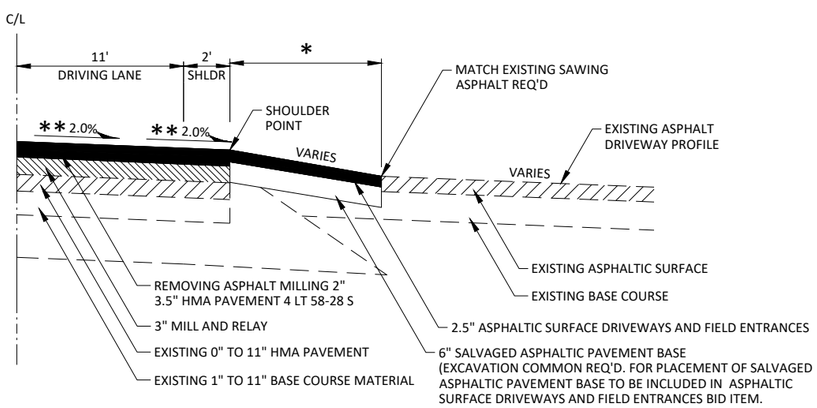

P.E./F.E./C.E. (EXISTING ASPHALT) PROFILE

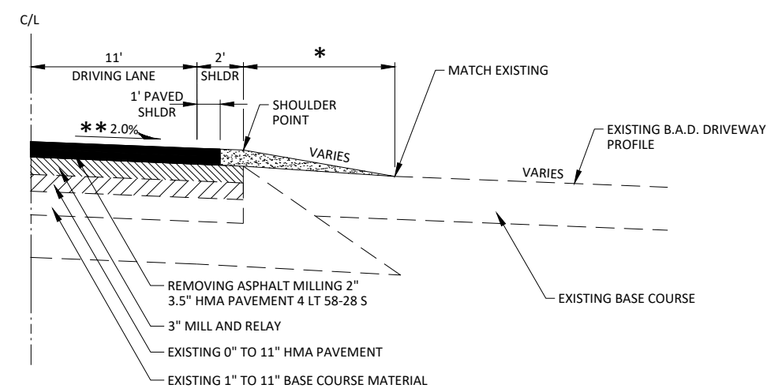

P.E./F.E./C.E. (EXISTING B.A.D.) PROFILE

2

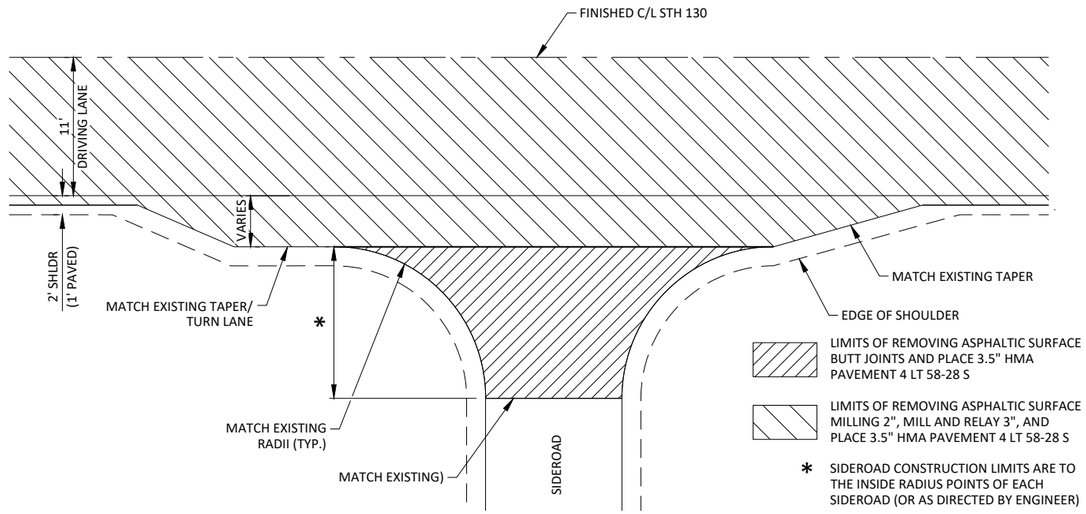

TYPICAL RURAL SIDEROAD DETAIL WITHOUT CURB & GUTTER

GRELL LANE	CTH N (EAST)
MUNZ DRIVE	CROAL HOLLOW ROAD
ST KILLIANS ROAD	DURST ROAD
CTH T	SANDUSKY ROAD
CTH N (WEST)	

NOTE: GRELL LANE (B.A.D.) REMOVING ASPHALTIC SURFACE BUTT JOINTS NOT REQ'D. MILL AND PAVE STRAIGHT THROUGH. USE BASE AGGREGATE DENSE 3/4-INCH TO MATCH IN TO THE RADIUS POINT OR AS DIRECTED BY THE ENGINEER.

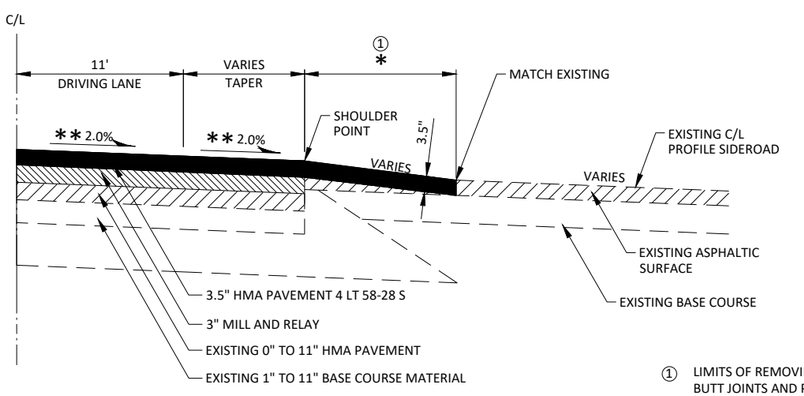

① LIMITS OF REMOVING ASPHALTIC SURFACE BUTT JOINTS AND PLACE 3.5" HMA PAVEMENT 4 LT 58-28 S

* SIDEROAD CONSTRUCTION LIMITS ARE TO THE INSIDE RADIUS POINTS OF EACH SIDEROAD (OR AS DIRECTED BY ENGINEER)

** MATCH EXISTING SUPERELEVATION

P.E./F.E./C.E. (EXISTING B.A.D.) PROFILE

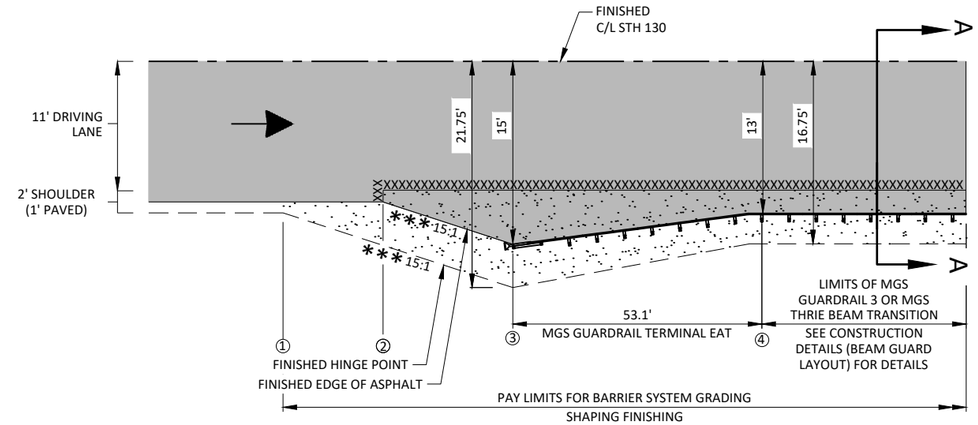

LIMITS OF HMA PAVEMENT 4 LT 58-28 S

LIMITS OF SALVAGED ASPHALTIC PAVEMENT BASE

*** 15:1 TAPER UNLESS OTHERWISE NOTED

XXXXXX SAWING ASPHALT

BEAMGUARD LAYOUT DETAIL

BEAMGUARD LAYOUT TABLE

STATION-STATION	LOCATION	STATION ①	STATION ②	STATION ③	STATION ④
26+62 - 28+48	MAINLINE, RT.	26+62	27+49	27+94	28+48
27+28 - 29+11	MAINLINE, LT.	27+28	28+14	28+58	29+11
30+61 - 32+47	MAINLINE, RT.	32+47	31+60	31+15	30+61
30+73 - 31+78	MAINLINE, LT.	31+78	31+43	31+26	30+73
509+52 - 510+93	MAINLINE, RT.	509+52	509+95	510+40	510+93
509+92 - 511+75	MAINLINE, LT.	509+92	510+77	511+22	511+75
512+31 - 514+15	MAINLINE, RT.	514+15	513+29	512+84	512+31
513+00 - 514+84	MAINLINE, LT.	514+84	513+98	513+53	513+00

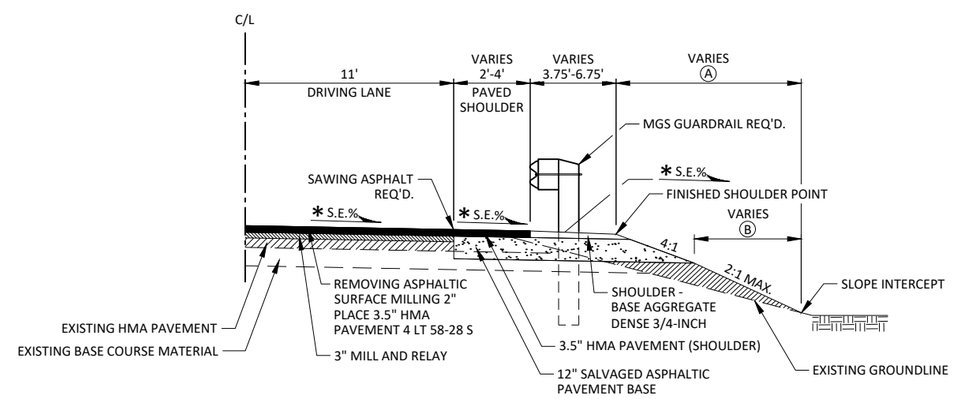

SECTION A-A

LIMITS OF SALVAGED ASPHALTIC PAVEMENT BASE

BORROW MATERIAL (PAID FOR UNDER BARRIER SYSTEM GRADING SHAPING FINISHING)

* MATCH EXISTING SUPERELEVATION

Ⓐ LIMITS OF FERTILIZER TYPE B AND SEEDING MIXTURE NO. 30 (AS DIRECTED BY THE ENGINEER). PAID FOR UNDER BARRIER SYSTEM GRADING SHAPING FINISHING BID ITEM. LIMITS OF EROSION MAT URBAN CLASS I TYPE B OR MULCH (AS DIRECTED BY THE ENGINEER). ALL POST CONSTRUCTION WET AREAS SHALL BE SEEDED WITH SEEDING MIX NO. 60. DO NOT FERTILIZE WET AREAS.

Ⓑ LIMITS OF SALVAGED TOPSOIL (AS DIRECTED BY THE ENGINEER). PAID FOR UNDER BARRIER SYSTEM GRADING SHAPING FINISHING BID ITEM.

2

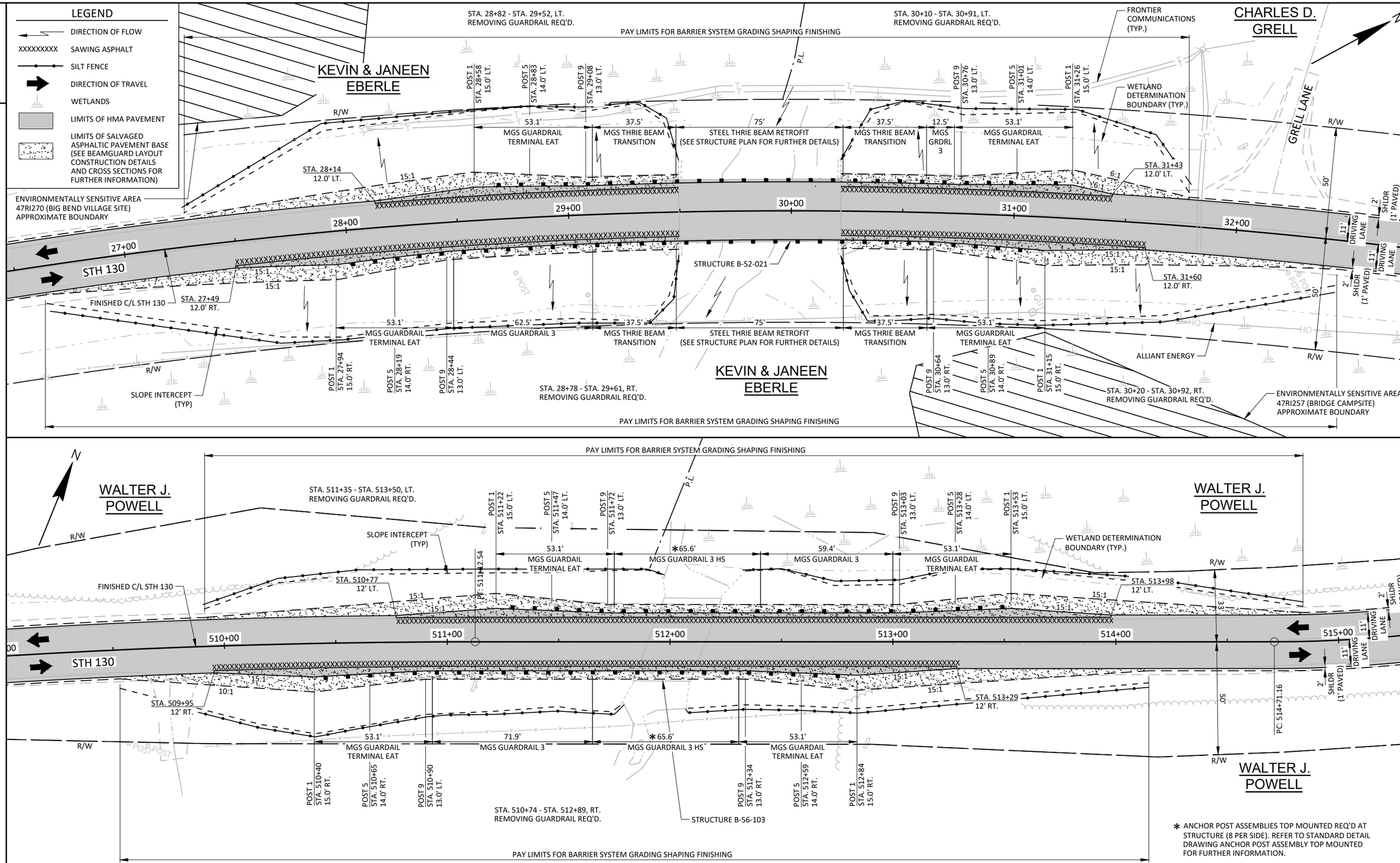

PROJECT NO: 5760-00-72	HWY: STH 130	COUNTY: SAUK	CONSTRUCTION DETAILS (BEAM GUARD LAYOUT)	SHEET 11	E

FILE NAME : S:\PROJECTS\W11633 WISDOT - STH 130 RICHLAND AND SAUK CO\SHEETSPLAN\DETAILS\W11633_BEAMGUARD LAYOUT DETAILS.DWG PLOT DATE : 7/8/2025 11:13:15 AM PLOT BY : CODY KINTZ PLOT SCALE : 1 IN:40 FT LAYOUT : LAYOUT 1

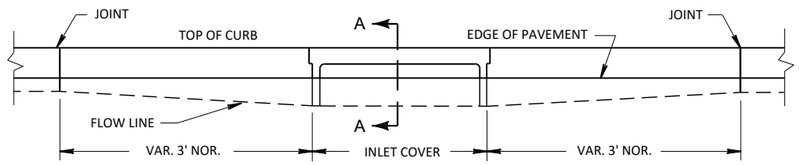

PROFILE VIEW

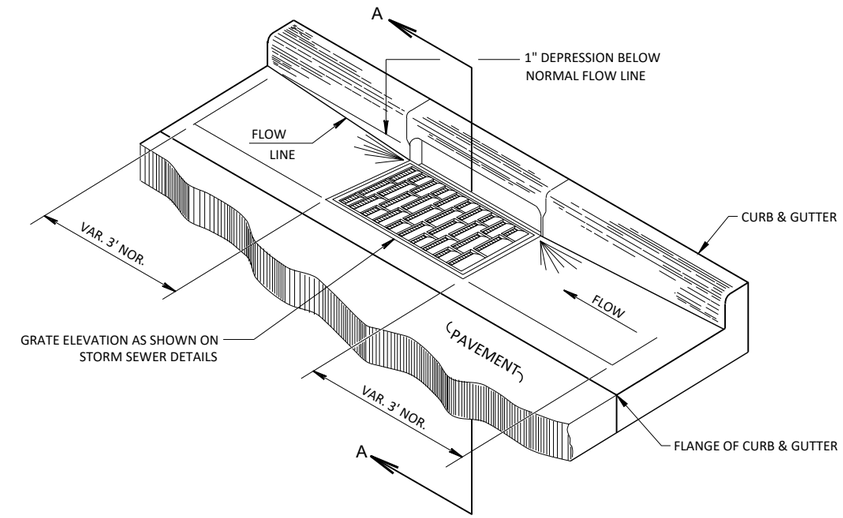

PLAN VIEW

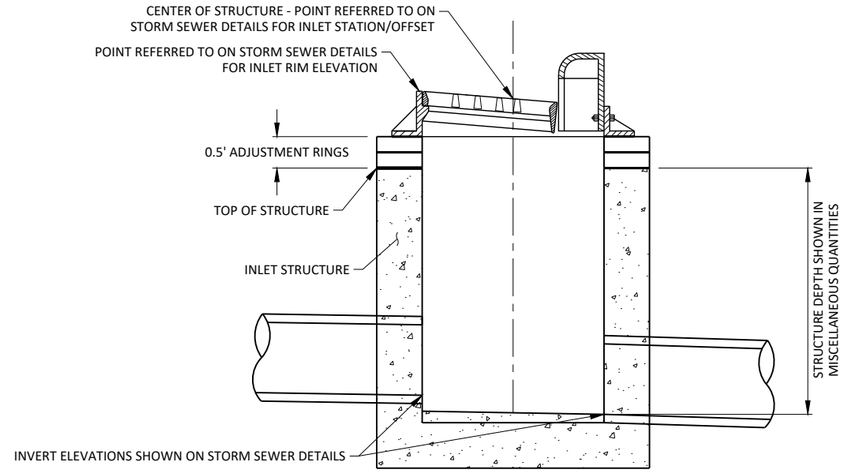

SECTION A-A

DETAIL OF CURB AND GUTTER AT INLETS

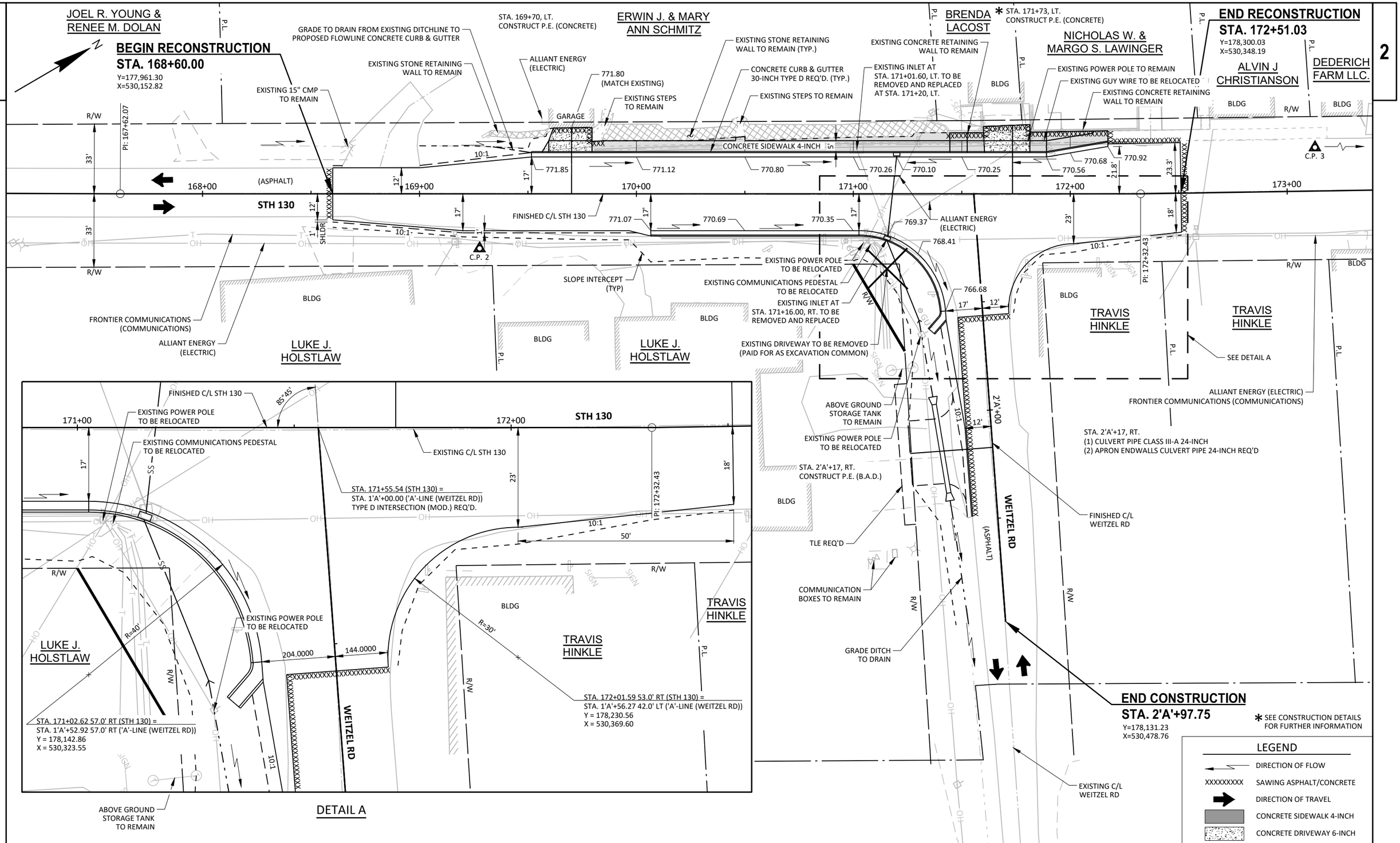

PROJECT NO: 5760-00-72	HWY: STH 130	COUNTY: SAUK	INTERSECTION DETAILS	SHEET 13	E

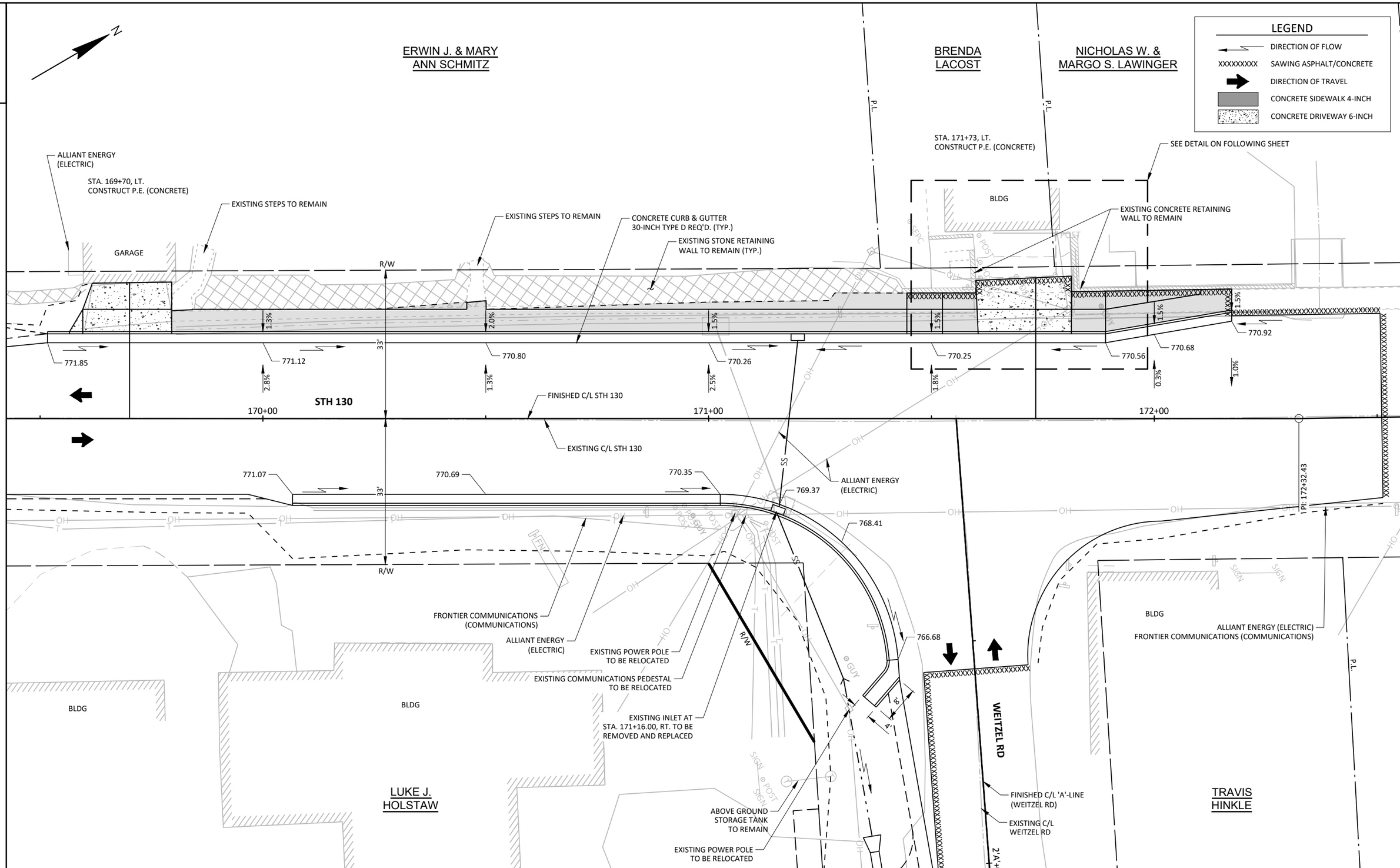

PROJECT NO: 5760-00-72	HWY: STH 130	COUNTY: SAUK	PAVING DETAILS	SHEET 14	E

FILE NAME : S:\PROJECTS\W11633 WISDOT - STH 130 RICHLAND AND SAUK CO\SHEETSPLAN\DETAILS\W11633_PAVING DETAILS.DWG PLOT DATE : 7/8/2025 11:13:34 AM PLOT BY : CODY KINTZ PLOT SCALE : 1 IN:20 FT LAYOUT : SHEET - (2)

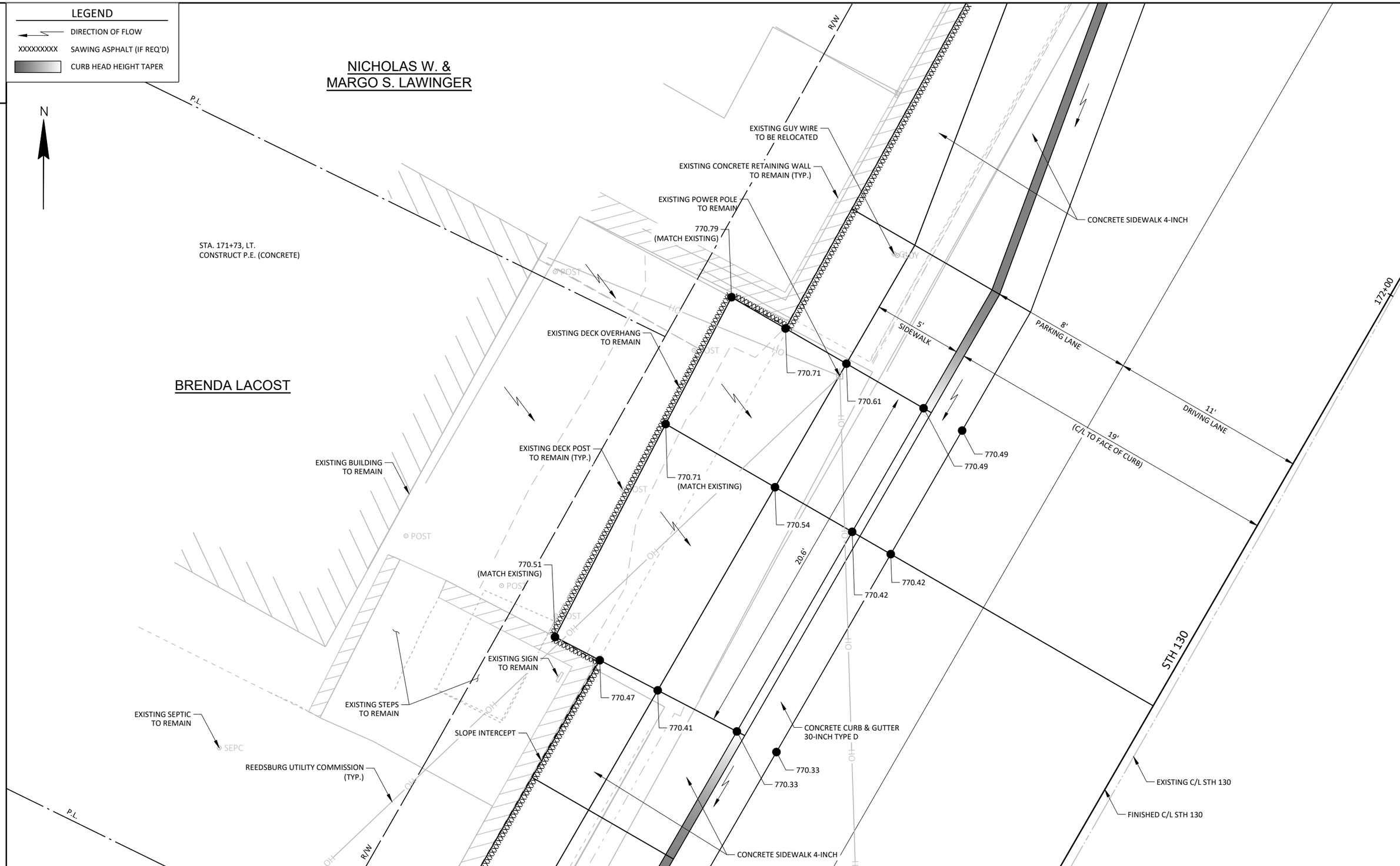

PROJECT NO: 5760-00-72	HWY: STH 130	COUNTY: SAUK	CONSTRUCTION DETAILS	SHEET 15	E

FILE NAME : S:\PROJECTS\W11633 WISDOT - STH 130 RICHLAND AND SAUK CO\SHEETSPLAN\DETAILS\W11633_CONSTRUCTION DETAILS (DRIVEWAY).DWG PLOT DATE : 7/8/2025 11:13:05 AM PLOT BY : CODY KINTZ PLOT SCALE : 1 IN:5 FT LAYOUT : LAYOUT 1

2

ALLIANT ENERGY (ELECTRIC)
FRONTIER COMMUNICATIONS (COMMUNICATIONS)

I - 1
STA. 171+20.00, -18.50' LT
RIM: 770.08
(1) INLET 2X3-FT
(1) INLET COVER TYPE H-S REQ'D.

ALLIANT ENERGY (ELECTRIC)

EXISTING DRIVEWAY TO BE REMOVED (PAID FOR AS EXCAVATION COMMON)

EXISTING POWER POLE TO BE RELOCATED

FINISHED C/L 'A'-LINE WEITZEL RD

N

P.L.

2

END CONSTRUCTION
STA. 2'A'+97.75
Y=178,131.23
X=530,478.76

2'A'+00

R/W

WEITZEL RD

P - 1

STA. 171+29, RT.
REMOVE P.E.

P - 2

GUY

171+00

FINISHED C/L STH 130

I - 2
STA. 171+15.50, 20.72' RT
RIM: 769.59
(1) INLET 4-FT DIAMETER
(1) INLET COVERS TYPE H REQ'D.

R/W

EXISTING C/L 'A'-LINE WEITZEL RD

EXISTING COMMUNICATIONS PEDESTAL TO BE RELOCATED

EXISTING POWER POLE TO BE RELOCATED

EW - 1
STA. 171+29.56, 56.46' RT
INV: 764.00
(1) APRON ENDWALLS FOR CULVERT PIPE REINFORCED CONCRETE 24-INCH REQ'D.

ABOVE GROUND STORAGE TANK TO REMAIN

SIGN

STH 130

EXISTING C/L STH 130

FRONTIER COMMUNICATIONS (COMMUNICATIONS) (TYP.)

STA. 2'A'+17, RT.
(1) CULVERT PIPE CLASS III-A 24-INCH (42 LF)
(2) APRON ENDWALLS CULVERT PIPE 24-INCH REQ'D

TLE REQ'D

SLOPE INTERCEPTS (TYP.)

COMMUNICATION BOXES TO REMAIN

ALLIANT ENERGY

ALLIANT ENERGY (ELECTRIC)

BLDG

OH

774
772
770
768
766
764
762
760
758
756

I - 1
P - 1: 766.41

I - 2
P - 1: 765.86
P - 2: 765.63

EW - 1
P - 2: 764.00

P - 1
38' of 24" RCP @ 1.47%

P - 2
39' of 24" RCP @ 4.43%

-7.33%

INV. = 761.40

-2.03%

INV. = 759.60

PROJECT NO: 5760-00-72	HWY: STH 130	COUNTY: SAUK	STORM SEWER	SHEET 16	E

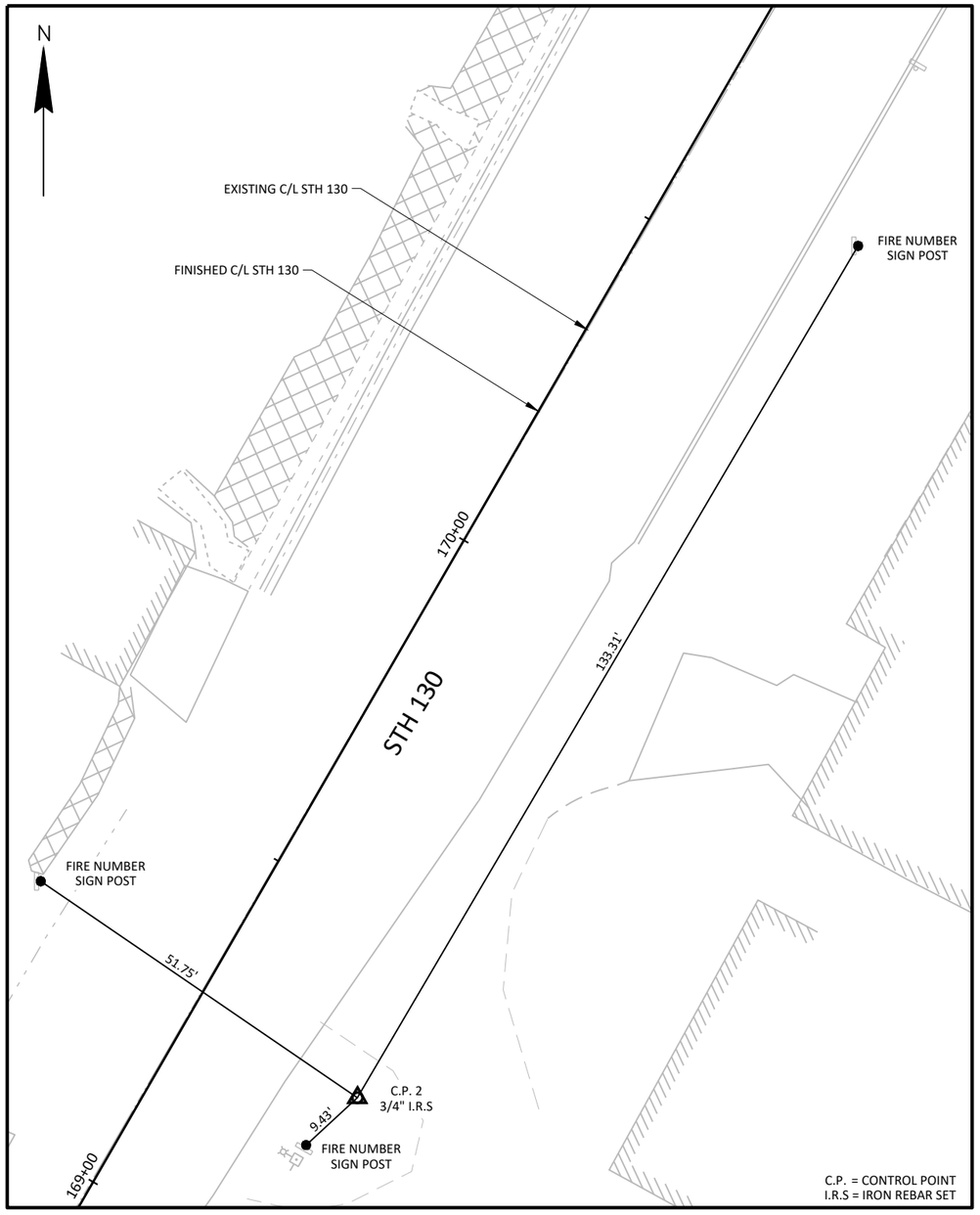

TIES TO C.P.#2

STA. 169+27.69, 25.2' RT.
Y = 178,007.32
X = 530,208.48

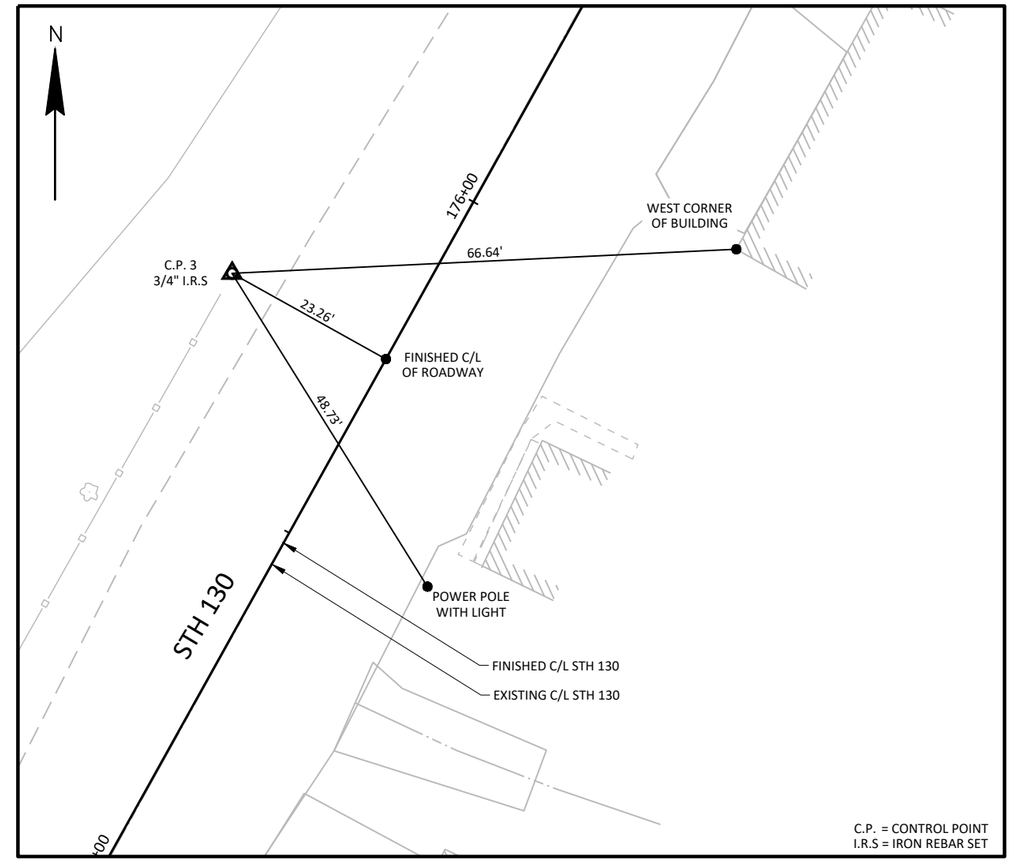

TIES TO C.P.#3

STA. 175+76.26, 23.3' LT.
Y = 178,595.49
X = 530,486.10

CONTROL POINTS

NO.	STA.	DESCRIPTION	Y	X	Z
2	169+27.69	¾" I.R.S., 25.2' RT.	178,007.32	530,208.48	771.36
3	175+76.26	¾" I.R.S., 23.3' LT.	178,595.49	530,486.10	768.71

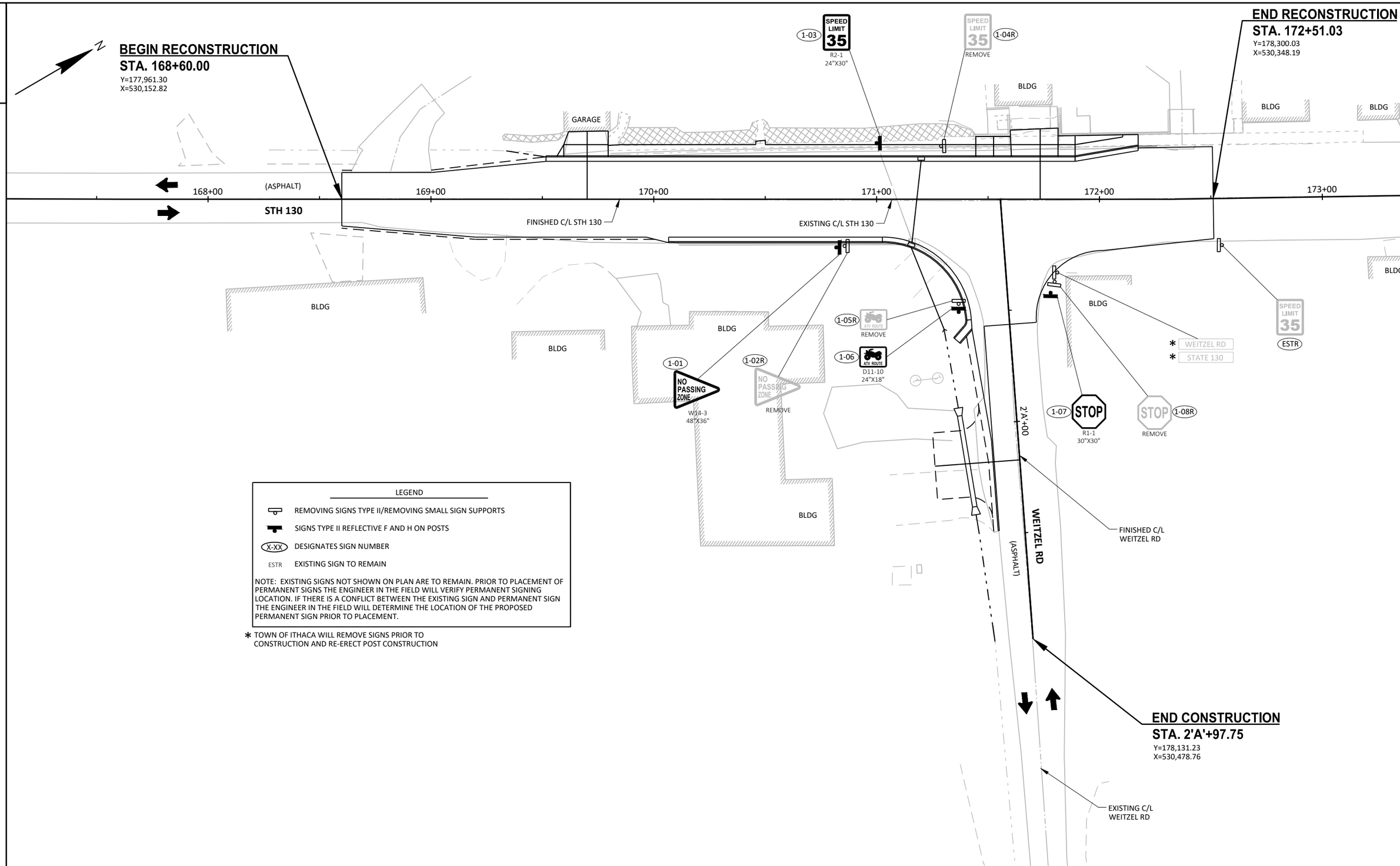

LEGEND

- REMOVING SIGNS TYPE II/REMOVING SMALL SIGN SUPPORTS
- SIGNS TYPE II REFLECTIVE F AND H ON POSTS
- (X-XX) DESIGNATES SIGN NUMBER
- ESTR EXISTING SIGN TO REMAIN

NOTE: EXISTING SIGNS NOT SHOWN ON PLAN ARE TO REMAIN. PRIOR TO PLACEMENT OF PERMANENT SIGNS THE ENGINEER IN THE FIELD WILL VERIFY PERMANENT SIGNING LOCATION. IF THERE IS A CONFLICT BETWEEN THE EXISTING SIGN AND PERMANENT SIGN THE ENGINEER IN THE FIELD WILL DETERMINE THE LOCATION OF THE PROPOSED PERMANENT SIGN PRIOR TO PLACEMENT.

* TOWN OF ITHACA WILL REMOVE SIGNS PRIOR TO CONSTRUCTION AND RE-ERECT POST CONSTRUCTION

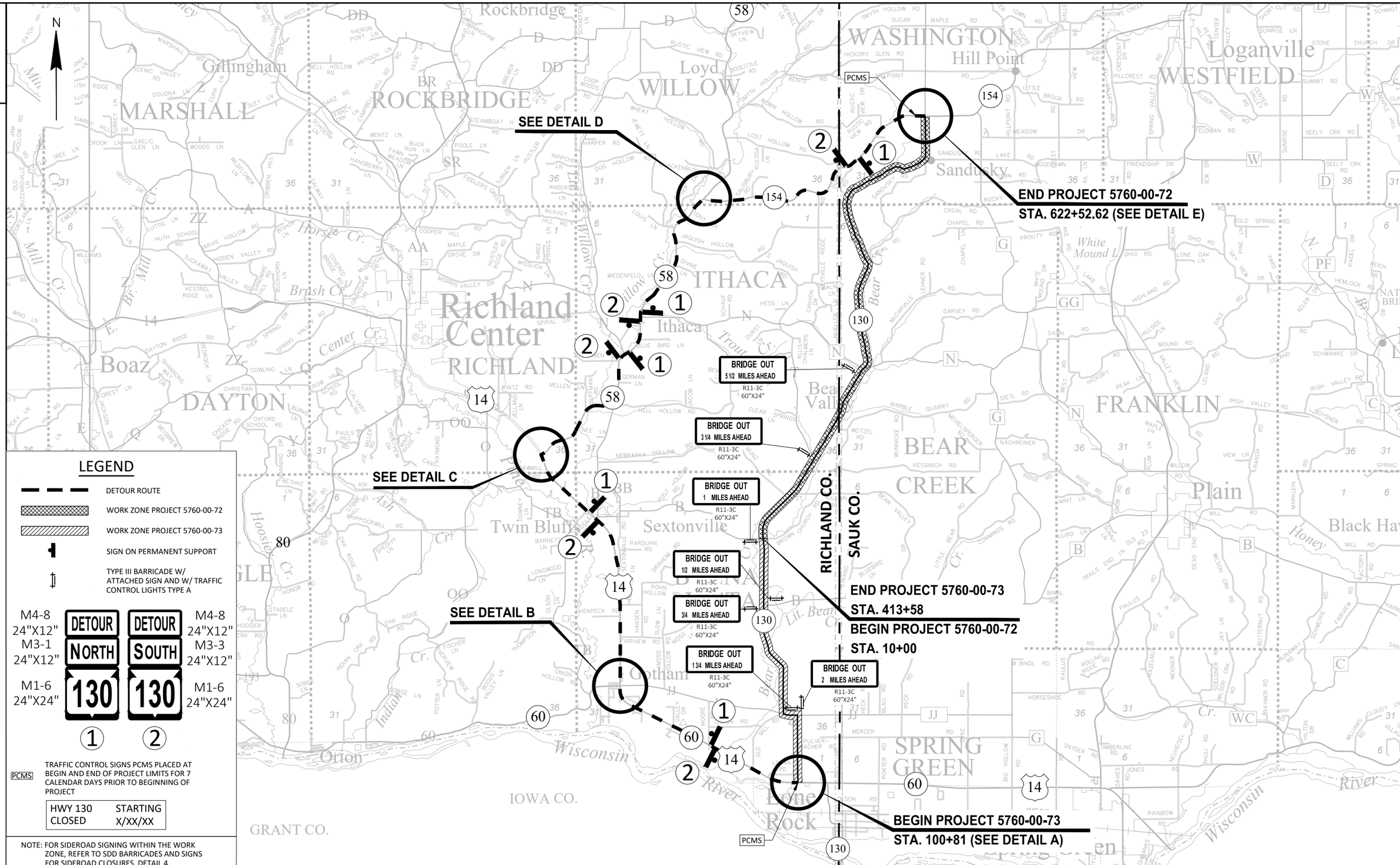

LEGEND

- DETOUR ROUTE
- WORK ZONE PROJECT 5760-00-72
- WORK ZONE PROJECT 5760-00-73
- SIGN ON PERMANENT SUPPORT
- TYPE III BARRICADE W/ ATTACHED SIGN AND W/ TRAFFIC CONTROL LIGHTS TYPE A

M4-8 24"X12"	DETOUR NORTH	M4-8 24"X12"
M3-1 24"X12"		M3-3 24"X12"
M1-6 24"X24"	130	M1-6 24"X24"
	1	2

PCMS TRAFFIC CONTROL SIGNS PCMS PLACED AT BEGIN AND END OF PROJECT LIMITS FOR 7 CALENDAR DAYS PRIOR TO BEGINNING OF PROJECT

HWY 130 CLOSED	STARTING X/XX/XX

NOTE: FOR SIDEROAD SIGNING WITHIN THE WORK ZONE, REFER TO SDD BARRICADES AND SIGNS FOR SIDEROAD CLOSURES, DETAIL 4.

PROJECT NO: 5760-00-72	HWY: STH 130	COUNTY: SAUK	DETOUR PLAN	SHEET 19	E

LEGEND

WORK ZONE

COVER SIGN

DETOUR ROUTE

SIGN ON PERMANENT SUPPORT

EXISTING SIGN ON SINGLE POST

EXISTING SIGN ON DOUBLE POST

TYPE III BARRICADE W/ ATTACHED SIGN AND W/ TRAFFIC CONTROL LIGHTS TYPE A

BARRICADES TYPE III

+ SIGN READS "NEXT 24 MILES"

++ SIGN READS "3 1/2 MILES AHEAD"

+++ SIGN READS "12 3/4 MILES AHEAD"

* SEE STANDARD DETAIL DRAWING BARRICADES AND SIGNS FOR MAINLINE CLOSURES

(A) 130 — M1-6 24"X24"

(B) MO6-1 21"X21"

(C) MO6-1 21"X21"

(D) MO6-1 21"X21"

(E) MO5-1R 21"X21"

(F) MO5-1L 21"X21"

(G) MO6-4 21"X21"

(H) END DETOUR — M4-8A 24"X18"

(I) DETOUR — M4-8 24"X12"

(J) DETOUR AHEAD — W20-2A

(K) BRIDGE OUT XX MILES AHEAD — R11-3C 60"X24"

(L) NORTH — M3-1 24"X12"

(M) SOUTH — M3-3 24"X12"

(N) M7-2 12"X9" — COVER SIGN, SEE SIGN PLATE A4-12

(O) DETOUR NEXT XX MILES — G20-51 60"X24"

(P) ROAD CLOSED AHEAD — W20-3A

(Q) DETOUR — M4-9L 30"X24"

(R) DETOUR — M4-9R 30"X24"

GENERAL NOTES:

THE EXACT LOCATION AND SPACING OF ALL SIGNS AND DEVICES SHALL BE ADJUSTED TO FIT FIELD CONDITIONS AS APPROVED BY THE ENGINEER.

ALL SIGNS INAPPROPRIATE TO THE STATUS OF THE CONTROL ZONE, INCLUDING PRE-EXISTING SIGNING IN THE VICINITY, SHALL BE COVERED OR REMOVED AS SPECIFIED IN THE PLANS AND/OR THE SPECIAL PROVISIONS OR AS DIRECTED BY THE ENGINEER.

"WO" AND "MO" SERIES SIGNS ARE THE SAME AS "W" AND "M" SIGNS EXCEPT THE BACKGROUND IS ORANGE.

ANY STOP SIGNS WHICH ARE REMOVED FOR A CONSTRUCTION OPERATION SHALL BE IMMEDIATELY RE-ESTABLISHED.

THE EXACT LOCATION OF PORTABLE CHANGEABLE MESSAGE SIGNS SHALL BE DETERMINED IN THE FIELD BY THE ENGINEER.

ALL SIGNS ARE 48"x48" UNLESS OTHERWISE NOTED.

STH 130/USH 14 & STH 60 INTERSECTION

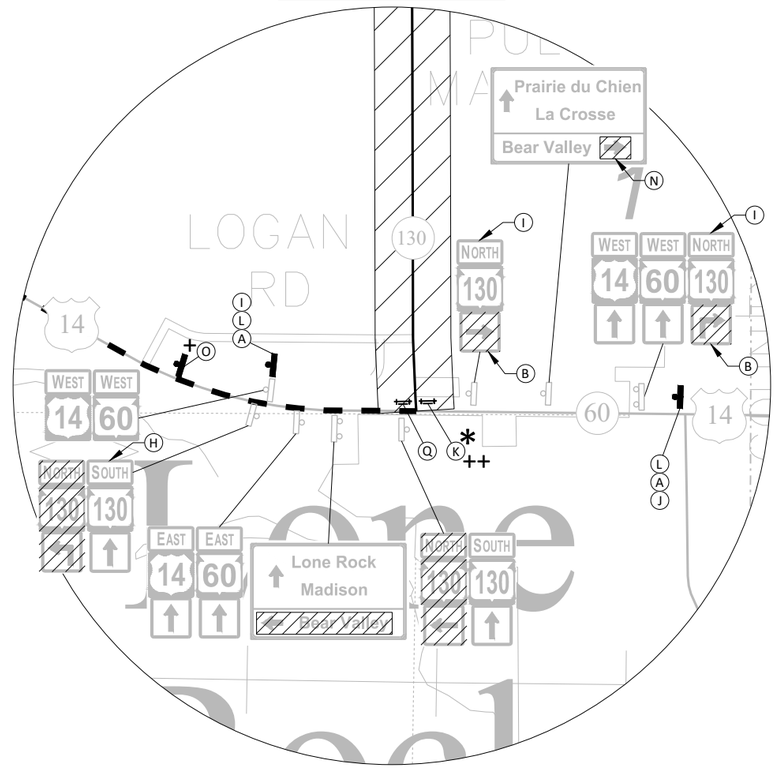

DETAIL A

USH 14/STH 60/CTH JJ INTERSECTION

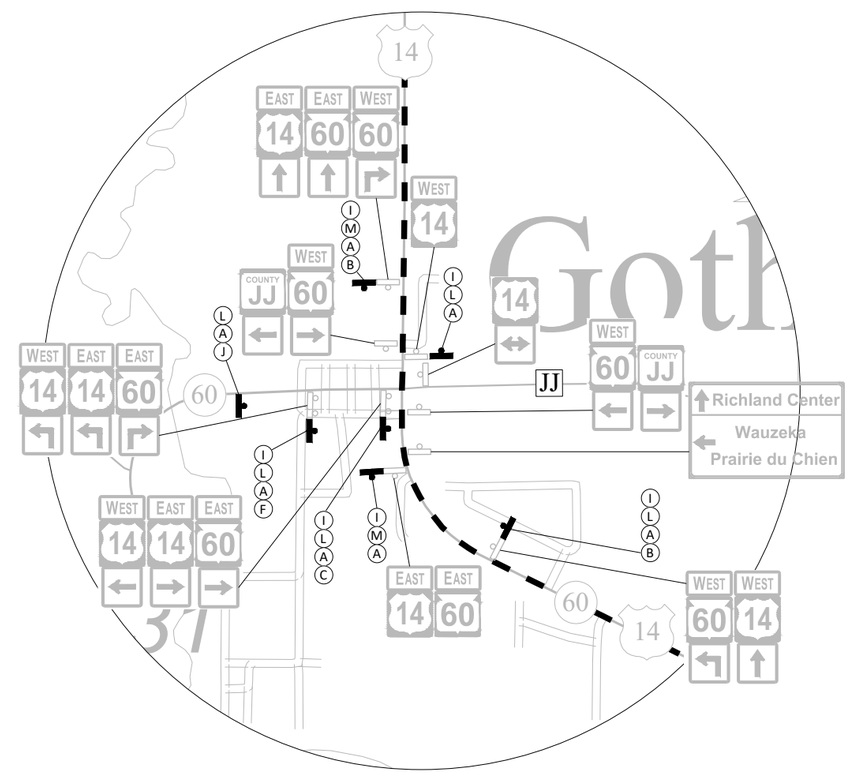

DETAIL B

PROJECT NO: 5760-00-72	HWY: STH 130	COUNTY: SAUK	DETOUR PLAN	SHEET 20	E

LEGEND

WORK ZONE

COVER SIGN

DETOUR ROUTE

SIGN ON PERMANENT SUPPORT

EXISTING SIGN ON SINGLE POST

EXISTING SIGN ON DOUBLE POST

TYPE III BARRICADE W/ ATTACHED SIGN AND W/ TRAFFIC CONTROL LIGHTS TYPE A

BARRICADES TYPE III

\+ SIGN READS "NEXT 24 MILES"

++ SIGN READS "3 1/2 MILES AHEAD"

+++ SIGN READS "12 3/4 MILES AHEAD"

* SEE STANDARD DETAIL DRAWING BARRICADES AND SIGNS FOR MAINLINE CLOSURES

GENERAL NOTES:

THE EXACT LOCATION AND SPACING OF ALL SIGNS AND DEVICES SHALL BE ADJUSTED TO FIT FIELD CONDITIONS AS APPROVED BY THE ENGINEER.

ALL SIGNS INAPPROPRIATE TO THE STATUS OF THE CONTROL ZONE, INCLUDING PRE-EXISTING SIGNING IN THE VICINITY, SHALL BE COVERED OR REMOVED AS SPECIFIED IN THE PLANS AND/OR THE SPECIAL PROVISIONS OR AS DIRECTED BY THE ENGINEER.

"WO" AND "MO" SERIES SIGNS ARE THE SAME AS "W" AND "M" SIGNS EXCEPT THE BACKGROUND IS ORANGE.

ANY STOP SIGNS WHICH ARE REMOVED FOR A CONSTRUCTION OPERATION SHALL BE IMMEDIATELY RE-ESTABLISHED.

THE EXACT LOCATION OF PORTABLE CHANGEABLE MESSAGE SIGNS SHALL BE DETERMINED IN THE FIELD BY THE ENGINEER.

ALL SIGNS ARE 48"x48" UNLESS OTHERWISE NOTED.

(A) 130 — M1-6 24"X24"

(B) MO6-1 21"X21"

(C) MO6-1 21"X21"

(D) MO6-1 21"X21"

(E) MO5-1R 21"X21"

(F) MO5-1L 21"X21"

(G) MO6-4 21"X21"

(H) END DETOUR — M4-8A 24"X18"

(I) DETOUR — M4-8 24"X12"

(J) DETOUR AHEAD — W20-2A

(K) BRIDGE OUT XX MILES AHEAD — R11-3C 60"X24"

(L) NORTH — M3-1 24"X12"

(M) SOUTH — M3-3 24"X12"

(N) M7-2 12"X9" — COVER SIGN, SEE SIGN PLATE A4-12

(O) DETOUR NEXT XX MILES — G20-51 60"X24"

(P) ROAD CLOSED AHEAD — W20-3A

(Q) DETOUR — M4-9L 30"X24"

(R) DETOUR — M4-9R 30"X24"

USH 14/STH 58 INTERSECTION

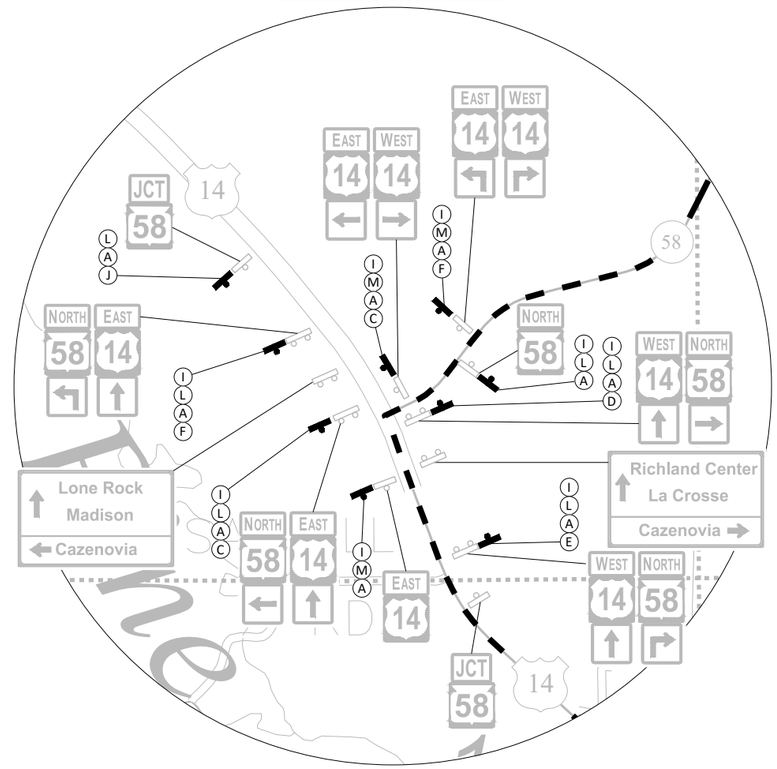

DETAIL C

STH 58/STH 154 INTERSECTION

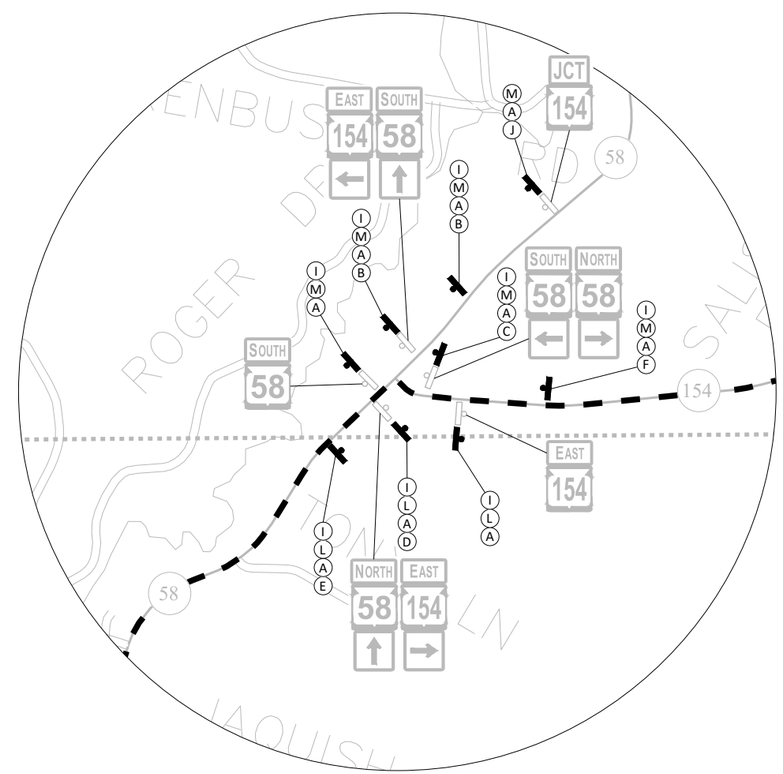

DETAIL D

N

LEGEND

WORK ZONE

COVER SIGN

DETOUR ROUTE

(A) 130 — M1-6 24"X24"

(B) MO6-1 21"X21"

(C) MO6-1 21"X21"

(D) MO6-1 21"X21"

(E) MO5-1R 21"X21"

(F) MO5-1L 21"X21"

(G) MO6-4 21"X21"

(H) END DETOUR — M4-8A 24"X18"

(I) DETOUR — M4-8 24"X12"

(J) DETOUR AHEAD — W20-2A

(K) BRIDGE OUT XX MILES AHEAD — R11-3C 60"X24"

(L) NORTH — M3-1 24"X12"

(M) SOUTH — M3-3 24"X12"

(N) M7-2 12"X9" COVER SIGN, SEE SIGN PLATE A4-12

SIGN ON PERMANENT SUPPORT

EXISTING SIGN ON SINGLE POST

EXISTING SIGN ON DOUBLE POST

TYPE III BARRICADE W/ ATTACHED SIGN AND W/ TRAFFIC CONTROL LIGHTS TYPE A

BARRICADES TYPE III

\+ SIGN READS "NEXT 24 MILES"

++ SIGN READS "3 1/2 MILES AHEAD"

+++ SIGN READS "12 3/4 MILES AHEAD"

* SEE STANDARD DETAIL DRAWING BARRICADES AND SIGNS FOR MAINLINE CLOSURES

(O) DETOUR NEXT XX MILES — G20-51 60"X24"

(P) ROAD CLOSED AHEAD — W20-3A

(Q) DETOUR — M4-9L 30"X24"

(R) DETOUR — M4-9R 30"X24"

GENERAL NOTES:

THE EXACT LOCATION AND SPACING OF ALL SIGNS AND DEVICES SHALL BE ADJUSTED TO FIT FIELD CONDITIONS AS APPROVED BY THE ENGINEER.

ALL SIGNS INAPPROPRIATE TO THE STATUS OF THE CONTROL ZONE, INCLUDING PRE-EXISTING SIGNING IN THE VICINITY, SHALL BE COVERED OR REMOVED AS SPECIFIED IN THE PLANS AND/OR THE SPECIAL PROVISIONS OR AS DIRECTED BY THE ENGINEER.

"WO" AND "MO" SERIES SIGNS ARE THE SAME AS "W" AND "M" SIGNS EXCEPT THE BACKGROUND IS ORANGE.

ANY STOP SIGNS WHICH ARE REMOVED FOR A CONSTRUCTION OPERATION SHALL BE IMMEDIATELY RE-ESTABLISHED.

THE EXACT LOCATION OF PORTABLE CHANGEABLE MESSAGE SIGNS SHALL BE DETERMINED IN THE FIELD BY THE ENGINEER.

ALL SIGNS ARE 48"x48" UNLESS OTHERWISE NOTED.

END CONSTRUCTION DETOUR
STH 130/STH 154 INTERSECTION

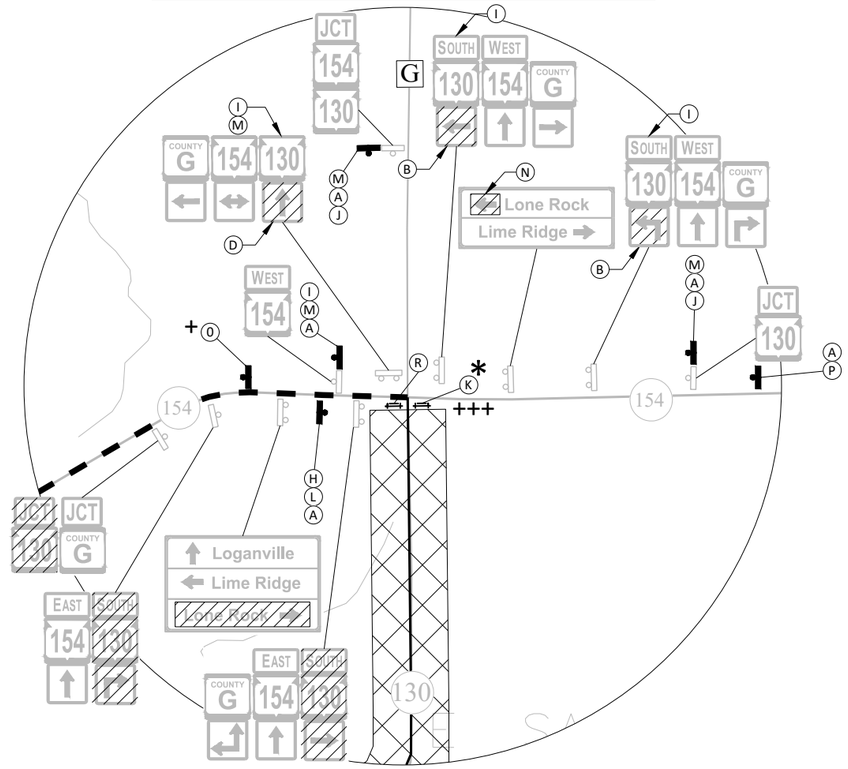

DETAIL E

2

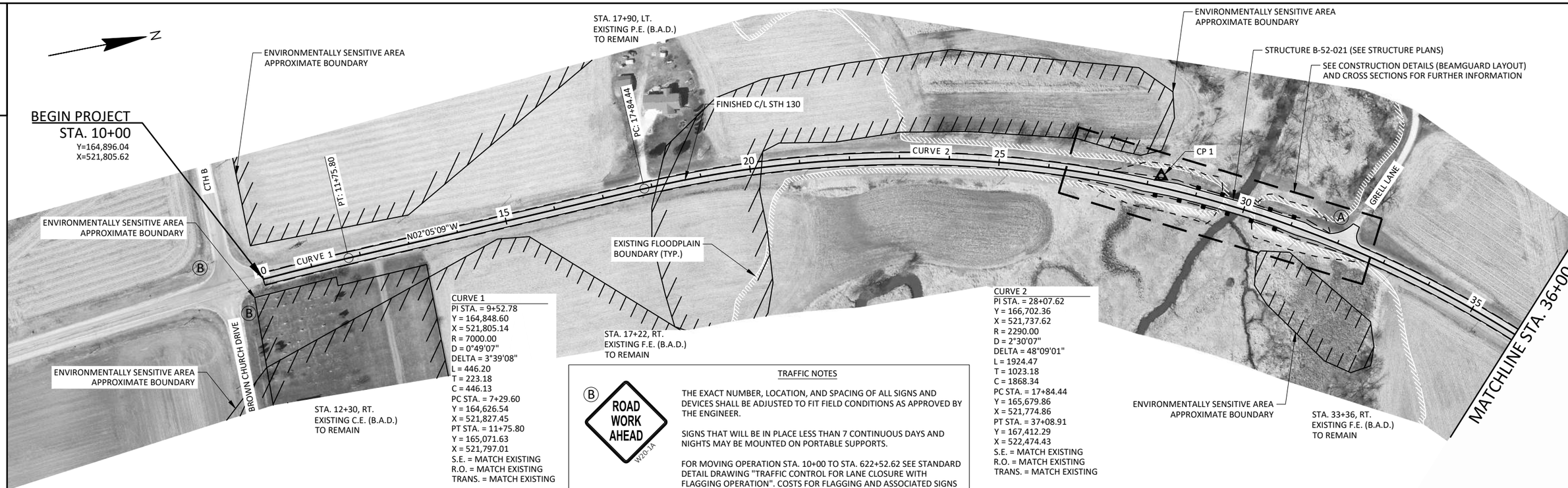

CURVE 1
PI STA. = 9+52.78
Y = 164,848.60
X = 521,805.14
R = 7000.00
D = 0°49'07"
DELTA = 3°39'08"
L = 446.20
T = 223.18
C = 446.13
PC STA. = 7+29.60
Y = 164,626.54
X = 521,827.45
PT STA. = 11+75.80
Y = 165,071.63
X = 521,797.01
S.E. = MATCH EXISTING
R.O. = MATCH EXISTING
TRANS. = MATCH EXISTING

CURVE 2
PI STA. = 28+07.62
Y = 166,702.36
X = 521,737.62
R = 2290.00
D = 2°30'07"
DELTA = 48°09'01"
L = 1924.47
T = 1023.18
C = 1868.34
PC STA. = 17+84.44
Y = 165,679.86
X = 521,774.86
PT STA. = 37+08.91
Y = 167,412.29
X = 522,474.43
S.E. = MATCH EXISTING
R.O. = MATCH EXISTING
TRANS. = MATCH EXISTING

TRAFFIC NOTES

(B) ROAD WORK AHEAD W20-1A

THE EXACT NUMBER, LOCATION, AND SPACING OF ALL SIGNS AND DEVICES SHALL BE ADJUSTED TO FIT FIELD CONDITIONS AS APPROVED BY THE ENGINEER.

SIGNS THAT WILL BE IN PLACE LESS THAN 7 CONTINUOUS DAYS AND NIGHTS MAY BE MOUNTED ON PORTABLE SUPPORTS.

FOR MOVING OPERATION STA. 10+00 TO STA. 622+52.62 SEE STANDARD DETAIL DRAWING "TRAFFIC CONTROL FOR LANE CLOSURE WITH FLAGGING OPERATION". COSTS FOR FLAGGING AND ASSOCIATED SIGNS FOR MOVING OPERATIONS ARE INCIDENTAL TO THE CONTRACT.

(A) SEE STANDARD DETAIL DRAWING BARRICADES AND SIGNS FOR SIDEROAD CLOSURES.

PLACE TEMPORARY MARKING LINE PAINT 6-INCH AFTER FIRST PAVING PASS. SEE STANDARD DETAIL DRAWING TEMPORARY LONGITUDINAL PAVEMENT MARKING.

SEE STANDARD DETAIL DRAWING PERMANENT LONGITUDINAL PAVEMENT MARKINGS FOR PAVEMENT MARKING LAYOUT.

ALL TRAFFIC CONTROL SIGNS ARE 48"x48" UNLESS NOTED OTHERWISE.

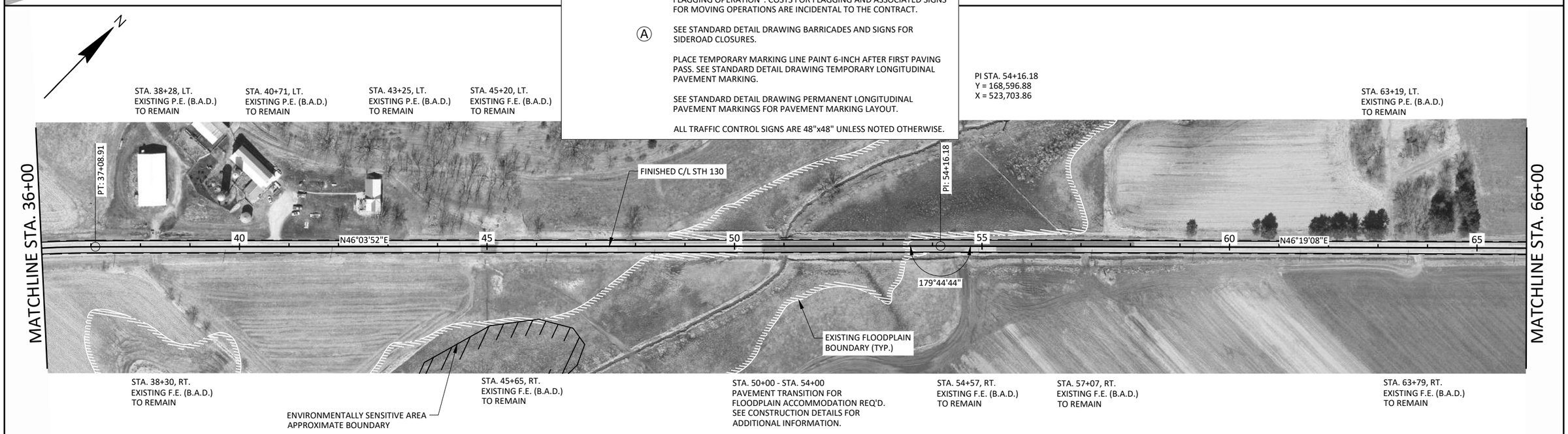

PROJECT NO: 5760-00-72	HWY: STH 130	COUNTY: SAUK	PLAN DETAILS	SHEET 23	E

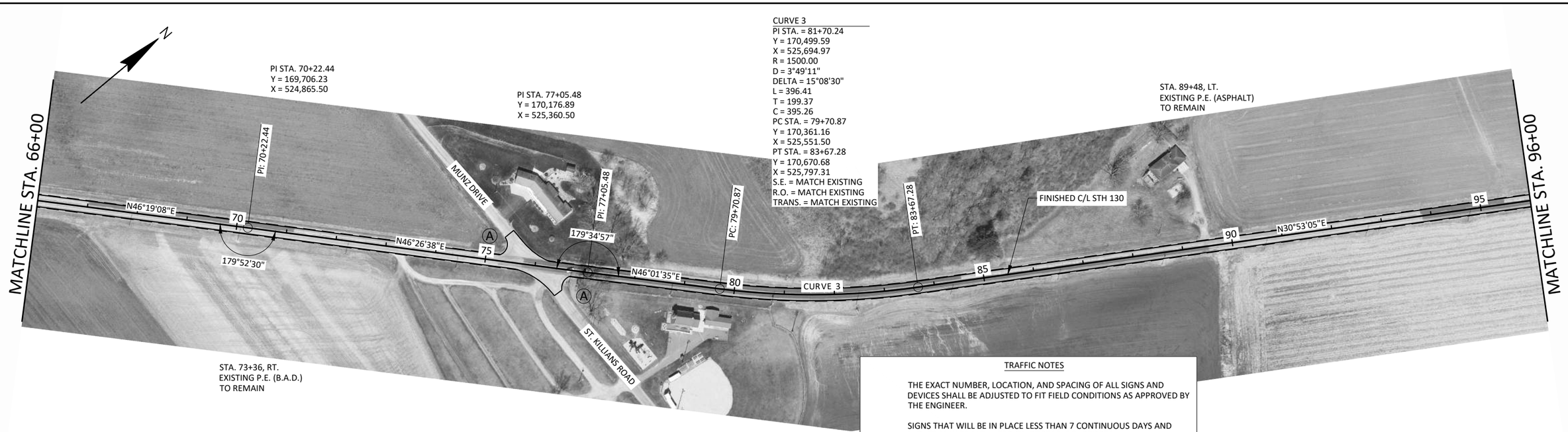

TRAFFIC NOTES

THE EXACT NUMBER, LOCATION, AND SPACING OF ALL SIGNS AND DEVICES SHALL BE ADJUSTED TO FIT FIELD CONDITIONS AS APPROVED BY THE ENGINEER.

SIGNS THAT WILL BE IN PLACE LESS THAN 7 CONTINUOUS DAYS AND NIGHTS MAY BE MOUNTED ON PORTABLE SUPPORTS.

FOR MOVING OPERATION STA. 10+00 TO STA. 622+52.62 SEE STANDARD DETAIL DRAWING "TRAFFIC CONTROL FOR LANE CLOSURE WITH FLAGGING OPERATION". COSTS FOR FLAGGING AND ASSOCIATED SIGNS FOR MOVING OPERATIONS ARE INCIDENTAL TO THE CONTRACT.

Ⓐ SEE STANDARD DETAIL DRAWING BARRICADES AND SIGNS FOR SIDEROAD CLOSURES.

PLACE TEMPORARY MARKING LINE PAINT 6-INCH AFTER FIRST PAVING PASS. SEE STANDARD DETAIL DRAWING TEMPORARY LONGITUDINAL PAVEMENT MARKING.

SEE STANDARD DETAIL DRAWING PERMANENT LONGITUDINAL PAVEMENT MARKINGS FOR PAVEMENT MARKING LAYOUT.

ALL TRAFFIC CONTROL SIGNS ARE 48"x48" UNLESS NOTED OTHERWISE.

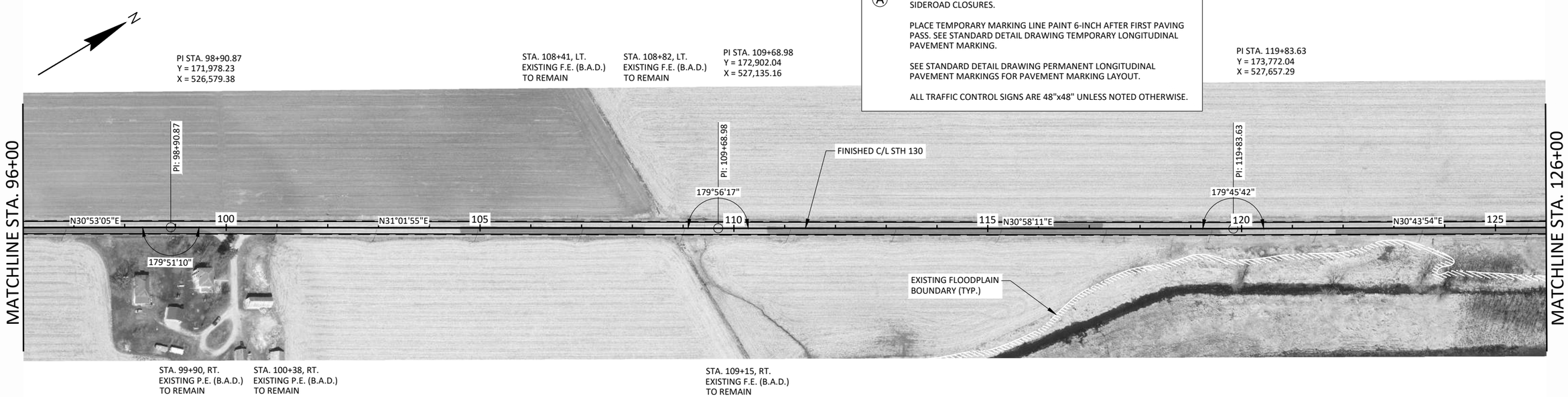

2

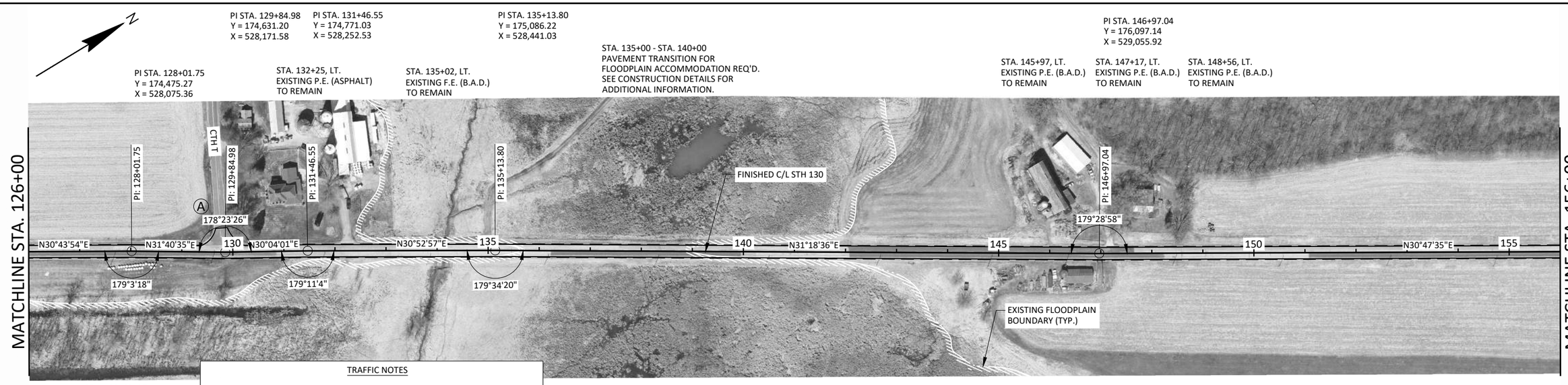

TRAFFIC NOTES

THE EXACT NUMBER, LOCATION, AND SPACING OF ALL SIGNS AND DEVICES SHALL BE ADJUSTED TO FIT FIELD CONDITIONS AS APPROVED BY THE ENGINEER.

SIGNS THAT WILL BE IN PLACE LESS THAN 7 CONTINUOUS DAYS AND NIGHTS MAY BE MOUNTED ON PORTABLE SUPPORTS.

FOR MOVING OPERATION STA. 10+00 TO STA. 622+52.62 SEE STANDARD DETAIL DRAWING "TRAFFIC CONTROL FOR LANE CLOSURE WITH FLAGGING OPERATION". COSTS FOR FLAGGING AND ASSOCIATED SIGNS FOR MOVING OPERATIONS ARE INCIDENTAL TO THE CONTRACT.

(A) SEE STANDARD DETAIL DRAWING BARRICADES AND SIGNS FOR SIDEROAD CLOSURES.

PLACE TEMPORARY MARKING LINE PAINT 6-INCH AFTER FIRST PAVING PASS. SEE STANDARD DETAIL DRAWING TEMPORARY LONGITUDINAL PAVEMENT MARKING.

SEE STANDARD DETAIL DRAWING PERMANENT LONGITUDINAL PAVEMENT MARKINGS FOR PAVEMENT MARKING LAYOUT.

ALL TRAFFIC CONTROL SIGNS ARE 48"x48" UNLESS NOTED OTHERWISE.

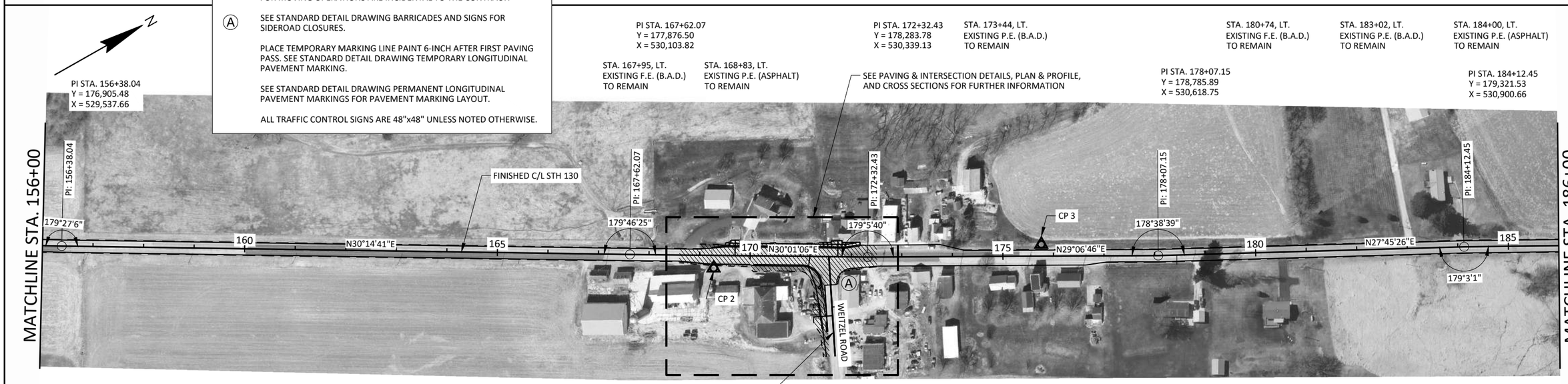

LEGEND

RECONSTRUCTION LIMITS (SEE PLAN & PROFILE SHEETS FOR FURTHER INFORMATION)

CURVE 4
PI STA. = 190+91.59
Y = 179,917.20
X = 531,226.87
R = 3200.00
D = 1°47'26"
DELTA = 10°32'19"
L = 588.59
T = 295.13
C = 587.76
PC STA. = 187+96.46
Y = 179,658.35
X = 531,085.11
PT STA. = 193+85.05
Y = 180,145.76
X = 531,413.58
S.E. = MATCH EXISTING
R.O. = MATCH EXISTING
TRANS. = MATCH EXISTING

CURVE 5
PI STA. = 200+97.09
Y = 180,697.19
X = 531,864.05
R = 2000.00
D = 2°51'53"
DELTA = 8°46'52"
L = 306.52
T = 153.56
C = 306.22
PC STA. = 199+43.53
Y = 180,578.27
X = 531,766.90
PT STA. = 202+50.05
Y = 180,829.55
X = 531,941.90
S.E. = MATCH EXISTING
R.O. = MATCH EXISTING
TRANS. = MATCH EXISTING

TRAFFIC NOTES

THE EXACT NUMBER, LOCATION, AND SPACING OF ALL SIGNS AND DEVICES SHALL BE ADJUSTED TO FIT FIELD CONDITIONS AS APPROVED BY THE ENGINEER.

SIGNS THAT WILL BE IN PLACE LESS THAN 7 CONTINUOUS DAYS AND NIGHTS MAY BE MOUNTED ON PORTABLE SUPPORTS.

FOR MOVING OPERATION STA. 10+00 TO STA. 622+52.62 SEE STANDARD DETAIL DRAWING "TRAFFIC CONTROL FOR LANE CLOSURE WITH FLAGGING OPERATION". COSTS FOR FLAGGING AND ASSOCIATED SIGNS FOR MOVING OPERATIONS ARE INCIDENTAL TO THE CONTRACT.

Ⓐ SEE STANDARD DETAIL DRAWING BARRICADES AND SIGNS FOR SIDEROAD CLOSURES.

PLACE TEMPORARY MARKING LINE PAINT 6-INCH AFTER FIRST PAVING PASS. SEE STANDARD DETAIL DRAWING TEMPORARY LONGITUDINAL PAVEMENT MARKING.

SEE STANDARD DETAIL DRAWING PERMANENT LONGITUDINAL PAVEMENT MARKINGS FOR PAVEMENT MARKING LAYOUT.

ALL TRAFFIC CONTROL SIGNS ARE 48"x48" UNLESS NOTED OTHERWISE.

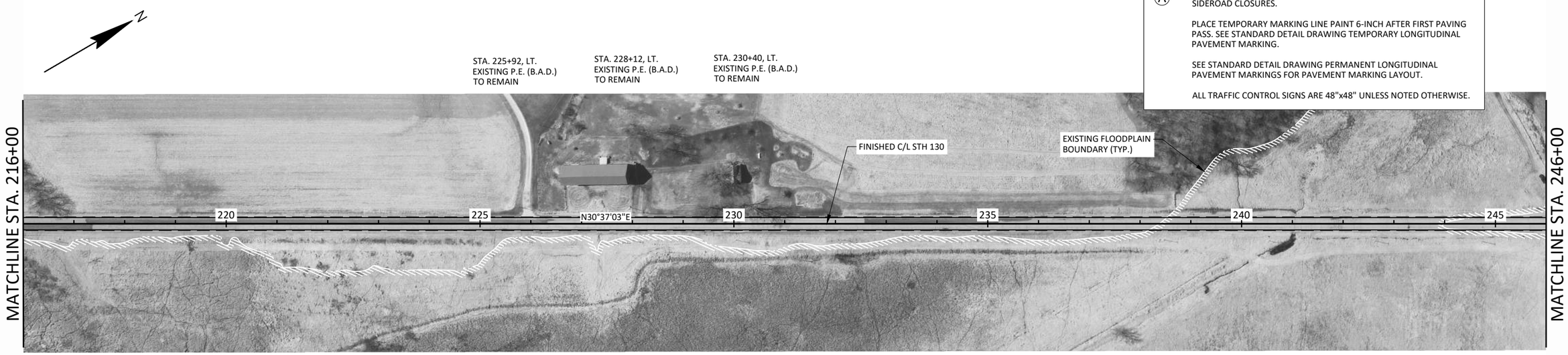

STA. 238+00 - STA. 245+00
PAVEMENT TRANSITION FOR
FLOODPLAIN ACCOMMODATION REQ'D.
SEE CONSTRUCTION DETAILS FOR
ADDITIONAL INFORMATION.

2

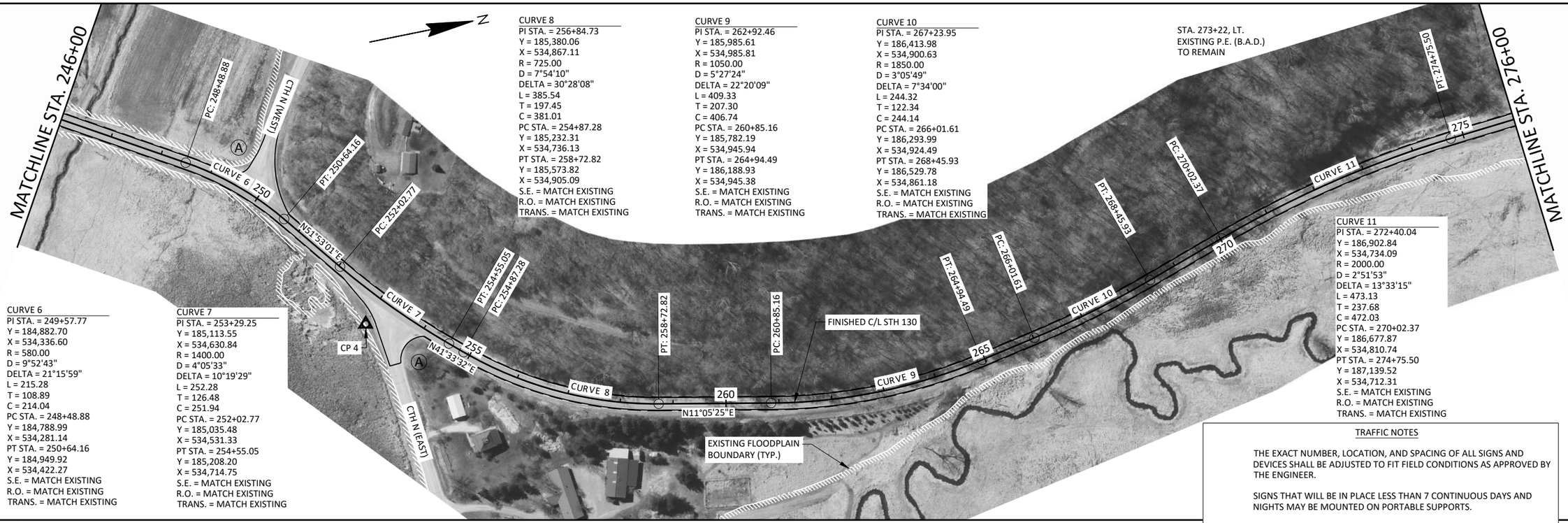

CURVE 6
PI STA. = 249+57.77
Y = 184,882.70
X = 534,336.60
R = 580.00
D = 9°52'43"
DELTA = 21°15'59"
L = 215.28
T = 108.89
C = 214.04
PC STA. = 248+48.88
Y = 184,788.99
X = 534,281.14
PT STA. = 250+64.16
Y = 184,949.92
X = 534,422.27
S.E. = MATCH EXISTING
R.O. = MATCH EXISTING
TRANS. = MATCH EXISTING

CURVE 7
PI STA. = 253+29.25
Y = 185,113.55
X = 534,630.84
R = 1400.00
D = 4°05'33"
DELTA = 10°19'29"
L = 252.28
T = 126.48
C = 251.94
PC STA. = 252+02.77
Y = 185,035.48
X = 534,531.33
PT STA. = 254+55.05
Y = 185,208.20
X = 534,714.75
S.E. = MATCH EXISTING
R.O. = MATCH EXISTING
TRANS. = MATCH EXISTING

CURVE 8
PI STA. = 256+84.73
Y = 185,380.06
X = 534,867.11
R = 725.00
D = 7°54'10"
DELTA = 30°28'08"
L = 385.54
T = 197.45
C = 381.01
PC STA. = 254+87.28
Y = 185,232.31
X = 534,736.13
PT STA. = 258+72.82
Y = 185,573.82
X = 534,905.09
S.E. = MATCH EXISTING
R.O. = MATCH EXISTING
TRANS. = MATCH EXISTING

CURVE 9
PI STA. = 262+92.46
Y = 185,985.61
X = 534,985.81
R = 1050.00
D = 5°27'24"
DELTA = 22°20'09"
L = 409.33
T = 207.30
C = 406.74
PC STA. = 260+85.16
Y = 185,782.19
X = 534,924.94
PT STA. = 264+94.49
Y = 186,188.93
X = 534,945.38
S.E. = MATCH EXISTING
R.O. = MATCH EXISTING
TRANS. = MATCH EXISTING

CURVE 10
PI STA. = 267+23.95
Y = 186,413.98
X = 534,900.63
R = 1850.00
D = 3°05'49"
DELTA = 7°34'00"
L = 244.32
T = 122.34
C = 244.14
PC STA. = 266+01.61
Y = 186,293.99
X = 534,924.49
PT STA. = 268+45.93
Y = 186,189.93
X = 534,861.18
S.E. = MATCH EXISTING
R.O. = MATCH EXISTING
TRANS. = MATCH EXISTING

CURVE 11
PI STA. = 272+40.04
Y = 186,902.84
X = 534,734.09
R = 2000.00
D = 2°51'53"
DELTA = 13°33'15"
L = 473.13
T = 237.68
C = 472.03
PC STA. = 270+02.37
Y = 186,677.87
X = 534,810.74
PT STA. = 274+75.50
Y = 187,139.52
X = 534,712.31
S.E. = MATCH EXISTING
R.O. = MATCH EXISTING
TRANS. = MATCH EXISTING

TRAFFIC NOTES

THE EXACT NUMBER, LOCATION, AND SPACING OF ALL SIGNS AND DEVICES SHALL BE ADJUSTED TO FIT FIELD CONDITIONS AS APPROVED BY THE ENGINEER.

SIGNS THAT WILL BE IN PLACE LESS THAN 7 CONTINUOUS DAYS AND NIGHTS MAY BE MOUNTED ON PORTABLE SUPPORTS.

FOR MOVING OPERATION STA. 10+00 TO STA. 622+52.62 SEE STANDARD DETAIL DRAWING "TRAFFIC CONTROL FOR LANE CLOSURE WITH FLAGGING OPERATION". COSTS FOR FLAGGING AND ASSOCIATED SIGNS FOR MOVING OPERATIONS ARE INCIDENTAL TO THE CONTRACT.

Ⓐ SEE STANDARD DETAIL DRAWING BARRICADES AND SIGNS FOR SIDEROAD CLOSURES.

PLACE TEMPORARY MARKING LINE PAINT 6-INCH AFTER FIRST PAVING PASS. SEE STANDARD DETAIL DRAWING TEMPORARY LONGITUDINAL PAVEMENT MARKING.

SEE STANDARD DETAIL DRAWING PERMANENT LONGITUDINAL PAVEMENT MARKINGS FOR PAVEMENT MARKING LAYOUT.

ALL TRAFFIC CONTROL SIGNS ARE 48"x48" UNLESS NOTED OTHERWISE.

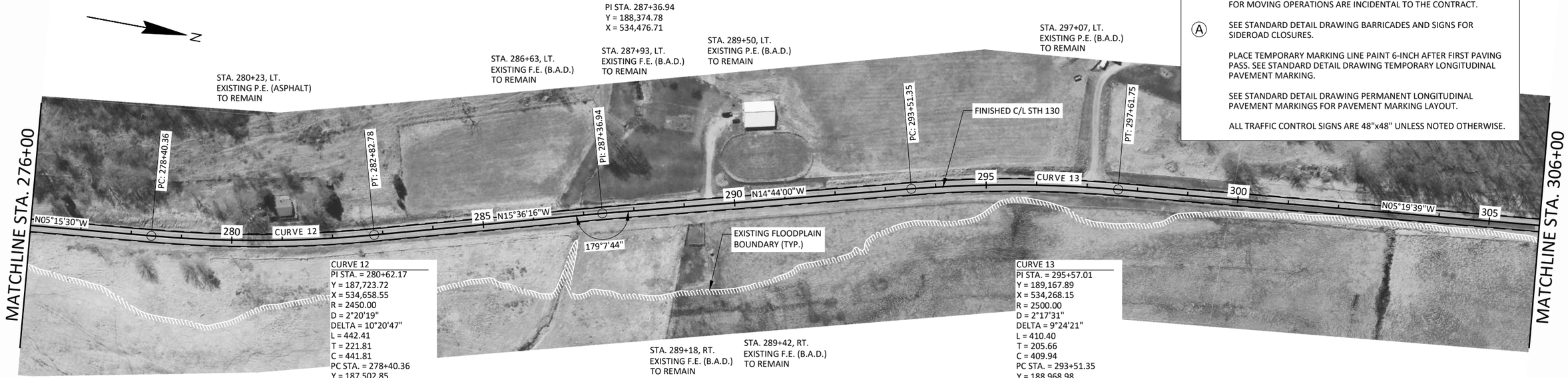

CURVE 12
PI STA. = 280+62.17
Y = 187,723.72
X = 534,658.55
R = 2450.00
D = 2°20'19"
DELTA = 10°20'47"
L = 442.41
T = 221.81
C = 441.81
PC STA. = 278+40.36
Y = 187,502.85
X = 534,678.87
PT STA. = 282+82.78
Y = 187,937.36
X = 534,598.88
S.E. = MATCH EXISTING
R.O. = MATCH EXISTING
TRANS. = MATCH EXISTING

CURVE 13
PI STA. = 295+57.01
Y = 189,167.89
X = 534,268.15
R = 2500.00
D = 2°17'31"
DELTA = 9°24'21"
L = 410.40
T = 205.66
C = 409.94
PC STA. = 293+51.35
Y = 188,968.98
X = 534,320.45
PT STA. = 297+61.75
Y = 189,372.66
X = 534,249.05
S.E. = MATCH EXISTING
R.O. = MATCH EXISTING
TRANS. = MATCH EXISTING

2

PROJECT NO: 5760-00-72	HWY: STH 130	COUNTY: SAUK	PLAN DETAILS	SHEET 27	E

2

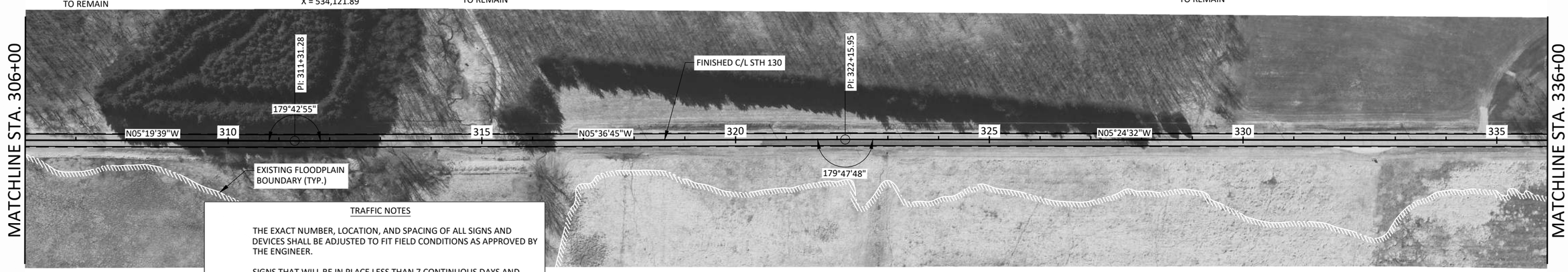

TRAFFIC NOTES

THE EXACT NUMBER, LOCATION, AND SPACING OF ALL SIGNS AND DEVICES SHALL BE ADJUSTED TO FIT FIELD CONDITIONS AS APPROVED BY THE ENGINEER.

SIGNS THAT WILL BE IN PLACE LESS THAN 7 CONTINUOUS DAYS AND NIGHTS MAY BE MOUNTED ON PORTABLE SUPPORTS.

FOR MOVING OPERATION STA. 10+00 TO STA. 622+52.62 SEE STANDARD DETAIL DRAWING "TRAFFIC CONTROL FOR LANE CLOSURE WITH FLAGGING OPERATION". COSTS FOR FLAGGING AND ASSOCIATED SIGNS FOR MOVING OPERATIONS ARE INCIDENTAL TO THE CONTRACT.

(A) SEE STANDARD DETAIL DRAWING BARRICADES AND SIGNS FOR SIDEROAD CLOSURES.

PLACE TEMPORARY MARKING LINE PAINT 6-INCH AFTER FIRST PAVING PASS. SEE STANDARD DETAIL DRAWING TEMPORARY LONGITUDINAL PAVEMENT MARKING.

SEE STANDARD DETAIL DRAWING PERMANENT LONGITUDINAL PAVEMENT MARKINGS FOR PAVEMENT MARKING LAYOUT.

ALL TRAFFIC CONTROL SIGNS ARE 48"x48" UNLESS NOTED OTHERWISE.

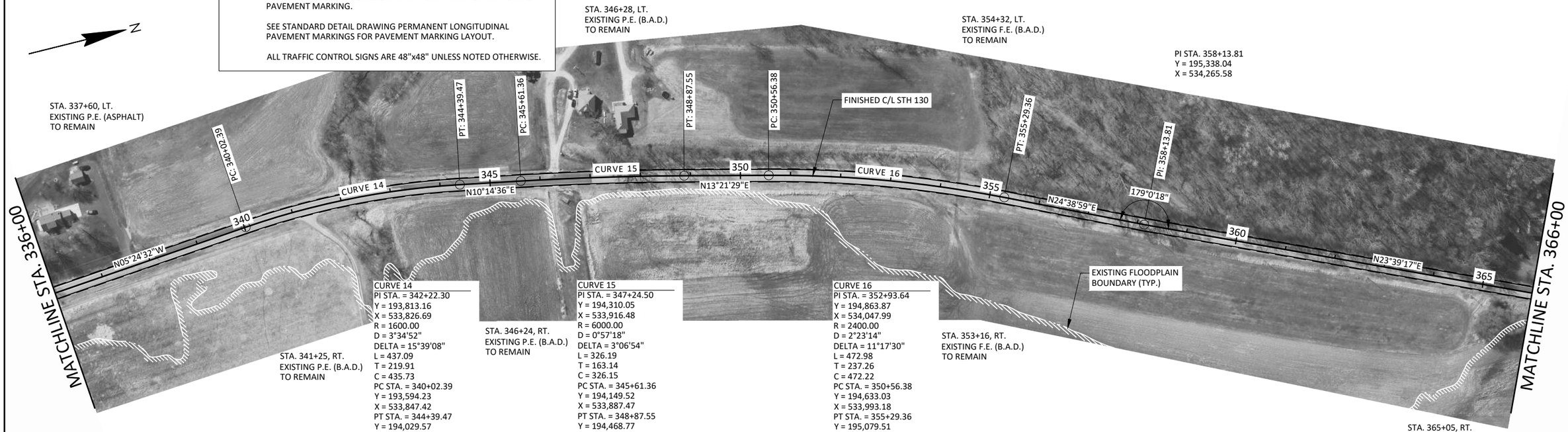

CURVE 14
PI STA. = 342+22.30
Y = 193,813.16
X = 533,826.69
R = 1600.00
D = 3°34'52"
DELTA = 15°39'08"
L = 437.09
T = 219.91
C = 435.73
PC STA. = 340+02.39
Y = 193,594.23
X = 533,847.42
PT STA. = 344+39.47
Y = 194,029.57
X = 533,865.80
S.E. = MATCH EXISTING
R.O. = MATCH EXISTING
TRANS. = MATCH EXISTING

CURVE 15
PI STA. = 347+24.50
Y = 194,310.05
X = 533,916.48
R = 6000.00
D = 0°57'18"
DELTA = 3°06'54"
L = 326.19
T = 163.14
C = 326.15
PC STA. = 345+61.36
Y = 194,149.52
X = 533,887.47
PT STA. = 348+87.55
Y = 194,468.77
X = 533,954.17
S.E. = MATCH EXISTING
R.O. = MATCH EXISTING
TRANS. = MATCH EXISTING

CURVE 16
PI STA. = 352+93.64
Y = 194,863.87
X = 534,047.99
R = 2400.00
D = 2°23'14"
DELTA = 11°17'30"
L = 472.98
T = 237.26
C = 472.22
PC STA. = 350+56.38
Y = 194,633.03
X = 533,993.18
PT STA. = 355+29.36
Y = 195,079.51
X = 534,146.95
S.E. = MATCH EXISTING
R.O. = MATCH EXISTING
TRANS. = MATCH EXISTING

2

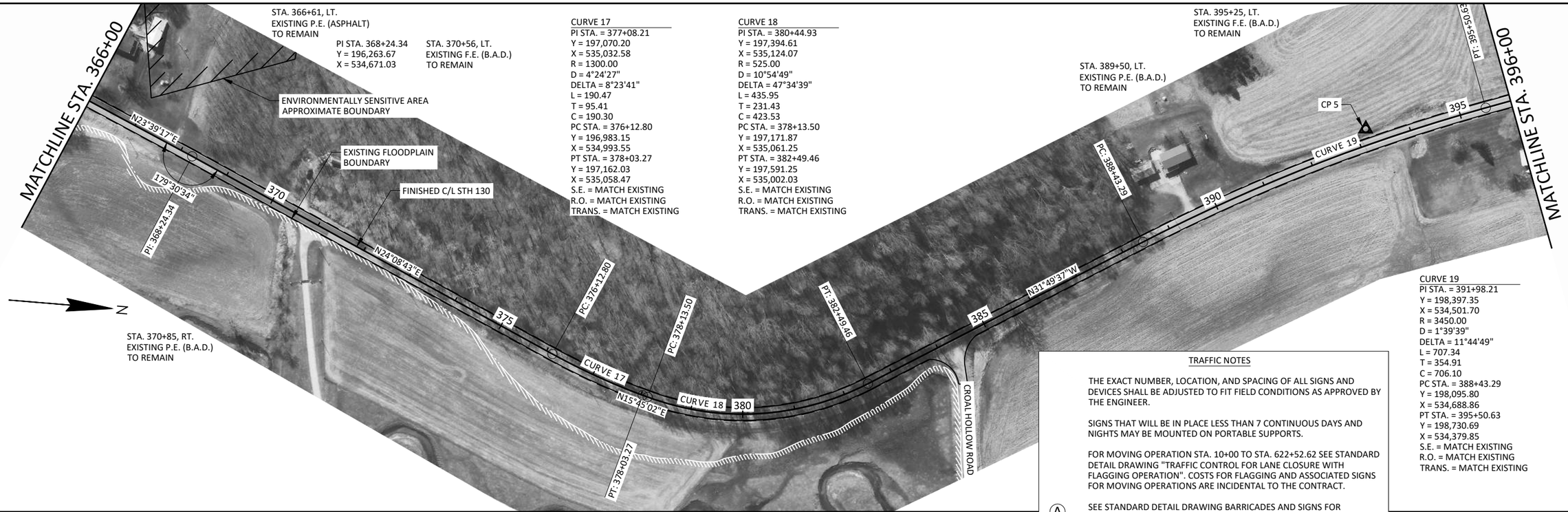

CURVE 17
PI STA. = 377+08.21
Y = 197,070.20
X = 535,032.58
R = 1300.00
D = 4°24'27"
DELTA = 8°23'41"
L = 190.47
T = 95.41
C = 190.30
PC STA. = 376+12.80
Y = 196,983.15
X = 534,993.55
PT STA. = 378+03.27
Y = 197,162.03
X = 535,058.47
S.E. = MATCH EXISTING
R.O. = MATCH EXISTING
TRANS. = MATCH EXISTING

CURVE 18
PI STA. = 380+44.93
Y = 197,394.61
X = 535,124.07
R = 525.00
D = 10°54'49"
DELTA = 47°34'39"
L = 435.95
T = 231.43
C = 423.53
PC STA. = 378+13.50
Y = 197,171.87
X = 535,061.25
PT STA. = 382+49.46
Y = 197,591.25
X = 535,002.03
S.E. = MATCH EXISTING
R.O. = MATCH EXISTING
TRANS. = MATCH EXISTING

CURVE 19
PI STA. = 391+98.21
Y = 198,397.35
X = 534,501.70
R = 3450.00
D = 1°39'39"
DELTA = 11°44'49"
L = 707.34
T = 354.91
C = 706.10
PC STA. = 388+43.29
Y = 198,095.80
X = 534,688.86
PT STA. = 395+50.63
Y = 198,730.69
X = 534,379.85
S.E. = MATCH EXISTING
R.O. = MATCH EXISTING
TRANS. = MATCH EXISTING

TRAFFIC NOTES

THE EXACT NUMBER, LOCATION, AND SPACING OF ALL SIGNS AND DEVICES SHALL BE ADJUSTED TO FIT FIELD CONDITIONS AS APPROVED BY THE ENGINEER.

SIGNS THAT WILL BE IN PLACE LESS THAN 7 CONTINUOUS DAYS AND NIGHTS MAY BE MOUNTED ON PORTABLE SUPPORTS.

FOR MOVING OPERATION STA. 10+00 TO STA. 622+52.62 SEE STANDARD DETAIL DRAWING "TRAFFIC CONTROL FOR LANE CLOSURE WITH FLAGGING OPERATION". COSTS FOR FLAGGING AND ASSOCIATED SIGNS FOR MOVING OPERATIONS ARE INCIDENTAL TO THE CONTRACT.

Ⓐ SEE STANDARD DETAIL DRAWING BARRICADES AND SIGNS FOR SIDEROAD CLOSURES.

PLACE TEMPORARY MARKING LINE PAINT 6-INCH AFTER FIRST PAVING PASS. SEE STANDARD DETAIL DRAWING TEMPORARY LONGITUDINAL PAVEMENT MARKING.

SEE STANDARD DETAIL DRAWING PERMANENT LONGITUDINAL PAVEMENT MARKINGS FOR PAVEMENT MARKING LAYOUT.

ALL TRAFFIC CONTROL SIGNS ARE 48"x48" UNLESS NOTED OTHERWISE.

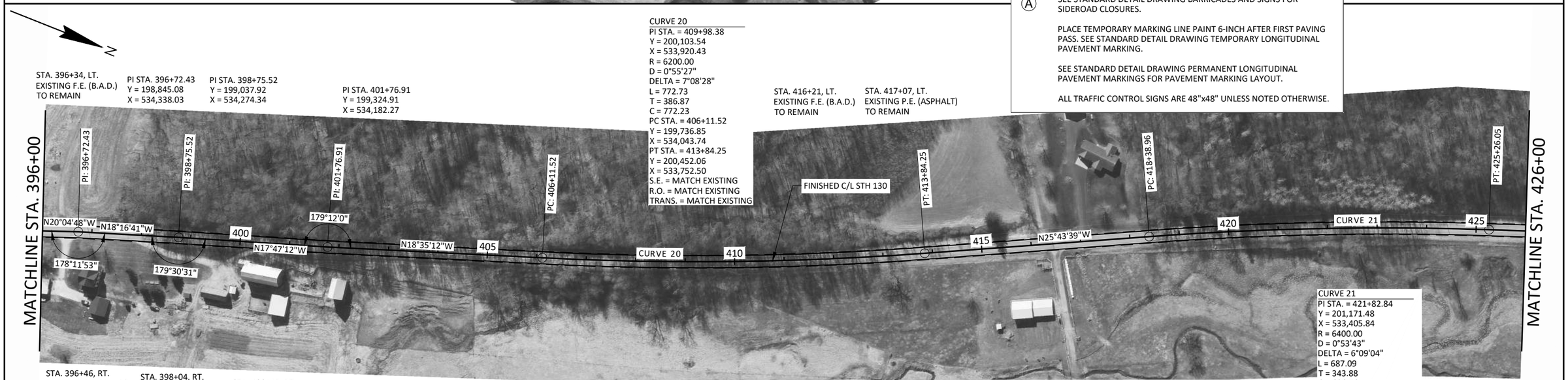

CURVE 20
PI STA. = 409+98.38
Y = 200,103.54
X = 533,920.43
R = 6200.00
D = 0°55'27"
DELTA = 7°08'28"
L = 772.73
T = 386.87
C = 772.23
PC STA. = 406+11.52
Y = 199,736.85
X = 534,043.74
PT STA. = 413+84.25
Y = 200,452.06
X = 533,752.50
S.E. = MATCH EXISTING
R.O. = MATCH EXISTING
TRANS. = MATCH EXISTING

CURVE 21
PI STA. = 421+82.84
Y = 201,171.48
X = 533,405.84
R = 6400.00
D = 0°53'43"
DELTA = 6°09'04"
L = 687.09
T = 343.88
C = 686.76
PC STA. = 418+38.96
Y = 200,861.69
X = 533,555.11
PT STA. = 425+26.05
Y = 201,495.48
X = 533,290.62
S.E. = MATCH EXISTING
R.O. = MATCH EXISTING
TRANS. = MATCH EXISTING

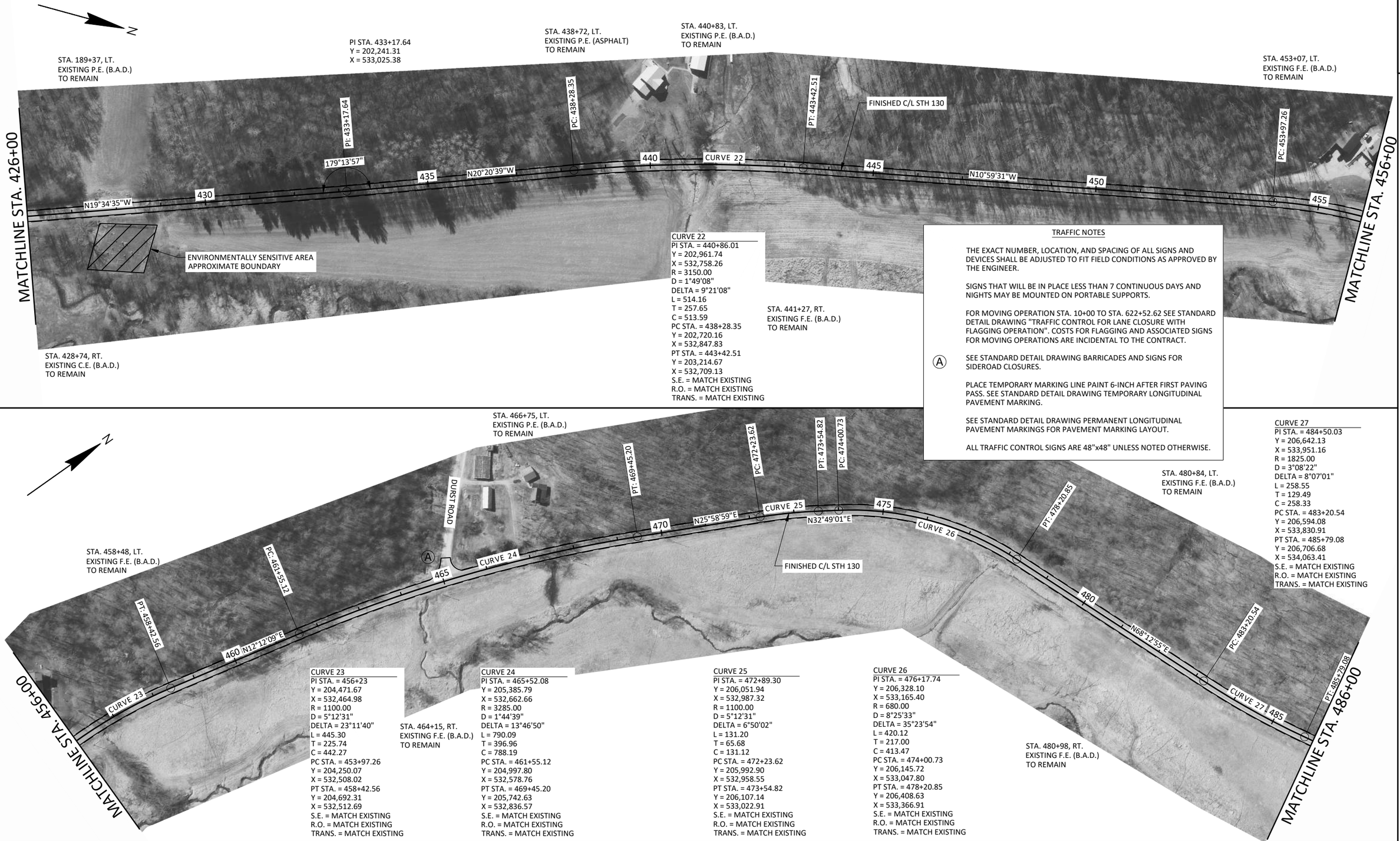

CURVE 22
PI STA. = 440+86.01
Y = 202,961.74
X = 532,758.26
R = 3150.00
D = 1°49'08"
DELTA = 9°21'08"
L = 514.16
T = 257.65
C = 513.59
PC STA. = 438+28.35
Y = 202,720.16
X = 532,847.83
PT STA. = 443+42.51
Y = 203,214.67
X = 532,709.13
S.E. = MATCH EXISTING
R.O. = MATCH EXISTING
TRANS. = MATCH EXISTING

TRAFFIC NOTES

THE EXACT NUMBER, LOCATION, AND SPACING OF ALL SIGNS AND DEVICES SHALL BE ADJUSTED TO FIT FIELD CONDITIONS AS APPROVED BY THE ENGINEER.

SIGNS THAT WILL BE IN PLACE LESS THAN 7 CONTINUOUS DAYS AND NIGHTS MAY BE MOUNTED ON PORTABLE SUPPORTS.

FOR MOVING OPERATION STA. 10+00 TO STA. 622+52.62 SEE STANDARD DETAIL DRAWING "TRAFFIC CONTROL FOR LANE CLOSURE WITH FLAGGING OPERATION". COSTS FOR FLAGGING AND ASSOCIATED SIGNS FOR MOVING OPERATIONS ARE INCIDENTAL TO THE CONTRACT.

Ⓐ SEE STANDARD DETAIL DRAWING BARRICADES AND SIGNS FOR SIDEROAD CLOSURES.

PLACE TEMPORARY MARKING LINE PAINT 6-INCH AFTER FIRST PAVING PASS. SEE STANDARD DETAIL DRAWING TEMPORARY LONGITUDINAL PAVEMENT MARKING.

SEE STANDARD DETAIL DRAWING PERMANENT LONGITUDINAL PAVEMENT MARKINGS FOR PAVEMENT MARKING LAYOUT.

ALL TRAFFIC CONTROL SIGNS ARE 48"x48" UNLESS NOTED OTHERWISE.

CURVE 27
PI STA. = 484+50.03
Y = 206,642.13
X = 533,951.16
R = 1825.00
D = 3°08'22"
DELTA = 8°07'01"
L = 258.55
T = 129.49
C = 258.33
PC STA. = 483+20.54
Y = 206,594.08
X = 533,830.91
PT STA. = 485+79.08
Y = 206,706.68
X = 534,063.41
S.E. = MATCH EXISTING
R.O. = MATCH EXISTING
TRANS. = MATCH EXISTING

CURVE 23
PI STA. = 456+23
Y = 204,471.67
X = 532,464.98
R = 1100.00
D = 5°12'31"
DELTA = 23°11'40"
L = 445.30
T = 225.74
C = 442.27
PC STA. = 453+97.26
Y = 204,250.07
X = 532,508.02
PT STA. = 458+42.56
Y = 204,692.31
X = 532,512.69
S.E. = MATCH EXISTING
R.O. = MATCH EXISTING
TRANS. = MATCH EXISTING

CURVE 24
PI STA. = 465+52.08
Y = 205,385.79
X = 532,662.66
R = 3285.00
D = 1°44'39"
DELTA = 13°46'50"
L = 790.09
T = 396.96
C = 788.19
PC STA. = 461+55.12
Y = 204,997.80
X = 532,578.76
PT STA. = 469+45.20
Y = 205,742.63
X = 532,836.57
S.E. = MATCH EXISTING
R.O. = MATCH EXISTING
TRANS. = MATCH EXISTING

CURVE 25
PI STA. = 472+89.30
Y = 206,051.94
X = 532,987.32
R = 1100.00
D = 5°12'31"
DELTA = 6°50'02"
L = 131.20
T = 65.68
C = 131.12
PC STA. = 472+23.62
Y = 205,992.90
X = 532,958.55
PT STA. = 473+54.82
Y = 206,107.14
X = 532,022.91
S.E. = MATCH EXISTING
R.O. = MATCH EXISTING
TRANS. = MATCH EXISTING

CURVE 26
PI STA. = 476+17.74
Y = 206,328.10
X = 533,165.40
R = 680.00
D = 8°25'33"
DELTA = 35°23'54"
L = 420.12
T = 217.00
C = 413.47
PC STA. = 474+00.73
Y = 206,145.72
X = 533,047.80
PT STA. = 478+20.85
Y = 206,408.63
X = 533,366.91
S.E. = MATCH EXISTING
R.O. = MATCH EXISTING
TRANS. = MATCH EXISTING

2

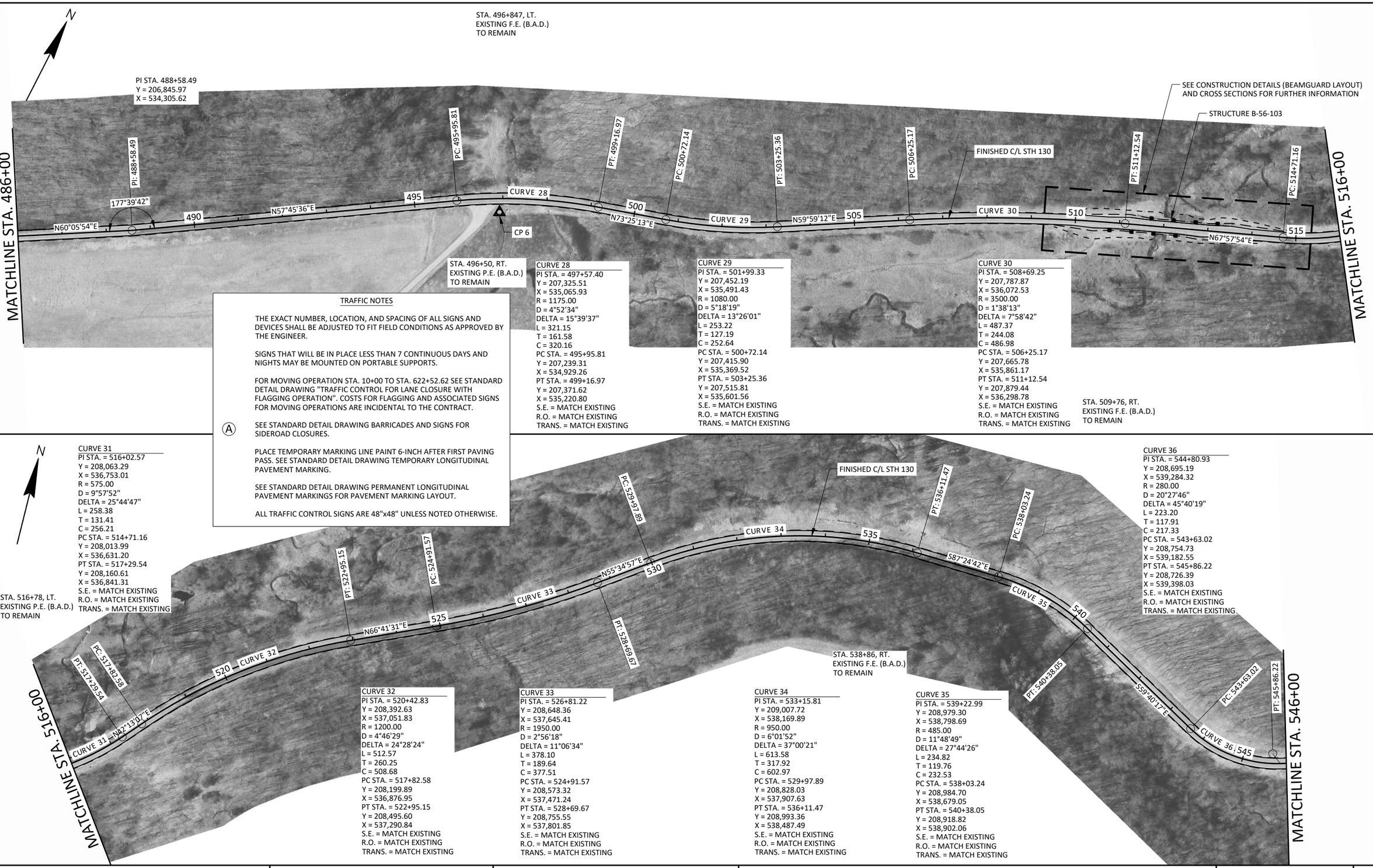

TRAFFIC NOTES

THE EXACT NUMBER, LOCATION, AND SPACING OF ALL SIGNS AND DEVICES SHALL BE ADJUSTED TO FIT FIELD CONDITIONS AS APPROVED BY THE ENGINEER.

SIGNS THAT WILL BE IN PLACE LESS THAN 7 CONTINUOUS DAYS AND NIGHTS MAY BE MOUNTED ON PORTABLE SUPPORTS.

FOR MOVING OPERATION STA. 10+00 TO STA. 622+52.62 SEE STANDARD DETAIL DRAWING "TRAFFIC CONTROL FOR LANE CLOSURE WITH FLAGGING OPERATION". COSTS FOR FLAGGING AND ASSOCIATED SIGNS FOR MOVING OPERATIONS ARE INCIDENTAL TO THE CONTRACT.

Ⓐ SEE STANDARD DETAIL DRAWING BARRICADES AND SIGNS FOR SIDEROAD CLOSURES.

PLACE TEMPORARY MARKING LINE PAINT 6-INCH AFTER FIRST PAVING PASS. SEE STANDARD DETAIL DRAWING TEMPORARY LONGITUDINAL PAVEMENT MARKING.

SEE STANDARD DETAIL DRAWING PERMANENT LONGITUDINAL PAVEMENT MARKINGS FOR PAVEMENT MARKING LAYOUT.

ALL TRAFFIC CONTROL SIGNS ARE 48"x48" UNLESS NOTED OTHERWISE.

CURVE 28
PI STA. = 497+57.40
Y = 207,325.51
X = 535,065.93
R = 1175.00
D = 4°52'34"
DELTA = 15°39'37"
L = 321.15
T = 161.58
C = 320.16
PC STA. = 495+95.81
Y = 207,239.31
X = 534,929.26
PT STA. = 499+16.97
Y = 207,371.62
X = 535,220.80
S.E. = MATCH EXISTING
R.O. = MATCH EXISTING
TRANS. = MATCH EXISTING

CURVE 29
PI STA. = 501+99.33
Y = 207,452.19
X = 535,491.43
R = 1080.00
D = 5°18'19"
DELTA = 13°26'01"
L = 253.22
T = 127.19
C = 252.64
PC STA. = 500+72.14
Y = 207,415.90
X = 535,369.52
PT STA. = 503+25.36
Y = 207,515.81
X = 535,601.56
S.E. = MATCH EXISTING
R.O. = MATCH EXISTING
TRANS. = MATCH EXISTING

CURVE 30
PI STA. = 508+69.25
Y = 207,787.87
X = 536,072.53
R = 3500.00
D = 1°38'13"
DELTA = 7°58'42"
L = 487.37
T = 244.08
C = 486.98
PC STA. = 506+25.17
Y = 207,665.78
X = 535,861.17
PT STA. = 511+12.54
Y = 207,879.44
X = 536,298.78
S.E. = MATCH EXISTING
R.O. = MATCH EXISTING
TRANS. = MATCH EXISTING

CURVE 31
PI STA. = 516+02.57
Y = 208,063.29
X = 536,753.01
R = 575.00
D = 9°57'52"
DELTA = 25°44'47"
L = 258.38
T = 131.41
C = 256.21
PC STA. = 514+71.16
Y = 208,013.99
X = 536,631.20
PT STA. = 517+29.54
Y = 208,160.61
X = 536,841.31
S.E. = MATCH EXISTING
R.O. = MATCH EXISTING
TRANS. = MATCH EXISTING

CURVE 32
PI STA. = 520+42.83
Y = 208,392.63
X = 537,051.83
R = 1200.00
D = 4°46'29"
DELTA = 24°28'24"
L = 512.57
T = 260.25
C = 508.68
PC STA. = 517+82.58
Y = 208,199.89
X = 536,876.95
PT STA. = 522+95.15
Y = 208,495.60
X = 537,290.84
S.E. = MATCH EXISTING
R.O. = MATCH EXISTING
TRANS. = MATCH EXISTING

CURVE 33
PI STA. = 526+81.22
Y = 208,648.36
X = 537,645.41
R = 1950.00
D = 2°56'18"
DELTA = 11°06'34"
L = 378.10
T = 189.64
C = 377.51
PC STA. = 524+91.57
Y = 208,573.32
X = 537,471.24
PT STA. = 528+69.67
Y = 208,755.55
X = 537,801.85
S.E. = MATCH EXISTING
R.O. = MATCH EXISTING
TRANS. = MATCH EXISTING

CURVE 34
PI STA. = 533+15.81
Y = 209,007.72
X = 538,169.89
R = 950.00
D = 6°01'52"
DELTA = 37°00'21"
L = 613.58
T = 317.92
C = 602.97
PC STA. = 529+97.89
Y = 208,828.03
X = 537,907.63
PT STA. = 536+11.47
Y = 208,993.36
X = 538,487.49
S.E. = MATCH EXISTING
R.O. = MATCH EXISTING
TRANS. = MATCH EXISTING

CURVE 35
PI STA. = 539+22.99
Y = 208,979.30
X = 538,798.69
R = 485.00
D = 11°48'49"
DELTA = 27°44'26"
L = 234.82
T = 119.76
C = 232.53
PC STA. = 538+03.24
Y = 208,984.70
X = 538,679.05
PT STA. = 540+38.05
Y = 208,918.82
X = 538,902.06
S.E. = MATCH EXISTING
R.O. = MATCH EXISTING
TRANS. = MATCH EXISTING

CURVE 36
PI STA. = 544+80.93
Y = 208,695.19
X = 539,284.32
R = 280.00
D = 20°27'46"
DELTA = 45°40'19"
L = 223.20
T = 117.91
C = 217.33
PC STA. = 543+63.02
Y = 208,754.73
X = 539,182.55
PT STA. = 545+86.22
Y = 208,726.39
X = 539,398.03
S.E. = MATCH EXISTING
R.O. = MATCH EXISTING
TRANS. = MATCH EXISTING

2

PROJECT NO: 5760-00-72	HWY: STH 130	COUNTY: SAUK	PLAN DETAILS	SHEET 31	E

2

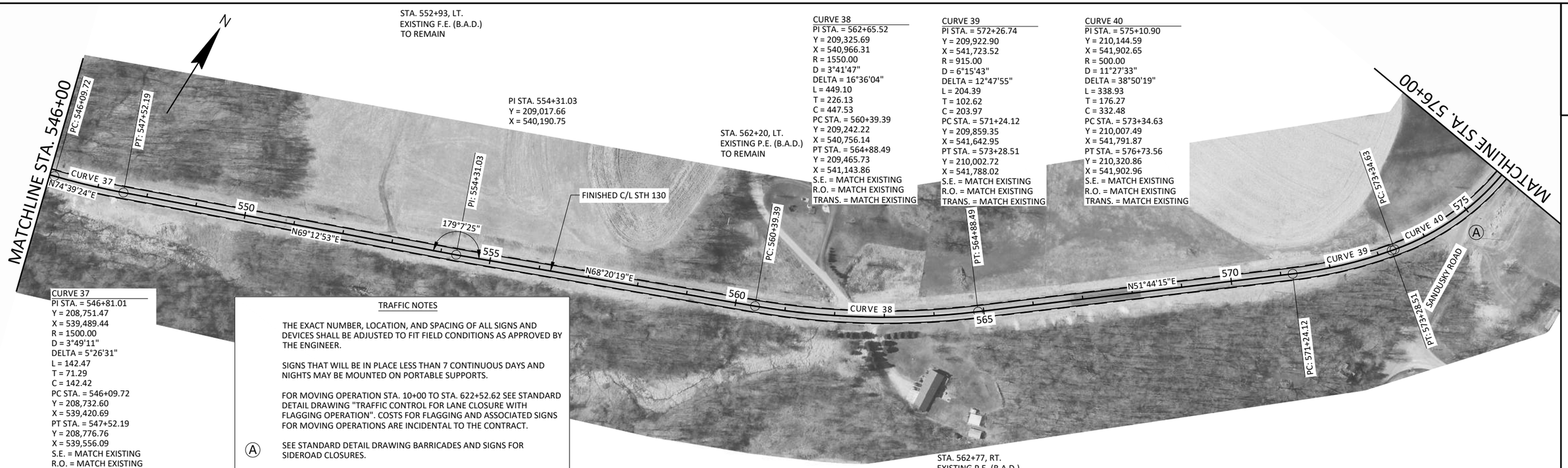

CURVE 37
PI STA. = 546+81.01
Y = 208,751.47
X = 539,489.44
R = 1500.00
D = 3°49'11"
DELTA = 5°26'31"
L = 142.47
T = 71.29
C = 142.42
PC STA. = 546+09.72
Y = 208,732.60
X = 539,420.69
PT STA. = 547+52.19
Y = 208,776.76
X = 539,556.09
S.E. = MATCH EXISTING
R.O. = MATCH EXISTING
TRANS. = MATCH EXISTING

CURVE 38
PI STA. = 562+65.52
Y = 209,325.69
X = 540,966.31
R = 1550.00
D = 3°41'47"
DELTA = 16°36'04"
L = 449.10
T = 226.13
C = 447.53
PC STA. = 560+39.39
Y = 209,242.22
X = 540,756.14
PT STA. = 564+88.49
Y = 209,465.73
X = 541,143.86
S.E. = MATCH EXISTING
R.O. = MATCH EXISTING
TRANS. = MATCH EXISTING

CURVE 39
PI STA. = 572+26.74
Y = 209,922.90
X = 541,723.52
R = 915.00
D = 6°15'43"
DELTA = 12°47'55"
L = 204.39
T = 102.62
C = 203.97
PC STA. = 571+24.12
Y = 209,859.35
X = 541,642.95
PT STA. = 573+28.51
Y = 210,002.72
X = 541,788.02
S.E. = MATCH EXISTING
R.O. = MATCH EXISTING
TRANS. = MATCH EXISTING

CURVE 40
PI STA. = 575+10.90
Y = 210,144.59
X = 541,902.65
R = 500.00
D = 11°27'33"
DELTA = 38°50'19"
L = 338.93
T = 176.27
C = 332.48
PC STA. = 573+34.63
Y = 210,007.49
X = 541,791.87
PT STA. = 576+73.56
Y = 210,320.86
X = 541,902.96
S.E. = MATCH EXISTING
R.O. = MATCH EXISTING
TRANS. = MATCH EXISTING

TRAFFIC NOTES

THE EXACT NUMBER, LOCATION, AND SPACING OF ALL SIGNS AND DEVICES SHALL BE ADJUSTED TO FIT FIELD CONDITIONS AS APPROVED BY THE ENGINEER.

SIGNS THAT WILL BE IN PLACE LESS THAN 7 CONTINUOUS DAYS AND NIGHTS MAY BE MOUNTED ON PORTABLE SUPPORTS.

FOR MOVING OPERATION STA. 10+00 TO STA. 622+52.62 SEE STANDARD DETAIL DRAWING "TRAFFIC CONTROL FOR LANE CLOSURE WITH FLAGGING OPERATION". COSTS FOR FLAGGING AND ASSOCIATED SIGNS FOR MOVING OPERATIONS ARE INCIDENTAL TO THE CONTRACT.

A SEE STANDARD DETAIL DRAWING BARRICADES AND SIGNS FOR SIDEROAD CLOSURES.

PLACE TEMPORARY MARKING LINE PAINT 6-INCH AFTER FIRST PAVING PASS. SEE STANDARD DETAIL DRAWING TEMPORARY LONGITUDINAL PAVEMENT MARKING.

SEE STANDARD DETAIL DRAWING PERMANENT LONGITUDINAL PAVEMENT MARKINGS FOR PAVEMENT MARKING LAYOUT.

ALL TRAFFIC CONTROL SIGNS ARE 48"x48" UNLESS NOTED OTHERWISE.

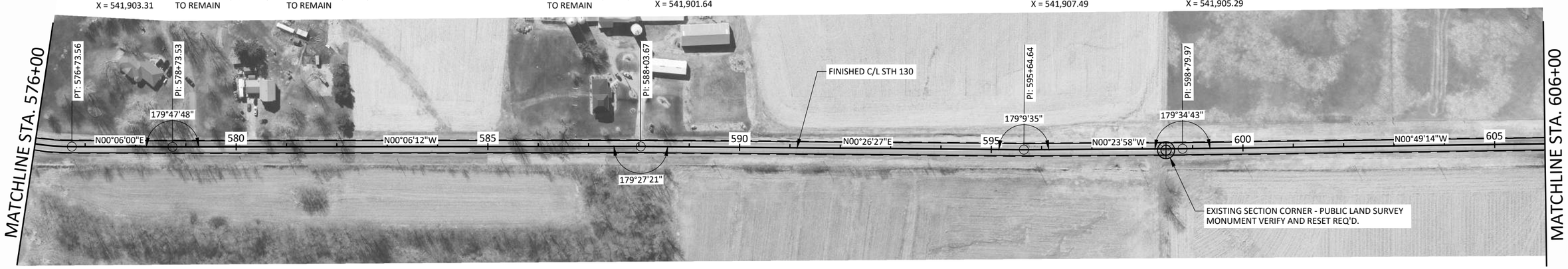

2

PROJECT NO: 5760-00-72	HWY: STH 130	COUNTY: SAUK	PLAN DETAILS	SHEET 32	E

TRAFFIC NOTES

THE EXACT NUMBER, LOCATION, AND SPACING OF ALL SIGNS AND DEVICES SHALL BE ADJUSTED TO FIT FIELD CONDITIONS AS APPROVED BY THE ENGINEER.

SIGNS THAT WILL BE IN PLACE LESS THAN 7 CONTINUOUS DAYS AND NIGHTS MAY BE MOUNTED ON PORTABLE SUPPORTS.

FOR MOVING OPERATION STA. 10+00 TO STA. 622+52.62 SEE STANDARD DETAIL DRAWING "TRAFFIC CONTROL FOR LANE CLOSURE WITH FLAGGING OPERATION". COSTS FOR FLAGGING AND ASSOCIATED SIGNS FOR MOVING OPERATIONS ARE INCIDENTAL TO THE CONTRACT.

Ⓐ SEE STANDARD DETAIL DRAWING BARRICADES AND SIGNS FOR SIDEROAD CLOSURES.

PLACE TEMPORARY MARKING LINE PAINT 6-INCH AFTER FIRST PAVING PASS. SEE STANDARD DETAIL DRAWING TEMPORARY LONGITUDINAL PAVEMENT MARKING.

SEE STANDARD DETAIL DRAWING PERMANENT LONGITUDINAL PAVEMENT MARKINGS FOR PAVEMENT MARKING LAYOUT.

ALL TRAFFIC CONTROL SIGNS ARE 48"x48" UNLESS NOTED OTHERWISE.

5760-00-72

Line	Item	Item Description	Unit	Total	Qty
0002	203.0335	Debris Containment Over Waterway (structure) 01. B-52-21	EACH	1.000	1.000
0008	204.0115	Removing Asphaltic Surface Butt Joints	SY	4,140.000	4,140.000
0010	204.0120	Removing Asphaltic Surface Milling	SY	163,350.000	163,350.000
0012	204.0150	Removing Curb & Gutter	LF	320.000	320.000
0014	204.0155	Removing Concrete Sidewalk	SY	70.000	70.000
0016	204.0165	Removing Guardrail	LF	740.000	740.000
0020	204.0220	Removing Inlets	EACH	2.000	2.000
0022	204.0245	Removing Storm Sewer (size) 01. 18-Inch	LF	64.000	64.000
0024	205.0100	Excavation Common	CY	1,030.000	1,030.000
0026	211.0101	Prepare Foundation for Asphaltic Paving (project) 01. 5760-00-72	EACH	1.000	1.000
0028	211.0400	Prepare Foundation for Asphaltic Shoulders	STA	3.000	3.000
0030	213.0100	Finishing Roadway (project) 01. 5760-00-72	EACH	1.000	1.000
0034	305.0110	Base Aggregate Dense 3/4-Inch	TON	5,660.000	5,660.000
0038	330.0100	Mill and Relay	SY	174,450.000	174,450.000
0040	374.1010.S	QMP Mill and Relay Compaction	SY	174,450.000	174,450.000
0042	455.0605	Tack Coat	GAL	8,581.000	8,581.000
0044	460.0105.S	HMA Percent Within Limits (PWL) Test Strip Volumetrics	EACH	1.000	1.000
0046	460.0110.S	HMA Percent Within Limits (PWL) Test Strip Density	EACH	4.000	4.000
0050	460.2005	Incentive Density PWL HMA Pavement	DOL	28,980.000	28,980.000
0052	460.2007	Incentive Density HMA Pavement Longitudinal Joints	DOL	12,260.000	12,260.000
0054	460.2010	Incentive Air Voids HMA Pavement	DOL	33,190.000	33,190.000
0056	460.5224	HMA Pavement 4 LT 58-28 S	TON	33,214.000	33,214.000
0058	465.0120	Asphaltic Surface Driveways and Field Entrances	TON	120.000	120.000
0060	465.0315	Asphaltic Flumes	SY	6.000	6.000
0062	465.0560	Asphaltic Rumble Strips, Centerline	LF	57,200.000	57,200.000
0064	502.3200	Protective Surface Treatment	SY	5.000	5.000
0078	509.1200	Curb Repair	LF	18.000	18.000
0080	509.1500	Concrete Surface Repair	SF	22.000	22.000
0086	509.2500	Concrete Masonry Overlay Decks	CY	1.000	1.000
0088	509.9010.S	Removing Asphaltic Concrete Deck Overlay (structure) 01. B-52-21	SY	210.000	210.000
0096	517.3001.S	Structure Overcoating Cleaning and Priming (structure) 01. B-52-21	EACH	1.000	1.000
0098	517.4001.S	Containment and Collection of Waste Materials (structure) 01. B-52-21	EACH	1.000	1.000
0102	517.6001.S	Portable Decontamination Facility	EACH	1.000	1.000
0104	520.1024	Apron Endwalls for Culvert Pipe 24-Inch	EACH	2.000	2.000
0106	520.3324	Culvert Pipe Class III-A 24-Inch	LF	42.000	42.000
0110	522.1024	Apron Endwalls for Culvert Pipe Reinforced Concrete 24-Inch	EACH	1.000	1.000
0116	601.0411	Concrete Curb & Gutter 30-Inch Type D	LF	420.000	420.000
0118	602.0405	Concrete Sidewalk 4-Inch	SF	1,400.000	1,400.000
0120	602.0810	Concrete Driveway 6-Inch	SY	54.000	54.000
0124	608.0424	Storm Sewer Pipe Reinforced Concrete Class IV 24-Inch	LF	77.000	77.000
0126	611.0624	Inlet Covers Type H	EACH	1.000	1.000
0128	611.0639	Inlet Covers Type H-S	EACH	1.000	1.000
0130	611.3004	Inlets 4-FT Diameter	EACH	1.000	1.000
0132	611.3230	Inlets 2x3-FT	EACH	1.000	1.000
0134	614.0010	Barrier System Grading Shaping Finishing	EACH	4.000	4.000
0136	614.2300	MGS Guardrail 3	LF	206.000	206.000
0138	614.2310	MGS Guardrail 3 HS	LF	131.500	131.500
0140	614.2500	MGS Thrie Beam Transition	LF	150.000	150.000
0142	614.2610	MGS Guardrail Terminal EAT	EACH	8.000	8.000

5760-00-72

Line	Item	Item Description	Unit	Total	Qty
0144	614.8010	Anchor Post Assembly Top Mount	EACH	16.000	16.000
0146	618.0100	Maintenance and Repair of Haul Roads (project) 01. 5760-00-72	EACH	1.000	1.000
0150	619.1000	Mobilization	EACH	0.500	0.500
0152	624.0100	Water	MGAL	475.000	475.000
0154	625.0100	Topsoil	SY	630.000	630.000
0156	628.1504	Silt Fence	LF	2,320.000	2,320.000
0158	628.1520	Silt Fence Maintenance	LF	4,640.000	4,640.000
0160	628.1905	Mobilizations Erosion Control	EACH	4.000	4.000
0162	628.1910	Mobilizations Emergency Erosion Control	EACH	2.000	2.000
0164	628.2008	Erosion Mat Urban Class I Type B	SY	630.000	630.000
0166	628.7504	Temporary Ditch Checks	LF	8.000	8.000
0168	628.7555	Culvert Pipe Checks	EACH	3.000	3.000
0170	629.0210	Fertilizer Type B	CWT	1.000	1.000
0172	630.0140	Seeding Mixture No. 40	LB	30.000	30.000
0174	630.0200	Seeding Temporary	LB	18.000	18.000
0176	630.0500	Seed Water	MGAL	16.000	16.000
0182	634.0614	Posts Wood 4x6-Inch X 14-FT	EACH	4.000	4.000
0186	637.2210	Signs Type II Reflective H	SF	13.180	13.180
0188	637.2230	Signs Type II Reflective F	SF	5.560	5.560
0190	638.2102	Moving Signs Type II	EACH	5.000	5.000
0192	638.2602	Removing Signs Type II	EACH	4.000	4.000
0194	638.3000	Removing Small Sign Supports	EACH	4.000	4.000
0196	642.5201	Field Office Type C	EACH	0.500	0.500
0198	643.0300	Traffic Control Drums	DAY	550.000	550.000
0200	643.0420	Traffic Control Barricades Type III	DAY	4,810.000	4,810.000
0202	643.0705	Traffic Control Warning Lights Type A	DAY	6,760.000	6,760.000
0204	643.0900	Traffic Control Signs	DAY	32,500.000	32,500.000
0206	643.0920	Traffic Control Covering Signs Type II	EACH	15.000	15.000
0208	643.1050	Traffic Control Signs PCMS	DAY	14.000	14.000
0210	643.3165	Temporary Marking Line Paint 6-Inch	LF	203,200.000	203,200.000
0212	643.5000	Traffic Control	EACH	0.500	0.500
0216	646.2040	Marking Line Grooved Wet Ref Epoxy 6-Inch	LF	224,800.000	224,800.000
0220	646.6120	Marking Stop Line Epoxy 18-Inch	LF	60.000	60.000
0222	648.0100	Locating No-Passing Zones	MI	11.600	11.600
0224	650.4000	Construction Staking Storm Sewer	EACH	3.000	3.000
0226	650.4500	Construction Staking Subgrade	LF	430.000	430.000
0228	650.5000	Construction Staking Base	LF	430.000	430.000
0230	650.5500	Construction Staking Curb Gutter and Curb & Gutter	LF	420.000	420.000
0234	650.8000	Construction Staking Resurfacing Reference	LF	60,870.000	60,870.000
0236	650.9500	Construction Staking Sidewalk (project) 01. 5760-00-72	EACH	1.000	1.000
0238	650.9911	Construction Staking Supplemental Control (project) 01. 5760-00-72	EACH	1.000	1.000
0242	650.9920	Construction Staking Slope Stakes	LF	575.000	575.000
0244	680.0100	Public Land Reference Monument Verify and Reset	EACH	1.000	1.000
0246	690.0150	Sawing Asphalt	LF	1,635.000	1,635.000
0248	690.0250	Sawing Concrete	LF	120.000	120.000
0250	740.0440	Incentive IRI Ride	DOL	46,410.000	46,410.000
0252	999.2000.S	Installing and Maintaining Bird Deterrent System (station) 01. 29+86	EACH	1.000	1.000
0258	ASP.1T0A	On-the-Job Training Apprentice at $5.00/HR	HRS	2,500.000	2,500.000
0260	ASP.1T0G	On-the-Job Training Graduate at $5.00/HR	HRS	3,520.000	3,520.000

5760-00-72

Line	Item	Item Description	Unit	Total	Qty
0262	SPV.0090	Special 01. Steel Thrie Beam Railing Retrofit	LF	146.000	146.000
0270	SPV.0195	Special 01. Salvaged Asphaltic Pavement Base	TON	2,750.000	2,750.000

3

REMOVING ASPHALTIC SURFACE MILLING

STATION - STATION	LOCATION	204.0120 CATEGORY 010 (SY)	204.0120 CATEGORY 030 (SY)
10+00 - 168+60	MAINLINE	42,700	-
172+51 - 173+76	MAINLINE	400	170
173+76 - 335+00	MAINLINE	43,058	192
335+00 - 494+00	MAINLINE	42,400	-
494+00 - 622+53	MAINLINE	34,430	-
	SUBTOTAL =	162,988	362
	TOTAL =	163,350	

REMOVING CURB & GUTTER

STATION - STATION	LOCATION	204.0150 (LF)
169+80 - 171+60	MAINLINE, LT.	180
170+11 - 171+13	MAINLINE, RT.	105
171+82 - 172+17	MAINLINE, LT.	35
	TOTAL =	320

REMOVING ASPHALTIC SURFACE BUTT JOINTS

LOCATION	204.0115 (SY)
STA. 10+00 - STA. 11+00	270
STA. 28+50 - STA. 29+50	270
STA. 30+22 - STA. 31+22	270
MUNZ DRIVE	225
ST. KILLIANS ROAD	230
CTH T	195
STA. 167+60 - STA. 168+60	270
STA. 176+64 - STA. 177+64	270
CTH N (WEST)	645
CTH N (EAST)	635
CROAL HOLLOW ROAD	220
DURST ROAD	110
SANDUSKY ROAD	260
STA. 621+50 - STA. 622+53	270
TOTAL=	4,140

REMOVING CONCRETE SIDEWALK

STATION - STATION	LOCATION	204.0155 (SY)
169+80 - 171+60	MAINLINE, LT.	51
171+82 - 172+17	MAINLINE, LT.	19
	TOTAL =	70

REMOVING INLETS

STATION - STATION	LOCATION	204.0220 (EACH)
171+02	MAINLINE, LT.	1
171+16	MAINLINE, RT.	1
	TOTAL =	2

REMOVING GUARDRAIL

STATION - STATION	LOCATION	204.0165 (LF)
28+78 - 29+61	MAINLINE, RT.	83
28+82 - 29+52	MAINLINE, LT.	72
30+10 - 30+91	MAINLINE, LT.	83
30+20 - 30+92	MAINLINE, RT.	72
510+74 - 512+89	MAINLINE, RT.	215
511+35 - 513+50	MAINLINE, LT.	215
	TOTAL =	740

ALL BID ITEMS ARE CATEGORY 010 UNLESS OTHERWISE NOTED

REMOVING STORM SEWER

STATION - STATION	LOCATION	204.0245 (18-INCH) (LF)
171+02 - 171+16	MAINLINE	43
171+16 - 171+33	MAINLINE, RT.	21
	TOTAL =	64

3

BASE AGGREGATE DENSE

STATION - STATION	LOCATION	305.0110 BASE AGGREGATE DENSE 3/4-INCH (TON)	SPV.0195.01 SALVAGED ASPHALTIC PAVEMENT BASE CATEGORY 010 (TON)	SPV.0195.01 SALVAGED ASPHALTIC PAVEMENT BASE CATEGORY 030 (TON)
10+00 - 168+60	MAINLINE	1,170	-	-
168+60 - 176+64	MAINLINE	250	-	-
168+60 - 172+51	MAINLINE	-	1,066	184
176+64 - 335+00	MAINLINE	1,170	-	-
335+00 - 494+00	MAINLINE	1,170	-	-
494+00 - 622+53	MAINLINE	950	-	-
26+62 - 32+47	MAINLINE, RT.	-	335	-
27+28 - 31+78	MAINLINE, LT.	-	255	-
509+52 - 514+15	MAINLINE, RT.	-	310	-
509+92 - 514+84	MAINLINE, LT.	-	320	-
-	DRIVEWAYS	950	280	-
	SUBTOTALS =	5,660	2,566	184
	TOTALS=	5,660	2,750	

MILL AND RELAY

STATION - STATION	LOCATION	* 330.0100 (SY)
10+00 - 168+60	MAINLINE	45,610
176+64 - 335+00	MAINLINE	45,750
335+00 - 494+00	MAINLINE	45,940
494+00 - 622+53	MAINLINE	37,150
	TOTALS =	174,450

* REMOVAL OF MATERIAL IN FLOODPLAIN ACCOMODATION AREAS IS INCIDENTAL TO MILL AND RELAY BID ITEM

ASPHALTIC FLUMES

STATION	LOCATION	465.0315 (SY)
1'A'+53	WEITZEL ROAD, RT.	6
	TOTAL =	6

EARTHWORK SUMMARY

STATION - STATION	LOCATION	(1) 205.0100 COMMON EXCAVATION CUT (2) (CY)	AVAILABLE MATERIAL (CY) (3)	UNEXPANDED FILL (CY)	EXPANDED FILL (CY) FACTOR 1.25 (4)	MASS ORDINATE +/- (CY) (5)	WASTE (CY)
168+60 - 172+51	MAINLINE	820	820	50	63	757	757
1'A'+17 - 2'A'+98	A'-LINE (WEITZEL ROAD)	210	210	20	25	185	185
	TOTALS =	1030	1030	70	88	942	942

NOTES:
1.) COMMON EXCAVATION IS THE SUM OF THE CUT AND EBS EXCAVATION COLUMNS. ITEM NUMBER 205.0100
2.) SALVAGED/UNUSABLE PAVEMENT MATERIAL IS INCLUDED IN CUT
3.) AVAILABLE MATERIAL = CUT - SALVAGED/UNUSABLE PAVEMENT MATERIAL
4.) EXPANDED FILL FACTOR 1.25: EXPANDED FILL = (UNEXPANDED FILL)*1.25
5.) THE MASS ORDINATE+ OR - QTY CALCULATED FOR THE DIVISION. PLUS QUANTITY INDICATES AN EXCESS OF MATERIAL WITHIN THE CATEGORY. MINUS INDICATES A SHORTAGE OF MATERIAL WITHIN THE CATEGORY.

* ADDITIONAL QUANTITIES LISTED ON STRUCTURE PLANS

HMA PAVEMENT

STATION - STATION	LOCATION	211.0101 PREPARE FOUNDATION FOR ASPHALTIC PAVING (01. 5760-00-72) (EACH)	211.0400 PREPARE FOUNDATION FOR ASPHALTIC SHOULDERS (STA)	* 455.0605 TACK COAT CATEGORY 010 (GAL)	* 455.0605 TACK COAT CATEGORY 030 (GAL)	* 460.5224 HMA PAVEMENT 4 LT 58-28 S CATEGORY 010 (TON)	* 460.5224 HMA PAVEMENT 4 LT 58-28 S CATEGORY 030 (TON)	465.0120 ASPHALTIC SURFACE DRIVEWAYS AND FIELD ENTRANCES (TON)
10+00 - 168+60	MAINLINE	-	-	2,180	-	8,590	-	-
168+60 - 172+51	MAINLINE	-	-	74	16	280	60	-
172+51 - 173+76	MAINLINE	-	-	85	20	83	33	-
173+76 - 335+00	MAINLINE	-	-	2,261	24	8,776	38	-
335+00 - 494+00	MAINLINE	-	-	2,160	-	8,460	-	-
494+00 - 622+53	MAINLINE	-	-	1,750	-	6,870	-	-
173+76 - 176+64	MAINLINE, LT.	-	3	-	-	-	-	-
-	PROJECT	1	-	-	-	-	-	-
-	DRIVEWAYS	-	-	-	-	-	-	120
	SUBTOTALS =	1	3	8,510	60	33,059	131	120
	TOTALS=	1	3	8,570		33,190		120

PWL MIXTURE USE TABLE

The following acceptance criteria are applicable for this project:

LOCATION	STATION	MIXTURE USE	UNDERLYING SURFACE	BID ITEM	TONS	THICKNESS	QUALITY MANAGEMENT PROGRAM TO BE USED FOR: MIXTURE ACCEPTANCE	QUALITY MANAGEMENT PROGRAM TO BE USED FOR: DENSITY ACCEPTANCE
11 foot Driving Lanes	10+00 - 168+60, 176+64 - 622+52.22	Upper Layer	4 LT 58-28 S	4 LT 58-28 S	14,490	1.75"	PWL Incentive Air Voids HMA Pavement 460.2010	Incentive Density PWL HMA Pavement 460.2005
11 foot Driving Lanes	10+00 - 168+60, 176+64 - 622+52.22	Lower Layer	Mill and Relayed Material	4 LT 58-28 S	14,490	1.75"	PWL Incentive Air Voids HMA Pavement 460.2010	Incentive Density PWL HMA Pavement 460.2005
Shoulders, Side Roads	10+00 - 168+60, 176+64 - 622+52.22	Upper Layer	4 LT 58-28 S	4 LT 58-28 S	1,885	1.75"	PWL Incentive Air Voids HMA Pavement 460.2010	Acceptance testing by the department; Not eligible for the incentive
Shoulders, Side Roads	10+00 - 168+60, 176+64 - 622+52.22	Lower Layer	Mill and Relayed Material	4 LT 58-28 S	1,885	1.75"	PWL Incentive Air Voids HMA Pavement 460.2010	Acceptance testing by the department; Not eligible for the incentive
11 foot Driving Lanes	168+60 - 172+51	Upper Layer	4 LT 58-28 S	4 LT 58-28 S	95	1.75"	PWL Incentive Air Voids HMA Pavement 460.2010	Incentive Density PWL HMA Pavement 460.2005
11 foot Driving Lanes	168+60 - 172+51	Lower Layer	Salvaged Asphaltic Pavement Base	4 LT 58-28 S	95	1.75"	PWL Incentive Air Voids HMA Pavement 460.2010	Incentive Density PWL HMA Pavement 460.2005
11 foot Driving Lanes	172+51 - 176+64	Upper Layer	4 LT 58-28 S	4 LT 58-28 S	95	1.75"	PWL Incentive Air Voids HMA Pavement 460.2010	Incentive Density PWL HMA Pavement 460.2005
11 foot Driving Lanes	172+51 - 176+64	Lower Layer	Milled Existing HMA Surface	4 LT 58-28 S	95	1.75"	PWL Incentive Air Voids HMA Pavement 460.2010	Incentive Density PWL HMA Pavement 460.2005
Shoulders, Parking Lanes, and Side Roads	168+60 - 172+51	Upper Layer	4 LT 58-28 S	4 LT 58-28 S	15	1.75"	PWL Incentive Air Voids HMA Pavement 460.2010	Acceptance testing by the department; Not eligible for the incentive
Shoulders, Parking Lanes, and Side Roads	168+60 - 172+51	Lower Layer	Salvaged Asphaltic Pavement Base	4 LT 58-28 S	15	1.75"	PWL Incentive Air Voids HMA Pavement 460.2010	Acceptance testing by the department; Not eligible for the incentive
Shoulders, Parking Lanes, and Side Roads	172+51 - 176+64	Upper Layer	4 LT 58-28 S	4 LT 58-28 S	15	1.75"	PWL Incentive Air Voids HMA Pavement 460.2010	Acceptance testing by the department; Not eligible for the incentive
Shoulders, Parking Lanes, and Side Roads	172+51 - 176+64	Lower Layer	Milled Existing HMA Surface	4 LT 58-28 S	15	1.75"	PWL Incentive Air Voids HMA Pavement 460.2010	Acceptance testing by the department; Not eligible for the incentive

3

RUMBLE STRIPS

STATION-STATION	LOCATION	465.0560 ASPHALTIC RUMBLE STRIPS, CENTERLINE (LF)
10+00 - 168+60	MAINLINE	14,200
176+64 - 622+53	MAINLINE	43,000
TOTALS =		57,200

CULVERT PIPE

STATION	LOCATION	520.1024 APRON ENDWALLS FOR CULVERT PIPE 24-INCH (EACH)	520.3324 CULVERT PIPE CLASS III-A 24-INCH (LF)
2'A'+17	WEITZEL ROAD, RT.	2	42

PIPE SIZE	MINIMUM THICKNESS (INCHES) STEEL	ALUMINUM
24-INCH	0.064	0.075

CONCRETE CURB & GUTTER

STATION-STATION	LOCATION	601.0411 30-INCH TYPE D (LF)
169+62 - 172+17	MAINLINE, LT.	266
170+07 - 171+43	MAINLINE, RT.	154
TOTALS =		420

CONCRETE DRIVEWAY 6-INCH

STATION	LOCATION	602.0810 (SY)
169+70	MAINLINE, LT.	25
171+73	MAINLINE, LT.	29
TOTAL =		54

CONCRETE SIDEWALK 4-INCH

STATION-STATION	LOCATION	602.0405 (SY)
169+79 - 171+60	MAINLINE, LT.	1130
171+81 - 172+17	MAINLINE, LT.	270
TOTAL =		1400

WATER

LOCATION	624.0100 (MGAL)
PROJECT	475
TOTAL =	475

ALL BID ITEMS ARE CATEGORY 010 UNLESS OTHERWISE NOTED

STORM SEWER PIPE

PIPE NUMBER	FROM STRUCTURE	TO STRUCTURE	UPSTREAM ELEVATION	DOWNSTREAM ELEVATION	% SLOPE	608.0424 PIPE REINFORCED CONCRETE CLASS IV 24-INCH (LF)
P-1	I-1	I-2	766.41	765.86	1.47%	38
P-2	I-2	EW-1	765.63	764.00	4.43%	39
					TOTALS=	77

3

GUARDRAIL

STATION-STATION	LOCATION	614.2300 MGS GUARDRAIL 3 (LF)	614.2330 MGS GUARDRAIL 3 HS (LF)	614.2500 MGS THRIE BEAM TRANSITION (LF)	614.2610 MGS GUARDRAIL TERMINAL EAT (EACH)	614.8010 ANCHOR POST ASSEMBLY TOP MOUNTED (EACH)
27+94 - 28+48	MAINLINE, RT.	-	-	-	1	-
28+48 - 29+10	MAINLINE, RT.	62.5	-	-	-	-
28+58 - 29+11	MAINLINE, LT.	-	-	-	1	-
29+10 -29+48	MAINLINE, RT.	-	-	37.5	-	-
29+11 - 29+49	MAINLINE, LT.	-	-	37.5	-	-
30+23 - 30+60	MAINLINE, LT.	-	-	37.5	-	-
30+24 - 30+61	MAINLINE, RT.	-	-	37.5	-	-
30+61 - 31+15	MAINLINE, RT.	-	-	-	1	-
30+60 - 30+73	MAINLINE, LT.	12.5	-	-	-	-
30+73 - 31+26	MAINLINE, LT.	-	-	-	1	-
510+40 - 510+93	MAINLINE, RT.	-	-	-	1	-
510+93 - 511+65	MAINLINE, RT.	72	-	-	-	-
511+22 - 511+75	MAINLINE, LT.	-	-	-	1	-
511+65 - 512+31	MAINLINE, RT.	-	65.5	-	-	-
511+75 - 512+41	MAINLINE, LT.	-	66	-	-	-
512+31 - 512+84	MAINLINE, RT.	-	-	-	1	-
512+41 - 513+00	MAINLINE, LT.	59	-	-	-	-
513+00 - 513+53	MAINLINE, LT.	-	-	-	1	-
511+87 - 512+09	MAINLINE, RT.	-	-	-	-	8
511+97 - 512+19	MAINLINE, LT.	-	-	-	-	8
TOTALS =		206	131.5	150	8	16

STORM SEWER STRUCTURES

STRUCTURE NUMBER	STATION	LOCATION	RIM ELEVATION (FT)	STRUCTURE DEPTH (FT)	522.1024 APRON ENDWALLS FOR CULVERT PIPE REINFORCED CONCRETE 24-INCH (EACH)	611.0624 INLET COVERS TYPE H (EACH)	611.0639 INLET COVERS TYPE H-S (EACH)	611.3004 INLETS 4-FT DIAMETER (EACH)	611.3230 INLETS 2X3-FT (EACH)
I-1	171+20.00	18.5' LT	770.08	2.64	-	-	1	-	1
I-2	171+15.50	20.72' RT	769.35	2.96	-	1	-	1	-
EW-1	171+29.56	56.46' RT	-	-	1	-	-	-	-
				TOTALS =	1	1	1	1	1

FINISHING ITEMS

STATION - STATION	LOCATION	625.0100 TOPSOIL (SY)	628.2008 EROSION MAT URBAN CLASS I TYPE B (SY)	629.0210 FERTILIZER TYPE B (CWT)	630.0140 SEEDING MIXTURE NO. 40 (LB)	630.0200 SEEDING TEMPORARY (LB)	630.0500 SEED WATER (MGAL)
168+60 - 171+41	MAINLINE, RT.	248	248	0.3	12.0	6.8	6.2
168+99 - 169+62	MAINLINE, LT.	40	40	0.1	2.0	1.1	1.0
171+72 - 172+51	MAINLINE, RT.	27	27	0.1	1.0	1.0	0.7
1'A'+63 - 2'A'+02	WEITZEL ROAD	75	75	0.1	4.0	2.1	1.9
2'A'+32 - 2'A'+98	WEITZEL ROAD	110	110	0.2	5.0	3.0	2.8
UNDISTRIBUTED	PROJECT	130	130	0.2	6.0	4.0	3.4
	TOTALS=	630	630	1.0	30.0	18.0	16.0

BARRIER SYSTEM GRADING SHAPING FINISHING

FOR INFORMATIONAL PURPOSES ONLY

STA. - STA.	LOCATION	614.0010 BARRIER SYSTEM GRADING SHAPING FINISHING (EACH)	EXCAVATION COMMON (CY)	EXCAVATION MARSH (CY)	BORROW (CY)	SELECT CRUSHED MATERIAL (TON)	SALVAGED TOPSOIL (SY)	EROSION MAT URBAN CLASS I TYPE B (SY)	FERTILIZER TYPE B (CWT)	SEEDING MIXTURE NO. 30 (LB)	SEEDING MIXTURE NO. 60 (LB)	SEED WATER (MGAL)	GEOTEXTILE TYPE SR (LF)	CONSTRUCTION STAKING SLOPE STAKES (LF)
26+62 - 32+47	MAINLINE, RT.	1	115	39	440	75	920	1270	0.7	20	4	34	450	585
27+28 - 31+78	MAINLINE, LT.	1	70	11	290	25	770	1040	0.5	15	4	26	1200	450
509+52 - 514+15	MAINLINE, RT.	1	115	-	-	-	250	550	0.5	10	-	15	-	463
509+92 - 514+84	MAINLINE, LT.	1	60	-	40	-	230	540	0.3	10	1	15	-	492
TOTALS =		4	360	50	770	100	2,170	3,400	2	55	9	90	1,650	1,990

SILT FENCE

STATION - STATION	LOCATION	628.1504 SILT FENCE (LF)	628.1520 SILT FENCE MAINTENANCE (LF)
26+63 - 29+49	MAINLINE, RT.	306	612
27+28 - 29+50	MAINLINE, LT.	251	502
30+22 - 31+78	MAINLINE, LT.	185	370
30+22 - 32+47	MAINLINE, RT.	244	488
509+87 - 511+79	MAINLINE, RT.	196	392
509+91 - 511+98	MAINLINE, LT.	210	420
512+07 - 514+15	MAINLINE,RT.	210	420
512+32 - 514+85	MAINLINE, LT.	254	508
	UNDISTIBUTED	464	928
	TOTALS =	2,320	4,640

3

MOBILIZATION EROSION CONTROL

PROJECT	628.1905 MOBILIZATION EROSION CONTROL (EACH)	628.1910 MOBILIZATION EMERGENCY EROSION CONTROL (EACH)
5760-00-72	4	2

TEMPORARY DITCH CHECKS

STATION	LOCATION	628.7504 (LF)
2'A'+95	WEITZEL, RT.	8
	TOTAL =	8

PERMANENT SIGNING

SIGN NUMBER	APPROX. STATION	LOCATION	POSITIION	SIGN CODE	SIGN DESCRIPTION	ORDER LINES	SIZE (INCH X INCH)	637.2210 SIGNS TYPE II REFELECTIVE H (SF)	637.2230 SIGNS TYPE II REFELECTIVE F (SF)	634.0614 POSTS WOOD 4X6-INCH 14 FT (EACH)	* 638.2102 MOVING SIGNS TYPE II (EACH)	638.2602 REMOVING SIGNS TYPE II (EACH)	638.3000 REMOVING SMALL SIGN SUPPORTS (EACH)
1-01	170+85	MAINLINE	RIGHT	W14-3	NO PASSING ZONE	-	48X36	-	5.56	1	-	-	-
1-02R	170+85	MAINLINE	RIGHT	W14-3	NO PASSING ZONE	-	-	-	-	-	-	1	1
1-03	171+00	MAINLINE	LEFT	R2-1	SPEED LIMIT	35	24X30	5.00	-	1	-	-	-
1-04R	171+30	MAINLINE	LEFT	R2-1	SPEED LIMIT	35	-	-	-	-	-	1	1
1-05R	1'A'+45	WEITZEL ROAD	RIGHT	D11-10	ATV ROUTE	-	-	-	-	-	-	1	1
1-06	1'A'+45	WEITZEL ROAD	RIGHT	D11-10	ATV ROUTE	-	24X18	3.00	-	1	-	-	-
1-07	1'A'+39	WEITZEL ROAD	LEFT	R1-1	STOP	-	30X30	5.18	-	1	-	-	-
1-08R	1'A'+40	WEITZEL ROAD	LEFT	R1-1	STOP	-	-	-	-	-	-	1	1
-	-	UNDISTRIBUTED	-	-	-	-	-	-	-	-	5	-	-
							TOTALS =	13.18	5.56	4	5	4	4

* ONLY USED IF LOCATING NO PASSING ZONES NECESSITATES RELOCATING SIGNS

ALL BID ITEMS ARE CATEGORY 010 UNLESS OTHERWISE NOTED

SAWING ITEMS

STATION - STATION	LOCATION	690.0150 SAWING ASPHALT (LF)	690.0250 SAWING CONCRETE (LF)
27+49 - 29+49	MAINLINE, RT.	200	-
28+14 - 29+50	MAINLINE, LT.	136	-
30+22 - 31+60	MAINLINE, RT.	138	-
30+22 - 31+43	MAINLINE, LT.	121	-
168+60	MAINLINE	24	-
169+62 - 169+84	MAINLINE, LT.	-	30
171+44 - 172+17	MAINLINE, LT.	-	90
172+17 - 172+51	MAINLINE, LT.	34	-
172+51	MAINLINE	40	-
509+95 - 513+29	MAINLINE, RT.	334	-
510+77 - 513+98	MAINLINE, LT.	321	-
1'A'+56	WEITZEL ROAD	24	-
1'A'+56 - 2'A'+48	WEITZEL ROAD	92	-
-	DRIVEWAYS	171	-
	TOTAL=	1,635	120

3

CULVERT PIPE CHECKS

STATION	LOCATION	628.7555 (EACH)
1'A'+90	WEITZEL, RT.	3
	TOTAL =	3

TRAFFIC CONTROL

LOCATION	643.0300 DRUMS (DAY)	643.0420 BARRICADES TYPE III (DAY)	643.0705 WARNING LIGHTS TYPE A (DAY)	643.0900 SIGNS (DAY)	643.0920 COVERING SIGNS TYPE II (EACH)	643.1050 PCMS (DAY)	643.5000 TRAFFIC CONTROL (EACH)
GUARDRAIL	180	-	-	-	-	-	-
SIDEROADS	-	4290	5,720	5,720	-	-	-
PROJECT	370	520	1,040	26,780	15 (1 cycle)	14	0.5
TOTALS =	550	4,810	6,760	32,500	15	14	0.5

LOCATING NO-PASSING ZONES

STATION	648.0100 (MI)
PROJECT	11.6
TOTAL=	11.6

PUBLIC LAND SURVEY MONUMENT

STATION	LOCATION	PUBLIC LAND SURVEY MONUMENT VERIFY AND RESET 680.0100 (EACH)
598+47	MAINLINE, 3' RT.	1
	TOTAL =	1

CONSTRUCTION STAKING

STATION - STATION	LOCATION	650.4000 STORM SEWER (EACH)	650.4500 SUBGRADE (LF)	650.5000 BASE (LF)	650.5500 CURB GUTTER AND CURB & GUTTER (LF)	650.8000 RESURFACING REFERENCE (LF)	650.9500 SIDEWALK (01. 5760-00-72) (EACH)	650.9911 SUPPLEMENTAL CONTROL (01. 5760-00-72) (EACH)	650.9920 SLOPE STAKES (LF)
169+62 - 172+17	MAINLINE, LT.	-	-	-	266	-	-	-	-
168+60 - 172+51	MAINLINE	-	391	391	-	-	-	-	394
170+07 - 171+43	MAINLINE, RT.	-	-	-	154	-	-	-	-
171+20	MAINLINE, LT.	1	-	-	-	-	-	-	-
171+16	MAINLINE, RT.	1	-	-	-	-	-	-	-
171+30	MAINLINE, RT.	1	-	-	-	-	-	-	-
1'A'+17 - 1'A'+56	WEITZEL ROAD	-	39	39	-	-	-	-	-
1'A'+17 - 2'A'+98	WEITZEL ROAD	-	-	-	-	-	-	-	181
10+00 - 168+60	MAINLINE	-	-	-	-	15,860	-	-	-
172+51 - 622+53	MAINLINE	-	-	-	-	45,010	-	-	-
	PROJECT	-	-	-	-	-	1	1	-
	TOTALS =	3	430	430	420	60,870	1	1	575

PAVEMENT MARKING

STATION - STATION	LOCATION	DESCRIPTION	643.3165 TEMPORARY MARKING LINE PAINT 6-INCH YELLOW SOLID (LF)	643.3165 YELLOW 12.5' SKIPS (LF)	646.2040 MARKING LINE GROOVED WET REF EPOXY 6-INCH WHITE SOLID (LF)	646.2040 YELLOW SOLID (LF)	646.2040 YELLOW 12.5' SKIPS (LF)	646.6120 MARKING STOP LINE EPOXY 18-INCH WHITE SOLID (LF)
10+00 - 18+67	MAINLINE	SB PASSING	1,740	450	-	870	225	-
18+67 - 44+09	MAINLINE	DOUBLE YELLOW	10,180	-	-	5,090	-	-
44+09 - 55+04	MAINLINE	NB PASSING	2,200	550	-	1,100	275	-
55+04 - 70+92	MAINLINE	PASSING	-	800	-	-	400	-
70+92 - 74+12	MAINLINE	SB PASSING	640	180	-	320	90	-
74+12 - 84+96	MAINLINE	DOUBLE YELLOW	4,340	-	-	2,170	-	-
84+96 - 92+93	MAINLINE	NB PASSING	1,600	400	-	800	200	-
92+93 - 106+89	MAINLINE	PASSING	-	700	-	-	350	-
106+89 - 117+69	MAINLINE	SB PASSING	2,160	550	-	1,080	275	-
117+69 - 130+78	MAINLINE	DOUBLE YELLOW	5,240	-	-	2,620	-	-
130+78 - 138+98	MAINLINE	NB PASSING	1,660	430	-	830	215	-
138+98 - 139+97	MAINLINE	PASSING	-	50	-	-	25	-
139+97 - 150+93	MAINLINE	SB PASSING	2,200	550	-	1,100	275	-
150+93 - 159+99	MAINLINE	DOUBLE YELLOW	3,640	-	-	1,820	-	-
159+99 - 170+86	MAINLINE	NB PASSING	2,180	550	-	1,090	275	-
170+86 - 179+68	MAINLINE	PASSING	-	450	-	-	225	-
179+68 - 189+58	MAINLINE	SB PASSING	2,000	500	-	1,000	250	-
189+58 - 200+34	MAINLINE	DOUBLE YELLOW	4,320	-	-	2,160	-	-
200+34 - 211+79	MAINLINE	NB PASSING	2,300	580	-	1,150	290	-
211+79 - 238+95	MAINLINE	PASSING	-	1,380	-	-	690	-
238+95 - 249+51	MAINLINE	SB PASSING	2,120	550	-	1,060	275	-
249+51 - 311+71	MAINLINE	DOUBLE YELLOW	24,900	0	-	12,450	0	-
311+71 - 322+30	MAINLINE	NB PASSING	2,120	550	-	1,060	275	-
322+30 - 333+58	MAINLINE	SB PASSING	2,260	580	-	1,130	290	-
333+58 - 622+53	MAINLINE	DOUBLE YELLOW	115,600	-	-	57,800	-	-
10+00 - 622+53	MAINLINE	WHITE EDGELINES	-	-	123,200	-	-	-
10+00 - 215+00	MAINLINE	TEMPORARY C/L	-	-	-	-	-	-
215+00 - 420+00	MAINLINE	TEMPORARY C/L	-	-	-	-	-	-
420+00 - 622+53	MAINLINE	TEMPORARY C/L	-	-	-	-	-	-
-	CTH N (WEST)	STOP LINE	-	-	-	-	-	25
-	CTH N (EAST)	STOP LINE	-	-	-	-	-	35
		SUBTOTALS =	193,400	9,800	123,200	96,700	4,900	60
		TOTALS=	203,200		224,800			60

* TWO APPLICATIONS
  1) PLACED ON LOWER LAYER AFTER FIRST PAVING PASS
  2) PLACED SAME DAY AS FINAL PAVING PASS. PERFORM LOCATING NO PASSING ZONES PRIOR TO PLACEMENT

STATE OF WISCONSIN
DEPARTMENT OF TRANSPORTATION
TRANSPORTATION PROJECT PLAT TITLE SHEET
5760-00-20
LONE ROCK - STH 154
(WEST JUNCTION CTH B TO STH 154)
STH 130
RICHLAND & SAUK COUNTIES

4

CONVENTIONAL SYMBOLS

SECTION LINE
QUARTER LINE
SIXTEENTH LINE
NEW REFERENCE LINE
NEW R/W LINE
EXISTING R/W OR HE LINE
PROPERTY LINE
LOT, TIE & OTHER MINOR LINES
SLOPE INTERCEPT
CORPORATE LIMITS
UNDERGROUND FACILITY (COMMUNICATIONS, ELECTRIC, ETC)
NEW R/W (FEE OR HE) (HATCHING VARIES BY OWNER)
TEMPORARY LIMITED EASEMENT AREA
EASEMENT AREA (PERMANENT LIMITED OR RESTRICTED DEVELOPMENT)
TRANSMISSION STRUCTURES
BUILDING
TO BE REMOVED
BRIDGE
CULVERT

SECTION CORNER SYMBOL
SECTION CORNER MONUMENT
GEODETIC SURVEY MONUMENT
SIXTEENTH CORNER MONUMENT
SIGN
OFF-PREMISE SIGN
R/W MONUMENT (TO BE SET)
NON-MONUMENTED R/W POINT
FOUND IRON PIN (1-INCH UNLESS NOTED)

	COMPENSABLE	NON-COMPENSABLE
ELECTRIC POLE		
TELEPHONE POLE		
PEDESTAL (LABEL TYPE) (TV, TEL, ELEC, ETC.)		

ACCESS RESTRICTED BY ACQUISITION
NO ACCESS (BY STATUTORY AUTHORITY)
ACCESS RESTRICTED (BY PREVIOUS PROJECT OR CONTROL)
NO ACCESS (NEW HIGHWAY)
PARCEL NUMBER 25
UTILITY NUMBER 40
PARALLEL OFFSETS

CONVENTIONAL ABBREVIATIONS

ACCESS RIGHTS	AR	POINT OF COMPOUND CURVE	PCC
ACRES	AC	POINT OF INTERSECTION	PI
AHEAD	AH	PROPERTY LINE	PL
ALUMINUM	ALUM	RECORDED AS	(100')
AND OTHERS	ET AL	REEL / IMAGE	R/I
BACK	BK	REFERENCE LINE	R/L
BLOCK	BLK	REMAINING	REM
CENTERLINE	C/L	RESTRICTIVE DEVELOPMENT EASEMENT	RDE
CERTIFIED SURVEY MAP	CSM	RIGHT	RT
CONCRETE	CONC	RIGHT OF WAY	R/W
COUNTY	CO	SECTION	SEC
COUNTY TRUNK HIGHWAY	CTH	SEPTIC VENT	SEPV
DISTANCE	DIST	SQUARE FEET	SF
CORNER	COR	STATE TRUNK HIGHWAY	STH
DOCUMENT NUMBER	DOC	STATION	STA
EASEMENT	EASE	TELEPHONE PEDESTAL	TP
EXISTING	EX	TEMPORARY LIMITED EASEMENT	TLE
GAS VALVE	GV	TRANSPORTATION PROJECT PLAT	TPP
GRID NORTH	GN	UNITED STATES HIGHWAY	USH
HIGHWAY EASEMENT	HE	VOLUME	V
IDENTIFICATION	ID		
LAND CONTRACT	LC		
LEFT	LT		
MONUMENT	MON		
NATIONAL GEODETIC SURVEY	NGS		
NUMBER	NO		
OUTLOT	OL		
PAGE	P		
POINT OF TANGENCY	PT		
PERMANENT LIMITED EASEMENT	PLE		
POINT OF BEGINNING	POB		
POINT OF CURVATURE	PC		

CURVE DATA ABBREVIATIONS

LONG CHORD	LCH
LONG CHORD BEARING	LCB
RADIUS	R
DEGREE OF CURVE	D
CENTRAL ANGLE	Δ /DELTA
LENGTH OF CURVE	L
TANGENT	T
DIRECTION AHEAD	DA
DIRECTION BACK	DB

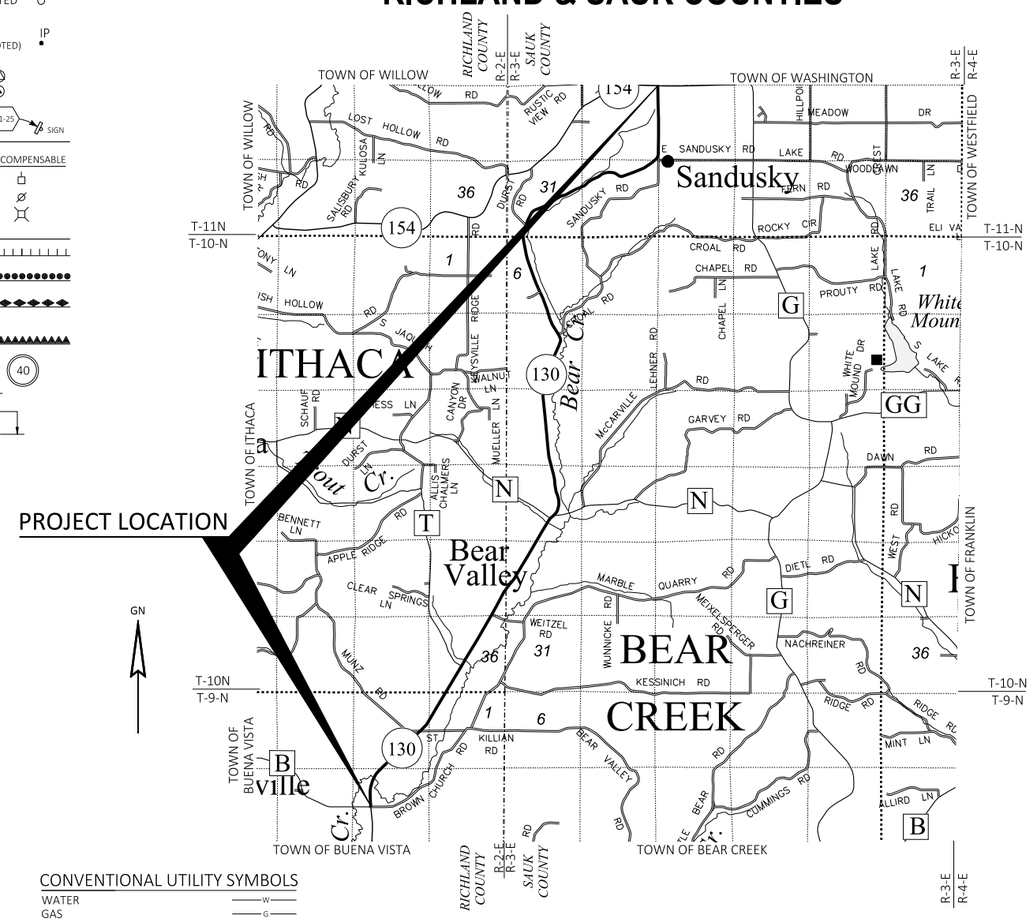

CONVENTIONAL UTILITY SYMBOLS

WATER — W
GAS — G
TELEPHONE — T
OVERHEAD TRANSMISSION LINES — OH
ELECTRIC — E
CABLE TELEVISION — TV
FIBER OPTIC — FO
SANITARY SEWER — SAN
STORM SEWER — SS
ELECTRIC TOWER

LAYOUT
SCALE 0 1MI

THE NOTES,CONVENTIONAL SIGNS, AND ABBREVIATIONS ARE ASSOCIATED WITH EACH TRANSPORTATION PROJECT PLAT FOR PROJECT 5760-00-20

NOTES:

POSITIONS SHOWN ON THIS PLAT ARE WISCONSIN COORDINATE REFERENCE SYSTEM COORDINATES (WISCRS), SAUK COUNTY, NAD83(2011), IN U.S. SURVEY FEET. VALUES ARE GRID COORDINATES, GRID BEARINGS, AND GRID DISTANCES. GRID DISTANCES MAY BE USED AS GROUND DISTANCES.

ALL NEW RIGHT-OF-WAY MONUMENTS WILL BE TYPE 2 (TYPICALLY ¾" X 24" IRON REBARS), UNLESS OTHERWISE NOTED, AND WILL BE PLACED PRIOR TO THE COMPLETION OF THE PROJECT.

ALL RIGHT-OF-WAY LINES DEPICTED IN THE NON-ACQUISITION AREAS ARE INTENDED TO RE-ESTABLISH EXISTING RIGHT-OF WAY LINES AS DETERMINED FROM PREVIOUS PROJECTS, OTHER RECORDED DOCUMENTS, CENTERLINE OF EXISTING PAVEMENTS AND/OR EXISTING OCCUPATIONAL LINES

RIGHT-OF-WAY BOUNDARIES ARE DEFINED WITH COURSES OF THE PERIMETER OF THE HIGHWAY LANDS REFERENCED TO THE U.S. PUBLIC LAND SURVEY SYSTEM OR OTHER "SURVEYS" OF PUBLIC RECORD.

DIMENSIONING FOR THE NEW RIGHT-OF-WAY IS MEASURED ALONG AND PERPENDICULAR TO THE NEW REFERENCE LINES.

A TEMPORARY LIMITED EASEMENT (TLE) IS A RIGHT FOR CONSTRUCTION PURPOSES, AS DEFINED HEREIN, INCLUDING THE RIGHT TO OPERATE NECESSARY EQUIPMENT THEREON, THE RIGHT OF INGRESS AND EGRESS, AS LONG AS REQUIRED FOR SUCH PUBLIC PURPOSE, INCLUDING THE RIGHT TO PRESERVE, PROTECT, REMOVE, OR PLANT THEREON ANY VEGETATION THAT THE HIGHWAY AUTHORITIES MAY DEEM DESIRABLE. ALL (TLEs) ON THIS PLAT EXPIRE AT THE COMPLETION OF THE CONSTRUCTION PROJECT FOR WHICH THIS INSTRUMENT IS GIVEN.

A PERMANENT LIMITED EASEMENT (PLE) IS A RIGHT FOR CONSTRUCTION AND MAINTENANCE PURPOSES, AS DEFINED HEREIN, INCLUDING THE RIGHT TO OPERATE NECESSARY EQUIPMENT THEREON AND THE RIGHT OF INGRESS AND EGRESS, AS LONG AS REQUIRED FOR SUCH PUBLIC PURPOSE, INCLUDING THE RIGHT TO PRESERVE, PROTECT, REMOVE, OR PLANT THEREON ANY VEGETATION THAT THE HIGHWAY AUTHORITIES MAY DEEM DESIRABLE, BUT WITHOUT PREJUDICE TO THE OWNER'S RIGHTS TO MAKE OR CONSTRUCT IMPROVEMENTS ON SAID LANDS OR TO FLATTEN THE SLOPES, PROVIDING SAID ACTIVITIES WILL NOT IMPAIR OR OTHERWISE ADVERSELY AFFECT THE HIGHWAY FACILITIES.

AN EASEMENT FOR HIGHWAY PURPOSES (HE), AS LONG AS SO USED, INCLUDING THE RIGHT TO PRESERVE, PROTECT, REMOVE, OR PLANT THEREON ANY VEGETATION THAT THE HIGHWAY AUTHORITIES MAY DEEM DESIRABLE.

PROPERTY LINES SHOWN ON THIS PLAT FOR PROPERTIES BEING IMPACTED ARE DRAWN FROM DATA DERIVED FROM FILED/RECORDED MAPS AND DOCUMENTS OF PUBLIC RECORD. THIS PLAT MAY NOT BE A TRUE REPRESENTATION OFEXISTING PROPERTY LINES, EXCLUDING RIGHT-OF-WAY, AND SHOULD NOT BE USED AS A SUBSTITUTE FOR AN ACCURATE FIELD SURVEY.

FOR THE CURRENT ACCESS/DRIVEWAY INFORMATION, CONTACT THE PLANNING UNIT OF THE WISCONSIN DEPARTMENT OF TRANSPORTATION OFFICE IN LA CROSSE

PARCEL AND UTILITY IDENTIFICATION NUMBERS MAY NOT POINT TO ALL AREAS OF ACQUISITION, AS NOTED ON THE TPP DETAIL PAGES.

INFORMATION FOR THE BASIS OF EXISTING HIGHWAY RIGHT-OF-WAY POINTS OF REFERENCE AND ACCESS CONTROL ARE LISTED ON THE TPP DETAIL PAGES.

4

PROJECT NUMBER 5760-00-20 - 4. 01
SHEET 2 OF 2

TRANSPORTATION PROJECT PLAT NO: 5760-00-20 - 4.01

PART OF LOT 1 OF CSM 541,V.5, P. 96, DOC.259800, BEING PART OF THE SOUTHEAST QUARTER OF THE SOUTHEAST QUARTER OF SECTION 25, TOWNSHIP 10 NORTH, RANGE 2 EAST, TOWN OF ITHACA, RICHLAND COUNTY, WISCONSIN

ACCEPTED FOR RECORDING AND FILING IN THE OFFICE OF THE REGISTER OF DEEDS IN Richland COUNTY, WISCONSIN AT 11:30 AM ON July 14, 2023 AS DOCUMENT # 1336502 AND FILED IN Plat Cabinet 1, Pg 125B

Susan Fuller
SIGNATURE OF REGISTER OF DEEDS

41

RESERVED FOR REGISTER OF DEEDS
PROJECT NUMBER 5760-00-20 - 4.01
SHEET 1 OF 2

RELOCATION ORDER STH 130, LONE ROCK - STH 154, WEST JUNCTION CTH B TO STH 154, RICHLAND AND SAUK COUNTIES.

TO PROPERLY ESTABLISH, LAY OUT, WIDEN, ENLARGE, EXTEND, CONSTRUCT, RECONSTRUCT, IMPROVE, OR MAINTAIN A PORTION OF THE HIGHWAY DESIGNATED ABOVE, THE STATE OF WISCONSIN DEPARTMENT OF TRANSPORTATION DEEMS IT NECESSARY TO RELOCATE OR CHANGE SAID HIGHWAY AND ACQUIRE CERTAIN LANDS AND INTERESTS OR RIGHTS IN LANDS FOR THE ABOVE PROJECT.

TO EFFECT THIS CHANGE, PURSUANT TO AUTHORITY GRANTED UNDER SECTION 84.02 (3), 84.09, AND 84.30, WISCONSIN STATUTES, THE DEPARTMENT OF TRANSPORTATION HEREBY ORDERS THAT:
1. THAT PORTION OF SAID HIGHWAY AS SHOWN ON THIS PLAT IS LAID OUT AND ESTABLISHED TO THE LINES AND WIDTHS AS SO SHOWN FOR THE ABOVE PROJECT.
2. THE LANDS OR INTERESTS OR RIGHTS IN LANDS AS SHOWN ON THIS PLAT ARE REQUIRED BY THE DEPARTMENT FOR THE ABOVE PROJECT AND SHALL BE ACQUIRED IN THE NAME OF THE STATE OF WISCONSIN, PURSUANT TO THE PROVISIONS OF SECTION 84.09 (1) OR (2), WISCONSIN STATUTES.

FOR CURRENT ACCESS/DRIVEWAY INFORMATION, CONTACT THE PLANNING UNIT OF THE WISCONSIN DEPARTMENT OF TRANSPORTATION OFFICE IN LA CROSSE.

POSITIONS SHOWN ON THIS PLAT ARE WISCONSIN COORDINATE REFERENCE SYSTEM COORDINATES (WISCRS), SAUK COUNTY, NAD 83 (2011), IN US SURVEY FEET. VALUES SHOWN ARE GRID COORDINATES, GRID BEARINGS, AND GRID DISTANCES. GRID DISTANCES MAY BE USED AS GROUND DISTANCES.

EXISTING STH 130 HIGHWAY RIGHT-OF-WAY SHOWN HEREIN IS BASED ON THE FOLLOWING POINTS OF REFERENCE: CSM 541, CSM 1107, FOUND MONUMENTS AND THE CENTERLINE OF STH 130 AS PRESENTLY TRAVELED.

EXISTING WEITZEL ROAD RIGHT-OF-WAY SHOWN HEREIN IS BASED ON THE FOLLOWING POINTS OF REFERENCE: CSM 541, FOUND MONUMENTS AND THE CENTERLINE OF WEITZEL ROAD AS PRESENTLY TRAVELED.

EXISTING ACCESS CONTROL ALONG STH 130 AND WEITTZEL ROAD HAS BEEN ESTABLISH FROM CSM 541, RECORDED IN DOC. 259800, V.5, P.96.

ALL NEW RIGHT-OF-WAY MONUMENTS WILL BE TYPE 2 (TYPICALLY 3/4" X 24" IRON REBARS), UNLESS OTHERWISE NOTED, AND WILL BE PLACED PRIOR TO THE COMPLETION OF THE PROJECT.

FOR ADDITIONAL INFORMATION REFER TO THE TITLE SHEET, RECORDED IN THE OFFICE OF REGISTER OF DEEDS IN RICHLAND COUNTY AS SHEET 2 OF 2.

GN

SCALE, FEET
0 30 60

FOUND 3" DIA
HCI SLIM MONUMENT
Y = 180735.834
X = 531254.205

SCHEDULE OF LANDS & INTERESTS REQUIRED

PARCEL NUMBER	OWNER (S)	INTERESTS REQUIRED	R/W ACRES REQUIRED			HE SQ. FT.	TLE SQ. FT.
			NEW	EXISTING	TOTAL		
1	LUKE J. HOLSTLAW	HE, TLE	-	-	-	427	391

NOTE: OWNER'S NAMES ARE SHOWN FOR REFERENCE PURPOSES ONLY AND ARE SUBJECT TO CHANGE PRIOR TO THE TRANSFER OF LAND INTERESTS TO THE DEPARTMENT.

UTILITY INTERESTS REQUIRED

PARCEL NUMBER	OWNER (S)	INTERESTS REQUIRED
200	FRONTIER COMMUNICATIONS	RELEASE OF RIGHTS

UTILITY EASEMENT TABLE

UTILITY NUMBER	OWNER & RECORDING INFORMATION	LOCATED IN R/W PARCEL #
200	GTE EASEMENT DOC. 144157, V.38, P.119	1
200	GTE EASEMENT DOC. 196037, V.206, P.178	1
200	VERIZON NORTH EASEMENT DOC. 241588, V.330,P.50	1

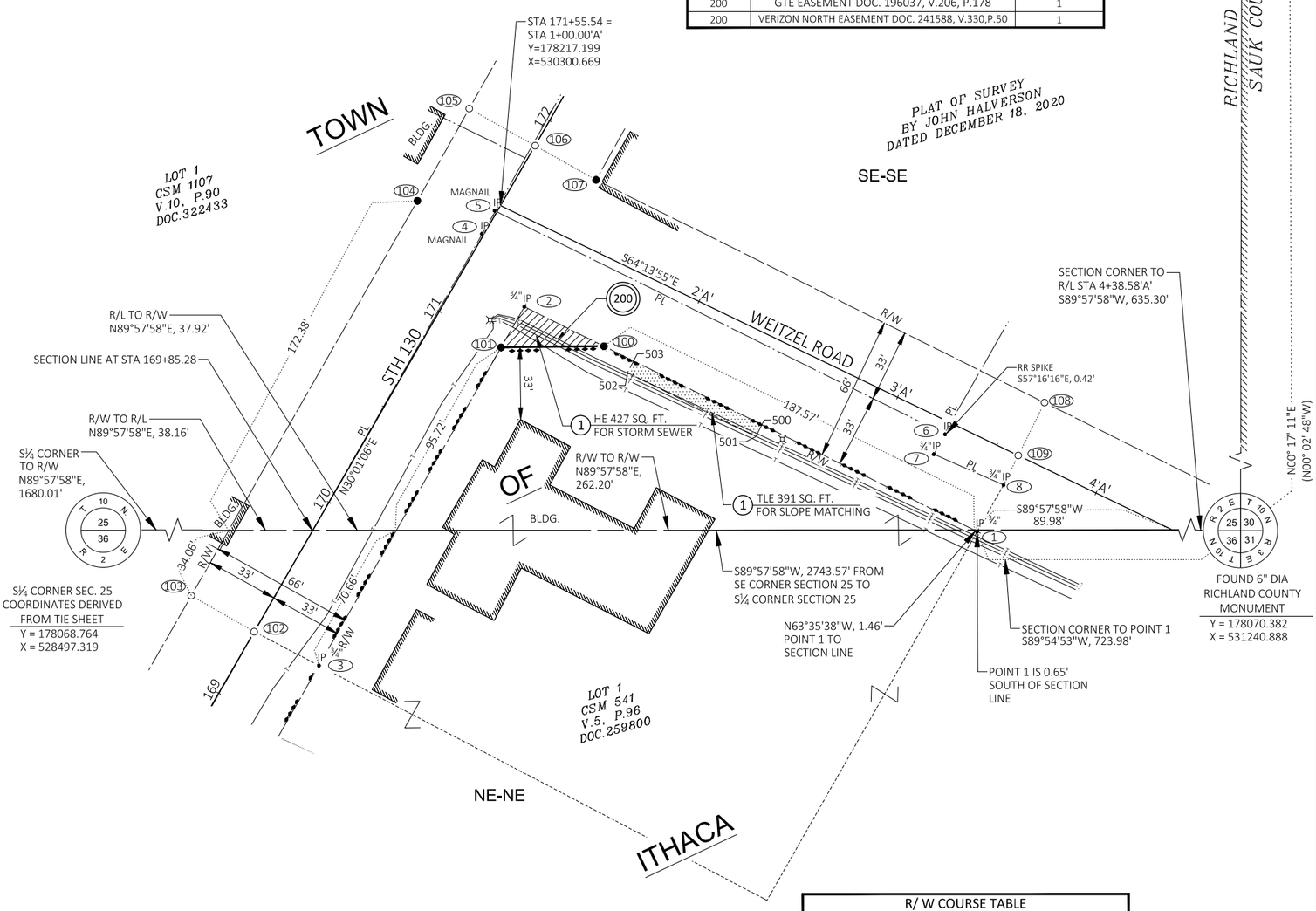

R/ W COURSE TABLE

POINT TO POINT	BEARING	DISTANCE
1 TO 100	N63° 35' 38"W (S63°55'17"E)	189.03'
100 TO 101	S89° 23' 05"W	46.64'
101 TO 3	S29° 47' 30"W (N29°28'26"E)	166.38'
3 TO 102	N62° 20' 54"W (N62°41'00"W)	33.13' (33.03')
102 TO 103	N60° 12' 31"W	32.90'
103 TO 104	N29° 47' 30"E (S29°26'32"W)	206.44'
104 TO 105	N29° 21' 01"E	47.99'
105 TO 106	S60° 39' 01"E	34.27'
106 TO 107	S60° 39' 01"E	31.73'
107 TO 108	S63° 35' 38"E	227.18'
108 TO 109	S26° 24' 22"W	26.80'
109 TO 8	S26° 24' 22"W	14.97'
8 TO 1	S29° 40' 24"W (S29°21'02"W)	24.27' (24.22')

FOUND POINT TABLE

POINT NUMBER	STATION	OFFSET	Y	X
2	171+21.22	32.36'RT	178171.292	530311.514
3	169+33.61	33.10'RT	178008.477	530218.300
4	171+40.21	0.88'LT	178204.364	530292.235
5	171+52.17	1.07'LT	178214.817	530298.058
6	3+26.76'A'	5.82'RT	178113.379	530502.350
7	3+26.07'A'	16.16'RT	178104.369	530497.233

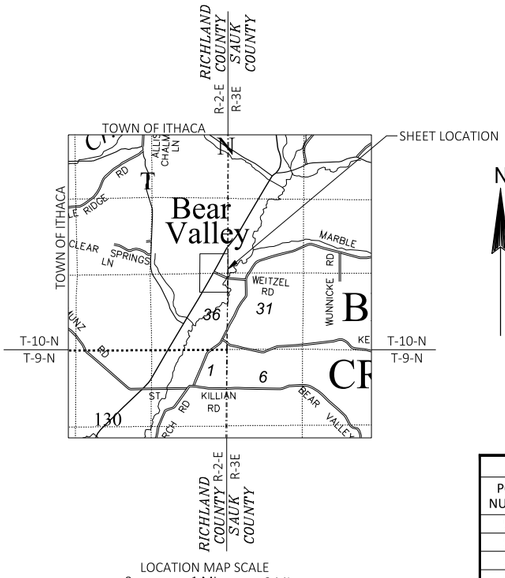

R/W POINTS TABLE

POINT NUMBER	STATION	OFFSET
1	3+59.03'A'	39.18'RT
8	3+60.69'A'	14.97'RT
100	1+70.01'A'	37.08'RT
101	170+99.99	32.44'RT
102	169+32.24	0.00'RT
103	169+32.11	32.90'LT
104	171+38.56	33.61'LT
105	171+86.54	34.27'LT
106	171+86.94	0.00'RT
107	1+33.99'A'	29.33'LT
108	3+1.15'A'	26.80'LT
109	3+60.85'A'	0.00'RT

TLE POINTS TABLE

POINT NUMBER	STATION	OFFSET
500	2+50.00'A'	37.97'RT
501	2+49.93'A'	43.97'RT
502	1+84.93'A'	43.24'RT
503	1+85.00'A'	37.24'RT

JEWELL
associates engineers, inc.
Engineers - Architects - Surveyors

I, NOAH E. ANLIKER, PROFESSIONAL LAND SURVEYOR, HEREBY CERTIFY THAT IN FULL COMPLIANCE WITH THE PROVISIONS OF SECTION 84.095 OF THE WISCONSIN STATUTES AND UNDER THE DIRECTION OF THE DEPARTMENT OF TRANSPORTATION, I HAVE SURVEYED AND MAPPED THIS TRANSPORTATION PROJECT PLAT AND SUCH PLAT CORRECTLY REPRESENTS ALL EXTERIOR BOUNDARIES OF THE SURVEYED LAND.

SIGNATURE: Noah E. Anliker DATE: 7/13/2023
PRINT NAME: NOAH E. ANLIKER
REGISTRATION NUMBER: S-3265

WISCONSIN NOAH E. ANLIKER S-3265 CAZENOVIA, WISCONSIN LAND SURVEYOR

THIS PLAT AND RELOCATION ORDER ARE APPROVED FOR THE DEPARTMENT OF TRANSPORTATION

SIGNATURE: Cory Schlagel DATE: 7/13/2023
PRINT NAME: CORY SCHLAGEL

PLOT SCALE : 1:30
PLOT NAME :
PLOT BY : Tim Velte
PLOT DATE : 7/12/2023 4:28 PM
PLOT DATE :
PLOT DATE :
FILE NAME : S:\PROJECTS\W11633 WISDOT - STH 130 RICHLAND AND SAUK CO\RW\DWG\W11633_5760-00-20_TPP.DWG
APPRAISAL PLAT DATE : 7/13/2023

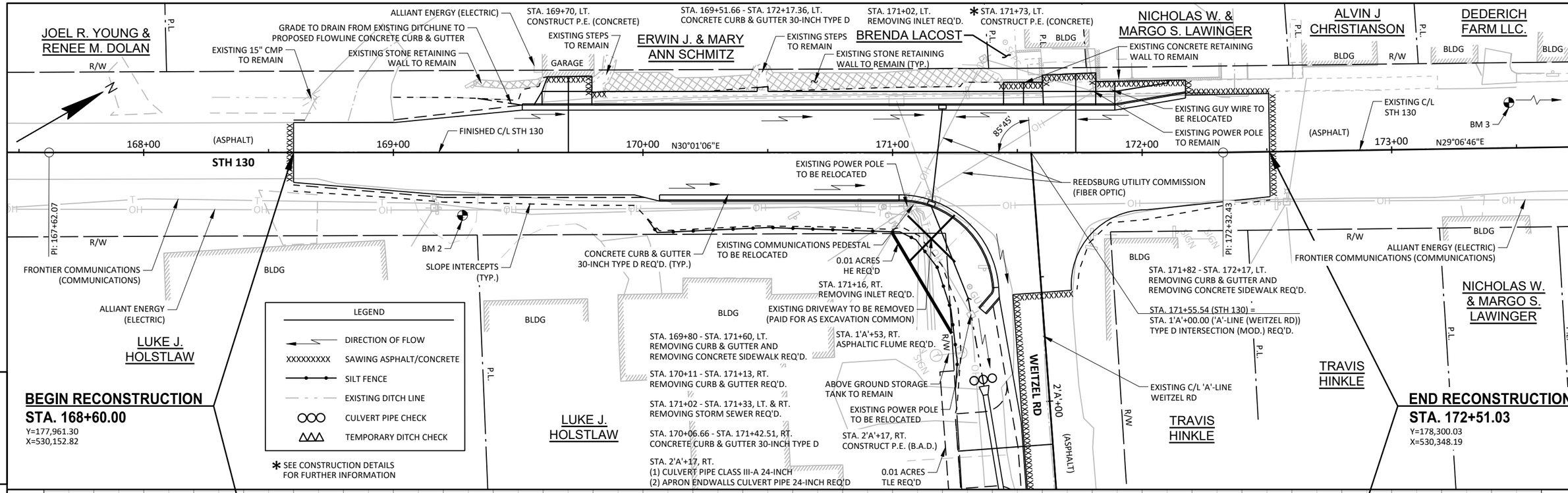

BENCH MARKS

NO.	STA.	DESCRIPTION	ELEV.	Y	X
2	169+28	¾" IRON REBAR SET, 25.2' RT.	771.36	178,007.32	530,208.48
3	175+76	¾" IRON REBAR SET, 23.3' LT.	768.71	178,595.49	530,486.10

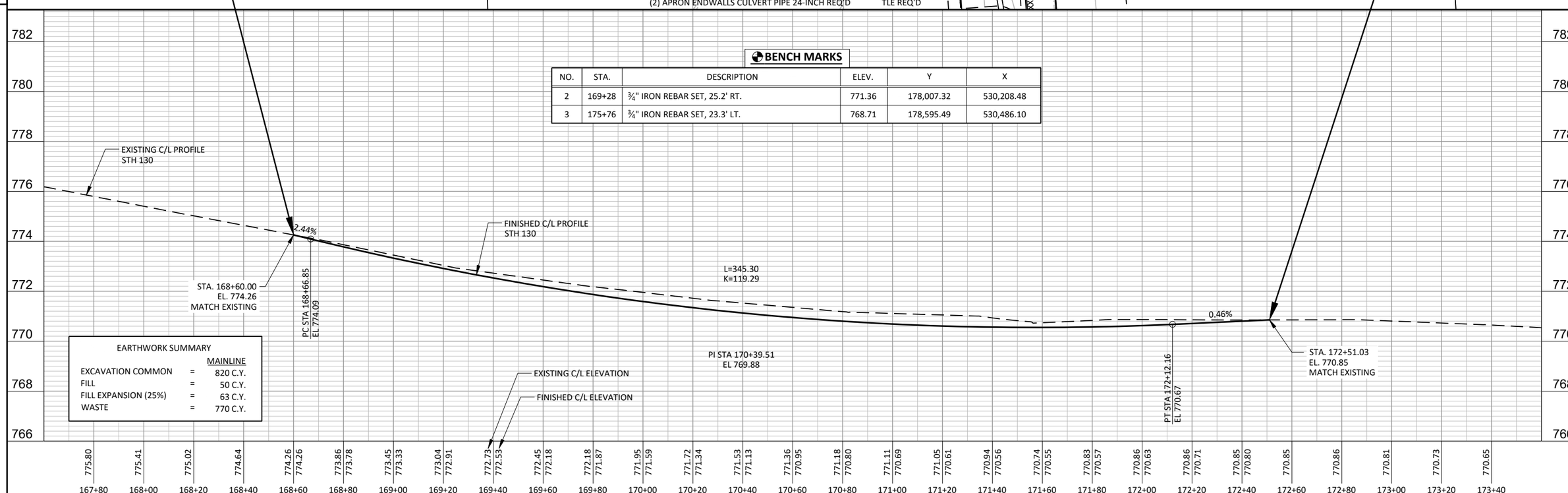

EARTHWORK SUMMARY

		MAINLINE
EXCAVATION COMMON	=	820 C.Y.
FILL	=	50 C.Y.
FILL EXPANSION (25%)	=	63 C.Y.
WASTE	=	770 C.Y.

PROJECT NO: 5760-00-72	HWY: STH 130	COUNTY: SAUK	PLAN AND PROFILE: MAINLINE	SHEET 42	E

FILE NAME : S:\PROJECTS\W11633 WISDOT - STH 130 RICHLAND AND SAUK CO\SHEETSPLAN\PLAN & PROFILE SHEETS\STH 130_P&P'S.DWG PLOT DATE : 7/8/2025 11:15:45 AM PLOT BY : CODY KINTZ PLOT SCALE : 1 IN:40 FT LAYOUT : LAYOUT1

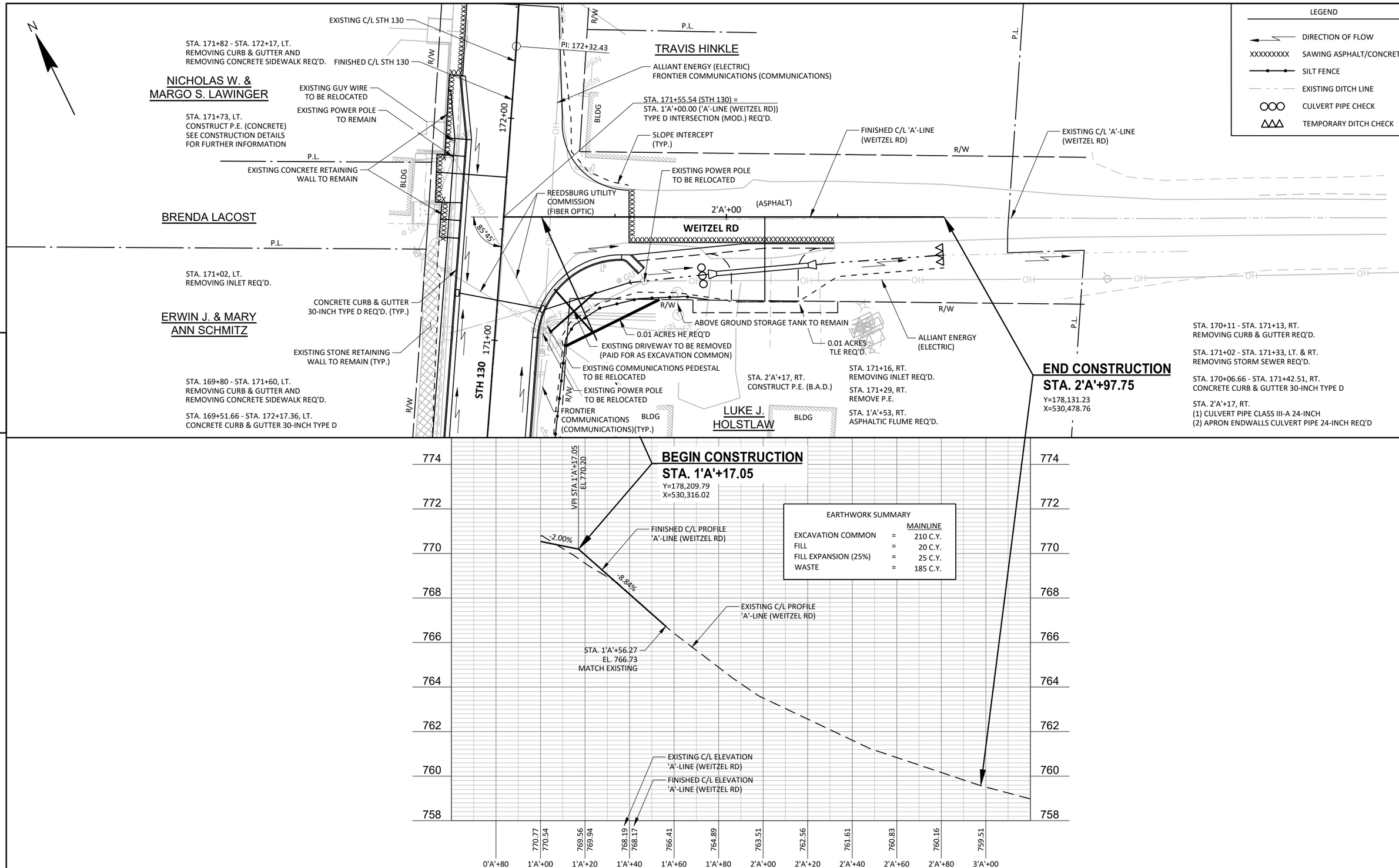

EARTHWORK SUMMARY

		MAINLINE
EXCAVATION COMMON	=	210 C.Y.
FILL	=	20 C.Y.
FILL EXPANSION (25%)	=	25 C.Y.
WASTE	=	185 C.Y.

PROJECT NO: 5760-00-72	HWY: STH 130	COUNTY: SAUK	PLAN AND PROFILE: SIDEROADS	SHEET 43	E

FILE NAME : S:\PROJECTS\W11633 WISDOT - STH 130 RICHLAND AND SAUK CO\SHEETSPLAN\PLAN & PROFILE SHEETS\STH 130_P&P'S.DWG PLOT DATE : 7/23/2025 3:40:43 PM PLOT BY : CODY KINTZ PLOT SCALE : 1 IN:40 FT LAYOUT : 'A'-LINE

Standard Detail Drawing List

08A05-21A	INLET COVERS TYPE A, H, A-S, H-S & Z
08C06-03	INLETS 3-FT AND 4-FT DIAMETER
08C07-03	INLETS 2X2-FT, 2X2.5-FT, 2X3-FT, 2.5X3-FT & 2X3.5-FT
08D01-23A	CONCRETE CURB & GUTTER
08D01-23B	CONCRETE CURB, TIES AND CURB AND GUTTER APPLICATIONS
08D04-07	CONCRETE SURFACE DRAINS & ASPHALTIC FLUMES
08D18-04	DRIVEWAY AND SIDEWALK RAMPS TYPES X & Y
08D18-05	DRIVEWAY AND SIDEWALK RAMPS TYPES X & Y
08D22-01	DRIVEWAYS WITHOUT CURB & GUTTER RESURFACING PROJECTS RURAL
08E08-03	TYPICAL INSTALLATIONS OF EROSION BALES / TEMPORARY DITCH CHECKS
08E09-06	SILT FENCE
08E10-02	INLET PROTECTION TYPE A, B, C AND D
08E15-01	CULVERT PIPE CHECK
08F01-11	APRON ENDWALLS FOR CULVERT PIPE
09A01-14A	AT-GRADE SIDE ROAD INTERSECTION, TYPES "B1", "B2", "C" AND D AND TEE INTERSECTION BYPASS LANE
13A11-04A	CENTERLINE RUMBLE STRIPS - ASPHALT
13A11-04D	CENTERLINE RUMBLE STRIPS - INTERSECTIONS, DRIVEWAYS, BRIDGES, RAILROADS
13C19-03	HMA LONGITUDINAL JOINTS
14B42-07A	MIDWEST GUARDRAIL SYSTEM (MGS) GUARDRAIL
14B42-07B	MIDWEST GUARDRAIL SYSTEM (MGS) GUARDRAIL
14B42-07C	MIDWEST GUARDRAIL SYSTEM (MGS) GUARDRAIL
14B42-07D	MIDWEST GUARDRAIL SYSTEM (MGS) GUARDRAIL
14B44-04A	MIDWEST GUARDRAIL SYSTEM ENERGY ABSORBING TERMINAL (MGS)
14B44-04B	MIDWEST GUARDRAIL SYSTEM ENERGY ABSORBING TERMINAL (MGS)
14B44-04C	MIDWEST GUARDRAIL SYSTEM ENERGY ABSORBING TERMINAL (MGS)
14B45-05A	MIDWEST GUARDRAIL SYSTEM THRIE BEAM TRANSITION (MGS)
14B45-05B	MIDWEST GUARDRAIL SYSTEM THRIE BEAM TRANSITION (MGS)
14B45-05C	MIDWEST GUARDRAIL SYSTEM THRIE BEAM TRANSITION (MGS)
14B45-05D	MIDWEST GUARDRAIL SYSTEM THRIE BEAM TRANSITION (MGS)
14B51-04A	ANCHOR POST ASSEMBLY TOP-MOUNTED
14B51-04B	ANCHOR POST ASSEMBLY TOP-MOUNTED
14B51-04C	ANCHOR POST ASSEMBLY TOP-MOUNTED
15C02-09A	BARRICADES AND SIGNS FOR MAINLINE CLOSURES
15C02-09B	BARRICADES AND SIGNS FOR VARIOUS CLOSURES
15C02-09C	DETOUR SIGNING FOR MAINLINE CLOSURES
15C04-05	TRAFFIC CONTROL, ADVANCE WARNING SIGNS 45 M.P.H. OR GREATER TWO-WAY UNDIVIDED ROAD OPEN TO TRAFFIC
15C08-23A	PERMANENT LONGITUDINAL PAVEMENT MARKINGS
15C08-23B	TEMPORARY LONGITUDINAL PAVEMENT MARKING
15C11-10A	CHANNELIZING DEVICES FLEXIBLE TUBULAR MARKER POST
15C11-10B	CHANNELIZING DEVICES DRUMS, CONES, BARRICADES AND VERTICAL PANELS
15C12-09A	TRAFFIC CONTROL FOR LANE CLOSURE WITH FLAGGING OPERATION
15C19-09A	MOVING PAVEMENT MARKING OPERATION TWO-LANE TWO-WAY ROADWAY
15C33-05	STOP LINE AND CROSSWALK PAVEMENT MARKING
15C35-06A	PAVEMENT MARKING (INTERSECTIONS)
15D39-02	TRAFFIC CONTROL, DROP-OFF SIGNING
15D39-03	TRAFFIC CONTROL, DROP-OFF SIGNING
15D44-02	TRAFFIC CONTROL, SIGNING ON ROADWAYS WITH MILLED SURFACES
15D45-03	TRAFFIC CONTROL, SIGNING ON ROADWAYS WITH LOOSE GRAVEL
16A01-07	LANDMARK REFERENCE MONUMENTS AND COVERS

6

GENERAL NOTES

DETAILS OF CONSTRUCTION, MATERIALS AND WORKMANSHIP NOT SHOWN ON THIS DRAWING SHALL CONFORM TO THE PERTINENT REQUIREMENTS OF THE STANDARD SPECIFICATIONS AND THE APPLICABLE SPECIAL PROVISIONS.

DETAIL DRAWINGS FOR PROPOSED ALTERNATE DESIGNS FOR CATCH BASIN, MANHOLE AND INLET COVERS SHALL BE SUBMITTED TO THE ENGINEER FOR APPROVAL PROVIDING THAT SUCH ALTERNATE DESIGNS MAKE PROVISION FOR EQUIVALENT CAPACITY AND STRENGTH.

ROUND FRAMES AND COVERS SHALL HAVE CONTINUOUSLY MACHINED BEARING SURFACES TO PREVENT ROCKING AND RATTLING.

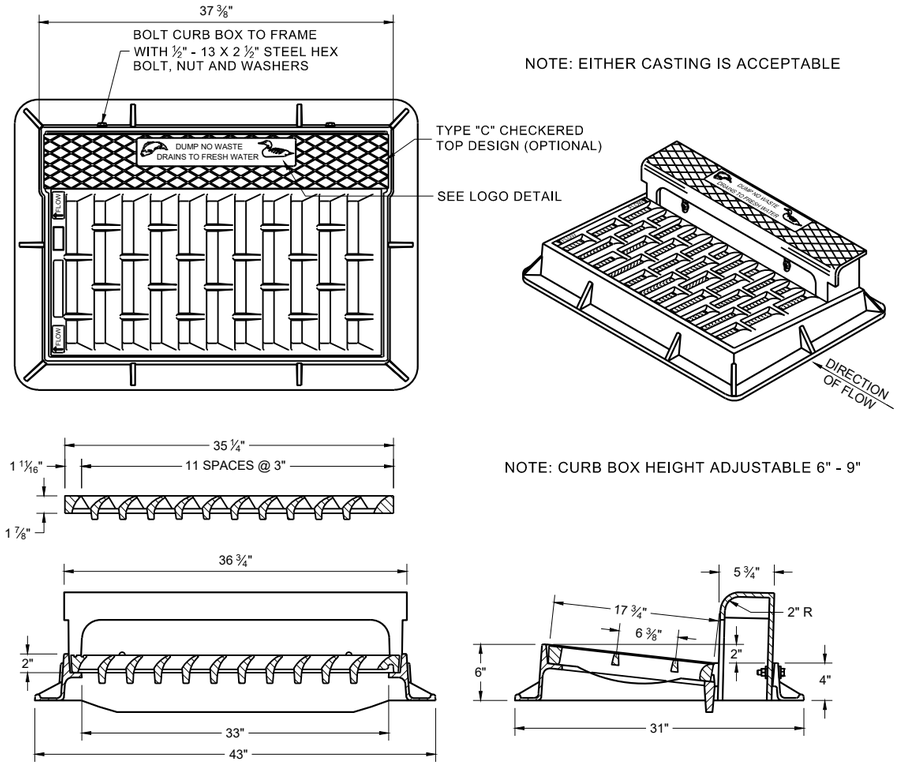

TYPE "H"

NOTE: EITHER CASTING IS ACCEPTABLE

1 ⅛" DIAGONAL BARS WITH 1 ⅝" OPENINGS

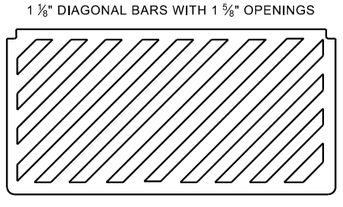

SPECIAL GRATE FOR TYPE "H" COVER

(MEASURES 35" X 17 ¾" X 2")

(NOTED AS TYPE H-S ON DRAINAGE TABLE)

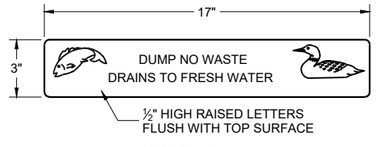

LOGO DETAIL

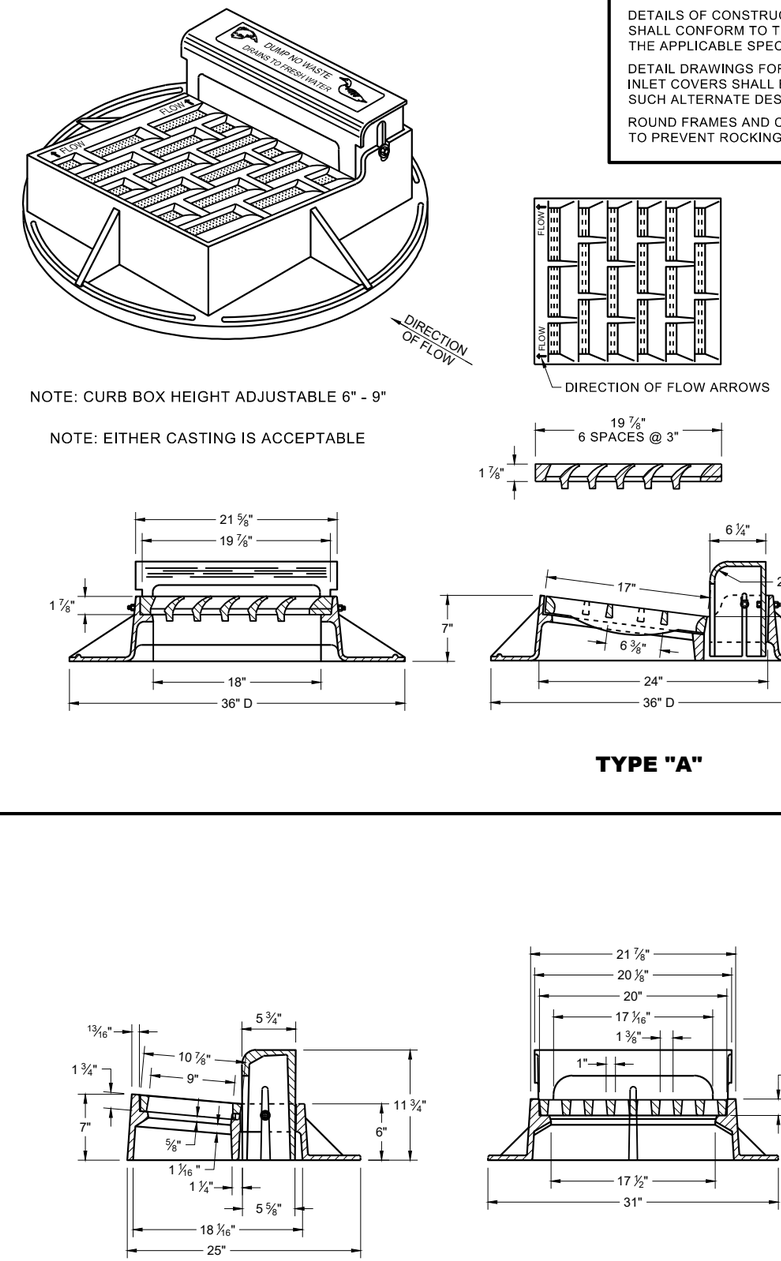

TYPE "A"

1" DIAGONAL BARS WITH 1 ½" OPENINGS

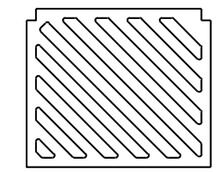

SPECIAL GRATE FOR TYPE "A" COVER

(MEASURES 19 ¾" X 17" X 1 ⅞")

(NOTED AS TYPE A-S ON DRAINAGE TABLE)

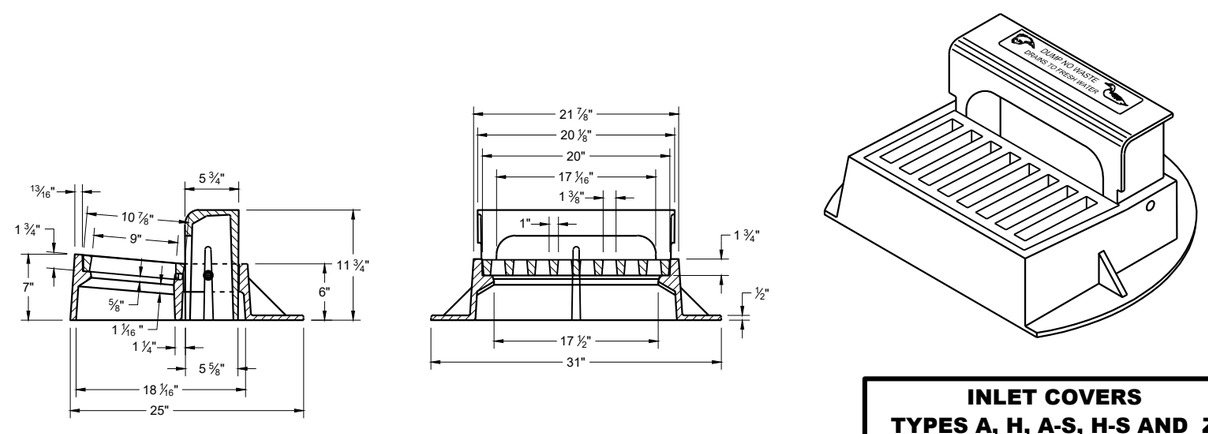

TYPE "Z"

INLET COVERS
TYPES A, H, A-S, H-S AND Z

STATE OF WISCONSIN
DEPARTMENT OF TRANSPORTATION

APPROVED
December 2023 — DATE
/S/ Rodney Taylor — ROADWAY STANDARDS DEVELOPMENT UNIT SUPERVISOR

FHWA

6

SDD 08A05-21a

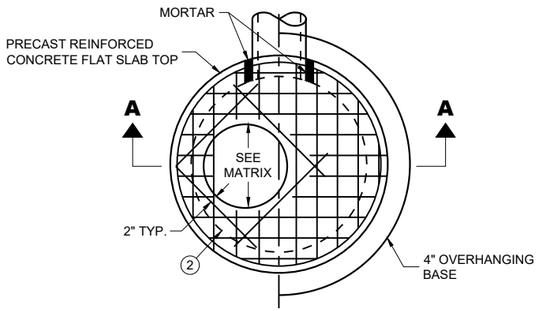

PLAN VIEW CIRCULAR OPENING

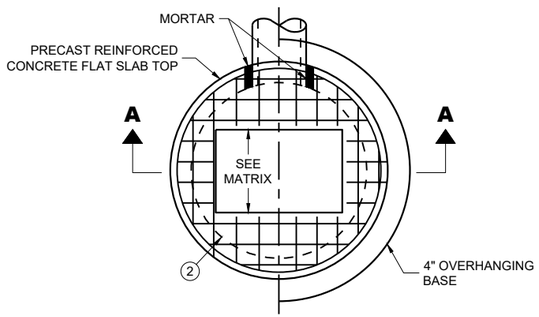

PLAN VIEW RECTANGULAR OPENING

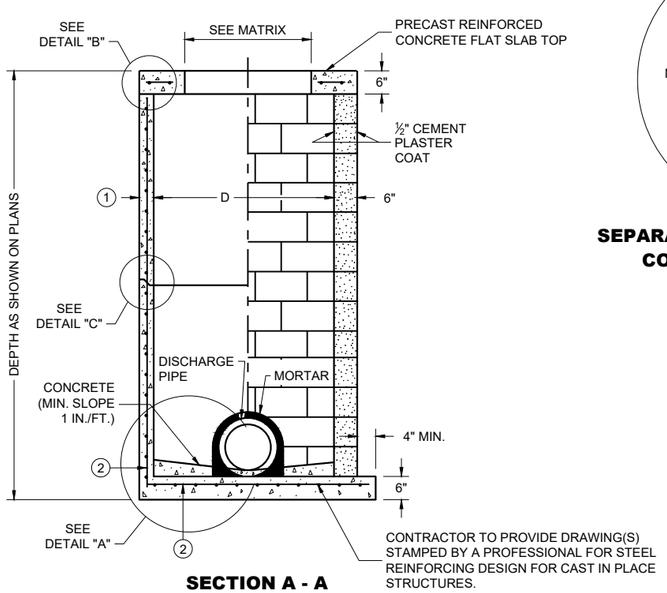

SECTION A - A

PRECAST REINFORCED CONCRETE WITH MONOLITHIC BASE

CONCRETE BLOCK WITH CAST IN PLACE OR PRECAST REINFORCED CONCRETE BASE (2)

CIRCULAR INLETS WITH FLAT TOP

CATCH BASIN COVER OPENING MATRIX

INLET SIZE	INLET COVER TYPE	ALL A'S	ALL B'S	BW	C	F	ALL H'S	S	T	V V-B	WM	Z
	OPENING SIZE (FT.)											
3-FT	2 DIA.				X							X
	2 X 2	X	X					X		X		
4-FT	2 DIA.				X							X
	2 X 2	X	X					X		X		
	2 X 2.5			X				X	X	X	X	
	2 X 3						X					
	2.5 X 3					X						

PIPE MATRIX

INLET SIZE	MAXIMUM INSIDE PIPE DIAMETER FOR TWO PIPES	
	180° SEPARATION (IN)	90° SEPARATION (IN)
3-FT	15	12
4-FT	24	18

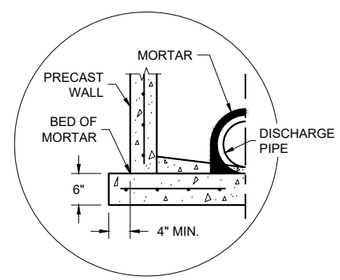

SEPARATE PRECAST REINFORCED CONCRETE BASE OPTION

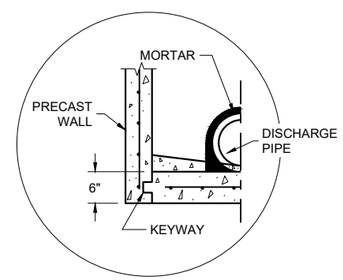

PRECAST REINFORCED CONCRETE WITH INTEGRAL BASE OPTION

DETAIL "A"

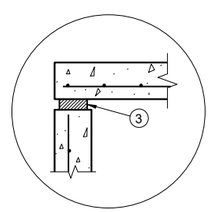

TOP WITH PLAIN END JOINT

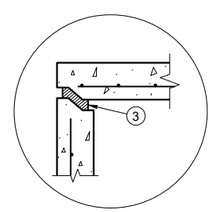

TOP WITH TONGUE AND GROOVE JOINT

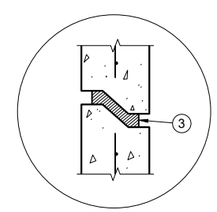

RISER WITH TONGUE AND GROOVE JOINT

DETAIL "B"

DETAIL "C"

INLETS 3-FT AND 4-FT DIAMETER

GENERAL NOTES

DETAILS OF CONSTRUCTION, MATERIALS AND WORKMANSHIP NOT SHOWN ON THIS DRAWING SHALL CONFORM TO THE PERTINENT REQUIREMENTS OF THE STANDARD SPECIFICATIONS AND THE APPLICABLE SPECIAL PROVISIONS.

UNLESS OTHERWISE AUTHORIZED IN WRITING BY THE ENGINEER, THE CONTRACTOR SHALL NOT ORDER AND DELIVER PRECAST INLET UNITS REQUIRED FOR THE PROJECT UNTIL A LIST OF SIZES IS FURNISHED BY THE ENGINEER.

DETAILED DRAWINGS FOR PROPOSED ALTERNATE DESIGNS FOR UNDERGROUND DRAINAGE STRUCTURES SHALL BE SUBMITTED TO THE ENGINEER FOR APPROVAL PROVIDING THAT SUCH ALTERNATE DESIGNS MAKE PROVISION FOR EQUIVALENT CAPACITY AND STRENGTH.

ALL DRAINAGE STRUCTURES ARE DESIGNATED ON THE PLANS AS "MANHOLES 3X3-L", "CATCH BASINS 4-B", "INLETS 2X3-H", ETC. THE FIRST NUMBERS DESIGNATE THE SIZE OF THE STRUCTURE, AND THE FOLLOWING LETTER DESIGNATES THE TYPE OF COVER TO BE USED TO COMPRISE THE COMPLETE UNIT.

BASES SHALL BE PLACED ON A BED OF MATERIAL AT LEAST 6 INCHES IN DEPTH, WHICH MEETS THE REQUIREMENTS OF FOUNDATION BACKFILL. THIS BEDDING SHALL BE COMPACTED AND PROVIDE UNIFORM SUPPORT FOR THE ENTIRE AREA OF THE BASE.

ALL BAR STEEL REINFORCEMENT SHALL BE EMBEDDED 2 INCHES CLEAR UNLESS OTHERWISE SHOWN OR NOTED.

ALL PRECAST INLET UNITS SHALL CONFORM TO THE PERTINENT REQUIREMENTS OF AASHTO DESIGNATION M199.

PRECAST REINFORCED RISERS SHALL HAVE A TONGUE AND GROOVE JOINT WITH TONGUE UP OR DOWN.

4" OVERHANGING BASES ARE REQUIRED FOR ALL CONCRETE BLOCK INSTALLATIONS. 4" OVERHANG IS REQUIRED WHEN SEPARATE PRECAST BASE IS PROVIDED. OVERHANG IS NOT REQUIRED ON PRECAST STRUCTURES WITH AN INTEGRAL OR MONOLITHIC BASE.

FOR ADDITIONAL CONFIGURATIONS, MAINTAIN A MINIMUM OF 12 INCHES AS MEASURED FROM THE INSIDE OF THE STRUCTURE WALL BETWEEN THE OUTSIDE PIPE WALLS OF ADJACENT PIPES. SEE DETAIL "D".

(1) MINIMUM WALL THICKNESS SHALL BE 4 INCHES FOR 3-FT DIAMETER AND 5 INCHES FOR 4-FT DIAMTER PRECAST INLETS.

(2) FOR PRECAST INLETS AND REINFORCED CONCRETE BASES PROVIDE REINFORCING STEEL IN ACCORDANCE TO AASHTO M199.

(3) JOINTS TO BE SEALED WITH A BUTYL RUBBER SEAL PER SEALANT MANUFACTURERS RECOMMENDATIONS CONFORMING TO ASTM C 990 OR RUBBER GASKETS CONFORMING TO ASTM C443.

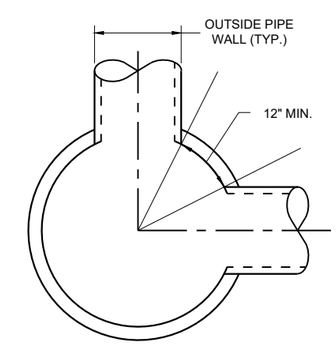

MINIMUM HORIZONTAL PIPE SEPARATION

DETAIL "D"

6

6

SDD 08C06-03

SDD 08C06-03

INLETS 3-FT AND 4-FT DIAMETER

STATE OF WISCONSIN
DEPARTMENT OF TRANSPORTATION

APPROVED
December 2023 — /S/ Rodney Taylor
DATE — ROADWAY STANDARDS DEVELOPMENT UNIT SUPERVISOR

FHWA

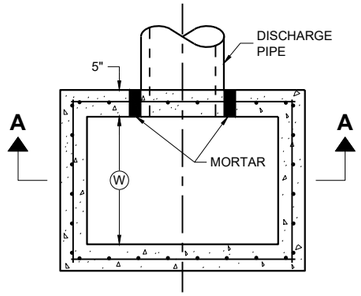

PLAN VIEW

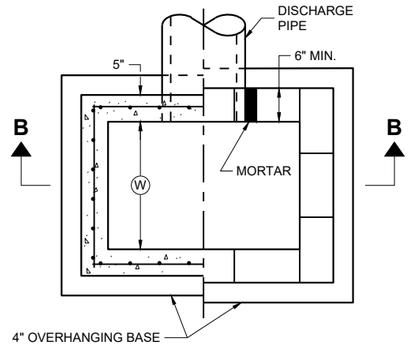

PLAN VIEW

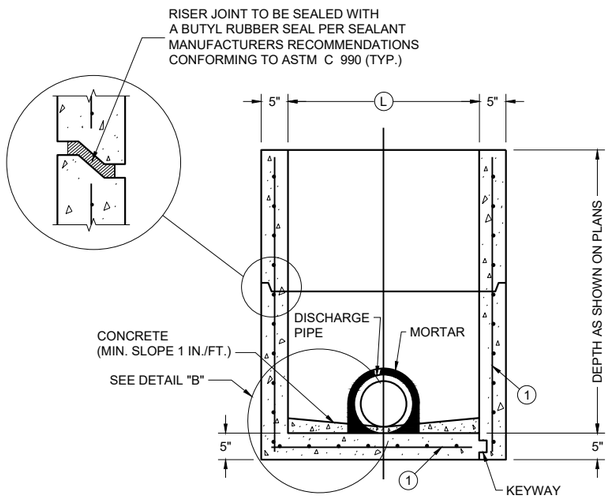

PRECAST REINFORCED CONCRETE WITH MONOLITHIC BASE

PRECAST REINFORCED CONCRETE WITH INTEGRAL BASE

SECTION A - A

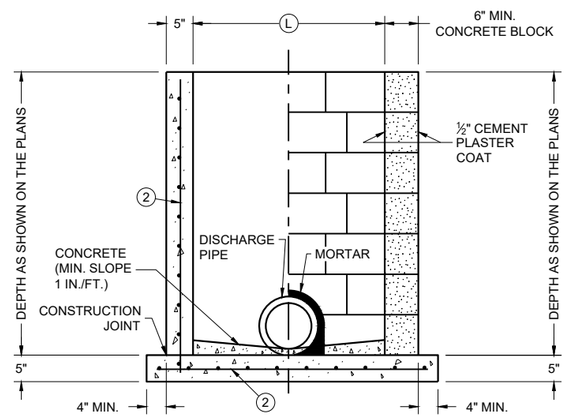

CAST IN PLACE REINFORCED CONCRETE

CONCRETE BLOCK WITH CAST IN PLACE OR PRECAST REINFORCED CONCRETE BASE (1)

SECTION B - B

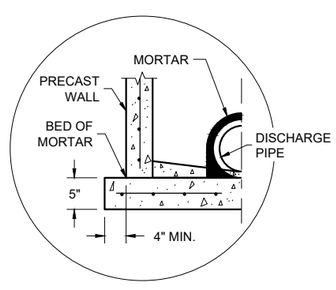

SEPARATE PRECAST REINFORCED CONCRETE BASE OPTION

DETAIL "B"

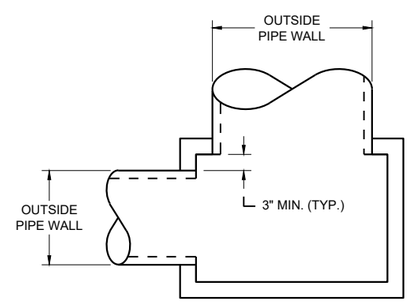

DETAIL "A"

GENERAL NOTES

DETAILS OF CONSTRUCTION, MATERIALS AND WORKMANSHIP N0T SHOWN ON THIS DRAWING SHALL CONFORM TO THE PERTINENT REQUIREMENTS OF THE STANDARD SPECIFICATIONS AND THE APPLICABLE SPECIAL PROVISIONS.

UNLESS OTHERWISE AUTHORIZED IN WRITING BY THE ENGINEER, THE CONTRACTOR SHALL NOT ORDER AND DELIVER PRECAST INLET UNITS REQUIRED FOR THE PROJECT UNTIL A LIST OF SIZES IS FURNISHED BY THE ENGINEER.

DETAILED DRAWINGS FOR PROPOSED ALTERNATE DESIGNS FOR UNDERGROUND DRAINAGE STRUCTURES SHALL BE SUBMITTED TO THE ENGINEER FOR APPROVAL PROVIDING THAT SUCH ALTERNATE DESIGNS MAKE PROVISION FOR EQUIVALENT CAPACITY AND STRENGTH.

ALL PRECAST INLET UNITS SHALL CONFORM TO THE PERTINENT REQUIREMENTS OF ASTM C 913.

ALL DRAINAGE STRUCTURES ARE DESIGNATED ON THE PLANS AS "MANHOLES 3X3-L", "CATCH BASINS 4-B", "INLETS 2X3-H", ETC. THE FIRST NUMBERS DESIGNATES THE SIZE OF THE STRUCTURE, AND THE FOLLOWING LETTER DESIGNATES THE TYPE OF COVER TO BE USED TO COMPRISE THE COMPLETE UNIT.

BASES SHALL BE PLACED ON A BED OF MATERIAL AT LEAST 6 INCHES IN DEPTH, WHICH MEETS THE REQUIREMENTS OF FOUNDATION BACKFILL. THIS BEDDING SHALL BE COMPACTED AND PROVIDE UNIFORM SUPPORT FOR THE ENTIRE AREA OF THE BASE.

ALL BAR STEEL REINFORCEMENT SHALL BE EMBEDDED 2 INCHES CLEAR UNLESS OTHERWISE SHOWN OR NOTED.

PRECAST REINFORCED RISERS SHALL HAVE A TONGUE AND GROOVE JOINT WITH TONGUE UP OR DOWN.

4" OVERHANGING BASES ARE REQUIRED FOR CAST-IN-PLACE REINFORCED CONCRETE AND CONCRETE BLOCK INSTALLATIONS. 4" OVERHANG IS REQUIRED WHEN SEPARATE PRECAST BASE IS PROVIDED. OVERHANG IS NOT REQUIRED ON PRECAST STRUCTURES WITH AN INTEGRAL OR MONOLITHIC BASE.

MAXIMUM INSIDE PIPE DIAMETER DETERMINED BY 3" CLEARANCE ON EACH SIDE OF THE OUTSIDE WALL OF THE PIPE. SEE DETAIL "A". ASSUMES PIPE ENTERS PERPENDICULAR TO THE STRUCTURE.

(1) FOR PRECAST INLETS AND REINFORCED CONCRETE BASES PROVIDE REINFORCING STEEL IN ACCORDANCE TO ASTM C 913

(2) CONTRACTOR TO PROVIDE DRAWING(S) STAMPED BY A PROFESSIONAL ENGINEER FOR STEEL REINFORCING DESIGN FOR CAST-IN-PLACE STRUCTURES.

CATCH BASIN COVER MATRIX

INLET SIZE	WIDTH (W) (FT.)	LENGTH (L) (FT.)	INLET COVER TYPE									
			ALL A'S	ALL B'S	BW	F	ALL H'S	S	T	V	WM	V V-B
2 X 2-FT	2	2	X	X				X				
2 X 2.5-FT	2	2.5			X			X	X	X	X	
2 X 3-FT	2	3					X					
2.5 X 3-FT	2.5	3				X						
2 X 3.5-FT	2	3.5										X

PIPE MATRIX

CATCH BASIN SIZE	MAXIMUM INSIDE PIPE DIAMETER FOR TWO PIPES	
	WIDTH (IN)	LENGTH (IN)
2 X 2-FT	12	12
2 X 2.5-FT	12	18
2 X 3-FT	12	24
2.5 X 3-FT	18	24
2 X 3.5-FT	12	30

INLETS 2 X 2-FT, 2 X 2.5-FT, 2 X 3-FT, 2.5 X 3-FT AND 2X3.5-FT

INLETS 2 X 2-FT, 2 X 2.5-FT, 2 X 3-FT, 2.5 X 3-FT AND 2 X 3.5-FT

STATE OF WISCONSIN
DEPARTMENT OF TRANSPORTATION

APPROVED
December 2023 — DATE
/S/ Rodney Taylor — ROADWAY STANDARDS DEVELOPMENT UNIT SUPERVISOR
FHWA

6

6

SDD 08C07-03

SDD 08C07-03

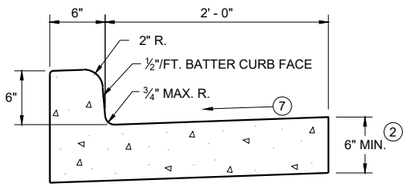

TYPES A (1) & D

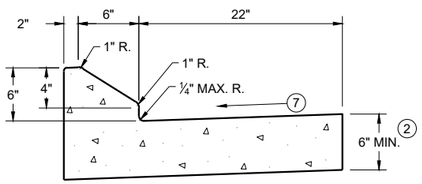

6" SLOPED CURB TYPES G (1) & J

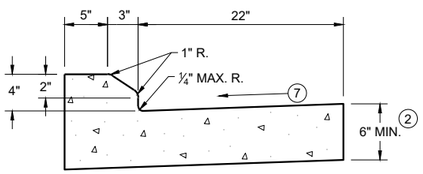

4" SLOPED CURB TYPES G (1) & J

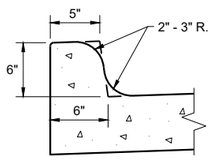

TYPES K (1) & L
(OPTIONAL CURB SHAPE)

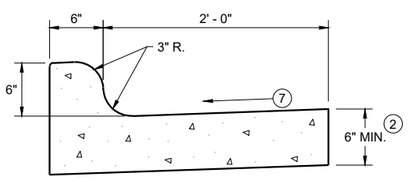

TYPES K (1) & L

CONCRETE CURB AND GUTTER 30"

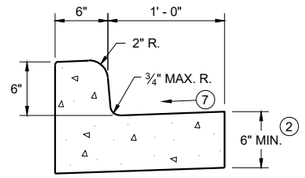

TYPES A (1) & D

CONCRETE CURB AND GUTTER 18"

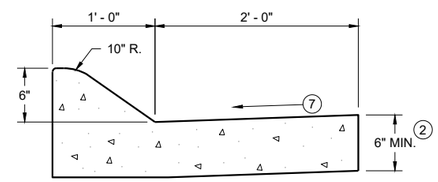

6" SLOPED CURB TYPES A (1) & D

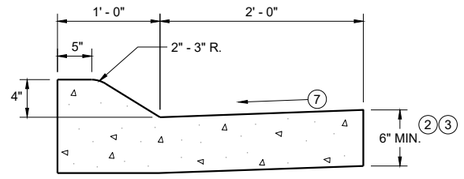

4" SLOPED CURB TYPES A (1) & D

CONCRETE CURB AND GUTTER 36"

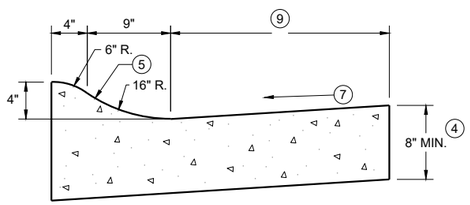

4" SLOPED CURB TYPES R (1) & T

TBT & TBTT	X
30"	22"
36"	28"

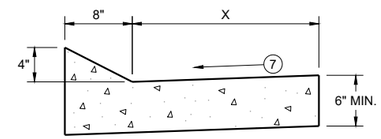

TYPES TBT & TBTT (1)

CONCRETE CURB AND GUTTER

PAVEMENT THICKNESS AND MAXIMUM CONCRETE PANEL WIDTH TABLE

PAVEMENT THICKNESS	MAXIMUM PANEL WIDTH
LESS THAN 10"	12'
10" & ABOVE	15'

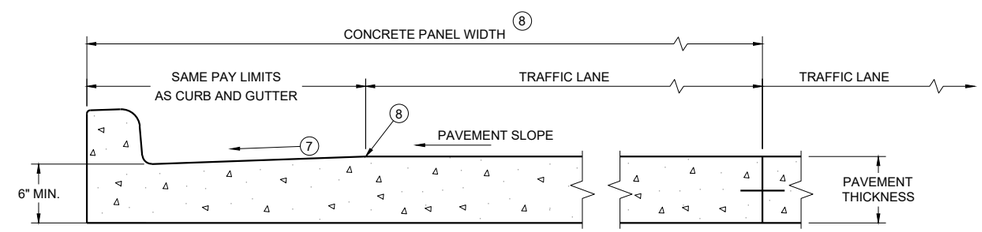

PARTIAL SECTION OF PAVEMENT WITH INTEGRAL CURB AND GUTTER *

* BIKE LANE IS NOT SHOWN

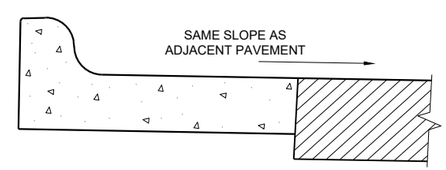

REVERSE SLOPE GUTTER (6)
(TYPICAL FOR ALL CURB & GUTTER TYPES)

GENERAL NOTES

DETAILS OF CONSTRUCTION AND WORKMANSHIP NOT SHOWN ON THIS DRAWING SHALL CONFORM TO THE PERTINENT REQUIREMENTS OF THE CONTRACT.

PAVEMENT TIES AND TIE BARS SHALL BE EPOXY COATED IN CONFORMANCE WITH SUBSECTION 505.2.6.2 OF THE STANDARD SPECIFICATIONS.

INTEGRAL CURB AND GUTTER SHALL CONFORM TO THE DETAILS SHOWN FOR CONCRETE CURB AND GUTTER INCLUDING THE TRANSVERSE GUTTER SLOPE.

UNLESS OTHERWISE SHOWN ON THE TYPICAL CROSS SECTIONS, THE BASE AGGREGATE AND COMMON EXCAVATION LIMITS ARE 2' - 0" BEHIND THE BACK OF CURBS.

(1) TIE BARS ARE REQUIRED FOR CURB AND GUTTERS TYPES A, G, K, R, AND TBTT.

(2) THE BOTTOM OF CURB AND GUTTER MAY BE CONSTRUCTED EITHER LEVEL OR PARALLEL TO THE SLOPE OF THE SUBGRADE OR BASE AGGREGATE PROVIDED A 6" MINIMUM GUTTER THICKNESS IS MAINTAINED.

(3) USE 8" MINIMUM GUTTER THICKNESS WHEN USED WITH AN ADJACENT CONCRETE TRUCK APRON PLACED BEHIND BACK OF CURB.

(4) THE BOTTOM OF CURB AND GUTTER MAY BE CONSTRUCTED EITHER LEVEL OR PARALLEL TO THE SLOPE OF THE SUBGRADE OR BASE AGGREGATE PROVIDED A 8" MINIMUM GUTTER THICKNESS IS MAINTAINED.

(5) UNLESS OTHERWISE NOTED, FOR STAKING PURPOSES THE FACE OF CURB IS 6" FROM THE BACK OF CURB.

(6) WHEN REVERSE SLOPE GUTTER IS REQUIRED, THE LOCATION(S) WILL BE SHOWN ELSEWHERE IN THE PLAN.

(7) USE 4% GUTTER CROSS SLOPE UNLESS OTHERWISE NOTED IN THE PLANS.

(8) INCLUDE LONGITUDINAL JOINT AND TIE BARS ALONG LANE EDGE WHEN CONCRETE PANEL WIDTH EXCEEDS THE MAXIMUM WIDTH PER TABLE BELOW. LONGITUDINAL JOINT(S) ARE NOT ALLOWED WITHIN TRAFFIC LANES AND BIKE LANES. LONGITUDINAL JOINT MAY BE SAWED.

(9) CONCRETE CURB AND GUTTER 4-INCH SLOPED 30-INCH TYPE "R" AND "T" = 17 INCHES
CONCRETE CURB AND GUTTER 4-INCH SLOPED 36-INCH TYPE "R" AND "T" = 23 INCHES

CONCRETE CURB AND GUTTER

STATE OF WISCONSIN
DEPARTMENT OF TRANSPORTATION

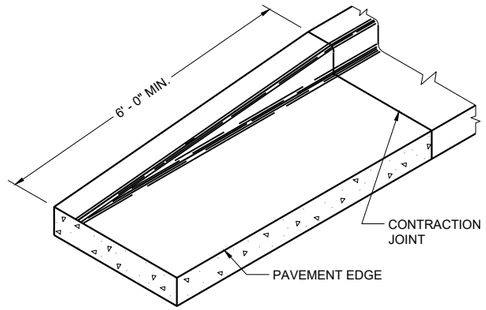

END SECTION CURB AND GUTTER

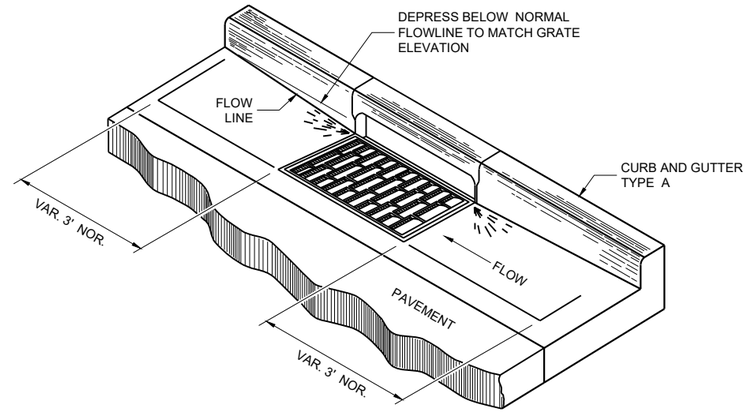

DETAIL OF CURB AND GUTTER AT INLETS

(TYPICAL H INLET COVER SHOWN)

GENERAL NOTES

DETAILS OF CONSTRUCTION AND WORKMANSHIP NOT SHOWN ON THIS DRAWING SHALL CONFORM TO THE PERTINENT REQUIREMENTS OF THE CONTRACT.

PAVEMENT TIES AND TIE BARS SHALL BE EPOXY COATED IN CONFORMANCE WITH SUBSECTION 505.2.6.2 OF THE STANDARD SPECIFICATIONS.

UNLESS OTHERWISE SHOWN ON THE TYPICAL CROSS SECTIONS, THE BASE AGGREGATE AND COMMON EXCAVATION LIMITS ARE 2' - 0" BEHIND THE BACK OF CURBS.

(1) TIE BARS ARE REQUIRED FOR CURB AND GUTTERS TYPES A, G, K, R, AND TBTT.

(2) THE BOTTOM OF CURB AND GUTTER MAY BE CONSTRUCTED EITHER LEVEL OR PARALLEL TO THE SLOPE OF THE SUBGRADE OR BASE AGGREGATE PROVIDED A 6" MINIMUM GUTTER THICKNESS IS MAINTAINED.

(10) REFER TO SDD 08D18 AND 08D19 FOR ADDITIONAL DRIVEWAY ENTRANCE CURB DETAILS.

(11) PLACE 1" THICK EXPANSION JOINT MATERIAL BETWEEN VERTICAL FACE CURB TYPES EXTENDING FROM THE TOP OF CURB TO 1 INCH BELOW THE ADJOINING CONCRETE SURFACE. RIGID CONCRETE STRUCTURES INCLUDE RAISED CONCRETE MEDIANS, CONCRETE SAFETY ISLANDS, SPLITTER ISLANDS, OR LOCATIONS IDENTIFIED ON THE PLANS.

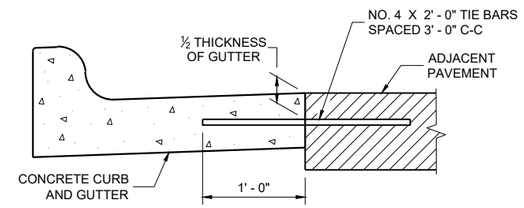

TYPICAL TIE BAR LOCATION (1)

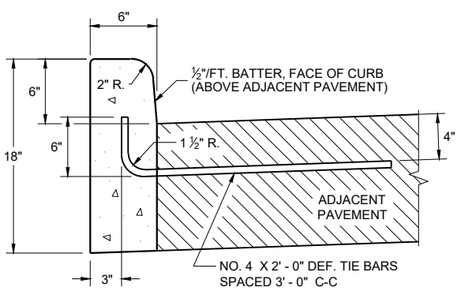

TYPES A (1) & D

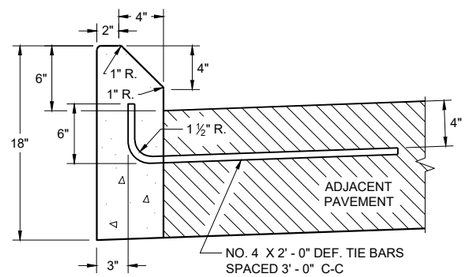

TYPES G (1) & J

CONCRETE CURB

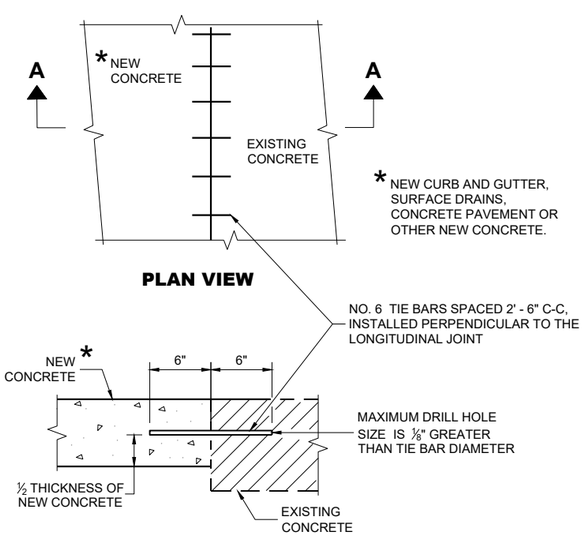

PLAN VIEW

SECTION A - A

TIE BARS DRILLED INTO EXISTING PAVEMENT

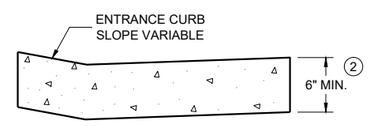

DRIVEWAY ENTRANCE CURB (10)

(WHEN DIRECTED BY THE ENGINEER)

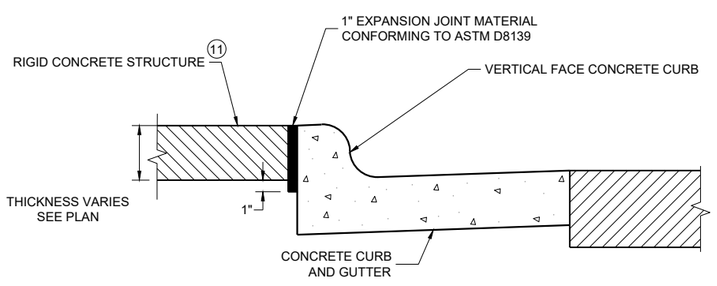

EXPANSION JOINT DETAIL FOR VERTICAL CURB ABUTTING A RIGID STRUCTURE (11)

CONCRETE CURB, TIES AND CURB AND GUTTER APPLICATIONS

STATE OF WISCONSIN
DEPARTMENT OF TRANSPORTATION

APPROVED
May 2023 — DATE
/S/ Rodnery Taylor — ROADWAY STANDARDS DEVELOPMENT UNIT SUPERVISOR

FHWA

NOTE: TAPER CURB ENDS TO GUTTER IN 1' - 0"

ASPHALTIC FLUME

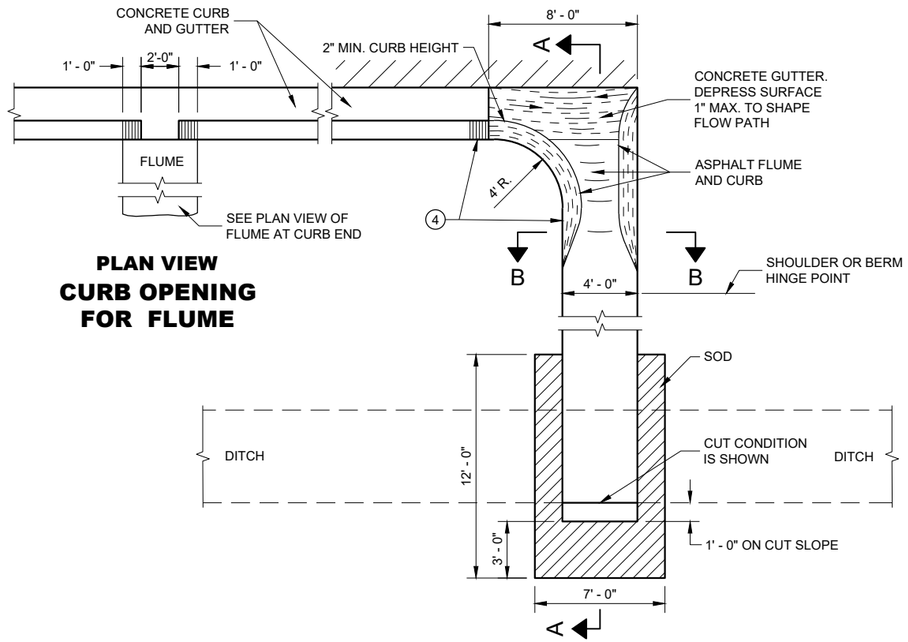

PLAN VIEW
CURB OPENING FOR FLUME

PLAN VIEW
FLUME AT CURB END

GENERAL NOTES

DETAILS OF CONSTRUCTION, MATERIALS AND WORKMANSHIP NOT SHOWN ON THIS DRAWING SHALL CONFORM TO PERTINENT REQUIREMENTS OF THE STANDARD SPECIFICATIONS AND APPLICABLE SPECIAL PROVISIONS.

4" X 4" - W3.0 X W3.0 CONCRETE REINFORCEMENT SHALL BE IN ACCORDANCE WITH AASHTO SPECIFICATION M55.

1. JOINTS SHALL BE ⅛" TO ¼" WIDE BY 1½" DEEP AND SPACED AT UNIFORM INTERVALS OF APPROXIMATELY 4 FEET.
2. GEOTEXTILE TYPE "R" SHALL UNDERLAY THE FULL LENGTH AND WIDTH OF THE CONCRETE SURFACE DRAIN AND RIPRAP.
3. CONCRETE SURFACE DRAIN WITHOUT CURB AND GUTTER MAY BE USED ON BACKSLOPES WHEN SPECIFIED.
4. ANGLE OF FLUME IN RELATION TO BACK OF CURB TO BE CONSTRUCTED PER THE PLAN DETAILS OR AS DIRECTED BY THE ENGINEER. ANGLE OF FLUME MAY BE OTHER THAN 90 DEGREES AS SHOWN.

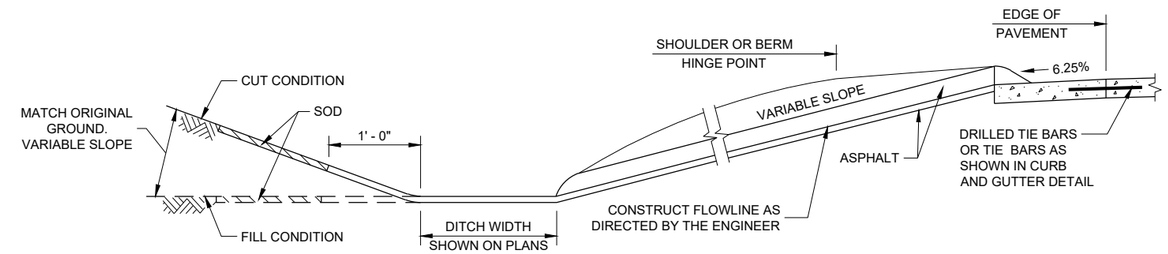

SECTION A - A

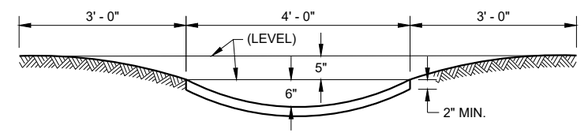

SECTION B - B

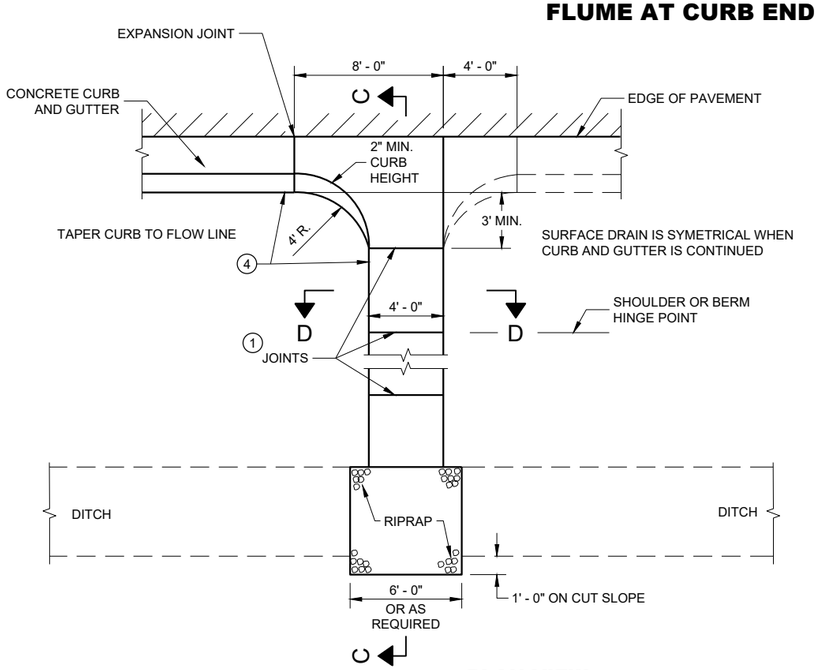

PLAN VIEW
CONCRETE SURFACE DRAIN

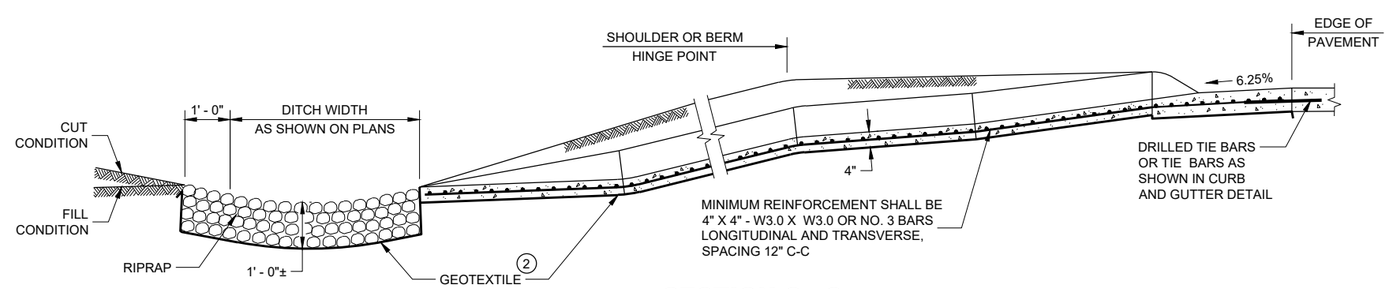

SECTION C - C

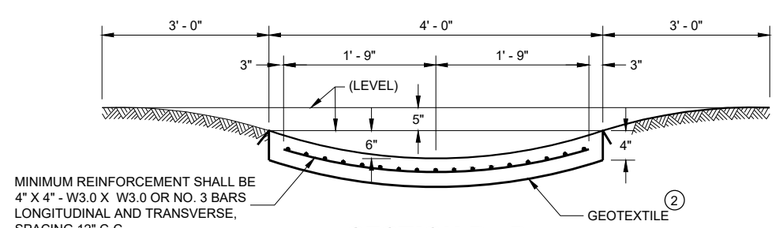

SECTION D - D

CONCRETE SURFACE DRAINS AND ASPHALTIC FLUMES

STATE OF WISCONSIN
DEPARTMENT OF TRANSPORTATION

APPROVED
May 2023 — DATE
/S/ Rodney Taylor — ROADWAY STANDARDS DEVE ENGINEER
FHWA

6

SDD 08D04 - 07

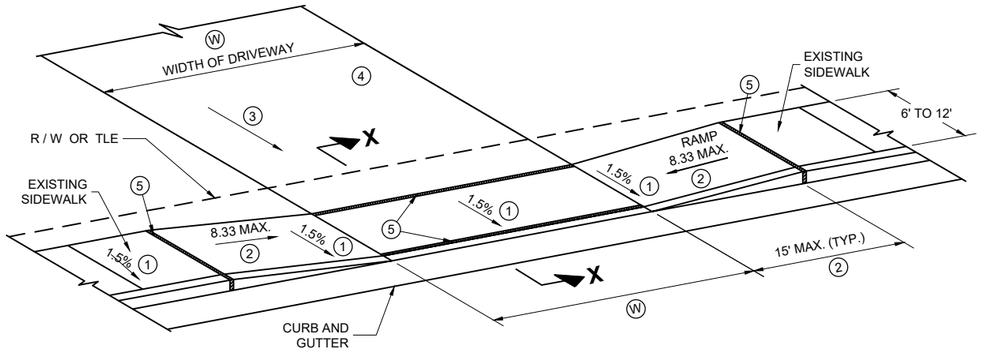

TYPE X
SIDEWALK ABUTS CURB AND GUTTER
TERRACE VARIES 0 TO 3 FEET

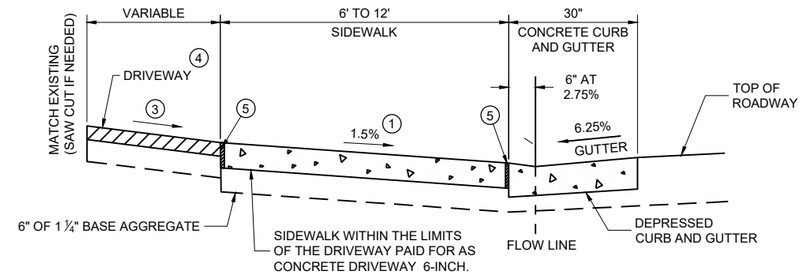

SECTION X - X

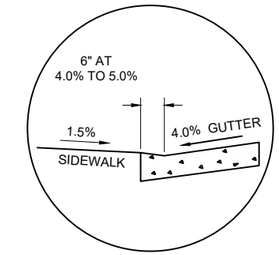

SECTION X - X
4% GUTTER SLOPE

Ⓦ: 12' MIN. - 24' MAX. RESIDENTIAL AND NON-COMMERCIAL (PE & FE)

16' MIN. - 35' MAX. COMMERCIAL (CE)

TABLE Y

Ⓐ FEET	Ⓒ FEET
3.5'	2.0'
4.5'	3.0'
5.5'	3.5'

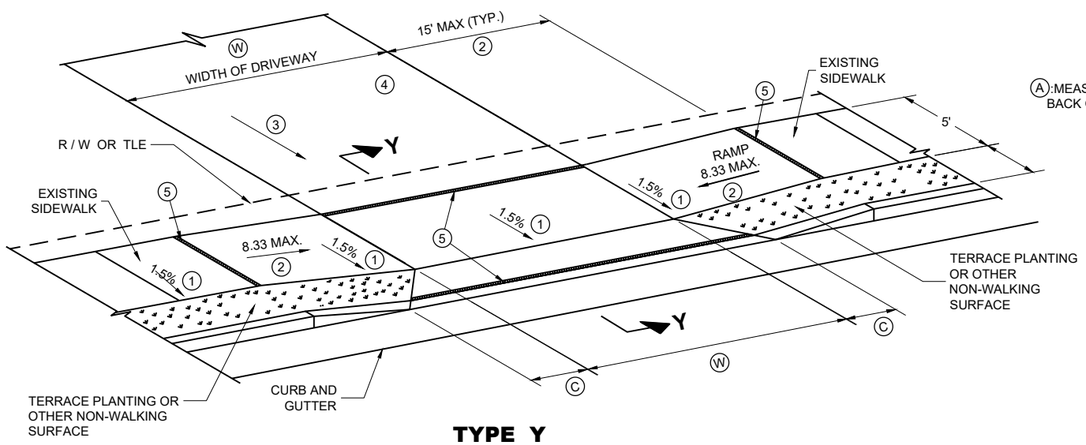

TYPE Y
SIDEWALK WITH NARROWER TERRACE
TERRACE VARIES 4 TO 6 FEET

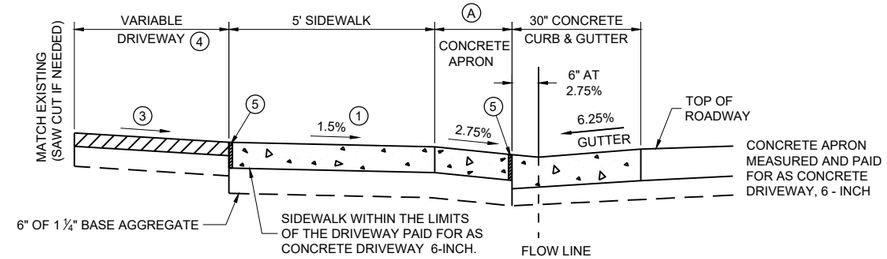

NOTE: SIDEWALK MY BE DEPRESSED IN DRIVEWAY AREAS

SECTION Y - Y

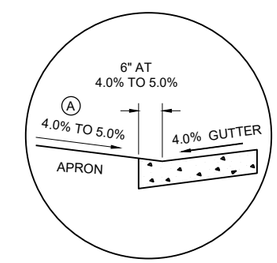

SECTION Y - Y
4% GUTTER SLOPE

DRIVEWAY DETAIL WITH CONCRETE CURB AND GUTTER

(URBAN AND SUBURBAN)

GENERAL NOTES

PROVIDE CONSTRUCTION JOINTS ALONG THE CENTER OF THE CONCRETE FOR DRIVEWAYS UNDER 20 FEET IN WIDTH AND AT THE THIRD POINTS OVER 20 FEET IN WIDTH.

Ⓦ IS SHOWN ON PLAN AND PROFILE SHEETS.

OFFSETS, ELEVATIONS, AND PERCENT GRADE ARE SHOWN ON THE CROSS SECTIONS.

① CONSTRUCTION TOLERANCE OF 0.5%± FOR SIDEWALK CROSS SLOPE. THE SIDEWALK CROSS SLOPE SHALL NOT EXCEED 2%.

② THE SIDEWALK RAMP MAXIMUM RUNNING SLOPE SHALL NOT REQUIRE THE RAMP LENGTH TO EXCEED 15 FEET TO AVOID CHASING THE SLOPE INDEFINITELY WHEN CONNECTING TO STEEP GRADES. WHEN APPLYING THE 15 FOOT MAXIMUM LENGTH, THE RUNNING SLOPE OF THE SIDEWALK SHALL BE AS FLAT AS FEASIBLE AND NOT EXCEED THE LONGITUDINAL GRADE OF THE ROADWAY. SLOPE SIDEWALK RAMP TOWARD APRON AS SHOWN WHERE THERE IS NO TERRACE OR WHERE THE TERRACE WIDTH IS LESS THAN 6 FEET WIDE.

③ DRIVEWAY SLOPES: DESIRABLE MAXIMUM
10.5% UP AWAY FROM SIDEWALK (SAG)
8.5% DOWN AWAY FROM SIDEWALK (CREST)
ABSOLUTE MAXIMUM 15% FOR BOTH CREST AND SAG

④ DRIVEWAY TYPES
- 6-INCH CONCRETE DRIVEWAY PAVEMENT OVER 6-INCH BASE AGGREGATE
- 2-INCH TO 3-INCH ASPHALTIC SURFACE OVER 6-INCH BASE AGGREGATE
- 6-INCH BASE AGGREGATE (MAY BE INCREASED FOR CLAY SUBGRADES.)

⑤ ½" EXPANSION JOINT FILLER

DRIVEWAY AND SIDEWALK RAMPS TYPES X AND Y

STATE OF WISCONSIN
DEPARTMENT OF TRANSPORTATION

APPROVED
July 2023 — DATE
/S/ Rodney Taylor — ROADWAY STANDARDS DEVELOPMENT UNIT SUPERVISOR

FHWA

6

6

SDD 08D18-04

SDD 08D18-04

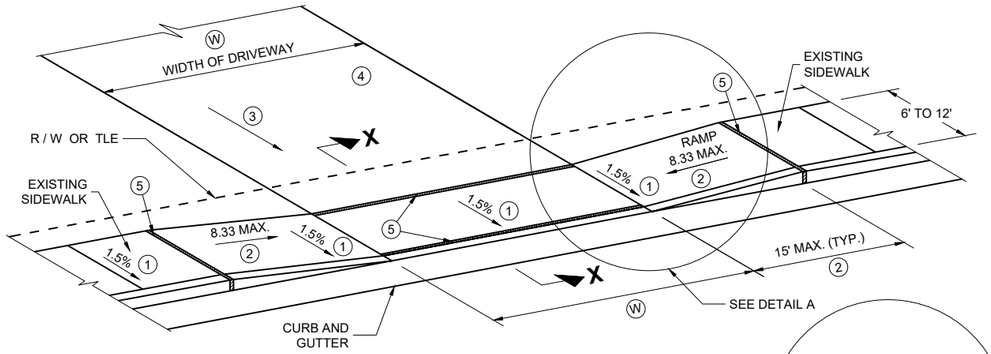

TYPE X
SIDEWALK ABUTS CURB AND GUTTER
TERRACE VARIES 0 TO 3 FEET

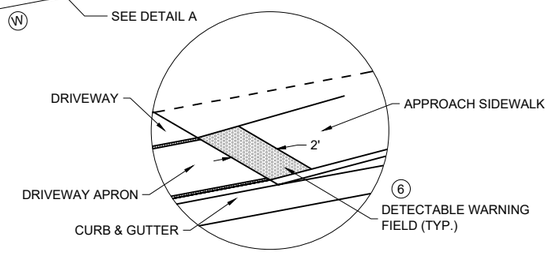

DETAIL A

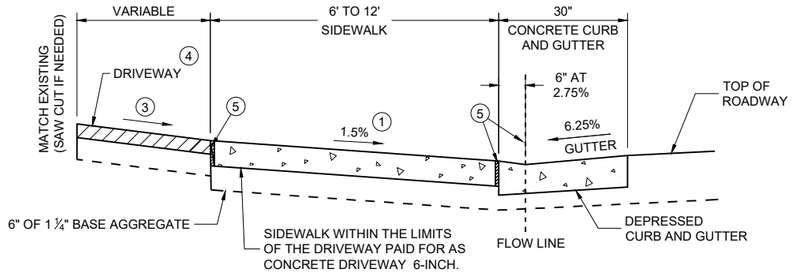

SECTION X - X

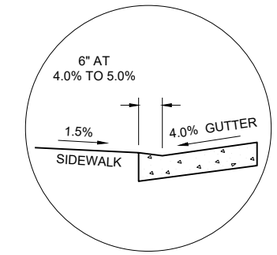

SECTION X - X
4% GUTTER SLOPE

Ⓦ: 12' MIN. - 24' MAX. RESIDENTIAL AND NON-COMMERCIAL (PE & FE)

16' MIN. - 35' MAX. COMMERCIAL (CE)

TABLE Y

Ⓐ FEET	Ⓒ FEET
3.5'	2.0'
4.5'	3.0'
5.5'	3.5'

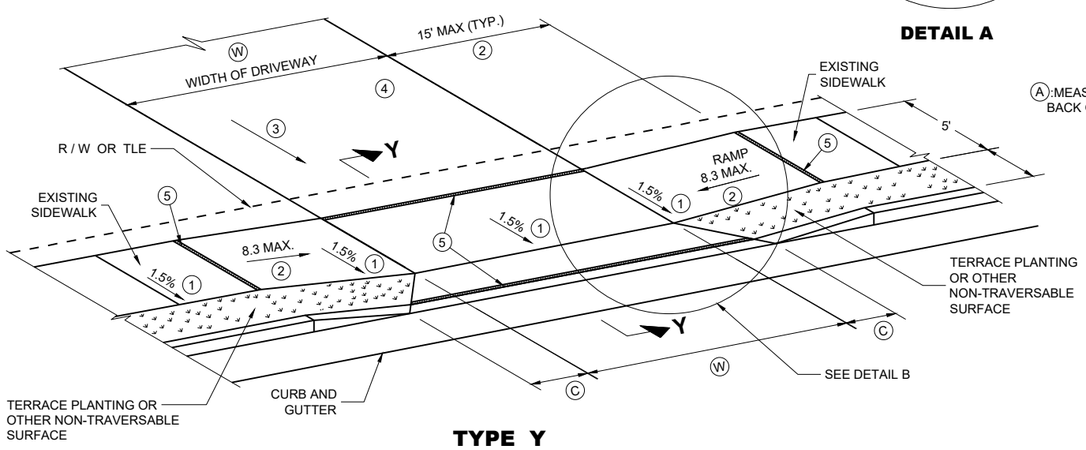

TYPE Y
SIDEWALK WITH NARROWER TERRACE
TERRACE VARIES 4 TO 6 FEET

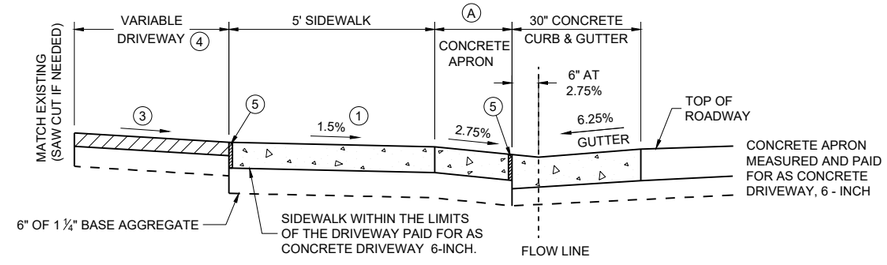

NOTE: SIDEWALK MY BE DEPRESSED IN DRIVEWAY AREAS

SECTION Y - Y
DRIVEWAY DETAIL WITH CONCRETE CURB AND GUTTER
(URBAN AND SUBURBAN)

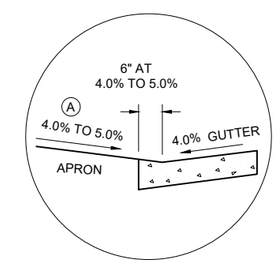

SECTION Y - Y
4% GUTTER SLOPE

GENERAL NOTES

PROVIDE CONSTRUCTION JOINTS ALONG THE CENTER OF THE CONCRETE FOR DRIVEWAYS UNDER 20 FEET IN WIDTH AND AT THE THIRD POINTS OVER 20 FEET IN WIDTH.

Ⓦ IS SHOWN ON PLAN AND PROFILE SHEETS.

OFFSETS, ELEVATIONS, AND PERCENT GRADE ARE SHOWN ON THE CROSS SECTIONS.

(1) CONSTRUCTION TOLERANCE OF 0.5%± FOR SIDEWALK CROSS SLOPE. THE SIDEWALK CROSS SLOPE SHALL NOT EXCEED 2.1%.

(2) THE SIDEWALK RAMP MAXIMUM RUNNING SLOPE SHALL NOT REQUIRE THE RAMP LENGTH TO EXCEED 15 FEET TO AVOID CHASING THE SLOPE INDEFINITELY WHEN CONNECTING TO STEEP GRADES. WHEN APPLYING THE 15 FOOT MAXIMUM LENGTH, THE RUNNING SLOPE OF THE SIDEWALK SHALL BE AS FLAT AS FEASIBLE AND NOT EXCEED THE LONGITUDINAL GRADE OF THE ROADWAY. SLOPE SIDEWALK RAMP TOWARD APRON AS SHOWN WHERE THERE IS NO TERRACE OR WHERE THE TERRACE WIDTH IS LESS THAN 6 FEET WIDE.

(3) DRIVEWAY SLOPES: DESIRABLE MAXIMUM
10.5% UP AWAY FROM SIDEWALK (SAG)
8.5% DOWN AWAY FROM SIDEWALK (CREST)
ABSOLUTE MAXIMUM 15% FOR BOTH CREST AND SAG

(4) DRIVEWAY TYPES
* 6-INCH CONCRETE DRIVEWAY PAVEMENT OVER 6-INCH BASE AGGREGATE
* 2-INCH TO 3-INCH ASPHALTIC SURFACE OVER 6-INCH BASE AGGREGATE
* 6-INCH BASE AGGREGATE (MAY BE INCREASED FOR CLAY SUBGRADES.)

(5) 1/2" EXPANSION JOINT FILLER

(6) DETECABLE WARNING FIELDS ARE REQUIRED WHEN A PEDESTRIAN CIRCULATION ROUTE CROSSES A DRIVEWAY THAT IS TRAFFIC SIGNAL, STOP, OR YIELD SIGN CONTROLLED. DETECTABLE WARNING FIELDS TO BE 2 FT DEEP AND EXTEND THE WIDTH OF THE PEDESTRIAN CIRCULATION ROUTE.

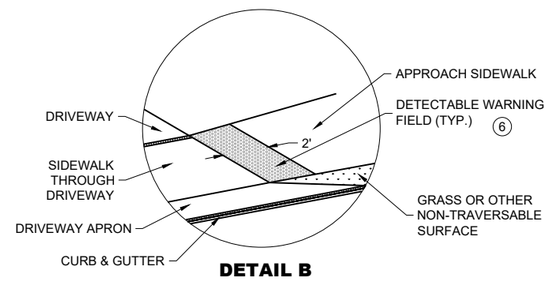

DETAIL B

DRIVEWAY AND SIDEWALK RAMPS TYPES X AND Y

STATE OF WISCONSIN
DEPARTMENT OF TRANSPORTATION

APPROVED
February 2025 /S/ Rodney Taylor
DATE
FHWA

6

SDD 08D18-05

GENERAL NOTES

1. DESIGN WILL DETERMINE FINAL DRIVEWAY ASPHALTIC THICKNESS BASED ON TYPE OF USAGE AND LOADINGS.

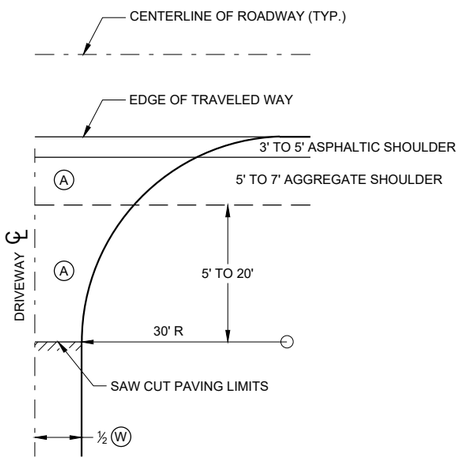

PLAN VIEW

A : PAID FOR AS ASPHALTIC SURFACE DRIVEWAYS AND FIELD ENTRANCES. (TON)

B : PAID FOR AS BASE AGGREGATE DENSE 1 ¼" (TON)

W : DRIVEWAY WIDTH 16' MIN. - 24' MAX.

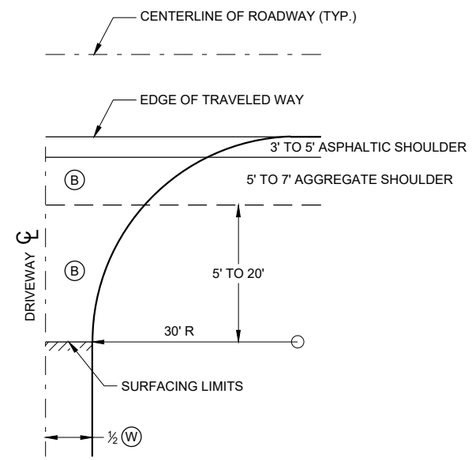

PLAN VIEW

HALF SECTION

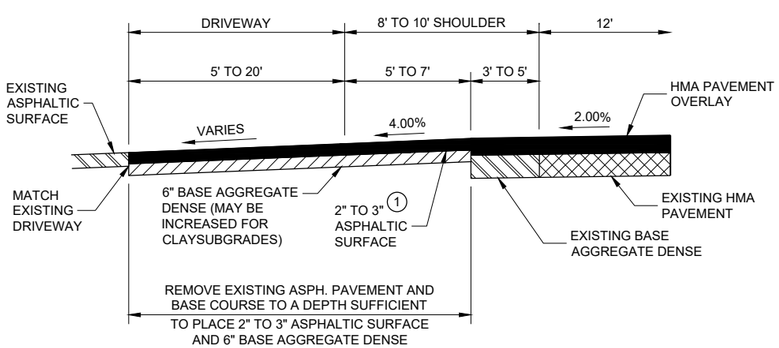

PROFILE VIEW

RURAL ENTRANCE WITH ASPHALTIC SURFACE

RESURFACING PROJECTS

PLAN VIEW

HALF SECTION

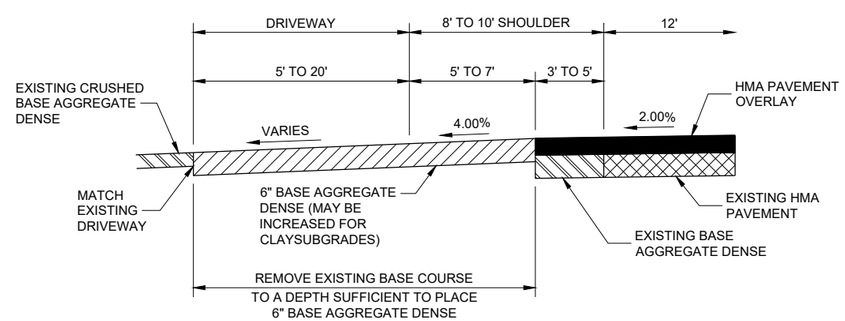

PROFILE VIEW

RURAL ENTRANCE WITH AGGREGATE SURFACE

6" BASE AGGREGATE DENSE RESURFACING PROJECTS

DRIVEWAYS WITHOUT CURB AND GUTTER RESURFACING PROJECTS RURAL

STATE OF WISCONSIN
DEPARTMENT OF TRANSPORTATION

APPROVED
December 2016 — DATE
/S/ Rodney Taylor — ROADWAY STANDARDS DEVE ENGINEER
FHWA

6

SDD 08D22 - 01

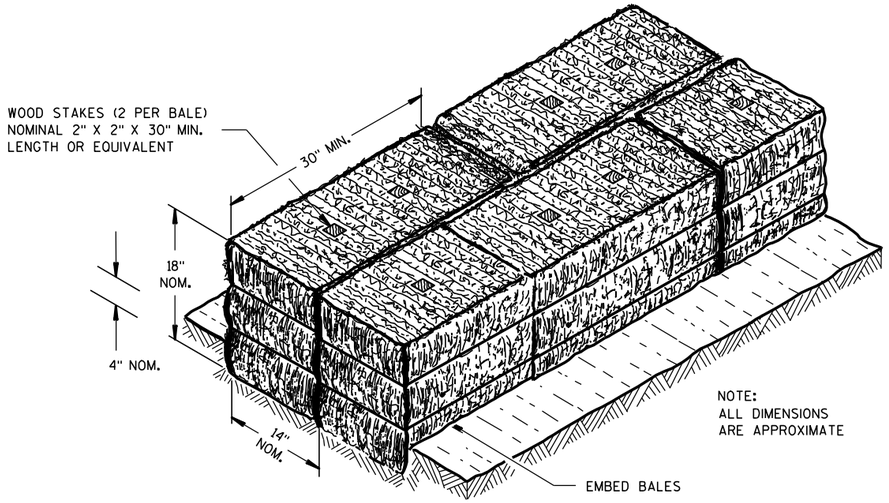

SECTION A-A

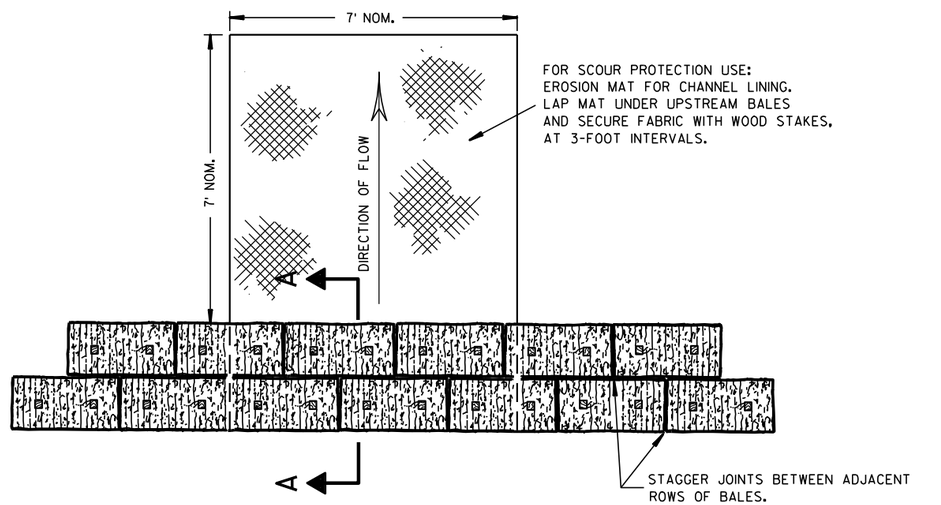

PLAN VIEW

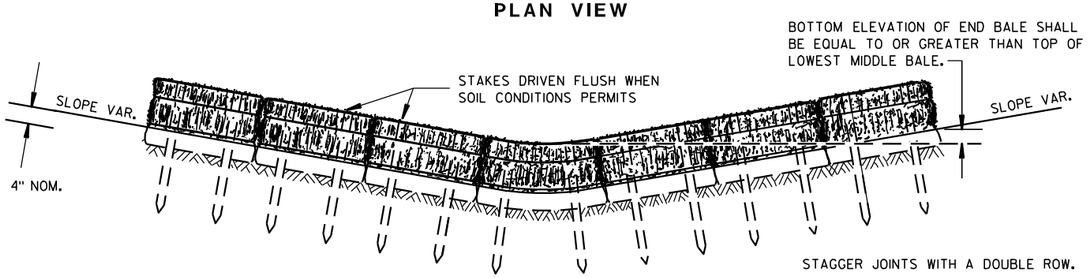

FRONT ELEVATION

TEMPORARY DITCH CHECK USING EROSION BALES ①

GENERAL NOTES

DETAILS OF CONSTRUCTION, MATERIALS AND WORKMANSHIP NOT SHOWN ON THIS DRAWING SHALL CONFORM TO THE PERTINENT REQUIREMENTS OF THE STANDARD SPECIFICATIONS AND THE APPLICABLE SPECIAL PROVISIONS.

① TEMPORARY DITCH CHECKS EITHER EROSION BALES OR MANUFACTURED SHALL BE PAID FOR UNDER THE BID ITEM OF TEMPORARY DITCH CHECK. THE DEPARTMENT WILL NOT PAY FOR TEMPORARY DITCH CHECKS CONSTRUCTED OF A SINGLE ROW OF EROSION BALES.

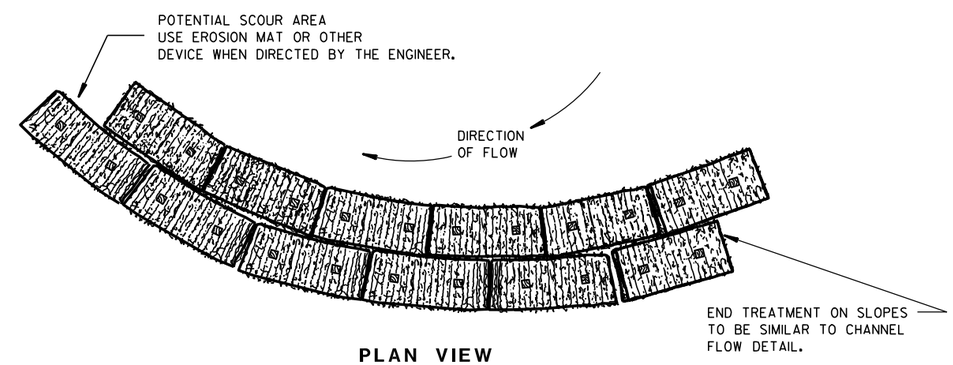

PLAN VIEW

WHEN ALTERING THE DIRECTION OF FLOW

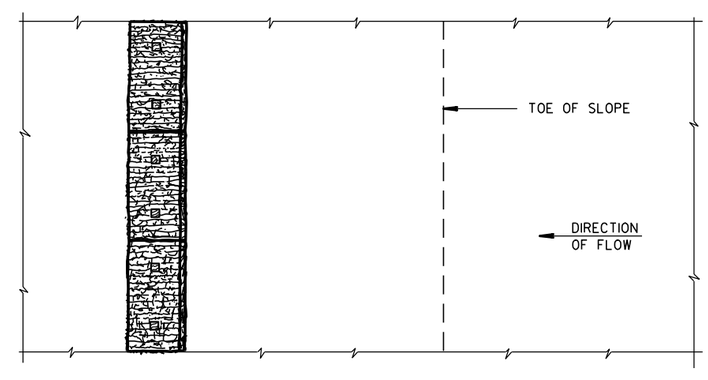

PLAN VIEW

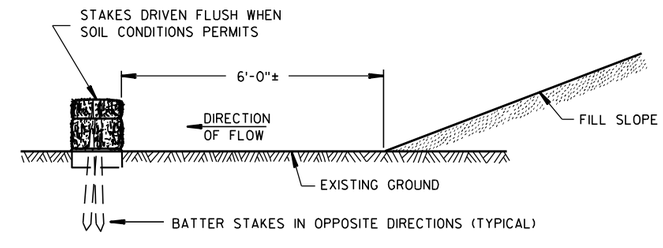

FRONT ELEVATION

WHEN EXISTING GROUND SLOPES AWAY FROM FILL SLOPE

EROSION BALES FOR SHEET FLOW

TYPICAL INSTALLATIONS OF EROSION BALES / TEMPORARY DITCH CHECKS

STATE OF WISCONSIN
DEPARTMENT OF TRANSPORTATION

APPROVED
6/04/02 — DATE
/S/ Beth Cann... — CHIEF ROADWAY DEVELOP... ...GINEER
FHWA

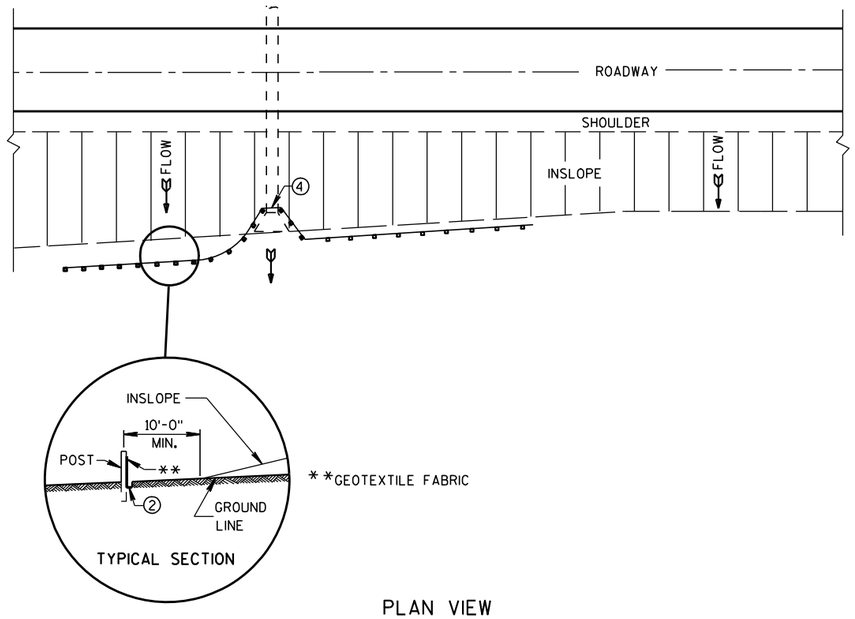

PLAN VIEW

TYPICAL APPLICATION OF SILT FENCE

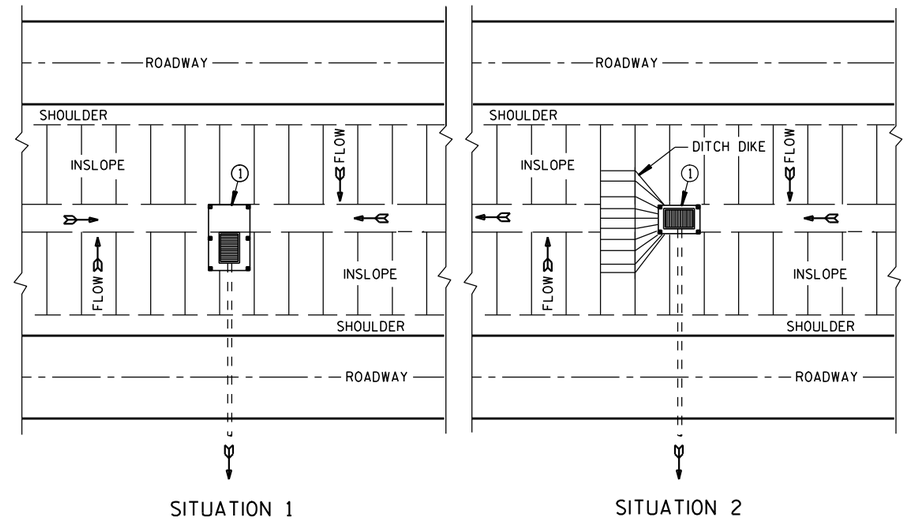

PLAN VIEW

SILT FENCE AT MEDIAN SURFACE DRAINS

GENERAL NOTES

DETAILS OF CONSTRUCTION NOT SHOWN ON THIS DRAWING SHALL CONFORM TO THE PERTINENT REQUIREMENTS OF THE STANDARD SPECIFICATIONS AND APPLICABLE SPECIAL PROVISIONS.

① HORIZONTAL BRACE REQUIRED WITH 2" X 4" WOODEN FRAME OR EQUIVALENT AT TOP OF POSTS.

② FOR MANUAL INSTALLATIONS THE TRENCH SHALL BE A MINIMUM OF 4" WIDE & 6" DEEP TO BURY AND ANCHOR THE GEOTEXTILE FABRIC. FOLD MATERIAL TO FIT TRENCH AND BACKFILL & COMPACT TRENCH WITH EXCAVATED SOIL.

③ WOOD POSTS SHALL BE A MINIMUM SIZE OF 1⅛" X 1⅛" OF OAK OR HICKORY.

④ SILT FENCE TO EXTEND ACROSS THE TOP OF THE PIPE.

⑤ CONSTRUCT SILT FENCE FROM A CONTINUOUS ROLL IF POSSIBLE BY CUTTING LENGTHS TO AVOID JOINTS. IF A JOINT IS NECESSARY USE ONE OF THE FOLLOWING TWO METHODS; A) OVERLAP THE END POSTS AND TWIST, OR ROTATE, AT LEAST 180 DEGREES. B) HOOK THE END OF EACH SILT FENCE LENGTH.

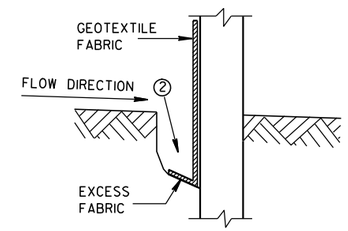

TRENCH DETAIL

NOTE: ADDITIONAL POST DEPTH OR TIE BACKS MAY BE REQUIRED IN UNSTABLE SOILS

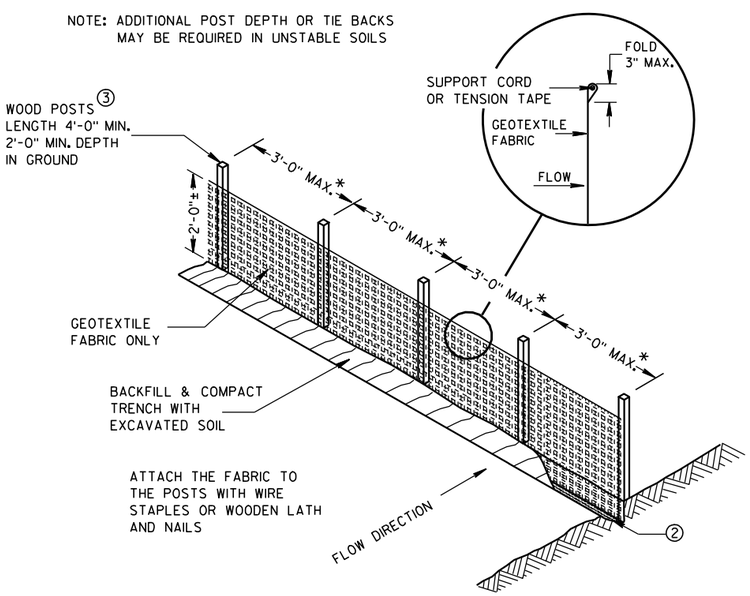

*NOTE: 8'-0" POST SPACING ALLOWED IF A WOVEN GEOTEXTILE FABRIC IS USED.

SILT FENCE

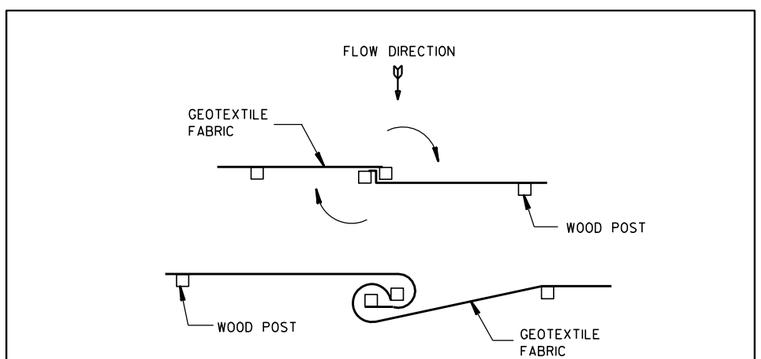

TWIST METHOD

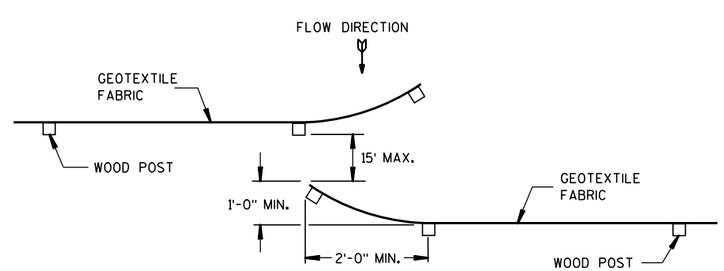

HOOK METHOD

JOINING TWO LENGTHS OF SILT FENCE ⑤

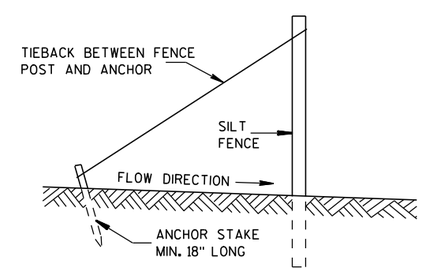

SILT FENCE TIE BACK

(WHEN REQUIRED BY THE ENGINEER)

SILT FENCE
STATE OF WISCONSIN DEPARTMENT OF TRANSPORTATION
APPROVED 4-29-05 /S/ Beth Cann----- DATE CHIEF ROADWAY DEVELOP ENGINEER FHWA

6

6

S.D.D. 8 E 9-6

S.D.D. 8 E 9-6

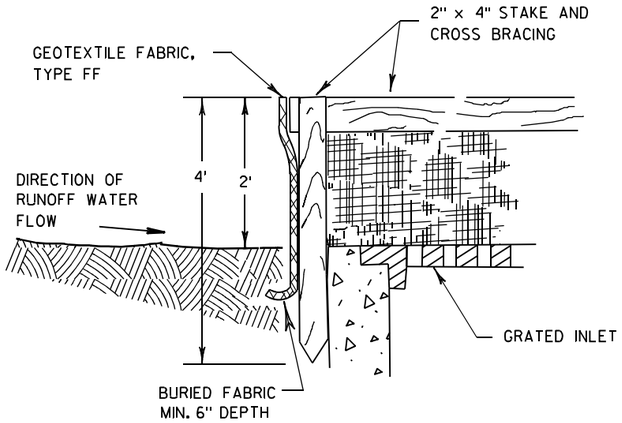

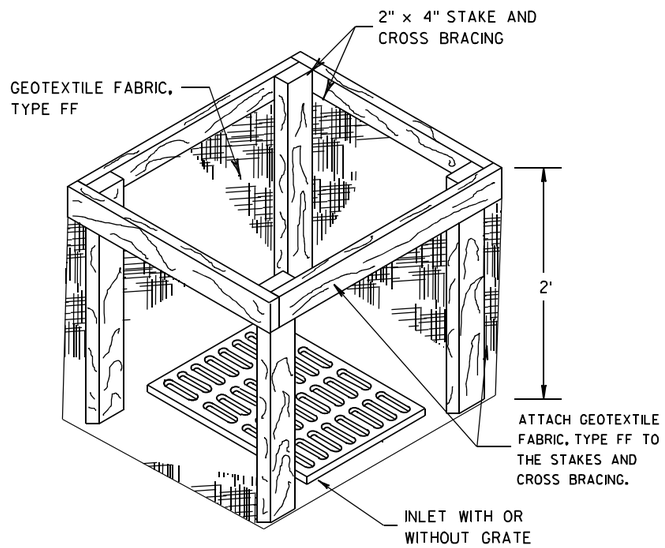

INLET PROTECTION, TYPE A

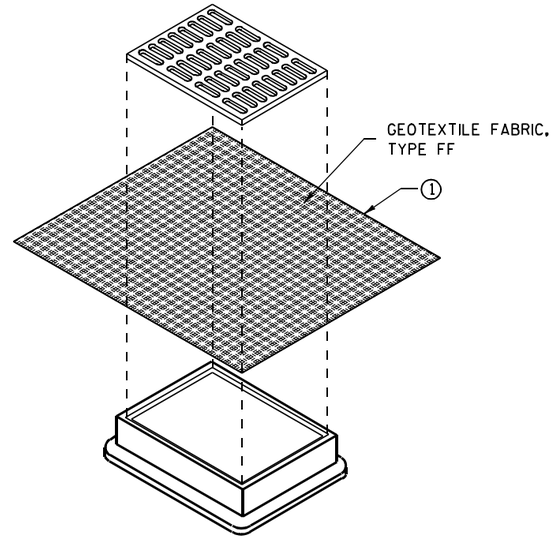

INLET PROTECTION, TYPE B (WITHOUT CURB BOX)

(CAN BE INSTALLED IN ANY INLET WITHOUT A CURB BOX)

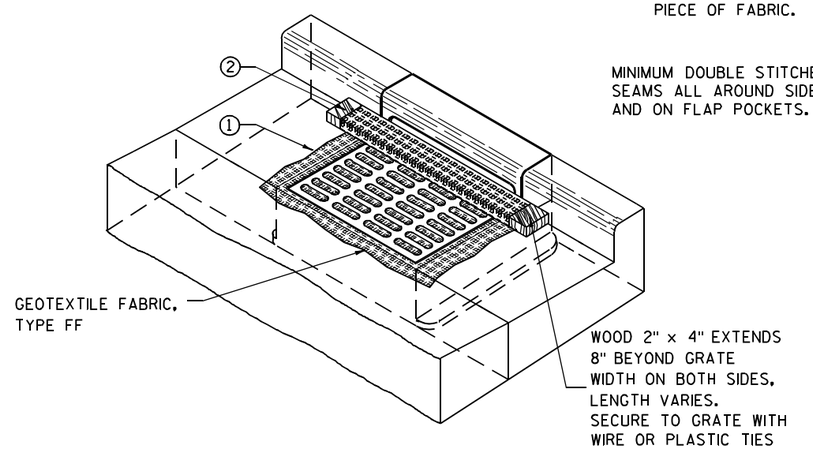

INLET PROTECTION, TYPE C (WITH CURB BOX)

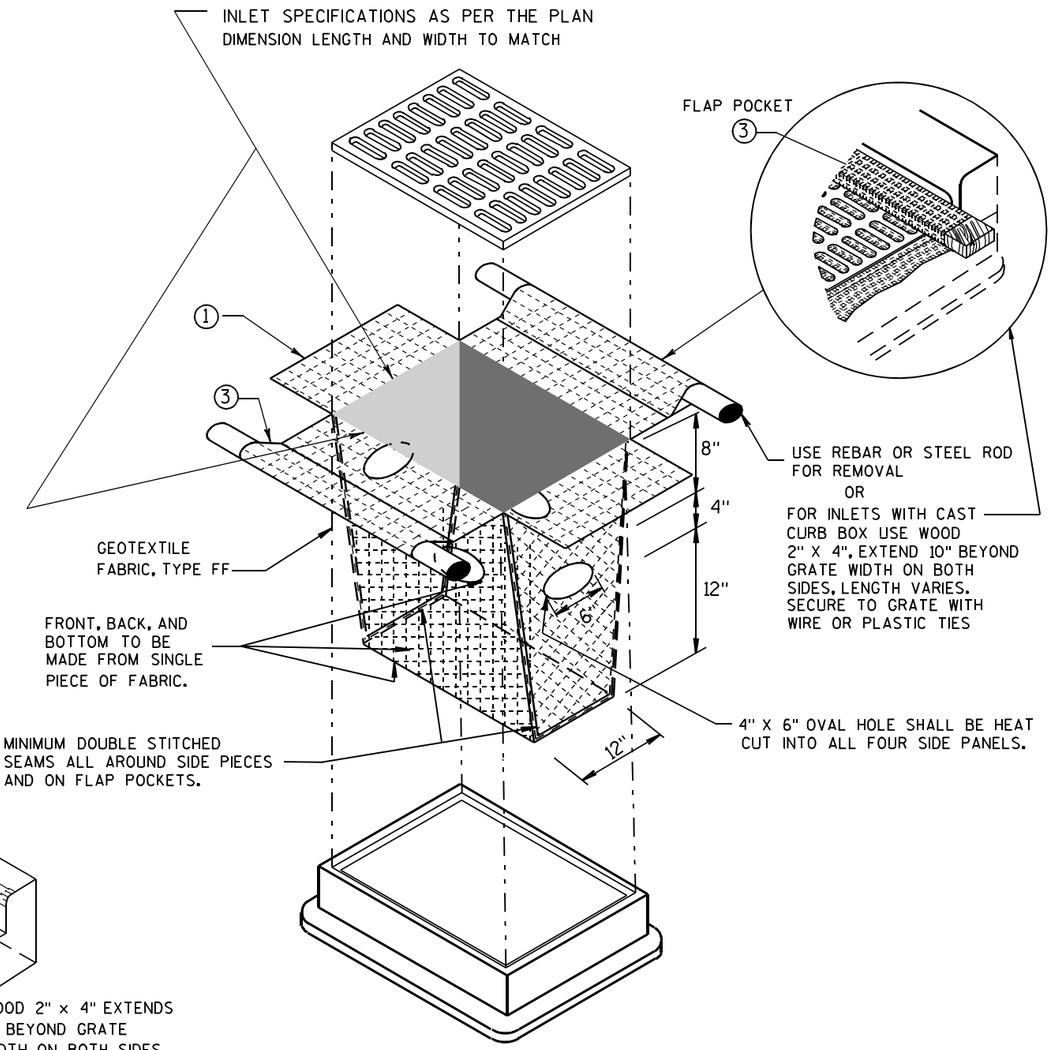

INLET PROTECTION, TYPE D

(CAN BE INSTALLED IN ANY INLET TYPE WITH OR WITHOUT A CURB BOX AS PER NOTE 2)

GENERAL NOTES

INLET PROTECTION DEVICES SHALL BE MAINTAINED OR REPLACED AT THE DIRECTION OF THE ENGINEER.

MANUFACTURED ALTERNATIVES APPROVED AND LISTED ON THE DEPARTMENT'S EROSION CONTROL PRODUCT ACCEPTABILITY LIST MAY BE SUBSTITUTED.

WHEN REMOVING OR MAINTAINING INLET PROTECTION, CARE SHALL BE TAKEN SO THAT THE SEDIMENT TRAPPED ON THE GEOTEXTILE FABRIC DOES NOT FALL INTO THE INLET. ANY MATERIAL FALLING INTO THE INLET SHALL BE REMOVED IMMEDIATELY.

1 FINISHED SIZE, INCLUDING FLAP POCKETS WHERE REQUIRED, SHALL EXTEND A MINIMUM OF 10" AROUND THE PERIMETER TO FACILITATE MAINTENANCE OR REMOVAL.

2 FOR INLET PROTECTION, TYPE C (WITH CURB BOX), AN ADDITIONAL 18" OF FABRIC IS WRAPPED AROUND THE WOOD AND SECURED WITH STAPLES. THE WOOD SHALL NOT BLOCK THE ENTIRE HEIGHT OF THE CURB BOX OPENING.

3 FLAP POCKETS SHALL BE LARGE ENOUGH TO ACCEPT WOOD 2X4.

INSTALLATION NOTES

TYPE B & C

TRIM EXCESS FABRIC IN THE FLOW LINE TO WITHIN 3" OF THE GRATE.

THE CONTRACTOR SHALL DEMONSTRATE A METHOD OF MAINTENANCE, USING A SEWN FLAP, HAND HOLDS OR OTHER METHOD TO PREVENT ACCUMULATED SEDIMENT FROM ENTERING THE INLET.

TYPE D

DO NOT INSTALL INLET PROTECTION TYPE D IN INLETS SHALLOWER THAN 30", MEASURED FROM THE BOTTOM OF THE INLET TO THE TOP OF THE GRATE.

TRIM EXCESS FABRIC IN THE FLOW LINE TO WITHIN 3" OF THE GRATE.

THE INSTALLED BAG SHALL HAVE A MINIMUM SIDE CLEARANCE, BETWEEN THE INLET WALLS AND THE BAG, MEASURED AT THE BOTTOM OF THE OVERFLOW HOLES, OF 3". WHERE NECESSARY THE CONTRACTOR SHALL CINCH THE BAG, USING PLASTIC ZIP TIES, TO ACHIEVE THE 3" CLEARANCE. THE TIES SHALL BE PLACED AT A MAXIMUM OF 4" FROM THE BOTTOM OF THE BAG.

INLET PROTECTION TYPE A, B, C, AND D

STATE OF WISCONSIN
DEPARTMENT OF TRANSPORTATION

APPROVED
10/16/02 — DATE
/S/ Beth Cannestra — CHIEF ROADWAY DEVELOPMENT ENGINEER
FHWA

6

S.D.D. 8 E 10-2

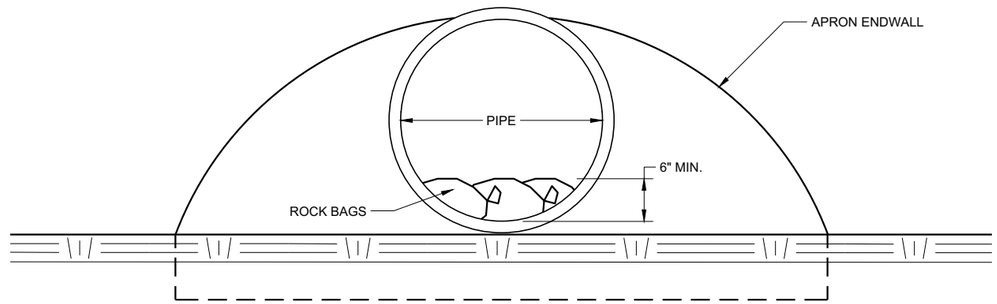

END VIEW

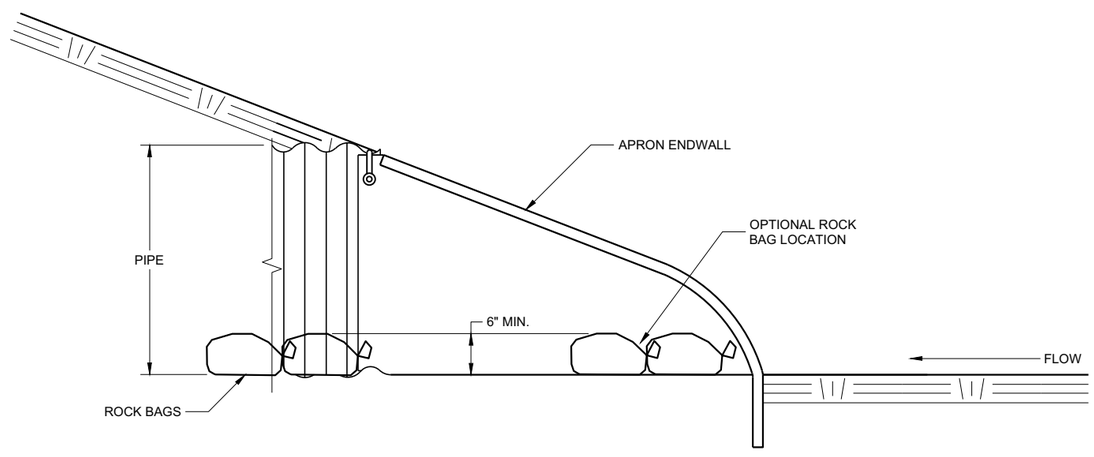

SIDE VIEW

CULVERT PIPE CHECK

(INSTALL ON INLET END ONLY)

CULVERT PIPE CHECK

STATE OF WISCONSIN
DEPARTMENT OF TRANSPORTATION

APPROVED
May 2019 — DATE
/S/ Daniel Schave — EROSION CONTROL ENGI
FHWA

6

SDD 08E15 - 01

METAL APRON ENDWALLS

PIPE DIA. (IN.)	MIN. THICK. (Inches) STEEL	MIN. THICK. (Inches) ALUM.	DIMENSIONS (Inches) A (±1")	B (MAX.)	H (±1")	L (±1 1/2")	L1 ①	L2 ①	W (±2")	APPROX. SLOPE	BODY
12	.064	.060	6	6	6	21	12	17 1/2	24	2 1/2 to 1	1 Pc.
15	.064	.060	7	8	6	26	14	21 3/4	30	2 1/2 to 1	1 Pc.
18	.064	.060	8	10	6	31	15	28 1/4	36	2 1/2 to 1	1 Pc.
21	.064	.060	9	12	6	36	18	29 5/8	42	2 1/2 to 1	1 Pc.
24	.064	.075	10	13	6	41	18	37 1/4	48	2 1/2 to 1	1 Pc.
30	.079	.075	12	16	8	51	18	52 1/4	60	2 1/2 to 1	1 Pc.
36	.079	.105	14	19	9	60	24	59 3/4	72	2 1/2 to 1	2 Pc.
42	.109	.105	16	22	11	69	24	75 5/8	84	2 1/2 to 1	2 Pc.
48	.109	.105	18	27	12	78	24	81	90	2 1/4 to 1	3 Pc.
54	.109	.105	18	30	12	84	30	85 1/2	102	2 1/4 to 1	3 Pc.
60	.109×	.105×	18	33	12	87	—	—	114	2 to 1	3 Pc.
66	.109×	.105×	18	36	12	87	—	—	120	2 to 1	3 Pc.
72	.109×	.105×	18	39	12	87	—	—	126	2 to 1	3 Pc.
78	.109×	.105×	18	42	12	87	—	—	132	1 1/2 to 1	3 Pc.
84	.109×	.105×	18	45	12	87	—	—	138	1 1/2 to 1	3 Pc.
90	.109×	.105×	18	37	12	87	—	—	144	1 1/2 to 1	3 Pc.
96	.109×	.105×	18	35	12	87	—	—	150	1 1/2 to 1	3 Pc.

× EXCEPT CENTER PANEL
SEE GENERAL NOTES

REINFORCED CONCRETE APRON ENDWALLS

PIPE DIA. (IN.)	DIMENSIONS (Inches) T	A	B	C	D	E	G	APPROX. SLOPE
12	2	4	24	48 7/8	72 7/8	24	2	3 to 1
15	2 1/4	6	27	46	73	30	2 1/4	3 to 1
18	2 1/2	9	27	46	73	36	2 1/2	3 to 1
21	2 3/4	9	36	37 1/2	73 1/2	42	2 3/4	3 to 1
24	3	9 1/2	43 1/2	30	73 1/2	48	3	3 to 1
27	3 1/4	10 1/2	49 1/2	24	73 1/2	54	3 1/4	3 to 1
30	3 1/2	12	54	19 3/4	73 1/2	60	3 1/2	3 to 1
36	4	15	63	34 3/4	97 3/4	72	4	3 to 1
42	4 1/2	21	63	35	98	78	4 1/2	3 to 1
48	5	24	72	26	98	84	5	3 to 1
54	5 1/2	27	65	*33 1/4-**35	*98 1/4-**100	90	5 1/2	2 2/5 to 1
60	6	*30-**35	60	39	99	96	5	2 to 1
66	6 1/2	*24-**30	*72-**78	*21-**27	99	102	5 1/2	2 to 1
72	7	*24-**36	78	21	99	108	6	2 to 1
78	7 1/2	*24-**36	78	21	99	114	6 1/2	2 to 1
84	8	36	90 1/2	21	111 1/2	120	6 1/2	1 1/2 to 1
90	8 1/2	41	87 1/2	24	111 1/2	132	6 1/2	1 1/2 to 1

*MINIMUM
**MAXIMUM

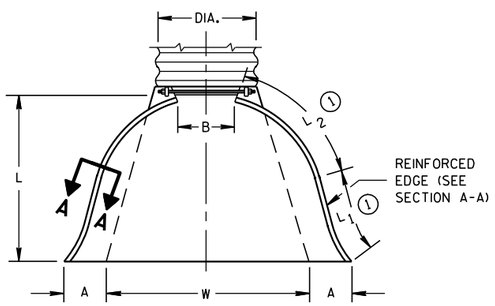

PLAN VIEW

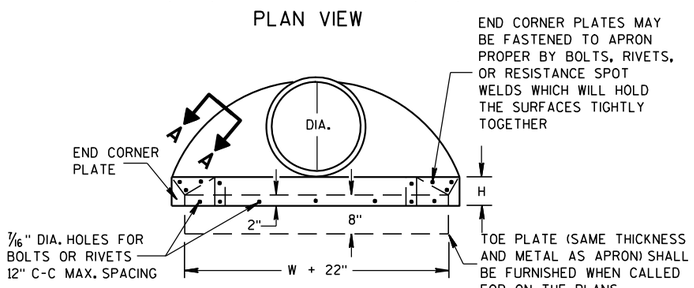

END VIEW

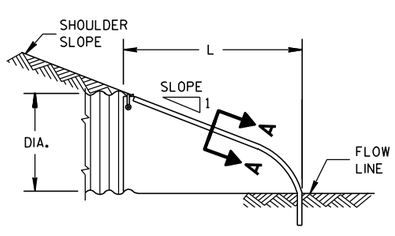

SIDE ELEVATION

METAL ENDWALLS

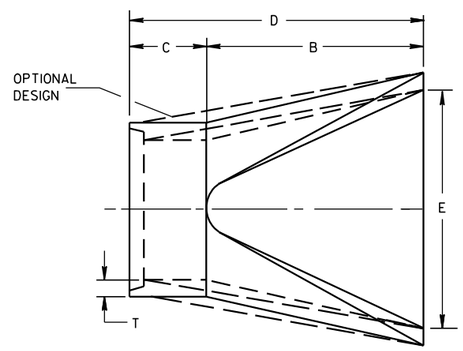

PLAN

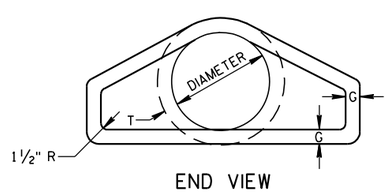

END VIEW

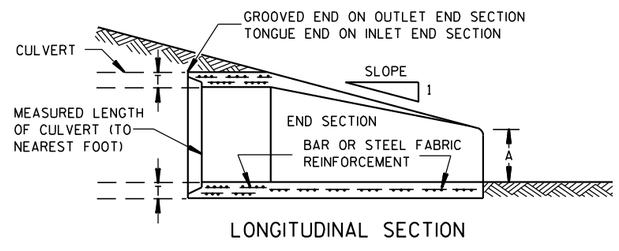

LONGITUDINAL SECTION

CONCRETE ENDWALLS

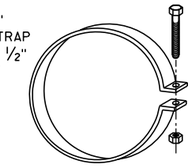

ALTERNATE FOR TYPE 1 CONNECTION

END SECTION CONNECTOR STRAP

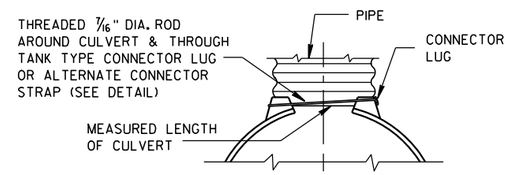

TYPE 1
FOR 12" THRU 24" CORR. PIPE

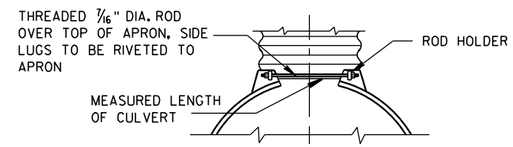

TYPE 2
FOR 30" THRU 96" CORR. PIPE

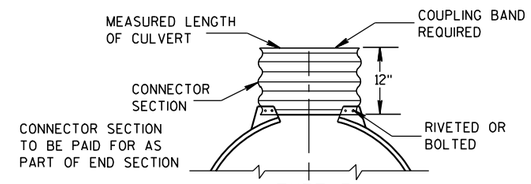

TYPE 3
FOR 42" THRU 96" CORR. PIPE

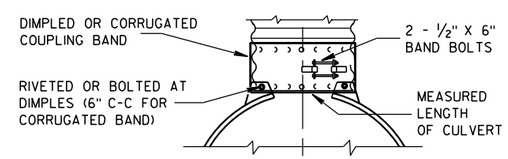

TYPE 5
ALTERNATE FOR:
ALL SIZES CORRUGATED CIRCULAR PIPE

NOTE: DIMPLED BAND FITS OVER OUTSIDE OF ENDWALL, AND CORRUGATED BAND FITS INSIDE ENDWALL. DIMPLED BAND MAY BE USED WITH HELICALLY CORRUGATED PIPE.

FOR CIRCUMFERENTIALLY CORRUGATED PIPE USE ENDWALL CONNECTION DETAILS 1, 2, 3 OR 5 AS APPLICABLE.

FOR HELICALLY CORRUGATED PIPE USE ENDWALL CONNECTION DETAILS 1, 2 OR 5.

FOR HELICALLY CORRUGATED PIPES WITH TWO CIRCUMFERENTIAL CORRUGATIONS AT EACH END USE ENDWALL CONNECTION DETAILS 1, 2 OR 3.

CONNECTION DETAILS

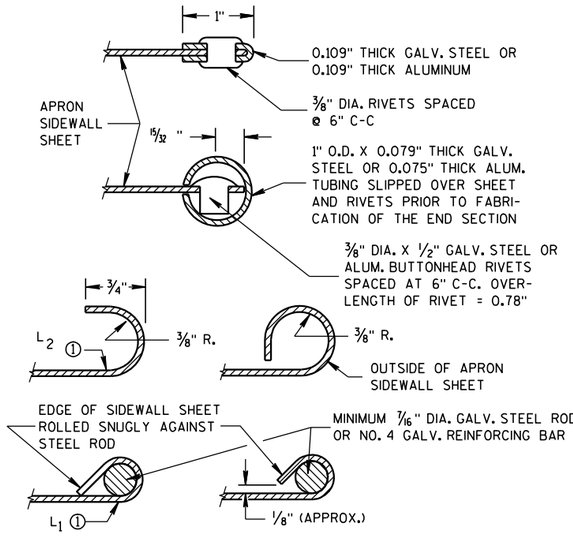

SECTION A-A

GENERAL NOTES

DETAILS OF CONSTRUCTION, MATERIALS AND WORKMANSHIP NOT SHOWN ON THIS DRAWING SHALL CONFORM TO THE PERTINENT REQUIREMENTS OF THE STANDARD SPECIFICATIONS AND THE APPLICABLE SPECIAL PROVISIONS.

CONCRETE CULVERT ENDWALLS MAY NOT BE USED WITH GALVANIZED STEEL OR ALUMINUM CULVERT PIPE OR VISE VERSA. GALVANIZED STEEL OR ALUMINUM ENDWALLS SHALL NORMALLY BE INSTALLED ON CULVERT PIPE OF THE SAME METAL.

ALL THREE PIECE STEEL APRON ENDWALLS FOR 60" DIAMETER PIPE AND LARGER SHALL HAVE 0.109" SIDES AND 0.138" CENTER PANELS. ALL THREE PIECE ALUMINUM APRON ENDWALLS FOR 60" DIAMETER PIPE AND LARGER SHALL HAVE 0.105" SIDES AND 0.134" CENTER PANELS. THE WIDTH OF CENTER PANELS SHALL BE GREATER THAN 20 PERCENT OF THE PIPE PERIMETER.

LAP SEAMS SHALL BE TIGHTLY JOINED BY GALVANIZED RIVETS OR BOLTS FOR STEEL UNITS AND ALUMINUM RIVETS AND BOLTS FOR ALUMINUM UNITS. FOR THE 60" THROUGH 96" DIAMETER APRON ENDWALL SIZES, THE REINFORCED EDGES AND CENTER PANEL SEAMS SHALL BE FURTHER REINFORCED WITH GALVANIZED STEEL OR ALUMINUM STIFFENER ANGLES. THE ANGLES SHALL BE ATTACHED BY GALVANIZED NUTS AND BOLTS FOR STEEL UNITS AND ALUMINUM NUTS AND BOLTS FOR ALUMINUM UNITS.

WHERE TWO OR MORE PIPES WITH APRON ENDWALLS ARE LAID ADJACENT TO EACH OTHER, THEY SHALL BE SEPARATED BY A DISTANCE SUFFICIENT TO PROVIDE A MINIMUM CLEARANCE OF 6 INCHES BETWEEN APRON ENDWALLS.

① FOR PIPE SIZES UP TO 60" DIAMETER, A 180° ROLLED EDGE MAY BE USED INSTEAD OF STEEL ROD REINFORCEMENT. SEE SECTION A-A.

APRON ENDWALLS FOR CULVERT PIPE

STATE OF WISCONSIN
DEPARTMENT OF TRANSPORTATION

APPROVED
11/30/94 — DATE
/S/ Rory L. Rhinesmith — CHIEF ROADWAY DEVELOPMENT ENGINEER
FHWA

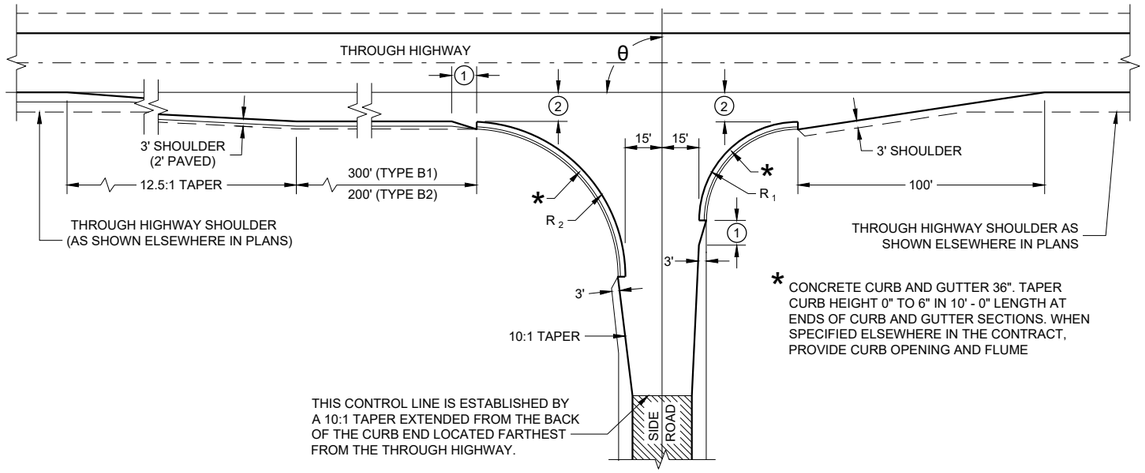

* CONCRETE CURB AND GUTTER 36". TAPER CURB HEIGHT 0" TO 6" IN 10' - 0" LENGTH AT ENDS OF CURB AND GUTTER SECTIONS. WHEN SPECIFIED ELSEWHERE IN THE CONTRACT, PROVIDE CURB OPENING AND FLUME

TYPE "B1" AND "B2"

RADII DIMENSIONS FOR TYPES "B1", "B2", "C" AND "D" INTERSECTIONS

θ	R_1	R_2
65 - 70	35	70
71 - 80	40	70
81 - 90	40	60
91 - 100	50	55
101 - 110	60	45

GENERAL NOTES

DESIGNS MAY BE USED INTERCHANGEABLY IN COMBINATION OR SEPARATELY FOR ANY ONE COMPLETE INTERSECTION DEPENDING UPON INTERSECTION ANGLE AND SURFACING OF EACH APPROACH ROADWAY.

SIDE ROAD SURFACING NOTE

WHEN THE SIDE ROAD IS NOT PRESENTLY PAVED, PAVEMENT SHALL BE PLACED TO THE LIMITS SHOWN UNLESS OTHERWISE PROVIDED IN THE CONTRACT. WHERE THE CONSTRUCTION LIMITS ARE BEYOND THE PAVING LIMITS, CRUSHED AGGREGATE SURFACING SHALL BE PLACED BETWEEN THE PAVING LIMITS AND CONSTRUCTION LIMITS.

WHEN THE SIDE ROAD IS PRESENTLY PAVED, NEW PAVEMENT SHALL BE PLACED TO THE LIMITS OF DESIGN AS SHOWN AND BEYOND, IF NECESSARY, TO MEET EXISTING PAVEMENT.

WHEN THE SIDE ROAD IS THE CONSTRUCTION PROJECT, THE INTERSECTION SURFACING SHALL BE THE SAME AS FOR THE PROJECT.

1. 10-FT TYPICAL.
2. 12-FT** PLUS ADDITIONAL WIDTH FOR BIKE LANE IF SHOWN ELSEWHERE IN THE PLAN.

   **10-FT MAY BE USED ON TYPE B2 ON RESURFACING PROJECTS IF SPECIFIED IN THE CONTRACT.
3. BYPASS LANE PAVED SURFACE WIDTH OUTSIDE OF TRAVEL LANE
   - ASPHALT = 12-FT PLUS PAVED SHOULDER WIDTH
   - PC CONCRETE = 13-FT PLUS PAVED SHOULDER WIDTH
4. BYPASS LANE PAVED SHOULDER WIDTH = THE GREATER OF 1-FT OR THE PAVED SHOULDER WIDTH OF THE THROUGH HIGHWAY.

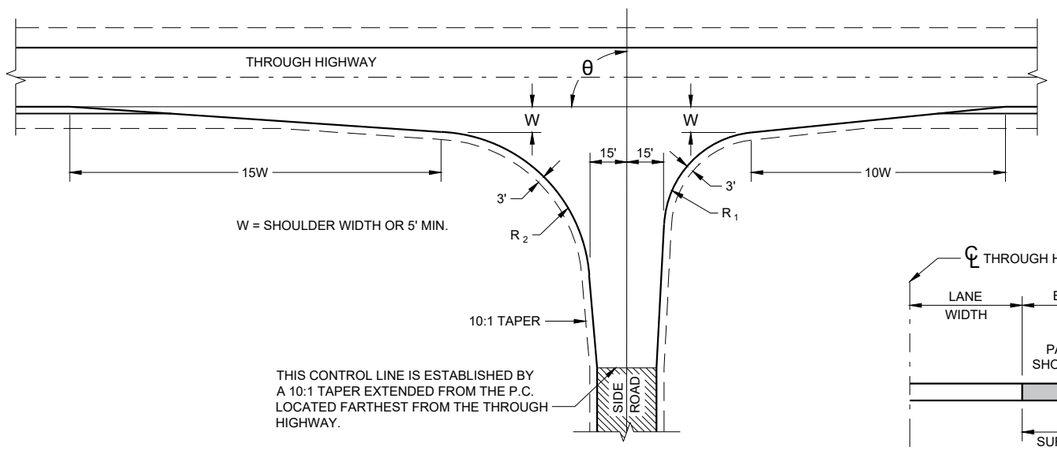

TYPE "C"

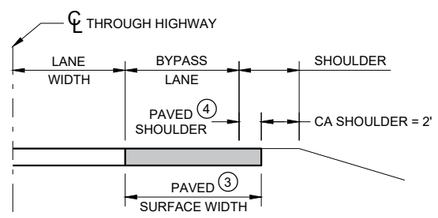

SECTION A - A

(SHOWING BYPASS LANE AND SHOULDER)

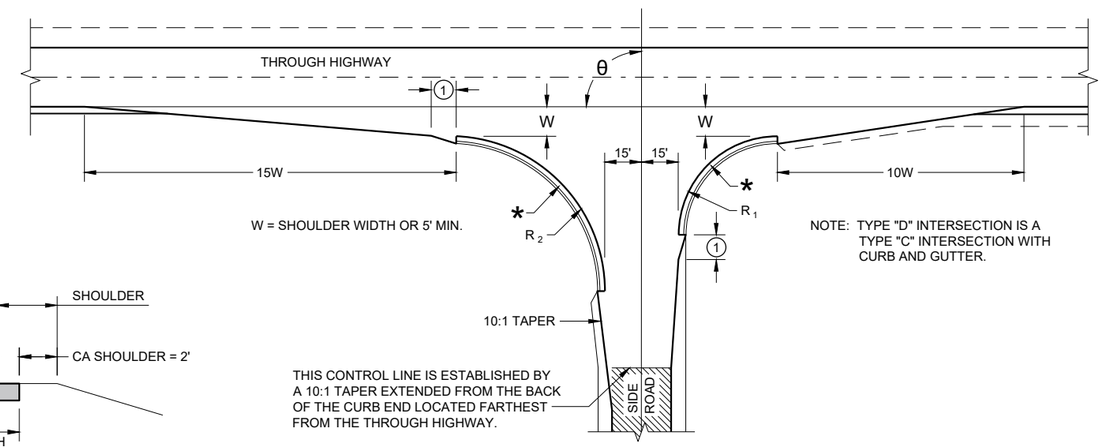

NOTE: TYPE "D" INTERSECTION IS A TYPE "C" INTERSECTION WITH CURB AND GUTTER.

TYPE "D"

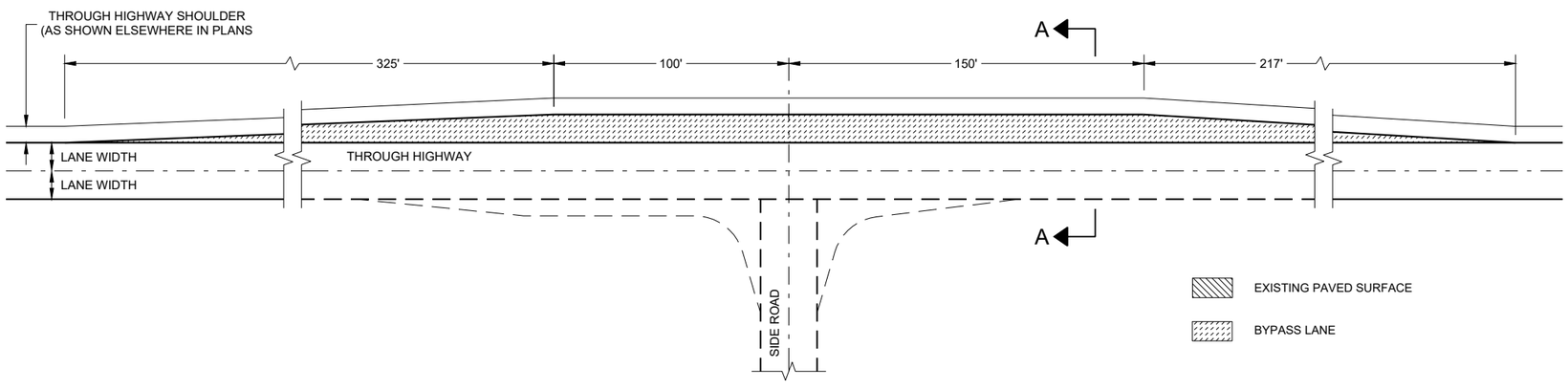

TEE INTERSECTION BYPASS LANE DETAIL

AT GRADE SIDE ROAD INTERSECTION TYPES "B1", "B2", "C", "D" AND TEE INTERSECTION BYPASS LANE

STATE OF WISCONSIN
DEPARTMENT OF TRANSPORTAT

6
SDD 09A01 - 14a

GENERAL NOTES

DO NOT MILL SHOULDER GROOVES THROUGH INTERSECTIONS, MARKED CROSSWALKS, NON-MOTORIZED PATH CROSSINGS, ETC. REFER TO SDD 13A11 SHEETS "d" AND "e".

CENTERLINE GROOVES MAY BE OMITTED IN AREAS WITH HIGH CONCENTRATIONS OF DRIVEWAYS WHEN DIRECTED BY THE ENGINEER.

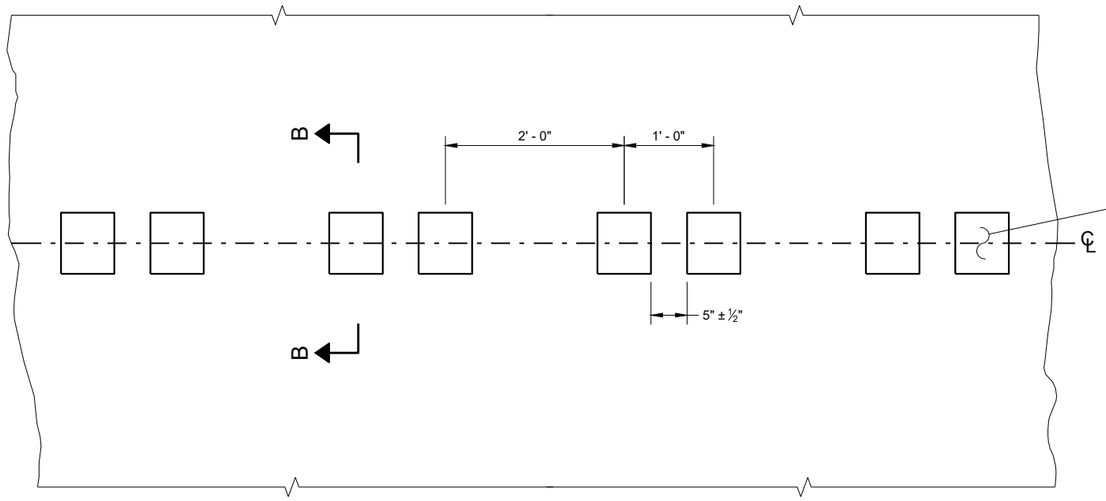

PLAN DETAIL VIEW

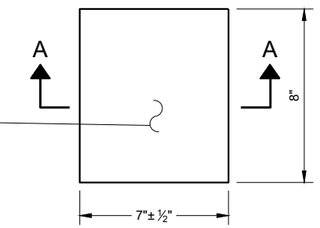

PLAN VIEW
(SINGLE GROOVE)

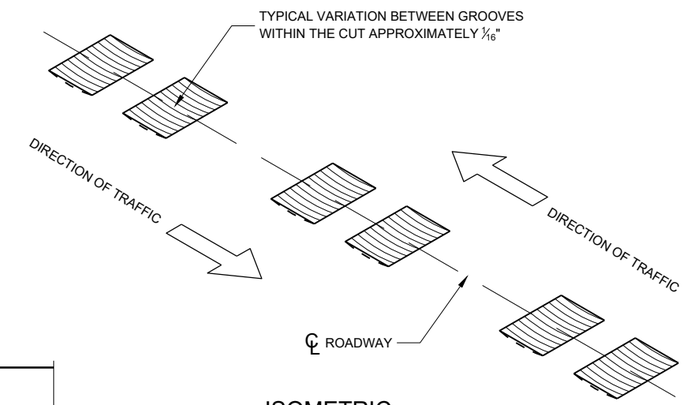

ISOMETRIC

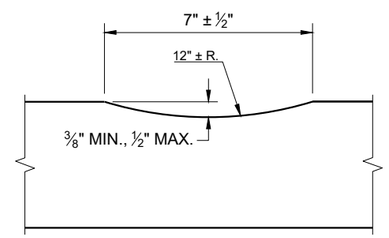

SECTION A - A

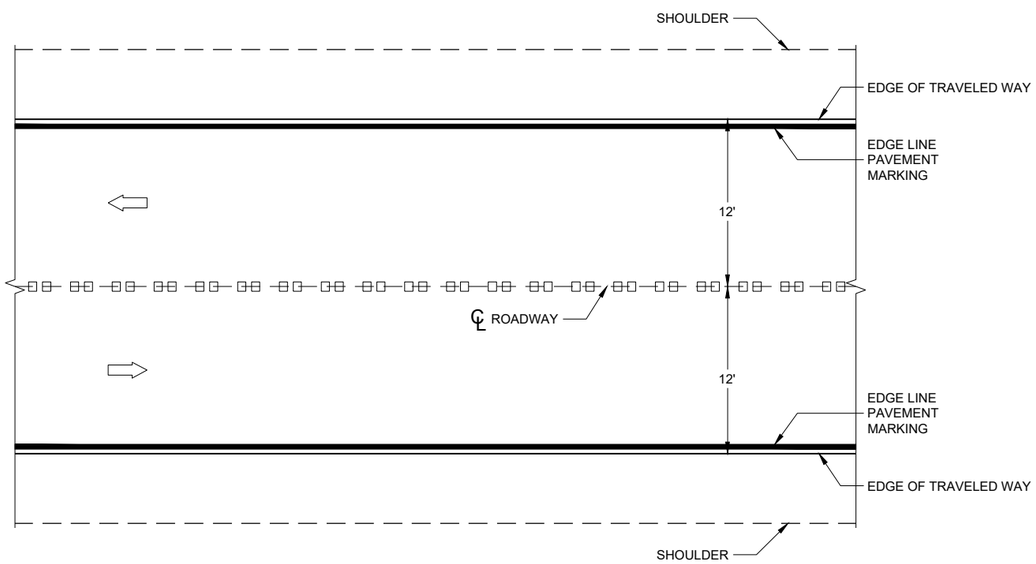

PLAN VIEW

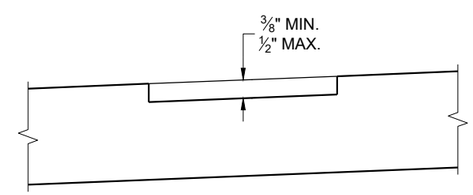

SECTION B - B
SUPERELEVATED ROADWAY

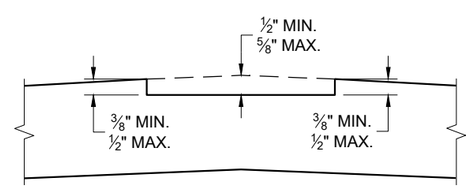

SECTION B - B
CROWNED ROADWAY

CENTERLINE RUMBLE STRIPS - ASPHALT

6

SDD 13A11 - 04a

CENTERLINE RUMBLE STRIPS - ASPHALT

STATE OF WISCONSIN
DEPARTMENT OF TRANSPORTAT

6

SDD 13A11 - 04a

GENERAL NOTES

1. CENTERLINE GROOVES MAY BE OMITTED IN AREAS WITH HIGH CONCENTRATIONS OF DRIVEWAYS WHEN DIRECTED BY THE ENGINEER.

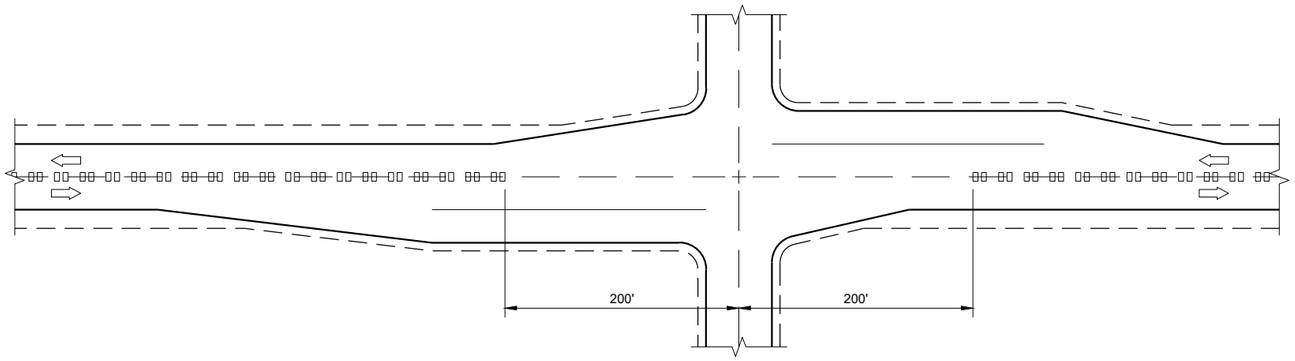

CENTERLINE GROOVES AT INTERSECTIONS

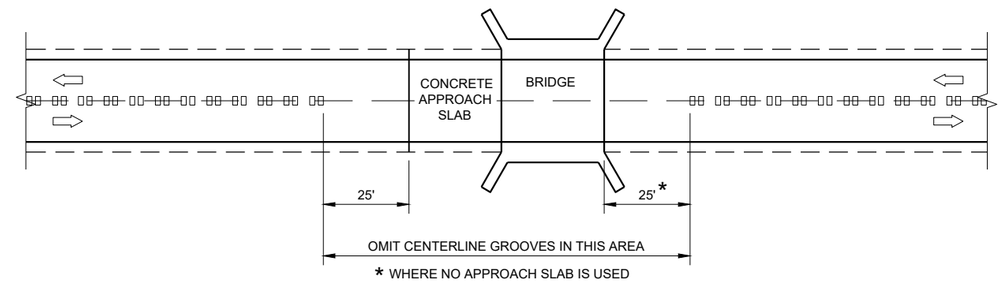

CENTERLINE GROOVES AT BRIDGES

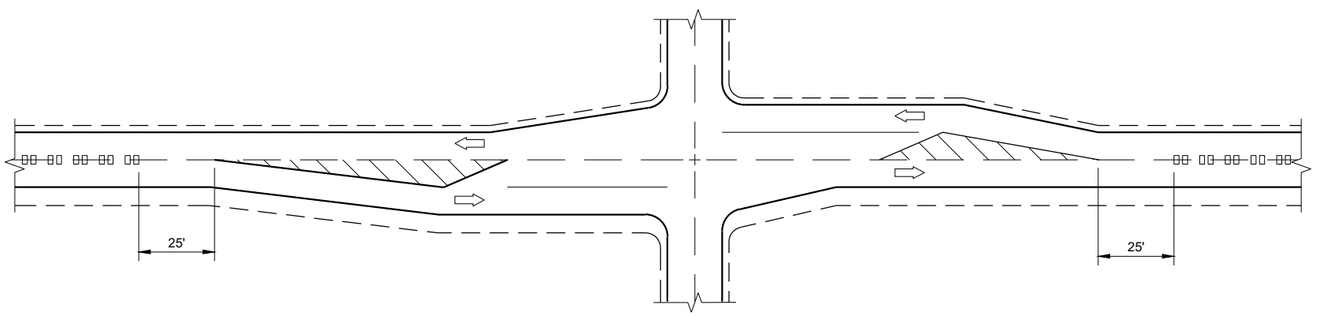

CENTERLINE GROOVES AT INTERSECTIONS (WITH LEFT TURN LANES)

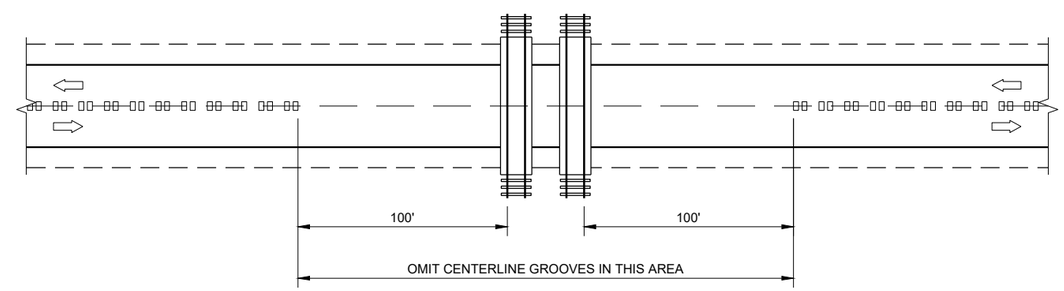

CENTERLINE GROOVES AT RAILROADS

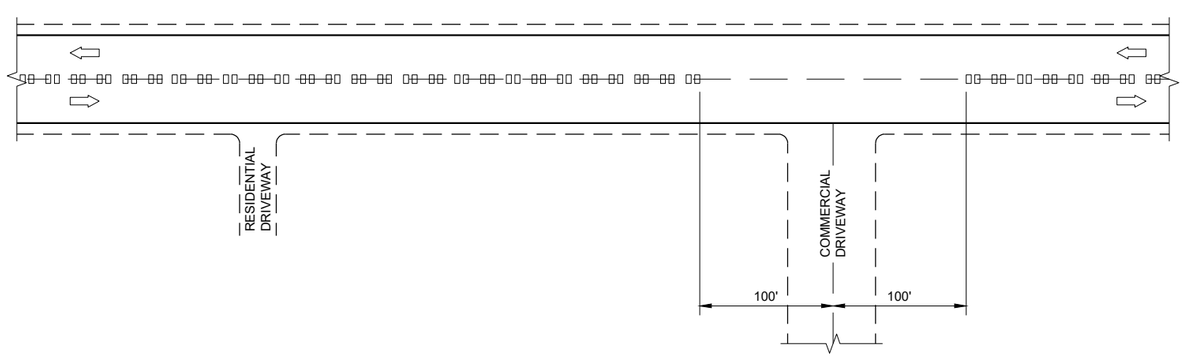

CENTERLINE GROOVES AT DRIVEWAYS (1)

6

SDD 13A11 - 04d

CENTER LINE RUMBLE STRIPS - INTERSECTIONS, DRIVEWAYS, BRIDGES, RAIL ROADS

STATE OF WISCONSIN
DEPARTMENT OF TRANSPORTATION

APPROVED

May 2023	/S/ John Jenkins
DATE	ROADWAY STANDARDS DEVE ENGINEER

FHWA

6

SDD 13A11 - 04d

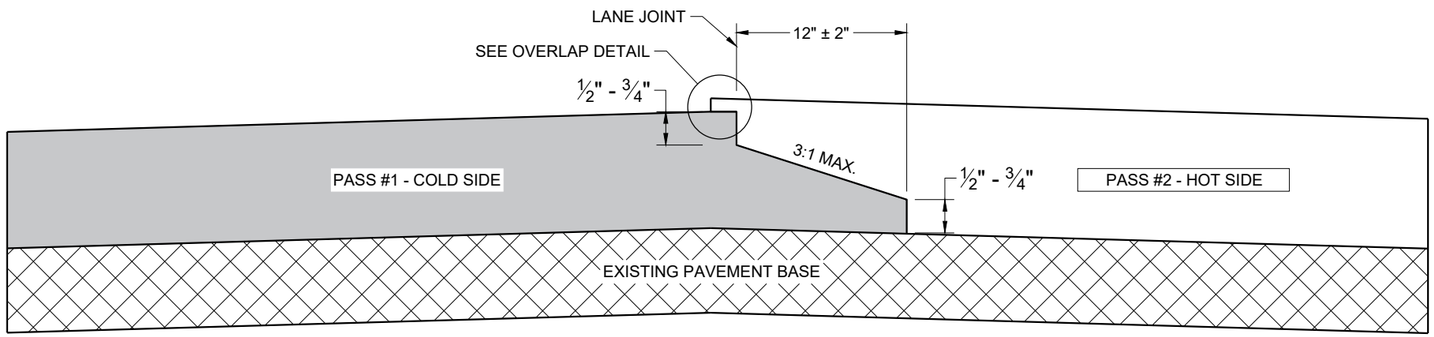

TYPICAL PAVEMENT CROSS SECTION
NOTCHED WEDGE JOINT

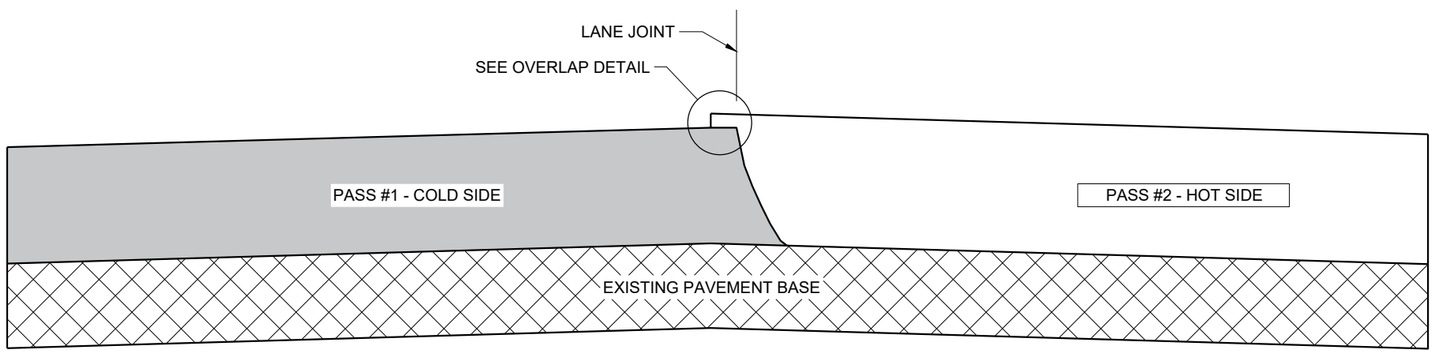

TYPICAL PAVEMENT CROSS SECTION
VERTICAL JOINT

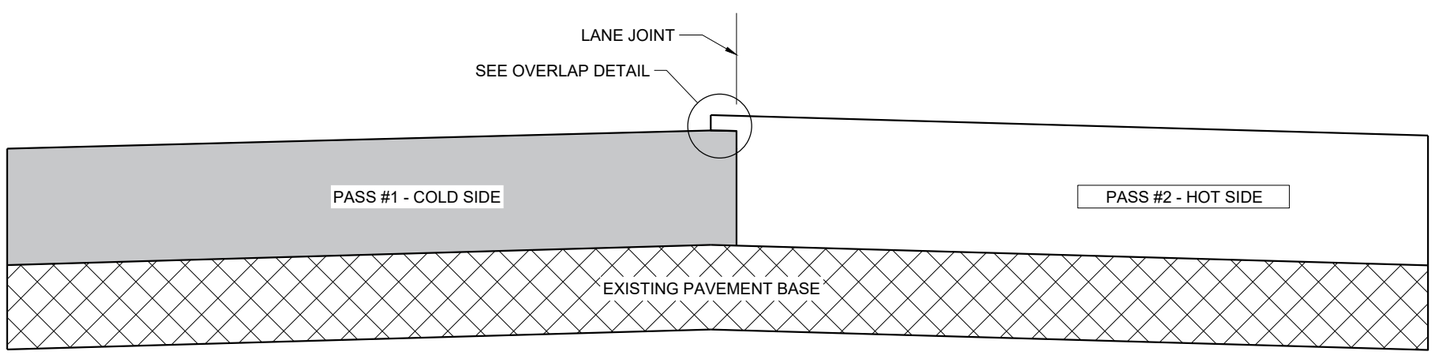

TYPICAL PAVEMENT CROSS SECTION
VERTICAL JOINT (MILLED)

GENERAL NOTES

IN ADDITION TO THE DETAILS PROVIDED IN THIS DRAWING, CONFORM TO STANDARD SPECIFICATION 450.3.2.8 FOR WHEN A NOTCHED WEDGE JOINT IS REQUIRED AND FOR GENERAL JOINT CONSTRUCTION REQUIREMENTS.

FOR ALL LONGITUDINAL JOINTS, ENSURE THE PAVER SCREED OVERLAPS THE PREVIOUSLY PLACED PAVEMENT BY 1" ± 0.5" AND THE HOT SIDE OF THE JOINT REMAINS HIGHER THAN THE COLD SIDE BY APPROXIMATELY 0.1" AFTER FINAL COMPACTION. (IT WILL BE FLUSH WHEN PAVING IN ECHELON.)

ONLY REMOVE THE LONGITUDINAL NOTCHED WEDGE JOINT FOR SMA PAVEMENT OR AS DIRECTED BY THE ENGINEER TO ADDRESS SPECIFIC LENGTHS OF JOINT DAMAGED BY TRAFFIC.

WHEN MILLING BACK OR REMOVING ANY LONGITUDINAL JOINT, LIMIT THE MATERIAL REMOVED TO 2" FROM THE TOP NOTCH OR FROM THE VERTICAL JOINT EDGE ON THE COLD SIDE OF THE JOINT.

USE LONGITUDINAL MILLED JOINT AS PLANS SHOW OR THE AS THE ENGINEER DIRECTS.

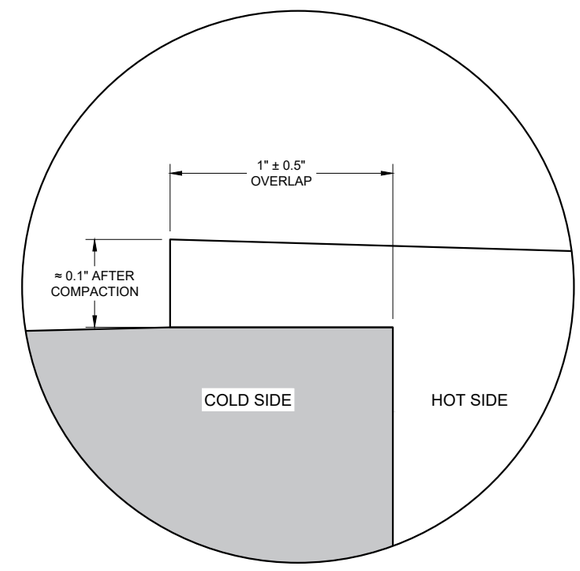

OVERLAP DETAIL (TYPICAL)

6

6

SDD 13C19 - 03

SDD 13C19 - 03

HMA LONGITUDINAL JOINTS

STATE OF WISCONSIN
DEPARTMENT OF TRANSPORTATION

APPROVED
November 2020 /S/ Steven Hefel
DATE HMA PAVEMENT ENGIN
FHWA

1. WOOD OR STEEL POSTS (w6X9 OR w6X8.5) MAY BE USED. DO NOT INTERMIX WOOD AND STEEL POSTS. INSTALL STEEL POSTS WITH HOLES ON APPROACHING TRAFFIC SIDE.
2. USE WOOD OR APPROVED PLASTIC BLOCKOUTS. WOOD BLOCKOUTS MAY BE CONSTRUCTED OUT OF TWO OR MORE WOOD BLOCKOUTS. SEE ALTERNATE WOOD BLOCKOUT DETAIL. DIMENSIONS OF APPROVED PLASTIC BLOCKOUTS MAY VARY.
3. IF ROCK IS ENCOUNTERED DURING EXCAVATION, PROVIDE A HOLE 12 INCHES IN DIAMETER EXTENDING 20 INCHES DEEP INTO THE ROCK. PLACE APPROXIMATELY 2 1/2" INCHES OF GRANULAR MATERIAL IN THE BOTTOM OF THE HOLE. CUT THE POSTS THE TO LENGTH AMD INSTALL. BACKFILL WITH EXCAVATED MATERIAL AND COMPACT. BACKFILL IS TO BE FREE OF LARGE ROCKS.
4. WHEN THE DISTANCE FROM BACK OF POST TO SHOULDER HINGE POINT IS LESS THAN 2 FEET INSTALL LONGER POST AT HALF POST SPACING (K).
5. FOR NEW MGS INSTALLATION TOP OF W-BEAM RAIL TOLERANCE IS ±1". FOR EXISTING MGS INSTALLATION TOP OF W-BEAM IS BETWEEN 27 ¾" TO 32".
6. WHEN USING STEEL POST AND WOOD BLOCKOUTS INSTALL FOUR 16D GALVANIZED NAILS. INSTALL NAILS AT THE BACK CORNERS OF THE BLOCK AND BEND THE NAILS OVER THE FLANGE OF THE STEEL POST.
7. TOTAL POST LENGTH FOR TYPE K IS 7' - 0". TOTAL POST LENGTH FOR OTHER MGS TYPES IS 6' - 0".

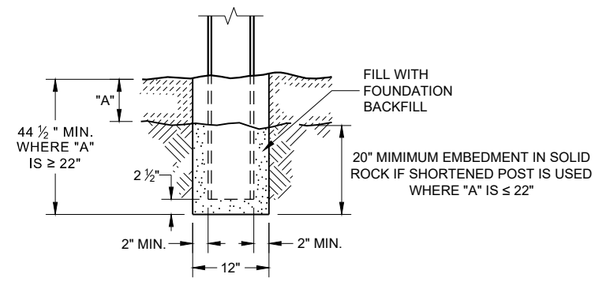

END VIEW
SETTING STEEL OR WOOD POST IN ROCK (3)

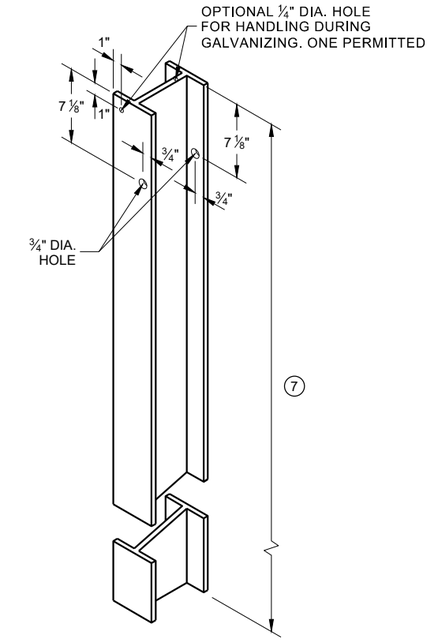

STEEL POST & HOLE PUNCHING DETAIL (W 6 X 9) (1)

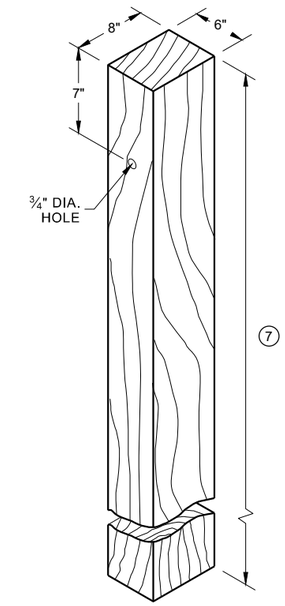

WOOD POST (6" X 8") NOMINAL (1)

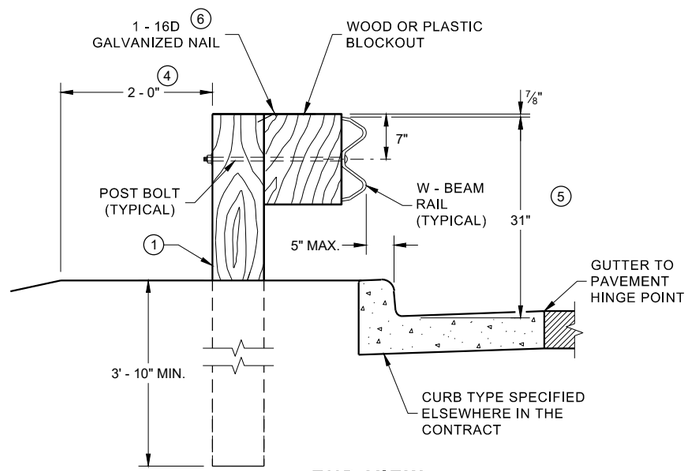

END VIEW
LOCATED ALONG A CURBED ROADWAY

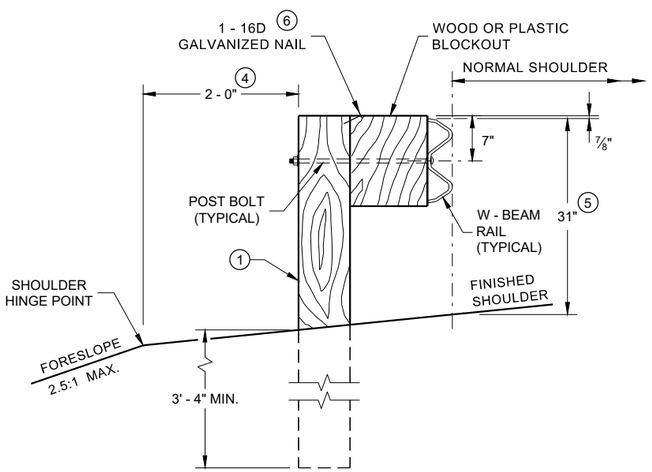

END VIEW
LOCATED ALONG A ROADWAY SHOULDER STANDARD INSTALLATION

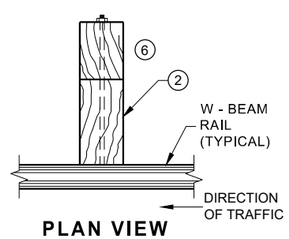

PLAN VIEW
WOOD POST, BLOCKOUT & BEAM

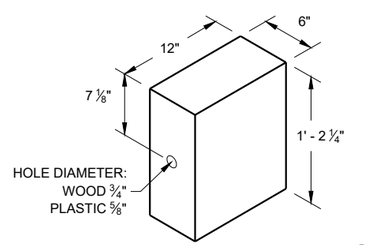

WOOD OR PLASTIC BLOCKOUT (2)

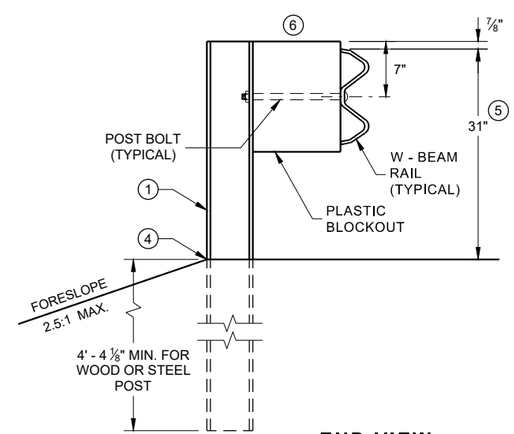

END VIEW
MGS LONGER POST AT HALFPOST SPACING W BEAM (K)

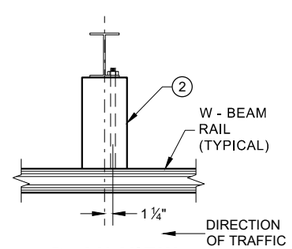

PLAN VIEW
STEEL POST, PLASTIC BLOCKOUT & BEAM

MIDWEST GUARDRAIL SYSTEM (MGS) GUARDRAIL

STATE OF WISCONSIN
DEPARTMENT OF TRANSPORTA

6

SDD 14B42 - 07a

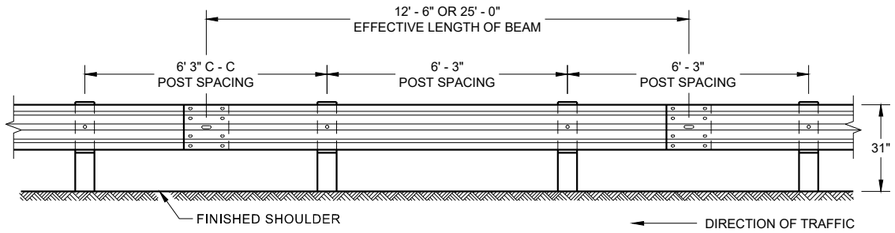

FRONT VIEW
POST SPACING STANDARD INSTALLATION

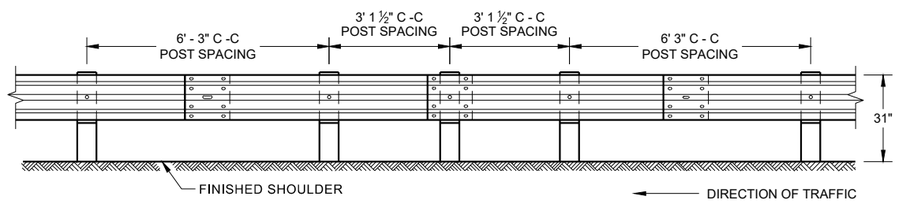

FRONT VIEW
HALF POST SPACING (HS) AND HALF POST SPACING WITH LONGER POSTS (K)

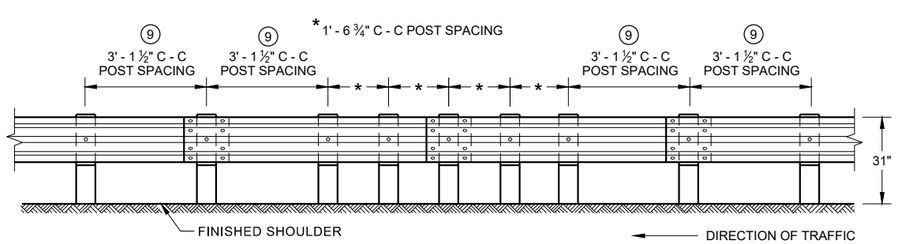

FRONT VIEW
QUARTER POST SPACING (QS)

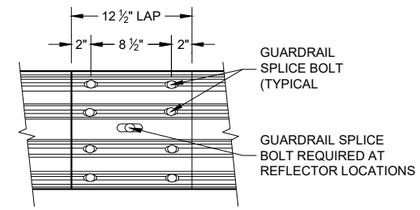

FRONT VIEW
MID-SPAN BEAM SPLICE

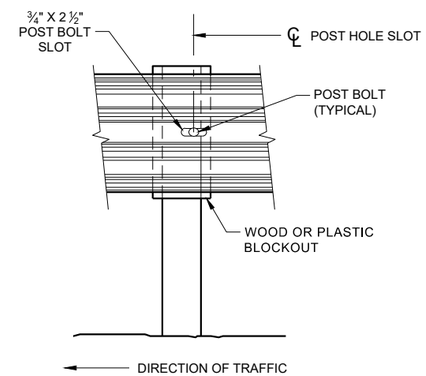

FRONT VIEW AT STEEL POST

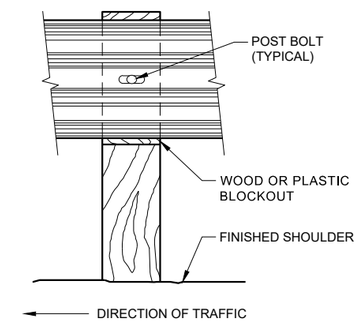

FRONT VIEW AT WOOD POST

GENERAL NOTES

(8) DO NOT INSTALL REFLECTORS ON THE FIRST 50 FEET OF THE APPROACH END OF THE ENERGY ABSORBING TERMINAL.

(9) 25 FEET OF HALF POST SPACING IS REQUIRED ON APPROACH AND DEPARTURE ENDS OF QUARTER POST SPACING.

POST BOLTS ARE A ⅝" DIAMETER ASTM A307 GUARDRAIL BOLT. A POST BOLT REQUIRES ⅝" DIAMETER A563A DOUBLE RECESSED (DR) HEAVY HEX NUT AND ⅝" DIAMETER F844 FLAT WASHER. POST BOLTS MAY BE LONGER IF MULTIPLE BLOCKOUTS ARE BEING USED.

GUARD RAIL SPLICE BOLTS ARE A ⅝" DIAMETER ASTM A307 GUARDRAIL HEAD BOLT. A GUARDRAIL SPLICE BOLT REQUIRES ⅝" DIAMETER A563A DOUBLE RECESSED (DR) HEAVY HEX NUT.

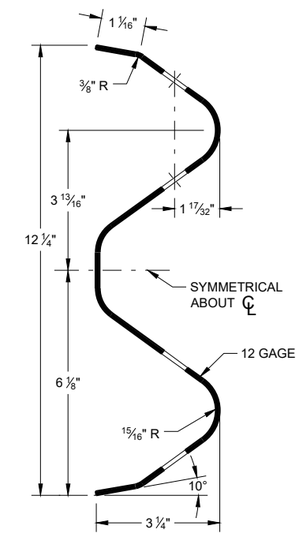

SECTION THRU W-BEAM RAIL

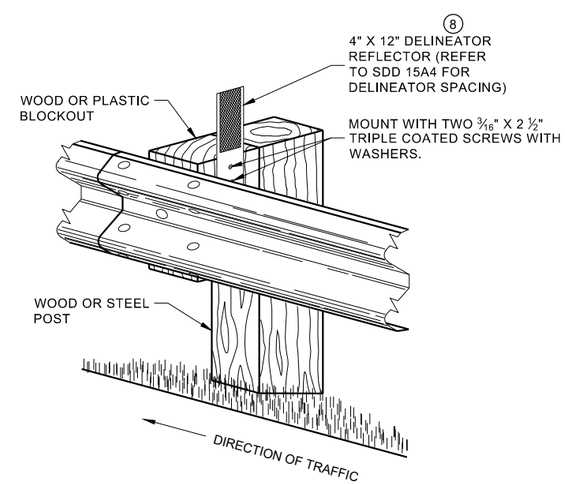

ONE SIDED REFLECTOR DETAIL AND TYPICAL INSTALLATION

MIDWEST GUARDRAIL SYSTEM (MGS) GUARDRAIL

STATE OF WISCONSIN
DEPARTMENT OF TRANSPORTAT

6

SDD 14B42 - 07b

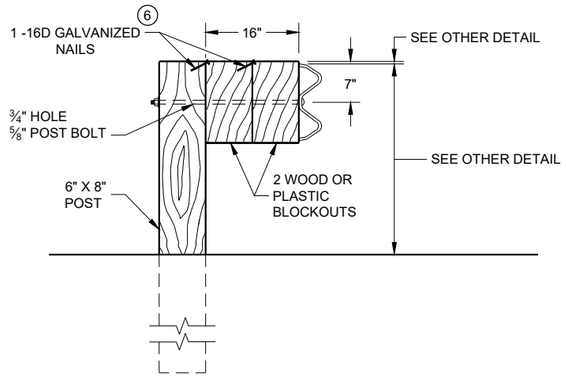

DETAIL FOR 16" BLOCKOUT DEPTH

IT IS ACCEPTABLE TO USE BLOCKOUTS UP TO 16" DEEP TO INCREASE THE POST OFFSET TO AVOID UNDERGROUND OBSTACLES. THERE IS NO LIMIT TO THE NUMBER OF POSTS THAT CAN HAVE ADDITIONAL BLOCKOUTS UP TO 16" DEEP.

NOTE:

1. ALL FILLETS SHALL HAVE A MINIMUM RADIUS OF 3/16".
2. IF THE BOLT EXTENDS MORE THAN ¼" FROM THE NUT THE BOLT SHOULD BE TRIMMED BACK.

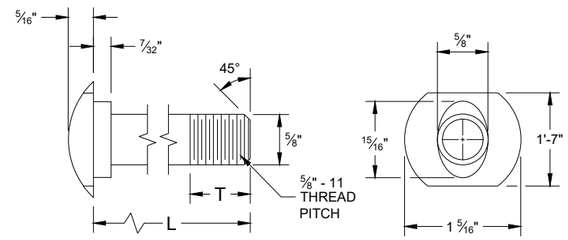

POST BOLT TABLE

L	T (MIN.)
1 ¼"	1 ⅛"
2"	1 ¾"
10"	4"
14"	4 1/16"
18"	4"
21"	4 1/16"
25"	4"

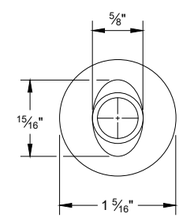

ALTERNATE BOLT HEAD

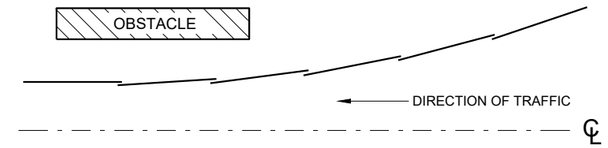

PLAN VIEW
BEAM LAPPING DETAIL

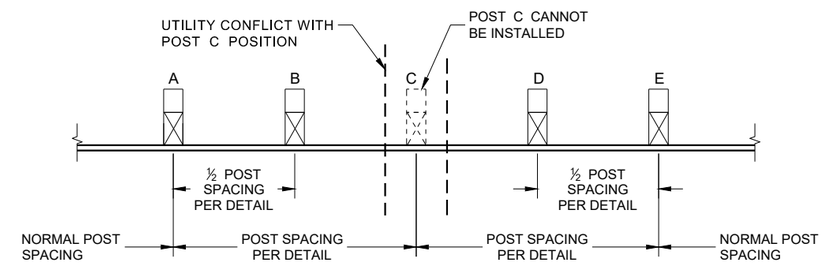

POST DRIVING FOR CONTINUOUS UNDERGROUND OBSTRUCTION

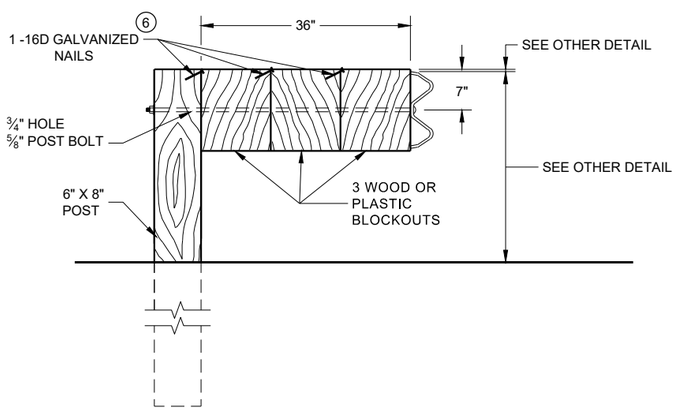

DETAIL FOR 36" BLOCKOUT DEPTH

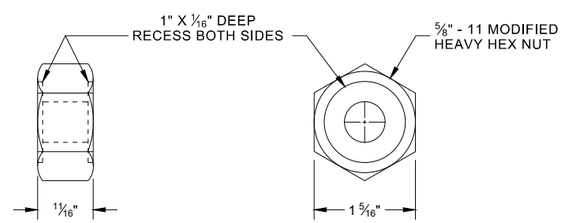

POST BOLT, SPLICE BOLT AND RECESS NUT

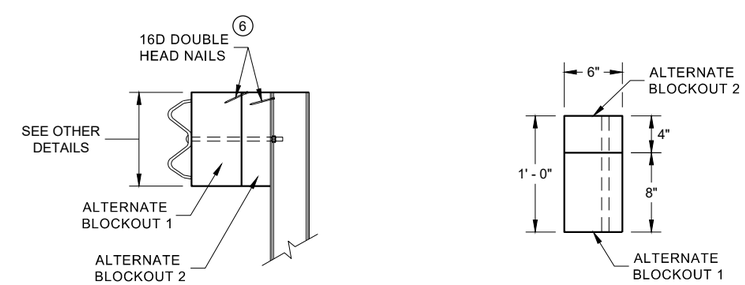

SIDE VIEW

PLAN VIEW

ALTERNATE WOOD BLOCKOUT DETAIL

NOTES: UNDER SPECIAL CIRCUMSTANCES, SUCH AS AVOIDING OBSTACLES THAT ARE NOT RELOCATED, IT IS ACCEPTABLE TO INSTALL ADDITIONAL BLOCKOUTS TO OBTAIN UP TO 36" DEPTH FOR ONE OR TWO POSTS IN A SECTION OF GUARDRAIL.

DO NOT USE 16" OR 36" BLOCKOUTS IF IT CAUSES THE POST TO BE DRIVEN BEYOND SHOULDER HINGE POINT OR CAUSES A FIXED OBJECT TO BE WITHIN THE DEFLECTION DISTANCE OF THE BARRIER.

(6) WHEN USING STEEL POST AD WOOD BLOCKOUTS, INSTALL FOUR 16D GALVANIZED NAILS. INSTALL NAILS AT THE BACK CORNERS OF THE BLOCK AND BEND THE NAILS OVER THE FLANGE OF THE STEEL POST.

MIDWEST GUARDRAIL SYSTEM (MGS) GUARDRAIL

STATE OF WISCONSIN
DEPARTMENT OF TRANSPORTA

6

SDD 14B42 - 07c

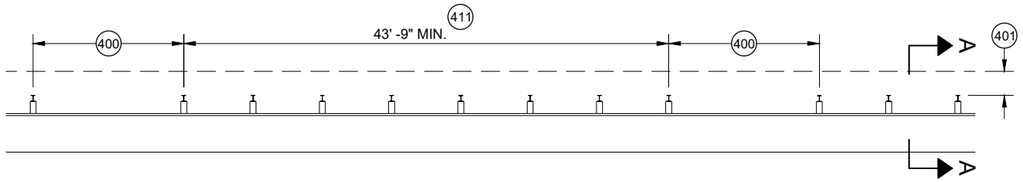

MISSING POST IN MGS GUARDRAIL

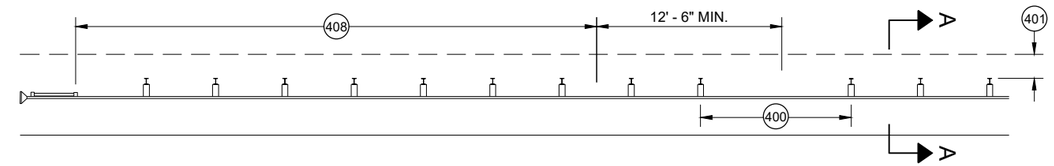

MISSING POST IN MGS GUARDRAIL NEAR EAT

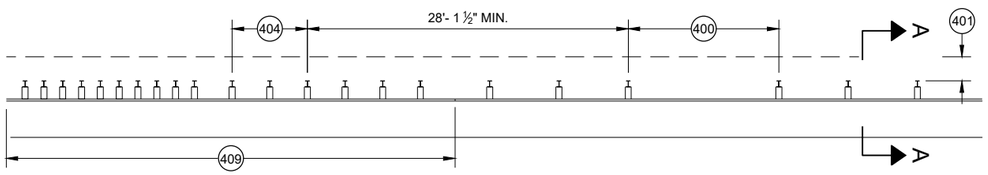

MISSING POST IN MGS GUARDRAIL NEAR AN APPROACH TRANSITION

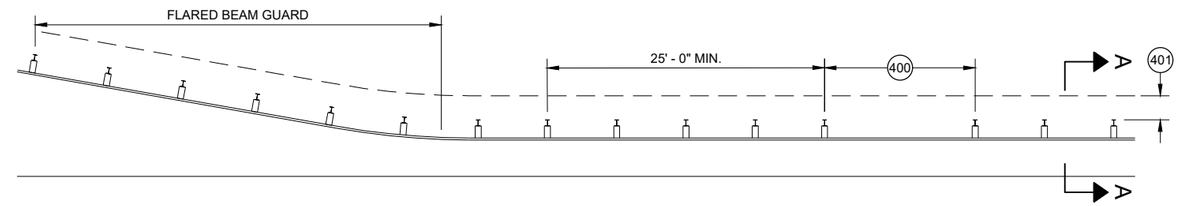

MISSING POST IN MGS GUARDRAIL NEAR FLARED BEAM GUARD

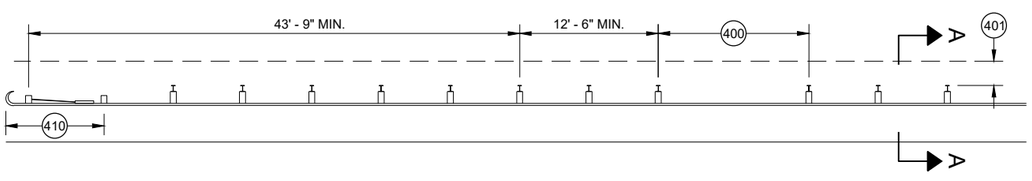

MISSING POST IN MGS GUARDRAIL NEAR A TYPE 2 END TERMINAL

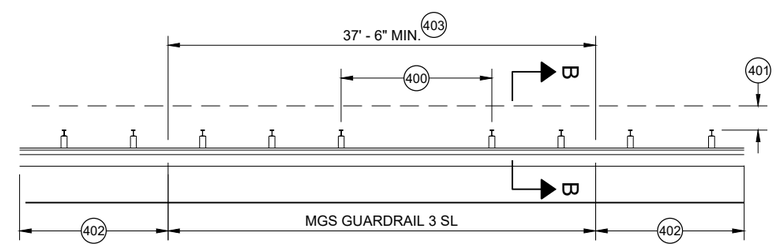

MISSING POST IN SHORT SPAN MGS GUARDRAIL NEAR CURB (SL) 407

400 MAX SPAN 12' - 6"
401 2' MIN.
402 MGS GUARDRAIL 3
403 NESTING BEAM GUARD
404 ASYMMETRIC TRANSITION
405 SOIL WELL DRAINED AND COMPACTED
406 SEE OTHER DRAWINGS IN THIS SDD
407 SEE OTHER DRAWINGS FOR MIN. SPACING BETWEEN SPANS
408 SEE SDD 14B44
409 SEE SDD 14B45
410 SEE SDD 14B47
411 MINIMUM DISTANCE BETWEEN MISSING POST SPANS.

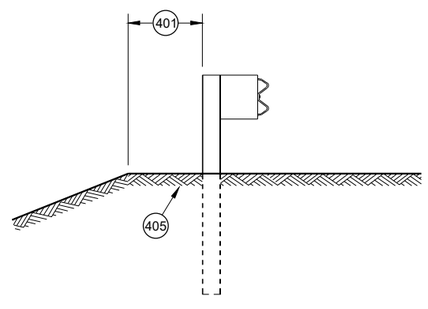

SECTION A - A 406

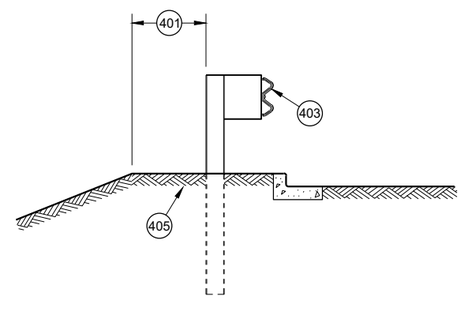

SECTION B - B 406

MIDWEST GUARDRAIL SYSTEM (MGS) GUARDRAIL

STATE OF WISCONSIN
DEPARTMENT OF TRANSPORTATION

APPROVED
May 2021 — DATE
/S/ Rodney Taylor — ROADWAY STANDARDS DEVE UNIT SUPERVISOR
FHWA

6

SDD 14B42 - 07d

GENERAL NOTES

(A) THE SLOPE IN THE AREA BOUNDED BY THE GRADELINE, THE HINGE POINT LINE (HPL) AND THE CLEAR ZONE LIMITS (CZL) SHALL BE 4:1 OR FLATTER.

(B) AFTER FINAL ASSEMBLY, RECHECK CABLE TO BE SURE IT IS TAUT AND HAS NOT RELAXED

(C) DIFFERENT MANUFACTURERS REQUIRE DIFFERENT PERFORATED W - BEAM RAIL END PANELS. SEE MANUFACTURER'S INFORMATION.

(D) ATTACH ALUMINUM SHEET TO E.A.T. HEAD USING 4 STAINLESS STEEL SELF - TAPPING SCREWS. ONE SCREW PER CORNER.

(E) HARDWARE MAY VARY BETWEEN MANUFACTURER. SEE MANUFACTURER'S DRAWING FOR INFORMATION.

DIMENSIONS MAY VARY, MANUFACTURER'S INFORMATION.

SEE SDD 14B42 FOR MORE INFORMATION.

* DO NOT ATTACH BLOCKOUTS TO POST 1 AND 2.

DO NOT INSTALL REFLECTORS ON THE FIRST 50 FEET OF THE APPROACH END OF THE ENERGY ABSORBING TERMINAL.

SEE MANUFACTURER'S DRAWING FOR SPLICE LOCATION, HARDWARE DIMENSIONS AND INSTALLATION INSTRUCTIONS.

THE CENTER OF THE UPPER 3 ½" DIAMETER HOLE ON POST NUMBER 3 THROUGH POST 9 IS TO BE FLUSH WITH THE GROUND LINE UP TO A MAXIMUM OF 2" ABOVE GROUND LINE. WOOD BLOCKS ON POSTS NUMBERED 3 THROUGH 9 MAY BE ADJUSTED UP TO 3" ABOVE THE TOP OF POST.

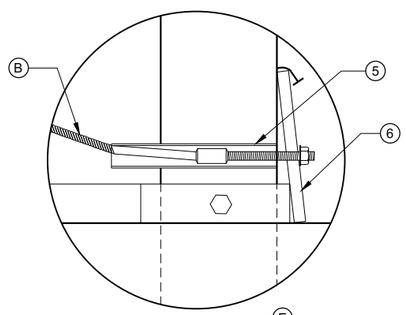

DETAIL "A" (E)

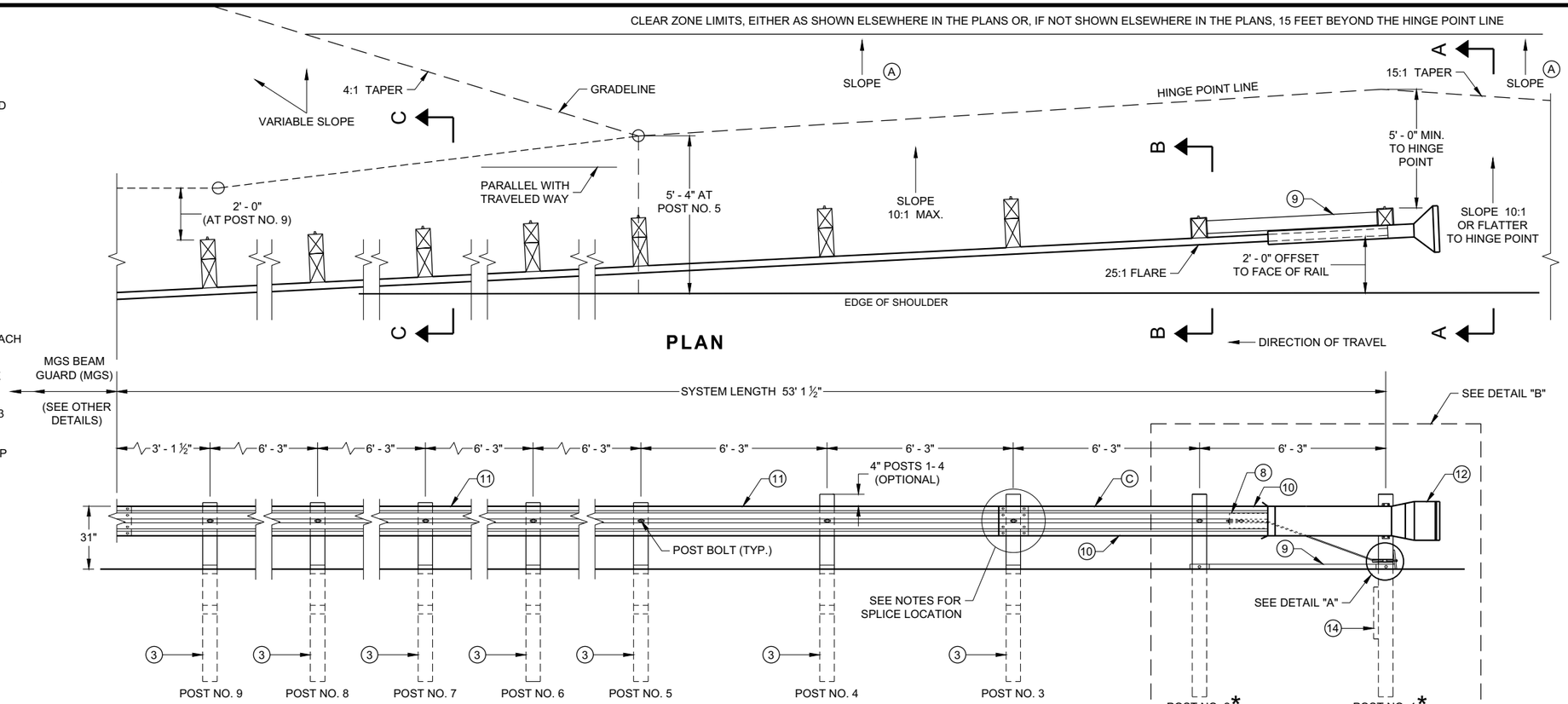

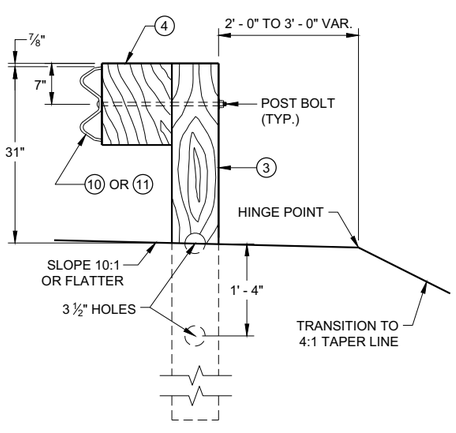

SECTION C - C
TYPICAL AT POST NOS. 3 - 9

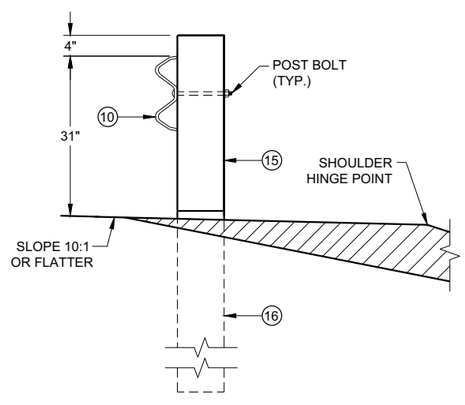

SECTION B - B
TYPICAL AT POST NO. 2*

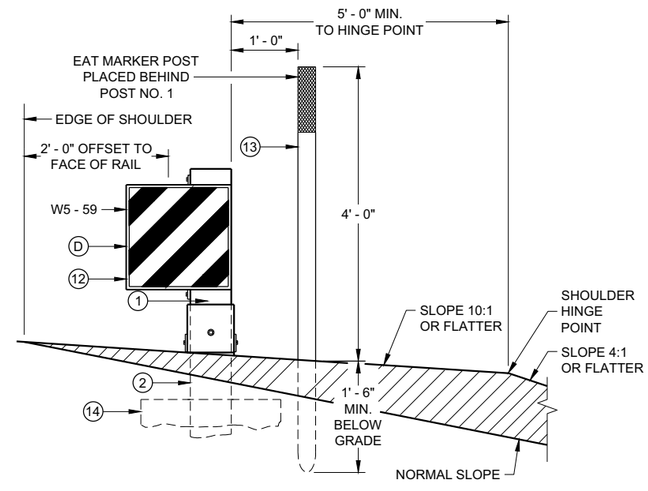

SECTION A - A
TYPICAL AT POST NO. 1*

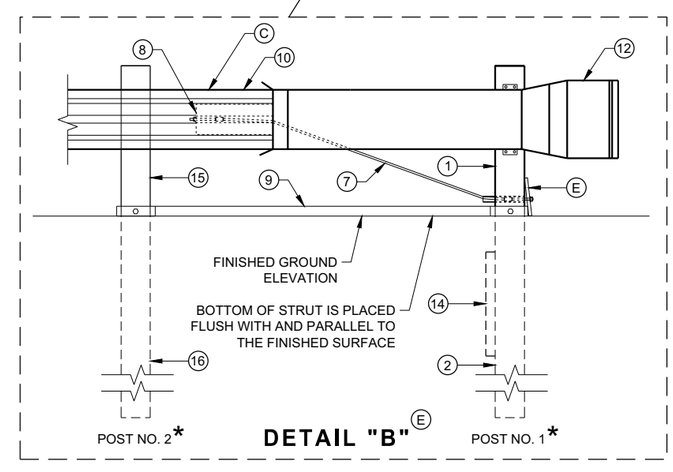

DETAIL "B" (E)

MIDWEST GUARDRAIL SYSTEM ENERGY ABSORBING TERMINAL (MGS)

STATE OF WISCONSIN
DEPARTMENT OF TRANSPORTATION

6

6

SDD 14B44 - 04a

SDD 14B44 - 04a

BILL OF MATERIALS

PART NO.	DESCRIPTION MATERIALS PROVIDED BY MGS EAT MANUFACTURER. SEE MANUGACTURER'S DETAILS FOR MORE INFORMATION.
1	UPPER POST NO. 1 6" X 6" TUBE
2	LOWER POST NO. 1
3	WOOD CRT
4	WOOD BLOCKOUT
5	PIPE SLEEVE
6	BEARING PLATE
7	BCT CABLE ASSEMBLY
8	ANCHOR CABLE BOX
9	GROUND STRUT
10	PERFORATED W-BEAM RAIL END PANEL, 12'-6" LONG.
11	STANDARD W-BEAM RAIL. MULTIPLE SECTIONS REQUIRED. SECTIONS VARY IN LENGTH.
12	IMPACT HEAD
13	EAT MARKER POST - YELLOW (SEE APPROVED PRODUCTS LIST)
14	SOIL PLATE
15	UPPER POST NO. 2
16	LOWER POST NO. 2

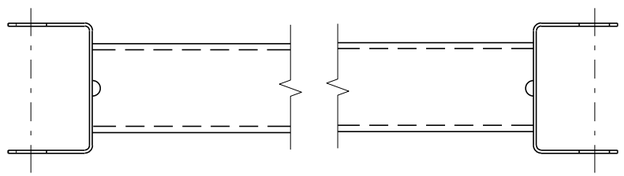

GENERIC GROUND STRUT 9 E

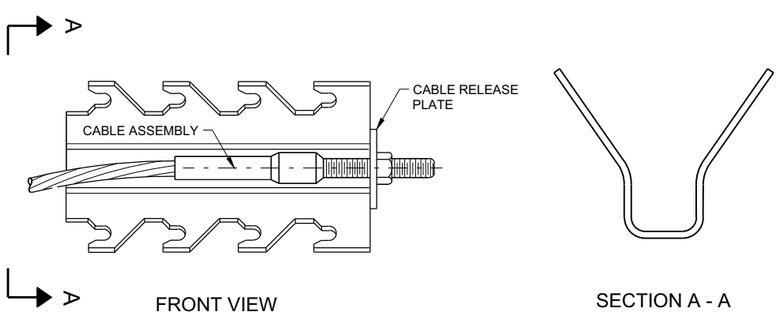

GENERIC ANCHOR CABLE BOX 9 E

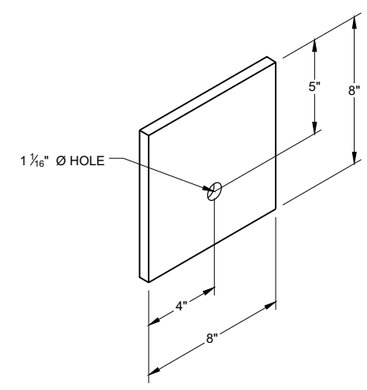

BEARING PLATE 6 E

6

6

SDD 14B44 - 04b

SDD 14B44 - 04b

MIDWEST GUARDRAIL SYSTEM ENERGY ABSORBING TERMINAL (MGS)

STATE OF WISCONSIN
DEPARTMENT OF TRANSPORTAT

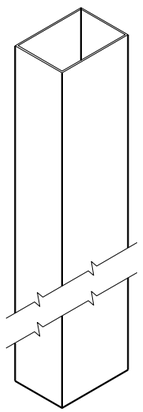

UPPER POST NO. 1 (1) (E)

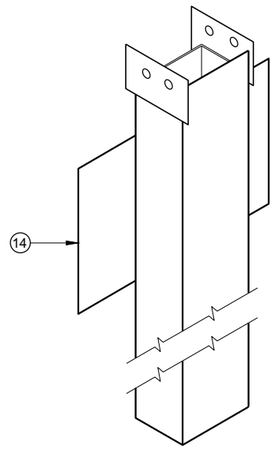

LOWER POST NO. 1 (2) (E)

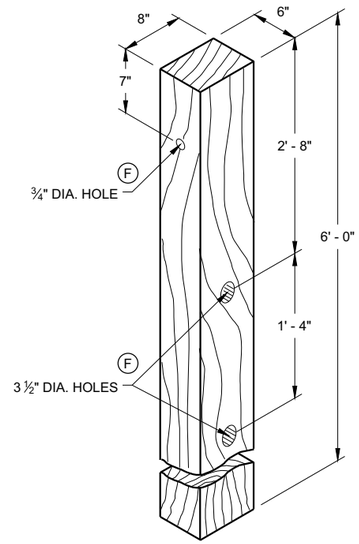

WOOD CRT POST (3) (E)
POSTS NUMBER 3-9

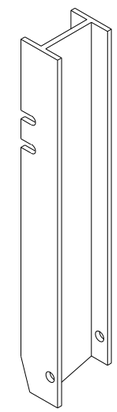

UPPER POST NO. 2 (15) (E)

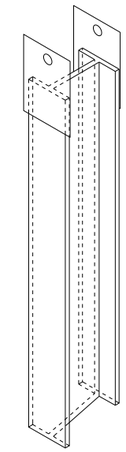

LOWER POST NO. 2 (16) (E)

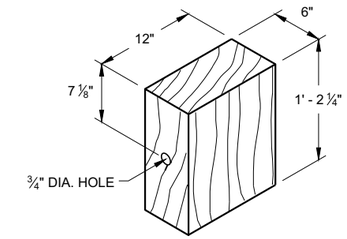

WOOD BLOCKOUT (4)
REQ'D. AT ALL POSTS EXCEPT POST NO'S 1 & 2

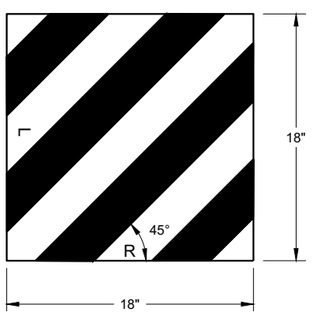

W5 - 59

REFLECTIVE SHEETING DETAIL (E)

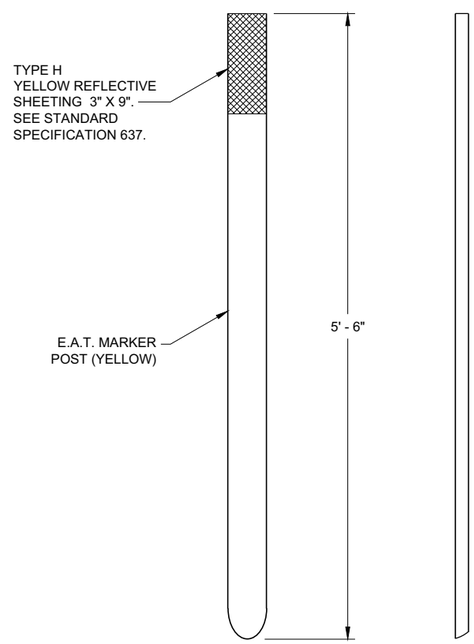

FRONT VIEW SIDE VIEW

E.A.T. MARKER POST (13)

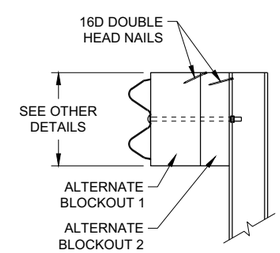

SIDE VIEW

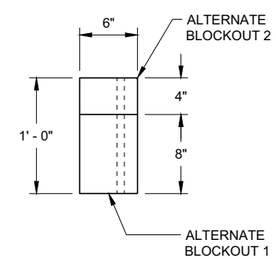

TOP VIEW

ALTERNATE WOOD BLOCKOUT DETAIL

MIDWEST GUARDRAIL SYSTEM ENERGY ABSORBING TERMINAL (MGS)

STATE OF WISCONSIN
DEPARTMENT OF TRANSPORTATION

APPROVED
7/2018 — DATE
/S/ Rodney Taylor — ROADWAY STANDARDS DEVE UNIT SUPERVISOR
FHWA

6

6

SDD 14B44 - 04c

SDD 14B44 - 04c

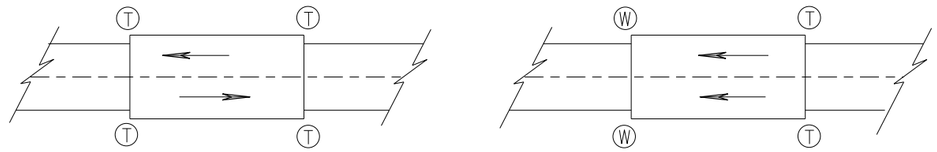

TWO WAY TRAFFIC **ONE WAY TRAFFIC**

(T) THRIE BEAM CONNECTION

(W) W-BEAM CONNECTION WHEN REQUIRED

TYPICAL LOCATIONS OF THRIE BEAM AND W-BEAM CONNECTIONS TO BRIDGE

GENERAL NOTES

IF ROCK IS ENCOUNTERED, REMOVE ROCK TO FULL DEPTH OF POST PLUS 2½", AND 12" DIAMETER AROUND POST. SEE 14B42 FOR MORE DETAILS.

TRANSITION USES STEEL POSTS ONLY.

SEE STANDARD DETAIL DRAWING 14 B 42 FOR MORE INFORMATION.

POST 2 THROUGH 17 USES STEEL POST ONLY

(1) BRIDGE RAILING TYPE "W" DOES NOT REQUIRE A TERMINAL CONNECTOR.

(2) OPTIONAL CURB AND GUTTER OR DRAINAGE FEATURE SEE PLAN FOR INFORMATION.

(13) STEEL OR WOOD POST IS ACCEPTABLE AT POST 1. SEE SDD14B42

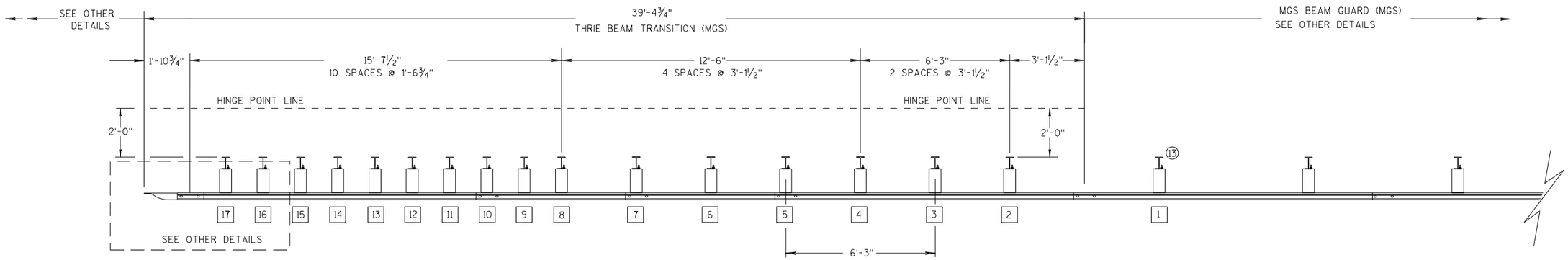

PLAN VIEW

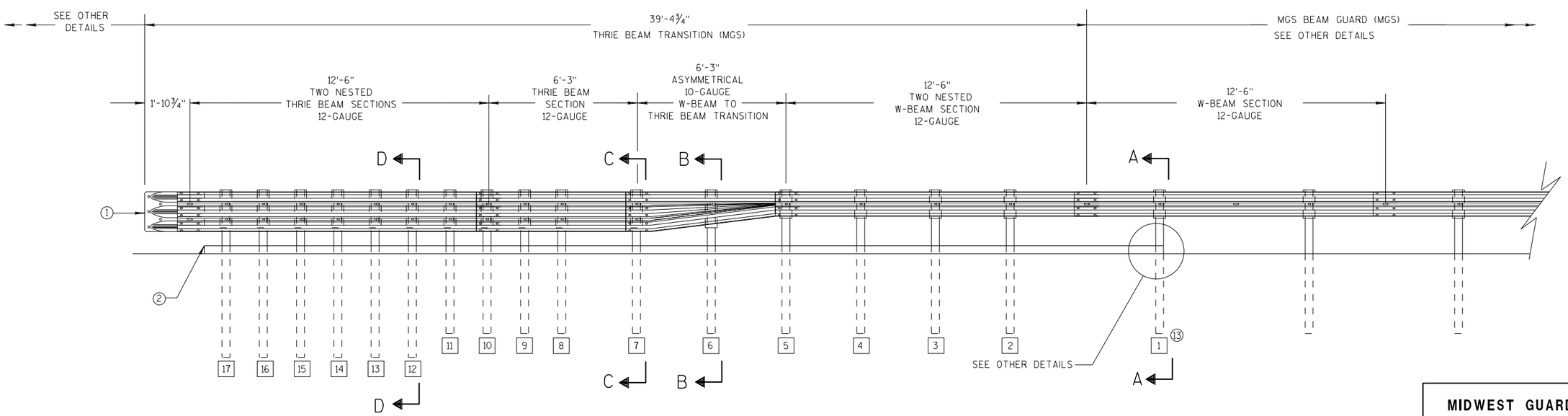

ELEVATION VIEW

MIDWEST GUARDRAIL SYSTEM THRIE BEAM TRANSITION

MIDWEST GUARDRAIL SYSTEM
THRIE BEAM TRANSITION (MGS)

STATE OF WISCONSIN
DEPARTMENT OF TRANSPOR

6

S.D.D. 14 B 45-5a

GENERAL NOTES

(2) OPTIONAL CURB AND GUTTER OR DRAINAGE FEATURE SEE PLAN FOR INFORMATION.

(3) WHEN USING STEEL POSTS AND WOOD BLOCKOUTS INSTALL FOUR 10D GALVANIZED NAILS. INSTALL NAILS AT THE BACK CORNERS OF THE BLOCK AND BEND THE NAILS OVER THE FLANGE OF THE STEEL POST.

(4) TOLERANCE FOR TOP OF W-BEAM RAIL IS ± 1".

(13) STEEL OR WOOD POST IS ACCEPTABLE AT POST 1. SEE SDD 14B42

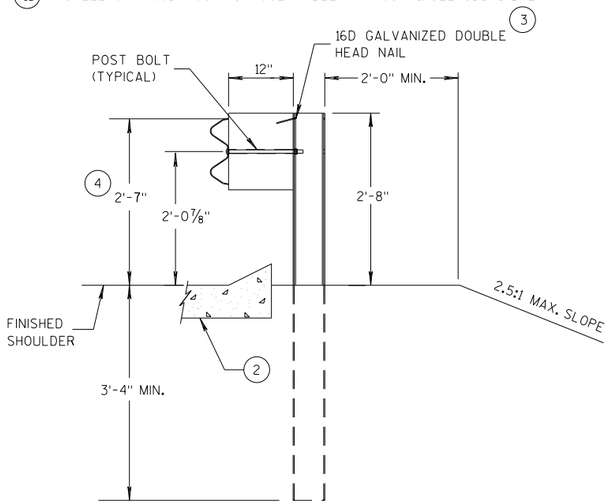

SECTION A-A (13)

POSTS 1-5

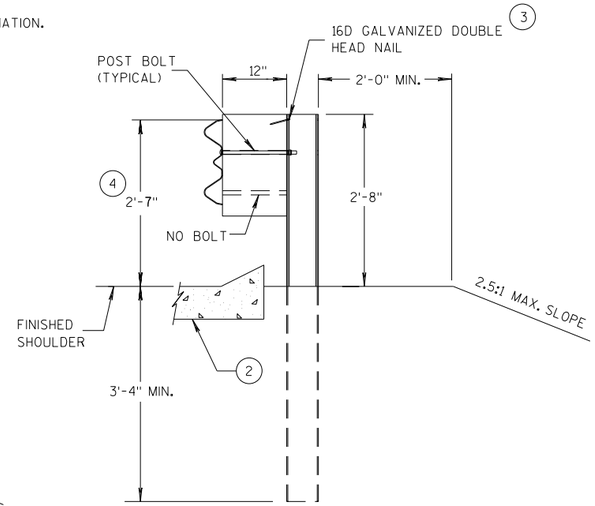

SECTION B-B

POST 6

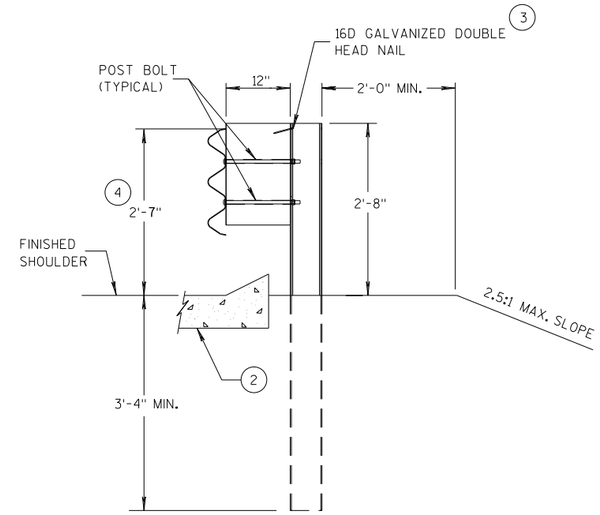

SECTION C-C

POSTS 7-11

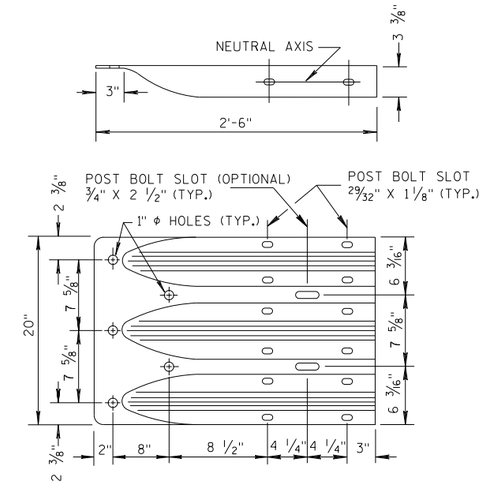

THRIE BEAM TERMINAL CONNECTOR

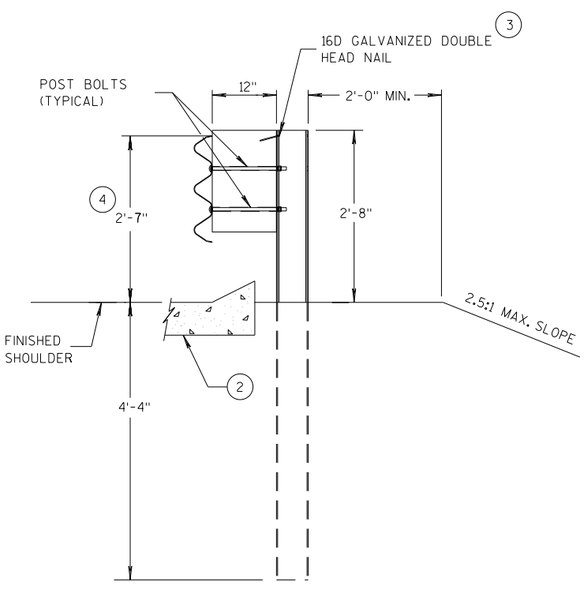

SECTION D-D

POSTS 12-17

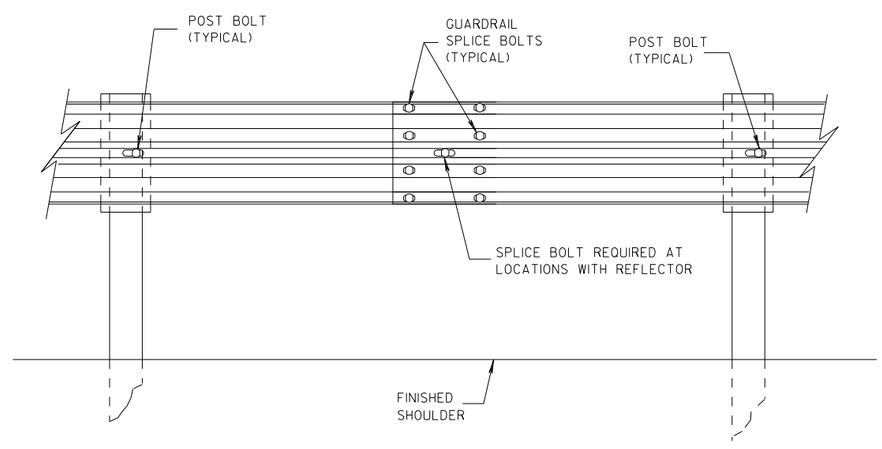

SPLICE DETAIL

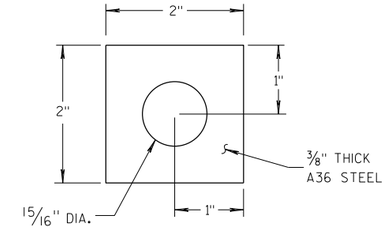

PLATE WASHER DETAIL

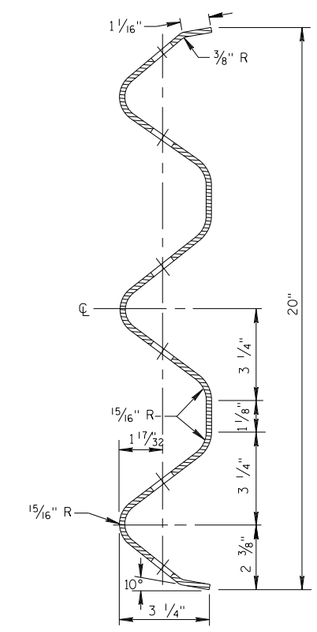

SECTION THRU THRIE BEAM RAIL ELEMENT

MIDWEST GUARDRAIL SYSTEM
THRIE BEAM TRANSITION (MGS)

STATE OF WISCONSIN
DEPARTMENT OF TRANSPORT

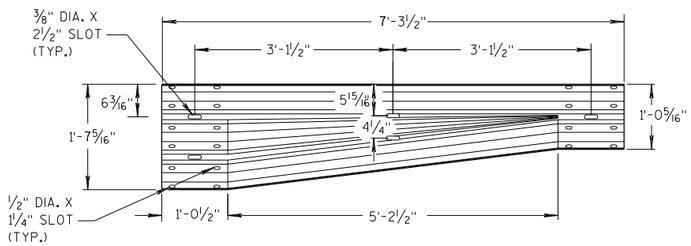

W-BEAM TO THRIE BEAM TRANSITION SECTION

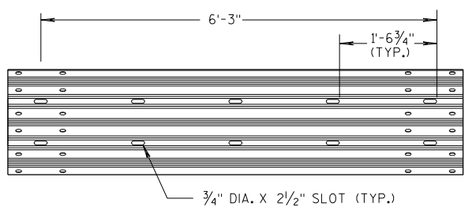

6'-3" THRIE BEAM SECTION

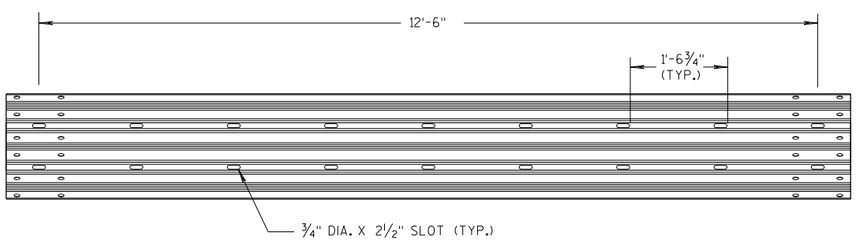

12'-6" THRIE BEAM SECTION

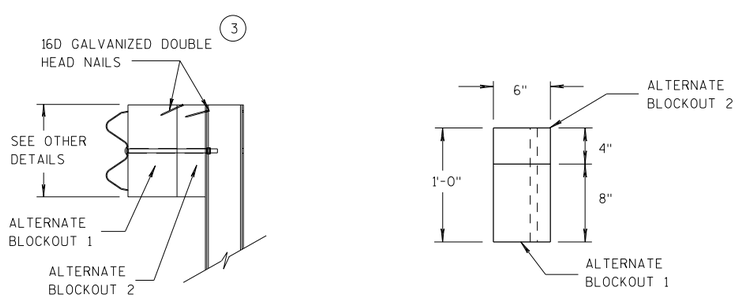

SIDE VIEW TOP VIEW

ALTERNATE WOOD BLOCKOUT DETAIL

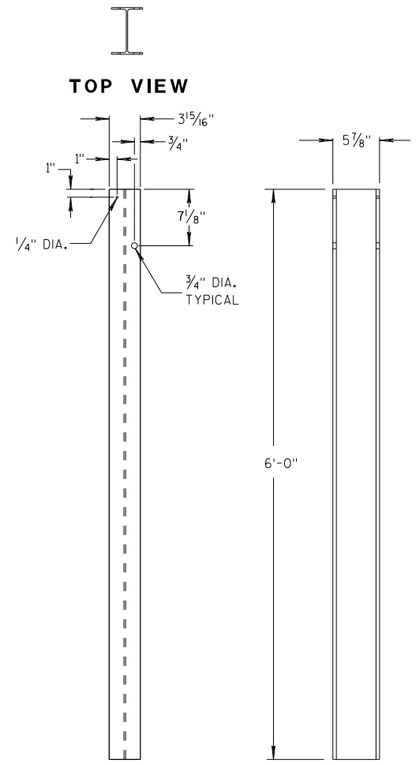

FRONT VIEW SIDE VIEW

STEEL POSTS 1-5 (13)

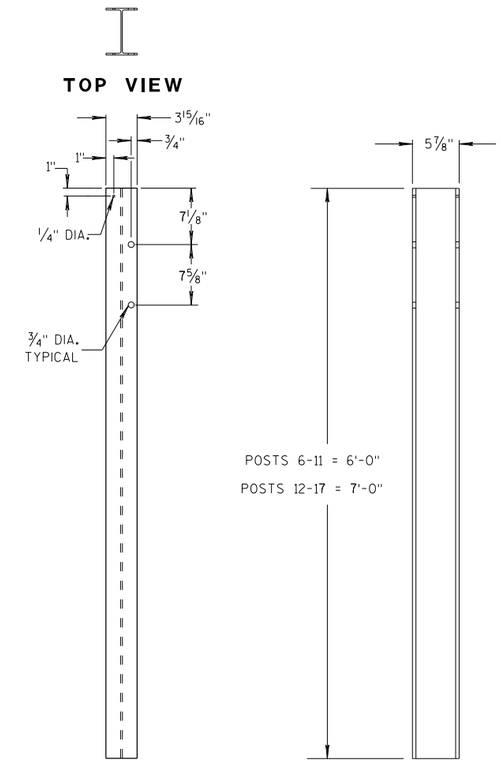

FRONT VIEW SIDE VIEW

STEEL POSTS 6-17

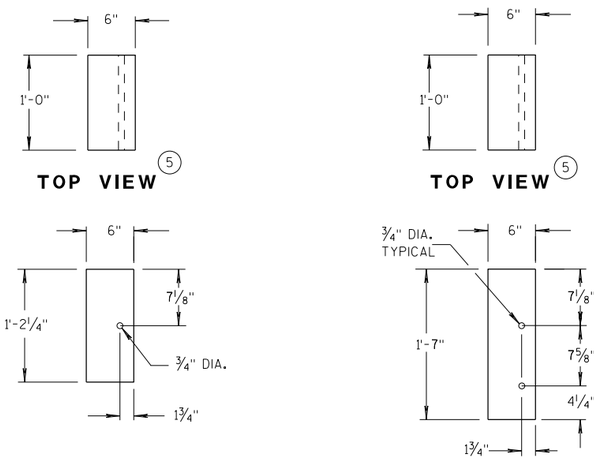

FRONT VIEW FRONT VIEW

BLOCKOUT POSTS 1-5

BLOCKOUT POSTS 6-17

GENERAL NOTES

STEEL POSTS ARE W6X9 OR W6X8.5.

BOLT HOLES FOR POST ARE ON FRONT AND OF SIDE OF POST.

(3) WHEN USING STEEL POSTS AND WOOD BLOCKOUTS INSTALL FOUR 16D GALVANIZED NAILS. INSTALL NAILS AT THE BACK CORNERS OF THE BLOCK AND BEND THE NAILS OVER THE FLANGE OF THE STEEL POST.

(5) WOOD BLOCKS MAY BE CONSTRUCTED OUT OF 2 WOOD BLOCKS. SEE ALTERNATE WOOD BLOCK DETAIL.

(13) STEEL OR WOOD POST IS ACCEPTABLE AT POST 1. SEE SDD 14B42.

MIDWEST GUARDRAIL SYSTEM THRIE BEAM TRANSITION (MGS)

STATE OF WISCONSIN
DEPARTMENT OF TRANSPOR

6

S.D.D. 14 B 45-5c

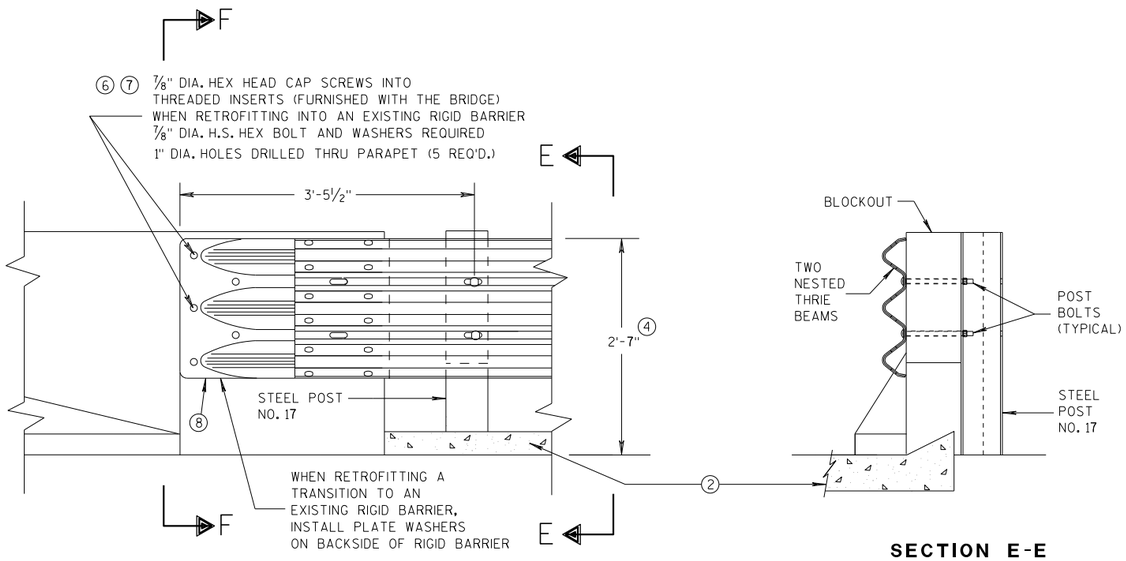

FRONT VIEW

SECTION E-E

THRIE BEAM CONNECTION TO BRIDGE PARAPET WITH SQUARE ENDS

GENERAL NOTES

THESE ARE TYPICAL CONNECTION DETAILS. ADJUST THE POSTION OF CONNECTIONS TO EXISTING BRIDGES TO FIT THE ACTUAL BRIDGE AND SITE DIMENSIONS.

② OPTIONAL CURB AND GUTTER OR DRAINAGE FEATURE SEE PLAN FOR INFORMATION.

④ TOLERANCE FOR TOP OF BEAM IS ± 1".

⑥ DRILLING BOLT HOLES THROUGH THE PARAPET, BOLTS, NUTS, WASHERS AND REPAIRING DAMAGED CONCRETE ARE INCIDENTAL TO THE CONTRACT.

⑦ BOLTS MAY BE A325 BOLTS OR A449 BOLTS. BOLT LENGTH AND THREADING LENGTH ARE TO ALLOW FOR A TIGHT CONNECTION BETWEEN RIGID BARRIER AND THRIE BEAM CONNECTION PLATE. CONTRACTOR IS TO FIELD VERIFY BOLT LENGTH AND THREAD LENGTH. ONE ROUND WASHER REQUIRED BETWEEN BOLT HEAD AND THRIE BEAM CONNECTOR PLATE. BOLTS THAT EXTEND THROUGH THE PARAPET AND OUT THE BACK FACE REQUIRE A HARDENED ROUND STEEL WASHER THAT IS 2" O.D. X 5/32" THICK AND ONE PLATE WASHER. REPAIR ANY DAMAGED CONCRETE FROM BOLT INSTALLATION.

⑧ THE RECESS FOR A W-BEAM CONNECTION, WHICH EXISTS ON SOME PARAPETS OF THIS TYPE, SHALL BE FILLED WITH A TREATED TIMBER BLOCKOUT. BLOCKOUT SIZE IS 1'-6" X 2'-0" X 3 1/2".

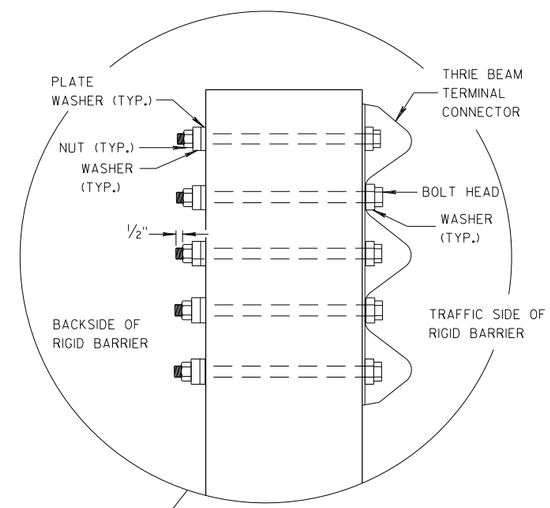

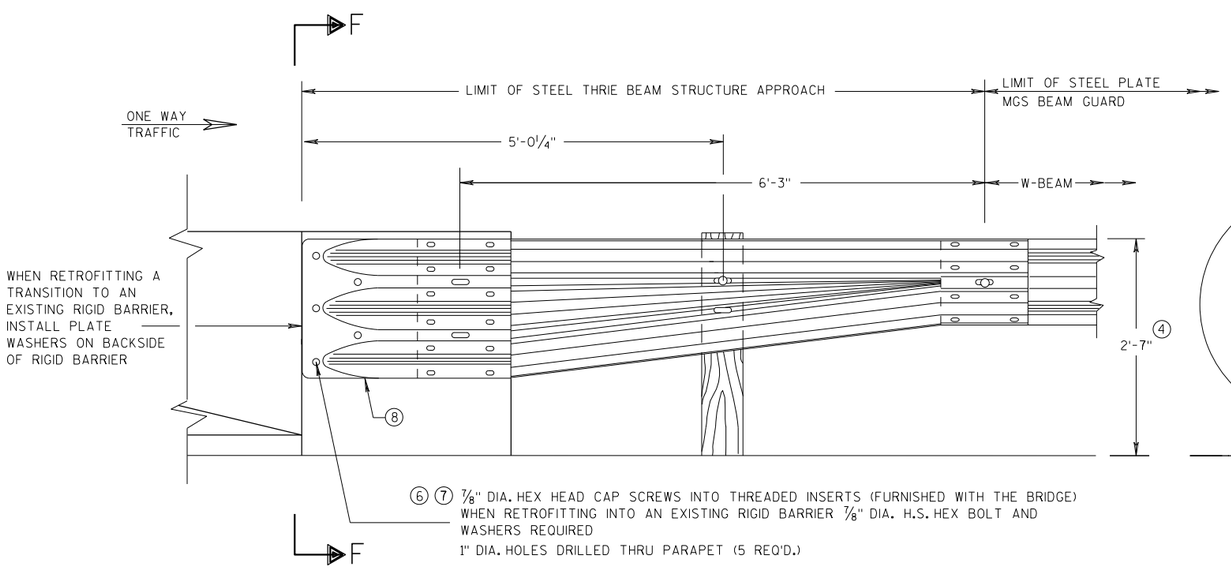

FRONT VIEW

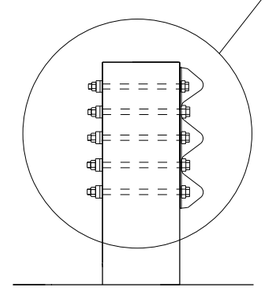

SECTION F-F

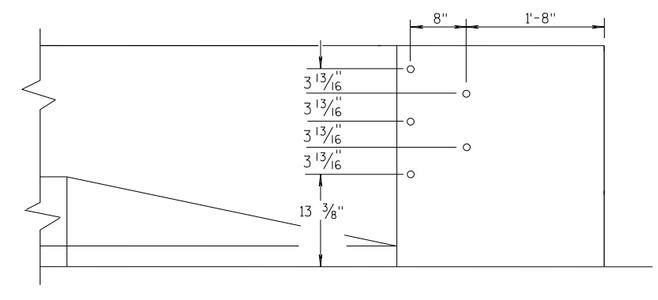

DRILL HOLE LOCATION

W BEAM TRANSITION AND CONNECTION TO BRIDGE PARAPETS WITH SQUARE ENDS

(USE ONLY ON THE TRAFFIC EXIT END OF ONE WAY BRIDGES)

MIDWEST GUARDRAIL SYSTEM THRIE BEAM TRANSITION (MGS)

STATE OF WISCONSIN
DEPARTMENT OF TRANSPORTATION

APPROVED
07/2018 — DATE
/S/ Rodney Taylor — ROADWAY STANDARDS DEVELOPMENT UNIT SUPERVISOR
FHWA

6

S.D.D. 14 B 45-5d

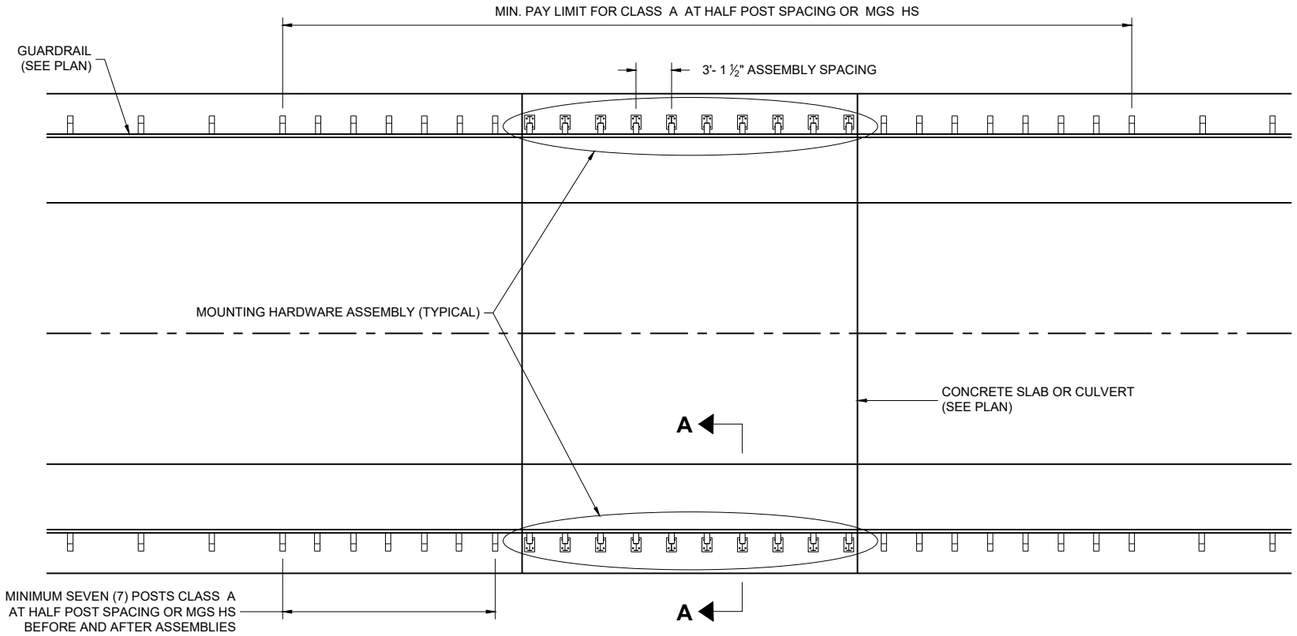

PLAN VIEW

GENERAL NOTES

HOLES DRILLED INTO CONCRETE SLAB OR CULVERT ARE 1 ⅛" DIAMETER.

POST BASE PLATE (AND BOTTOM PLATES IF USED) SHALL BE FLAT WITH ALL SURFACES SMOOTH, AND FREE FROM WARP AND ALL EDGES SMOOTH, STRAIGHT AND VERTICAL. ALL PLATE CUTS SHALL BE MACHINE OR MACHINE FLAME CUTS. CUT BOTTOM OF POST SO THAT POST WILL BE VERTICAL WHEN POST ASSEMBLY IS PLACED ON TOP OF CONCRETE. HEX BOLTS AND THREADED RODS ARE TO BE PLACED PERPENDICULAR TO THE BASE PLATE.

"H" DIMENSION WILL VARY. SEE PLAN FOR "H" DIMENSION. CONTRACTOR HAS OPTION OF INSTALLING POSTS THAT ARE TALLER THAN "H" DIMENSION AND CUT POSTS TO PROPER "H" DIMENSION IN THE FIELD. IF ELECTING TO FIELD CUT POSTS, DRILL HOLES AT APPROPRIATE LOCATIONS AND APPLY GALVANIZATION.

GALVANIZE STEEL COMPONENTS AFTER FABRICATION PER SECTION 614 OF THE WISCONSIN DEPARTMENT OF TRANSPORTATION STANDARD SPECIFICATIONS.

INSTALL 1 NUT AND 1 WASHER WHERE APPLICABLE. PROVIDE SUFFICIENT LENGTH OF BOLT OR THREADED ROD TO ALLOW FOR ¼" TO ½" OF THREAD TO BEYOND THE NUT.

1. FILL BOLT SLOT OPENINGS IN POST SHIMS AND PLATE A2 WITH NON-STAINING GRAY NON-BITUMINOUS JOINT SEALER. CAULK AROUND PERIMETER OF A2 WITH NON-STAINING GRAY NON-BITUMINOUS JOINT SEALER.
2. BOND STRENGTH OF ADHESIVE IS 1,305 PSI OR GREATER WITH A MINIMUM EMBEDMENT DEPTH OF 8-INCHES. IF MINIMUM EMBEDMENT CANNOT BE ACHIEVED, BOLT THROUGH STRUCTURE.
3. USE GAS-METAL ARC WELDING (GMAW) PROCESS WITH ER70S-3 WELDING WIRE AND ARGON-OXYGEN OR CO_2 COVER GAS.
4. OTHER COMPONENT OF BARRIER SYSTEM NOT SHOWN. SEE SDD 14B15 OR SDD 14B42 FOR MORE DETAILS.
5. HOLES TO MOUNT BEAM GUARD AND BLOCK NOT SHOWN ON DRAWINGS. SEE SDD 14B15 OR SDD 14B42 FOR MORE DETAILS.
6. ADD AND ADJUST SHIM PLATES AS NECESSARY TO INSTALL POST PLUMB. SEE A10 FOR DETAIL.

Concrete Strength (f'c) PSI	"T" Inch	Min. "K" Inch
3,500	11 ≤	9
4,000	10 ≤	8

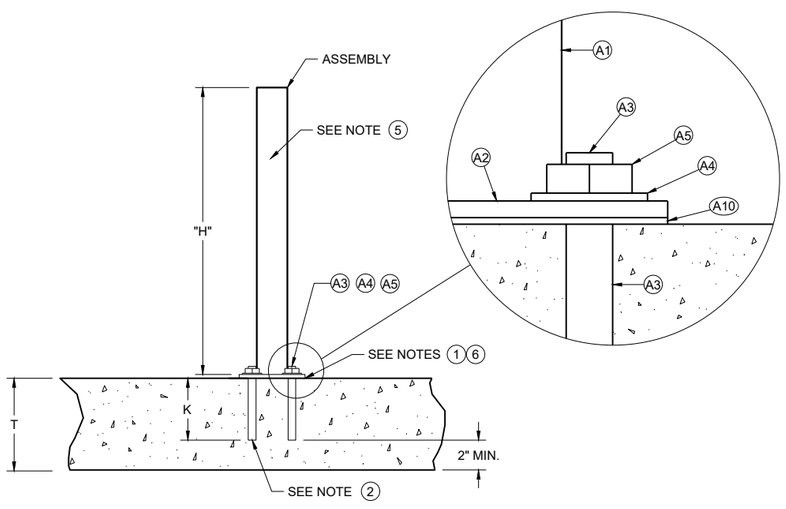

ADHESIVE ANCHOR DETAIL

SEE NOTE 4

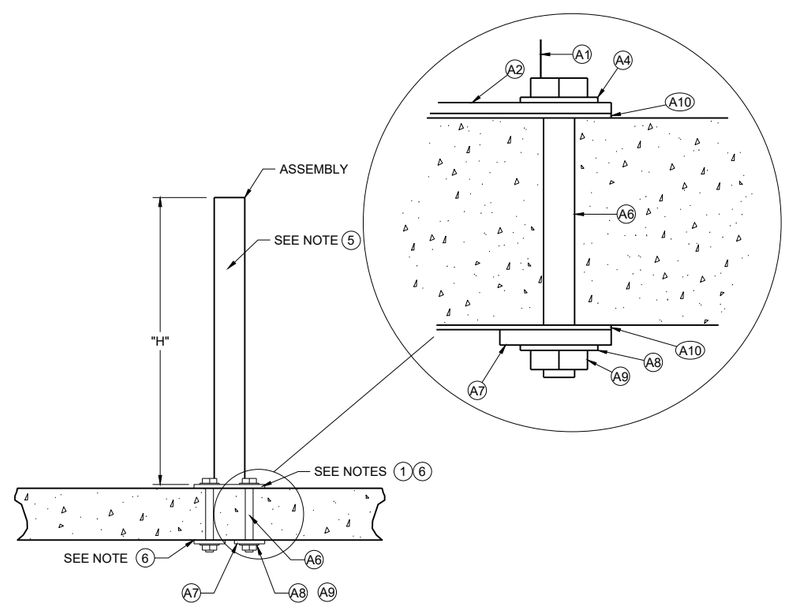

BOLT THROUGH DETAIL

SEE NOTE 4

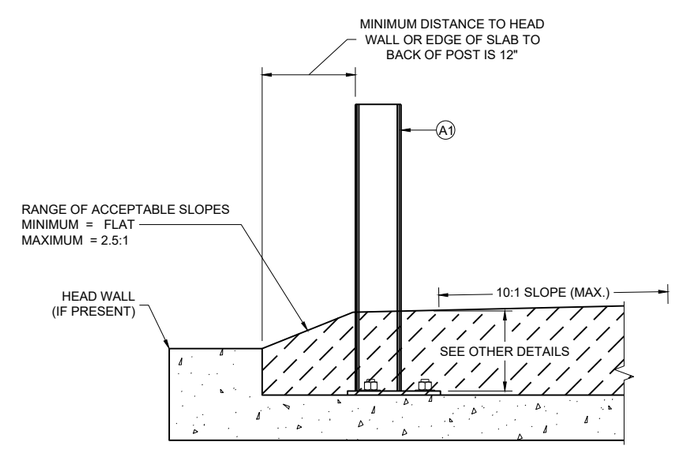

SECTION A - A

SEE NOTE 4

ANCHOR POST ASSEMBLY TOP MOUNTED

STATE OF WISCONSIN
DEPARTMENT OF TRANSPORTATION

6

SDD 14B51-05a

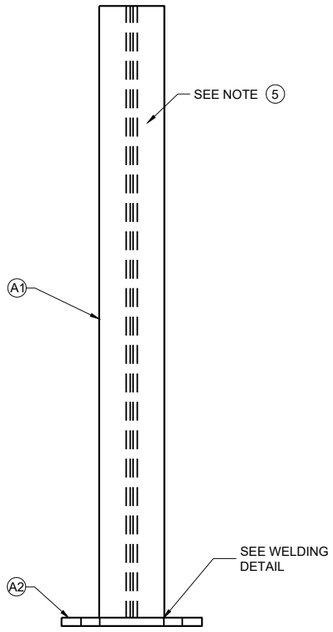

PROFILE VIEW
POST ASSEMBLY

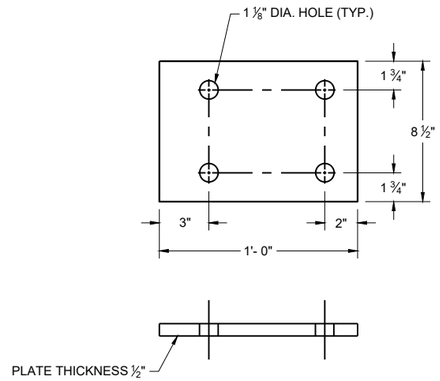

A2 STEEL BASE PLATE

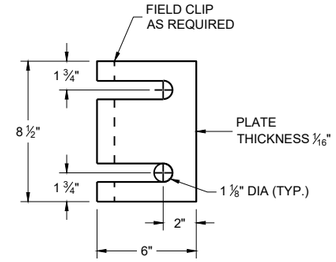

A10 SHIM PLATE

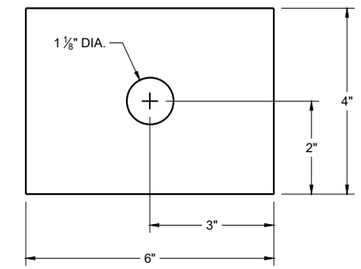

A7 PLATE WASHER

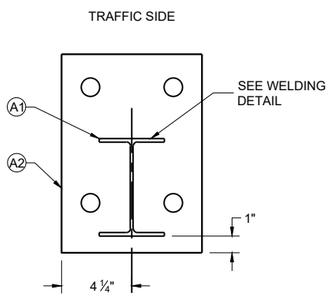

PLAN VIEW
POST ASSEMBLY

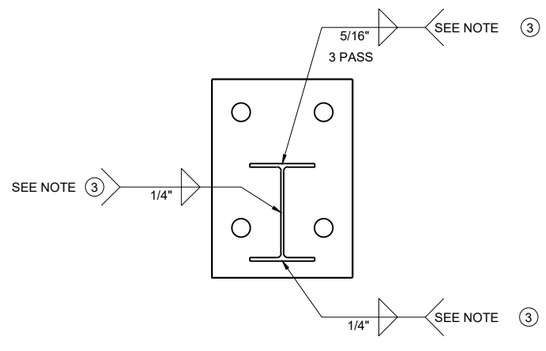

POST ASSEMBLY
WELDING DETAIL

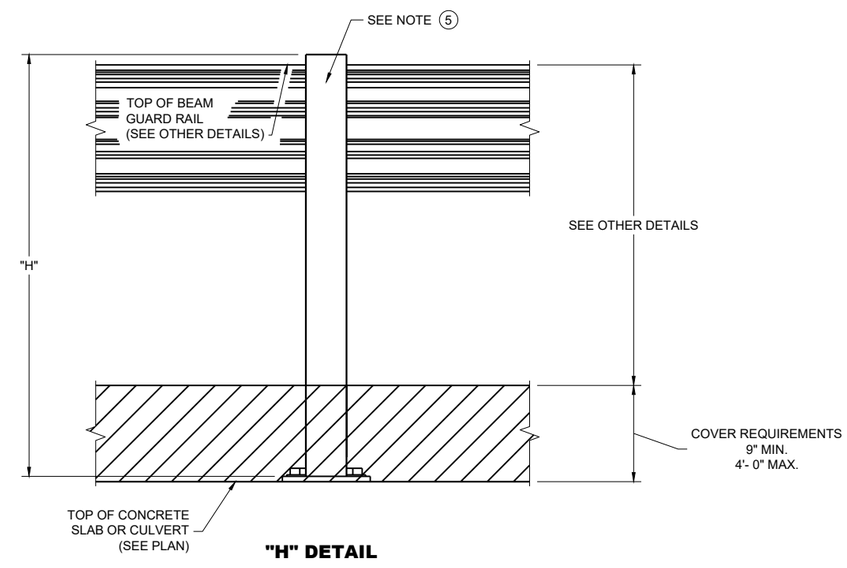

"H" DETAIL

SEE NOTE 4

ANCHOR POST ASSEMBLY
TOP MOUNTED

STATE OF WISCONSIN
DEPARTMENT OF TRANSPORTATION

6

SDD 14B51-05b

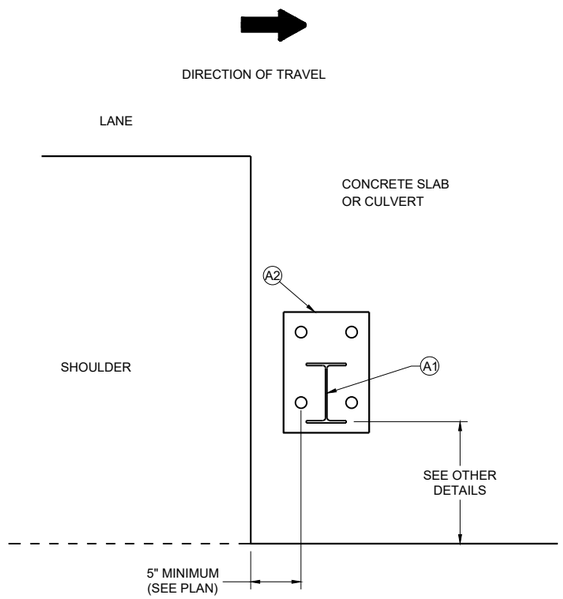

EDGE PLACEMENT

SEE NOTE 4

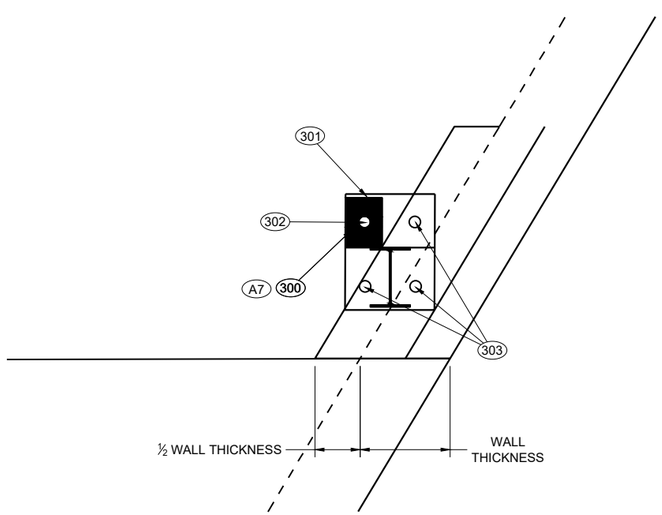

TOP MOUNT OPTION NEAR EDGE OF SLAB

BILL OF MATERIALS LIST

ITEM	DESCRIPTION	MATERIAL SPECIFICATIONS	NOTES
A1	W6x9 or W6x8.5	ASTM A992 50 KSI MIN., ASTM A709 GRADE 50, OR ASTM A36	SEE SDD 14B15 OR 14B42 LENGTH WILL VARY
A2	STEEL BASE PLATE	ASTM A992 50 KSI MIN., ASTM A529 GRADE 50, ASTM A572 GRADE 50, OR ASTM A36	
A3	1" DIA. THREADED ROD	SAE J429 GRADE 2, OR ASTM F1554 GRADE 55	LENGTH WILL VARY
A4	1" DIA. FLAT WASHER	ASTM F844	
A5	1" HEX NUT	ASTM A563A	
A6	1" DIA. HEX BOLT	ASTM A307	LENGTH WILL VARY
A7	PLATE WASHER	ASTM A992 50 KSI MIN., ASTM A529 GRADE 50, ASTM A572 GRADE 50, OR ASTM A36	¼" THICKNESS
A8	1" DIA. FLAT WASHER	ASTM F844	
A9	1" DIA. HEX NUT	ASTM A563A	
A10	SHIM PLATE	SEE A2	4 MAX PER POST

NOTES

300 Plate washer installed on underside of slab or culvert

301 Top plate assembly on top of slab or culvert

302 Bolt through option allowed

303 Adhesive Anchors

ANCHOR POST ASSEMBLY TOP MOUNTED

STATE OF WISCONSIN
DEPARTMENT OF TRANSPORTATION

APPROVED
June 2025
DATE

/S/ Rodney Taylor
WORK ZONE ENGINFFR

FHWA

6

SDD 14B51-05c

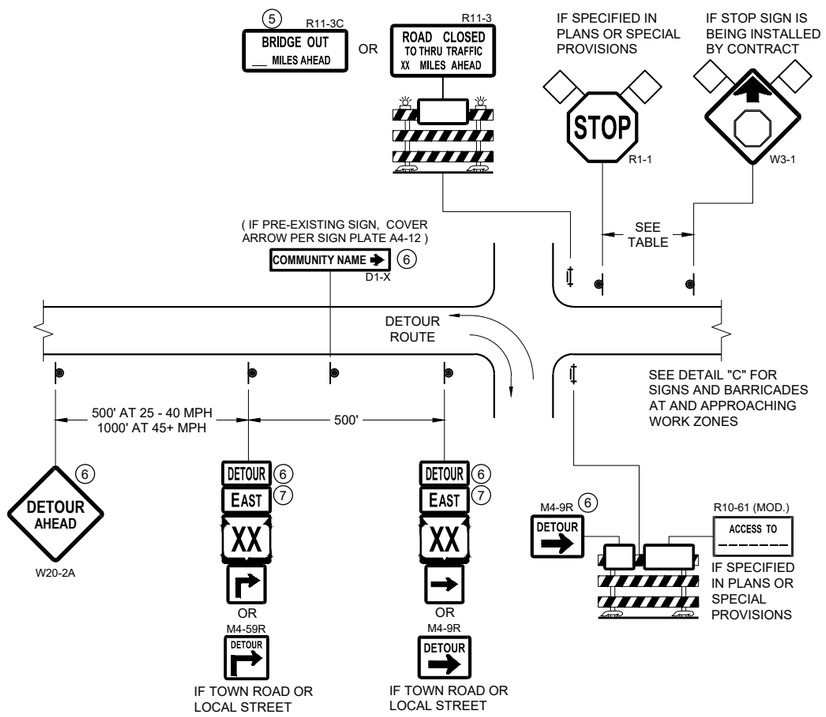

DETAIL A
MAINLINE CLOSURE WITH POSTED DETOUR

WORK ZONE GREATER THAN OR EQUAL TO ½ MILE FROM DETOUR ROUTE (1000 FEET IF URBAN)

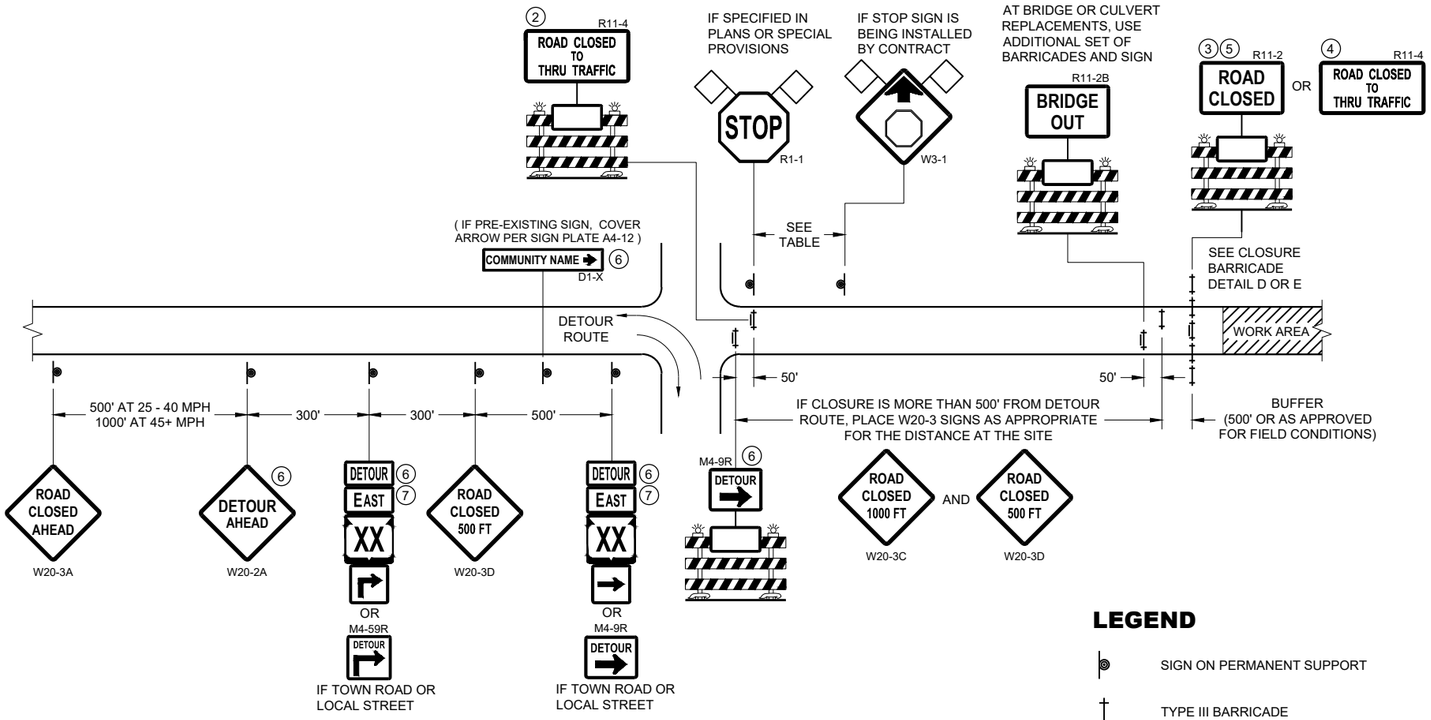

DETAIL B
MAINLINE CLOSURE WITH POSTED DETOUR

WORK ZONE LESS THAN ½ MILE FROM DETOUR ROUTE (1000 FEET IF URBAN)

LEGEND

- SIGN ON PERMANENT SUPPORT
- TYPE III BARRICADE
- TYPE III BARRICADE WITH ATTACHED SIGN
- TYPE "A" WARNING LIGHT (FLASHING)
- WORK AREA
- FLAGS, 16" X 16" MIN. (ORANGE)
- DETOUR M4 - 8
- EAST M3 - X
- XX M1 - 4 OR XX M1 - 6 OR COUNTY X M1 - 5A
- M05 - 1 OR M06 - 1

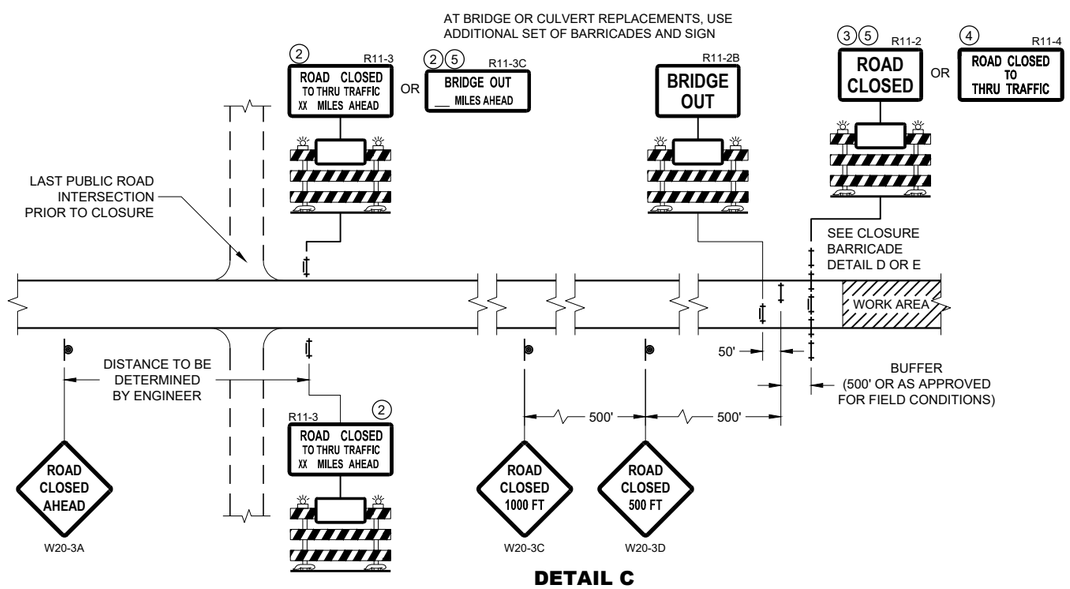

DETAIL C
MAINLINE CLOSURE, NO POSTED DETOUR

SPEED LIMIT (MPH)	"STOP AHEAD" ADVANCE WARNING DISTANCE (FT)
25	200
30	200
35	350
40	350
45	500
50	550
55	750

SEE SDD 15C2-SHEET "b" FOR GENERAL NOTES AND FOOTNOTES 1 THROUGH 7

BARRICADES AND SIGNS FOR MAINLINE CLOSURES

STATE OF WISCONSIN
DEPARTMENT OF TRANSPORTATION

APPROVED
May 2023 — DATE
/S/ Andrew Heidtke — WORK ZONE ENGINEER

FHWA

6

SDD 15C02 - 09a

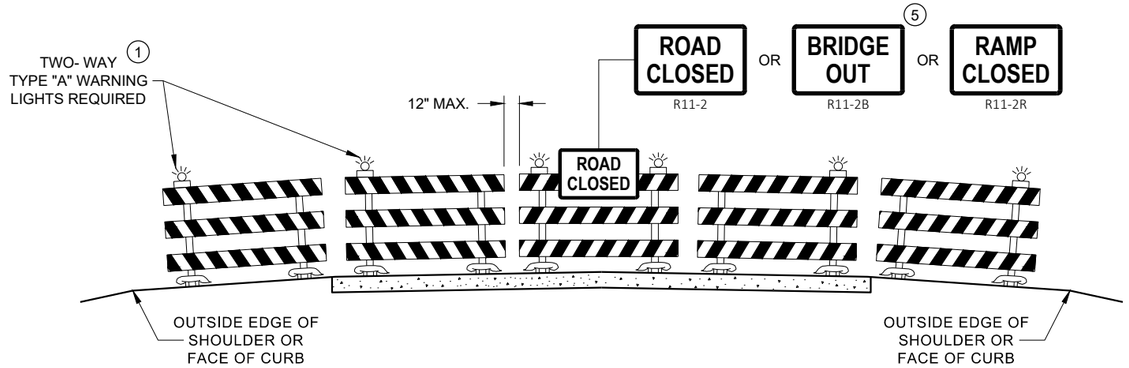

DETAIL D
ROAD CLOSURE BARRICADE DETAIL
APPROACH VIEW

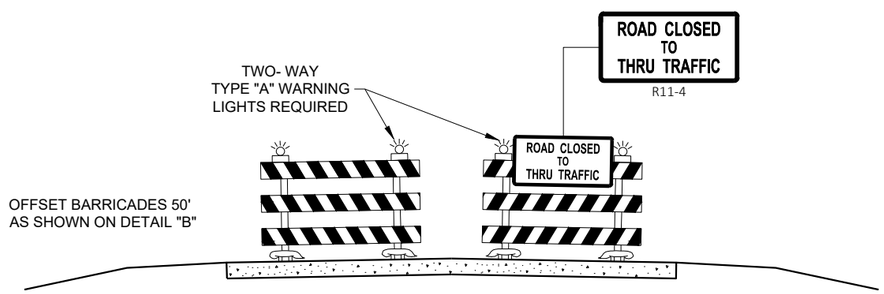

DETAIL E
LANE CLOSURE BARRICADE DETAIL
APPROACH VIEW

SEE SDD 15C2 - SHEET "a" FOR LEGEND

GENERAL NOTES

THE EXACT NUMBER, LOCATION, AND SPACING OF ALL SIGNS AND BARRICADES SHALL BE ADJUSTED TO FIT FIELD CONDITIONS AS APPROVED BY THE ENGINEER.

ANY SIGNS TEMPORARY OR EXISTING, WHICH CONFLICT WITH TRAFFIC CONTROL "IN USE", SHALL BE REMOVED OR COVERED AS NEEDED AND AS APPROVED BY THE ENGINEER.

THE SPACING BETWEEN TRAFFIC CONTROL SIGNS SHOULD BE ADJUSTED TO NOT CONFLICT WITH AND SHOULD PROVIDE A DESIRABLE MINIMUM OF 200 FEET CLEARANCE TO EXISTING SIGNS THAT WILL REMAIN IN PLACE.

BARRICADES THAT MUST BE MOVED FOR A WORK OPERATION SHALL BE IMMEDIATELY RE-ESTABLISHED UPON COMPLETION OF THE OPERATION, OR FOR CONTINUING OPERATIONS, AT THE END OF EACH WORKING DAY.

SIGNS THAT WILL BE IN PLACE LESS THAN 7 CONTINUOUS DAYS AND NIGHTS MAY BE MOUNTED ON PORTABLE SUPPORTS.

ALL TYPE III BARRICADES SHALL HAVE RAILS REFLECTORIZED ON BOTH FACES. STRIPES SHALL BE PROPERLY SLOPED DOWN TOWARD THE TRAFFIC SIDE OR AS SHOWN IN THE ROAD CLOSURE BARRICADE DETAIL "D" FOR FULL ROAD CLOSURES.

TYPE "A" LOW - INTENSITY FLASHING WARNING LIGHTS SHALL BE VISIBLE ON BOTH SIDES OF THE BARRICADE.

THE R11 - 2, R11 - 3, M4 - 9, R11 - 4, AND R10 - 61 SIGNS PLACED ON THE BARRICADES SHALL COVER NO MORE THAN THE TOP RAIL. THE SIGNS SHALL NOT COVER ANY PORTION OF THE MIDDLE RAIL OR BOTTOM RAILS.

"WO" AND "MO" SIGNS ARE THE SAME AS "W" AND "M" SIGNS EXCEPT THE BACKGROUND IS ORANGE.

ALL SIGNS SHALL BE 48" X 48" UNLESS OTHERWISE NOTED BELOW:
- R11 - 2 SHALL BE 48" X 30"
- R11 - 3 SHALL, R11 - 4 AND R10 - 61 SHALL BE 60 " X 30"
- M4 - 9 SHALL BE 30" X 24"
- M3 - X SHALL BE 24" X 12" (36" X 18" IF NEEDED TO MATCH EXISTING SIGNS)
- M4 - 8 SHALL BE 24" X 12" (36" X 18" IF NEEDED TO MATCH EXISTING SIGNS)
- M1 - 4, M1 - 5A AND M1 - 6 SHALL BE 24" X 24" (36" X 36" IF NEEDED TO MATCH EXISTING SIGNS)
- MO5 - 1 AND MO6 - 1 SHALL BE 21" X 21" (30" X 30" IF NEEDED TO MATCH EXISTING SIGNS)
- D1 - X SHALL BE AS SHOWN ON SPECIFIC PROJECT SIGNING DETAIL SHEETS.
- R1 - 1 SHALL BE 36" X 36"

1. TWO WARNING LIGHTS SHALL BE PROVIDED ON THE CENTER BARRICADE AND A MINIMUM OF ONE WARNING LIGHT SHALL BE PROVIDED ON EACH OF THE OTHER BARRICADES WITHIN THE ROADWAY LIMITS. SPACING OF THE WARNING LIGHTS SHALL BE UNIFORM TO THE EDGE OF ROADWAY AS SHOWN (APPROX. 8 FOOT LIGHT SPACING.
2. THESE SIGNS AND BARRICADES ARE NOT REQUIRED IF ROAD CLOSURE BEGINS AT AN INTERSECTION.
3. FOR ROAD CLOSURE WITHOUT LOCAL ACCESS TO PROJECT, SEE ROAD CLOSURE BARRICADE DETAIL "D".
4. FOR ROAD CLOSURE WITH LOCAL ACCESS TO PROJECT, SEE ROAD CLOSURE BARRICADE DETAIL "E".
5. FOR BRIDGE OR CULVERT REPLACEMENTS, SUBSTITUTE "BRIDGE OUT" INSTEAD OF "ROAD CLOSED" ON R11 - 2 AND R11 - 3 SIGNS.
6. INSTALL DETOUR AND COMMUNITY GUIDE SIGNS AND ARROWS ONLY IF SPECIFIED IN THE CONTRACT. IF THERE ARE EXISTING ROUTE MARKER ASSEMBLIES THAT WILL REMAIN IN PLACE, ADJUST THE LOCATION OF THE DETOUR ROUTE SIGNS TO CORRESPOND WITH THE EXISTING ASSEMBLIES. MODIFY EXISTING SIGNS WHERE POSSIBLE. SEE SPECIFIC PROJECT DETOUR SIGNING DETAIL SHEETS. IF DETOUR SIGNS ARE BEING INSTALLED BY OTHERS, PLACE THE CONTRACTED TRAFFIC CONTROL SIGNS TO ALLOW FOR PLACEMENT OF ALL WARNING, DETOUR AND GUIDE SIGNS AS SHOWN.
7. "EAST" CARDINAL DIRECTION MARKERS AND RIGHT TURN ARROWS ARE SHOWN. USE OTHER CARDINAL DIRECTIONS AND ARROWS AS APPROPRIATE.

BARRICADES AND SIGNS FOR VARIOUS CLOSURES

STATE OF WISCONSIN
DEPARTMENT OF TRANSPORTATION

APPROVED
May 2023 — DATE
/S/ Andrew Heidtke — WORK ZONE ENGINEE
FHWA

6
SDD 15C02 - 09b

THIS DRAWING PROVIDES GENERAL GUIDANCE ON TYPICAL DETOUR SIGN LAYOUT AND SPACING. SEE PROJECT DETOUR SIGNING SHEETS FOR SPECIFIC DETAILS FOR EACH PROJECT.

LEGEND

- SIGN ON PERMANENT SUPPORT
- WORK AREA
- DETOUR — M4 - 8
- EAST — M3 - X
- XX — M1 - 4 OR XX — M1 - 6 OR COUNTY X — M1 - 5A
- M05 - 1 OR M06 - 1 OR M06 - 1

GENERAL NOTES

THE EXACT NUMBER, LOCATION AND SPACING OF ALL SIGNS SHALL BE ADJUSTED TO FIT FIELD CONDITIONS AS APPROVED BY THE ENGINEER.

IF THERE ARE EXISTING ROUTE MARKER ASSEMBLIES THAT WILL REMAIN IN PLACE, ADJUST THE LOCATION OF THE DETOUR ROUTE SIGNS TO CORRESPOND WITH THE EXISTING ASSEMBLIES. SEE SPECIFIC PROJECT DETOUR SIGNING DETAIL SHEETS. MODIFY EXISTING SIGNS WHERE POSSIBLE.

THE SPACING BETWEEN TRAFFIC CONTROL AND DETOUR SIGNS SHOULD BE ADJUSTED TO NOT CONFLICT WITH AND TO PROVIDE A DESIRABLE MINIMUM OF 200 FEET CLEARANCE TO EXISTING SIGNS THAT WILL REMAIN IN PLACE.

ANY SIGNS TEMPORARY OR EXISTING, WHICH CONFLICT WITH TRAFFIC CONTROL "IN USE" SHALL BE REMOVED OR COVERED AS NEEDED AND AS APPROVED BY THE ENGINEER.

SIGNS THAT WILL BE IN PLACE LESS THAN 7 CONTINUOUS DAYS AND NIGHTS MAY BE MOUNTED ON PORTABLE SUPPORTS.

"MO" SIGNS ARE THE SAME AS "M" SIGNS EXCEPT THE BACKGROUND IS ORANGE.

SIGN SIZES SHALL BE AS FOLLOWS:

M3-X SHALL BE 24" X 12" (36" X 18" IF NEEDED TO MATCH EXISTING SIGNS)
M4-8 SHALL BE 24" X 12" (36" X 18" IF NEEDED TO MATCH EXISTING SIGNS)
M1-4, M1-5A AND M1-6 SHALL BE 24" X 24" (36" X 36" IF NEEDED TO MATCH EXISTING SIGNS)
M05-1 AND M06-1 SHALL BE 21" X 21" (30" X 30" IF NEEDED TO MATCH EXISTING SIGNS)
M4-9 AND M4-59 SHALL BE 30" X 24"
M4-8a SHALL BE 24" X 18"
G20-51 SHALL BE 60" X 24"
W20-2A SHALL BE 48" X 48"
D1-X SHALL BE AS SHOWN ON SPECIFIC PROJECT SIGNING DETAIL SHEETS.

* OPTIONAL SIGNS. SEE SPECIFIC PROJECT DETOUR SIGNING DETAIL SHEETS.

** FOR A TOWN ROAD OR LOCAL STREET DETOURED ONTO A STATE TRUNK HIGHWAY, PLACE A ROAD NAME PLAQUE ABOVE THE M4-9 SIGN AS SPECIFIED IN THE CONTRACT.

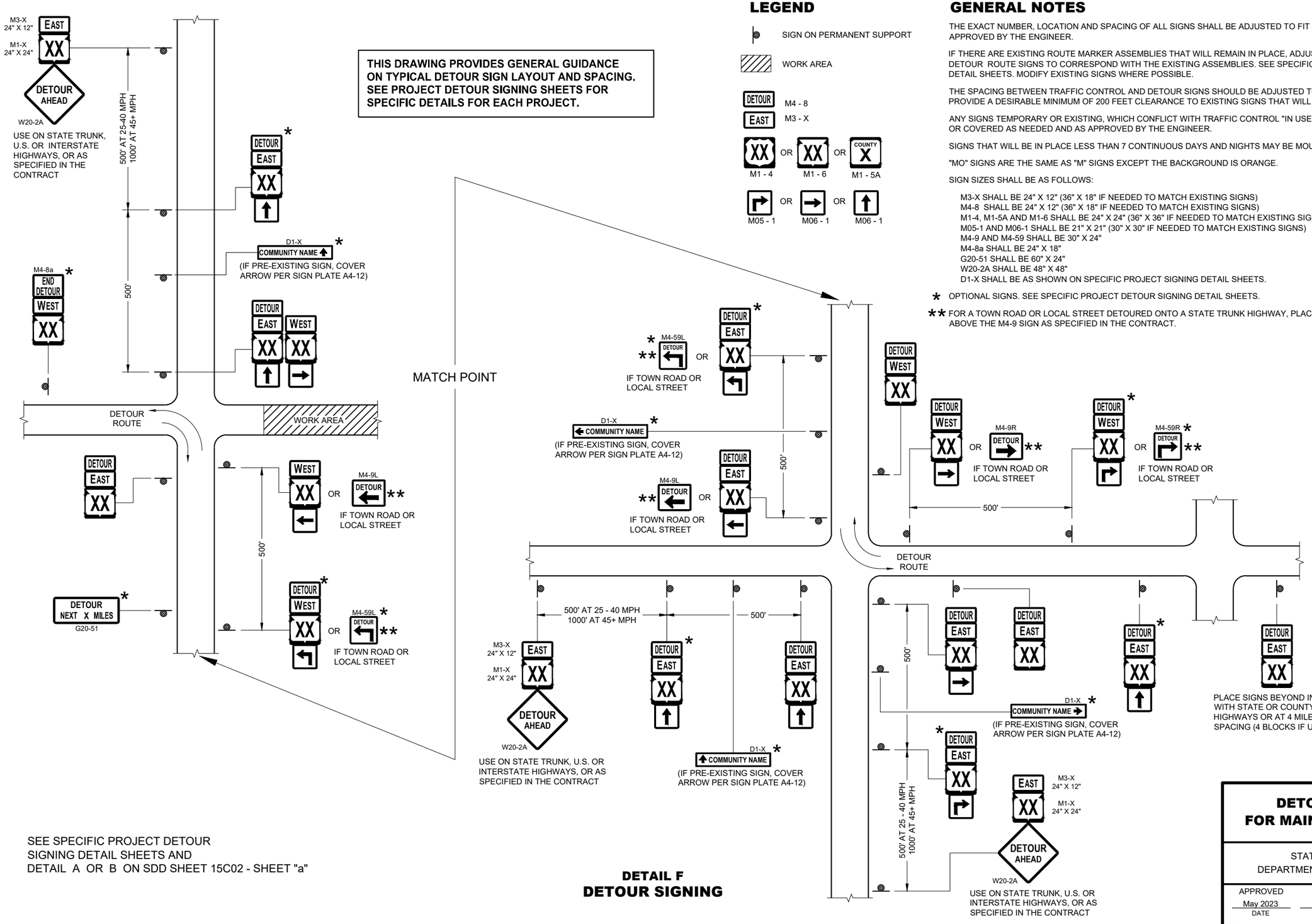

SEE SPECIFIC PROJECT DETOUR SIGNING DETAIL SHEETS AND DETAIL A OR B ON SDD SHEET 15C02 - SHEET "a"

DETAIL F
DETOUR SIGNING

DETOUR SIGNING FOR MAINLINE CLOSURES

STATE OF WISCONSIN
DEPARTMENT OF TRANSPORTATION

APPROVED
May 2023 — DATE
/S/ Andrew Heidtke — WORK ZONE ENGINEER
FHWA

GENERAL NOTES

THE EXACT NUMBER, LOCATION, AND SPACING OF ALL SIGNS AND DEVICES SHALL BE ADJUSTED TO FIT FIELD CONDITIONS.

THE SPACING BETWEEN TRAFFIC CONTROL SIGNS SHOULD BE ADJUSTED TO NOT CONFLICT WITH AND SHOULD PROVIDE A MINIMUM OF 200 FEET (500 FEET DESIRABLE) CLEARANCE TO EXISTING SIGNS THAT WILL REMAIN IN PLACE.

ALL SIGNS ARE 48" X 48" UNLESS OTHERWISE NOTED.

SIGNS THAT WILL BE IN PLACE LESS THAN SEVEN CONTINUOUS DAYS AND NIGHTS MAY BE MOUNTED ON PORTABLE SUPPORTS.

IF A "STOP" SIGN MUST BE REMOVED FOR A WORK OPERATION, A TEMPORARY "STOP" SIGN SHALL BE PLACED PRIOR TO THE SIGN REMOVAL, OR A FLAGGER SHALL BE PROVIDED UNTIL THE SIGN IS REESTABLISHED.

* OMIT G20-1 SIGNS IF LENGTH OF WORK AREA IS 2 MILES OR LESS

** PLACE AN ADDITIONAL W20-1A "ROAD WORK AHEAD" SIGN IF WORK AREA WITHIN THE PROJECT IS SEPARATED BY MORE THAN 2 MILES FROM PREVIOUS WORK AREA.

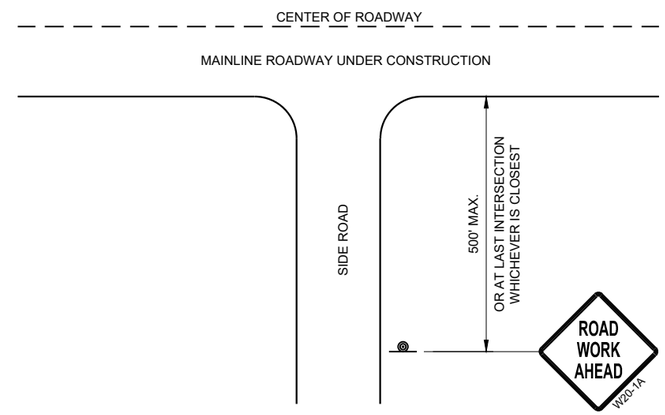

TYPICAL SIDE ROAD APPROACH WARNING SIGN DETAIL

LEGEND

- SIGN ON PERMANENT SUPPORT
- DIRECTION OF TRAFFIC
- WORK AREA

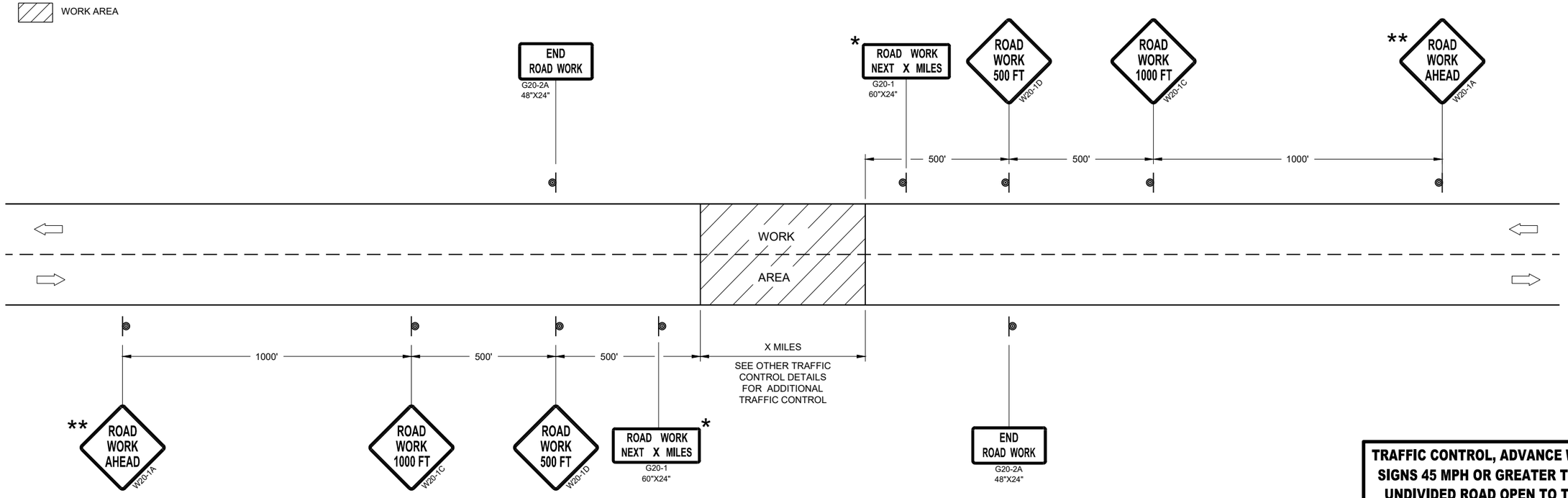

TRAFFIC CONTROL, ADVANCE WARNING SIGNS 45MPH OR GREATER

TRAFFIC CONTROL, ADVANCE WARNING SIGNS 45 MPH OR GREATER TWO-WAY UNDIVIDED ROAD OPEN TO TRAFFIC

STATE OF WISCONSIN
DEPARTMENT OF TRANSPORTATION

APPROVED
July 2018 — DATE
/S/ Andrew Heidtke — WORK ZONE ENGINEE
FHWA

6
SDD 15C04 - 05

GENERAL NOTES

DETAILS OF CONSTRUCTION NOT SHOWN ON THIS DRAWING SHALL CONFORM TO STANDARD SPECIFICATIONS AND SPECIAL PROVISIONS.

1. LOCATE THE NO PASSING ZONE W14-3 SIGN WITHIN 50 FEET OF THE "T" MARKING
2. MEASURE FROM EDGE OF MARKING TO JOINT LINE. THIS DOES NOT INCLUDE SPACE NEEDED FOR GROOVING OPERATIONS.

*CONFIRM MARKING LINE WIDTH WITH THE MISCELLANEOUS QUANTITIES

LEGEND

"T" MARKING

SIGN ON PERMANENT SUPPORT

DIRECTION OF TRAFFIC

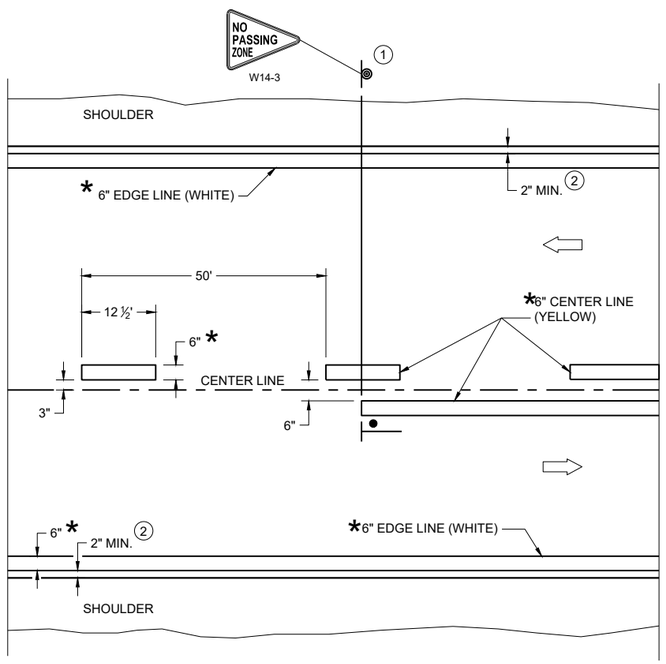

TWO WAY TRAFFIC

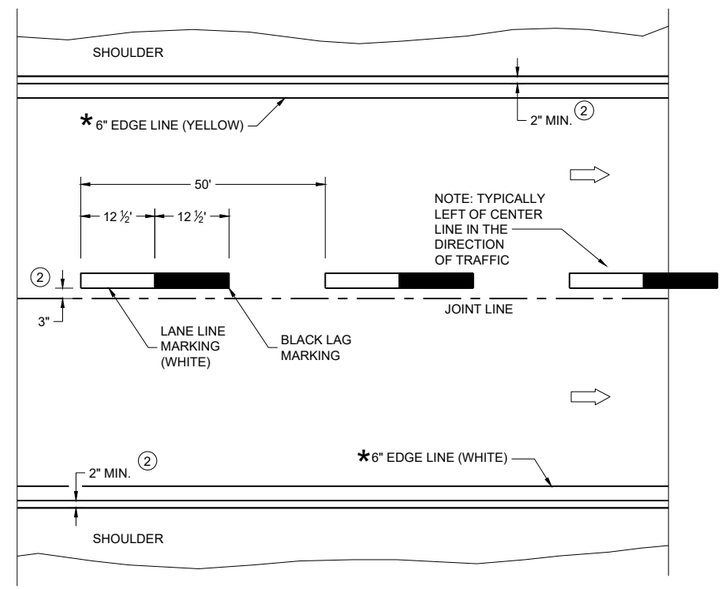

ONE WAY TRAFFIC

PERMANENT PAVEMENT MARKING

6

SDD 15C08-23a

PERMANENT LONGITUDINAL PAVEMENT MARKINGS

STATE OF WISCONSIN
DEPARTMENT OF TRANSPORTATION

APPROVED
May 2023 — DATE
/S/ Jeannie Silver — Statewide Pavement Marking Engineer
FHWA

6

SDD 15C08-23a

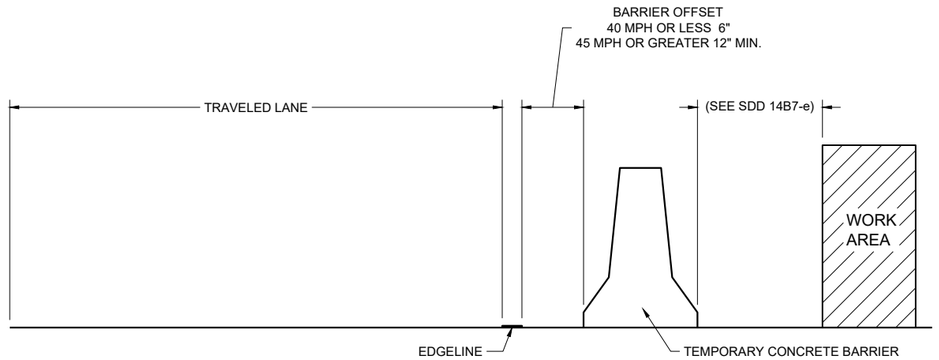

TEMPORARY BARRIER OFFSET FROM EDGELINE

GENERAL NOTES

DETAILS OF CONSTRUCTION NOT SHOWN ON THIS DRAWING SHALL CONFORM TO STANDARD SPECIFICATIONS AND SPECIAL PROVISIONS.

LEGEND

DIRECTION OF TRAFFIC

*CONFIRM MARKING LINE WIDTH WITH THE MISCELLANEOUS QUANTITIES

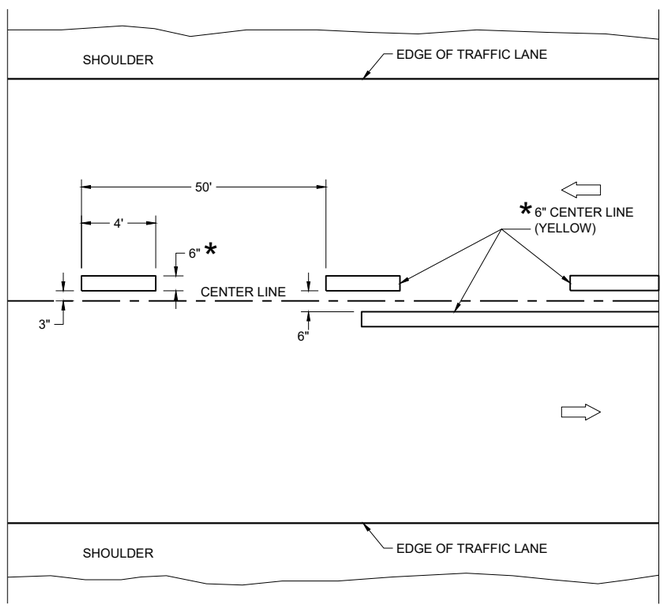

TWO WAY TRAFFIC

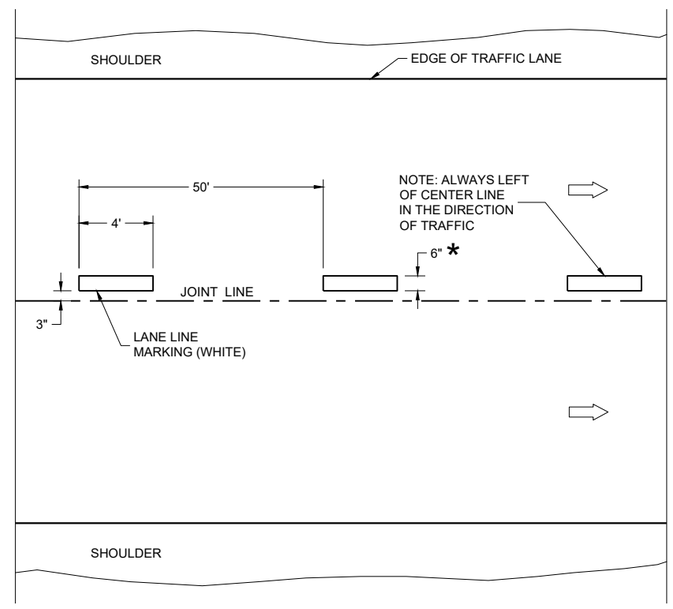

ONE WAY TRAFFIC

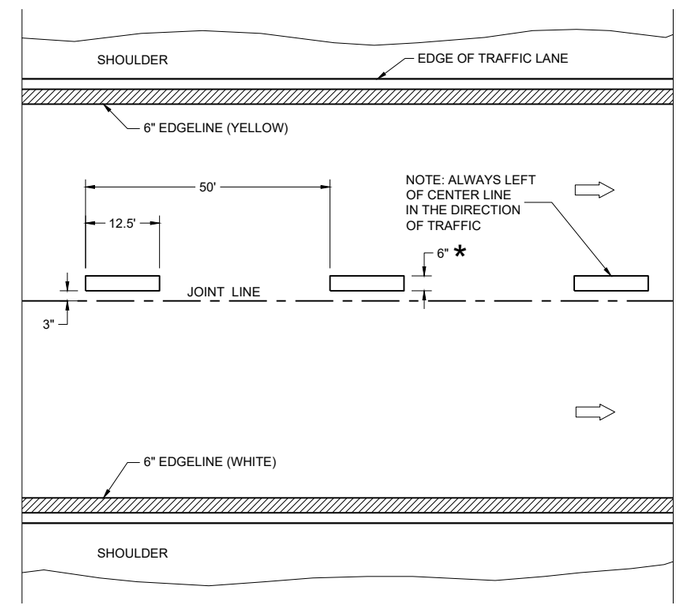

FREEWAYS AND EXPRESSWAYS

TEMPORARY PAVEMENT MARKING

TEMPORARY LONGITUDINAL PAVEMENT MARKING	
STATE OF WISCONSIN DEPARTMENT OF TRANSPORTATION	
APPROVED May 2023 DATE	/S/ Jeannie Silver Statewide Pavement Marking Engineer
FHWA	

6

SDD 15C08-23b

6

SDD 15C08-23b

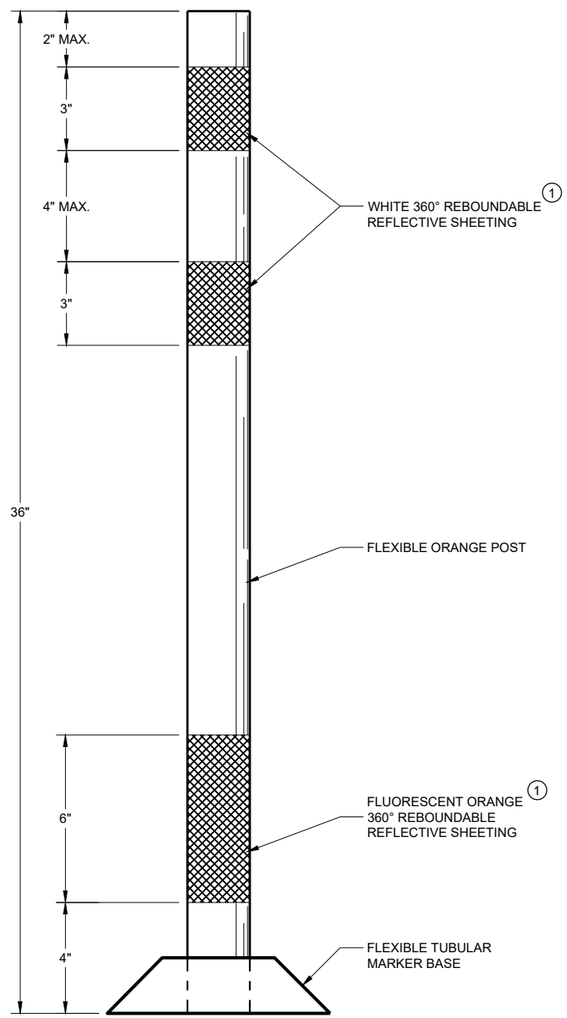

FLEXIBLE TUBULAR MARKER POST WORK ZONE

GENERAL NOTES

DETAILS OF CONSTRUCTION NOT SHOWN ON THIS DRAWING SHALL CONFORM TO THE PERTINENT REQUIREMENTS OF THE STANDARD SPECIFICATIONS AND THE APPLICABLE SPECIAL PROVISIONS.

SURFACE MOUNTED BASES SHALL BE FURNISHED IN ACCORDANCE WITH MANUFACTURERS RECOMMENDATIONS TO BE COMPATIBLE WITH FLEXIBLE TUBULAR MARKER POSTS TO A SIZE AND SHAPE THAT WILL PROVIDE A STABLE POST FOUNDATION WHEN SECURED TO THE PAVEMENT.

THE ASPHALTIC ADHESIVE OR BUTYL PAD FURNISHED SHALL BE IN ACCORDANCE WITH MANUFACTURERS RECOMMENDATIONS, UNLESS DIRECTED BY THE ENGINEER TO USE BOLTS.

(1) REFLECTIVE SHEETING SHALL FOLLOW THE REQUIREMENTS IN THE APPROVED PRODUCTS LISTING FOR SIGN SHEETING.

6

SDD 15C11 - 10a

CHANNELIZING DEVICES FLEXIBLE TUBULAR MARKER POST

STATE OF WISCONSIN
DEPARTMENT OF TRANSPORTATION

APPROVED
November 2022 — DATE
/S/ Andrew Heidtke — WORK ZONE ENGINEE
FHWA

6

SDD 15C11 - 10a

GENERAL NOTES

1. REFLECTIVE SHEETING SHALL FOLLOW THE REQUIREMENTS IN THE APPROVED PRODUCTS LISTING FOR SIGN SHEETING.
2. LOCATION OF WARNING LIGHTS WHEN SHOWN ON THE PLAN.

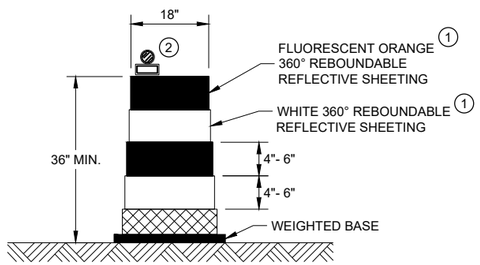

DRUM

BALLAST WIDTHS
RANGE FROM 24"-36"

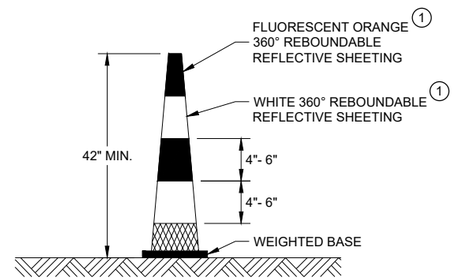

42" CONE

DO NOT USE IN TAPERS
½ SPACING OF DRUMS

BALLAST WIDTHS
RANGE FROM 14"-20"

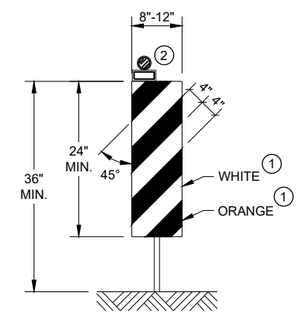

VERTICAL PANEL

THE STRIPES SHALL SLOPE DOWNWARD TO
THE TRAFFIC SIDE FOR CHANNELIZATION.

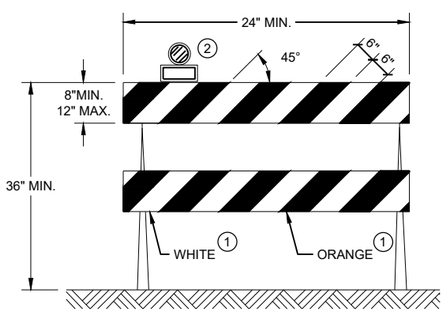

TYPE II BARRICADE

FOR RAILS LESS THAN 36" LONG, 4" WIDE STRIPES
MAY BE USED. ALL STRIPES SHALL SLOPE DOWNWARD
TO THE TRAFFIC SIDE FOR CHANNELIZATION.

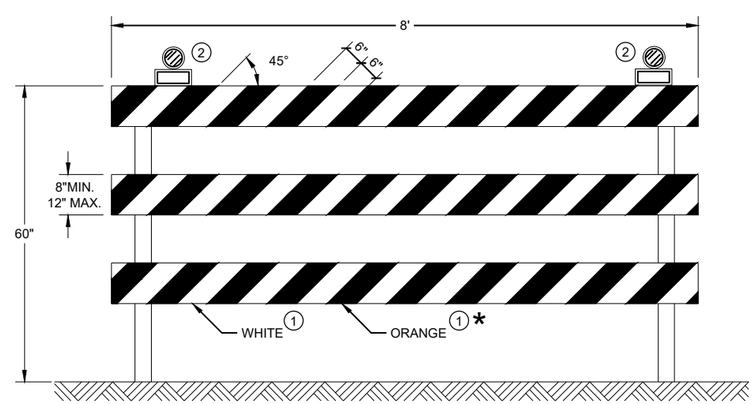

TYPE III BARRICADE

IF SIGN MOUNTED, DO NOT COVER MORE THAN 50% OF THE TOP
TWO RAILS OR 33% OF THE TOTAL AREA OF THE THREE RAILS.

* IF USED FOR A PERMANENT APPLICATION USE RED SHEETING.

CHANNELIZING DEVICES
DRUMS, CONES, BARRICADES
AND VERTICAL PANELS

STATE OF WISCONSIN
DEPARTMENT OF TRANSPORTATION

APPROVED
November 2022 — /S/ Andrew Heidtke
DATE — WORK ZONE ENGINEE
FHWA

6

6

SDD 15C11 - 10b

SDD 15C11 - 10b

LEGEND

SIGN ON PORTABLE OR PERMANENT SUPPORT

TEMPORARY PORTABLE RUMBLE STRIP ARRAY

DIRECTION OF TRAFFIC

WORK AREA

FLAGGER, EQUIPPED WITH STOP/SLOW PADDLE FASTENED ON SUPPORT STAFF

GENERAL NOTES

DETAILS OF TRAFFIC CONTROL DEVICES AND INSTALLATION NOT SHOWN ON THIS DRAWING SHALL CONFORM TO THE PERTINENT REQUIREMENTS OF THE STANDARD SPECIFICATIONS, THE SPECIAL PROVISIONS, AND THE MANUAL ON UNIFORM TRAFFIC CONTROL DEVICES.

ALL SIGNS ARE 48" X 48" UNLESS OTHERWISE NOTED.

"WO" SIGNS ARE THE SAME AS "W" SIGNS EXCEPT THE BACKGROUND IS ORANGE.

THE EXACT NUMBER, LOCATION AND SPACING OF ALL SIGNS, DEVICES, AND LOCATION OF ALL FLAGGERS SHALL BE ADJUSTED TO FIT FIELD CONDITIONS AS APPROVED BY THE ENGINEER.

THE FIRST ADVANCE WARNING SIGN SHOULD TYPICALLY BE LOCATED IN ADVANCE OF THE ANTICIPATED TRAFFIC BACKUP OR QUEUE.

WHEN A SIDE ROAD OR RAMP INTERSECTS THE FACILITY ON WHICH THE WORK IS BEING PERFORMED, ADDITIONAL TRAFFIC CONTROLS SHALL BE PROVIDED AS SPECIFIED IN THE PLANS AND/OR THE SPECIAL PROVISIONS OR AS APPROVED BY THE ENGINEER.

FLAGGING

FLAGGERS SHALL BE IN SIGHT OF EACH OTHER OR IN DIRECT COMMUNICATION AT ALL TIMES. THEY SHALL BE EQUIPPED WITH STOP/SLOW PADDLES FASTENED ON SUPPORT STAFFS. WHEN THE FLAGGING OPERATION IS NOT IN EFFECT REMOVE TEMPORARY PORTABLE RUMBLE STRIPS PRIOR TO COVERING OR REMOVING ALL ADVANCE SIGNING.

(1) FOR MOVING WORK OPERATIONS, POST ADDITIONAL W20-7A FLAGGER SIGNS AT APPROXIMATELY 3,500' INTERVALS IN THE MOVING WORK OPERATION OR AS APPROVED BY THE ENGINEER.

(2) SIGN NOT REQUIRED IF FLAGGING OPERATION OCCURS WITHIN A SIGNED ROAD WORK ZONE AREA.

WHEN THE DISTANCE BETWEEN FLAGGERS EXCEEDS 2 MILES, A PILOT CAR IS REQUIRED. WHEN CURVES REDUCE SIGHT DISTANCE BELOW 400', A PILOT CAR IS REQUIRED.

TEMPORARY PORTABLE RUMBLE STRIPS

UTILIZE TEMPORARY PORTABLE RUMBLE STRIPS ON ALL FLAGGING OPERATIONS.

(3) EACH TEMPORARY PORTABLE RUMBLE STRIP ARRAY CONSISTS OF THREE RUMBLE STRIPS PLACED TRANSVERSE ACROSS THE LANE AT THE LOCATIONS SHOWN. WITHIN EACH ARRAY, SPACING BETWEEN RUMBLE STRIPS SHALL BE 15 FEET ON CENTER

ONLY USE TEMPORARY PORTABLE RUMBLE STRIPS FROM THE APPROVED PRODUCTS LIST.

INSTALL TEMPORARY RUMBLE STRIPS PER MANUFACTURER'S RECOMMENDATIONS.

PLACE ADVANCE SIGNING PRIOR TO INSTALLING TEMPORARY RUMBLE STRIPS.

DO NOT INSTALL TEMPORARY PORTABLE RUMBLE STRIPS ON GRAVEL, MILLED SURFACES, OR ASPHALT THAT HAS BEEN PAVED LESS THAN 12 HOURS.

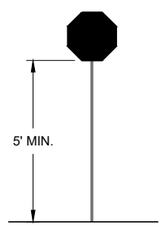

STOP/SLOW PADDLE ON SUPPORT STAFF

SIGN AND TEMPORARY RUMBLE STRIP ARRAY SPACING TABLE

SPEED LIMIT	SPACING "A"
25-30 MPH	200'
35-40 MPH	350'
45-55 MPH	500'

WO3-4

USE OF WO3-4 SIGN IS OPTIONAL. WHEN USED, THIS SIGN SHALL BE LOCATED BETWEEN THE W20-7A AND W20-4A SIGNS, USING SPACING "A".

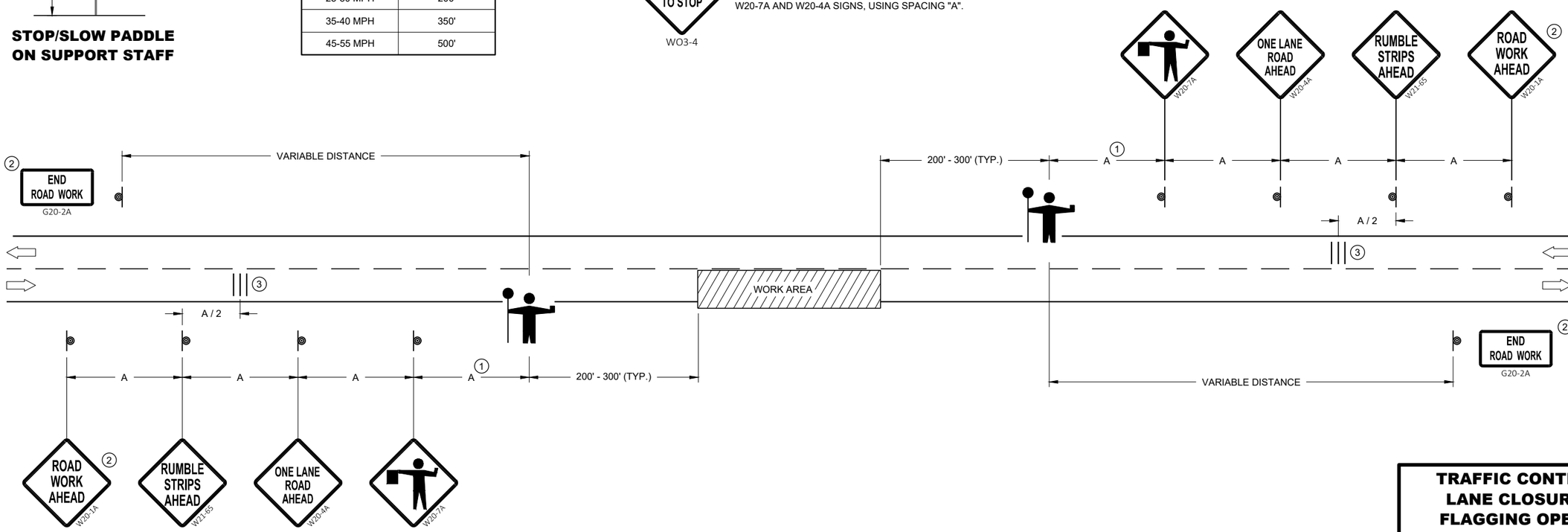

TRAFFIC CONTROL FOR LANE CLOSURE WITH FLAGGING OPERATION

STATE OF WISCONSIN
DEPARTMENT OF TRANSPORTATION

APPROVED
May 2022 — DATE
/S/ Andrew Heidtke — WORK ZONE ENGINEE
FHWA

LEGEND

V1 LEAD VEHICLE

V2 MARKING VEHICLE

V3 SHADOW VEHICLE

TRUCK MOUNTED ATTENUATOR (TMA)

SIGN ON TEMPORARY SUPPORT

DIRECTION OF TRAFFIC

GENERAL NOTES

ALL VEHICLES SHALL BE EQUIPPED WITH TWO 360 DEGREE HIGH INTENSITY YELLOW FLASHING LIGHTS OR STROBE LIGHTS AND OPERATED WITH HEADLIGHTS TURNED ON.

ALL VEHICLES SHALL BE EQUIPPED WITH REAR FACING TYPE B OR C FLASHING ARROW PANEL OPERATING IN CAUTION MODE. SIGNS PLACED ON VEHICLES MUST NOT OBSCURE THE ARROW PANEL.

ALL SIGNS ARE 48" X 48" UNLESS OTHERWISE SPECIFIED.

DISTANCE BETWEEN VEHICLES MAY VARY ACCORDING TO TERRAIN, SIGHT DISTANCE, PAINT DRYING TIME, AND OTHER FACTORS. WHENEVER ADEQUATE STOPPING SIGHT DISTANCE EXISTS TO THE REAR, SHADOW VEHICLES SHOULD MAINTAIN THE MINIMUM DISTANCE FROM THE WORK VEHICLE AND PROCEED AT THE SAME SPEED AS THE WORK VEHICLE. SHADOW VEHICLES SHOULD SLOW DOWN IN ADVANCE OF VERTICAL AND HORIZONTAL CURVES THAT RESTRICT SIGHT DISTANCE.

THE WORK AND SHADOW VEHICLES SHOULD PULL OVER PERIODICALLY TO ALLOW TRAFFIC TO PASS.

WHEN NO WORK ACTIVITY IS TAKING PLACE, REMOVE OR LAY STATIONARY SIGNS AND SUPPORTS FLAT ON THE GRADE WITH UPRIGHTS ORIENTED PARALLEL TO AND DOWNSTREAM FROM TRAFFIC.

CONES SHOULD BE USED BETWEEN THE MARKING AND SHADOW VEHICLE AT 100 FOOT SPACING. CONES MAY BE OMITTED ON PAINTED LINE IF APPROVED BY THE ENGINEER. CONSIDER PAVEMENT MARKING DRY OR CURE TIMES AND TRAFFIC VOLUME.

CONES SHALL BE A MINIMUM OF 28" FOR WET PAVEMENT MARKING .

1. SIGNS SHALL BE REPEATED APPROXIMATELY EVERY THREE MILES AND AFTER EVERY MAJOR INTERSECTION.
2. IF CONSTRUCTION WORK ZONE SIGNS ARE IN PLACE, W20-1A OR W21-63 ARE NOT REQUIRED.
3. V1 AND V2 CAN BE SWITCHED SO THAT THE MARKER IS THE LEAD VEHICLE.

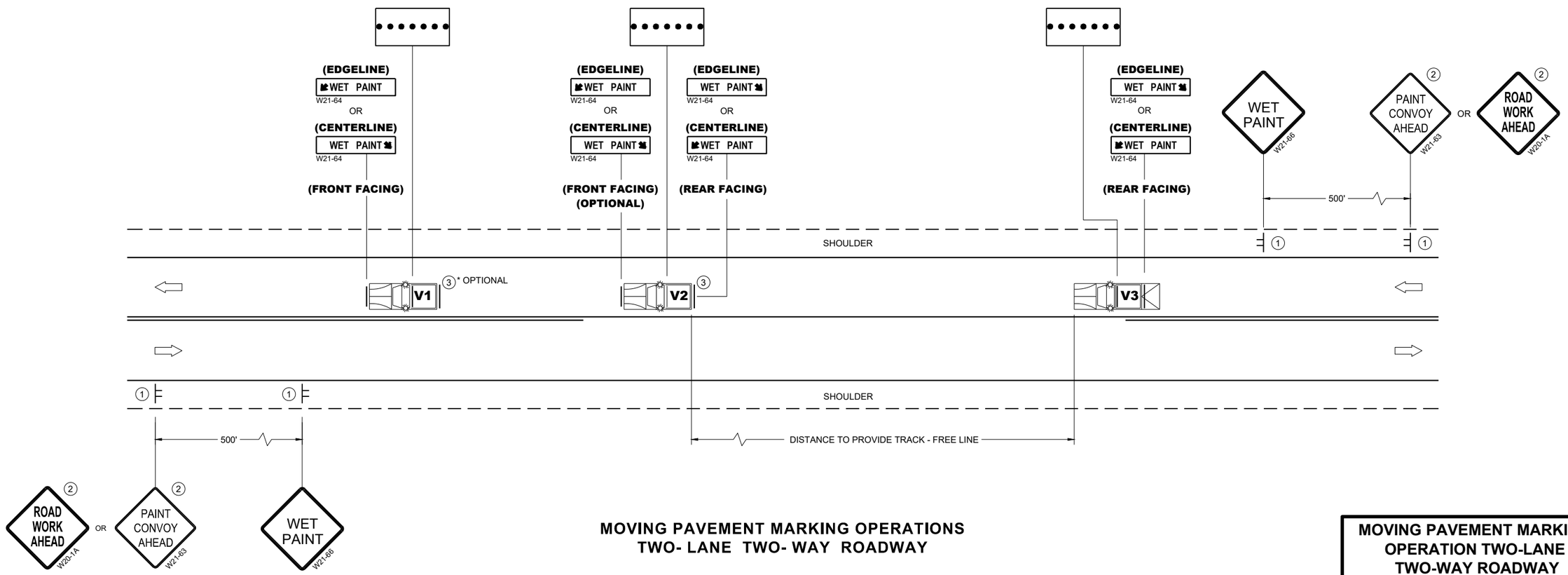

MOVING PAVEMENT MARKING OPERATIONS
TWO- LANE TWO- WAY ROADWAY

MOVING PAVEMENT MARKING OPERATION TWO-LANE TWO-WAY ROADWAY

STATE OF WISCONSIN
DEPARTMENT OF TRANSPORTATION

APPROVED
March 2024 — DATE
/S/ Andrew Heidtke — WORK ZONE ENGINEER
FHWA

6

SDD 15C19-9a

GENERAL NOTES

STOP SIGN SHALL BE PLACED A MINIMUM OF 6 FEET TO A MAXIMUM OF 50 FEET FROM THE EDGELINE LOCATION.

1. 18-INCH STOP LINES MAY BE DELETED OR ADDED BY THE REGION MARKING ENGINEER BASED ON VISIBILITY AND SIGHT LINES.
2. NO STOP LINE IS REQUIRED IF STOP SIGN IS LESS THAN OR EQUAL TO 40 FEET FROM THE EDGELINE.
3. NO STOP LINE IS REQUIRED IF STOP SIGN IS LESS THAN OR EQUAL TO 30 FEET FROM THE FLANGE LINE EXTENSION.
4. MOVE CLOSER TO THE EDGE OF TRAVEL LINE AS NEEDED FOR VISIBILITY AND SIGHT LINES (NO CLOSER THAN 4 FEET).
5. LADDER BAR CROSSWALKS SHOULD ONLY BE USED FOR MID BLOCK CROSSINGS. USE 2 - 6" TRANSVERSE LINES.
6. POSTED SPEED LIMITS OF 40 MPH OR GREATER USE A MINIMUM WIDTH OF 8' FOR MIDBLOCK CROSSWALKS

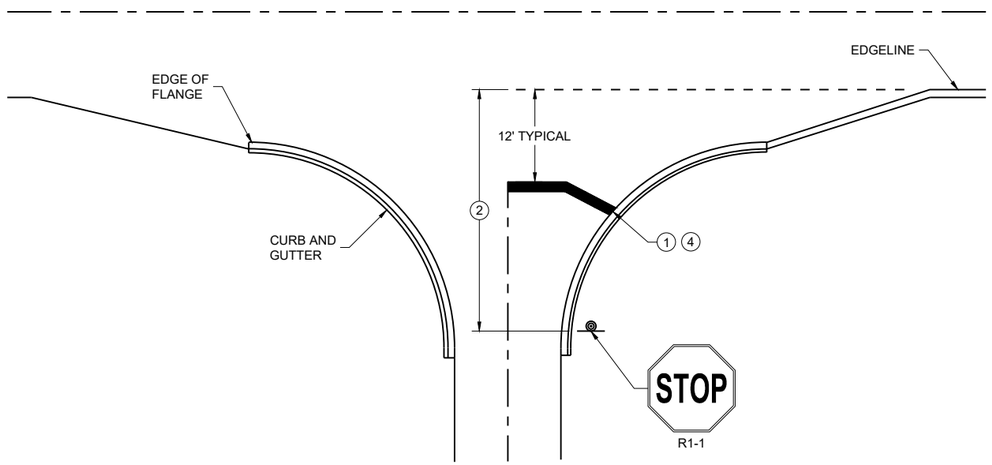

TYPICAL STOP LINE PAVEMENT MARKING WITH CURB AND GUTTER

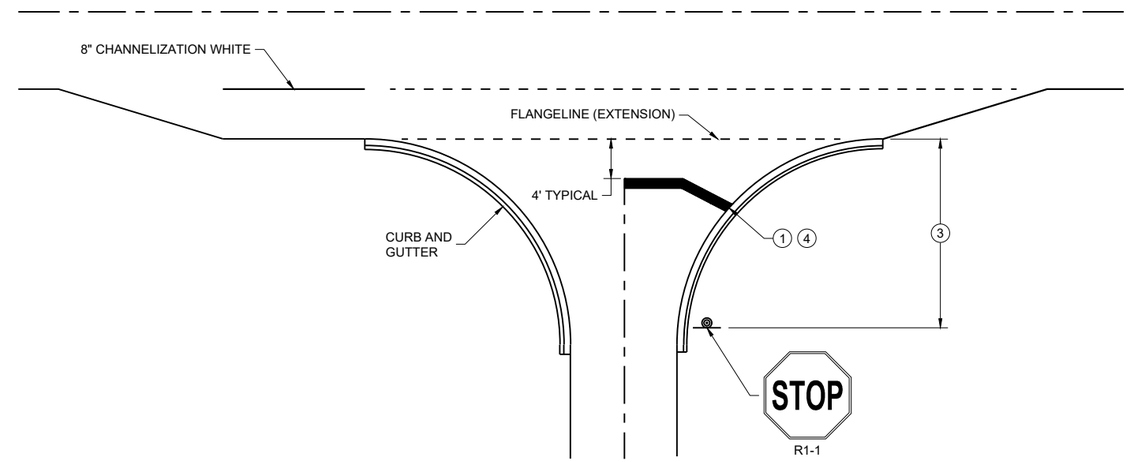

TYPICAL STOP LINE PAVEMENT MARKING FOR SIDE ROADS WITH RIGHT TURN LANE

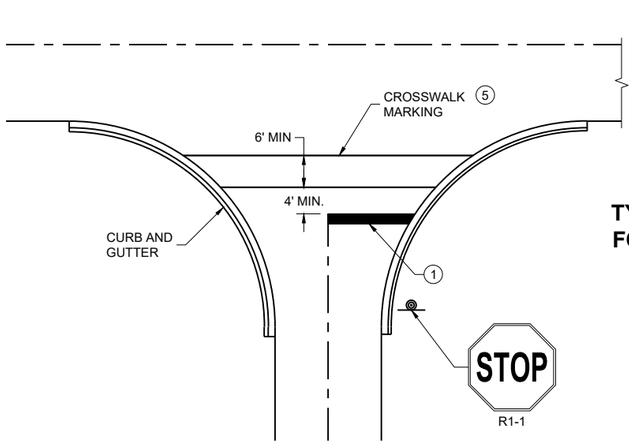

TYPICAL STOP LINE PAVEMENT MARKING FOR SIDE ROADS WITH CROSSWALK MARKING

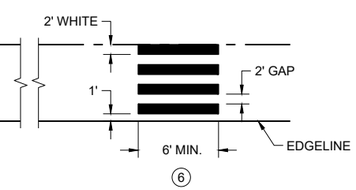

TYPICAL PAVEMENT MARKING FOR MID-BLOCK CROSSWALK 5

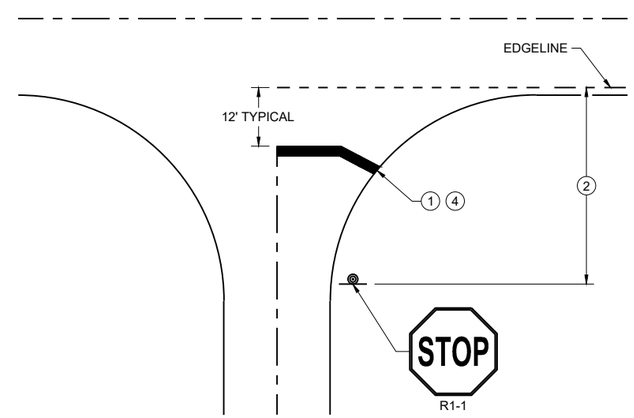

TYPICAL STOP LINE PAVEMENT MARKING WITHOUT CURB AND GUTTER

STOP LINE AND CROSSWALK PAVEMENT MARKING

STATE OF WISCONSIN
DEPARTMENT OF TRANSPORTATION

APPROVED
March 2024 — DATE
/S/ Matthew Rauch — STATE SIGNING AND MARKING ENGINEER

FHWA

6
SDD 15C33-05

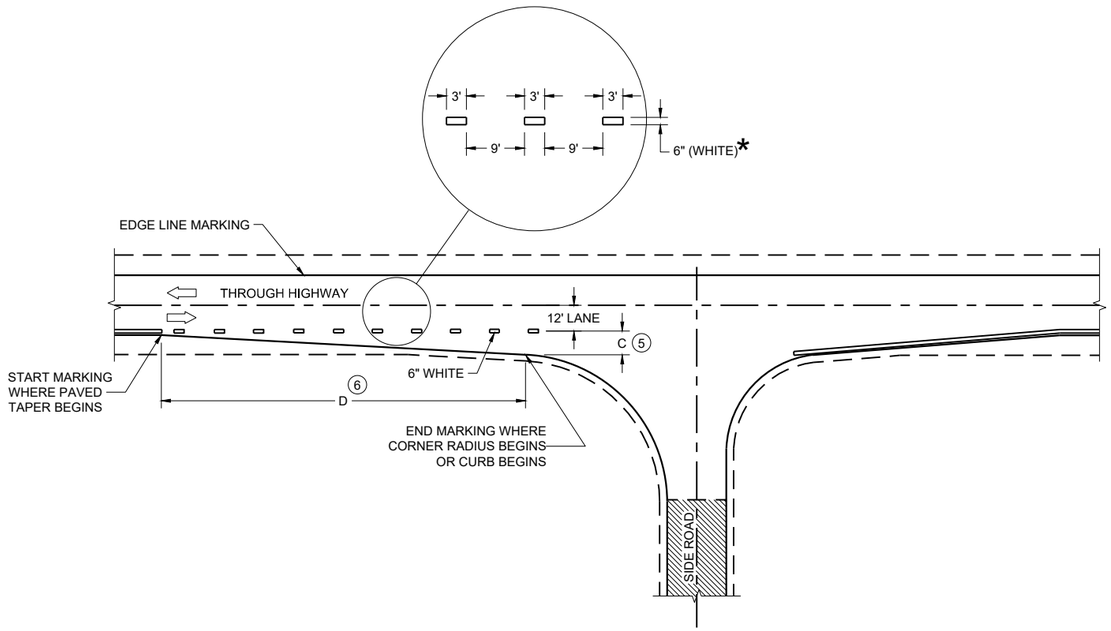

MINOR INTERSECTION

*CONFIRM MARKING LINE WIDTH WITH THE MISCELLANEOUS QUANTITIES

GENERAL NOTES

OMIT EDGE LINES THROUGH INTERSECTIONS. CONTINUE EDGE LINES THROUGH DRIVEWAYS.

1. WHEN DISTANCE "A" IS LESS THAN 250 FEET, OMIT LANE LINE.
2. WHEN DISTANCE "B" IS LESS THAN 100 FEET, OMIT CHANNELIZING LANE LINE.
3. BARRIER LINE ENDS AT SIDE ROAD PAVEMENT / SURFACE EDGE EXTENSION.
4. BARRIER LINE STARTS 500 FEET PRIOR TO THE BYPASS TAPER.
5. WHEN DISTANCE "C" IS LESS THAN 4 FEET, OMIT DOTTED EXTENSION.
6. WHEN DISTANCE "D" IS LESS THAN 50 FEET, OMIT DOTTED EXTENSION.

LEGEND

⇨ DIRECTION OF TRAVEL

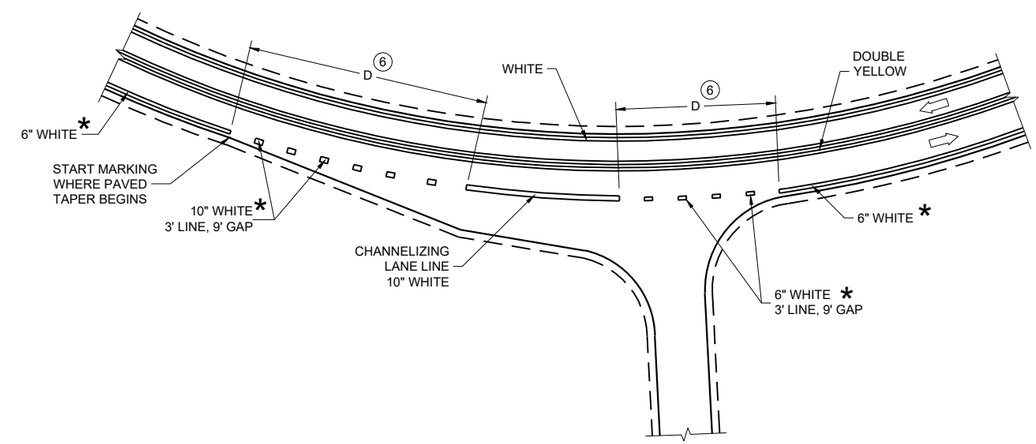

INTERSECTION ON OUTSIDE OF CURVE

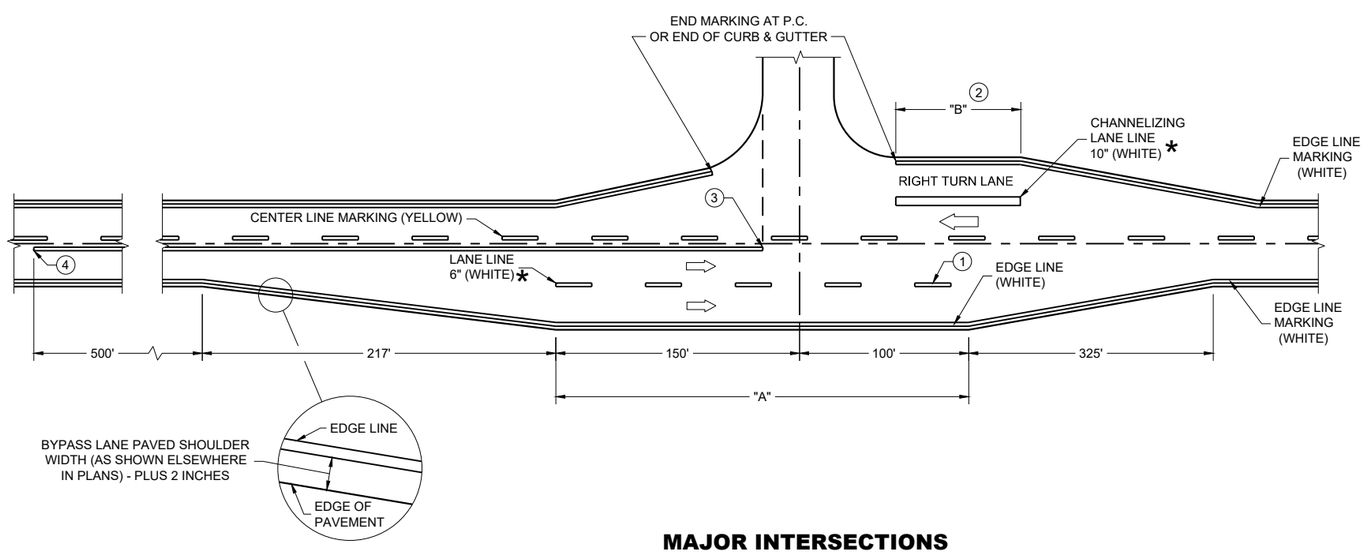

MAJOR INTERSECTIONS

(INTERSECTION WITH FULL RIGHT TURN LANE OR BYPASS LANE)

PAVEMENT MARKING (INTERSECTIONS)

STATE OF WISCONSIN
DEPARTMENT OF TRANSPORTATION

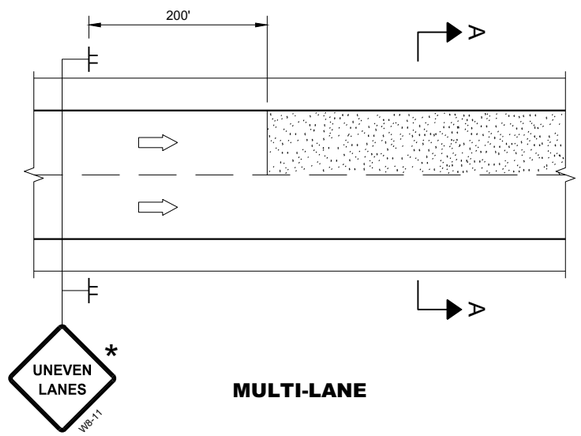

MULTI-LANE

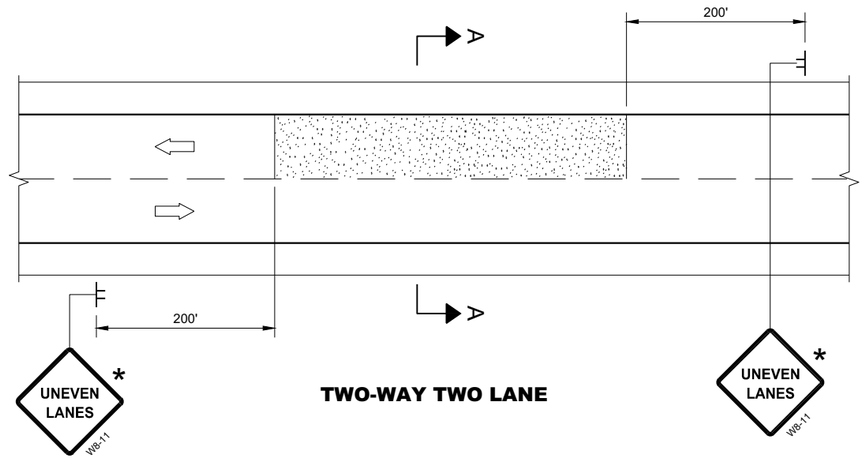

TWO-WAY TWO LANE

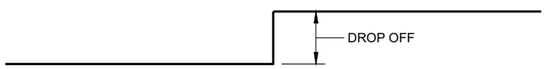

SECTION A - A

OR

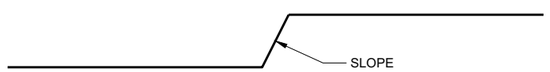

SECTION A - A

ADJACENT LANE DROP-OFFS

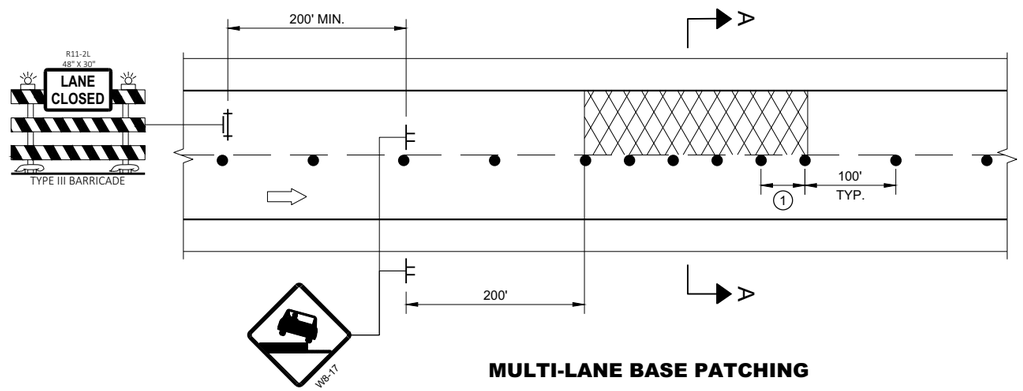

MULTI-LANE BASE PATCHING

GENERAL NOTES

FOR SPOT LOCATIONS USE ENGINEERING JUDGEMENT WHEN PLACING ADDITIONAL SIGNS.

ALL SIGNS ARE 48" X 48" UNLESS OTHERWISE NOTED.

"WO" SIGNS ARE THE SAME AS "W" SIGNS EXCEPT THE BACKGROUND IS ORANGE.

WARNING LIGHTS ARE NOT REQUIRED IF THE LANE CLOSURE IS A DAYTIME ONLY OPERATION.

* IF THE DROP-OFF IS CONTINUOUS ALONG THE PROJECT, PLACE ADDITIONAL SIGNS EVERY 1 MILE AND AFTER EVERY ENTRANCE RAMP.

(1) USE CLOSER SPACING WHEN DELINEATING DROP-OFF.

LEGEND

- SIGN ON TEMPORARY SUPPORT
- TRAFFIC CONTROL DRUM
- TYPE III BARRICADE WITH ATTACHED SIGN
- TYPE "A" WARNING LIGHT (FLASHING)
- DIRECTION OF TRAFFIC
- WORK AREA WITH DROP-OFF
- MILLED SURFACE

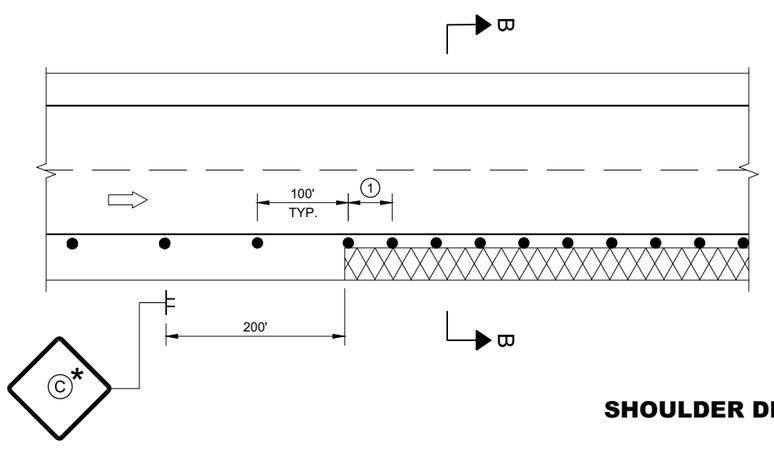

SHOULDER DROP-OFFS

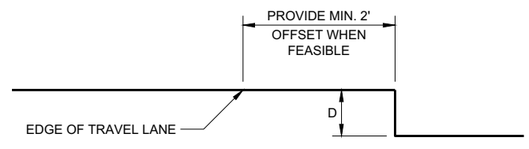

SECTION B - B

D	SIGN (C)
< 2" WITH A SLOPE STEEPER THAN 3:1	LOW SHOULDER WO8-9
2" < 6" WITH A SLOPE STEEPER THAN 3:1	SHOULDER DROP - OFF W8-9A PROVIDE A 3:1 OR FLATTER SLOPE OF MATERIAL ADJACENT TO THE PAVEMENT

TRAFFIC CONTROL, DROP-OFF SIGNING

STATE OF WISCONSIN
DEPARTMENT OF TRANSPORTATION

APPROVED
March 2018 — DATE
/S/ Andrew Heidtke — WORK ZONE ENGINEE
FHWA

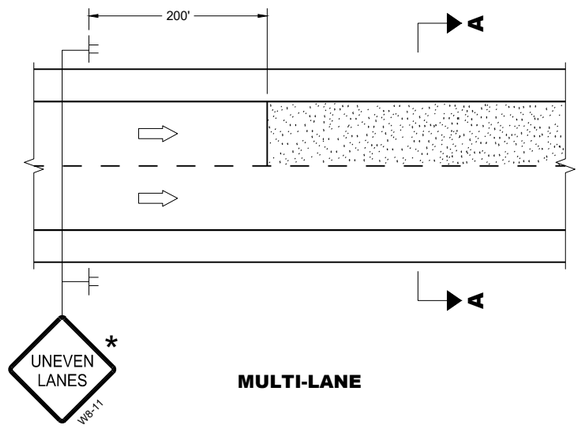

MULTI-LANE

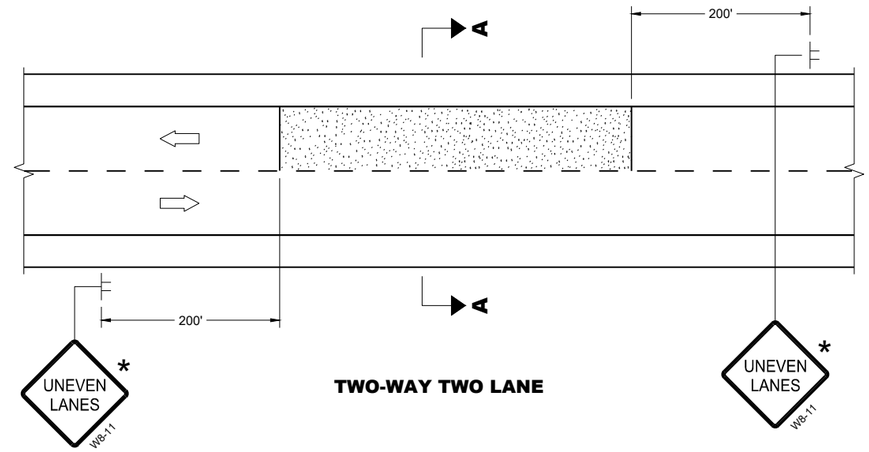

TWO-WAY TWO LANE

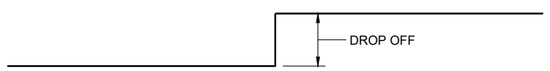

SECTION A - A

OR

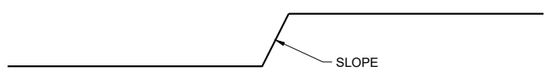

SECTION A - A

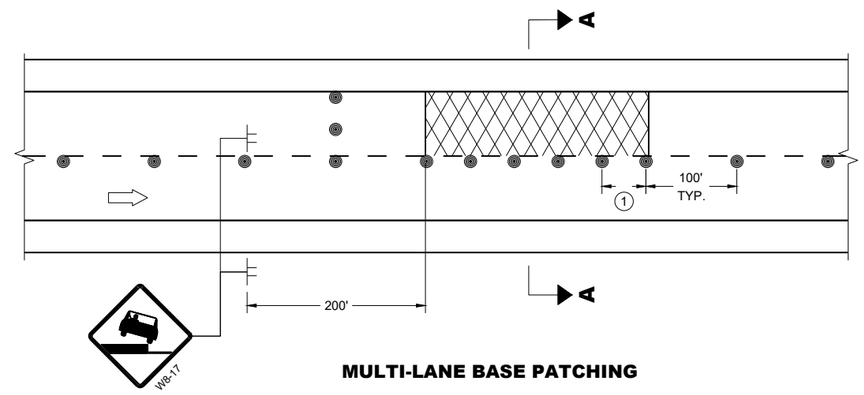

MULTI-LANE BASE PATCHING

ADJACENT LANE DROP-OFFS

GENERAL NOTES

FOR SPOT LOCATIONS USE ENGINEERING JUDGEMENT WHEN PLACING ADDITIONAL SIGNS.

ALL SIGNS ARE 48" X 48" UNLESS OTHERWISE NOTED.

"WO" SIGNS ARE THE SAME AS "W" SIGNS EXCEPT THE BACKGROUND IS ORANGE.

WARNING LIGHTS ARE NOT REQUIRED IF THE LANE CLOSURE IS A DAYTIME ONLY OPERATION.

* IF THE DROP-OFF IS CONTINUOUS ALONG THE PROJECT, PLACE ADDITIONAL SIGNS EVERY 1 MILE AND AFTER EVERY ENTRANCE RAMP.

(1) USE CLOSER SPACING WHEN DELINEATING DROP-OFF.

LEGEND

- SIGN ON TEMPORARY SUPPORT
- TRAFFIC CONTROL DRUM
- TYPE III BARRICADE WITH ATTACHED SIGN
- TYPE "A" WARNING LIGHT (FLASHING)
- DIRECTION OF TRAFFIC
- WORK AREA WITH DROP-OFF
- MILLED SURFACE

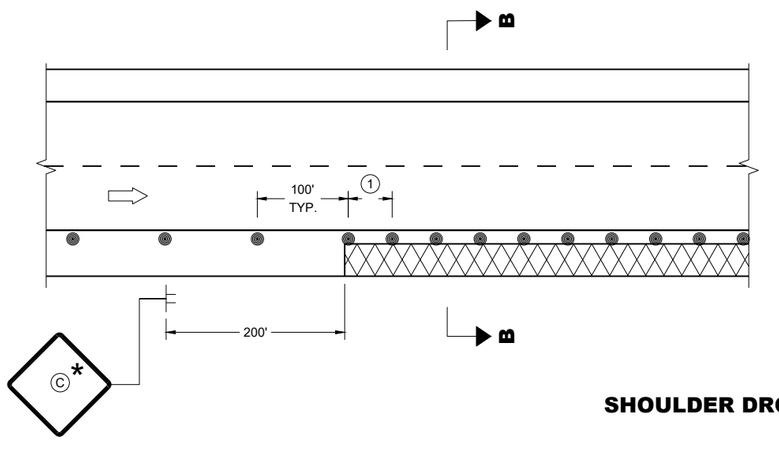

SHOULDER DROP-OFFS

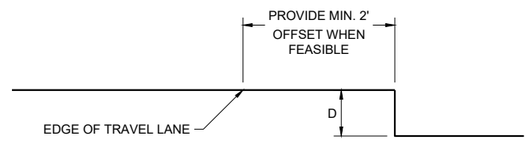

SECTION B - B

D	SIGN (C)
< 2" WITH A SLOPE STEEPER THAN 3:1	LOW SHOULDER WO8-9
2" < 6" WITH A SLOPE STEEPER THAN 3:1	SHOULDER DROP - OFF W8-9A
	PROVIDE A 3:1 OR FLATTER SLOPE OF MATERIAL ADJACENT TO THE PAVEMENT

TRAFFIC CONTROL, DROP-OFF SIGNING

STATE OF WISCONSIN
DEPARTMENT OF TRANSPORTATION

APPROVED
February 2025 — DATE
/S/ Andrew Heidtke — WORK ZONE ENGINEER

FHWA

GENERAL NOTES

DRAWING NOT TO SCALE. ALL SIGNS AND POSTS ON THIS SHEET SHALL BE PAID FOR WITH 'TRAFFIC CONTROL SIGNS' BID ITEM. ALL SIDE ROADS WHICH ARE UNDER CONSTRUCTION OF CURB AND GUTTER AND/OR GRADING SHALL BE ADEQUATELY SIGNED.

ALL SIGNS AND DEVICES SHALL BE IN CONFORMANCE WITH THE WISCONSIN MANUAL OF UNIFORM TRAFFIC CONTROL DEVICES (WMUTCD). SIGN LAYOUTS SHALL BE IN ACCORDANCE WITH THE WISDOT STANDARD SIGN PLATES.

"WO" SIGNS ARE THE SAME AS "W" SIGNS EXCEPT THAT THE BACKGROUND IS ORANGE.

ALL SIGNS ARE 48" X 48" UNLESS OTHERWISE NOTED.

THE EXACT NUMBER, LOCATION AND SPACING OF ALL SIGNS AND DEVICES SHALL BE ADJUSTED TO FIT FIELD CONDITIONS AS DIRECTED BY THE ENGINEER.

ALL SIGNS INAPPROPRIATE TO THE STATUS OF THE CONTROL ZONE, INCLUDING PRE-EXISTING SIGNS IN THE VICINITY, SHALL BE COVERED OR REMOVED AS DIRECTED BY THE ENGINEER.

SEE 15C34 FOR ADDITIONAL TRAFFIC CONTROL SIGNING WHEN CENTERLINE PAVEMENT MAKINGS ARE MISSING. 'DO NOT PASS' SIGNS MUST BE INSTALLED ON THE SAME DAY AS MILLING OPERATIONS.

(1) PLACE SIGNS 350' IN ADVANCE OF MILLED SURFACES AND AT 1 MILE INTERVALS, OR AS DIRECTED BY THE ENGINEER.

(2) PLACE SIGN 200' MIN. FROM INTERSECTION AND 200' MIN. AFTER ADVANCE WARNING SIGN SHOWN IN SDD 15C04.

LEGEND

SIGN ON TEMPORARY SUPPORT

DIRECTION OF TRAFFIC

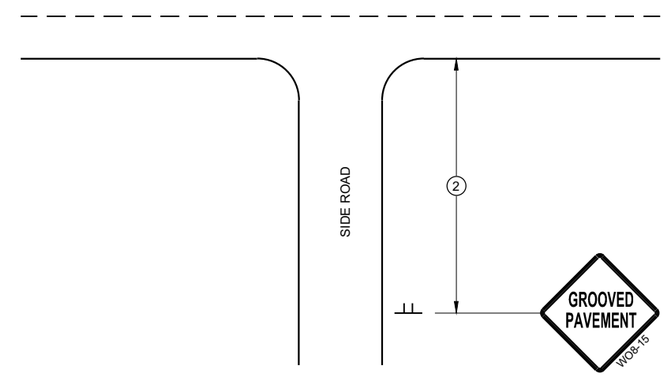

TYPICAL SIDE ROAD APPROACH SIGN DETAIL

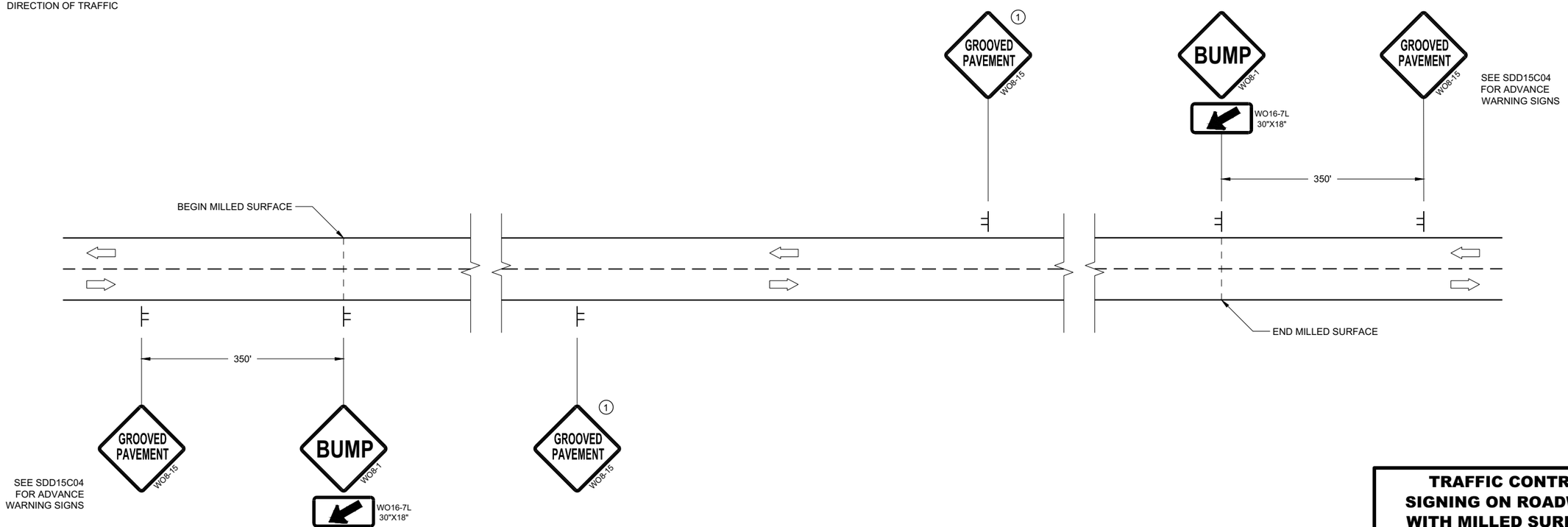

DETAIL FOR SIGNING ON MILLED SURFACES

TRAFFIC CONTROL, SIGNING ON ROADWAYS WITH MILLED SURFACES

STATE OF WISCONSIN
DEPARTMENT OF TRANSPORTATION

APPROVED
February 2020 /S/ Andrew Heidtke
DATE WORK ZONE ENGINEE
FHWA

6

SDD 15D44 - 02

6

SDD 15D44 - 02

GENERAL NOTES

DRAWING NOT TO SCALE. ALL SIGNS AND POSTS ON THIS SHEET SHALL BE PAID FOR WITH 'TRAFFIC CONTROL SIGNS' BID ITEM. ALL SIDE ROADS WHICH ARE UNDER CONSTRUCTION OF CURB AND GUTTER AND/OR GRADING SHALL BE ADEQUATELY SIGNED.

ALL SIGNS AND DEVICES SHALL BE IN CONFORMANCE WITH THE WISCONSIN MANUAL OF UNIFORM TRAFFIC CONTROL DEVICES (WMUTCD). SIGN LAYOUTS SHALL BE IN ACCORDANCE WITH THE WISDOT STANDARD SIGN PLATES.

"WO" SIGNS ARE THE SAME AS "W" SIGNS EXCEPT THAT THE BACKGROUND IS ORANGE.

ALL SIGNS ARE 48" X 48" UNLESS OTHERWISE NOTED.

THE EXACT NUMBER, LOCATION AND SPACING OF ALL SIGNS AND DEVICES SHALL BE ADJUSTED TO FIT FIELD CONDITIONS AS DIRECTED BY THE ENGINEER.

ALL SIGNS INAPPROPRIATE TO THE STATUS OF THE CONTROL ZONE, INCLUDING PRE-EXISTING SIGNS IN THE VICINITY, SHALL BE COVERED OR REMOVED AS DIRECTED BY THE ENGINEER.

SEE 15C34 FOR ADDITIONAL TRAFFIC CONTROL SIGNING WHEN CENTERLINE PAVEMENT MAKINGS ARE MISSING. 'DO NOT PASS' SIGNS MUST BE INSTALLED ON THE SAME DAY AS MILLING OPERATIONS.

1. PLACE SIGNS 350' IN ADVANCE OF CHIP SEALED OR LOOSE GRAVEL SURFACES AND AT 1 MILE INTERVALS, OR AS DIRECTED BY THE ENGINEER.
2. PLACE SIGN 200' MIN. FROM INTERSECTION AND 200' MIN. AFTER ADVANCE WARNING SIGN SHOWN IN SDD 15C04.
3. ADD WO8-1 OR WO8-2 SIGN WHEN THE CONDITION IS PRESENT.

LEGEND

SIGN ON TEMPORARY SUPPORT

DIRECTION OF TRAFFIC

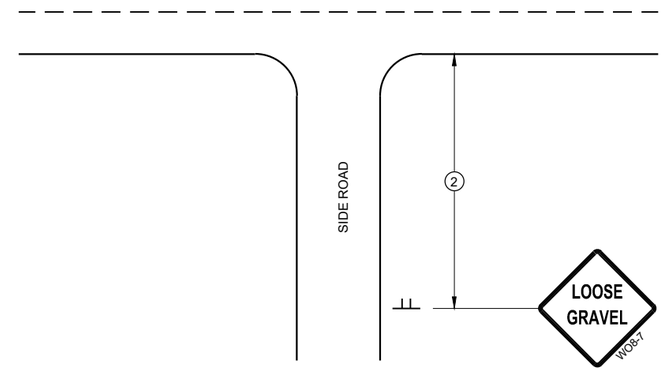

TYPICAL SIDE ROAD APPROACH SIGN DETAIL

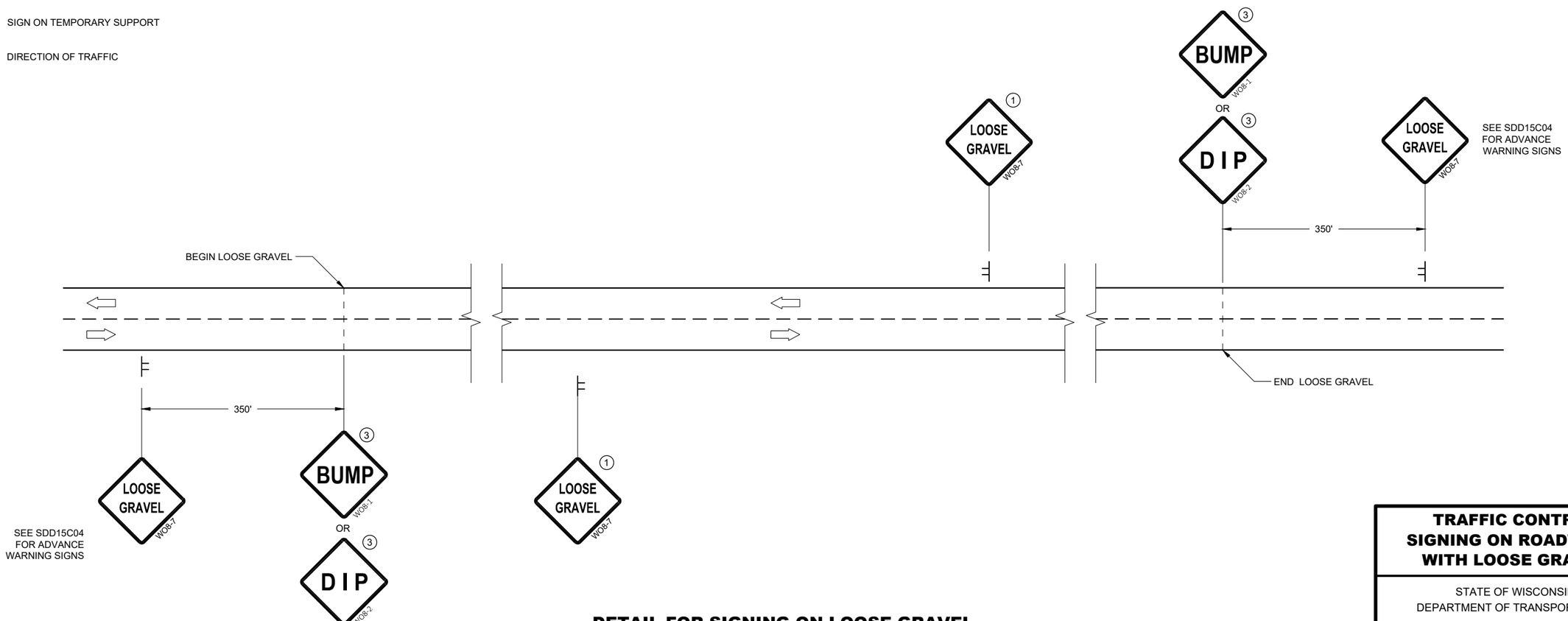

DETAIL FOR SIGNING ON LOOSE GRAVEL OR CHIP SEALED SURFACES

TRAFFIC CONTROL SIGNING ON ROADWAYS WITH LOOSE GRAVEL

STATE OF WISCONSIN
DEPARTMENT OF TRANSPORTATION

APPROVED
February 2021 — DATE
/S/ Andrew Heidtke — WORK ZONE ENGINEE
FHWA

6
SDD 15D45 - 03

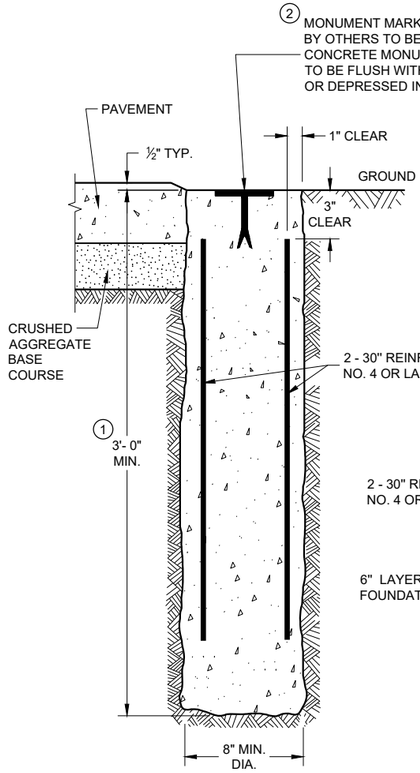

CAST-IN-PLACE

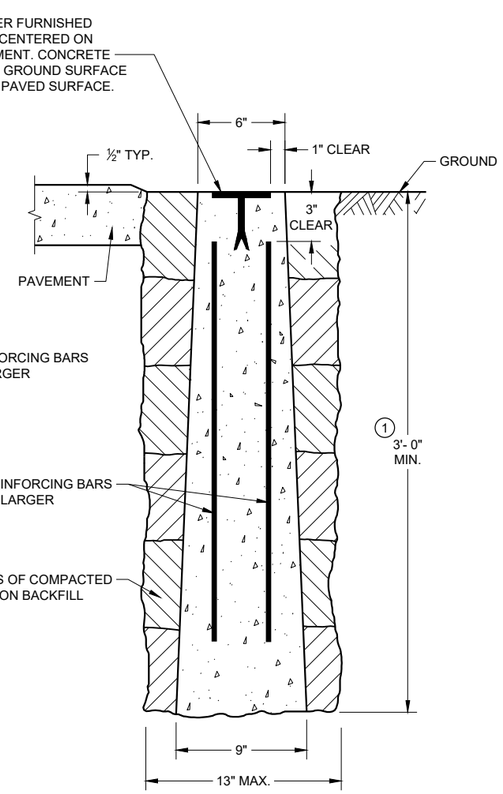

PRECAST

CONCRETE MONUMENTS
TYPE A

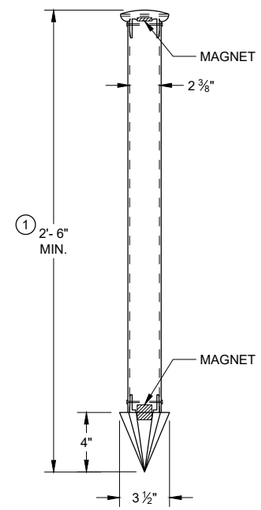

TYPE C
DRIVEN MONUMENT

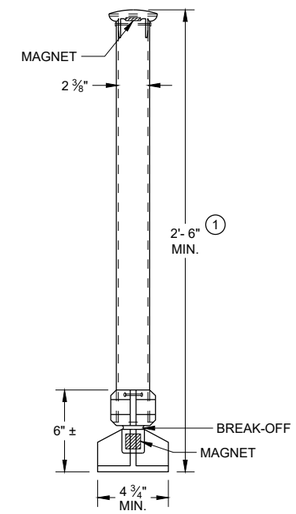

TYPE D
NON-DRIVEN
BREAK-OFF MONUMENT

ALUMINUM MONUMENTS
(INCLUDES MARKER)

GENERAL NOTES

DETAILS OF CONSTRUCTION, MATERIALS AND WORKMANSHIP NOT SHOWN ON THIS DRAWING SHALL CONFORM TO THE PERTINENT REQUIREMENTS OF THE STANDARD SPECIFICATIONS AND THE APPLICABLE SPECIAL PROVISIONS.

DETAILED DRAWINGS OF PROPOSED ALTERNATE DESIGNS FOR METAL MONUMENTS OR MONUMENT COVERS SHALL BE SUBMITTED TO THE ENGINEER FOR APPROVAL.

PERMANENT MAGNETS SHALL BE INSERTED NEAR THE TOP AND BOTTOM OF ALL ALUMINUM MONUMENTS SO THE MONUMENT CAN EASILY BE DETECTED BY A METAL DETECTOR.

THE CAST IRON MONUMENT COVER SHALL BE A "NON-ROCKING" TYPE. ADJUSTMENT OF THE COVER TO GRADE MAY BE ACCOMPLISHED BY THE USE OF MORTAR AND BRICK, OR BY EITHER PRECAST OR CAST-IN-PLACE REINFORCED CONCRETE GRADE RINGS.

MONUMENTS SHALL BE LOCATED AND PLACED AT THE DIRECTION OF THE ENGINEER.

ALUMINUM MONUMENTS AND MONUMENT COVERS SHALL BE MADE FROM AN ALUMINUM AND MAGNESIUM ALLOY AS DETERMINED BY THE MANUFACTURER.

THE MONUMENT COVERS DETAILED ON THIS DRAWING ARE NOT EQUAL ALTERNATES. MONUMENT COVERS SHALL BE CAST IRON UNLESS ALUMINUM IS SPECIFIED ELSEWHERE IN THE CONTRACT.

MONUMENT SHALL BE CAST-IN-PLACE CONCRETE UNLESS PRECAST CONCRETE OR ALUMINUM MONUMENTS ARE SPECIFIED IN THE CONTRACT OR PERMITTED BY THE ENGINEER.

① MINIMUM LENGTH SHALL BE 4'-0" FOR MONUMENTS INSTALLED IN PAVED AREAS.

② AN OFFICIAL COUNTY MONUMENT MARKER SUPPLIED BY A COUNTY MAY BE REQUIRED FOR SOME SECTION CORNERS AND WITNESS MONUMENTS INSTEAD OF THIS WISDOT MARKER.

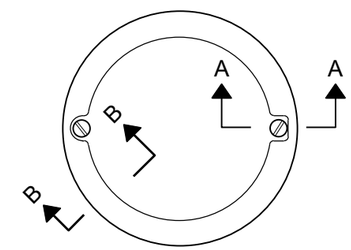

TOP VIEW

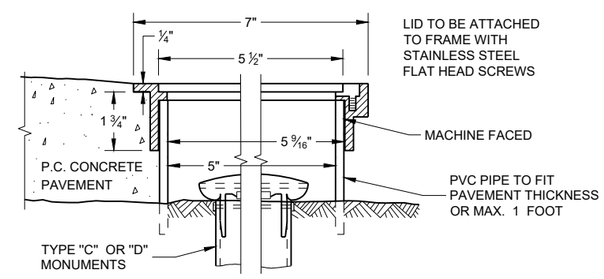

SECTION B-B **SECTION A-A**

ALUMINUM MONUMENT COVER
(APPROXIMATE WEIGHT 2 LBS)
(FOR CONCRETE PAVEMENT ONLY)

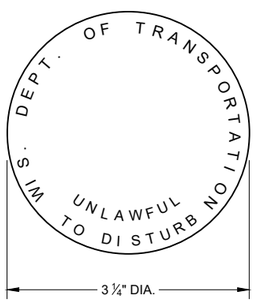

② **WIS DOT MONUMENT MARKER LOGO**

FOR TYPES "A", "C" & "D"

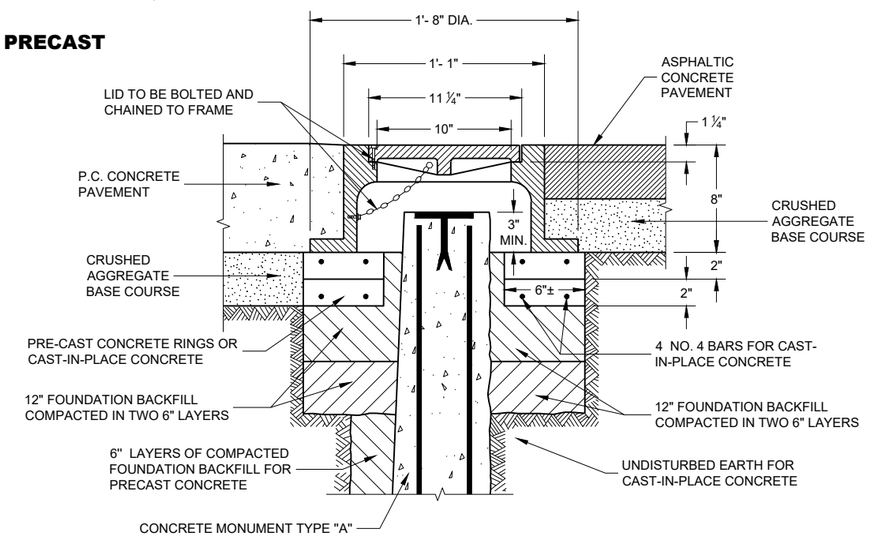

CAST IRON MONUMENT COVER
(APPROXIMATE WEIGHT 95 LBS)

LANDMARK REFERENCE MONUMENTS AND COVERS

STATE OF WISCONSIN
DEPARTMENT OF TRANSPORTATION

APPROVED
March 2018 — DATE
/S/ Raymond A. Kumapavii — CHIEF SURVEYING AND MAPPING ENGINEER

FHWA

6

SDD 16A01 - 07

URBAN AREA

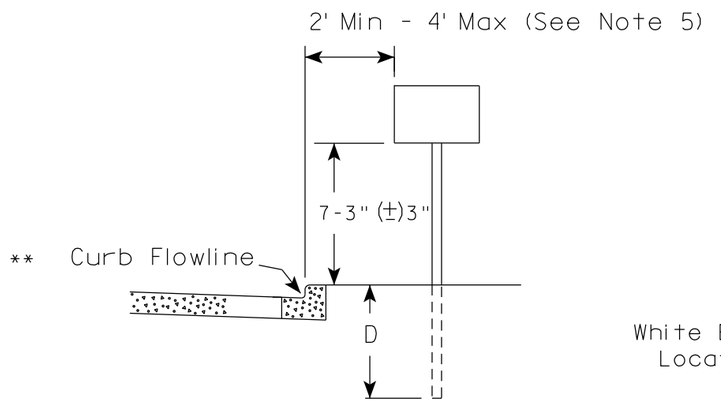

RURAL AREA (See Note 2)

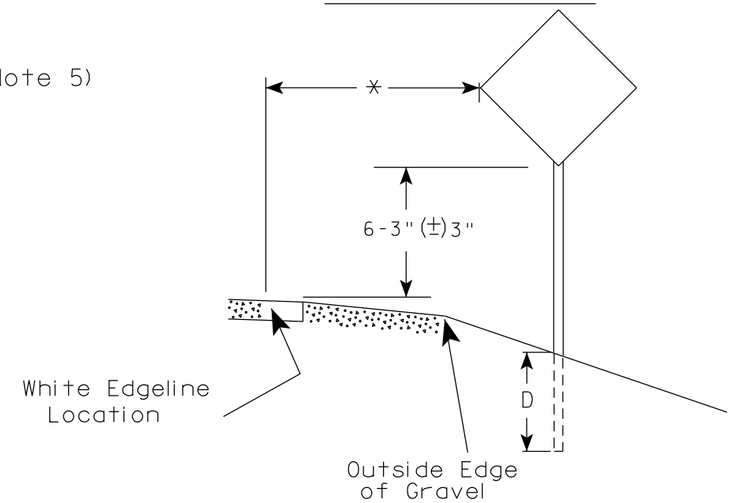

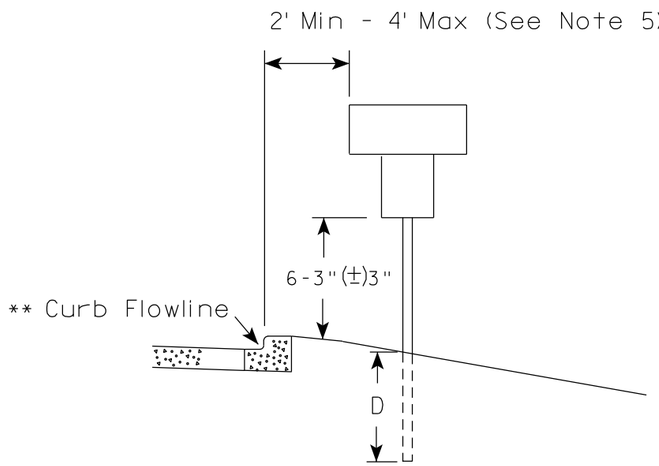

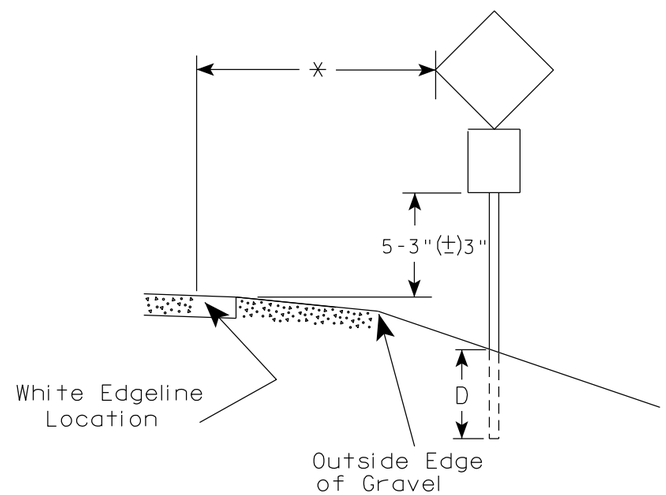

** The existence of curb and gutter does not in itself mandate the vertical clearance illustrated. That height is typically measured where there is sidewalk adjacent to the roadway or parking is permitted. In the absence of sidewalk vertical clearance is measured from the top of the curb. Offset of signs is measured from the flow line.

* 6 feet from edge of a paved shoulder or 12 feet from the edge of pavement (edge line location) or 2 feet from outside edge of gravel, whichever is greater unless directed by project engineer.

GENERAL NOTES

1. Signs wider than 4 feet or 20 sq.ft or larger, shall be mounted on multiple posts. Refer to plate A4-4.
2. If signs are mounted on or behind barrier wall, see A4-10 sign plate.
   The Double Arrow sign (W12-1D) shall be mounted at a height of 2'-3" (±) 3". The Chevron sign (W1-8), Roundabout Chevron panel (R6-4B), Enhanced Reference Markers, Clearance Markers (W5-52), Mile Markers (D10 series), In Road Object Markers (W5-54) & End of Road Markers (W5-56) shall be mounted at a height of 4'-3" (±) 3".
3. For expressways and freeways, mounting height is 7'- 3" (±) 3" or 6'-3" (±) 3" depending upon existence of a sub-sign.
4. Minimum mounting height for signs mounted on traffic signal poles is 5'- 3" (±) 3".
5. Offset distance shall be consistent with existing signs or consistent throughout length of project.
6. Folding signs shall be mounted at a height of 5'-3" (±) 3" or as directd by the Engineer.

POST EMBEDMENT DEPTH

Area of Sign Installation (Sq. Ft.)	D (Min)
20 or Less	4'
Greater than 20	5'

TYPICAL INSTALLATION OF PERMANENT TYPE II SIGNS ON SINGLE POSTS

WISCONSIN DEPT OF TRANSPORTATION

APPROVED Matthew R Rauch
for State Traffic Engineer

DATE 12/6/23 PLATE NO. A4-3.23

7 7

PROJECT NO:	HWY:	COUNTY:		SHEET NO: 94	E

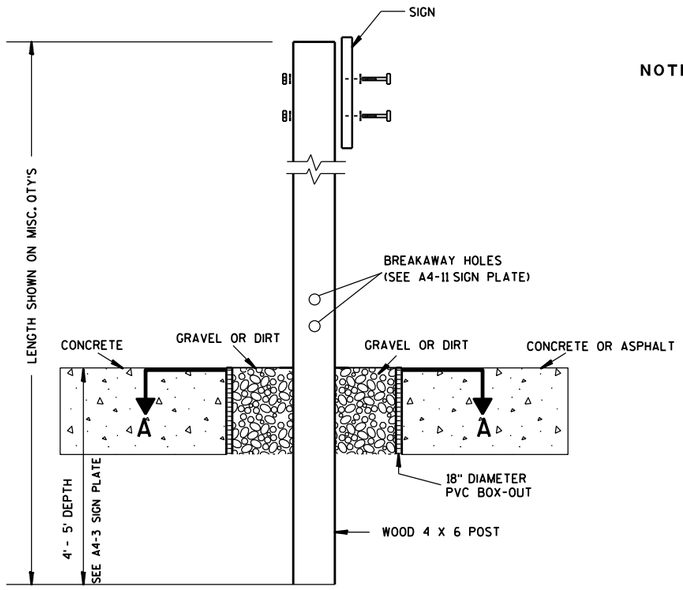

ELEVATION VIEW

DETAIL OF WOOD 4 X 6 SIGN POST IN BOX-OUT

NOTES:
1. ALL MATERIAL TO BE APPROVED BY ENGINEER PRIOR TO INSTALLATION
2. SEE SIGN PLATE A4-8 FOR SIGN HARDWARE REQUIREMENTS
3. 18 INCH X 18 INCH SQUARE BOX-OUTS MAY BE USED FOR INSTALLATIONS IN EXISTING CONCRETE OR ASPHALT LOCATIONS.

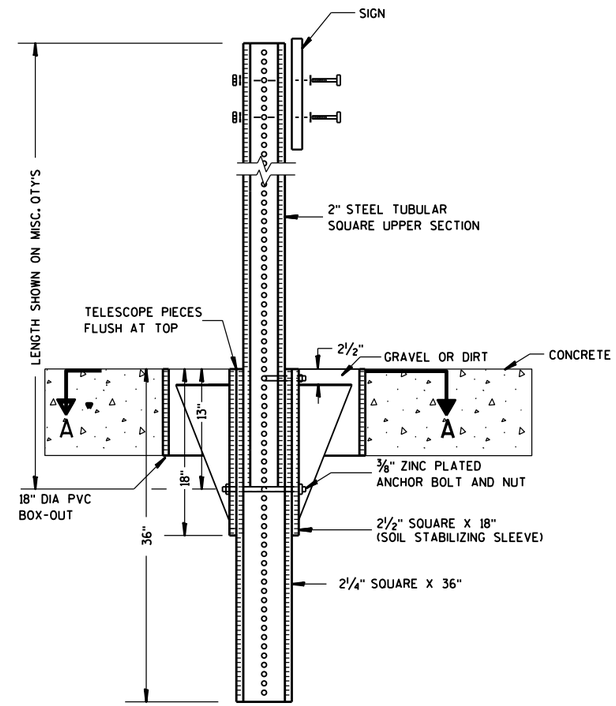

ELEVATION VIEW

DETAIL OF STEEL 2 X 2 SIGN POST IN BOX-OUT

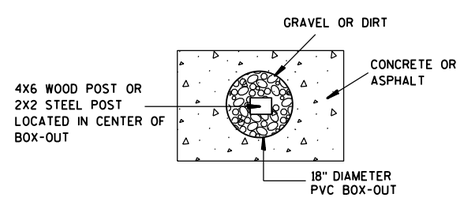

PLAN VIEW

FOR NEW CONCRETE/ASPHALT INSTALLATIONS

SIGN POST
BOX-OUTS
A4-3B

WISCONSIN DEPT OF TRANSPORTATION

APPROVED Matthew R Rauch
for State Traffic Engineer

DATE 1/27/14 PLATE NO. A4-3B.1

PROJECT NO:	HWY:	COUNTY:		SHEET NO:	E

URBAN AREA

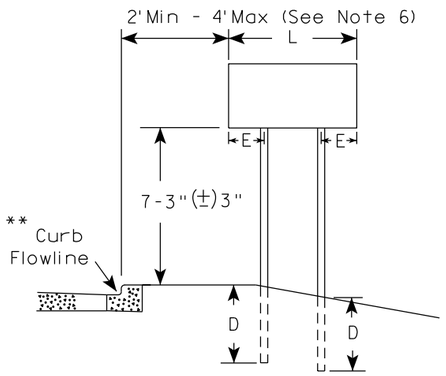

RURAL AREA (See Note 3)

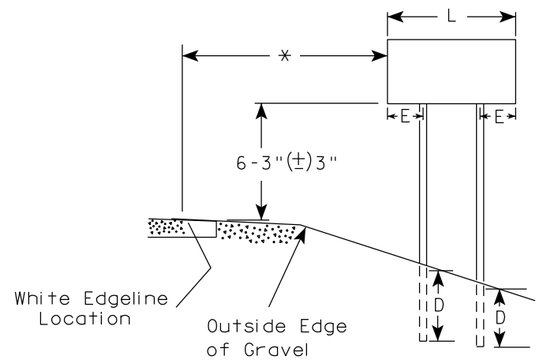

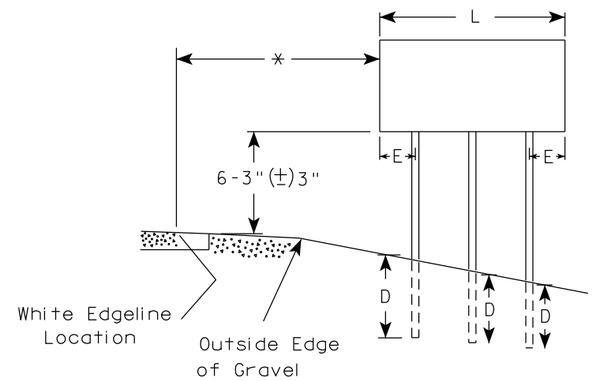

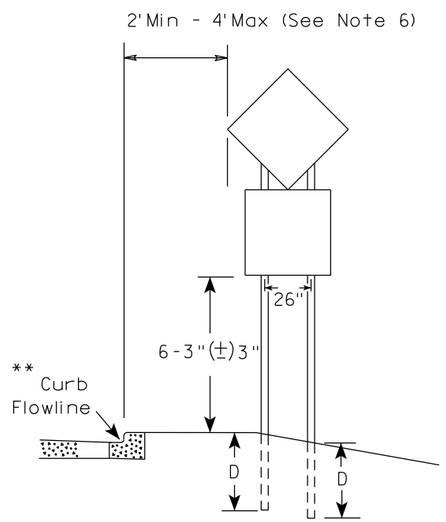

48" DIAMOND WARNING SIGN

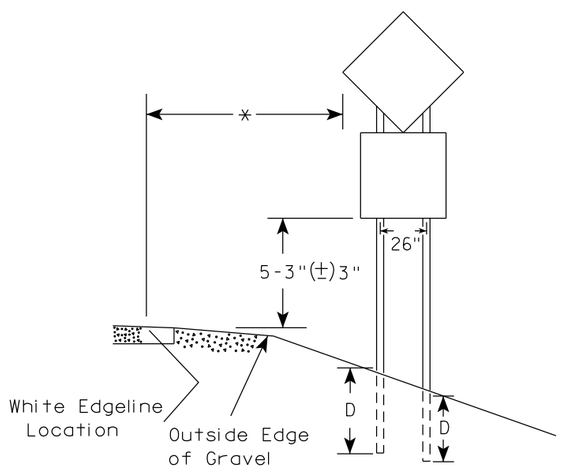

48" DIAMOND WARNING SIGN

GENERAL NOTES

1. For 3 or 4 post installations, individual post spacing shall be greater than 3'-6".
2. See tables below for required number of posts.
3. For expressways and freeways, mounting height is 7'-3" (±) 3" or 6'-3" (±) 3" depending upon existence of sub-sign.
4. The (±) tolerance for mounting height is 3 inches.
5. J-Assemblies are considered to be one sign for mounting height.
6. Offset distance shall be consistent with existing signs or consistent throughout length of project.
7. Folding signs shall be mounted at a height of 5'-3" (±) 3" or as directed by the engineer.
8. The Double Arrow sign (W12-1) shall be mounted at a height of 2'-3" (±) 3". The Chevron sign (W1-8), Roundabout Chevron panel (R6-4B), Clearance Markers (W5-52), Mile Markers (D10 series), In Road Object Markers (W5-54) & End of Road Markers (W5-56) shall be mounted at a height of 4"-3" (±) 3".

* 6 feet from edge of a paved shoulder or 12 feet from the edge of pavement (edge line location) or 2 feet from outside edge of gravel, whichever is greater unless directed by project engineer.

** The existence of curb and gutter does not in itself mandate the vertical clearance illustrated. That height is typically measured where there is sidewalk adjacent to the roadway or parking is permitted. In the absence of sidewalk vertical clearance is measured from the top of the curb. Offset of signs is measured from the flow line.

*** See A4-3 sign plate for signs 4' or less in width and less than 20 S.F. in area.

SIGN SHAPE OTHER THAN DIAMOND (TWO POSTS REQUIRED)	
L	E
*** Greater than 48" Less than 60"	12"
60" to 108"	L/5

SIGN SHAPE OTHER THAN DIAMOND (THREE POSTS REQUIRED)	
L	E
Greater than 108" to 144"	12"

POST EMBEDMENT DEPTH

Area of Sign Installation (Sq. Ft.)	D (Min)
20 or Less	4'
Greater than 20	5'

TYPICAL INSTALLATION OF TYPE II SIGNS ON MULTIPLE POSTS

WISCONSIN DEPT OF TRANSPORTATION

APPROVED Matthew R Rauch
for State Traffic Engineer

DATE 12/6/23 PLATE NO. A4-4.16

PROJECT NO:	HWY:	COUNTY:		SHEET NO: 96	E

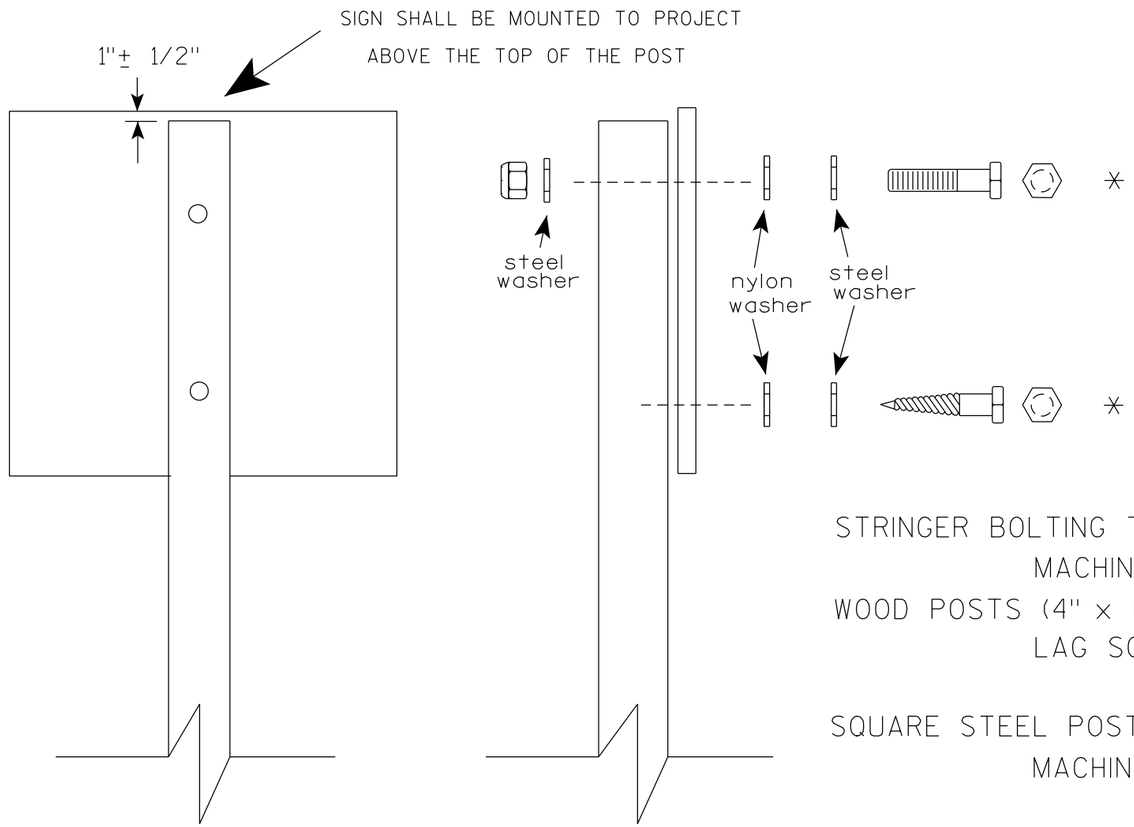

Nuts, bolts and lags used for mounting signs shall have hexagonal heads and shall be either :

a. Hot dip galvanized in accordance with ASTM Designation: A 153, Class D, or SC 3

b. Electro-galvanized in accordance with ASTM Designation : B 633, TYPE III, SC 3.

Threads on bolts and nuts shall be manufactured with sufficient allowance for the cadmium plate or galvanized coating to permit the nuts to run freely on the bolts.

STRINGER BOLTING TO ALUMINUM SIGNS (SEE SIGN PLATE A4-18)

MACHINE BOLTS - 5/16" X 1-3/4" Length w/ lock nuts

WOOD POSTS (4" x 6")

LAG SCREWS - 3/8" X 3" (NO STRINGERS ON BACK OF SIGN)
3/8" X 4" (STRINGERS ON BACK OF SIGN)

SQUARE STEEL POSTS (2" x 2")

MACHINE BOLTS - 3/8" X 3-1/4" Length w/ nuts (NO STRINGER ON BACK OF SIGN)
3/8" X 5" Length w/ nuts (STRINGERS ON BACK OF SIGN)

RIVETS - 9/32 " (6605-9-6) BULB-TITE, TRI-FOLD, ALUMINUM BODY/MANDREL
O.D. FLANGE .720-.765 INCH, GRIP RANGE .042-.375 INCH

WASHERS (ALL POSTS) -

1-1/4" O.D. X 3/8" I.D. X 1/16" STEEL
1-1/4" O.D. X 3/8" I.D. X .080 NYLON

* Two different fastening systems are shown for illustration purposes. On any individual sign, either one or the other system shall be used. Actual number of fasteners per sign varies with the sign area, but normally there are two. For a single post installation, all signs greater than 9 sq. ft. require the use of 3 fasteners.

ATTACHMENT OF SIGNS TO POSTS

WISCONSIN DEPT OF TRANSPORTATION

APPROVED Matthew R Rauch
for State Traffic Engineer

DATE 4/1/2020 PLATE NO. A4-8.9

TELESCOPIC TUBING ANCHORS
TWO PIECE SYSTEM

2 1/4 " SQUARE
12 GAUGE
PERFORATED
GALVANIZED FINISH

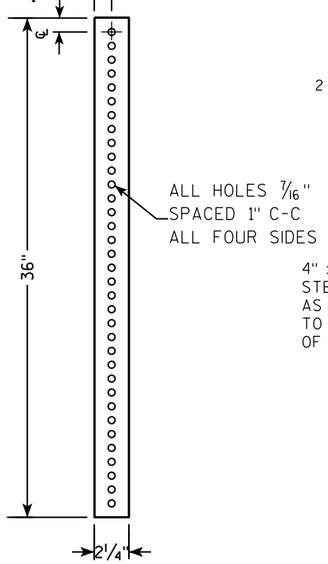

2 1/2 " SQUARE
12 GAUGE
OMNI-DIRECTIONAL
PERFORATED
SOIL STABILIZING SLEEVE
GALVANIZED FINISH

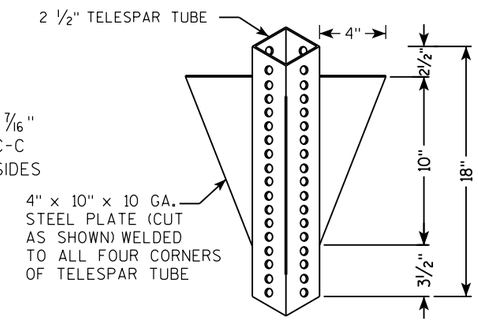

DETAIL OF TUBULAR STEEL SIGN POST
(IN POURED CONCRETE OR ASPHALT)

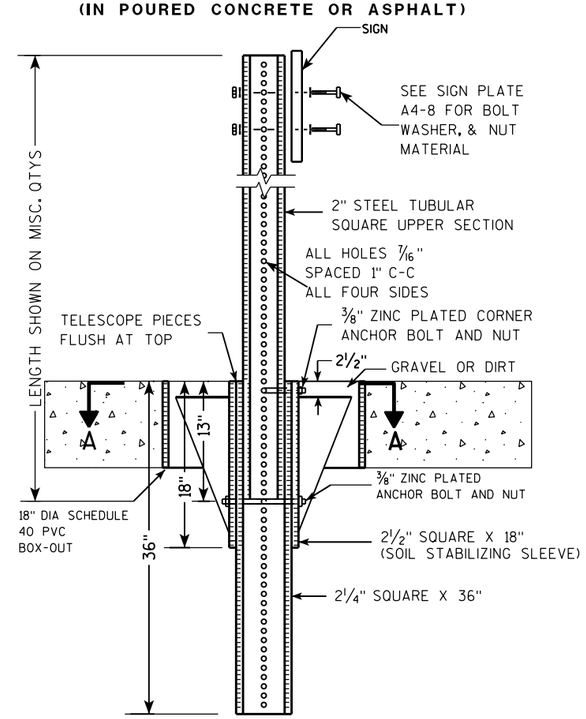

DETAIL OF TUBULAR STEEL SIGN POST
(IN LOCATIONS OTHER THAN POURED CONCRETE OR ASPHALT)

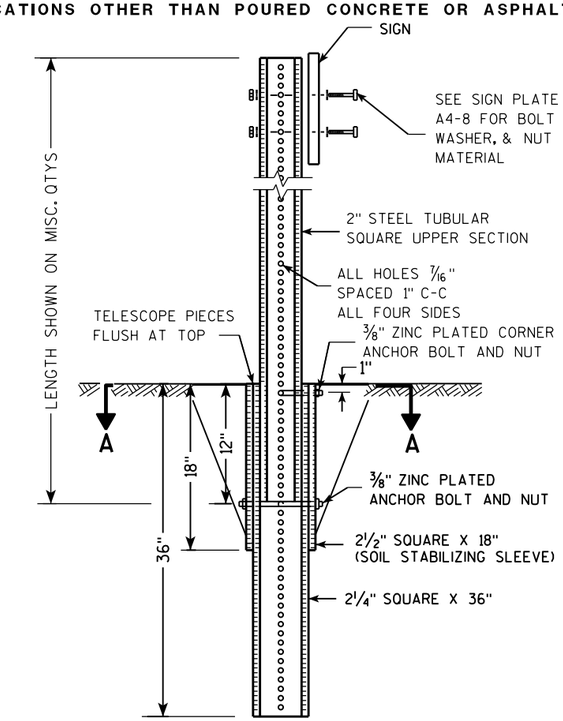

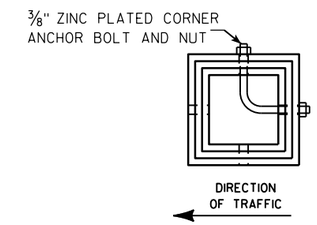

SECTION A-A

Area of Sign Installation (Sq. Ft.)	Number of Required Posts
9 or less	1
Greater than 9 less than or equal to 18	2
Greater than 18 less than or equal to 27	3

Signs wider than 3 feet or larger than 9 sq. ft shall be mounted on multiple posts (see above table).

TUBULAR STEEL
SIGN POST
A4-9

WISCONSIN DEPT OF TRANSPORTATION

APPROVED Matthew R Rauch
for State Traffic Engineer

DATE 2/05/15 PLATE A4-9.9

7

7

PROJECT NO:	HWY:	COUNTY:		SHEET NO:	E

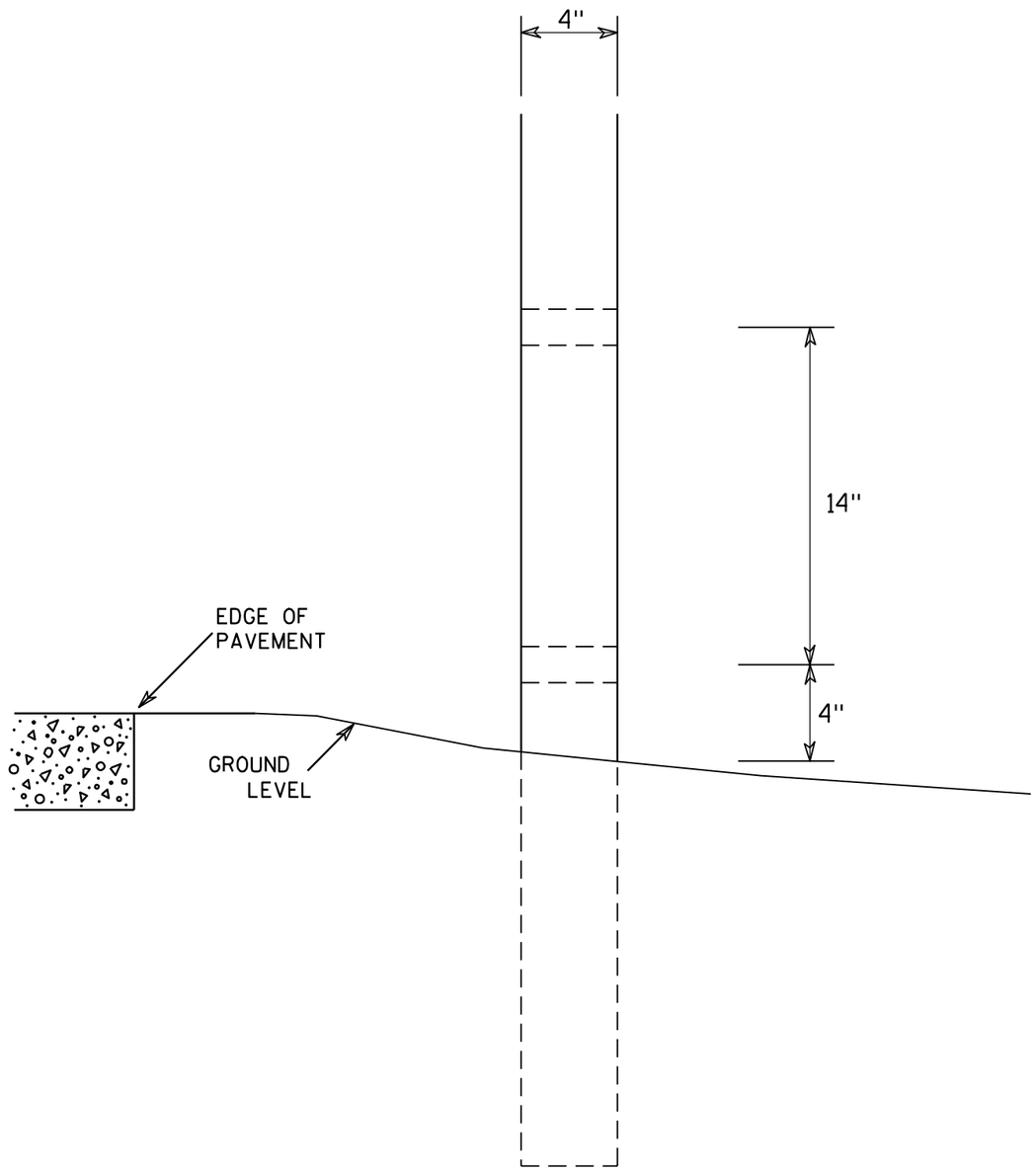

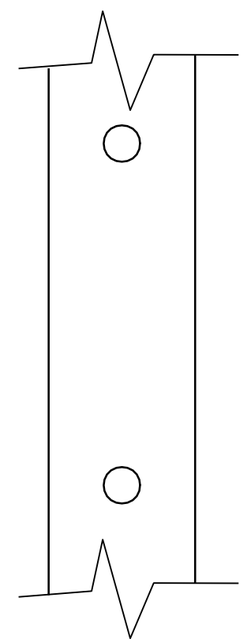

SIDE VIEW

GENERAL NOTES

1. All 4 x 6 Wood Posts shall be modified by having two 1½" diameter holes drilled perpendicular to the roadway centerline.

7

7

4 X 6 WOOD POST MODIFICATIONS

WISCONSIN DEPT OF TRANSPORTATION

APPROVED Chester J Spang for State Traffic Engineer

DATE 3/27/97 PLATE NO. A4-11.2

PROJECT NO:	HWY:	COUNTY:		SHEET NO: 99	E

BANDING

SINGLE SIGN

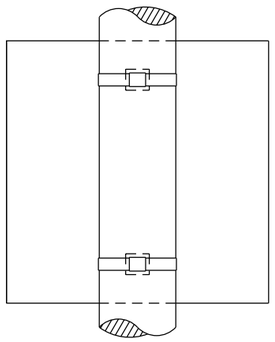

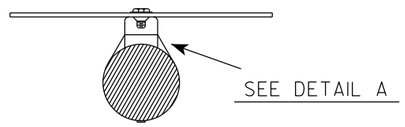

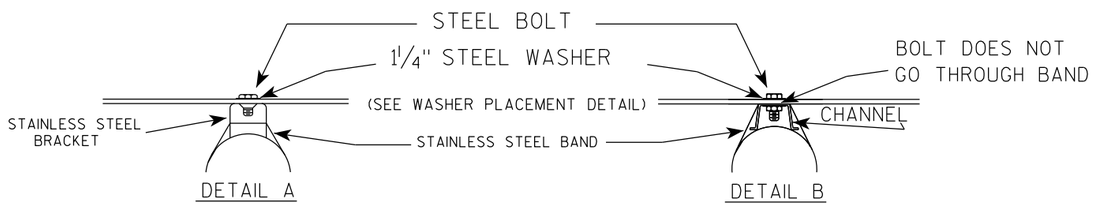

WASHER PLACEMENT

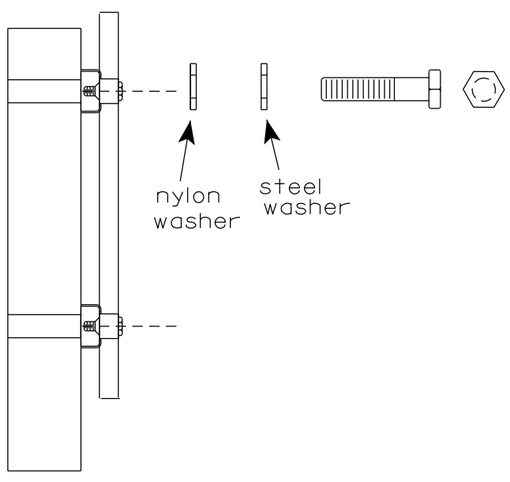

WASHERS (ALL POSTS) -
1-1/4" O.D. X 3/8" I.D. X 1/16" STEEL
1-1/4" O.D. X 3/8" I.D. X .080 NYLON
FOR ALL TYPE H SIGNS

GENERAL NOTES

1. Any sign over 3 feet in width shall use the V-Block banding method. See A5-10 standard plate.
2. Signs 3 feet or greater in height shall have three bracket bands installed. Signs less than 3 feet in height shall have two bracket bands installed.
3. Banding and assembly bracket shall be stainless steel. All bands shall be 3/4" in width and 0.025" thickness.
4. ALL SIGN MOUNTING BOLTS AND WASHERS SHALL BE EITHER:
   a. Hot dip or mechanically galvanized in accordance with ASTM Designation: A 153, Class D
   b. Electro-galvanized in accordance with ASTM designation: B 633, Type III, SC 3

"J" ASSEMBLY

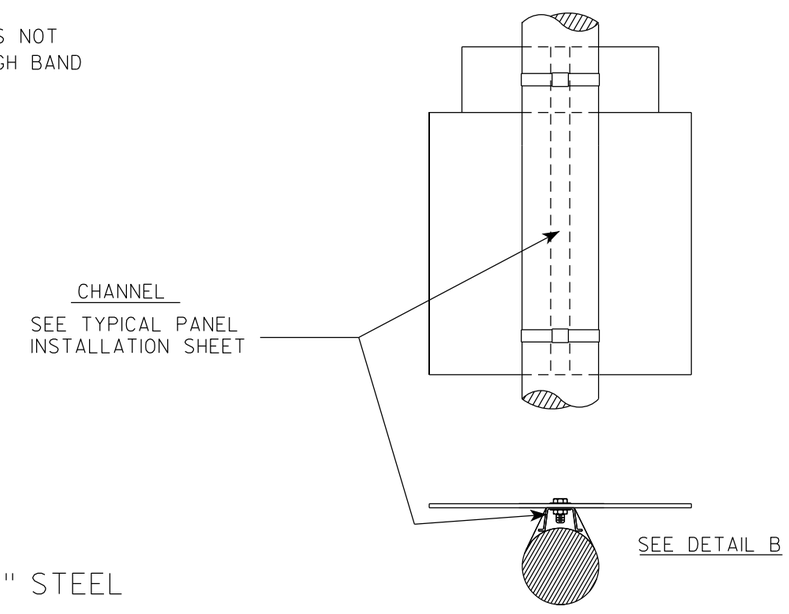

STANDARD SIGN
SIGN BANDING DETAILS

WISCONSIN DEPT OF TRANSPORTATION

APPROVED Matthew R Rauch for State Traffic Engineer

DATE 6/10/19 PLATE NO. A5-9.4

PROJECT NO:	HWY:	COUNTY:		SHEET NO: 100	E

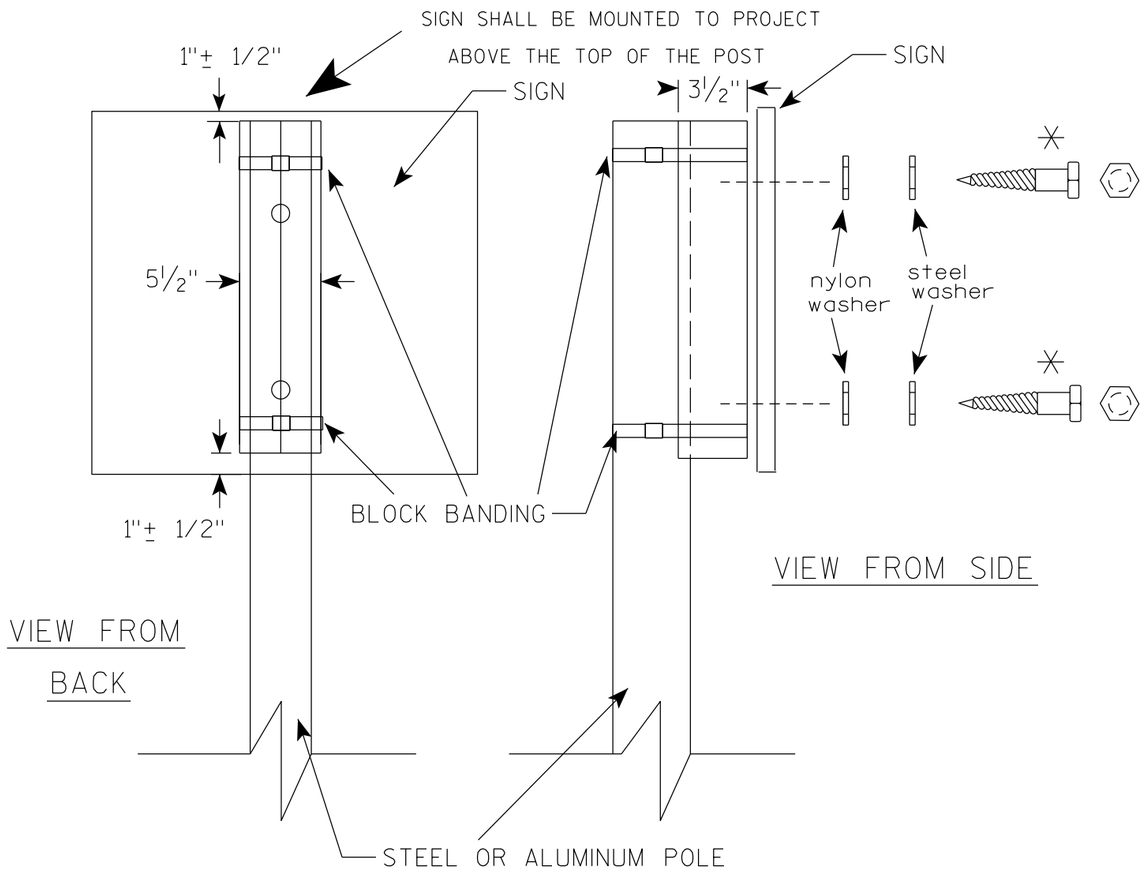

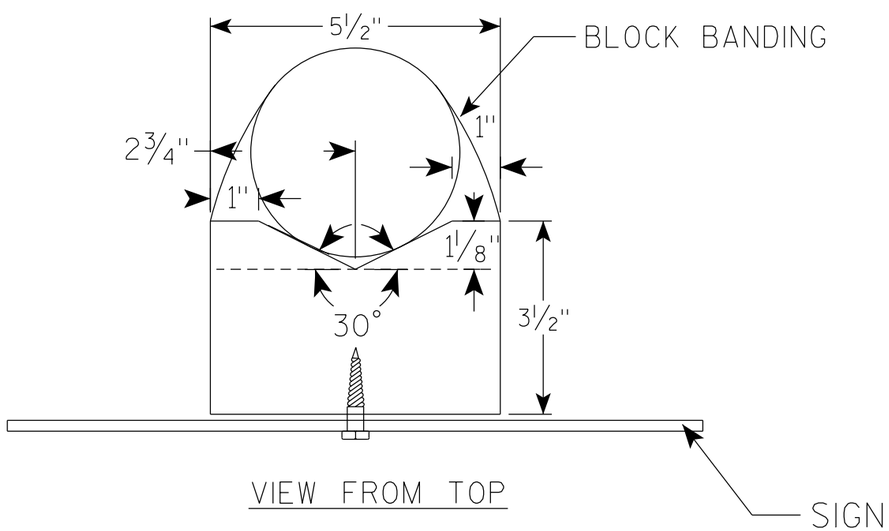

GENERAL NOTES

1. WOOD 4"X6" POST MATERIAL SHALL CONFORM TO 507.2.2 OF THE WisDOT STANDARD SPECIFICATIONS
2. BLOCK BANDING AND CLIPS SHALL BE STAINLESS STEEL, 3/4" WIDTH AND 0.025" THICKNESS
3. SIGNS 3' OR GREATER IN HEIGHT SHALL UTILIZE 3 BLOCK BANDS. SIGNS UNDER 3' IN HEIGHT SHALL UTILIZE 2 BLOCK BANDS
4. ACTUAL NUMBER OF FASTENERS PER SIGN VARIES WITH THE SIGN AREA, BUT NORNALLY THERE ARE TWO. FOR SIGNS GREATER THAN 9 S.F. 3 FASTENERS SHALL BE USED.
5. ALL SIGN MOUNTING BOLTS AND WASHERS SHALL BE EITHER:
   a. Hot dip or mechanically galvanized in accordance with ASTM Designation: A 153, Class D
   b. Electro-galvanized in accordance with ASTM Designation : B 633, TYPE III, SC 3
6. ALL BOLTS SHALL HAVE HEXAGONAL HEADS.
7. STEEL WASHERS SHALL BE 1 1/4" O.D. X 3/8" I.D. X 1/16"
8. NYLON WASHERS SHALL BE 1 1/4" O.D. X 3/8" I.D. X .080 FOR TYPE H OR TYPE F FACE SIGN

✳ LAG BOLTS SHALL BE 3/8" X 2 1/2"

7

7

BLOCK BANDING DETAIL
(V-BLOCK OPTION)

WISCONSIN DEPT OF TRANSPORTATION

APPROVED Matthew R Rauch
for State Traffic Engineer

DATE 4/19/2022 PLATE NO. A5-10.3

PROJECT NO:				SHEET NO: 101	E

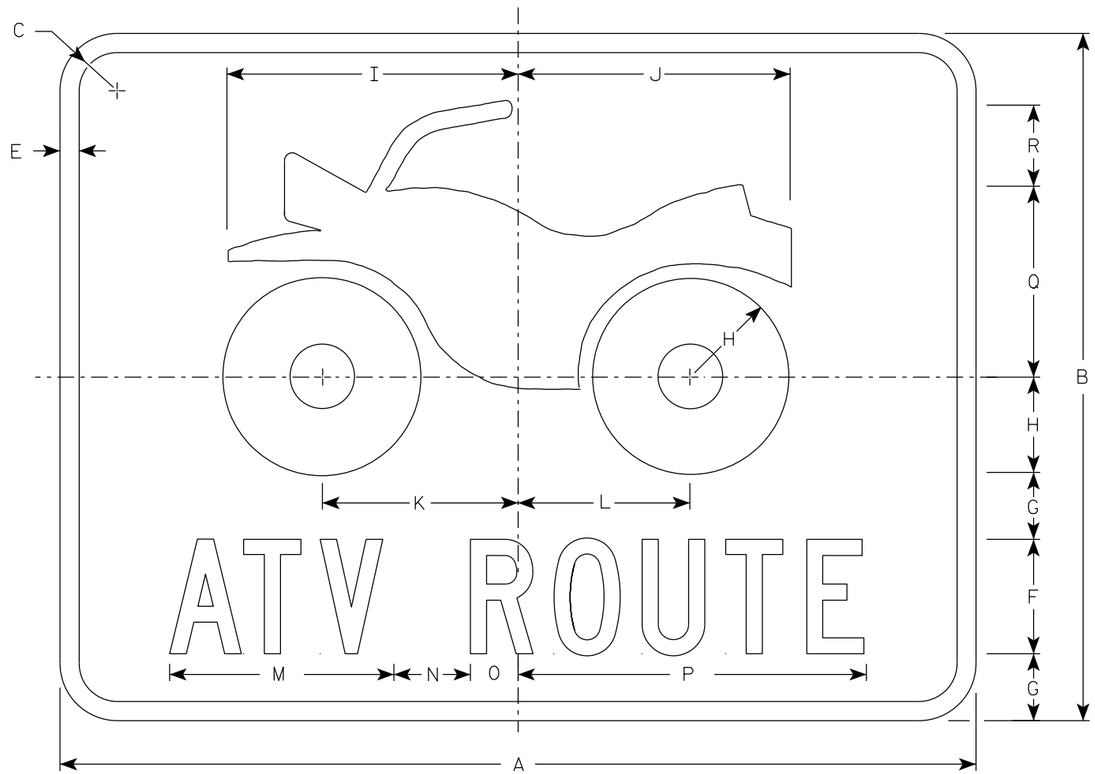

D11-10

NOTES

1. Sign is Type II - Type H Reflective
2. Color:
   Background - Green
   Message - White
3. Message Series - C

SIZE	A	B	C	D	E	F	G	H	I	J	K	L	M	N	O	P	Q	R	S	T	U	V	W	X	Y	Z	Area sq. ft.
1																											
2S	24	18	1 1/2		1/2	3	1 3/4	2 1/2	7 5/8	7 1/8	5 1/8	5 1/2	5 7/8	2	1 1/4	9 1/8	5	2 1/8									3.0
2M	24	18	1 1/2		1/2	3	1 3/4	2 1/2	7 5/8	7 1/8	5 1/8	5 1/2	5 7/8	2	1 1/4	9 1/8	5	2 1/8									3.0
3																											
4																											
5																											

STANDARD SIGN
D11-10

WISCONSIN DEPT OF TRANSPORTATION

APPROVED Matthew R Rauch
for State Traffic Engineer

DATE 1/25/2023 PLATE NO. D11-10.6

PROJECT NO:

SHEET NO: 102 E

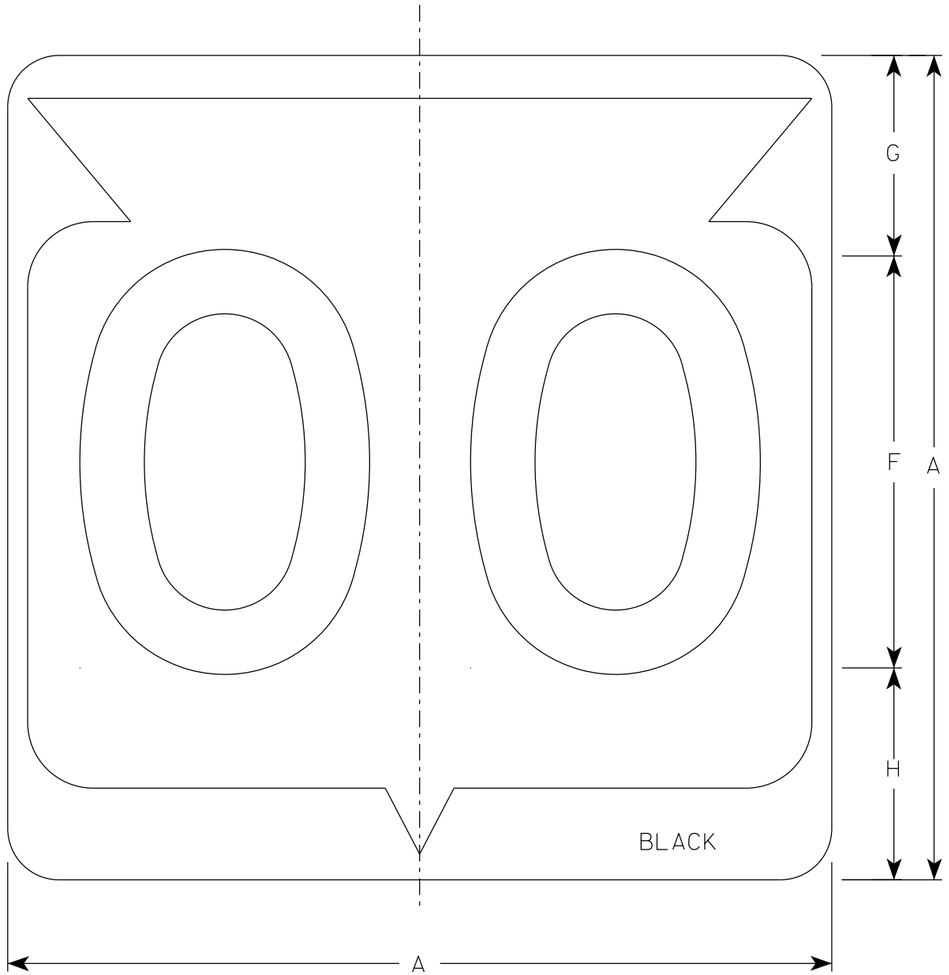

M1-6

NOTES

1. Sign is Type II - Type H Reflective
2. Color:
   Background - White
   Message - Black
3. Message Series - D except 3 number signs Series C

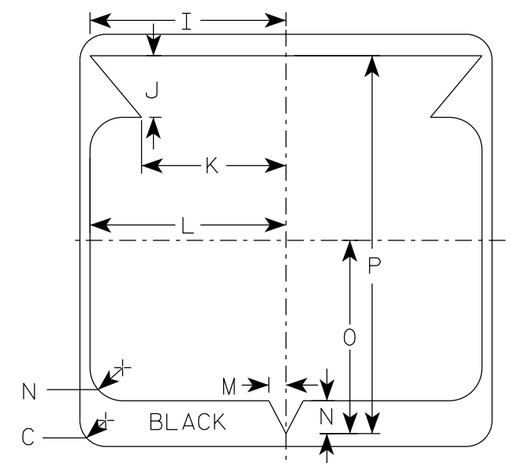

SIZE	A	B	C	D	E	F	G	H	I	J	K	L	M	N	O	P	Q	R	S	T	U	V	W	X	Y	Z	Area sq. ft.
1																											
2	24		1 1/2			12	5 1/2	6 1/2	10 1/4	2 1/2	8 7/8	11 1/2	1	1 7/8	11 1/4	21 7/8											4.0
2M	24		1 1/2			12	5 1/2	6 1/2	10 1/4	2 1/2	8 7/8	11 1/2	1	1 7/8	11 1/4	21 7/8											4.0
3	36		2 1/4			18	8 3/4	9 1/4	15 3/8	5 3/8	12 5/8	17 1/8	1 1/2	2 7/8	16 7/8	33											9.0
4	36		2 1/4			18	8 3/4	9 1/4	15 3/8	5 3/8	12 5/8	17 1/8	1 1/2	2 7/8	16 7/8	33											9.0
5	36		2 1/4			18	8 3/4	9 1/4	15 3/8	5 3/8	12 5/8	17 1/8	1 1/2	2 7/8	16 7/8	33											9.0

STATE ROUTE MARKER
M1-6 FOR ASSEMBLIES

WISCONSIN DEPT OF TRANSPORTATION

APPROVED Matthew R Rauch
for State Traffic Engineer

DATE 11/8/2022 PLATE NO. M1-6.11

PROJECT NO:	HWY:	COUNTY:		SHEET NO: 103	E

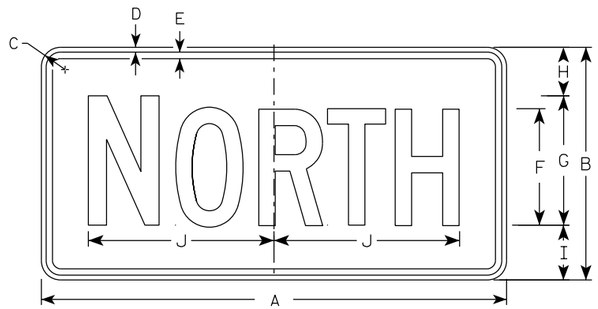

M3-1
MM3-1
MP3-1

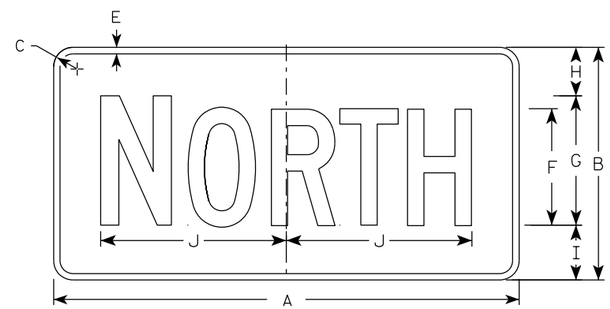

MB3-1
MK3-1
MN3-1

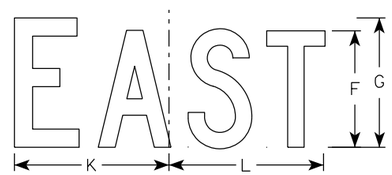

M3-2
MM3-2
MP3-2

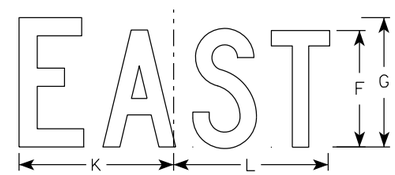

MB3-2
MK3-2
MN3-2

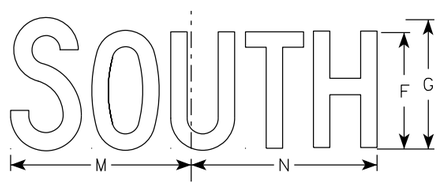

M3-3
MM3-3
MP3-3

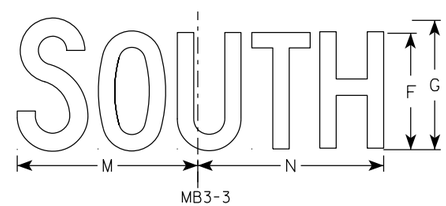

MB3-3
MK3-3
MN3-3

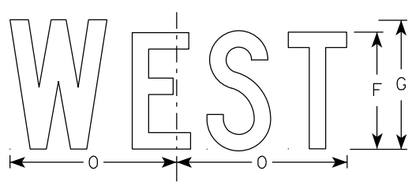

M3-4
MM3-4
MP3-4

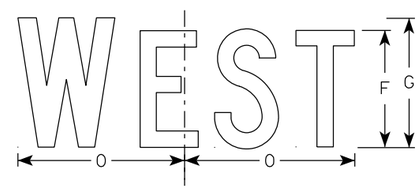

MB3-4
MK3-4
MN3-4

NOTES

1. All Signs Type II - Type H Reflective
2. Color:
   Background - See note 5
   Message - See note 5
3. Message Series - C
4. Corners may be square or rounded when base material is plywood but borders shall be rounded as shown. When base material is metal, the corners and borders shall be rounded.
5. M3-1 thru M3-4 Background - White
   Message - Black
   MB3-1 thru MB3-4 Background - Blue
   Message - White
   MK3-1 thru MK3-4 Background - Green
   Message - White
   MM3-1 thru MM3-4 Background - White
   Message - Green
   MN3-1 thru MN3-4 Background - Brown
   Message - White
   MP3-1 thru MP3-4 Background - White
   Message - Blue
6. Note the first letter of each direction is larger than the remainder of the message.

SIZE	A	B	C	D	E	F	G	H	I	J	K	L	M	N	O	P	Q	R	S	T	U	V	W	X	Y	Z	Area sq. ft.
1																											
2S	24	12	1 1/2	3/8	3/8	6	7	2 1/4	2 3/4	10 1/4	7 7/8	8 3/8	10 1/4	9 3/4	8 3/4												2.00
2M	24	12	1 1/2	3/8	3/8	6	7	2 1/4	2 3/4	10 1/4	7 7/8	8 3/8	10 1/4	9 3/4	8 3/4												2.00
3	36	18	1 1/2	3/8	1/2	9	10	3 3/4	4 1/4	14 3/8	12	12 1/8	14	14 1/8	13												4.5
4	36	18	1 1/2	3/8	1/2	9	10	3 3/4	4 1/4	14 3/8	12	12 1/8	14	14 1/8	13												4.5
5	36	18	1 1/2	3/8	1/2	9	10	3 3/4	4 1/4	14 3/8	12	12 1/8	14	14 1/8	13												4.5

STANDARD SIGNS
M3-1 THRU M3-4
SERIES

WISCONSIN DEPT OF TRANSPORTATION

APPROVED Matthew R Rauch
For State Traffic Engineer

DATE 2/8/2023 PLATE NO. M3-1.15

PROJECT NO: | HWY: | COUNTY: | SHEET NO: 104 | E

NOTES

1. Sign is Type II - Type F Reflective
2. Color:
   Background - Orange
   Message - Black
3. Message Series - B
4. Corners may be square or rounded when base material is plywood but borders shall be rounded as shown. When base material is metal, the corners and borders shall be rounded.

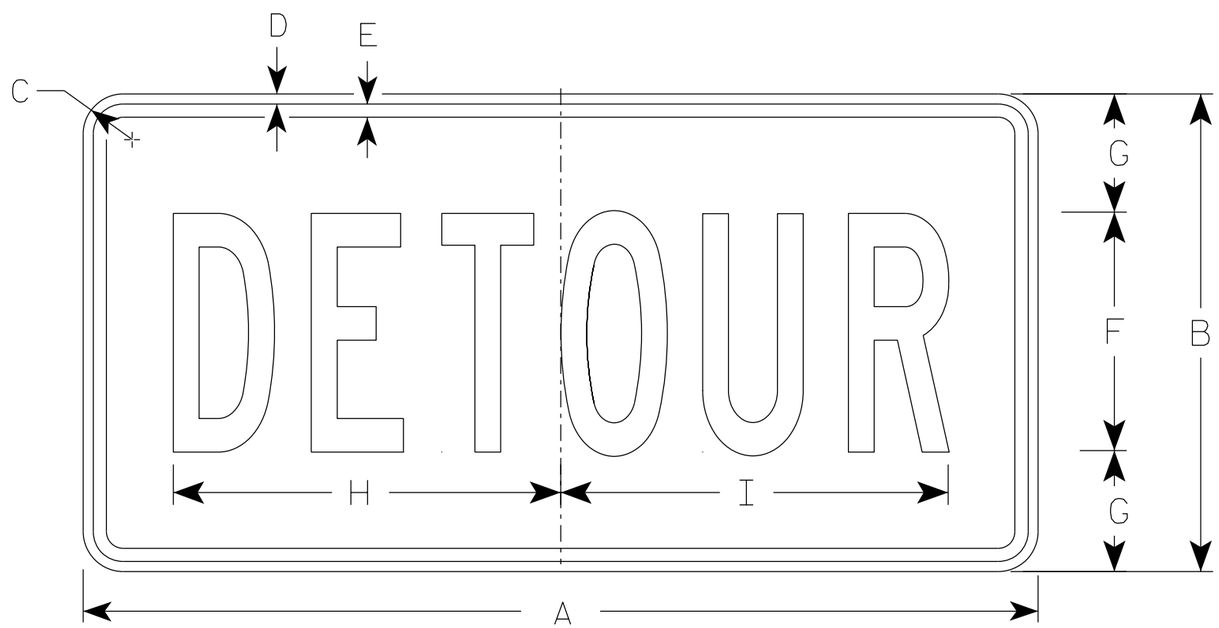

M4-8

SIZE	A	B	C	D	E	F	G	H	I	J	K	L	M	N	O	P	Q	R	S	T	U	V	W	X	Y	Z	Area sq. ft.
1																											
2	24	12	1 1/2	3/8	3/8	6	3	10	10 1/4																		2.0
2M	24	12	1 1/2	3/8	3/8	6	3	10	10 1/4																		2.0
3	36	18	1 1/2	3/8	1/2	9	4 1/2	14 5/8	14 1/2																		4.5
4	36	18	1 1/2	3/8	1/2	9	4 1/2	14 5/8	14 1/2																		4.5
5	36	18	1 1/2	3/8	1/2	9	4 1/2	14 5/8	14 1/2																		4.5

STANDARD SIGN
M4-8

WISCONSIN DEPT OF TRANSPORTATION

APPROVED Matthew R Rauch
for State Traffic Engineer

DATE 2/9/2023 PLATE NO. M4-8.4

PROJECT NO:	HWY:	COUNTY:		SHEET NO:	E

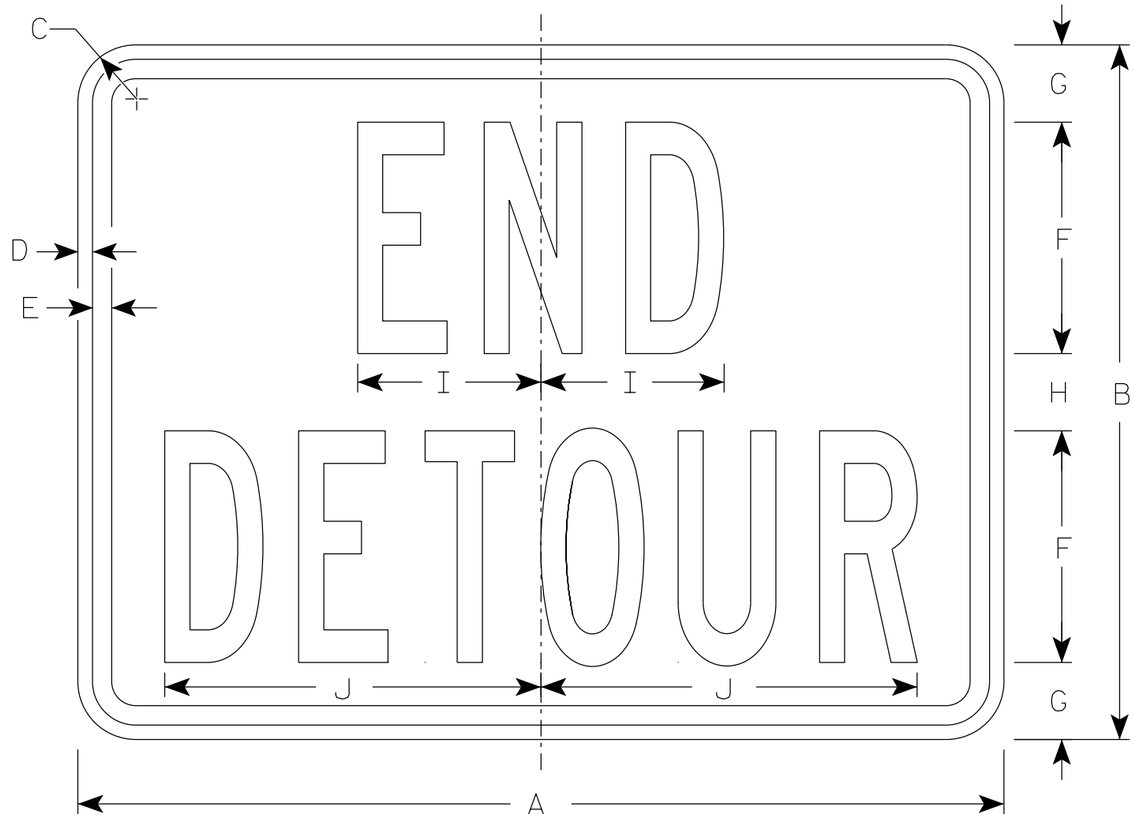

M4-8A

NOTES

1. Sign is Type II - Type F Reflective
2. Color:
   Background - Orange
   Message - Black
3. Message Series - B
4. Corners may be square or rounded when base material is plywood but borders shall be rounded as shown. When base material is metal, the corners and borders shall be rounded.

SIZE	A	B	C	D	E	F	G	H	I	J	K	L	M	N	O	P	Q	R	S	T	U	V	W	X	Y	Z	Area sq. ft.
1																											
2	24	18	1 1/2	3/8	1/2	6	2	2	4 3/4	9 3/4																	3.0
2M	24	18	1 1/2	3/8	1/2	6	2	2	4 3/4	9 3/4																	3.0
3	30	24	1 1/2	3/8	1/2	8	2 1/2	3	6 3/4	13																	5.0
4	30	24	1 1/2	3/8	1/2	8	2 1/2	3	6 3/4	13																	5.0
5	30	24	1 1/2	3/8	1/2	8	2 1/2	3	6 3/4	13																	5.0

STANDARD SIGN
M4-8A

WISCONSIN DEPT OF TRANSPORTATION

APPROVED Matthew R Rauch
for State Traffic Engineer

DATE 2/9/2023 PLATE NO. M4-8A.4

PROJECT NO: | HWY: | COUNTY: | SHEET NO: 106 | E

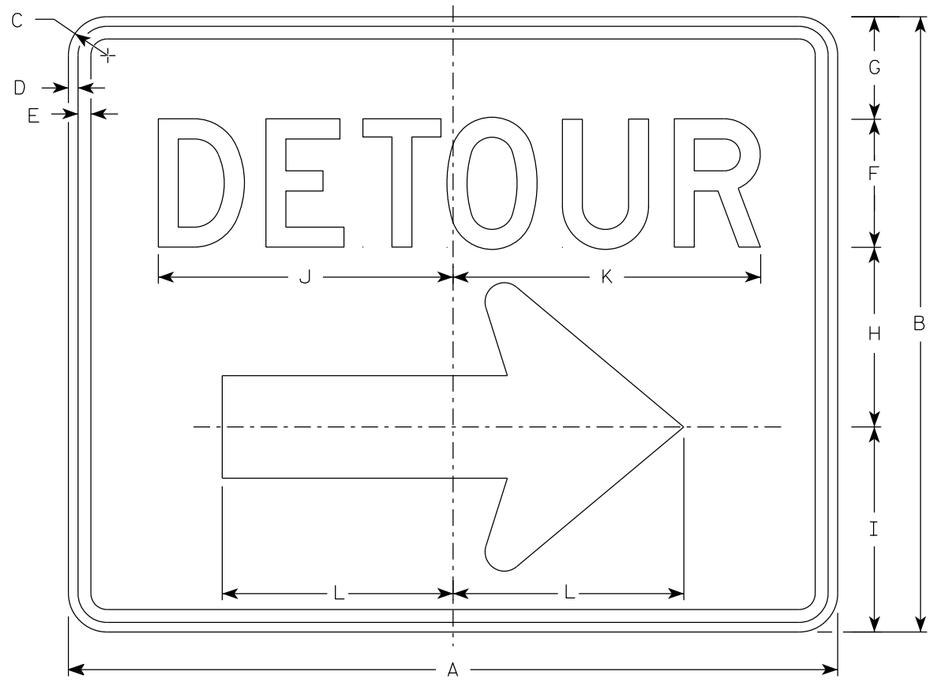

M4-9R

NOTES

1. Sign is Type II - Type F Reflective
2. Color:
   Background - Orange
   Message - Black
3. Message Series - D
4. Corners may be square or rounded when base material is plywood but borders shall be rounded as shown. When base material is metal, the corners and borders shall be rounded.
4. M4-9L is the same as M4-9R except the arrow is reversed.

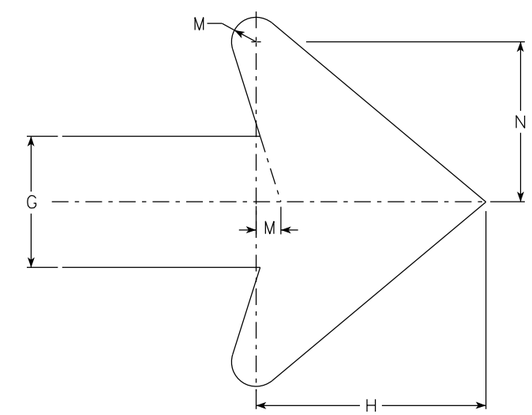

Arrow Detail

SIZE	A	B	C	D	E	F	G	H	I	J	K	L	M	N	O	P	Q	R	S	T	U	V	W	X	Y	Z	Area sq. ft.
1																											
2	30	24	1 1/2	3/8	1/2	5	4	7	8	11 1/2	12	9	3/4	4 7/8													5.00
2M	30	24	1 1/2	3/8	1/2	5	4	7	8	11 1/2	12	9	3/4	4 7/8													5.00
3	30	24	1 1/2	3/8	1/2	5	4	7	8	11 1/2	12	9	3/4	4 7/8													5.00
4	48	36	1 7/8	1/2	5/8	8	6	10 1/2	11 5/8	20 5/8	20 1/2	13 1/4	1 1/8	6 7/8													12.0
5	48	36	1 7/8	1/2	5/8	8	6	10 1/2	11 5/8	20 5/8	20 1/2	13 1/4	1 1/8	6 7/8													12.0

STANDARD SIGN
M4-9 R & L

WISCONSIN DEPT OF TRANSPORTATION

APPROVED Matthew R Rauch
For State Traffic Engineer

DATE 2/9/2023 PLATE NO. M4-9R.6

PROJECT NO: | HWY: | COUNTY: | SHEET NO: E

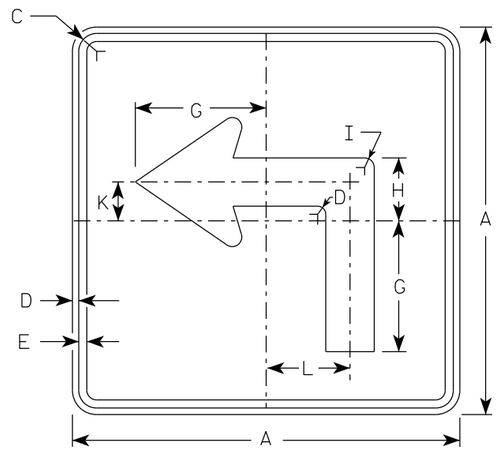

M5-1L
MM5-1L
MO5-1L
MP5-1L

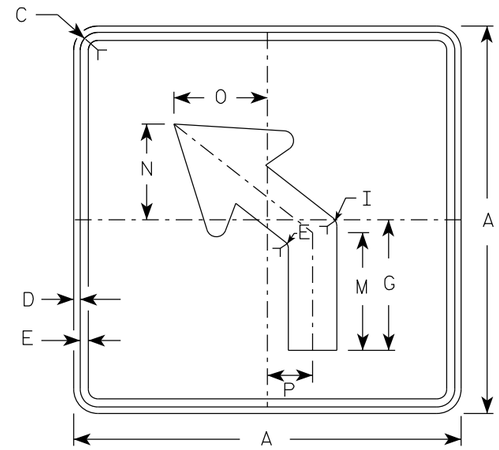

M5-2L
MM5-2L
MO5-2L
MP5-2L

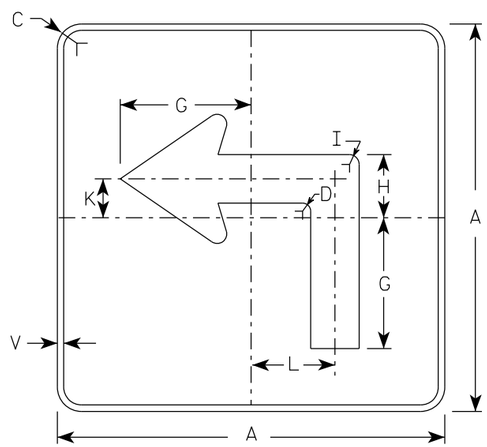

MB5-1L
MK5-1L
MN5-1L
MR5-1L

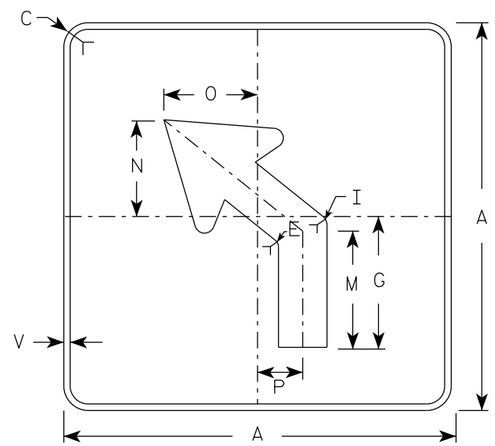

MB5-2L
MK5-2L
MN5-2L
MR5-2L

NOTES

1. Signs are Type II - Type H reflective except as shown
2. Color:
   Background - See note 4
   Message - See note 4
3. Corners may be square or rounded when base material is plywood but borders shall be rounded as shown. When base material is metal, the corners and borders shall be rounded.
4. M5-1 and M5-2 Background - White
   Message - Black
   MB5-1 and MB5-2 Background - Blue
   Message - White
   MK5-1 and MK5-2 Background - Green
   Message - White
   MM5-1 and MM5-2 Background - White
   Message - Green
   MN5-1 and MN5-2 Background - Brown
   Message - White
   MO5-1 and MO5-2 Background - Orange - Type F Reflective
   Message - Black
   MP5-1 and MP5-2 Background - White
   Message - Blue
   MR5-1 and MR5-2 Background - Brown
   Message - Yellow
5. M5-1R same as M5-1L except arrow points right.
6. M5-2R same as M5-2L except arrow tilts right.

ARROW DETAIL

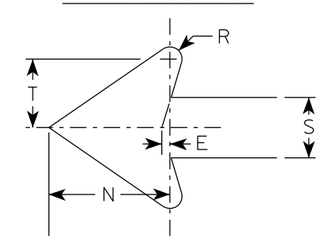

SIZE	A	B	C	D	E	F	G	H	I	J	K	L	M	N	O	P	Q	R	S	T	U	V	W	X	Y	Z	Area sq. ft.
1																											
2S	21		1 1/2	3/8	3/8		7	3 3/8	5/8		2 1/8	4 1/2	6 3/8	5 1/4	5	2 1/2		1/2	2 5/8	3		1/2					3.06
2M	21		1 1/2	3/8	3/8		7	3 3/8	5/8		2 1/8	4 1/2	6 3/8	5 1/4	5	2 1/2		1/2	2 5/8	3		1/2					3.06
3	30		1 7/8	1/2	5/8		10 1/8	4 7/8	7/8		3	6 1/2	9 1/8	7 1/2	7 1/4	3 1/2		3/4	3 3/4	4 1/4		1/2					6.25
4	30		1 7/8	1/2	5/8		10 1/8	4 7/8	7/8		3	6 1/2	9 1/8	7 1/2	7 1/4	3 1/2		3/4	3 3/4	4 1/4		1/2					6.25
5	30		1 7/8	1/2	5/8		10 1/8	4 7/8	7/8		3	6 1/2	9 1/8	7 1/2	7 1/4	3 1/2		3/4	3 3/4	4 1/4		1/2					6.25

STANDARD SIGN
M5-1 & M5-2

WISCONSIN DEPT OF TRANSPORTATION

APPROVED Matthew R Rauch
for State Traffic Engineer

DATE 2/13/2023 PLATE NO. M5-1.15

PROJECT NO: | HWY: | COUNTY: | SHEET NO: 108 | E

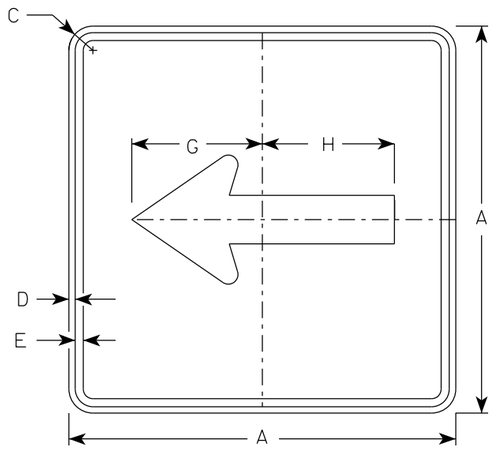

M6-1
MM6-1
MO6-1
MP6-1

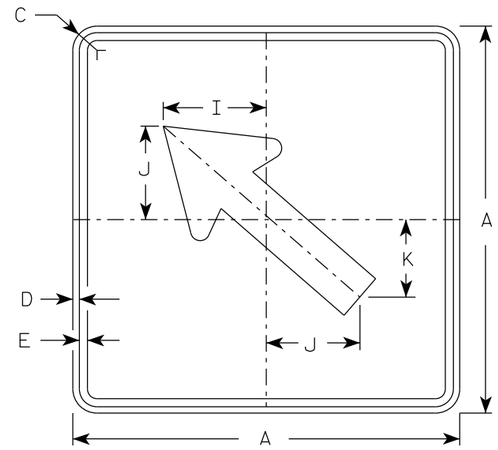

M6-2
MM6-2
MO6-2
MP6-2

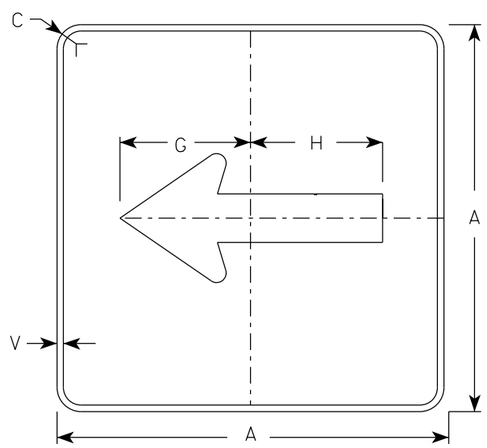

MB6-1
MK6-1
MN6-1
MR6-1

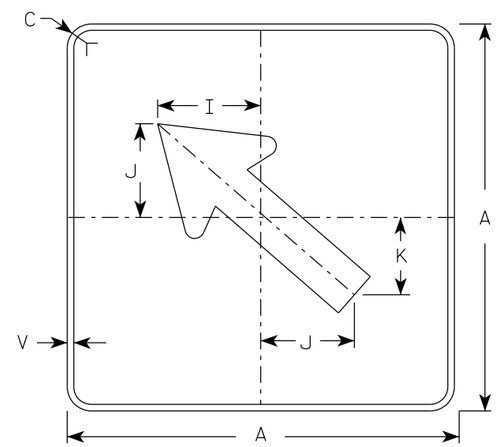

MB6-2
MK6-2
MN6-2
MR6-2

NOTES

1. Signs are Type II - Type H Reflective except as Shown
2. Color:
   Background - See note 4
   Message - See note 4
3. Corners may be square or rounded when base material is plywood but borders shall be rounded as shown. When base material is metal, the corners and borders shall be rounded.
4. M6-1 and M6-2 Background - White
   Message - Black
   MB6-1 and MB6-2 Background - Blue
   Message - White
   MK6-1 and MK6-2 Background - Green
   Message - White
   MM6-1 and MM6-2 Background - White
   Message - Green
   MN6-1 and MN6-2 Background - Brown
   Message - White
   MO6-1 and MO6-2 Background - Orange - Type F Reflective
   Message - Black
   MP6-1 and MP6-2 Background - White
   Message - Blue
   MR6-1 and MR6-2 Background - Brown
   Message - Yellow

ARROW DETAIL

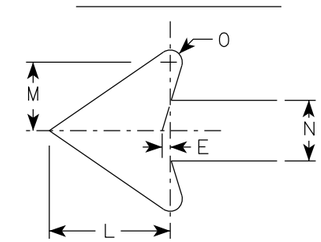

SIZE	A	B	C	D	E	F	G	H	I	J	K	L	M	N	O	P	Q	R	S	T	U	V	W	X	Y	Z	Area sq. ft.
1																											
2S	21		1 1/2	3/8	3/8		7 1/2	7 1/8	5 5/8	5	4 1/4	5 1/4	3	2 5/8	1/2							1/2					3.06
2M	21		1 1/2	3/8	3/8		7 1/2	7 1/8	5 5/8	5	4 1/4	5 1/4	3	2 5/8	1/2							1/2					3.06
3	30		1 7/8	1/2	5/8		10 3/4	10 1/4	8	7 1/4	6	7 1/2	4 1/4	3 3/4	3/4							1/2					6.25
4	30		1 7/8	1/2	5/8		10 3/4	10 1/4	8	7 1/4	6	7 1/2	4 1/4	3 3/4	3/4							1/2					6.25
5	30		1 7/8	1/2	5/8		10 3/4	10 1/4	8	7 1/4	6	7 1/2	4 1/4	3 3/4	3/4							1/2					6.25

STANDARD SIGN
M6-1 & M6-2
SERIES

WISCONSIN DEPT OF TRANSPORTATION

APPROVED Matthew R Rauch
for State Traffic Engineer

DATE 2/13/2023 PLATE NO. M6-1.16

PROJECT NO: | HWY: | COUNTY: | SHEET NO: 109 | E

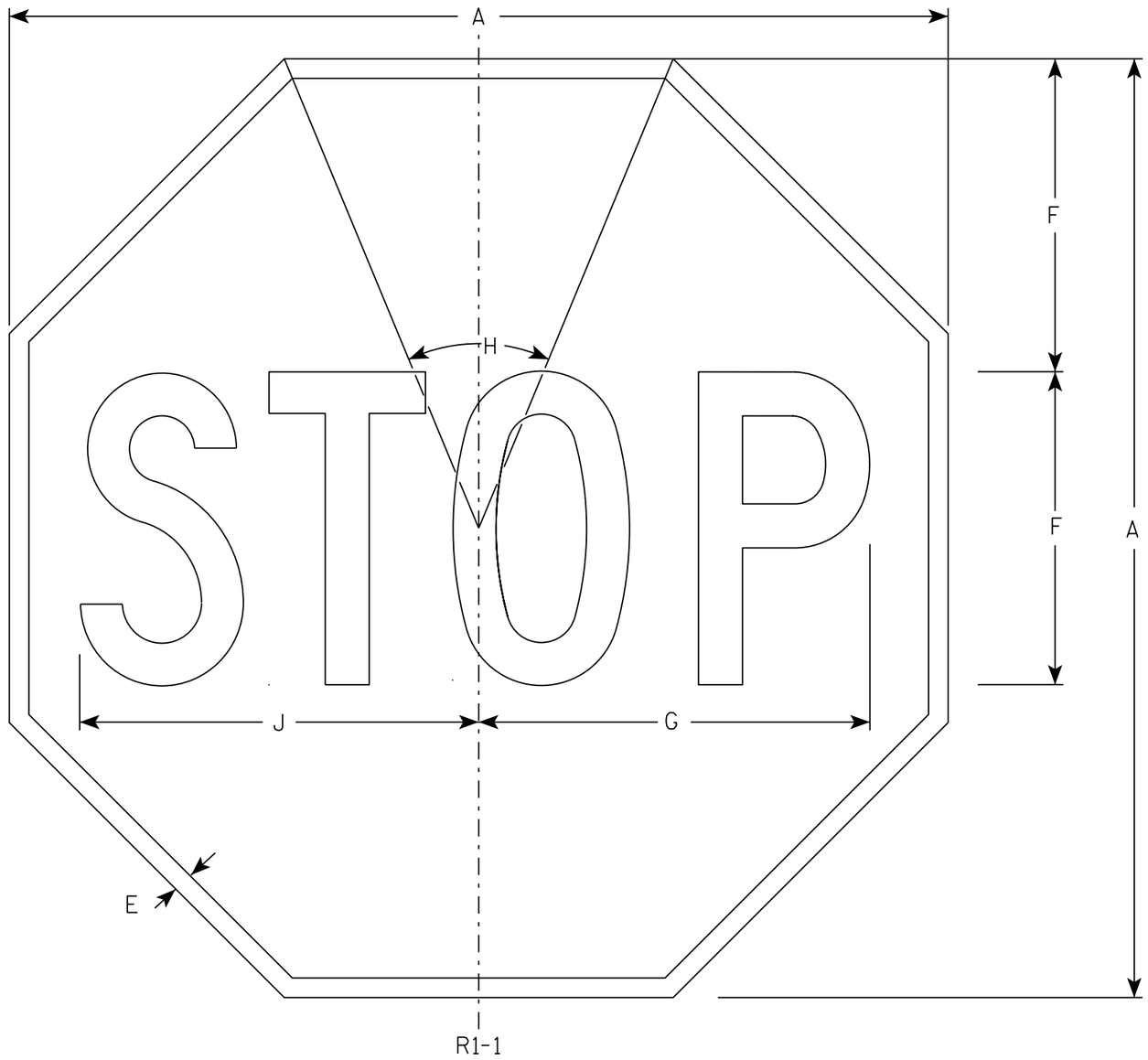

NOTES

1. Sign is Type II - Type H Reflective - reference WIS DOT Standard Specification for HIGHWAY and STRUCTURE CONSTRUCTION latest edition.
2. Color:
   Background - Red
   Message - White
3. Message Series - C

SIZE	A	B	C	D	E	F	G	H	I	J	K	L	M	N	O	P	Q	R	S	T	U	V	W	X	Y	Z	Area sq. ft.
1	30				5/8	10	12 1/2	45°		12 3/4																	5.18
2S	30				5/8	10	12 1/2	45°		12 3/4																	5.18
2M	36				3/4	12	15	45°		15 3/8																	7.46
3	36				3/4	12	15	45°		15 3/8																	7.46
4	48				1	16	20	45°		20 1/2																	13.25
5	48				1	16	20	45°		20 1/2																	13.25
6	18				3/8	6	7 3/4	45°		7 3/4																	1.86
7	12				1/4	4	5	45°		5 1/8																	0.78

STANDARD SIGN
R1-1

WISCONSIN DEPT OF TRANSPORTATION

APPROVED Matthew R Rauch
for State Traffic Engineer

DATE 11/12/15 PLATE NO. R1-1.13

PROJECT NO:	HWY:	COUNTY:		SHEET NO: 110	E

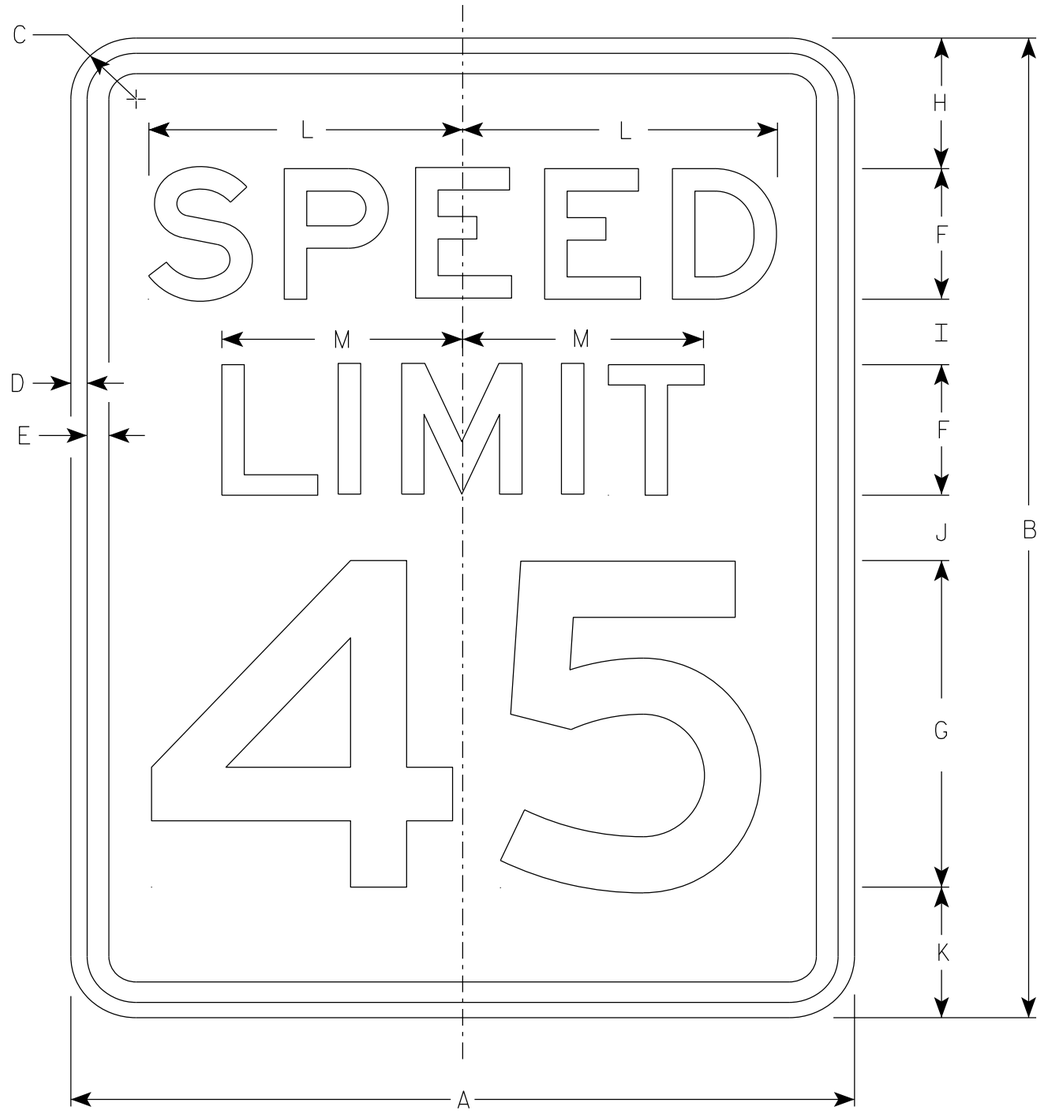

R2-1

NOTES

1. Sign is Type II - Type H Reflective
2. Color:
   Background - White
   Message - Black
3. Message Series - E
4. Substitute appropriate numerals and optically adjust spacing to achieve proper balance.

SIZE	A	B	C	D	E	F	G	H	I	J	K	L	M	N	O	P	Q	R	S	T	U	V	W	X	Y	Z	Area sq. ft.
1	18	24	1 1/2	3/8	1/2	3	8	3	2	2	3	7 1/4	5 1/2														3.0
2S	24	30	1 1/2	3/8	1/2	4	10	3	2 1/4	3 3/8	3 3/8	9 5/8	7 3/8														5.0
2M	30	36	1 7/8	1/2	5/8	5	12	5	2 1/2	2 1/2	4	12	9 1/4														7.5
3	36	48	1 7/8	1/2	5/8	6	14	6	5	5	6	14 3/8	11														12.0
4	36	48	1 7/8	1/2	5/8	6	14	6	5	5	6	14 3/8	11														12.0
5	48	60	3	3/4	1	8	20	6	4 1/2	6 3/4	6 3/4	19 1/4	14 5/8														20.0

STANDARD SIGN
R2-1

WISCONSIN DEPT OF TRANSPORTATION

APPROVED Matthew R Rauch
for State Traffic Engineer

DATE 2/1/23 PLATE NO. R2-1.14

PROJECT NO: | HWY: | COUNTY: | SHEET NO: 111 | E

NOTES

1. Sign is Type II - Type H Reflective
2. Color:
   Background - White
   Message - Black
3. Message Series - C
4. Corners may be square or rounded when base material is plywood but borders shall be rounded as shown. When base material is metal, the corners and borders shall be rounded.
5. Substitute appropriate numerals to nearest quarter mile and optically adjust spacing to achieve proper balance.

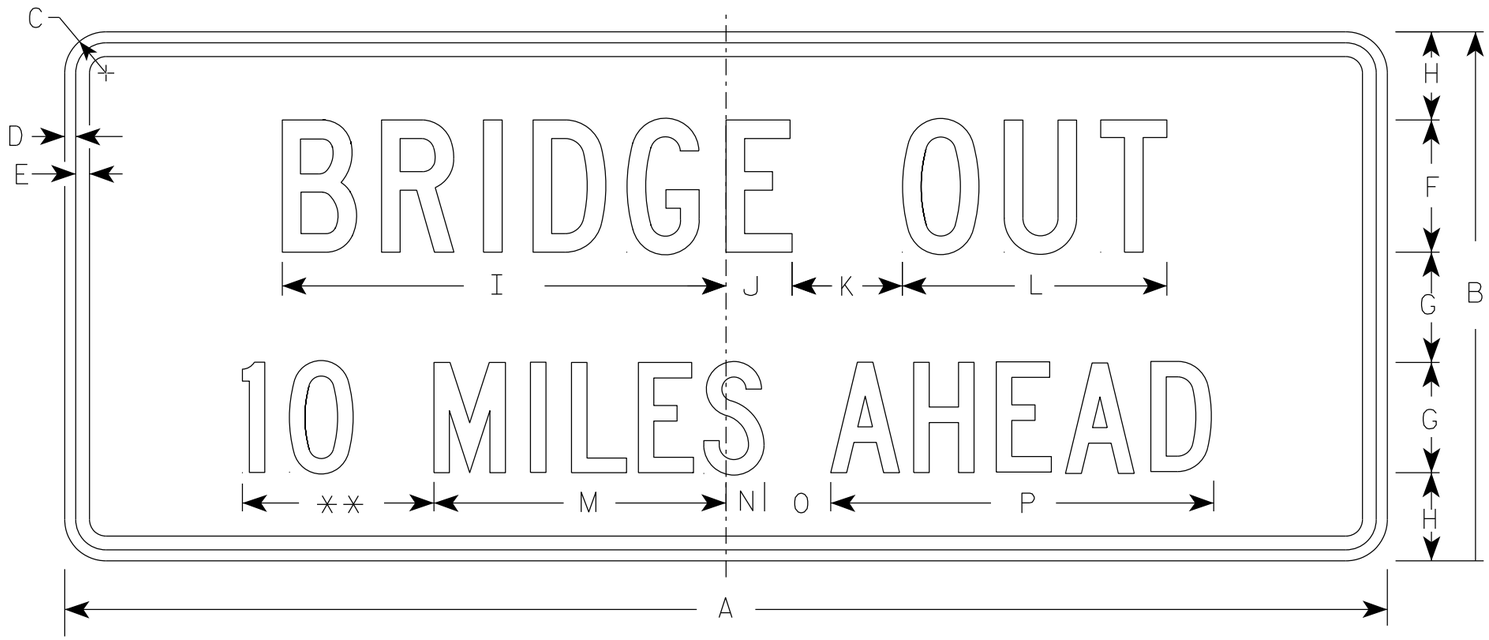

R11-3C

** See Note 5

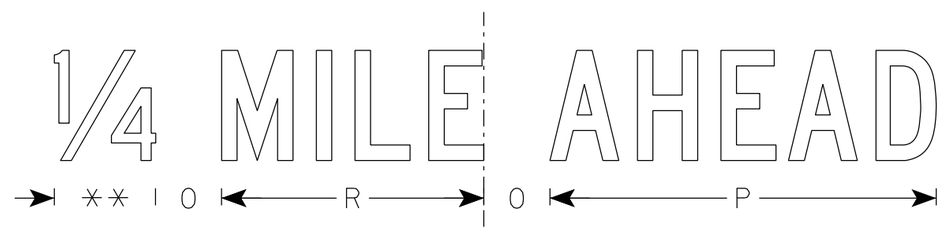

SIZE	A	B	C	D	E	F	G	H	I	J	K	L	M	N	O	P	Q	R	S	T	U	V	W	X	Y	Z	Area sq. ft.
1	36	15	1 1/2	1/2	5/8	4	3	2 1/2	13 1/4	2 1/4	3	8	8	1 1/2	2	10 3/4		7 1/8									3.75
2S	60	24	1 7/8	1/2	5/8	6	5	4	20 1/8	3	5	12	13 1/4	1 3/4	3	17 3/8		11 7/8									10.0
2M	60	24	1 7/8	1/2	5/8	6	5	4	20 1/8	3	5	12	13 1/4	1 3/4	3	17 3/8		11 7/8									10.0
3																											
4																											
5																											

STANDARD SIGN
R11-3C

WISCONSIN DEPT OF TRANSPORTATION

APPROVED Matthew R Rauch
for State Traffic Engineer

DATE 2/5/24 PLATE NO. R11-3C.4

PROJECT NO:

SHEET NO: 112 E

NOTES

1. Sign is Type II- Type F Reflective
2. Color:
   Background - Yellow
   Message - Black
3. Message Series - Lines 1 and 2 are Series D.
   Line 3 is series C.
4. Corners and borders shall be rounded on all base materials for this sign.

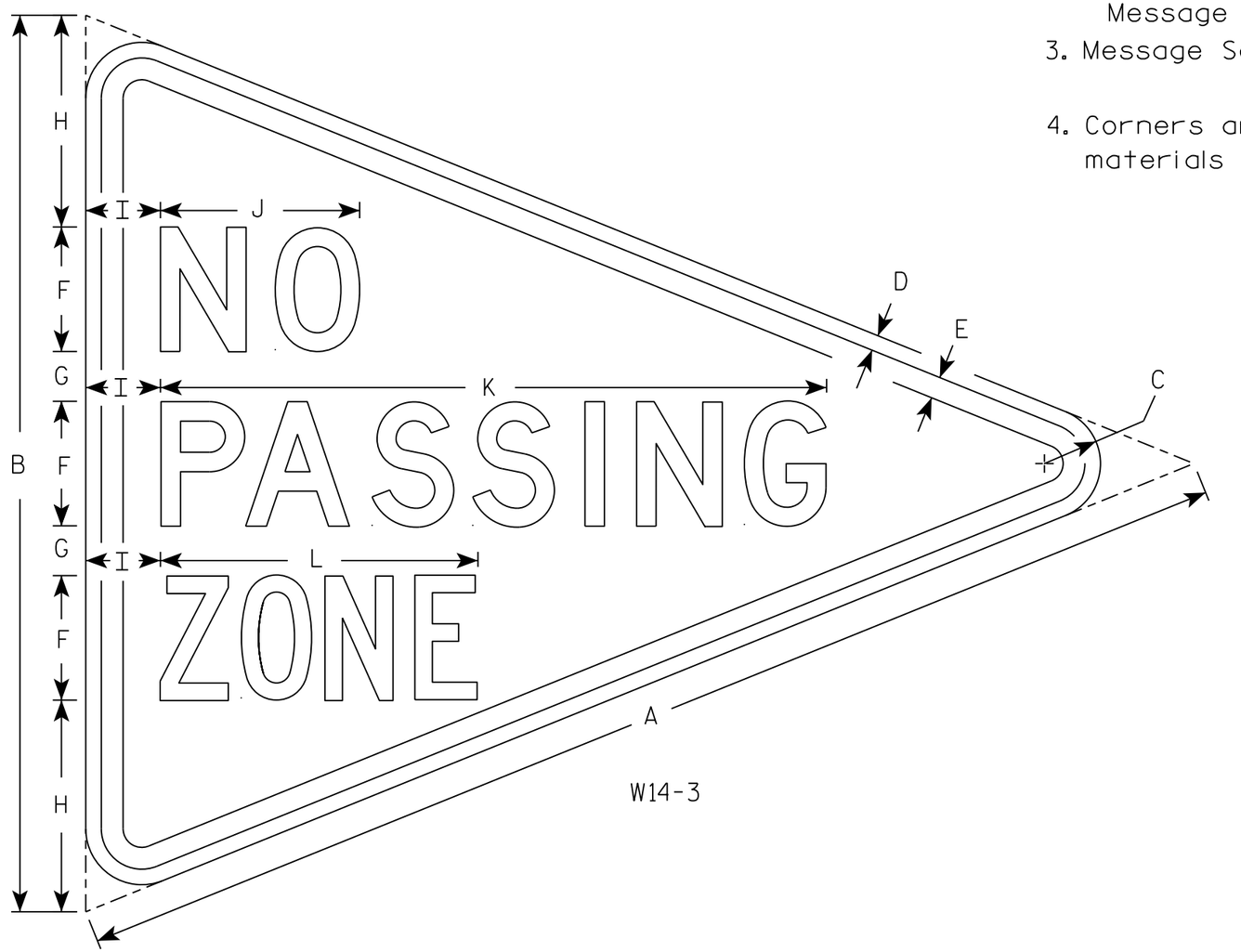

W14-3

SIZE	A	B	C	D	E	F	G	H	I	J	K	L	M	N	O	P	Q	R	S	T	U	V	W	X	Y	Z	Area sq. ft.
1																											
2S	48	36	2 1/4	5/8	7/8	5	2	8 1/2	3	8	26 3/4	12 3/4															5.56
2M																											
3																											
4																											
5																											

STANDARD SIGN
W14-3

WISCONSIN DEPT OF TRANSPORTATION

APPROVED Matthew R Rauch
for State Traffic Engineer
DATE 3/21/17 PLATE NO. W14-3.10

PROJECT NO: | HWY: | COUNTY: | SHEET NO: 113 | E

NOTES

1. Sign is Type II - Type F Reflective
2. Color:
   Background - Orange
   Message - Black
3. Message Series - C
4. Corners may be square or rounded when base material is plywood but borders shall be rounded as shown. When base material is metal, the corners and borders shall be rounded.

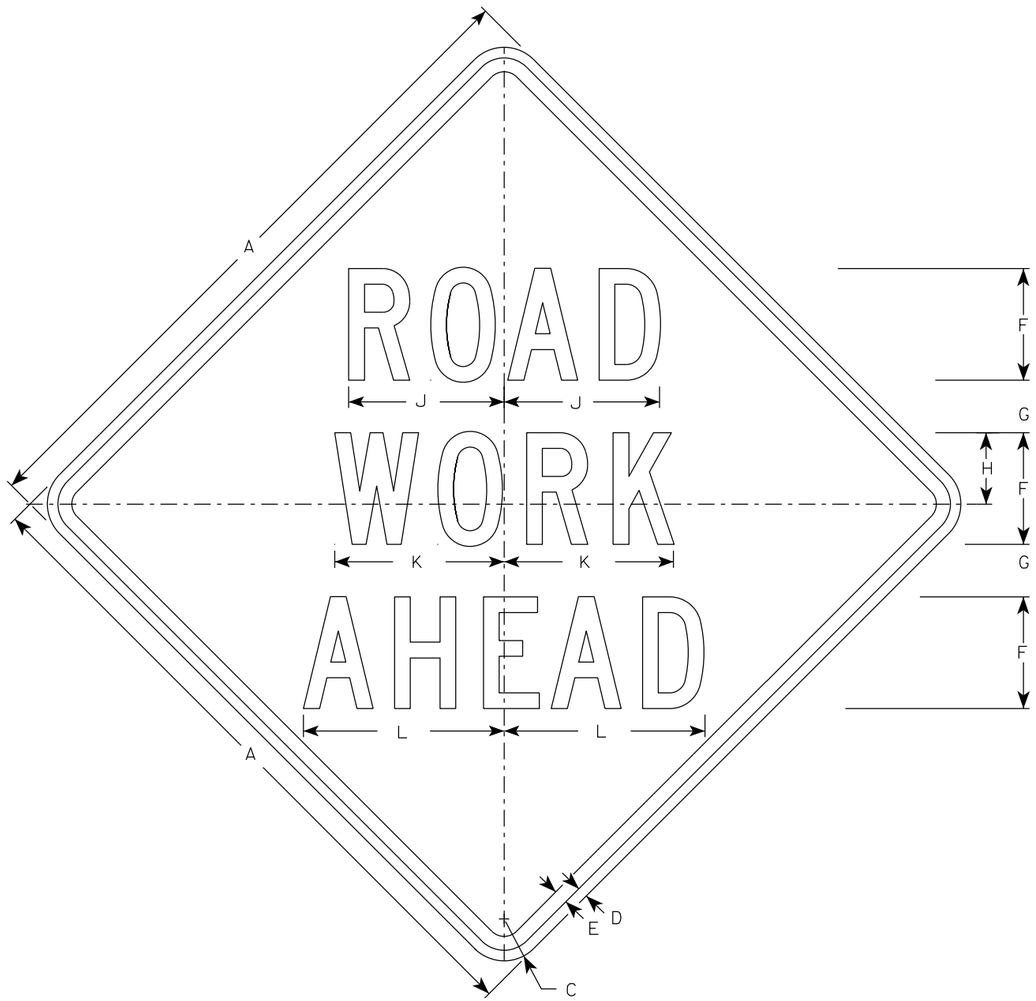

W20-1A

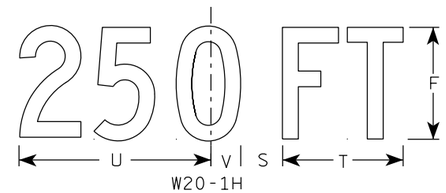

W20-1H

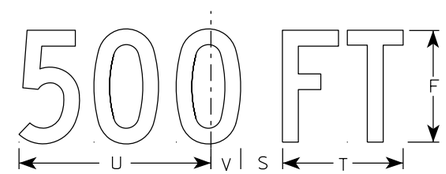

W20-1D

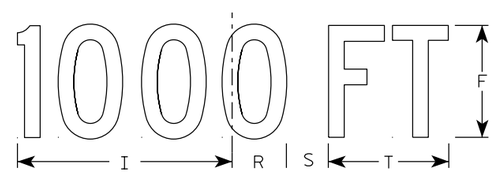

W20-1C

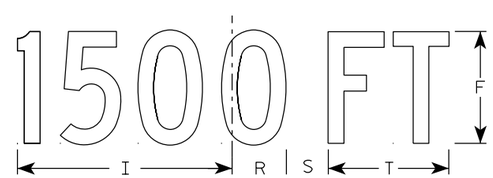

W20-1B

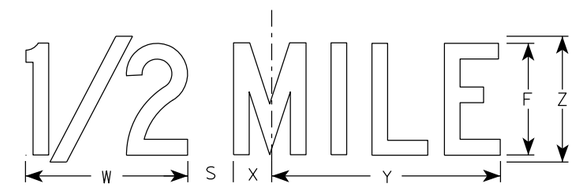

W20-1G

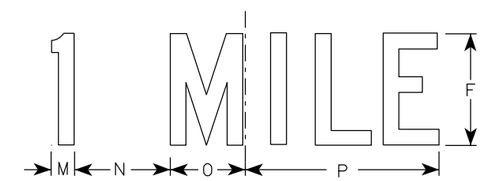

W20-1F

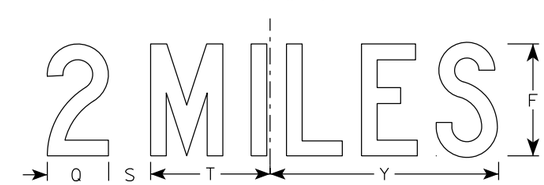

W20-1E

SIZE	A	B	C	D	E	F	G	H	I	J	K	L	M	N	O	P	Q	R	S	T	U	V	W	X	Y	Z	Area sq. ft.
1	36		2 1/4	5/8	3/4	5	2 5/8	3 1/4	10 1/8	7	7 5/8	8 7/8	1 1/8	4 1/2	3 1/2	9	3 1/4	2 1/2	2 1/4	5 5/8	9	1 3/8	8	1 3/4	10 3/4	6	9.0
2S	48		3	3/4	1	8	3 3/4	5 1/8	15 3/8	11 1/8	12 1/8	14 3/8	1 5/8	6 7/8	5 3/8	13 7/8	4 3/8	3 7/8	3	8 5/8	13 3/4	2 1/8	11 7/8	2 3/4	16 3/8	9	16.0
2M	48		3	3/4	1	8	3 3/4	5 1/8	15 3/8	11 1/8	12 1/8	14 3/8	1 5/8	6 7/8	5 3/8	13 7/8	4 3/8	3 7/8	3	8 5/8	13 3/4	2 1/8	11 7/8	2 3/4	16 3/8	9	16.0
3	48		3	3/4	1	8	3 3/4	5 1/8	15 3/8	11 1/8	12 1/8	14 3/8	1 5/8	6 7/8	5 3/8	13 7/8	4 3/8	3 7/8	3	8 5/8	13 3/4	2 1/8	11 7/8	2 3/4	16 3/8	9	16.0
4	48		3	3/4	1	8	3 3/4	5 1/8	15 3/8	11 1/8	12 1/8	14 3/8	1 5/8	6 7/8	5 3/8	13 7/8	4 3/8	3 7/8	3	8 5/8	13 3/4	2 1/8	11 7/8	2 3/4	16 3/8	9	16.0
5	48		3	3/4	1	8	3 3/4	5 1/8	15 3/8	11 1/8	12 1/8	14 3/8	1 5/8	6 7/8	5 3/8	13 7/8	4 3/8	3 7/8	3	8 5/8	13 3/4	2 1/8	11 7/8	2 3/4	16 3/8	9	16.0

STANDARD SIGN
W20-1A, B, C, D, E, F, G & H

WISCONSIN DEPT OF TRANSPORTATION

APPROVED Matthew R Rauch
For State Traffic Engineer

DATE 1/10/2024 PLATE NO. W20-1.12

PROJECT NO:

SHEET NO: E

FILE NAME : C:\CAEfiles\Projects\tr_stdplate\W201.DGN PLOT DATE : 10-JAN 2024 11:16 PLOT BY : dotc4c

WISDOT/CADDS SHEET 42

7

7

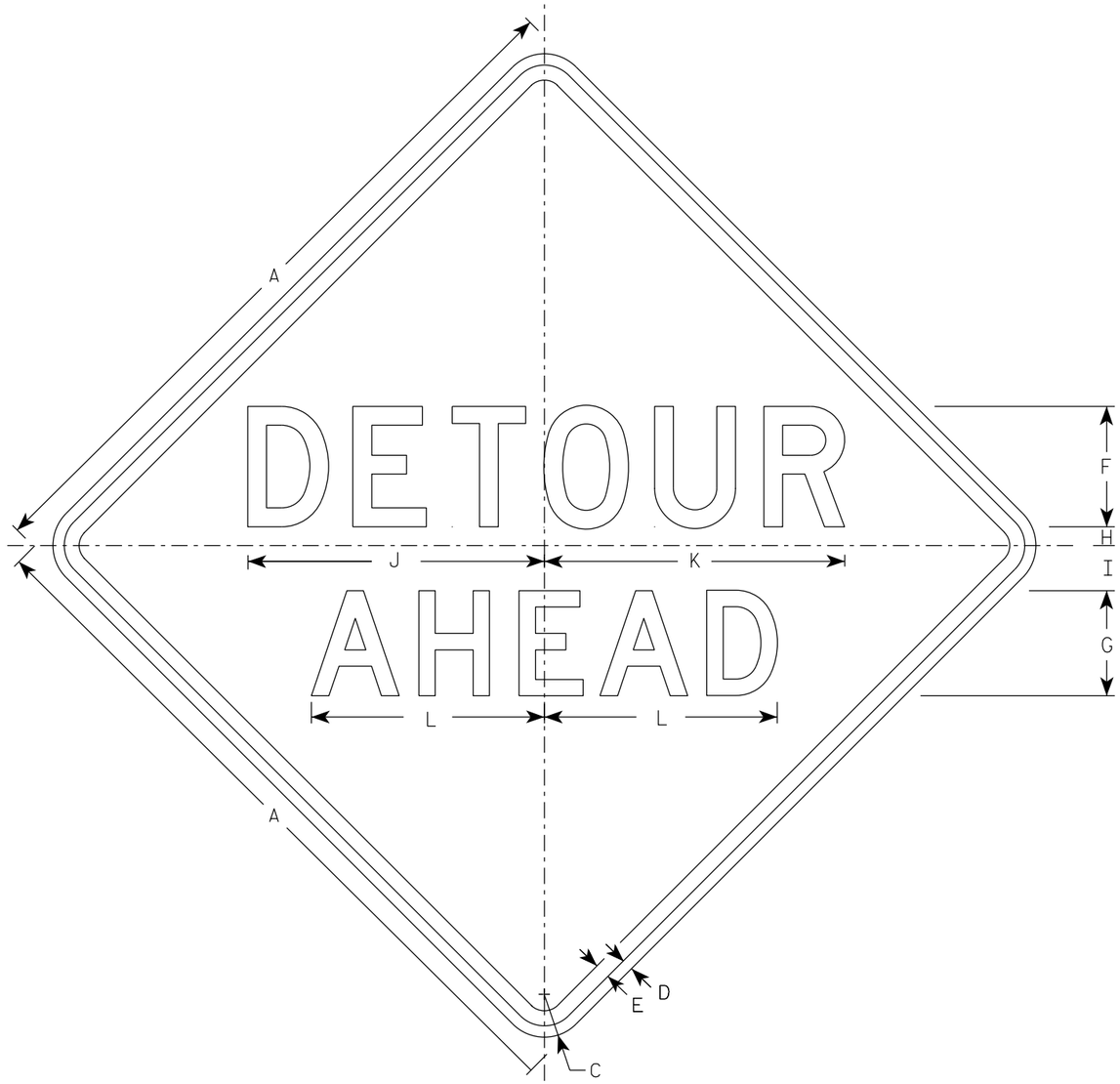

W20-2A

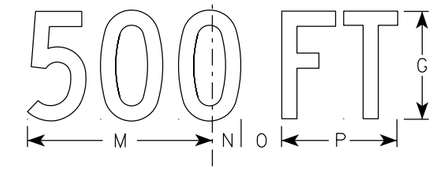

W20-2D

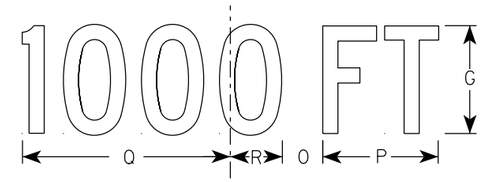

W20-2C

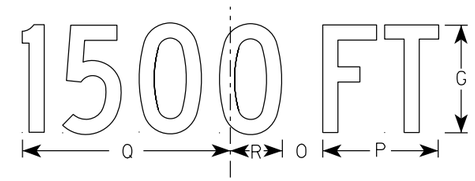

W20-2B

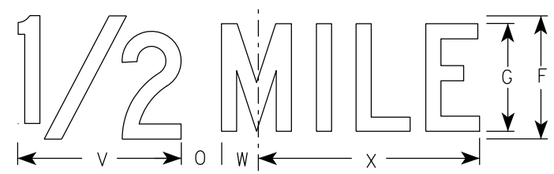

W20-2G

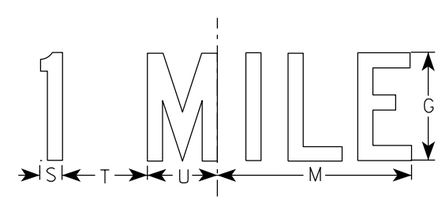

W20-2F

NOTES

1. Sign is Type II - Type F Reflective
2. Color:
   Background - Orange
   Message - Black
3. Message Series - See note 5
4. Corners may be square or rounded when base material is plywood but borders shall be rounded as shown. When base material is metal, the corners and borders shall be rounded.
5. Line 1 is Series D.
   Line 2 is Series D for AHEAD and Series C for all other distances.

SIZE	A	B	C	D	E	F	G	H	I	J	K	L	M	N	O	P	Q	R	S	T	U	V	W	X	Y	Z	Area sq. ft.
1	36		2 1/4	5/8	3/4	6	5	1	2 1/4	14 3/4	15	11 5/8	9	1 3/8	1 7/8	5 5/8	10 1/8	2 1/2	1 1/8	4 1/2	3 1/2	8	1 3/4	10 3/4			9.0
2S	48		3	3/4	1	8	7	1 1/4	3	19 3/4	20	15 1/2	12	1 7/8	2 5/8	7 1/2	13 1/2	3 3/8	1 1/2	6	4 5/8	10 5/8	2 3/8	14 3/8			16.0
2M	48		3	3/4	1	8	7	1 1/4	3	19 3/4	20	15 1/2	12	1 7/8	2 5/8	7 1/2	13 1/2	3 3/8	1 1/2	6	4 5/8	10 5/8	2 3/8	14 3/8			16.0
3	48		3	3/4	1	8	7	1 1/4	3	19 3/4	20	15 1/2	12	1 7/8	2 5/8	7 1/2	13 1/2	3 3/8	1 1/2	6	4 5/8	10 5/8	2 3/8	14 3/8			16.0
4	48		3	3/4	1	8	7	1 1/4	3	19 3/4	20	15 1/2	12	1 7/8	2 5/8	7 1/2	13 1/2	3 3/8	1 1/2	6	4 5/8	10 5/8	2 3/8	14 3/8			16.0
5	48		3	3/4	1	8	7	1 1/4	3	19 3/4	20	15 1/2	12	1 7/8	2 5/8	7 1/2	13 1/2	3 3/8	1 1/2	6	4 5/8	10 5/8	2 3/8	14 3/8			16.0

STANDARD SIGN
W20-2A,B,C,D,F & G

WISCONSIN DEPT OF TRANSPORTATION

APPROVED Matthew R Rauch
For State Traffic Engineer

DATE 1/10/2024 PLATE NO. W20-2.7

PROJECT NO: | HWY: | COUNTY: | SHEET NO: E

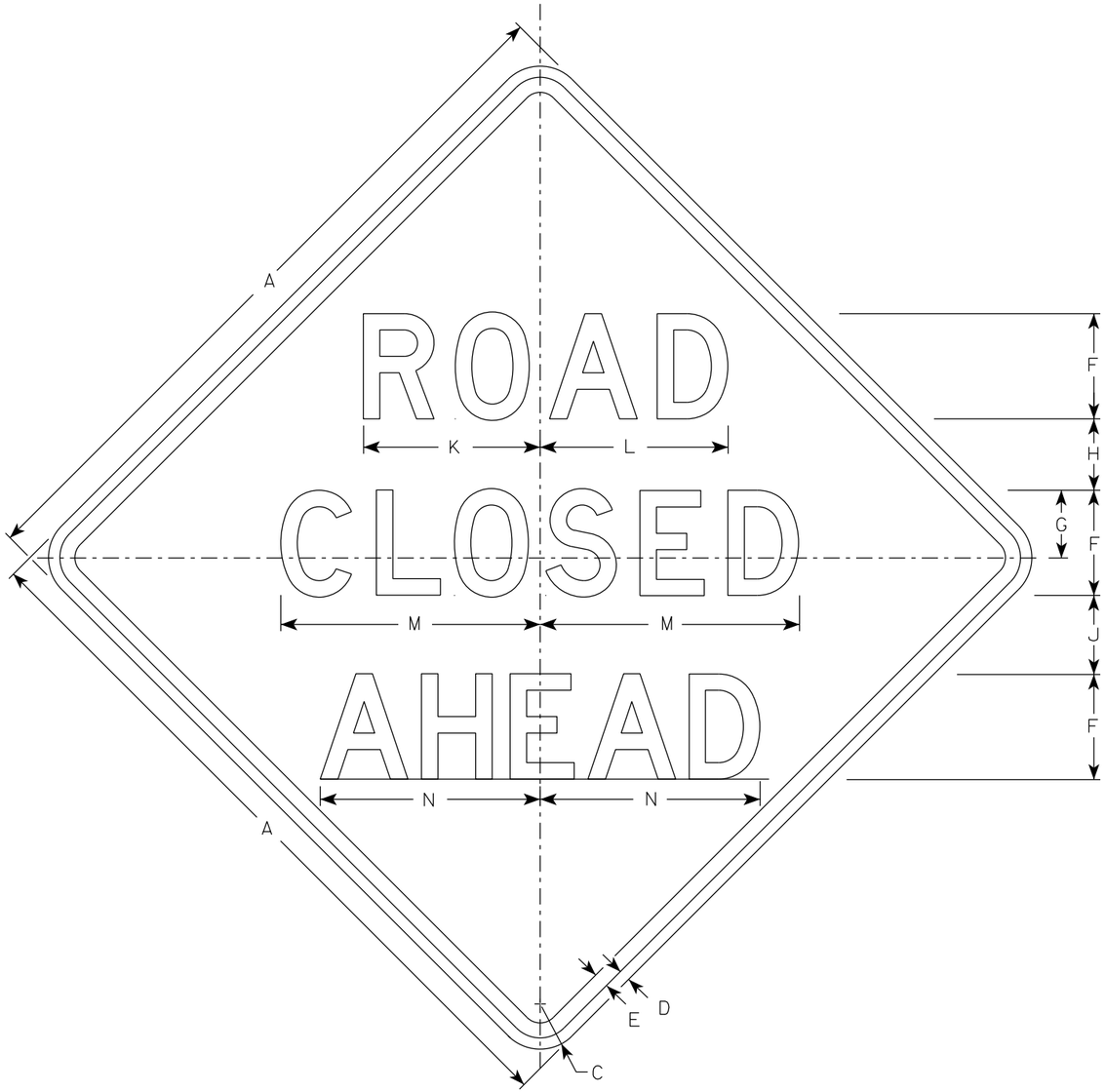

W20-3A

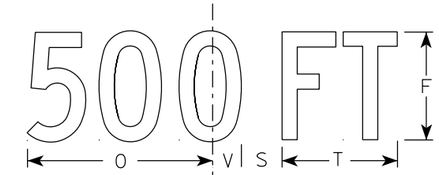

W20-3D

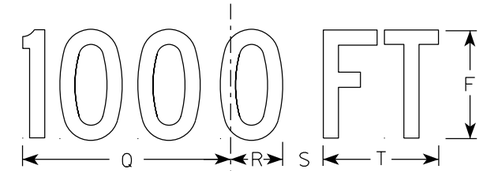

W20-3C

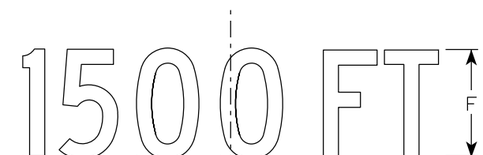

W20-3B

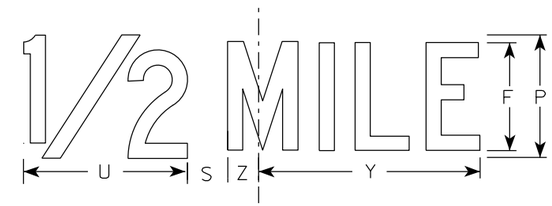

W20-3G

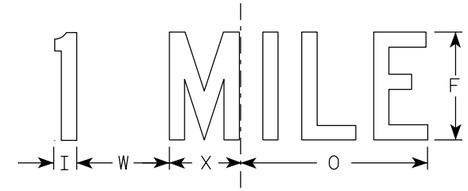

W20-3F

NOTES

1. Sign is Type II - Type F Reflective
2. Color:
   Background - Orange
   Message - Black
3. Message Series - see note 5
4. Corners may be square or rounded when base material is plywood but borders shall be rounded as shown. When base material is metal, the corners and borders shall be rounded.
5. Lines 1 and 2 are Series D.
   Line 3 is Series D for AHEAD and Series C for all other distances.

SIZE	A	B	C	D	E	F	G	H	I	J	K	L	M	N	O	P	Q	R	S	T	U	V	W	X	Y	Z	Area sq. ft.
1	36		2 1/4	5/8	3/4	5	3 3/8	3 1/2	1 1/8	4	8 3/8	8 7/8	12 1/2	11	9	6	10 1/8	2 1/2	1 7/8	5 5/8	8	1 3/8	4 1/2	3 1/2	10 3/4	1 3/4	9.0
2S	48		3	3/4	1	7	4 1/2	4 3/4	1 1/2	5 1/4	11 3/4	12 1/2	17 1/4	14 5/8	12	8	13 1/2	3 3/8	2 5/8	7 1/2	10 5/8	1 7/8	6	4 5/8	14 3/8	2 3/8	16.0
2M	48		3	3/4	1	7	4 1/2	4 3/4	1 1/2	5 1/4	11 3/4	12 1/2	17 1/4	14 5/8	12	8	13 1/2	3 3/8	2 5/8	7 1/2	10 5/8	1 7/8	6	4 5/8	14 3/8	2 3/8	16.0
3	48		3	3/4	1	7	4 1/2	4 3/4	1 1/2	5 1/4	11 3/4	12 1/2	17 1/4	14 5/8	12	8	13 1/2	3 3/8	2 5/8	7 1/2	10 5/8	1 7/8	6	4 5/8	14 3/8	2 3/8	16.0
4	48		3	3/4	1	7	4 1/2	4 3/4	1 1/2	5 1/4	11 3/4	12 1/2	17 1/4	14 5/8	12	8	13 1/2	3 3/8	2 5/8	7 1/2	10 5/8	1 7/8	6	4 5/8	14 3/8	2 3/8	16.0
5	48		3	3/4	1	7	4 1/2	4 3/4	1 1/2	5 1/4	11 3/4	12 1/2	17 1/4	14 5/8	12	8	13 1/2	3 3/8	2 5/8	7 1/2	10 5/8	1 7/8	6	4 5/8	14 3/8	2 3/8	16.0

STANDARD SIGN
W20-3A, B, C, D, F & G

WISCONSIN DEPT OF TRANSPORTATION

APPROVED Matthew R Rauch
for State Traffic Engineer

DATE 1/10/2024 PLATE NO. W20-3.8

PROJECT NO: | HWY: | COUNTY: | SHEET NO: E

STATE PROJECT NUMBER

5760-00-72

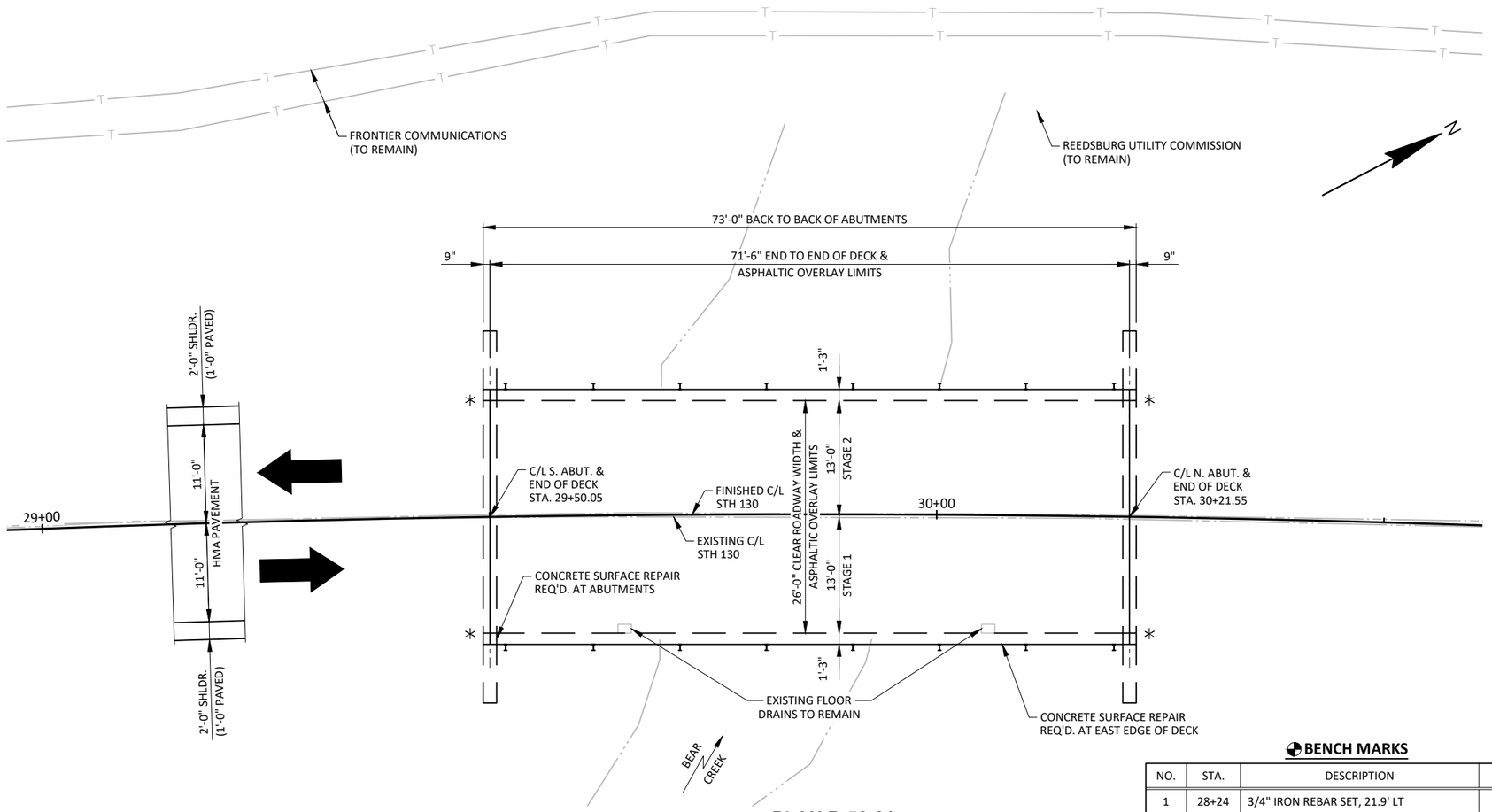

PLAN B-52-21

(SINGLE-SPAN STEEL GIRDER STRUCTURE)

∗ THRIE BEAM TRANSITION REQ'D.
SEE ROADWAY PLANS (TYP.)

BENCH MARKS

NO.	STA.	DESCRIPTION	ELEV.
1	28+24	3/4" IRON REBAR SET, 21.9' LT	741.88

DESIGN DATA

LIVE LOAD:

DESIGN LOADING	H20
INVENTORY RATING	HS-14
OPERATING RATING	HS-23
WISCONSIN STANDARD PERMIT VEHICLE (WIS-SPV)	180 KIPS

MATERIAL PROPERTIES:

CONCRETE MASONRY	f'c = 3,500 P.S.I.
STEEL RAILING RETROFIT	fy = 50,000 P.S.I.

TRAFFIC DATA

A.D.T. (2027)	520
A.D.T. (2047)	580
DESIGN SPEED	55 M.P.H.

GENERAL NOTES

DRAWINGS SHALL NOT BE SCALED.

DIMENSIONS SHOWN ON THE PLANS ARE BASED ON THE ORIGINAL STRUCTURE PLANS, INSPECTION REPORTS, AND FIELD SURVEY.

TOP 1¾ INCHES OF THE EXISTING 3-INCH ASPHALTIC CONCRETE OVERLAY SHALL BE REMOVED FROM THE ENTIRE BRIDGE DECK UNDER THE BID ITEM "REMOVING ASPHALTIC CONCRETE DECK OVERLAY B-52-21".

EXISTING FLOOR DRAINS TO REMAIN IN PLACE. HANDWORK REQUIRED AT FLOOR DRAIN LOCATIONS TO PROPERLY PLACE AND SLOPE 1¾" ASPHALT OVERLAY.

CONCRETE SURFACE REPAIR IS LOCATED AT ABUTMENTS AND THE EAST EDGE OF DECK. AREAS PROVIDED ARE APPROXIMATE. LOCATIONS AND EXTENTS SHALL BE DETERMINED BY THE FIELD ENGINEER.

AT "CURB REPAIR" EXPOSE EXISTING REINFORCEMENT A MINIMUM OF 1" CLEAR.

PROFILE GRADE LINE SHALL BE DETERMINED IN THE FIELD BASED ON A MINIMUM OVERLAY THICKNESS OF 1 ¾" PLACED ABOVE THE MILLED SURFACE. EXPECT AVERAGE OVERLAY THICKNESS IS 2". IF EXPECTED AVERAGE OVERLAY THICKNESS IS EXCEEDED BY MORE THAN ½", CONTACT THE STRUCTURES DESIGN SECTION.

THE COLOR OF THE FINAL COAT OF PAINT AT ALL SPOT PAINTING AREAS SHALL BE AMS STANDARD COLOR NO. 26293 (LIGHT GRAY).

ALL CONCRETE REMOVAL SHALL BE DEFINED BY A ½" DEEP SAWCUT.

APPLY PROTECTIVE SURFACE TREATMENT TO THE VERTICAL FACE AND HORIZONTAL FACES OF CURB REPAIR AREAS.

THE PLAN QUANTITY FOR THE BID ITEM "HMA PAVEMENT 4 LT 58-28 S" BASED ON THE AVERAGE OVERLAY THICKNESS.

SCOPE OF WORK

- NEW HMA PAVEMENT 4 LT 58-28 S OVERLAY
- CONCRETE SURFACE REPAIR AND CURB REPAIR
- SPOT PAINTING GIRDERS AT LOCATIONS DIRECTED BY THE ENGINEER IN THE FIELD

LIST OF DRAWINGS

8

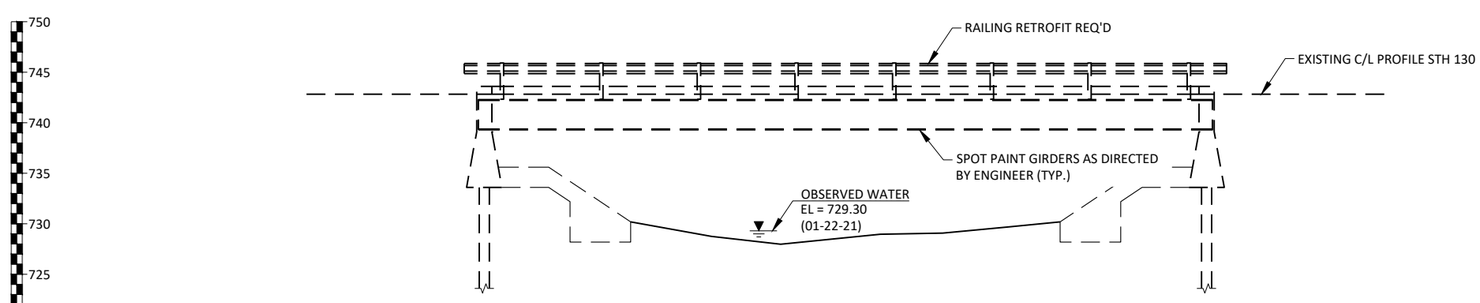

ELEVATION

(NORMAL TO BEAR CREEK)

WISCONSIN PROFESSIONAL ENGINEER
PATRICK T. BOLAND
E-36303
HILLPOINT, WIS.
Patrick Boland 8-6-25

DESIGN CONSULTANT
PATRICK BOLAND, PE
(608) 588-7484

BRIDGE OFFICE CONTACT
AARON BONK, PE
(608) 261-0261

NO.	DATE	REVISION	BY

JEWELL
560 SUNRISE DRIVE
SPRING GREEN, WI 53588
OFFICE: (608) 588-7484
www.JewellAssoc.com

STATE OF WISCONSIN
DEPARTMENT OF TRANSPORTATION

ACCEPTED JLR 08/22/25
CHIEF STRUCTURES DESIGN ENGINEER DATE

STRUCTURE B-52-21

STH 130 OVER BEAR CREEK

COUNTY RICHLAND	TOWN/~~CITY/VILLAGE~~ BUENA VISTA

DESIGN SPEC. REHABILITATION N/A

DESIGNED BY	DESIGN CK'D.	DRAWN BY	PLANS CK'D.
CTMP	PTB	CTMP	PTB

GENERAL PLAN

SHEET 1 OF 2

8

STATE PROJECT NUMBER
5760-00-72

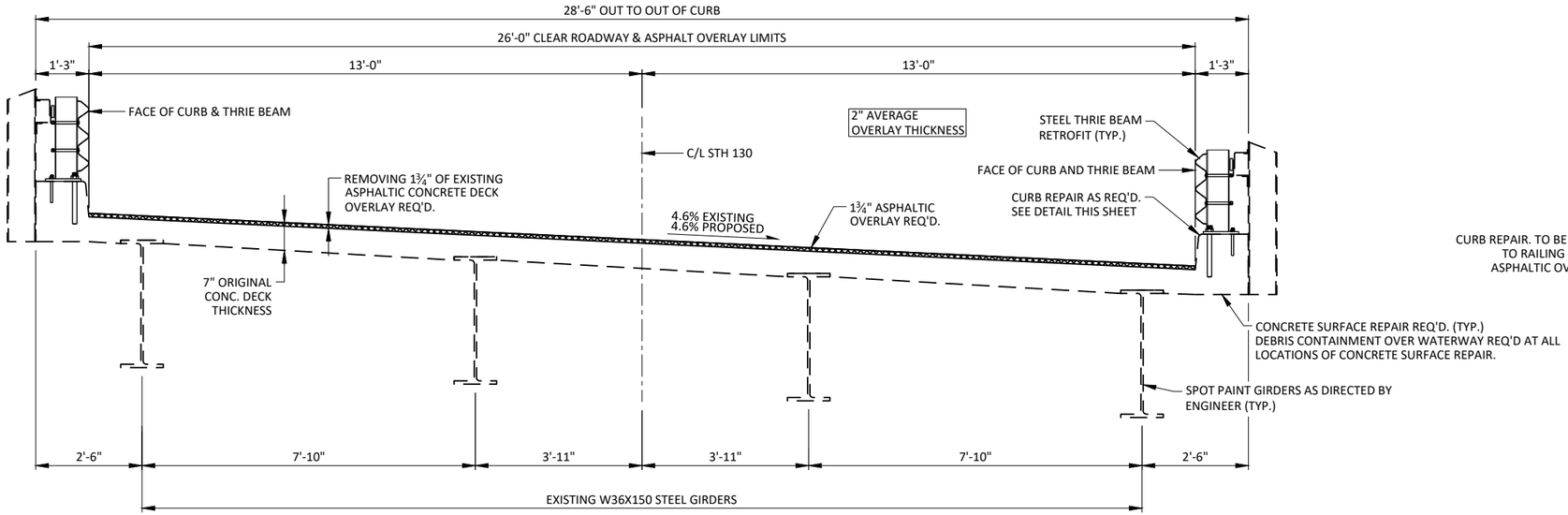

CROSS-SECTION THROUGH ROADWAY

LOOKING NORTH

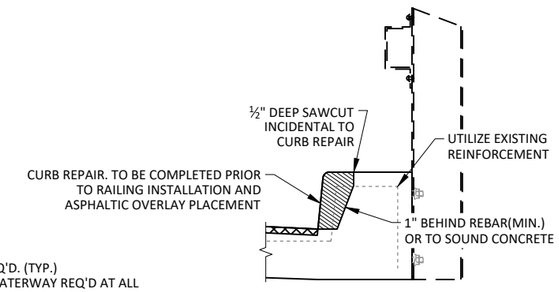

CURB REPAIR DETAIL

AS DIRECTED BY ENGINEER IN THE FIELD
(APPROXIMATELY 9 LF ON EACH SIDE OF THE BRIDGE THROUGHOUT)

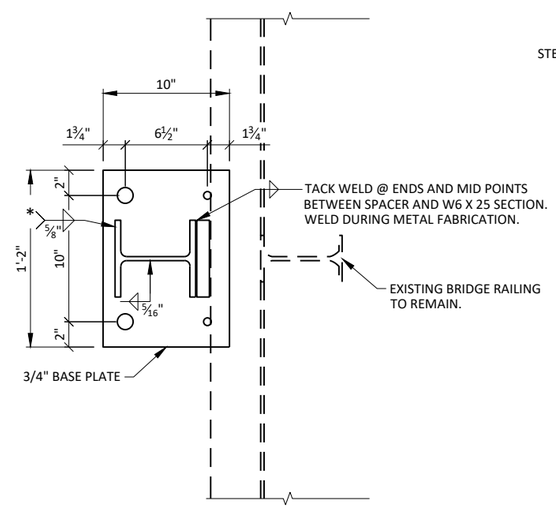

SECTION A-A

* WELD IS THE SAME ON BOTH FLANGES AT CONNECTION OF FLANGES AND BASE PLATE. FLANGE WELD DOES NOT REQUIRE MAGNETIC PARTICLE TESTING

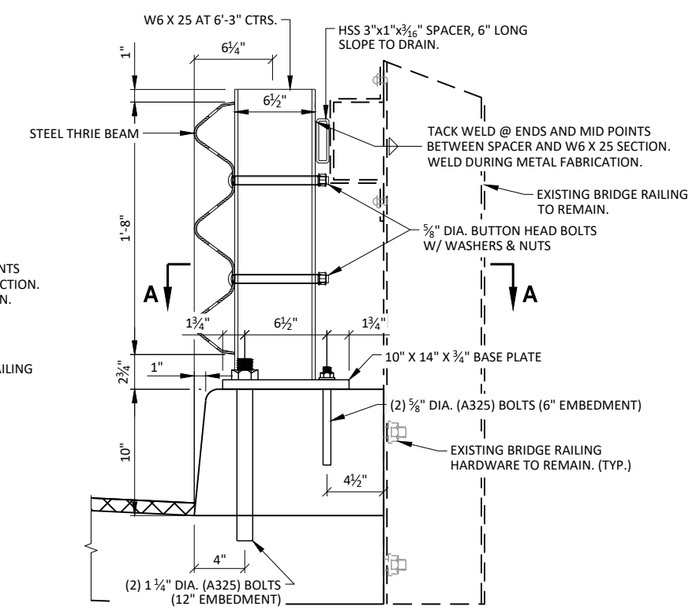

STEEL THRIE BEAM RETROFIT DETAIL

TOTAL ESTIMATED QUANTITIES

	ITEM NUMBER	ITEM DESCRIPTION	UNIT	S. ABUT.	N. ABUT.	SUPER	TOTALS
	203.0335	DEBRIS CONTAINMENT OVER WATERWAY B-52-21	EACH	--	--	--	1
	455.0605	TACK COAT	GAL	--	--	11	11
	460.5224	HMA PAVEMENT 4 LT 58-28 S	TON	--	--	24	24
	502.3200	PROTECTIVE SURFACE TREATMENT	SY	--	--	5	5
	509.1200	CURB REPAIR	LF	--	--	18	18
	509.1500	CONCRETE SURFACE REPAIR	SF	5	--	17	22
**	509.2500	CONCRETE MASONRY OVERLAY DECKS	CY	--	--	1	1
	509.9010.S	REMOVING ASPHALTIC CONCRETE DECK OVERLAY B-52-21	SY	--	--	210	210
	517.3001.S	STRUCTURE OVERCOATING CLEANING AND PRIMING B-52-21	EACH	--	--	--	1
	517.4001.S	CONTAINMENT AND COLLECTION OF WASTE MATERIALS B-52-21	EACH	--	--	--	1
	517.6001.S	PORTABLE DECONTAMINATION FACILITY	EACH	--	--	--	1
	SPV.0090.01	STEEL THRIE BEAM RAILING RETROFIT	LF	--	--	146	146

** QUANTITY INCLUDES CURB REPAIR VOLUME

8

8

NO.	DATE	REVISION	

STATE OF WISCONSIN
DEPARTMENT OF TRANSPORTATION

STRUCTURE B-52-21

DRAWN BY CTMP | PLANS CK'D. PTB

CROSS SECTIONS AND QUANTIES

SHEET 2 OF 2

EARTHWORK - MAINLINE

	AREA (SF)		INCREMENTAL VOLUME (CY)			CUMULATIVE VOLUME (CY)			
STATION	CUT NOTE 1	FILL NOTE 2	CUT NOTE 1	FILL NOTE 2	FILL (1.25) NOTE 3	CUT NOTE 1	FILL NOTE 2	FILL (1.25) NOTE 3	MASS ORDINATE NOTE 4
168+60	45	1	0	0	0	0	0	0	0
169+00	43	1	65	1	1	65	1	1	64
169+50	47	2	83	3	4	148	4	5	143
169+82	59	2	63	2	3	211	6	8	203
170+00	59	3	39	2	3	250	8	10	240
170+48	62	9	108	11	14	358	19	24	334
170+50	62	9	5	1	1	363	20	25	338
171+00	57	9	110	17	21	473	37	46	427
171+50	62	0	110	8	10	583	45	56	527
172+00	67	2	119	2	3	702	47	59	643
172+17	68	2	43	1	1	745	48	60	685
172+50	51	1	73	2	3	818	50	63	755
172+51	51	1	2	0	0	820	50	63	757
	COLUMN SUBTOTALS =		820	50	64	820	50	63	757

EARTHWORK - 'A'-LINE (WEITZEL ROAD)

	AREA (SF)		INCREMENTAL VOLUME (CY)			CUMULATIVE VOLUME (CY)			
STATION	CUT NOTE 1	FILL NOTE 2	CUT NOTE 1	FILL NOTE 2	FILL (1.25) NOTE 3	CUT NOTE 1	FILL NOTE 2	FILL (1.25) NOTE 3	MASS ORDINATE NOTE 4
1'A'+17	82	13	0	0	0	0	0	0	0
1'A'+50	38	8	73	13	16	73	13	16	57
2'A'+00	39	0	71	7	9	144	20	25	119
2'A'+17	36	0	24	0	0	168	20	25	143
2'A'+50	13	0	30	0	0	198	20	25	173
2'A'+98	0	0	12	0	0	210	20	25	185
	COLUMN SUBTOTALS =		210	20	25	210	20	25	185

NOTES:

1 - CUT	CUT INCLUDES SALVAGED/UNUSABLE PAVEMENT MATERIAL
2 - FILL	DOES NOT INCLUDE UNUSABLE PAVEMENT EXC VOLUME
3 - FILL (25%)	(UNEXPANDED FILL)*1.25
4 - MASS ORDINATE	CUT - FILL (25%)

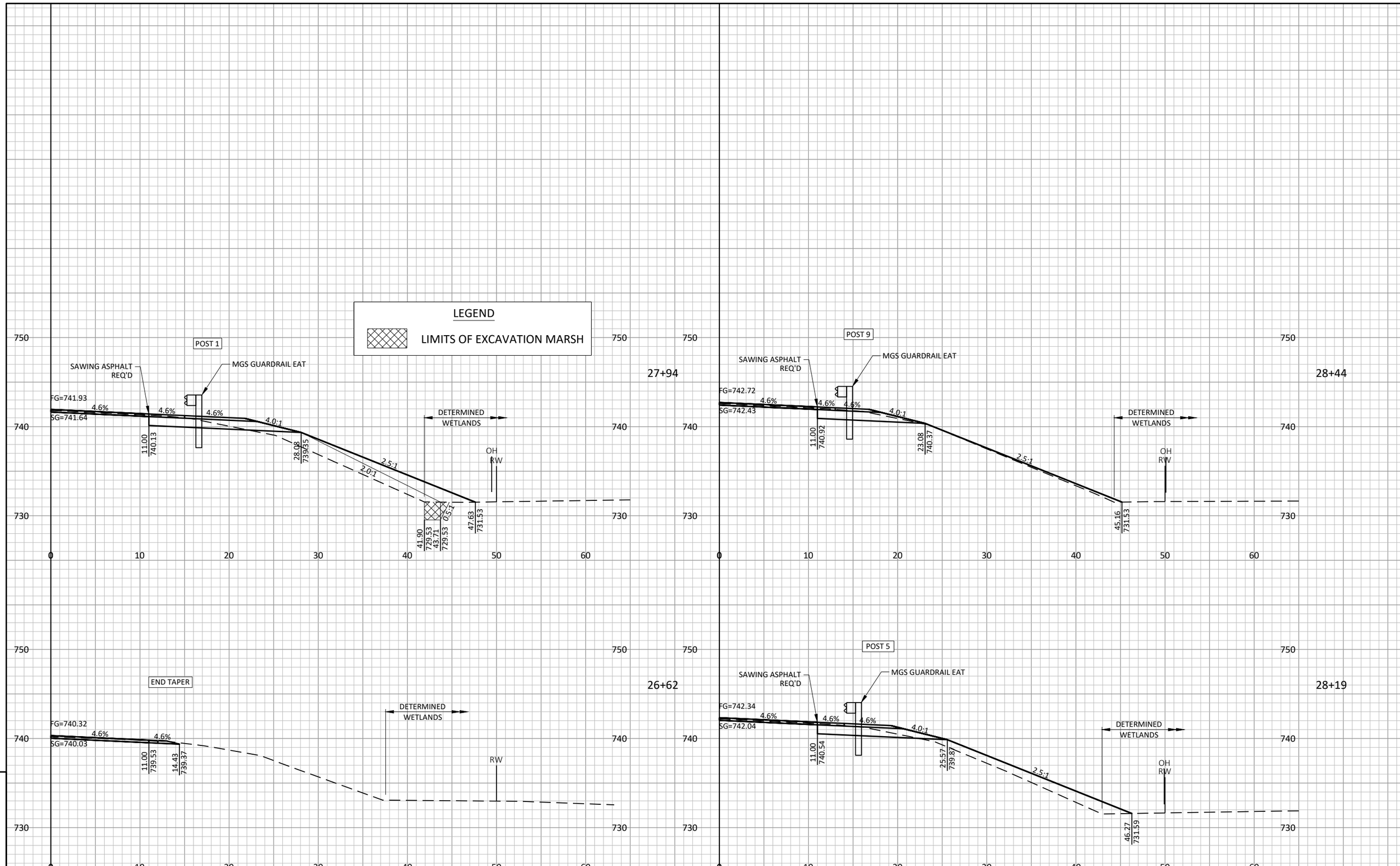

9

9

PROJECT NO: 5760-00-72	HWY: STH 130	COUNTY: SAUK	CROSS SECTIONS: MAINLINE (MGS GUARDRAIL)	SHEET 120	E

FILE NAME : S:\PROJECTS\W11633 WISDOT - STH 130 RICHLAND AND SAUK CO\DESIGN\CORRIDORS\W11633_CORRIDOR.DWG PLOT DATE : 7/8/2025 11:16:06 AM PLOT BY : CODY KINTZ PLOT SCALE : 1 IN:10 FT LAYOUT : SS - SE EAT

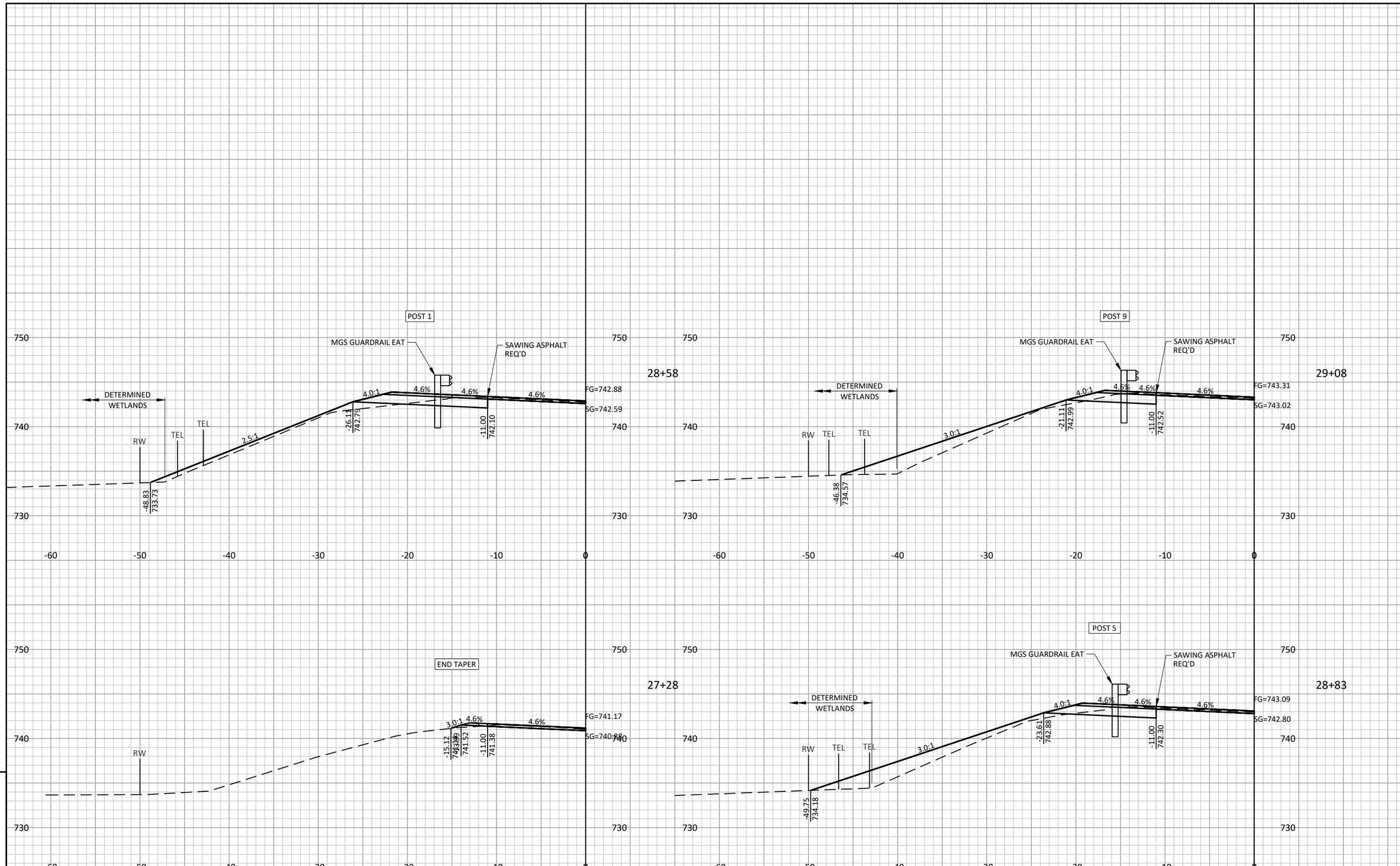

PROJECT NO: 5760-00-72	HWY: STH 130	COUNTY: SAUK	CROSS SECTIONS: MAINLINE (MGS GUARDRAIL)	SHEET	E

FILE NAME : S:\PROJECTS\W11633 WISDOT - STH 130 RICHLAND AND SAUK CO\DESIGN\CORRIDORS\W11633_CORRIDOR.DWG PLOT DATE : 7/8/2025 11:16:10 AM PLOT BY : CODY KINTZ PLOT SCALE : 1 IN:10 FT LAYOUT : SS - SW EAT

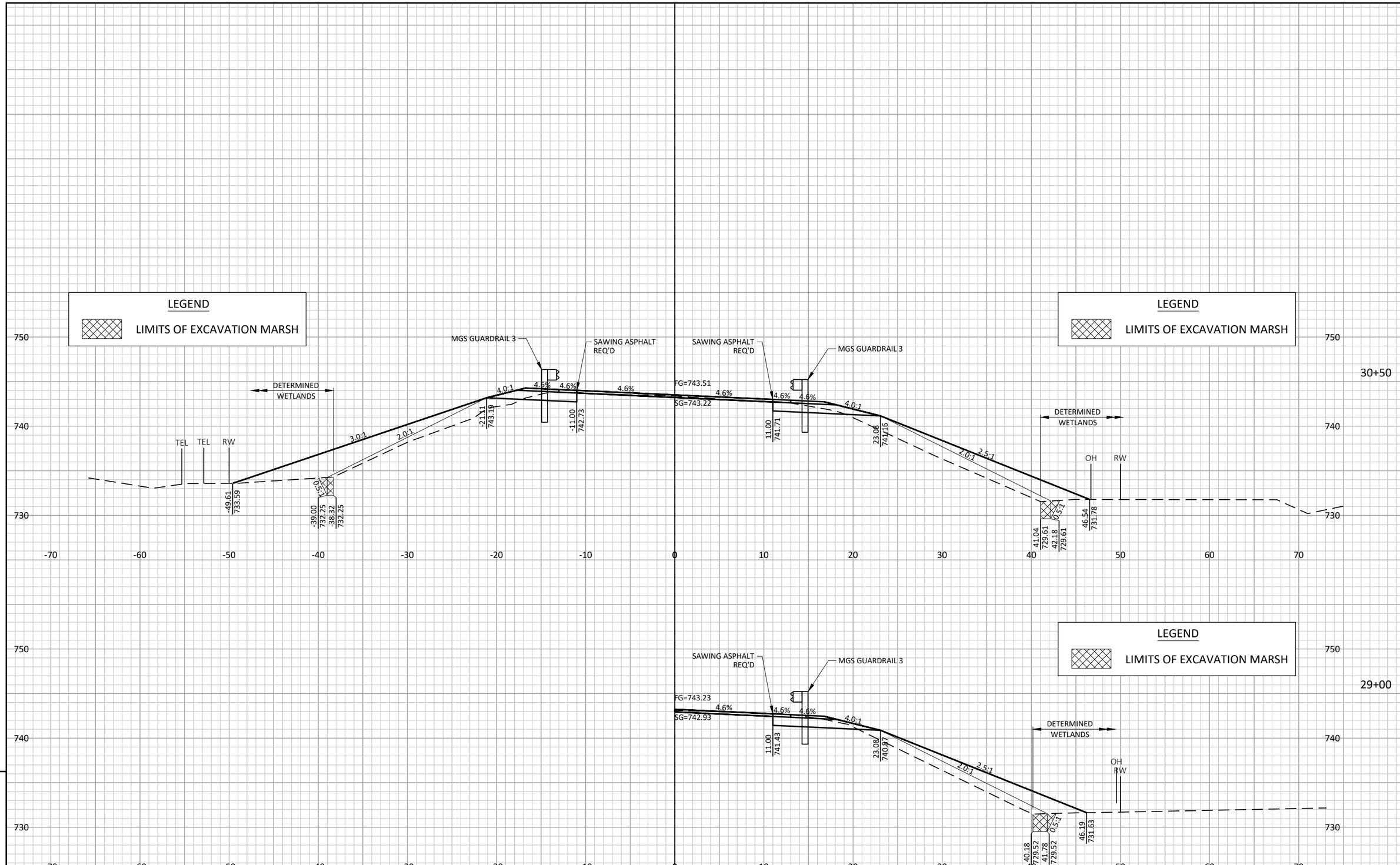

PROJECT NO: 5760-00-72	HWY: STH 130	COUNTY: SAUK	CROSS SECTIONS: MAINLINE (MGS GUARDRAIL)	SHEET 122	E

FILE NAME : S:\PROJECTS\W11633 WISDOT - STH 130 RICHLAND AND SAUK CO\DESIGN\CORRIDORS\W11633_CORRIDOR.DWG PLOT DATE : 7/8/2025 11:16:15 AM PLOT BY : CODY KINTZ PLOT SCALE : 1 IN:10 FT LAYOUT : SOUTH STRUCTURE 1

9

9

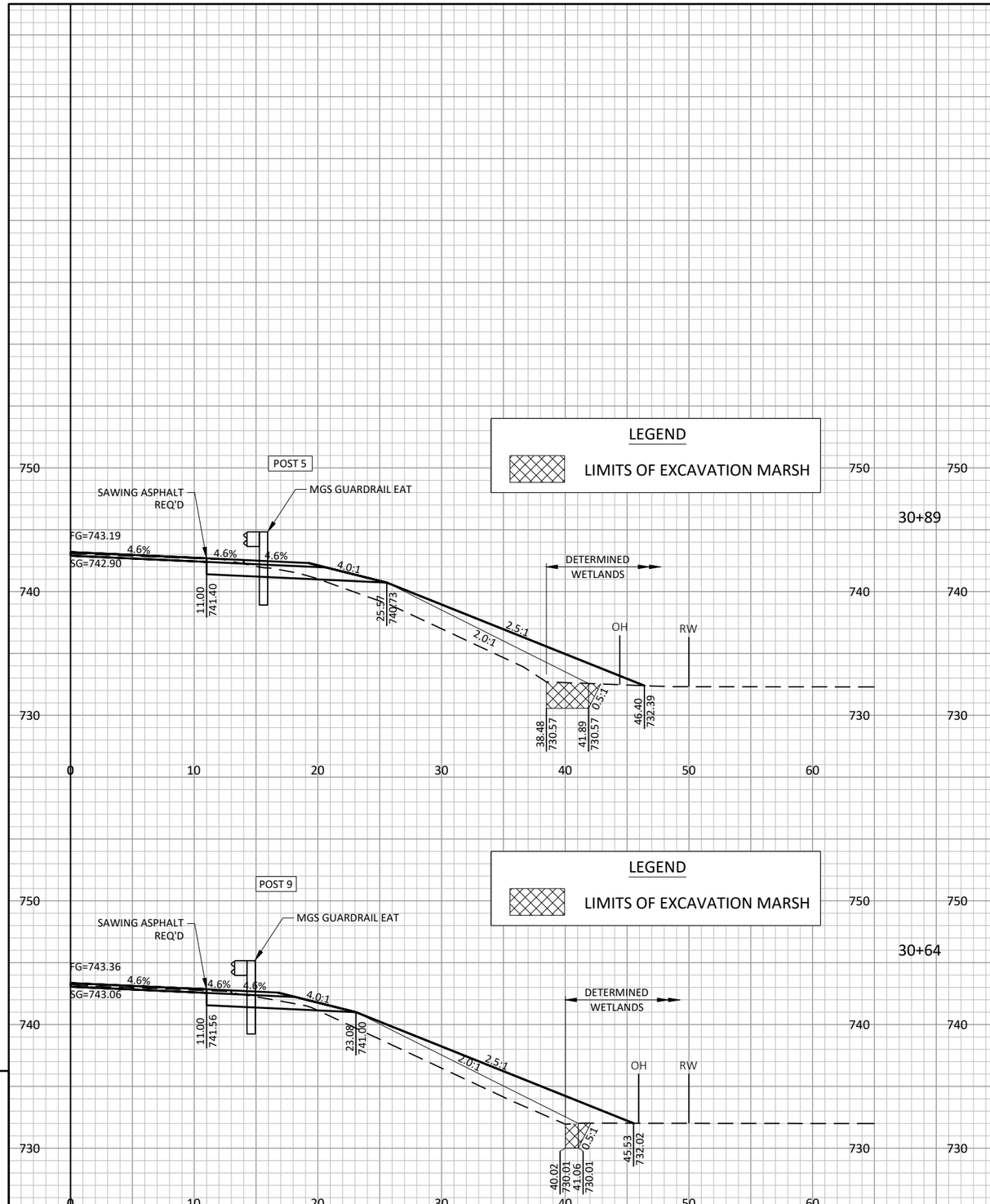

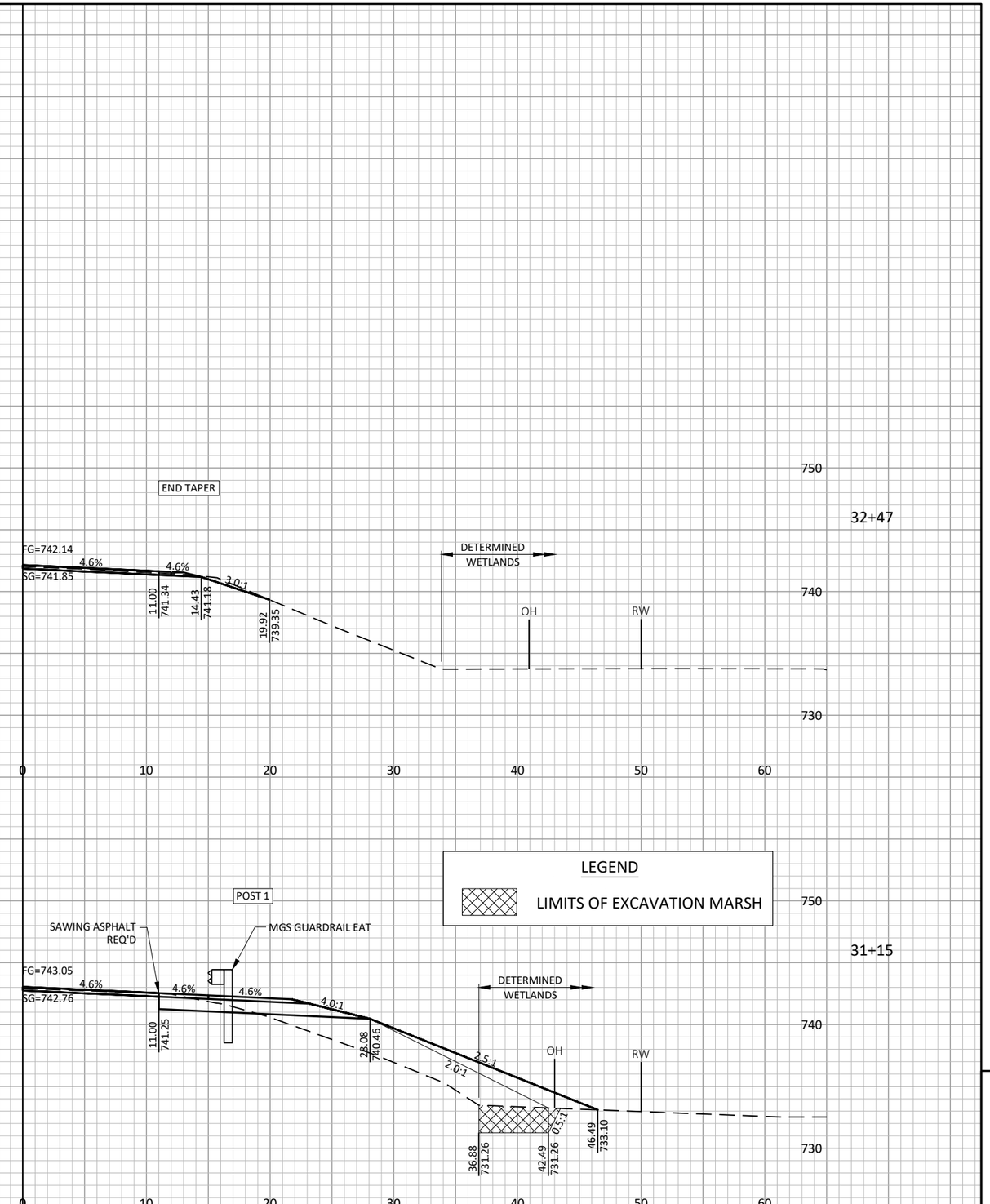

9

9

PROJECT NO: 5760-00-72	HWY: STH 130	COUNTY: SAUK	CROSS SECTIONS: MAINLINE (MGS GUARDRAIL)	SHEET	E

FILE NAME : S:\PROJECTS\W11633 WISDOT - STH 130 RICHLAND AND SAUK CO\DESIGN\CORRIDORS\W11633_CORRIDOR.DWG PLOT DATE : 7/8/2025 11:16:20 AM PLOT BY : CODY KINTZ PLOT SCALE : 1 IN:10 FT LAYOUT : SS - NE EAT

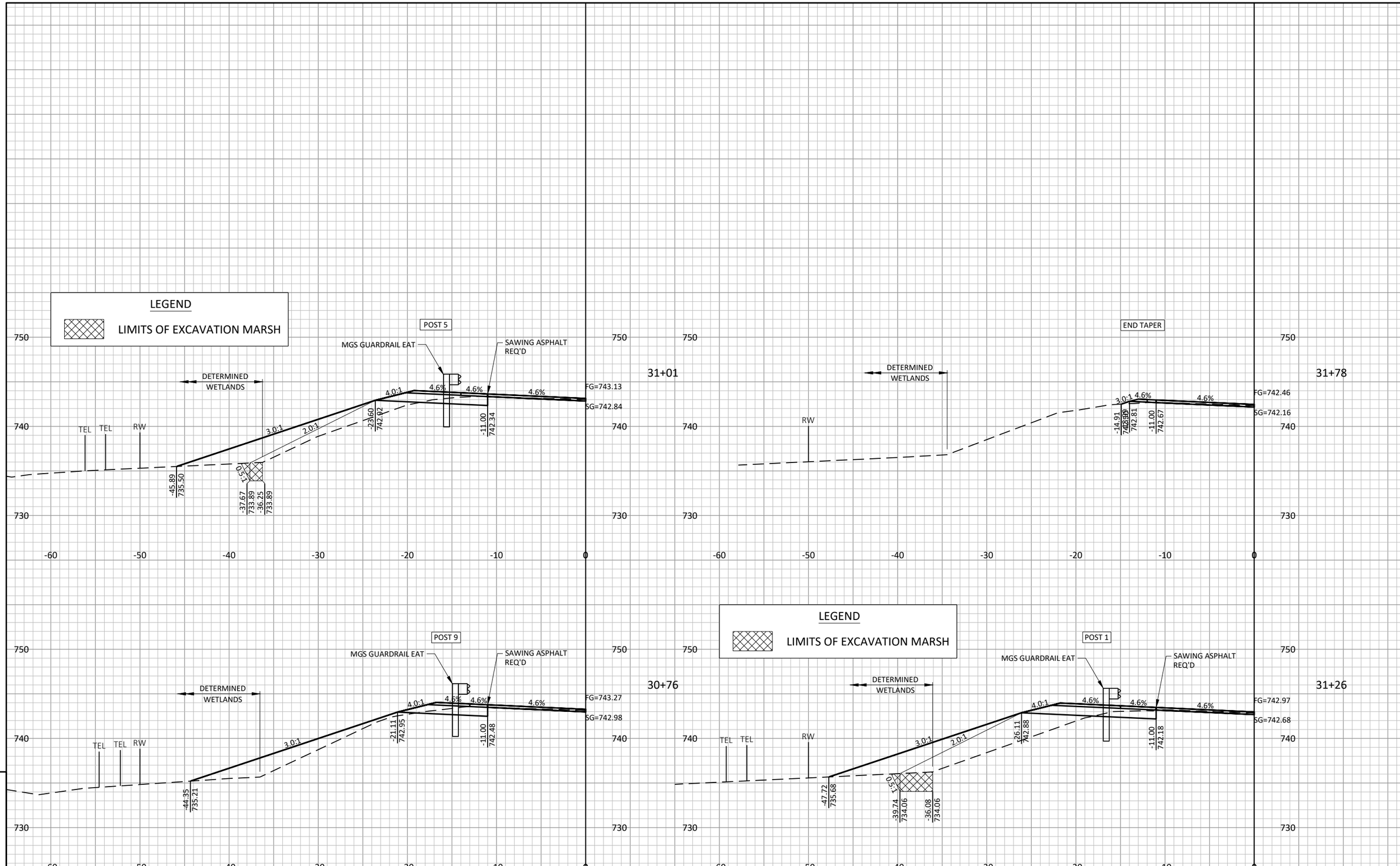

PROJECT NO: 5760-00-72	HWY: STH 130	COUNTY: SAUK	CROSS SECTIONS: MAINLINE (MGS GUARDRAIL)	SHEET 124	E

FILE NAME : S:\PROJECTS\W11633 WISDOT - STH 130 RICHLAND AND SAUK CO\DESIGN\CORRIDORS\W11633_CORRIDOR.DWG PLOT DATE : 7/8/2025 11:16:24 AM PLOT BY : CODY KINTZ PLOT SCALE : 1 IN:10 FT LAYOUT : SS - NW EAT

9

9

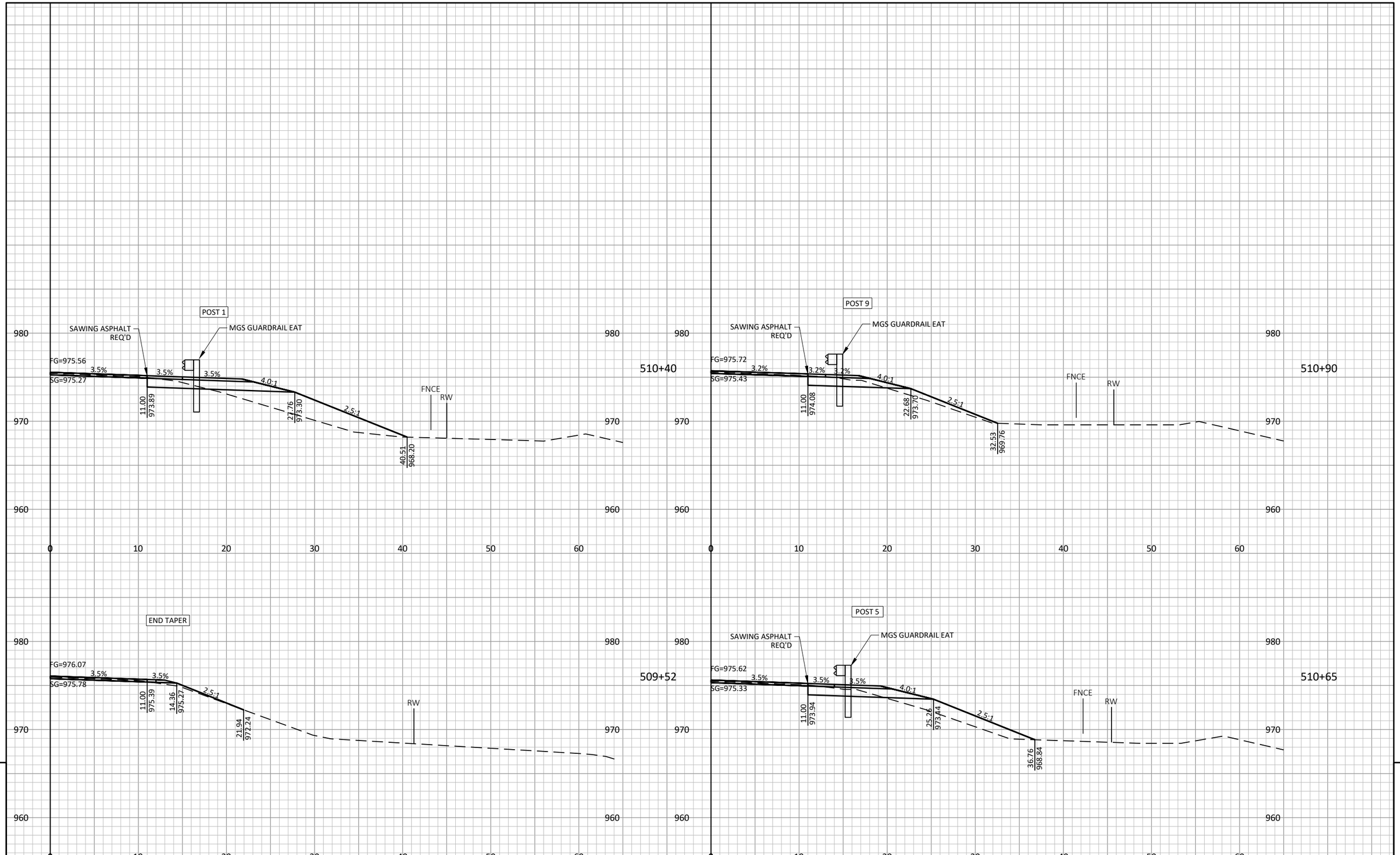

9

9

PROJECT NO: 5760-00-72	HWY: STH 130	COUNTY: SAUK	CROSS SECTIONS: MAINLINE (MGS GUARDRAIL)	SHEET 125	E

FILE NAME : S:\PROJECTS\W11633 WISDOT - STH 130 RICHLAND AND SAUK CO\DESIGN\CORRIDORS\W11633_CORRIDOR.DWG PLOT DATE : 7/8/2025 11:16:30 AM PLOT BY : CODY KINTZ PLOT SCALE : 1 IN:10 FT LAYOUT : NS - SW EAT

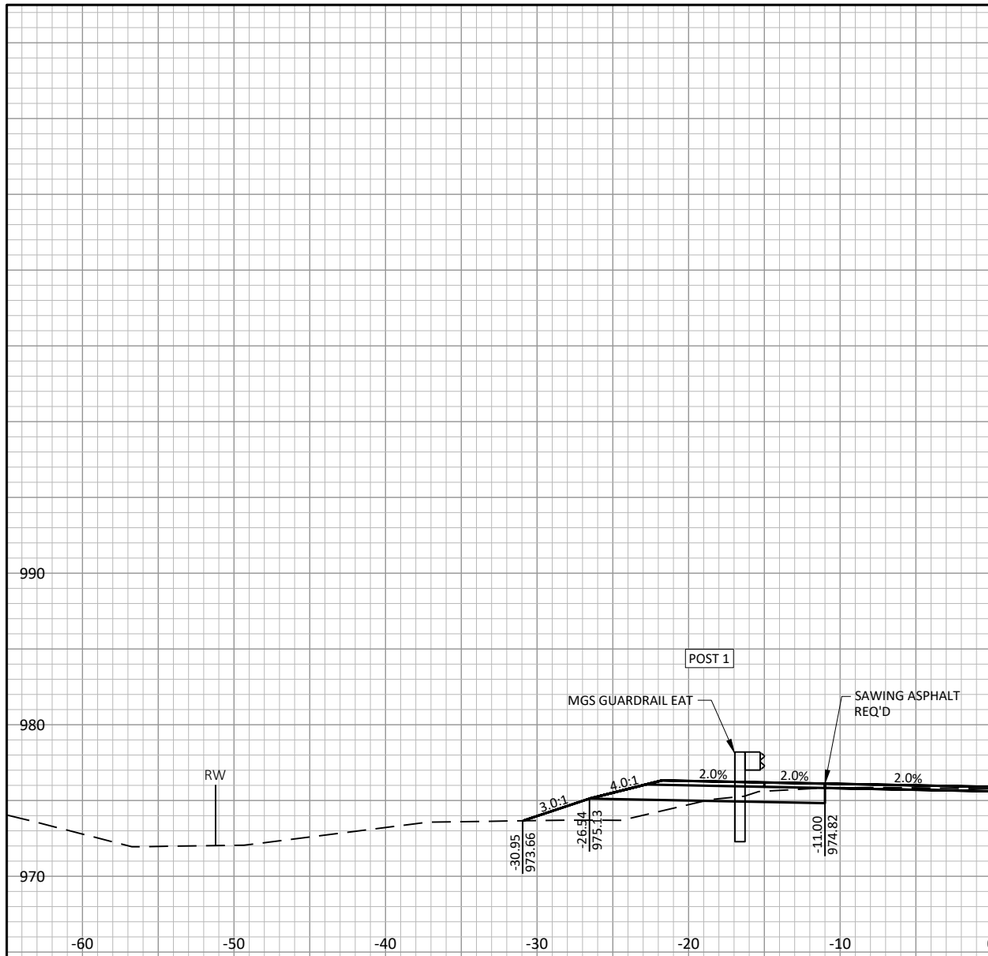

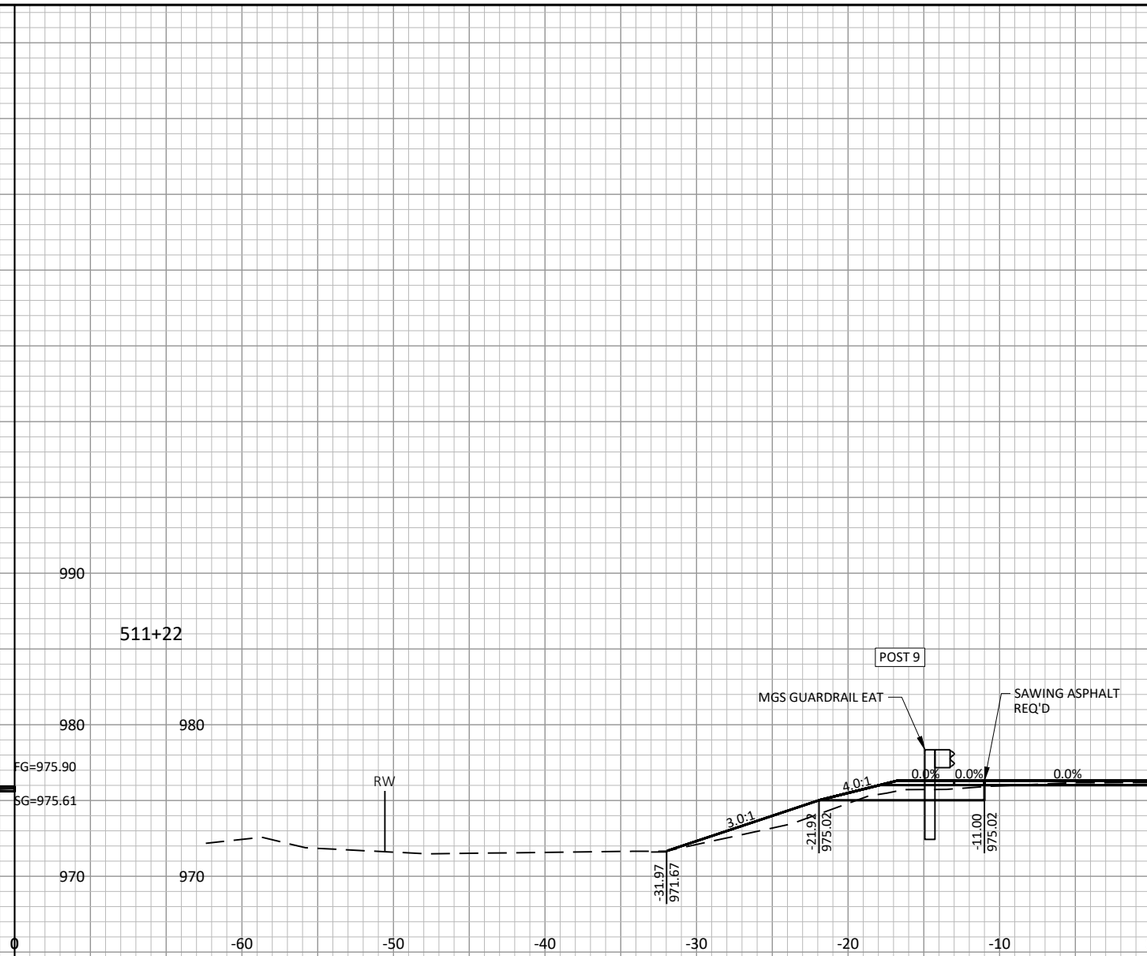

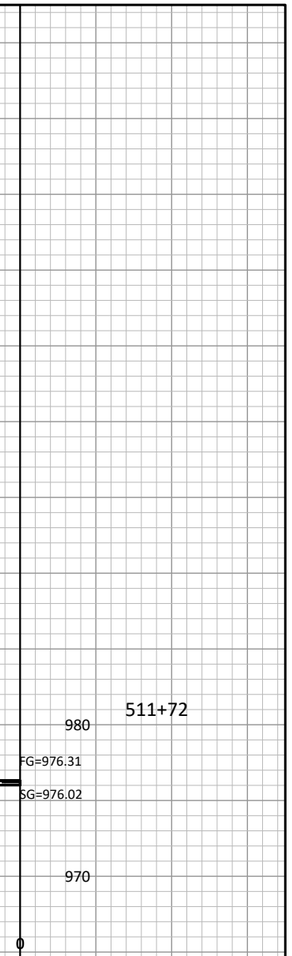

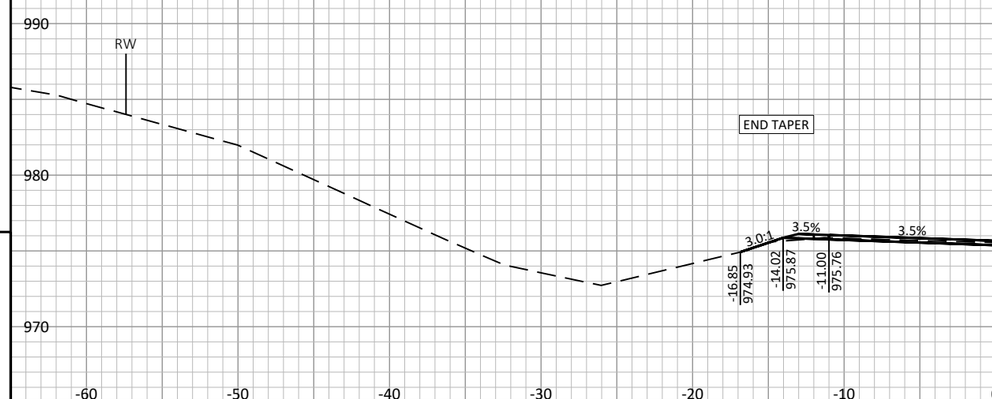

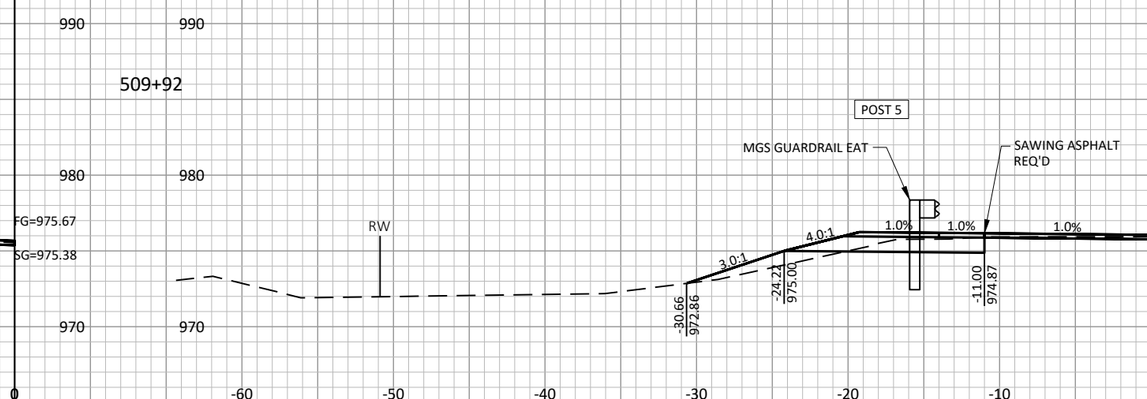

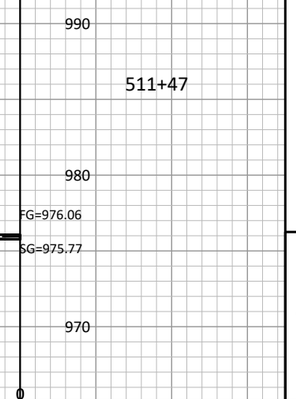

9

9

PROJECT NO: 5760-00-72	HWY: STH 130	COUNTY: SAUK	CROSS SECTIONS: MAINLINE (MGS GUARDRAIL)	SHEET 126	E

FILE NAME : S:\PROJECTS\W11633 WISDOT - STH 130 RICHLAND AND SAUK CO\DESIGN\CORRIDORS\W11633_CORRIDOR.DWG PLOT DATE : 7/8/2025 11:16:35 AM PLOT BY : CODY KINTZ PLOT SCALE : 1 IN:10 FT LAYOUT : NS - NW EAT

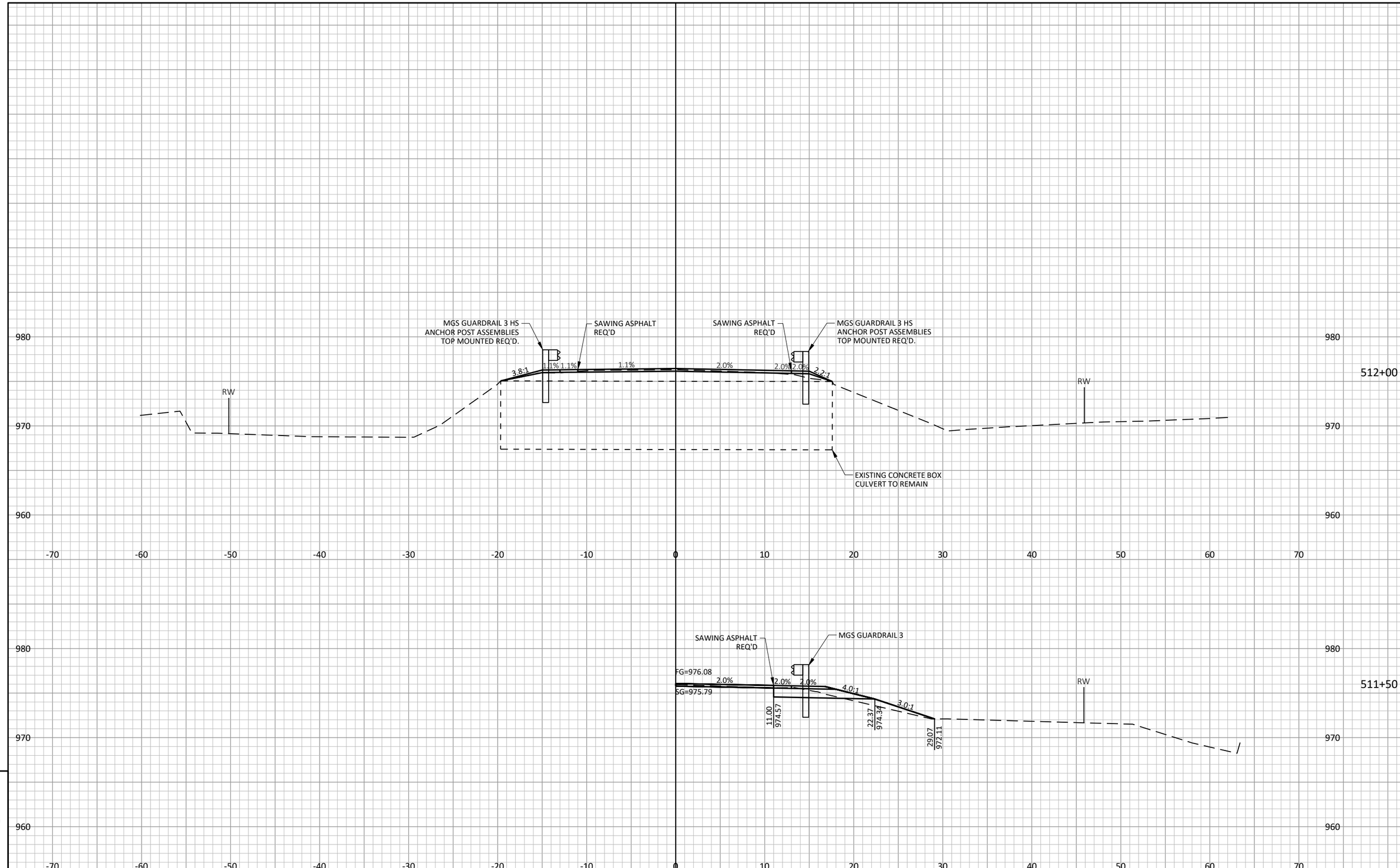

9

9

PROJECT NO: 5760-00-72	HWY: STH 130	COUNTY: SAUK	CROSS SECTIONS: MAINLINE (MGS GUARDRAIL)	SHEET	E

FILE NAME : S:\PROJECTS\W11633 WISDOT - STH 130 RICHLAND AND SAUK CO\DESIGN\CORRIDORS\W11633_CORRIDOR.DWG PLOT DATE : 7/8/2025 11:16:40 AM PLOT BY : CODY KINTZ PLOT SCALE : 1 IN:10 FT LAYOUT : NORTH STRUCTURE 1

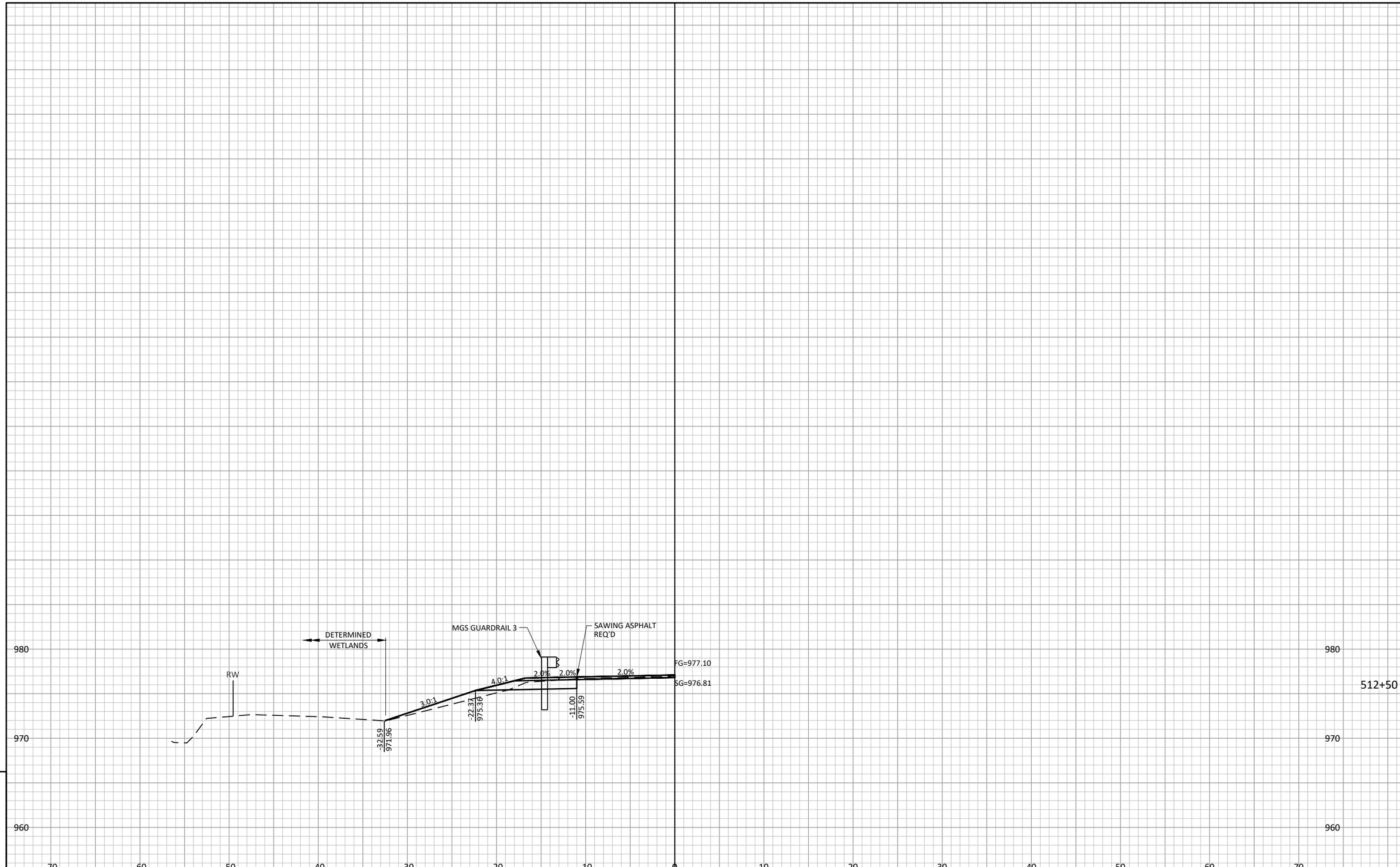

9

9

PROJECT NO: 5760-00-72	HWY: STH 130	COUNTY: SAUK	CROSS SECTIONS: MAINLINE (MGS GUARDRAIL)	SHEET	E

FILE NAME : S:\PROJECTS\W11633 WISDOT - STH 130 RICHLAND AND SAUK CO\DESIGN\CORRIDORS\W11633_CORRIDOR.DWG PLOT DATE : 7/8/2025 11:16:44 AM PLOT BY : CODY KINTZ PLOT SCALE : 1 IN:10 FT LAYOUT : NORTH STRUCTURE 2

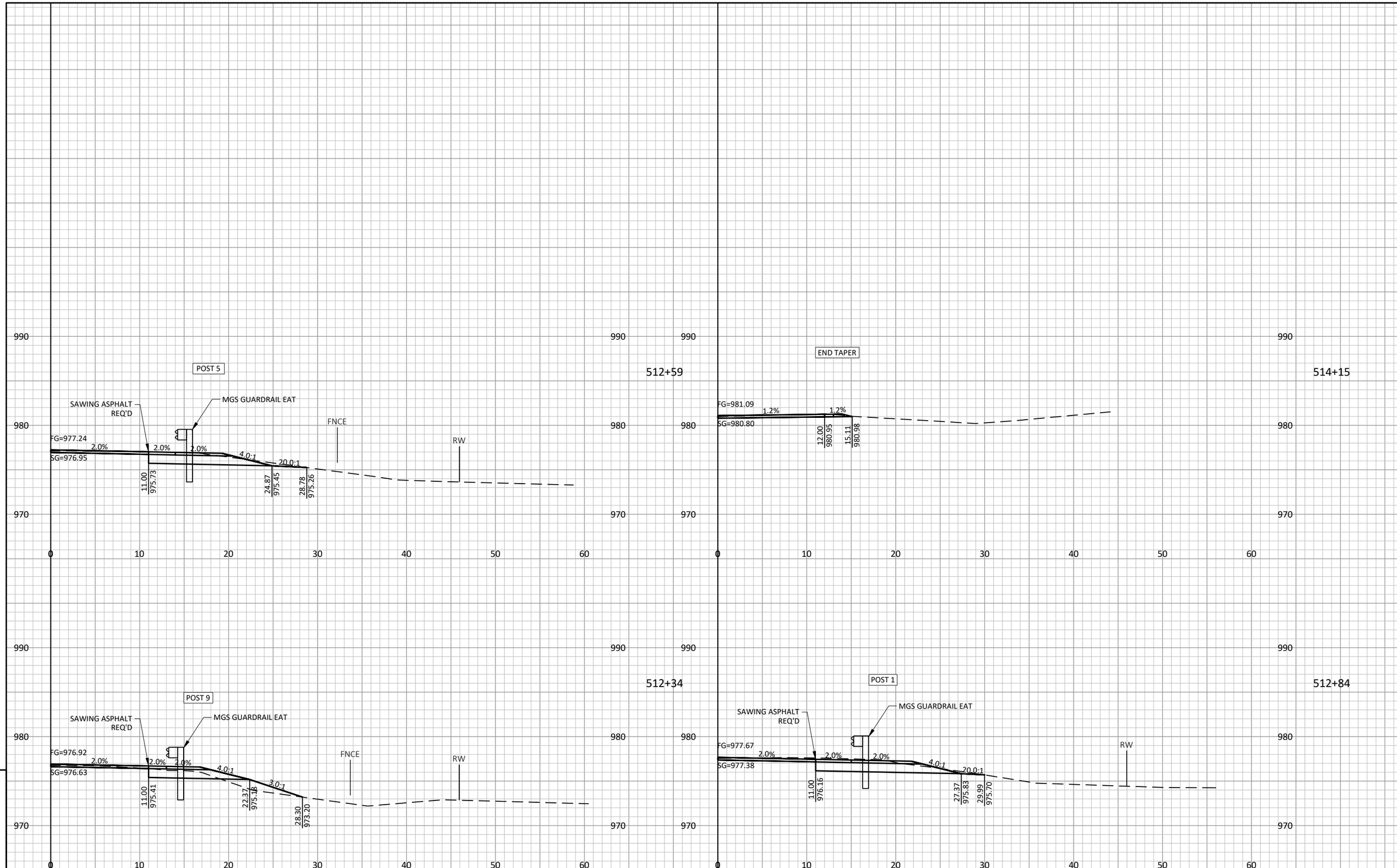

9

9

PROJECT NO: 5760-00-72	HWY: STH 130	COUNTY: SAUK	CROSS SECTIONS: MAINLINE (MGS GUARDRAIL)	SHEET	E

FILE NAME : S:\PROJECTS\W11633 WISDOT - STH 130 RICHLAND AND SAUK CO\DESIGN\CORRIDORS\W11633_CORRIDOR.DWG PLOT DATE : 7/8/2025 11:16:50 AM PLOT BY : CODY KINTZ PLOT SCALE : 1 IN:10 FT LAYOUT : NS - SE EAT

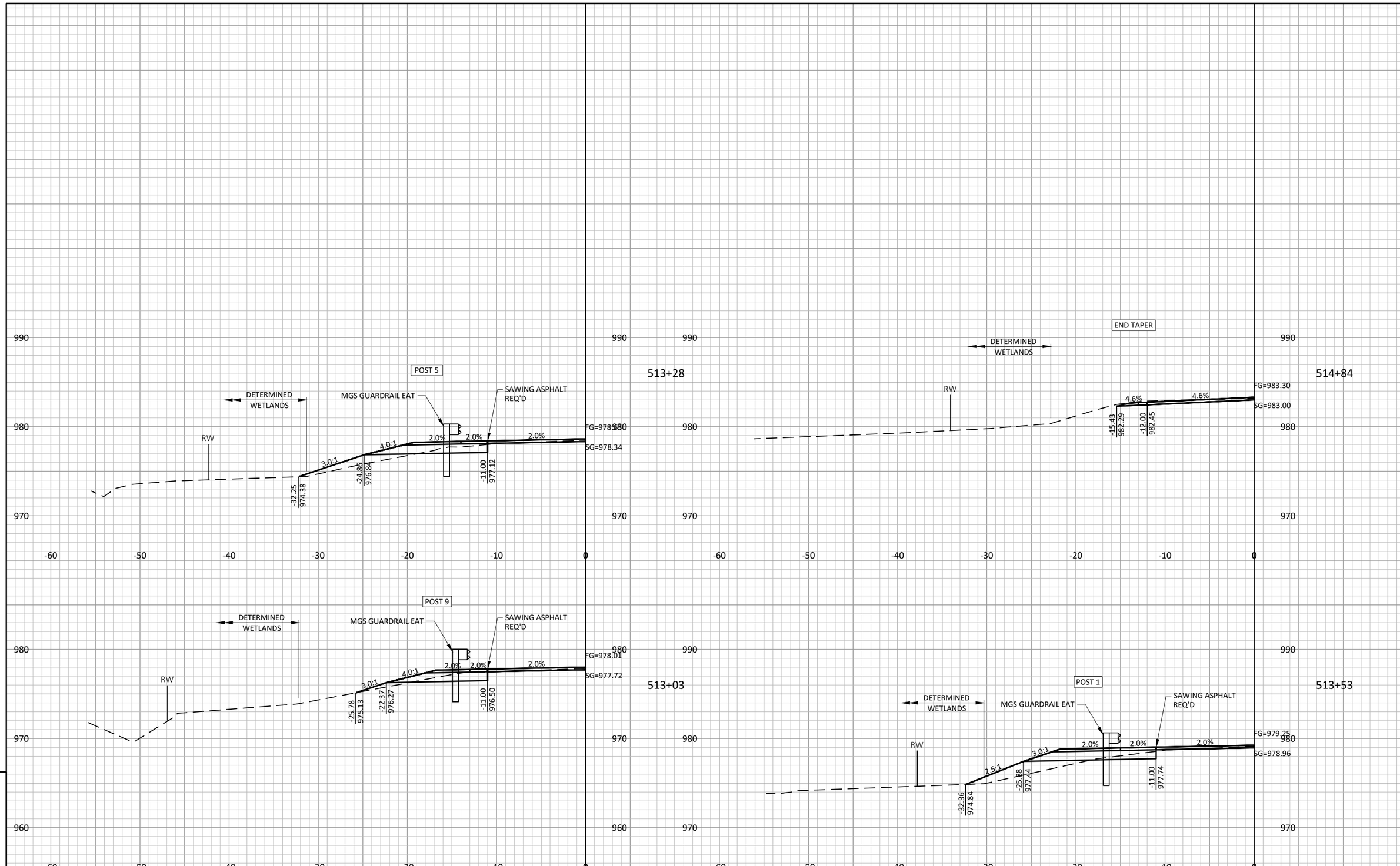

9

9

PROJECT NO: 5760-00-72	HWY: STH 130	COUNTY: SAUK	CROSS SECTIONS: MAINLINE (MGS GUARDRAIL)	SHEET 130	E

FILE NAME : S:\PROJECTS\W11633 WISDOT - STH 130 RICHLAND AND SAUK CO\DESIGN\CORRIDORS\W11633_CORRIDOR.DWG PLOT DATE : 7/8/2025 11:16:55 AM PLOT BY : CODY KINTZ PLOT SCALE : 1 IN:10 FT LAYOUT : NS - NE EAT

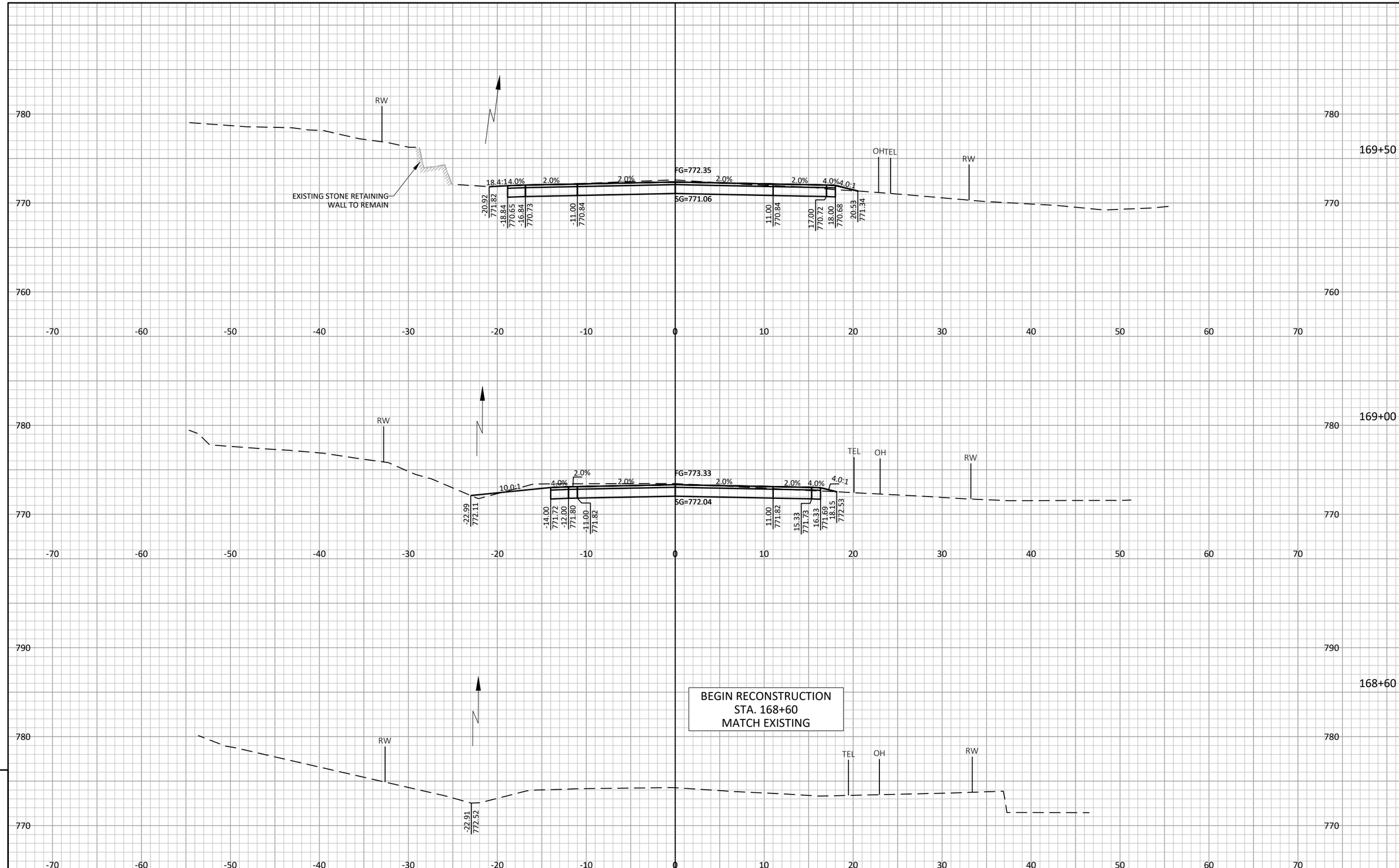

PROJECT NO: 5760-00-72	HWY: STH 130	COUNTY: SAUK	CROSS SECTIONS: MAINLINE	SHEET 131	E

FILE NAME : S:\PROJECTS\W11633 WISDOT - STH 130 RICHLAND AND SAUK CO\DESIGN\CORRIDORS\W11633_CORRIDOR.DWG PLOT DATE : 7/8/2025 11:17:00 AM PLOT BY : CODY KINTZ PLOT SCALE : 1 IN:10 FT LAYOUT : BEAR VALLEY 1

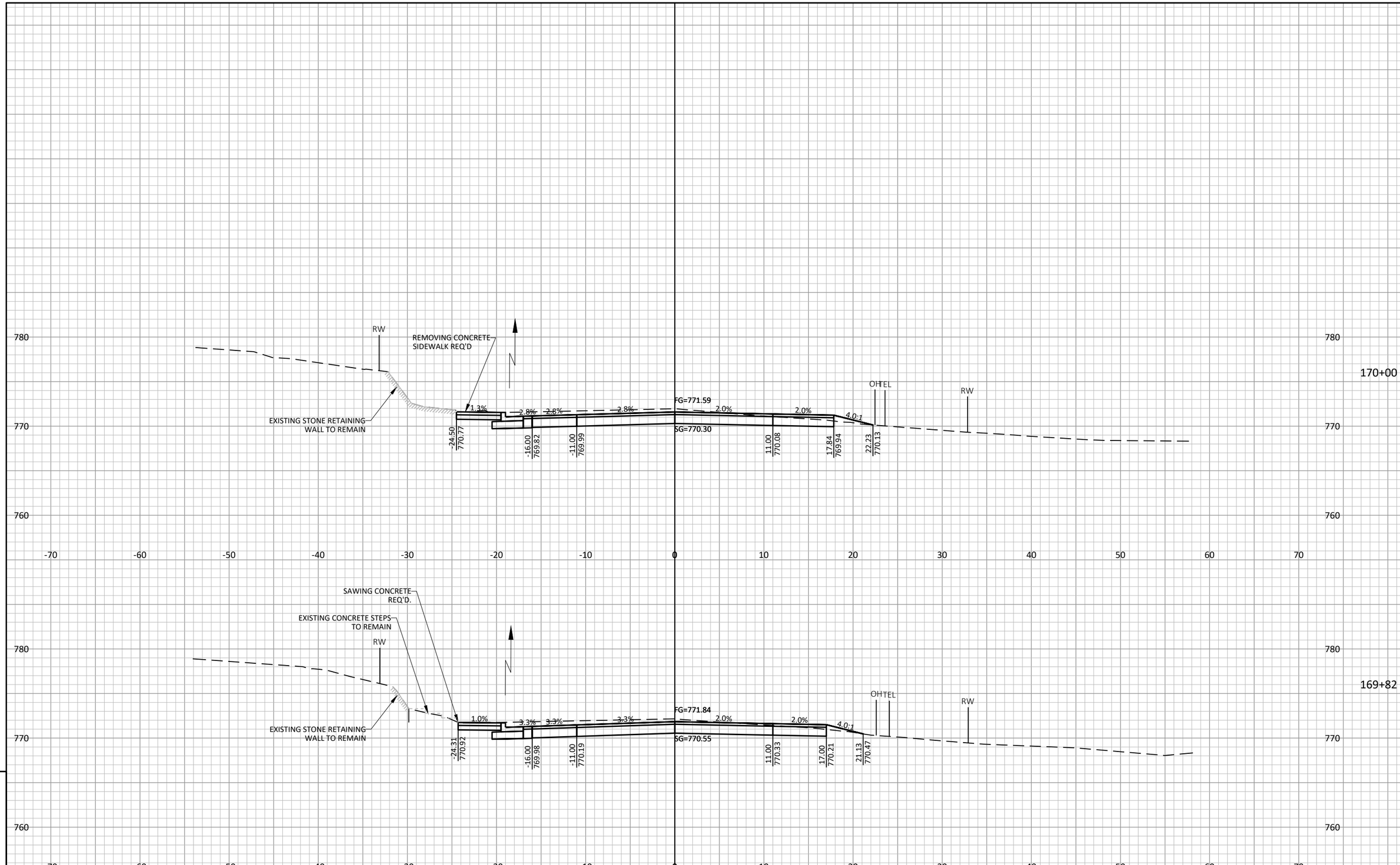

9

9

PROJECT NO: 5760-00-72	HWY: STH 130	COUNTY: SAUK	CROSS SECTIONS: MAINLINE	SHEET 132	E

FILE NAME : S:\PROJECTS\W11633 WISDOT - STH 130 RICHLAND AND SAUK CO\DESIGN\CORRIDORS\W11633_CORRIDOR.DWG PLOT DATE : 7/8/2025 11:17:05 AM PLOT BY : CODY KINTZ PLOT SCALE : 1 IN:10 FT LAYOUT : BEAR VALLEY 2

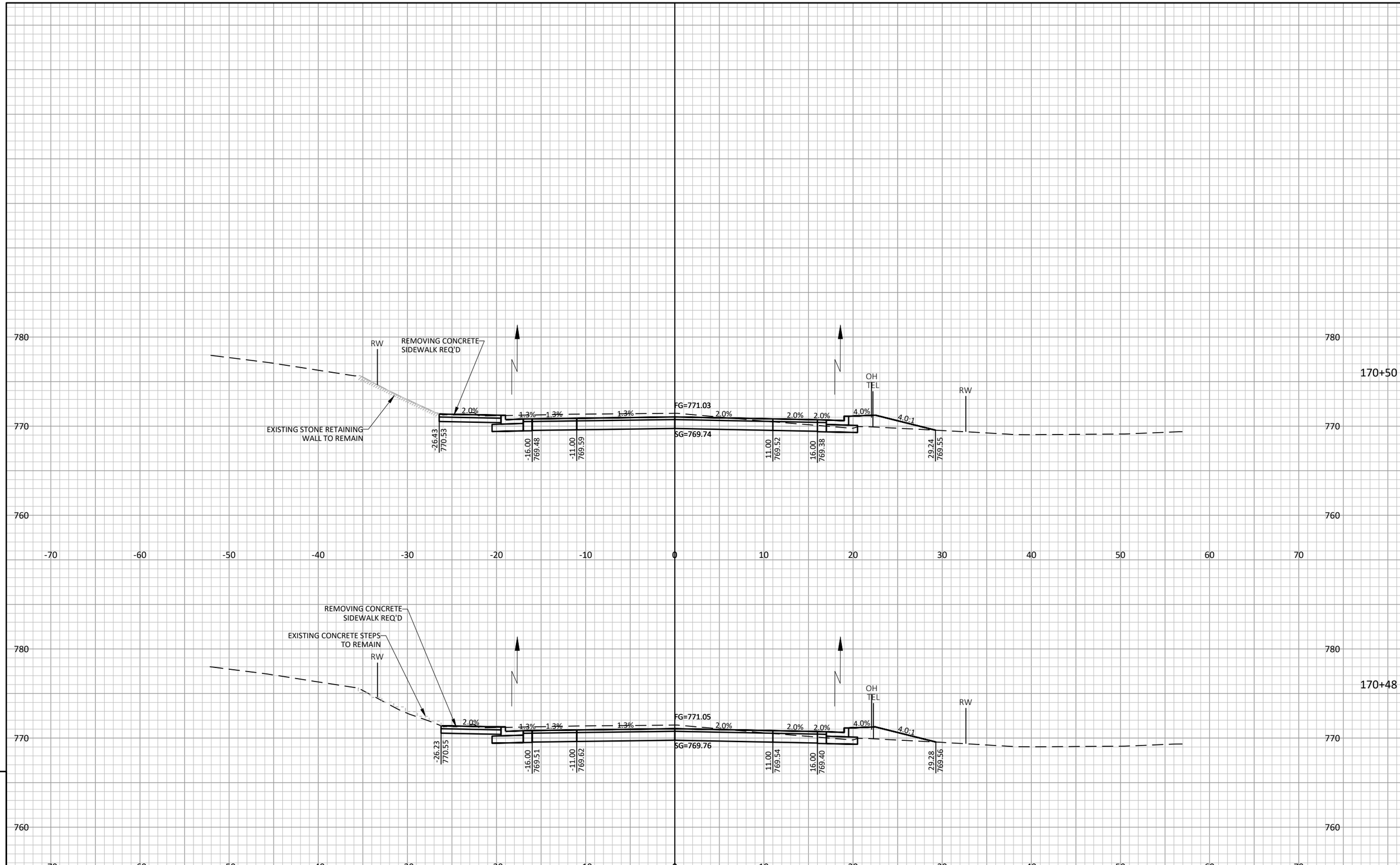

9

9

PROJECT NO: 5760-00-72	HWY: STH 130	COUNTY: SAUK	CROSS SECTIONS: MAINLINE	SHEET 133	E

FILE NAME : S:\PROJECTS\W11633 WISDOT - STH 130 RICHLAND AND SAUK CO\DESIGN\CORRIDORS\W11633_CORRIDOR.DWG PLOT DATE : 7/8/2025 11:17:10 AM PLOT BY : CODY KINTZ PLOT SCALE : 1 IN:10 FT LAYOUT : BEAR VALLEY 3

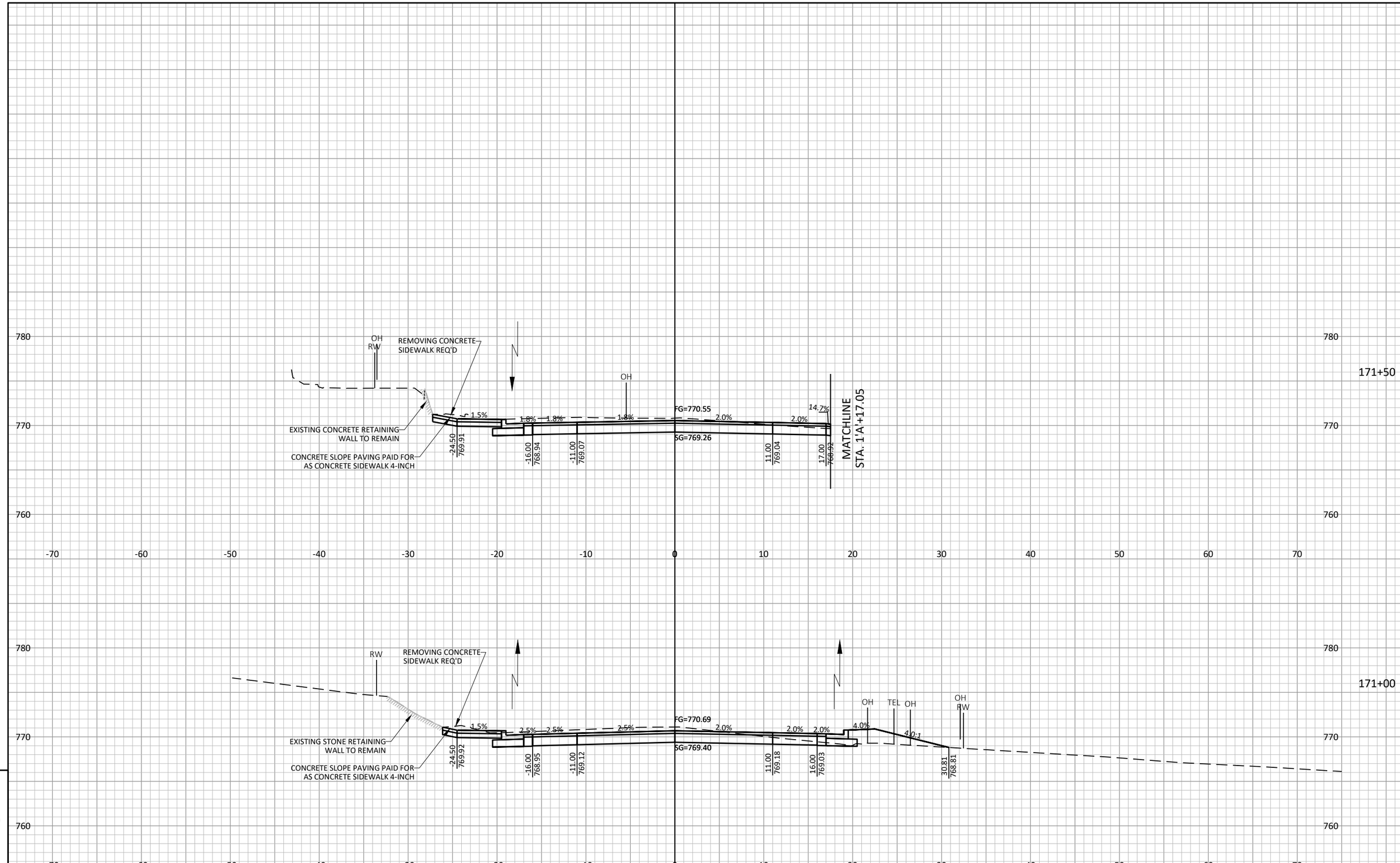

9

9

PROJECT NO: 5760-00-72	HWY: STH 130	COUNTY: SAUK	CROSS SECTIONS: MAINLINE	SHEET 134	E

FILE NAME : S:\PROJECTS\W11633 WISDOT - STH 130 RICHLAND AND SAUK CO\DESIGN\CORRIDORS\W11633_CORRIDOR.DWG PLOT DATE : 7/8/2025 11:17:15 AM PLOT BY : CODY KINTZ PLOT SCALE : 1 IN:10 FT LAYOUT : BEAR VALLEY 4

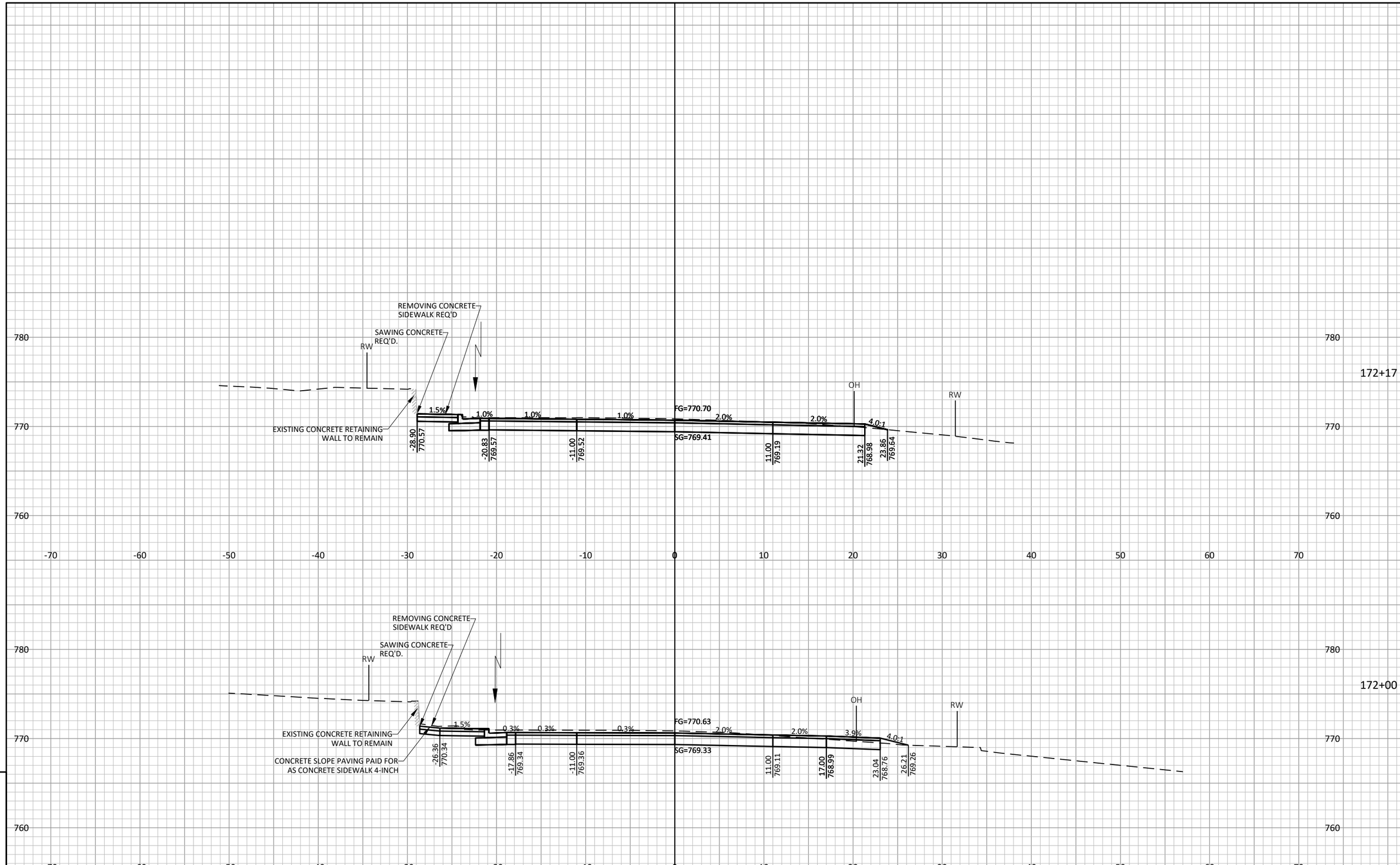

9

9

PROJECT NO: 5760-00-72	HWY: STH 130	COUNTY: SAUK	CROSS SECTIONS: MAINLINE	SHEET 135	E

FILE NAME : S:\PROJECTS\W11633 WISDOT - STH 130 RICHLAND AND SAUK CO\DESIGN\CORRIDORS\W11633_CORRIDOR.DWG PLOT DATE : 7/8/2025 11:17:20 AM PLOT BY : CODY KINTZ PLOT SCALE : 1 IN:10 FT LAYOUT : BEAR VALLEY 5

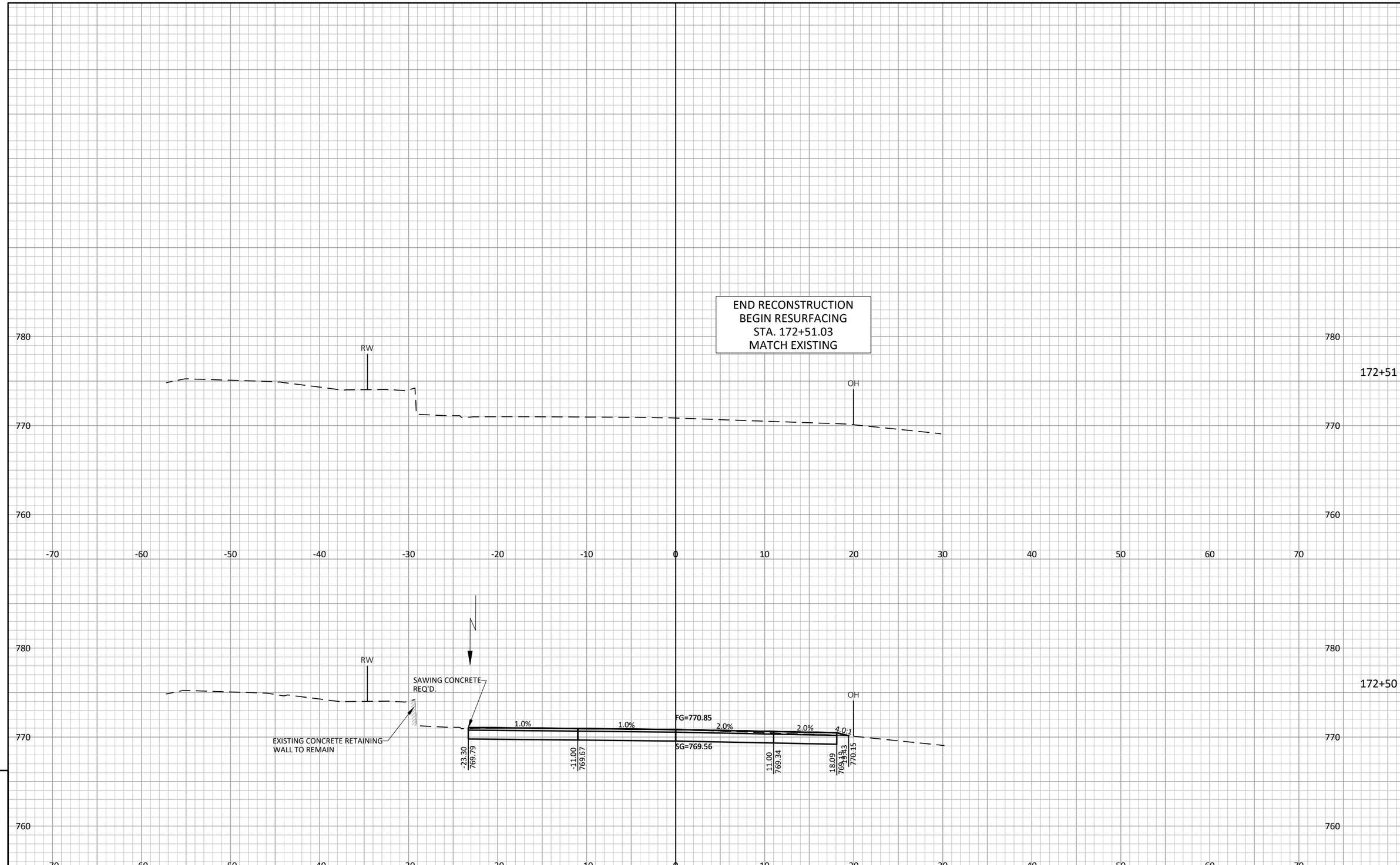

9

9

PROJECT NO: 5760-00-72	HWY: STH 130	COUNTY: SAUK	CROSS SECTIONS: MAINLINE	SHEET 136	E

FILE NAME : S:\PROJECTS\W11633 WISDOT - STH 130 RICHLAND AND SAUK CO\DESIGN\CORRIDORS\W11633_CORRIDOR.DWG PLOT DATE : 7/8/2025 11:17:25 AM PLOT BY : CODY KINTZ PLOT SCALE : 1 IN:10 FT LAYOUT : BEAR VALLEY 6

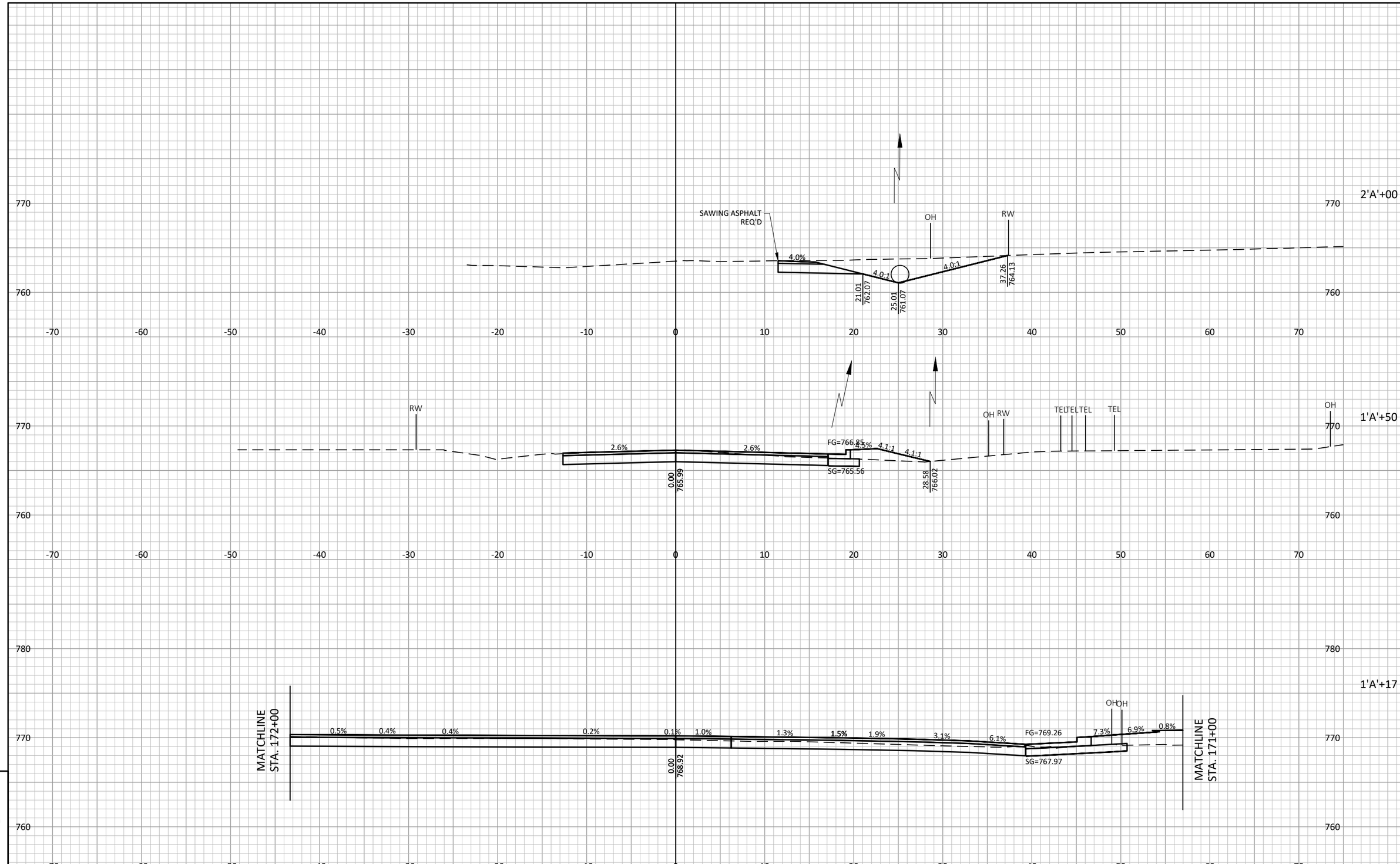

9

9

PROJECT NO: 5760-00-72	HWY: STH 130	COUNTY: SAUK	CROSS SECTIONS: 'A'-LINE (WEITZEL ROAD)	SHEET 137	E

FILE NAME : S:\PROJECTS\W11633 WISDOT - STH 130 RICHLAND AND SAUK CO\DESIGN\CORRIDORS\W11633_CORRIDOR.DWG PLOT DATE : 7/8/2025 11:17:30 AM PLOT BY : CODY KINTZ PLOT SCALE : 1 IN:10 FT LAYOUT : WEITZEL 1

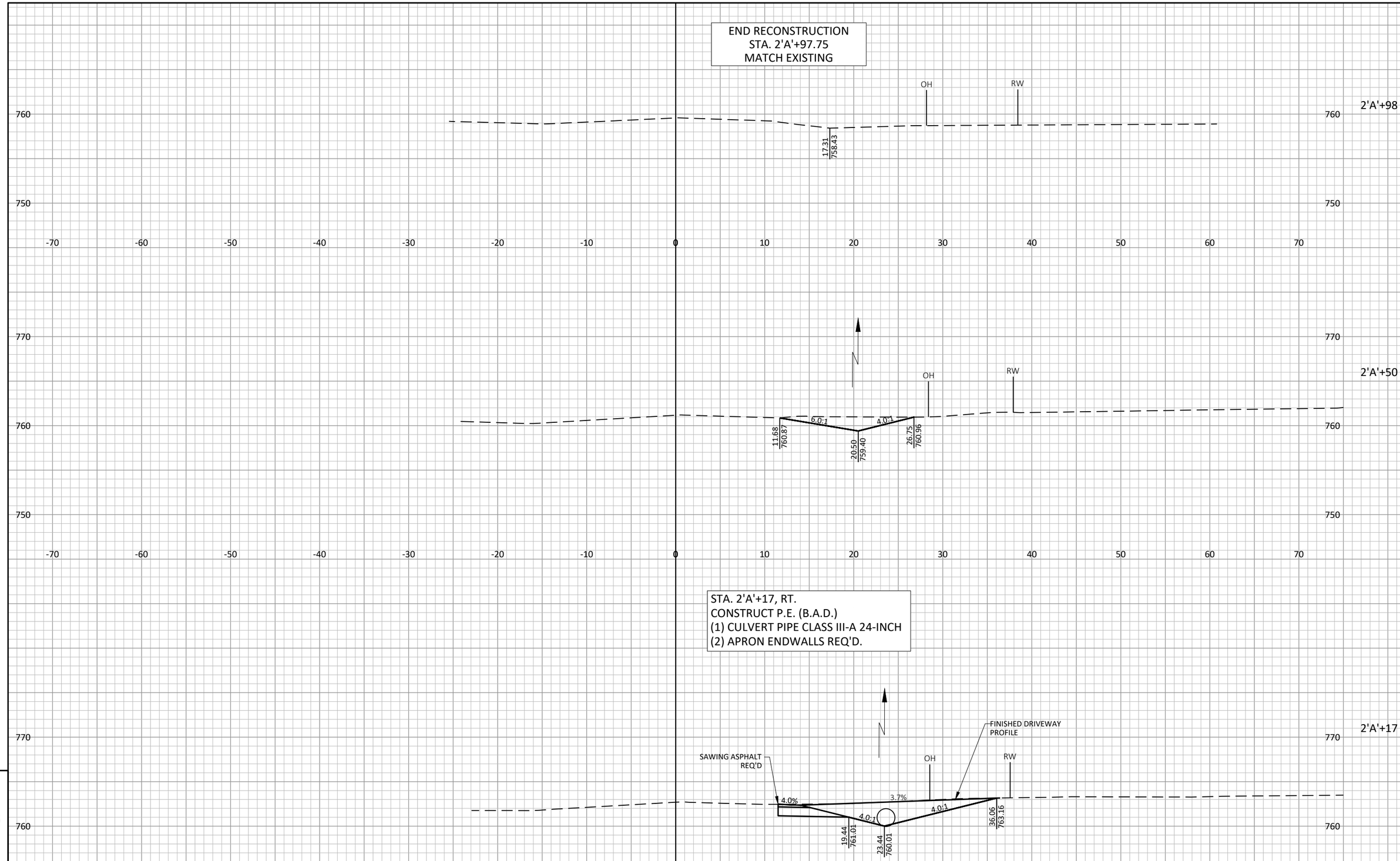

PROJECT NO: 5760-00-72	HWY: STH 130	COUNTY: SAUK	CROSS SECTIONS: 'A'-LINE (WEITZEL ROAD)	SHEET 138	E

FILE NAME : S:\PROJECTS\W11633 WISDOT - STH 130 RICHLAND AND SAUK CO\DESIGN\CORRIDORS\W11633_CORRIDOR.DWG PLOT DATE : 7/8/2025 11:17:35 AM PLOT BY : CODY KINTZ PLOT SCALE : 1 IN:10 FT LAYOUT : WEITZEL 2

Notes

Wisconsin Department of Transportation

Dedicated people creating transportation solutions through innovation and exceptional service.

http://www.dot.wisconsin.gov

MAD

PROJECT ID: 5760-00-73

WITH: 5760-00-72

COUNTY: RICHLAND

JANUARY 2026

ORDER OF SHEETS

TOTAL SHEETS = 110

STATE PROJECT	FEDERAL PROJECT	
	PROJECT	CONTRACT
5760-00-73	WISC 2026136	1

STATE OF WISCONSIN
DEPARTMENT OF TRANSPORTATION

PLAN OF PROPOSED IMPROVEMENT

LONE ROCK - STH 154

USH 14 TO WEST JUNCTION CTH B

STH 130
RICHLAND COUNTY

STATE PROJECT NUMBER

5760-00-73

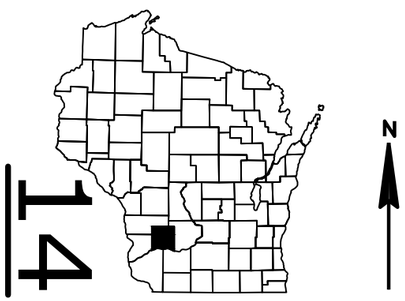

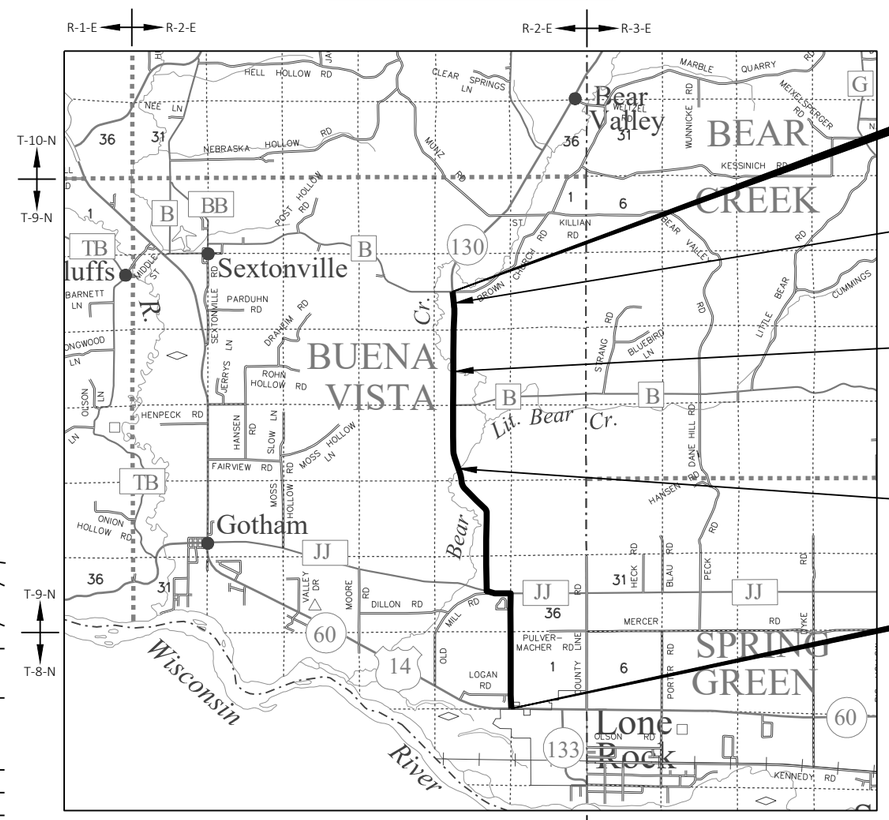

LAYOUT

SCALE 0 2 MI

TOTAL NET LENGTH OF CENTERLINE = 5.924 MI

HORIZONTAL POSITIONS SHOWN ON THIS PLAN ARE WISCONSIN COORDINATE REFERENCE SYSTEM (WISCRS), RICHLAND COUNTY, NAD83 (2011), IN U.S. SURVEY FEET. POSITIONS SHOWN ARE GRID COORDINATES, GRID BEARINGS, AND GRID DISTANCES. GRID DISTANCES ARE THE SAME AS GROUND DISTANCES.

ELEVATIONS ARE REFERENCED TO NAVD 88 (2012). GPS DERIVED ELEVATIONS ARE BASED ON GEOID 18.

DESIGN DESIGNATION 5760-00-03

A.A.D.T.	2027	=	880
A.A.D.T.	2047	=	970
D.H.V.		=	110
D.D.		=	60/40
T.		=	20.93 %
DESIGN SPEED		=	60 MPH
ESALS		=	490,000

CONVENTIONAL SYMBOLS

PLAN

CORPORATE LIMITS
PROPERTY LINE
LOT LINE
LIMITED HIGHWAY EASEMENT
EXISTING RIGHT OF WAY
PROPOSED OR NEW R/W LINE
SLOPE INTERCEPT
REFERENCE LINE (300'EB')
EXISTING CULVERT
PROPOSED CULVERT (Box or Pipe)
COMBUSTIBLE FLUIDS (CAUTION)
MARSH AREA
WOODED OR SHRUB AREA

PROFILE

GRADE LINE
ORIGINAL GROUND
MARSH OR ROCK PROFILE (To be noted as such) (ROCK)
SPECIAL DITCH (LABEL)
GRADE ELEVATION (95.36)
CULVERT (Profile View)

UTILITIES

ELECTRIC (E)
FIBER OPTIC (FO)
GAS (G)
SANITARY SEWER (SAN)
STORM SEWER (SS)
TELEPHONE (T)
WATER (W)
UTILITY PEDESTAL
POWER POLE
TELEPHONE POLE

ORIGINAL PLANS PREPARED BY

WESTBROOK Associated Engineers, Inc.
619 EAST HOXIE STREET
P.O. BOX 429
SPRING GREEN, WISCONSIN 53588
PHONE (608) 588-7866
FAX (608) 588-7954

WISCONSIN PROFESSIONAL ENGINEER AARON B. PALMER E-35695 RICHLAND CENTER, WI

7/21/2025 (Date) (Signature)

STATE OF WISCONSIN
DEPARTMENT OF TRANSPORTATION

PREPARED BY

Surveyor	WESTBROOK ASSOCIATED ENGINEERS, INC.
Designer	WESTBROOK ASSOCIATED ENGINEERS, INC.
Project Manager	NATHANIEL SCHUMAKER, P.E.
Regional Examiner	SW REGION
Regional Supervisor	BRIAN MEYER, P.E.

APPROVED FOR THE DEPARTMENT

DATE: 7/21/2025 Nathaniel Schumaker (Signature)

E

2

GENERAL NOTES

THERE ARE UTILITY FACILITIES WITHIN THE PROJECT AREA THAT ARE NOT SHOWN ON THE PLANS. THE CONTRACTOR SHALL COORDINATE THEIR CONSTRUCTION ACTIVITIES WITH A CALL TO DIGGERS HOTLINE.

NO TREES OR SHRUBS TO BE REMOVED WITHOUT THE APPROVAL OF THE ENGINEER.

EROSION CONTROL FEATURES, AS SHOWN ON THE PLANS, ARE SUGGESTED LOCATIONS. EXACT LOCATIONS WILL BE DETERMINED BY THE ENGINEER IN THE FIELD. MAINTAIN EROSION CONTROL ITEMS UNTIL SUCH TIME AS THE ENGINEER DETERMINES THE MEASURE IS NO LONGER NECESSARY. PROTECT WETLANDS AND OTHER WATERWAYS THAT ARE PRESENT WITHIN THE PROJECT LIMITS.

DISTURBED AREAS SHOWN WITHIN THE RIGHT-OF-WAY, EXCEPT THE AREAS WITHIN THE FINISHED SHOULDER POINTS, ARE TO BE FERTILIZED (TYPE B), SEEDED (USE SEED MIX NO. 30), SEEDING TEMPORARY, AND EROSION MAT CLASS I TYPE B AS DIRECTED BY THE ENGINEER. FERTILIZER (TYPE B), SEEDING (SEEDING MIX NO. 30) & SEEDING TEMPORARY ARE PAID FOR UNDER THE BID ITEM BARRIER SYSTEM GRADING SHAPING FINISHING.

WHEN THE QUANTITY OF THE ITEM OF BASE AGGREGATE DENSE OR HMA PAVEMENT IS MEASURED FOR PAYMENT BY THE TON, THE DEPTH OR THICKNESS OF THE COURSE SHOWN ON THE PLANS IS APPROXIMATE, AND THE ACTUAL THICKNESS WILL DEPEND ON THE DISTRIBUTION OF THE MATERIAL AS DIRECTED BY THE ENGINEER IN THE FIELD.

PRIOR TO THE PLACEMENT OF GUARDRAIL, THE SHOULDERS SHALL BE PLACED, SHAPED, AND COMPACTED.

EXISTING SHOULDER AGGREGATE SHALL BE INCORPORATED INTO THE NEW SHOULDERS UNLESS OTHERWISE DIRECTED BY THE ENGINEER IN THE FIELD.

REMOVAL OF ASPHALTIC SURFACES WHERE AN ABUTTING ASPHALTIC SURFACE IS TO REMAIN IN PLACE SHALL REQUIRE A VERTICAL SAWCUT MEETING THE APPROVAL OF THE ENGINEER IN THE FIELD.

HMA PAVEMENT WEIGHT CALCUATIONS ARE BASED ON 112 LB/SY/IN.

3.5-INCHES OF HMA PAVEMENT SHALL BE CONSTRUCTED WITH TWO 1.75-INCH LAYERS OF HMA PAVEMENT 4 LT 58-28 S.

APPLY TACK COAT TO MILLED SURFACE PRIOR TO PLACEMENT OF HMA PAVEMENT AT A RATE OF 0.07 GAL/SY.

APPLY TACK COAT BETWEEN LAYERS OF HMA PAVEMENT AT A RATE OF 0.05 GAL/SY.

THE CONTRACTOR'S PAVING OPERATIONS SHALL BE CONSISTENT WITH THE PLAN TYPICAL SECTIONS AND CONSTRUCTED TO PREVENT HMA LONGITUDINAL JOINTS FROM BEING LOCATED WITHIN A DRIVING, TURNING, PASSING, OR PARKING LANES.

PAVING LIMITS AT INTERSECTIONS ARE TO BE DETERMINED IN THE FIELD BY THE ENGINEER.

THE EXACT LOCATIONS AND LIMITS OF PRIVATE , COMMERCIAL, AND FIELD ENTRANCES SHALL BE DETERMINED BY THE ENGINEER IN THE FIELD. DRIVEWAYS SHALL BE REPLACED IN KIND.

CONTRACTOR SHALL MAINTAIN ACCESS TO ALL DRIVEWAYS ALL TIMES EXCEPT WHEN PAVING OPERATIONS REQUIRE THE DRIVEWAY TO BE CLOSED. ACCESS TO DRIVEWAYS SHALL BE RE-ESTABLISHED IMMEDIATELY AFTER OPERATIONS ARE COMPLETED. ACCESS SHALL BE PROVIDED DURING ALL NON-WORKING HOURS.

THE LOCATION OF STOP LINES SHALL BE DETERMINED BY THE ENGINEER IN THE FIELD.

ADJUST DITCH GRADING AS NECESSARY TO FIELD CONDITIONS AND AS DIRECTED BY THE ENGINEER IN THE FIELD.

PIPE ELEVATIONS, LENGTHS, AND LOCATIONS AS SHOWN ON THE PLANS, MAY BE ADJUSTED TO FIT EXISTING FIELD CONDITIONS AS DIRECTED BY THE ENGINEER.

FLAGGERS SHALL BE IN SIGHT OF EACH OTHER OR IN DIRECT COMMUNICATION AT ALL TIMES. THEY SHALL BE EQUIPPED WITH STOP/SLOW PADDLES FASTENED ON SUPPORT STAFFS. WHEN THE FLAGGING OPERATION IS NOT IN EFFECT, ALL SIGNS RELATING TO THIS OPERATION SHALL BE COVERED OR REMOVED AND FACILITY RESTORED TO NORMAL OPERATIONS.

ENVIRONMENTALLY AND ARCHEOLOGICALLY SENSITIVE AREAS PRESENT WITHIN THE PROJECT LIMITS. THESE AREAS SHOULD NOT BE USED FOR BORROW OR WASTE DISPOSAL, OR FOR THE STAGING OF PERSONNEL, EQUIPMENT, OR MATERIALS.

STANDARD ABBREVIATIONS

ABUT.	Abutment	JT	Joint	SEC	Section
AC	Acre	JCT	Junction	SHLDR	Shoulder
AGG.	Aggregate	LHF	Left-Hand Forward	SHR	SHRINKAGE
AH	Ahead	L	Length of Curve	SW	Sidewalk
<	Angle	LIN FT OR LF	Linear Foot	S	South
ASPH	Asphaltic	LC	Long Chord of Curve	SQ	Square
AVG.	Average	MH	Manhole	SF OR SQ FT	Square Feet
A.D.T	Average Daily Traffic	MB	Mailbox	SY or SQ YD	Square Yard
BAD	Base Aggregate Dense	ML OR M/L	Match Line	STD	Standard
BK	Back	N	North	SDD	Standard Detail Drawings
BF	Back Face	Y	North Grid Coordinate	STH	State Trunk Highway
B.M.	Bench Mark	OD	Outside Diameter	STA	Station
BR.	Bridge	PLE	Permanent Limited Easement	SS	Storm Sewer
C/L	Center Line	PT	Point	SG	Subgrade
CC	Center to Center	PC	Point of Curvature	SE	Superelevation
CTH	County Trunk Highway	PI	Point of Intersection	SL or S/L	Survey Line
CR.	Creek	PRC	Point of Reverse Curvature	SV	Septic Vent
CY or CU YD	Cubic Yard	PT	Point of Tangency	T	Tangent
CP	Culvert Pipe	POC	Point on Curve	TEL	Telephone
C & G	Curb and Gutter	PVC	Polyvinyl Chloride	TEMP	Temporary
D	Degree of Curve	PCC	Portland Cement Concrete	TI	Temporary Interest
DHV	Design Hour Volume	LB	Pound	t	Ton
DIA	Diameter	PSI	Pounds Per Square Inch	T or TN	Town
E	East	PE	Private Entrance	TRANS	Transition
X	East Grid Coordinate	R	Radius	TL OR T/L	Transit Line
ELEC	Electric	RR	Railroad	T	Trucks (percent of)
EL OR ELEV	Elevation	RL OR R/L	Reference Line	TYP	Typical
ESALS	Equivalent Single Ac=xle Loads	RP	Reference Point	UNCL	Unclassified
EBS	Excavation Below Subgrade	RCCP	Reinforced Concrete Culvert Pipe	UG	Underground Cable
FF	Face to Face	REQD	Required	USH	United States Highway
FE	Field Entrance	RES	Residence or Residential	VAR	Variable
F	Fill	RW	Retaining Wall	V	Velocity or Design Speed
FG	Finished Grade	RT	Right	VERT	Vertical
FL or F/L	Flow Line	RHF	Right-Hand Forward	VC	Vertical Curve
FT	Foot	R/W	Right-of-Way	VOL	Volume
FTG	Footing	R	River	WM	Water Main
GN	Grid North	RD	Road	WV	Water Valve
HT	Height	RDWY	Roadway	W	West
CWT	Hundredweight	SALV	Salvaged	WB	Westbound
HYD	Hydrant	SAN S	Sanitary Sewer	YD	Yard
INL	Inlet	ID	Inside Diameter	INV	Invert
IP	Iron Pipe or Pin	IRS	Iron Rod Set		

UTILITIES

ELECTRICITY
ATC MANAGEMENT, INC.
ATTN: DOUG VOSBERG
2489 RINDEN ROAD
COTTAGE GROVE, WI 53527
PHONE: (608) 877-7650
EMAIL: dvosberg@atcllc.com

GAS
ALLIANT ENERGY
ATTN: PATRICK MCINTYRE
900 PRAIRIE DRIVE
SPRING GREEN, WI 53588
PHONE: (608) 588-9708
EMAIL: patrickmcintyre@alliantenergy.com

COMMUNICATION LINE
REEDSBURG UTILITY COMMISSION
ATTN: KEN LAS
501 UTILITY COURT
REEDSBURG, WI 53959
PHONE: (608) 786-1000
EMAIL: klas@rucls.net

ELECTRICITY
ALLIANT ENERGY
ATTN: PATRICK MCINTYRE
900 PRAIRIE DRIVE
SPRING GREEN, WI 53588
PHONE: (608) 588-9708
EMAIL: patrickmcintyre@alliantenergy.com

COMMUNICATION LINE
FRONTIER COMMUNICATIONS
ATTN: CHRISTOPHER POLLACK
521 4TH STREET
WAUSAU, WI 54403
PHONE: (715) 847-1240
EMAIL: Christopher.Pollack@ftr.com

COMMUNICATION LINE
WICONNECT WIRELESS
ATTN: DAVE BANGERT
2670F EAST MAIN STREET
REEDSBURG, WI 53959
PHONE: (608) 524-2610
EMAIL: dave@ccwis.com

DIGGERS HOTLINE
Dial 811 or (800)242-8511
www.DiggersHotline.com

2

ORDER OF SECTION 2 DETAIL SHEETS

GENERAL NOTES
PROJECT OVERVIEW
TYPICAL SECTIONS
CONSTRUCTION DETAILS
BEAM GUARD DETAILS
EROSION CONTROL
PAVEMENT MARKING
TRAFFIC CONTROL OVERVIEW
CONTROL POINT TIES

CONTACTS

WISDOT

WISDOT PROJECT MANAGER
3550 MORMON COULEE ROAD
LA CROSSE, WI 54601

ATTN: NATHANIEL SCHUMAKER, P.E.
PH: (608) 789-5538
Nathaniel.Schumaker@dot.wi.gov

WDNR LIAISON

DNR SOUTH CENTRAL REGION
HEADQUARTERS
3911 FISH HATCHERY ROAD
FITCHBURG, WI 53711

ATTN: ANDY BARTA
PH: (608) 235-2955
Andrew.Barta@wisconsin.gov

DESIGN CONSULTANT

WESTBROOK ASSOCIATED
ENGINEERS, INC.
619 EAST HOXIE STREET
SPRING GREEN, WI 53588

ATTN: AARON PALMER, P.E.
PH: (608) 588-7866
FAX: (608) 588-7954
apalmer@westbrookeng.com

RUNOFF COEFFICIENT TABLE

	HYDROLOGIC SOIL GROUP											
	A			B			C			D		
	SLOPE RANGE (PERCENT)			SLOPE RANGE (PERCENT)			SLOPE RANGE (PERCENT)			SLOPE RANGE (PERCENT)		
LAND USE:	0-2	2-6	6 & OVER	0-2	2-6	6 & OVER	0-2	2-6	6 & OVER	0-2	2-6	6 & OVER
ROW CROPS:	.08	.16	.22	.12	.20	.27	.15	.24	.33	.19	.28	.38
	.22	.30	.38	.26	.34	.44	.30	.37	.50	.34	.41	.56
MEDIAN STRIPTURF:	.19	.20	.24	.19	.22	.26	.20	.23	.30	.20	.25	.30
	.24	.26	.30	.25	.28	.33	.26	.30	.37	.27	.32	.40
SIDE SLOPETURF:			.25			.27			.28			.30
			.32			.34			.36			.38
PAVEMENT:												
ASPHALT:	.70 - .95											
CONCRETE:	.80 - .95											
BRICK:	.70 - .80											
DRIVES, WALKS:	.75 - .85											
ROOFS:	.75 - .95											
GRAVEL ROADS, SHOULDERS:	.40 - .60											

TOTAL PROJECT AREA = 23.70 ACRES
TOTAL AREA EXPECTED TO BE DISTURBED BY CONSTRUCTION ACTIVITIES = 0.45 ACRES

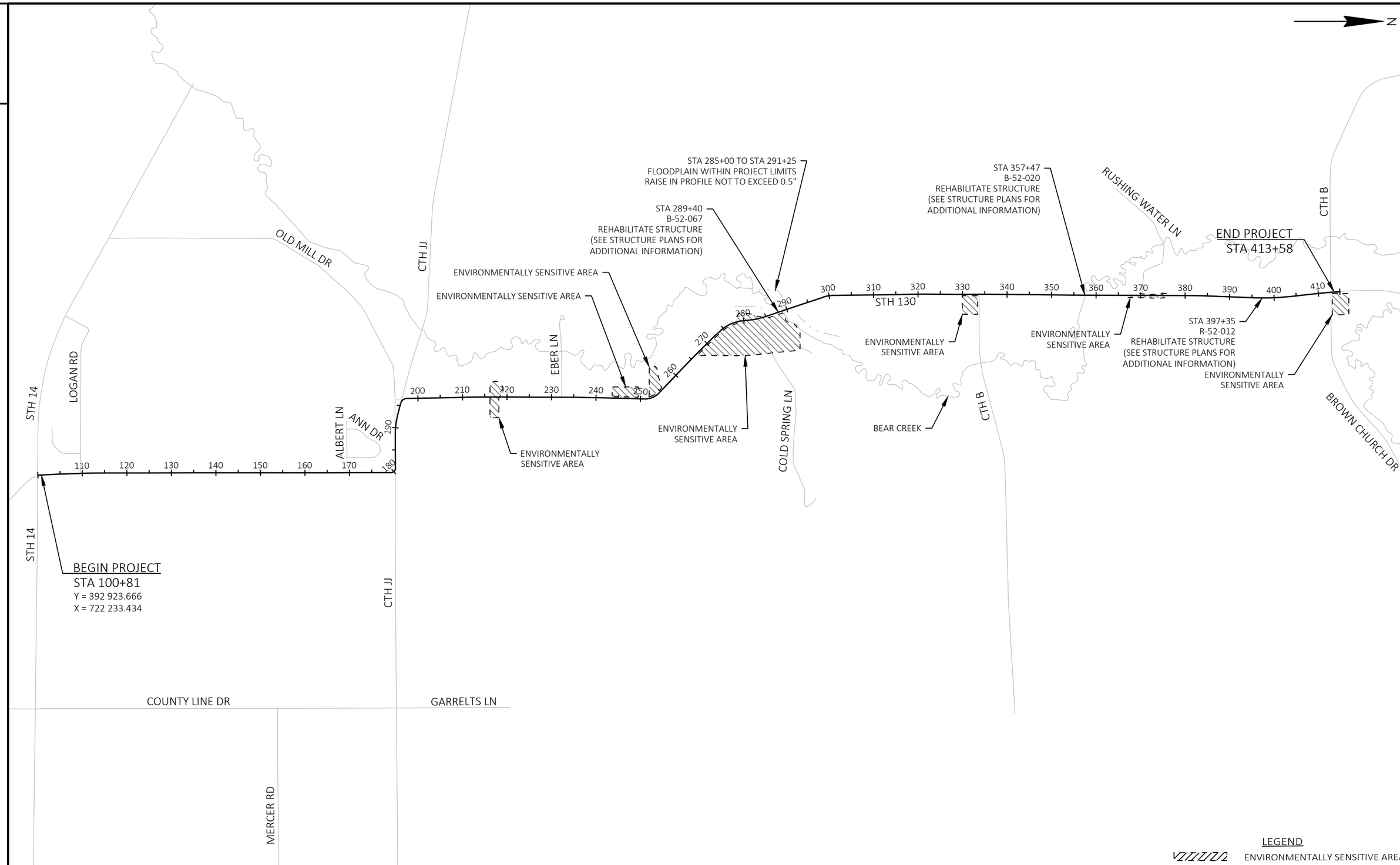

2

PROJECT NO: 5760-00-73	HWY: STH 130	COUNTY: RICHLAND	PROJECT OVERVIEW	SHEET 3	E

2

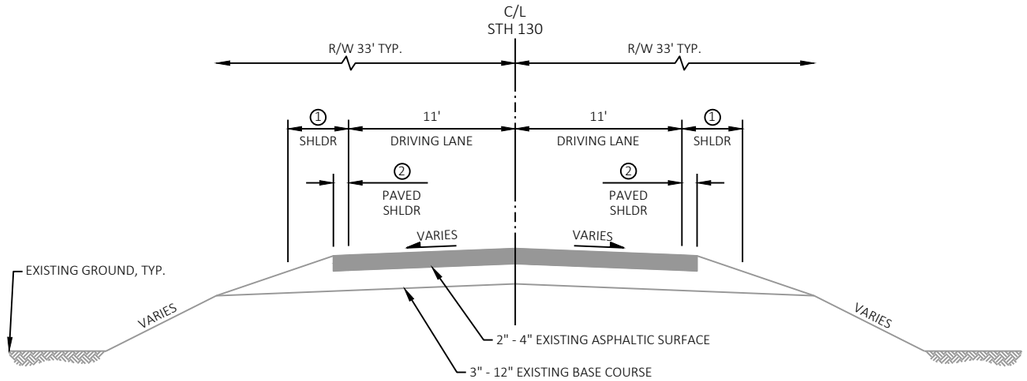

EXISTING TYPICAL SECTION

STA	-	STA	①	②
100+81	-	112+50	6'	1'
112+50	-	197+50	5'	1'
197+50	-	200+50	4'	1'
200+50	-	285+30	4'	0'
285+30	-	291+15	3' to 9'	0' to 8'
291+15	-	295+00	3'	0'
295+00	-	311+50	4'	1'
311+50	-	319+50	3'	0'
319+50	-	357+10	4'	0'

NOTES

① TOTAL SHOULDER WIDTH.

② PAVED SHOULDER WIDTH.

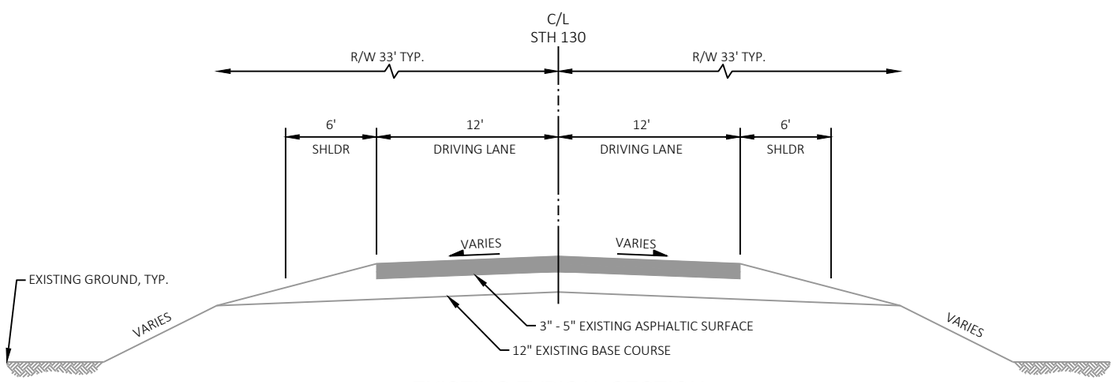

EXISTING TYPICAL SECTION

STA 357+84 - 412+08

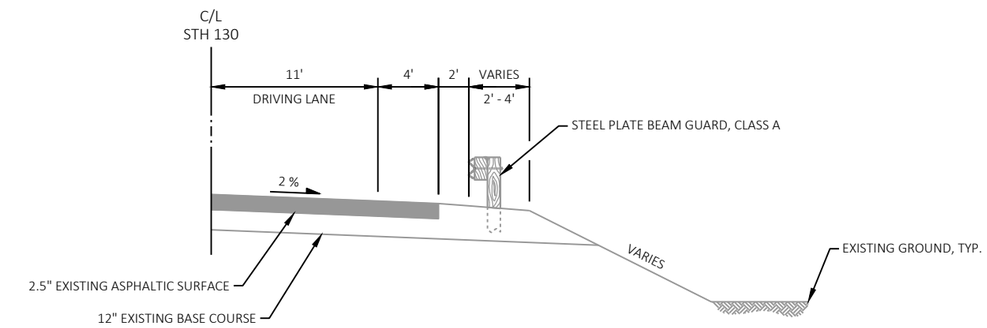

TYPICAL EXISTING HALF SECTION - GUARDRAIL

STA 288+41 - 291+10

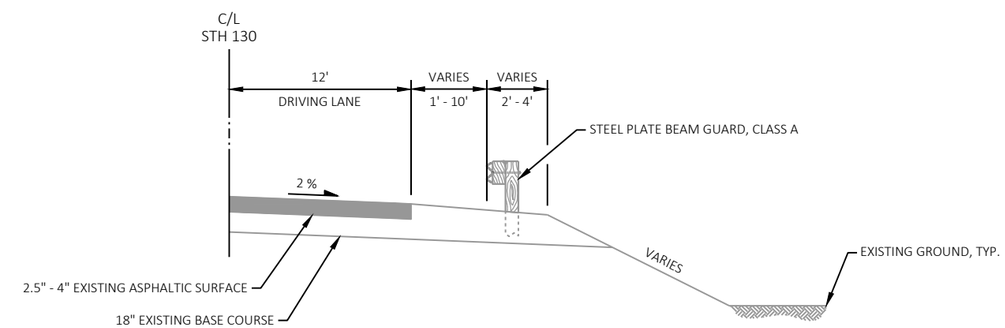

TYPICAL EXISTING HALF SECTION - GUARDRAIL

STA 356+39 - 358+54

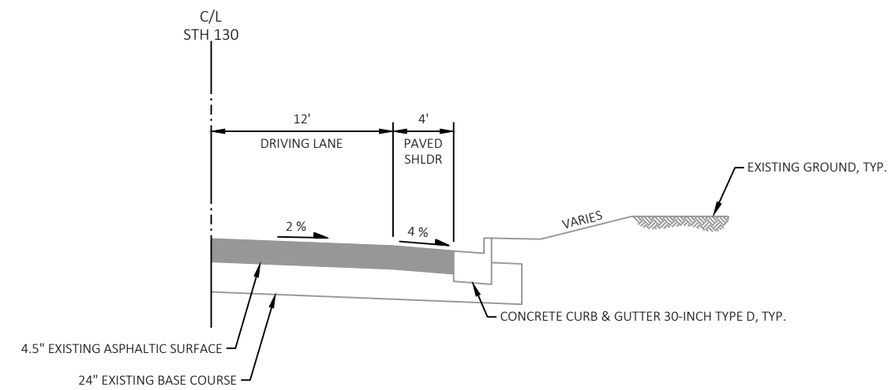

TYPICAL EXISTING HALF SECTION - CURB AND GUTTER

STA 366+86 - 372+91, RT
STA 370+40 - 372+14, LT

2

PROJECT NO: 5760-00-73	HWY: STH 130	COUNTY: RICHLAND	TYPICAL SECTIONS	SHEET 4	E

2

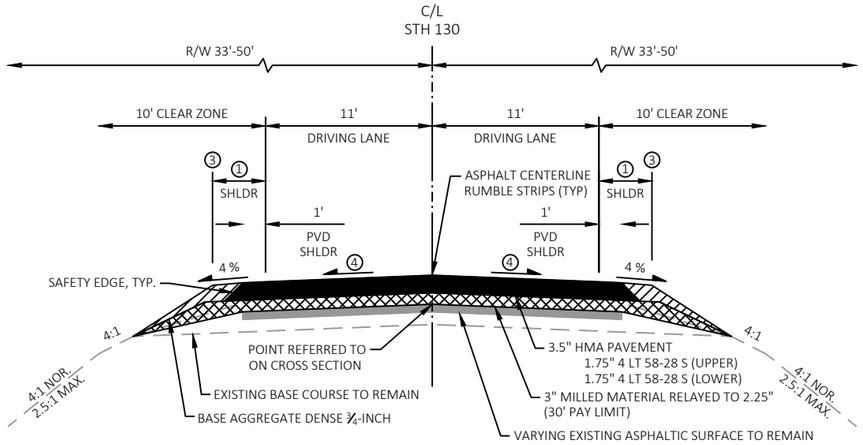

FINISHED TYPICAL SECTION

STA	-	STA	①
100+81	-	112+50	5.5'
112+50	-	197+50	4.5'
197+50	-	285+00	3.5'
292+50	-	295+00	2.5'
295+00	-	311+50	3.5'
311+50	-	319+50	2.5'
319+50	-	357+11	3.5'

NOTES

① TOTAL SHOULDER WIDTH.

③ MILL 3" OF EXISTING ASPHALTIC PAVEMENT. RELAY 2.25" MILLED MATERIAL TO LIMITS SHOWN.

④ 2% TYPICAL. NO SUPERELEVATION CORRECTION ANTICIPATED, MATCH EXISTING SUPERELEVATION.

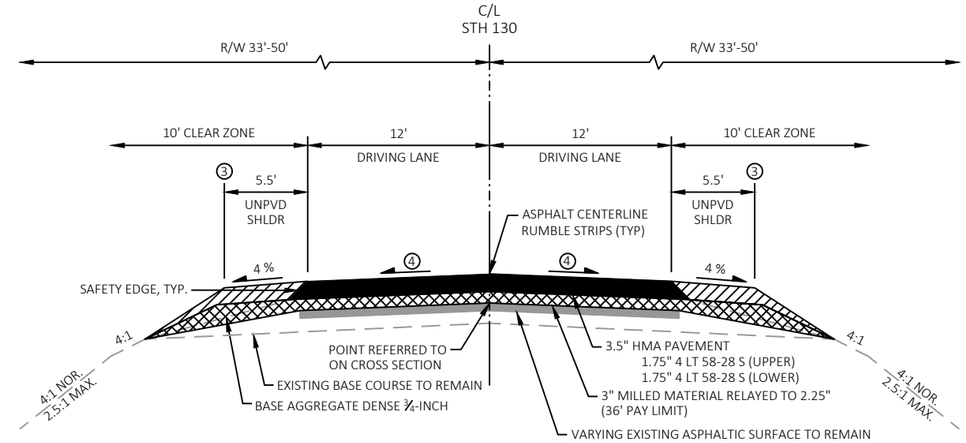

FINISHED TYPICAL SECTION

STA 357+82 - 366+86
STA 372+90 - 412+00

2

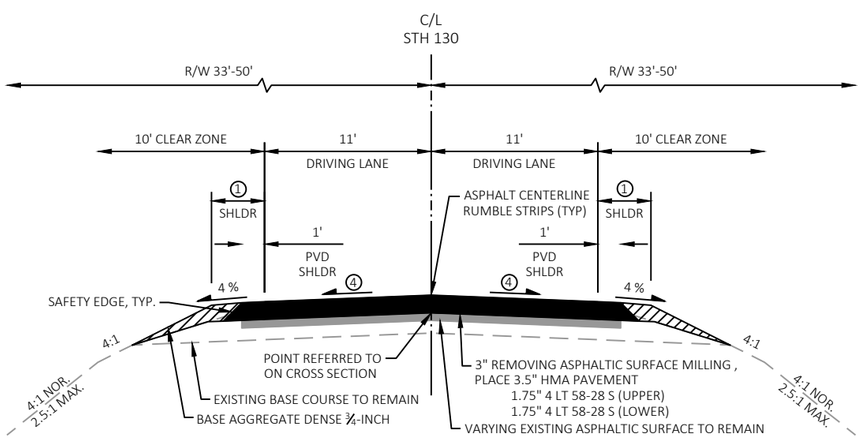

FINISHED TYPICAL SECTION

STA	-	STA	①
285+00	-	291+15	3.5'
291+15	-	292+50	2.5'

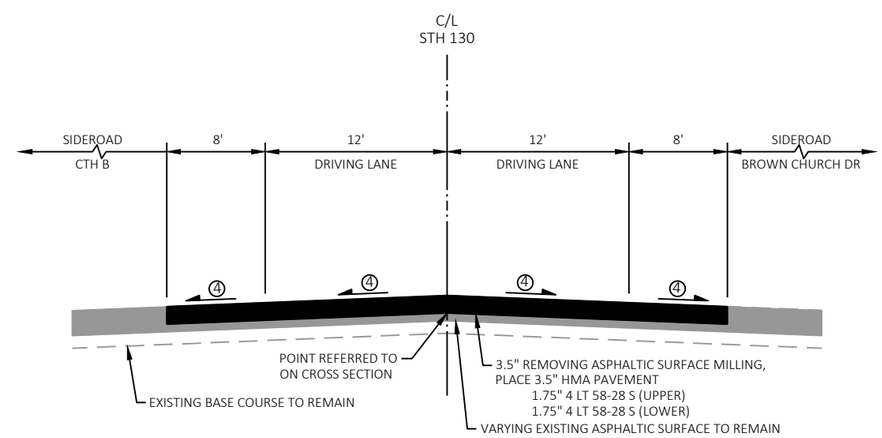

FINISHED TYPICAL SECTION

STA 412+08 - 413+58

PROJECT NO: 5760-00-73	HWY: STH 130	COUNTY: RICHLAND	TYPICAL SECTIONS	SHEET 5	E

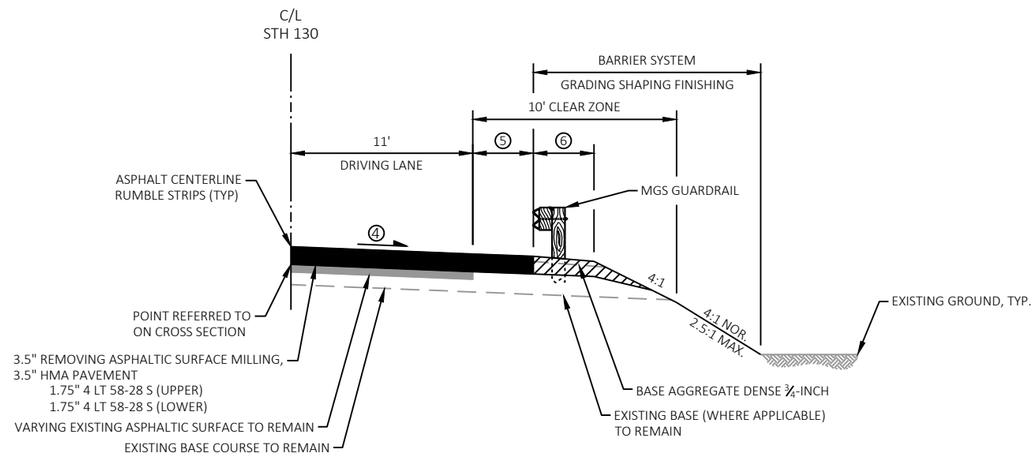

TYPICAL PROPOSED HALF SECTION - GUARDRAIL

STA 286+42 - 292+52

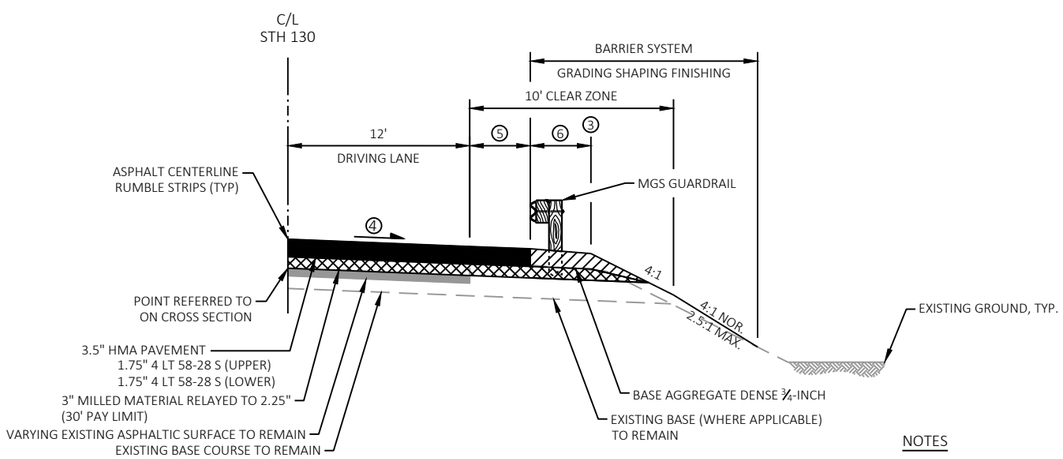

TYPICAL PROPOSED HALF SECTION - GUARDRAIL

STA 355+57 - 358+95

NOTES

3. MILL 3" OF EXISTING ASPHALTIC PAVEMENT. RELAY 2.25" MILLED MATERIAL TO LIMITS SHOWN.

4. 2% TYPICAL. NO SUPERELEVATION CORRECTION ANTICIPATED, MATCH EXISTING SUPERELEVATION.

5. 1' TYPICAL. PAVE TO FRONT FACE OF GUARDRAIL. VARIES 1' TO 7' 9".

6. VARIES FROM POST 9 TO POST 1. SEE CROSS SECTIONS AND SDD 14B44-04a.

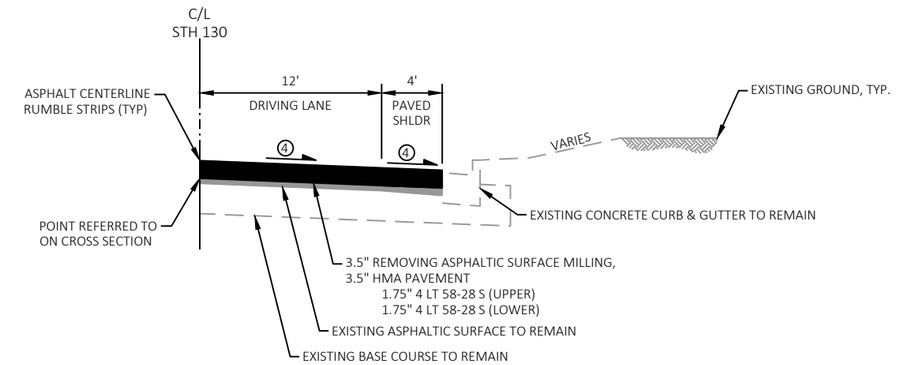

TYPICAL PROPOSED HALF SECTION - CURB & GUTTER

STA 366+86 - 372+90

SOIL BORING LOG

BORING NO.	STATION	OFFSET FROM C/L	ASPHALT DEPTH	UNDERLYING MATERIAL
B-1	104+20	4' RT	7.5"	6.5" REC, SAND
B-2	116+36	5' RT	6.0"	9.0" REC, SAND
B-3	132+66	7' RT	3.5"	8.5" REC + 3.0" BASE, SAND
B-4	149+04	4' LT	11.0"	7.0" BASE, SILT
B-5	167+76	6' LT	2.5"	4.5" REC + 3.0" BASE, SAND
B-6	185+19	10' LT	2.0"	6.0" REC + 2.0" ASPHALT, SAND
B-7	200+20	2' RT	8.5"	3.0" BASE, SAND
B-8	216+12	8' RT	2.5"	8.5" REC + 3.0" BASE, SAND
B-9	227+64	5' RT	2.5"	7.0" REC + 4.5" BASE, SAND
B-10	246+16	10' LT	3.0"	9.0" REC + 12.0" BASE, CLAY
B-11	252+75	8' RT	2.0"	8.5" REC + 15.5" BASE, SAND
B-12	276+09	9' LT	3.5"	7.0" REC + 2.0" BASE + 2.0" ASPHALT + 2.0" BASE + 2.0" SILT + 7.0" BASE, SILT
B-13	282+48	6' LT	2.5"	3.0" REC + 15.5" BASE, SAND
B-14	298+55	4' RT	2.5"	2.5" REC + 3.0" BASE + 2.0" ASPHALT + 4.0" BASE, SILT
B-15	308+53	2' LT	3.0"	7.0" REC & BASE MIX + 11.0" BASE, SILT
B-16	320+52	6' RT	2.5"	6.0" REC+ 3.0" BASE + 2.5" ASPHALT + 6.0" BASE, SILT
B-17	332+23	7' LT	2.5"	5.0" REC + 12.5" BASE, CLAY
B-18	343+08	9' LT	4.0"	11.0" REC + 6.0" BASE MIX, SILT
B-19	354+27	3' LT	2.5"	8.0" REC & BASE MIX + 10.5 " BASE, SAND
B-20	364+81	3' RT	4.0"	10.0" BASE + 3.0" GRAVEL + 40.0" REC & BASE MIX + 6.0" CONCRETE, UNKNOWN
B-21	372+51	7' RT	4.5"	28.5" BASE + 3.0" GRAVEL, SAND
B-22	382+56	8' RT	4.0"	12.0" BASE, SAND
B-23	393+32	3' LT	3.0"	13.0" BASE, SAND
B-24	401+77	6' LT	4.5"	15.5" BASE, SAND & SILT
B-25	412+33	9' LT	5.0"	15.0" BASE, SILT

NOTE: SOIL BORING LOGS ARE FOR REFERENCE ONLY. PAVEMENT DEPTHS LISTED MAY INCLUDE UNDERLYING REPROCESSED ASPHALTIC PAVEMENT.

2

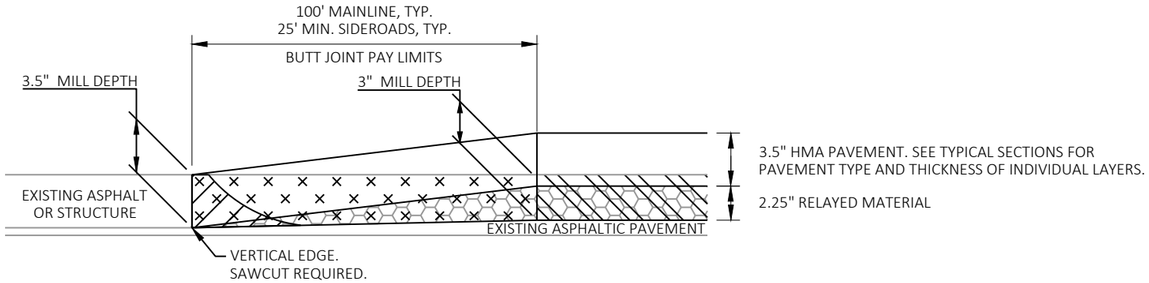

REMOVE ASPHALTIC SURFACE, MILLING

REMOVING ASPHALTIC SURFACE, BUTT JOINTS

RELAYED MATERIAL

REMOVE ASPHALTIC SURFACE WEDGE AT BUTT JOINT TO CREATE VERTICAL EDGE

NOTE: ANY SAWCUT USED IN THIS OPERATION CONSIDERED INCIDENTAL TO REMOVING ASPHALTIC SURFACE BUTT JOINTS.

BUTT JOINT DETAIL - MILL AND RELAY

STA 100+81 - 101+81
STA 356+11 - 357+11
STA 357+82 - 358+82
STA 109+66, LT
STA 169+47, LT
STA 179+89, RT
STA 191+61, LT
STA 196+50, LT
STA 333+70, RT

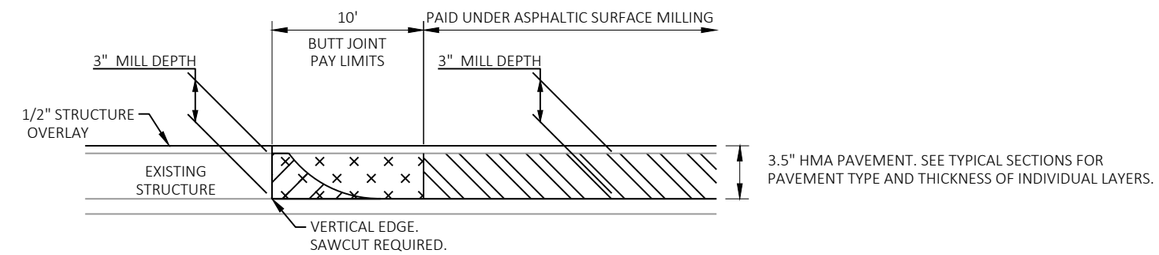

REMOVE ASPHALTIC SURFACE, MILLING

REMOVING ASPHALTIC SURFACE, BUTT JOINTS

REMOVE ASPHALTIC SURFACE WEDGE AT BUTT JOINT TO CREATE VERTICAL EDGE

NOTE: ANY SAWCUT USED IN THIS OPERATION CONSIDERED INCIDENTAL TO REMOVING ASPHALTIC SURFACE BUTT JOINTS.

BUTT JOINT DETAIL - MILL AND OVERLAY

STA 287+89 - 288+89
STA 289+89 - 290+89
STA 370+22, LT

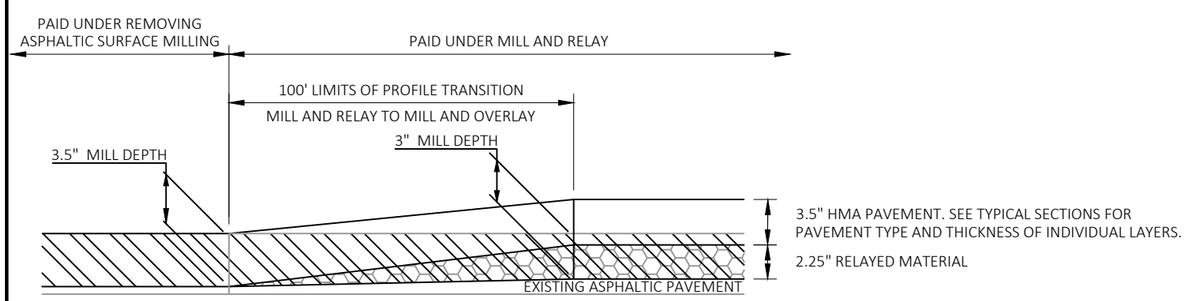

REMOVE ASPHALTIC SURFACE, MILLING

RELAYED MATERIAL

NOTE: ALL WORK DONE UNDER PROFILE TRANSITION SHALL BE PAID UNDER MILL AND RELAY.

PROFILE TRANSITION - NO PROFILE CHANGE

STA 365+86 - 366+86
STA 372+90 - 373+90
STA 411+08 - 412+08

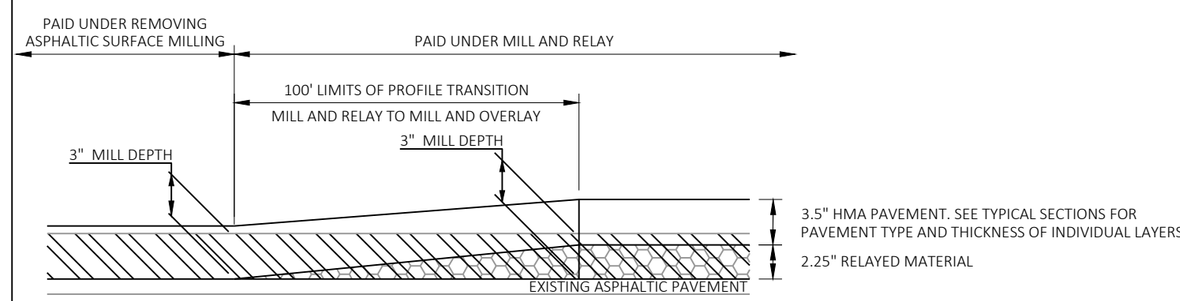

REMOVE ASPHALTIC SURFACE, MILLING

RELAYED MATERIAL

NOTE: ALL WORK DONE UNDER PROFILE TRANSITION SHALL BE PAID UNDER MILL AND RELAY.

PROFILE TRANSITION - 1/2-INCH PROFILE CHANGE

STA 284+00 - 285+00
STA 292+50 - 293+50

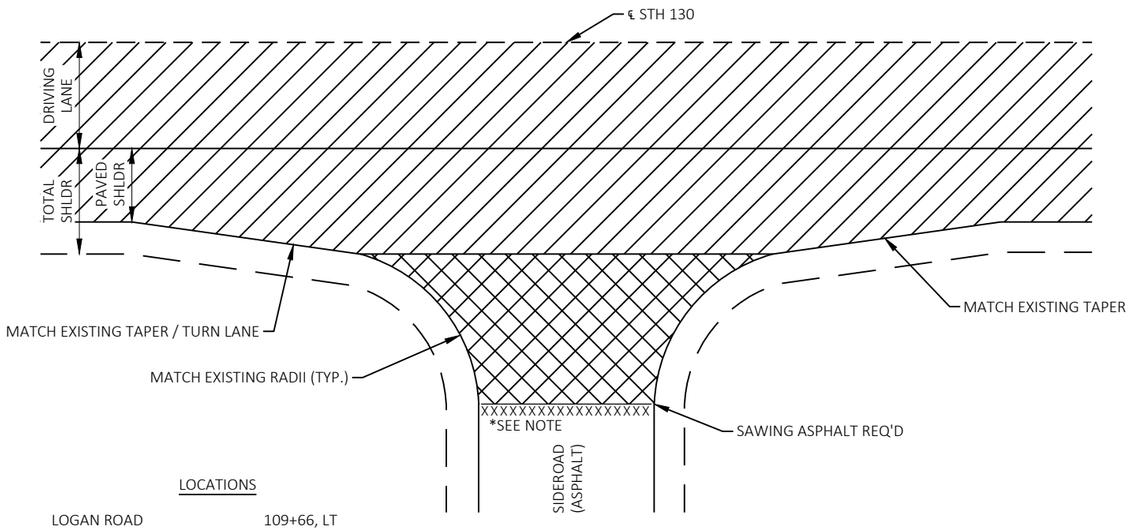

LOCATIONS

LOGAN ROAD	109+66, LT
ALBERT ROAD	169+47, LT
CTH JJ	179+89, RT
OLD MILL ROAD	191+61, LT
CTH JJ /OLD MILL ROAD	196+85, LT
CTH B	333+70, RT
RUSHING WATER LANE	370+22, LT

LIMITS OF REMOVING ASPHALTIC SURFACE BUTT JOINTS

LIMITS OF REMOVING ASPHALTIC SURFACE MILLING

* SIDEROAD CONSTRUCTION LIMITS ARE TO THE FURTHEST RADIUS POINT FROM THE MAINLINE CENTERLINE OF EACH SIDEROAD (OR AS DIRECTED BY THE ENGINEER)

PAVEMENT REMOVAL AT INTERSECTION DETAIL

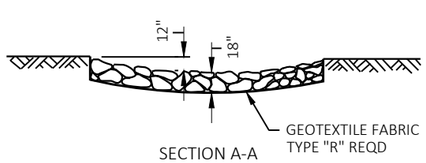

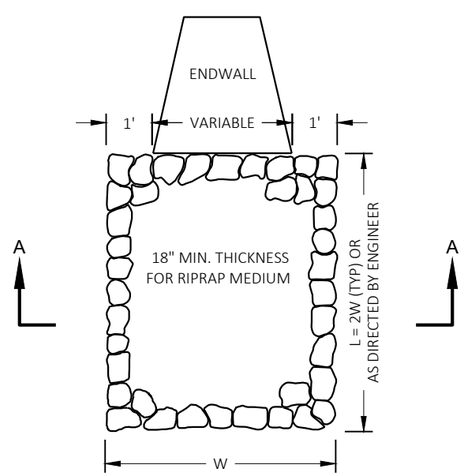

RIPRAP TREATMENT AT CULVERTS

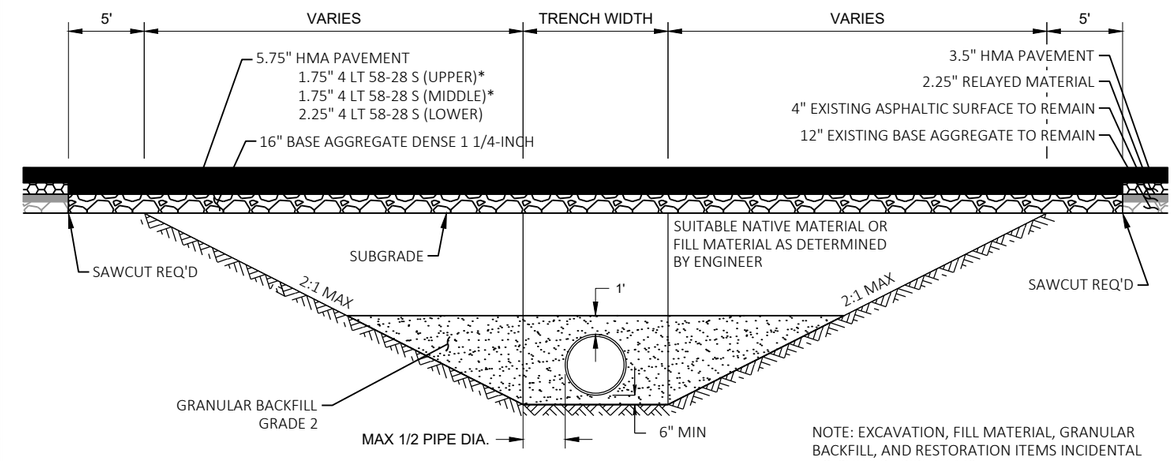

NOTE: EXCAVATION, FILL MATERIAL, GRANULAR BACKFILL, AND RESTORATION ITEMS INCIDENTAL TO CULVERT PIPE ITEMS

* UPPER AND MIDDLE LAYERS TO BE PAVED CONTINUOUSLY WITH HMA PAVEMENT THROUGH TRENCH EXCAVATION

CULVERT CROSS DRAIN DETAIL

STA 323+59

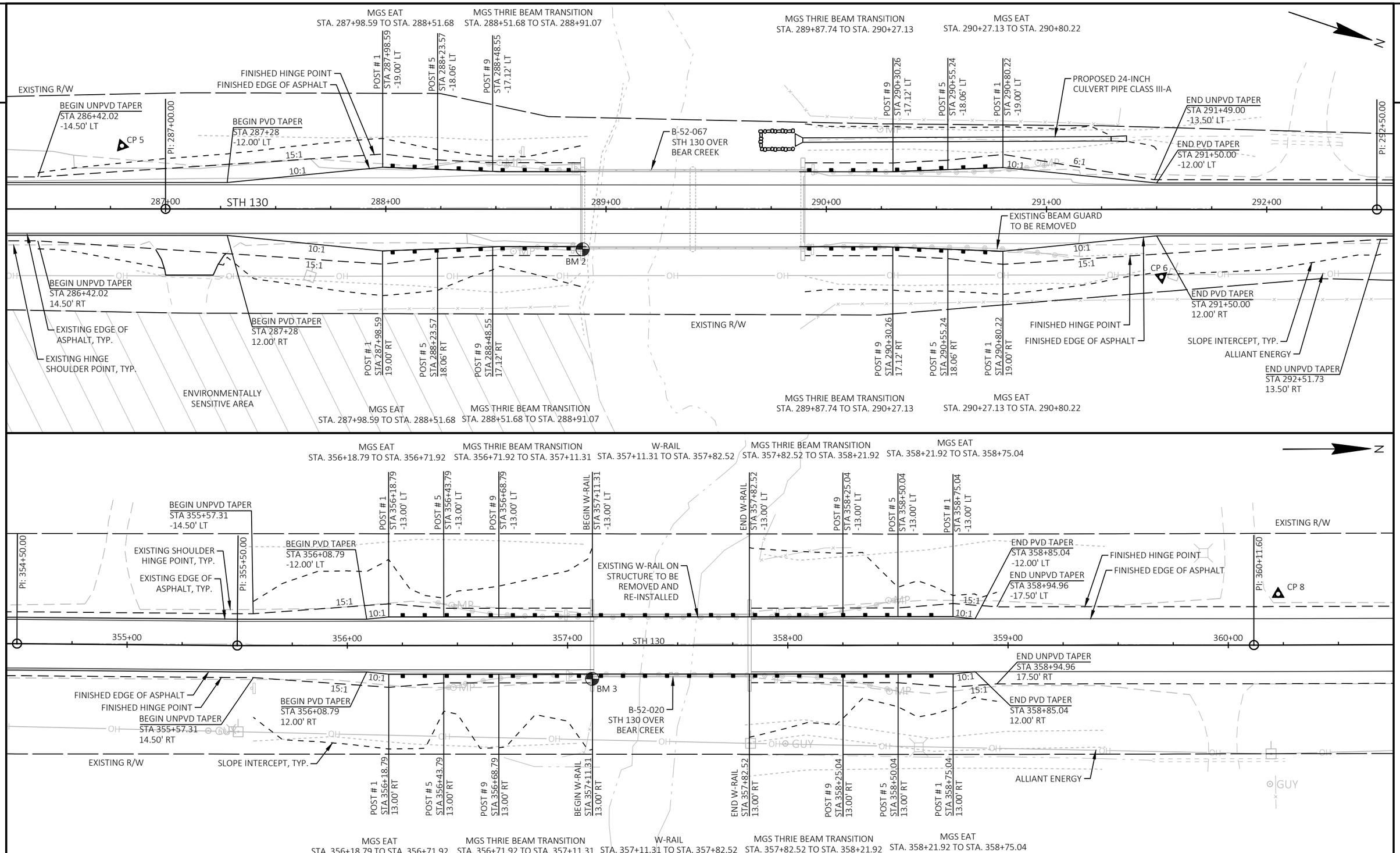

PROJECT NO: 5760-00-73	HWY: STH 130	COUNTY: RICHLAND	BEAM GUARD DETAILS	SHEET 9	E

2

WETLANDS

MGS GUARDRAIL TERMINAL EAT

MGS THRIE BEAM TRANSITION

EXISTING R/W

PROPOSED CULVERT PIPE CLASS III-A 24-INCH

EXISTING CULVERTS TO REMAIN

STA. 292+17 LT PE (B.A.D.)

PI: 287+00.00

PI: 292+50.00

287+00 288+00 289+00 STH 130 290+00 291+00 292+00

EXISTING CULVERT TO REMAIN

STA. 287+09 RT FE (B.A.D.)

BEAR CREEK

STRUCTURE B-52-067 (TO REMAIN)

EXISTING R/W

MGS GUARDRAIL TERMINAL EAT

MGS THRIE BEAM TRANSITION

SLOPE INTERCEPT, TYP.

ALLIANT ENERGY

SILT FENCE, TYP.

WETLANDS

WETLANDS

ENVIRONMENTALLY SENSITIVE AREA

LEGEND

- EROSION MAT URBAN CLASS I, TYPE B (PAID AS BARRIER SYSTEM GRADING SHAPING FINISHING.)
- SILT FENCE
- RIPRAP MEDIUM
- SLOPE INTERCEPT
- CULVERT PIPE CHECK
- SURFACE WATER FLOW

N

WETLANDS

MGS GUARDRAIL TERMINAL EAT

MGS THRIE BEAM TRANSITION

MGS THRIE BEAM TRANSITION

MGS GUARDRAIL TERMINAL EAT

STA. 360+04 LT FE (B.A.D.)

EXISTING R/W

PI: 354+50.00

STA. 354+92 LT FE (B.A.D.)

PI: 355+50.00

PI: 360+11.60

355+00 356+00 357+00 STH 130 358+00 359+00 360+00

STRUCTURE B-52-020 (TO REMAIN)

EXISTING R/W

BEAR CREEK

SLOPE INTERCEPT, TYP.

SILT FENCE, TYP.

ALLIANT ENERGY

EXISTING CULVERT PIPE TO REMAIN

STA. 359+96 RT FE (B.A.D.)

PROJECT NO: 5760-00-73	HWY: STH 130	COUNTY: RICHLAND	EROSION CONTROL	SHEET 10	E

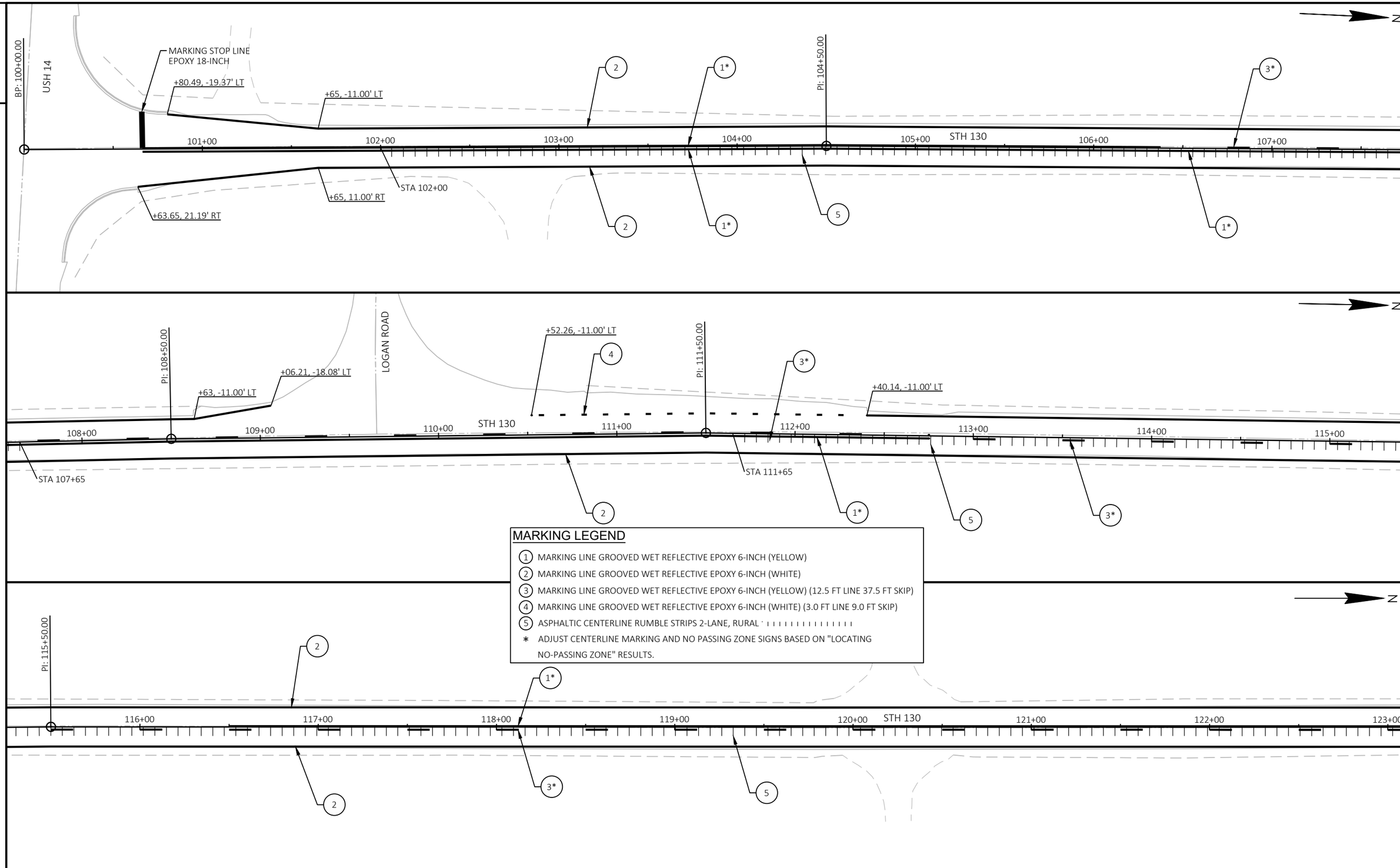

MARKING LEGEND

1. MARKING LINE GROOVED WET REFLECTIVE EPOXY 6-INCH (YELLOW)
2. MARKING LINE GROOVED WET REFLECTIVE EPOXY 6-INCH (WHITE)
3. MARKING LINE GROOVED WET REFLECTIVE EPOXY 6-INCH (YELLOW) (12.5 FT LINE 37.5 FT SKIP)
4. MARKING LINE GROOVED WET REFLECTIVE EPOXY 6-INCH (WHITE) (3.0 FT LINE 9.0 FT SKIP)
5. ASPHALTIC CENTERLINE RUMBLE STRIPS 2-LANE, RURAL

* ADJUST CENTERLINE MARKING AND NO PASSING ZONE SIGNS BASED ON "LOCATING NO-PASSING ZONE" RESULTS.

PROJECT NO: 5760-00-73	HWY: STH 130	COUNTY: RICHLAND	PAVEMENT MARKING	SHEET 11	E

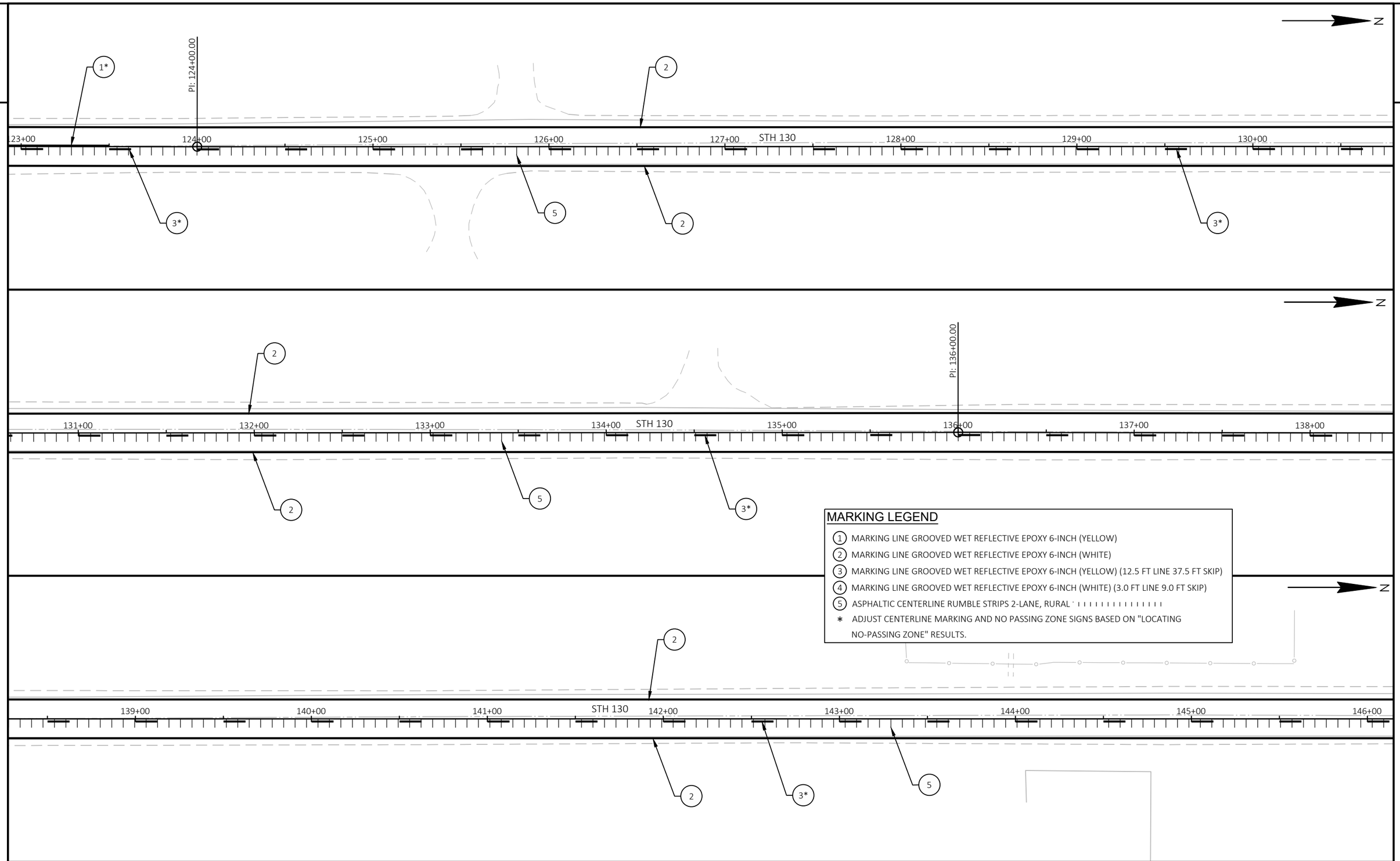

MARKING LEGEND

1. MARKING LINE GROOVED WET REFLECTIVE EPOXY 6-INCH (YELLOW)
2. MARKING LINE GROOVED WET REFLECTIVE EPOXY 6-INCH (WHITE)
3. MARKING LINE GROOVED WET REFLECTIVE EPOXY 6-INCH (YELLOW) (12.5 FT LINE 37.5 FT SKIP)
4. MARKING LINE GROOVED WET REFLECTIVE EPOXY 6-INCH (WHITE) (3.0 FT LINE 9.0 FT SKIP)
5. ASPHALTIC CENTERLINE RUMBLE STRIPS 2-LANE, RURAL

* ADJUST CENTERLINE MARKING AND NO PASSING ZONE SIGNS BASED ON "LOCATING NO-PASSING ZONE" RESULTS.

PROJECT NO: 5760-00-73	HWY: STH 130	COUNTY: RICHLAND	PAVEMENT MARKING	SHEET 12	E

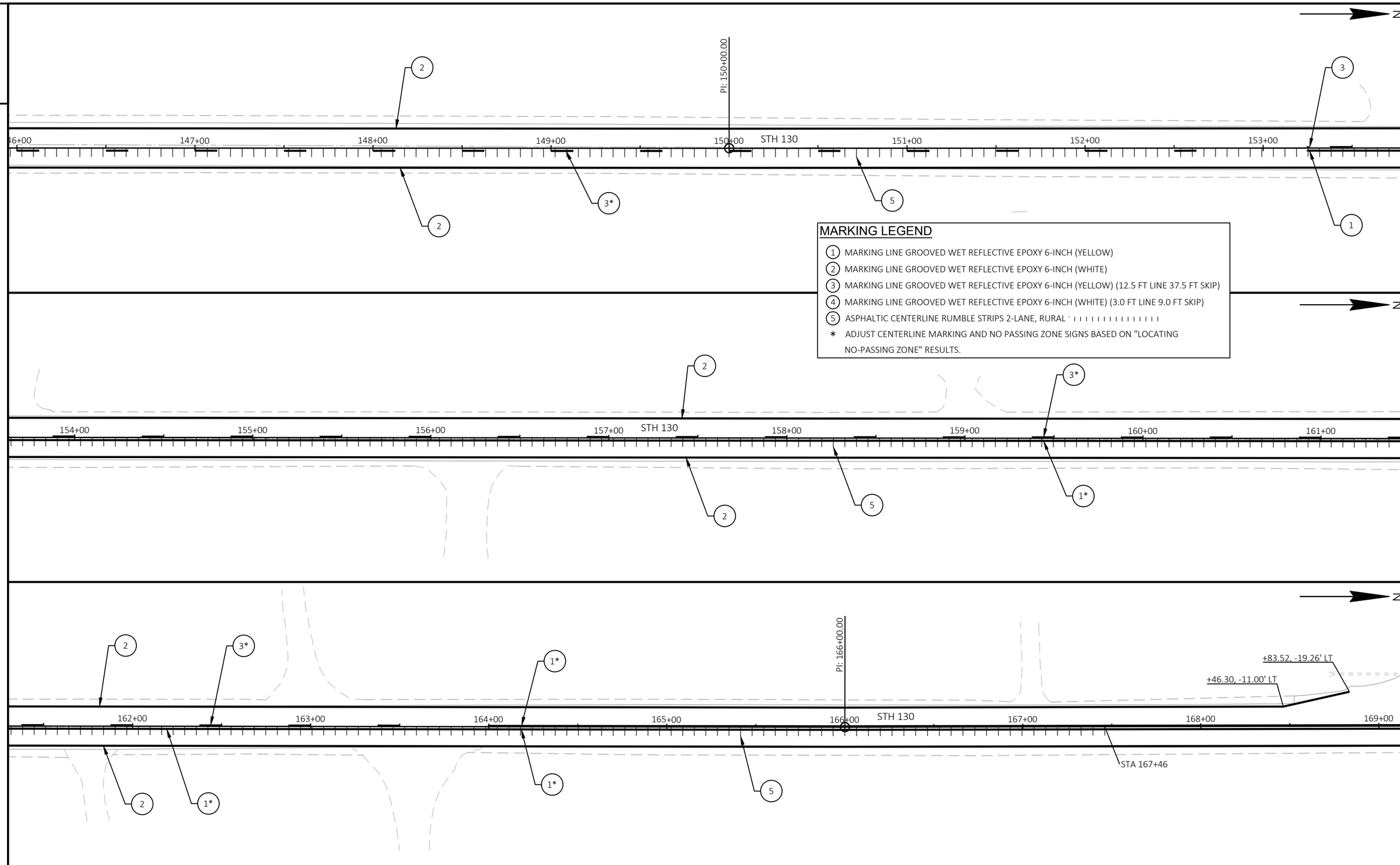

PROJECT NO: 5760-00-73	HWY: STH 130	COUNTY: RICHLAND	PAVEMENT MARKING	SHEET 13	E

FILE NAME : \\WAE-DATA\GENERAL\00-PROJECT FILES\2021\21168 ID 5760-00-03 STH 130, RICHLAND COUNTY\0-CAD\SHEETSPLAN\024501_PM.DWG
LAYOUT NAME - 024503_pm
PLOT DATE : 6/18/2025 11:06 AM PLOT BY : ERIK MEYER PLOT NAME : PLOT SCALE : 1 IN:50 FT
WISDOT/CADDS SHEET 42

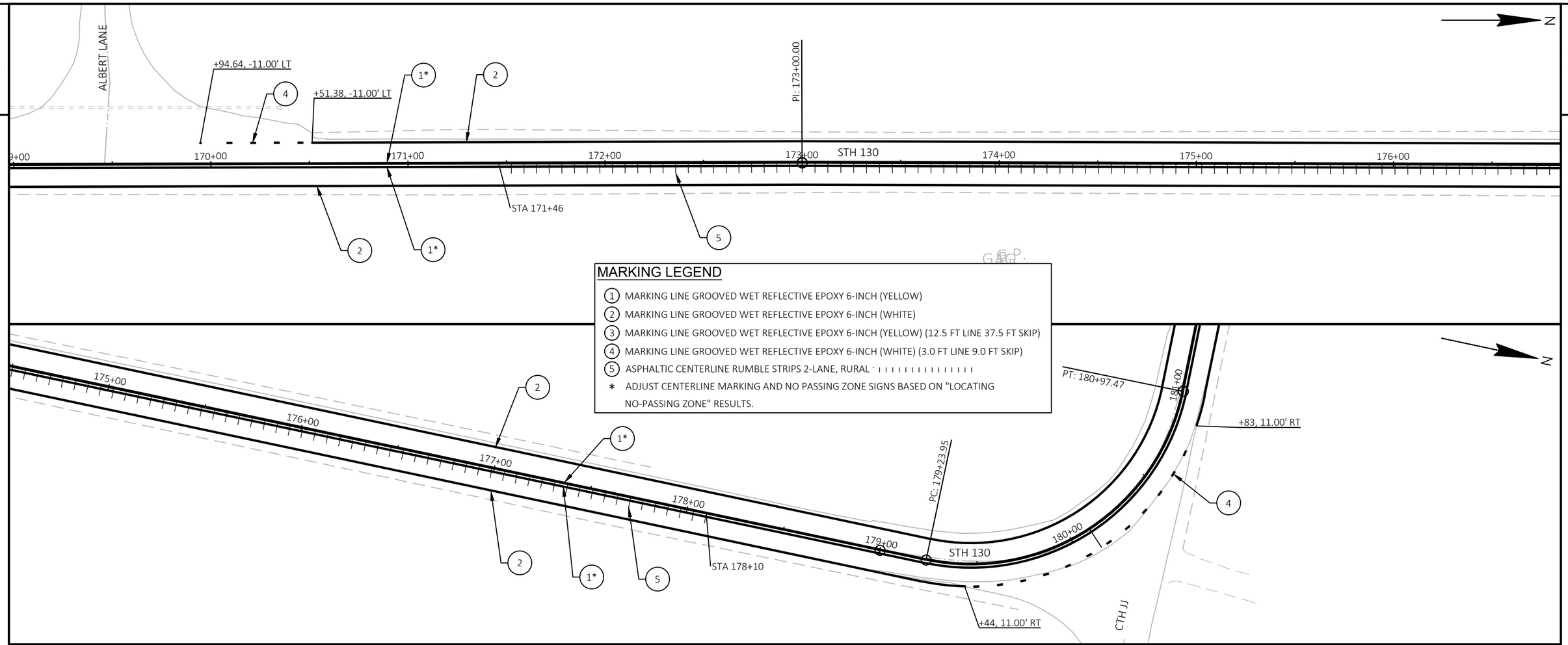

MARKING LEGEND

1. MARKING LINE GROOVED WET REFLECTIVE EPOXY 6-INCH (YELLOW)
2. MARKING LINE GROOVED WET REFLECTIVE EPOXY 6-INCH (WHITE)
3. MARKING LINE GROOVED WET REFLECTIVE EPOXY 6-INCH (YELLOW) (12.5 FT LINE 37.5 FT SKIP)
4. MARKING LINE GROOVED WET REFLECTIVE EPOXY 6-INCH (WHITE) (3.0 FT LINE 9.0 FT SKIP)
5. ASPHALTIC CENTERLINE RUMBLE STRIPS 2-LANE, RURAL

* ADJUST CENTERLINE MARKING AND NO PASSING ZONE SIGNS BASED ON "LOCATING NO-PASSING ZONE" RESULTS.

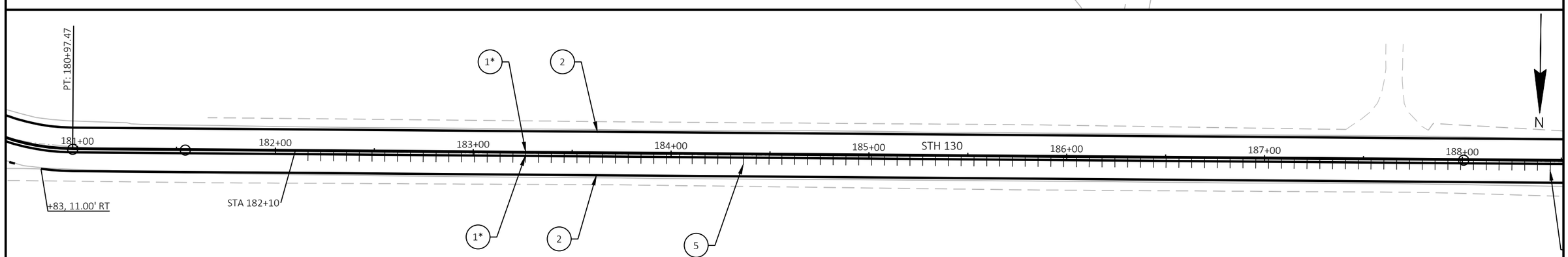

PROJECT NO: 5760-00-73	HWY: STH 130	COUNTY: RICHLAND	PAVEMENT MARKING	SHEET 14	E

FILE NAME : \\WAE-DATA\GENERAL\00-PROJECT FILES\2021\21168 ID 5760-00-03 STH 130, RICHLAND COUNTY\0-CAD\SHEETSPLAN\024501_PM.DWG
LAYOUT NAME - 024504_pm
PLOT DATE : 6/18/2025 11:06 AM PLOT BY : ERIK MEYER PLOT NAME : PLOT SCALE : 1 IN:50 FT
WISDOT/CADDS SHEET 42

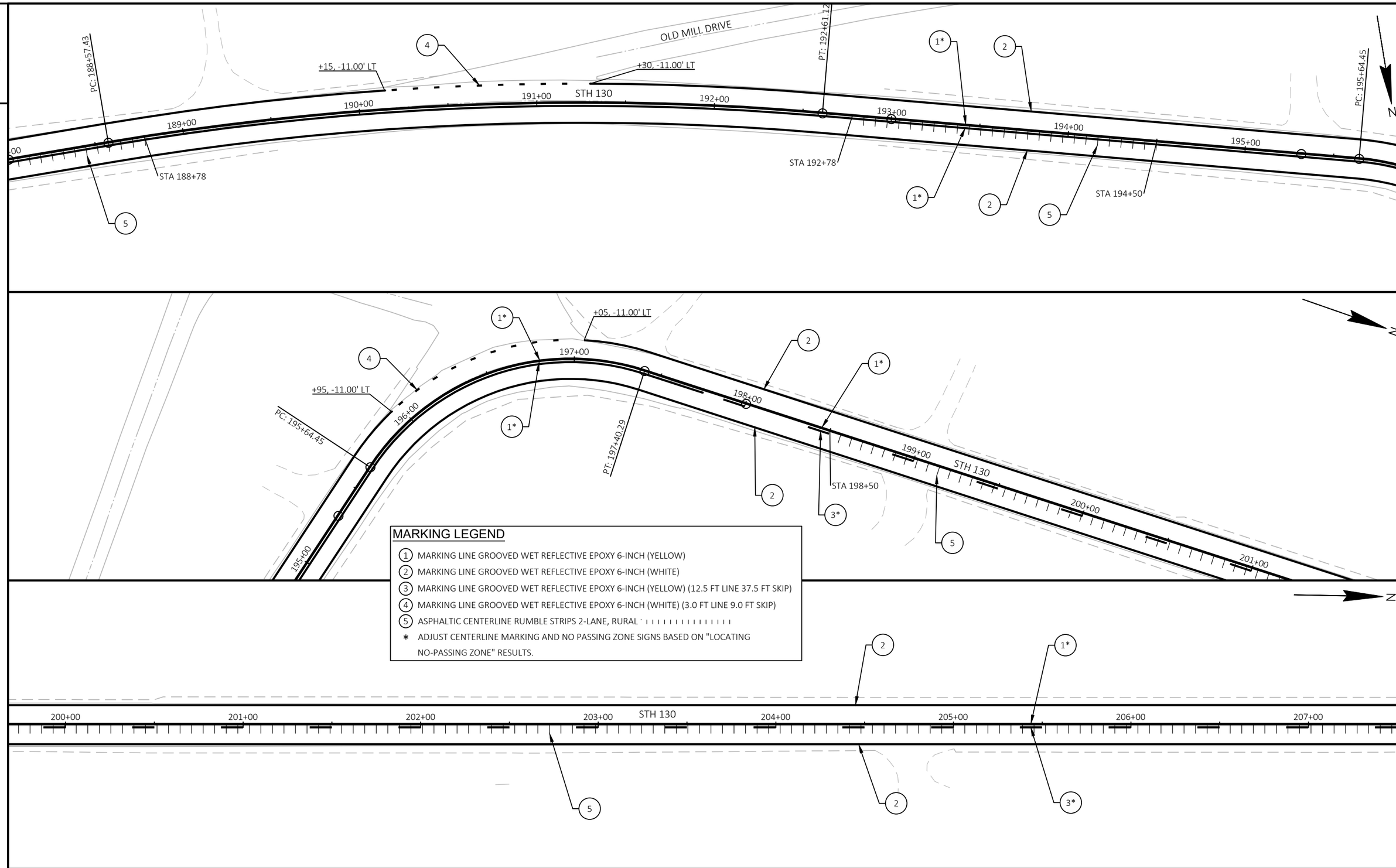

MARKING LEGEND

1. MARKING LINE GROOVED WET REFLECTIVE EPOXY 6-INCH (YELLOW)
2. MARKING LINE GROOVED WET REFLECTIVE EPOXY 6-INCH (WHITE)
3. MARKING LINE GROOVED WET REFLECTIVE EPOXY 6-INCH (YELLOW) (12.5 FT LINE 37.5 FT SKIP)
4. MARKING LINE GROOVED WET REFLECTIVE EPOXY 6-INCH (WHITE) (3.0 FT LINE 9.0 FT SKIP)
5. ASPHALTIC CENTERLINE RUMBLE STRIPS 2-LANE, RURAL

* ADJUST CENTERLINE MARKING AND NO PASSING ZONE SIGNS BASED ON "LOCATING NO-PASSING ZONE" RESULTS.

PROJECT NO: 5760-00-73	HWY: STH 130	COUNTY: RICHLAND	PAVEMENT MARKING	SHEET 15	E

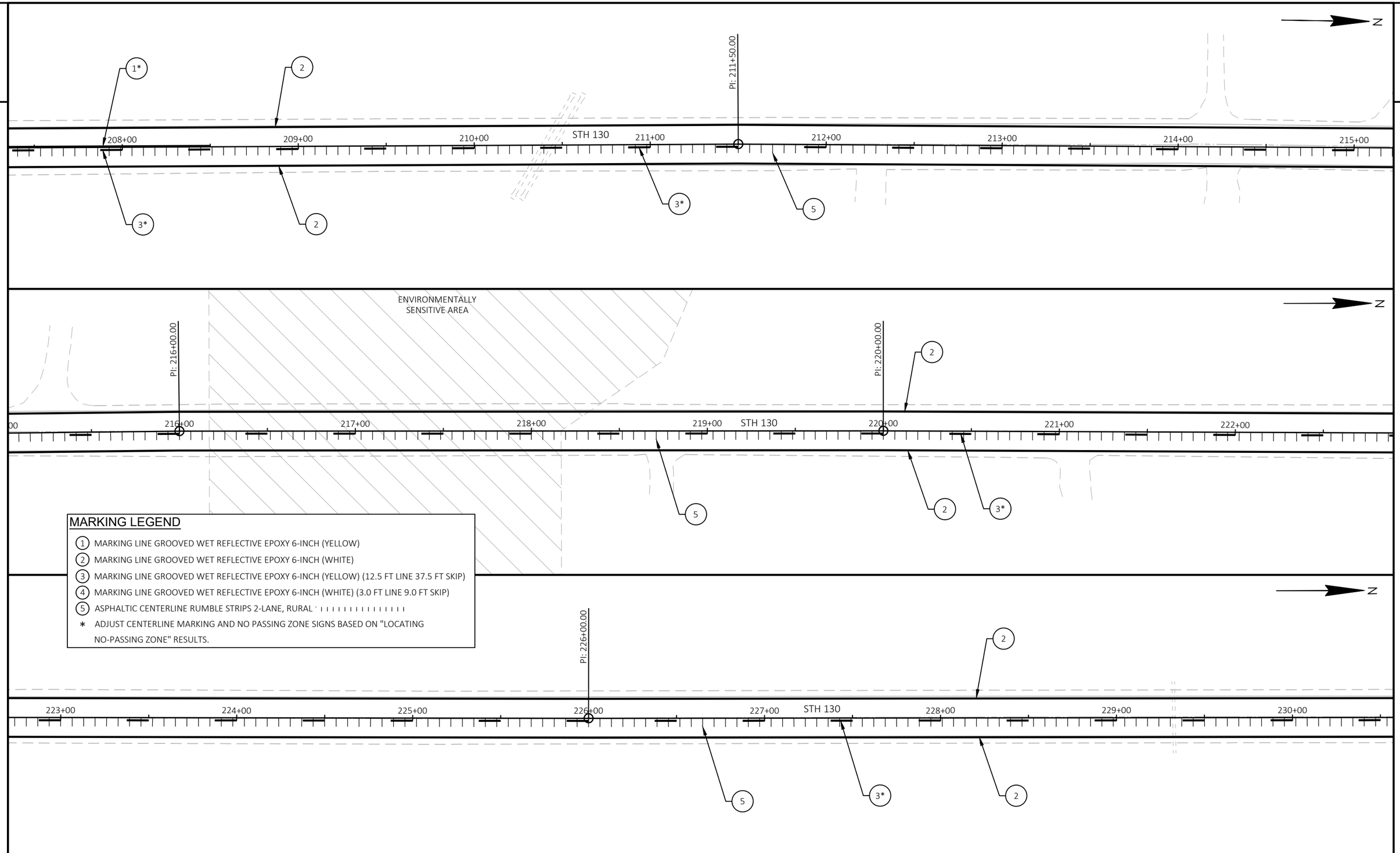

MARKING LEGEND

1. MARKING LINE GROOVED WET REFLECTIVE EPOXY 6-INCH (YELLOW)
2. MARKING LINE GROOVED WET REFLECTIVE EPOXY 6-INCH (WHITE)
3. MARKING LINE GROOVED WET REFLECTIVE EPOXY 6-INCH (YELLOW) (12.5 FT LINE 37.5 FT SKIP)
4. MARKING LINE GROOVED WET REFLECTIVE EPOXY 6-INCH (WHITE) (3.0 FT LINE 9.0 FT SKIP)
5. ASPHALTIC CENTERLINE RUMBLE STRIPS 2-LANE, RURAL

* ADJUST CENTERLINE MARKING AND NO PASSING ZONE SIGNS BASED ON "LOCATING NO-PASSING ZONE" RESULTS.

PROJECT NO: 5760-00-73	HWY: STH 130	COUNTY: RICHLAND	PAVEMENT MARKING	SHEET 16	E

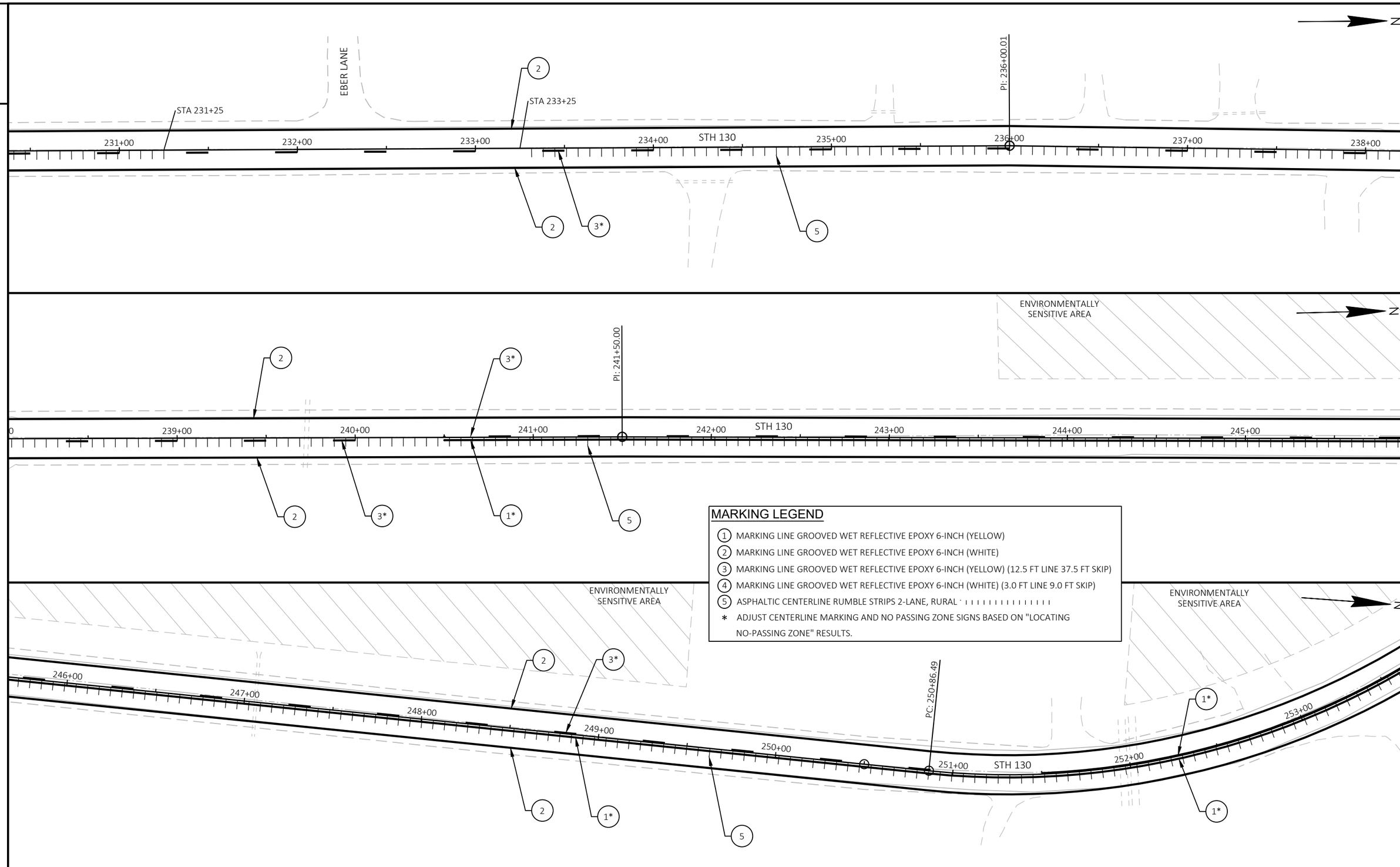

MARKING LEGEND

1. MARKING LINE GROOVED WET REFLECTIVE EPOXY 6-INCH (YELLOW)
2. MARKING LINE GROOVED WET REFLECTIVE EPOXY 6-INCH (WHITE)
3. MARKING LINE GROOVED WET REFLECTIVE EPOXY 6-INCH (YELLOW) (12.5 FT LINE 37.5 FT SKIP)
4. MARKING LINE GROOVED WET REFLECTIVE EPOXY 6-INCH (WHITE) (3.0 FT LINE 9.0 FT SKIP)
5. ASPHALTIC CENTERLINE RUMBLE STRIPS 2-LANE, RURAL

* ADJUST CENTERLINE MARKING AND NO PASSING ZONE SIGNS BASED ON "LOCATING NO-PASSING ZONE" RESULTS.

PROJECT NO: 5760-00-73	HWY: STH 130	COUNTY: RICHLAND	PAVEMENT MARKING	SHEET 17	E

MARKING LEGEND

1. MARKING LINE GROOVED WET REFLECTIVE EPOXY 6-INCH (YELLOW)
2. MARKING LINE GROOVED WET REFLECTIVE EPOXY 6-INCH (WHITE)
3. MARKING LINE GROOVED WET REFLECTIVE EPOXY 6-INCH (YELLOW) (12.5 FT LINE 37.5 FT SKIP)
4. MARKING LINE GROOVED WET REFLECTIVE EPOXY 6-INCH (WHITE) (3.0 FT LINE 9.0 FT SKIP)
5. ASPHALTIC CENTERLINE RUMBLE STRIPS 2-LANE, RURAL

* ADJUST CENTERLINE MARKING AND NO PASSING ZONE SIGNS BASED ON "LOCATING NO-PASSING ZONE" RESULTS.

PROJECT NO: 5760-00-73	HWY: STH 130	COUNTY: RICHLAND	PAVEMENT MARKING	SHEET 18	E

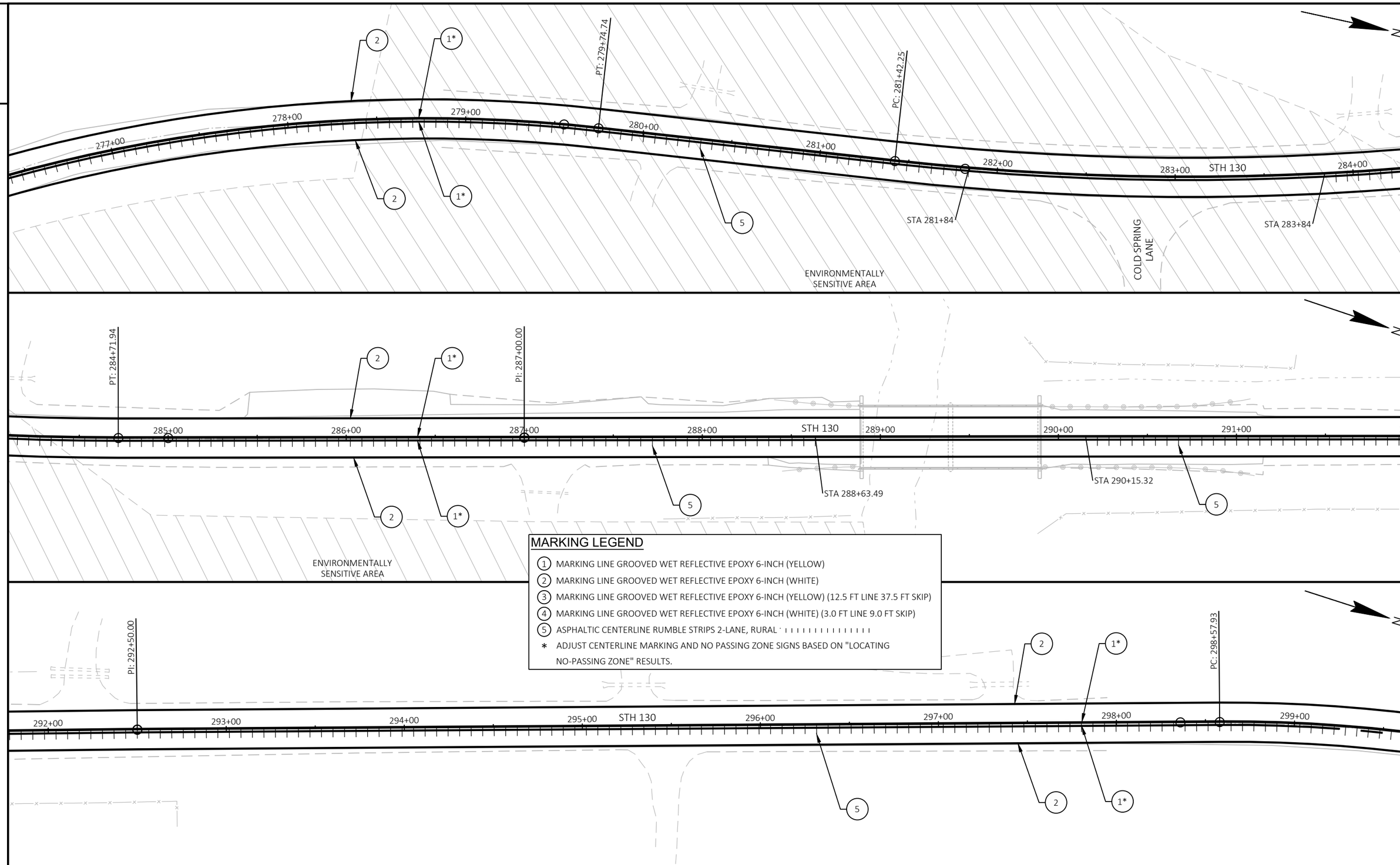

MARKING LEGEND

1. MARKING LINE GROOVED WET REFLECTIVE EPOXY 6-INCH (YELLOW)
2. MARKING LINE GROOVED WET REFLECTIVE EPOXY 6-INCH (WHITE)
3. MARKING LINE GROOVED WET REFLECTIVE EPOXY 6-INCH (YELLOW) (12.5 FT LINE 37.5 FT SKIP)
4. MARKING LINE GROOVED WET REFLECTIVE EPOXY 6-INCH (WHITE) (3.0 FT LINE 9.0 FT SKIP)
5. ASPHALTIC CENTERLINE RUMBLE STRIPS 2-LANE, RURAL

* ADJUST CENTERLINE MARKING AND NO PASSING ZONE SIGNS BASED ON "LOCATING NO-PASSING ZONE" RESULTS.

PROJECT NO: 5760-00-73	HWY: STH 130	COUNTY: RICHLAND	PAVEMENT MARKING	SHEET 19	E

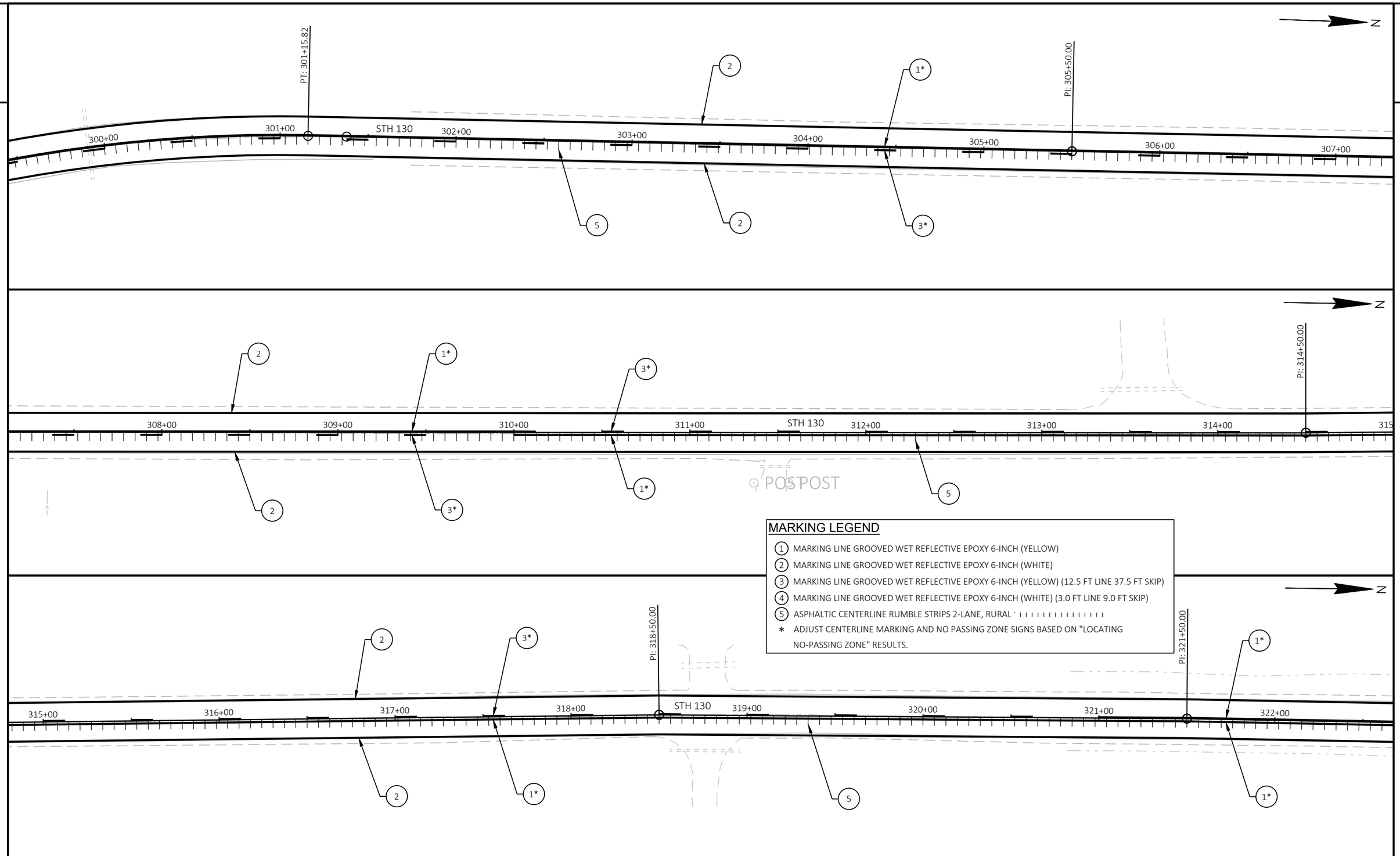

MARKING LEGEND

1. MARKING LINE GROOVED WET REFLECTIVE EPOXY 6-INCH (YELLOW)
2. MARKING LINE GROOVED WET REFLECTIVE EPOXY 6-INCH (WHITE)
3. MARKING LINE GROOVED WET REFLECTIVE EPOXY 6-INCH (YELLOW) (12.5 FT LINE 37.5 FT SKIP)
4. MARKING LINE GROOVED WET REFLECTIVE EPOXY 6-INCH (WHITE) (3.0 FT LINE 9.0 FT SKIP)
5. ASPHALTIC CENTERLINE RUMBLE STRIPS 2-LANE, RURAL

* ADJUST CENTERLINE MARKING AND NO PASSING ZONE SIGNS BASED ON "LOCATING NO-PASSING ZONE" RESULTS.

PROJECT NO: 5760-00-73	HWY: STH 130	COUNTY: RICHLAND	PAVEMENT MARKING	SHEET 20	E

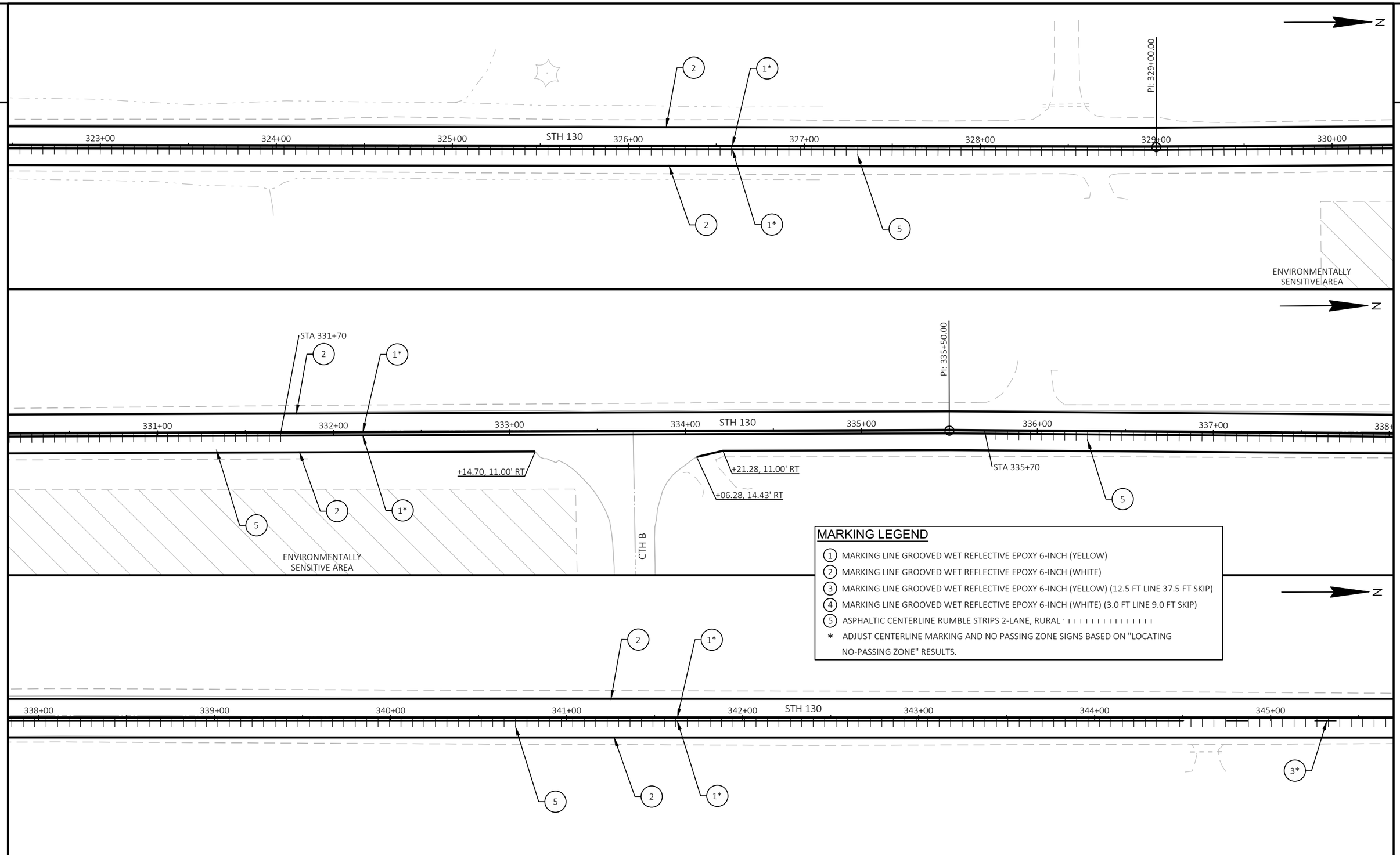

MARKING LEGEND

1. MARKING LINE GROOVED WET REFLECTIVE EPOXY 6-INCH (YELLOW)
2. MARKING LINE GROOVED WET REFLECTIVE EPOXY 6-INCH (WHITE)
3. MARKING LINE GROOVED WET REFLECTIVE EPOXY 6-INCH (YELLOW) (12.5 FT LINE 37.5 FT SKIP)
4. MARKING LINE GROOVED WET REFLECTIVE EPOXY 6-INCH (WHITE) (3.0 FT LINE 9.0 FT SKIP)
5. ASPHALTIC CENTERLINE RUMBLE STRIPS 2-LANE, RURAL

* ADJUST CENTERLINE MARKING AND NO PASSING ZONE SIGNS BASED ON "LOCATING NO-PASSING ZONE" RESULTS.

PROJECT NO: 5760-00-73	HWY: STH 130	COUNTY: RICHLAND	PAVEMENT MARKING	SHEET 21	E

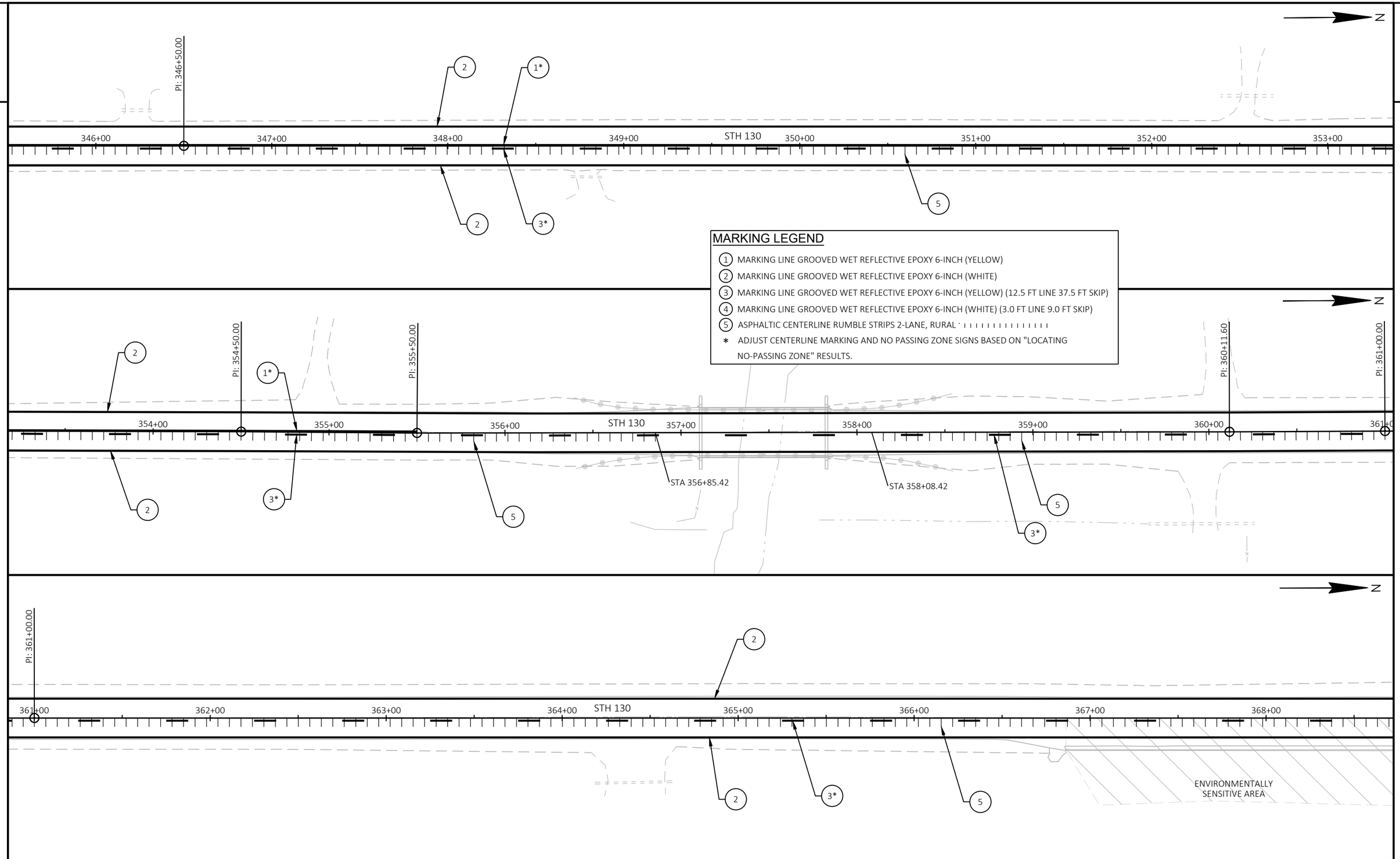

PROJECT NO: 5760-00-73	HWY: STH 130	COUNTY: RICHLAND	PAVEMENT MARKING	SHEET 22	E

FILE NAME : \\WAE-DATA\GENERAL\00-PROJECT FILES\2021\21168 ID 5760-00-03 STH 130, RICHLAND COUNTY\0-CAD\SHEETSPLAN\024501_PM.DWG
LAYOUT NAME - 0245012_pm
PLOT DATE : 6/18/2025 11:07 AM PLOT BY : ERIK MEYER PLOT NAME : PLOT SCALE : 1 IN:50 FT
WISDOT/CADDS SHEET 42

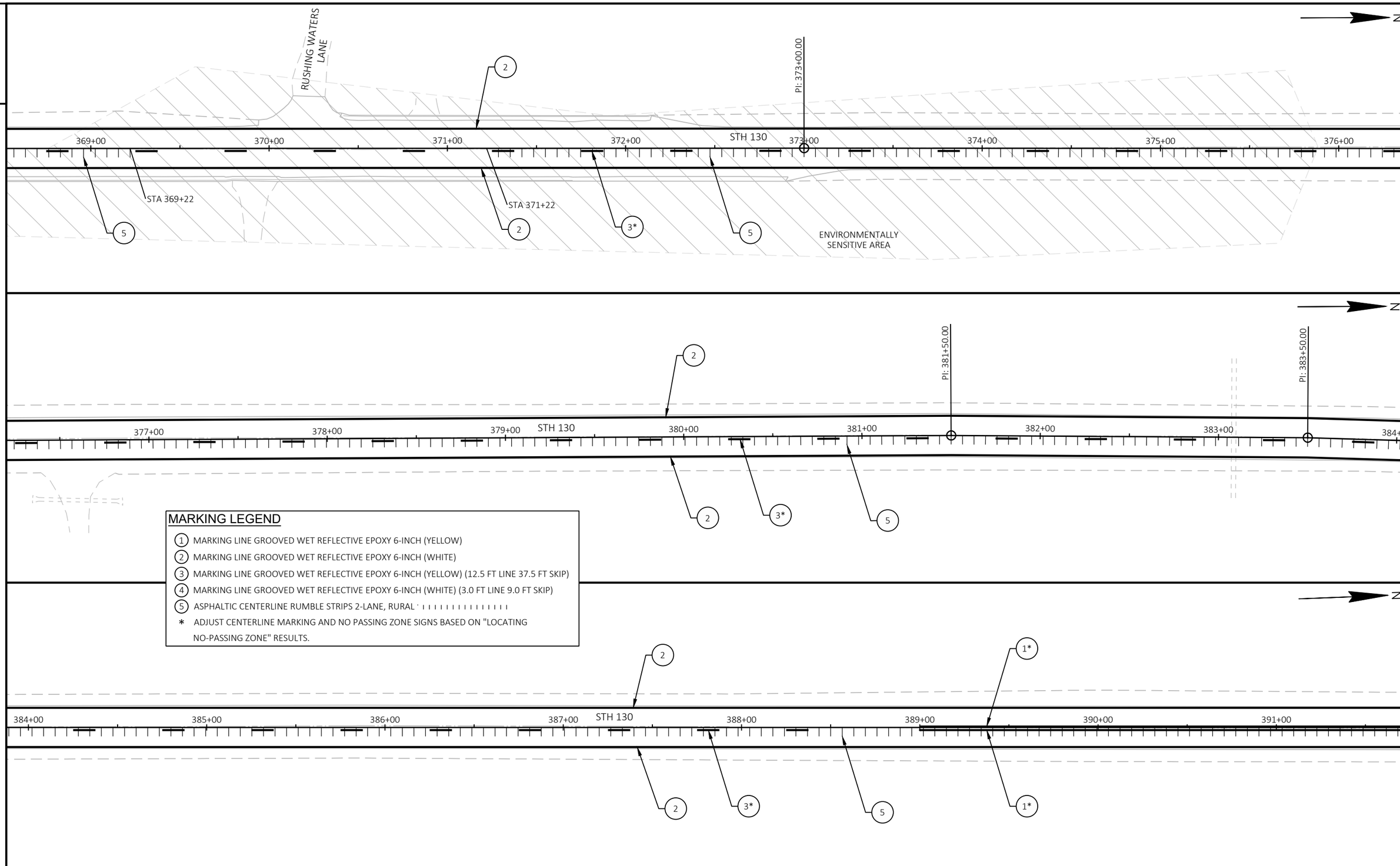

PROJECT NO: 5760-00-73	HWY: STH 130	COUNTY: RICHLAND	PAVEMENT MARKING	SHEET 23	E

FILE NAME : \\WAE-DATA\GENERAL\00-PROJECT FILES\2021\21168 ID 5760-00-03 STH 130, RICHLAND COUNTY\0-CAD\SHEETSPLAN\024501_PM.DWG
LAYOUT NAME - 0245013_pm
PLOT DATE : 6/18/2025 11:07 AM PLOT BY : ERIK MEYER PLOT NAME : PLOT SCALE : 1 IN:50 FT
WISDOT/CADDS SHEET 42

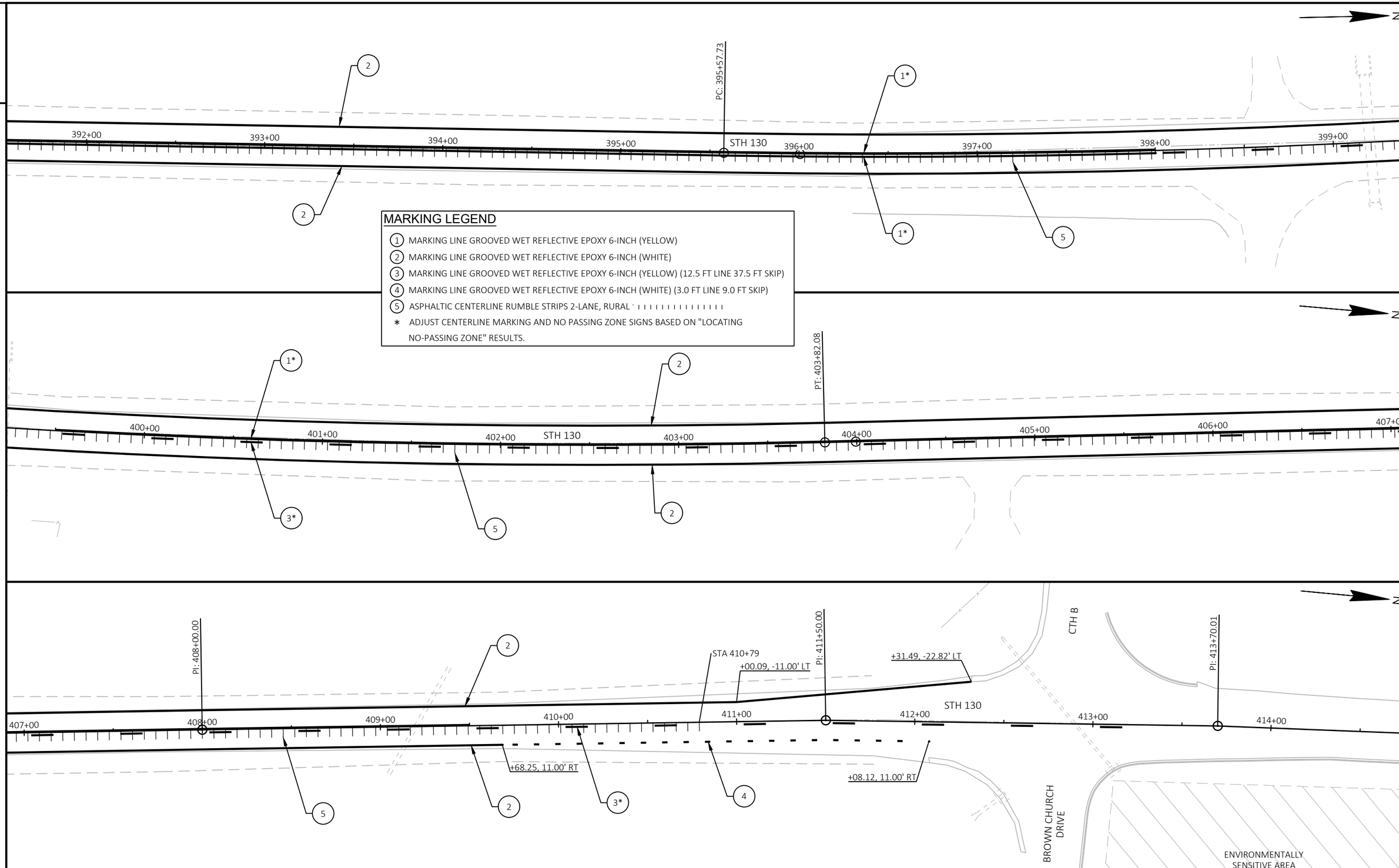

MARKING LEGEND

1. MARKING LINE GROOVED WET REFLECTIVE EPOXY 6-INCH (YELLOW)
2. MARKING LINE GROOVED WET REFLECTIVE EPOXY 6-INCH (WHITE)
3. MARKING LINE GROOVED WET REFLECTIVE EPOXY 6-INCH (YELLOW) (12.5 FT LINE 37.5 FT SKIP)
4. MARKING LINE GROOVED WET REFLECTIVE EPOXY 6-INCH (WHITE) (3.0 FT LINE 9.0 FT SKIP)
5. ASPHALTIC CENTERLINE RUMBLE STRIPS 2-LANE, RURAL

* ADJUST CENTERLINE MARKING AND NO PASSING ZONE SIGNS BASED ON "LOCATING NO-PASSING ZONE" RESULTS.

PROJECT NO: 5760-00-73	HWY: STH 130	COUNTY: RICHLAND	PAVEMENT MARKING	SHEET 24	E

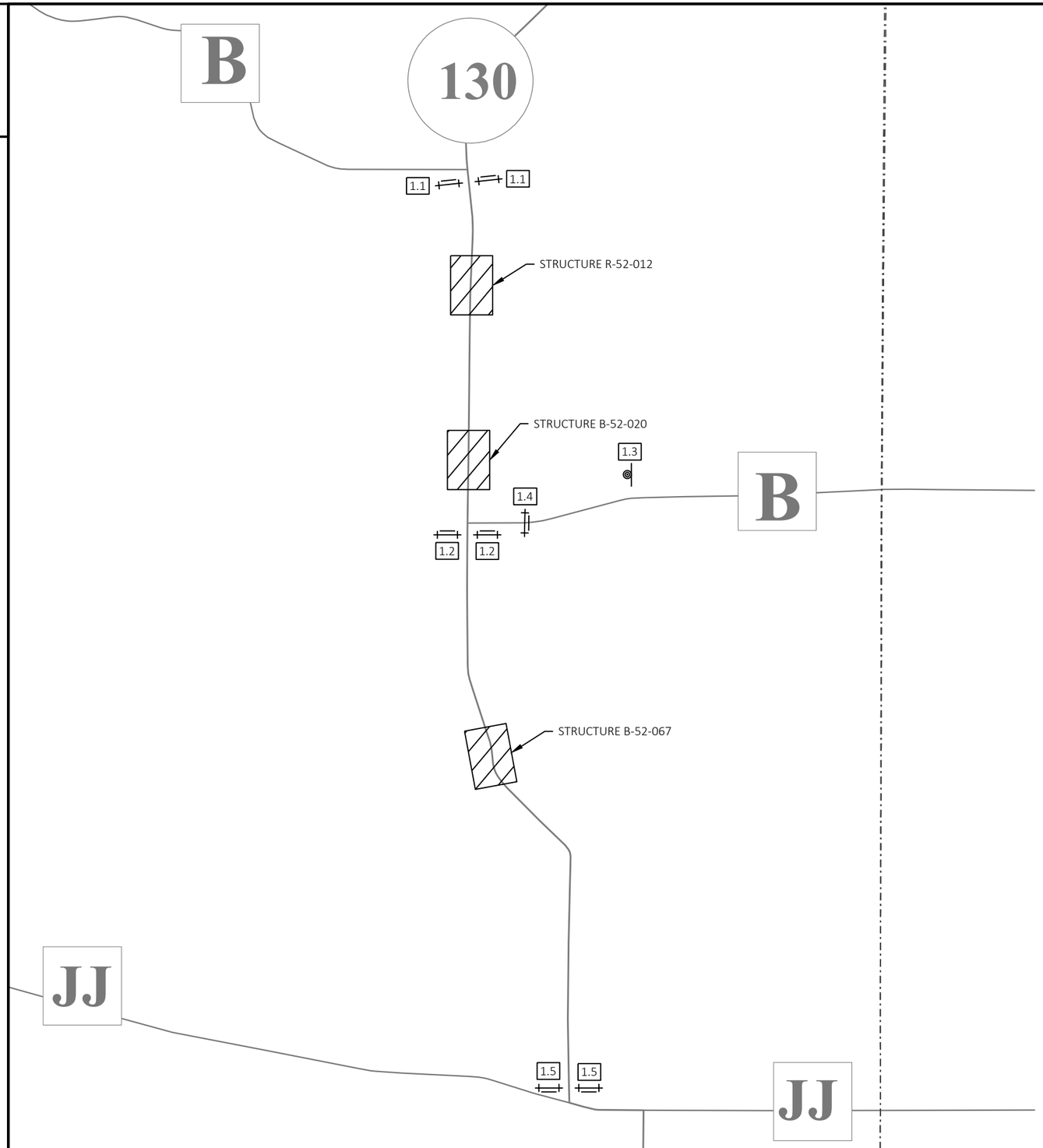

LEGEND

- WORK ZONE
- COUNTY LINE
- SIGN NUMBER
- PROPOSED SIGN ON TEMPORARY POST
- BARRICADE TYPE III WITH SIGN

NOTES

- SEE THE FOLLOWING STANDARD DETAIL DRAWINGS FOR ADDITIONAL INFORMATION NOT SHOWN ON TRAFFIC CONTROL SHEETS, INCLUDING SIGN CODES, SIGN SIZES AND SPACING REQUIREMENTS:
  - -- SDD 15C2-A "BARRICADES AND SIGNS FOR MAINLINE CLOSURES"
  - -- SDD 15C2-B "BARRICADES AND SIGNS FOR VARIOUS MAINLINE CLOSURES"
  - -- SDD 15D28 "TRAFFIC CONTROL, WORK ON SHOULDER OR PARKING LANE, UNDIVIDED ROADWAY"
- EXACT NUMBER, LOCATION AND SPACING OF SIGNS AND DEVICES MAY BE ADJUSTED TO FIT FIELD CONDITIONS AS DIRECTED BY THE ENGINEER.
- PRIOR TO ANY FULL OR PARTIAL CLOSURES THE DETOUR ROUTE MUST BE IN PLACE AS SHOWN IN THE 5760-00-72 PLAN.
- LIMIT FULL CLOSURES TO REHABILITATION WORK ON STRUCTURES B-52-067 AND B-52-020 ONLY. AFTER REHABILITATION WORK IS COMPLETED OPEN STH 130 TO THROUGH TRAFFIC.
- PERFORM BRIDGE REHABILITATION WORK ON STRUCTURES B-52-067 AND B-52-020 UNDER FULL CLOSURES IN ACCORDANCE WITH STANDARD DETAIL DRAWING "BARRICADES AND SIGNS FOR MAINLINE CLOSURES".
- DURING REHABILITATION WORK LIMIT FULL ROADWAY CLOSURES TO ONE LOCATION AT A TIME. EITHER STRUCTURE B-52-020 OR B-52-067 MUST REMAIN OPEN AT ALL TIMES. BOTH STRUCTURES MAY NOT BE CLOSED AT THE SAME TIME.
- PERFORM REHABILITATION WORK ON RETAINING WALL R-52-012 UNDER TRAFFIC UTILIZING FLAGGING OPERATIONS WITH STANDARD DETAIL DRAWING "TRAFFIC CONTROL FOR LANE CLOSURE WITH FLAGGING OPERATION" OR A SHOULDER CLOSURE WITH STANDARD DETAIL DRAWING "TRAFFIC CONTROL, WORK ON SHOULDER OR PARKING LANE, UNDIVIDED ROADWAY".

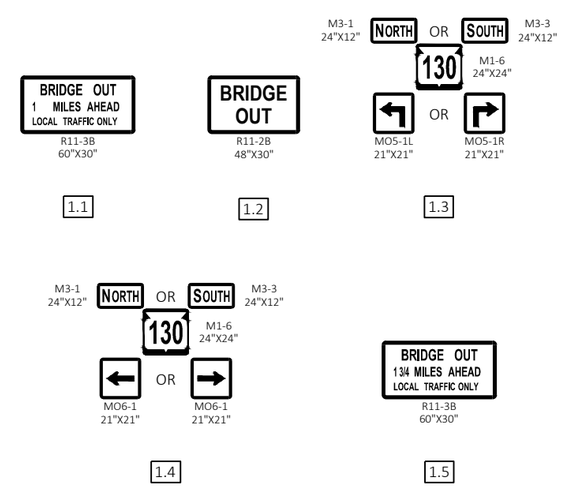

2

CP 1
MAG NAIL
STA. 109+44.97, 17.66' LT
Y = 393 786.219
X = 722 177.645

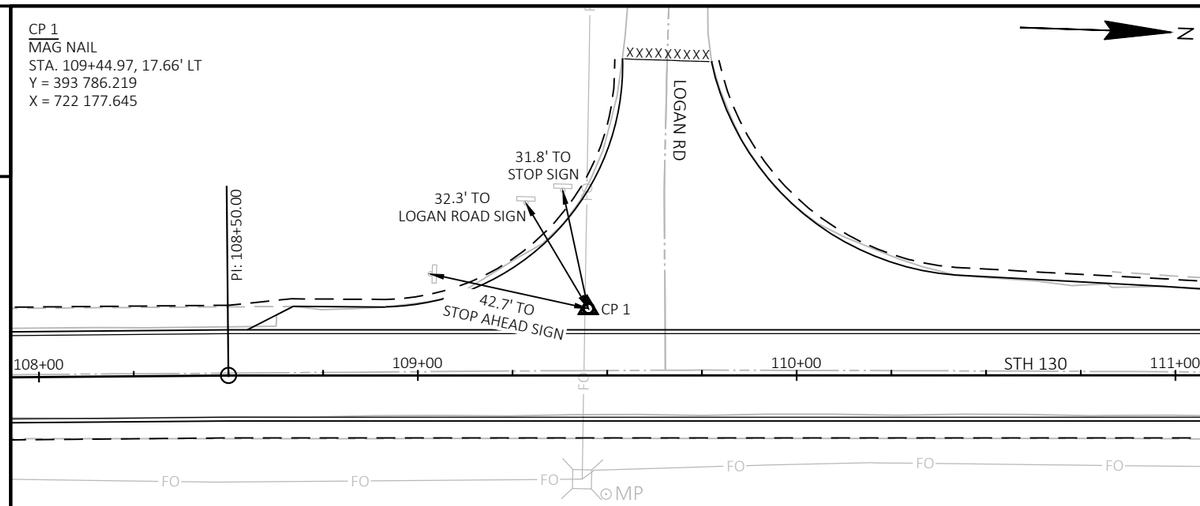

TIES TO CP 1

CP 2
3/4" REBAR
STA. 129+10.36, 20.40' RT
Y = 395 752.084
X = 722 205.468

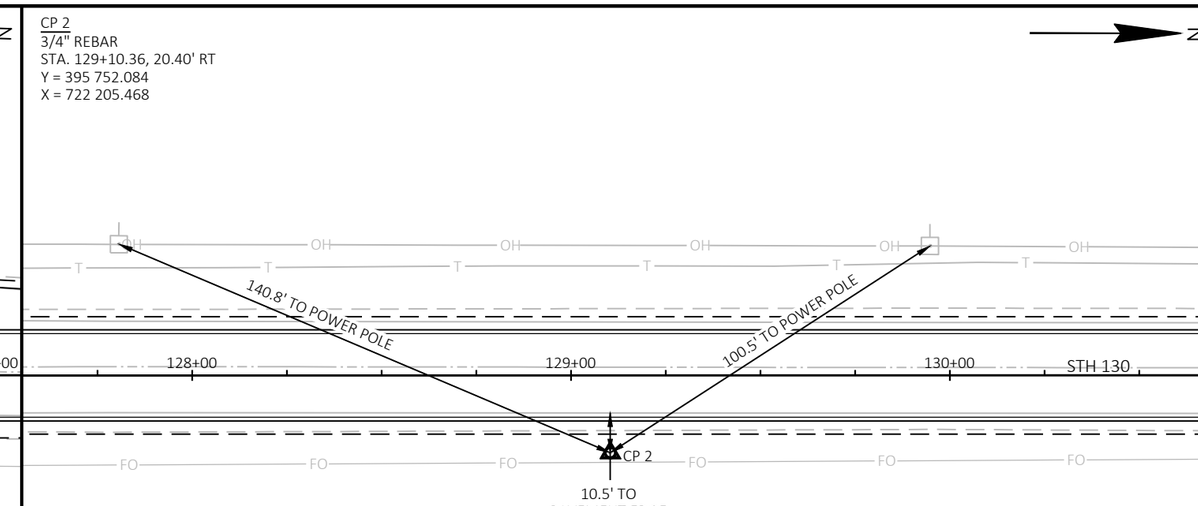

TIES TO CP 2

2

CP 3
3/4" REBAR
STA. 211+20.02, 27.14' LT
Y = 402 501.181
X = 720 458.447

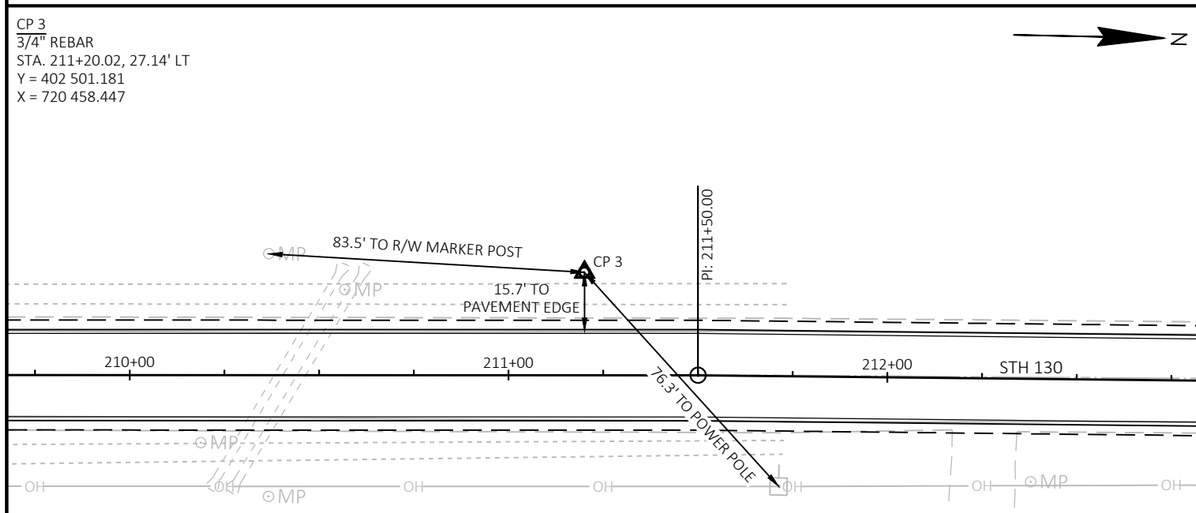

TIES TO CP 3

CP 4
3/4" REBAR
STA. 244+56.32, 31.36' RT
Y = 405 836.924
X = 720 538.159

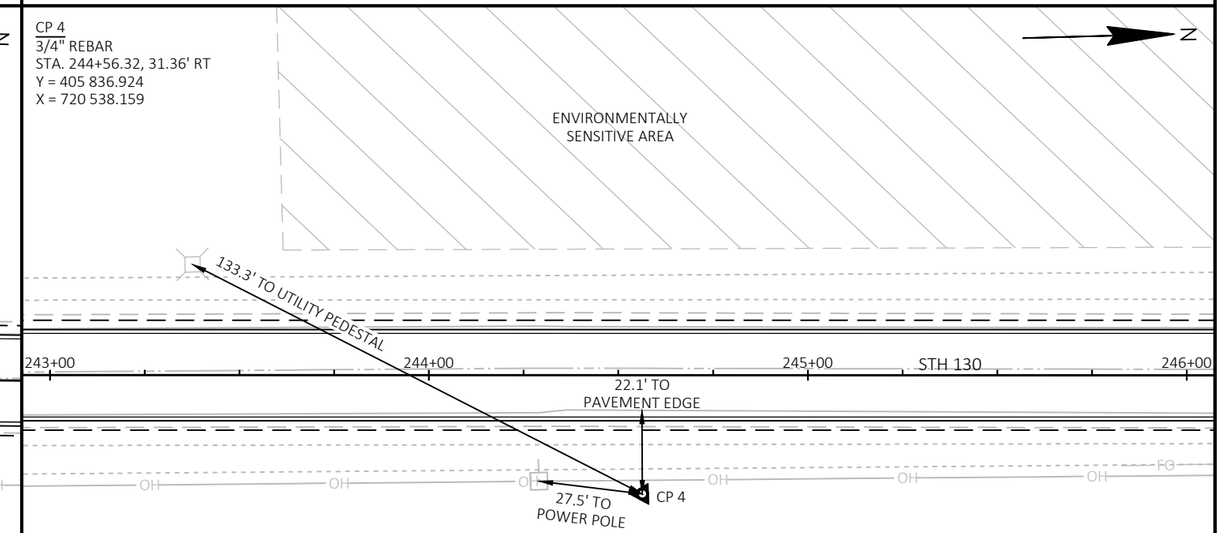

TIES TO CP 4

PROJECT NO: 5760-00-73	HWY: STH 130	COUNTY: RICHLAND	CONTROL POINT TIES	SHEET 26	E

2

CP 5
3/4" REBAR
STA. 286+80.21, 28.69' LT
Y = 409 353.792
X = 718 585.794

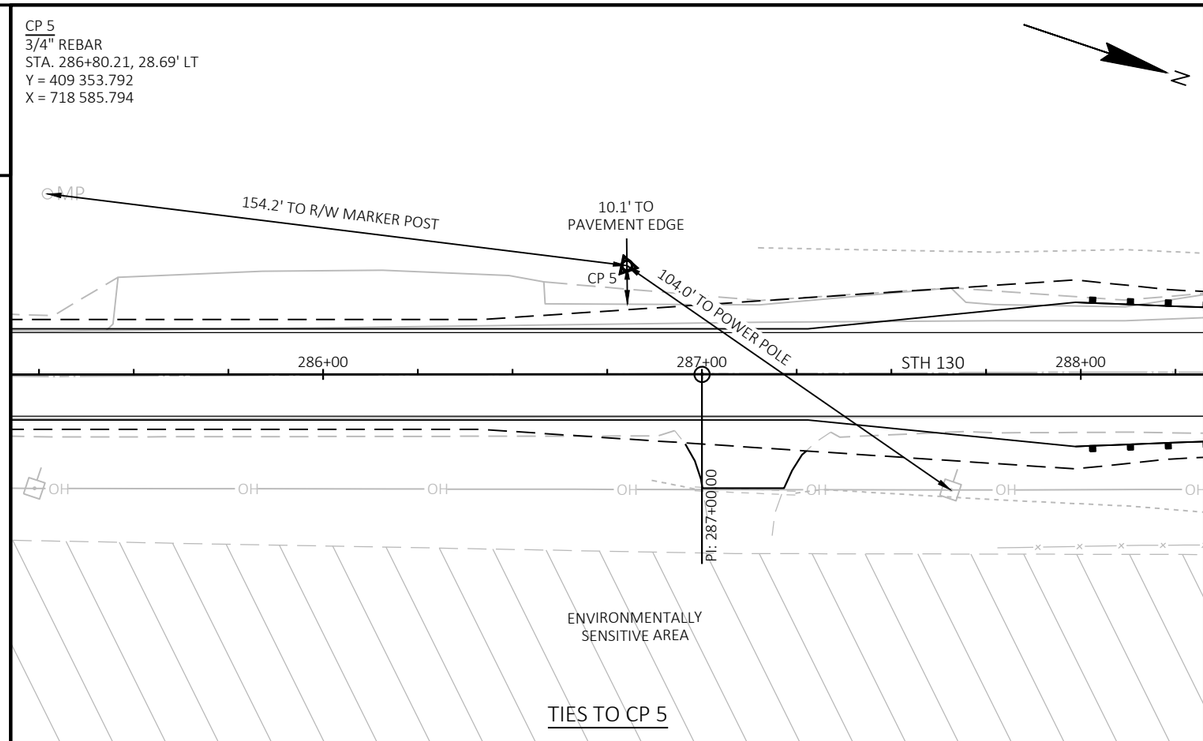

TIES TO CP 5

CP 6
3/4" REBAR
STA. 291+52.18, 30.61' RT
Y = 409 819.968
X = 718 491.190

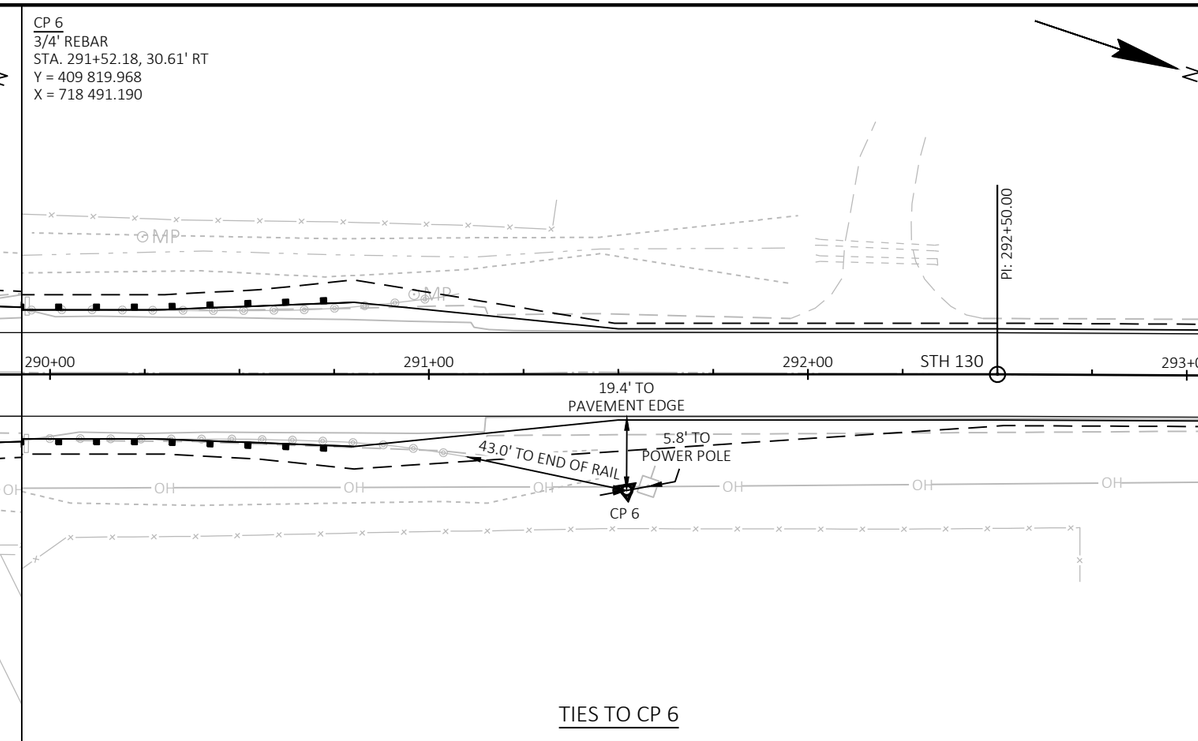

TIES TO CP 6

2

CP 7
3/4" REBAR
STA. 354+42.59, 18.36' RT
Y = 416 059.508
X = 718 207.294

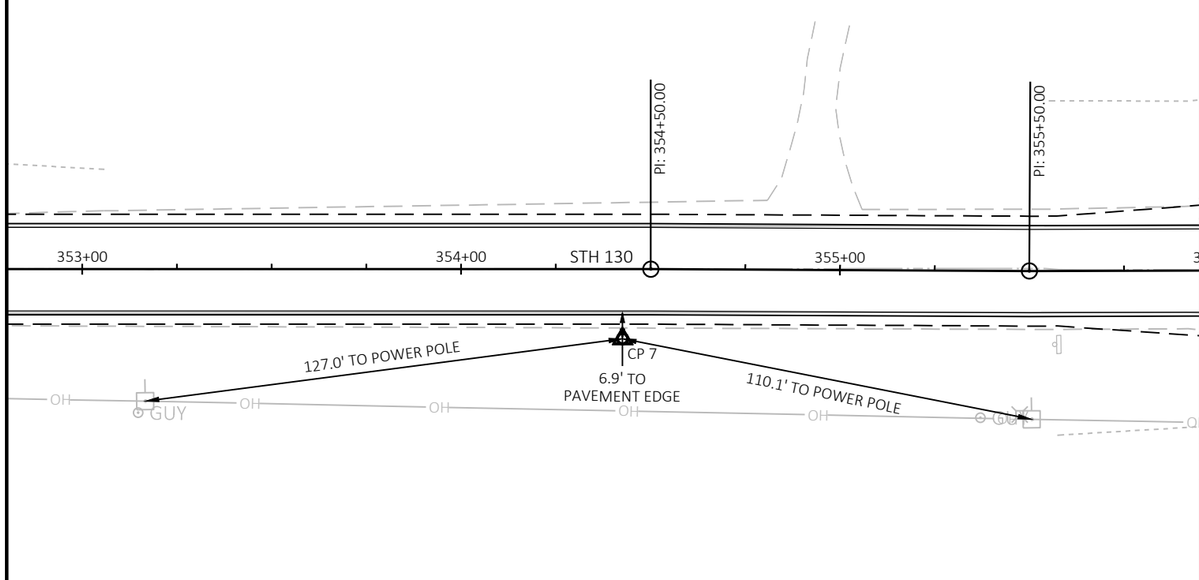

TIES TO CP 7

CP 8
3/4" REBAR
STA. 360+22.69, 23.16' LT
Y = 416 639.814
X = 718 169.712

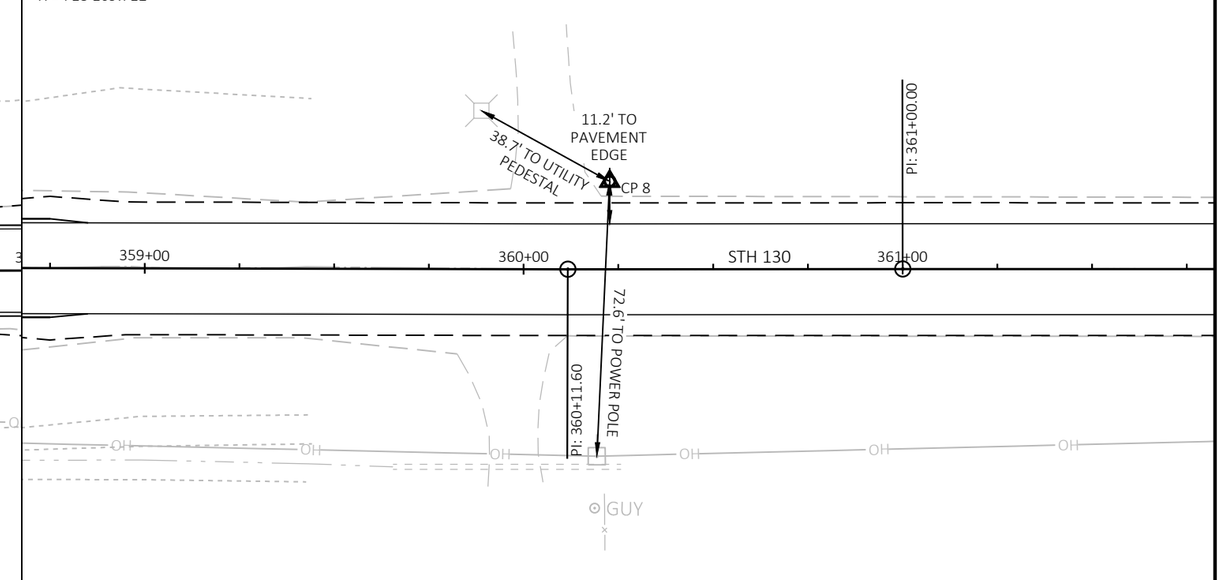

TIES TO CP 8

PROJECT NO: 5760-00-73	HWY: STH 130	COUNTY: RICHLAND	CONTROL POINT TIES	SHEET 27	E

2

CP 9
3/4" REBAR
STA. 388+93.97, 19.89' LT
Y = 419 511.370
X = 718 204.882

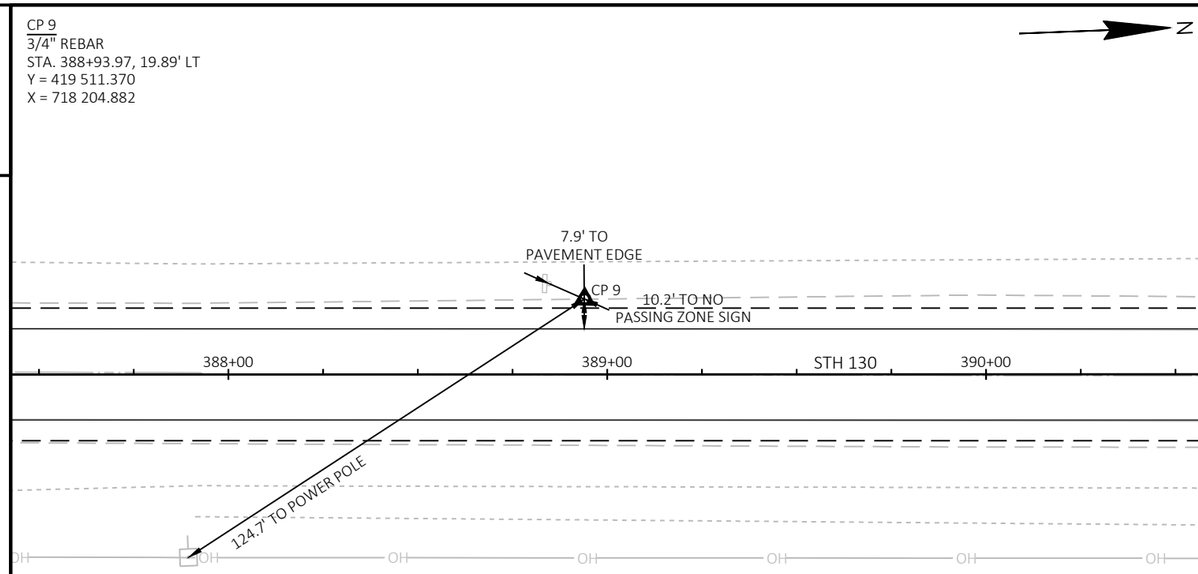

TIES TO CP 9

CP 10
3/4" REBAR
STA. 399+39.34, 21.54' RT
Y = 420 556.026
X = 718 273.938

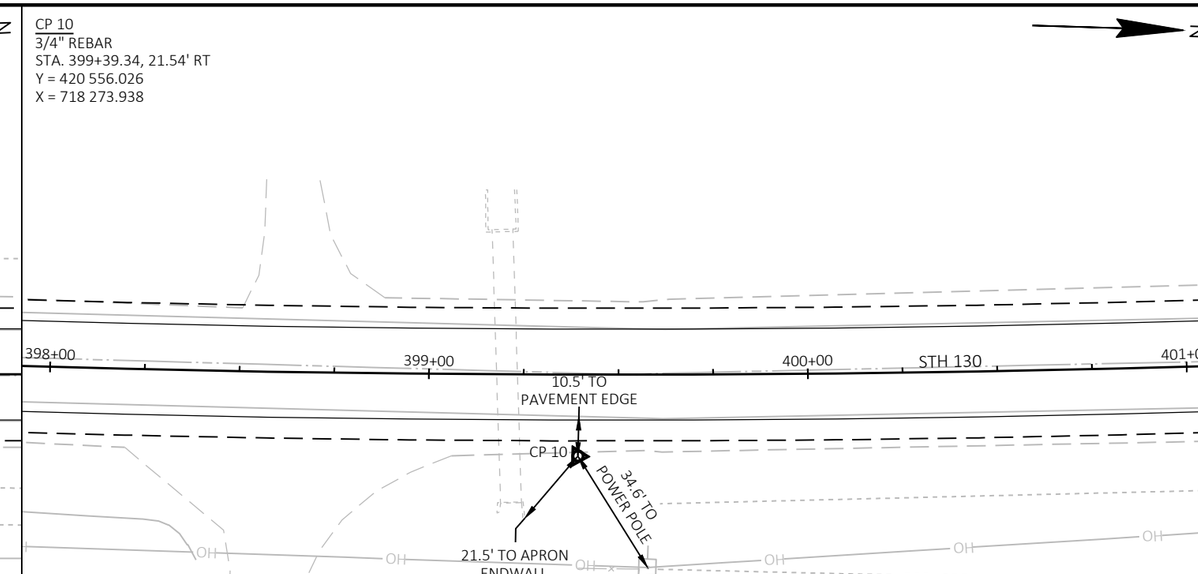

TIES TO CP 10

2

PROJECT NO: 5760-00-73	HWY: STH 130	COUNTY: RICHLAND	CONTROL POINT TIES	SHEET 28	E

5760-00-73

Line	Item	Item Description	Unit	Total	Qty
0004	203.0335	Debris Containment Over Waterway (structure) 02. B-52-67	EACH	1.000	1.000
0006	204.0110	Removing Asphaltic Surface	SY	240.000	240.000
0008	204.0115	Removing Asphaltic Surface Butt Joints	SY	3,130.000	3,130.000
0010	204.0120	Removing Asphaltic Surface Milling	SY	4,500.000	4,500.000
0016	204.0165	Removing Guardrail	LF	624.000	624.000
0018	204.0170	Removing Fence	LF	93.000	93.000
0032	213.0100	Finishing Roadway (project) 02. 5760-00-73	EACH	1.000	1.000
0034	305.0110	Base Aggregate Dense 3/4-Inch	TON	4,650.000	4,650.000
0036	305.0120	Base Aggregate Dense 1 1/4-Inch	TON	971.000	971.000
0038	330.0100	Mill and Relay	SY	101,200.000	101,200.000
0042	455.0605	Tack Coat	GAL	8,733.000	8,733.000
0044	460.0105.S	HMA Percent Within Limits (PWL) Test Strip Volumetrics	EACH	1.000	1.000
0046	460.0110.S	HMA Percent Within Limits (PWL) Test Strip Density	EACH	2.000	2.000
0048	460.2000	Incentive Density HMA Pavement	DOL	240.000	240.000
0050	460.2005	Incentive Density PWL HMA Pavement	DOL	16,220.000	16,220.000
0052	460.2007	Incentive Density HMA Pavement Longitudinal Joints	DOL	11,820.000	11,820.000
0054	460.2010	Incentive Air Voids HMA Pavement	DOL	16,220.000	16,220.000
0056	460.5224	HMA Pavement 4 LT 58-28 S	TON	17,172.000	17,172.000
0058	465.0120	Asphaltic Surface Driveways and Field Entrances	TON	39.000	39.000
0062	465.0560	Asphaltic Rumble Strips, Centerline	LF	27,606.000	27,606.000
0064	502.3200	Protective Surface Treatment	SY	431.000	431.000
0066	502.3215	Protective Surface Treatment Reseal	SY	30.000	30.000
0068	505.0400	Bar Steel Reinforcement HS Structures	LB	500.000	500.000
0070	509.0301	Preparation Decks Type 1	SY	116.000	116.000
0072	509.0302	Preparation Decks Type 2	SY	47.000	47.000
0074	509.0310.S	Sawing Pavement Deck Preparation Areas	LF	407.000	407.000
0076	509.0500	Cleaning Decks	SY	370.000	370.000
0078	509.1200	Curb Repair	LF	40.000	40.000
0080	509.1500	Concrete Surface Repair	SF	451.000	451.000
0082	509.2000	Full-Depth Deck Repair	SY	3.000	3.000
0084	509.2100.S	Concrete Masonry Deck Repair	CY	7.000	7.000
0086	509.2500	Concrete Masonry Overlay Decks	CY	24.000	24.000
0090	509.9010.S	Removing Asphaltic Concrete Deck Overlay (structure) 02. B-52-20	SY	207.000	207.000
0092	516.0600.S	Sheet Membrane Waterproofing for Asphalt Overlays	SY	207.000	207.000
0094	517.1801.S	Structure Repainting Recycled Abrasive (structure) 01. B-52-20	EACH	1.000	1.000
0100	517.4501.S	Negative Pressure Containment and Collection of Waste Materials (structure) 01. B-52-20	EACH	1.000	1.000
0102	517.6001.S	Portable Decontamination Facility	EACH	1.000	1.000
0104	520.1024	Apron Endwalls for Culvert Pipe 24-Inch	EACH	1.000	1.000
0106	520.3324	Culvert Pipe Class III-A 24-Inch	LF	140.000	140.000
0108	521.1524	Apron Endwalls for Culvert Pipe Sloped Side Drains Steel 24-Inch 6 to 1	EACH	1.000	1.000
0112	522.2414	Culvert Pipe Reinforced Concrete Horizontal Elliptical Class HE-IV 14x23-Inch	LF	31.000	31.000
0114	522.2614	Apron Endwalls for Culvert Pipe Reinforced Concrete Horizontal Elliptical 14x23-Inch	EACH	2.000	2.000
0122	606.0200	Riprap Medium	CY	7.000	7.000
0134	614.0010	Barrier System Grading Shaping Finishing	EACH	8.000	8.000
0140	614.2500	MGS Thrie Beam Transition	LF	315.200	315.200
0142	614.2610	MGS Guardrail Terminal EAT	EACH	8.000	8.000
0148	618.0100	Maintenance and Repair of Haul Roads (project) 02. 5760-00-73	EACH	1.000	1.000
0150	619.1000	Mobilization	EACH	0.500	0.500

5760-00-73

Line	Item	Item Description	Unit	Total	Qty
0152	624.0100	Water	MGAL	46.700	46.700
0156	628.1504	Silt Fence	LF	1,835.000	1,835.000
0158	628.1520	Silt Fence Maintenance	LF	2,932.000	2,932.000
0160	628.1905	Mobilizations Erosion Control	EACH	11.000	11.000
0162	628.1910	Mobilizations Emergency Erosion Control	EACH	3.000	3.000
0168	628.7555	Culvert Pipe Checks	EACH	15.000	15.000
0178	633.5200	Markers Culvert End	EACH	3.000	3.000
0180	634.0612	Posts Wood 4x6-Inch X 12-FT	EACH	11.000	11.000
0184	634.0616	Posts Wood 4x6-Inch X 16-FT	EACH	1.000	1.000
0190	638.2102	Moving Signs Type II	EACH	12.000	12.000
0196	642.5201	Field Office Type C	EACH	0.500	0.500
0198	643.0300	Traffic Control Drums	DAY	604.000	604.000
0200	643.0420	Traffic Control Barricades Type III	DAY	922.000	922.000
0202	643.0705	Traffic Control Warning Lights Type A	DAY	1,844.000	1,844.000
0204	643.0900	Traffic Control Signs	DAY	854.000	854.000
0210	643.3165	Temporary Marking Line Paint 6-Inch	LF	72,403.000	72,403.000
0212	643.5000	Traffic Control	EACH	0.500	0.500
0214	645.0130	Geotextile Type R	SY	14.000	14.000
0216	646.2040	Marking Line Grooved Wet Ref Epoxy 6-Inch	LF	106,089.000	106,089.000
0218	646.4720	Marking Line Same Day Epoxy 6-Inch	LF	45,065.000	45,065.000
0220	646.6120	Marking Stop Line Epoxy 18-Inch	LF	21.000	21.000
0222	648.0100	Locating No-Passing Zones	MI	5.920	5.920
0232	650.6000	Construction Staking Pipe Culverts	EACH	2.000	2.000
0234	650.8000	Construction Staking Resurfacing Reference	LF	31,277.000	31,277.000
0240	650.9911	Construction Staking Supplemental Control (project) 02. 5760-00-73	EACH	1.000	1.000
0244	680.0100	Public Land Reference Monument Verify and Reset	EACH	3.000	3.000
0246	690.0150	Sawing Asphalt	LF	114.000	114.000
0250	740.0440	Incentive IRI Ride	DOL	23,696.000	23,696.000
0254	999.2000.S	Installing and Maintaining Bird Deterrent System (station) 02. 289+40	EACH	1.000	1.000
0256	999.2000.S	Installing and Maintaining Bird Deterrent System (station) 03. 357+47	EACH	1.000	1.000
0264	SPV.0090	Special 02. Removing and Replacing Modular Block Retaining Wall Cap Blocks	LF	216.000	216.000
0266	SPV.0090	Special 03. Remove and Re-install W-Rail and Timber Rail Post B-52-20	LF	146.000	146.000
0268	SPV.0090	Special 04. Flashing Stainless Steel	LF	198.000	198.000

3

DRIVEWAYS AND FIELD ENTRANCES

STATION	LOCATION	* 204.0110 REMOVING ASPHALTIC SURFACE SY	* 305.0120 BASE AGGREGATE DENSE 1 1/4-INCH TON	465.0120 ASPHALTIC SURFACE DRIVEWAYS AND FIELD ENTRANCES TON	REMARKS
101+20	STH 130, LT	---	9	---	AGG, FE
102+81	STH 130, RT	---	20	---	AGG, PE
120+23	STH 130, LT	---	20	---	AGG, FE
120+24	STH 130, RT	---	18	---	AGG, FE
125+43	STH 130, RT	---	16	---	AGG, FE
125+79	STH 130, LT	---	17	---	AGG, FE
134+54	STH 130, LT	---	19	---	AGG, FE
143+85	STH 130, RT	---	11	---	AGG, PE
144+15	STH 130, LT	---	5	---	AGG, PE
153+67	STH 130, LT	---	8	---	AGG, FE
156+18	STH 130, RT	---	14	---	AGG, FE
158+98	STH 130, LT	---	10	---	AGG, FE
161+79	STH 130, RT	35	12	6	ASPH, PE
162+89	STH 130, LT	---	14	---	AGG, FE
163+57	STH 130, RT	81	27	14	ASPH, PE
167+02	STH 130, LT	---	5	---	AGG, PE
180+41	STH 130, RT	---	6	---	AGG, FE
187+63	STH 130, LT	---	11	---	AGG, PE
189+22	STH 130, LT	---	14	---	AGG, PE
195+27	STH 130, LT	---	10	---	AGG, PE
197+55	STH 130, LT	---	7	---	AGG, PE
198+99	STH 130, RT	---	10	---	AGG, FE
199+10	STH 130, LT	---	6	---	AGG, PE
204+79	STH 130, RT	---	10	---	AGG, FE
212+23	STH 130, RT	---	7	---	AGG, FE
214+19	STH 130, LT	---	8	---	AGG, PE
214+24	STH 130, RT	---	7	---	AGG, FE
215+30	STH 130, LT	---	11	---	AGG, PE
218+74	STH 130, RT	---	6	---	AGG, FE
221+08	STH 130, RT	---	7	---	AGG, FE
232+27	STH 130, LT	---	25	---	EBER LANE
234+24	STH 130, RT	---	11	---	AGG, FE
235+28	STH 130, LT	---	5	---	AGG, PE
236+46	STH 130, LT	---	7	---	AGG, PE
237+27	STH 130, LT	---	9	---	AGG, FE
237+85	STH 130, RT	---	10	---	AGG, FE
251+22	STH 130, RT	---	6	---	AGG, FE
251+66	STH 130, LT	---	9	---	AGG, FE
252+80	STH 130, LT	---	11	---	AGG, FE
253+44	STH 130, RT	---	15	---	AGG, PE
	SUBTOTAL	116	453	20	

DRIVEWAYS AND FIELD ENTRANCES (CONT'D)

		204.0110 SY	305.0120 TON	465.0120 TON	REMARKS
254+43	STH 130, RT	---	9	---	AGG, PE
260+88	STH 130, LT	---	10	---	AGG, FE
261+21	STH 130, RT	---	15	---	AGG, FE
261+80	STH 130, RT	---	10	---	AGG, PE
263+71	STH 130, LT	---	9	---	AGG, PE
263+75	STH 130, RT	---	32	---	AGG, PE
265+84	STH 130, RT	---	11	---	AGG, PE
272+66	STH 130, LT	---	12	---	AGG, FE
273+41	STH 130, RT	---	4	---	AGG, FE
273+45	STH 130, LT	---	10	---	AGG, PE
274+94	STH 130, LT	---	9	---	AGG, PE
280+03	STH 130, RT	---	7	---	AGG, FE
280+32	STH 130, LT	---	7	---	AGG, PE
282+82	STH 130, RT	---	64	---	COLD SPRING LANE
284+07	STH 130, LT	---	13	---	AGG, FE
287+09	STH 130, RT	---	11	---	AGG, FE
292+17	STH 130, LT	---	14	---	AGG, PE
295+30	STH 130, LT	---	8	---	AGG, PE
295+45	STH 130, RT	---	11	---	AGG, PE
297+31	STH 130, LT	---	7	---	AGG, PE
311+44	STH 130, RT	---	5	---	AGG, FE
313+58	STH 130, LT	---	20	---	AGG, PE
318+75	STH 130, RT	---	11	---	AGG, PE
318+76	STH 130, LT	---	9	---	AGG, FE
328+48	STH 130, LT	---	11	---	AGG, PE
328+68	STH 130, RT	---	6	---	AGG, FE
334+18	STH 130, RT	---	6	---	AGG, FE
335+96	STH 130, LT	---	13	---	AGG, FE
344+64	STH 130, RT	---	6	---	AGG, FE
346+22	STH 130, LT	---	6	---	AGG, FE
348+79	STH 130, RT	---	5	---	AGG, FE
352+54	STH 130, LT	---	6	---	AGG, PE
354+92	STH 130, LT	---	9	---	AGG, FE
359+96	STH 130, RT	---	10	---	AGG, FE
360+04	STH 130, LT	---	9	---	AGG, FE
364+37	STH 130, RT	---	16	---	AGG, FE
369+90	STH 130, RT	22	8	4	ASPH, PE
370+87	STH 130, LT	14	5	3	ASPH, FE
376+58	STH 130, RT	67	23	12	ASPH, PE
398+61	STH 130, RT	---	31	---	AGG, PE
398+63	STH 130, LT	---	12	---	AGG, FE
404+77	STH 130, RT	---	12	---	AGG, FE
	SUBTOTAL	103	512	19	
	TOTAL	219	965	39	

* ADDITIONAL QUANTITIES ELSEWHERE IN PLANS

BUTT JOINTS

STATION	TO	STATION	LOCATION	204.0115 REMOVING ASPHALTIC SURFACE BUTT JOINTS SY
100+81	-	101+81	STH 130	360
288+79	-	288+89	B-52-0067	40
289+89	-	289+99	B-52-0067	40
356+11	-	357+11	B-52-0020	280
357+82	-	358+82	B-52-0020	270
			SUBTOTAL	990
		109+66	LOGAN RD	440
		169+47	ALBERT LN	300
		179+89	CTH JJ	460
		191+61	OLD MILL DR	210
		196+50	CTH JJ / OLD MILL DR	470
		333+70	CTH B	220
		370+22	RUSHING WATER LN	40
			SUBTOTAL	2,140
			TOTAL	3,130

MILL AND RELAY

STATION	TO	STATION	LOCATION	330.0100 SY
101+81	-	285+00	STH 130	61,100
292+50	-	356+11	STH 130	21,200
358+82	-	366+86	STH 130	3,200
372+90	-	412+08	STH 130	15,700
			TOTAL	101,200

BASE AGGREGATE DENSE

STATION	TO	STATION	LOCATION	305.0110 BASE AGGREGATE DENSE 3/4-INCH TON	* 305.0120 BASE AGGREGATE DENSE 1 1/4-INCH TON	624.0100 WATER MGAL
100+81	-	112+50	STH 130	240	---	2.4
112+50	-	197+50	STH 130	1,350	---	13.5
197+50	-	286+42	STH 130	1,010	---	10.1
286+42	-	288+89	STH 130	70	---	0.7
289+90	-	292+52	STH 130	50	---	0.5
292+52	-	295+00	STH 130	15	---	0.2
295+00	-	311+50	STH 130	190	---	1.9
311+50	-	319+50	STH 130	60	---	0.6
319+50	-	355+57	STH 130	410	---	4.1
323+59	-	0+00	CROSS DRAIN	5	6	0.2
355+57	-	357+10	STH 130	40	---	0.4
357+83	-	358+95	STH 130	30	---	0.3
358+95	-	366+86	STH 130	200	---	2.0
372+90	-	412+08	STH 130	980	---	9.8
			TOTAL	4,650	6	46.7

* ADDITIONAL QUANTITIES ELSEWHERE IN PLANS

3

ASPHALT ITEMS

STATION	TO	STATION	LOCATION	* 455.0605 TACK COAT GAL	* 460.5224 HMA PAVEMENT 4 LT 58-28 S TON
100+81	-	287+28	STH 130	4,975	9,760
287+28	-	288+89	STH 130	60	120
289+90	-	291+50	STH 130	60	120
291+50	-	356+09	STH 130	1,725	3,380
356+09	-	357+10	STH 130	30	60
357+83	-	358+85	STH 130	30	60
358+85	-	366+50	STH 130	205	400
366+50	-	373+23	STH 130	220	440
373+23	-	409+61	STH 130	975	1,920
409+61	-	412+08	STH 130	160	320
			SUBTOTAL	8,440	16,580
		109+66	LOGAN RD	77	152
		169+47	ALBERT LN	53	104
		179+89	CTH JJ	47	92
		191+61	OLD MILL DR	21	42
		196+50	CTH JJ / OLD MILL DR	48	94
		323+59	STH 130 CROSS DRAIN	---	8
		333+70	CTH B	25	48
		370+22	RUSHING WATERS LN	7	14
			SUBTOTAL	278	554
			TOTAL	8,718	17,134

* ADDITIONAL QUNATITIES INCLUDED ELSEWHERE IN PLANS

REMOVING ASPHALTIC SURFACE MILLING

STATION	TO	STATION	LOCATION	204.0120 SY
285+00	-	288+79	STH 130	1,010
290+00	-	292+50	STH 130	670
366+86	-	372+90	STH 130	2,150
412+08	-	413+58	STH 130	670
			TOTAL	4,500

REMOVING GUARDRAIL

STATION	TO	STATION	LOCATION	204.0165 LF
288+40	-	288+90	B-52-067 SW QUAD	50
288+44	-	288+89	B-52-067 SE QUAD	45
289+89	-	291+08	B-52-067 NW QUAD	119
289+89	-	291+10	B-52-067 NE QUAD	121
356+38	-	357+11	B-52-020 SW QUAD	73
356+40		357+11	B-52-020 SE QUAD	71
357+83		358+55	B-52-020 NW QUAD	72
357+83	-	358+56	B-52-020 NE QUAD	73
			TOTAL	624

REMOVING FENCE

STATION	TO	STATION	LOCATION	204.0170 LF
356+97	-	357+11	STH 130, RT	28
357+87	-	358+29	STH 130, LT	65
			TOTAL	93

INCENTIVE DENSITY

LOCATION	460.0105.S HMA PERCENT WITHIN LIMITS (PWL) TEST STRIP VOLUMETRICS EACH	460.0110.S HMA PERCENT WITHIN LIMITS (PWL) TEST STRIP DENSITY EACH
ID 5760-00-73	1	2
TOTAL	1	2

NOTE:
ALL ITEMS CATEGORY 0010 UNLESS NOTED OTHERWISE

THE FOLLOWING ACCEPTANCE CRITERIA ARE APPLICABLE FOR THIS PROJECT:

DESCRIPTION	STATION / STATION	MIXTURE USE	UNDERLYING SURFACE	BID ITEM	TONS	THICKNESS	QUALITY MANAGEMENT PROGRAM TO USE	
							MIXTURE ACCEPTANCE	DENSITY ACCEPTANCE
11-FOOT DRIVING LANES	100+81 - 288+89; 289+90 - 357+12	UPPER LAYER	4 LT 58-28 S	4 LT 58-28 S	6720	1.75"	PWL INCENTIVE AIR VOIDS HMA PAVEMENT 460.2010	INCENTIVE DENSITY PWL HMA PAVEMENT 460.2005
11-FOOT DRIVING LANES	100+81 - 285+00; 292+50 - 357+12	LOWER LAYER	RELAYED MATERIAL	4 LT 58-28 S	6520	1.75"	PWL INCENTIVE AIR VOIDS HMA PAVEMENT 460.2010	INCENTIVE DENSITY PWL HMA PAVEMENT 460.2005
11-FOOT DRIVING LANES	285+00 - 292+50	LOWER LAYER	MILLED SURFACE	4 LT 58-28 S	200	1.75"	PWL INCENTIVE AIR VOIDS HMA PAVEMENT 460.2010	INCENTIVE DENSITY HMA PAVEMENT 460.2000
12-FOOT DRIVING LANES	357+82 - 413+58	UPPER LAYER	4 LT 58-28 S	4 LT 58-28 S	1570	1.75"	PWL INCENTIVE AIR VOIDS HMA PAVEMENT 460.2010	INCENTIVE DENSITY PWL HMA PAVEMENT 460.2005
12-FOOT DRIVING LANES	357+82 - 366+86; 372+90 - 413+58	LOWER LAYER	RELAYED MATERIAL	4 LT 58-28 S	1410	1.75"	PWL INCENTIVE AIR VOIDS HMA PAVEMENT 460.2010	INCENTIVE DENSITY PWL HMA PAVEMENT 460.2005
12-FOOT DRIVING LANES	366+86 - 372+90	LOWER LAYER	MILLED SURFACE	4 LT 58-28 S	160	1.75"	PWL INCENTIVE AIR VOIDS HMA PAVEMENT 460.2010	INCENTIVE DENSITY HMA PAVEMENT 460.2000
INTERSECTIONS	100+81 - 413+58	UPPER LAYER	4 LT 58-28 S	4 LT 58-28 S	273	1.75"	PWL INCENTIVE AIR VOIDS HMA PAVEMENT 460.2010	ACCEPTED BY DEPARTMENT TESTING, NOT ELIGBLE FOR INCENTIVE.
INTERSECTIONS	100+81 - 413+58	LOWER LAYER	MILLED SURFACE	4 LT 58-28 S	273	1.75"	PWL INCENTIVE AIR VOIDS HMA PAVEMENT 460.2010	ACCEPTED BY DEPARTMENT TESTING, NOT ELIGBLE FOR INCENTIVE.

3

CULVERT PIPE

STATION	TO	STATION	LOCATION	* 204.0110 REMOVING ASPHALTIC SURFACE SY	520.1024 APRON ENDWALLS FOR CULVERT PIPE 24-INCH EACH	520.3324 CULVERT PIPE CLASS III-A 24-INCH LF	521.1524 APRON ENDWALLS FOR CULVERT PIPE SLOPED SIDE DRAINS STEEL 24-INCH 6 TO 1 EACH	522.2414 CULVERT PIPE REINFORCED CONCRETE HORIZONTAL ELLIPTICAL CLASS HE-IV 14X23-INCH LF	522.2614 APRON ENDWALLS FOR CULVERT PIPE REINFORCED CONCRETE HORIZONTAL ELLIPTICAL 14X23-INCH EACH	633.5200 MARKERS CULVERT END EACH	JOINT TIES ** EACH	STEEL THICKNESS INCHES	INLET*** ELEV	INLET*** OFFSET	OUTLET*** ELEV	OUTLET*** OFFSET
289+89.32	-	291+29.31	STH 130, LT	---	1	140	1	---	---	1	6	0.064	709.88	32.09' LT	708.72	31.42' LT
		323+59	STH 130	21	---	---	---	31	2	2	4	---	728.50	13.95' RT	728.01	14.05' LT
			TOTAL	21	1	140	1	31	2	3						

* ADDITIONAL QUNATITIES INCLUDED ELSEWHERE IN PLANS
** NON-BID ITEM: FOR INFORMATION ONLY
*** PIPE INVERT AT END OF PIPE FOR INFORMATION ONLY. FIELD VERIFY.

3

ASPHALTIC RUMBLE STRIPS, CENTERLINE

STATION	TO	STATION	LOCATION	465.0560 LF
102+00	-	107+65	STH 130	565
111+65	-	167+46	STH 130	5581
171+46	-	178+10	STH 130	664
182+10	-	188+78	STH 130	668
192+78	-	194+50	STH 130	172
198+50	-	231+25	STH 130	3275
233+25	-	281+84	STH 130	4859
283+84	-	288+63	STH 130	480
290+15	-	331+70	STH 130	4155
335+70	-	356+85	STH 130	2116
358+08	-	369+22	STH 130	1114
371+22	-	410+79	STH 130	3957
			TOTAL	27,606

RIPRAP AND GEOTEXTILE

STATION	TO	STATION	LOCATION	606.0200 RIPRAP MEDIUM CY	645.0130 GEOTEXTILE TYPE R SY
289+71	-	289+83	STH 130, LT	7	14
			TOTAL	7	14

BARRIER SYSTEM GRADING SHAPING FINISHING

FOR INFORMATIONAL PURPOSES ONLY

STATION	TO	STATION	LOCATION	614.0010 BARRIER SYSTEM GRADING SHAPING FINISHING EACH	SALVAGED TOPSOIL SY	MULCHING SY	EROSION MAT URBAN CLASS I TYPE B SY	FERTILIZER TYPE B CWT	SEEDING MIXTURE NO. 30 LB	SEED WATER MGAL	CONSTRUCTION STAKING BASE LF	CONSTRUCTION STAKING SLOPE STAKES LF	EXCAVATION COMMON CY	BORROW CY
286+42	-	288+89	B-52-067 SW QUAD	1	100	93	---	0.2	11	6	247	247	103	73
286+42	-	288+89	B-52-067 SE QUAD	1	200	200	---	0.3	17	9	247	247		
289+90	-	291+49	B-52-067 NW QUAD	1	240	236	---	0.3	16	8	159	159	91	189
289+90	-	292+52	B-52-067 NE QUAD	1	280	276	---	0.4	22	11	261	261		
355+57	-	357+10	B-52-020 SW QUAD	1	180	---	180	0.2	15	8	153	153	56	99
355+57	-	357+10	B-52-020 SE QUAD	1	380	---	380	0.4	23	12	153	153		
357+83	-	358+95	B-52-020 NW QUAD	1	190	---	190	0.2	13	7	112	112	56	95
357+83	-	358+95	B-52-020 NE QUAD	1	150	---	150	0.2	11	6	112	112		
			TOTAL	8	1,720	805	900	2.2	128	67	1,444	1,444	306	456

MGS GUARDRAIL

STATION	TO	STATION	LOCATION	614.2500 MGS THRIE BEAM TRANSITION LF	614.2610 MGS GUARDRAIL TERMINAL EAT EACH
287+99	-	288+91	B-52-067 SW QUAD	39.4	1
287+99	-	288+91	B-52-067 SE QUAD	39.4	1
289+88	-	290+81	B-52-067 NW QUAD	39.4	1
289+88	-	290+80	B-52-067 NW QUAD	39.4	1
356+19	-	247+11	B-52-020 SW QUAD	39.4	1
356+19	-	247+11	B-52-020 SE QUAD	39.4	1
357+83	-	358+75	B-52-020 NW QUAD	39.4	1
357+83	-	358+75	B-52-020 NW QUAD	39.4	1
			TOTAL	315.2	8

SILT FENCE

STATION	TO	STATION	LOCATION	628.1504 SILT FENCE LF	628.1520 SILT FENCE MAINTENANCE LF
286+30	-	288+90	B-52-067 SW QUAD	272	544
287+21	-	288+90	B-52-067 SE QUAD	185	370
289+88	-	292+57	B-52-067 NE QUAD	292	584
355+47	-	357+12	B-52-020 SE QUAD	202	404
355+47	-	357+12	B-52-020 SW QUAD	201	402
357+82	-	359+03	B-52-020 NW QUAD	156	312
357+82	-	359+04	B-52-020 NE QUAD	154	308
			UNDISTRIBUTED	373	---
			TOTAL	1,835	2,924

MOBILIZATIONS EROSION CONTROL

LOCATION	628.1905 MOBILIZATIONS EROSION CONTROL EACH	628.1910 MOBILIZATIONS EMERGENCY EROSION CONTROL EACH
ID 5760-00-73	11	3
TOTAL	11	3

CULVERT PIPE CHECKS

STATION	LOCATION	628.7555 EACH
286+98	RT, DRIVEWAY	2
291+35	STH 130, LT	4
323+59	STH 130	4
	UNDIST	5
	TOTAL	15

PERMANENT SIGNING

STATION	LOCATION	634.0612 POSTS WOOD 4X6-INCH X 12-FT EACH	634.0616 POSTS WOOD 4X6-INCH X 16-FT EACH	638.2102 MOVING SIGNS TYPE II EACH	REMARKS
288+61	B-52-067 SW QUAD	---	1	1	ROAD CURVES AHEAD & 50 MPH
288+86	B-52-067 SW QUAD	1	---	1	BRIDGE HASH MARKS
288+86	B-52-067 SE QUAD	1	---	1	BRIDGE HASH MARKS
289+93	B-52-067 NW QUAD	1	---	1	BRIDGE HASH MARKS
289+93	B-52-067 NE QUAD	1	---	1	BRIDGE HASH MARKS
357+00	B-52-020 SW QUAD	1	---	1	BRIDGE HASH MARKS
357+01	B-52-020 SE QUAD	1	---	1	BRIDGE HASH MARKS
357+94	B-52-020 NE QUAD	1	---	1	BRIDGE HASH MARKS
357+94	B-52-020 NW QUAD	1	---	1	BRIDGE HASH MARKS
	UNDISTRIBUTED	3	---	3	NO PASSING ZONE SIGNS
	TOTAL	11	1	12	

NOTE:
ALL ITEMS CATEGORY 0010 UNLESS NOTED OTHERWISE

3

TRAFFIC CONTROL

LOCATION	DURATION	643.0300 TRAFFIC CONTROL DRUMS NO.	643.0300 DAY	643.0420 TRAFFIC CONTROL BARRICADES TYPE III NO.	643.0420 DAY	643.0705 TRAFFIC CONTROL WARNING LIGHTS TYPE A NO.	643.0705 DAY	643.0900 TRAFFIC CONTROL SIGNS NO.	643.0900 DAY	643.5000 TRAFFIC CONTROL EACH
B-52-067	18	10	180	19	342	38	684	18	324	---
B-52-020	20	10	200	19	380	38	760	18	360	---
R-52-012	2	12	24	---	---	---	---	5	10	---
UNDISTRIBUTED	40	5	200	5	200	10	400	4	160	---
PROJECT	---	---	---	---	---	---	---	---	---	0.5
TOTAL		37	604	43	922	86	1,844	45	854	0.5

LOCATING NO PASSING ZONES

STATION	TO	STATION	LOCATION	648.0100 MI
100+81	-	413+58	STH 130	5.92
			TOTAL	5.92

CONSTRUCTION STAKING

STATION	TO	STATION	LOCATION	650.6000 CONSTRUCTION STAKING PIPE CULVERTS EACH	650.8000 CONSTRUCTION STAKING RESURFACING REFERENCE LF	650.9911.02 CONSTRUCTION STAKING SUPPLEMENTAL CONTROL 02. 5786-00-73 EACH
289+90	-	291+30	STH 130, LT	1	---	---
100+81	-	413+58	STH 130	---	31,277	---
		323+59	STH 130	1	---	---
			PROJECT	---	---	1
			TOTAL	2	31,277	1

3

MARKING LINE ITEMS

STATION	TO	STATION	LOCATION	643.3165 TEMPORARY MARKING LINE PAINT 6-INCH SOLID YELLOW LF	643.3165 12.5' LINE 37.5' SKIP YELLOW LF	646.2040 MARKING LINE GROOVED WET REF EPOXY 6-INCH SOLID WHITE LF	646.2040 SOLID YELLOW LF	646.2040 3' LINE 9' SKIP WHITE LF	646.2040 12.5' LINE 37.5' SKIP YELLOW LF	646.4720 MARKING LINE SAME DAY EPOXY 6-INCH SOLID YELLOW LF	646.4720 12.5' LINE 37.5' SKIP YELLOW LF	646.6120 MARKING STOP LINE EPOXY 18-INCH SOLID WHITE LF
100+66	-	106+25	DOUBLE YELLOW	2,236	---	1,118	1,118	---	---	1,118	---	21
106+25	-	112+75	SB PASSING ONLY	1,300	325	966	650	47	163	650	163	---
112+75	-	116+50	PASSING	---	188	750	---	---	94	---	94	---
116+50	-	123+50	NB PASSING ONLY	1,400	350	1,400	700	---	175	700	175	---
123+50	-	153+25	PASSING	---	1,488	5,950	---	---	744	---	744	---
153+25	-	164+00	SB PASSING ONLY	2,150	538	2,150	1,075	---	269	1,075	269	---
164+00	-	197+75	DOUBLE YELLOW	13,500	---	5,919	6,750	105	---	6,750	---	---
197+75	-	208+50	NB PASSING ONLY	2,150	538	2,150	1,075	---	269	1,075	269	---
208+50	-	240+50	PASSING	---	1,600	6,400	---	---	800	---	800	---
240+50	-	251+50	SB PASSING ONLY	2,200	550	2,200	1,100	---	275	1,100	275	---
251+50	-	253+75	DOUBLE YELLOW	900	---	450	450	---	---	450	---	---
253+75	-	263+50	NB PASSING ONLY	1,950	488	1,950	975	---	244	975	244	---
263+50	-	265+25	DOUBLE YELLOW	700	---	350	350	---	---	350	---	---
265+25	-	274+50	SB PASSING ONLY	1,850	463	1,850	925	---	231	925	231	---
274+50	-	299+25	DOUBLE YELLOW	9,900	---	4,950	4,950	---	---	4,950	---	---
299+25	-	310+00	NB PASSING ONLY	2,150	538	2,150	1,075	---	269	1,075	269	---
310+00	-	321+00	SB PASSING ONLY	2,200	550	2,200	1,100	---	275	1,100	275	---
321+00	-	344+50	DOUBLE YELLOW	9,400	---	4,609	4,700	---	---	4,700	---	---
344+50	-	355+50	NB PASSING ONLY	2,200	550	2,200	1,100	---	275	1,100	275	---
355+50	-	389+00	PASSING	---	1,675	6,700	---	---	838	---	838	---
389+00	-	398+00	DOUBLE YELLOW	3,600	---	1,800	1,800	---	---	1,800	---	---
398+00	-	399+50	PASSING	---	75	300	---	---	38	---	38	---
399+50	-	409+50	NB PASSING ONLY	2,000	500	2,000	1,000	---	250	1,000	250	---
409+50	-	413+58	PASSING	---	204	299	---	60	102	---	102	---
			UNDISTRIBUTED	---	---	---	8,864	---	---	8,864	---	---
			SUBTOTAL	61,786	10,617	60,811	39,757	212	5,308	39,757	5,308	21
			TOTAL	72,403		106,089				45,065		21

SAWING ASPHALT

STATION	LOCATION	690.0150 LF
161+79	DRIVEWAY, RT	12
163+57	DRIVEWAY, RT	17
323+59	STH 130 CROSS DRAIN	48
369+90	DRIVEWAY, RT	13
370+87	DRIVEWAY, LT	11
376+58	DRIVEWAY, RT	13
	TOTAL	114

PUBLIC LAND SURVEY MONUMENT VERIFY AND RESET

LOCATION	680.0100 EACH	REMARKS
SEC 2 / 1, T8N, R2E	1	QUARTER CORNER
SEC 2 / 1, T8N, R2E & SEC 35 / 36, T9N, R2E	1	SECTION CORNER
SEC 35 / 36, T9N, R2E	1	QUARTER CORNER
TOTAL	3	

NOTE:
ALL ITEMS CATEGORY 0010 UNLESS NOTED OTHERWISE

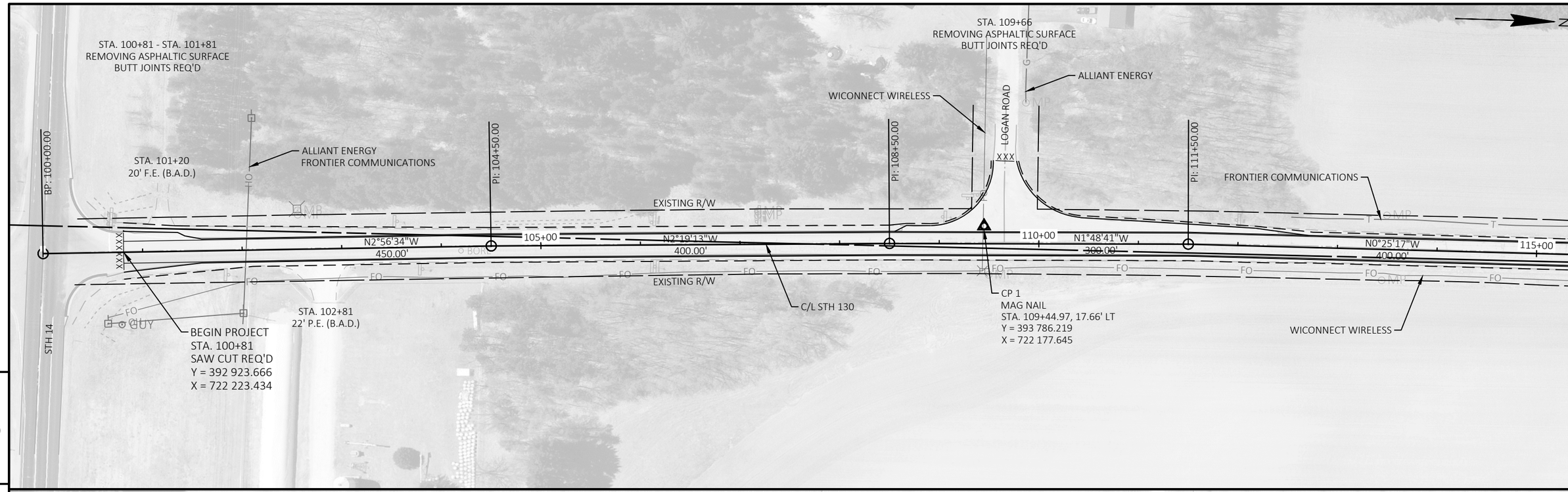

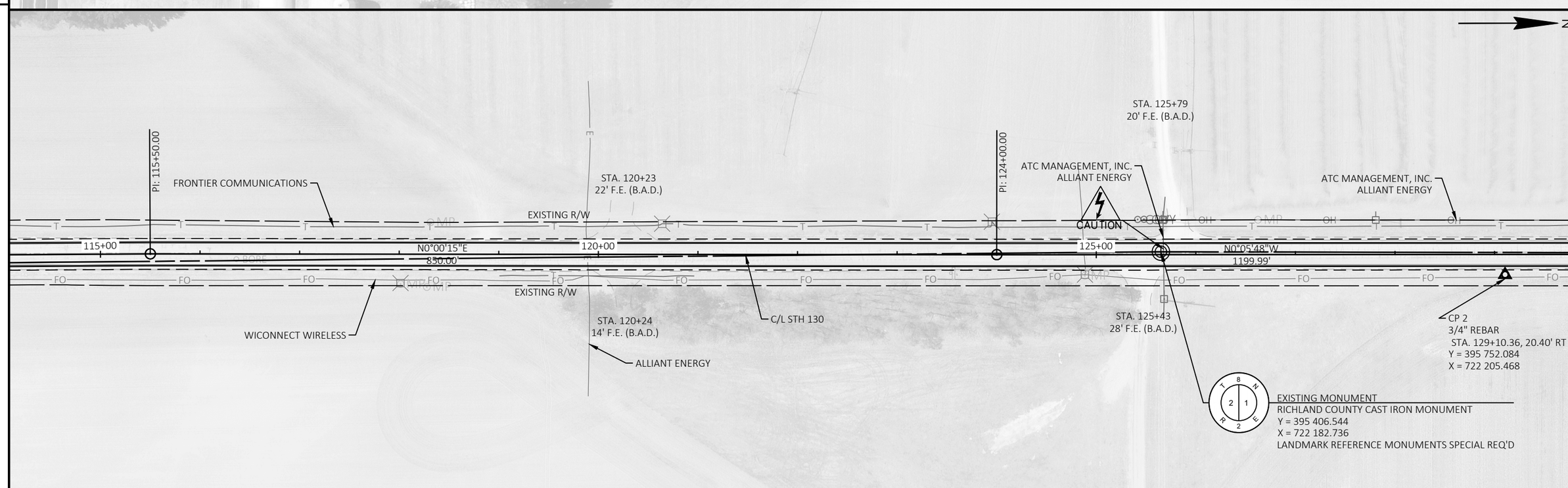

PROJECT NO: 5760-00-73	HWY: STH 130	COUNTY: RICHLAND	PLAN SHEETS	SHEET 34	E

FILE NAME : G:\00-PROJECT FILES\2021\21168 ID 5760-00-03 STH 130, RICHLAND COUNTY\0-CAD\SHEETSPLAN\050201_PN.DWG
LAYOUT NAME - 050201_pn
PLOT DATE : 7/18/2025 8:53 AM
PLOT BY : ERIK MEYER
PLOT NAME :
PLOT SCALE : 1 IN:100 FT

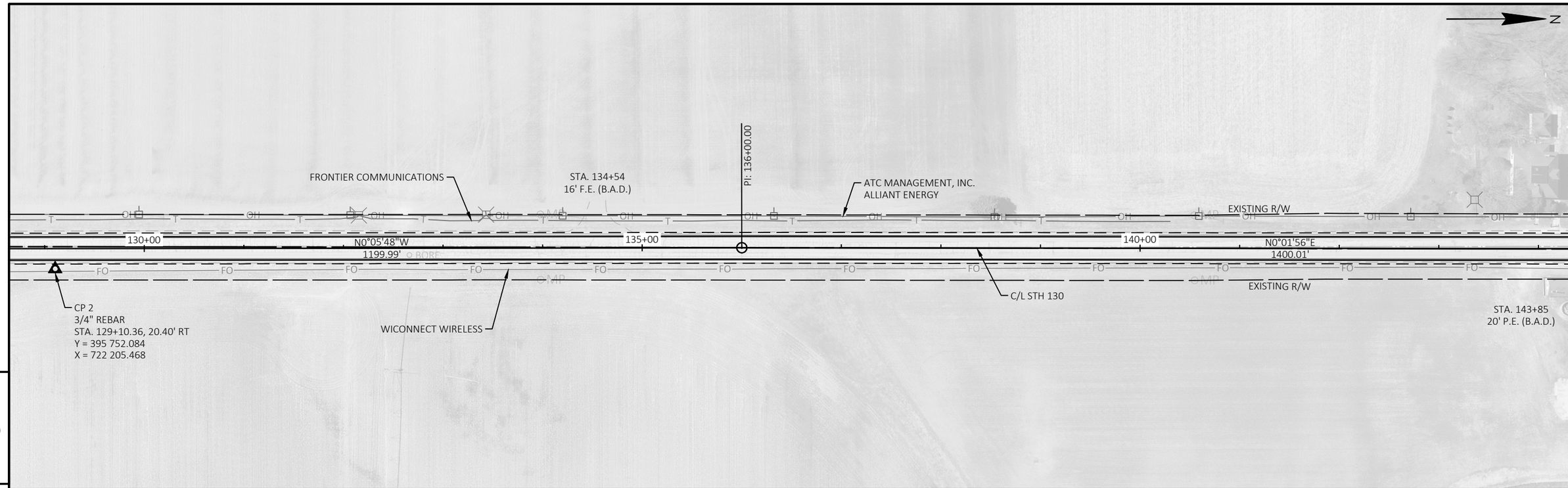

5

5

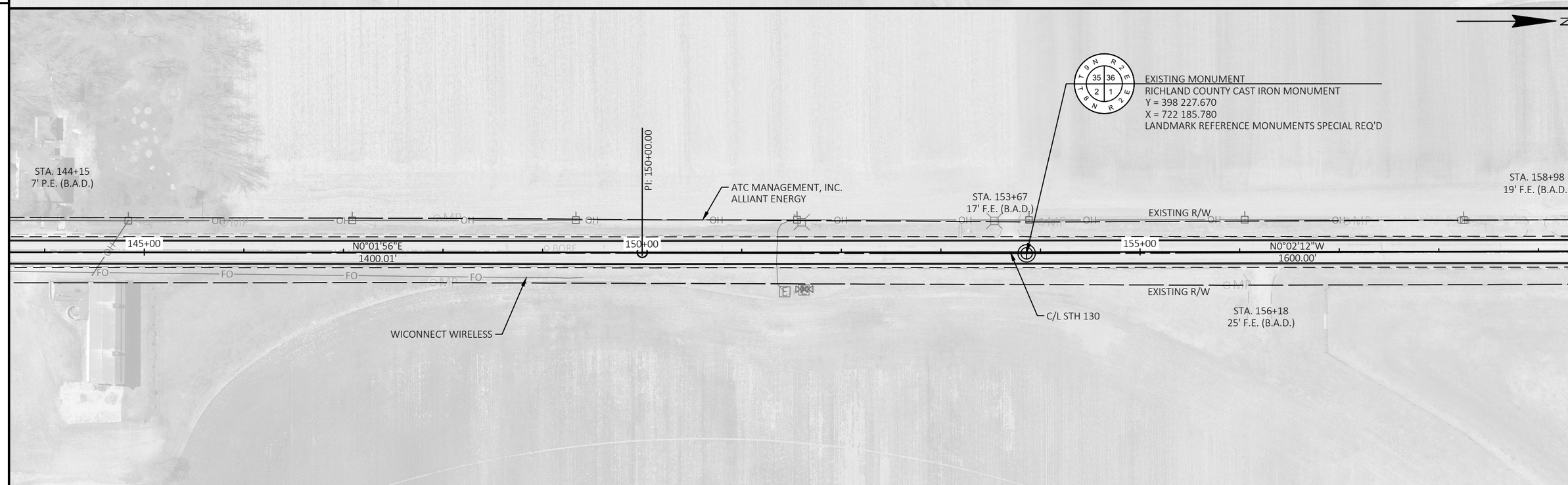

PROJECT NO: 5760-00-73	HWY: STH 130	COUNTY: RICHLAND	PLAN SHEETS	SHEET 35	E

FILE NAME : G:\00-PROJECT FILES\2021\21168 ID 5760-00-03 STH 130, RICHLAND COUNTY\0-CAD\SHEETSPLAN\050201_PN.DWG
LAYOUT NAME - 050202_pn
PLOT DATE : 7/18/2025 8:53 AM PLOT BY : ERIK MEYER PLOT NAME : PLOT SCALE : 1 IN:100 FT
WISDOT/CADDS SHEET 44

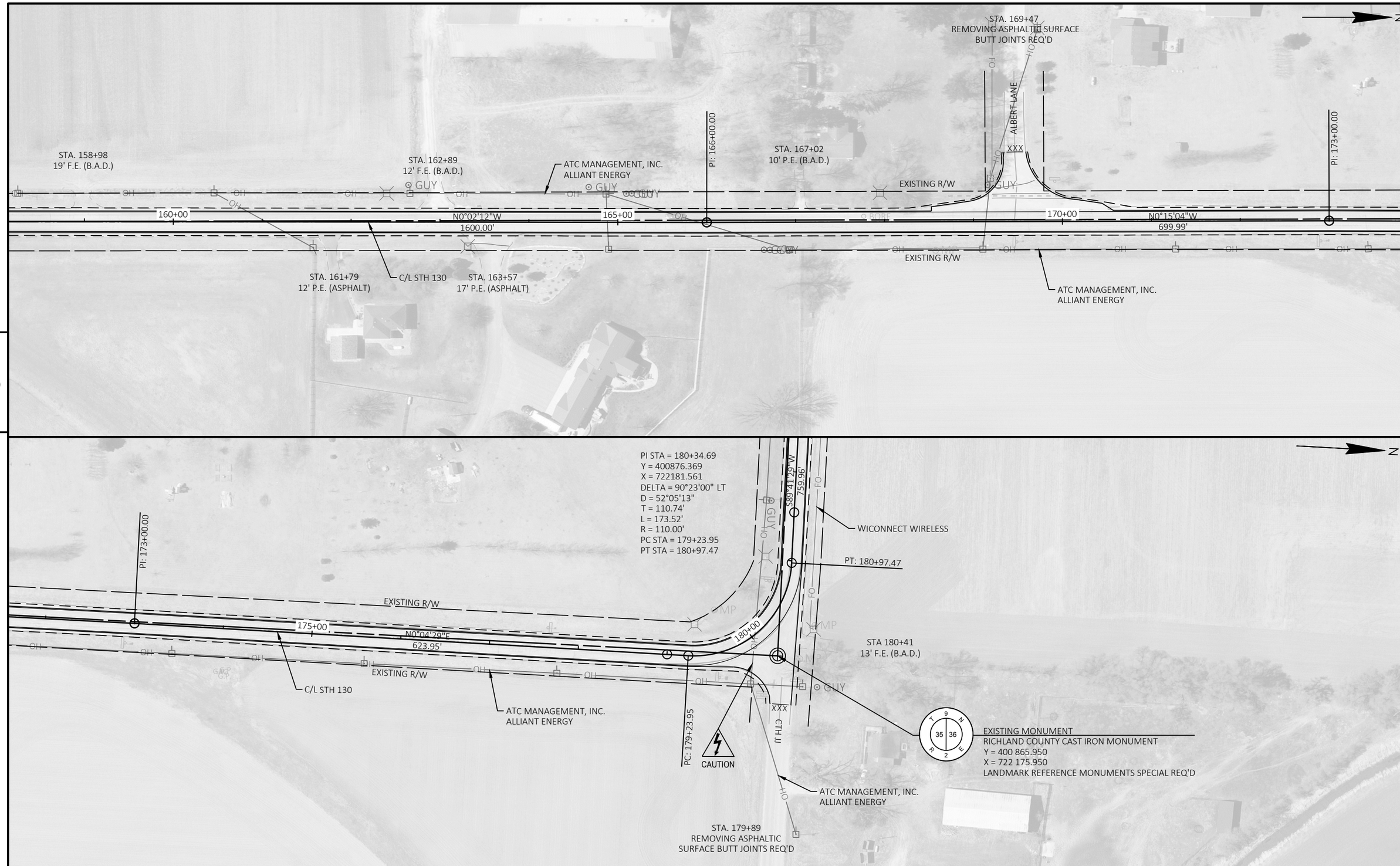

PROJECT NO: 5760-00-73	HWY: STH 130	COUNTY: RICHLAND	PLAN SHEETS	SHEET 36	E

FILE NAME : G:\00-PROJECT FILES\2021\21168 ID 5760-00-03 STH 130, RICHLAND COUNTY\0-CAD\SHEETSPLAN\050201_PN.DWG
LAYOUT NAME - 050203_pn
PLOT DATE : 7/18/2025 8:53 AM PLOT BY : ERIK MEYER PLOT NAME : PLOT SCALE : 1 IN:100 FT

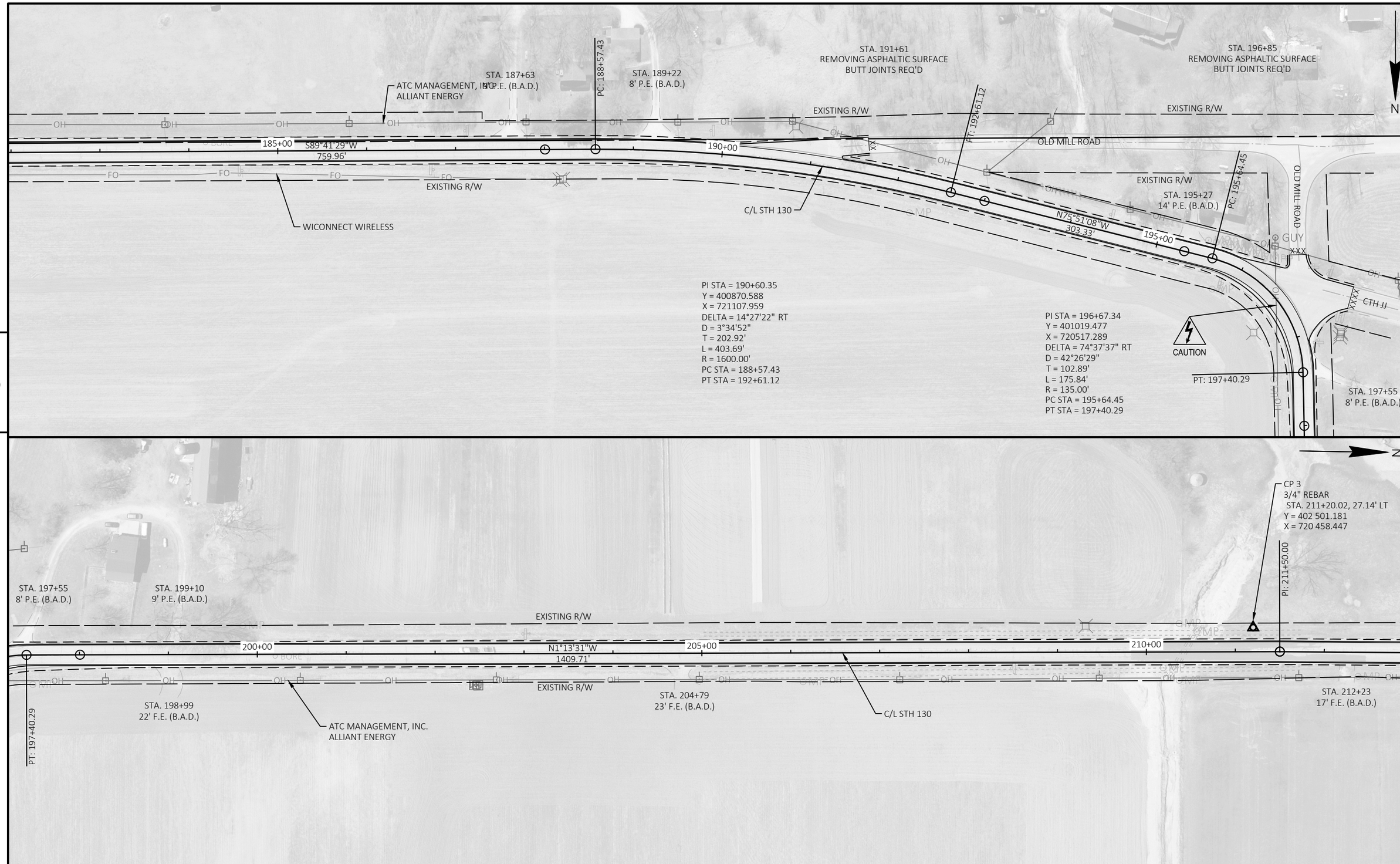

PROJECT NO: 5760-00-73	HWY: STH 130	COUNTY: RICHLAND	PLAN SHEETS	SHEET 37	E

FILE NAME : G:\00-PROJECT FILES\2021\21168 ID 5760-00-03 STH 130, RICHLAND COUNTY\0-CAD\SHEETSPLAN\050201_PN.DWG
LAYOUT NAME - 050204_pn
PLOT DATE : 7/18/2025 8:53 AM PLOT BY : ERIK MEYER PLOT NAME : PLOT SCALE : 1 IN:100 FT

WISDOT/CADDS SHEET 44

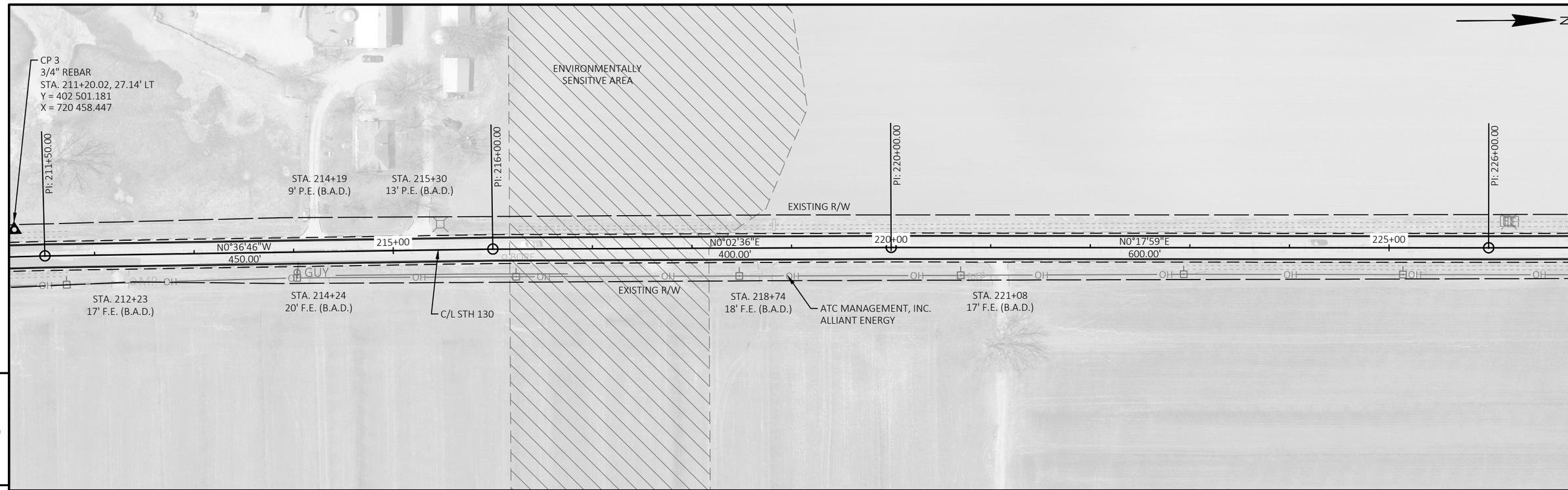

5

5

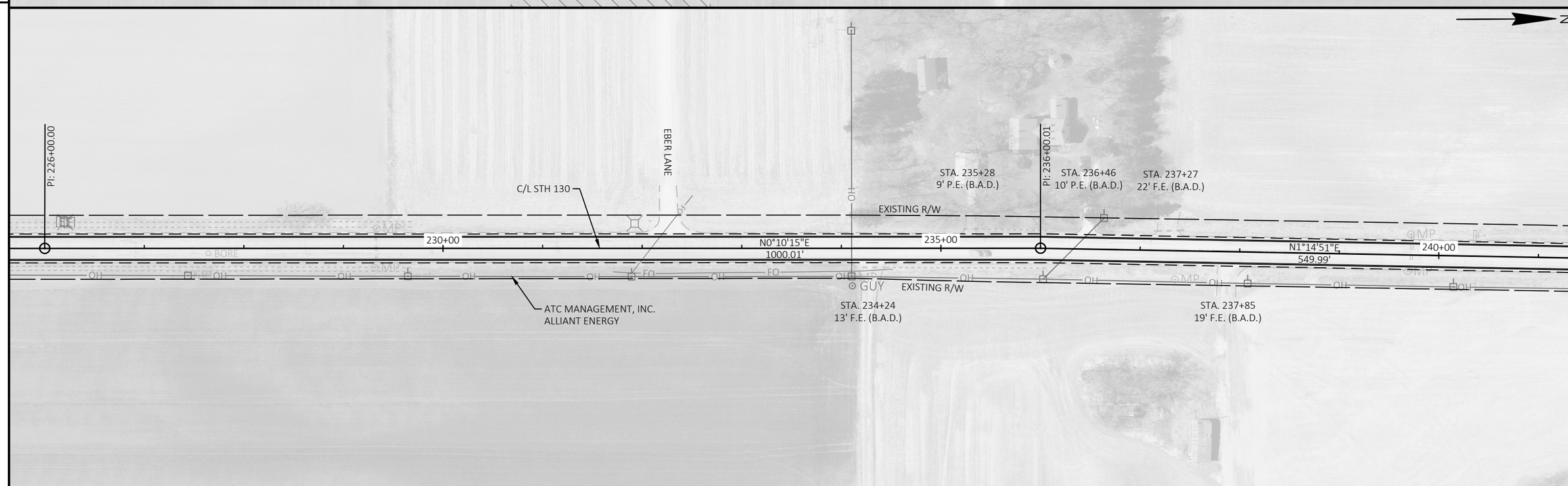

PROJECT NO: 5760-00-73	HWY: STH 130	COUNTY: RICHLAND	PLAN SHEETS	SHEET 38	E

FILE NAME : G:\00-PROJECT FILES\2021\21168 ID 5760-00-03 STH 130, RICHLAND COUNTY\0-CAD\SHEETSPLAN\050201_PN.DWG
LAYOUT NAME - 050205_pn
PLOT DATE : 7/18/2025 8:53 AM
PLOT BY : ERIK MEYER
PLOT NAME :
PLOT SCALE : 1 IN:100 FT
WISDOT/CADDS SHEET 44

5

5

PROJECT NO: 5760-00-73	HWY: STH 130	COUNTY: RICHLAND	PLAN SHEETS	SHEET 39	E

FILE NAME : G:\00-PROJECT FILES\2021\21168 ID 5760-00-03 STH 130, RICHLAND COUNTY\0-CAD\SHEETSPLAN\050201_PN.DWG
LAYOUT NAME - 050206_pn
PLOT DATE : 7/18/2025 8:54 AM PLOT BY : ERIK MEYER PLOT NAME : PLOT SCALE : 1 IN:100 FT

WISDOT/CADDS SHEET 44

5

PI: 272+00.00
STA. 272+66
17' F.E. (B.A.D.)
STA. 273+45
13' P.E. (B.A.D.)
PC: 274+19.19
STA. 274+94
14' P.E. (B.A.D.)
275+00
N42°12'38"W
219.19'
270+00
N44°37'28"W
500.00'
STA. 273+41
12' F.E. (B.A.D.)
C/L STH 130
ALLIANT ENERGY
EXISTING R/W
PI STA = 277+06.58
Y = 408391.807
X = 718797.666
DELTA = 36°10'17" RT
D = 6°30'39"
T = 287.39'
L = 555.55'
R = 880.00'
PC STA = 274+19.19
PT STA = 279+74.74
ENVIRONMENTALLY
SENSITIVE AREA
PT: 279+74.74
USGS MONUMENT -
DO NOT DISTURB
BM 1
BRONZE MONUMENT IN
CONCRETE BASE
STA. 280+22.66, 44.40' LT
ELEV. = 719.615
Y = 408 720.579
X = 718 718.232
STA. 280+32
11' P.E. (B.A.D.)
280+00
N6°02'21"W
67.51'
STA. 280+03
13' F.E. (B.A.D.)
PC: 281+42.25
PI STA = 283+07.76
Y = 409008.769
X = 718732.395
DELTA = 12°35'36" LT
D = 3°49'11"
T = 165.51'
L = 329.69'
R = 1500.00'
PC STA = 281+42.25
PT STA = 284+71.94
COLD SPRING
LANE
N

5

PI STA = 283+07.76
Y = 409008.769
X = 718732.395
DELTA = 12°35'36" LT
D = 3°49'11"
T = 165.51'
L = 329.69'
R = 1500.00'
PC STA = 281+42.25
PT STA = 284+71.94
STA. 284+00
END MILL AND RELAY
BEGIN PROFILE TRANSITION
STA. 285+00
END PROFILE TRANSITION
BEGIN REMOVING ASPHALTIC
SURFACE MILLING
STA. 288+79 - STA. 288+89
REMOVING ASPHALTIC SURFACE
BUTT JOINTS REQ'D
STA. 289+89 - STA. 289+99
REMOVING ASPHALTIC SURFACE
BUTT JOINTS REQ'D
STA. 292+50
END REMOVING ASPHALTIC
SURFACE MILLING
BEGIN PROFILE TRANSITION
STA. 293+50
END PROFILE TRANSITION
BEGIN MILL AND RELAY
CP 5
3/4" REBAR
STA. 286+80.21, 28.69' LT
Y = 409 353.792
X = 718 585.794
50 MPH
MOVE SIGNS
MOVE SIGN
STA. 291+29.31 - STA. 289+89.32
(1) CULVERT PIPE CLASS III-A 24-INCH REQ'D
(1) APRON ENDWALL FOR CULVERT PIPE 24-INCH REQ'D
(1) APRON ENDWALL FOR CULVERT PIPE SLOPED SIDE
DRAINS STEEL 24-INCH 6 TO 1 REQ'D
EXISTING L.H.E.
MOVE SIGN
PT: 284+71.94
PI: 287+00.00
PI: 292+50.00
STA. 284+07
16' F.E. (B.A.D.)
C/L STH 130
STA. 292+17
18' P.E. (B.A.D.)
STA. 295+30
19' P.E. (B.A.D.)
STA. 297+31
20' P.E. (B.A.D.)
EXISTING R/W
285+00
290+00
295+00
N18°20'43"W
607.93'
EXISTING R/W
STA. 287+09
20' P.E. (B.A.D.)
SLOPE INTERCEPT, TYP.
MOVE SIGN
MOVE SIGN
BEAR CREEK
SEE BEAM GUARD DETAILS
AND CROSS SECTIONS FOR
MORE INFORMATION
CP 6
3/4" REBAR
STA. 291+52.18, 30.61' RT
Y = 409 819.968
X = 718 491.190
ATC MANAGEMENT, INC.
ALLIANT ENERGY
STA. 295+45
16' P.E. (B.A.D.)
EXISTING STRUCTURE B-52-067
(TWO SPAN HAUNCHED SLAB BRIDGE)
ENVIRONMENTALLY
SENSITIVE AREA
BM 2
MONUMENT ON BRIDGE
STA. 288+89.35, 18.20' RT
ELEV. = 713.027
Y = 409 566.957
X = 718 563.400
COLD SPRING LANE
N

PROJECT NO: 5760-00-73	HWY: STH 130	COUNTY: RICHLAND	PLAN SHEETS	SHEET 40	E

FILE NAME : G:\00-PROJECT FILES\2021\21168 ID 5760-00-03 STH 130, RICHLAND COUNTY\0-CAD\SHEETSPLAN\050201_PN.DWG
LAYOUT NAME - 050207_pn
PLOT DATE : 7/18/2025 8:54 AM PLOT BY : ERIK MEYER PLOT NAME : PLOT SCALE : 1 IN:100 FT

5

5

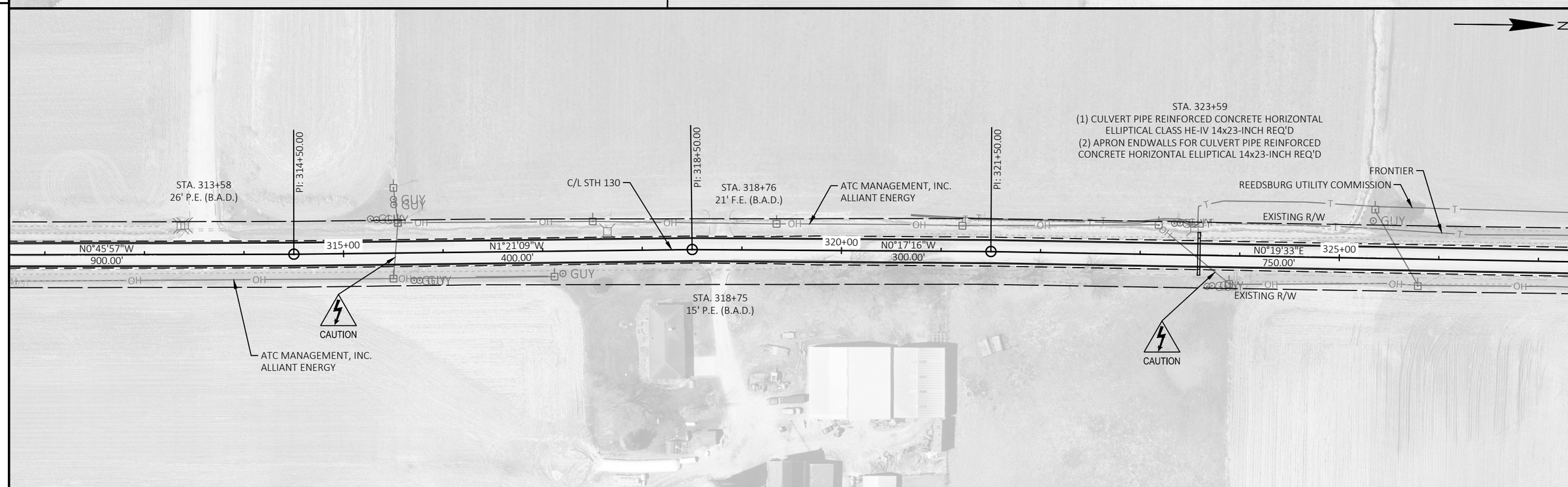

PROJECT NO: 5760-00-73	HWY: STH 130	COUNTY: RICHLAND	PLAN SHEETS	SHEET 41	E

FILE NAME : G:\00-PROJECT FILES\2021\21168 ID 5760-00-03 STH 130, RICHLAND COUNTY\0-CAD\SHEETSPLAN\050201_PN.DWG
LAYOUT NAME - 050208_pn
PLOT DATE : 7/18/2025 8:54 AM PLOT BY : ERIK MEYER PLOT NAME : PLOT SCALE : 1 IN:100 FT

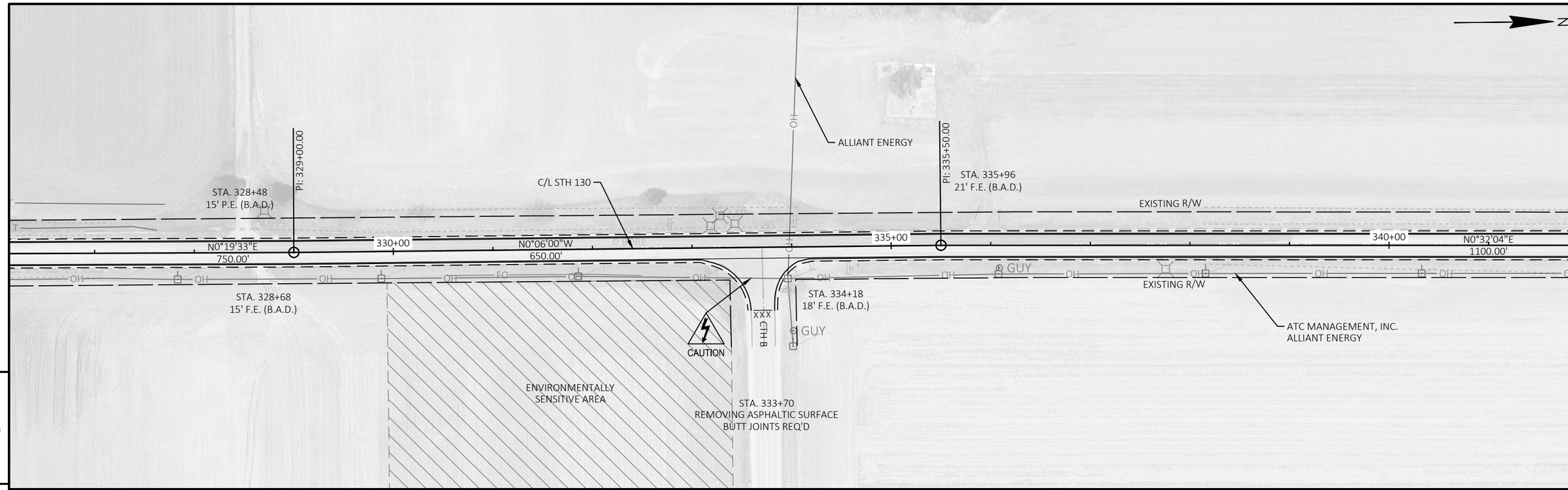

5

5

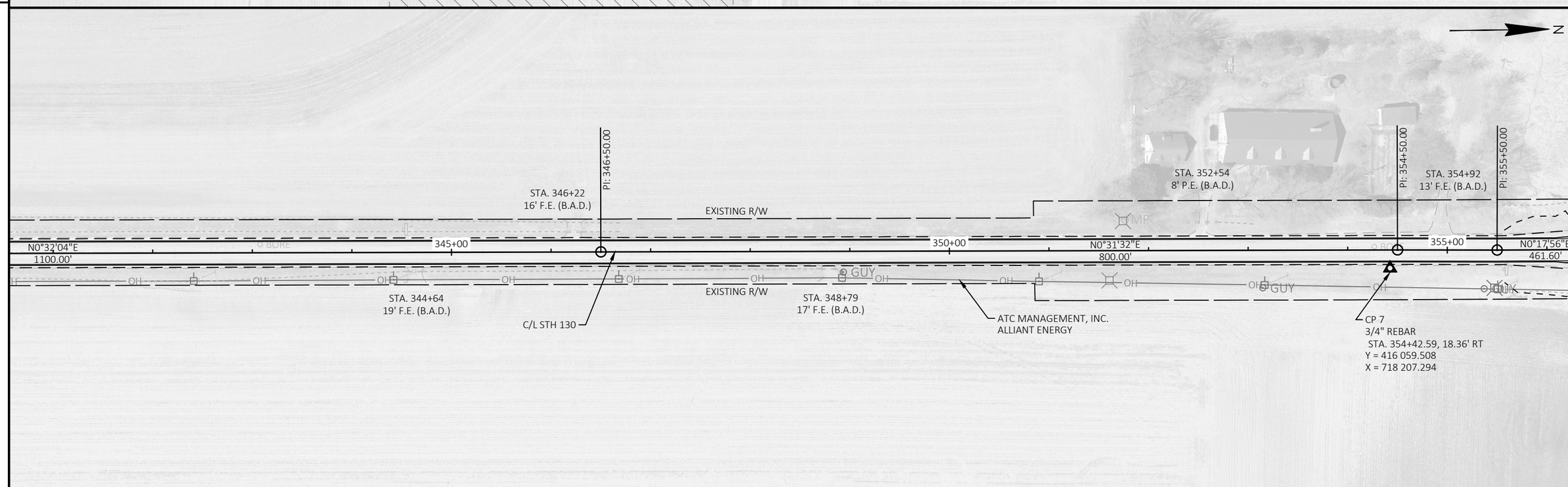

PROJECT NO: 5760-00-73	HWY: STH 130	COUNTY: RICHLAND	PLAN SHEETS	SHEET 42	E

FILE NAME : G:\00-PROJECT FILES\2021\21168 ID 5760-00-03 STH 130, RICHLAND COUNTY\0-CAD\SHEETSPLAN\050201_PN.DWG
LAYOUT NAME - 050209_pn
PLOT DATE : 7/18/2025 8:54 AM PLOT BY : ERIK MEYER PLOT NAME : PLOT SCALE : 1 IN:100 FT

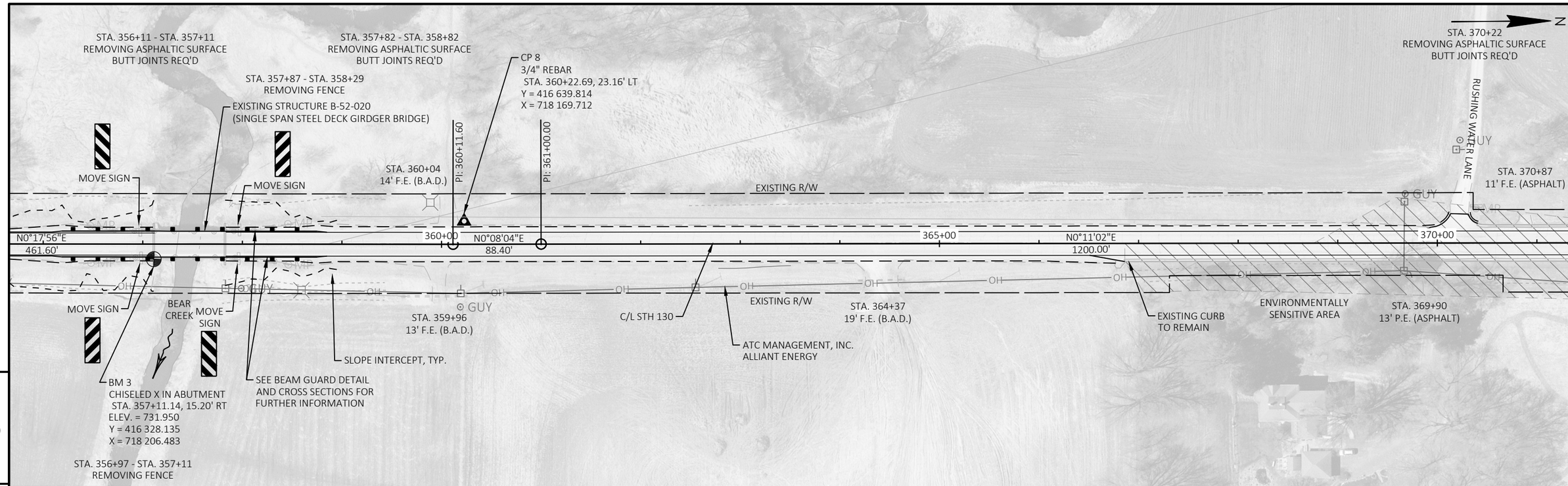

PROJECT NO: 5760-00-73	HWY: STH 130	COUNTY: RICHLAND	PLAN SHEETS	SHEET 43	E

FILE NAME : G:\00-PROJECT FILES\2021\21168 ID 5760-00-03 STH 130, RICHLAND COUNTY\0-CAD\SHEETSPLAN\050201_PN.DWG
LAYOUT NAME - 050210_pn
PLOT DATE : 7/18/2025 8:54 AM PLOT BY : ERIK MEYER PLOT NAME : PLOT SCALE : 1 IN:100 FT

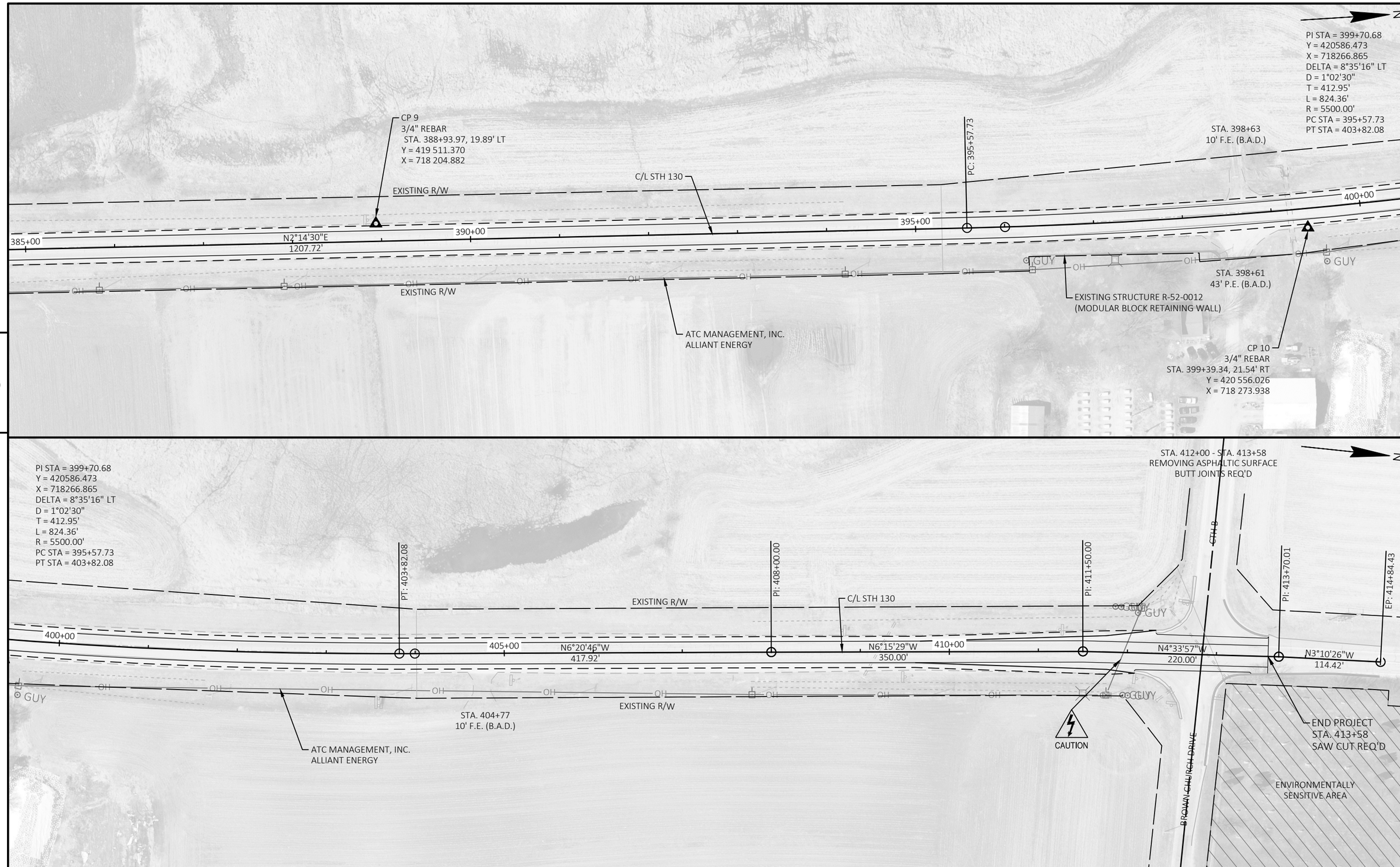

PROJECT NO: 5760-00-73	HWY: STH 130	COUNTY: RICHLAND	PLAN SHEETS	SHEET 44	E

FILE NAME : G:\00-PROJECT FILES\2021\21168 ID 5760-00-03 STH 130, RICHLAND COUNTY\0-CAD\SHEETSPLAN\050201_PN.DWG
LAYOUT NAME - 050211_pn
PLOT DATE : 7/18/2025 8:54 AM PLOT BY : ERIK MEYER PLOT NAME : PLOT SCALE : 1 IN:100 FT

Standard Detail Drawing List

08D22-01	DRIVEWAYS WITHOUT CURB & GUTTER RESURFACING PROJECTS RURAL
08E08-03	TYPICAL INSTALLATIONS OF EROSION BALES / TEMPORARY DITCH CHECKS
08E09-06	SILT FENCE
08E15-01	CULVERT PIPE CHECK
08F01-11	APRON ENDWALLS FOR CULVERT PIPE
08F02-01	APRON ENDWALLS FOR PIPE ARCH AND ELLIPTICAL PIPE
08F04-08	JOINT TIES FOR CONCRETE PIPE AND CONCRETE COLLAR DETAIL
08F07-05	STEEL APRON ENDWALLS FOR CULVERT PIPE AND PIPE ARCH SLOPED SIDE DRAINS
13A11-04A	CENTERLINE RUMBLE STRIPS - ASPHALT
13A11-04D	CENTERLINE RUMBLE STRIPS - INTERSECTIONS, DRIVEWAYS, BRIDGES, RAILROADS
13C19-03	HMA LONGITUDINAL JOINTS
14B29-01	SAFETY EDGE
14B42-07A	MIDWEST GUARDRAIL SYSTEM (MGS) GUARDRAIL
14B42-07B	MIDWEST GUARDRAIL SYSTEM (MGS) GUARDRAIL
14B42-07C	MIDWEST GUARDRAIL SYSTEM (MGS) GUARDRAIL
14B42-07D	MIDWEST GUARDRAIL SYSTEM (MGS) GUARDRAIL
14B44-04A	MIDWEST GUARDRAIL SYSTEM ENERGY ABSORBING TERMINAL (MGS)
14B44-04B	MIDWEST GUARDRAIL SYSTEM ENERGY ABSORBING TERMINAL (MGS)
14B44-04C	MIDWEST GUARDRAIL SYSTEM ENERGY ABSORBING TERMINAL (MGS)
14B45-05A	MIDWEST GUARDRAIL SYSTEM THRIE BEAM TRANSITION (MGS)
14B45-05B	MIDWEST GUARDRAIL SYSTEM THRIE BEAM TRANSITION (MGS)
14B45-05C	MIDWEST GUARDRAIL SYSTEM THRIE BEAM TRANSITION (MGS)
14B45-05G	MIDWEST GUARDRAIL SYSTEM THRIE BEAM TRANSITION (MGS)
15A03-02A	FLEXIBLE MARKER POST FOR CULVERT END
15A03-02B	FLEXIBLE MARKER POST FOR CULVERT END
15C02-09A	BARRICADES AND SIGNS FOR MAINLINE CLOSURES
15C02-09B	BARRICADES AND SIGNS FOR VARIOUS CLOSURES
15C11-10B	CHANNELIZING DEVICES DRUMS, CONES, BARRICADES AND VERTICAL PANELS

6

6

GENERAL NOTES

1. DESIGN WILL DETERMINE FINAL DRIVEWAY ASPHALTIC THICKNESS BASED ON TYPE OF USAGE AND LOADINGS.

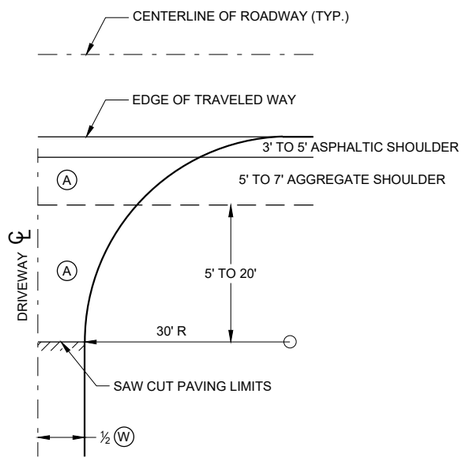

PLAN VIEW

A : PAID FOR AS ASPHALTIC SURFACE DRIVEWAYS AND FIELD ENTRANCES. (TON)

B : PAID FOR AS BASE AGGREGATE DENSE 1 ¼" (TON)

W : DRIVEWAY WIDTH 16' MIN. - 24' MAX.

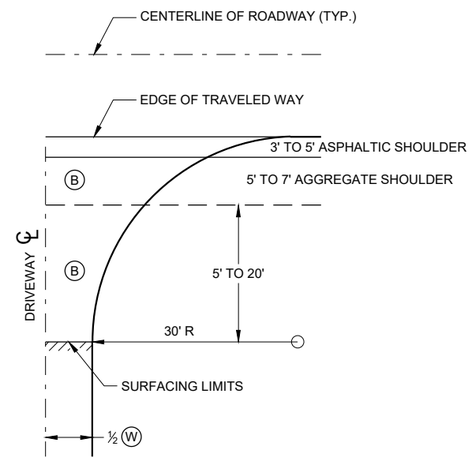

PLAN VIEW

HALF SECTION

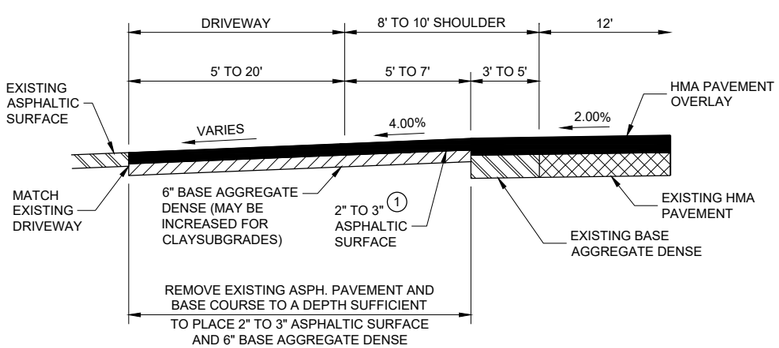

PROFILE VIEW

RURAL ENTRANCE WITH ASPHALTIC SURFACE

RESURFACING PROJECTS

PLAN VIEW

HALF SECTION

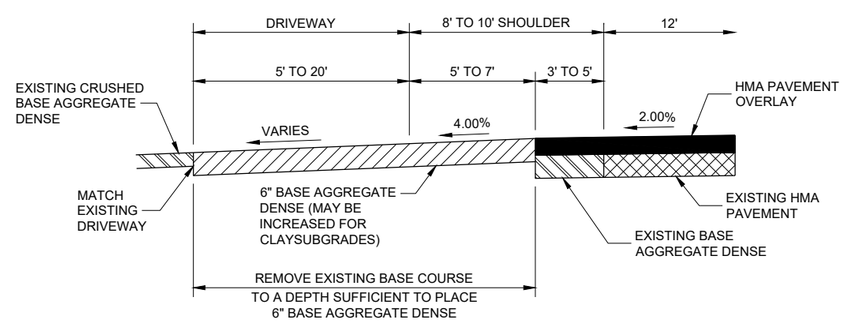

PROFILE VIEW

RURAL ENTRANCE WITH AGGREGATE SURFACE

6" BASE AGGREGATE DENSE RESURFACING PROJECTS

DRIVEWAYS WITHOUT CURB AND GUTTER RESURFACING PROJECTS RURAL

STATE OF WISCONSIN
DEPARTMENT OF TRANSPORTATION

APPROVED
December 2016 — DATE
/S/ Rodney Taylor — ROADWAY STANDARDS DEVE ENGINEER
FHWA

6

SDD 08D22 - 01

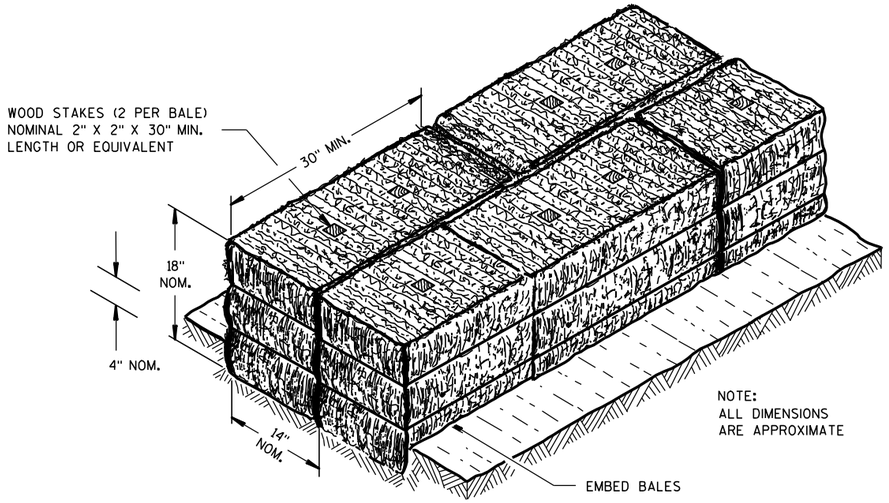

SECTION A-A

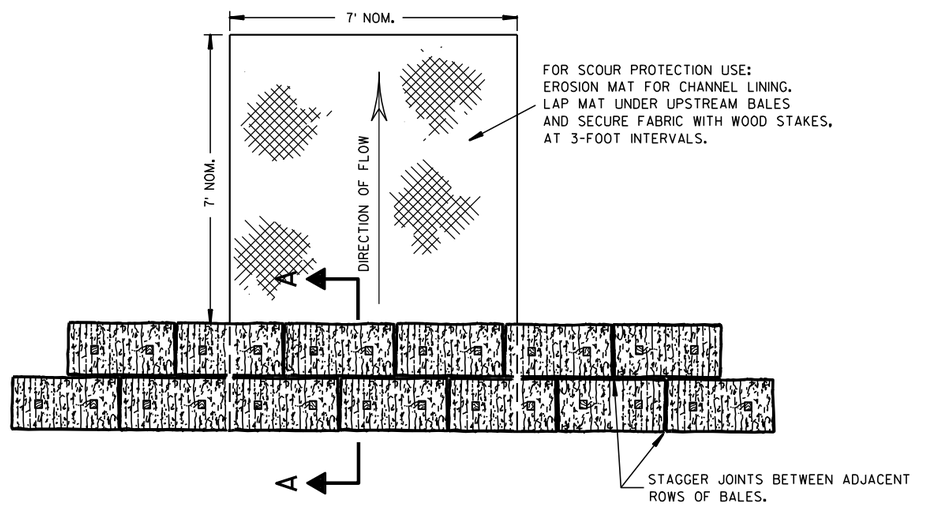

PLAN VIEW

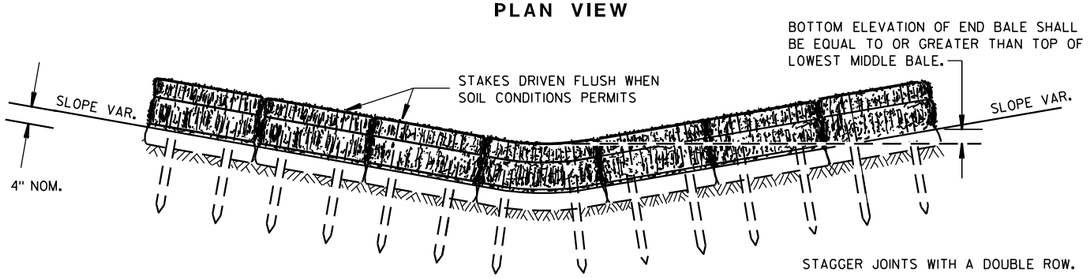

FRONT ELEVATION

TEMPORARY DITCH CHECK USING EROSION BALES ①

GENERAL NOTES

DETAILS OF CONSTRUCTION, MATERIALS AND WORKMANSHIP NOT SHOWN ON THIS DRAWING SHALL CONFORM TO THE PERTINENT REQUIREMENTS OF THE STANDARD SPECIFICATIONS AND THE APPLICABLE SPECIAL PROVISIONS.

① TEMPORARY DITCH CHECKS EITHER EROSION BALES OR MANUFACTURED SHALL BE PAID FOR UNDER THE BID ITEM OF TEMPORARY DITCH CHECK. THE DEPARTMENT WILL NOT PAY FOR TEMPORARY DITCH CHECKS CONSTRUCTED OF A SINGLE ROW OF EROSION BALES.

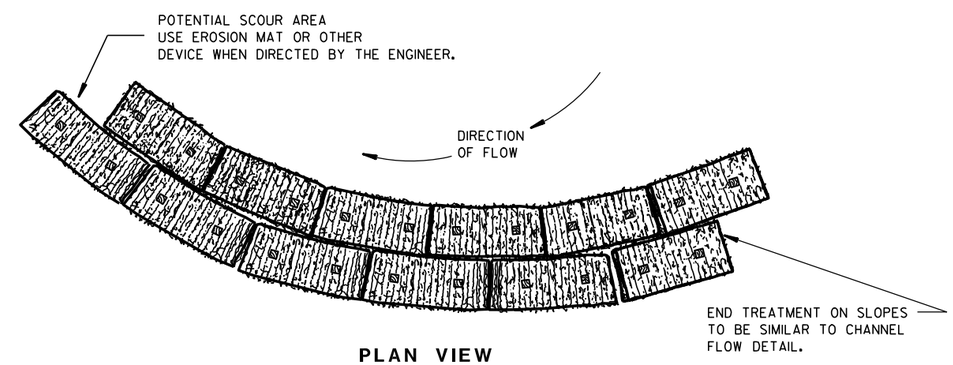

PLAN VIEW

WHEN ALTERING THE DIRECTION OF FLOW

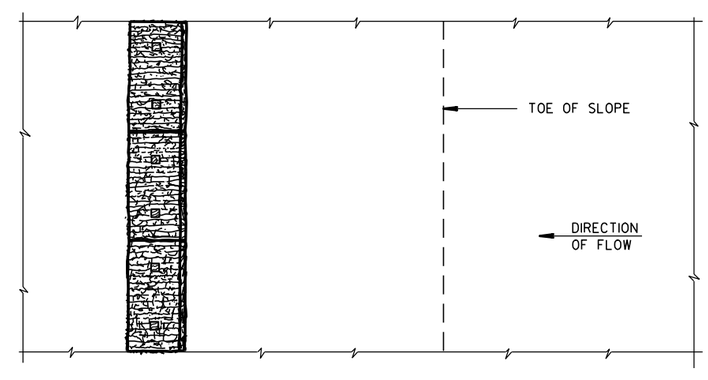

PLAN VIEW

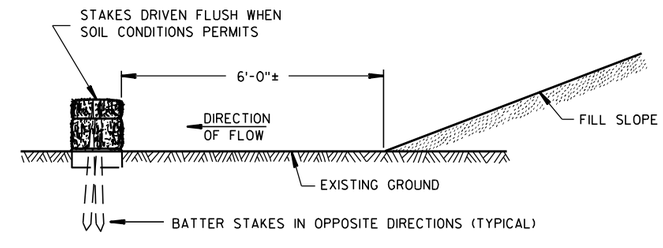

FRONT ELEVATION

WHEN EXISTING GROUND SLOPES AWAY FROM FILL SLOPE

EROSION BALES FOR SHEET FLOW

TYPICAL INSTALLATIONS OF EROSION BALES / TEMPORARY DITCH CHECKS

STATE OF WISCONSIN
DEPARTMENT OF TRANSPORTATION

APPROVED

6/04/02 — DATE

/S/ Beth Cann — CHIEF ROADWAY DEVELOPMENT ENGINEER

FHWA

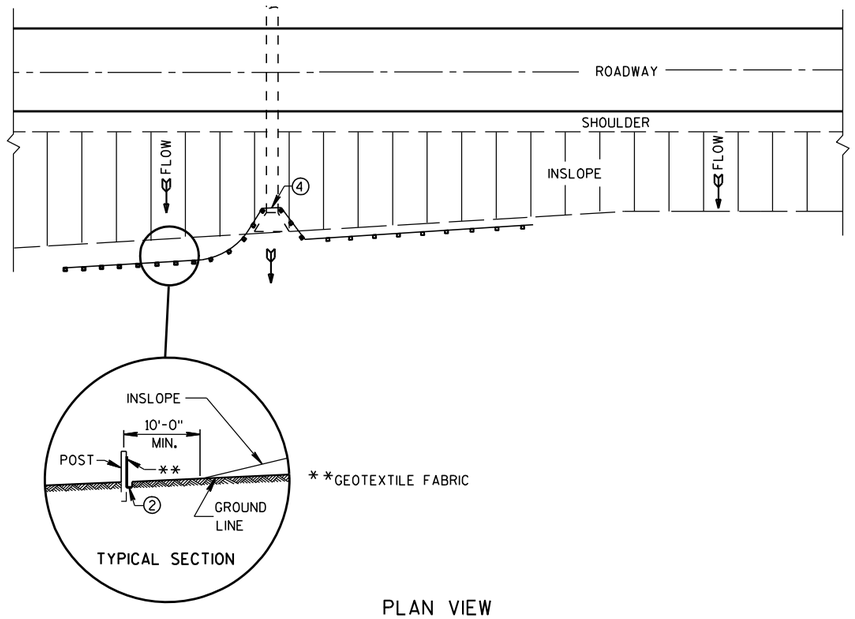

PLAN VIEW

TYPICAL APPLICATION OF SILT FENCE

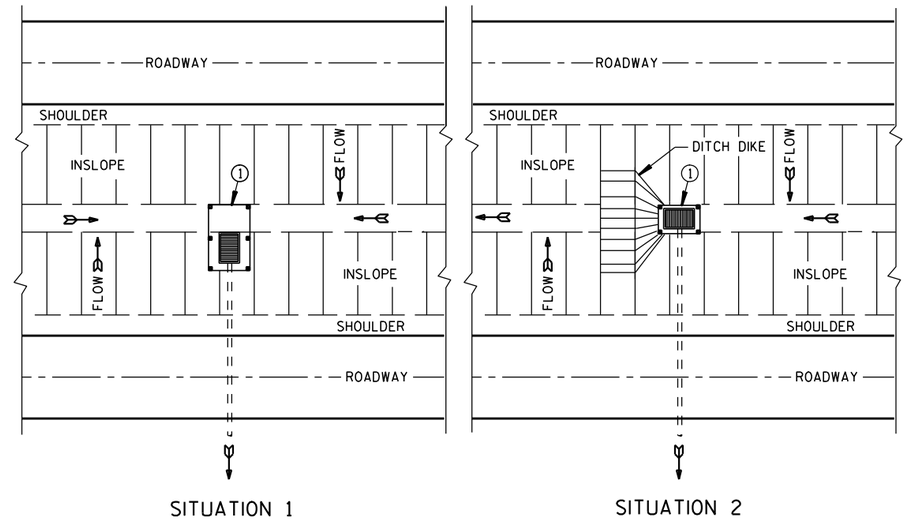

PLAN VIEW

SILT FENCE AT MEDIAN SURFACE DRAINS

GENERAL NOTES

DETAILS OF CONSTRUCTION NOT SHOWN ON THIS DRAWING SHALL CONFORM TO THE PERTINENT REQUIREMENTS OF THE STANDARD SPECIFICATIONS AND APPLICABLE SPECIAL PROVISIONS.

① HORIZONTAL BRACE REQUIRED WITH 2" X 4" WOODEN FRAME OR EQUIVALENT AT TOP OF POSTS.

② FOR MANUAL INSTALLATIONS THE TRENCH SHALL BE A MINIMUM OF 4" WIDE & 6" DEEP TO BURY AND ANCHOR THE GEOTEXTILE FABRIC. FOLD MATERIAL TO FIT TRENCH AND BACKFILL & COMPACT TRENCH WITH EXCAVATED SOIL.

③ WOOD POSTS SHALL BE A MINIMUM SIZE OF 1⅛" X 1⅛" OF OAK OR HICKORY.

④ SILT FENCE TO EXTEND ACROSS THE TOP OF THE PIPE.

⑤ CONSTRUCT SILT FENCE FROM A CONTINUOUS ROLL IF POSSIBLE BY CUTTING LENGTHS TO AVOID JOINTS. IF A JOINT IS NECESSARY USE ONE OF THE FOLLOWING TWO METHODS; A) OVERLAP THE END POSTS AND TWIST, OR ROTATE, AT LEAST 180 DEGREES. B) HOOK THE END OF EACH SILT FENCE LENGTH.

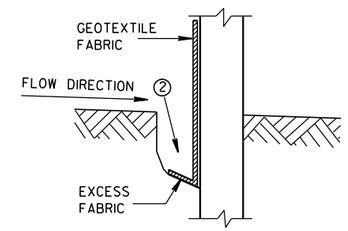

TRENCH DETAIL

NOTE: ADDITIONAL POST DEPTH OR TIE BACKS MAY BE REQUIRED IN UNSTABLE SOILS

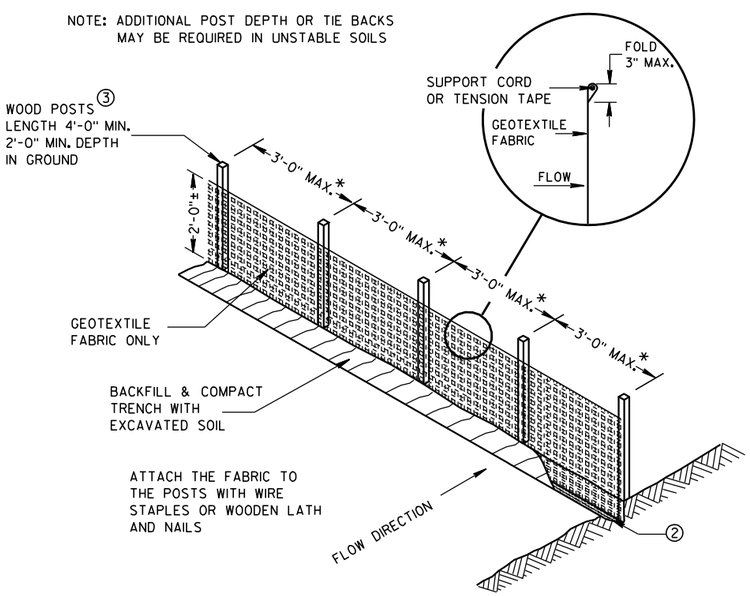

*NOTE: 8'-0" POST SPACING ALLOWED IF A WOVEN GEOTEXTILE FABRIC IS USED.

SILT FENCE

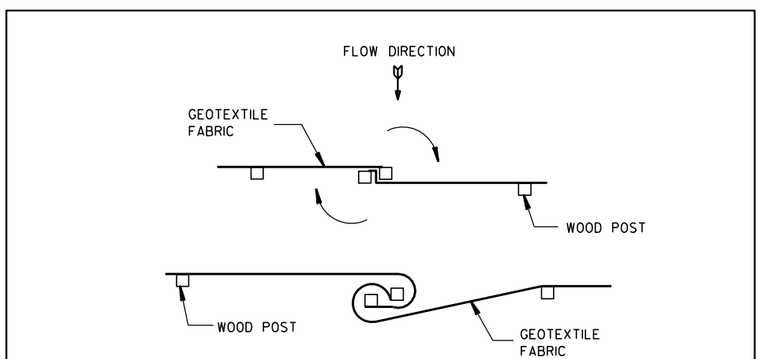

TWIST METHOD

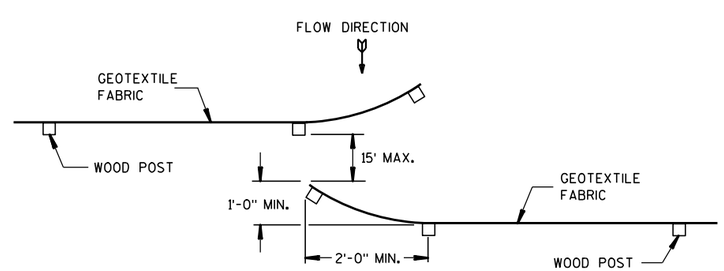

HOOK METHOD

JOINING TWO LENGTHS OF SILT FENCE ⑤

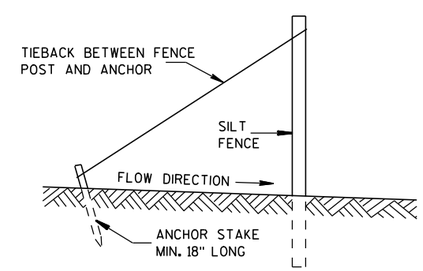

SILT FENCE TIE BACK

(WHEN REQUIRED BY THE ENGINEER)

SILT FENCE
STATE OF WISCONSIN DEPARTMENT OF TRANSPORTATION
APPROVED 4-29-05 DATE — /S/ Beth Cann-- CHIEF ROADWAY DEVELOP ENGINEER FHWA

6

6

S.D.D. 8 E 9-6

S.D.D. 8 E 9-6

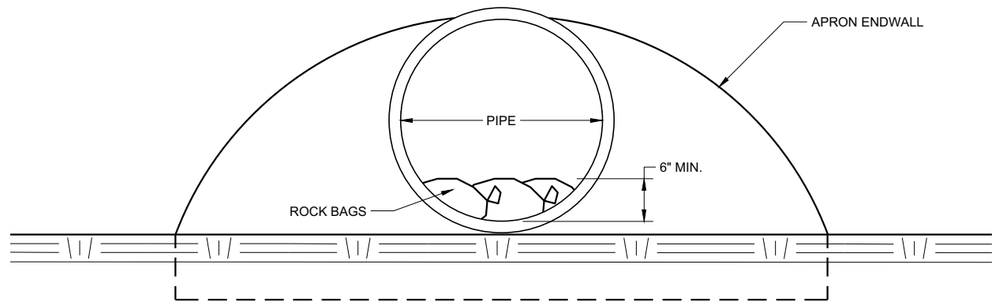

END VIEW

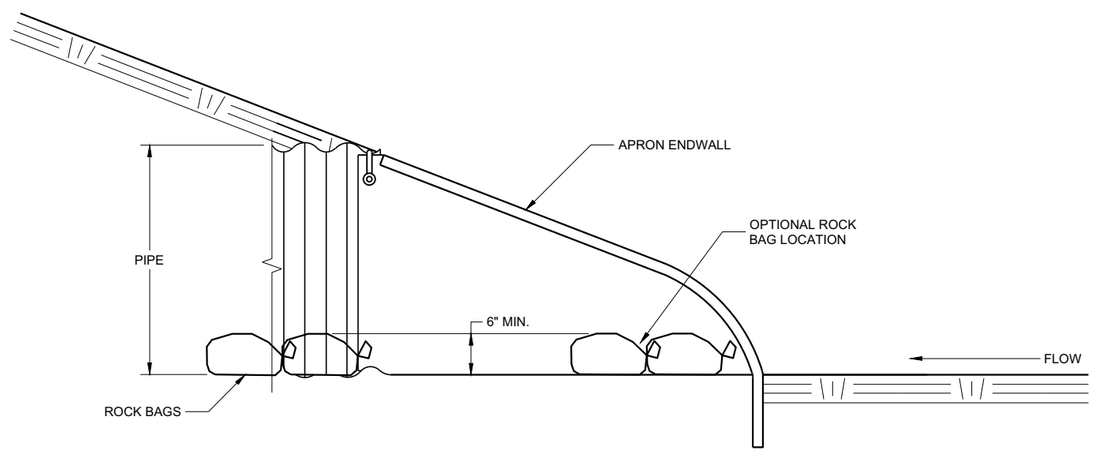

SIDE VIEW

CULVERT PIPE CHECK

(INSTALL ON INLET END ONLY)

CULVERT PIPE CHECK

STATE OF WISCONSIN
DEPARTMENT OF TRANSPORTATION

APPROVED
May 2019 — DATE
/S/ Daniel Schave — EROSION CONTROL ENGI
FHWA

6

6

SDD 08E15 - 01

SDD 08E15 - 01

METAL APRON ENDWALLS

PIPE DIA. (IN.)	MIN. THICK. (Inches) STEEL	MIN. THICK. (Inches) ALUM.	DIMENSIONS (Inches) A (±1")	B (MAX.)	H (±1")	L (±1 1/2")	L1 ①	L2 ①	W (±2")	APPROX. SLOPE	BODY
12	.064	.060	6	6	6	21	12	17 1/2	24	2 1/2 to 1	1 Pc.
15	.064	.060	7	8	6	26	14	21 3/4	30	2 1/2 to 1	1 Pc.
18	.064	.060	8	10	6	31	15	28 1/4	36	2 1/2 to 1	1 Pc.
21	.064	.060	9	12	6	36	18	29 5/8	42	2 1/2 to 1	1 Pc.
24	.064	.075	10	13	6	41	18	37 1/4	48	2 1/2 to 1	1 Pc.
30	.079	.075	12	16	8	51	18	52 1/4	60	2 1/2 to 1	1 Pc.
36	.079	.105	14	19	9	60	24	59 3/4	72	2 1/2 to 1	2 Pc.
42	.109	.105	16	22	11	69	24	75 5/8	84	2 1/2 to 1	2 Pc.
48	.109	.105	18	27	12	78	24	81	90	2 1/4 to 1	3 Pc.
54	.109	.105	18	30	12	84	30	85 1/2	102	2 1/4 to 1	3 Pc.
60	.109×	.105×	18	33	12	87	—	—	114	2 to 1	3 Pc.
66	.109×	.105×	18	36	12	87	—	—	120	2 to 1	3 Pc.
72	.109×	.105×	18	39	12	87	—	—	126	2 to 1	3 Pc.
78	.109×	.105×	18	42	12	87	—	—	132	1 1/2 to 1	3 Pc.
84	.109×	.105×	18	45	12	87	—	—	138	1 1/2 to 1	3 Pc.
90	.109×	.105×	18	37	12	87	—	—	144	1 1/2 to 1	3 Pc.
96	.109×	.105×	18	35	12	87	—	—	150	1 1/2 to 1	3 Pc.

× EXCEPT CENTER PANEL
SEE GENERAL NOTES

REINFORCED CONCRETE APRON ENDWALLS

PIPE DIA. (IN.)	DIMENSIONS (Inches) T	A	B	C	D	E	G	APPROX. SLOPE
12	2	4	24	48 7/8	72 7/8	24	2	3 to 1
15	2 1/4	6	27	46	73	30	2 1/4	3 to 1
18	2 1/2	9	27	46	73	36	2 1/2	3 to 1
21	2 3/4	9	36	37 1/2	73 1/2	42	2 3/4	3 to 1
24	3	9 1/2	43 1/2	30	73 1/2	48	3	3 to 1
27	3 1/4	10 1/2	49 1/2	24	73 1/2	54	3 1/4	3 to 1
30	3 1/2	12	54	19 3/4	73 1/2	60	3 1/2	3 to 1
36	4	15	63	34 3/4	97 3/4	72	4	3 to 1
42	4 1/2	21	63	35	98	78	4 1/2	3 to 1
48	5	24	72	26	98	84	5	3 to 1
54	5 1/2	27	65	*33 1/4-**35	*98 1/4-**100	90	5 1/2	2 2/5 to 1
60	6	*30-**35	60	39	99	96	5	2 to 1
66	6 1/2	*24-**30	*72-**78	*21-**27	99	102	5 1/2	2 to 1
72	7	*24-**36	78	21	99	108	6	2 to 1
78	7 1/2	*24-**36	78	21	99	114	6 1/2	2 to 1
84	8	36	90 1/2	21	111 1/2	120	6 1/2	1 1/2 to 1
90	8 1/2	41	87 1/2	24	111 1/2	132	6 1/2	1 1/2 to 1

*MINIMUM
**MAXIMUM

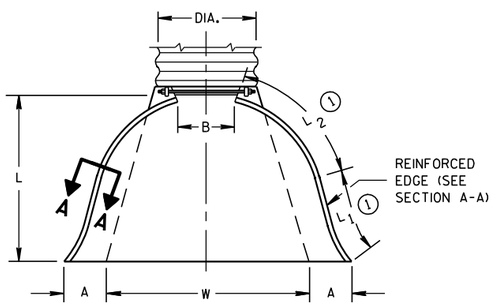

PLAN VIEW

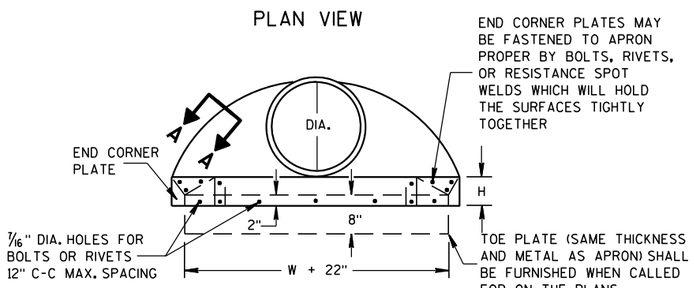

END VIEW

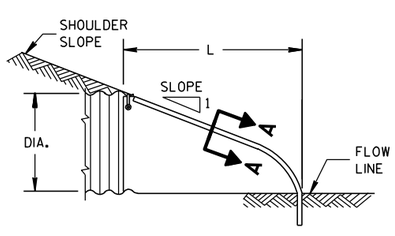

SIDE ELEVATION

METAL ENDWALLS

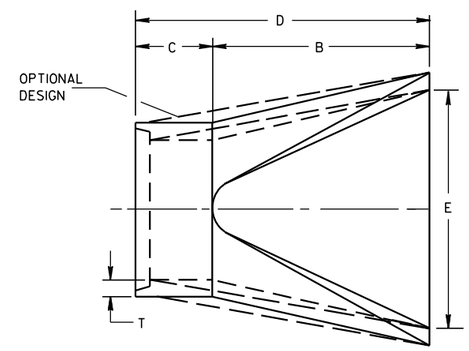

PLAN

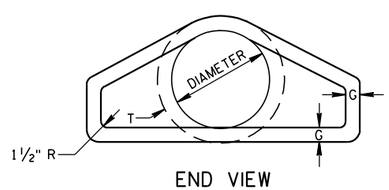

END VIEW

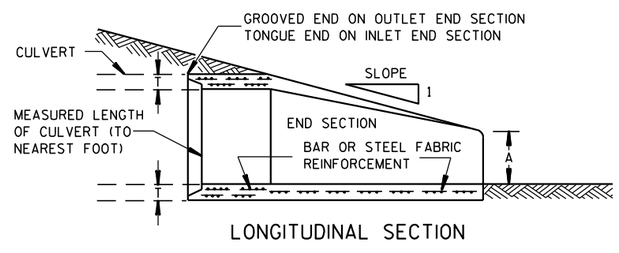

LONGITUDINAL SECTION

CONCRETE ENDWALLS

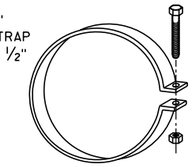

ALTERNATE FOR TYPE 1 CONNECTION

END SECTION CONNECTOR STRAP

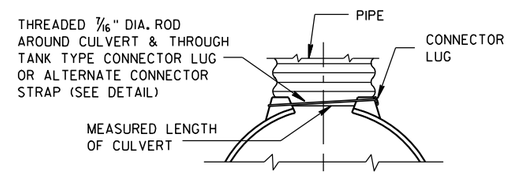

TYPE 1
FOR 12" THRU 24" CORR. PIPE

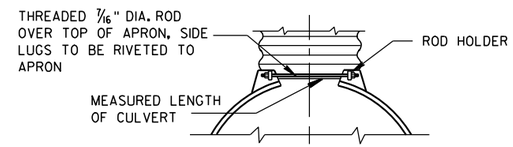

TYPE 2
FOR 30" THRU 96" CORR. PIPE

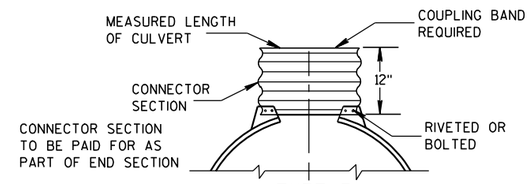

TYPE 3
FOR 42" THRU 96" CORR. PIPE

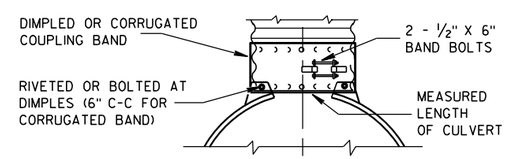

TYPE 5
ALTERNATE FOR:
ALL SIZES CORRUGATED CIRCULAR PIPE

NOTE: DIMPLED BAND FITS OVER OUTSIDE OF ENDWALL, AND CORRUGATED BAND FITS INSIDE ENDWALL. DIMPLED BAND MAY BE USED WITH HELICALLY CORRUGATED PIPE.

FOR CIRCUMFERENTIALLY CORRUGATED PIPE USE ENDWALL CONNECTION DETAILS 1, 2, 3 OR 5 AS APPLICABLE.

FOR HELICALLY CORRUGATED PIPE USE ENDWALL CONNECTION DETAILS 1, 2 OR 5.

FOR HELICALLY CORRUGATED PIPES WITH TWO CIRCUMFERENTIAL CORRUGATIONS AT EACH END USE ENDWALL CONNECTION DETAILS 1, 2 OR 3.

CONNECTION DETAILS

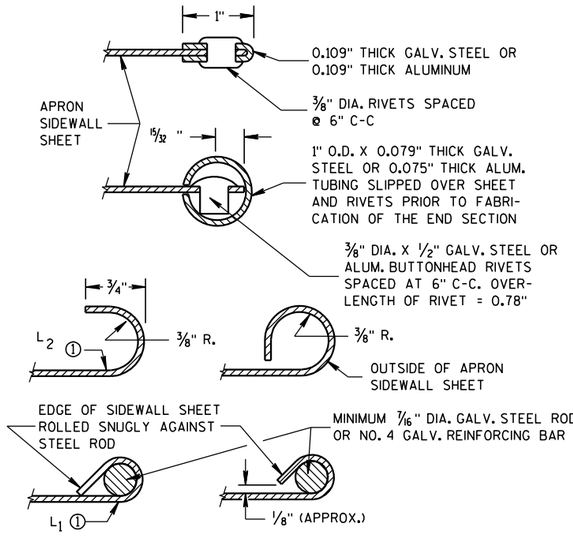

SECTION A-A

GENERAL NOTES

DETAILS OF CONSTRUCTION, MATERIALS AND WORKMANSHIP NOT SHOWN ON THIS DRAWING SHALL CONFORM TO THE PERTINENT REQUIREMENTS OF THE STANDARD SPECIFICATIONS AND THE APPLICABLE SPECIAL PROVISIONS.

CONCRETE CULVERT ENDWALLS MAY NOT BE USED WITH GALVANIZED STEEL OR ALUMINUM CULVERT PIPE OR VISE VERSA. GALVANIZED STEEL OR ALUMINUM ENDWALLS SHALL NORMALLY BE INSTALLED ON CULVERT PIPE OF THE SAME METAL.

ALL THREE PIECE STEEL APRON ENDWALLS FOR 60" DIAMETER PIPE AND LARGER SHALL HAVE 0.109" SIDES AND 0.138" CENTER PANELS. ALL THREE PIECE ALUMINUM APRON ENDWALLS FOR 60" DIAMETER PIPE AND LARGER SHALL HAVE 0.105" SIDES AND 0.134" CENTER PANELS. THE WIDTH OF CENTER PANELS SHALL BE GREATER THAN 20 PERCENT OF THE PIPE PERIMETER.

LAP SEAMS SHALL BE TIGHTLY JOINED BY GALVANIZED RIVETS OR BOLTS FOR STEEL UNITS AND ALUMINUM RIVETS AND BOLTS FOR ALUMINUM UNITS. FOR THE 60" THROUGH 96" DIAMETER APRON ENDWALL SIZES, THE REINFORCED EDGES AND CENTER PANEL SEAMS SHALL BE FURTHER REINFORCED WITH GALVANIZED STEEL OR ALUMINUM STIFFENER ANGLES. THE ANGLES SHALL BE ATTACHED BY GALVANIZED NUTS AND BOLTS FOR STEEL UNITS AND ALUMINUM NUTS AND BOLTS FOR ALUMINUM UNITS.

WHERE TWO OR MORE PIPES WITH APRON ENDWALLS ARE LAID ADJACENT TO EACH OTHER, THEY SHALL BE SEPARATED BY A DISTANCE SUFFICIENT TO PROVIDE A MINIMUM CLEARANCE OF 6 INCHES BETWEEN APRON ENDWALLS.

① FOR PIPE SIZES UP TO 60" DIAMETER, A 180° ROLLED EDGE MAY BE USED INSTEAD OF STEEL ROD REINFORCEMENT. SEE SECTION A-A.

APRON ENDWALLS FOR CULVERT PIPE

STATE OF WISCONSIN
DEPARTMENT OF TRANSPORTATION

APPROVED
11/30/94 — DATE
/S/ Rory L. Rhinesmith — CHIEF ROADWAY DEVELOPMENT ENGINEER
FHWA

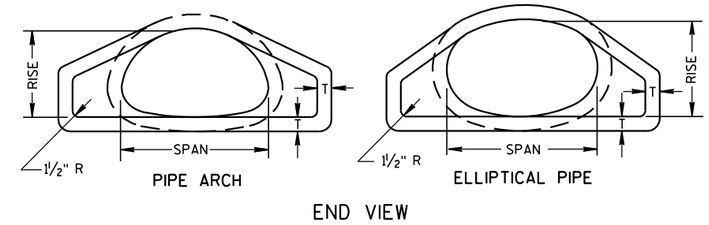

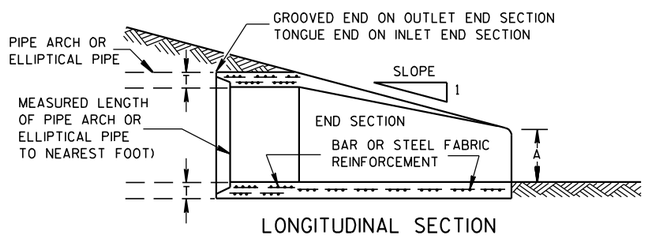

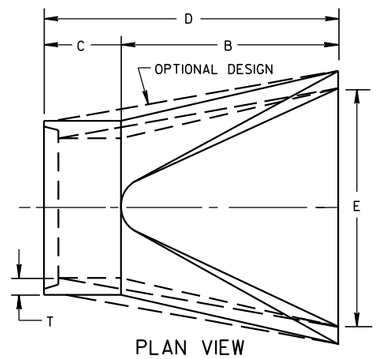

CONCRETE ENDWALLS

2- ⅔" X ½" CORRUGATIONS														
EQUIV. DIA. (Inches)	(Inches)		MIN. THICK. (Inches)		DIMENSIONS (Inches)							APPROX. SLOPE	BODY
	SPAN	RISE	STEEL	ALUM.	A (±1")	B (MAX.)	H (±1")	L (±1½")	L1 ①	L2 ①	W (±2")		
15	17	13	.064	.060	7	9	6	19	14	16	30	2½ to 1	1 Pc.
18	21	15	.064	.060	7	10	6	23	14	19⅜	36	2½ to 1	1 Pc.
21	24	18	.064	.060	8	12	6	28	18	21¾	42	2½ to 1	1 Pc.
24	28	20	.064	.060	9	14	6	32	18	27½	48	2½ to 1	1 Pc.
30	35	24	.079	.075	10	16	6	39	18	37⅝	60	2½ to 1	1 Pc.
36	42	29	.079	.075	12	18	8	46	24	45⅜	75	2½ to 1	1 Pc.
42	49	33	.109	.105	13	21	9	53	24	54¾	85	2½ to 1	2 Pc.
48	57	38	.109	.105	18	26	12	63	24	68	90	2½ to 1	3 Pc.
54	64	43	.109	.105	18	30	12	70	24	72¾	102	2¼ to 1	3 Pc.
60	71	47	.109*	.105*	18	33	12	77	30	82¼	114	2¼ to 1	3 Pc.
66	77	52	.109*	.105*	18	36	12	77	—	—	126	2 to 1	3 Pc.
72	83	57	.109*	.105*	18	39	12	77	—	—	138	2 to 1	3 Pc.

3" X 1" CORRUGATIONS														
EQUIV. DIA. (Inches)	(Inches)		MIN. THICK. (Inches)		DIMENSIONS (Inches)							APPROX. SLOPE	BODY
	SPAN	RISE	STEEL	ALUM.	A (±1")	B (MAX.)	H (±1")	L (±1½")	L1 ①	L2 ①	W (±2")		
48	53	41	.109	.105	18	26	12	63	24	72¾	90	2½ to 1	2 Pc.
54	60	46	.109	.105	18	30	12	70	30	82¼	102	2 to 1	2 Pc.
60	66	51	.109*	.105*	18	33	12	77	—	—	114	1½ to 1	3 Pc.
66	73	55	.109*	.105*	18	36	12	77	—	—	126	1½ to 1	3 Pc.
72	81	59	.109*	.105*	18	39	12	77	—	—	138	2 to 1	3 Pc.
78	87	63	.109*	.105*	22	38	12	77	—	—	148	1½ to 1	3 Pc.
84	95	67	.109*	.105*	22	34	12	77	—	—	162	1½ to 1	3 Pc.
90	103	71	.109*	.105*	22	38	12	77	—	—	174	1½ to 1	3 Pc.
96	112	75	.109*	.105*	24	40	12	77	—	—	174	1½ to 1	3 Pc.

NOTE: ALL SPLICES TO BE LAP RIVETED OR BOLTED.

* EXCEPT CENTER PANEL SEE GENERAL NOTES

REINFORCED CONCRETE PIPE ARCH									
EQUIV. DIA. (Inches)	DIMENSIONS (Inches)								APPROX. SLOPE
	** SPAN	** RISE	T	A	B	C	D	E	
24	29	18	3	8½	39	33	72	48	3 to 1
30	36	22	3½	9½	50	46	96	60	3 to 1
36	44	27	4	11⅛	60	36	96	72	3 to 1
42	51	31	4½	15 13/16	60	36	96	78	3 to 1
48	58	36	5	21	60	36	96	84	3 to 1
54	65	40	5½	25½	60	36	96	90	3 to 1
60	73	45	6	31	60	36	96	96	3 to 1
72	88	54	7	31	60	39	99	120	2 to 1
84	102	62	8	28½	83	19	102	144	2 to 1

REINFORCED CONCRETE ELLIPTICAL PIPE									
EQUIV. DIA. (Inches)	DIMENSIONS (Inches)								APPROX. SLOPE
	** SPAN	** RISE	T	A	B	C	D	E	
24	30	19	3¼	8½	39	33	72	48	3 to 1
30	38	24	3¾	9½	54	18	72	60	3 to 1
36	45	29	4½	11⅛	60	24	84	72	2½ to 1
42	53	34	5	15¾	60	36	96	78	2½ to 1
48	60	38	5½	21	60	36	96	84	2½ to 1
54	68	43	6	25½	60	36	96	90	2½ to 1
60	76	48	6½	30	60	36	96	96	2½ to 1

**NOMINAL SIZE

GENERAL NOTES

DETAILS OF CONSTRUCTION, MATERIALS AND WORKMANSHIP NOT SHOWN ON THIS DRAWING SHALL CONFORM TO THE PERTINENT REQUIREMENTS OF THE STANDARD SPECIFICATIONS AND THE APPLICABLE SPECIAL PROVISIONS.

CONCRETE APRON ENDWALLS MAY NOT BE USED WITH GALVANIZED STEEL OR ALUMINUM CULVERT PIPE OR VISE VERSA. GALVANIZED STEEL OR ALUMINUM APRON ENDWALLS SHALL NORMALLY BE INSTALLED ON CULVERT PIPE OF THE SAME METAL.

ALL THREE PIECE STEEL APRON ENDWALLS FOR 66" X 51" PIPE ARCH AND LARGER SHALL HAVE 0.109" SIDES AND 0.138" CENTER PANELS. ALL THREE PIECE ALUMINUM APRON ENDWALLS FOR 66" X 51" PIPE ARCH AND LARGER SHALL HAVE 0.105" SIDES AND 0.134" CENTER PANELS. THE WIDTH OF CENTER PANELS SHALL BE GREATER THAN 20 PERCENT OF THE PIPE ARCH PERIMETER.

LAP SEAMS SHALL BE TIGHTLY JOINED BY GALVANIZED RIVETS OR BOLTS FOR STEEL UNITS AND ALUMINUM RIVETS AND BOLTS FOR ALUMINUM UNITS. FOR THE 77" X 52" THROUGH 112" X 75" APRON ENDWALL SIZES, THE REINFORCED EDGES AND CENTER PANEL SEAMS SHALL BE FURTHER REINFORCED WITH GALVANIZED STEEL OR ALUMINUM STIFFENER ANGLES. THE ANGLES SHALL BE ATTACHED BY GALVANIZED NUTS AND BOLTS FOR STEEL UNITS AND ALUMINUM NUTS AND BOLTS FOR ALUMINUM UNITS.

WHERE TWO OR MORE PIPES WITH APRON ENDWALLS ARE LAID ADJACENT TO EACH OTHER, THEY SHALL BE SEPARATED BY A DISTANCE SUFFICIENT TO PROVIDE A MINIMUM CLEARANCE OF 6 INCHES BETWEEN APRON ENDWALLS.

① FOR PIPE ARCH SIZES UP TO 73" X 55" A 180° ROLLED EDGE MAY BE USED INSTEAD OF STEEL ROD REINFORCEMENT. SEE SECTION A-A.

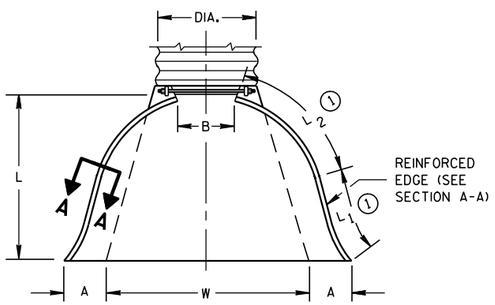

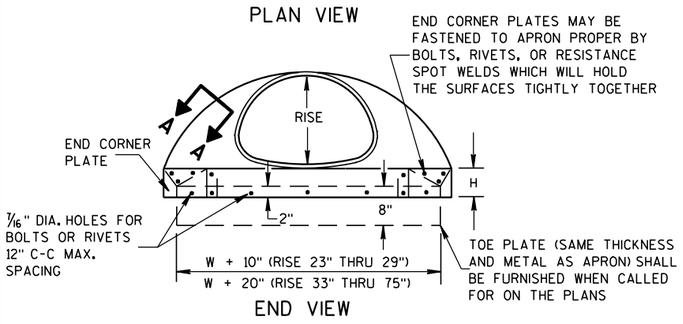

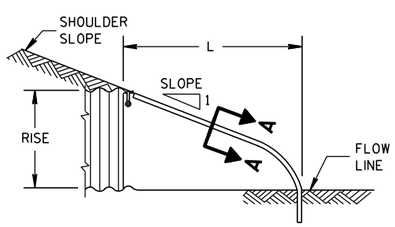

SIDE ELEVATION

METAL ENDWALLS

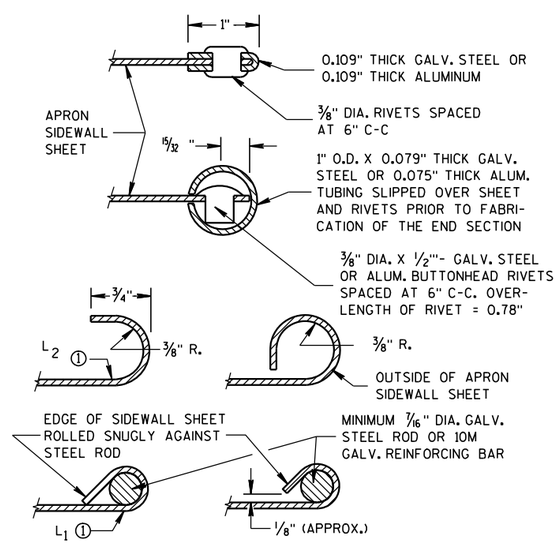

SECTION A-A

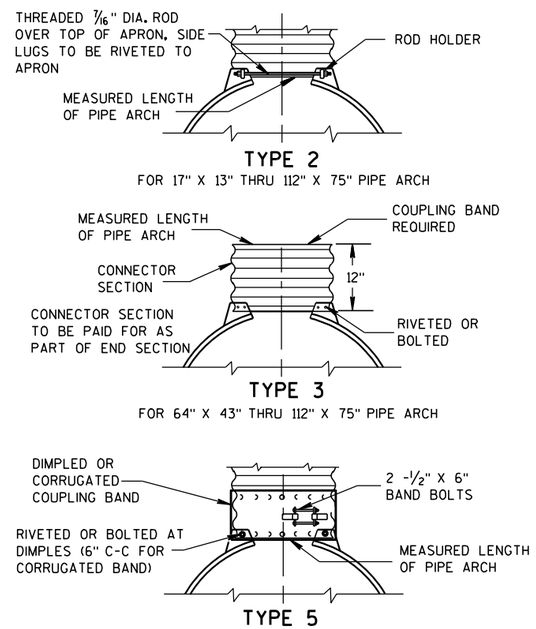

NOTE: DIMPLED BAND FITS OVER OUTSIDE OF ENDWALL, AND CORRUGATED BAND FITS INSIDE ENDWALL.

CONNECTION DETAILS

APRON ENDWALLS FOR PIPE ARCH AND ELLIPTICAL PIPE

STATE OF WISCONSIN
DEPARTMENT OF TRANSPORTATION

APPROVED

11/30/94 — DATE

/S/ Rory L. Rhinesmith — CHIEF ROADWAY DEVELOPMENT ENGINEER

FHWA

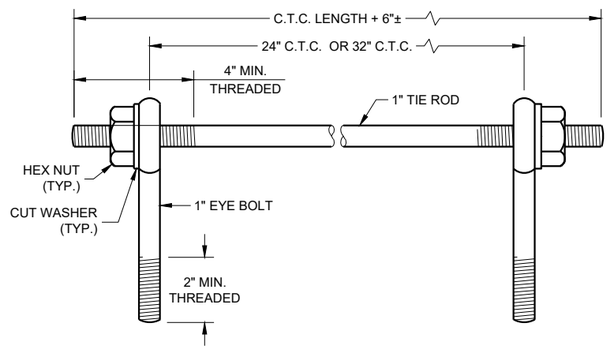

EYE BOLTS AND TIE ROD

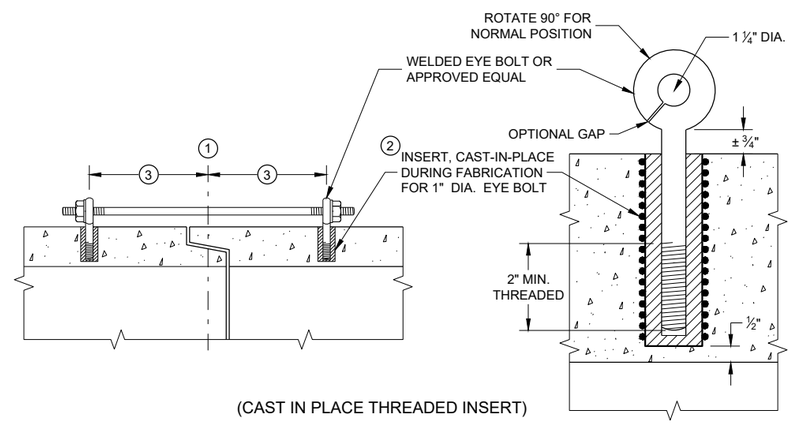

(CAST IN PLACE THREADED INSERT)

LONGITUDINAL SECTIONS

EYE BOLT AND TIE ROD ASSEMBLY (ALTERNATE NO. 1)

GENERAL NOTES

DETAILS OF CONSTRUCTION, MATERIALS, AND WORKMANSHIP NOT SHOWN ON THIS DRAWING SHALL CONFORM TO THE PERTINENT REQUIREMENTS OF THE STANDARD SPECIFICATIONS AND APPLICABLE SPECIAL PROVISIONS.

CONCRETE CULVERT AND STORM SEWER PIPE SHALL BE TIED TOGETHER IN THE MANNER ILLUSTRATED BY THIS DETAIL AT LOCATIONS DESIGNATED IN THE STANDARD SPECIFICATIONS AND THE PLAN. THE CONTRACTOR MAY USE EITHER ALTERNATE 1, 2 OR 3 FOR DRAINAGE STRUCTURES. ONLY ALTERNATE 1 AND 3 MAY BE USED FOR CATTLE PASSES, UNLESS OTHERWISE STATED IN THE CONTRACT. THE MATERIALS, FABRICATION AND WORK NECESSARY TO TIE THE PIPE BY THIS DETAIL WILL BE CONSIDERED INCIDENTAL TO THE PIPE AND APRON ENDWALLS IF REQUIRED.

DETAILED DRAWINGS FOR PROPOSED ALTERNATE DESIGNS FOR JOINT TIES SHALL BE SUBMITTED TO THE ENGINEER FOR APPROVAL.

JOINT TIES TO BE HOT-DIP GALVANIZED PER ASTM A 153.

1. CENTER LINE OF TONGUE AND GROOVE OR BELL AND SPIGOT JOINTS.
2. THE INSIDE OF THE THREADED INSERTS SHALL BE CLEAN TO ALLOW THE INSERTION OF THREADED EYE BOLTS.
3. HOLES SHALL BE CAST-IN-PLACE OR DRILLED PER THE APPLICABLE DETAIL, AND EQUAL DISTANCE FROM THE CENTERLINE OF THE JOINT.
4. BOLT PROJECTION INSIDE OF PIPE SHALL NOT EXCEED 2 INCHES.
5. OPENING TO BE ROD DIAMETER PLUS 1 INCH.
6. LENGTH ADEQUATE TO EXTEND TO WITHIN ½ INCH OF THE INNER SURFACE OF THE PIPE.
7. EYE BOLT LENGTH DETERMINED BY WALL THICKNESS, BELL THICKNESS AND BOLT PROJECTION INSIDE PIPE.

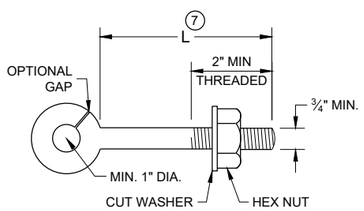

EYE BOLT 7

NOTE: TWO EYE BOLTS MAY BE USED WITH A 30" OR 38" LONG THREADED ROD IN LIEU OF THE 90° BENT TIE ROD.

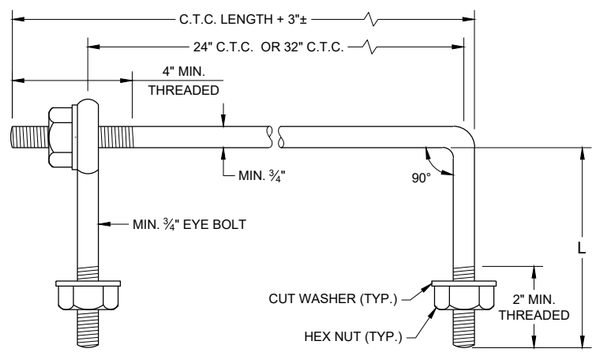

EYE BOLT AND TIE ROD

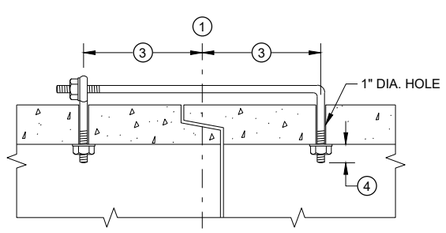

(TONGUE AND GROOVE PIPE)

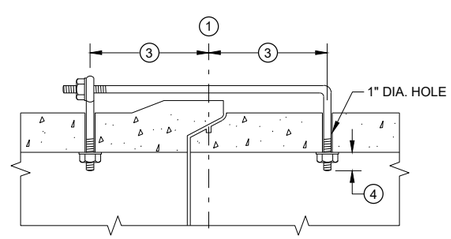

(MODIFIED BELL PIPE)

LONGITUDINAL SECTION

(JOINT TIES FOR 18" TO 66" DIA. CONCRETE PIPE)

EYE BOLT AND TIE ROD ASSEMBLY (ALTERNATE NO. 2)

ADJUSTABLE TIE ROD TABLE

PIPE DIAMETER	TIE ROD DIAMETER	D	L_1	N
12 - 60	⅝	⅝	5	½
66 - 84	¾	¾	5	½
90 - 144	1	1	7	1 7/16

DIMENSIONS SHOWN ARE IN INCHES

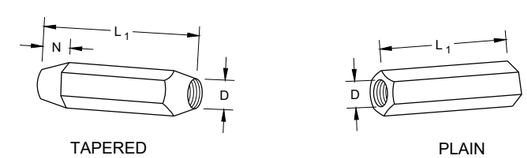

RIGHT AND LEFT THREADS

SLEEVE NUTS

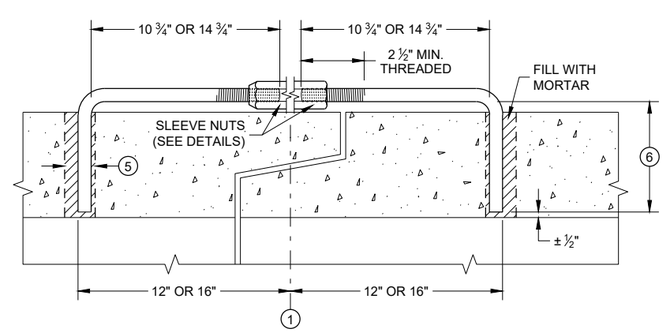

LONGITUDINAL SECTION

ADJUSTABLE TIE ROD (ALTERNATE NO. 3)

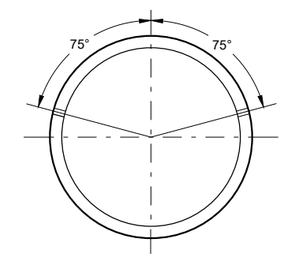

PLACEMENT OF (2) CAST-IN-PLACE INSERTS OR HOLES DURING FABRICATION FOR PIPE SECTIONS REQUIRING TIE RODS

TRANSVERSE SECTION

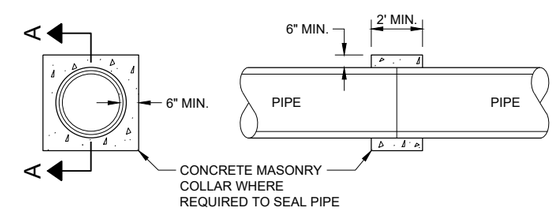

SECTION A - A

CONCRETE COLLAR DETAIL

JOINT TIES FOR CONCRETE PIPE AND CONCRETE COLLAR DETAIL

STATE OF WISCONSIN
DEPARTMENT OF TRANSPORTATION

APPROVED
November 2021 — DATE
/S/ Rodney Taylor — ROADWAY STANDARDS DEVE ENGINEER
FHWA

6

SDD 08F04 - 08

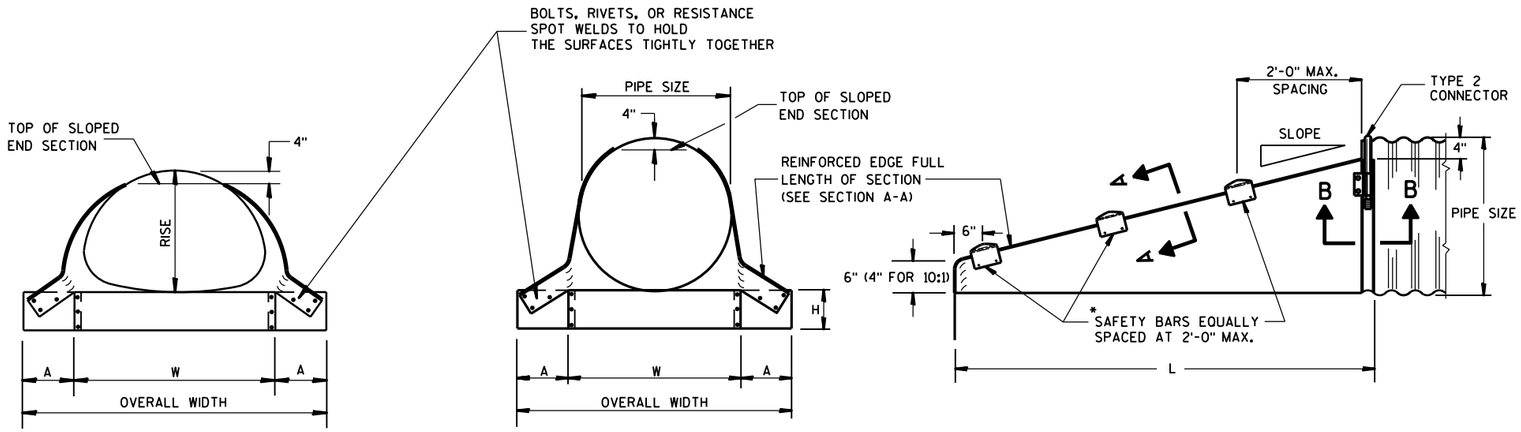

FRONT VIEW

FRONT VIEW

SIDE VIEW

GENERAL NOTES

DETAILS OF CONSTRUCTION, MATERIALS AND WORKMANSHIP NOT SHOWN ON THIS DRAWING SHALL CONFORM TO THE PERTINENT REQUIREMENTS OF THE STANDARD SPECIFICATIONS AND THE APPLICABLE SPECIAL PROVISIONS.

SLOPED END SECTIONS SHALL CONFORM TO THE REQUIREMENTS OF THE STANDARD SPECIFICATIONS, SECTION 521 FOR STEEL APRON ENDWALLS.

SAFETY BARS SHALL BE FABRICATED FROM GALVANIZED STEEL PIPE MEETING THE REQUIREMENTS OF ASTM A-53, GRADE B, SCHEDULE 40 OR APPROVED EQUAL.

STEEL APRON ENDWALLS FOR CULVERT PIPE SLOPED SIDE DRAINS

PIPE DIA. (IN.)	MIN. THICK. (Inches)	DIMENSIONS (Inches)				L DIMENSIONS					
		A	H	W	OVERALL WIDTH	SLOPE	LENGTH INCHES	SLOPE	LENGTH INCHES	SLOPE	LENGTH INCHES
15	.064	8	6	21	37	4:1	20	6:1	30	10:1	70
18	.064	8	6	24	40	4:1	32	6:1	48	10:1	100
21	.064	8	6	27	43	4:1	44	6:1	66	10:1	130
24	.064	8	6	30	46	4:1	56	6:1	84	10:1	160
30	.109	12	9	36	60	4:1	80	6:1	120	10:1	220
36	.109	12	9	42	66	4:1	104	6:1	156	10:1	280
42	.109	16	12	48	80	4:1	128	6:1	192	——	——
48	.109	16	12	54	86	4:1	152	6:1	228	——	——
54	.109	16	12	60	92	4:1	176	6:1	264	——	——
60	.109	16	12	66	98	4:1	200	6:1	300	——	——

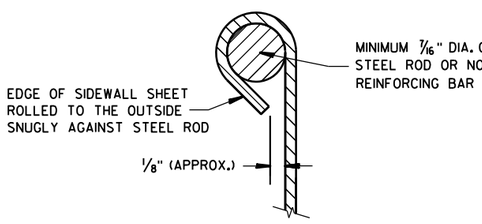

SECTION A-A

*NOTE:
THREE SAFETY BARS ARE SHOWN. ACTUAL NUMBER OF BARS REQUIRED AT A 2'-0" C-C MAX. SPACING WILL VARY DEPENDING ON THE LENGTH OF THE END SECTION.

3" GALVANIZED PIPE. FLATTEN ENDS, THEN BEND OUTSIDE 4" TO MATCH END SECTION SIDES.

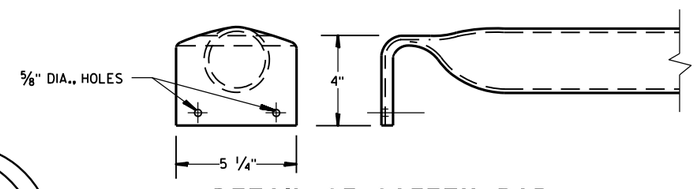

DETAIL OF SAFETY BAR

STEEL APRON ENDWALLS FOR PIPE ARCH SLOPED SIDE DRAINS

EQUIV. DIA. (Inches)	(Inches)		MIN. THICK. (Inches) ①	DIMENSIONS (Inches)				L DIMENSIONS					
	SPAN	RISE		A	H	W	OVERALL WIDTH	SLOPE	LENGTH INCHES	SLOPE	LENGTH INCHES	SLOPE	LENGTH INCHES
15	17	13	.064 *	7	6	30	44	4:1	19	6:1	30	10:1 ②	70
18	21	15	.064 *	8	6	27	43	4:1	20	6:1	30	10:1	70
21	24	18	.064 *	8	6	30	46	4:1	32	6:1	48	10:1	100
24	28	20	.064 *	8	6	34	50	4:1	40	6:1	60	10:1	120
30	35	24	.079 *	12	9	41	65	4:1	56	6:1	84	10:1	160
36	42	29	.109 *	12	9	48	72	4:1	76	6:1	114	10:1	210
42	49	33	.109	16	12	55	87	4:1	92	6:1	138	——	——
48	57	38	.109	16	12	63	95	4:1	112	6:1	168	——	——
54	64	43	.109	16	12	70	102	4:1	132	6:1	198	——	——

① * MINIMUM THICKNESS OF ALL 10:1 SLOPED SIDE DRAINS IS 0.109".
② ACTUAL SLOPE GREATER THAN 10:1.

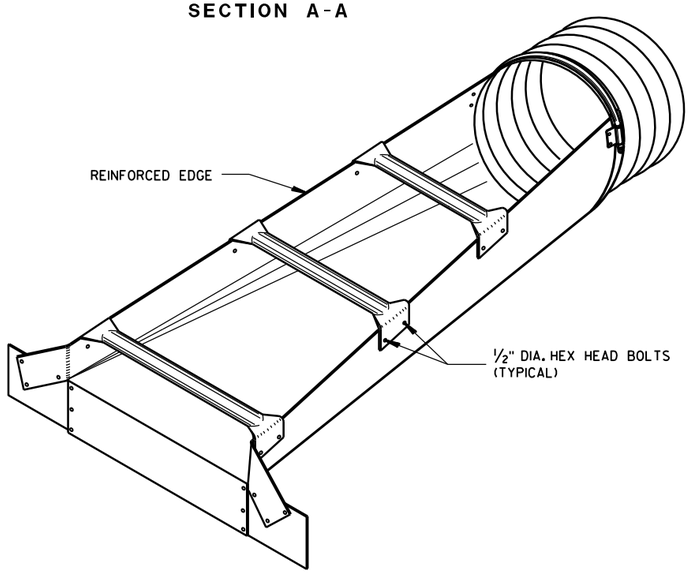

ISOMETRIC VIEW

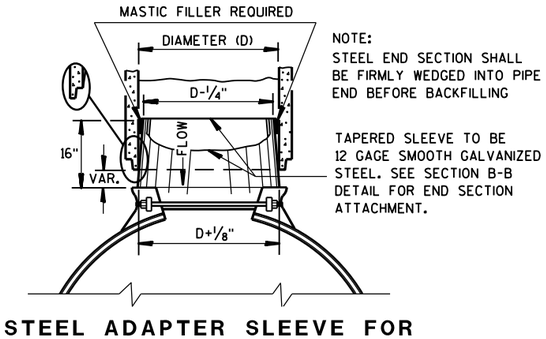

NOTE:
STEEL END SECTION SHALL BE FIRMLY WEDGED INTO PIPE END BEFORE BACKFILLING

TAPERED SLEEVE TO BE 12 GAGE SMOOTH GALVANIZED STEEL. SEE SECTION B-B DETAIL FOR END SECTION ATTACHMENT.

STEEL ADAPTER SLEEVE FOR CONCRETE PIPE

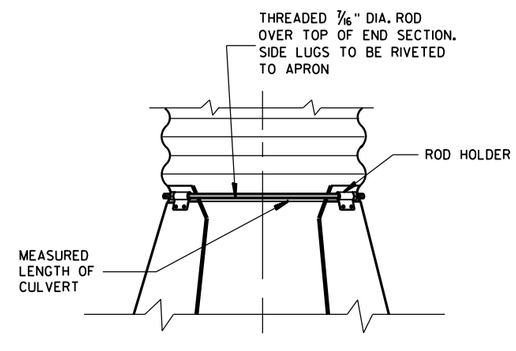

TYPE 2 CONNECTION DETAIL

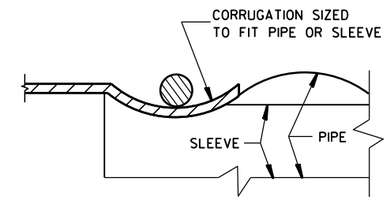

SECTION B-B

STEEL APRON ENDWALLS FOR CULVERT PIPE AND PIPE ARCH SLOPED SIDE DRAINS

STATE OF WISCONSIN
DEPARTMENT OF TRANSPORTATION

APPROVED
9/14/2012 — DATE
/S/ Jerry H. Zogg — ROADWAY STANDARDS DEVELOPMENT ENGINEER
FHWA

GENERAL NOTES

DO NOT MILL SHOULDER GROOVES THROUGH INTERSECTIONS, MARKED CROSSWALKS, NON-MOTORIZED PATH CROSSINGS, ETC. REFER TO SDD 13A11 SHEETS "d" AND "e".

CENTERLINE GROOVES MAY BE OMITTED IN AREAS WITH HIGH CONCENTRATIONS OF DRIVEWAYS WHEN DIRECTED BY THE ENGINEER.

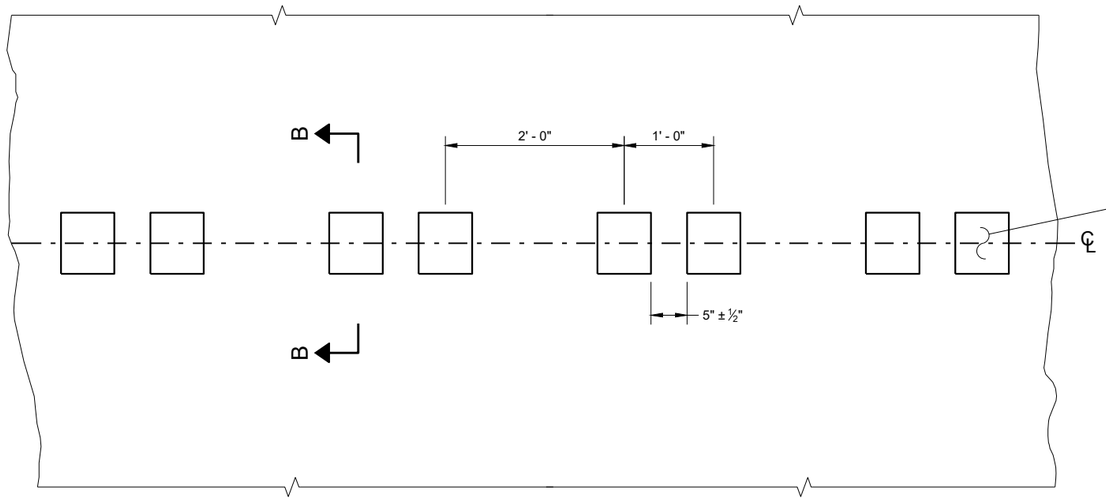

PLAN DETAIL VIEW

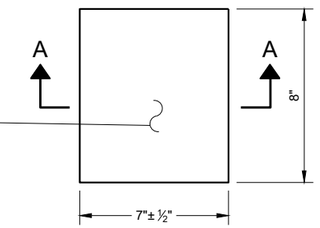

PLAN VIEW
(SINGLE GROOVE)

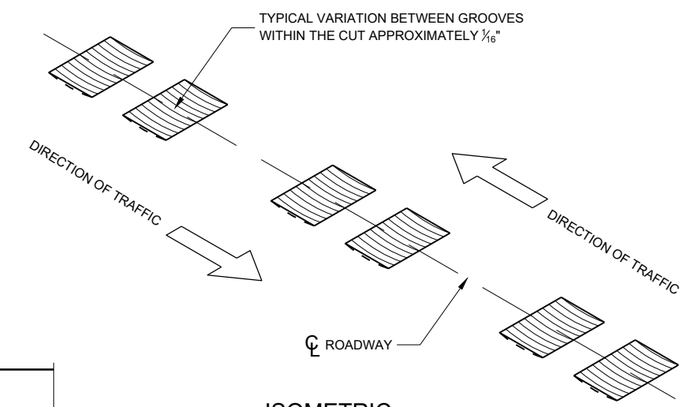

ISOMETRIC

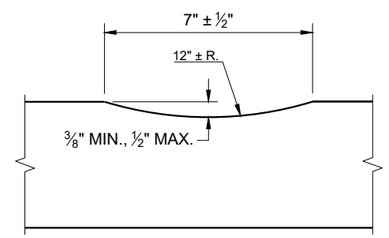

SECTION A - A

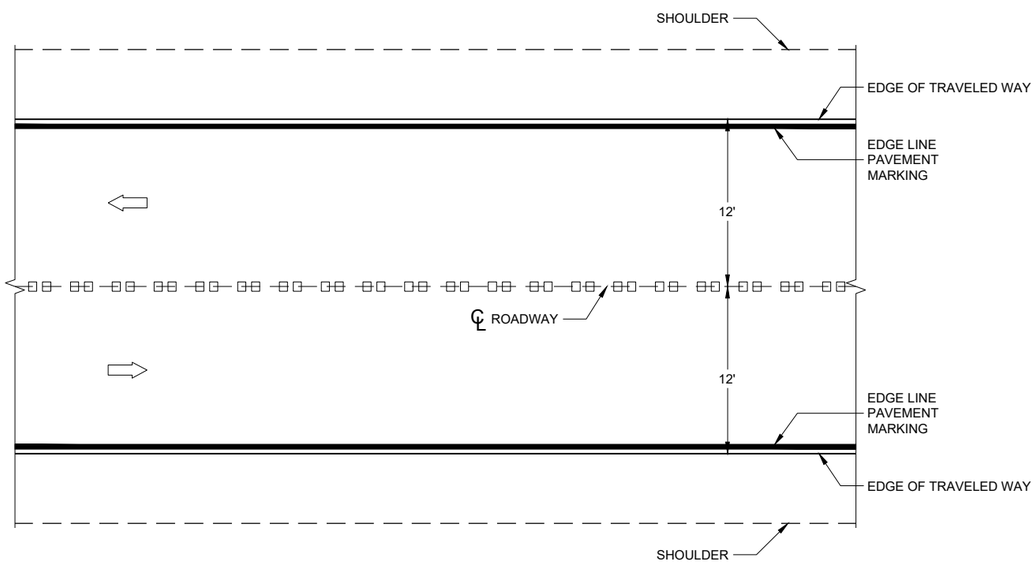

PLAN VIEW

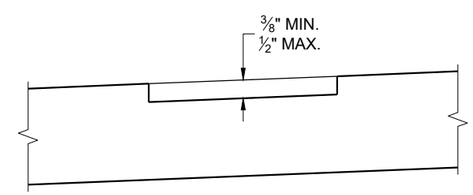

SECTION B - B
SUPERELEVATED ROADWAY

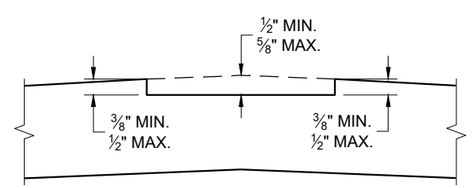

SECTION B - B
CROWNED ROADWAY

CENTERLINE RUMBLE STRIPS - ASPHALT

6

SDD 13A11 - 04a

CENTERLINE RUMBLE STRIPS - ASPHALT

STATE OF WISCONSIN
DEPARTMENT OF TRANSPORTAT

6

SDD 13A11 - 04a

GENERAL NOTES

1. CENTERLINE GROOVES MAY BE OMITTED IN AREAS WITH HIGH CONCENTRATIONS OF DRIVEWAYS WHEN DIRECTED BY THE ENGINEER.

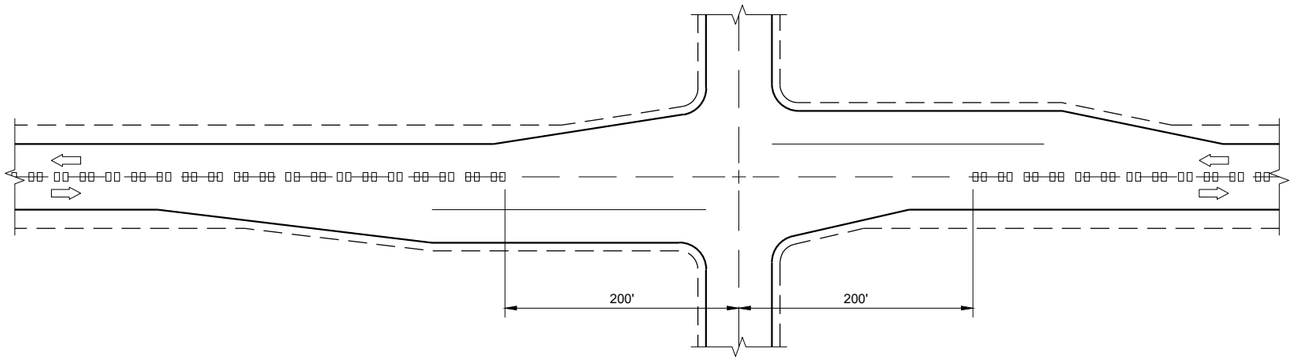

CENTERLINE GROOVES AT INTERSECTIONS

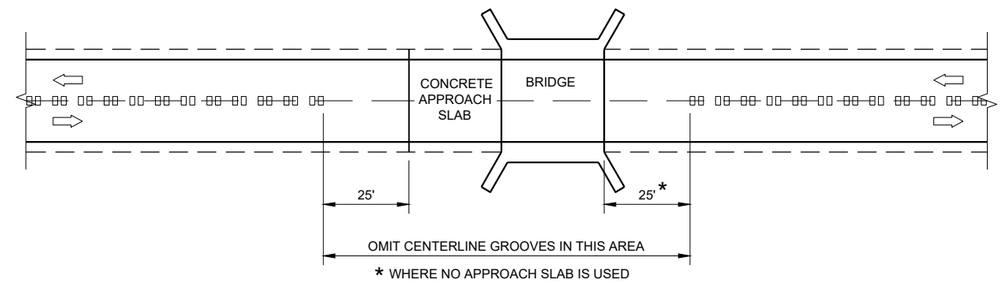

CENTERLINE GROOVES AT BRIDGES

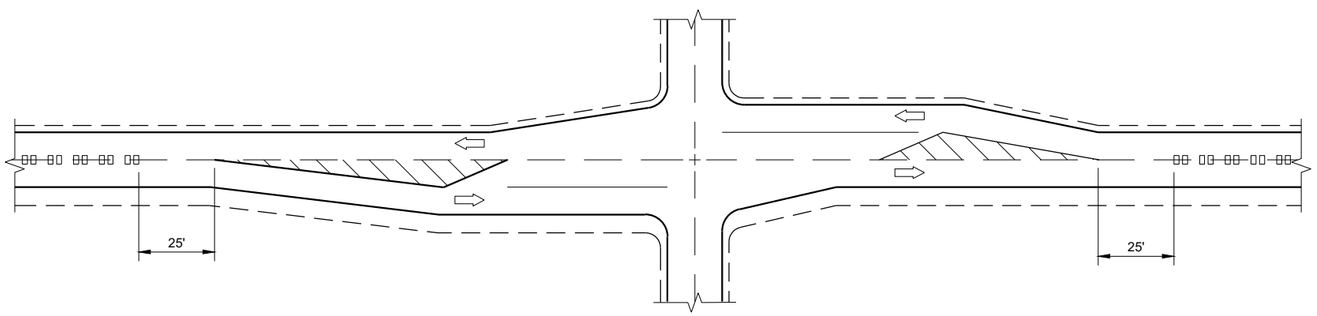

CENTERLINE GROOVES AT INTERSECTIONS (WITH LEFT TURN LANES)

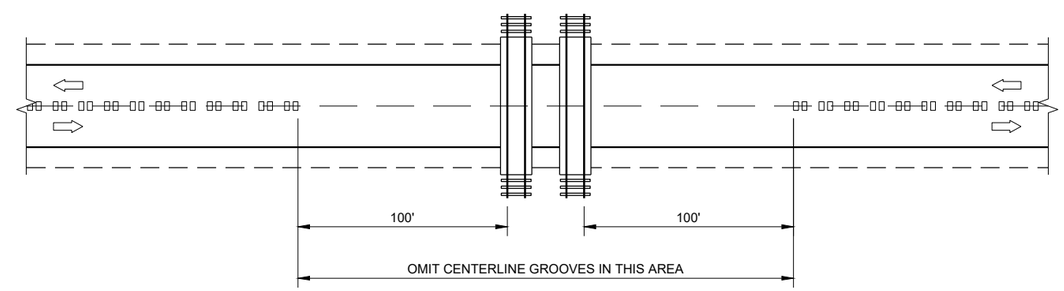

CENTERLINE GROOVES AT RAILROADS

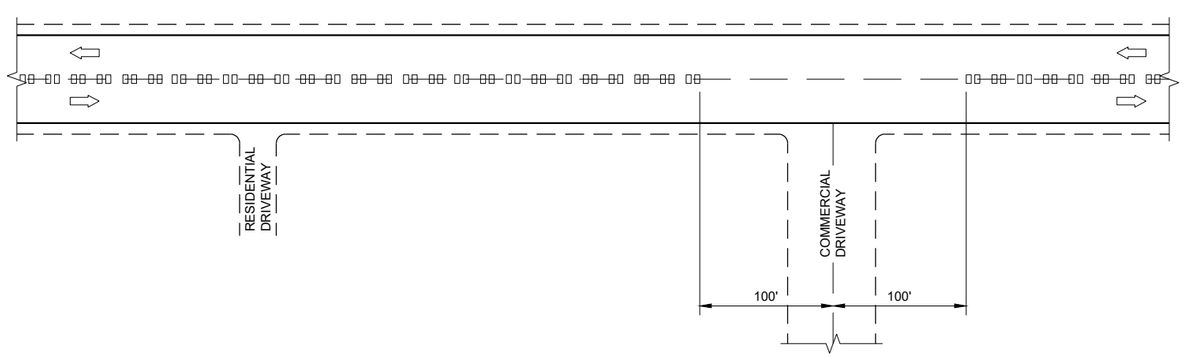

CENTERLINE GROOVES AT DRIVEWAYS (1)

6

SDD 13A11 - 04d

CENTER LINE RUMBLE STRIPS - INTERSECTIONS, DRIVEWAYS, BRIDGES, RAIL ROADS

STATE OF WISCONSIN
DEPARTMENT OF TRANSPORTATION

APPROVED
May 2023 — DATE
/S/ John Jenkins — ROADWAY STANDARDS DEVE ENGINEER
FHWA

6

SDD 13A11 - 04d

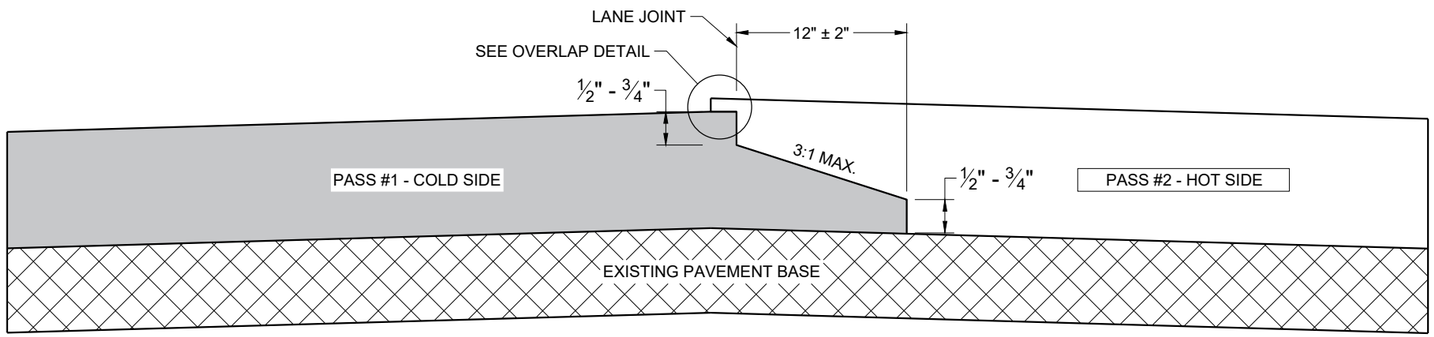

TYPICAL PAVEMENT CROSS SECTION
NOTCHED WEDGE JOINT

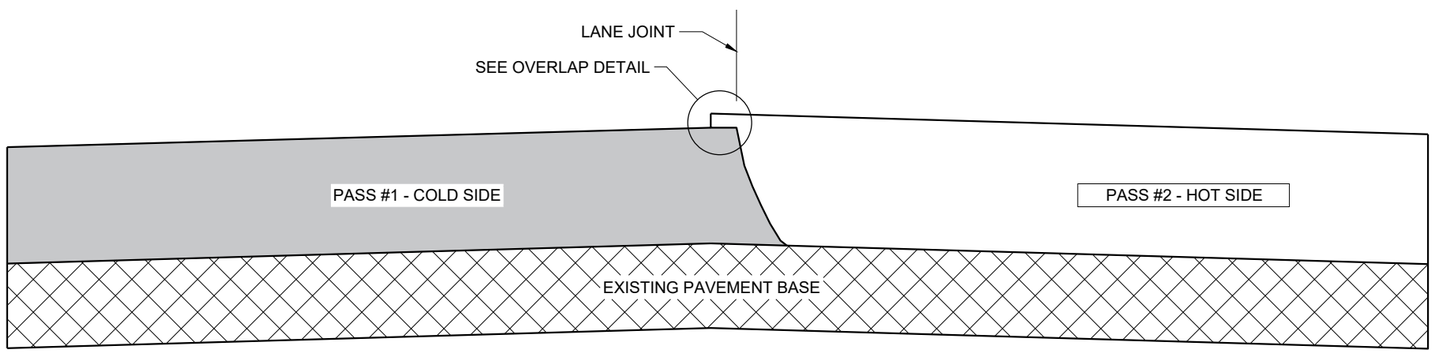

TYPICAL PAVEMENT CROSS SECTION
VERTICAL JOINT

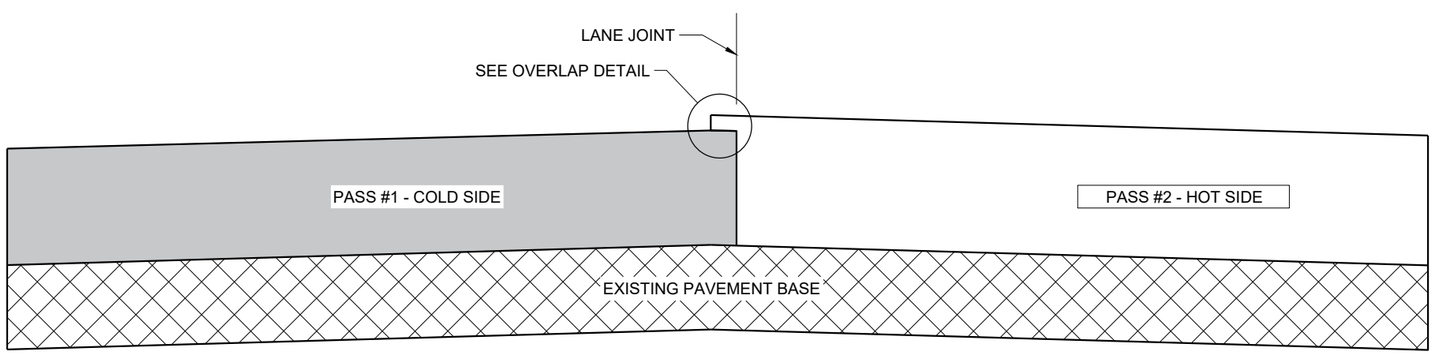

TYPICAL PAVEMENT CROSS SECTION
VERTICAL JOINT (MILLED)

GENERAL NOTES

IN ADDITION TO THE DETAILS PROVIDED IN THIS DRAWING, CONFORM TO STANDARD SPECIFICATION 450.3.2.8 FOR WHEN A NOTCHED WEDGE JOINT IS REQUIRED AND FOR GENERAL JOINT CONSTRUCTION REQUIREMENTS.

FOR ALL LONGITUDINAL JOINTS, ENSURE THE PAVER SCREED OVERLAPS THE PREVIOUSLY PLACED PAVEMENT BY 1" ± 0.5" AND THE HOT SIDE OF THE JOINT REMAINS HIGHER THAN THE COLD SIDE BY APPROXIMATELY 0.1" AFTER FINAL COMPACTION. (IT WILL BE FLUSH WHEN PAVING IN ECHELON.)

ONLY REMOVE THE LONGITUDINAL NOTCHED WEDGE JOINT FOR SMA PAVEMENT OR AS DIRECTED BY THE ENGINEER TO ADDRESS SPECIFIC LENGTHS OF JOINT DAMAGED BY TRAFFIC.

WHEN MILLING BACK OR REMOVING ANY LONGITUDINAL JOINT, LIMIT THE MATERIAL REMOVED TO 2" FROM THE TOP NOTCH OR FROM THE VERTICAL JOINT EDGE ON THE COLD SIDE OF THE JOINT.

USE LONGITUDINAL MILLED JOINT AS PLANS SHOW OR THE AS THE ENGINEER DIRECTS.

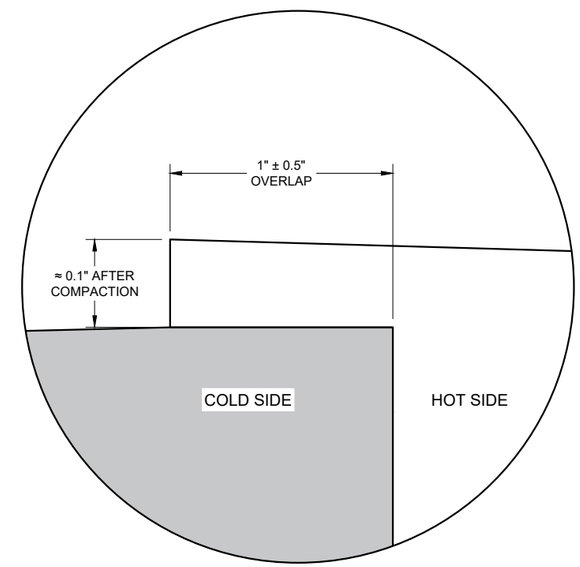

OVERLAP DETAIL (TYPICAL)

6

6

SDD 13C19 - 03

SDD 13C19 - 03

HMA LONGITUDINAL JOINTS

STATE OF WISCONSIN
DEPARTMENT OF TRANSPORTATION

APPROVED
November 2020 /S/ Steven Hefel
DATE HMA PAVEMENT ENGIN

FHWA

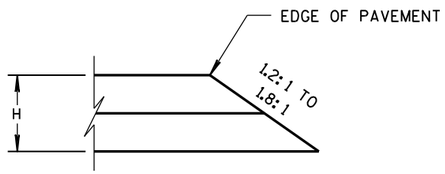

CONSTRUCTED WITH FINAL TWO LAYERS

FOR H 5" OR LESS

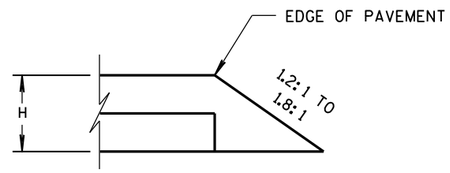

CONSTRUCTED WITH FINAL LAYER

FOR H 5" OR LESS

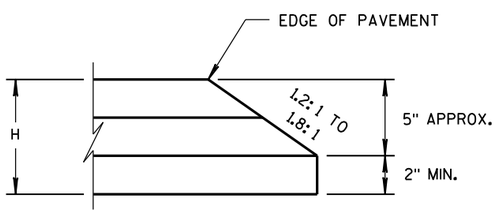

CONSTRUCTED WITH FINAL TWO LAYERS

FOR H GREATER THAN 5"

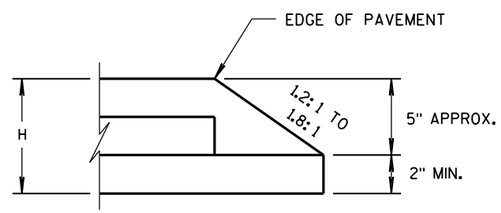

CONSTRUCTED WITH FINAL LAYER

FOR H GREATER THAN 5"

HMA PAVEMENT AND HMA OVERLAYS

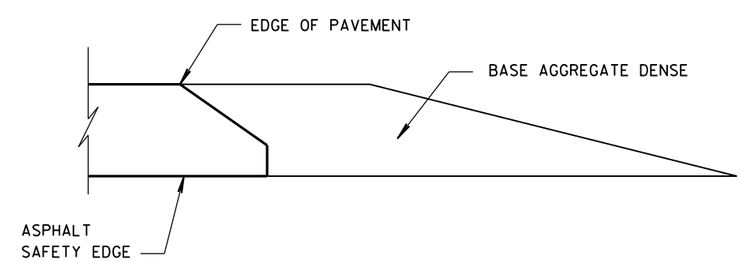

FINISHED SHOULDER AGGREGATE PLACEMENT

6

6

SAFETY EDGE SM

STATE OF WISCONSIN
DEPARTMENT OF TRANSPORTATION

APPROVED

11/30/2012
DATE

/S/ Jerry H. Zogg
ROADWAY STANDARDS DEVELOPMENT ENGINEER

FHWA

S.D.D. 14 B 29-1

1. WOOD OR STEEL POSTS (w6X9 OR w6X8.5) MAY BE USED. DO NOT INTERMIX WOOD AND STEEL POSTS. INSTALL STEEL POSTS WITH HOLES ON APPROACHING TRAFFIC SIDE.
2. USE WOOD OR APPROVED PLASTIC BLOCKOUTS. WOOD BLOCKOUTS MAY BE CONSTRUCTED OUT OF TWO OR MORE WOOD BLOCKOUTS. SEE ALTERNATE WOOD BLOCKOUT DETAIL. DIMENSIONS OF APPROVED PLASTIC BLOCKOUTS MAY VARY.
3. IF ROCK IS ENCOUNTERED DURING EXCAVATION, PROVIDE A HOLE 12 INCHES IN DIAMETER EXTENDING 20 INCHES DEEP INTO THE ROCK. PLACE APPROXIMATELY 2 1/2" INCHES OF GRANULAR MATERIAL IN THE BOTTOM OF THE HOLE. CUT THE POSTS THE TO LENGTH AMD INSTALL. BACKFILL WITH EXCAVATED MATERIAL AND COMPACT. BACKFILL IS TO BE FREE OF LARGE ROCKS.
4. WHEN THE DISTANCE FROM BACK OF POST TO SHOULDER HINGE POINT IS LESS THAN 2 FEET INSTALL LONGER POST AT HALF POST SPACING (K).
5. FOR NEW MGS INSTALLATION TOP OF W-BEAM RAIL TOLERANCE IS ±1". FOR EXISTING MGS INSTALLATION TOP OF W-BEAM IS BETWEEN 27 ¾" TO 32".
6. WHEN USING STEEL POST AND WOOD BLOCKOUTS INSTALL FOUR 16D GALVANIZED NAILS. INSTALL NAILS AT THE BACK CORNERS OF THE BLOCK AND BEND THE NAILS OVER THE FLANGE OF THE STEEL POST.
7. TOTAL POST LENGTH FOR TYPE K IS 7' - 0". TOTAL POST LENGTH FOR OTHER MGS TYPES IS 6' - 0".

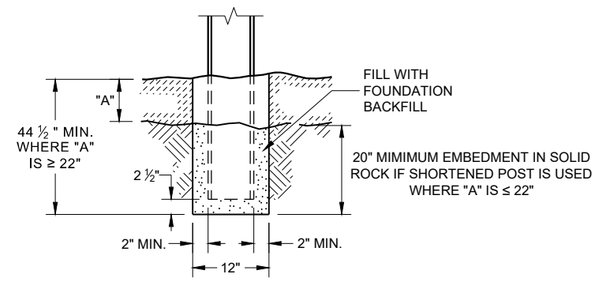

END VIEW
SETTING STEEL OR WOOD POST IN ROCK (3)

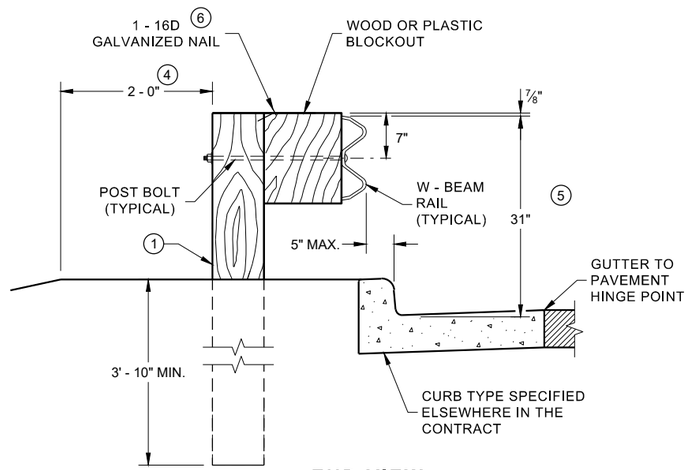

END VIEW
LOCATED ALONG A CURBED ROADWAY

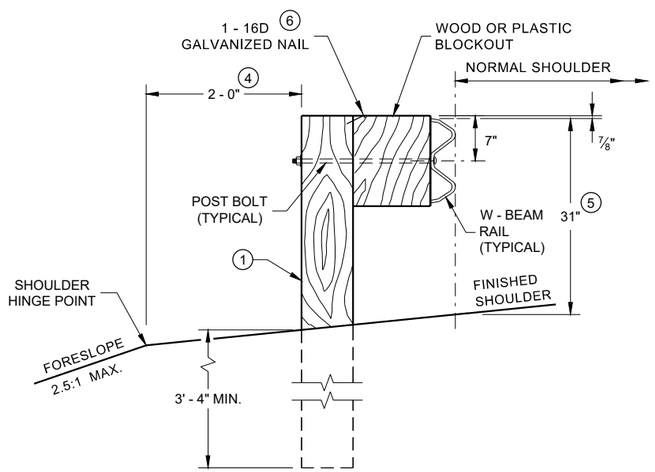

END VIEW
LOCATED ALONG A ROADWAY SHOULDER STANDARD INSTALLATION

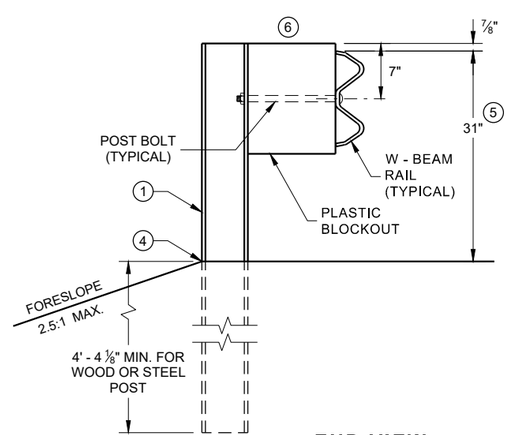

END VIEW
MGS LONGER POST AT HALFPOST SPACING W BEAM (K)

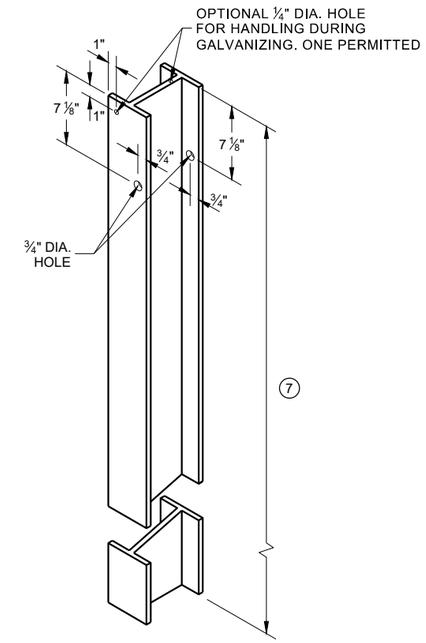

STEEL POST & HOLE PUNCHING DETAIL (W 6 X 9) (1)

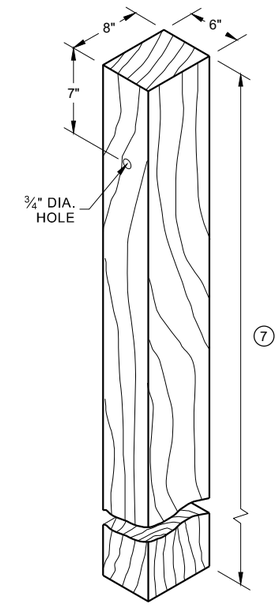

WOOD POST (6" X 8") NOMINAL (1)

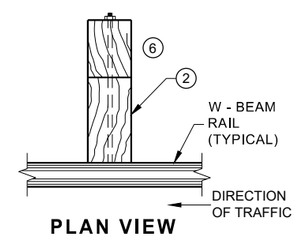

PLAN VIEW WOOD POST, BLOCKOUT & BEAM

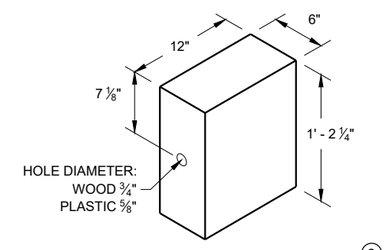

WOOD OR PLASTIC BLOCKOUT (2)

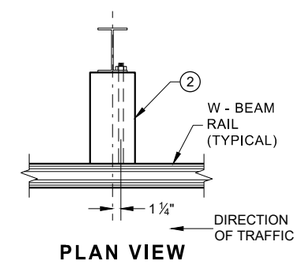

PLAN VIEW STEEL POST, PLASTIC BLOCKOUT & BEAM

MIDWEST GUARDRAIL SYSTEM (MGS) GUARDRAIL

STATE OF WISCONSIN
DEPARTMENT OF TRANSPORTATION

6

6

SDD 14B42 - 07a

SDD 14B42 - 07a

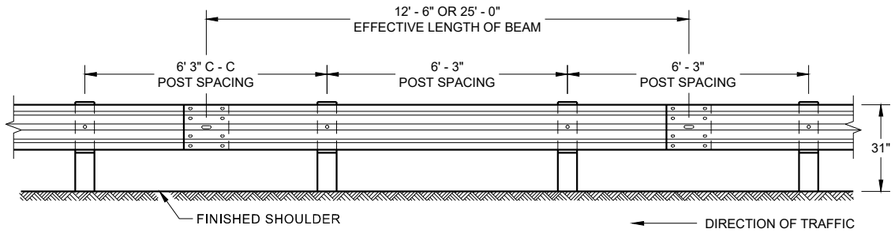

FRONT VIEW
POST SPACING STANDARD INSTALLATION

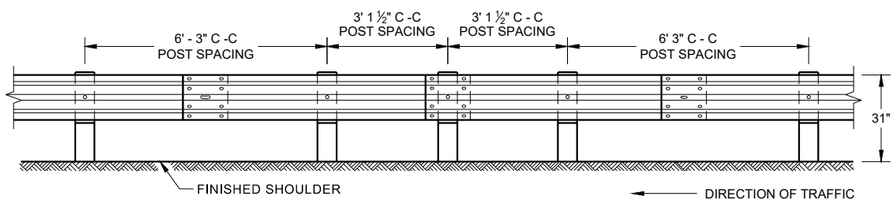

FRONT VIEW
HALF POST SPACING (HS) AND HALF POST SPACING WITH LONGER POSTS (K)

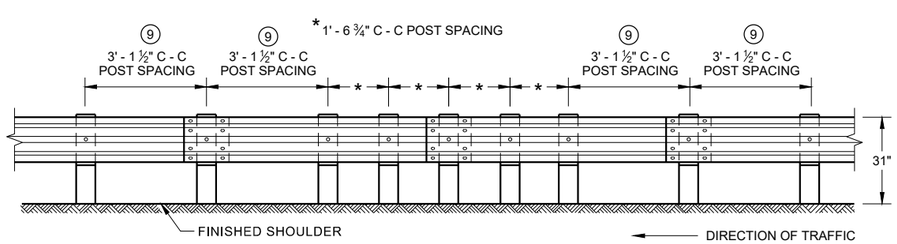

FRONT VIEW
QUARTER POST SPACING (QS)

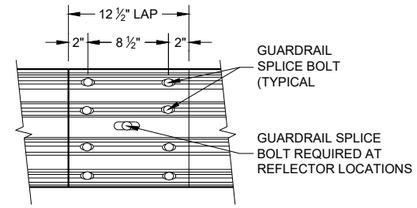

FRONT VIEW
MID-SPAN BEAM SPLICE

GENERAL NOTES

8 DO NOT INSTALL REFLECTORS ON THE FIRST 50 FEET OF THE APPROACH END OF THE ENERGY ABSORBING TERMINAL.

9 25 FEET OF HALF POST SPACING IS REQUIRED ON APPROACH AND DEPARTURE ENDS OF QUARTER POST SPACING.

POST BOLTS ARE A ⅝" DIAMETER ASTM A307 GUARDRAIL BOLT. A POST BOLT REQUIRES ⅝" DIAMETER A563A DOUBLE RECESSED (DR) HEAVY HEX NUT AND ⅝" DIAMETER F844 FLAT WASHER. POST BOLTS MAY BE LONGER IF MULTIPLE BLOCKOUTS ARE BEING USED.

GUARD RAIL SPLICE BOLTS ARE A ⅝" DIAMETER ASTM A307 GUARDRAIL HEAD BOLT. A GUARDRAIL SPLICE BOLT REQUIRES ⅝" DIAMETER A563A DOUBLE RECESSED (DR) HEAVY HEX NUT.

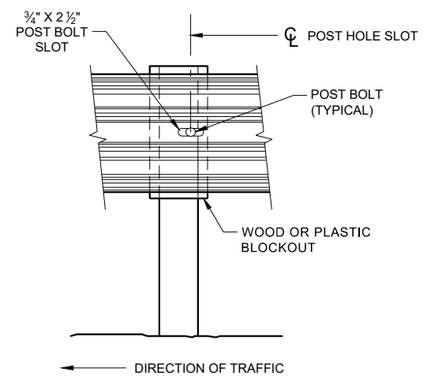

FRONT VIEW AT STEEL POST

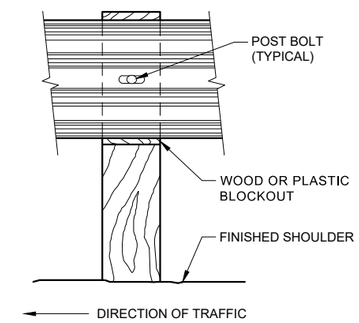

FRONT VIEW AT WOOD POST

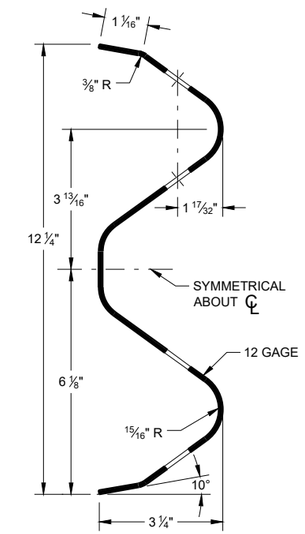

SECTION THRU W-BEAM RAIL

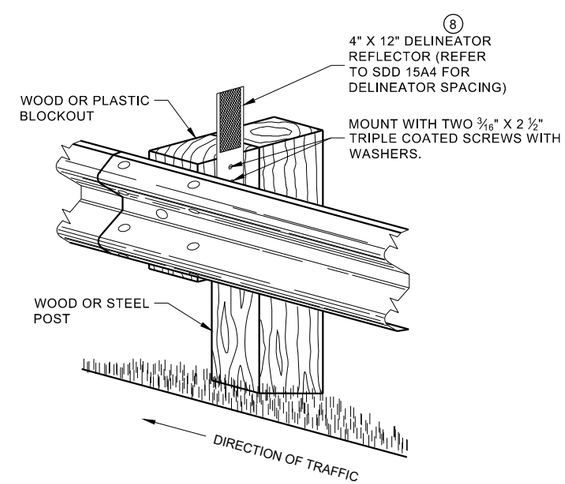

ONE SIDED REFLECTOR DETAIL AND TYPICAL INSTALLATION

MIDWEST GUARDRAIL SYSTEM (MGS) GUARDRAIL

STATE OF WISCONSIN
DEPARTMENT OF TRANSPORTA

6

SDD 14B42 - 07b

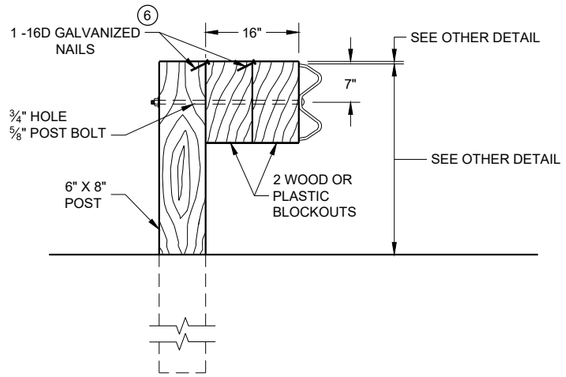

DETAIL FOR 16" BLOCKOUT DEPTH

IT IS ACCEPTABLE TO USE BLOCKOUTS UP TO 16" DEEP TO INCREASE THE POST OFFSET TO AVOID UNDERGROUND OBSTACLES. THERE IS NO LIMIT TO THE NUMBER OF POSTS THAT CAN HAVE ADDITIONAL BLOCKOUTS UP TO 16" DEEP.

NOTE:

1. ALL FILLETS SHALL HAVE A MINIMUM RADIUS OF 3/16".
2. IF THE BOLT EXTENDS MORE THAN ¼" FROM THE NUT THE BOLT SHOULD BE TRIMMED BACK.

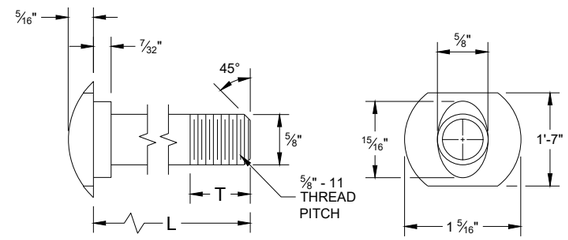

POST BOLT TABLE

L	T (MIN.)
1 ¼"	1 ⅛"
2"	1 ¾"
10"	4"
14"	4 1/16"
18"	4"
21"	4 1/16"
25"	4"

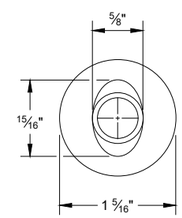

ALTERNATE BOLT HEAD

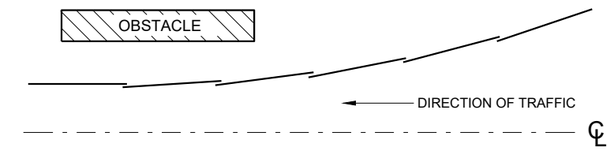

PLAN VIEW
BEAM LAPPING DETAIL

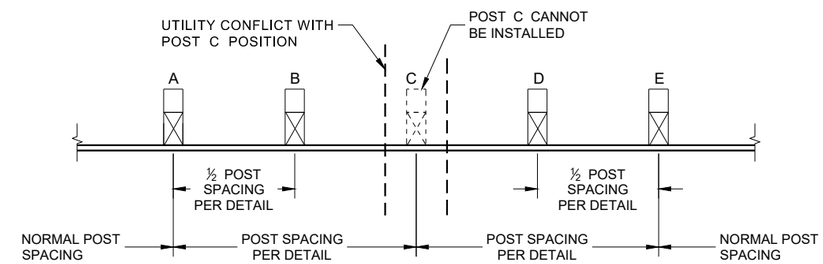

POST DRIVING FOR CONTINUOUS UNDERGROUND OBSTRUCTION

6

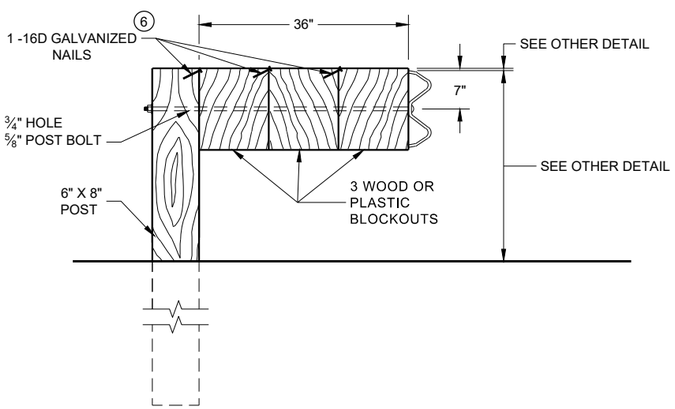

DETAIL FOR 36" BLOCKOUT DEPTH

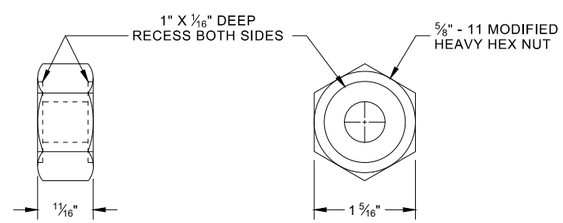

POST BOLT, SPLICE BOLT AND RECESS NUT

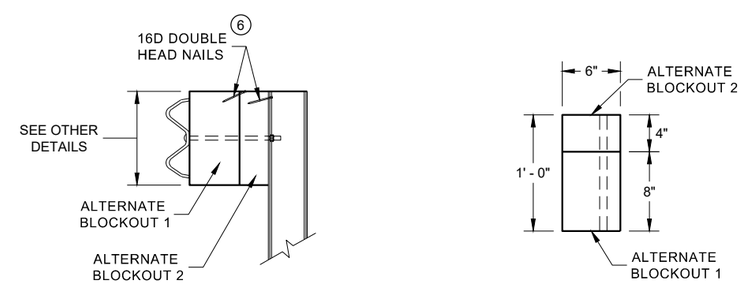

SIDE VIEW

PLAN VIEW

ALTERNATE WOOD BLOCKOUT DETAIL

NOTES: UNDER SPECIAL CIRCUMSTANCES, SUCH AS AVOIDING OBSTACLES THAT ARE NOT RELOCATED, IT IS ACCEPTABLE TO INSTALL ADDITIONAL BLOCKOUTS TO OBTAIN UP TO 36" DEPTH FOR ONE OR TWO POSTS IN A SECTION OF GUARDRAIL.

DO NOT USE 16" OR 36" BLOCKOUTS IF IT CAUSES THE POST TO BE DRIVEN BEYOND SHOULDER HINGE POINT OR CAUSES A FIXED OBJECT TO BE WITHIN THE DEFLECTION DISTANCE OF THE BARRIER.

(6) WHEN USING STEEL POST AD WOOD BLOCKOUTS, INSTALL FOUR 16D GALVANIZED NAILS. INSTALL NAILS AT THE BACK CORNERS OF THE BLOCK AND BEND THE NAILS OVER THE FLANGE OF THE STEEL POST.

MIDWEST GUARDRAIL SYSTEM (MGS) GUARDRAIL

STATE OF WISCONSIN
DEPARTMENT OF TRANSPORTA

SDD 14B42 - 07c

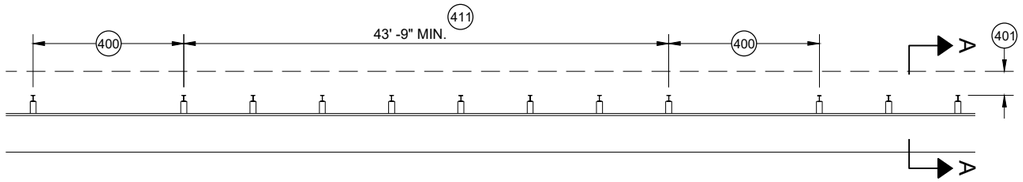

MISSING POST IN MGS GUARDRAIL

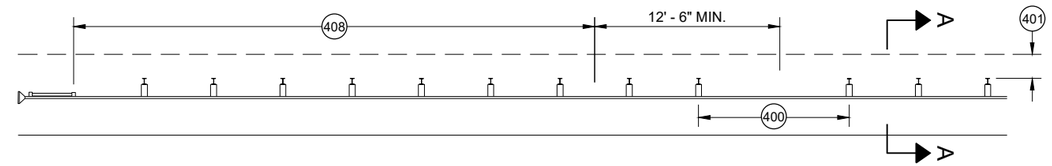

MISSING POST IN MGS GUARDRAIL NEAR EAT

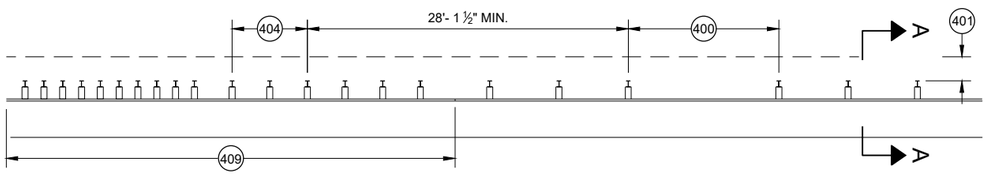

MISSING POST IN MGS GUARDRAIL NEAR AN APPROACH TRANSITION

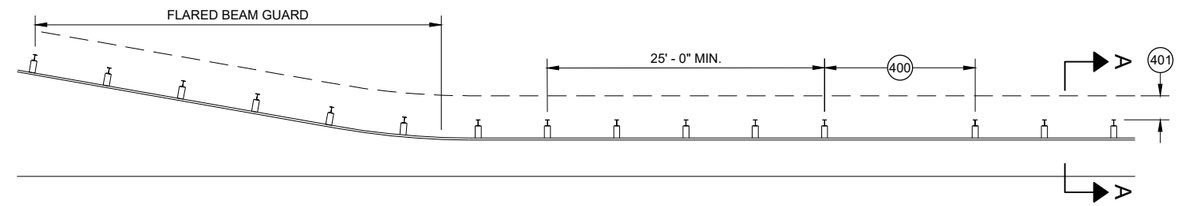

MISSING POST IN MGS GUARDRAIL NEAR FLARED BEAM GUARD

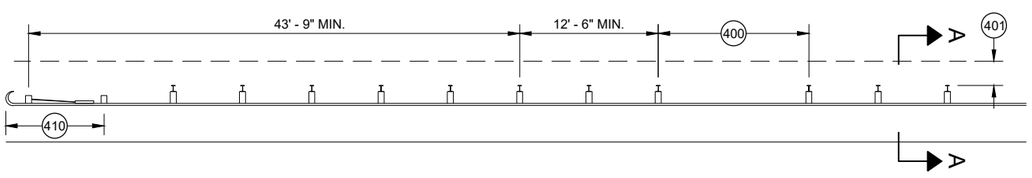

MISSING POST IN MGS GUARDRAIL NEAR A TYPE 2 END TERMINAL

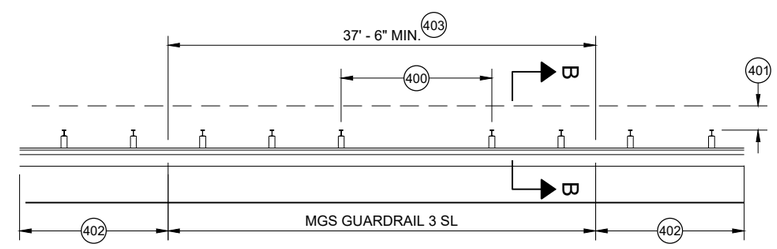

MISSING POST IN SHORT SPAN MGS GUARDRAIL NEAR CURB (SL) 407

400 MAX SPAN 12' - 6"
401 2' MIN.
402 MGS GUARDRAIL 3
403 NESTING BEAM GUARD
404 ASYMMETRIC TRANSITION
405 SOIL WELL DRAINED AND COMPACTED
406 SEE OTHER DRAWINGS IN THIS SDD
407 SEE OTHER DRAWINGS FOR MIN. SPACING BETWEEN SPANS
408 SEE SDD 14B44
409 SEE SDD 14B45
410 SEE SDD 14B47
411 MINIMUM DISTANCE BETWEEN MISSING POST SPANS.

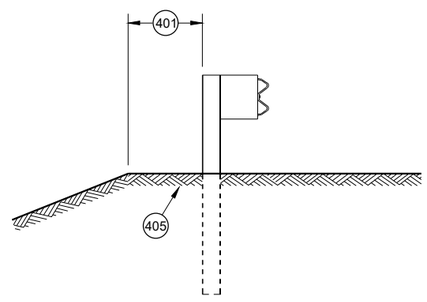

SECTION A - A 406

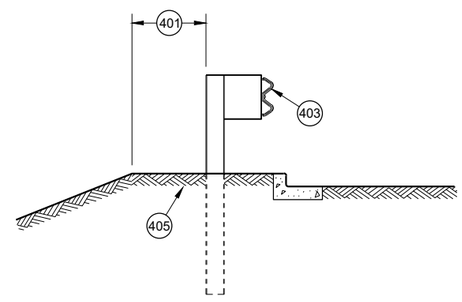

SECTION B - B 406

MIDWEST GUARDRAIL SYSTEM (MGS) GUARDRAIL

STATE OF WISCONSIN
DEPARTMENT OF TRANSPORTATION

APPROVED
May 2021 — DATE
/S/ Rodney Taylor — ROADWAY STANDARDS DEVE UNIT SUPERVISOR
FHWA

6

SDD 14B42 - 07d

GENERAL NOTES

(A) THE SLOPE IN THE AREA BOUNDED BY THE GRADELINE, THE HINGE POINT LINE (HPL) AND THE CLEAR ZONE LIMITS (CZL) SHALL BE 4:1 OR FLATTER.

(B) AFTER FINAL ASSEMBLY, RECHECK CABLE TO BE SURE IT IS TAUT AND HAS NOT RELAXED

(C) DIFFERENT MANUFACTURERS REQUIRE DIFFERENT PERFORATED W - BEAM RAIL END PANELS. SEE MANUFACTURER'S INFORMATION.

(D) ATTACH ALUMINUM SHEET TO E.A.T. HEAD USING 4 STAINLESS STEEL SELF - TAPPING SCREWS. ONE SCREW PER CORNER.

(E) HARDWARE MAY VARY BETWEEN MANUFACTURER. SEE MANUFACTURER'S DRAWING FOR INFORMATION.

DIMENSIONS MAY VARY, MANUFACTURER'S INFORMATION.

SEE SDD 14B42 FOR MORE INFORMATION.

* DO NOT ATTACH BLOCKOUTS TO POST 1 AND 2.

DO NOT INSTALL REFLECTORS ON THE FIRST 50 FEET OF THE APPROACH END OF THE ENERGY ABSORBING TERMINAL.

SEE MANUFACTURER'S DRAWING FOR SPLICE LOCATION, HARDWARE DIMENSIONS AND INSTALLATION INSTRUCTIONS.

THE CENTER OF THE UPPER 3 ½" DIAMETER HOLE ON POST NUMBER 3 THROUGH POST 9 IS TO BE FLUSH WITH THE GROUND LINE UP TO A MAXIMUM OF 2" ABOVE GROUND LINE. WOOD BLOCKS ON POSTS NUMBERED 3 THROUGH 9 MAY BE ADJUSTED UP TO 3" ABOVE THE TOP OF POST.

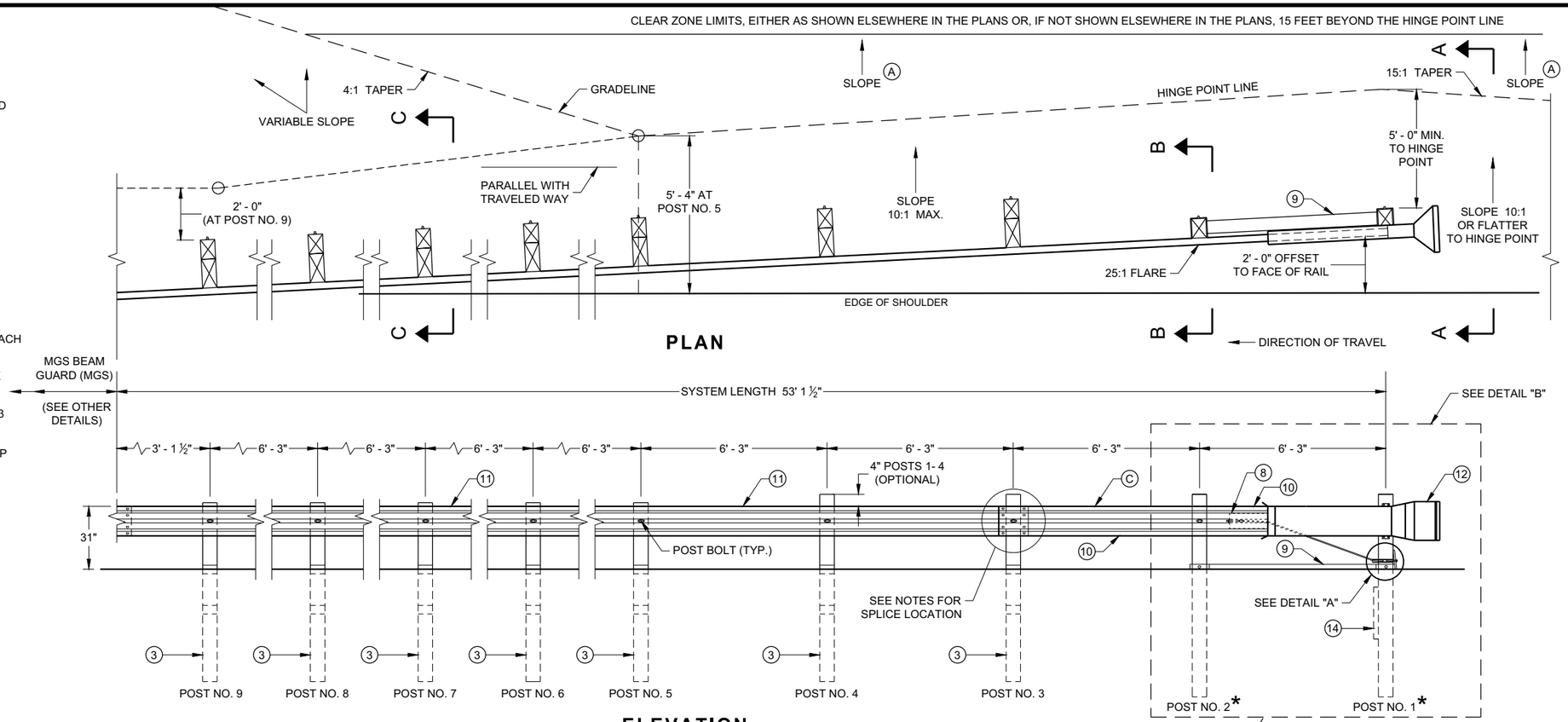

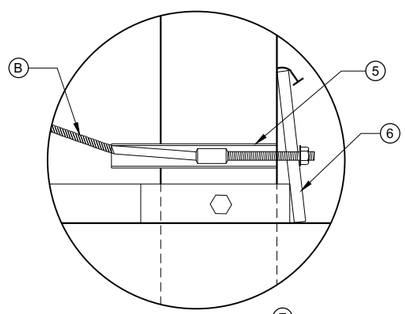

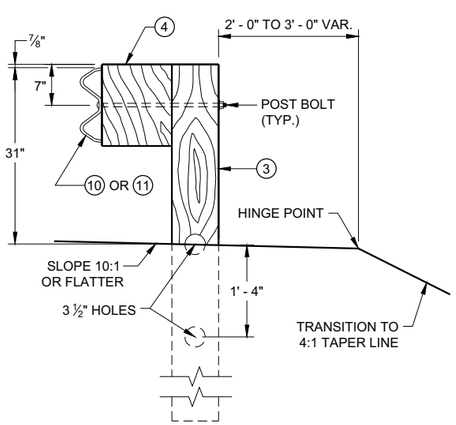

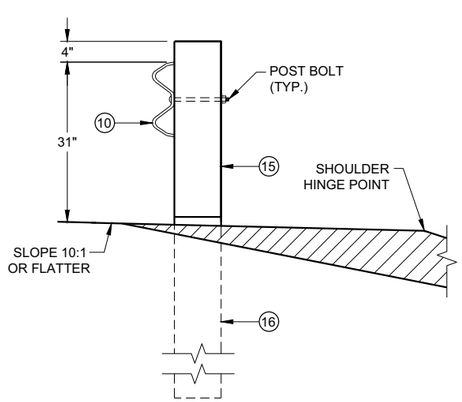

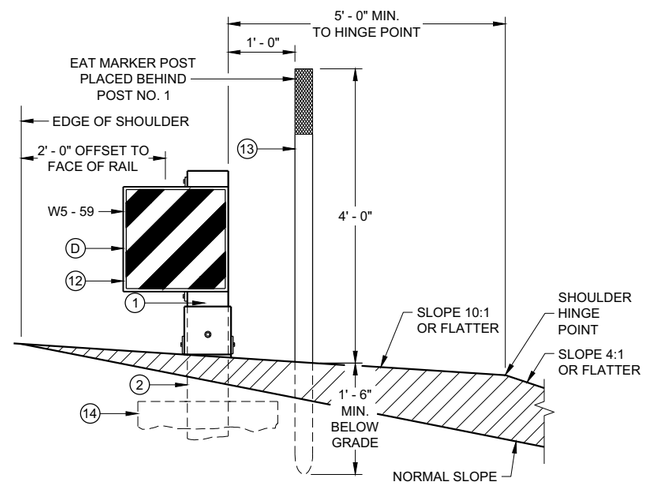

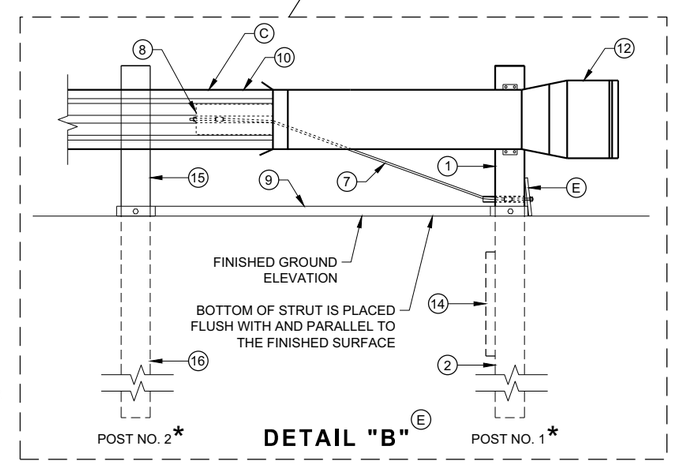

MIDWEST GUARDRAIL SYSTEM ENERGY ABSORBING TERMINAL (MGS)

STATE OF WISCONSIN
DEPARTMENT OF TRANSPORTATION

6

6

SDD 14B44 - 04a

SDD 14B44 - 04a

BILL OF MATERIALS

PART NO.	DESCRIPTION MATERIALS PROVIDED BY MGS EAT MANUFACTURER. SEE MANUGACTURER'S DETAILS FOR MORE INFORMATION.
1	UPPER POST NO. 1 6" X 6" TUBE
2	LOWER POST NO. 1
3	WOOD CRT
4	WOOD BLOCKOUT
5	PIPE SLEEVE
6	BEARING PLATE
7	BCT CABLE ASSEMBLY
8	ANCHOR CABLE BOX
9	GROUND STRUT
10	PERFORATED W-BEAM RAIL END PANEL, 12'-6" LONG.
11	STANDARD W-BEAM RAIL. MULTIPLE SECTIONS REQUIRED. SECTIONS VARY IN LENGTH.
12	IMPACT HEAD
13	EAT MARKER POST - YELLOW (SEE APPROVED PRODUCTS LIST)
14	SOIL PLATE
15	UPPER POST NO. 2
16	LOWER POST NO. 2

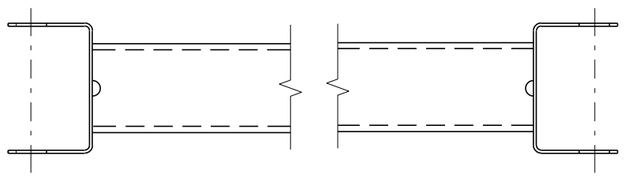

GENERIC GROUND STRUT 9 E

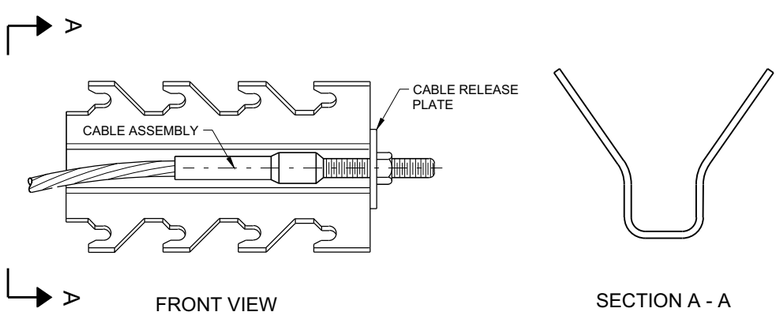

GENERIC ANCHOR CABLE BOX 9 E

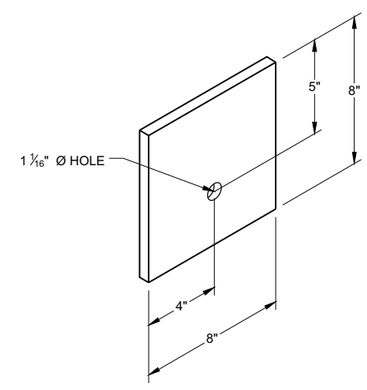

BEARING PLATE 6 E

6

6

SDD 14B44 - 04b

SDD 14B44 - 04b

MIDWEST GUARDRAIL SYSTEM ENERGY ABSORBING TERMINAL (MGS)

STATE OF WISCONSIN
DEPARTMENT OF TRANSPORTAT

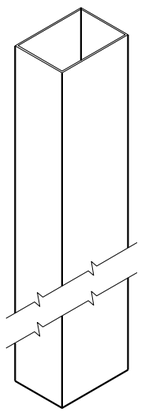

UPPER POST NO. 1 (1) (E)

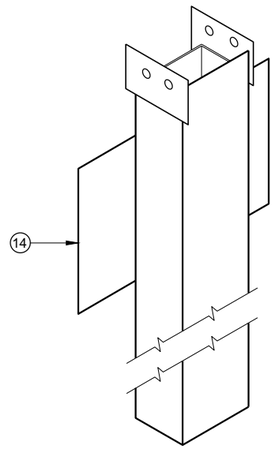

LOWER POST NO. 1 (2) (E)

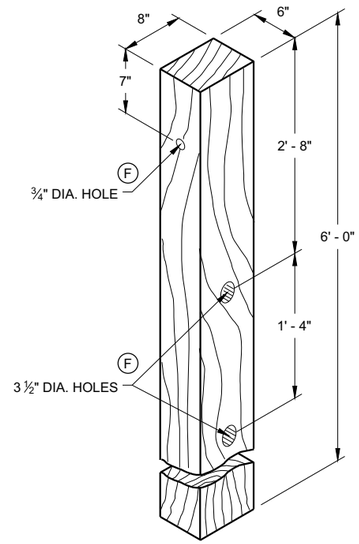

WOOD CRT POST (3) (E)

POSTS NUMBER 3-9

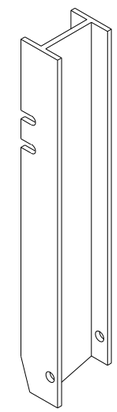

UPPER POST NO. 2 (15) (E)

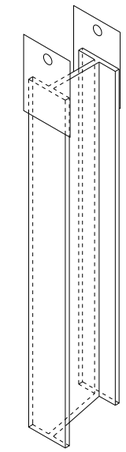

LOWER POST NO. 2 (16) (E)

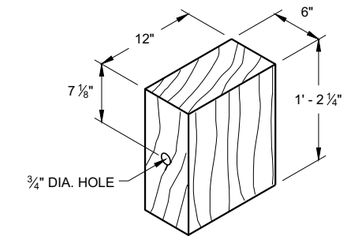

WOOD BLOCKOUT (4)

REQ'D. AT ALL POSTS EXCEPT POST NO'S 1 & 2

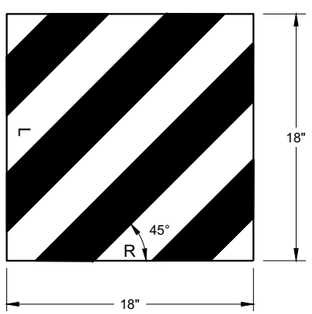

W5 - 59

REFLECTIVE SHEETING DETAIL (E)

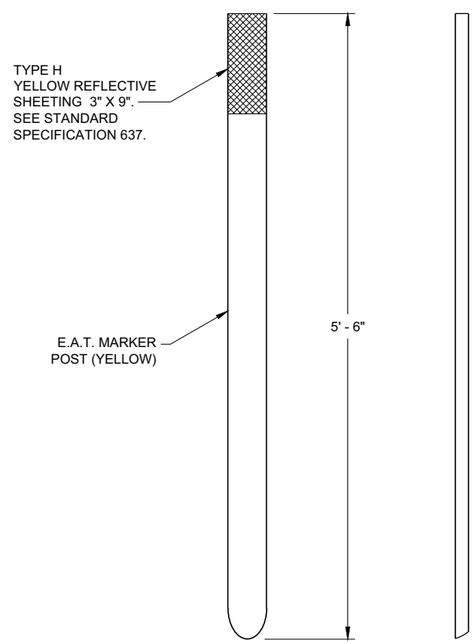

FRONT VIEW SIDE VIEW

E.A.T. MARKER POST (13)

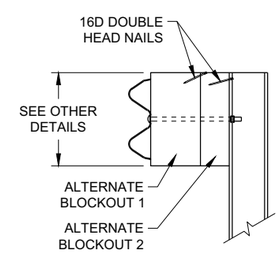

SIDE VIEW

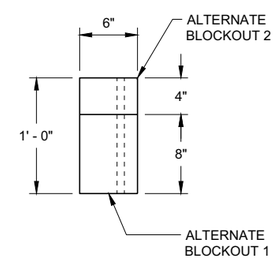

TOP VIEW

ALTERNATE WOOD BLOCKOUT DETAIL

MIDWEST GUARDRAIL SYSTEM ENERGY ABSORBING TERMINAL (MGS)

STATE OF WISCONSIN
DEPARTMENT OF TRANSPORTATION

APPROVED
7/2018 — DATE
/S/ Rodney Taylor — ROADWAY STANDARDS DEVE UNIT SUPERVISOR
FHWA

6

SDD 14B44 - 04c

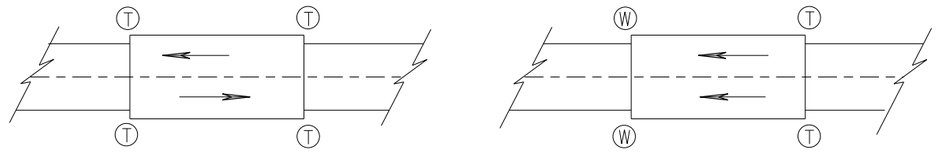

TWO WAY TRAFFIC **ONE WAY TRAFFIC**

(T) THRIE BEAM CONNECTION

(W) W-BEAM CONNECTION WHEN REQUIRED

TYPICAL LOCATIONS OF THRIE BEAM AND W-BEAM CONNECTIONS TO BRIDGE

GENERAL NOTES

IF ROCK IS ENCOUNTERED, REMOVE ROCK TO FULL DEPTH OF POST PLUS 2½", AND 12" DIAMETER AROUND POST. SEE 14B42 FOR MORE DETAILS.

TRANSITION USES STEEL POSTS ONLY.

SEE STANDARD DETAIL DRAWING 14 B 42 FOR MORE INFORMATION.

POST 2 THROUGH 17 USES STEEL POST ONLY

(1) BRIDGE RAILING TYPE "W" DOES NOT REQUIRE A TERMINAL CONNECTOR.

(2) OPTIONAL CURB AND GUTTER OR DRAINAGE FEATURE SEE PLAN FOR INFORMATION.

(13) STEEL OR WOOD POST IS ACCEPTABLE AT POST 1. SEE SDD14B42

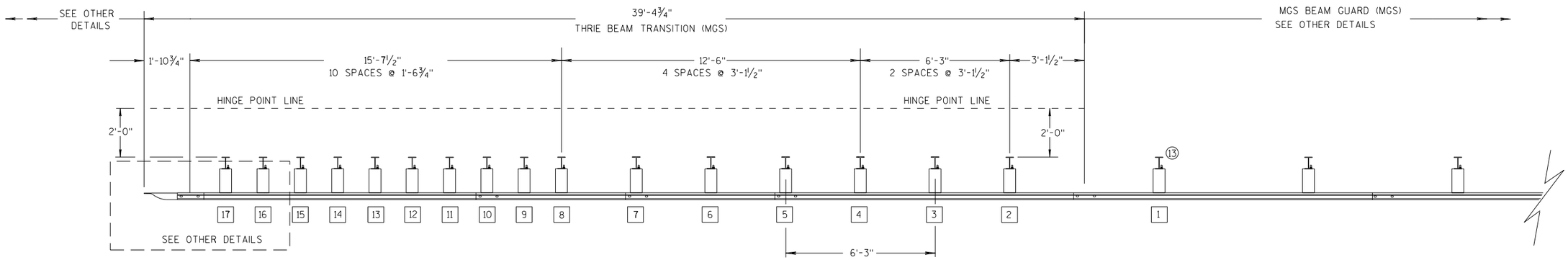

PLAN VIEW

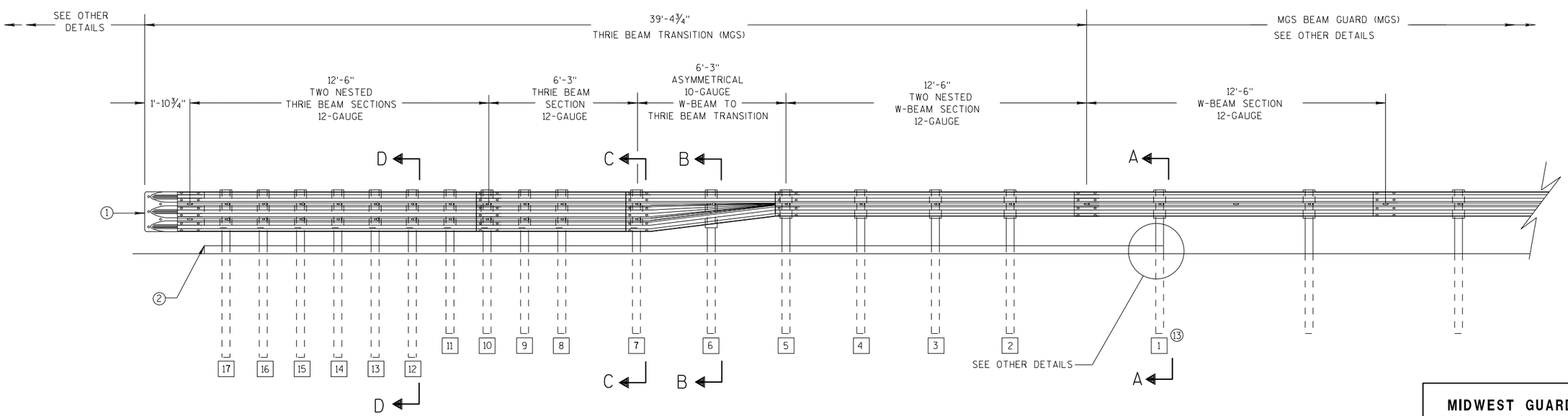

ELEVATION VIEW

MIDWEST GUARDRAIL SYSTEM THRIE BEAM TRANSITION

MIDWEST GUARDRAIL SYSTEM
THRIE BEAM TRANSITION (MGS)

STATE OF WISCONSIN
DEPARTMENT OF TRANSPOR

6

S.D.D. 14 B 45-5a

GENERAL NOTES

(2) OPTIONAL CURB AND GUTTER OR DRAINAGE FEATURE SEE PLAN FOR INFORMATION.

(3) WHEN USING STEEL POSTS AND WOOD BLOCKOUTS INSTALL FOUR 10D GALVANIZED NAILS. INSTALL NAILS AT THE BACK CORNERS OF THE BLOCK AND BEND THE NAILS OVER THE FLANGE OF THE STEEL POST.

(4) TOLERANCE FOR TOP OF W-BEAM RAIL IS ± 1".

(13) STEEL OR WOOD POST IS ACCEPTABLE AT POST 1. SEE SDD 14B42

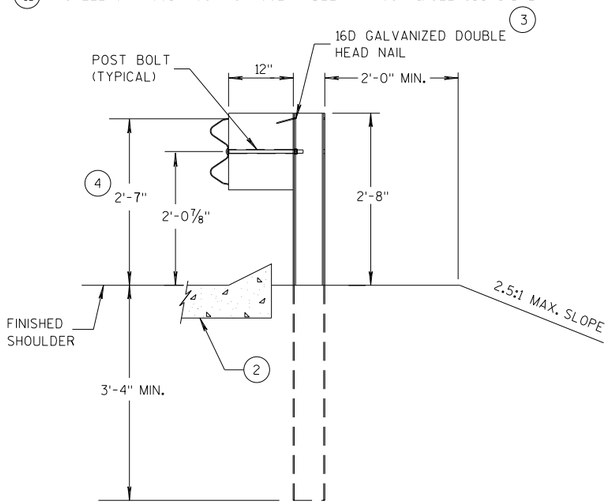

SECTION A-A (13)

POSTS 1-5

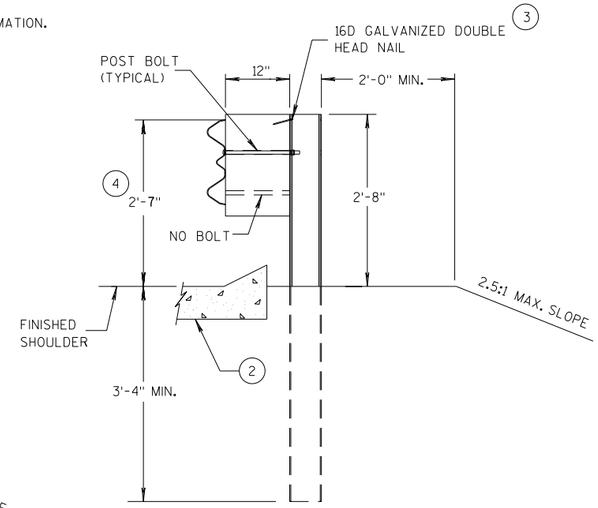

SECTION B-B

POST 6

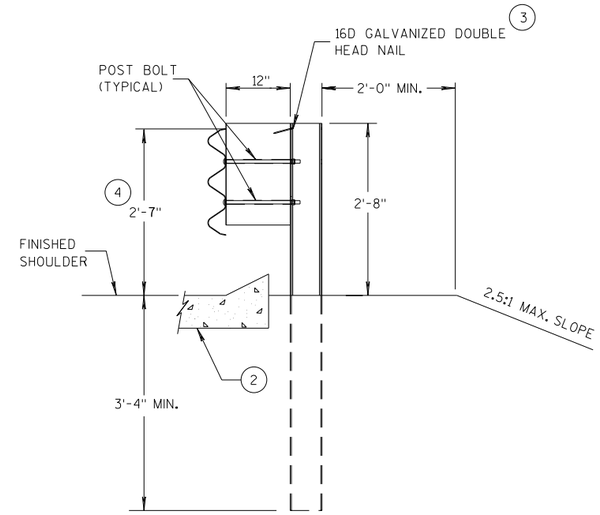

SECTION C-C

POSTS 7-11

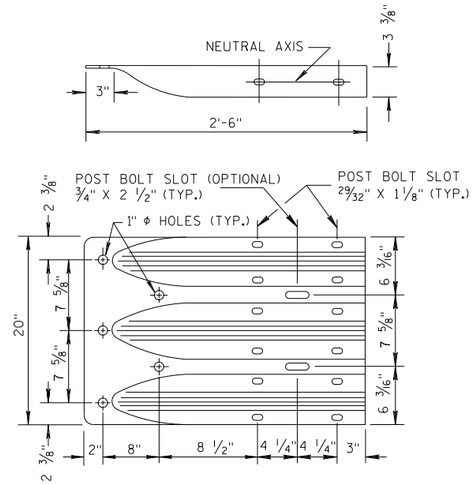

THRIE BEAM TERMINAL CONNECTOR

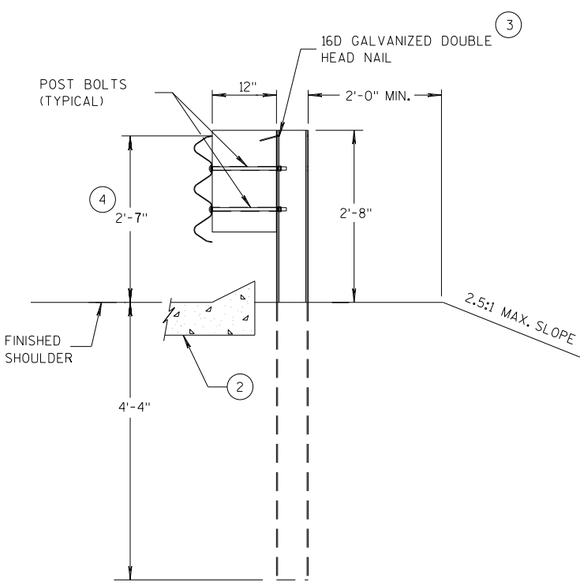

SECTION D-D

POSTS 12-17

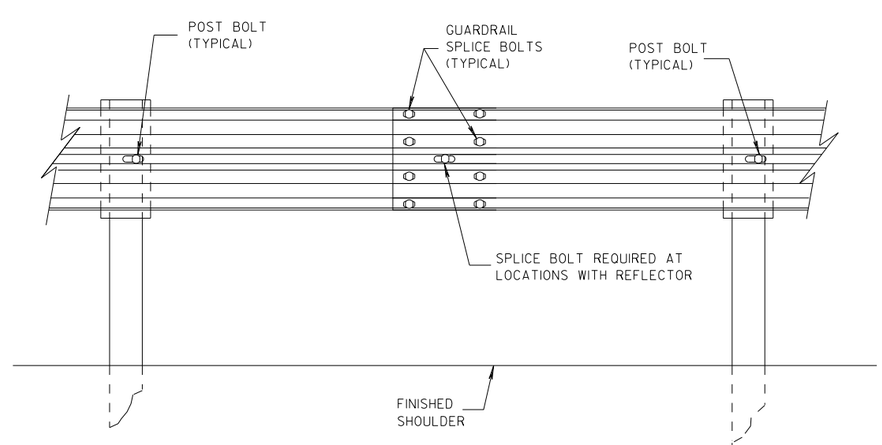

SPLICE DETAIL

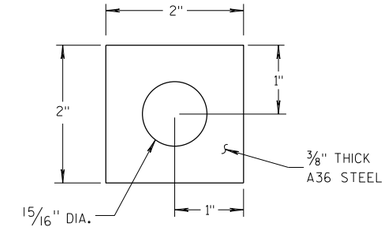

PLATE WASHER DETAIL

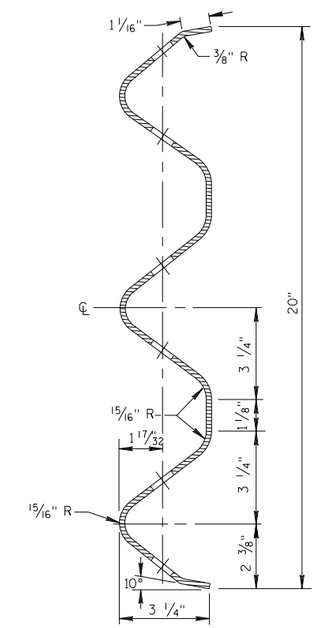

SECTION THRU THRIE BEAM RAIL ELEMENT

MIDWEST GUARDRAIL SYSTEM
THRIE BEAM TRANSITION (MGS)

STATE OF WISCONSIN
DEPARTMENT OF TRANSPORTATION

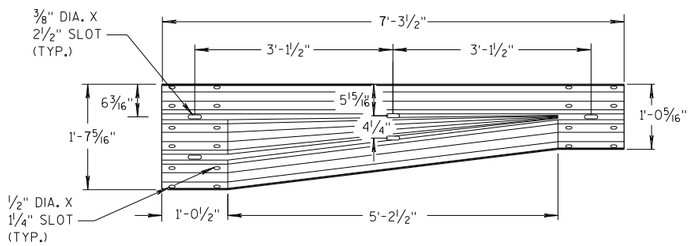

W-BEAM TO THRIE BEAM TRANSITION SECTION

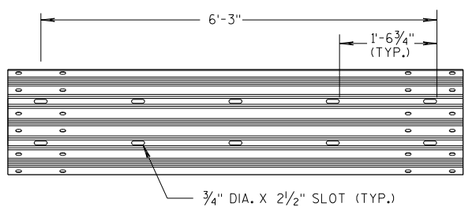

6'-3" THRIE BEAM SECTION

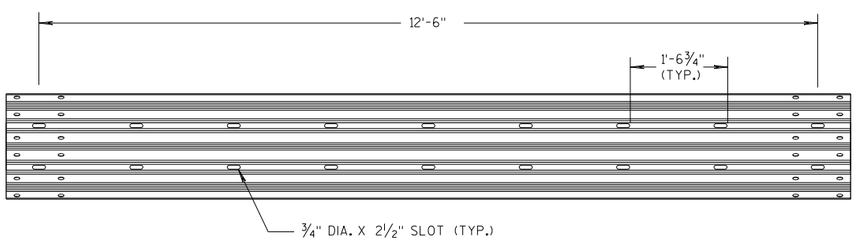

12'-6" THRIE BEAM SECTION

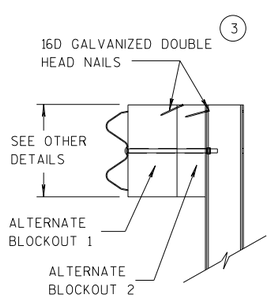

SIDE VIEW

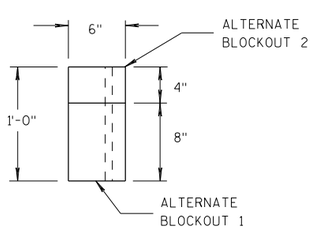

TOP VIEW

ALTERNATE WOOD BLOCKOUT DETAIL

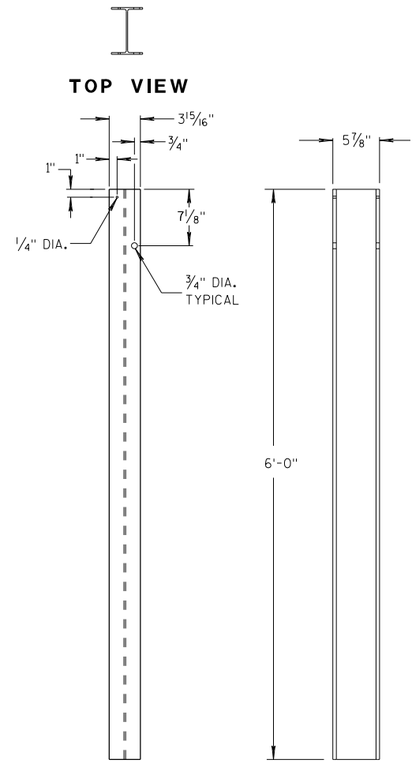

STEEL POSTS 1-5 (13)

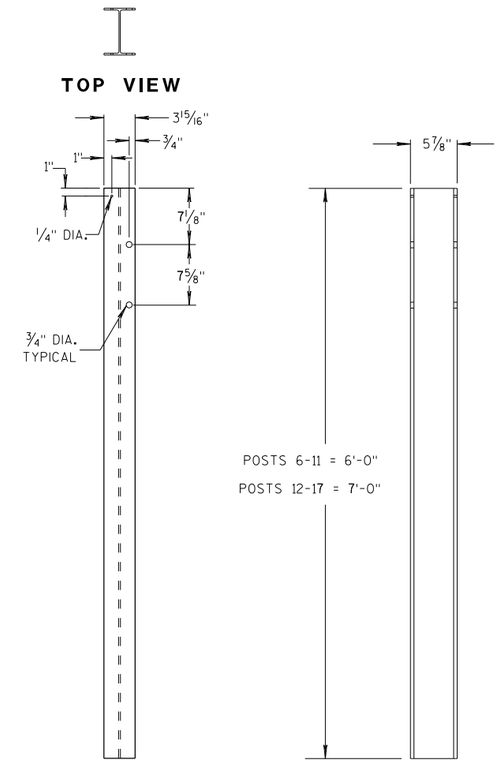

STEEL POSTS 6-17

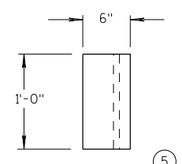

TOP VIEW (5)

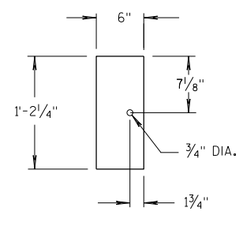

FRONT VIEW

BLOCKOUT POSTS 1-5

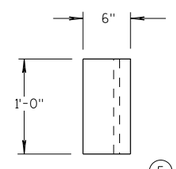

TOP VIEW (5)

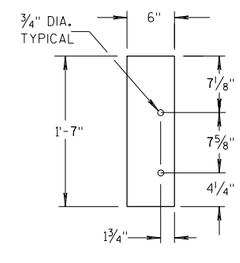

FRONT VIEW

BLOCKOUT POSTS 6-17

GENERAL NOTES

STEEL POSTS ARE W6X9 OR W6X8.5.

BOLT HOLES FOR POST ARE ON FRONT AND OF SIDE OF POST.

(3) WHEN USING STEEL POSTS AND WOOD BLOCKOUTS INSTALL FOUR 16D GALVANIZED NAILS. INSTALL NAILS AT THE BACK CORNERS OF THE BLOCK AND BEND THE NAILS OVER THE FLANGE OF THE STEEL POST.

(5) WOOD BLOCKS MAY BE CONSTRUCTED OUT OF 2 WOOD BLOCKS. SEE ALTERNATE WOOD BLOCK DETAIL.

(13) STEEL OR WOOD POST IS ACCEPTABLE AT POST 1. SEE SDD 14B42.

MIDWEST GUARDRAIL SYSTEM
THRIE BEAM TRANSITION (MGS)

STATE OF WISCONSIN
DEPARTMENT OF TRANSPOR

6

S.D.D. 14 B 45-5c

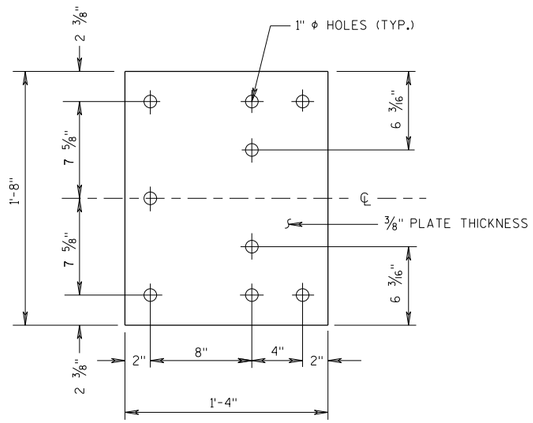

BACK-UP PLATE DETAIL

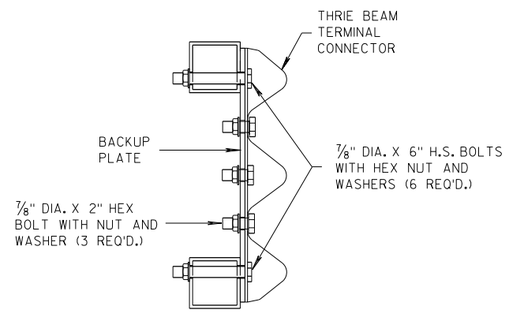

SECTION J-J

GENERAL NOTES

(4) TOLERANCE FOR TOP OF BEAM IS ± 1".

(6) DRILLING HOLES THROUGH THE PAPRPET, BOLTS, NUTS, WASHERS AND REPAIRING DAMAGED CONCRETE ARE INCIDENTAL TO THE CONTRACT.

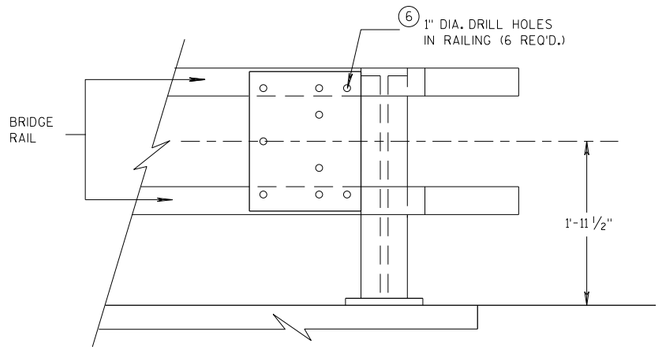

BACK-UP PLATE MOUNTING ONTO BRIDGE RAILING

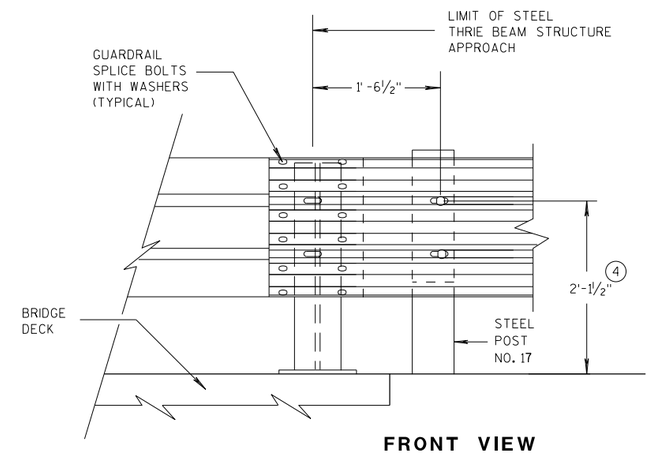

FRONT VIEW

THRIE BEAM CONNECTION TO STEEL RAILING TYPE "W"

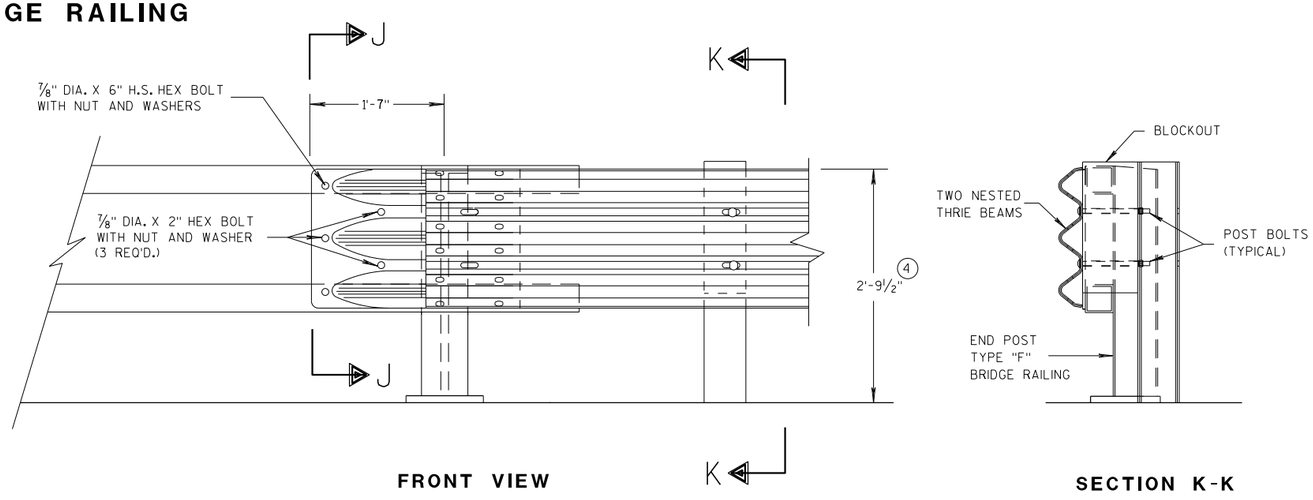

FRONT VIEW

SECTION K-K

THRIE BEAM CONNECTION TO TUBULAR RAILING TYPE "F"

MIDWEST GUARDRAIL SYSTEM THRIE BEAM TRANSITION (MGS)

STATE OF WISCONSIN
DEPARTMENT OF TRANSPORTATION

APPROVED 07/2018 — DATE — FHWA

/S/ Rodney Taylor — ROADWAY STANDARDS DEVELOPMENT UNIT SUPERVISOR

6

S.D.D. 14 B 45-5g

GENERAL NOTES

DETAILS OF CONSTRUCTION, MATERIALS AND WORKMANSHIP NOT SHOWN ON THIS DRAWING SHALL CONFORM TO THE PERTINENT REQUIREMENTS OF THE STANDARD SPECIFICATIONS AND THE APPLICABLE SPECIAL PROVISIONS.

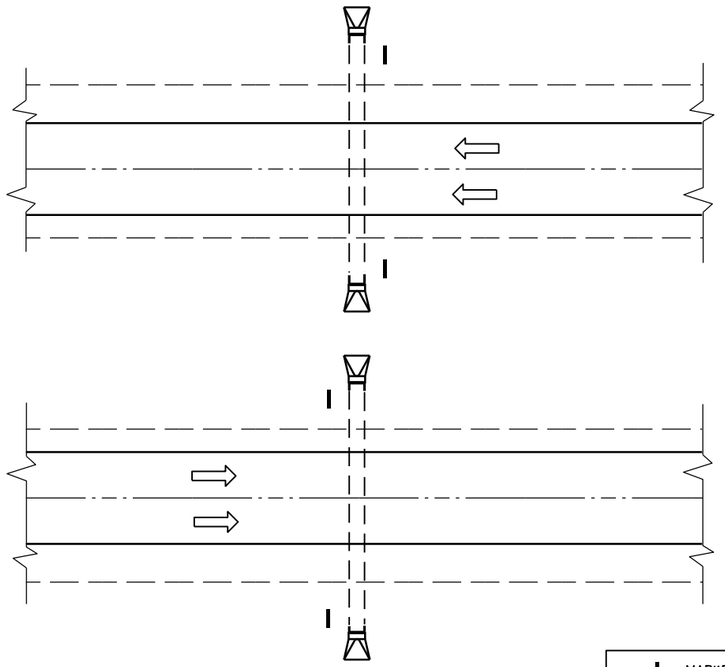

PLAN VIEW

DIVIDED HIGHWAY

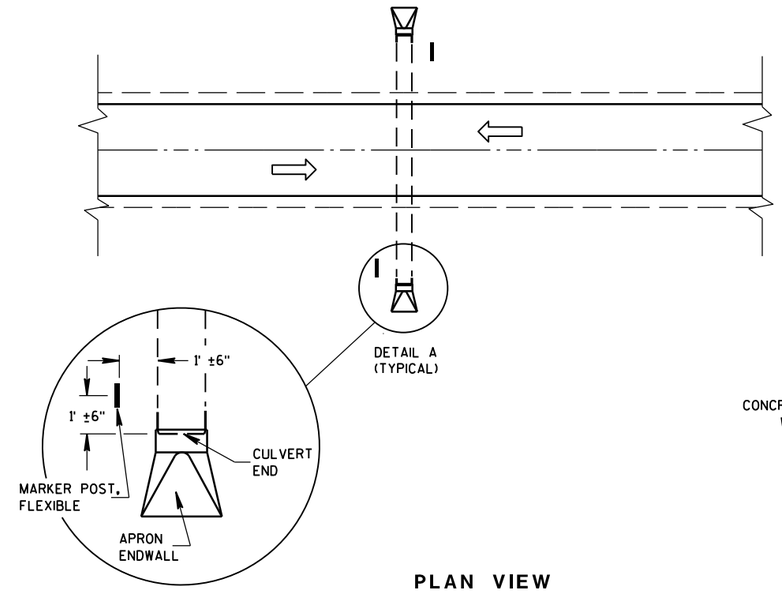

DETAIL A
(TYPICAL)

PLAN VIEW

UNDIVIDED HIGHWAY

MARKER POST, FLEXIBLE

DIRECTION OF TRAFFIC FLOW

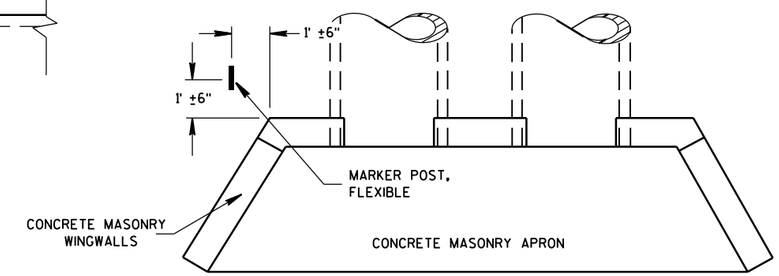

PLAN VIEW

CONCRETE MASONRY ENDWALLS FOR CULVERT PIPE AND PIPE ARCH

FLEXIBLE MARKER POST LOCATION

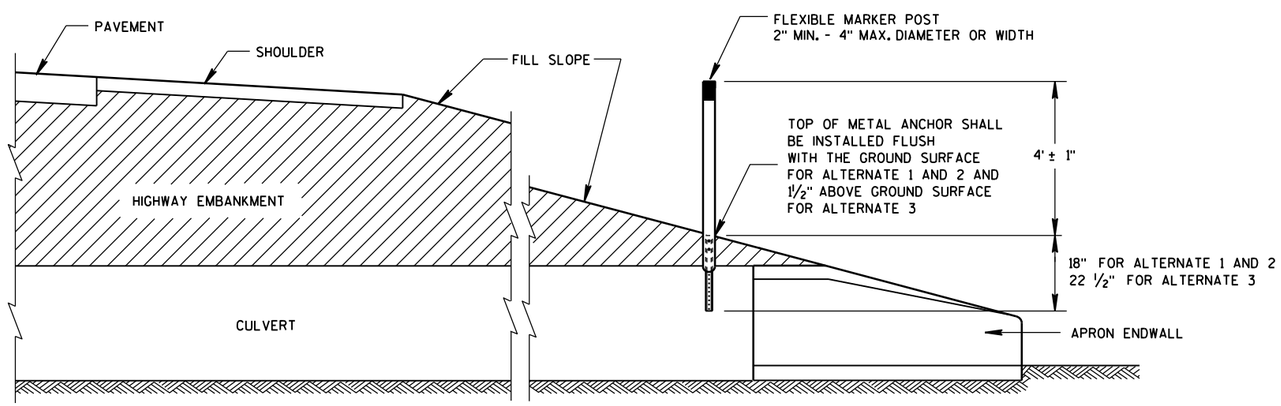

CROSS SECTION

FLEXIBLE MARKER POST

FLEXIBLE MARKER POST FOR CULVERT END

STATE OF WISCONSIN
DEPARTMENT OF TRANSPOR

6

S.D.D. 15 A 3-2a

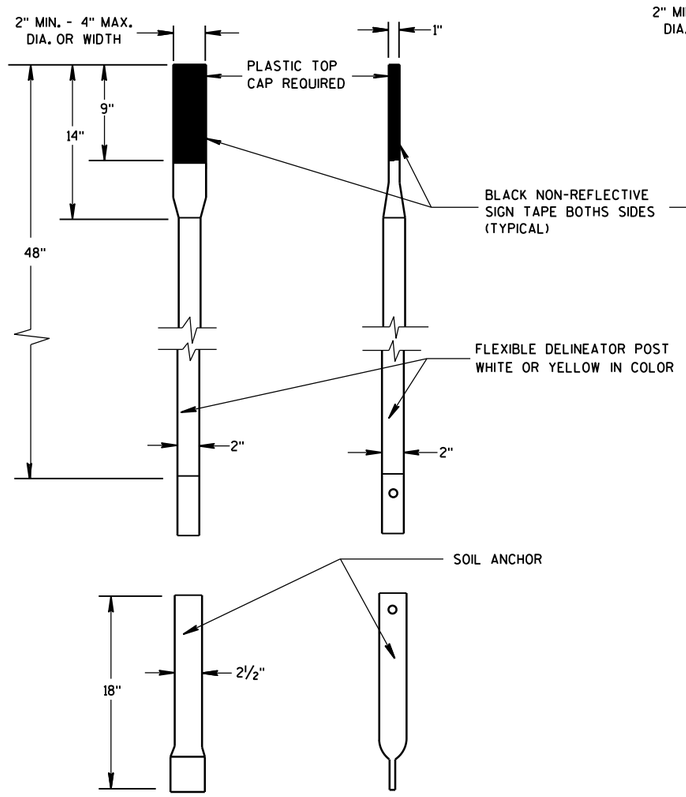

FRONT VIEW SIDE VIEW

ALTERNATE 1

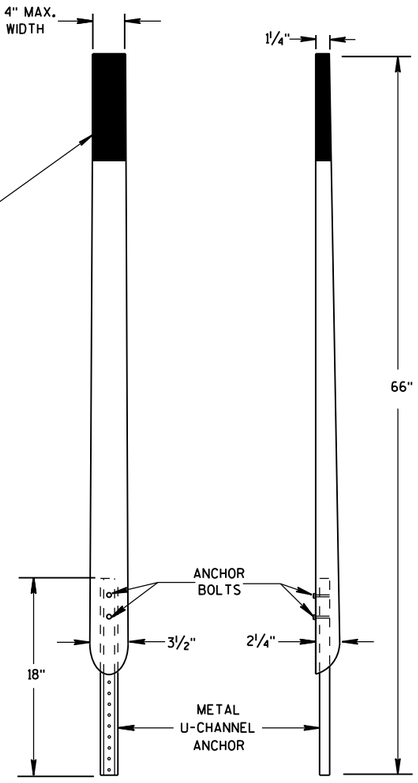

FRONT VIEW SIDE VIEW

ALTERNATE 2

FLEXIBLE MARKER POSTS

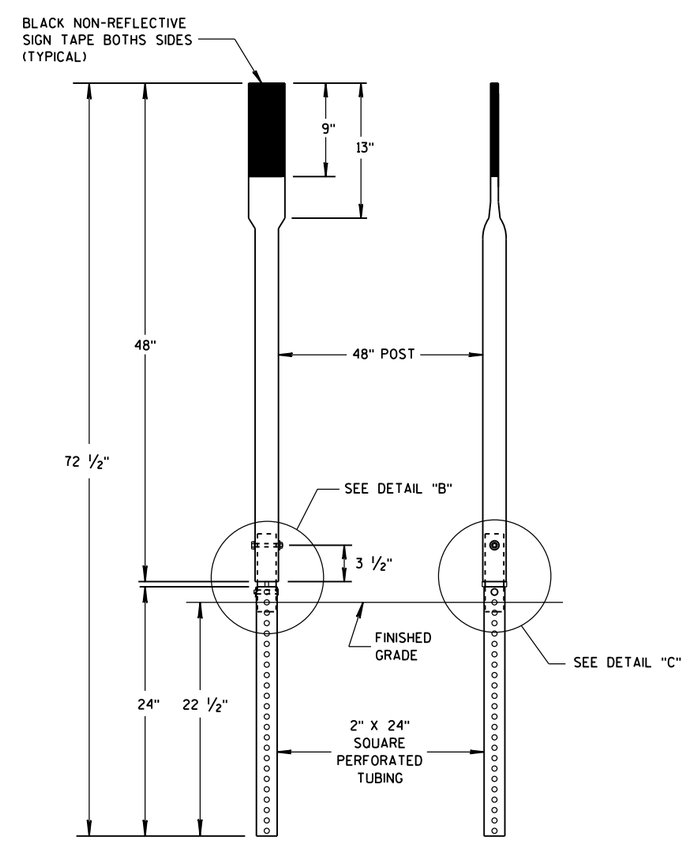

FRONT VIEW SIDE VIEW

ALTERNATE 3

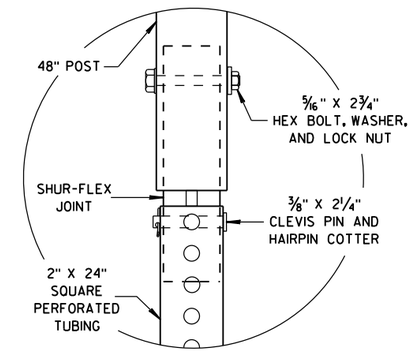

DETAIL B

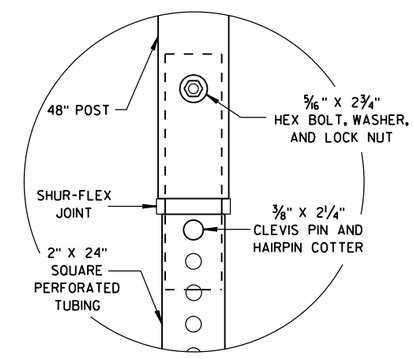

DETAIL C

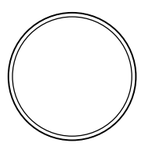

SECTION A-A

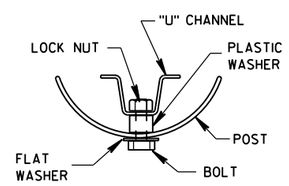

SECTION B-B

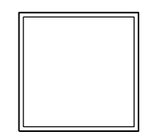

SECTION C-C

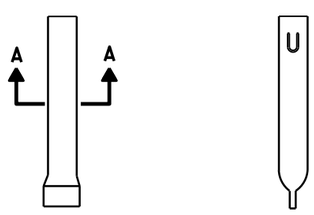

FRONT VIEW SIDE VIEW

ALTERNATE 1

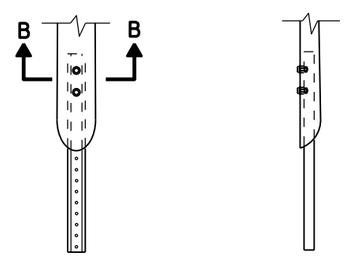

FRONT VIEW SIDE VIEW

ALTERNATE 2

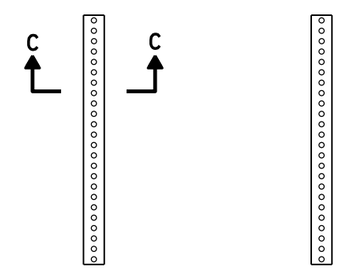

FRONT VIEW SIDE VIEW

ALTERNATE 3

FLEXIBLE MARKER POST ANCHORS

FLEXIBLE MARKER POST
FOR CULVERT END

STATE OF WISCONSIN
DEPARTMENT OF TRANSPORTATION

APPROVED
10/1/2012 /S/ Travis Feltes
DATE STATE TRAFFIC ENGINEER
FHWA

6

6

S.D.D. 15 A 3-2b

S.D.D. 15 A 3-2b

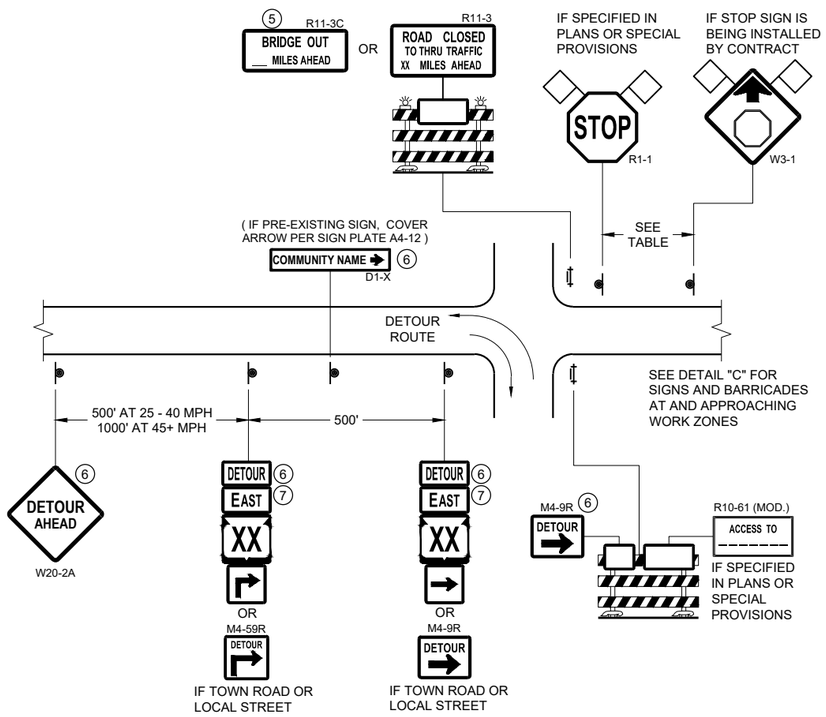

DETAIL A
MAINLINE CLOSURE WITH POSTED DETOUR

WORK ZONE GREATER THAN OR EQUAL TO ½ MILE FROM DETOUR ROUTE (1000 FEET IF URBAN)

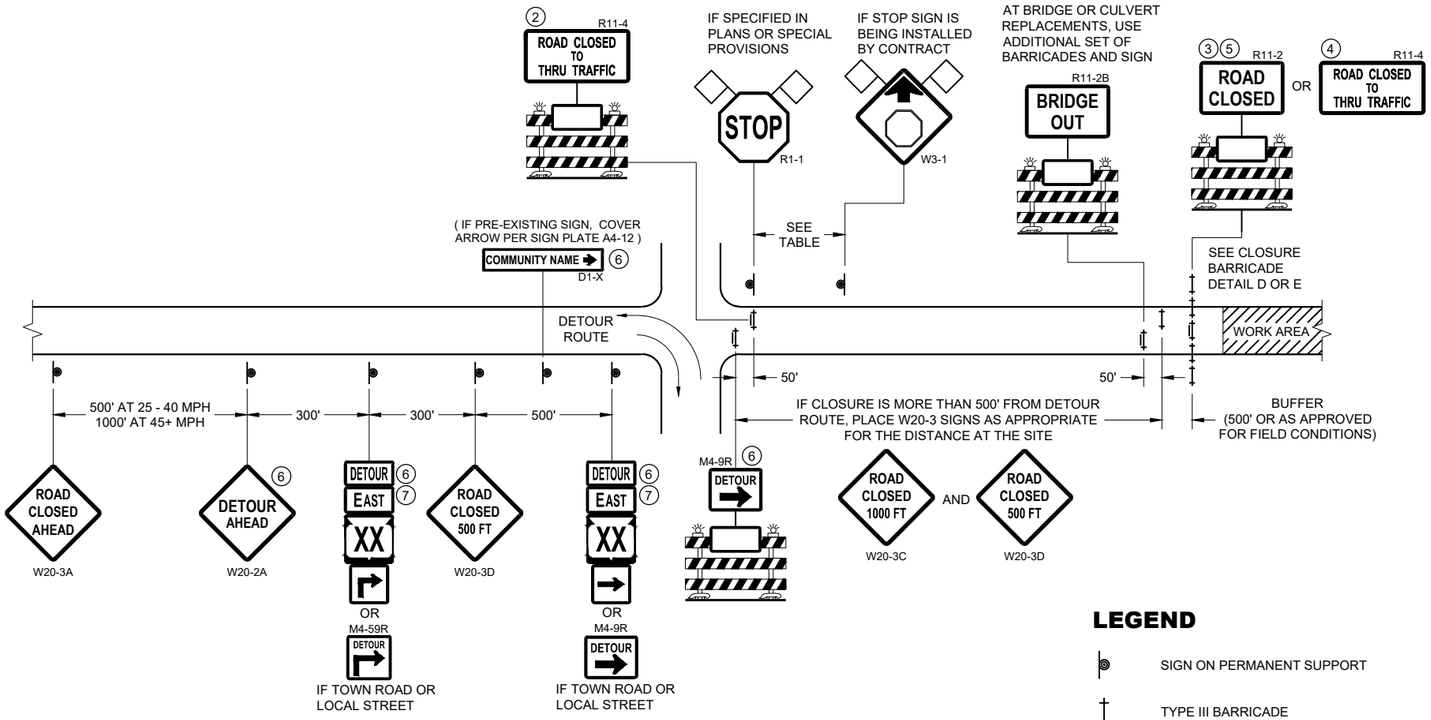

DETAIL B
MAINLINE CLOSURE WITH POSTED DETOUR

WORK ZONE LESS THAN ½ MILE FROM DETOUR ROUTE (1000 FEET IF URBAN)

LEGEND

- SIGN ON PERMANENT SUPPORT
- TYPE III BARRICADE
- TYPE III BARRICADE WITH ATTACHED SIGN
- TYPE "A" WARNING LIGHT (FLASHING)
- WORK AREA
- FLAGS, 16" X 16" MIN. (ORANGE)
- DETOUR — M4 - 8
- EAST — M3 - X
- XX (M1 - 4) OR XX (M1 - 6) OR COUNTY X (M1 - 5A)
- M05 - 1 OR M06 - 1

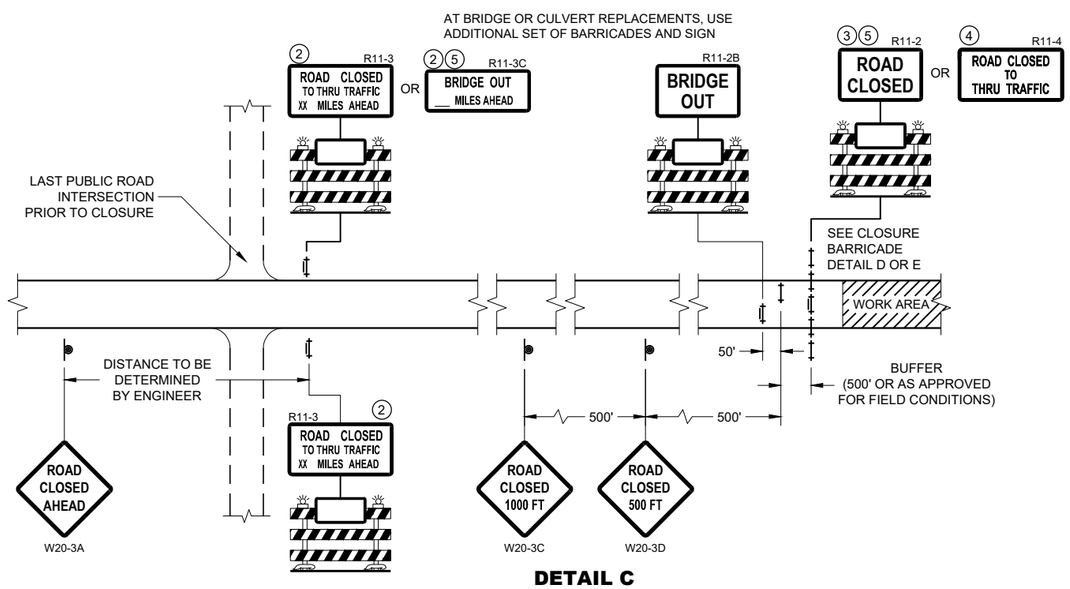

DETAIL C
MAINLINE CLOSURE, NO POSTED DETOUR

SPEED LIMIT (MPH)	"STOP AHEAD" ADVANCE WARNING DISTANCE (FT)
25	200
30	200
35	350
40	350
45	500
50	550
55	750

SEE SDD 15C2-SHEET "b" FOR GENERAL NOTES AND FOOTNOTES 1 THROUGH 7

BARRICADES AND SIGNS FOR MAINLINE CLOSURES

STATE OF WISCONSIN
DEPARTMENT OF TRANSPORTATION

APPROVED
May 2023 — DATE
/S/ Andrew Heidtke — WORK ZONE ENGINEER
FHWA

6

SDD 15C02 - 09a

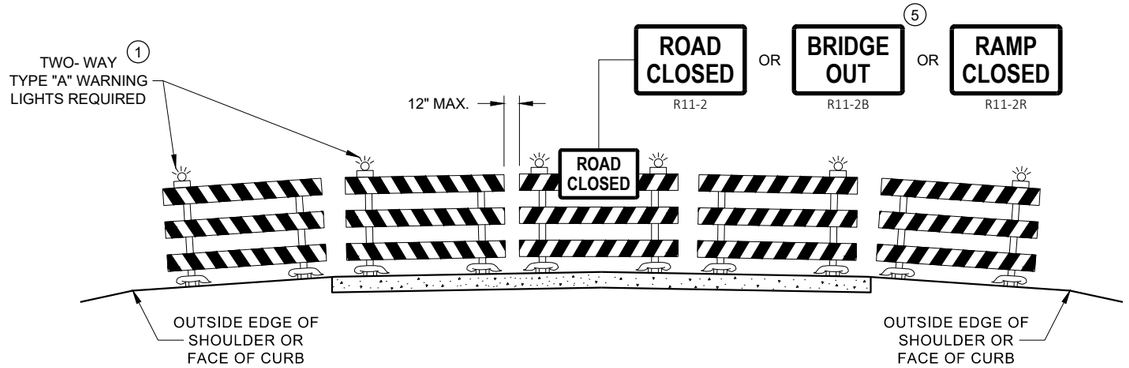

DETAIL D
ROAD CLOSURE BARRICADE DETAIL
APPROACH VIEW

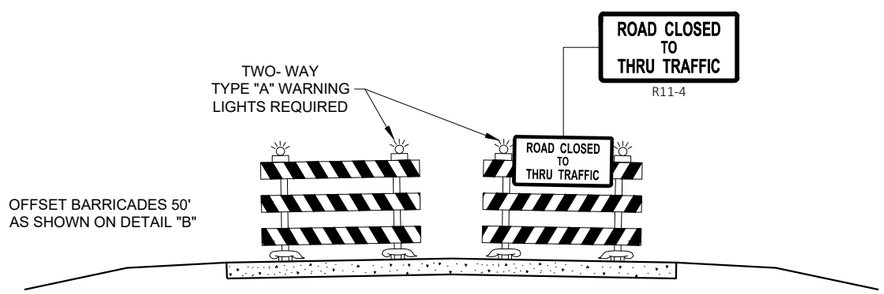

DETAIL E
LANE CLOSURE BARRICADE DETAIL
APPROACH VIEW

SEE SDD 15C2 - SHEET "a" FOR LEGEND

GENERAL NOTES

THE EXACT NUMBER, LOCATION, AND SPACING OF ALL SIGNS AND BARRICADES SHALL BE ADJUSTED TO FIT FIELD CONDITIONS AS APPROVED BY THE ENGINEER.

ANY SIGNS TEMPORARY OR EXISTING, WHICH CONFLICT WITH TRAFFIC CONTROL "IN USE", SHALL BE REMOVED OR COVERED AS NEEDED AND AS APPROVED BY THE ENGINEER.

THE SPACING BETWEEN TRAFFIC CONTROL SIGNS SHOULD BE ADJUSTED TO NOT CONFLICT WITH AND SHOULD PROVIDE A DESIRABLE MINIMUM OF 200 FEET CLEARANCE TO EXISTING SIGNS THAT WILL REMAIN IN PLACE.

BARRICADES THAT MUST BE MOVED FOR A WORK OPERATION SHALL BE IMMEDIATELY RE-ESTABLISHED UPON COMPLETION OF THE OPERATION, OR FOR CONTINUING OPERATIONS, AT THE END OF EACH WORKING DAY.

SIGNS THAT WILL BE IN PLACE LESS THAN 7 CONTINUOUS DAYS AND NIGHTS MAY BE MOUNTED ON PORTABLE SUPPORTS.

ALL TYPE III BARRICADES SHALL HAVE RAILS REFLECTORIZED ON BOTH FACES. STRIPES SHALL BE PROPERLY SLOPED DOWN TOWARD THE TRAFFIC SIDE OR AS SHOWN IN THE ROAD CLOSURE BARRICADE DETAIL "D" FOR FULL ROAD CLOSURES.

TYPE "A" LOW - INTENSITY FLASHING WARNING LIGHTS SHALL BE VISIBLE ON BOTH SIDES OF THE BARRICADE.

THE R11 - 2, R11 - 3, M4 - 9, R11 - 4, AND R10 - 61 SIGNS PLACED ON THE BARRICADES SHALL COVER NO MORE THAN THE TOP RAIL. THE SIGNS SHALL NOT COVER ANY PORTION OF THE MIDDLE RAIL OR BOTTOM RAILS.

"WO" AND "MO" SIGNS ARE THE SAME AS "W" AND "M" SIGNS EXCEPT THE BACKGROUND IS ORANGE.

ALL SIGNS SHALL BE 48" X 48" UNLESS OTHERWISE NOTED BELOW:
- R11 - 2 SHALL BE 48" X 30"
- R11 - 3 SHALL, R11 - 4 AND R10 - 61 SHALL BE 60 " X 30"
- M4 - 9 SHALL BE 30" X 24"
- M3 - X SHALL BE 24" X 12" (36" X 18" IF NEEDED TO MATCH EXISTING SIGNS)
- M4 - 8 SHALL BE 24" X 12" (36" X 18" IF NEEDED TO MATCH EXISTING SIGNS)
- M1 - 4, M1 - 5A AND M1 - 6 SHALL BE 24" X 24" (36" X 36" IF NEEDED TO MATCH EXISTING SIGNS)
- MO5 - 1 AND MO6 - 1 SHALL BE 21" X 21" (30" X 30" IF NEEDED TO MATCH EXISTING SIGNS)
- D1 - X SHALL BE AS SHOWN ON SPECIFIC PROJECT SIGNING DETAIL SHEETS.
- R1 - 1 SHALL BE 36" X 36"

1. TWO WARNING LIGHTS SHALL BE PROVIDED ON THE CENTER BARRICADE AND A MINIMUM OF ONE WARNING LIGHT SHALL BE PROVIDED ON EACH OF THE OTHER BARRICADES WITHIN THE ROADWAY LIMITS. SPACING OF THE WARNING LIGHTS SHALL BE UNIFORM TO THE EDGE OF ROADWAY AS SHOWN (APPROX. 8 FOOT LIGHT SPACING.
2. THESE SIGNS AND BARRICADES ARE NOT REQUIRED IF ROAD CLOSURE BEGINS AT AN INTERSECTION.
3. FOR ROAD CLOSURE WITHOUT LOCAL ACCESS TO PROJECT, SEE ROAD CLOSURE BARRICADE DETAIL "D".
4. FOR ROAD CLOSURE WITH LOCAL ACCESS TO PROJECT, SEE ROAD CLOSURE BARRICADE DETAIL "E".
5. FOR BRIDGE OR CULVERT REPLACEMENTS, SUBSTITUTE "BRIDGE OUT" INSTEAD OF "ROAD CLOSED" ON R11 - 2 AND R11 - 3 SIGNS.
6. INSTALL DETOUR AND COMMUNITY GUIDE SIGNS AND ARROWS ONLY IF SPECIFIED IN THE CONTRACT. IF THERE ARE EXISTING ROUTE MARKER ASSEMBLIES THAT WILL REMAIN IN PLACE, ADJUST THE LOCATION OF THE DETOUR ROUTE SIGNS TO CORRESPOND WITH THE EXISTING ASSEMBLIES. MODIFY EXISTING SIGNS WHERE POSSIBLE. SEE SPECIFIC PROJECT DETOUR SIGNING DETAIL SHEETS. IF DETOUR SIGNS ARE BEING INSTALLED BY OTHERS, PLACE THE CONTRACTED TRAFFIC CONTROL SIGNS TO ALLOW FOR PLACEMENT OF ALL WARNING, DETOUR AND GUIDE SIGNS AS SHOWN.
7. "EAST" CARDINAL DIRECTION MARKERS AND RIGHT TURN ARROWS ARE SHOWN. USE OTHER CARDINAL DIRECTIONS AND ARROWS AS APPROPRIATE.

BARRICADES AND SIGNS FOR VARIOUS CLOSURES

STATE OF WISCONSIN
DEPARTMENT OF TRANSPORTATION

APPROVED
May 2023 — DATE
/S/ Andrew Heidtke — WORK ZONE ENGINEE
FHWA

6
SDD 15C02 - 09b

GENERAL NOTES

1. REFLECTIVE SHEETING SHALL FOLLOW THE REQUIREMENTS IN THE APPROVED PRODUCTS LISTING FOR SIGN SHEETING.
2. LOCATION OF WARNING LIGHTS WHEN SHOWN ON THE PLAN.

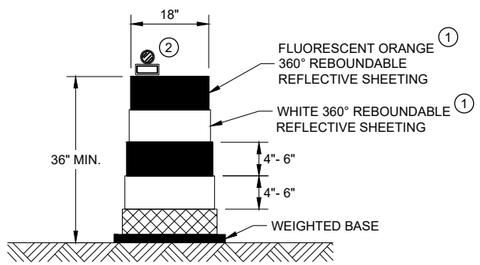

DRUM

BALLAST WIDTHS
RANGE FROM 24"-36"

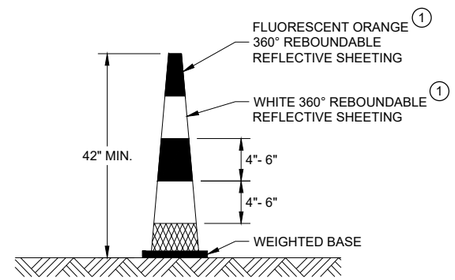

42" CONE

DO NOT USE IN TAPERS
½ SPACING OF DRUMS

BALLAST WIDTHS
RANGE FROM 14"-20"

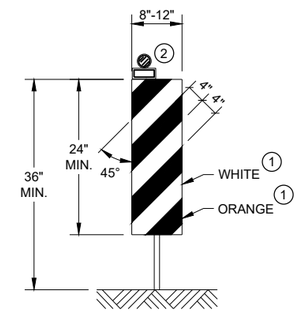

VERTICAL PANEL

THE STRIPES SHALL SLOPE DOWNWARD TO
THE TRAFFIC SIDE FOR CHANNELIZATION.

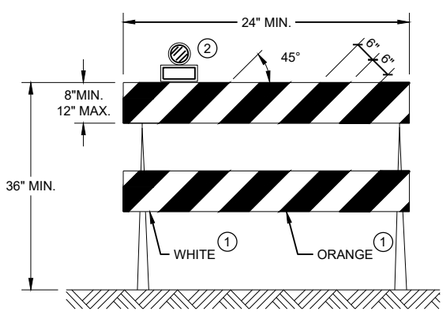

TYPE II BARRICADE

FOR RAILS LESS THAN 36" LONG, 4" WIDE STRIPES
MAY BE USED. ALL STRIPES SHALL SLOPE DOWNWARD
TO THE TRAFFIC SIDE FOR CHANNELIZATION.

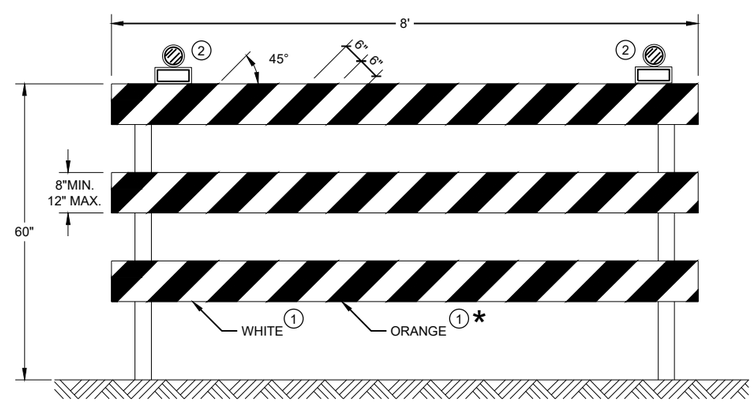

TYPE III BARRICADE

IF SIGN MOUNTED, DO NOT COVER MORE THAN 50% OF THE TOP
TWO RAILS OR 33% OF THE TOTAL AREA OF THE THREE RAILS.

* IF USED FOR A PERMANENT APPLICATION USE RED SHEETING.

CHANNELIZING DEVICES
DRUMS, CONES, BARRICADES
AND VERTICAL PANELS

STATE OF WISCONSIN
DEPARTMENT OF TRANSPORTATION

APPROVED
November 2022 — DATE
/S/ Andrew Heidtke — WORK ZONE ENGINEE
FHWA

6

6

SDD 15C11 - 10b

SDD 15C11 - 10b

URBAN AREA

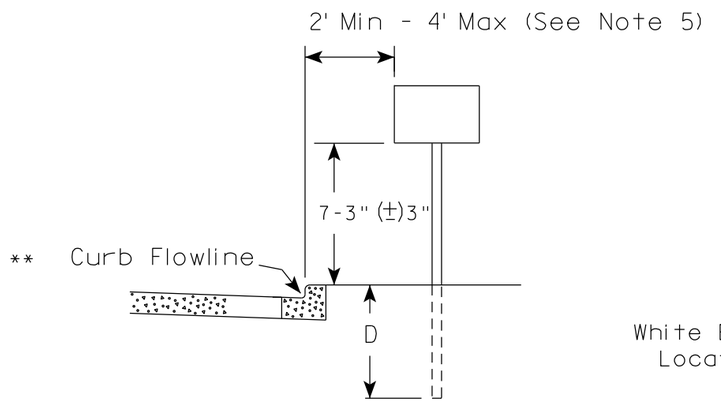

RURAL AREA (See Note 2)

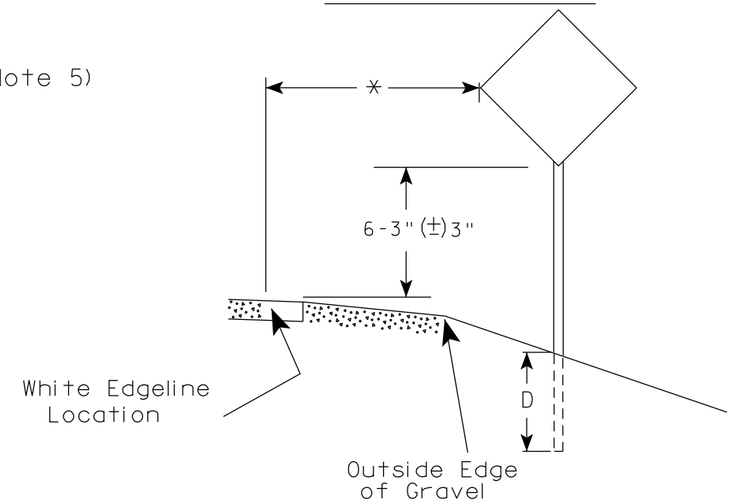

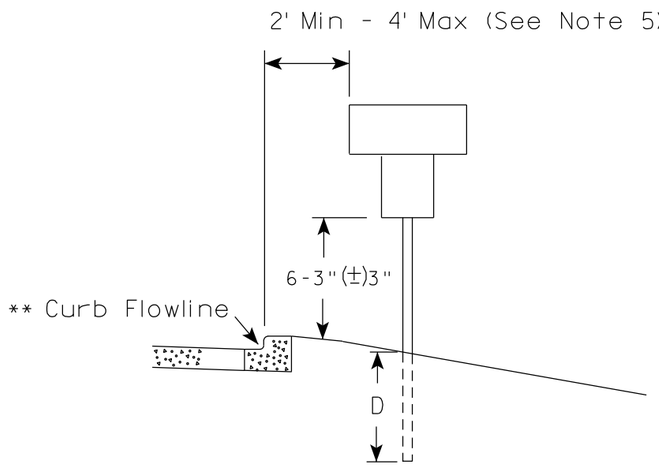

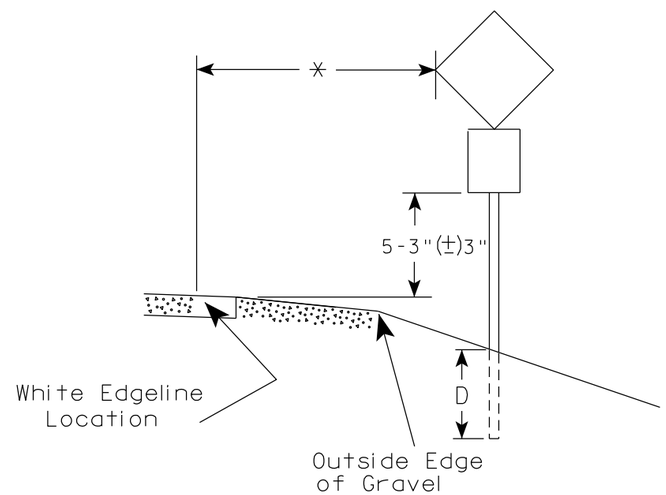

** The existence of curb and gutter does not in itself mandate the vertical clearance illustrated. That height is typically measured where there is sidewalk adjacent to the roadway or parking is permitted. In the absence of sidewalk vertical clearance is measured from the top of the curb. Offset of signs is measured from the flow line.

* 6 feet from edge of a paved shoulder or 12 feet from the edge of pavement (edge line location) or 2 feet from outside edge of gravel, whichever is greater unless directed by project engineer.

GENERAL NOTES

1. Signs wider than 4 feet or 20 sq.ft or larger, shall be mounted on multiple posts. Refer to plate A4-4.
2. If signs are mounted on or behind barrier wall, see A4-10 sign plate.
   The Double Arrow sign (W12-1D) shall be mounted at a height of 2'-3" (±) 3". The Chevron sign (W1-8), Roundabout Chevron panel (R6-4B), Enhanced Reference Markers, Clearance Markers (W5-52), Mile Markers (D10 series), In Road Object Markers (W5-54) & End of Road Markers (W5-56) shall be mounted at a height of 4'-3" (±) 3".
3. For expressways and freeways, mounting height is 7'- 3" (±) 3" or 6'-3" (±) 3" depending upon existence of a sub-sign.
4. Minimum mounting height for signs mounted on traffic signal poles is 5'- 3" (±) 3".
5. Offset distance shall be consistent with existing signs or consistent throughout length of project.
6. Folding signs shall be mounted at a height of 5'-3" (±) 3" or as directd by the Engineer.

POST EMBEDMENT DEPTH

Area of Sign Installation (Sq. Ft.)	D (Min)
20 or Less	4'
Greater than 20	5'

TYPICAL INSTALLATION OF PERMANENT TYPE II SIGNS ON SINGLE POSTS

WISCONSIN DEPT OF TRANSPORTATION

APPROVED Matthew R Rauch
for State Traffic Engineer

DATE 12/6/23 PLATE NO. A4-3.23

7 7

PROJECT NO:	HWY:	COUNTY:		SHEET NO: 74	E

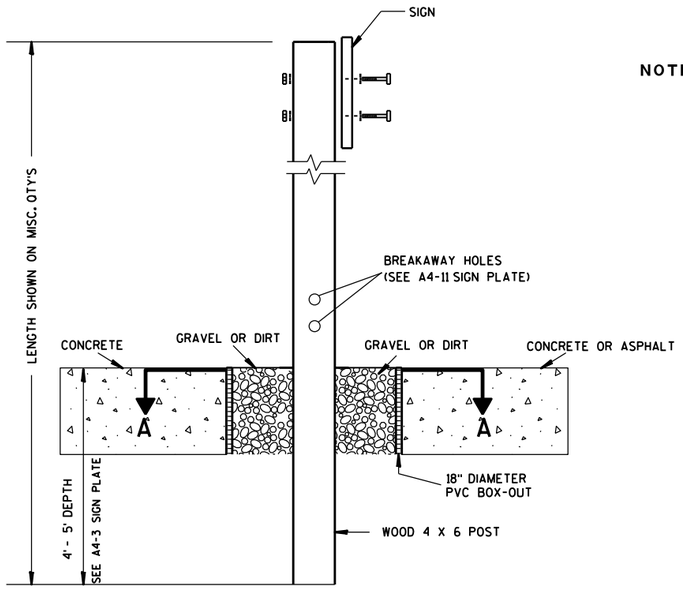

ELEVATION VIEW

DETAIL OF WOOD 4 X 6 SIGN POST IN BOX-OUT

NOTES:
1. ALL MATERIAL TO BE APPROVED BY ENGINEER PRIOR TO INSTALLATION
2. SEE SIGN PLATE A4-8 FOR SIGN HARDWARE REQUIREMENTS
3. 18 INCH X 18 INCH SQUARE BOX-OUTS MAY BE USED FOR INSTALLATIONS IN EXISTING CONCRETE OR ASPHALT LOCATIONS.

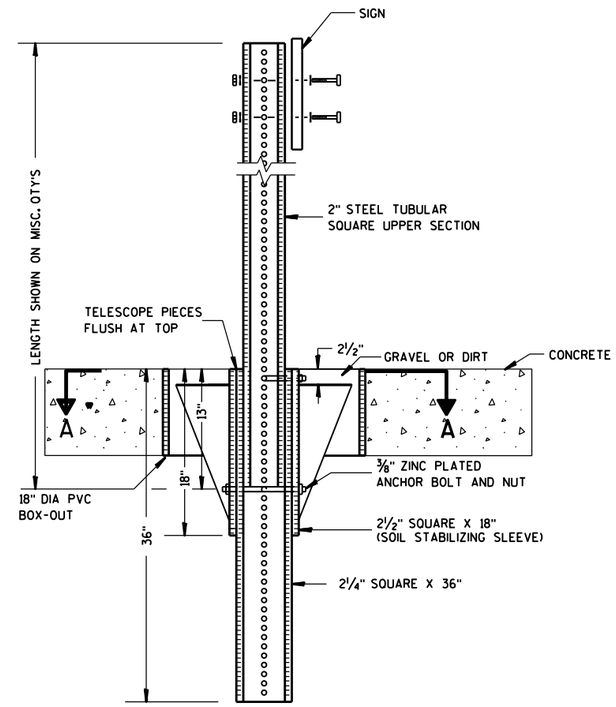

ELEVATION VIEW

DETAIL OF STEEL 2 X 2 SIGN POST IN BOX-OUT

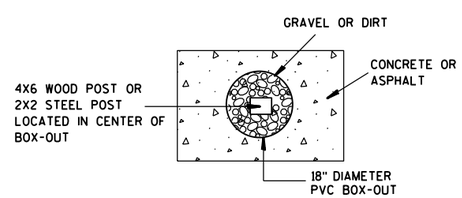

PLAN VIEW

FOR NEW CONCRETE/ASPHALT INSTALLATIONS

SIGN POST
BOX-OUTS
A4-3B

WISCONSIN DEPT OF TRANSPORTATION

APPROVED Matthew R Rauch
for State Traffic Engineer

DATE 1/27/14 PLATE NO. A4-3B.1

PROJECT NO:	HWY:	COUNTY:		SHEET NO:	E

URBAN AREA

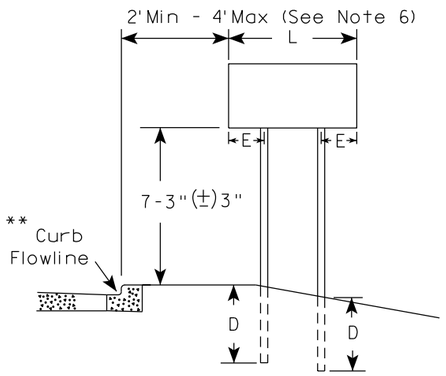

RURAL AREA (See Note 3)

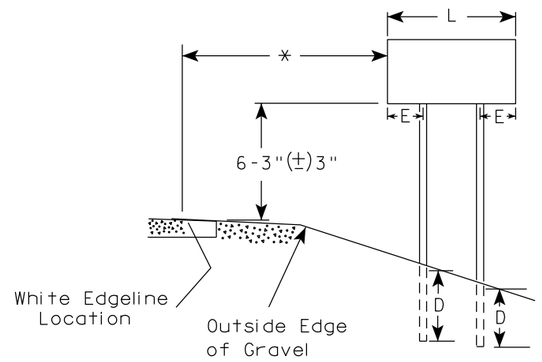

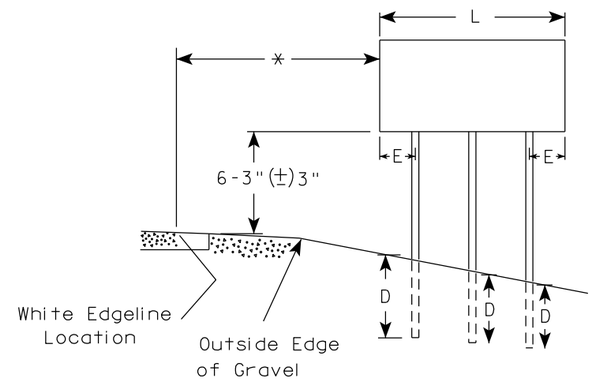

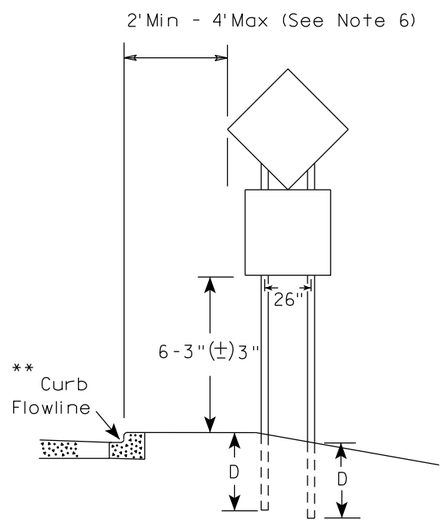

48" DIAMOND WARNING SIGN

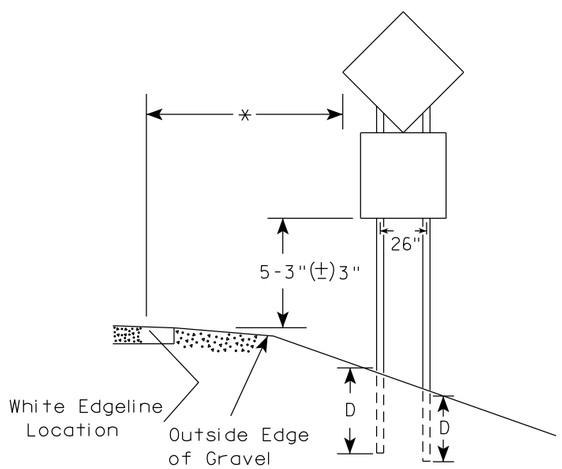

48" DIAMOND WARNING SIGN

GENERAL NOTES

1. For 3 or 4 post installations, individual post spacing shall be greater than 3'-6".
2. See tables below for required number of posts.
3. For expressways and freeways, mounting height is 7'-3" (±) 3" or 6'-3" (±) 3" depending upon existence of sub-sign.
4. The (±) tolerance for mounting height is 3 inches.
5. J-Assemblies are considered to be one sign for mounting height.
6. Offset distance shall be consistent with existing signs or consistent throughout length of project.
7. Folding signs shall be mounted at a height of 5'-3" (±) 3" or as directed by the engineer.
8. The Double Arrow sign (W12-1) shall be mounted at a height of 2'-3" (±) 3". The Chevron sign (W1-8), Roundabout Chevron panel (R6-4B), Clearance Markers (W5-52), Mile Markers (D10 series), In Road Object Markers (W5-54) & End of Road Markers (W5-56) shall be mounted at a height of 4"-3" (±) 3".

* 6 feet from edge of a paved shoulder or 12 feet from the edge of pavement (edge line location) or 2 feet from outside edge of gravel, whichever is greater unless directed by project engineer.

** The existence of curb and gutter does not in itself mandate the vertical clearance illustrated. That height is typically measured where there is sidewalk adjacent to the roadway or parking is permitted. In the absence of sidewalk vertical clearance is measured from the top of the curb. Offset of signs is measured from the flow line.

*** See A4-3 sign plate for signs 4' or less in width and less than 20 S.F. in area.

SIGN SHAPE OTHER THAN DIAMOND (TWO POSTS REQUIRED)	
L	E
*** Greater than 48" Less than 60"	12"
60" to 108"	L/5

SIGN SHAPE OTHER THAN DIAMOND (THREE POSTS REQUIRED)	
L	E
Greater than 108" to 144"	12"

POST EMBEDMENT DEPTH

Area of Sign Installation (Sq. Ft.)	D (Min)
20 or Less	4'
Greater than 20	5'

TYPICAL INSTALLATION OF TYPE II SIGNS ON MULTIPLE POSTS

WISCONSIN DEPT OF TRANSPORTATION

APPROVED Matthew R Rauch
for State Traffic Engineer

DATE 12/6/23 PLATE NO. A4-4.16

PROJECT NO:	HWY:	COUNTY:		SHEET NO: 76	E

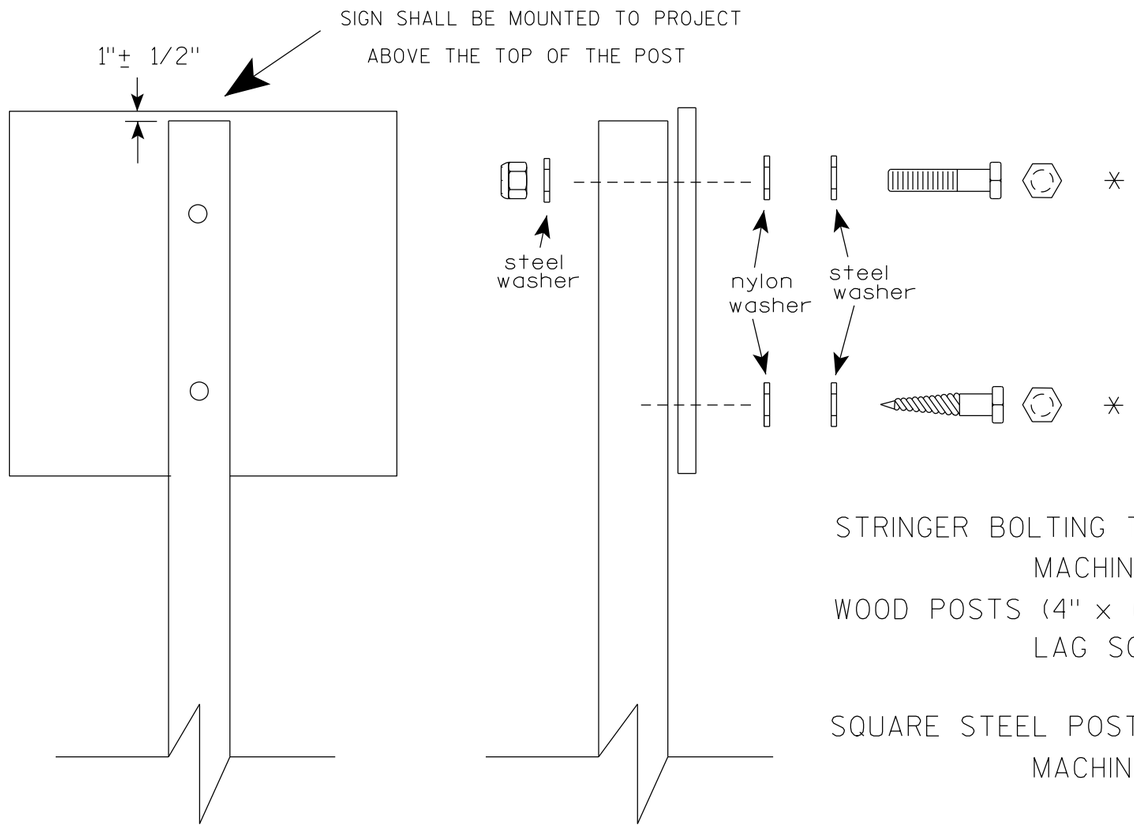

Nuts, bolts and lags used for mounting signs shall have hexagonal heads and shall be either :

a. Hot dip galvanized in accordance with ASTM Designation: A 153, Class D, or SC 3

b. Electro-galvanized in accordance with ASTM Designation : B 633, TYPE III, SC 3.

Threads on bolts and nuts shall be manufactured with sufficient allowance for the cadmium plate or galvanized coating to permit the nuts to run freely on the bolts.

STRINGER BOLTING TO ALUMINUM SIGNS (SEE SIGN PLATE A4-18)

MACHINE BOLTS - 5/16" X 1-3/4" Length w/ lock nuts

WOOD POSTS (4" x 6")

LAG SCREWS - 3/8" X 3" (NO STRINGERS ON BACK OF SIGN)
3/8" X 4" (STRINGERS ON BACK OF SIGN)

SQUARE STEEL POSTS (2" x 2")

MACHINE BOLTS - 3/8" X 3-1/4" Length w/ nuts (NO STRINGER ON BACK OF SIGN)
3/8" X 5" Length w/ nuts (STRINGERS ON BACK OF SIGN)

RIVETS - 9/32 " (6605-9-6) BULB-TITE, TRI-FOLD, ALUMINUM BODY/MANDREL
O.D. FLANGE .720-.765 INCH, GRIP RANGE .042-.375 INCH

WASHERS (ALL POSTS) -

1-1/4" O.D. X 3/8" I.D. X 1/16" STEEL
1-1/4" O.D. X 3/8" I.D. X .080 NYLON

* Two different fastening systems are shown for illustration purposes. On any individual sign, either one or the other system shall be used. Actual number of fasteners per sign varies with the sign area, but normally there are two. For a single post installation, all signs greater than 9 sq. ft. require the use of 3 fasteners.

ATTACHMENT OF SIGNS TO POSTS

WISCONSIN DEPT OF TRANSPORTATION

APPROVED Matthew R Rauch
for State Traffic Engineer

DATE 4/1/2020 PLATE NO. A4-8.9

TELESCOPIC TUBING ANCHORS
TWO PIECE SYSTEM

2 1/4 " SQUARE
12 GAUGE
PERFORATED
GALVANIZED FINISH

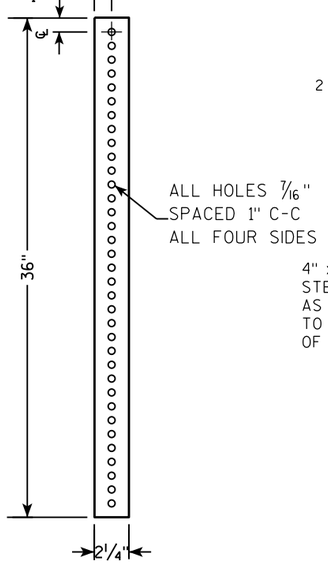

2 1/2 " SQUARE
12 GAUGE
OMNI-DIRECTIONAL
PERFORATED
SOIL STABILIZING SLEEVE
GALVANIZED FINISH

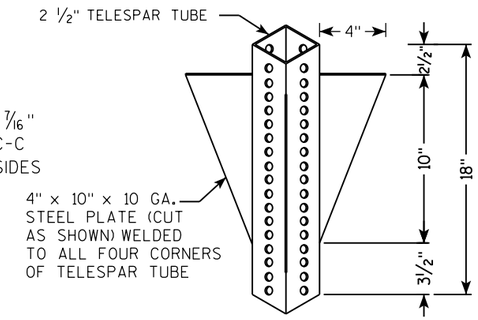

DETAIL OF TUBULAR STEEL SIGN POST
(IN POURED CONCRETE OR ASPHALT)

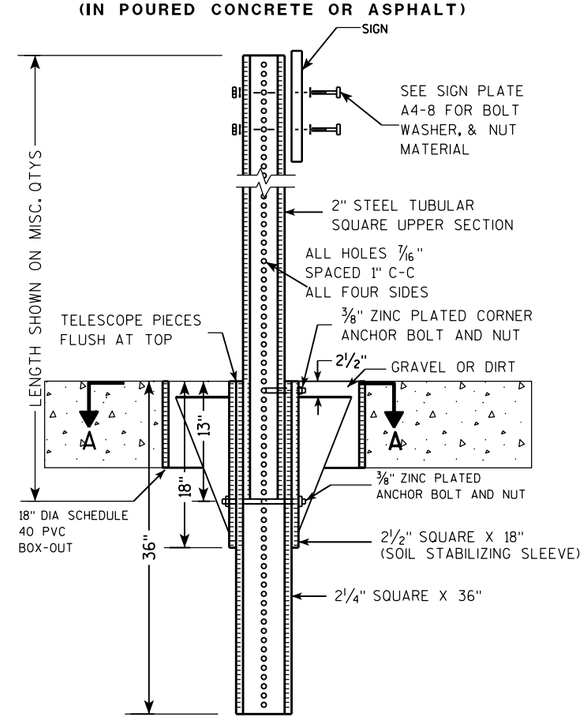

DETAIL OF TUBULAR STEEL SIGN POST
(IN LOCATIONS OTHER THAN POURED CONCRETE OR ASPHALT)

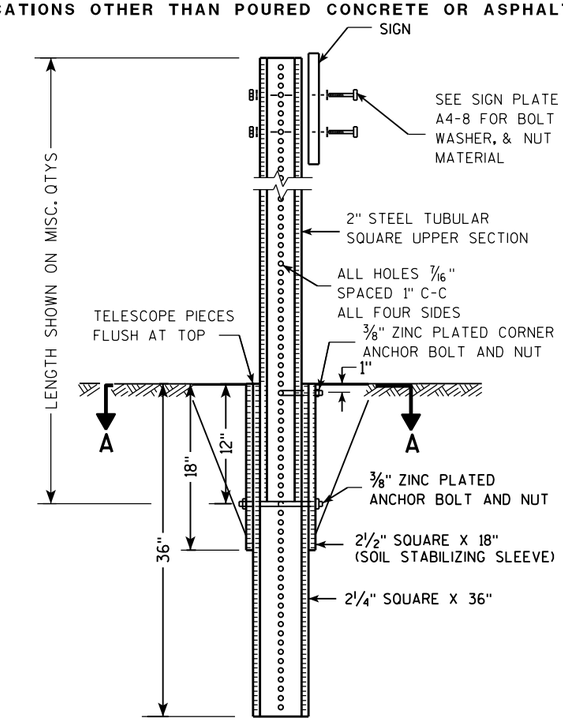

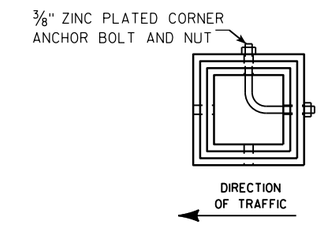

SECTION A-A

Area of Sign Installation (Sq. Ft.)	Number of Required Posts
9 or less	1
Greater than 9 less than or equal to 18	2
Greater than 18 less than or equal to 27	3

Signs wider than 3 feet or larger than 9 sq. ft shall be mounted on multiple posts (see above table).

TUBULAR STEEL
SIGN POST
A4-9

WISCONSIN DEPT OF TRANSPORTATION

APPROVED *Matthew R Rauch*
for State Traffic Engineer

DATE 2/05/15 PLATE A4-9.9

7 78 7

PROJECT NO:	HWY:	COUNTY:		SHEET NO:	E

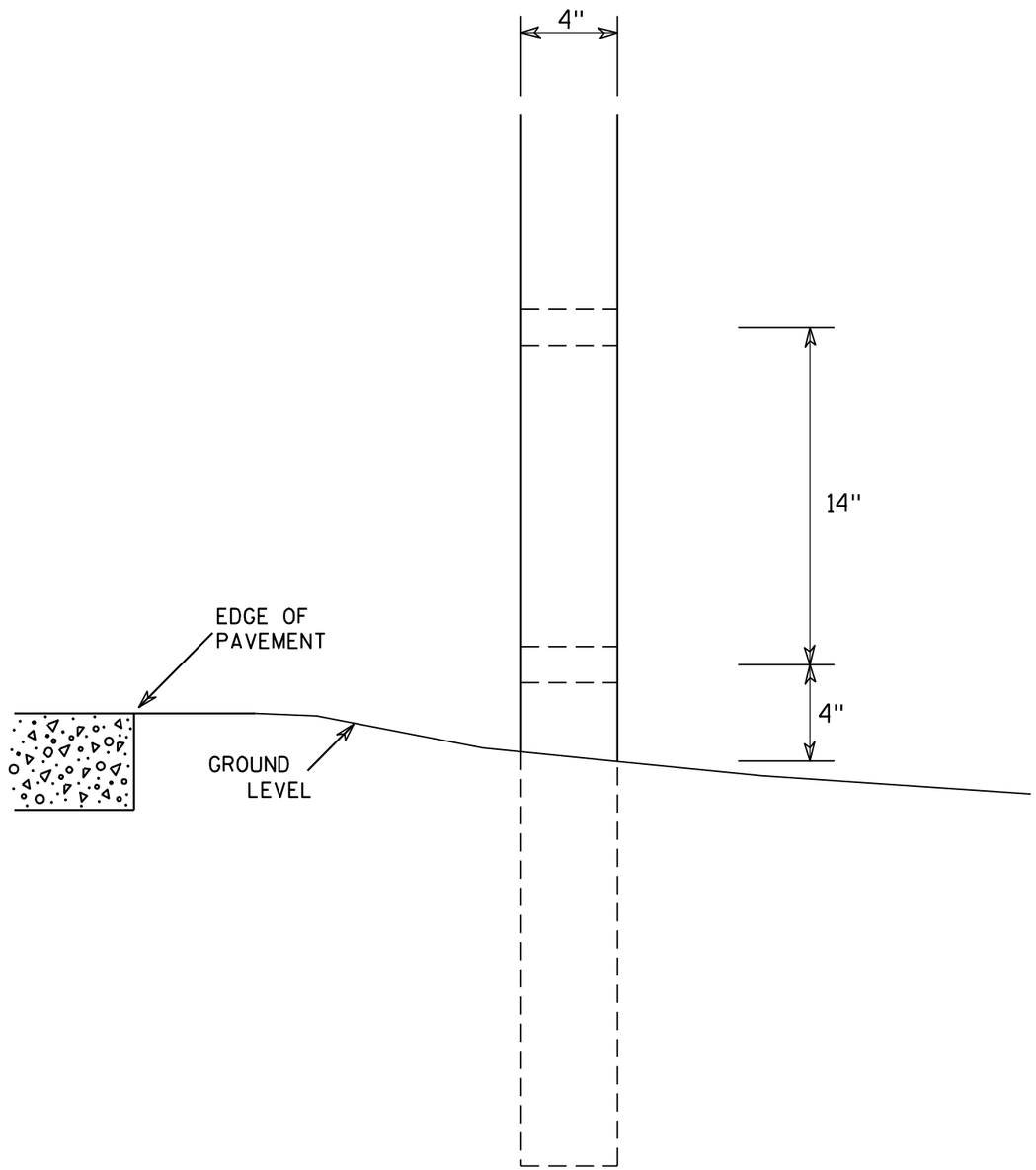

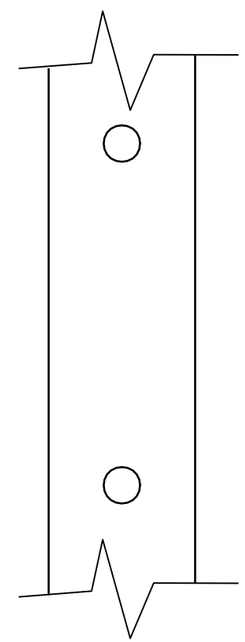

SIDE VIEW

GENERAL NOTES

1. All 4 x 6 Wood Posts shall be modified by having two 1½" diameter holes drilled perpendicular to the roadway centerline.

7

7

4 X 6 WOOD POST MODIFICATIONS

WISCONSIN DEPT OF TRANSPORTATION

APPROVED Chester J Spang for State Traffic Engineer

DATE 3/27/97 PLATE NO. A4-11.2

PROJECT NO:	HWY:	COUNTY:		SHEET NO: 79	E

BANDING

SINGLE SIGN

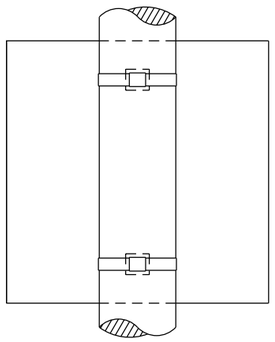

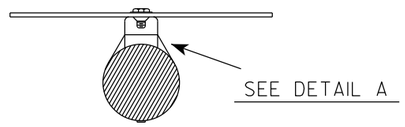

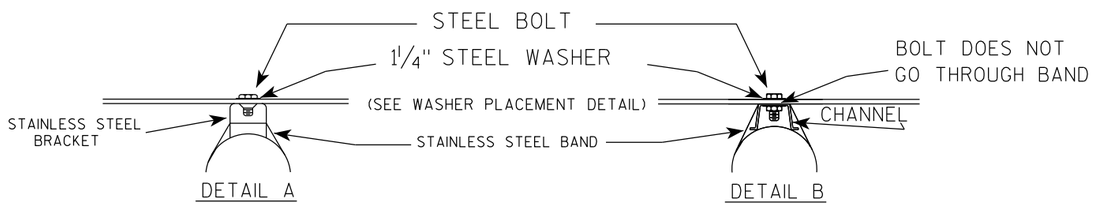

WASHER PLACEMENT

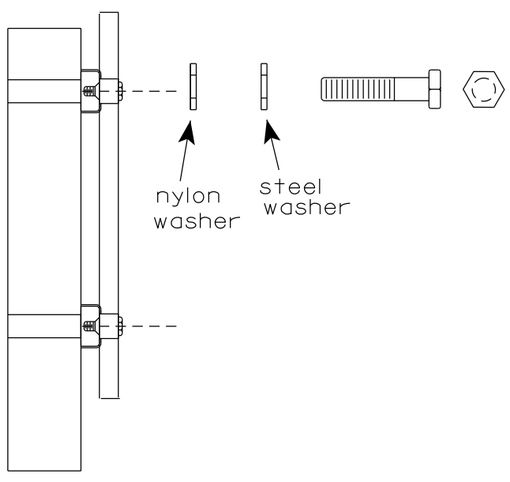

WASHERS (ALL POSTS) -
1-1/4" O.D. X 3/8" I.D. X 1/16" STEEL
1-1/4" O.D. X 3/8" I.D. X .080 NYLON
FOR ALL TYPE H SIGNS

GENERAL NOTES

1. Any sign over 3 feet in width shall use the V-Block banding method. See A5-10 standard plate.
2. Signs 3 feet or greater in height shall have three bracket bands installed. Signs less than 3 feet in height shall have two bracket bands installed.
3. Banding and assembly bracket shall be stainless steel. All bands shall be ¾" in width and 0.025" thickness.
4. ALL SIGN MOUNTING BOLTS AND WASHERS SHALL BE EITHER:
   a. Hot dip or mechanically galvanized in accordance with ASTM Designation: A 153, Class D
   b. Electro-galvanized in accordance with ASTM designation: B 633, Type III, SC 3

"J" ASSEMBLY

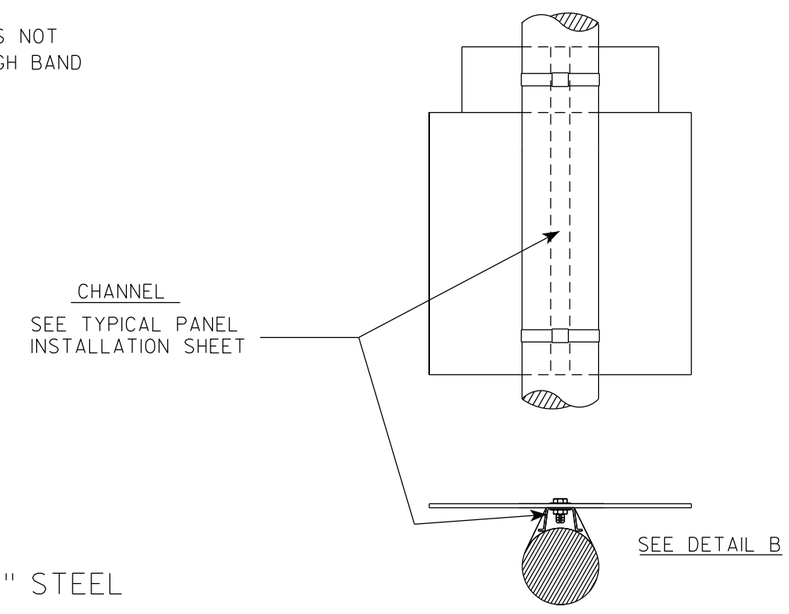

STANDARD SIGN
SIGN BANDING DETAILS

WISCONSIN DEPT OF TRANSPORTATION

APPROVED Matthew R Rauch for State Traffic Engineer

DATE 6/10/19 PLATE NO. A5-9.4

PROJECT NO:	HWY:	COUNTY:		SHEET NO: 80	E

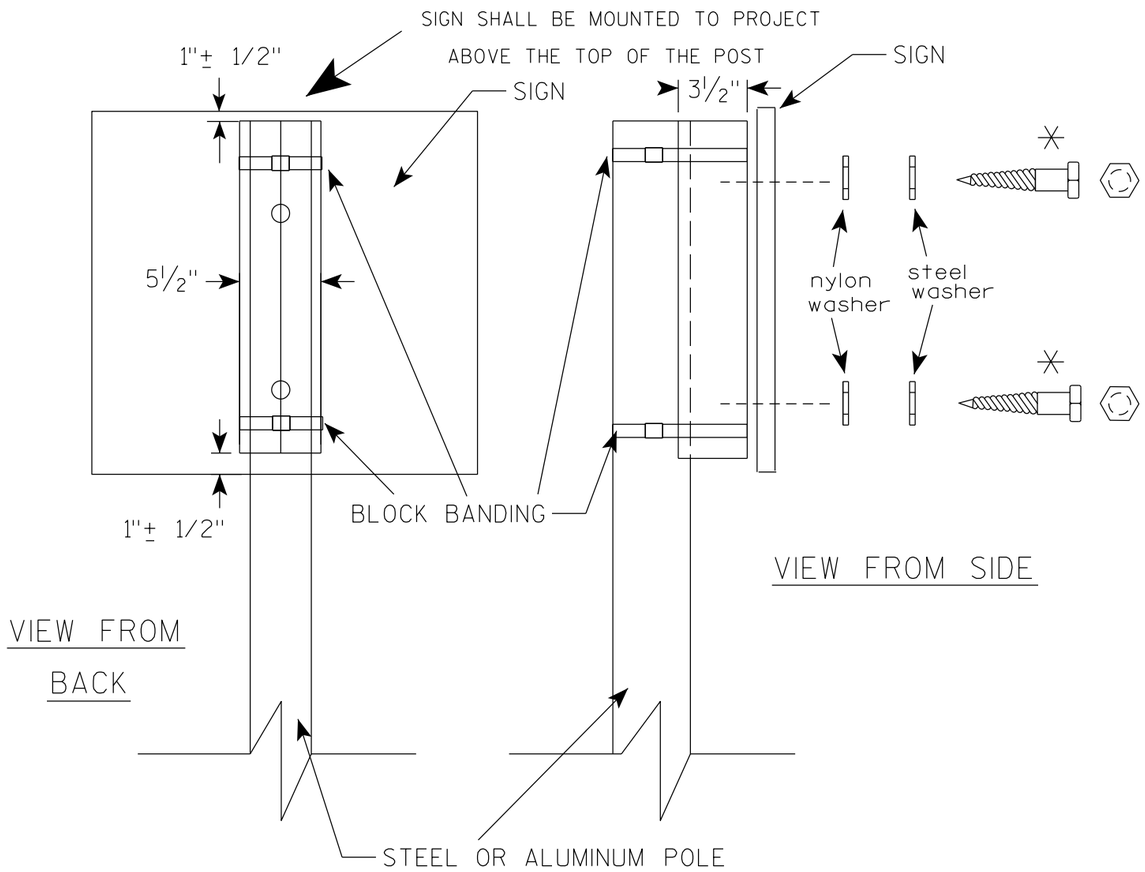

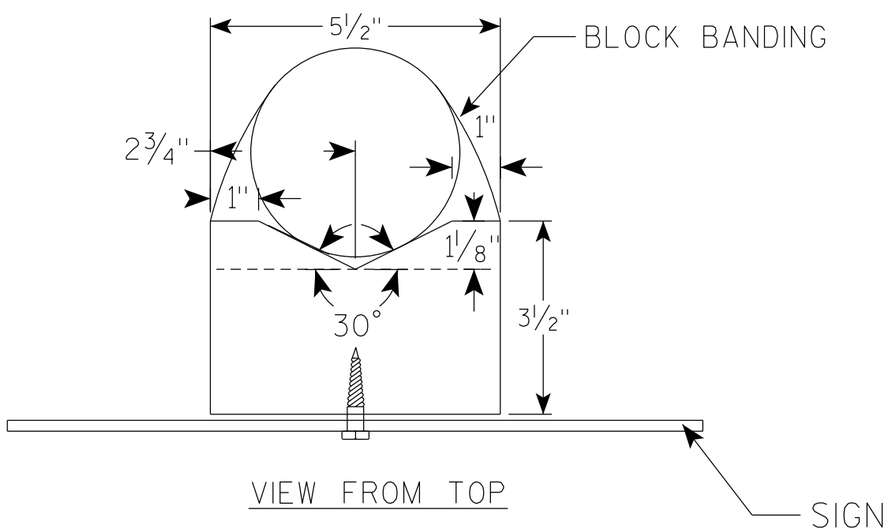

GENERAL NOTES

1. WOOD 4"X6" POST MATERIAL SHALL CONFORM TO 507.2.2 OF THE WisDOT STANDARD SPECIFICATIONS
2. BLOCK BANDING AND CLIPS SHALL BE STAINLESS STEEL, 3/4" WIDTH AND 0.025" THICKNESS
3. SIGNS 3' OR GREATER IN HEIGHT SHALL UTILIZE 3 BLOCK BANDS. SIGNS UNDER 3' IN HEIGHT SHALL UTILIZE 2 BLOCK BANDS
4. ACTUAL NUMBER OF FASTENERS PER SIGN VARIES WITH THE SIGN AREA, BUT NORNALLY THERE ARE TWO. FOR SIGNS GREATER THAN 9 S.F. 3 FASTENERS SHALL BE USED.
5. ALL SIGN MOUNTING BOLTS AND WASHERS SHALL BE EITHER:
   a. Hot dip or mechanically galvanized in accordance with ASTM Designation: A 153, Class D
   b. Electro-galvanized in accordance with ASTM Designation : B 633, TYPE III, SC 3
6. ALL BOLTS SHALL HAVE HEXAGONAL HEADS.
7. STEEL WASHERS SHALL BE 1 1/4" O.D. X 3/8" I.D. X 1/16"
8. NYLON WASHERS SHALL BE 1 1/4" O.D. X 3/8" I.D. X .080 FOR TYPE H OR TYPE F FACE SIGN

✳ LAG BOLTS SHALL BE 3/8" X 2 1/2"

7

7

BLOCK BANDING DETAIL
(V-BLOCK OPTION)

WISCONSIN DEPT OF TRANSPORTATION

APPROVED Matthew R Rauch
for State Traffic Engineer

DATE 4/19/2022 PLATE NO. A5-10.3

PROJECT NO:				SHEET NO: 81	E

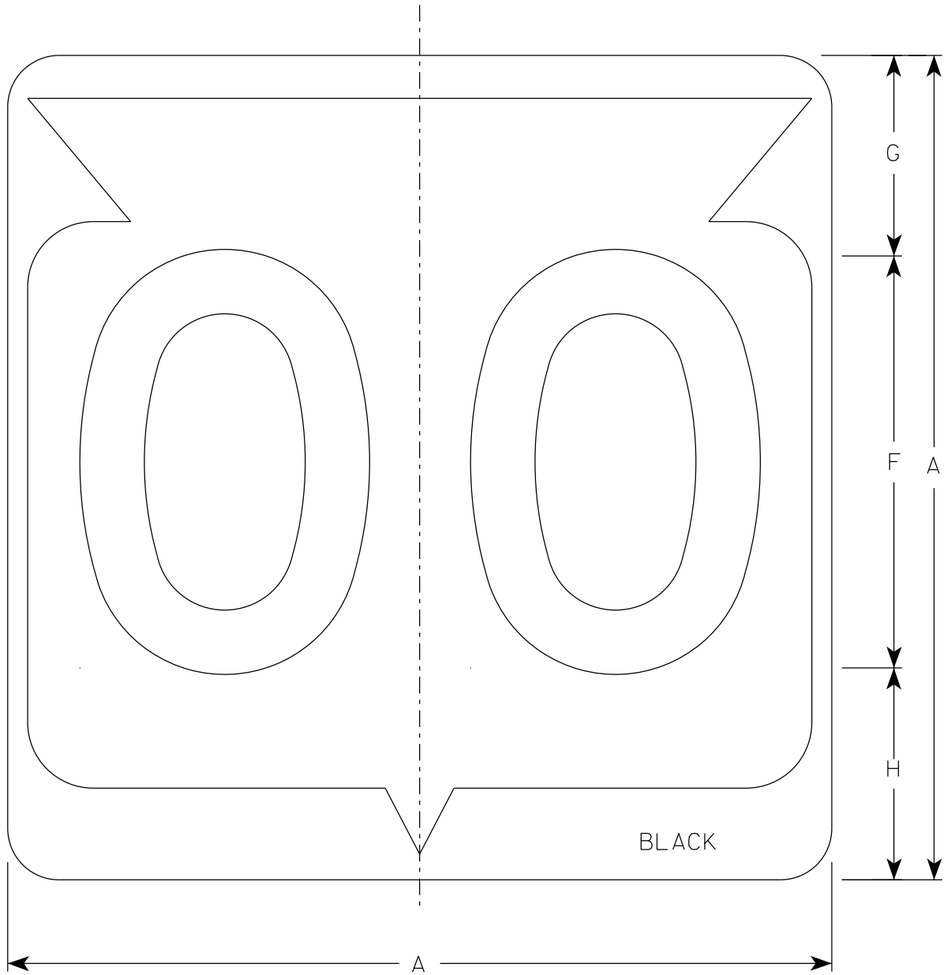

M1-6

NOTES

1. Sign is Type II - Type H Reflective
2. Color:
   Background - White
   Message - Black
3. Message Series - D except 3 number signs Series C

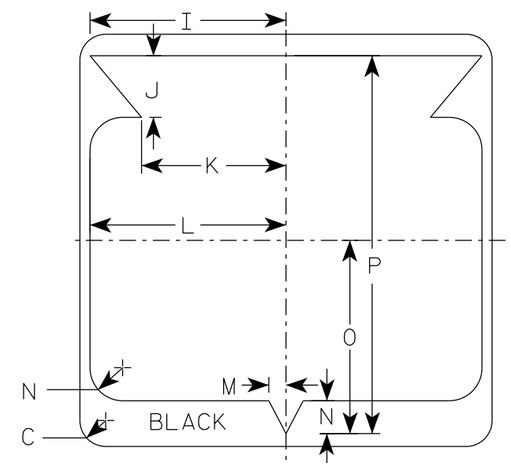

SIZE	A	B	C	D	E	F	G	H	I	J	K	L	M	N	O	P	Q	R	S	T	U	V	W	X	Y	Z	Area sq. ft.
1																											
2	24		1 1/2			12	5 1/2	6 1/2	10 1/4	2 1/2	8 7/8	11 1/2	1	1 7/8	11 1/4	21 7/8											4.0
2M	24		1 1/2			12	5 1/2	6 1/2	10 1/4	2 1/2	8 7/8	11 1/2	1	1 7/8	11 1/4	21 7/8											4.0
3	36		2 1/4			18	8 3/4	9 1/4	15 3/8	5 3/8	12 5/8	17 1/8	1 1/2	2 7/8	16 7/8	33											9.0
4	36		2 1/4			18	8 3/4	9 1/4	15 3/8	5 3/8	12 5/8	17 1/8	1 1/2	2 7/8	16 7/8	33											9.0
5	36		2 1/4			18	8 3/4	9 1/4	15 3/8	5 3/8	12 5/8	17 1/8	1 1/2	2 7/8	16 7/8	33											9.0

STATE ROUTE MARKER
M1-6 FOR ASSEMBLIES

WISCONSIN DEPT OF TRANSPORTATION

APPROVED Matthew R Rauch
for State Traffic Engineer

DATE 11/8/2022 PLATE NO. M1-6.11

PROJECT NO:	HWY:	COUNTY:		SHEET NO: 82	E

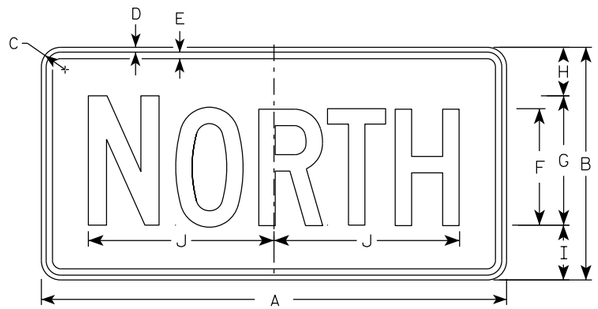

M3-1
MM3-1
MP3-1

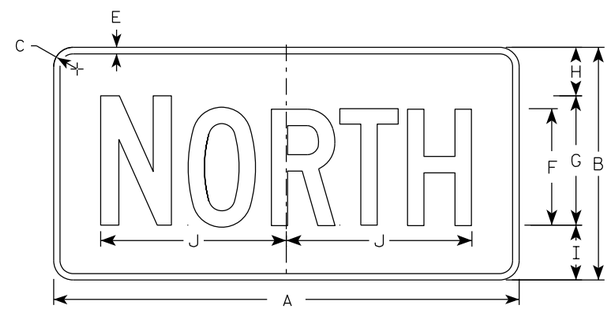

MB3-1
MK3-1
MN3-1

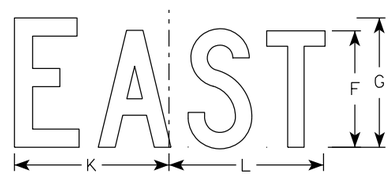

M3-2
MM3-2
MP3-2

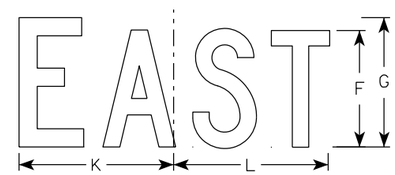

MB3-2
MK3-2
MN3-2

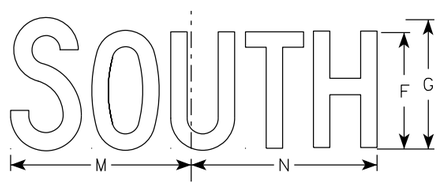

M3-3
MM3-3
MP3-3

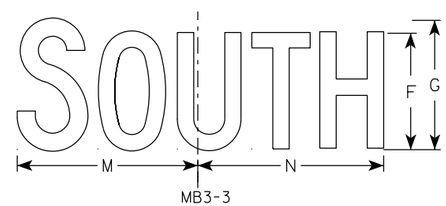

MB3-3
MK3-3
MN3-3

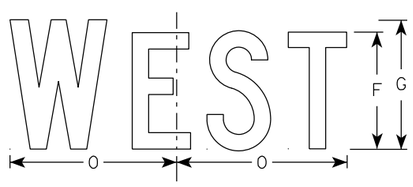

M3-4
MM3-4
MP3-4

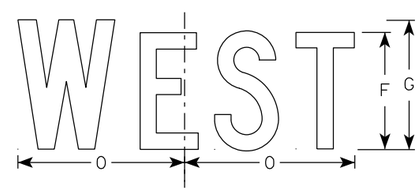

MB3-4
MK3-4
MN3-4

NOTES

1. All Signs Type II - Type H Reflective
2. Color:
   Background - See note 5
   Message - See note 5
3. Message Series - C
4. Corners may be square or rounded when base material is plywood but borders shall be rounded as shown. When base material is metal, the corners and borders shall be rounded.
5. M3-1 thru M3-4 Background - White
   Message - Black
   MB3-1 thru MB3-4 Background - Blue
   Message - White
   MK3-1 thru MK3-4 Background - Green
   Message - White
   MM3-1 thru MM3-4 Background - White
   Message - Green
   MN3-1 thru MN3-4 Background - Brown
   Message - White
   MP3-1 thru MP3-4 Background - White
   Message - Blue
6. Note the first letter of each direction is larger than the remainder of the message.

SIZE	A	B	C	D	E	F	G	H	I	J	K	L	M	N	O	P	Q	R	S	T	U	V	W	X	Y	Z	Area sq. ft.
1																											
2S	24	12	1 1/2	3/8	3/8	6	7	2 1/4	2 3/4	10 1/4	7 7/8	8 3/8	10 1/4	9 3/4	8 3/4												2.00
2M	24	12	1 1/2	3/8	3/8	6	7	2 1/4	2 3/4	10 1/4	7 7/8	8 3/8	10 1/4	9 3/4	8 3/4												2.00
3	36	18	1 1/2	3/8	1/2	9	10	3 3/4	4 1/4	14 3/8	12	12 1/8	14	14 1/8	13												4.5
4	36	18	1 1/2	3/8	1/2	9	10	3 3/4	4 1/4	14 3/8	12	12 1/8	14	14 1/8	13												4.5
5	36	18	1 1/2	3/8	1/2	9	10	3 3/4	4 1/4	14 3/8	12	12 1/8	14	14 1/8	13												4.5

STANDARD SIGNS
M3-1 THRU M3-4
SERIES

WISCONSIN DEPT OF TRANSPORTATION

APPROVED Matthew R Rauch
For State Traffic Engineer

DATE 2/8/2023 PLATE NO. M3-1.15

PROJECT NO: | HWY: | COUNTY: | SHEET NO: 83 | E

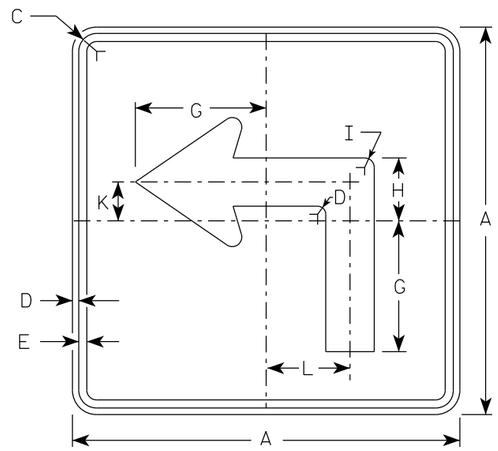

M5-1L
MM5-1L
MO5-1L
MP5-1L

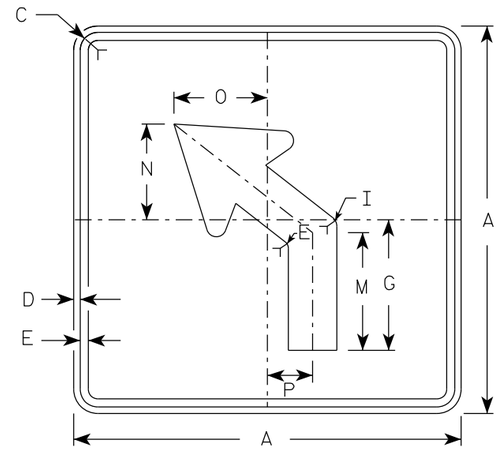

M5-2L
MM5-2L
MO5-2L
MP5-2L

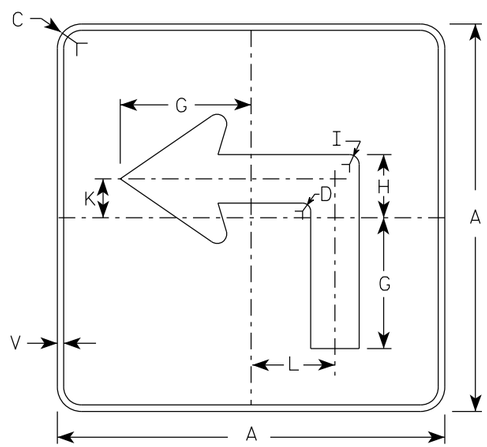

MB5-1L
MK5-1L
MN5-1L
MR5-1L

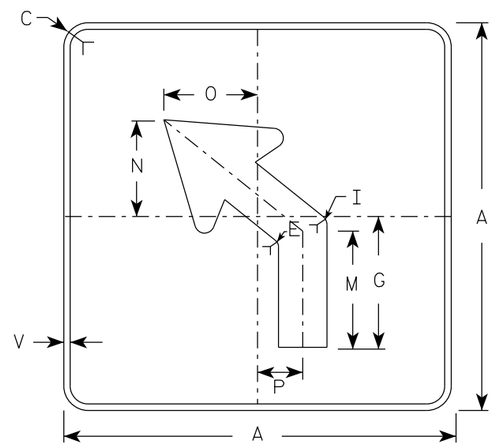

MB5-2L
MK5-2L
MN5-2L
MR5-2L

NOTES

1. Signs are Type II - Type H reflective except as shown
2. Color:
   Background - See note 4
   Message - See note 4
3. Corners may be square or rounded when base material is plywood but borders shall be rounded as shown. When base material is metal, the corners and borders shall be rounded.
4. M5-1 and M5-2 Background - White
   Message - Black
   MB5-1 and MB5-2 Background - Blue
   Message - White
   MK5-1 and MK5-2 Background - Green
   Message - White
   MM5-1 and MM5-2 Background - White
   Message - Green
   MN5-1 and MN5-2 Background - Brown
   Message - White
   MO5-1 and MO5-2 Background - Orange - Type F Reflective
   Message - Black
   MP5-1 and MP5-2 Background - White
   Message - Blue
   MR5-1 and MR5-2 Background - Brown
   Message - Yellow
5. M5-1R same as M5-1L except arrow points right.
6. M5-2R same as M5-2L except arrow tilts right.

ARROW DETAIL

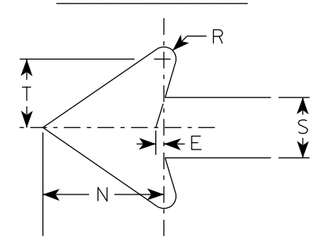

SIZE	A	B	C	D	E	F	G	H	I	J	K	L	M	N	O	P	Q	R	S	T	U	V	W	X	Y	Z	Area sq. ft.
1																											
2S	21		1 1/2	3/8	3/8		7	3 3/8	5/8		2 1/8	4 1/2	6 3/8	5 1/4	5	2 1/2		1/2	2 5/8	3		1/2					3.06
2M	21		1 1/2	3/8	3/8		7	3 3/8	5/8		2 1/8	4 1/2	6 3/8	5 1/4	5	2 1/2		1/2	2 5/8	3		1/2					3.06
3	30		1 7/8	1/2	5/8		10 1/8	4 7/8	7/8		3	6 1/2	9 1/8	7 1/2	7 1/4	3 1/2		3/4	3 3/4	4 1/4		1/2					6.25
4	30		1 7/8	1/2	5/8		10 1/8	4 7/8	7/8		3	6 1/2	9 1/8	7 1/2	7 1/4	3 1/2		3/4	3 3/4	4 1/4		1/2					6.25
5	30		1 7/8	1/2	5/8		10 1/8	4 7/8	7/8		3	6 1/2	9 1/8	7 1/2	7 1/4	3 1/2		3/4	3 3/4	4 1/4		1/2					6.25

STANDARD SIGN
M5-1 & M5-2

WISCONSIN DEPT OF TRANSPORTATION

APPROVED Matthew R Rauch
for State Traffic Engineer

DATE 2/13/2023 PLATE NO. M5-1.15

PROJECT NO: | HWY: | COUNTY: | SHEET NO: 84 | E

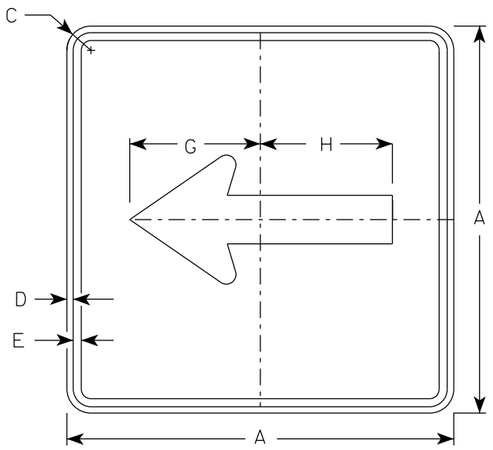

M6-1
MM6-1
MO6-1
MP6-1

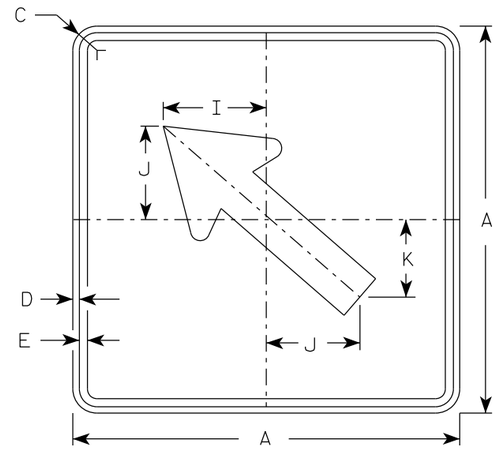

M6-2
MM6-2
MO6-2
MP6-2

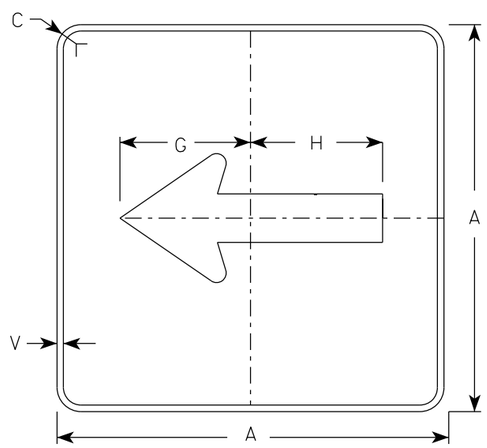

MB6-1
MK6-1
MN6-1
MR6-1

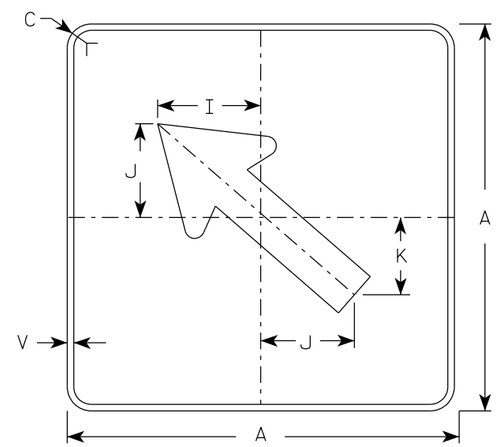

MB6-2
MK6-2
MN6-2
MR6-2

NOTES

1. Signs are Type II - Type H Reflective except as Shown
2. Color:
   Background - See note 4
   Message - See note 4
3. Corners may be square or rounded when base material is plywood but borders shall be rounded as shown. When base material is metal, the corners and borders shall be rounded.
4. M6-1 and M6-2 Background - White
   Message - Black
   MB6-1 and MB6-2 Background - Blue
   Message - White
   MK6-1 and MK6-2 Background - Green
   Message - White
   MM6-1 and MM6-2 Background - White
   Message - Green
   MN6-1 and MN6-2 Background - Brown
   Message - White
   MO6-1 and MO6-2 Background - Orange - Type F Reflective
   Message - Black
   MP6-1 and MP6-2 Background - White
   Message - Blue
   MR6-1 and MR6-2 Background - Brown
   Message - Yellow

ARROW DETAIL

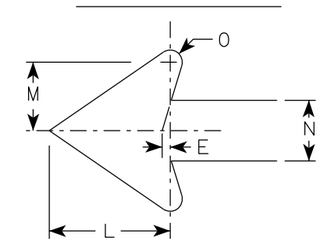

SIZE	A	B	C	D	E	F	G	H	I	J	K	L	M	N	O	P	Q	R	S	T	U	V	W	X	Y	Z	Area sq. ft.
1																											
2S	21		1 1/2	3/8	3/8		7 1/2	7 1/8	5 5/8	5	4 1/4	5 1/4	3	2 5/8	1/2							1/2					3.06
2M	21		1 1/2	3/8	3/8		7 1/2	7 1/8	5 5/8	5	4 1/4	5 1/4	3	2 5/8	1/2							1/2					3.06
3	30		1 7/8	1/2	5/8		10 3/4	10 1/4	8	7 1/4	6	7 1/2	4 1/4	3 3/4	3/4							1/2					6.25
4	30		1 7/8	1/2	5/8		10 3/4	10 1/4	8	7 1/4	6	7 1/2	4 1/4	3 3/4	3/4							1/2					6.25
5	30		1 7/8	1/2	5/8		10 3/4	10 1/4	8	7 1/4	6	7 1/2	4 1/4	3 3/4	3/4							1/2					6.25

STANDARD SIGN
M6-1 & M6-2
SERIES

WISCONSIN DEPT OF TRANSPORTATION

APPROVED Matthew R Rauch
for State Traffic Engineer

DATE 2/13/2023 PLATE NO. M6-1.16

PROJECT NO: | HWY: | COUNTY: | SHEET NO: 85 | E

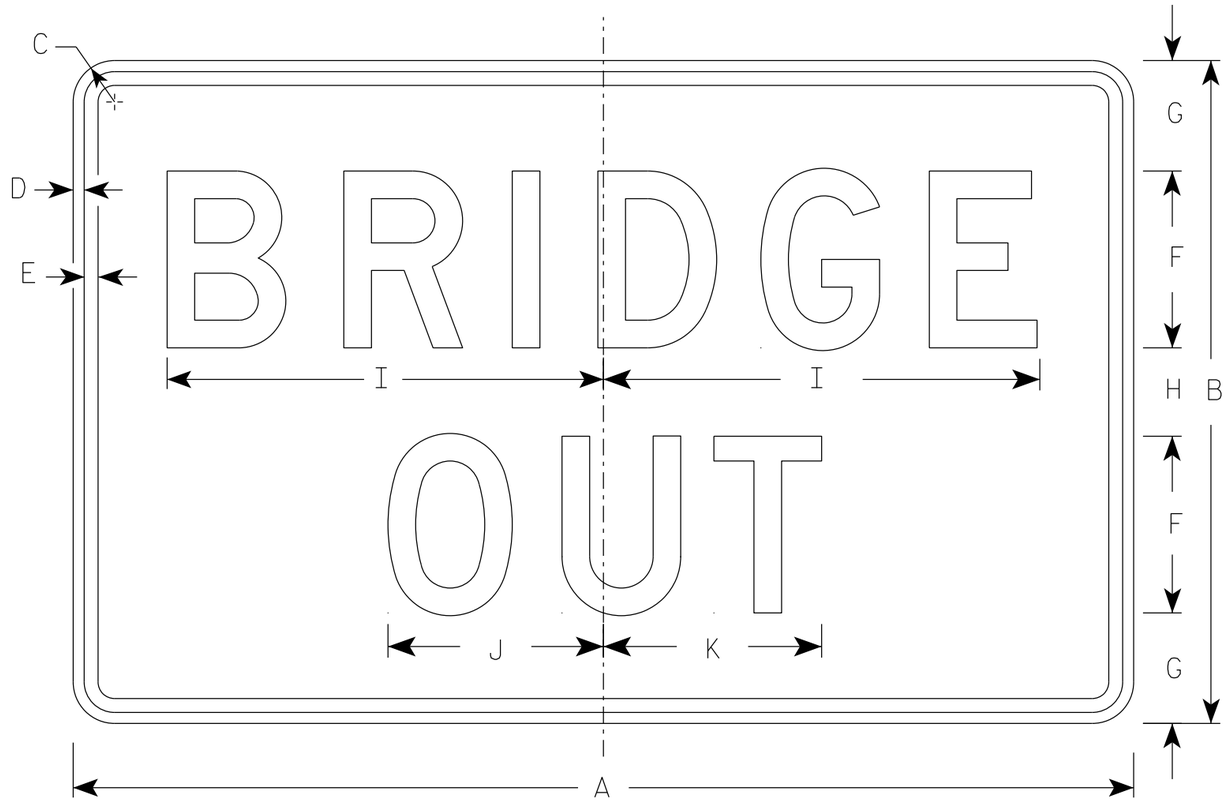

R11-2B

NOTES

1. Sign is Type II - Type H Reflective
2. Color:
   Background - White
   Message - Black
3. Message Series - D
4. Corners may be square or rounded when base material is plywood but borders shall be rounded as shown. When base material is metal, the corners and borders shall be rounded.

SIZE	A	B	C	D	E	F	G	H	I	J	K	L	M	N	O	P	Q	R	S	T	U	V	W	X	Y	Z	Area sq. ft.
1																											
2S	48	30	1 7/8	1/2	5/8	8	5	4	19 3/4	9 3/4	9 7/8																10.0
2M	48	30	1 7/8	1/2	5/8	8	5	4	19 3/4	9 3/4	9 7/8																10.0
3	48	30	1 7/8	1/2	5/8	8	5	4	19 3/4	9 3/4	9 7/8																10.0
4	48	30	1 7/8	1/2	5/8	8	5	4	19 3/4	9 3/4	9 7/8																10.0
5	48	30	1 7/8	1/2	5/8	8	5	4	19 3/4	9 3/4	9 7/8																10.0

STANDARD SIGN
R11-2B

WISCONSIN DEPT OF TRANSPORTATION

APPROVED Matthew R Rauch
For State Traffic Engineer

DATE 2/5/24 PLATE NO. R11-2B.3

PROJECT NO:

SHEET NO: 86 E

NOTES

1. Sign is Type II - Type H Reflective
2. Color:
   Background - White
   Message - Black
3. Message Series - C
4. Corners may be square or rounded when base material is plywood but borders shall be rounded as shown. When base material is metal, the corners and borders shall be rounded.
5. Substitute appropriate numerals to nearest quarter mile and optically adjust spacing to achieve proper balance.

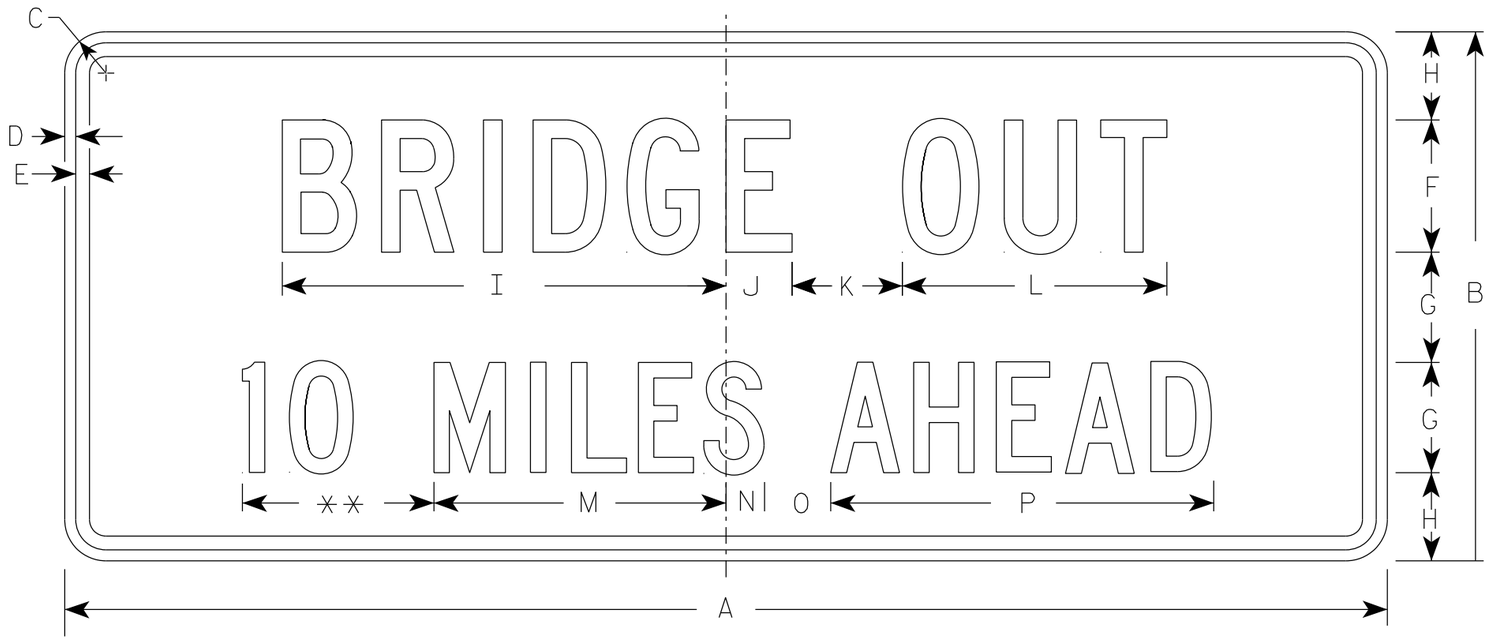

R11-3C

** See Note 5

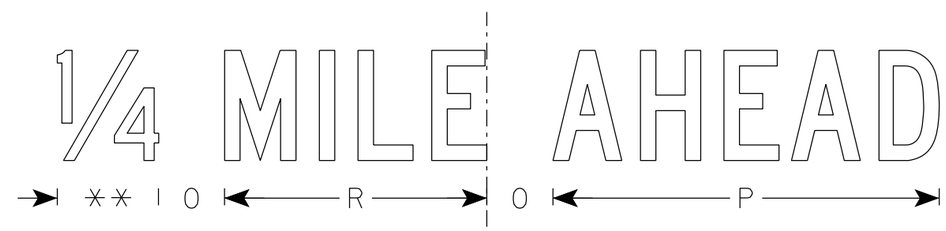

SIZE	A	B	C	D	E	F	G	H	I	J	K	L	M	N	O	P	Q	R	S	T	U	V	W	X	Y	Z	Area sq. ft.
1	36	15	1 1/2	1/2	5/8	4	3	2 1/2	13 1/4	2 1/4	3	8	8	1 1/2	2	10 3/4		7 1/8									3.75
2S	60	24	1 7/8	1/2	5/8	6	5	4	20 1/8	3	5	12	13 1/4	1 3/4	3	17 3/8		11 7/8									10.0
2M	60	24	1 7/8	1/2	5/8	6	5	4	20 1/8	3	5	12	13 1/4	1 3/4	3	17 3/8		11 7/8									10.0
3																											
4																											
5																											

STANDARD SIGN
R11-3C

WISCONSIN DEPT OF TRANSPORTATION

APPROVED Matthew R Rauch
for State Traffic Engineer

DATE 2/5/24 PLATE NO. R11-3C.4

PROJECT NO:

SHEET NO: 87 E

STATE PROJECT NUMBER
5760–00–73

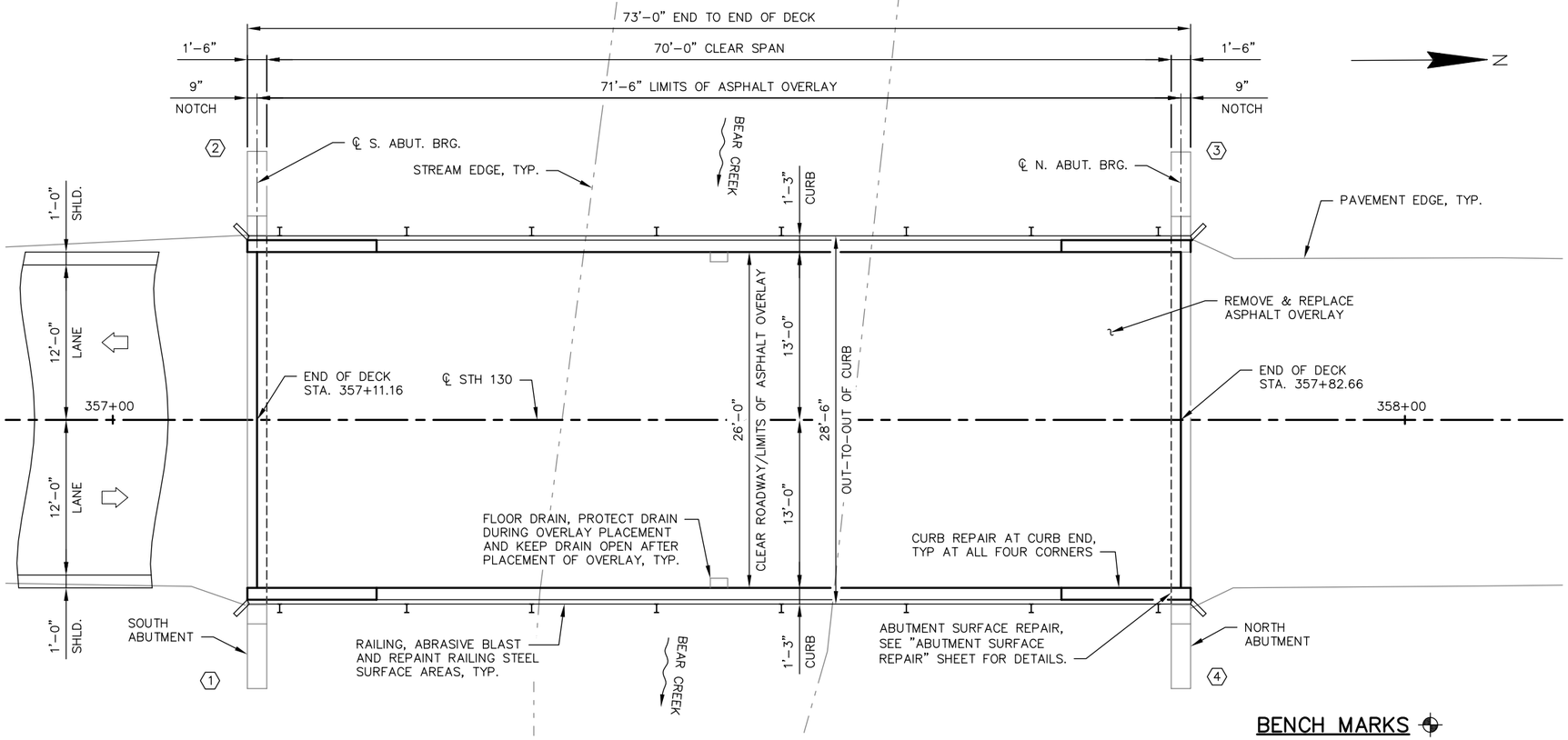

PLAN B–52–20

(SINGLE SPAN STEEL DECK GIRDER)

NOTE

⬡ INDICATES WING NUMBER

DESIGN DATA

LIVE LOAD:

DESIGN LOADING ——— HS 20
INVENTORY RATING ——— HS 15
OPERATING RATING ——— HS 26
WISCONSIN STANDARD PERMIT VEHICLE RATING (WIS.–SPV): ——— 190 KIPS

MATERIAL PROPERTIES:

CONCRETE MASONRY DECK
DECK PATCHING AND FULL DEPTH DECK REPAIR — $f'c$ = 4,000 P.S.I.
CONCRETE MASONRY SUBSTRUCTURE ——— $f'c$ = 3,500 P.S.I.

TRAFFIC DATA:

STH 130
A.A.D.T. (2027) ——— 880
A.A.D.T. (2047) ——— 970
DESIGN SPEED ——— 60 M.P.H.

BENCH MARKS

NO.	STATION/OFFSET	DESCRIPTION	ELEVATION
BM #3	357+11.14, 15.20' RT.	CHISELED X IN ABUTMENT	731.95

HORIZONTAL DATUM AND ADJUSTMENT: NAD 83 (2011)
VERTICAL DATUM AND ADJUSTMENT: NAVD 88 (2012)
COORDINATE REFERENCE SYSTEM: WISCRS RICHLAND CO.

WISCONSIN
ANDREW C. KNUTSON
E-34662
SPRING GREEN, WI
5-5-25
PROFESSIONAL ENGINEER

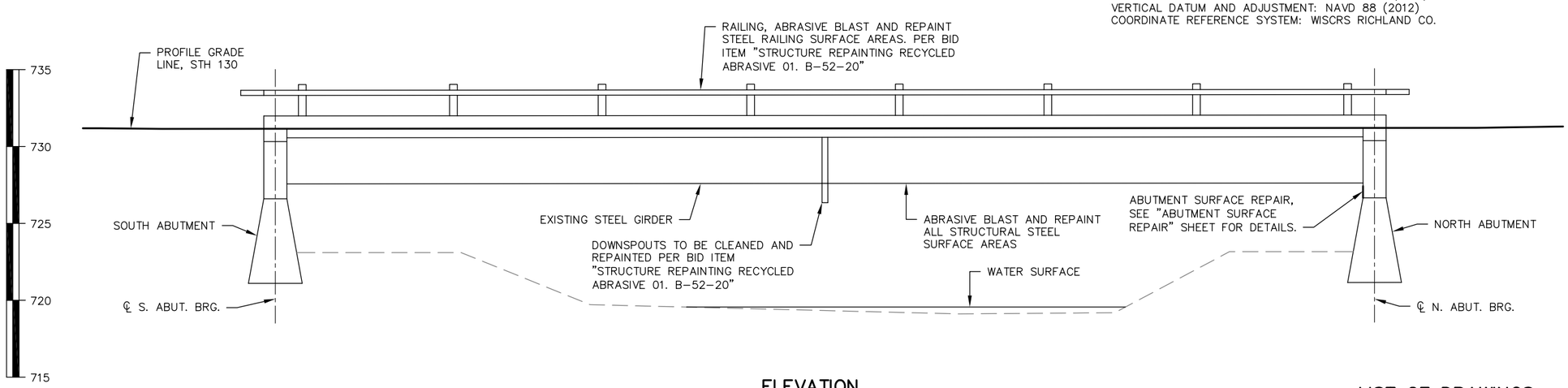

ELEVATION

(NORMAL TO BEAR CREEK, LOOKING WEST)

LIST OF DRAWINGS

1. GENERAL PLAN
2. CROSS SECTION, GENERAL NOTES & QUANTITIES
3. DECK CONDITION SURVEY
4. ABUTMENT SURFACE REPAIR

BRIDGE OFFICE CONTACT
AARON BONK, P.E.
(608) 261–0261

CONSULTANT CONTACT
ANDY KNUTSON, P.E., S.E.
(608) 588–7866

NO.	DATE	REVISION	BY

WESTBROOK Associated Engineers, Inc.
619 EAST HOXIE STREET
P.O. BOX 429
SPRING GREEN, WI 53588
PHONE (608) 588–7866
FAX (608) 588–7954

STATE OF WISCONSIN
DEPARTMENT OF TRANSPORTATION

ACCEPTED EMK 05/09/25
CHIEF STRUCTURES DESIGN ENGINEER DATE

STRUCTURE B–52–20

STH 130 OVER BEAR CREEK

COUNTY	TOWN/~~CITY/VILLAGE~~
RICHLAND	BUENA VISTA

DESIGN SPEC.
REHABILITATION N/A

DESIGNED BY	DESIGN CK'D.	DRAWN BY	PLANS CK'D.
JDO	CDS	JDO	ACK

GENERAL PLAN

SHEET 1 OF 4

88

8

8

FILE: B520020_01_gen.dwg
PLOT SCALE:

I.D. 5760–00–73 PLOT DATE: May 05, 2025

STATE PROJECT NUMBER
5760–00–73

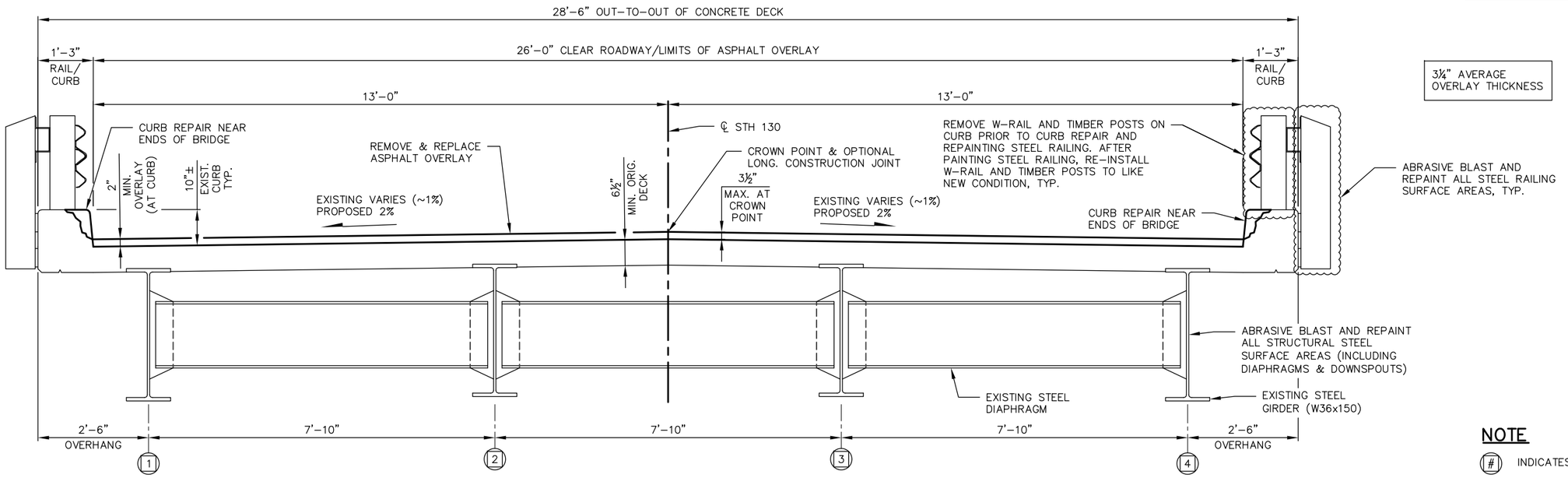

CROSS SECTION
(LOOKING NORTH)

NOTE

(#) INDICATES GIRDER LINE

TOTAL ESTIMATED QUANTITIES

	ITEM NO.	BID ITEMS	UNIT	S. ABUT.	N. ABUT.	SUPER.	TOTALS
	455.0605	TACK COAT	GAL	---	---	15	15
	460.5224	HMA PAVEMENT 4 LT 58–28 S	TON	---	---	38	38
	502.3215	PROTECTIVE SURFACE TREATMENT RESEAL	SY	---	---	30	30
▲	509.0301	PREPARATION DECKS TYPE 1	SY	---	---	79	79
▲	509.0302	PREPARATION DECKS TYPE 2	SY	---	---	32	32
▲	509.0310.S	SAWING PAVEMENT DECK PREPARATION AREAS	LF	---	---	407	407
	509.1200	CURB REPAIR	LF	---	---	40	40
◑	509.1500	CONCRETE SURFACE REPAIR	SF	---	8	---	8
▲	509.2000	FULL–DEPTH DECK REPAIR	SY	---	---	2	2
	509.2100.S	CONCRETE MASONRY DECK REPAIR	CY	---	---	7	7
	509.9010.S	REMOVING ASPHALTIC CONCRETE DECK OVERLAY 02. B–52–20	SY	---	---	207	207
	516.0600.S	SHEET MEMBRANE WATERPROOFING FOR ASPHALT OVERLAYS	SY	---	---	207	207
	517.1801.S	STRUCTURE REPAINTING RECYCLED ABRASIVE 01. B–52–20	EACH	---	---	---	1
	517.4501.S	NEGATIVE PRESSURE CONTAINMENT AND COLLECTION OF WASTE MATERIALS 01. B–52–20	EACH	---	---	---	1
	517.6001.S	PORTABLE DECONTAMINATION FACILITY	EACH	---	---	---	1
	SPV.0090.03	REMOVE AND RE–INSTALL W–RAIL AND TIMBER RAIL POST B–52–20	LF	---	---	146	146

◑ CONCRETE SURFACE REPAIR AS DETAILED IN THE PLANS AND AS DIRECTED BY THE FIELD ENGINEER. QUANTITIES SHOWN ARE APPROXIMATE.

▲ UNDISTRIBUTED QUANTITIES, USE AS DIRECTED BY THE ENGINEER.

GENERAL NOTES

DRAWINGS SHALL NOT BE SCALED.

DIMENSIONS AND ELEVATIONS SHOWN ARE BASED ON THE EXISTING ORIGINAL STRUCTURE PLANS AND EXISTING FIELD SURVEY FROM 2021.

ALL CONCRETE REMOVAL SHALL BE DEFINED BY A ½ INCH DEEP SAW CUT, UNLESS SPECIFIED OTHERWISE.

EXISTING ASPHALTIC OVERLAY SHALL BE REMOVED FROM THE BRIDGE DECK 2" MIN. OR TO SOUND CONCRETE, WHICHEVER IS GREATER, COVERED UNDER BID ITEM 509.9010.S.

"PREPARATION DECKS TYPE 1", "PREPARATION DECKS TYPE 2", AND "FULL–DEPTH DECK REPAIR" AREAS ARE BASED ON THE PLANS AND AS DETERMINED BY THE ENGINEER. DECK PREPARATION AND FULL–DEPTH DECK REPAIRS SHALL BE FILLED WITH "CONCRETE MASONRY DECK REPAIR" TO THE TOP OF THE EXISTING CONCRETE DECK.

AREAS OF "PREPARATION DECKS TYPE 1" SHALL BE DEFINED BY A SAW CUT.

SCARIFICATION IS NOT REQUIRED UNLESS DIRECTED BY THE ENGINEER.

ANY EXCAVATION REQUIRED TO COMPLETE THE ASPHALT OVERLAY OR CURB REPAIR AT THE ABUTMENTS TO BE INCLUDED WITH THE BID ITEM "HMA PAVEMENT 4 LT 58–28 S".

THE PLAN QUANTITY FOR THE BID ITEM "HMA PAVEMENT 4 LT 58–28 S" IS BASED ON THE AVERAGE OVERLAY THICKNESS OF 3¼".

PROFILE GRADE LINE SHALL BE DETERMINED IN THE FIELD BASED ON A MINIMUM OVERLAY THICKNESS OF 2" PLACED ABOVE THE DECK SURFACE FOLLOWING THE REMOVAL OF THE EXISTING ASPHALT OVERLAY. EXPECTED AVERAGE OVERLAY THICKNESS IS 3¼". IF EXPECTED AVERAGE OVERLAY THICKNESS IS EXCEEDED BY MORE THAN ½", CONTACT THE STRUCTURES DESIGN SECTION.

UNDER THE CONCRETE SURFACE REPAIR BID ITEM, REMOVE THOSE PORTIONS OF CONCRETE THAT THE PLANS SHOW, AND THE FIELD ENGINEER DIRECTS, AND REPLACE THOSE PORTIONS WITH CONCRETE.

UTILIZE EXISTING BAR STEEL REINFORCEMENT WHERE SHOWN AND EXTEND 24 BAR DIAMETERS INTO NEW WORK, UNLESS SPECIFIED OTHERWISE.

AT "CURB REPAIR" REMOVE CONCRETE TO SOUND CONCRETE OR AT LEAST 1" BEHIND EXISTING REINFORCING STEEL. REQUIRED AREAS SHALL BE FILLED WITH "CONCRETE MASONRY DECK REPAIR" TO THE ORIGINAL CURB GEOMETRY (PER ADJACENT CURB GEOMETRY).

APPLY PROTECTIVE SURFACE TREATMENT ON TRAFFIC FACE AND TOP SURFACE OF ENTIRE LENGTH OF CURBS (AFTER CURB REPAIRS AND PRIOR TO REINSTALLING W–RAIL AND TIMBER POSTS).

EXISTING FLOOR DRAINS TO REMAIN IN PLACE. REMOVE TOP OF DECK IN DRAIN AREA AS DIRECTED BY THE FIELD ENGINEER TO ALLOW PLACING AND SLOPING OF 2" ASPHALT OVERLAY.

EXISTING FLOOR DRAIN DOWNSPOUTS ARE TO BE CLEANED AND PAINTED. CLEANING AND PAINTING OF EXISTING FLOOR DRAIN DOWNSPOUTS IS INCLUDED IN BID ITEM "STRUCTURE REPAINTING RECYCLED ABRASIVE B–52–20".

EXISTING STEEL RAILING IS TO BE CLEANED AND PAINTED. CLEANING AND PAINTING OF EXISTING STEEL RAILING IS INCLUDED IN BID ITEM "STRUCTURE REPAINTING RECYCLED ABRASIVE B–52–20".

THE EXISTING STRUCTURE (B–52–20) IS A SINGLE SPAN 36–INCH STEEL GIRDER STRUCTURE WITH AN OVERALL LENGTH OF 73'–0" AND A CLEAR ROADWAY WIDTH OF 26'–0". ORIGINAL CONSTRUCTION YEAR IS 1956.

ESTIMATED STRUCTURAL STEEL SURFACE AREA = 3,000 SF.

ESTIMATED STEEL RAILING SURFACE AREA = 650 SF.

THE COLOR OF THE FINISH TOP COAT SHALL BE GRAY (AMS STANDARD COLOR NO. 26293).

8

8

NO.	DATE	REVISION	BY

STATE OF WISCONSIN
DEPARTMENT OF TRANSPORTATION

STRUCTURE B–52–20

DRAWN BY JDO | PLANS CK'D ACK

CROSS SECTION, GENERAL NOTES & QUANTITIES

SHEET 2 OF 4

89

FILE: B520020_01_gen.dwg
PLOT SCALE:

STATE PROJECT NUMBER
5760–00–73

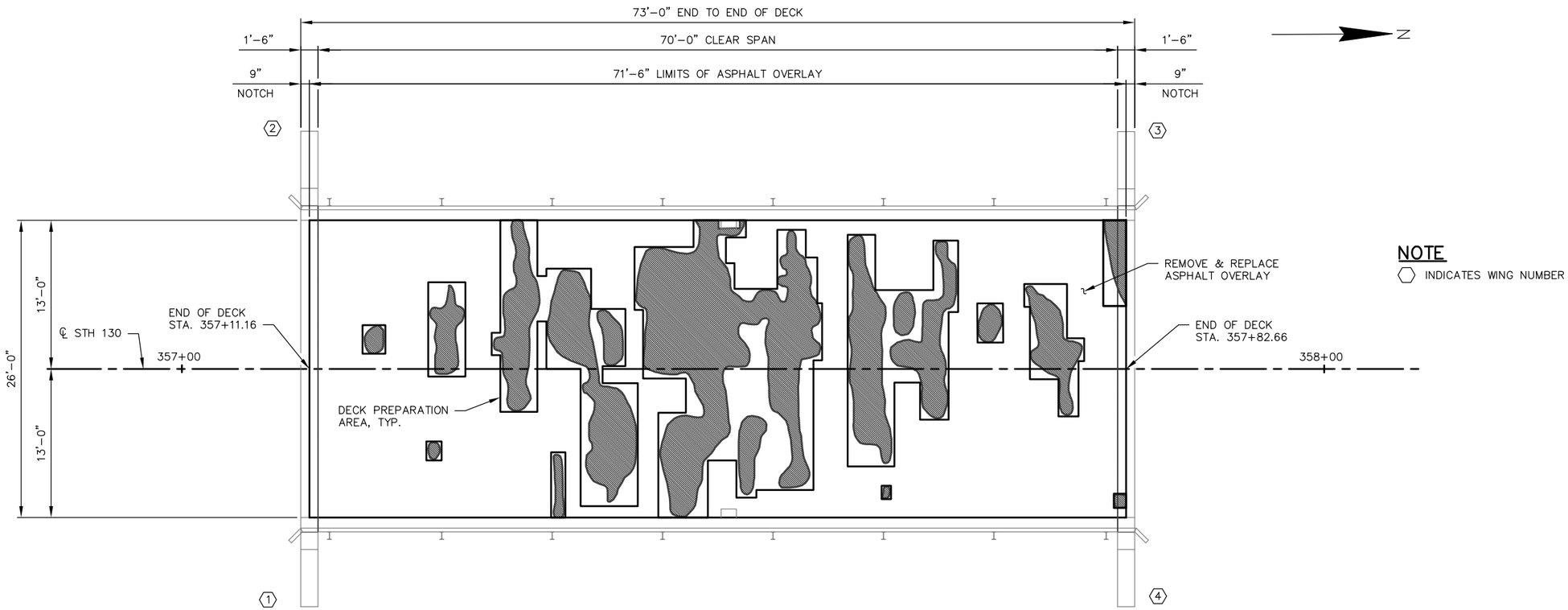

NOTE

⬡ INDICATES WING NUMBER

PLAN B–52–20

(PROPOSED REHAB AREAS)

FIELD OBSERVATIONS SUMMARY		STRUCTURE NO. B-52-20	
ITEM	UNIT	QUANT.	%
TOTAL AREA	ft^2	1859	
SHADE/DEBRIS	ft^2	0	
DELAMINATION	ft^2	449	24.2
SPALL	ft^2	0	0
DEBOND	ft^2	0	0
ASPHALT PATCH	ft^2	0	0
PCC PATCH	ft^2	0	0

LEGEND

- DELAMINATION
- SPALL
- DEBOND
- ASPHALT PATCH
- PCC PATCH
- SHADE/DEBRIS

SURFACE TYPE: BITUMINOUS OVERLAY
INFRARED INSPECTION DATE: 6/9/21

NO.	DATE	REVISION	BY

STATE OF WISCONSIN
DEPARTMENT OF TRANSPORTATION

STRUCTURE B–52–20

DRAWN BY JDO | PLANS CK'D ACK

DECK CONDITION SURVEY

SHEET 3 OF 4

90

8

8

FILE: B520020_01_gen.dwg
PLOT SCALE:

I.D. 5760–00–73 PLOT DATE: May 05, 2025

STATE PROJECT NUMBER
5760–00–73

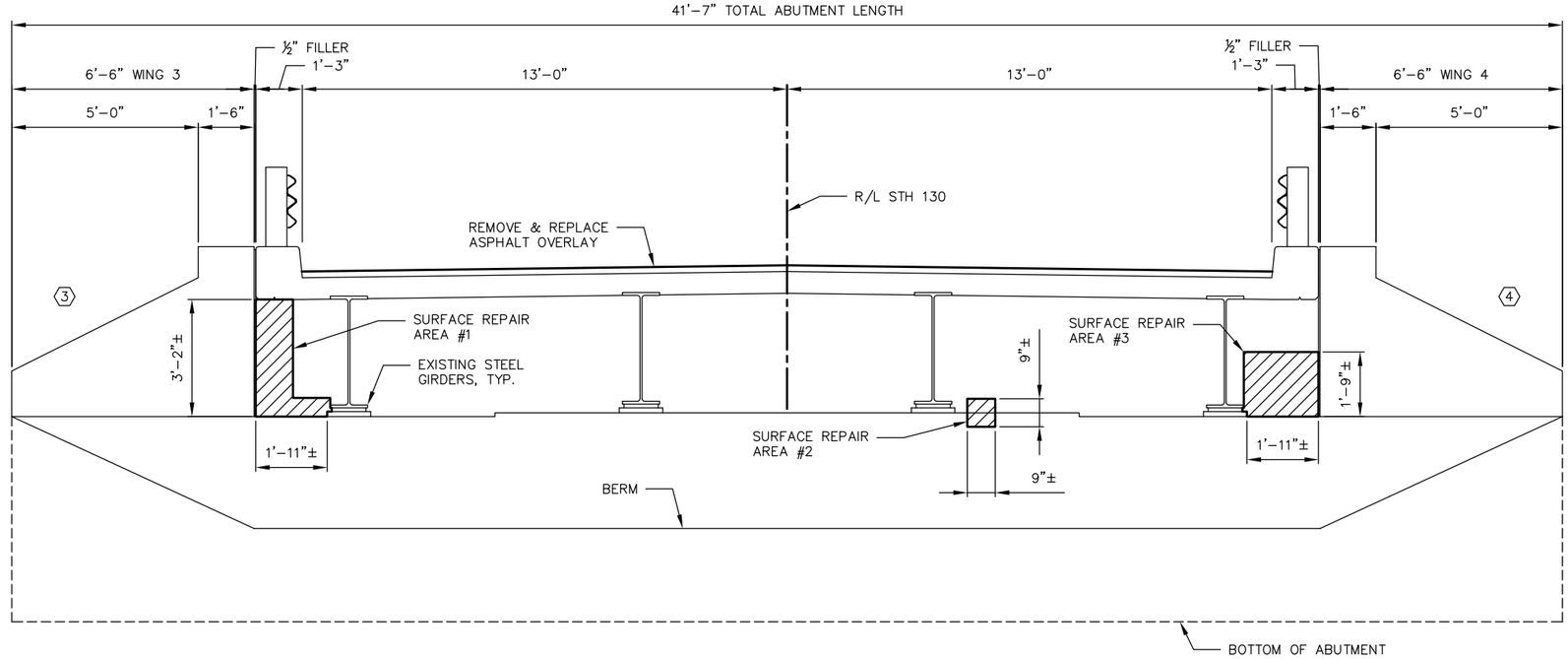

NORTH ABUTMENT FRONT FACE ELEVATION

(LOOKING NORTH)

NOTES

- CONCRETE SURFACE REPAIR LIMITS. THE LIMITS ARE APPROXIMATE. FIELD CONDITIONS MAY VARY. CONCRETE SURFACE REPAIR AS DIRECTED BY THE FIELD ENGINEER.
- INDICATES WING NUMBER

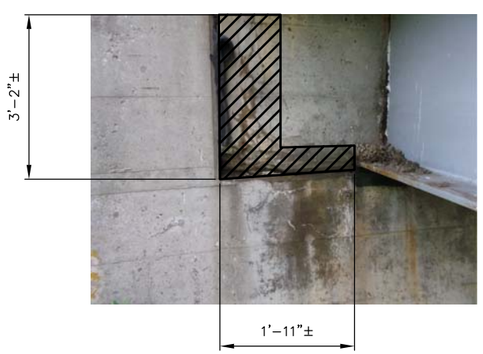

SURFACE REPAIR AREA #1

(LOOKING NORTH)

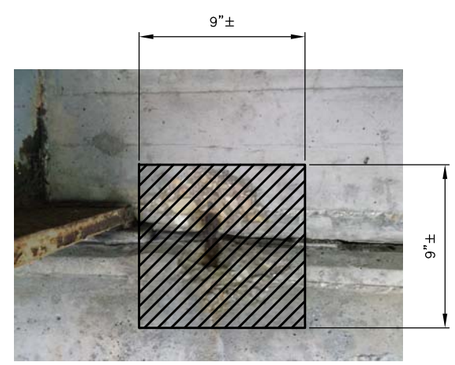

SURFACE REPAIR AREA #2

(LOOKING NORTH)

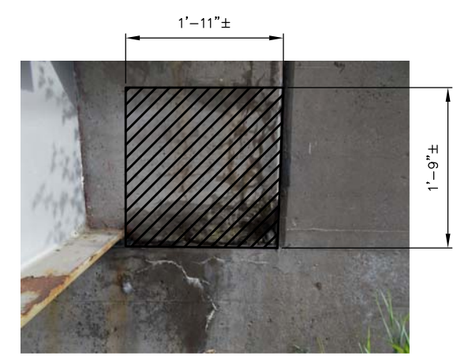

SURFACE REPAIR AREA #3

(LOOKING NORTH)

NO.	DATE	REVISION	BY

STATE OF WISCONSIN
DEPARTMENT OF TRANSPORTATION

STRUCTURE B–52–20

DRAWN BY JDO | PLANS CK'D ACK

ABUTMENT SURFACE REPAIR

SHEET 4 OF 4

91

FILE: B520020_01_gen.dwg
PLOT SCALE:

8

8

I.D. 5760–00–73 PLOT DATE: May 05, 2025

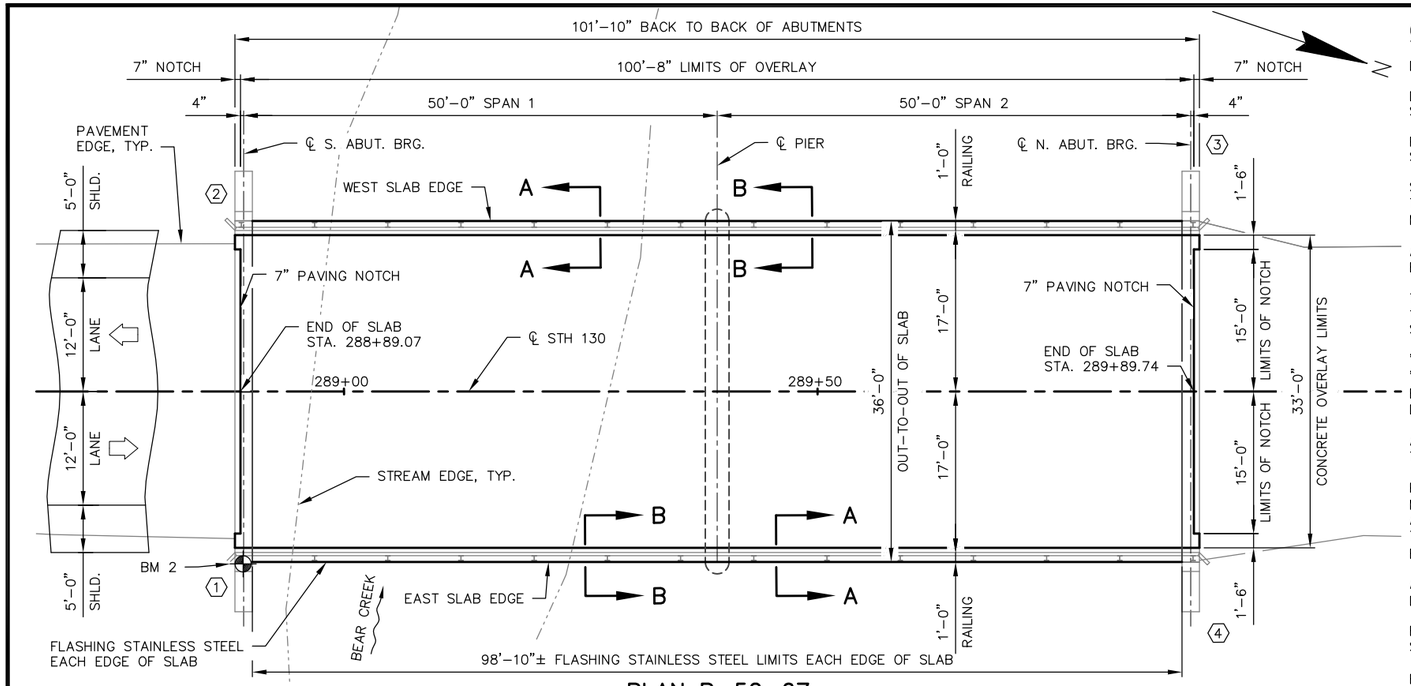

PLAN B-52-67

(TWO SPAN HAUNCHED SLAB)

NOTES

CONCRETE SURFACE REPAIR LIMITS. THE LIMITS ARE APPROXIMATE. FIELD CONDITIONS MAY VARY. CONCRETE SURFACE REPAIR AS DIRECTED BY THE FIELD ENGINEER.

INDICATES WING NUMBER

SEE "CROSS SECTION, SURFACE REPAIR & QUANTITIES" SHEET FOR SECTION A-A & SECTION B-B.

BENCH MARKS

NO.	STATION/OFFSET	DESCRIPTION	ELEVATION
BM 2	288+89.35, 18.20' RT.	MONUMENT ON BRIDGE	713.03

HORIZONTAL DATUM AND ADJUSTMENT: NAD 83 (2011)
VERTICAL DATUM AND ADJUSTMENT: NAVD 88 (2012)
COORDINATE REFERENCE SYSTEM: WISCRS RICHLAND CO.

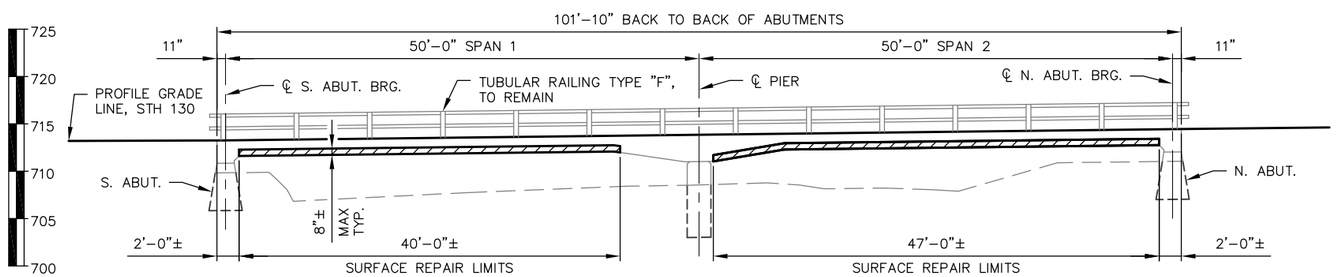

EAST SLAB EDGE ELEVATION

(NORMAL TO BEAR CREEK, LOOKING WEST)
(CONCRETE SURFACE REPAIR LIMITS ALONG EAST DECK EDGE SHOWN)

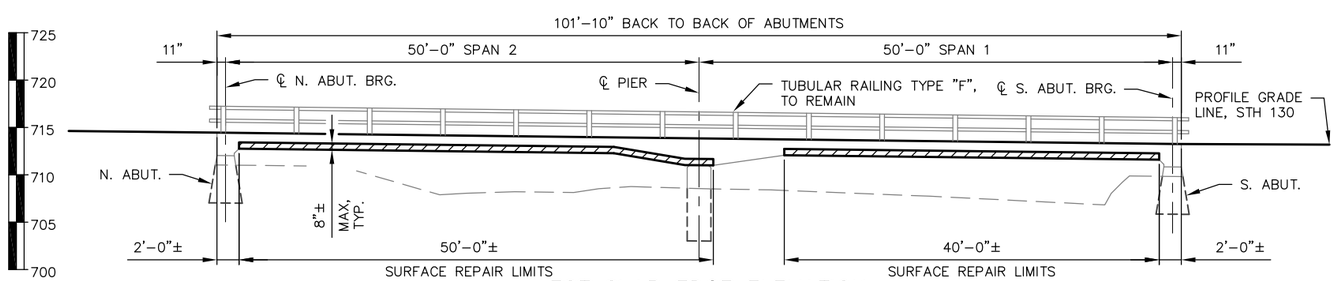

WEST SLAB EDGE ELEVATION

(NORMAL TO BEAR CREEK, LOOKING EAST)
(CONCRETE SURFACE REPAIR LIMITS ALONG WEST DECK EDGE SHOWN)

GENERAL NOTES

DRAWINGS SHALL NOT BE SCALED.

DIMENSIONS AND ELEVATIONS SHOWN ARE BASED ON THE EXISTING ORIGINAL STRUCTURE PLANS AND EXISTING FIELD SURVEY FROM 2021.

PROTECTIVE SURFACE TREATMENT SHALL BE APPLIED TO THE ENTIRE TOP SURFACE OF THE NEW CONCRETE OVERLAY.

SEAL OVERLAY CONSTRUCTION JOINTS ACCORDING TO SECTION 502.3.13.1 OF THE STANDARD SPECIFICATIONS. COST IS INCLUDED WITH BID ITEM "CONCRETE MASONRY OVERLAY DECKS".

A MINIMUM OF 1-INCH OF CONCRETE SHALL BE REMOVED FROM THE ENTIRE BRIDGE DECK UNDER THE BID ITEM "CLEANING DECKS".

THE AVERAGE OVERLAY THICKNESS IS BASED ON THE MINIMUM OVERLAY THICKNESS PLUS ½-INCH TO ACCOUNT FOR VARIATIONS IN THE DECK SURFACE.

"PREPARATION DECKS TYPE 1", "PREPARATION DECKS TYPE 2", AND "FULL-DEPTH DECK REPAIR" AREAS UNDISTRIBUTED QUANTITIES AND ARE TO BE DETERMINED BY THE FIELD ENGINEER. DECK PREPARATION AND FULL-DEPTH DECK REPAIRS SHALL BE FILLED WITH "CONCRETE MASONRY OVERLAY DECKS".

ANY EXCAVATION REQUIRED TO COMPLETE THE OVERLAY AT THE ABUTMENTS TO BE INCLUDED WITH THE BID ITEM "CONCRETE MASONRY OVERLAY DECKS".

PROFILE GRADE LINE SHALL BE DETERMINED IN THE FIELD BASED ON A MINIMUM OVERLAY THICKNESS OF 1½" PLACED ABOVE THE DECK SURFACE AFTER SURFACE PREPARATION. EXPECTED AVERAGE OVERLAY THICKNESS AT THE CROWN IS 2". IF EXPECTED AVERAGE OVERLAY THICKNESS IS EXCEEDED BY MORE THAN ½", CONTACT THE STRUCTURES DESIGN SECTION.

ALL CONCRETE REMOVAL NOT COVERED WITH A CONCRETE OVERLAY SHALL BE DEFINED BY A ½ INCH DEEP SAW CUT, UNLESS SPECIFIED OTHERWISE.

BAR STEEL REINFORCEMENT SHALL BE EMBEDDED 2" CLEAR UNLESS OTHERWISE SHOWN OR NOTED.

BEVEL EXPOSED EDGES OF CONCRETE ¾" UNLESS OTHERWISE NOTED.

CONCRETE SURFACE REPAIR SHALL BE USED FOR NEEDED REPAIRS. LOCATIONS AND LIMITS OF REPAIRS SHOWN ARE APPROXIMATE AND SHALL BE VERIFIED IN THE FIELD BY THE ENGINEER.

TAKE NECESSARY PRECAUTIONS WHILE REMOVING DETERIORATED CONCRETE TO PRESERVE EXISTING REINFORCING STEEL. CLEAN, REALIGN, AND RETIE EXISTING REINFORCING STEEL, AS THE ENGINEER CONSIDERS NECESSARY.

REMOVE CONCRETE TO SOUND CONCRETE OR TO ONE INCH BEHIND THE EXISTING REINFORCING STEEL, WHICHEVER DEPTH IS GREATER, AT LOCATIONS THE PLANS SHOW OR AS THE FIELD ENGINEER DIRECTS. NOTIFY THE DESIGN ENGINEER IF SOUND CONCRETE IS NOT ENCOUNTERED WITHIN 1'-0" FROM THE SURFACE OF THE EXISTING CONCRETE.

CLEAN THE SURFACES AGAINST WHICH PLACING THE NEW CONCRETE TO REMOVE LOOSE PARTICLES AND DUST, AND KEEP CONTINUOUSLY WET FOR A PERIOD OF 2 HOURS BEFORE PLACING NEW CONCRETE.

THE BID ITEM "FLASHING STAINLESS STEEL" SHALL INCLUDE PROVIDING AND INSTALLING THE STAINLESS STEEL FLASHING, SILICONE CAULK, CONCRETE SCREWS AND CLEANING THE EDGE OF THE SLAB PRIOR TO ATTACHMENT OF THE FLASHING.

FLASHING TO BE INSTALLED AFTER PROTECTIVE SURFACE TREATMENT APPLICATION. PROTECTIVE SURFACE TREATMENT SHALL BE APPLIED TO THE TOP SURFACE OF THE SLAB, THE EXTERIOR EDGE OF THE SLAB, AND THE FIRST 1'-0" OF THE UNDERSIDE OF THE SLAB.

CONCRETE SCREWS SHALL BE 410 STAINLESS STEEL.

EXTEND FLASHING FROM F.F. OF SOUTH ABUTMENT TO F.F. OF NORTH ABUTMENT.

TOP OF FLASHING TO BEGIN APPROX. 1-INCH BELOW TOP OF SLAB SURFACE.

THE FLASHING IS TO BE A CONSTANT HEIGHT BASED ON THE THINNEST SLAB DEPTH OVER THE BRIDGE LENGTH.

PROVIDE 2" MINIMUM FLASHING OVERLAP, FASTEN WITH 3/16"X2" (MIN.) CONCRETE SCREWS.

CAULK SHALL BE NON-STAINING, GRAY NON-BITUMINOUS JOINT SEALER.

THE EXISTING STRUCTURE (B-52-67) IS A TWO SPAN HAUNCHED SLAB STRUCTURE WITH AN OVERALL LENGTH OF 101'-10" AND A CLEAR ROADWAY WIDTH OF 34'-0". ORIGINAL CONSTRUCTION YEAR IS 1981.

LIST OF DRAWINGS

1. GENERAL PLAN & GENERAL NOTES
2. CROSS SECTION, SURFACE REPAIR & QUANTITIES

STATE PROJECT NUMBER

5760-00-73

DESIGN DATA

LIVE LOAD:

DESIGN LOADING — HS 20
INVENTORY RATING — HS 20
OPERATING RATING — HS 34
WISCONSIN STANDARD PERMIT VEHICLE RATING (WIS.-SPV): — 250 KIPS

MATERIAL PROPERTIES:

CONCRETE MASONRY OVERLAY — $f'c$ = 4,000 P.S.I.
HIGH-STRENGTH BAR STEEL REINFORCEMENT — fy = 60,000 P.S.I.

TRAFFIC DATA:

STH 130
A.A.D.T. (2027) — 880
A.A.D.T. (2047) — 970
DESIGN SPEED — 60 M.P.H.

WISCONSIN
ANDREW C. KNUTSON
E-34662
SPRING GREEN, WI
8-29-25
PROFESSIONAL ENGINEER

BRIDGE OFFICE CONTACT
AARON BONK, P.E.
(608) 261-0261

CONSULTANT CONTACT
ANDY KNUTSON, P.E., S.E.
(608) 588-7866

NO.	DATE	REVISION	BY

WESTBROOK Associated Engineers, Inc.
619 EAST HOXIE STREET
P.O. BOX 429
SPRING GREEN, WI 53588
PHONE (608) 588-7866
FAX (608) 588-7954

STATE OF WISCONSIN
DEPARTMENT OF TRANSPORTATION

ACCEPTED JLR 08/29/25
CHIEF STRUCTURES DESIGN ENGINEER DATE

STRUCTURE B-52-67

STH 130 OVER BEAR CREEK

COUNTY RICHLAND | TOWN/~~CITY/VILLAGE~~ BUENA VISTA
DESIGN SPEC. REHABILITATION N/A
DESIGNED BY JDO | DESIGN CK'D. CDS | DRAWN BY JDO | PLANS CK'D. ACK

GENERAL PLAN & GENERAL NOTES

SHEET 1 OF 2

92

8

8

FILE: B520067_01_gen.dwg
PLOT SCALE:

STATE PROJECT NUMBER
5760–00–73

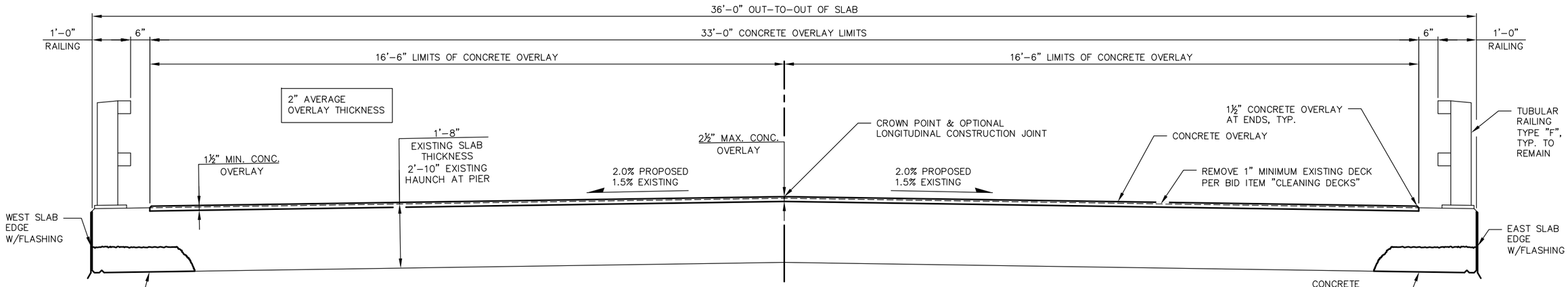

CROSS SECTION THRU ROADWAY

(LOOKING NORTH)

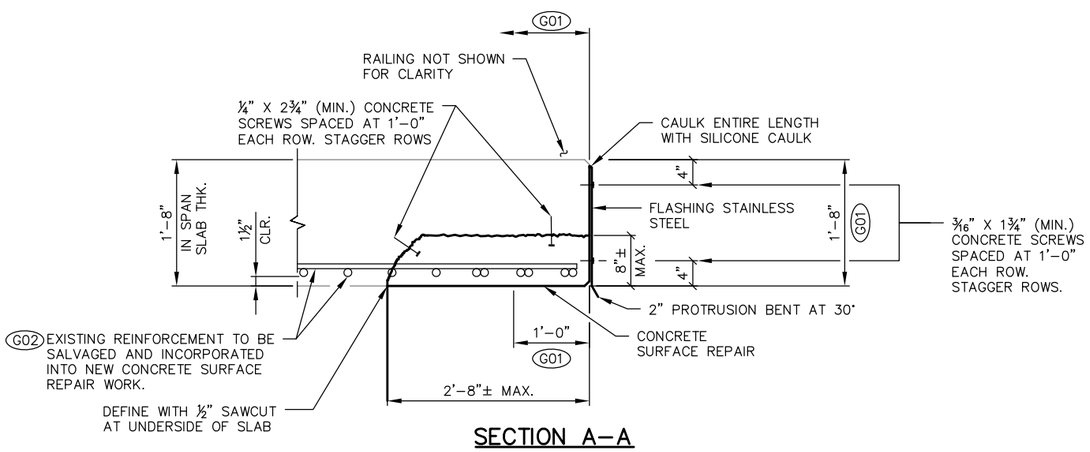

SECTION A–A

(REHABILITATION FLASHING DETAIL WITH SURFACE REPAIR)

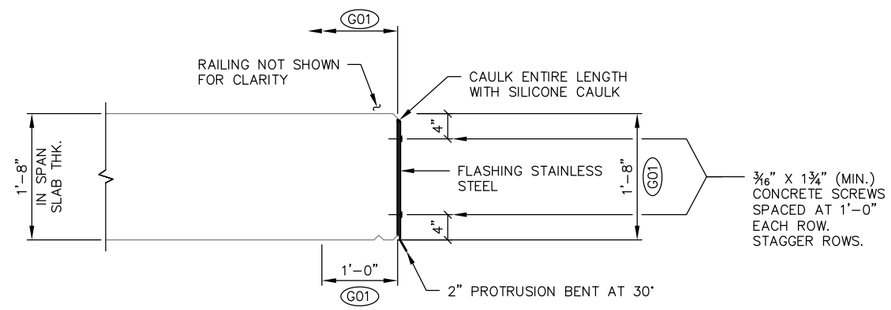

SECTION B–B

(REHABILITATION FLASHING DETAIL WITH NO SURFACE REPAIR)

TOTAL ESTIMATED QUANTITIES

	ITEM NO.	BID ITEMS	UNIT	S. ABUT.	PIER	N. ABUT.	SUPER.	TOTALS
	203.0335	DEBRIS CONTAINMENT OVER WATERWAY B–52–67	EACH	---	---	---	---	1
	502.3200	PROTECTIVE SURFACE TREATMENT	SY	---	---	---	431	431
▲	505.0400	BAR STEEL REINFORCEMENT HS STRUCTURES	LB	---	---	---	500	500
■▲	509.0301	PREPARATION DECKS TYPE 1	SY	---	---	---	37	37
▲	509.0302	PREPARATION DECKS TYPE 2	SY	---	---	---	15	15
	509.0500	CLEANING DECKS	SY	---	---	---	370	370
◑	509.1500	CONCRETE SURFACE REPAIR	SF	---	---	---	443	443
▲	509.2000	FULL–DEPTH DECK REPAIR	SY	---	---	---	1	1
	509.2500	CONCRETE MASONRY OVERLAY DECKS	CY	---	---	---	24	24
	SPV.0090	FLASHING STAINLESS STEEL	LF	---	---	---	198	198
	(NON–BID ITEM)	FILLER	SIZE					½" & ¾"

◑ CONCRETE SURFACE REPAIR AS DETAILED IN THE PLANS AND AS DIRECTED BY THE FIELD ENGINEER. QUANTITIES SHOWN ARE APPROXIMATE.

▲ UNDISTRIBUTED QUANTITIES, USE AS DIRECTED BY THE ENGINEER.

■ QUANTITY BASED ON INFRARED SCAN PERFORMED 6/28/2022. SCAN DATA INDICATED 5% DELAMINATION QUANTITY.

NOTES

G01 COAT WITH "PROTECTIVE SURFACE TREATMENT" AS PER THE STANDARD SPECIFICATIONS. PROTECTIVE SURFACE TREATMENT TO BE APPLIED TO THE ENTIRE EXPOSED TOP OF SLAB INCLUDING NEW CONCRETE OVERLAY AND EDGE OF SLAB AND 1'–0" UNDER SLAB BETWEEN F.F. OF ABUTMENTS.

G02 IF THE EXISTING STRUCTURAL REINFORCEMENT IS HEAVILY CORRODED (OVER 25% SECTION LOSS), ADDITIONAL REINFORCEMENT OF SAME SIZE AS EXISTING DAMAGED REINFORCEMENT SHALL BE PLACED ALONG SIDE OF THE CORRODED REINFORCEMENT. ADDITIONAL REINFORCEMENT WILL BE PAID FOR UNDER THE UNIT LB BID ITEM FOR "BAR STEEL REINFORCEMENT HS STRUCTURES".

NO.	DATE	REVISION	BY

STATE OF WISCONSIN
DEPARTMENT OF TRANSPORTATION

STRUCTURE B–52–67

DRAWN BY JDO | PLANS CK'D ACK

CROSS SECTION, SURFACE REPAIR & QUANTITIES

SHEET 2 OF 2

93

8

8

FILE: B520067_01_gen.dwg
PLOT SCALE:

STATE PROJECT NUMBER
5760–00–73

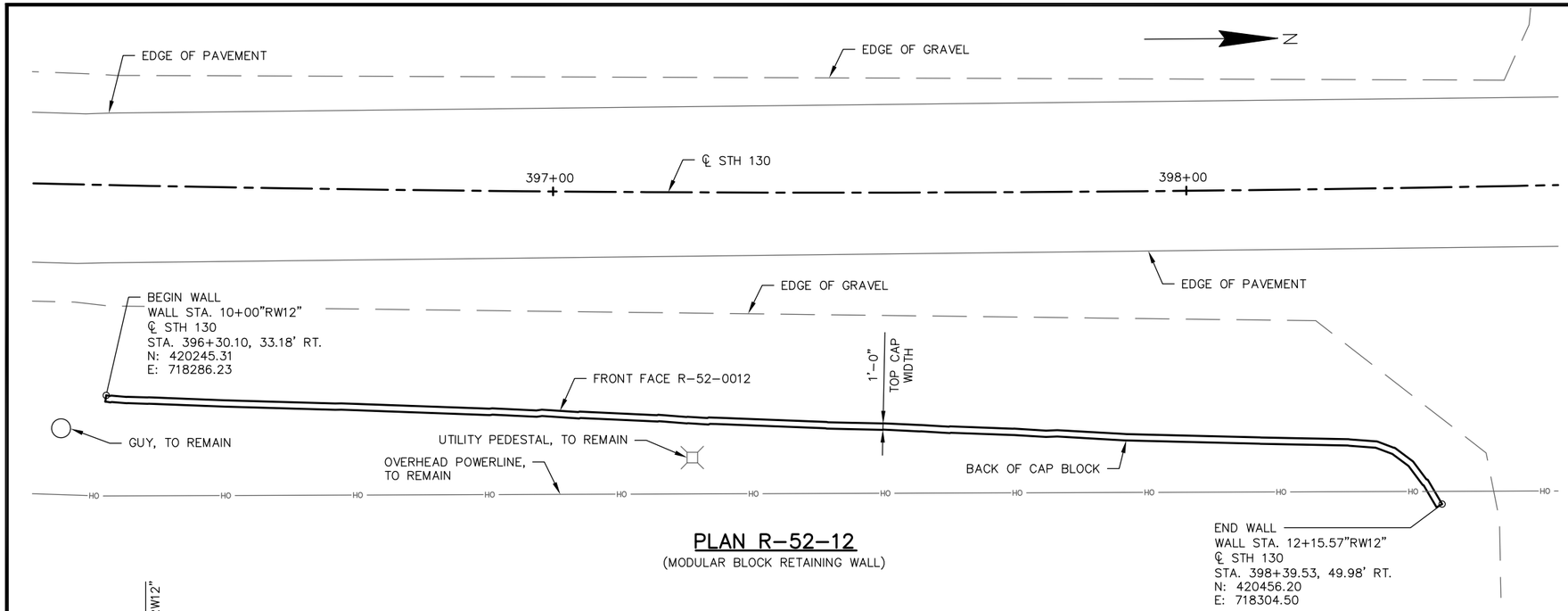

PLAN R–52–12

(MODULAR BLOCK RETAINING WALL)

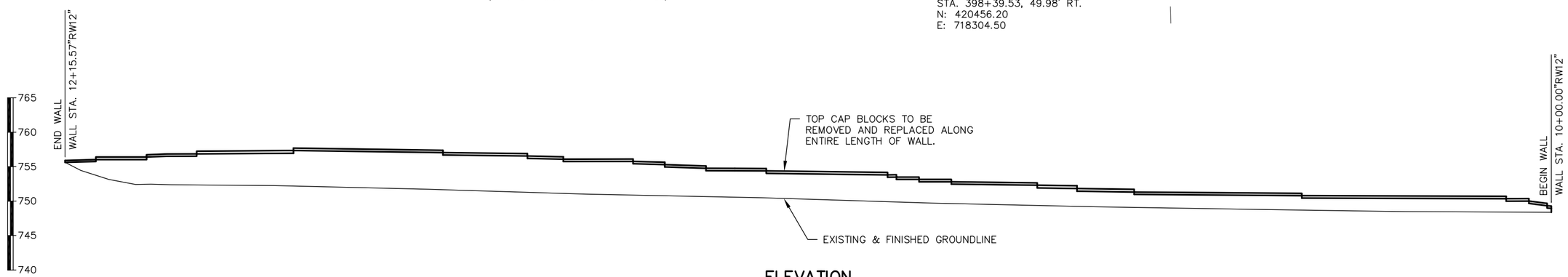

ELEVATION

(LOOKING AT FRONT FACE)

DESIGN DATA

MATERIAL PROPERTIES:

CONCRETE BLOCK — $f'c$ = 5,000 P.S.I. (DRY–CAST)
$f'c$ = 4,000 P.S.I. (WET–CAST)

TRAFFIC DATA:

STH 130
A.A.D.T. (2027) — 880
A.A.D.T. (2047) — 970
DESIGN SPEED — 60 M.P.H.

BENCH MARKS

NO.	STATION/OFFSET	DESCRIPTION	ELEVATION
BM #1	399+39.34, 21.54' RT.	¾" REBAR	752.30

HORIZONTAL DATUM AND ADJUSTMENT: NAD 83 (2011)
VERTICAL DATUM AND ADJUSTMENT: NAVD 88 (2012)
COORDINATE REFERENCE SYSTEM: WISCRS RICHLAND CO.

TOTAL ESTIMATED QUANTITIES

ITEM NO.	BID ITEMS	UNIT	TOTALS
SPV.0090.02	REMOVING AND REPLACING MODULAR BLOCK RETAINING WALL CAP BLOCKS	LF	216

GENERAL NOTES

DRAWINGS SHALL NOT BE SCALED.

DIMENSIONS AND ELEVATIONS SHOWN ARE BASED ON THE EXISTING ORIGINAL STRUCTURE PLANS AND EXISTING FIELD SURVEY FROM 2021.

TOP CAP BLOCKS TO BE REMOVED AND REPLACED. REPLACEMENT BLOCKS SHALL BE THE SAME DIMENSIONS, MADE OF THE SAME MATERIAL, AND HAVE THE SAME COLOR AS THE EXISTING CAP BLOCKS. REMOVAL AND REPLACEMENT OF TOP CAP BLOCKS SHALL BE INCLUDED UNDER THE BID ITEM "REMOVING AND REPLACING MODULAR BLOCK RETAINING WALL CAP BLOCK".

ANY EXCAVATION REQUIRED TO REMOVE TOP CAP BLOCKS SHALL BE INCLUDED WITH BID ITEM "REMOVING AND REPLACING MODULAR BLOCK RETAINING WALL CAP BLOCKS".

THE EXISTING STRUCTURE (R–52–12) IS A MASONRY BLOCK RETAINING WALL WITH AN OVERALL LENGTH OF 216'–0". ORIGINAL CONSTRUCTION YEAR IS 1980.

LIST OF DRAWINGS

1. GENERAL PLAN

BRIDGE OFFICE CONTACT
AARON BONK, P.E.
(608) 261–0261

CONSULTANT CONTACT
ANDY KNUTSON, P.E., S.E.
(608) 588–7866

NO.	DATE	REVISION	BY

WESTBROOK Associated Engineers, Inc.
619 EAST HOXIE STREET
P.O. BOX 429
SPRING GREEN, WI 53588
PHONE (608) 588–7866
FAX (608) 588–7954

STATE OF WISCONSIN
DEPARTMENT OF TRANSPORTATION

ACCEPTED JLR 08/05/25
CHIEF STRUCTURES DESIGN ENGINEER — DATE

STRUCTURE R–52–12

ALONG STH 130

COUNTY: RICHLAND — TOWN/~~CITY/VILLAGE~~: BUENA VISTA

DESIGN SPEC.: REHABILITATION N/A

DESIGNED BY JDO — DESIGN CK'D. CDS — DRAWN BY CDS — PLANS CK'D. ACK

GENERAL PLAN — SHEET 1 OF 1

94

8

8

FILE: R520012_01_gen.dwg
PLOT SCALE:

FOR INFORMATIONAL PURPOSES ONLY.
GRADING PAID FOR UNDER "BARRIER SYSTEM GRADING SHAPING FINISHING".

DIVISION 1 - B-52-0067 SOUTH APPROACH

STATION	DISTANCE	AREA (SF)		INCREMENTAL VOL (CY) (UNADJUSTED)		CUMULATIVE VOL (CY)		
		CUT	FILL	CUT NOTE 1	FILL NOTE 2	CUT 1.00 NOTE 1	EXPANDED FILL 1.25	MASS ORDINATE NOTE 3
286+42.00	0.00	13.46	0.00	0	0	0	0	0
286+50.00	8.00	14.13	0.00	4	0	4	0	4
287+00.00	50.00	15.73	0.70	28	1	32	1	31
287+28.00	28.00	11.62	1.15	14	1	46	3	44
287+50.00	22.00	7.25	9.66	8	4	54	8	47
287+98.59	48.59	8.48	24.69	14	31	68	46	22
288+00.00	1.41	8.59	23.98	0	1	68	48	21
288+23.57	23.57	10.42	10.04	8	15	76	66	10
288+48.55	24.98	10.87	1.66	10	5	86	73	14
288+50.00	1.45	11.04	1.32	1	0	87	73	15
288+88.49	38.49	11.68	19.49	16	15	103	91	12
		DIVISION 1 TOTALS		103	73			

DIVISION 2 - B-52-0067 NORTH APPROACH

STATION	DISTANCE	AREA (SF)		INCREMENTAL VOL (CY) (UNADJUSTED)		CUMULATIVE VOL (CY)		
		CUT	FILL	CUT NOTE 1	FILL NOTE 2	CUT 1.00 NOTE 1	EXPANDED FILL 1.25	MASS ORDINATE NOTE 3
289+90.32	0.00	11.30	57.32	0	0	0	0	0
290+00.00	9.68	10.65	44.09	4	18	4	23	-19
290+30.26	30.26	11.88	28.43	13	41	17	74	-57
290+50.00	19.74	13.05	32.98	9	22	26	101	-75
290+55.24	5.24	13.10	33.82	3	6	29	109	-80
290+80.22	24.98	11.27	43.98	11	36	40	154	-114
291+00.00	19.78	8.13	36.11	7	29	47	190	-143
291+50.00	50.00	13.20	1.76	20	35	67	234	-167
292+00.00	50.00	4.06	0.00	16	2	83	236	-153
292+50.00	50.00	4.31	0.00	8	0	91	236	-145
292+52.00	2.00	4.14	0.00	0	0	91	236	-145
		DIVISION 2 TOTALS		91	189			
		B-52-0067 TOTALS		194	262			

DIVISION 3 - B-52-0020 SOUTH APPROACH

STATION	DISTANCE	AREA (SF)		INCREMENTAL VOL (CY) (UNADJUSTED)		CUMULATIVE VOL (CY)		
		CUT	FILL	CUT NOTE 1	FILL NOTE 2	CUT 1.00 NOTE 1	EXPANDED FILL 1.25	MASS ORDINATE NOTE 3
355+57.31	0.00	7.72	4.84	0	0	0	0	0
356+00.00	42.69	10.33	31.50	14	29	14	36	-22
356+08.79	8.79	10.04	30.27	3	10	17	49	-32
356+18.79	10.00	9.58	31.09	4	11	21	63	-42
356+43.79	25.00	5.82	0.16	7	14	28	80	-52
356+50.00	6.21	8.16	3.73	2	0	30	80	-50
356+68.79	18.79	11.24	8.00	7	4	37	85	-48
357+00.00	31.21	14.54	16.51	15	14	52	103	-51
357+11.16	11.16	6.89	66.63	4	17	56	124	-68
		DIVISION 3 TOTALS		56	99			

DIVISION 4 - B-52-0020 NORTH APPROACH

STATION	DISTANCE	AREA (SF)		INCREMENTAL VOL (CY) (UNADJUSTED)		CUMULATIVE VOL (CY)		
		CUT	FILL	CUT NOTE 1	FILL NOTE 2	CUT 1.00 NOTE 1	EXPANDED FILL 1.25	MASS ORDINATE NOTE 3
357+82.66	0.00	12.68	100.97	0	0	0	0	0
358+00.00	17.34	17.13	54.00	10	50	10	63	-53
358+25.04	25.04	13.13	21.45	14	35	24	106	-82
358+50.04	25.00	15.23	0.00	13	10	37	119	-82
358+75.04	25.00	11.71	0.00	12	0	49	119	-70
358+85.04	10.00	9.00	0.34	4	0	53	119	-66
358+94.96	9.92	8.42	1.32	3	0	56	119	-63
		DIVISION 4 TOTALS		56	95			
		B-52-0020 TOTALS		112	194			

NOTES:	
1 - CUT	CUT INCLUDES SALVAGED/UNUSABLE PAVEMENT MATERIAL
2 - FILL	DOES NOT INCLUDE UNUSABLE PAVEMENT EXC VOLUME
3 - MASS ORDINATE	CUT - SALVAGED PAVT - (FILL * FILL FACTOR)

9

9

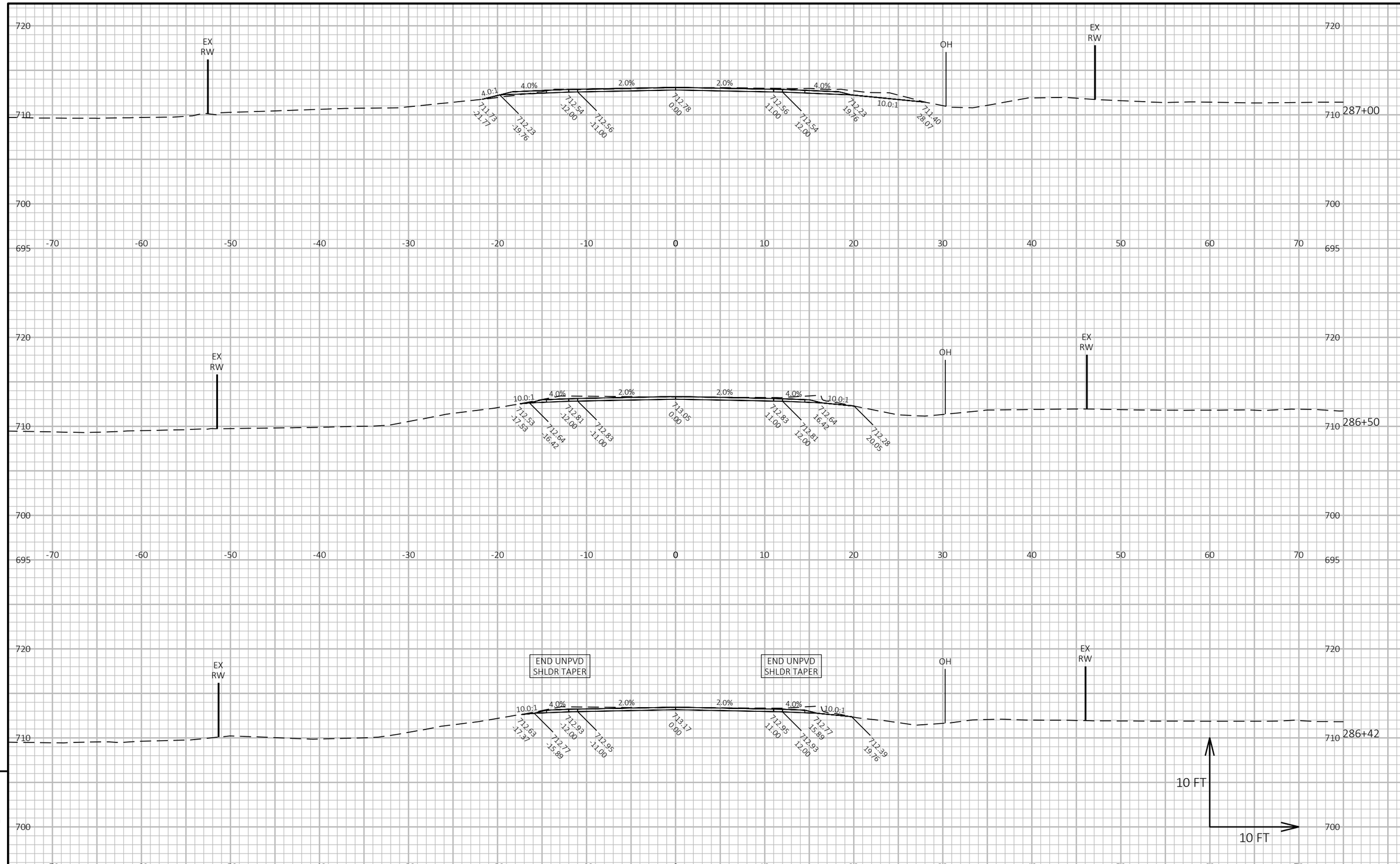

9

9

PROJECT NO: 5760-00-73	HWY: STH 130	COUNTY: RICHLAND	CROSS SECTIONS: STRUCTURE B-52-067	SHEET 96	E

FILE NAME : G:\00-PROJECT FILES\2021\21168 ID 5760-00-03 STH 130, RICHLAND COUNTY\0-CAD\SHEETSPLAN\090201_XS.DWG
LAYOUT NAME - 090201_xs
PLOT DATE : 1/27/2025 1:15 PM
PLOT BY : GAVIN WIPPERFURTH
PLOT NAME :
PLOT SCALE : 1 IN:10 FT HORZ. / 1 IN:10 FT VERT.
WISDOT/CADDS SHEET 49

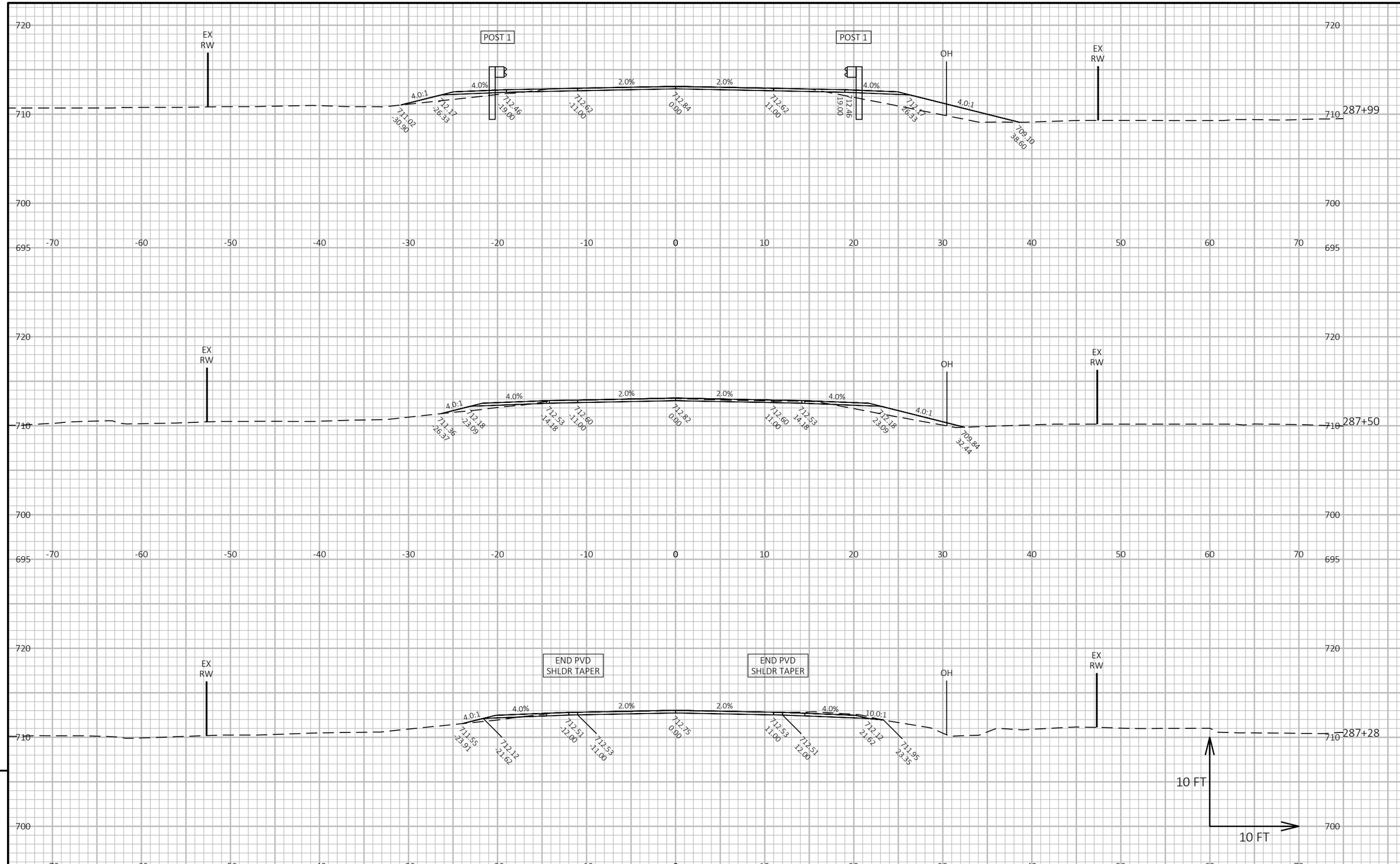

9

9

PROJECT NO: 5760-00-73	HWY: STH 130	COUNTY: RICHLAND	CROSS SECTIONS: STRUCTURE B-52-067	SHEET 97	E

FILE NAME : G:\00-PROJECT FILES\2021\21168 ID 5760-00-03 STH 130, RICHLAND COUNTY\0-CAD\SHEETSPLAN\090201_XS.DWG
LAYOUT NAME - 090202_xs
PLOT DATE : 1/27/2025 1:16 PM PLOT BY : GAVIN WIPPERFURTH PLOT NAME : PLOT SCALE : 1 IN:10 FT HORZ. / 1 IN:10 FT VERT.

WISDOT/CADDS SHEET 49

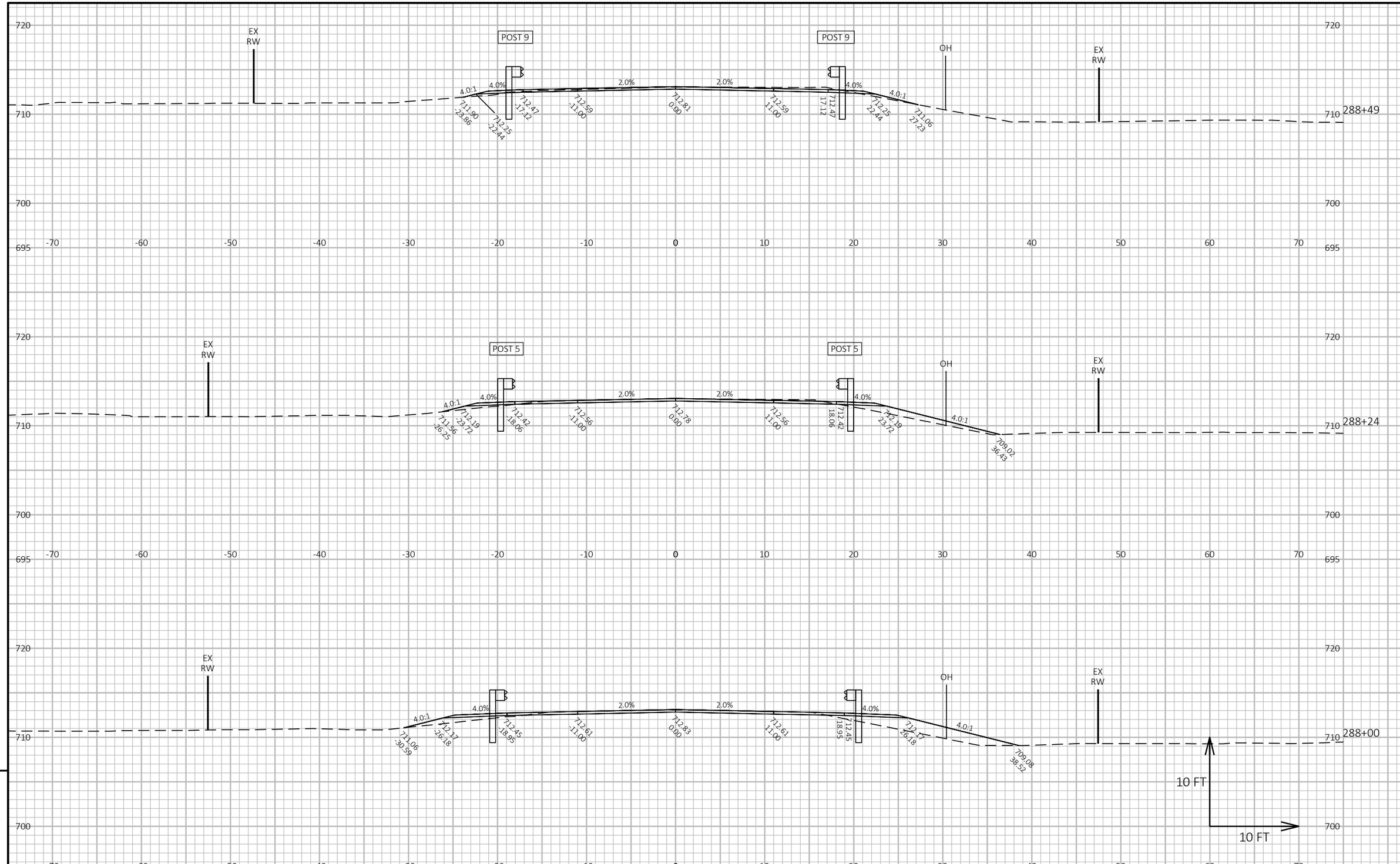

9

9

PROJECT NO: 5760-00-73	HWY: STH 130	COUNTY: RICHLAND	CROSS SECTIONS: STRUCTURE B-52-067	SHEET 98	E

FILE NAME : G:\00-PROJECT FILES\2021\21168 ID 5760-00-03 STH 130, RICHLAND COUNTY\0-CAD\SHEETSPLAN\090201_XS.DWG
LAYOUT NAME - 090203_xs
PLOT DATE : 1/27/2025 1:16 PM PLOT BY : GAVIN WIPPERFURTH PLOT NAME : PLOT SCALE : 1 IN:10 FT HORZ. / 1 IN:10 FT VERT.

WISDOT/CADDS SHEET 49

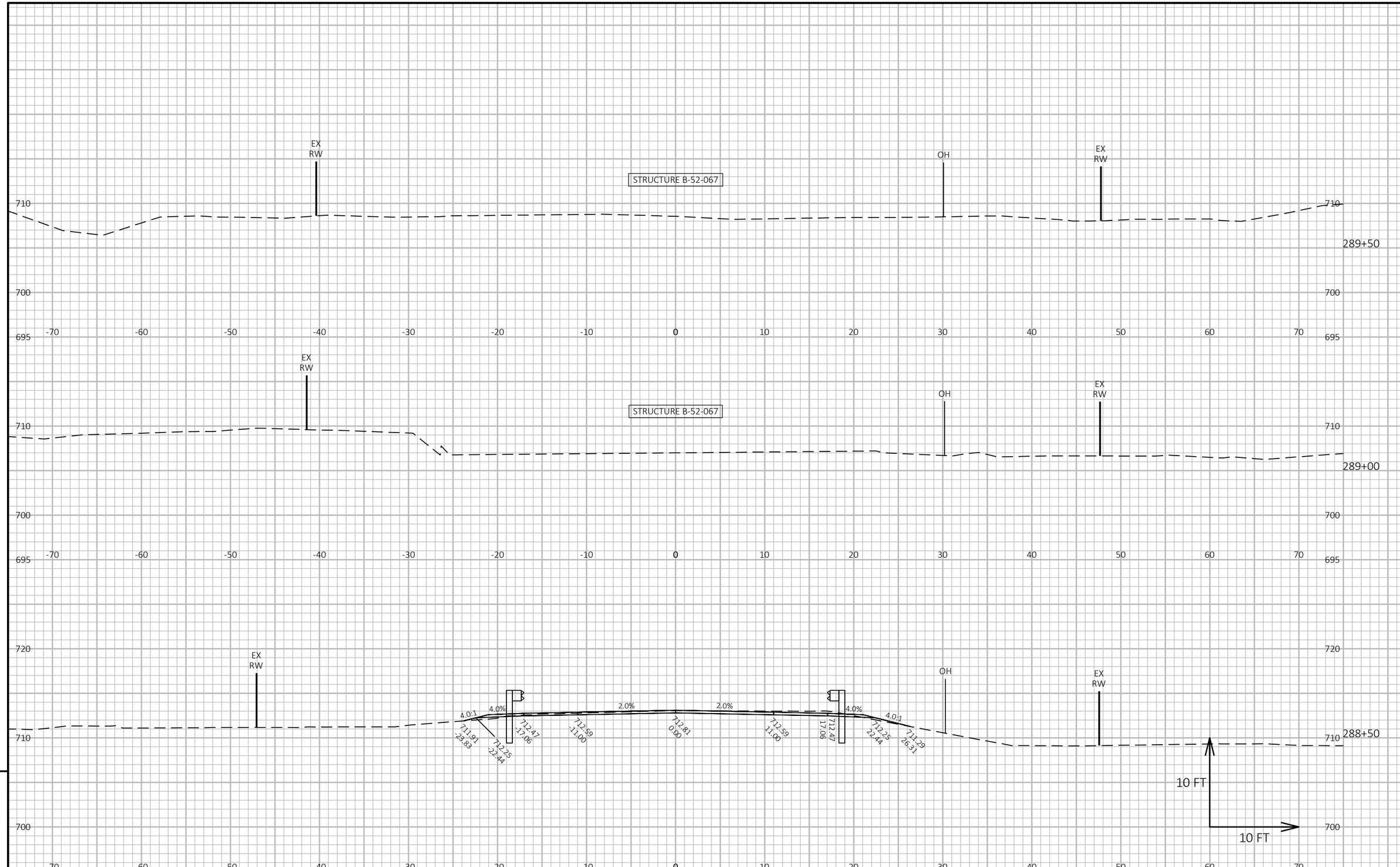

9

9

PROJECT NO: 5760-00-73	HWY: STH 130	COUNTY: RICHLAND	CROSS SECTIONS: STRUCTURE B-52-067	SHEET 99	E

FILE NAME : G:\00-PROJECT FILES\2021\21168 ID 5760-00-03 STH 130, RICHLAND COUNTY\0-CAD\SHEETSPLAN\090201_XS.DWG
LAYOUT NAME - 090204_xs
PLOT DATE : 1/27/2025 1:17 PM PLOT BY : GAVIN WIPPERFURTH PLOT NAME : PLOT SCALE : 1 IN:10 FT HORZ. / 1 IN:10 FT VERT.

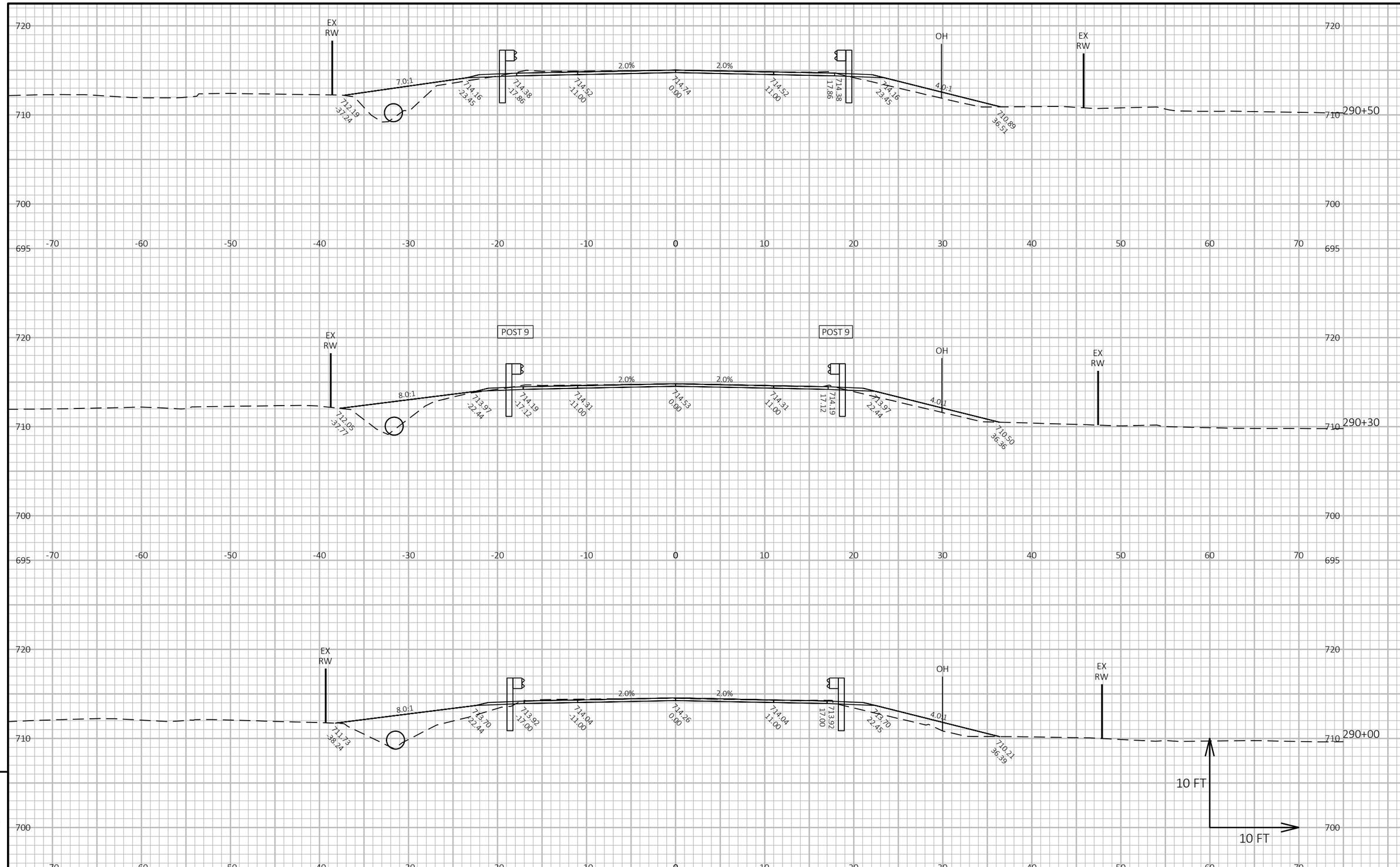

9

9

PROJECT NO: 5760-00-73	HWY: STH 130	COUNTY: RICHLAND	CROSS SECTIONS: STRUCTURE B-52-067	SHEET 100	E

FILE NAME : G:\00-PROJECT FILES\2021\21168 ID 5760-00-03 STH 130, RICHLAND COUNTY\0-CAD\SHEETSPLAN\090201_XS.DWG
LAYOUT NAME - 090205_xs
PLOT DATE : 1/27/2025 1:17 PM
PLOT BY : GAVIN WIPPERFURTH
PLOT NAME :
PLOT SCALE : 1 IN:10 FT HORZ. / 1 IN:10 FT VERT.
WISDOT/CADDS SHEET 49

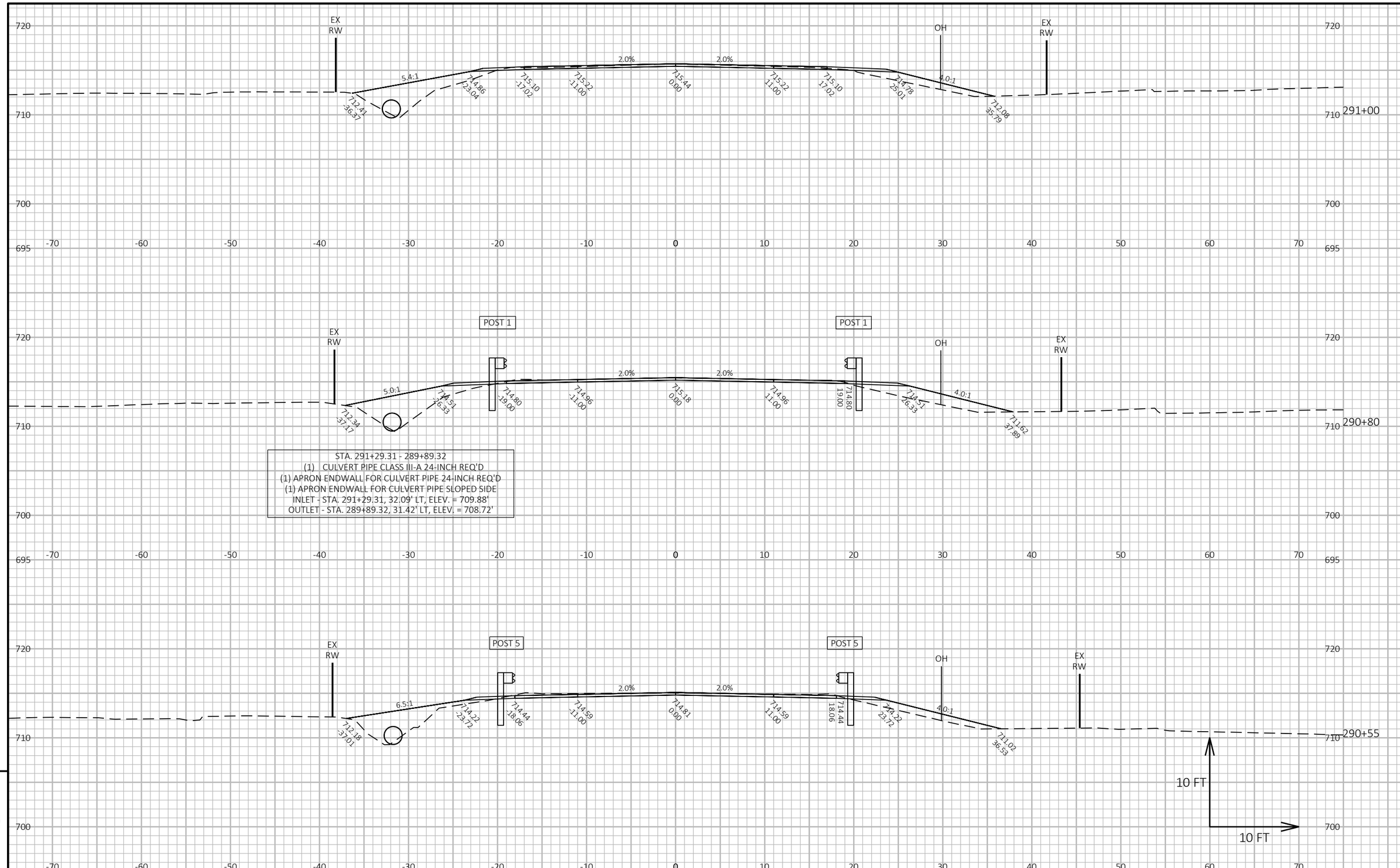

9

9

PROJECT NO: 5760-00-73	HWY: STH 130	COUNTY: RICHLAND	CROSS SECTIONS: STRUCTURE B-52-067	SHEET 101	E

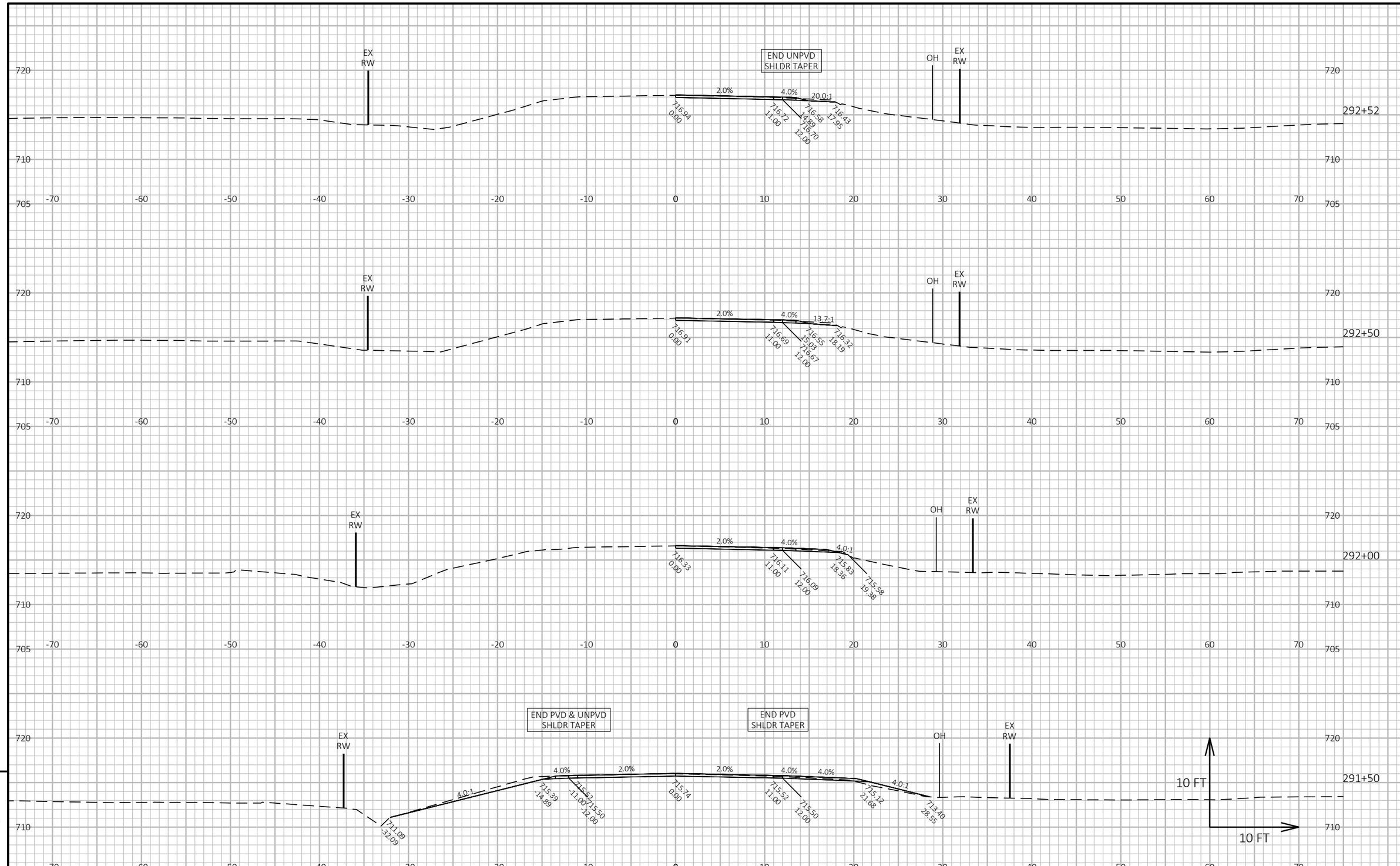

9

9

PROJECT NO: 5760-00-73	HWY: STH 130	COUNTY: RICHLAND	CROSS SECTIONS: STRUCTURE B-52-067	SHEET 102	E

FILE NAME : G:\00-PROJECT FILES\2021\21168 ID 5760-00-03 STH 130, RICHLAND COUNTY\0-CAD\SHEETSPLAN\090201_XS.DWG
LAYOUT NAME - 090207_xs
PLOT DATE : 1/27/2025 1:18 PM
PLOT BY : GAVIN WIPPERFURTH
PLOT NAME :
PLOT SCALE : 1 IN:10 FT HORZ. / 1 IN:10 FT VERT.
WISDOT/CADDS SHEET 49

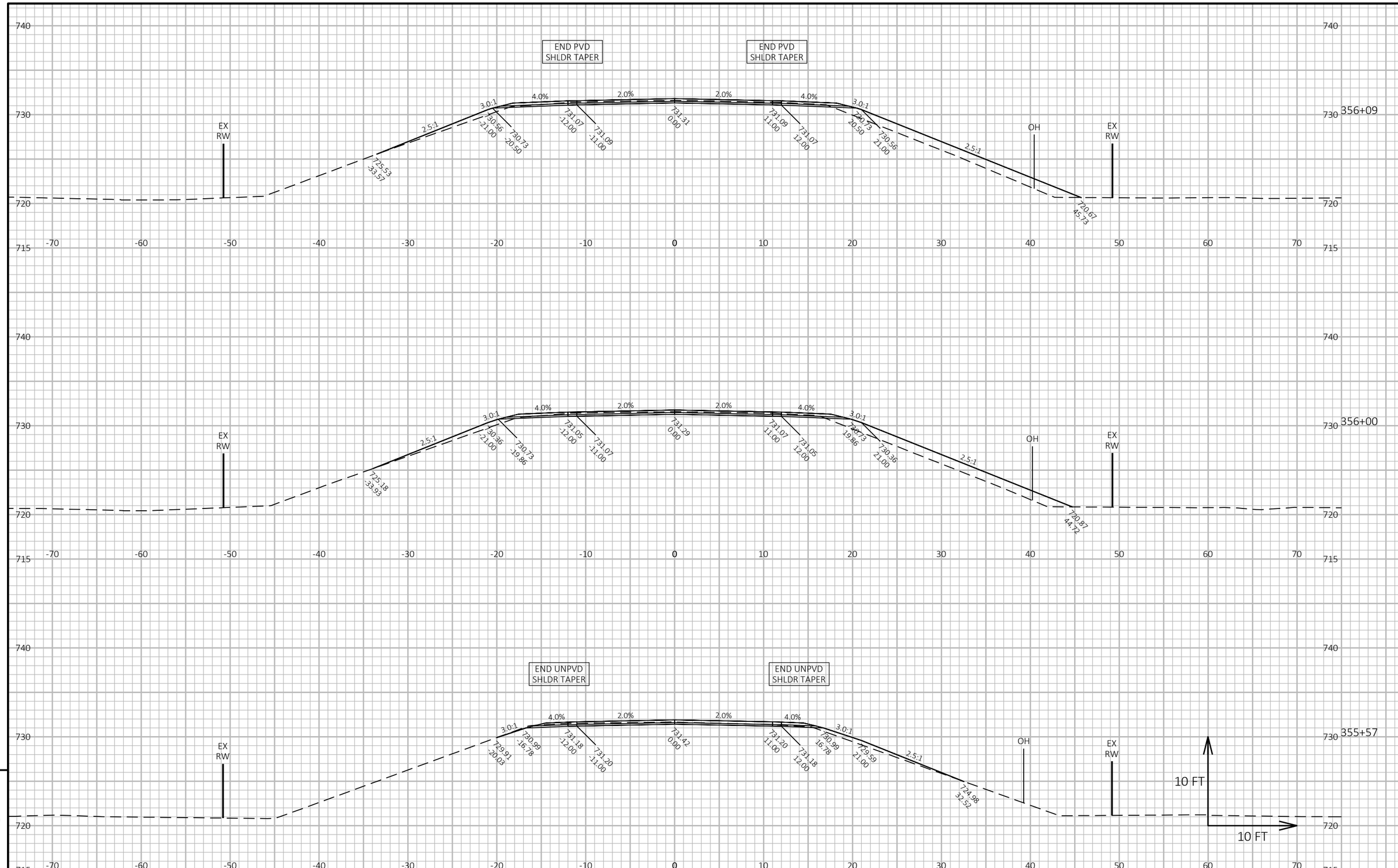

9

9

PROJECT NO: 5760-00-73	HWY: STH 130	COUNTY: RICHLAND	CROSS SECTIONS: STRUCTURE B-52-020	SHEET 103	E

FILE NAME : G:\00-PROJECT FILES\2021\21168 ID 5760-00-03 STH 130, RICHLAND COUNTY\0-CAD\SHEETSPLAN\090201_XS.DWG
LAYOUT NAME - 090208_xs
PLOT DATE : 1/27/2025 1:19 PM
PLOT BY : GAVIN WIPPERFURTH
PLOT NAME :
PLOT SCALE : 1 IN:10 FT HORZ. / 1 IN:10 FT VERT.
WISDOT/CADDS SHEET 49

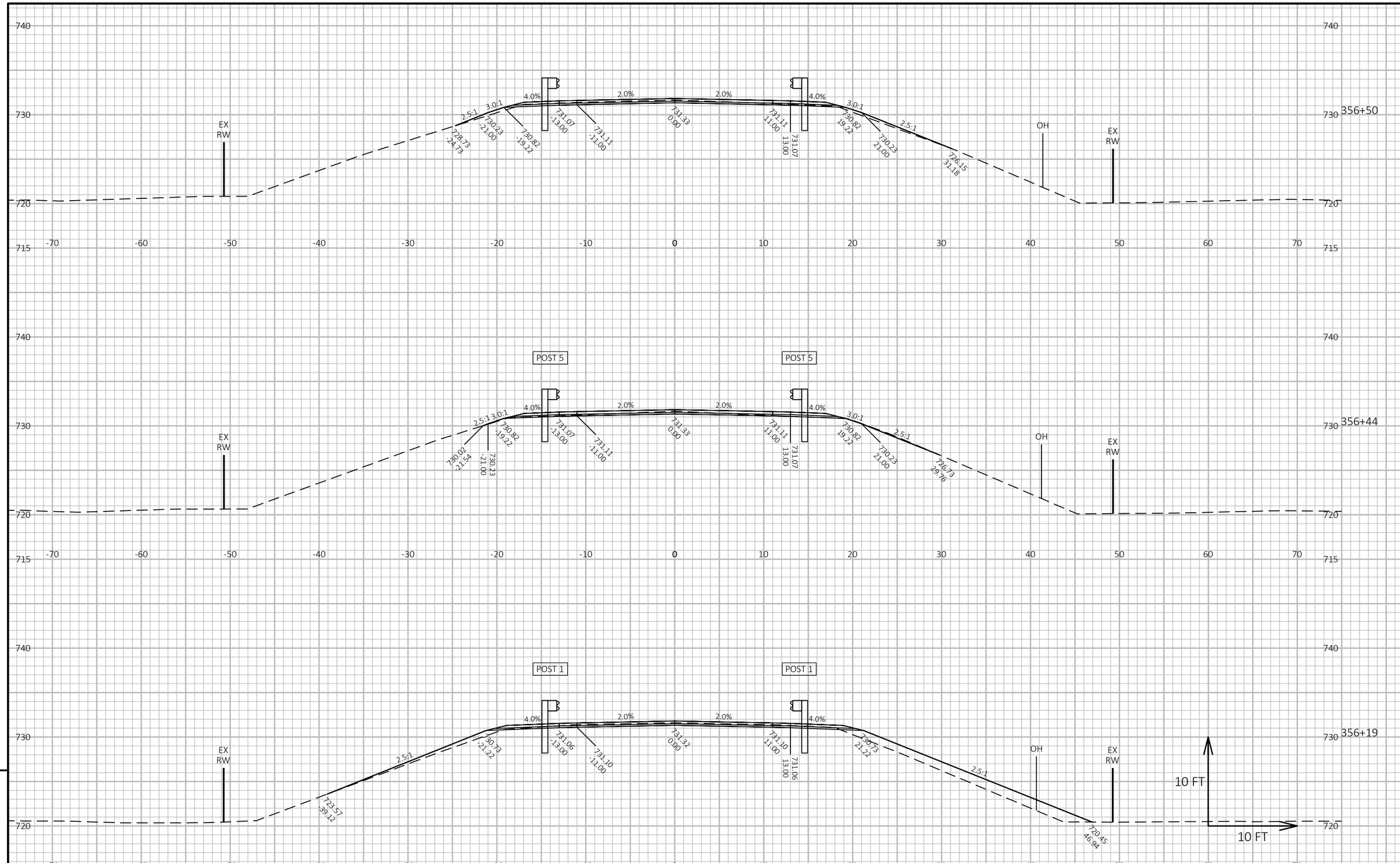

9

9

PROJECT NO: 5760-00-73	HWY: STH 130	COUNTY: RICHLAND	CROSS SECTIONS: STRUCTURE B-52-020	SHEET 104	E

FILE NAME : G:\00-PROJECT FILES\2021\21168 ID 5760-00-03 STH 130, RICHLAND COUNTY\0-CAD\SHEETSPLAN\090201_XS.DWG
LAYOUT NAME - 090209_xs

PLOT DATE : 1/27/2025 1:19 PM PLOT BY : GAVIN WIPPERFURTH PLOT NAME : PLOT SCALE : 1 IN:10 FT HORZ. / 1 IN:10 FT VERT.

WISDOT/CADDS SHEET 49

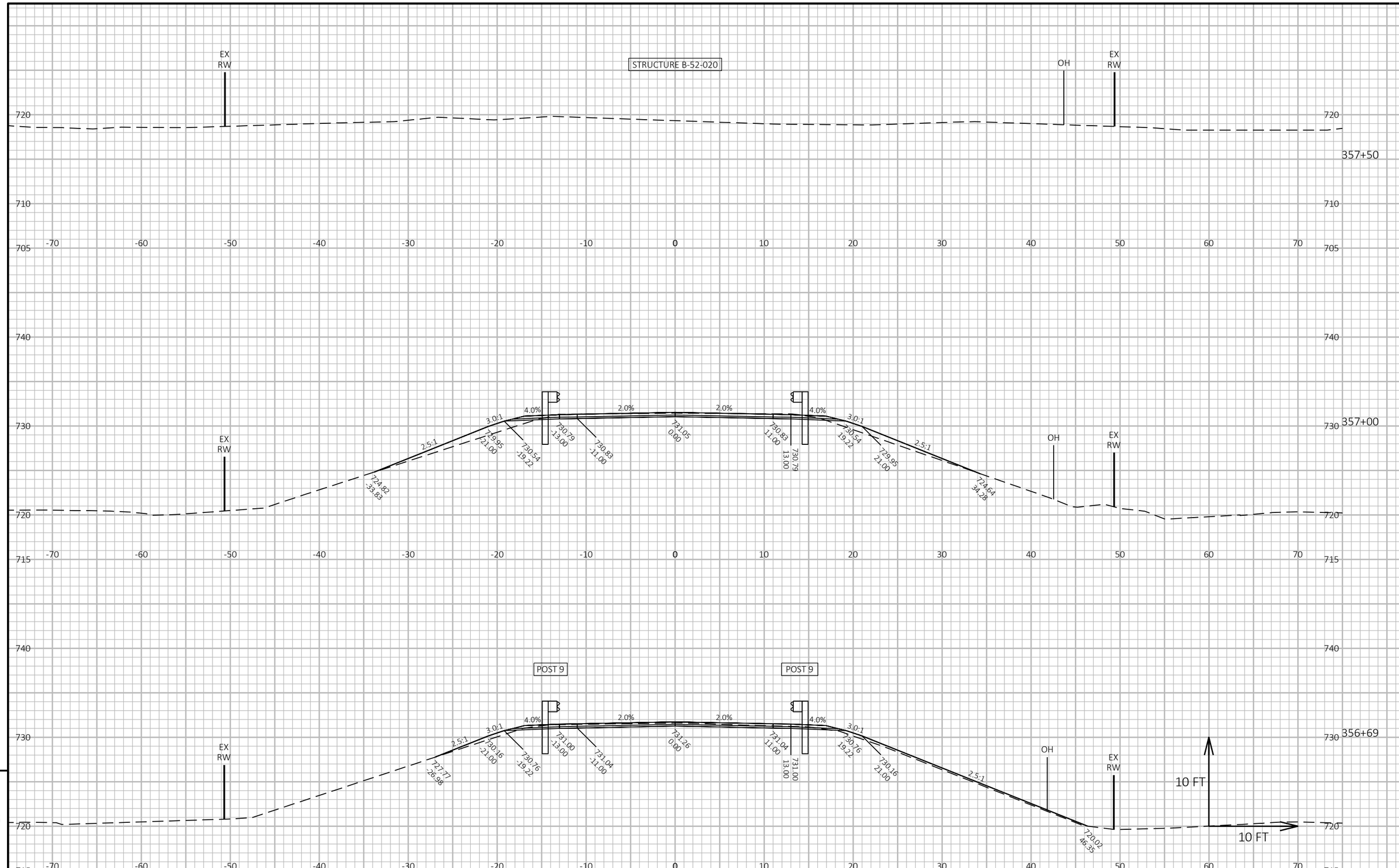

PROJECT NO: 5760-00-73	HWY: STH 130	COUNTY: RICHLAND	CROSS SECTIONS: STRUCTURE B-52-020	SHEET 105	E

FILE NAME : G:\00-PROJECT FILES\2021\21168 ID 5760-00-03 STH 130, RICHLAND COUNTY\0-CAD\SHEETSPLAN\090201_XS.DWG
LAYOUT NAME - 090210_xs
PLOT DATE : 1/27/2025 1:20 PM PLOT BY : GAVIN WIPPERFURTH PLOT NAME : PLOT SCALE : 1 IN:10 FT HORZ. / 1 IN:10 FT VERT.
WISDOT/CADDS SHEET 49

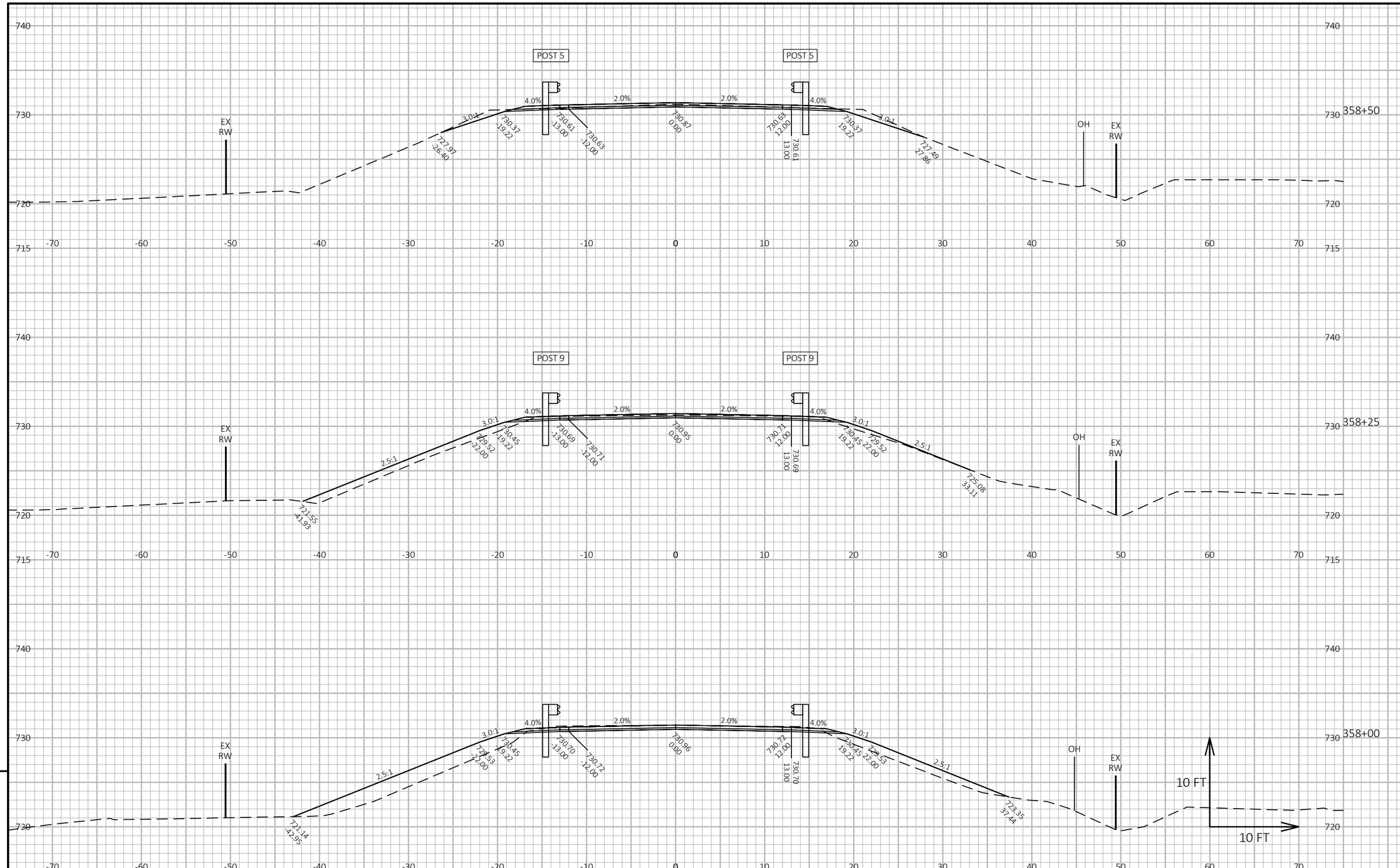

9

9

PROJECT NO: 5760-00-73	HWY: STH 130	COUNTY: RICHLAND	CROSS SECTIONS: STRUCTURE B-52-020	SHEET 106	E

FILE NAME : G:\00-PROJECT FILES\2021\21168 ID 5760-00-03 STH 130, RICHLAND COUNTY\0-CAD\SHEETSPLAN\090201_XS.DWG
LAYOUT NAME - 090211_xs
PLOT DATE : 1/27/2025 1:20 PM
PLOT BY : GAVIN WIPPERFURTH
PLOT NAME :
PLOT SCALE : 1 IN:10 FT HORZ. / 1 IN:10 FT VERT.
WISDOT/CADDS SHEET 49

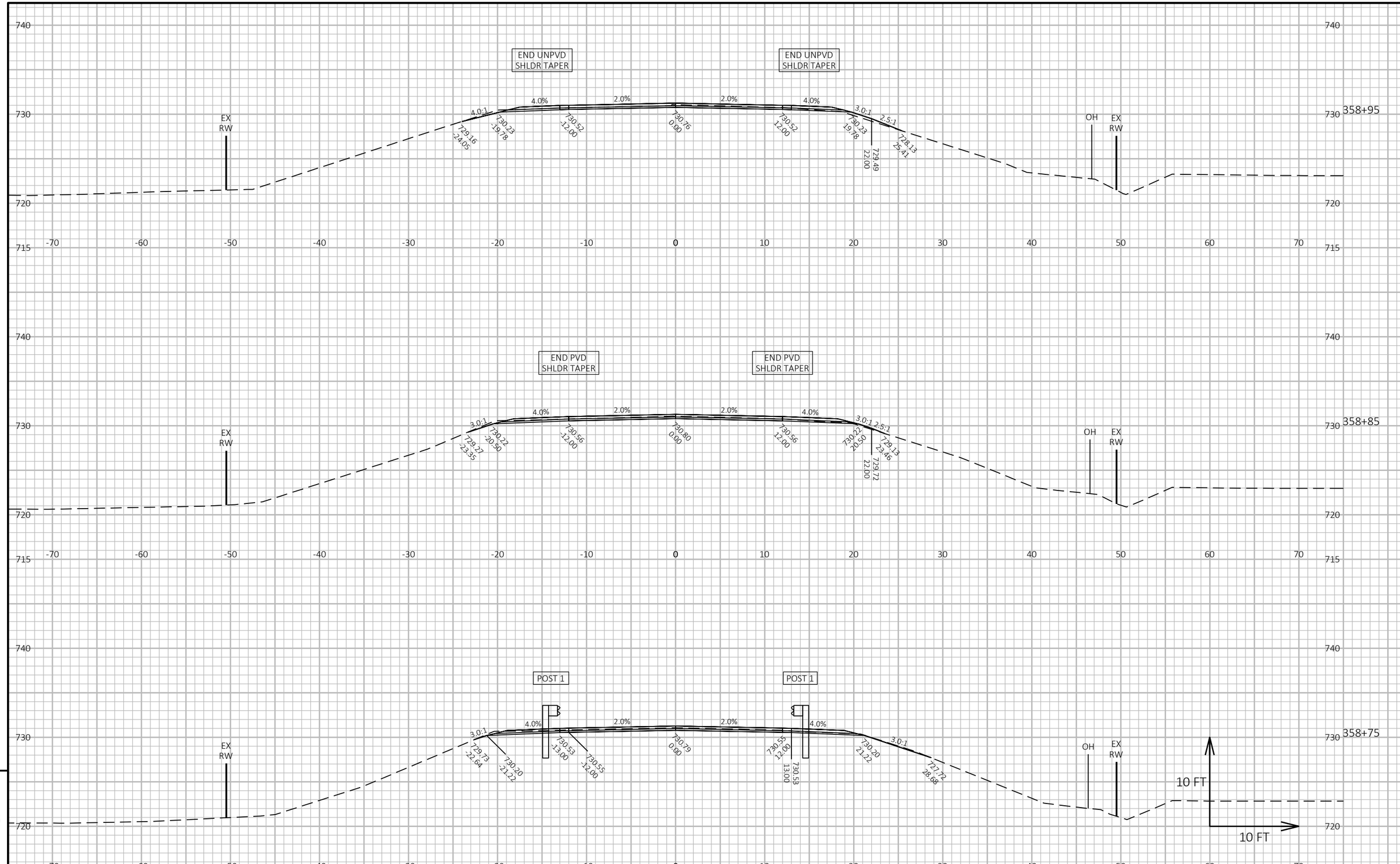

9

9

PROJECT NO: 5760-00-73	HWY: STH 130	COUNTY: RICHLAND	CROSS SECTIONS: STRUCTURE B-52-020	SHEET 107	E

FILE NAME : G:\00-PROJECT FILES\2021\21168 ID 5760-00-03 STH 130, RICHLAND COUNTY\0-CAD\SHEETSPLAN\090201_XS.DWG
LAYOUT NAME - 090212_xs
PLOT DATE : 1/27/2025 1:20 PM PLOT BY : GAVIN WIPPERFURTH PLOT NAME : PLOT SCALE : 1 IN:10 FT HORZ. / 1 IN:10 FT VERT.

WISDOT/CADDS SHEET 49

STA. 323+59
(1) CULVERT PIPE REINFORCED CONCRETE HORIZONTAL ELLIPTICAL CLASS HE-IV 14x23-INCH REQ'D
(2) APRON ENDWALLS FOR CULVERT PIPE REINFORCED CONCRETE HORIZONTAL ELLIPTICAL 14x23-INCH REQ'D
SKEW 0°
INLET - STA. 323+59, 13+95' RT, ELEV=728.50
OUTLET - STA. 323+59, 17.05' LT, ELEV=728.01

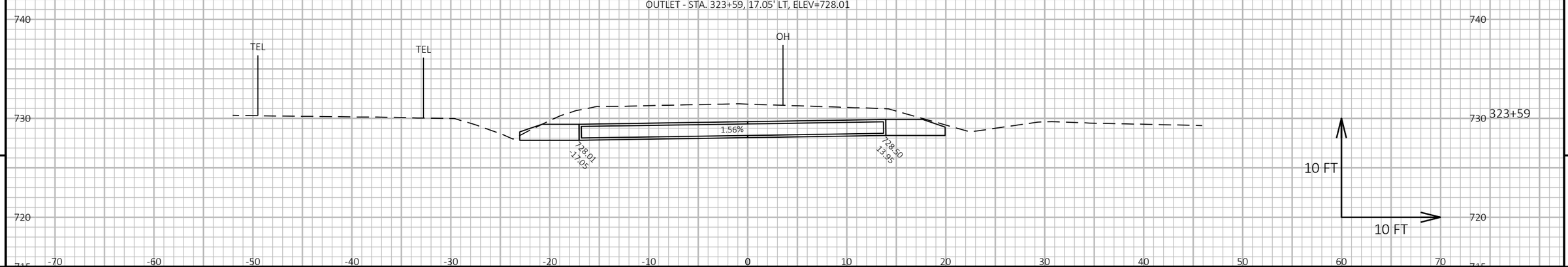

9

9

PROJECT NO: 5760-00-73	HWY: STH 130	COUNTY: RICHLAND	CROSS SECTIONS: CROSS DRAIN	SHEET 108	E

FILE NAME : \\WAE-DATA\GENERAL\00-PROJECT FILES\2021\21168 ID 5760-00-03 STH 130, RICHLAND COUNTY\0-CAD\SHEETSPLAN\090213_XS.DWG
LAYOUT NAME - 090213_xs
PLOT DATE : 5/6/2025 11:06 AM PLOT BY : ERIK MEYER PLOT NAME : **PLOT SCALE :** 1 IN:10 FT HORZ. / 1 IN:10 FT VERT.
WISDOT/CADDS SHEET 49

Notes

Wisconsin Department of Transportation

Dedicated people creating transportation solutions through innovation and exceptional service.

http://www.dot.wisconsin.gov