MAD

PROJECT ID: 5939-00-63

WITH: N/A

COUNTY: IOWA

FEBRUARY 2026

ORDER OF SHEETS

TOTAL SHEETS = 184

STATE OF WISCONSIN
DEPARTMENT OF TRANSPORTATION

PLAN OF PROPOSED IMPROVEMENT

COBB - AVOCA

CTH I TO STH 133

STH 80

IOWA COUNTY

STATE PROJECT	FEDERAL PROJECT	
	PROJECT	CONTRACT
5939-00-63	WISC 2026175	1

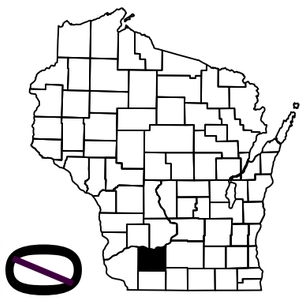

N

05

DESIGN DESIGNATION			5939-00-63 SOUTH OF CTH P N JCT	NORTH OF CTH P N JCT
A.A.D.T.	2028	=	1,400	400
A.A.D.T.	2048	=	1,500	460
D.H.V.		=	180	55
D.D.		=	60/40	60/40
T.		=	19.9%	11.8%
DESIGN SPEED		=	60 MPH	60 MPH
ESALS		=	490,000	200,000

END PROJECT 5939-00-63
STA 654+10.6

STATE PROJECT NUMBER
5939-00-63

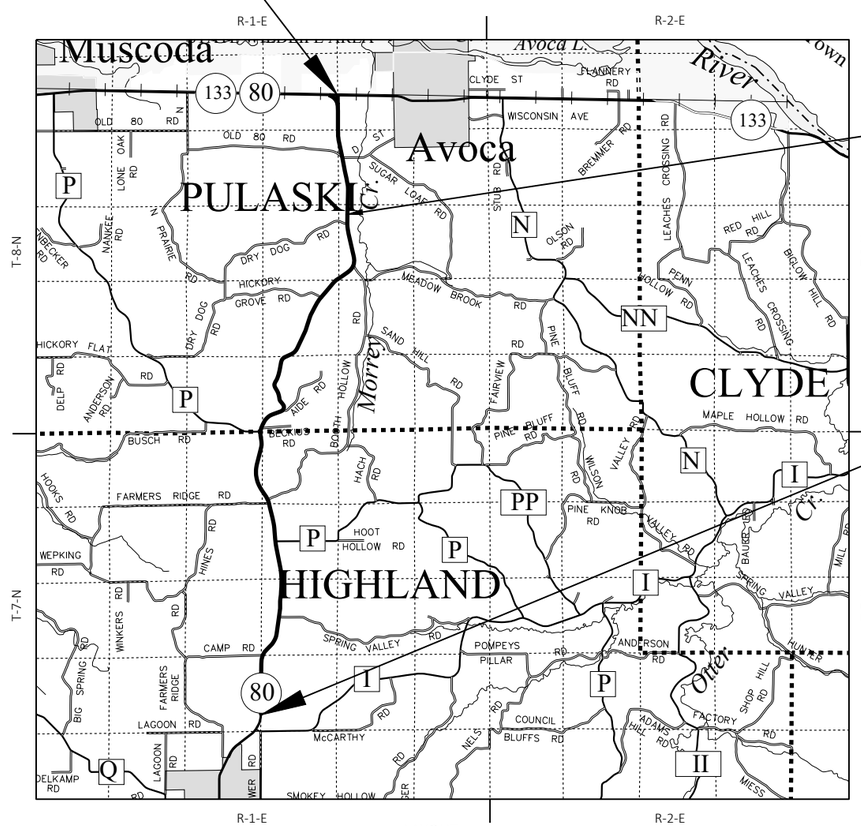

STRUCTURE B-25-194 OVER UNNAMED
TRIBUTARY TO MORREY CREEK
STA 568+59 TO STA 569+00

BEGIN PROJECT 5939-00-63
STA 187+69.7
Y = 192,030.525
X = 315,294.252

LAYOUT

SCALE 0 2 MI

TOTAL NET LENGTH OF CENTERLINE = 8.834 MILES

HORIZONTAL POSITIONS SHOWN ON THIS PLAN ARE WISCONSIN COUNTY COORDINATE SYSTEM (WCCS), IOWA COUNTY, NAD83 (2011), IN U.S. SURVEY FEET. POSITIONS SHOWN ARE GRID COORDINATES, GRID BEARINGS, AND GRID DISTANCES. GRID DISTANCES ARE THE SAME AS GROUND DISTANCES. ELEVATIONS ARE REFERENCED TO NAVD 88 (2012). GPS DERIVED ELEVATIONS ARE BASED ON GEOID 12A.

CONVENTIONAL SYMBOLS

PLAN

- CORPORATE LIMITS
- PROPERTY LINE
- LOT LINE
- LIMITED HIGHWAY EASEMENT
- EXISTING RIGHT OF WAY
- PROPOSED OR NEW R/W LINE
- SLOPE INTERCEPT
- REFERENCE LINE (300'EB')
- EXISTING CULVERT
- PROPOSED CULVERT (Box or Pipe)
- COMBUSTIBLE FLUIDS (CAUTION)
- MARSH AREA
- WOODED OR SHRUB AREA

PROFILE

- GRADE LINE
- ORIGINAL GROUND
- MARSH OR ROCK PROFILE (To be noted as such) (ROCK)
- SPECIAL DITCH (LABEL)
- GRADE ELEVATION (95.36)
- CULVERT (Profile View)

UTILITIES

- ELECTRIC (E)
- FIBER OPTIC (FO)
- GAS (G)
- SANITARY SEWER (SAN)
- STORM SEWER (SS)
- TELEPHONE (T)
- WATER (W)
- UTILITY PEDESTAL
- POWER POLE
- TELEPHONE POLE

WSP USA

WISCONSIN
MAXWELL L. SEBESTA
E-48682
LA CROSSE
WIS.
PROFESSIONAL ENGINEER

4/15/2025
DATE

STATE OF WISCONSIN
DEPARTMENT OF TRANSPORTATION

PREPARED BY

Surveyor	JEWELL ASSOCIATES ENGINEERS, INC.
Designer	WSP USA
Project Manager	DEREK POTTER, P.E.
Regional Examiner	WISDOT
Regional Supervisor	CHAD SCHROEDER, P.E.

APPROVED FOR THE DEPARTMENT

DATE: 4/29/25 (Signature)

E

GENERAL NOTES

THE LOCATIONS OF EXISTING AND PROPOSED UTILITY INSTALLATIONS AS SHOWN ON THE PLANS ARE APPROXIMATE. THERE MAY BE OTHER UTILITY INSTALLATIONS WITHIN THE PROJECT AREA THAT ARE NOT SHOWN. THE CONTRACTOR SHALL COORDINATE THEIR CONSTRUCTION ACTIVITIES WITH A CALL TO DIGGERS HOTLINE AND/OR A DIRECT CALL TO THE UTILITIES THAT HAVE FACILITIES IN THE AREAS. NOT ALL UTILITIES ARE MEMBERS OF DIGGERS HOTLINE.

UTILITY LINES IN THE CROSS SECTIONS ARE FOR HORIZONTAL REFERENCE ONLY.

CONTRACTOR TO VERIFY ELEVATIONS OF THE EXISTING PAVEMENT TO REMAIN IN PLACE, PRIOR TO STAKING.

D.O.T. BRIDGE BENCHMARK MONUMENT TO BE FURNISHED BY THE STATE AND PLACED BY THE CONTRACTOR AS DIRECTED BY THE ENGINEER.

CONTRACTORS SHALL MAINTAIN ACCESS TO ALL DRIVEWAYS AT ALL TIMES.

THE CONTRACTOR'S PAVING OPERATIONS SHALL BE CONSISTENT WITH THE PLAN TYPICAL SECTIONS AND CONSTRUCTED TO PREVENT HMA LONGITUDINAL JOINTS FROM BEING LOCATED WITHIN DRIVING, TURNING, PASSING OR PARKING LANES.

HMA PAVEMENT WEIGHT CALCULATIONS ARE BASED ON 112 LB/SY/IN.

APPLY TACK COAT BETWEEN LAYERS OF ASPHALT PAVEMENT AND TO MILLED SURFACES. THE APPLICATION RATE IS 0.05 GAL/SY BETWEEN LAYERS OF NEW HMA PAVEMENT AND 0.07 GAL/SY PLACED ON EXISTING ASPHALT, MILLED SURFACES, CONCRETE PAVEMENT, REMOVING DISTRESSED MILLING LOCATIONS OR AS DIRECTED BY THE ENGINEER.

SAWCUTS, AS SHOWN ON THE PLANS, ARE SUGGESTED LOCATIONS AND MAY BE ADJUSTED AT THE DISCRETION OF THE ENGINEER TO BETTER SUIT FIELD CONDITIONS.

CONTRACTOR WILL BE RESPONSIBLE FOR RESHAPING AND SEEDING ANY PREVIOUSLY GRASSED AREAS WHICH ARE DISTURBED BY THEIR OPERATION OUTSIDE OF THE NORMAL CONSTRUCTION LIMITS.

THE QUANTITY OF THE ITEMS FOR EROSION PROTECTION INCLUDES AN UNDISTRIBUTED AMOUNT FOR PROTECTION, CONTROL AND ABATEMENT OF WATER POLLUTION RESULTING FROM SOIL EROSION. THE DISTRIBUTION AND LOCATION OF THESE MATERIALS ARE TO BE DETERMINED BY THE ENGINEER.

DISTURBED AREAS WITHIN THE RIGHT OF WAY ARE TO BE TOPSOILED (SALVAGED), FERTILIZED, SEEDED, AND EMATTED AS DIRECTED BY THE ENGINEER.

THE EROSION CONTROL DEVICES AS SHOWN ON THE EROSION CONTROL SHEETS ARE AT SUGGESTED LOCATIONS. EXACT LOCATIONS WILL BE DETERMINED BY THE ENGINEER. EROSION CONTROL DEVICES SHALL BE PLACED IN SEQUENCE WITH CONSTRUCTION OPERATIONS OR AS DETERMINED BY THE ENGINEER.

NO TREES OR SHRUBS ARE TO BE REMOVED WITHOUT APPROVAL OF THE ENGINEER.

NUMBER, LOCATION, AND SPACING OF SIGNS AND DEVICES, AS SHOWN IN THE PLANS SHALL BE ADJUSTED TO FIT FIELD CONDITIONS.

EXISTING RIGHT OF WAY LINES SHOWN IN THE PLANS AND CROSS SECTIONS ARE APPROXIMATE.

DRIVEWAY AND ENTRANCE STATIONS AND OFFSETS IN THE PLANS REFER TO THE MATCH-IN LOCATION OF THE EXISTING DRIVEWAY/ENTRANCE.

MILL AND PAVE ADJACENT TO EXISTING SECTION AND ALUMINUM TIE MONUMENTS WITHOUT DAMAGING THE MONUMENTS. SEE ALIGNMENT DIAGRAM FOR LOCATIONS.

ENSURE THAT DH4987 GPS IS NOT DISTURBED, BUMPED OR MOVED DURING THE DURATION OF THE PROJECT. NOTIFY JACOB ROCKWEILER IMMEDIATELY IF DH4987 GPS IS/ARE DISTURBED, BUMPED OR MOVED DURING CONSTRUCTION OPERATIONS. CONTACT INFO:

JACOB ROCKWEILER, P.E.
WISCONSIN HEIGHT MODERNIZATION PROGRAM MANAGER
WISCONSIN DEPARTMENT OF TRANSPORTATION
PHONE: (608) 516-6362
EMAIL: JACOB.ROCKWEILER@DOT.WI.GOV

DESIGN CONTACTS

WISDOT PROJECT MANAGER
DEREK POTTER, P.E.
WISDOT SOUTHWEST REGION
MADISON OFFICE
2101 WRIGHT ST.
MADISON, WI 53704
(608) 246-3861
DEREK.POTTER@DOT.WI.GOV

DESIGNER
MAX SEBESTA, P.E.
WSP USA
831 CRITTER COURT, SUITE 400
ONALASKA, WI 54650
(608) 667-4377
MAXWELL.SEBESTA@WSP.COM

DNR LIAISON

ERIC HEGGELUND
3911 FISH HATCHERY ROAD
MADISON, WI 53711-5376
(608) 275-3301
ERIC.HEGGELUND@WISCONSIN.GOV

SECTION 2 ORDER OF SHEETS

UTILITY CONTACTS

ALLIANT ENERGY
ELECTRICITY
PATRICK MCINTYRE
900 PRAIRIE DR
SPRING GREEN, WI 53588
(608) 844 - 9605
PATRICKMCINTYRE@ALLIANTENERGY.COM

BRIGHTSPEED OF WESTERN WISCONSIN
COMMUNICATION LINE
DOUG MCGOWAN
135 BONSON ST
PLATTEVILLE, WI 53818
(608) 342 - 4316
DOUG.MCGOWAN1@BRIGHTSPEED.COM

WE ENERGIES
GAS/PETROLEUM
ADAM MARING
210 N 29TH AVE
MONROE, WI 53566
(608) 328 - 5679
ADAM.MARING@WE-ENERGIES.COM

DIGGERS HOTLINE
Dial 811 or (800)242-8511
www.DiggersHotline.com

RUNOFF COEFFICIENT TABLE

	HYDROLOGIC SOIL GROUP											
	A			B			C			D		
	SLOPE RANGE (PERCENT)			SLOPE RANGE (PERCENT)			SLOPE RANGE (PERCENT)			SLOPE RANGE (PERCENT)		
LAND USE:	0-2	2-6	6 & OVER	0-2	2-6	6 & OVER	0-2	2-6	6 & OVER	0-2	2-6	6 & OVER
ROW CROPS	.08 .22	.16 .30	.22 .38	.12 .26	.20 .34	.27 .44	.15 .30	.24 .37	.33 .50	.19 .34	.28 .41	.38 .56
MEDIAN STRIP-TURF	.19 .24	.20 .26	.24 .30	.19 .25	.22 .28	.26 .33	.20 .26	.23 .30	.30 .37	.20 .27	.25 .32	.30 .40
SIDE SLOPE: TURF			.25 .32			.27 .34			.28 .36			.30 .38
PAVEMENT:												
ASPHALT	.70 - .95											
CONCRETE	.80 - .95											
BRICK	.70 - .80											
DRIVES, WALKS	.75 - .85											
ROOFS	.75 - .95											
GRAVEL ROADS, SHOULDERS	.40 - .60											

TOTAL PROJECT AREA = 34.748 ACRES
TOTAL AREA EXPECTED TO BE DISTURBED BY CONSTRUCTION ACTIVITIES = 0.390 ACRES

ABBREVIATIONS CONT'D

PCC	PORTLAND CEMENT CONCRETE
PE	PRIVATE ENTRANCE
PGL	PROFILE GRADE LINE
PL	PROPERTY LINE
R	RADIUS OR RANGE
R/L	REFERENCE LINE
RCCP	REINFORCED CONCRETE CULVERT PIPE
REQ'DREQUIRED	
RT	RIGHT
R/W	RIGHT OF WAY
RD	ROAD
SHLD	SHOULDER(S)
S	SOUTH
SB	SOUTHBOUND
SF	SQUARE FOOT (FEET)
SDD	STANDARD DETAIL DRAWING(S)
STH	STATE TRUNK HIGHWAYS
SS	STORM SEWER
SSD	STOPPING SIGHT DISTANCE
STA	STATION
SE	SUPERELEVATION
S/L	SURVEY LINE
SYM	SYMMETRICAL
T	TRUCKS (PERCENT OF)
TEL	TELEPHONE
TEMP	TEMPORARY
TLE	TEMPORARY LIMITED EASEMENT
TOC	TOP OF CURB
TYP	TYPICAL
UNCL	UNCLASSIFIED
UG	UNDERGROUND
VAR	VARIABLE
VC	VERTICAL CURVE
VPC	VERTICAL POINT OF CURVATURE
VPI	VERTICAL POINT OF INTERSECTION
VPT	VERTICAL POINT OF TANGENCY
WT	WEIGHT
W	WEST
WB	WEST BOUND

ABBREVIATIONS

AC	ACRE
AGG	AGGREGATE
<	ANGLE
AE, AEW	APRON ENDWALL
ASPH	ASPHALTIC
ADT	AVERAGE DAILY TRAFFIC
AADT	ANNUAL AVERAGE DAILY TRAFFIC
BAD	BASE AGGREGATE DENSE
BF	BACK FACE
BM	BENCHMARK
BTWN	BETWEEN
CTR	CENTER
C/L	CENTERLINE
Δ	CENTRAL ANGLE OR DELTA
CE	COMMERCIAL ENTRANCE
CONST	CONSTRUCTION
CMCP	CORRUGATED METAL CULVERT PIPE
CMP	CORRUGATED METAL PIPE
CO	COUNTY
CTH	COUNTY TRUNK HIGHWAYS
CY	CUBIC YARD
CP	CONTROL POINT OR CULVERT PIPE
C&G	CURB AND GUTTER
D	DEGREE OF CURVE
DHV	DESIGN HOUR VOLUME
DIA	DIAMETER
DD	DIRECTIONAL DISTRIBUTION
DISCH	DISCHARGE
DMS	DYNAMIC MESSAGE SIGN
EA	EACH
E	EAST
EB	EASTBOUND
ELEC	ELECTRIC(AL), ELEC. CABLE
EL, ELEV	ELEVATION
ESALS	EQUIVALENT SINGLE AXLE LOADS
EXC	EXCAVATION
EXIST	EXISTING
FF	FACE TO FACE
FERT	FERTILIZER
FE	FIELD ENTRANCE
F/L, FL	FLOW LINE
GALV	GALVANIZE
HS	HIGH STRENGTH
CWT	HUNDRED WEIGHT
INL	INLET
INTER	INTERSECTION
JT	JOINT
LT	LEFT
L	LENGTH OF CURVE
LF	LINEAR FOOT (FEET)
LC	LONG CHORD
LS	LUMP SUM
MP	MARKER POST
MGAL	1000 GALLONS
NC	NORMAL CROWN
N	NORTH
NB	NORTH BOUND
NOR	NORMAL
NO	NUMBER
PAV'T	PAVEMENT
PLE	PERMANENT LIMITED EASEMENT
PC	POINT OF CURVATURE
PI	POINT OF INTERSECTION
PT	POINT OF TANGENCY

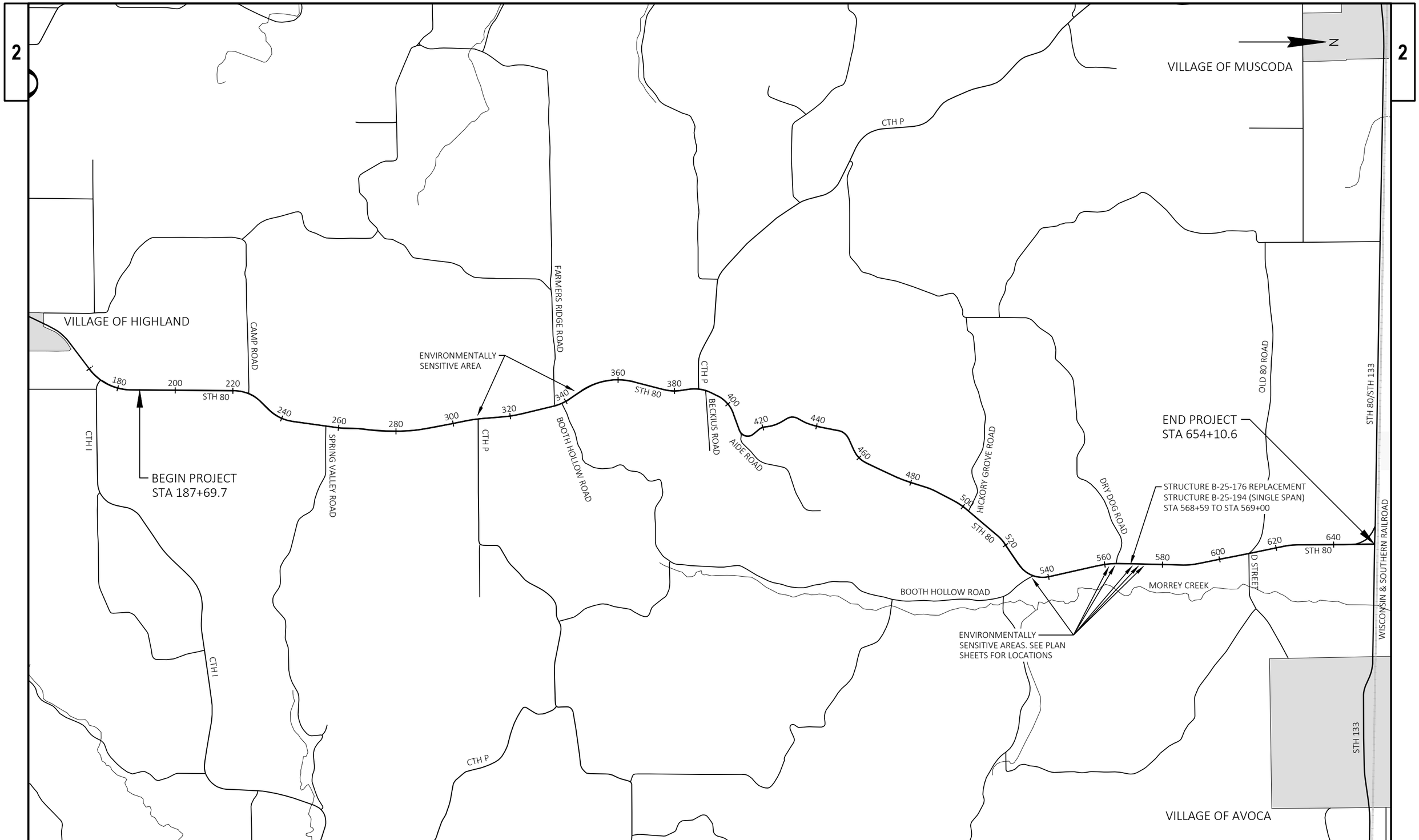

PROJECT NO: 5939-00-63	HWY: STH 80	COUNTY: IOWA	PROJECT OVERVIEW	SHEET 4	E

FILE NAME : W:\7701_07\CAD\! XXXX-XX-XX\SHEETSPLAN\020201-PO.DWG
LAYOUT NAME - 01
PLOT DATE : 4/14/2025 2:10 PM
PLOT BY : METRY, ALEXANDER
PLOT NAME :
PLOT SCALE : 1 IN:3000 FT
WISDOT/CADDS SHEET 42

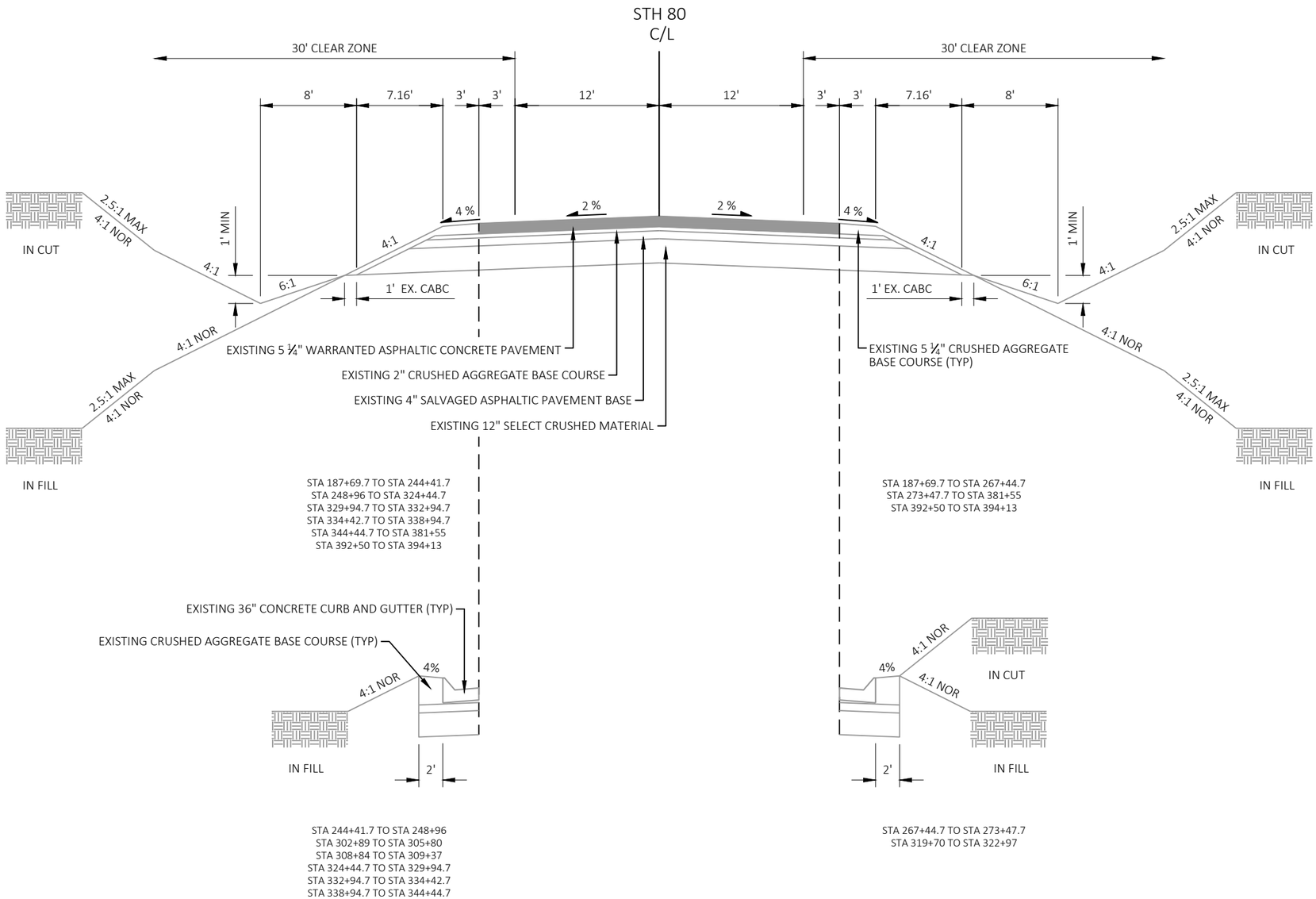

EXISTING TYPICAL SECTION STH 80
STA 187+69.7 TO STA 381+55
STA 392+50 - STA 394+13 (SUPERELEVATED SECTION)

PROJECT NO: 5939-00-63	HWY: STH 80	COUNTY: IOWA	EXISTING TYPICAL SECTIONS	SHEET 5	E

FILE NAME : \\CORP.PBWAN.NET\US\CENTRALDATA\USZOK100\WI_PROJECTS\7701_07\CAD\! XXXX-XX-XX\SHEETSPLAN\020301-TS.DWG
LAYOUT NAME - 01
PLOT DATE : 12/16/2025 1:28 PM PLOT BY : SEBESTA, MAXWELL PLOT NAME : PLOT SCALE : 1 IN:10 FT
WISDOT/CADDS SHEET 42

2

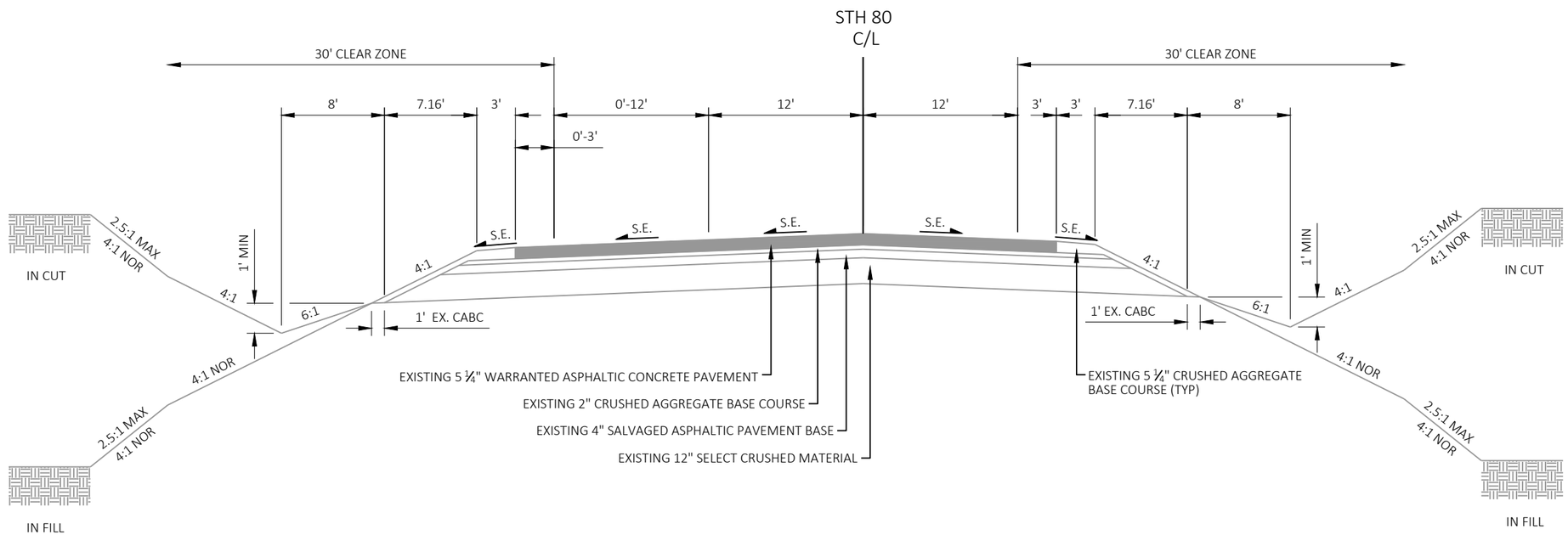

EXISTING TYPICAL SECTION STH 80
STA 381+55 TO STA 392+50

PROJECT NO: 5939-00-63	HWY: STH 80	COUNTY: IOWA	EXISTING TYPICAL SECTIONS	SHEET 6	E

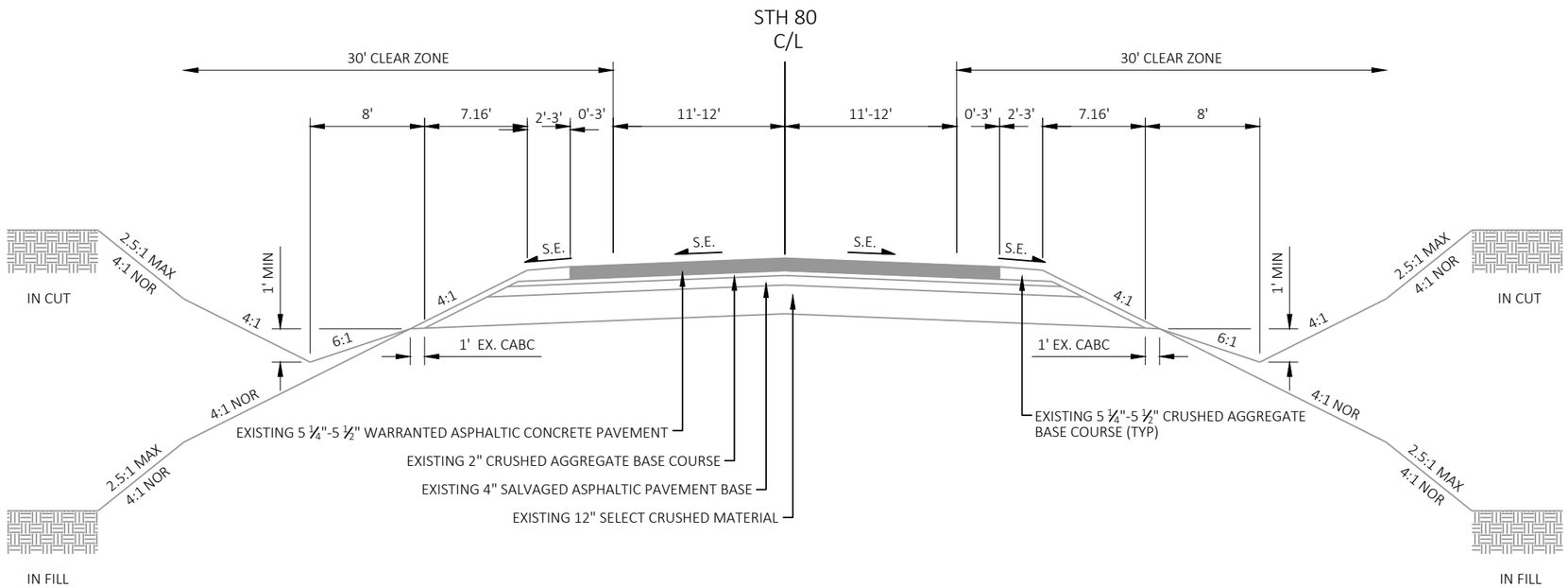

EXISTING TYPICAL SECTION STH 80
STA 394+13 TO STA 395+97

PROJECT NO: 5939-00-63	HWY: STH 80	COUNTY: IOWA	EXISTING TYPICAL SECTIONS	SHEET 7	E

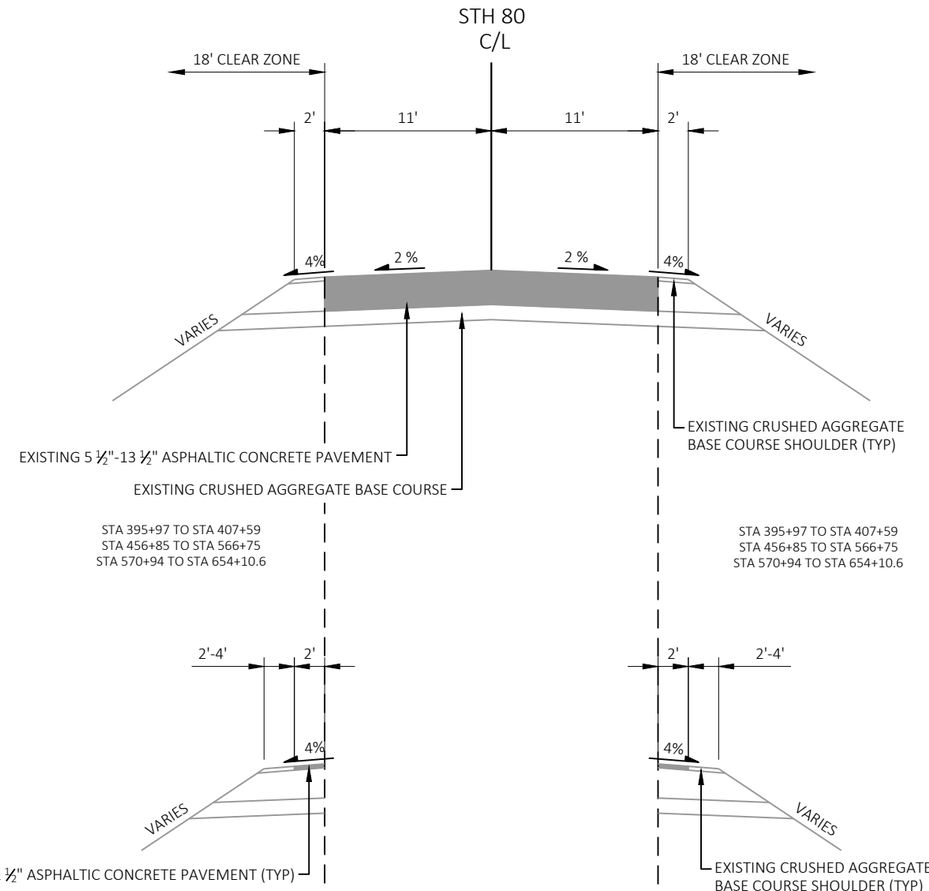

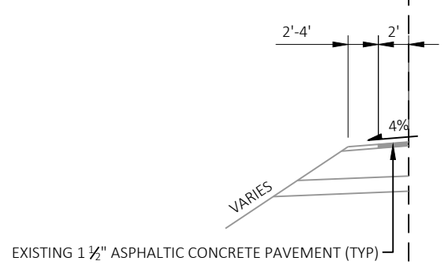

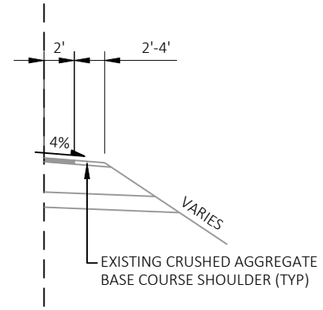

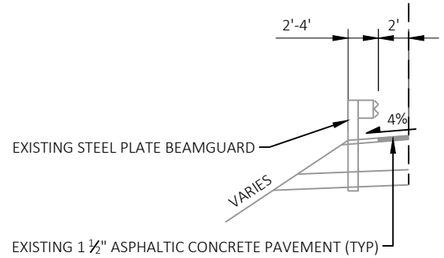

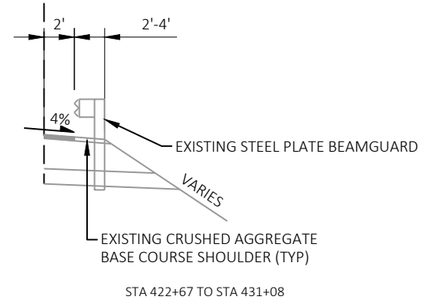

EXISTING TYPICAL SECTION STH 80
STA 395+97 TO STA 566+75
STA 570+94 TO STA 654+10.6

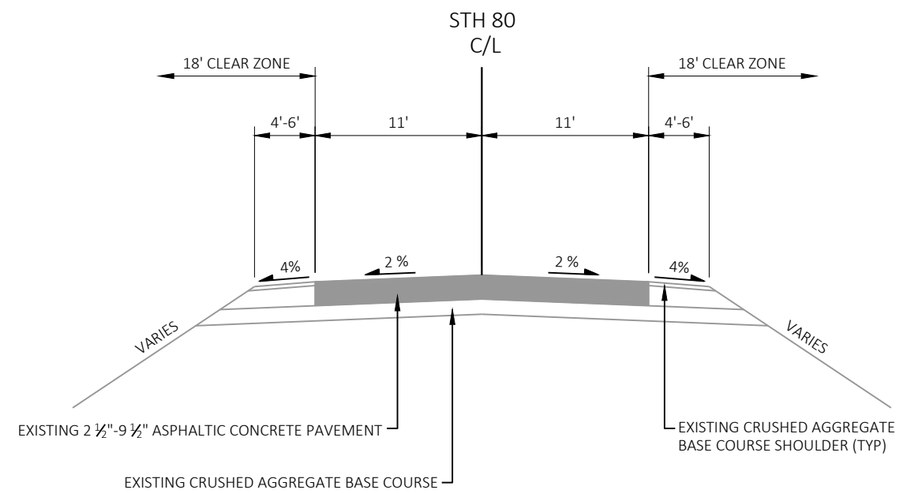

EXISTING TYPICAL SECTION STH 80
STA 566+75 TO STA 570+94
(STA 568+68.8 - STA 568+89.7 - EXISTING BRIDGE STRUCTURE B-25-176 - SEE STRUCTURE PLANS)

2

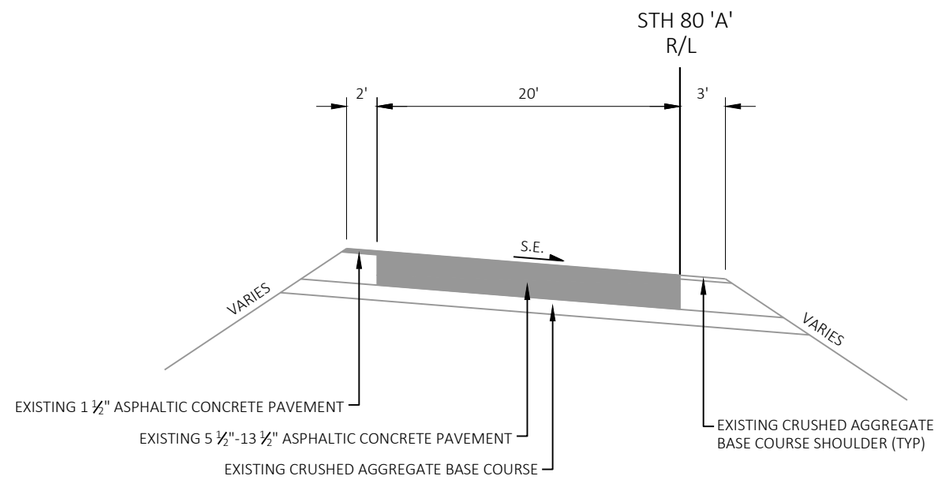

EXISTING TYPICAL SECTION 'A' LINE
STA 1'A'+75 TO STA 9'A'+75

PROJECT NO: 5939-00-63	HWY: STH 80	COUNTY: IOWA	EXISTING TYPICAL SECTIONS	SHEET 9	E

FILE NAME : \\CORP.PBWAN.NET\US\CENTRALDATA\USZOK100\WI_PROJECTS\7701_07\CAD\! XXXX-XX-XX\SHEETSPLAN\020301-TS.DWG
LAYOUT NAME - 05
PLOT DATE : 12/16/2025 1:28 PM PLOT BY : SEBESTA, MAXWELL PLOT NAME : PLOT SCALE : 1 IN:10 FT
WISDOT/CADDS SHEET 42

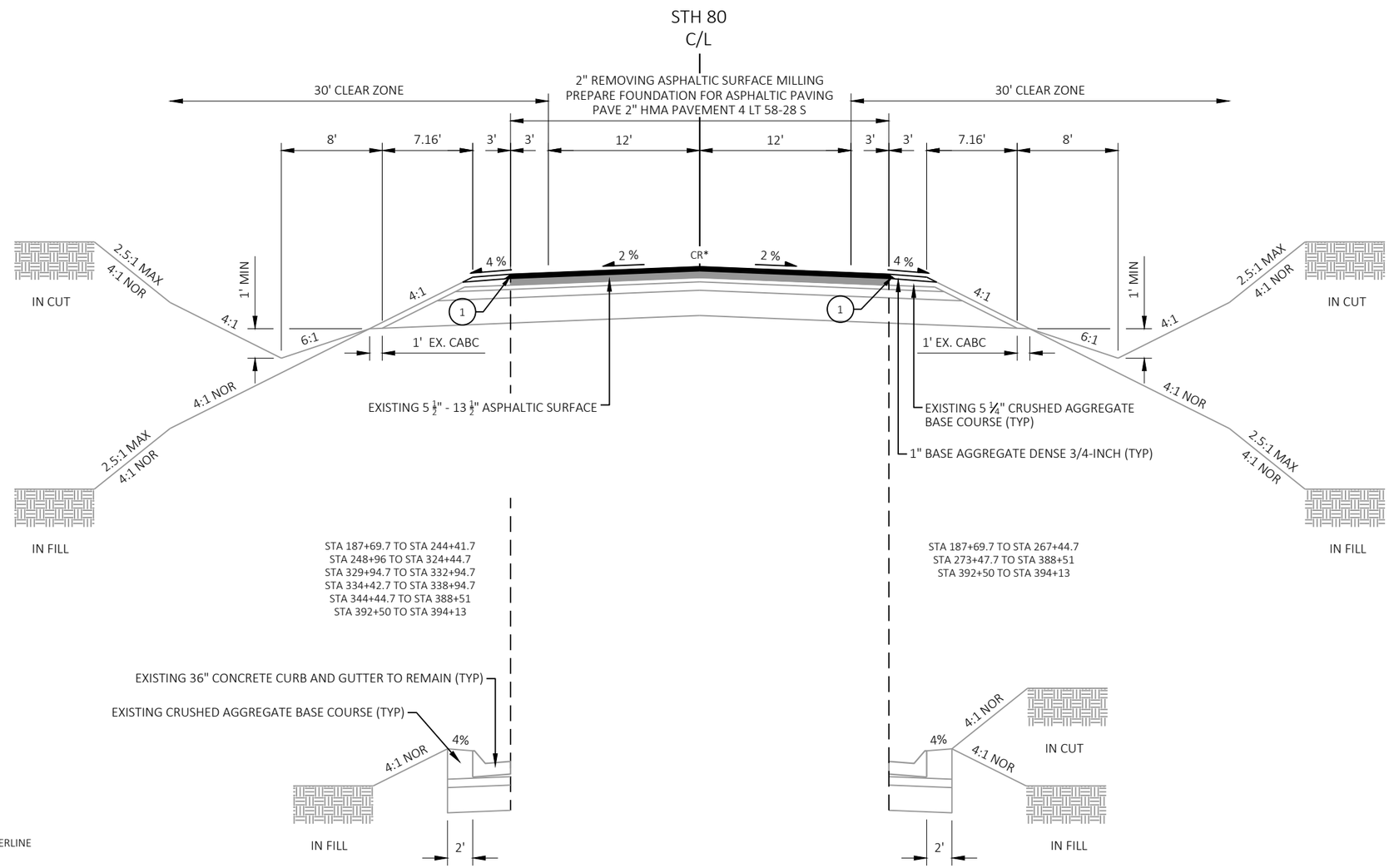

FINISHED TYPICAL SECTION STH 80
STA 187+69.7 TO STA 381+55
STA 392+50 - STA 394+13 (SUPERELEVATED SECTION)

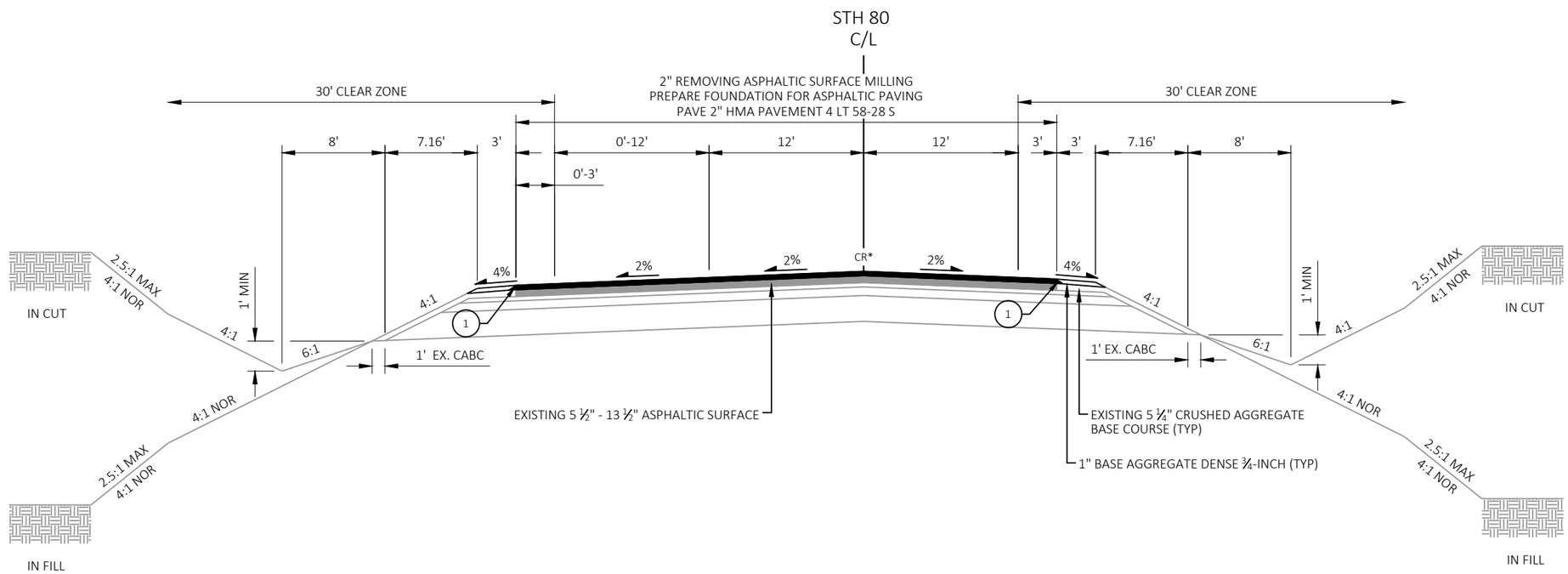

FINISHED TYPICAL SECTION STH 80
STA 381+55 TO STA 392+50

*CR = ASPHALTIC RUMBLE STRIPS, CENTERLINE

(1) SAFETY EDGE

PROJECT NO: 5939-00-63	HWY: STH 80	COUNTY: IOWA	FINISHED TYPICAL SECTIONS	SHEET 11	E

2

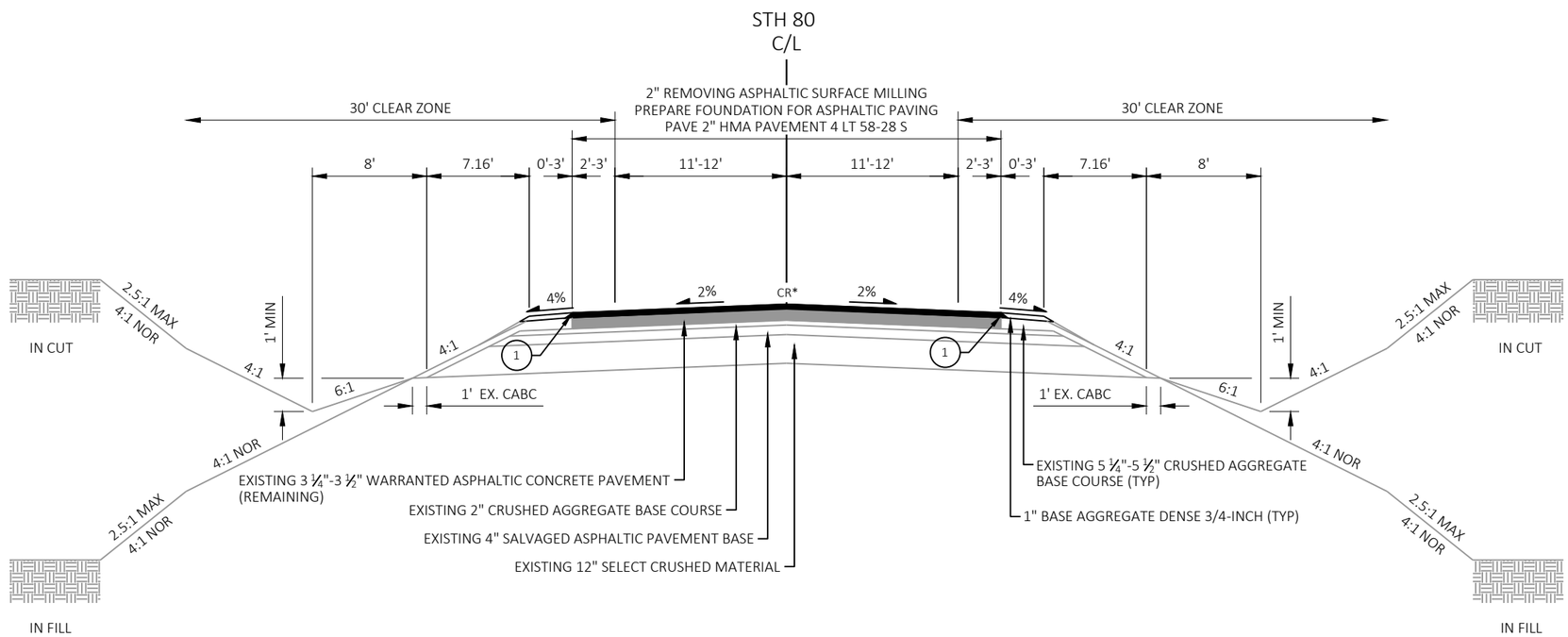

FINISHED TYPICAL SECTION STH 80
STA 394+13 TO STA 395+97

*CR = ASPHALTIC RUMBLE STRIPS, CENTERLINE

(1) SAFETY EDGE

PROJECT NO: 5939-00-63	HWY: STH 80	COUNTY: IOWA	FINISHED TYPICAL SECTIONS	SHEET 12	E

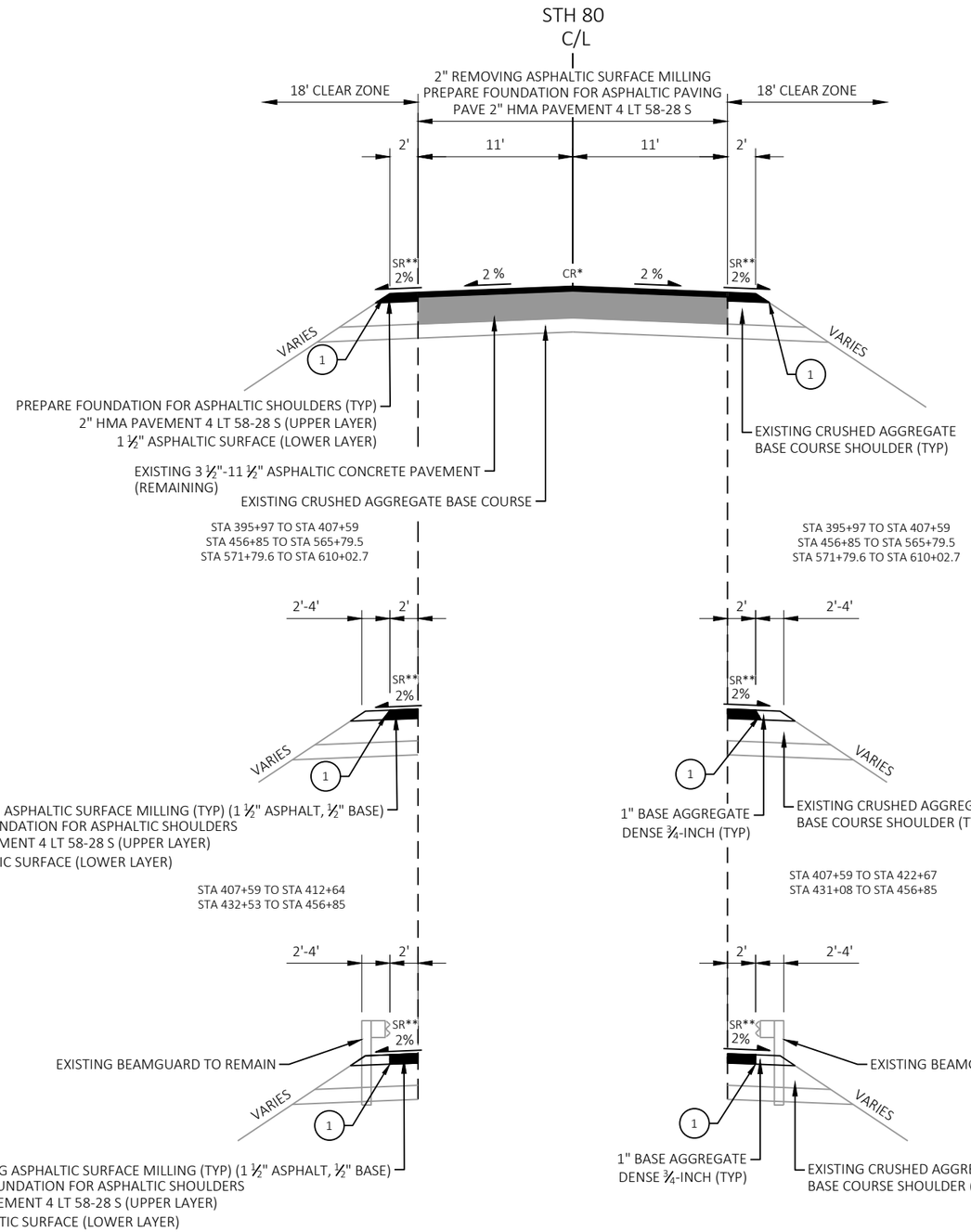

*CR = ASPHALTIC RUMBLE STRIPS, CENTERLINE
**SR = ASPHALTIC RUMBLE STRIPS, SHOULDER

(1) SAFETY EDGE

(2) RESIN BINDER HIGH FRICTION SURFACE TREATMENT
STA 407+14 TO STA 418+89

FINISHED TYPICAL SECTION STH 80
STA 395+97 TO STA 565+79.5
STA 571+79.6 TO STA 610+02.7
(2)

2

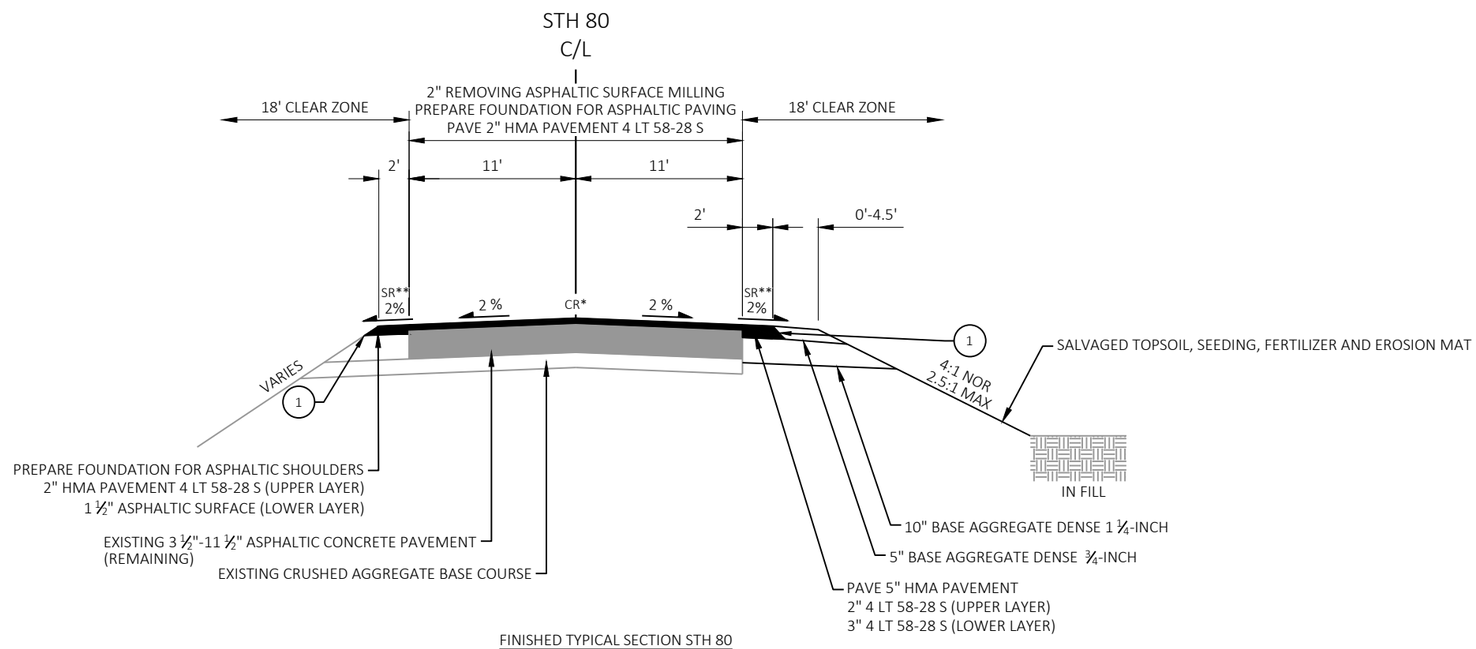

FINISHED TYPICAL SECTION STH 80
STA 565+79.5 TO STA 566+25

*CR = ASPHALTIC RUMBLE STRIPS, CENTERLINE
**SR = ASPHALTIC RUMBLE STRIPS, SHOULDER

(1) SAFETY EDGE

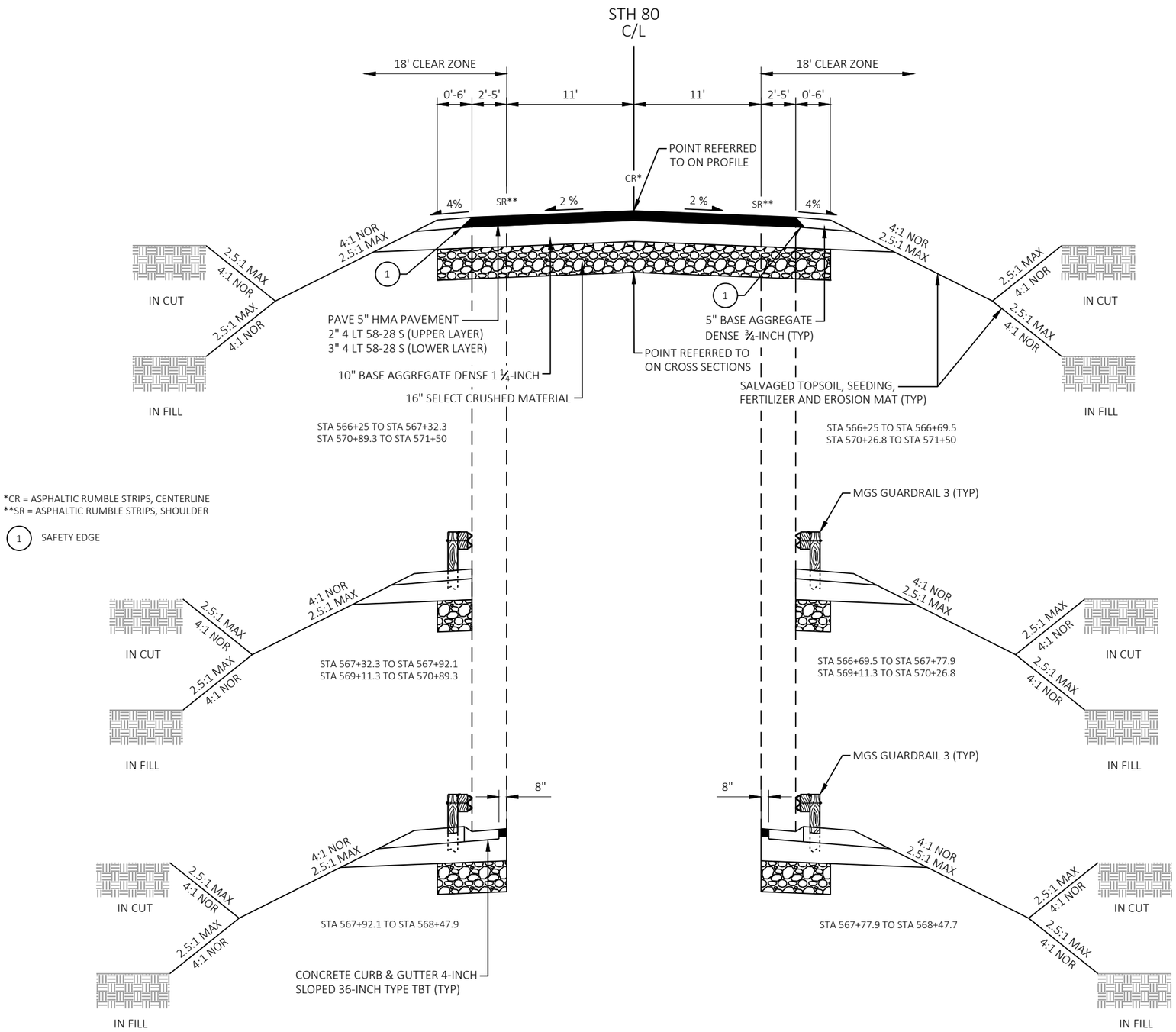

FINISHED TYPICAL SECTION STH 80
STA 566+25 TO STA 571+50

PROJECT NO: 5939-00-63	HWY: STH 80	COUNTY: IOWA	FINISHED TYPICAL SECTIONS	SHEET 15	E

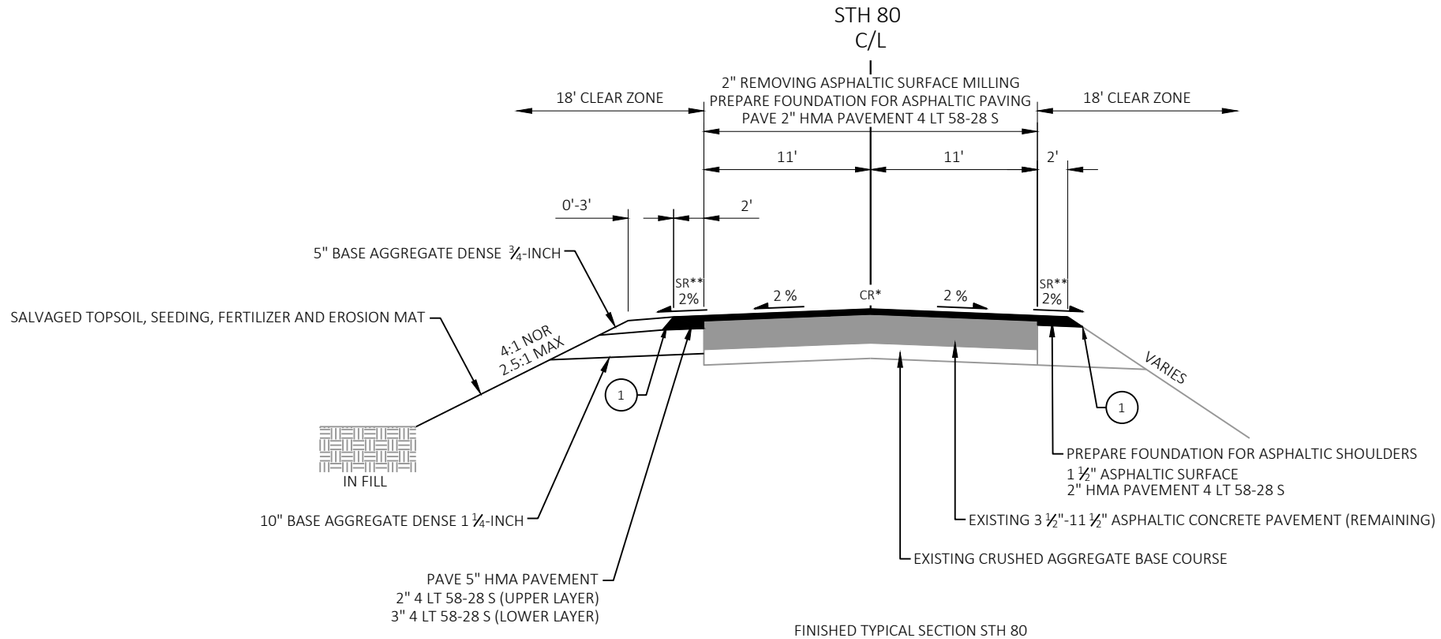

FINISHED TYPICAL SECTION STH 80
STA 571+50 TO STA 571+79.6

*CR = ASPHALTIC RUMBLE STRIPS, CENTERLINE
**SR = ASPHALTIC RUMBLE STRIPS, SHOULDER

(1) SAFETY EDGE

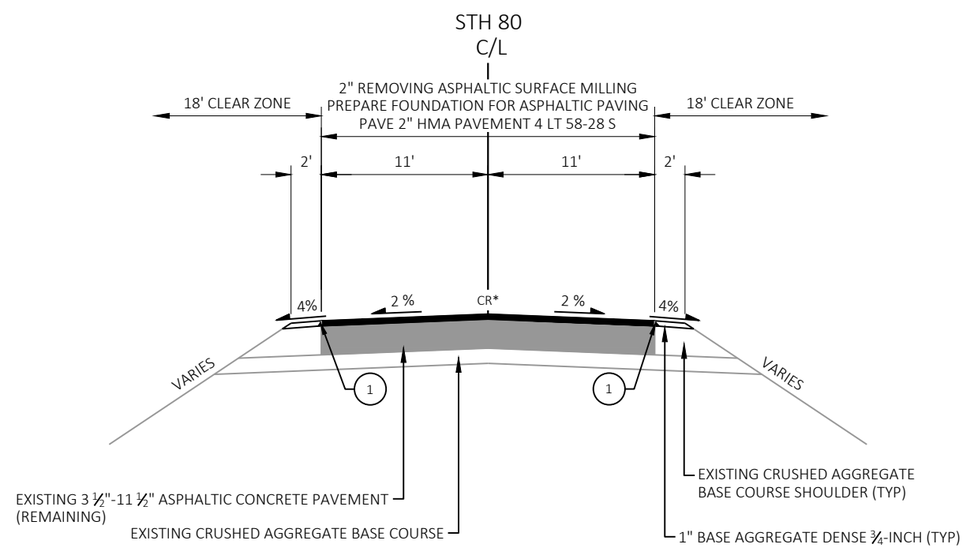

FINISHED TYPICAL SECTION STH 80
STA 610+02.7 TO STA 654+10.6

PROJECT NO: 5939-00-63	HWY: STH 80	COUNTY: IOWA	FINISHED TYPICAL SECTIONS	SHEET 16	E

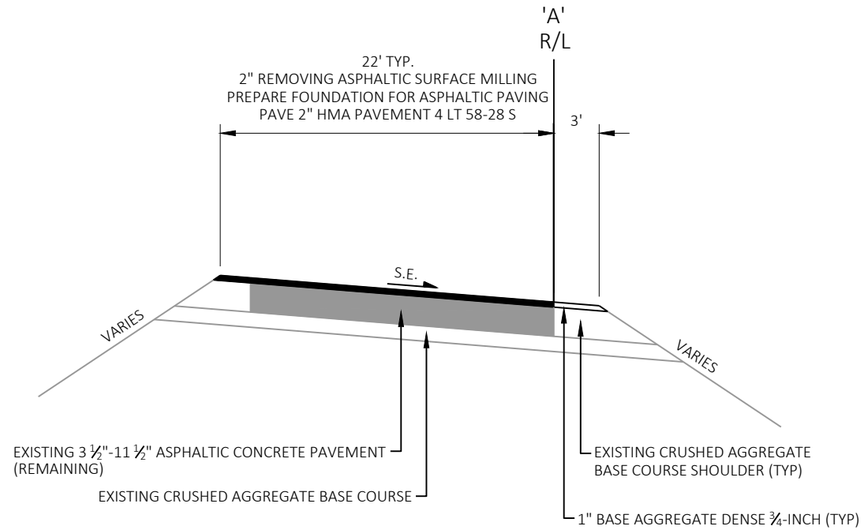

FINISHED TYPICAL SECTION 'A' LINE
STA 1'A'+75 TO STA 9'A'+75

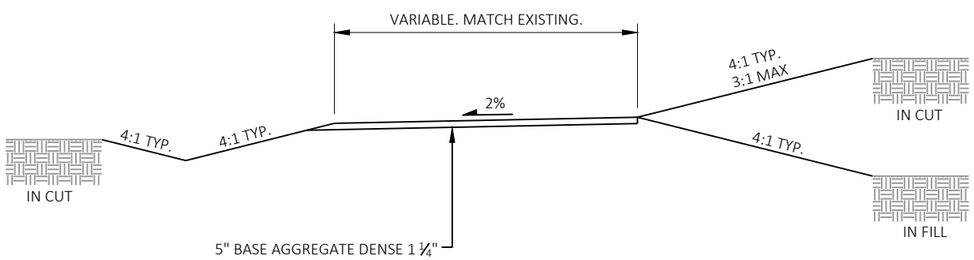

FINISHED TYPICAL SECTION DRIVEWAY (SPRING VALLEY ROAD)
STA 1+65 TO STA 2+50
STA 2+80 TO STA 3+10

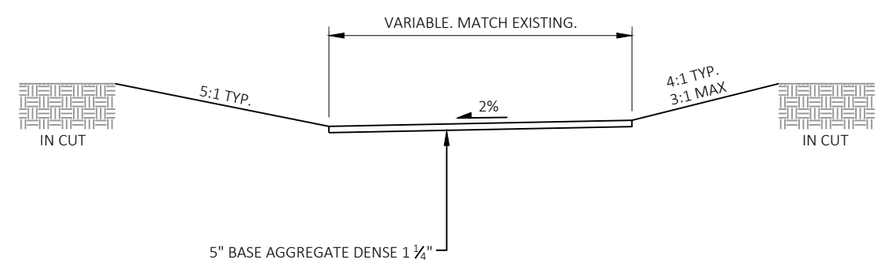

FINISHED TYPICAL SECTION DRIVEWAY (SPRING VALLEY ROAD)
STA 2+50 TO STA 2+80

2

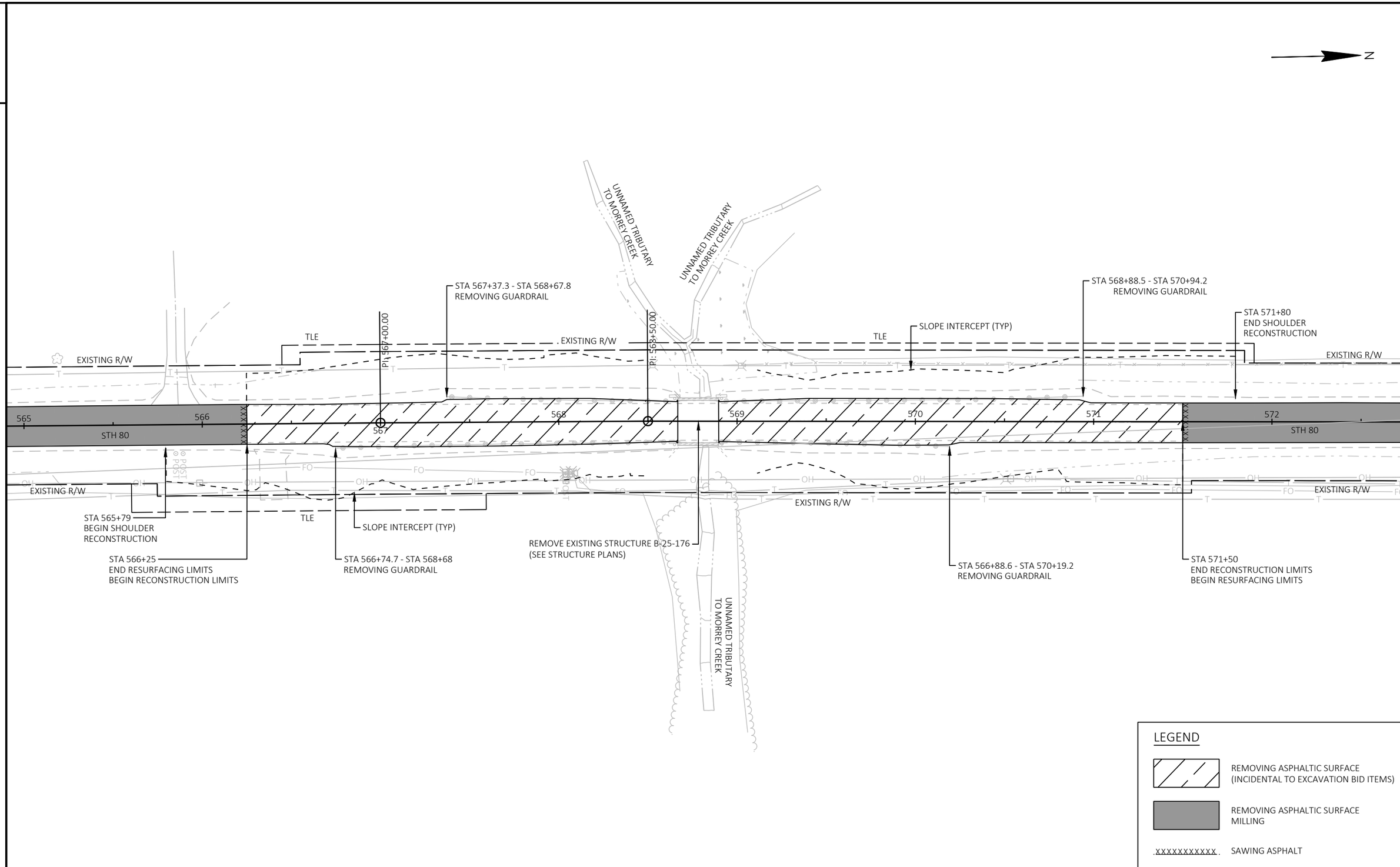

2

PROJECT NO: 5939-00-63	HWY: STH 80	COUNTY: IOWA	CONSTRUCTION DETAILS - REMOVALS	SHEET 18	E

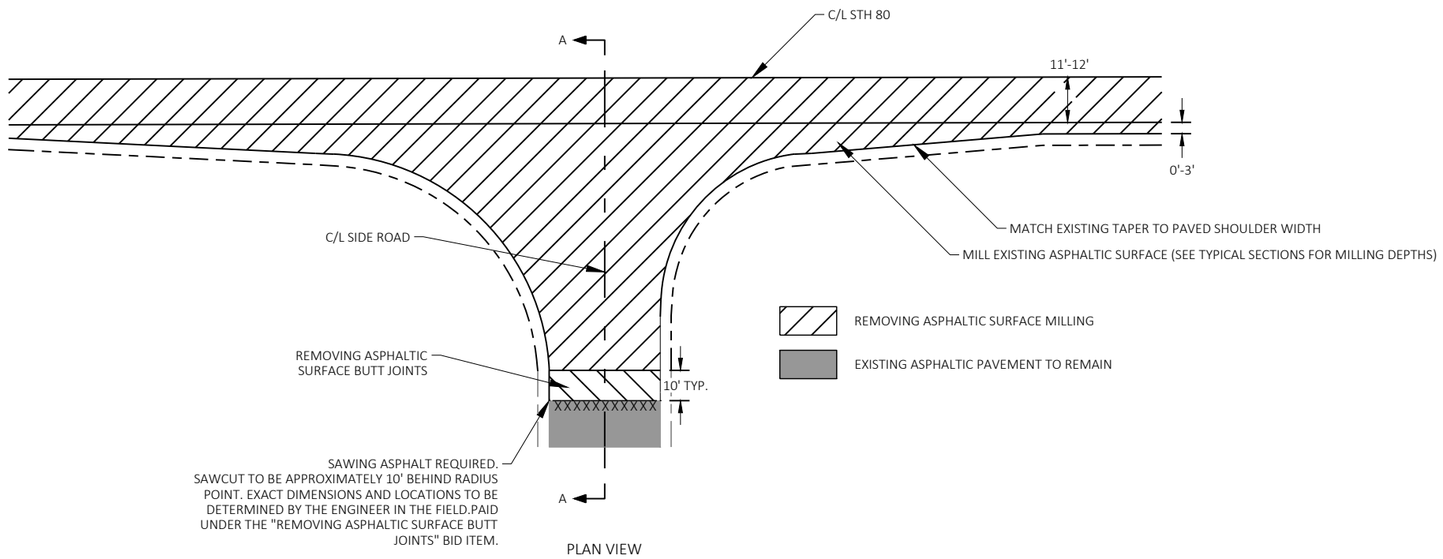

PLAN VIEW

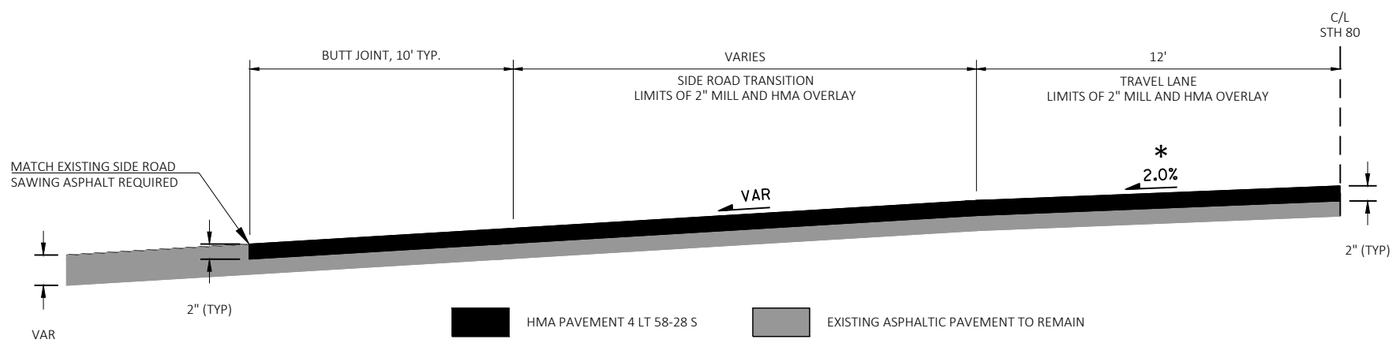

SECTION A-A

SIDE ROAD TRANSITION DETAIL

*2.0% TYPICAL; MATCH EXISTING PAVEMENT CROSS SLOPE ALONG SUPERELEVATED CURVES

CAMP ROAD
SPRING VALLEY ROAD
FARMERS RIDGE ROAD
BOOTH HOLLOW ROAD (SOUTH)
BECKIUS ROAD
AIDE ROAD
BOOTH HOLLOW ROAD (NORTH)
DRY DOG ROAD
D STREET
OLD 80 ROAD

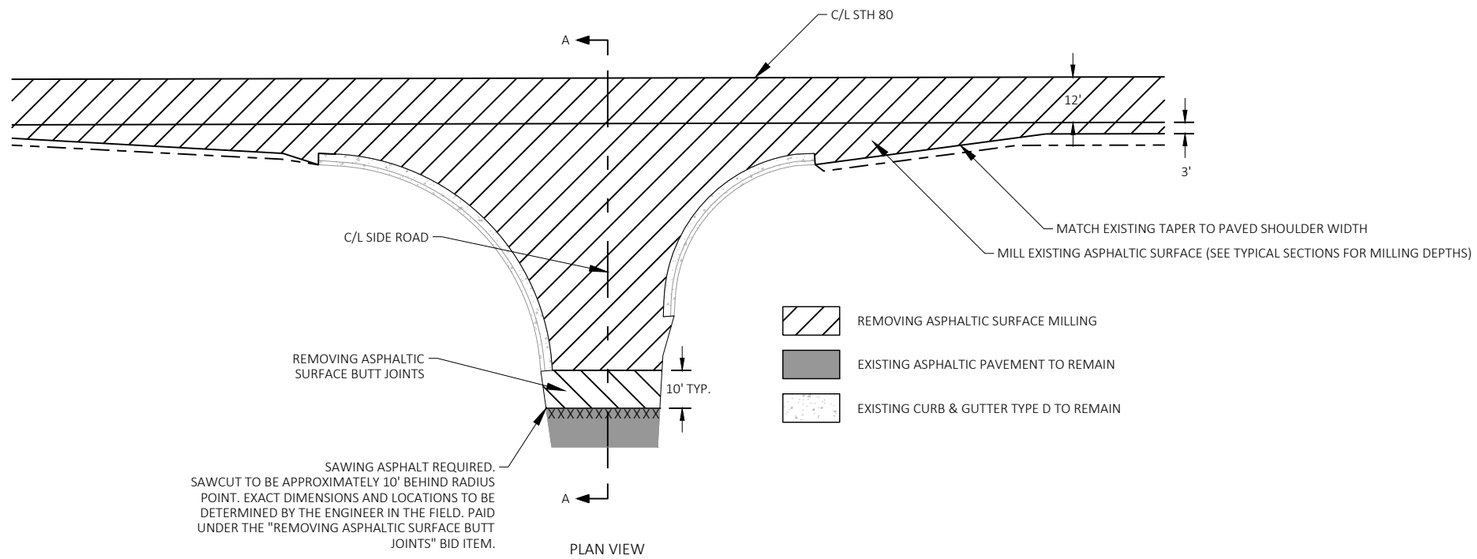

PLAN VIEW

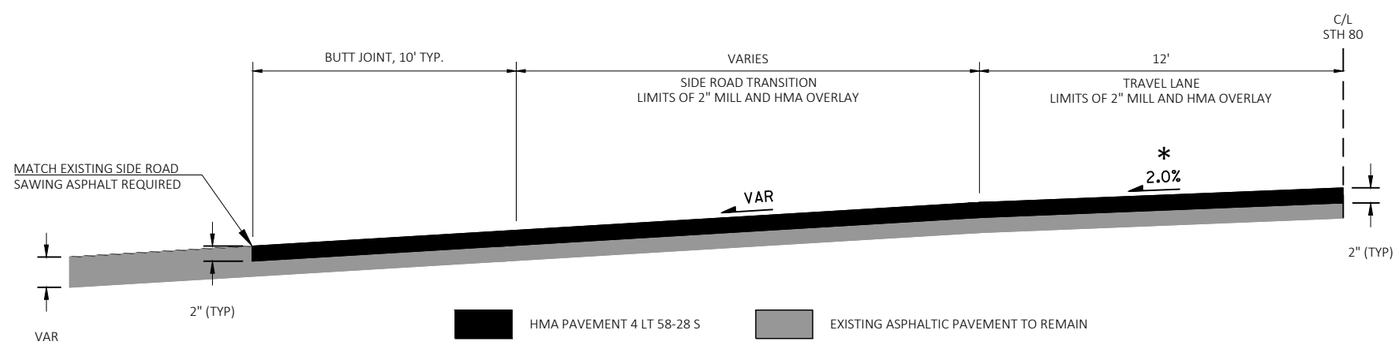

SECTION A-A

SIDE ROAD WITH CURB AND GUTTER TRANSITION DETAIL

*2.0% TYPICAL; MATCH EXISTING PAVEMENT CROSS SLOPE ALONG SUPERELEVATED CURVES

CTH P (SOUTH)

CTH P (NORTH) (WITH RIGHT TURN LANE)

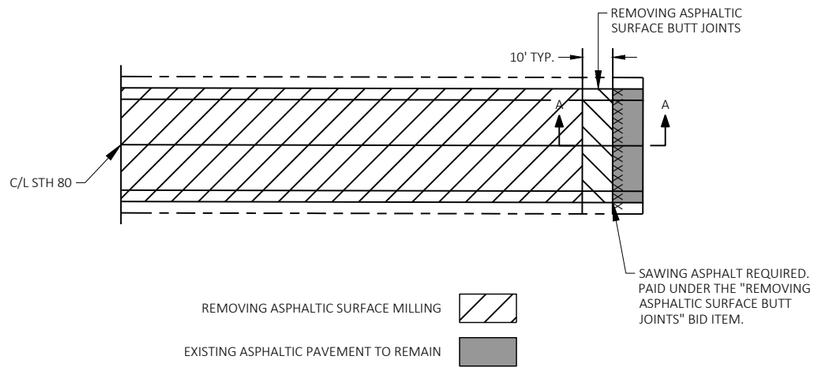

PLAN VIEW

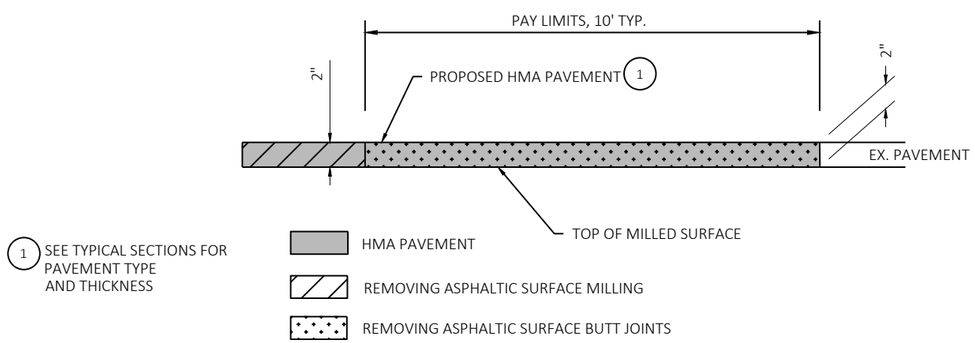

SECTION A-A

MAINLINE BUTT JOINT DETAIL FOR MILLED ASPHALTIC PAVEMENTS

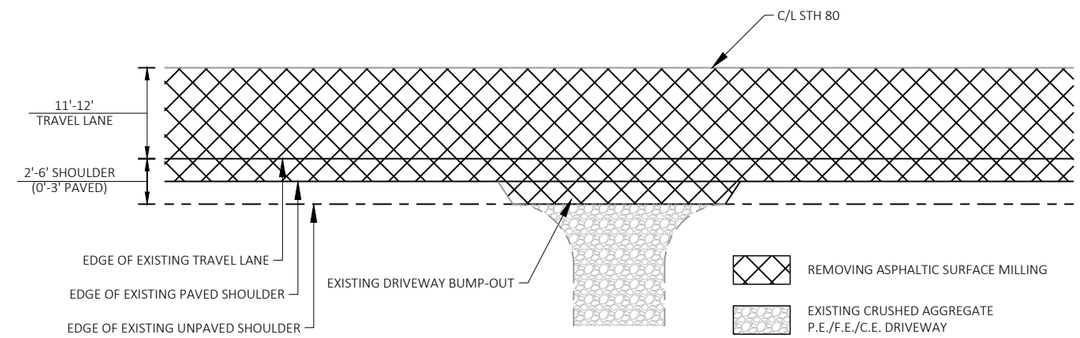

PLAN VIEW

REMOVING EXISTING PAVED DRIVEWAY BUMP-OUTS AT AGGREGATE ENTRANCES

EXISTING DRIVEWAY BUMP-OUT ASPHALT DEPTH VARIES BETWEEN 2"-4".

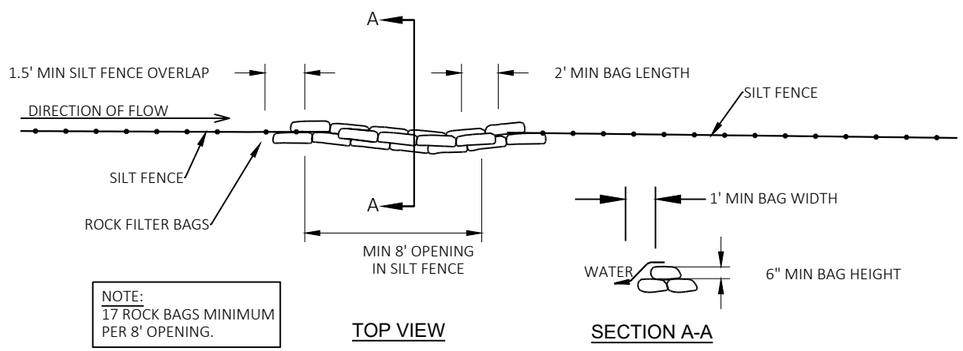

ROCK BAGS USED FOR SILT FENCE RELIEF

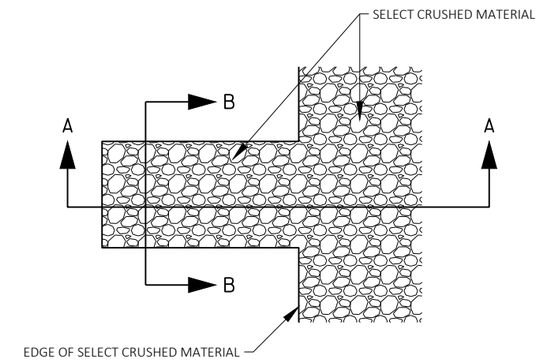

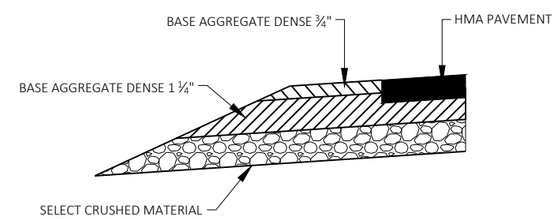

SECTION A-A

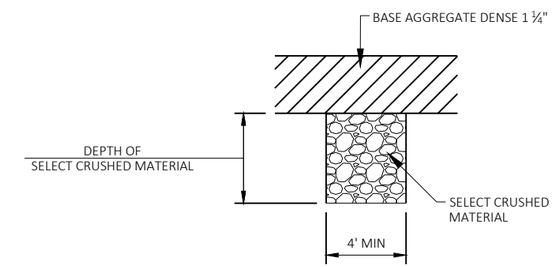

SECTION B-B

DETAIL FOR FRENCH DRAINS/WEEP

DRAINS ARE TO BE CONSTRUCTED AT LEAST EVERY 250'
OR AT ANY LOW POINT TO SUFFICENTLY DRAIN SELECT CRUSHED MATERIAL
(OR AS OTHERWISE DIRECTED BY THE FIELD ENGINEER)

EXCAVATION REQUIRED TO CONSTRUCT FRENCH DRAINS/WEEPS SHALL
BE CONSIDERED INCIDENTAL TO THE ITEM, SELECT CRUSHED MATERIAL.

DO NOT COVER FORESLOPE OF SELECT CRUSHED MATERIAL WITH TOPSOIL

APPROXIMATE FRENCH DRAIN/WEEP LOCATIONS:

STA 567+54 LT & RT
STA 569+15 LT & RT

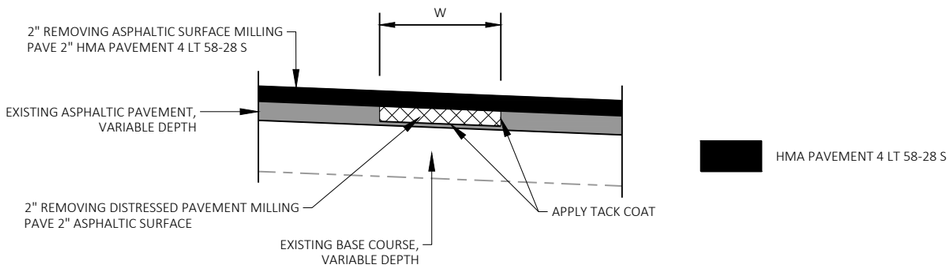

SECTION A-A

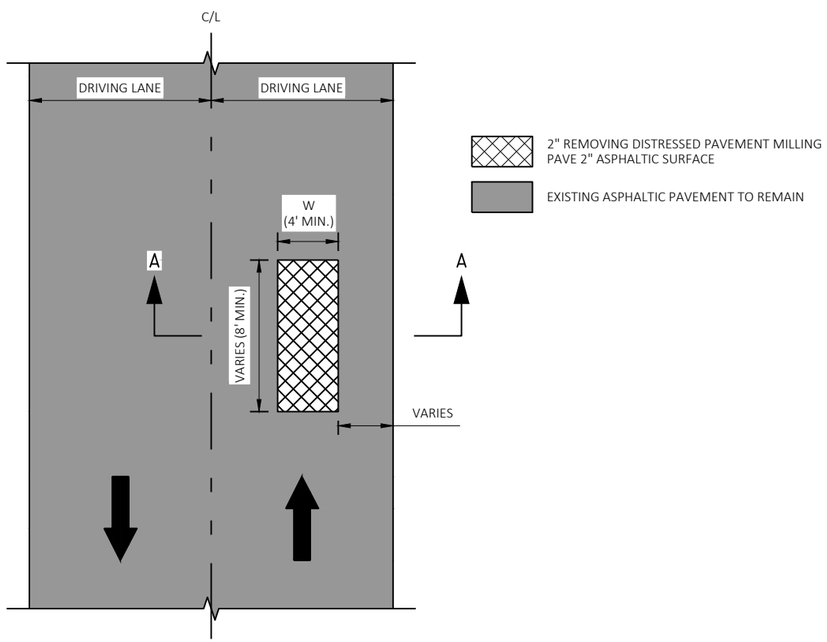

PLAN VIEW - MILLED SURFACE

REMOVING DISTRESSED PAVEMENT MILLING DETAIL

EXACT LOCATIONS AND WIDTHS TO BE DETERMINED BY THE FIELD ENGINEER.

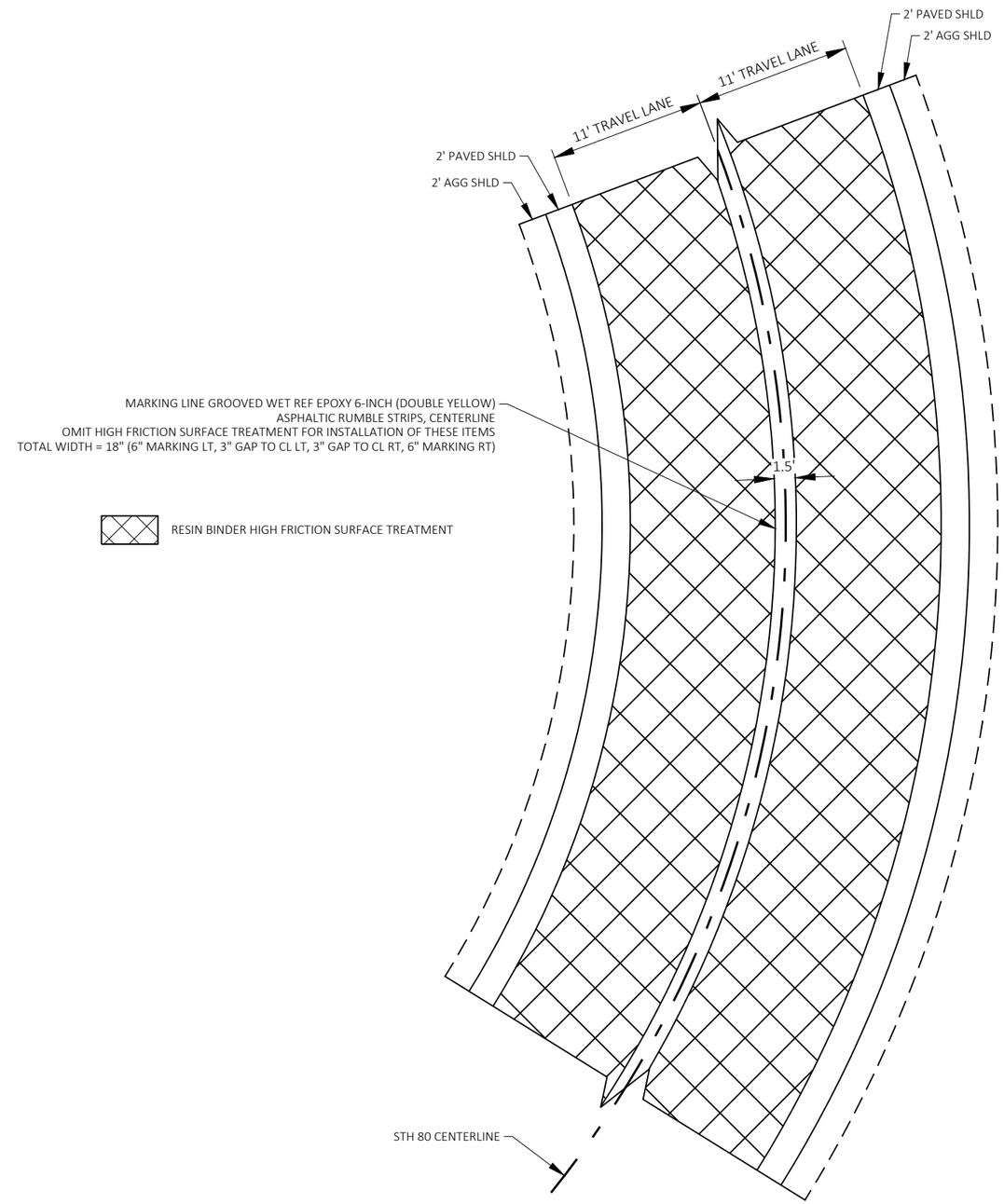

RESIN BINDER HIGH FRICTION SURFACE TREATMENT DETAIL

STA 407+14 - STA 418+89

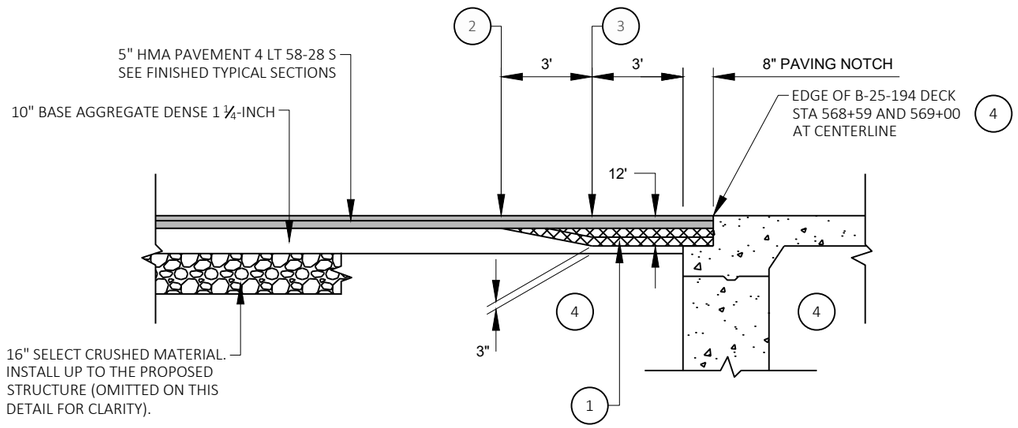

HMA PAVEMENT 4 LT 58-28 S LANE WEDGE AT PAVING NOTCH

1 PLACE HMA PAVEMENT 4 LT 58-28 S WEDGE IN TWO 3 ½ - INCH LAYERS AND COMPACT PER STANDARD SPECS.

2 STA 568+52 AND STA 569+07 AT CENTERLINE

3 STA 568+55 AND STA 569+04 AT CENTERLINE

4 SEE STRUCTURE PLANS FOR DETAILS.

NOTE: FOR ADJUSTMENTS TO DETAIL OR TO TO FIT FIELD CONDITIONS, OBTAIN APPROVAL FROM THE ENGINEER.

HMA PAVEMENT WEDGE AT PAVING NOTCH DETAILS

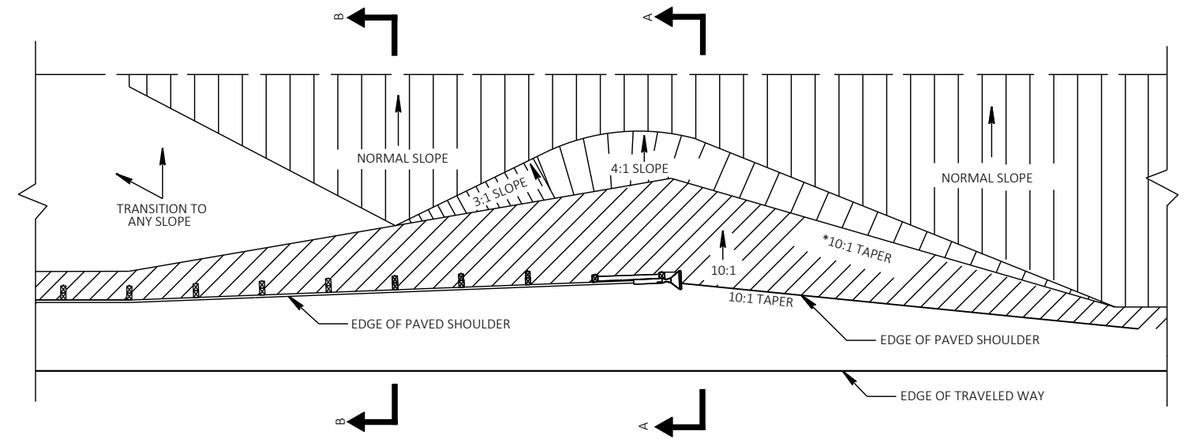

PLAN VIEW

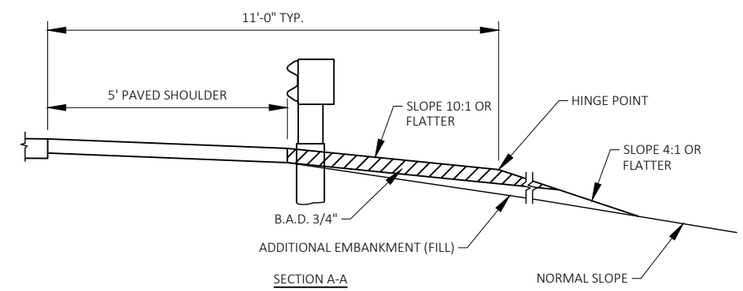

SECTION A-A

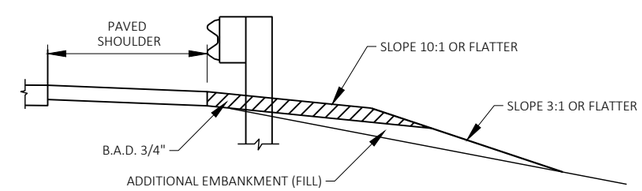

SECTION B-B

FILL AREA AT BEAMGURAD

NOTES

*MODIFIED THE TAPER TO 10:1 FROM 15:1 (AS SHOWN IN STANDARD DETAIL DRAWING) TO MINIMIZE GRADING IMPACTS

ALL AREAS BEYOND THE AGGREGATE SHOULDER HINGE POINT SHALL BE SEEDED AND FERTILIZED

MODIFIED BARRIER SYSTEM GRADING DETAIL

2

MGS GUARDRAIL LAYOUT DETAILS				
TYPE		STATION	OFFSET	
MGS GUARDRAIL TERMINAL EAT	POST #1	567+32.3	16'	LT
	POST #5	567+57.3	15'	LT
	POST #9	567+82.3	14'	LT
MGS GUARDRAIL 3		567+85.4	14'	LT
MGS THRIE BEAM TRANSITION		568+10.4	14'	LT

MGS GUARDRAIL LAYOUT DETAILS				
TYPE		STATION	OFFSET	
MGS GUARDRAIL TERMINAL EAT	POST #1	570+89.3	16'	LT
	POST #5	570+64.3	15'	LT
	POST #9	570+39.3	14'	LT
MGS GUARDRAIL 3		570+36.2	14'	LT
MGS THRIE BEAM TRANSITION		569+48.7	14'	LT

2

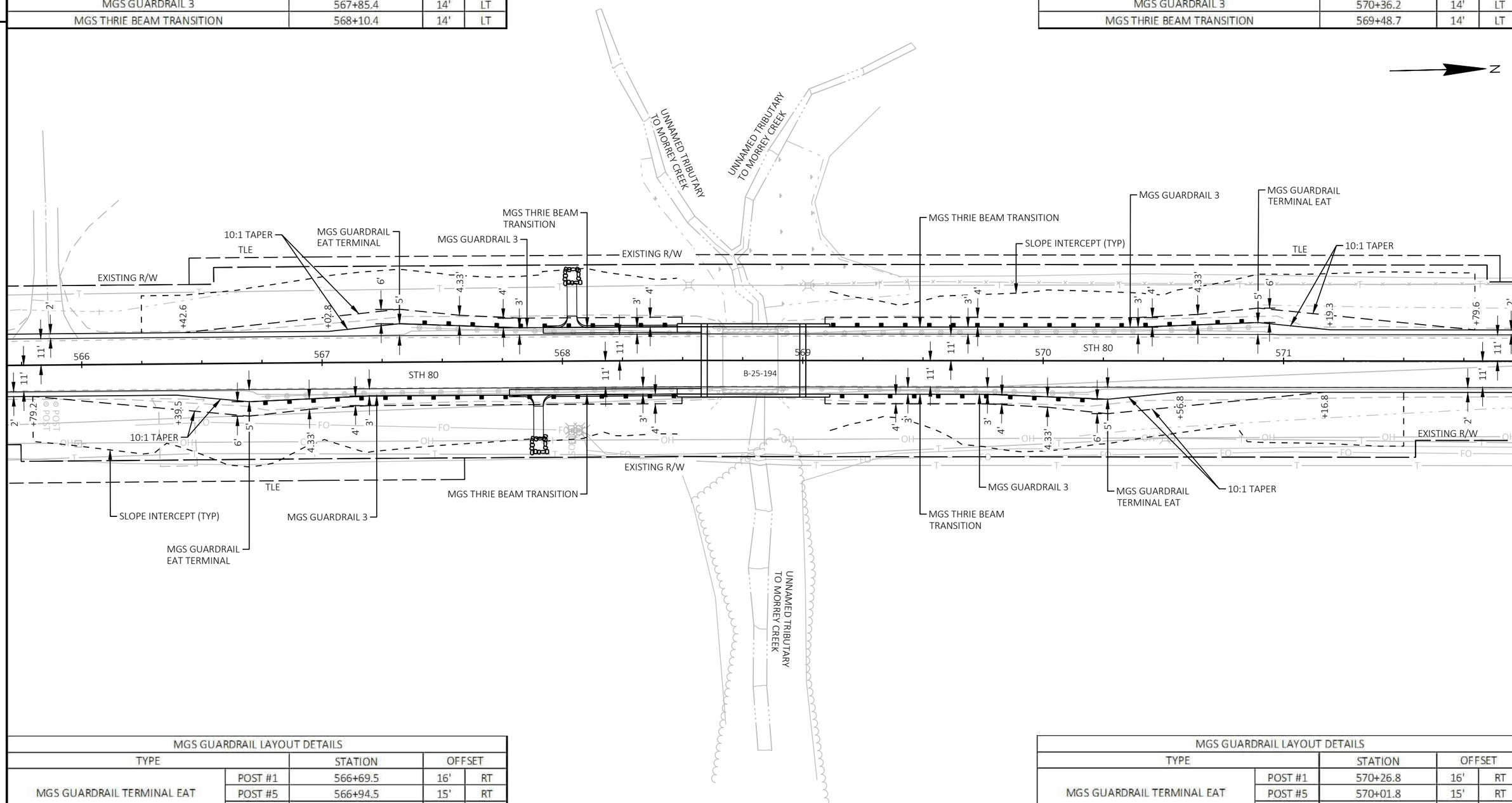

MGS GUARDRAIL LAYOUT DETAILS				
TYPE		STATION	OFFSET	
MGS GUARDRAIL TERMINAL EAT	POST #1	566+69.5	16'	RT
	POST #5	566+94.5	15'	RT
	POST #9	567+19.5	14'	RT
MGS GUARDRAIL 3		567+22.6	14'	RT
MGS THRIE BEAM TRANSITION		568+10.1	14'	RT

MGS GUARDRAIL LAYOUT DETAILS				
TYPE		STATION	OFFSET	
MGS GUARDRAIL TERMINAL EAT	POST #1	570+26.8	16'	RT
	POST #5	570+01.8	15'	RT
	POST #9	569+76.8	14'	RT
MGS GUARDRAIL 3		569+73.7	14'	RT
MGS THRIE BEAM TRANSITION		569+48.7	14'	RT

PROJECT NO: 5939-00-63	HWY: STH 80	COUNTY: IOWA	CONSTRUCTION DETAILS - MGS GUARDRAIL DETAILS	SHEET 25	E

2

NOTES:
SILT FENCE RELIEF REQUIRED IN ALL FOUR QUADRANTS OF SILT FENCE INSTALLATION. ACTUAL LOCATION OF RELIEF TO BE DETERMINED IN THE FIELD BY THE ENGINEER. SEE CONSTRUCTION DETAIL SHEETS FOR DETAIL.

N

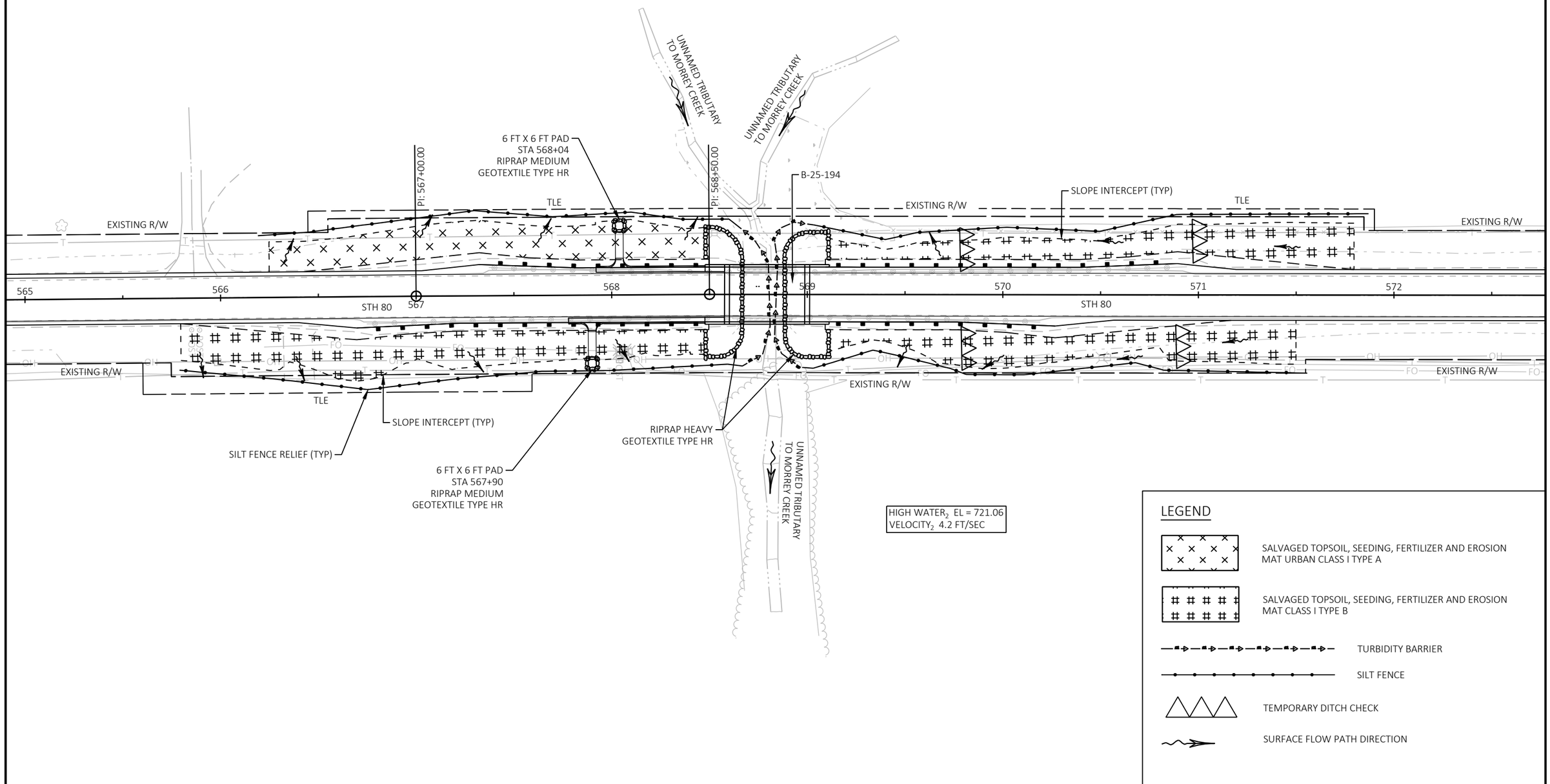

2

PROJECT NO: 5939-00-63	HWY: STH 80	COUNTY: IOWA	EROSION CONTROL	SHEET 26	E

FILE NAME : \\CORP.PBWAN.NET\US\CENTRALDATA\USZOK100\WI_PROJECTS\7701_07\CAD\I XXXX-XX-XX\SHEETSPLAN\022001-EC.DWG
LAYOUT NAME - 01
PLOT DATE : 9/17/2025 9:43 AM
PLOT BY : MCKANE, RYAN
PLOT NAME :
PLOT SCALE : 1 IN:50 FT
WISDOT/CADDS SHEET 42

2

LEGEND

- SALVAGED TOPSOIL, SEEDING, FERTILIZER AND EROSION MAT URBAN CLASS I TYPE A
- SALVAGED TOPSOIL, SEEDING, FERTILIZER AND EROSION MAT CLASS I TYPE B
- TURBIDITY BARRIER
- SILT FENCE
- TEMPORARY DITCH CHECK
- SURFACE FLOW PATH DIRECTION

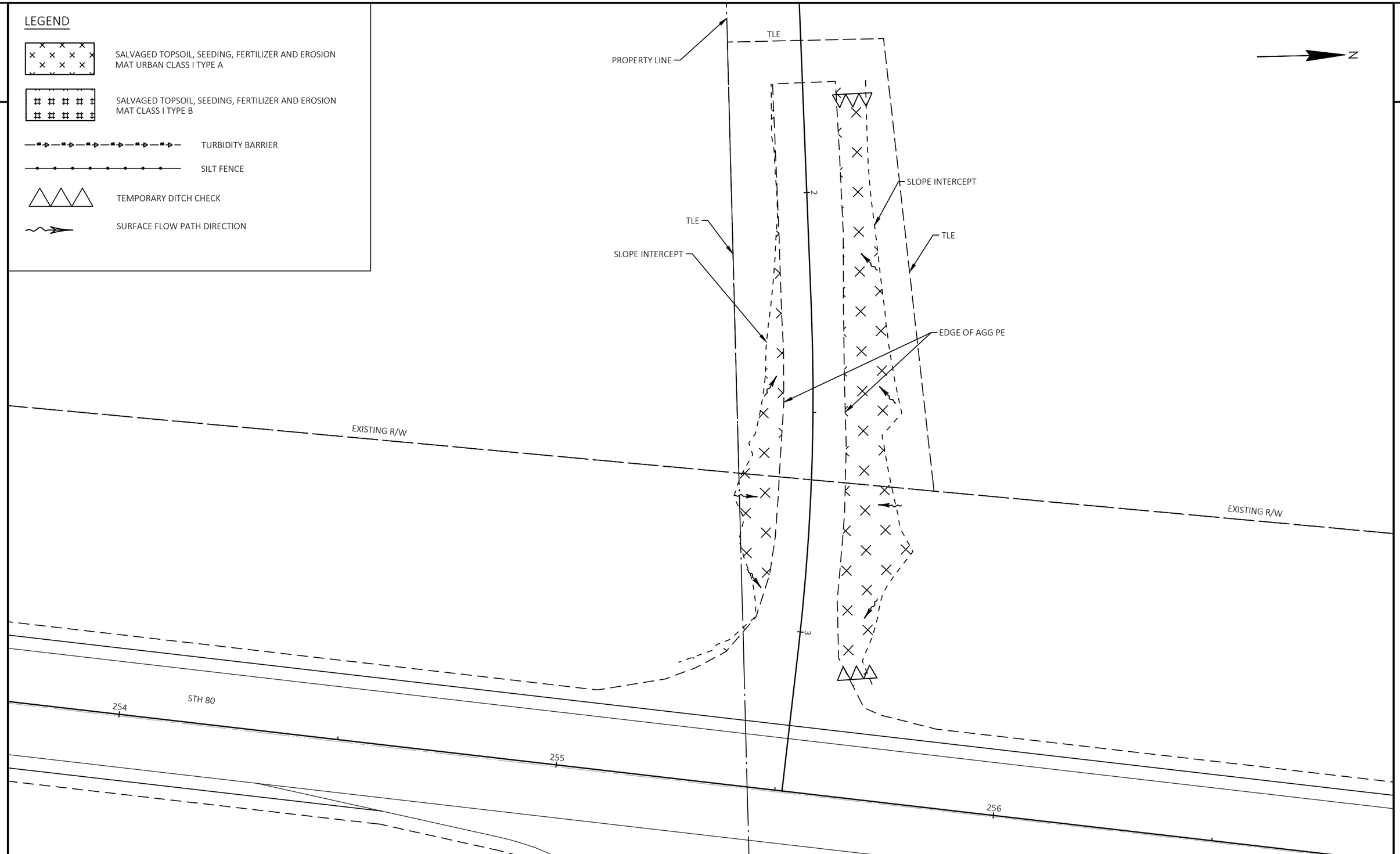

2

PROJECT NO: 5939-00-63	HWY: STH 80	COUNTY: IOWA	EROSION CONTROL	SHEET 27	E

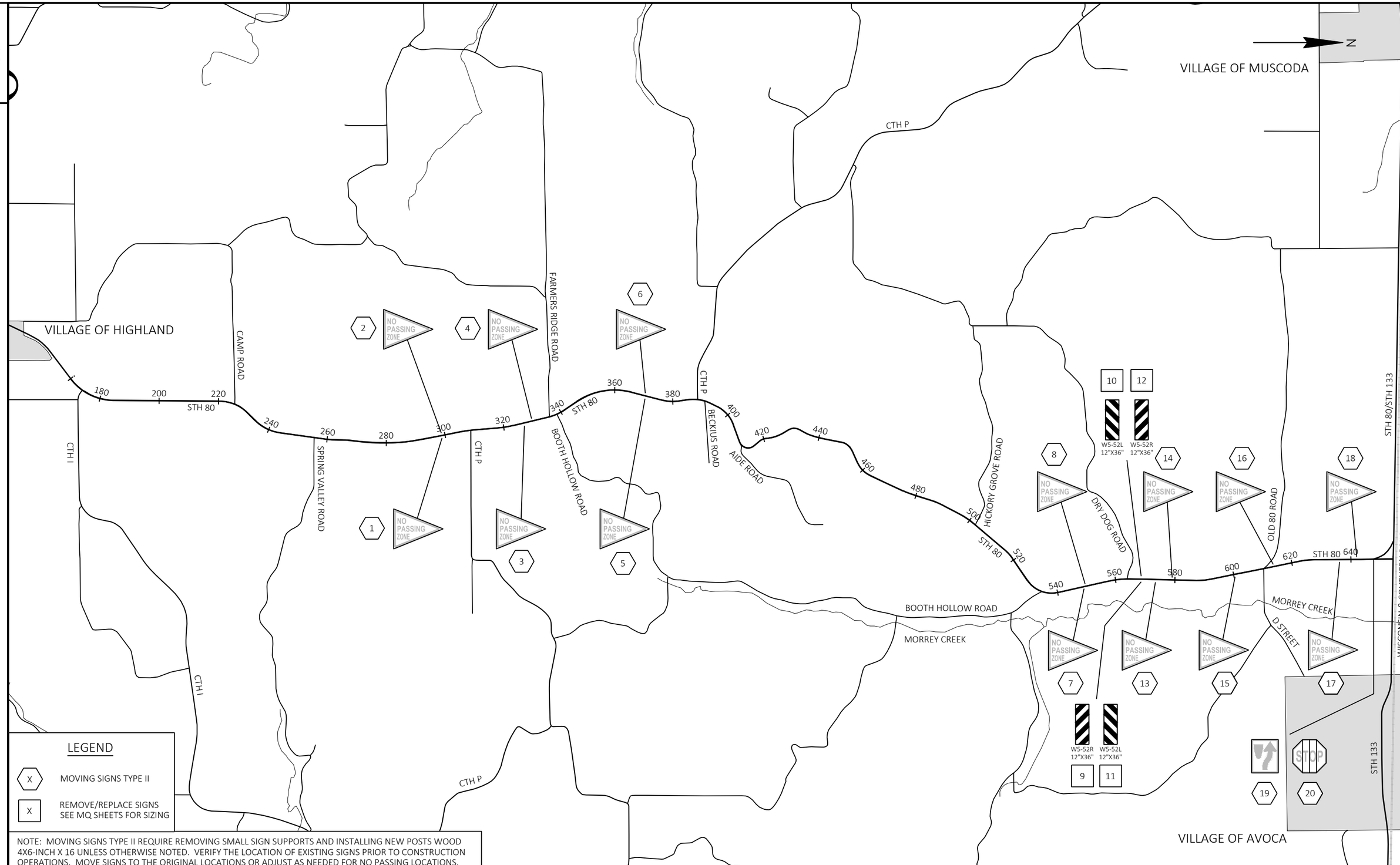

NOTE: MOVING SIGNS TYPE II REQUIRE REMOVING SMALL SIGN SUPPORTS AND INSTALLING NEW POSTS WOOD 4X6-INCH X 16 UNLESS OTHERWISE NOTED. VERIFY THE LOCATION OF EXISTING SIGNS PRIOR TO CONSTRUCTION OPERATIONS. MOVE SIGNS TO THE ORIGINAL LOCATIONS OR ADJUST AS NEEDED FOR NO PASSING LOCATIONS.

PROJECT NO: 5939-00-63	HWY: STH 80	COUNTY: IOWA	MOVING SIGNS	SHEET 28	E

FILE NAME : W:\7701_07\CAD\! XXXX-XX-XX\SHEETSPLAN\023201-PS.DWG
LAYOUT NAME - 01
PLOT DATE : 4/14/2025 3:14 PM
PLOT BY : METRY, ALEXANDER
PLOT NAME :
PLOT SCALE : 1 IN:3000 FT
WISDOT/CADDS SHEET 42

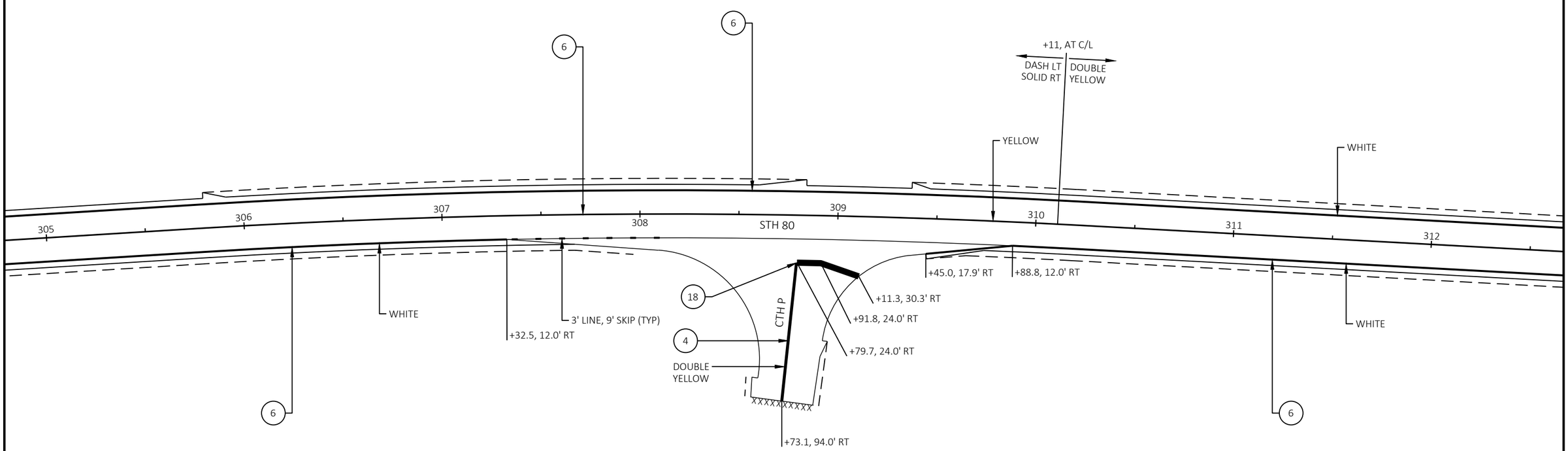

LEGEND

4	MARKING LINE EPOXY 4-INCH	10	MARKING LINE GROOVED WET REF EPOXY 10-INCH
6	MARKING LINE GROOVED WET REF EPOXY 6-INCH	18	MARKING STOP LINE EPOXY 18-INCH

SEE SDD "PERMANENT LONGITUDINAL PAVEMENT MARKINGS", "PAVEMENT MARKING (TURN LANES)", "PAVEMENT MARKINGS (INTERSECTIONS)", "STOP LINE AND CROSSWALK PAVEMENT MARKING", AND "PAVEMENT MARKING, ENTRANCE RAMP AND PARALLEL ENTRANCE RAMP" FOR DETAILS.

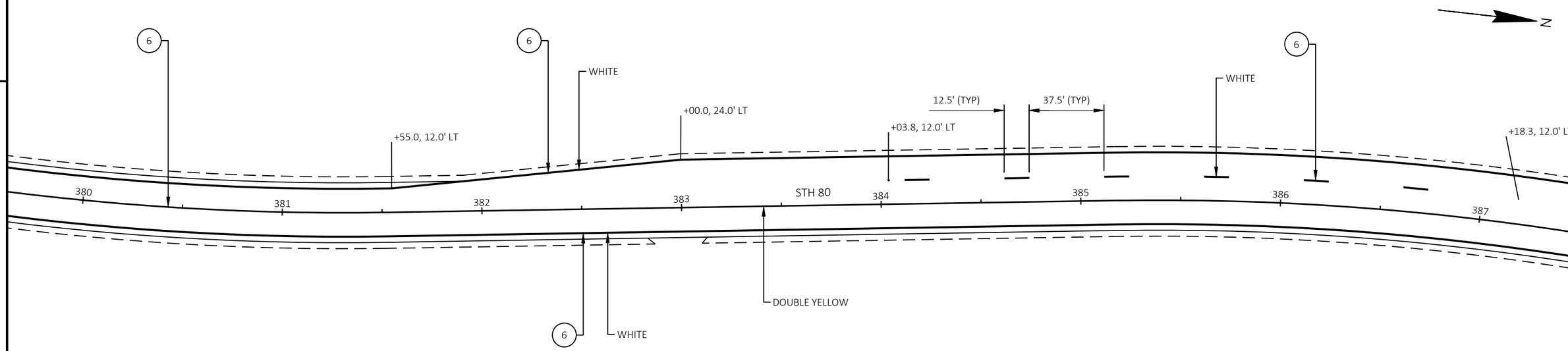

LEGEND

4	MARKING LINE EPOXY 4-INCH	10	MARKING LINE GROOVED WET REF EPOXY 10-INCH
6	MARKING LINE GROOVED WET REF EPOXY 6-INCH	18	MARKING STOP LINE EPOXY 18-INCH

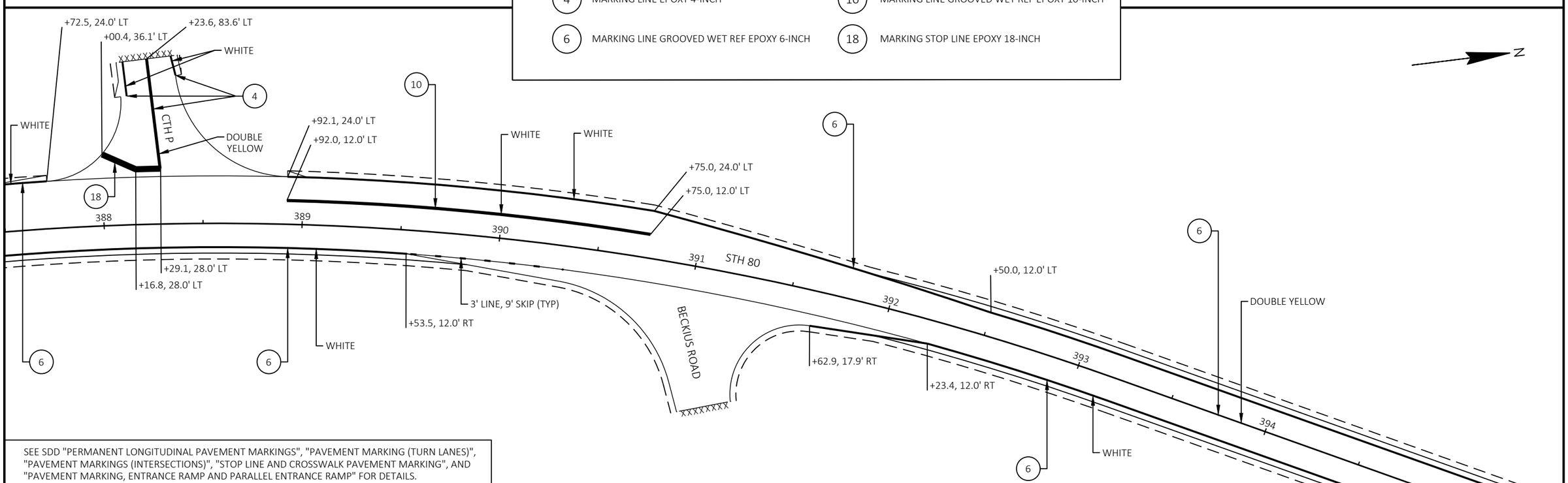

SEE SDD "PERMANENT LONGITUDINAL PAVEMENT MARKINGS", "PAVEMENT MARKING (TURN LANES)", "PAVEMENT MARKINGS (INTERSECTIONS)", "STOP LINE AND CROSSWALK PAVEMENT MARKING", AND "PAVEMENT MARKING, ENTRANCE RAMP AND PARALLEL ENTRANCE RAMP" FOR DETAILS.

PROJECT NO: 5939-00-63	HWY: STH 80	COUNTY: IOWA	PAVEMENT MARKINGS	SHEET 30	E

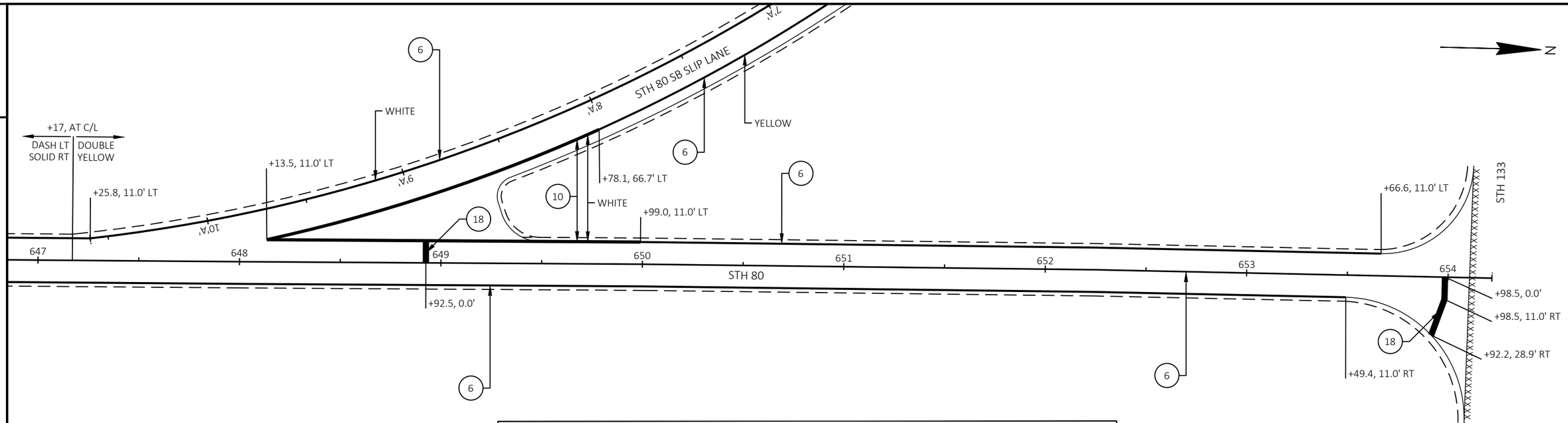

LEGEND

4	MARKING LINE EPOXY 4-INCH	10	MARKING LINE GROOVED WET REF EPOXY 10-INCH
6	MARKING LINE GROOVED WET REF EPOXY 6-INCH	18	MARKING STOP LINE EPOXY 18-INCH

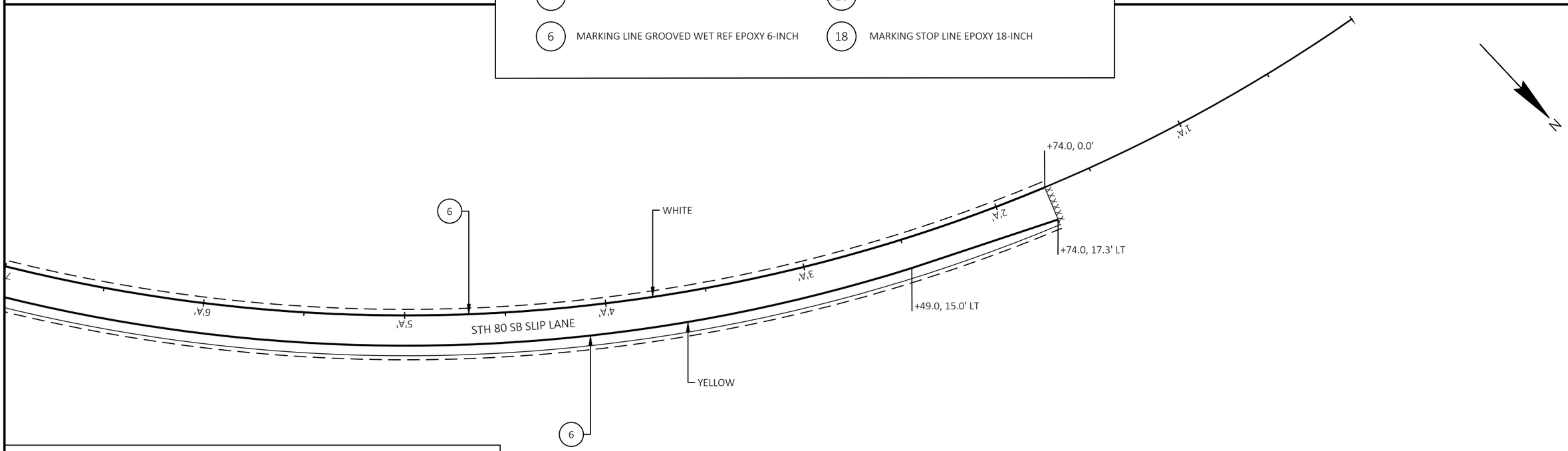

SEE SDD "PERMANENT LONGITUDINAL PAVEMENT MARKINGS", "PAVEMENT MARKING (TURN LANES)", "PAVEMENT MARKINGS (INTERSECTIONS)", "STOP LINE AND CROSSWALK PAVEMENT MARKING", AND "PAVEMENT MARKING, ENTRANCE RAMP AND PARALLEL ENTRANCE RAMP" FOR DETAILS.

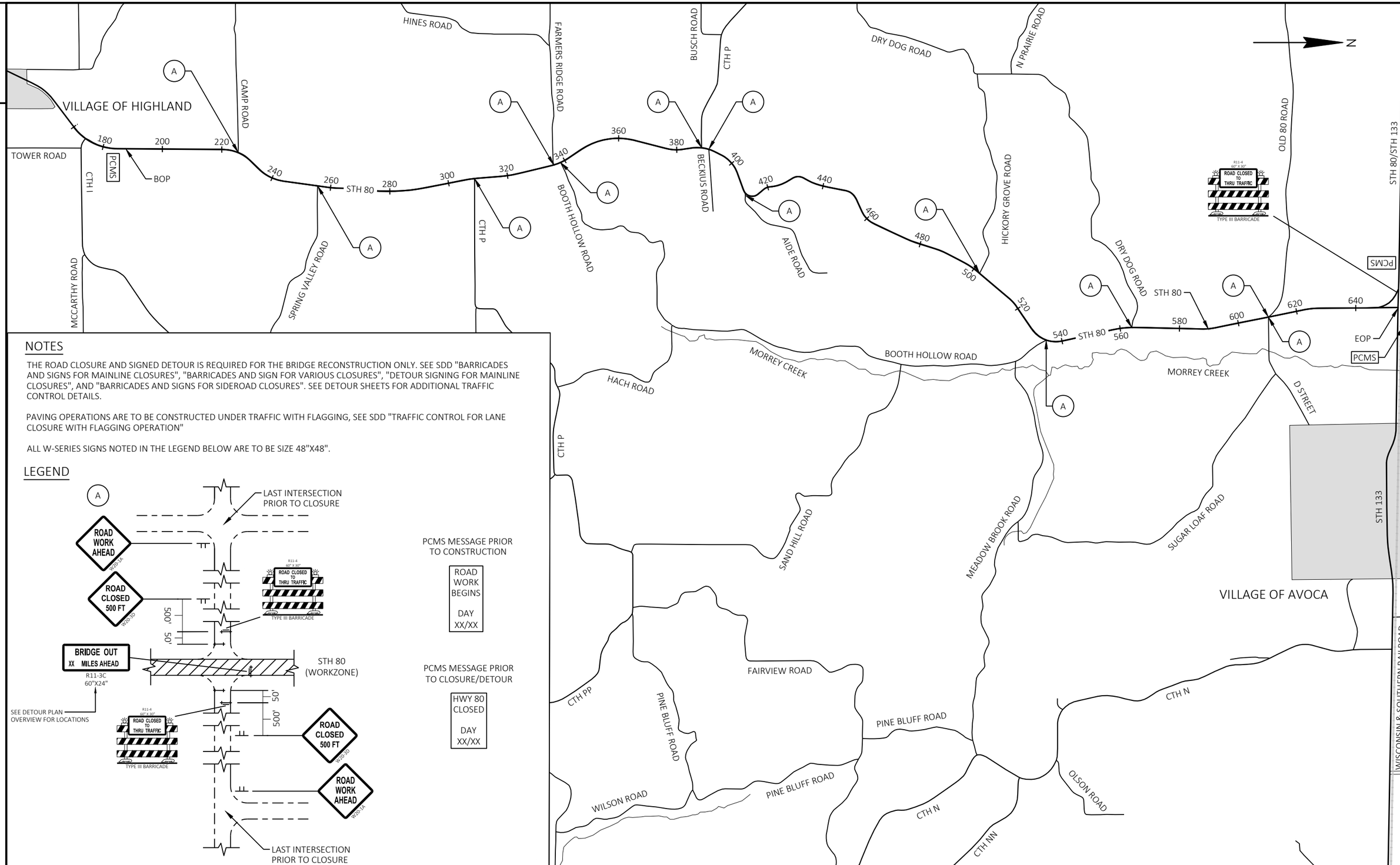

NOTES

THE ROAD CLOSURE AND SIGNED DETOUR IS REQUIRED FOR THE BRIDGE RECONSTRUCTION ONLY. SEE SDD "BARRICADES AND SIGNS FOR MAINLINE CLOSURES", "BARRICADES AND SIGN FOR VARIOUS CLOSURES", "DETOUR SIGNING FOR MAINLINE CLOSURES", AND "BARRICADES AND SIGNS FOR SIDEROAD CLOSURES". SEE DETOUR SHEETS FOR ADDITIONAL TRAFFIC CONTROL DETAILS.

PAVING OPERATIONS ARE TO BE CONSTRUCTED UNDER TRAFFIC WITH FLAGGING, SEE SDD "TRAFFIC CONTROL FOR LANE CLOSURE WITH FLAGGING OPERATION"

ALL W-SERIES SIGNS NOTED IN THE LEGEND BELOW ARE TO BE SIZE 48"X48".

LEGEND

PCMS MESSAGE PRIOR TO CONSTRUCTION

ROAD
WORK
BEGINS

DAY
XX/XX

PCMS MESSAGE PRIOR TO CLOSURE/DETOUR

HWY 80
CLOSED

DAY
XX/XX

PROJECT NO: 5939-00-63	HWY: STH 80	COUNTY: IOWA	TRAFFIC CONTROL	SHEET 32	E

NOTE:

ALL W-SERIES SIGNS SHOWN ON THIS SHEET ARE TO BE SIZE 48"X48".

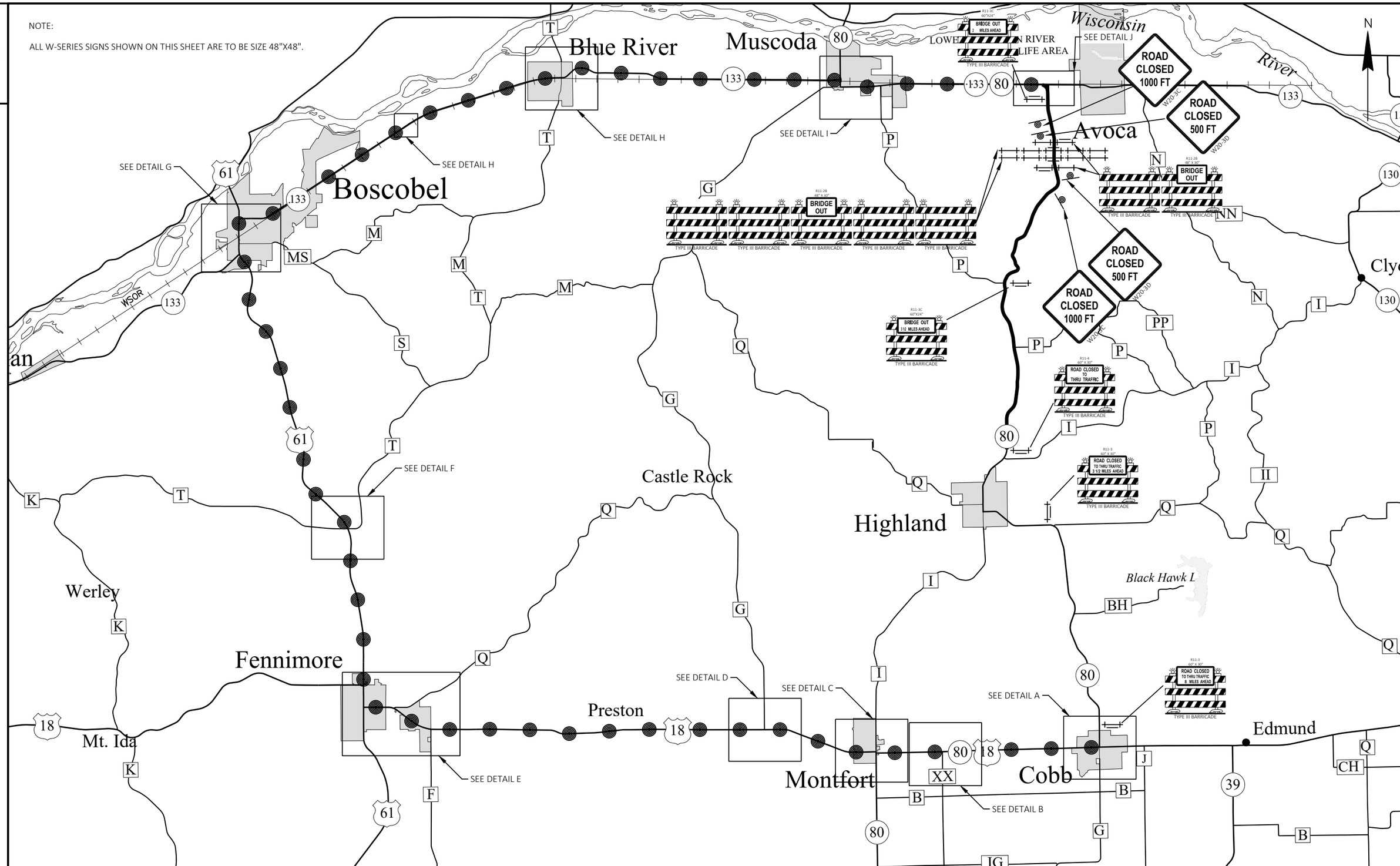

PROJECT NO: 5939-00-63	HWY: STH 80	COUNTY: IOWA	DETOUR PLAN OVERVIEW	SHEET 33	E

FILE NAME : W:\7701_07\CAD\! XXXX-XX-XX\SHEETSPLAN\027001-DT.DWG
LAYOUT NAME - 01
PLOT DATE : 4/17/2025 10:04 AM
PLOT BY : SEBESTA, MAXWELL
PLOT NAME :
PLOT SCALE : 1 IN:2 MI

WISDOT/CADDS SHEET 42

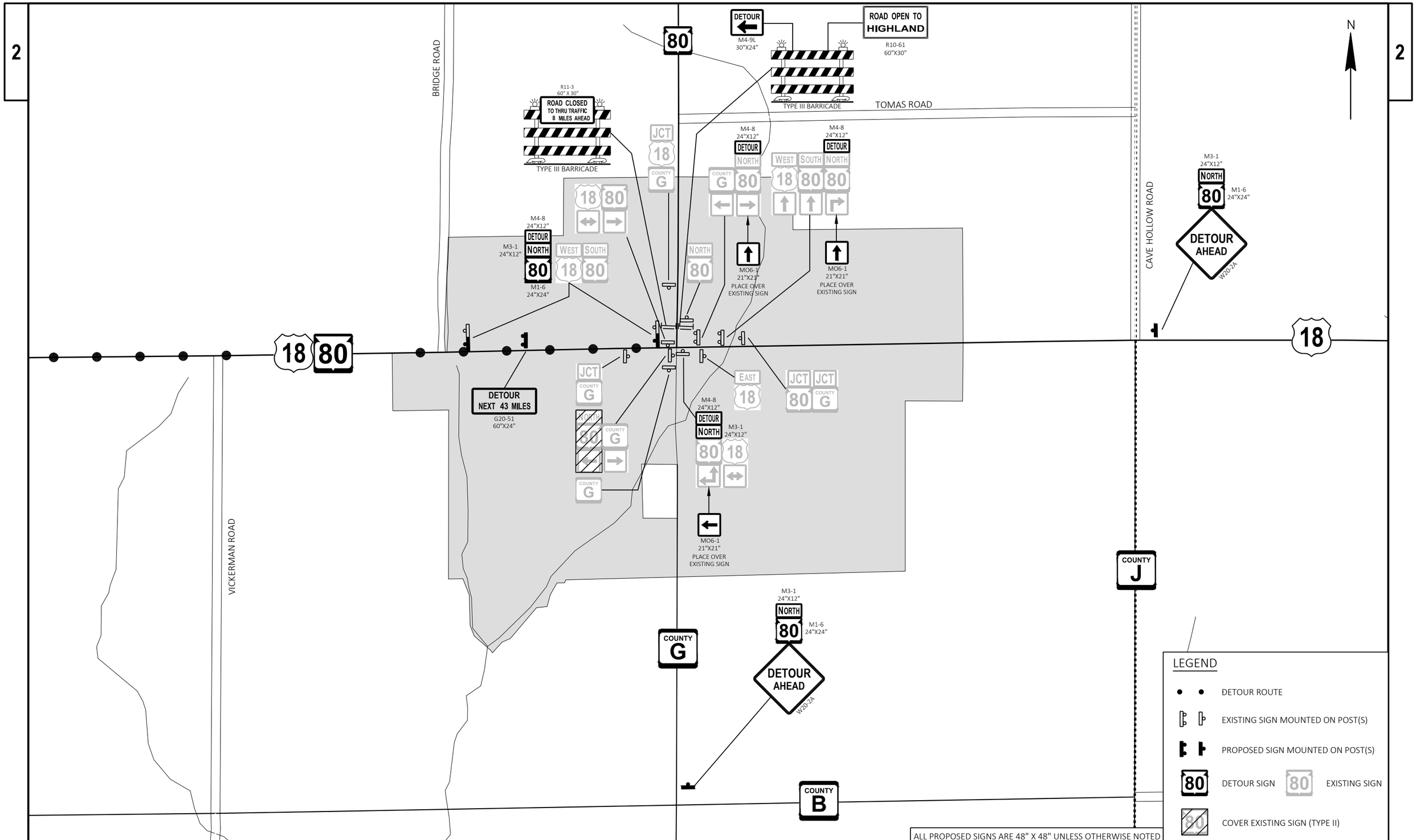

LEGEND

- DETOUR ROUTE
- EXISTING SIGN MOUNTED ON POST(S)
- PROPOSED SIGN MOUNTED ON POST(S)
- DETOUR SIGN / EXISTING SIGN
- COVER EXISTING SIGN (TYPE II)

ALL PROPOSED SIGNS ARE 48" X 48" UNLESS OTHERWISE NOTED

PROJECT NO: 5939-00-63	HWY: STH 80	COUNTY: IOWA	DETOUR PLAN - DETAIL A	SHEET 34	E

FILE NAME : W:\7701_07\CAD\! XXXX-XX-XX\SHEETSPLAN\027002-DT.DWG
LAYOUT NAME - 01
PLOT DATE : 4/17/2025 10:16 AM
PLOT BY : SEBESTA, MAXWELL
PLOT NAME :
PLOT SCALE : 1 IN:1000 FT
WISDOT/CADDS SHEET 42

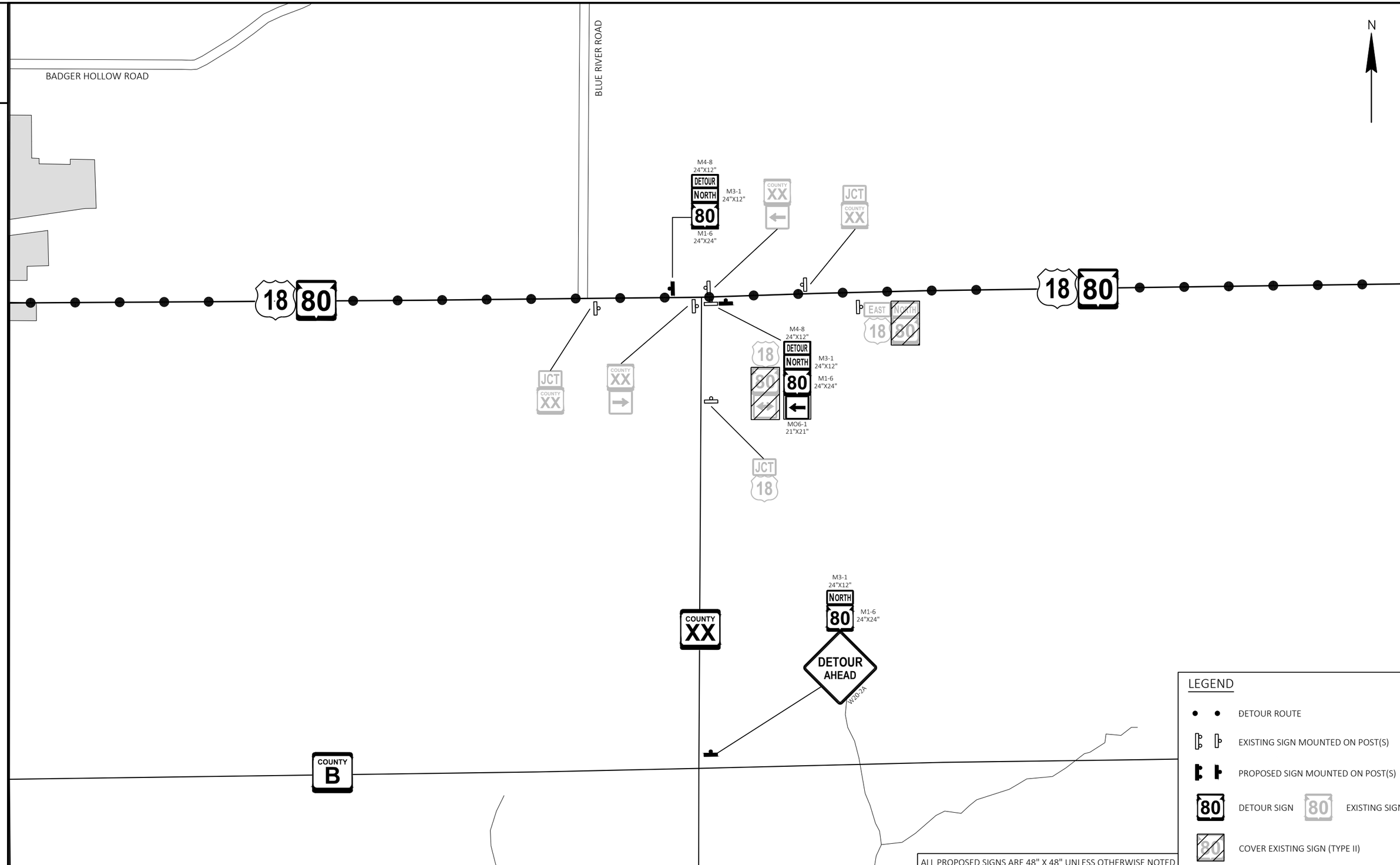

PROJECT NO: 5939-00-63	HWY: STH 80	COUNTY: IOWA	DETOUR PLAN - DETAIL B	SHEET 35	E

FILE NAME : W:\7701_07\CAD\! XXXX-XX-XX\SHEETSPLAN\027002-DT.DWG
LAYOUT NAME - 02
PLOT DATE : 4/17/2025 10:16 AM
PLOT BY : SEBESTA, MAXWELL
PLOT NAME :
PLOT SCALE : 1 IN:1000 FT

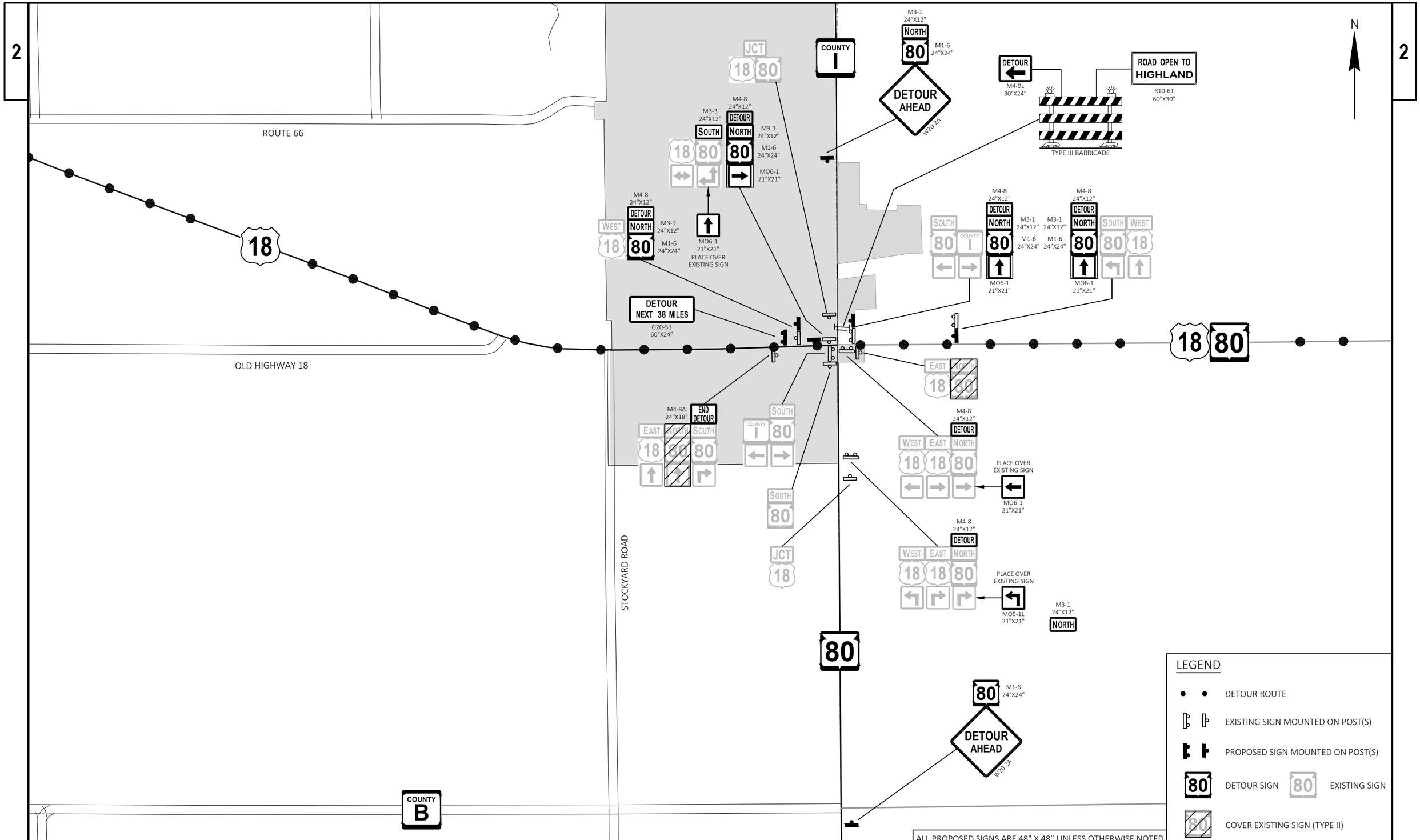

PROJECT NO: 5939-00-63	HWY: STH 80	COUNTY: IOWA	DETOUR PLAN - DETAIL C	SHEET 36	E

FILE NAME : W:\7701_07\CAD\! XXXX-XX-XX\SHEETSPLAN\027002-DT.DWG
LAYOUT NAME - 03
PLOT DATE : 4/17/2025 10:16 AM PLOT BY : SEBESTA, MAXWELL PLOT NAME : PLOT SCALE : 1 IN:1000 FT

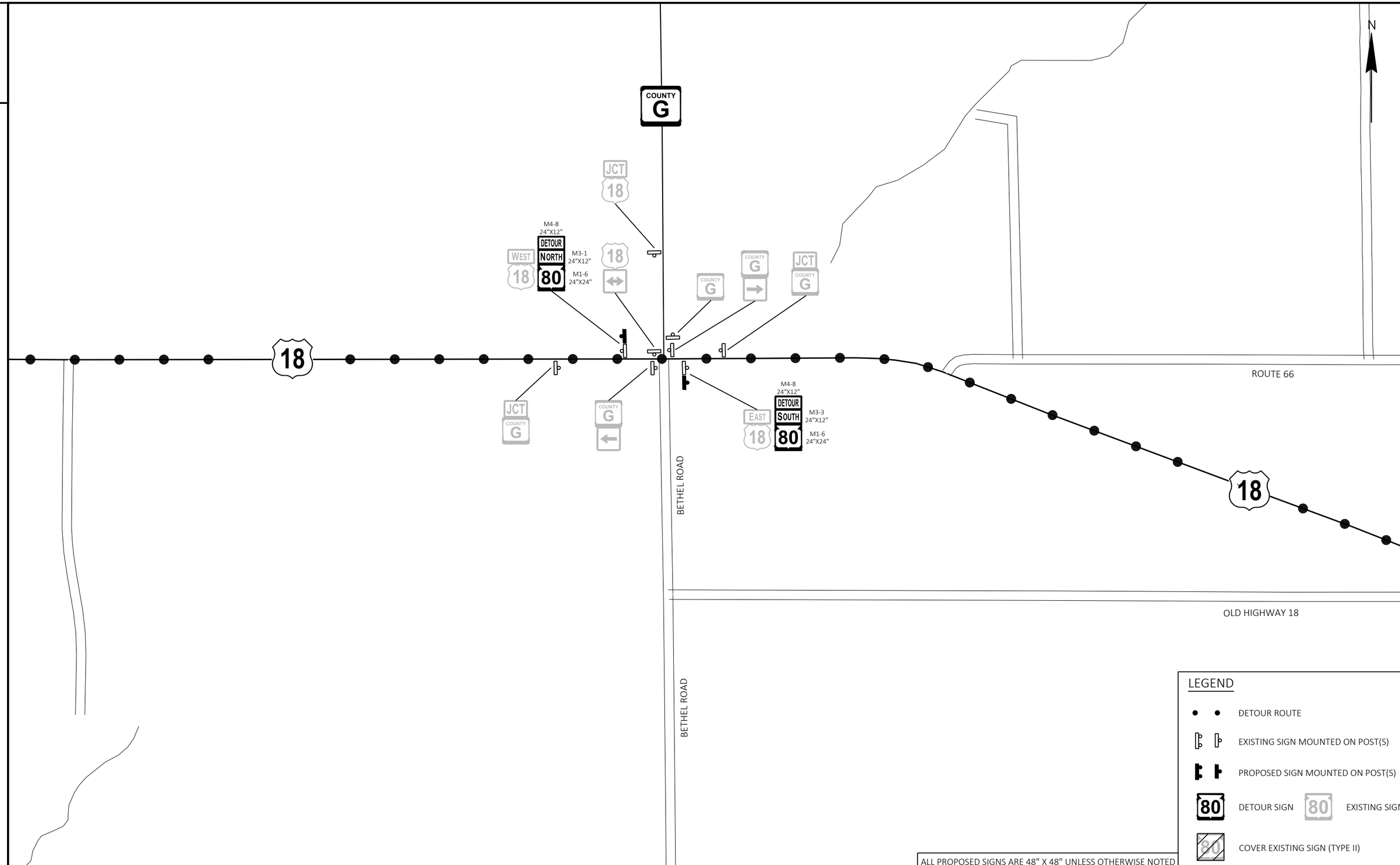

PROJECT NO: 5939-00-63	HWY: STH 80	COUNTY: IOWA	DETOUR PLAN - DETAIL D	SHEET 37	E

FILE NAME : W:\7701_07\CAD\! XXXX-XX-XX\SHEETSPLAN\027002-DT.DWG
LAYOUT NAME - 04
PLOT DATE : 4/17/2025 10:16 AM PLOT BY : SEBESTA, MAXWELL PLOT NAME : PLOT SCALE : 1 IN:1000 FT
WISDOT/CADDS SHEET 42

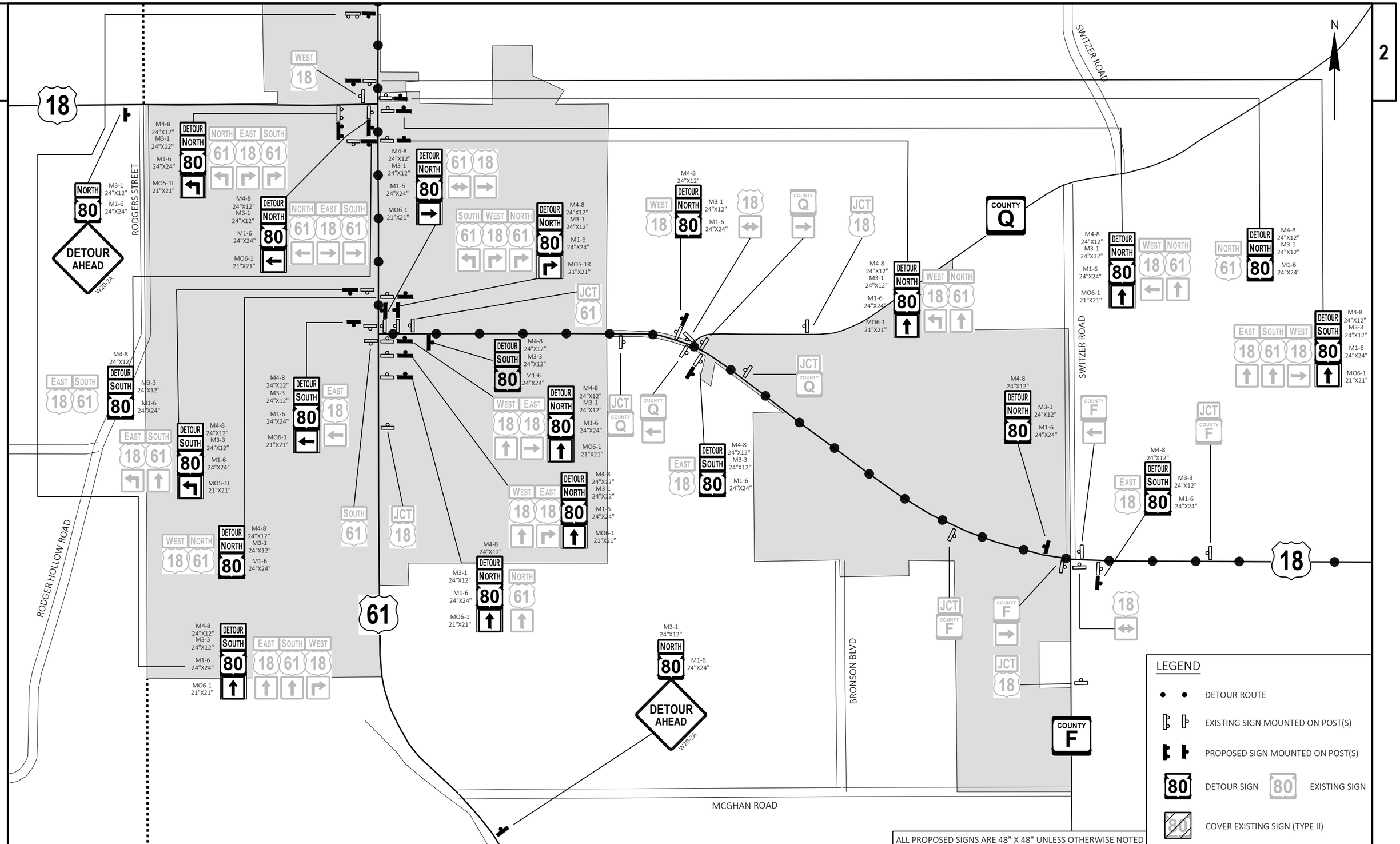

PROJECT NO: 5939-00-63	HWY: STH 80	COUNTY: IOWA	DETOUR PLAN - DETAIL E	SHEET 38	E

FILE NAME : W:\7701_07\CAD\! XXXX-XX-XX\SHEETSPLAN\027002-DT.DWG
LAYOUT NAME - 05
PLOT DATE : 4/17/2025 10:16 AM
PLOT BY : SEBESTA, MAXWELL
PLOT NAME :
PLOT SCALE : 1 IN:1000 FT
WISDOT/CADDS SHEET 42

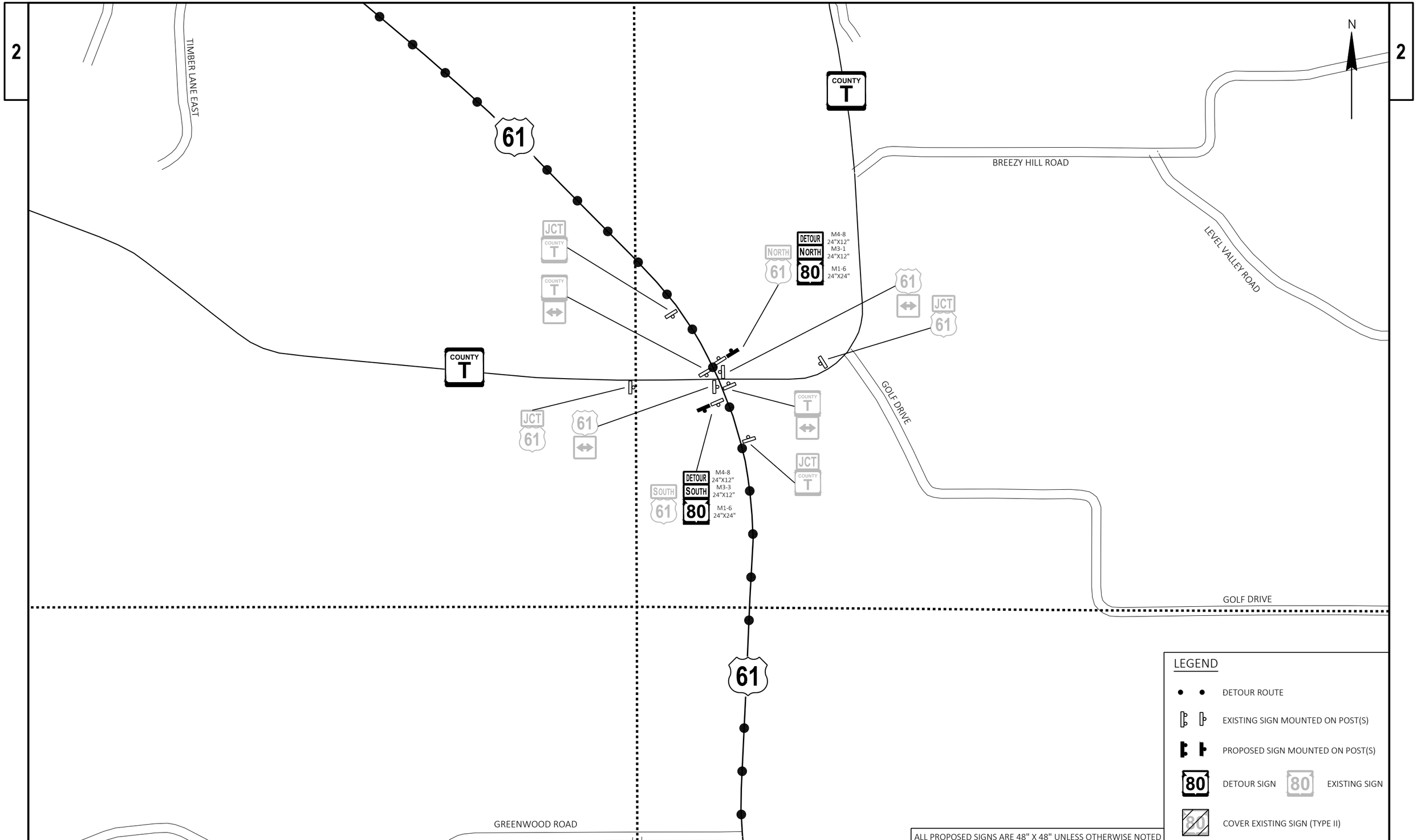

PROJECT NO: 5939-00-63	HWY: STH 80	COUNTY: IOWA	DETOUR PLAN - DETAIL F	SHEET 39	E

FILE NAME : W:\7701_07\CAD\! XXXX-XX-XX\SHEETSPLAN\027002-DT.DWG
LAYOUT NAME - 06
PLOT DATE : 4/17/2025 10:16 AM PLOT BY : SEBESTA, MAXWELL PLOT NAME : PLOT SCALE : 1 IN:1000 FT

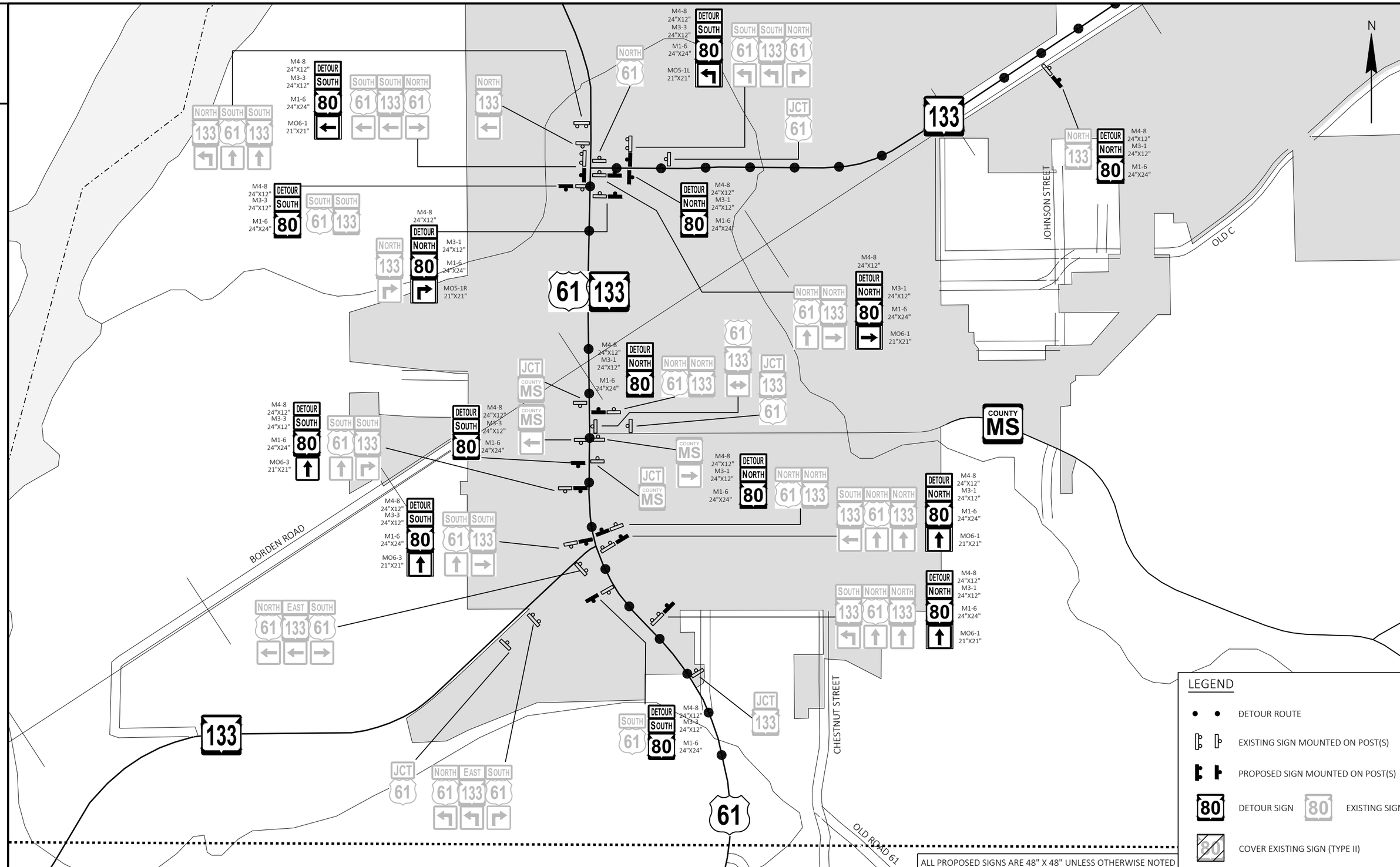

PROJECT NO: 5939-00-63	HWY: STH 80	COUNTY: IOWA	DETOUR PLAN - DETAIL G	SHEET 40	E

FILE NAME : W:\7701_07\CAD\! XXXX-XX-XX\SHEETSPLAN\027002-DT.DWG
LAYOUT NAME - 07
PLOT DATE : 4/17/2025 10:17 AM
PLOT BY : SEBESTA, MAXWELL
PLOT NAME :
PLOT SCALE : 1 IN:1000 FT

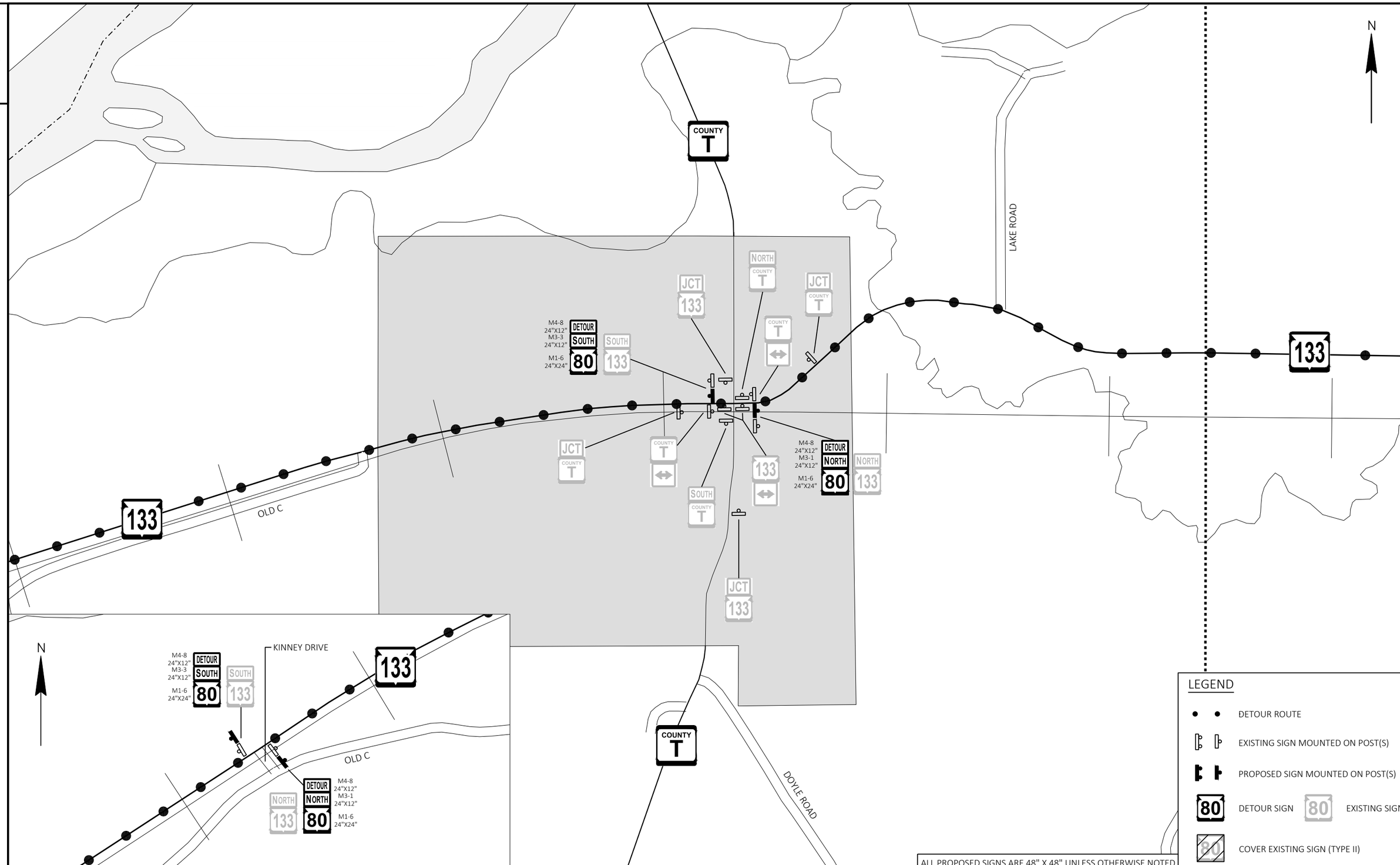

ALL PROPOSED SIGNS ARE 48" X 48" UNLESS OTHERWISE NOTED

PROJECT NO: 5939-00-63	HWY: STH 80	COUNTY: IOWA	DETOUR PLAN - DETAIL H	SHEET 41	E

FILE NAME : W:\7701_07\CAD\! XXXX-XX-XX\SHEETSPLAN\027002-DT.DWG
LAYOUT NAME - 08
PLOT DATE : 4/17/2025 10:17 AM
PLOT BY : SEBESTA, MAXWELL
PLOT NAME :
PLOT SCALE : 1 IN:1000 FT

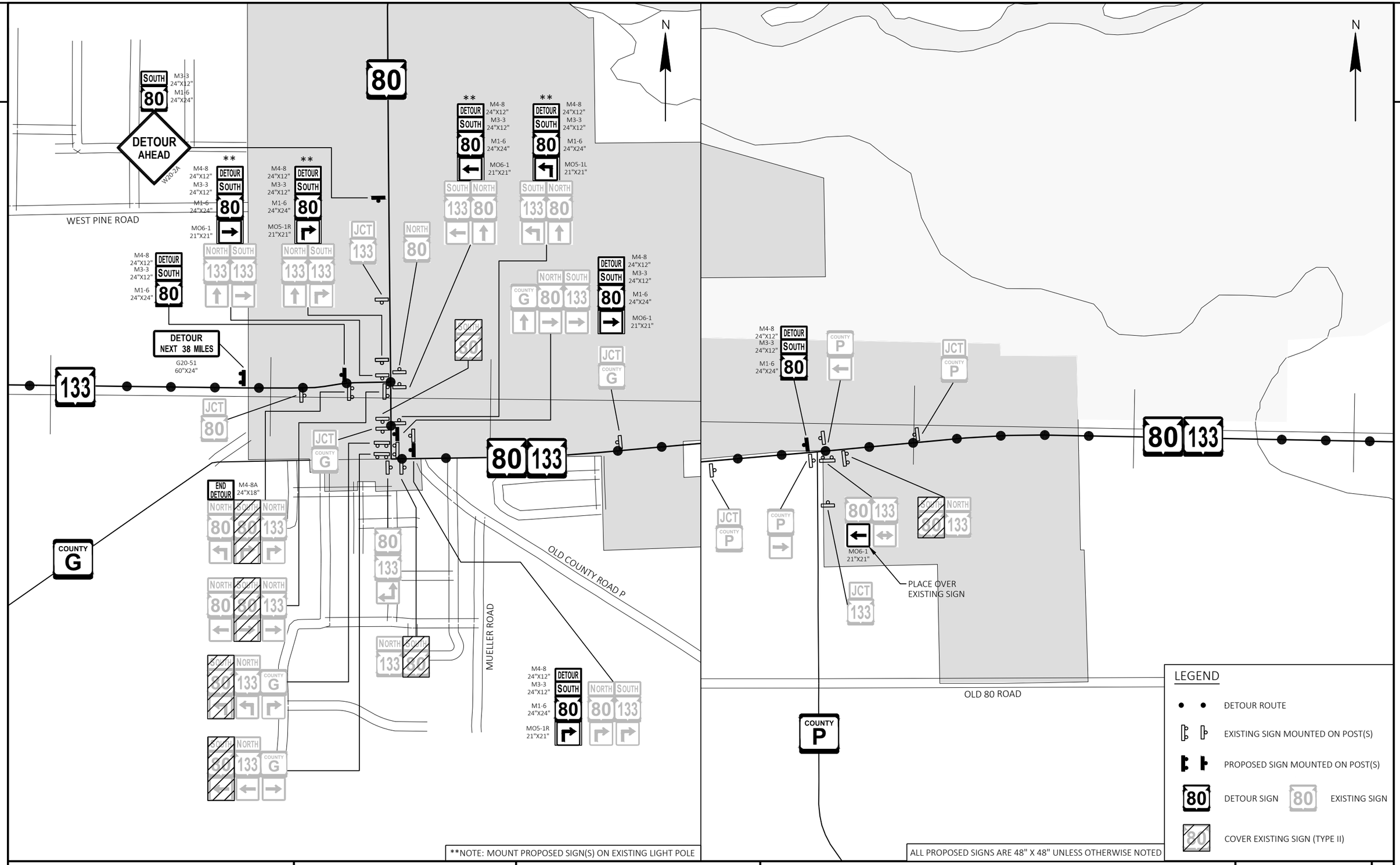

**NOTE: MOUNT PROPOSED SIGN(S) ON EXISTING LIGHT POLE

ALL PROPOSED SIGNS ARE 48" X 48" UNLESS OTHERWISE NOTED

PROJECT NO: 5939-00-63	HWY: STH 80	COUNTY: IOWA	DETOUR PLAN - DETAIL I	SHEET 42	E

FILE NAME : W:\7701_07\CAD\! XXXX-XX-XX\SHEETSPLAN\027002-DT.DWG
LAYOUT NAME - 09
PLOT DATE : 4/17/2025 10:17 AM
PLOT BY : SEBESTA, MAXWELL
PLOT NAME :
PLOT SCALE : 1 IN:1000 FT

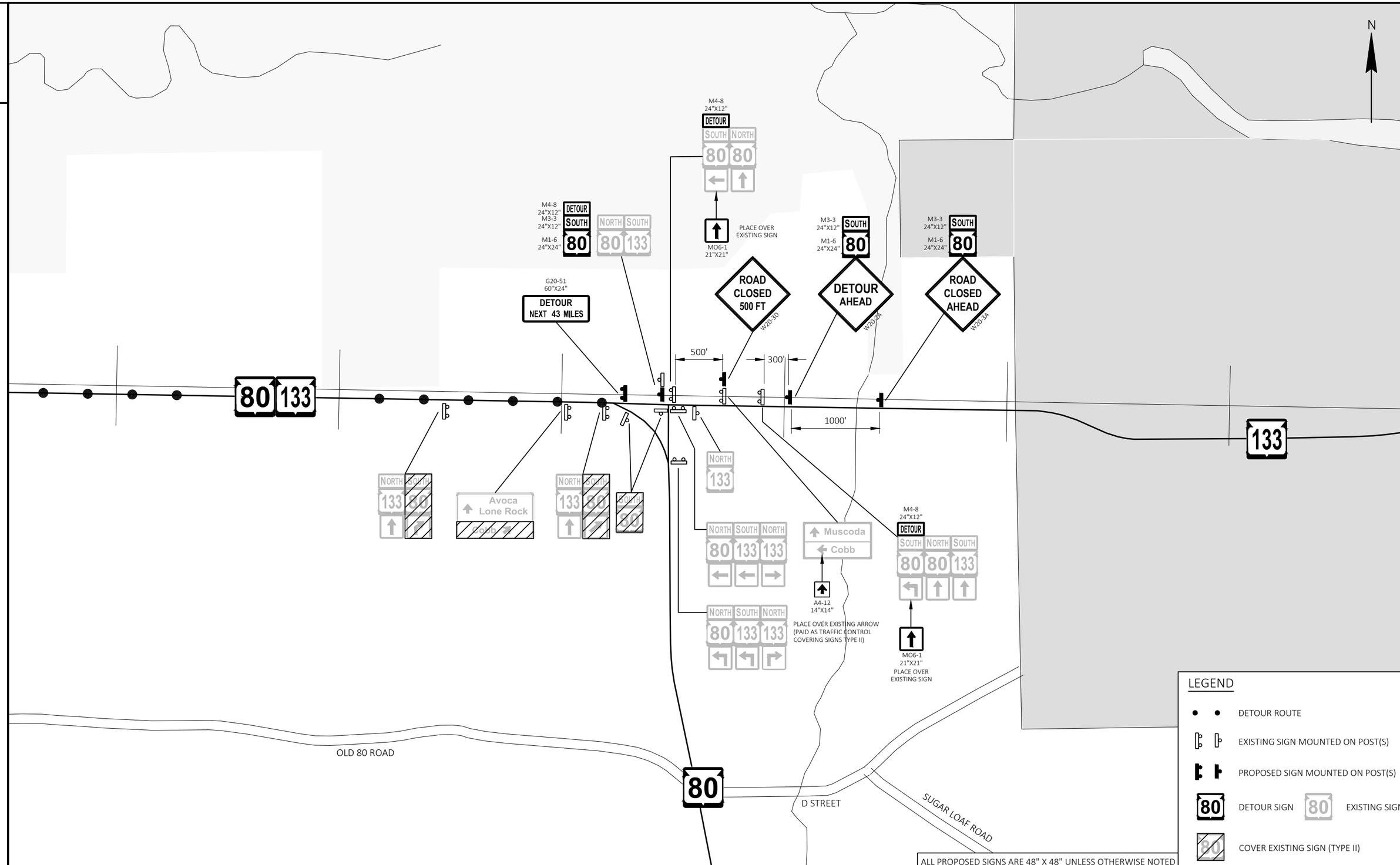

PROJECT NO: 5939-00-63	HWY: STH 80	COUNTY: IOWA	DETOUR PLAN - DETAIL J	SHEET 43	E

FILE NAME : W:\7701_07\CAD\! XXXX-XX-XX\SHEETSPLAN\027002-DT.DWG
LAYOUT NAME - 10
PLOT DATE : 4/17/2025 10:17 AM PLOT BY : SEBESTA, MAXWELL PLOT NAME : PLOT SCALE : 1 IN:1000 FT

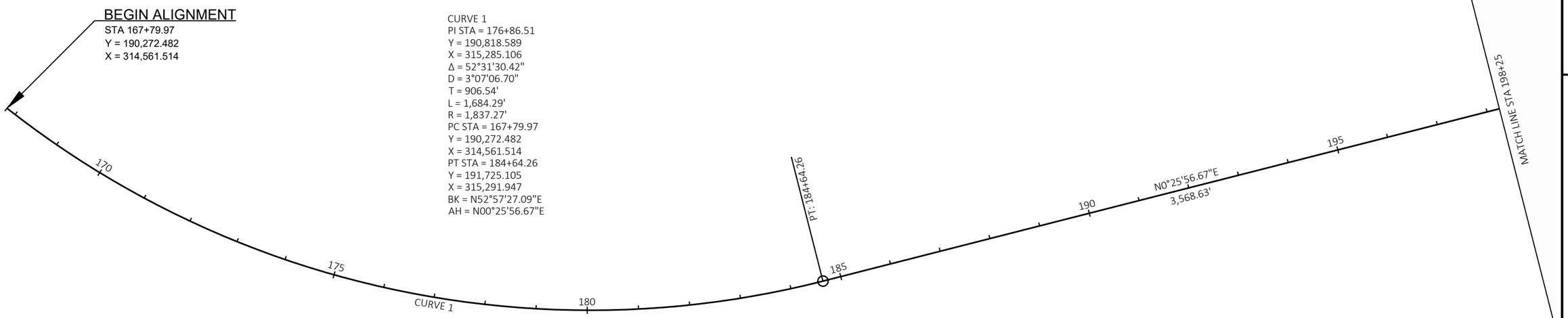

CONTROL POINT AND MONUMENT DATA

POINT	DESCRIPTION	STATION	OFFSET	X COORDINATE	Y COORDINATE	ELEVATION
1102	IOWA COUNTY SECTION MONUMENT	STA 198+81.17	0.92' LT	315301.721	193141.975	1208.64
912	FENO MONUMENT	STA 198+95.14	55.36' LT	315247.388	193156.360	1210.42
1103	IOWA COUNTY SECTION MONUMENT	STA 225+18.47	82.04' LT	315332.413	195797.610	1166.26

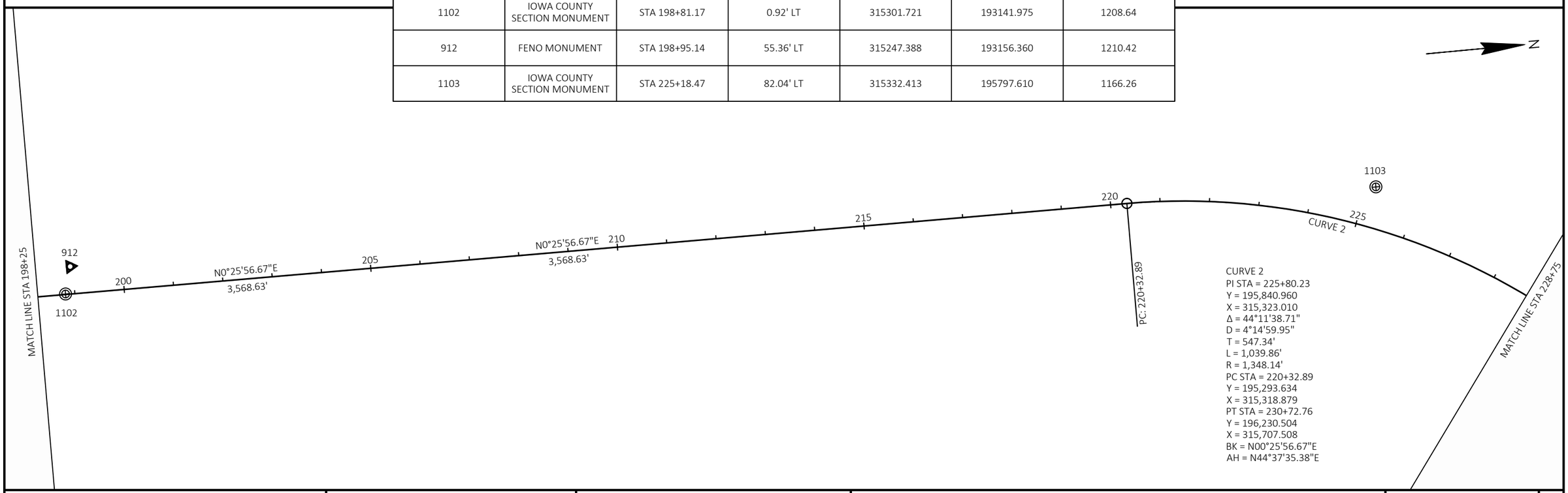

PROJECT NO: 5939-00-63	HWY: STH 80	COUNTY: IOWA	ALIGNMENT DIAGRAM	SHEET 44	E

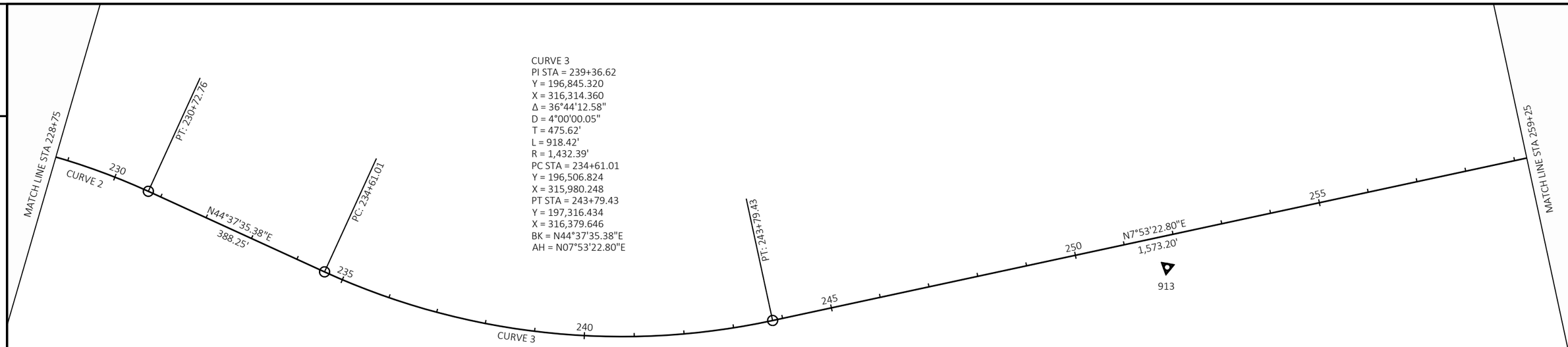

CURVE 3
PI STA = 239+36.62
Y = 196,845.320
X = 316,314.360
Δ = 36°44'12.58"
D = 4°00'00.05"
T = 475.62'
L = 918.42'
R = 1,432.39'
PC STA = 234+61.01
Y = 196,506.824
X = 315,980.248
PT STA = 243+79.43
Y = 197,316.434
X = 316,379.646
BK = N44°37'35.38"E
AH = N07°53'22.80"E

CONTROL POINT AND MONUMENT DATA

POINT	DESCRIPTION	STATION	OFFSET	X COORDINATE	Y COORDINATE	ELEVATION
913	FENO MONUMENT	STA 251+74.65	62.28' RT	316550.492	198095.580	1193.67

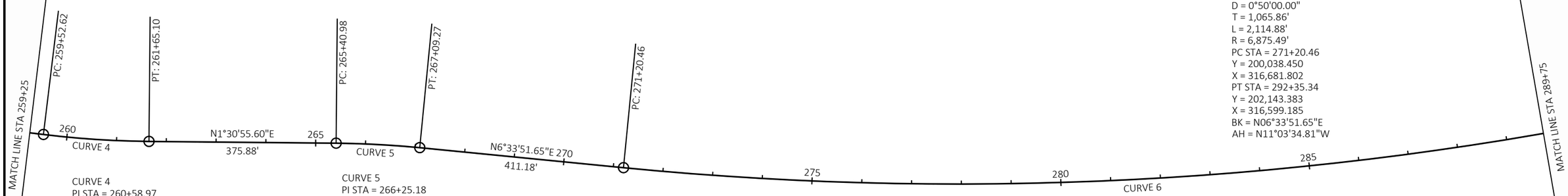

CURVE 4
PI STA = 260+58.97
Y = 198,980.080
X = 316,610.190
Δ = 6°22'27.19"
D = 3°00'00.00"
T = 106.35'
L = 212.47'
R = 1,909.86'
PC STA = 259+52.62
Y = 198,874.740
X = 316,595.592
PT STA = 261+65.10
Y = 199,086.390
X = 316,613.002
BK = N07°53'22.80"E
AH = N01°30'55.60"E

CURVE 5
PI STA = 266+25.18
Y = 199,546.310
X = 316,625.170
Δ = 5°02'56.05"
D = 3°00'00.00"
T = 84.20'
L = 168.30'
R = 1,909.86'
PC STA = 265+40.98
Y = 199,462.137
X = 316,622.943
PT STA = 267+09.27
Y = 199,629.961
X = 316,634.796
BK = N01°30'55.60"E
AH = N06°33'51.65"E

CURVE 6
PI STA = 281+86.32
Y = 201,097.320
X = 316,803.650
Δ = 17°37'26.46"
D = 0°50'00.00"
T = 1,065.86'
L = 2,114.88'
R = 6,875.49'
PC STA = 271+20.46
Y = 200,038.450
X = 316,681.802
PT STA = 292+35.34
Y = 202,143.383
X = 316,599.185
BK = N06°33'51.65"E
AH = N11°03'34.81"W

PROJECT NO: 5939-00-63	HWY: STH 80	COUNTY: IOWA	ALIGNMENT DIAGRAM	SHEET 45	E

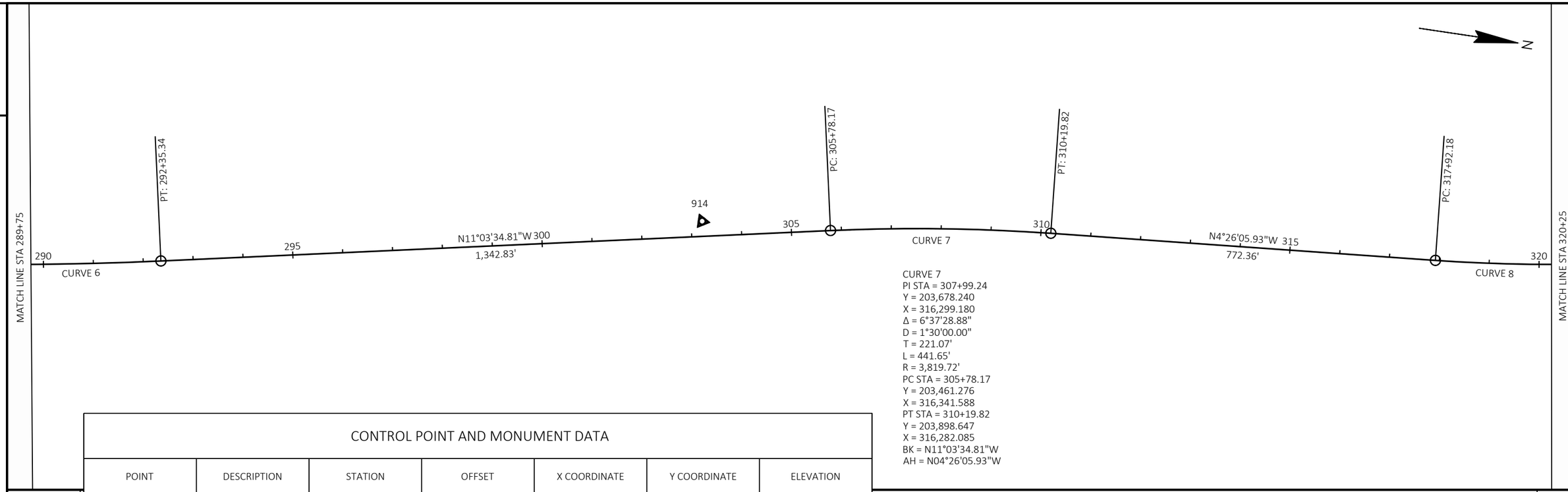

CURVE 7
PI STA = 307+99.24
Y = 203,678.240
X = 316,299.180
Δ = 6°37'28.88"
D = 1°30'00.00"
T = 221.07'
L = 441.65'
R = 3,819.72'
PC STA = 305+78.17
Y = 203,461.276
X = 316,341.588
PT STA = 310+19.82
Y = 203,898.647
X = 316,282.085
BK = N11°03'34.81"W
AH = N04°26'05.93"W

CONTROL POINT AND MONUMENT DATA

POINT	DESCRIPTION	STATION	OFFSET	X COORDINATE	Y COORDINATE	ELEVATION
914	FENO MONUMENT	STA 303+22.18	30.31' LT	316360.953	203204.221	1204.79
2006	IOWA COUNTY SECTION MONUMENT	STA 320+92.35	54.97' RT	316239.654	204975.737	1231.76

CURVE 9
PI STA = 338+26.41
Y = 206,653.720
X = 315,785.890
Δ = 20°29'20.08"
D = 3°30'00.02"
T = 295.86'
L = 585.40'
R = 1,637.02'
PC STA = 335+30.55
Y = 206,366.124
X = 315,855.319
PT STA = 341+15.95
Y = 206,898.821
X = 315,620.187
BK = N13°34'19.92"W
AH = N34°03'40.00"W

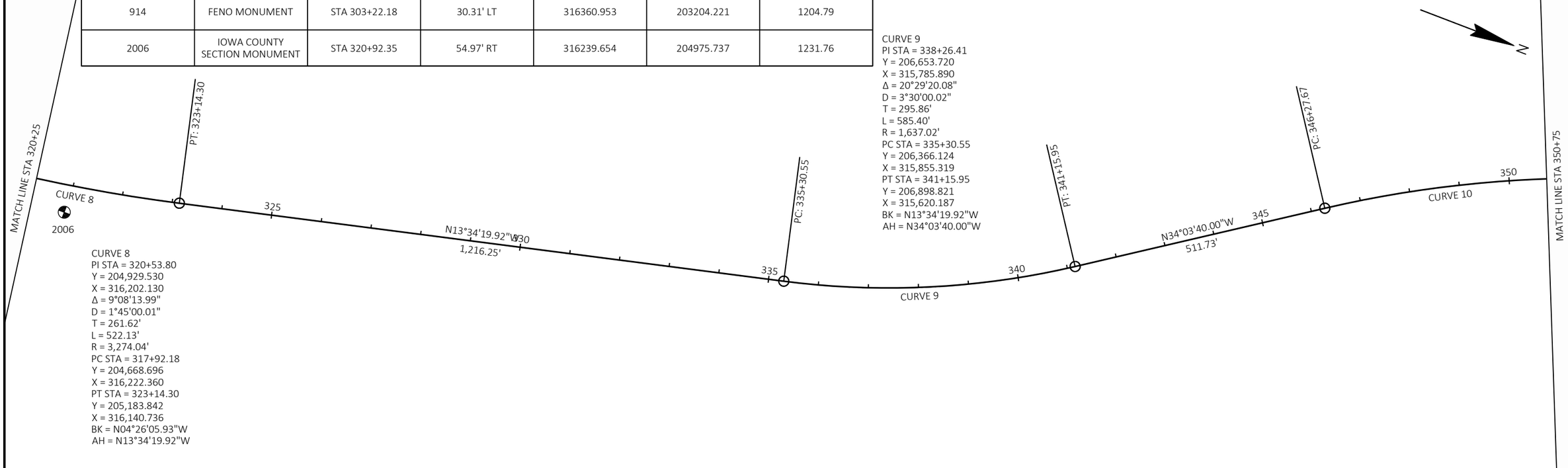

CURVE 8
PI STA = 320+53.80
Y = 204,929.530
X = 316,202.130
Δ = 9°08'13.99"
D = 1°45'00.01"
T = 261.62'
L = 522.13'
R = 3,274.04'
PC STA = 317+92.18
Y = 204,668.696
X = 316,222.360
PT STA = 323+14.30
Y = 205,183.842
X = 316,140.736
BK = N04°26'05.93"W
AH = N13°34'19.92"W

PROJECT NO: 5939-00-63	HWY: STH 80	COUNTY: IOWA	ALIGNMENT DIAGRAM	SHEET 46	E

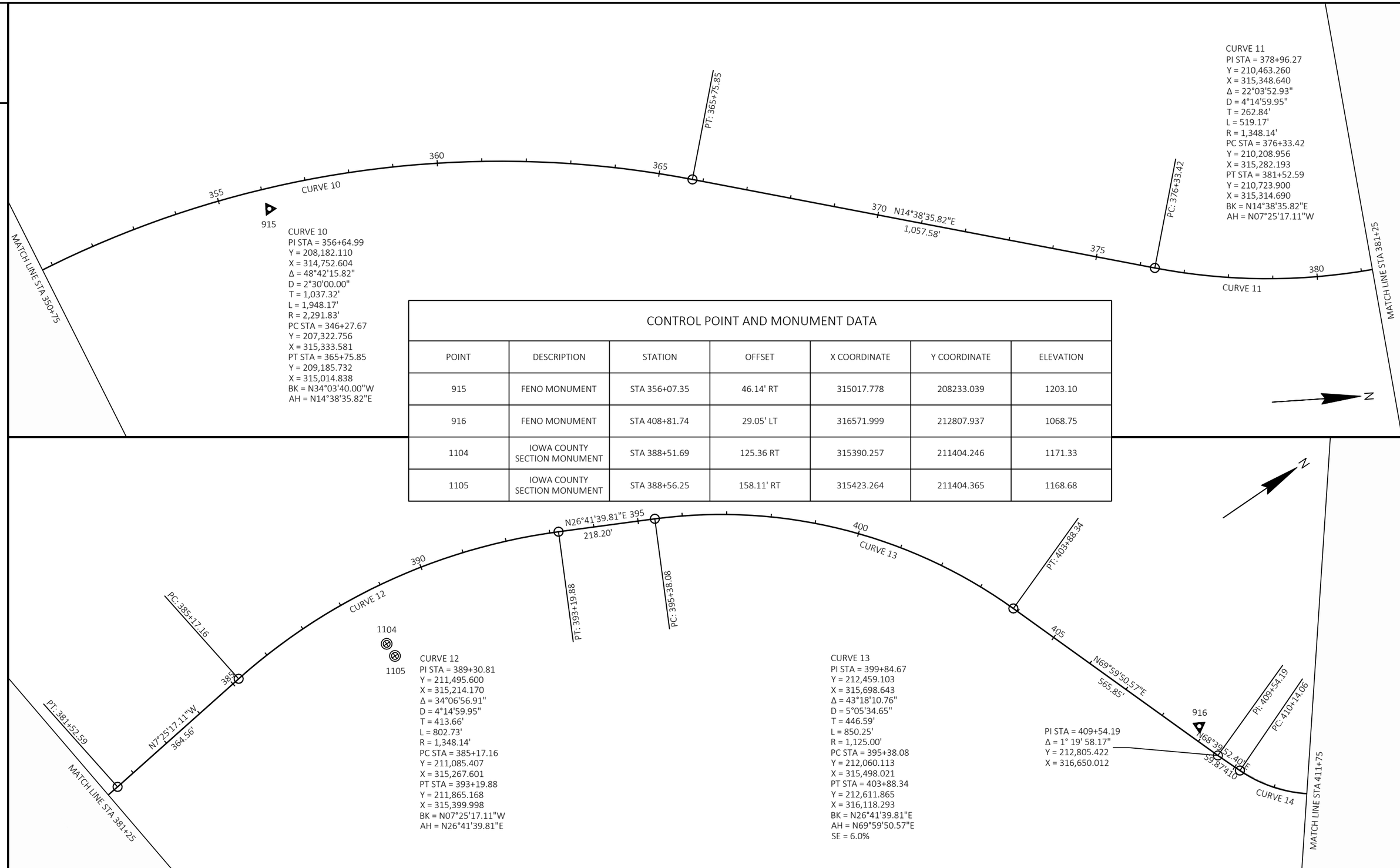

CONTROL POINT AND MONUMENT DATA

POINT	DESCRIPTION	STATION	OFFSET	X COORDINATE	Y COORDINATE	ELEVATION
915	FENO MONUMENT	STA 356+07.35	46.14' RT	315017.778	208233.039	1203.10
916	FENO MONUMENT	STA 408+81.74	29.05' LT	316571.999	212807.937	1068.75
1104	IOWA COUNTY SECTION MONUMENT	STA 388+51.69	125.36 RT	315390.257	211404.246	1171.33
1105	IOWA COUNTY SECTION MONUMENT	STA 388+56.25	158.11' RT	315423.264	211404.365	1168.68

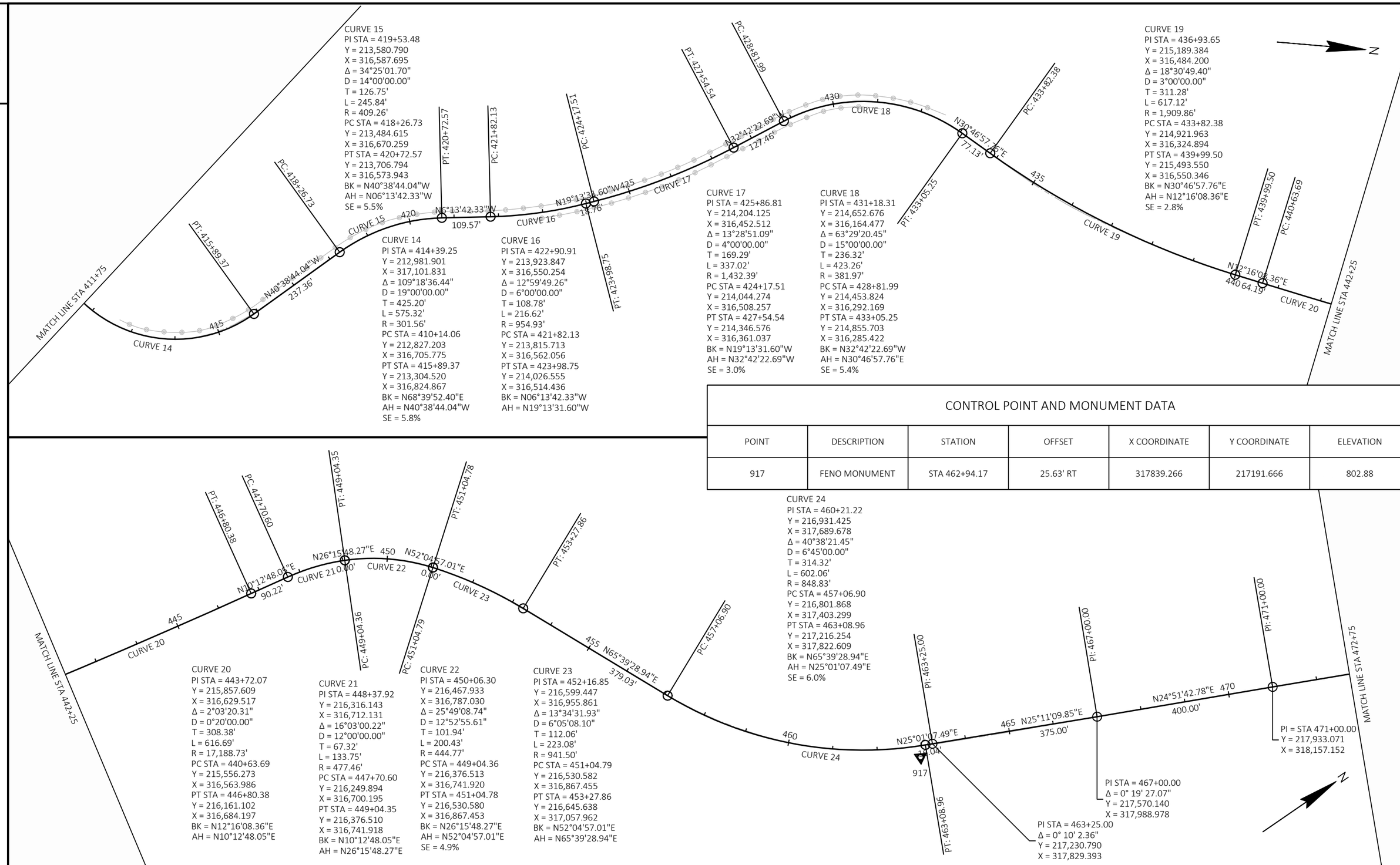

CONTROL POINT AND MONUMENT DATA

POINT	DESCRIPTION	STATION	OFFSET	X COORDINATE	Y COORDINATE	ELEVATION
917	FENO MONUMENT	STA 462+94.17	25.63' RT	317839.266	217191.666	802.88

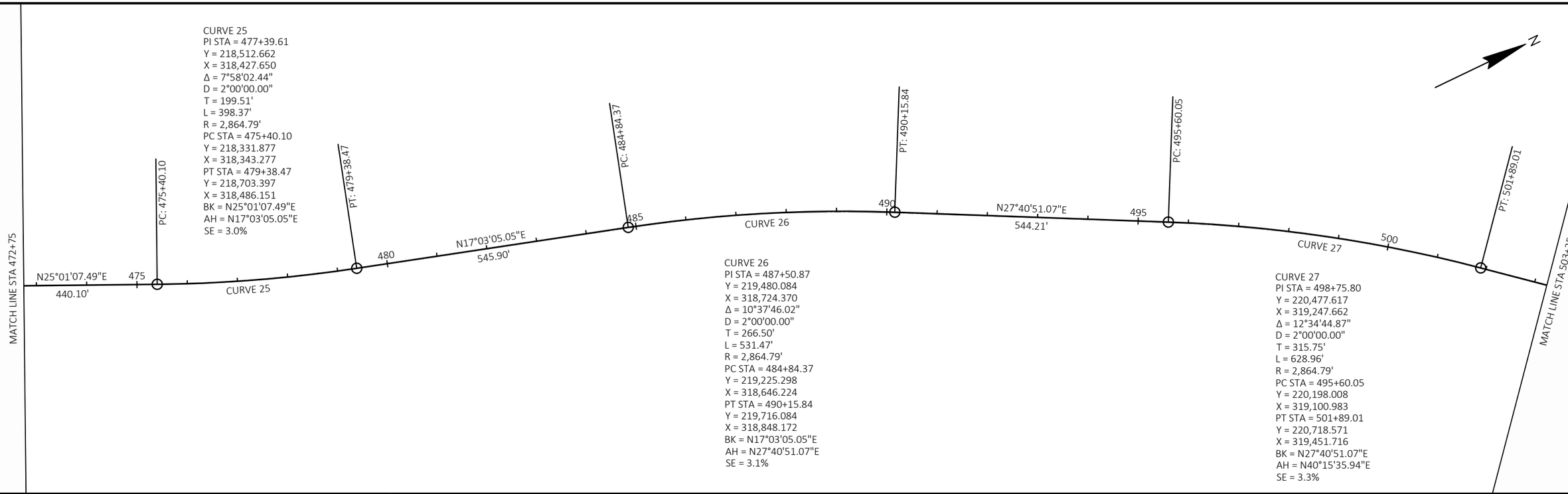

CONTROL POINT AND MONUMENT DATA

POINT	DESCRIPTION	STATION	OFFSET	X COORDINATE	Y COORDINATE	ELEVATION
918	FENO MONUMENT	STA 514+63.80	27.13' RT	320296.267	221673.857	753.04

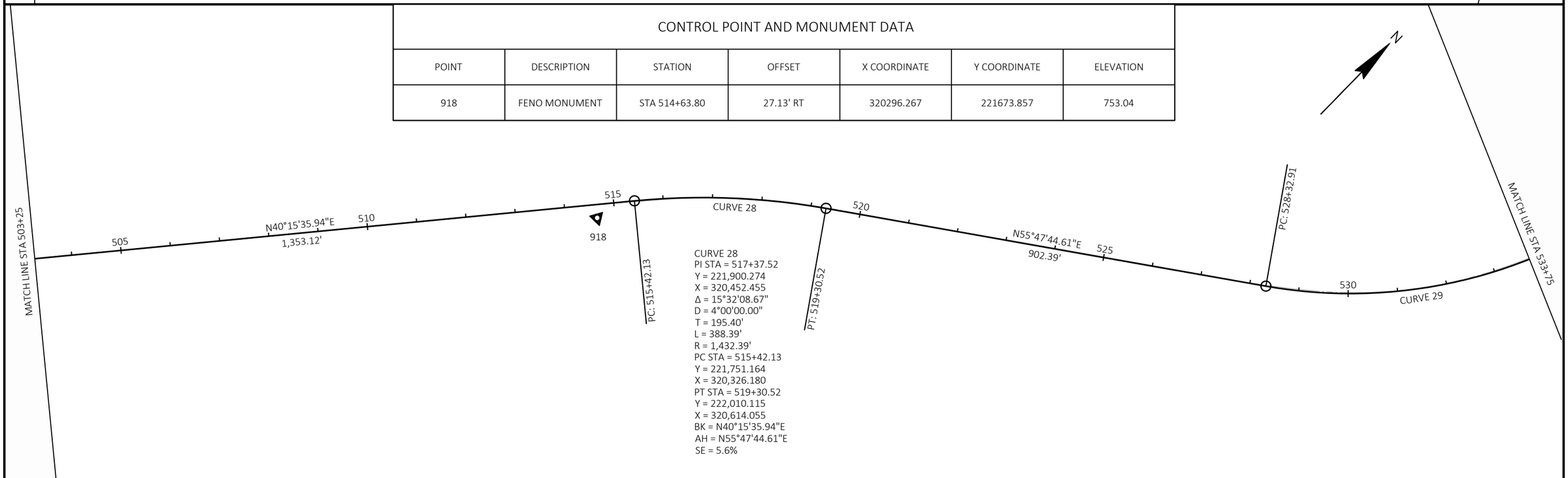

2

CURVE 29
PI STA = 534+98.53
Y = 222,891.564
X = 321,910.860
Δ = 68°24'03.03"
D = 5°51'00.00"
T = 665.62'
L = 1,169.25'
R = 979.42'
PC STA = 528+32.91
Y = 222,517.389
X = 321,360.366
PT STA = 540+02.16
Y = 223,541.141
X = 321,765.601
BK = N55°47'44.61"E
AH = N12°36'18.41"W
SE = 5.5%

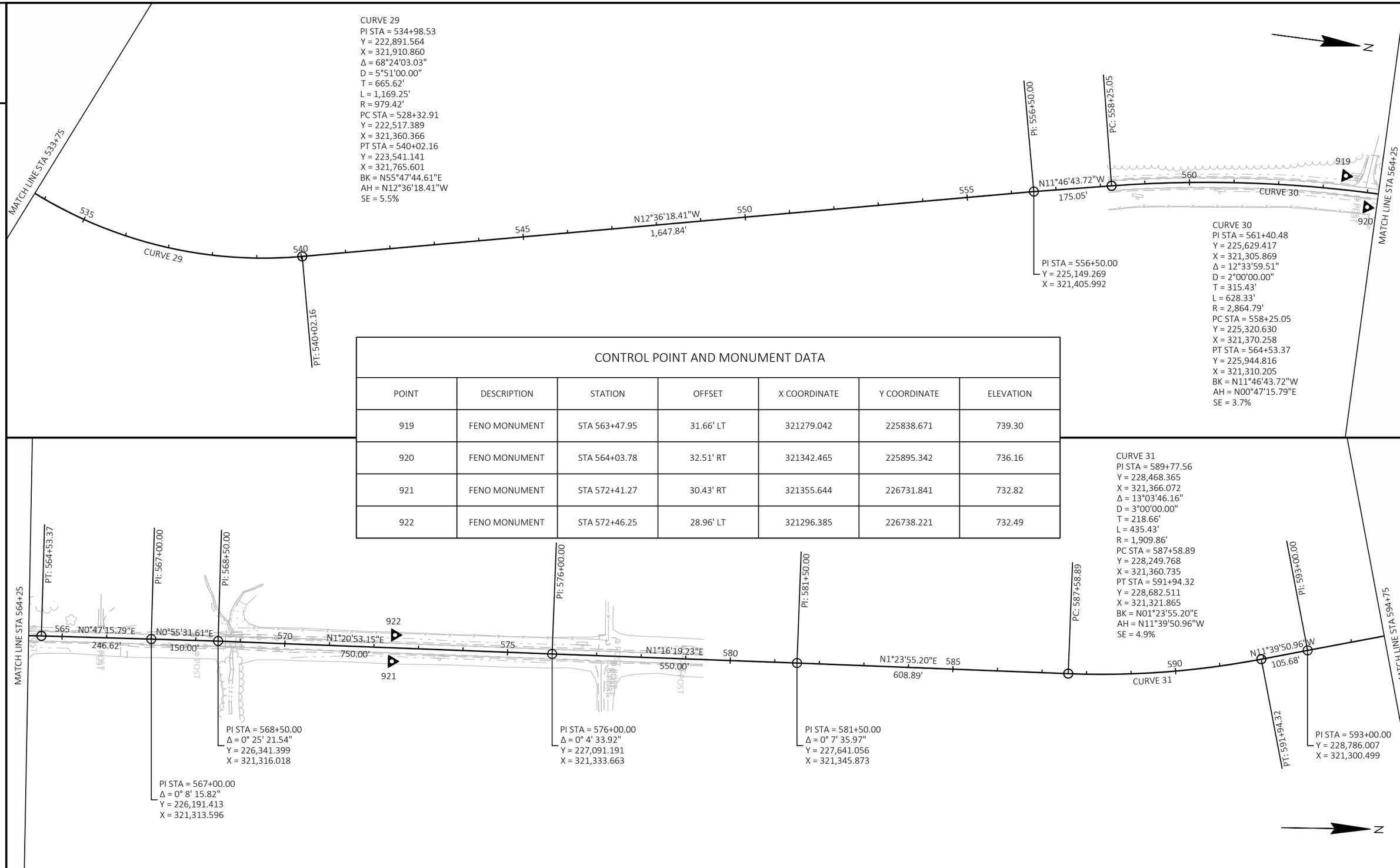

CURVE 31
PI STA = 589+77.56
Y = 228,468.365
X = 321,366.072
Δ = 13°03'46.16"
D = 3°00'00.00"
T = 218.66'
L = 435.43'
R = 1,909.86'
PC STA = 587+58.89
Y = 228,249.768
X = 321,360.735
PT STA = 591+94.32
Y = 228,682.511
X = 321,321.865
BK = N01°23'55.20"E
AH = N11°39'50.96"W
SE = 4.9%

CONTROL POINT AND MONUMENT DATA

POINT	DESCRIPTION	STATION	OFFSET	X COORDINATE	Y COORDINATE	ELEVATION
919	FENO MONUMENT	STA 563+47.95	31.66' LT	321279.042	225838.671	739.30
920	FENO MONUMENT	STA 564+03.78	32.51' RT	321342.465	225895.342	736.16
921	FENO MONUMENT	STA 572+41.27	30.43' RT	321355.644	226731.841	732.82
922	FENO MONUMENT	STA 572+46.25	28.96' LT	321296.385	226738.221	732.49

2

PROJECT NO: 5939-00-63	HWY: STH 80	COUNTY: IOWA	ALIGNMENT DIAGRAM	SHEET 50	E

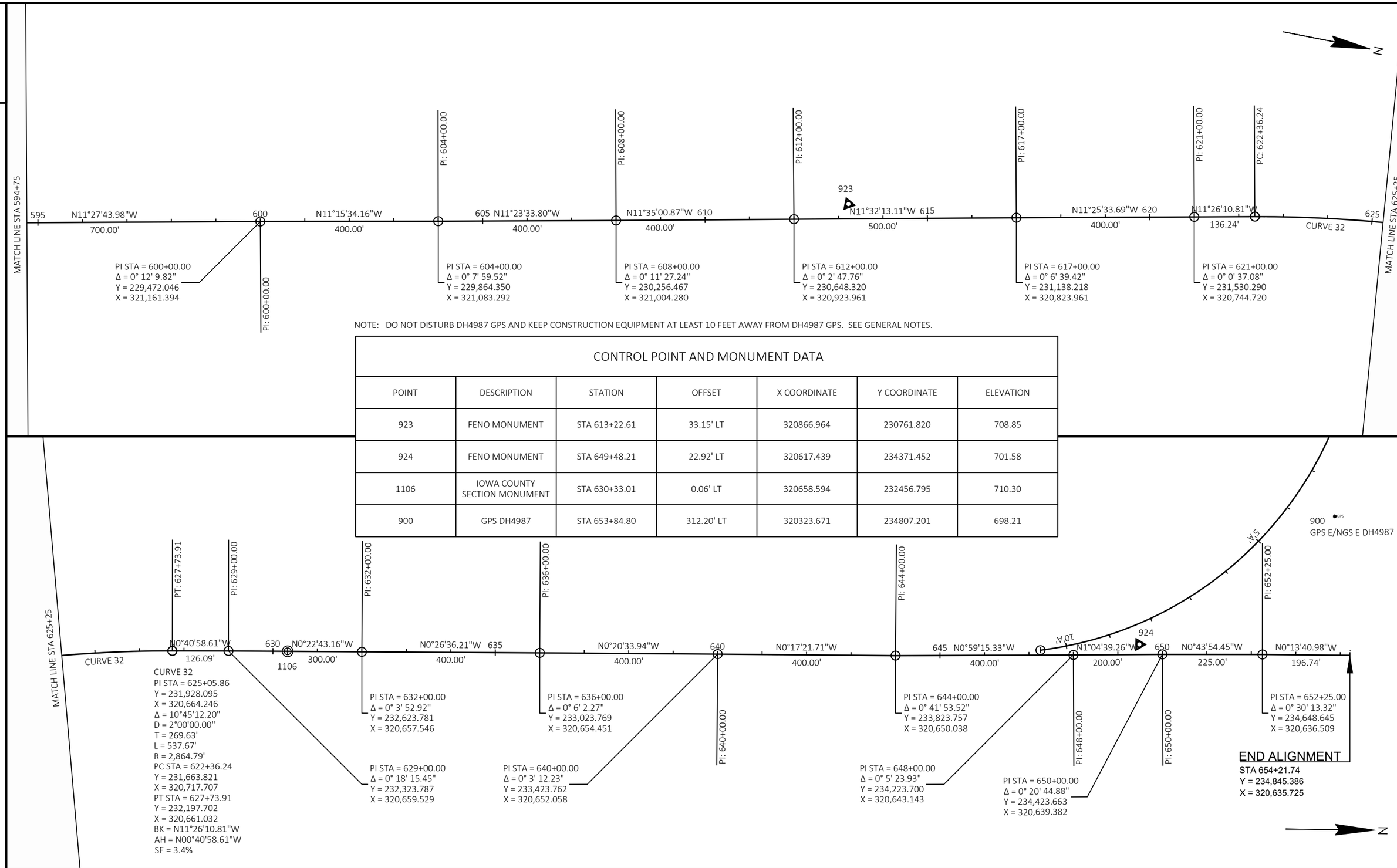

NOTE: DO NOT DISTURB DH4987 GPS AND KEEP CONSTRUCTION EQUIPMENT AT LEAST 10 FEET AWAY FROM DH4987 GPS. SEE GENERAL NOTES.

CONTROL POINT AND MONUMENT DATA

POINT	DESCRIPTION	STATION	OFFSET	X COORDINATE	Y COORDINATE	ELEVATION
923	FENO MONUMENT	STA 613+22.61	33.15' LT	320866.964	230761.820	708.85
924	FENO MONUMENT	STA 649+48.21	22.92' LT	320617.439	234371.452	701.58
1106	IOWA COUNTY SECTION MONUMENT	STA 630+33.01	0.06' LT	320658.594	232456.795	710.30
900	GPS DH4987	STA 653+84.80	312.20' LT	320323.671	234807.201	698.21

PROJECT NO: 5939-00-63	HWY: STH 80	COUNTY: IOWA	ALIGNMENT DIAGRAM	SHEET 51	E

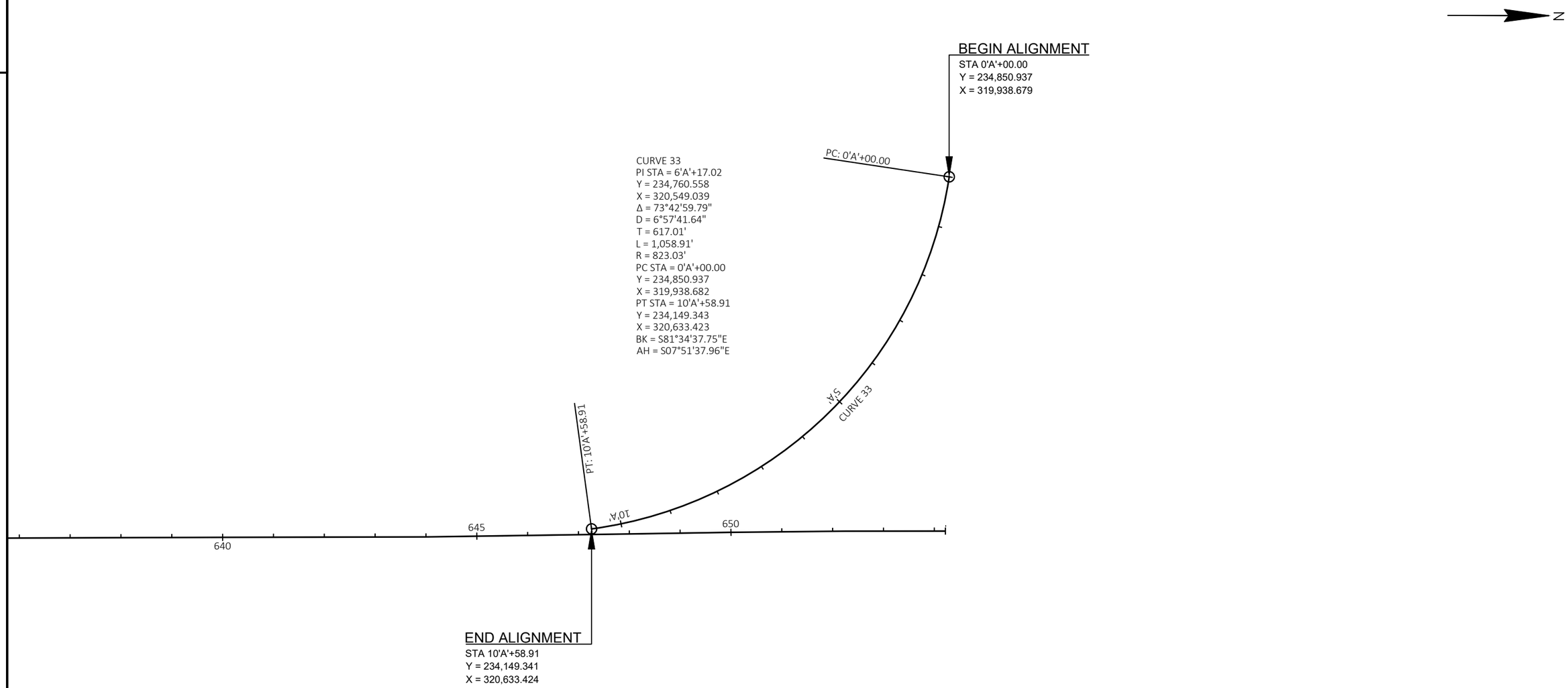
N
BEGIN ALIGNMENT
STA 0'A'+00.00
Y = 234,850.937
X = 319,938.679
PC: 0'A'+00.00
CURVE 33
PI STA = 6'A'+17.02
Y = 234,760.558
X = 320,549.039
Δ = 73°42'59.79"
D = 6°57'41.64"
T = 617.01'
L = 1,058.91'
R = 823.03'
PC STA = 0'A'+00.00
Y = 234,850.937
X = 319,938.682
PT STA = 10'A'+58.91
Y = 234,149.343
X = 320,633.423
BK = S81°34'37.75"E
AH = S07°51'37.96"E
5'A'
CURVE 33
PT: 10'A'+58.91
10'A'
640
645
650
END ALIGNMENT
STA 10'A'+58.91
Y = 234,149.341
X = 320,633.424

Estimate Of Quantities

5939-00-63

Line	Item	Item Description	Unit	Total	Qty
0002	203.0250	Removing Structure Over Waterway Remove Debris (structure) 01. B-25-176	EACH	1.000	1.000
0004	204.0110	Removing Asphaltic Surface	SY	330.000	330.000
0006	204.0115	Removing Asphaltic Surface Butt Joints	SY	513.000	513.000
0008	204.0120	Removing Asphaltic Surface Milling	SY	140,017.000	140,017.000
0010	204.0165	Removing Guardrail	LF	661.000	661.000
0012	205.0100	Excavation Common	CY	1,835.000	1,835.000
0014	206.1001	Excavation for Structures Bridges (structure) 01. B-25-194	EACH	1.000	1.000
0016	210.1500	Backfill Structure Type A	TON	95.000	95.000
0018	211.0101	Prepare Foundation for Asphaltic Paving (project) 01. 5939-00-63	EACH	1.000	1.000
0020	211.0400	Prepare Foundation for Asphaltic Shoulders	STA	418.000	418.000
0022	213.0100	Finishing Roadway (project) 01. 5939-00-63	EACH	1.000	1.000
0024	305.0110	Base Aggregate Dense 3/4-Inch	TON	1,292.000	1,292.000
0026	305.0120	Base Aggregate Dense 1 1/4-Inch	TON	1,374.000	1,374.000
0028	312.0110	Select Crushed Material	TON	1,653.000	1,653.000
0030	415.0060	Concrete Pavement 6-Inch	SY	6.000	6.000
0032	416.0610	Drilled Tie Bars	EACH	6.000	6.000
0034	455.0605	Tack Coat	GAL	10,444.000	10,444.000
0036	460.0105.S	HMA Percent Within Limits (PWL) Test Strip Volumetrics	EACH	1.000	1.000
0038	460.0110.S	HMA Percent Within Limits (PWL) Test Strip Density	EACH	1.000	1.000
0040	460.2000	Incentive Density HMA Pavement	DOL	2,940.000	2,940.000
0042	460.2005	Incentive Density PWL HMA Pavement	DOL	13,430.000	13,430.000
0044	460.2007	Incentive Density HMA Pavement Longitudinal Joints	DOL	23,300.000	23,300.000
0046	460.2010	Incentive Air Voids HMA Pavement	DOL	16,370.000	16,370.000
0048	460.5224	HMA Pavement 4 LT 58-28 S	TON	16,941.000	16,941.000
0050	465.0105	Asphaltic Surface	TON	1,032.000	1,032.000
0052	465.0120	Asphaltic Surface Driveways and Field Entrances	TON	70.000	70.000
0054	465.0520	Asphaltic Rumble Strips, Shoulder	LF	39,775.000	39,775.000
0056	465.0560	Asphaltic Rumble Strips, Centerline	LF	35,772.000	35,772.000
0058	502.0100	Concrete Masonry Bridges	CY	170.000	170.000
0060	502.3200	Protective Surface Treatment	SY	136.000	136.000
0062	502.3210	Pigmented Surface Sealer	SY	50.000	50.000
0064	505.0400	Bar Steel Reinforcement HS Structures	LB	3,080.000	3,080.000
0066	505.0600	Bar Steel Reinforcement HS Coated Structures	LB	27,500.000	27,500.000
0068	516.0500	Rubberized Membrane Waterproofing	SY	18.000	18.000
0070	521.1821	Apron Endwalls for Pipe Arch Sloped Side Drains Steel 21x15-Inch 10 to 1	EACH	1.000	1.000
0072	550.0500	Pile Points	EACH	14.000	14.000
0074	550.1120	Piling Steel HP 12-Inch X 53 Lb	LF	1,330.000	1,330.000
0076	601.0588	Concrete Curb & Gutter 4-Inch Sloped 36-Inch Type TBT	LF	126.000	126.000
0078	602.3010	Concrete Surface Drains	CY	4.000	4.000
0080	606.0200	Riprap Medium	CY	6.000	6.000
0082	606.0300	Riprap Heavy	CY	137.000	137.000
0084	612.0406	Pipe Underdrain Wrapped 6-Inch	LF	162.000	162.000
0086	614.0150	Anchor Assemblies for Steel Plate Beam Guard	EACH	4.000	4.000
0088	614.2300	MGS Guardrail 3	LF	225.000	225.000
0090	614.2500	MGS Thrie Beam Transition	LF	157.600	157.600
0092	614.2610	MGS Guardrail Terminal EAT	EACH	4.000	4.000
0094	618.0100	Maintenance and Repair of Haul Roads (project) 01. 5939-00-63	EACH	1.000	1.000
0096	619.1000	Mobilization	EACH	1.000	1.000
0098	624.0100	Water	MGAL	40.000	40.000

Estimate Of Quantities

5939-00-63

Line	Item	Item Description	Unit	Total	Qty
0100	625.0500	Salvaged Topsoil	SY	2,055.000	2,055.000
0102	628.1504	Silt Fence	LF	1,337.000	1,337.000
0104	628.1520	Silt Fence Maintenance	LF	1,337.000	1,337.000
0106	628.1905	Mobilizations Erosion Control	EACH	3.000	3.000
0108	628.1910	Mobilizations Emergency Erosion Control	EACH	3.000	3.000
0110	628.2004	Erosion Mat Class I Type B	SY	1,407.000	1,407.000
0112	628.2006	Erosion Mat Urban Class I Type A	SY	648.000	648.000
0114	628.6005	Turbidity Barriers	SY	222.000	222.000
0116	628.7504	Temporary Ditch Checks	LF	90.000	90.000
0118	628.7570	Rock Bags	EACH	75.000	75.000
0120	629.0210	Fertilizer Type B	CWT	1.330	1.330
0122	630.0120	Seeding Mixture No. 20	LB	66.000	66.000
0124	630.0140	Seeding Mixture No. 40	LB	28.900	28.900
0126	630.0200	Seeding Temporary	LB	55.200	55.200
0128	630.0500	Seed Water	MGAL	95.000	95.000
0130	634.0612	Posts Wood 4x6-Inch X 12-FT	EACH	4.000	4.000
0132	634.0616	Posts Wood 4x6-Inch X 16-FT	EACH	16.000	16.000
0134	637.2230	Signs Type II Reflective F	SF	12.000	12.000
0136	638.2102	Moving Signs Type II	EACH	16.000	16.000
0138	638.2602	Removing Signs Type II	EACH	4.000	4.000
0140	638.3000	Removing Small Sign Supports	EACH	20.000	20.000
0142	642.5001	Field Office Type B	EACH	1.000	1.000
0144	643.0300	Traffic Control Drums	DAY	100.000	100.000
0146	643.0420	Traffic Control Barricades Type III	DAY	3,600.000	3,600.000
0148	643.0705	Traffic Control Warning Lights Type A	DAY	6,560.000	6,560.000
0150	643.0900	Traffic Control Signs	DAY	27,840.000	27,840.000
0152	643.0920	Traffic Control Covering Signs Type II	EACH	12.000	12.000
0154	643.1050	Traffic Control Signs PCMS	DAY	14.000	14.000
0156	643.3165	Temporary Marking Line Paint 6-Inch	LF	71,015.000	71,015.000
0158	643.5000	Traffic Control	EACH	1.000	1.000
0160	645.0111	Geotextile Type DF Schedule A	SY	54.000	54.000
0162	645.0120	Geotextile Type HR	SY	330.000	330.000
0164	646.1020	Marking Line Epoxy 4-Inch	LF	281.000	281.000
0166	646.2040	Marking Line Grooved Wet Ref Epoxy 6-Inch	LF	163,687.000	163,687.000
0168	646.4020	Marking Line Epoxy 10-Inch	LF	546.000	546.000
0170	646.6120	Marking Stop Line Epoxy 18-Inch	LF	106.000	106.000
0172	648.0100	Locating No-Passing Zones	MI	8.830	8.830
0174	650.4500	Construction Staking Subgrade	LF	705.000	705.000
0176	650.5000	Construction Staking Base	LF	705.000	705.000
0178	650.5500	Construction Staking Curb Gutter and Curb & Gutter	LF	126.000	126.000
0180	650.6501	Construction Staking Structure Layout (structure) 01. B-25-194	EACH	1.000	1.000
0182	650.8000	Construction Staking Resurfacing Reference	LF	46,116.000	46,116.000
0184	650.9911	Construction Staking Supplemental Control (project) 01. 5939-00-63	EACH	1.000	1.000
0186	650.9920	Construction Staking Slope Stakes	LF	705.000	705.000
0188	680.0100	Public Land Reference Monument Verify and Reset	EACH	2.000	2.000
0190	690.0150	Sawing Asphalt	LF	404.000	404.000
0192	715.0502	Incentive Strength Concrete Structures	DOL	1,021.000	1,021.000
0194	740.0440	Incentive IRI Ride	DOL	35,303.000	35,303.000
0196	999.2000.S	Installing and Maintaining Bird Deterrent System (station) 01. 568+80	EACH	1.000	1.000

Estimate Of Quantities

5939-00-63

Line	Item	Item Description	Unit	Total	Qty
0198	ASP.1T0A	On-the-Job Training Apprentice at $5.00/HR	HRS	2,000.000	2,000.000
0200	ASP.1T0G	On-the-Job Training Graduate at $5.00/HR	HRS	1,320.000	1,320.000
0202	SPV.0180	Special 01. Removing Distressed Pavement Milling	SY	1,401.000	1,401.000
0204	SPV.0180	Special 02. Resin Binder High Friction Surface Treatment	SY	2,677.000	2,677.000

3

PAVEMENT REMOVAL SUMMARY

CATEGORY	STATION	TO	STATION	LOCATION	REMOVING ASPHALTIC SURFACE 204.0110 SY	REMOVING ASPHALTIC SURFACE BUTT JOINTS 204.0115 SY	REMOVING ASPHALTIC SURFACE MILLING 204.0120 SY	REMOVING DISTRESSED PAVEMENT MILLING SPV.0180.01 SY	REMARKS
0010	189+70	-	189+80	STH 80	-	33	-	-	
0010	189+80	-	293+30	STH 80	-	-	35,767	-	INCL. SIDEROADS
0010	293+30	-	398+90	STH 80	-	-	37,465	-	INCL. SIDEROADS
0010	398+90	-	504+50	STH 80	-	-	27,928	-	INCL. SIDEROADS
0010	504+50	-	566+25	STH 80	-	-	15,647	-	INCL. SIDEROADS
0010	571+50	-	654+01	STH 80	-	-	20,823	-	INCL. SIDEROADS
0010	654+01	-	654+11	STH 80	-	95	-	-	
0010	1+74 'A'	-	1+84 'A'	STH 80	-	22	-	-	SLIP LANE
0010	1+84 'A'	-	10+59 'A'	STH 80	-	-	1,987	-	SLIP LANE
0010	225+26	-	225+48	CAMP ROAD	-	29	-	-	
0010	255+42	-	255+71	SPRING VALLEY RD	-	35	-	-	
0010	308+61	-	308+91	CTH P (SOUTH LEG)	-	35	-	-	
0010	335+79	-	336+07	FARMERS RIDGE RD	-	31	-	-	
0010	338+40	-	338+66	BOOTH HOLLOW RD	-	31	-	-	
0010	388+09	-	388+36	CTH P (NORTH LEG)	-	35	-	-	
0010	391+04	-	391+31	BECKIUS RD	-	32	-	-	
0010	411+58	-	411+67	AIDE RD	-	16	-	-	
0010	533+90	-	534+02	BOOTH HOLLOW RD	-	21	-	-	
0010	563+87	-	564+09	DRY DOG RD	-	26	-	-	
0010	610+08	-	610+27	D ST	-	23	-	-	
0010	611+31	-	611+56	OLD 80 RD	-	49	-	-	
0010	189+70	-	654+11	DRIVEWAYS & PE	330	-	400	-	
0010	BOP	-	EOP	UNDISTRIBUTED	-	-	-	1,401	
				PROJECT TOTALS =	**330**	**513**	**140,017**	**1,401**	

DIVISION	FROM/TO STATION	LOCATION	205.0100 COMMON EXCAVATION (1) CUT (2)	EBS EXCAVATION (3)	SALVAGED/UNUSABLE PAVEMENT MATERIAL (4)	AVAILABLE MATERIAL (5)	UNEXPANDED FILL	EXPANDED FILL (6) FACTOR 1.25	MASS ORDINATE +/- (7)	WASTE (8)	208.0100 BORROW	COMMENT
DIVISION 1												
B-25-194_SOUTH APPROACH	565+79.527/568+47.638	STH 80	765	0	141	624	178	223	402	402	0	
B-25-194_NORTH APPROACH	569+11.25/571+79.57	STH 80	918	0	152	766	78	98	669	669	0	
SPRING VALLEY PE	01+75/03+10	SPRING VALLEY RD	152	0	0	152	0	0	152	152	0	
DIVISION 1 SUBTOTAL			1,835	0	293	1,542	256	320	1,222	1,222	0	
GRAND TOTAL			1,835	0	293	1,542	256	320	1,222	1,222	0	
TOTAL COMMON EXC			1,835									

NOTES:
(1) COMMON EXCAVATION IS THE SUM OF THE CUT AND EBS EXCAVATION COLUMNS. ITEM NUMBER 205.0100
(2) SALVAGED/UNSUABLE PAVEMENT MATERIAL IS INCLUDED IN CUT.
(3) EBS EXCAVATION TO BE BACKFILLED WITH SELECT BORROW MATERIAL. NOTE: THIS IS DESIGNERS CHOICE, CAN BE BACKFILLED WITH BORROW, OR CUT AS WELL.
(4) SALVAGED/UNUSABLE PAVEMENT MATERIAL
(5) AVAILABLE MATERIAL = CUT - SALVAGED/UNUSUABLE PAVEMENT MATERIAL
(6) EXPANDED FILL FACTOR = 1.25
EXPANDED FILL = UNEXPANDED FILL * FILL FACTOR
(7) THE MASS ORDINATE + OR - QTY CALCULATED FOR THE DIVISION. PLUS QUANTITY INDICATES AN EXCESS OF MATERIAL WITHIN THE DIVISION. MINUS INDICATES A SHORTAGE OF MATERIAL WITHIN THE DIVISION.
(8) FACTORS USED TO COMPUTE ANTICIPATED WASTE AND THE COMPUTED WASTE VOLUME IDENTIFIED ARE FOR GENERAL INFORMATION ONLY.

3

FOUNDATION/SHOULDER ITEMS

CATEGORY	STATION	TO	STATION	LOCATION	PREPARE FOUNDATION FOR ASPHALTIC PAVING (PROJECT) 01. 5939-00-63 211.0101 EACH	PREPARE FOUNDATION FOR ASPHALTIC SHOULDERS 211.0400 STA	REMARKS
0010	187+70	-	654+11	STH 80	1	-	PROJECT LIMITS
0010	395+97	-	610+03	STH 80 LT	-	209	EXCLUDES RECONSTRUCTION
0010	395+97	-	610+03	STH 80 RT	-	209	EXCLUDES RECONSTRUCTION
				PROJECT TOTALS =	**1**	**418**	

3

BASE MATERIAL SUMMARY

CATEGORY	STATION	TO	STATION	LOCATION	BASE AGGREGATE DENSE 3/4-INCH 305.0110 TON	BASE AGGREGATE DENSE 1 1/4-INCH 305.0120 TON	SELECT CRUSHED MATERIAL 312.0110 TON	REMARKS
0010	187+70	-	395+97	STH 80 LT/RT	810	-	-	1" DEPTH FOR EX LOW SHOULDERS
0010	407+59	-	456+85	STH 80 LT/RT	192	-	-	1" DEPTH FOR EX LOW SHOULDERS
0010	565+80	-	568+50	STH 80 RT	56	-	-	
0010	566+43	-	568+50	STH 80 LT	42	-	-	
0010	569+09	-	571+17	STH 80 RT	34	-	-	
0010	569+09	-	571+80	STH 80 LT	44	-	-	
0010	565+80	-	568+58	STH 80	-	643	802	
0010	569+01	-	571+80	STH 80	-	671	851	
0010	610+03	-	654+11	STH 80 LT/RT	114	-	-	1" DEPTH FOR EX LOW SHOULDERS
0010	1+75	-	3+21	SPRING VALLEY DWY	-	60	-	
				PROJECT TOTALS =	**1,292**	**1,374**	**1,653**	

RUMBLE STRIP SUMMARY

CATEGORY	STATION	TO	STATION	LOCATION	ASPHALTIC RUMBLE STRIPS, SHOULDER 465.0520 LF	ASPHALTIC RUMBLE STRIPS, CENTERLINE 465.0560 LF	REMARKS
0010	189+70	-	395+97	STH 80	-	16,624	*
0010	395+97	-	609+38	STH 80	39,775	19,148	**
0010	613+00	-	653+49	STH 80	-	4,049	*
				PROJECT TOTALS =	**39,775**	**35,772**	

* SEE SDD "CENTERLINE RUMBLE STRIPS - ASPHALT" AND "CENTER LINE RUMBLE STRIPS - INTERSECTIONS, DRIVEWAYS, BRIDGES, RAIL ROADS" FOR CENTERLINE RUMBLE DETAILS

** SEE SDD "SHOULDER RUMBLE STRIPS ASPHALT" AND "SHOULDER AND EDGELINE RUMBLE STRIPS CROSSINGS, INTERSECTIONS, BRIDGES, DRIVEWAYS" FOR SHOULDER RUMBLE DETAILS

APRON ENDWALLS FOR PIPE ARCH SLOPED SIDE DRAINS STEEL 21X15-INCH 10 TO 1

CATEGORY	STATION	LOCATION	521.1821 EACH	REMARKS
0010	420+46	RT	1	
		PROJECT TOTAL =	**1**	

3

ASPHALT ITEMS SUMMARY

CATEGORY	STATION	TO	STATION	LOCATION	TACK COAT 455.0605 GAL	HMA PAVEMENT 4 LT 58-28 S 460.5224 TON	ASPHALTIC SURFACE 465.0105 TON	ASPHALTIC SURFACE DRIVEWAYS AND FIELD ENTRANCES 465.0120 TON	COMMENTS
0010	187+70	-	293+30	STH 80	2,456	3,929	-	-	2" MILL/RELAY
0010	293+30	-	396+20	STH 80	2,446	3,913	-	-	2" MILL/RELAY
0010	396+20	-	504+50	STH 80	2,189	3,502	-	-	2" MILL/RELAY
0010	504+50	-	566+25	STH 80	1,246	1,994	-	-	2" MILL/RELAY
0010	566+25	-	571+50	STH 80	-	253	-	-	3" LOWER LIFT - STRUCTURE
0010	566+25	-	571+50	STH 80	76	169	-	-	2" UPPER LIFT - STRUCTURE
0010	571+50	-	610+03	STH 80	779	1,246	-	-	2" MILL/RELAY
0010	610+03	-	654+11	STH 80	764	1,223	-	-	2" MILL/RELAY
0010	1+74 'A'	-	10+59 'A'	SLIP LANE	141	226	-	-	2" MILL/RELAY
0010	224+65	-	226+05	CAMP RD	29	46	-	-	
0010	254+89	-	256+05	SPRING VALLEY RD	27	43	-	-	
0010	308+09	-	309+45	CTH P (SOUTH LEG)	38	60	-	-	
0010	335+29	-	336+48	FARMERS RIDGE RD	28	45	-	-	
0010	337+88	-	339+15	BOOTH HOLLOW RD	28	45	-	-	
0010	387+73	-	388+92	CTH P (NORTH LEG)	21	34	-	-	
0010	390+32	-	391+63	BECKIUS RD	31	49	-	-	
0010	410+83	-	411+72	AIDE RD	13	21	-	-	
0010	533+86	-	535+60	BOOTH HOLLOW RD	34	54	-	-	
0010	563+57	-	564+38	DRY DOG RD	9	14	-	-	
0010	609+58	-	610+89	D ST	20	32	-	-	
0010	609+88	-	611+65	OLD 80 RD	27	43	-	-	
0010	BOP	-	EOP	VARIOUS PE'S	42	-	-	70	
0010	396+20	-	504+50	STH 80	-	-	404	-	SHOULDER LOWER LAYER
0010	504+50		566+25	STH 80	-	-	230	-	SHOULDER LOWER LAYER
0010	571+50	-	610+03	STH 80	-	-	143	-	SHOULDER LOWER LAYER
0010	BOP	-	EOP	UNDISTRIBUTED	-	-	255	-	DISTRESSED MILLING
				PROJECT TOTALS =	**10,444**	**16,941**	**1,032**	**70**	

HMA AND INCENTIVE ITEMS TABLE

DESIGN	STATION		LOCATION	MIXTURE USE	UNDERLYING SURFACE	BID ITEM	TONS	THICKNESS	QUALITY MANAGEMENT PROGRAM TO BE USED FOR: MIXTURE ACCEPTANCE	QUALITY MANAGEMENT PROGRAM TO BE USED FOR: DENSITY ACCEPTANCE
2" MILL 2" OVERLAY	BoP	396+20	2-12FT DRIVING LANES & TURN LANE	SURFACE LIFT	MILLED EXISTING HMA SURFACE	4 MT 58-28 S	6366	2.00	INCENTIVE AIR VOIDS HMA PAVEMENT 460.2010	INCENTIVE DENSITY PWL HMA PAVEMENT 460.2005
	BoP	396+20	3' PAVED SHOULDERS	SURFACE LIFT	MILLED EXISTING HMA SURFACE	4 MT 58-28 S	1475	2.00	INCENTIVE AIR VOIDS HMA PAVEMENT 460.2010	INCENTIVE DENSITY HMA PAVEMENT 460.2000
	396+20	566+25	2-11FT DRIVING LANES	SURFACE LIFT	MILLED EXISTING HMA SURFACE	4 MT 58-28 S	4655	2.00	INCENTIVE AIR VOIDS HMA PAVEMENT 460.2010	INCENTIVE DENSITY PWL HMA PAVEMENT 460.2005
	396+20	566+25	2' PAVED SHOULDERS	SURFACE LIFT	ASPHALTIC SURFACE	4 MT 58-28 S	840	2.00	INCENTIVE AIR VOIDS HMA PAVEMENT 460.2010	INCENTIVE DENSITY HMA PAVEMENT 460.2000
RECONSTRUCT	566+25	571+50	2-11FT DRIVING LANES	BINDER LIFT	BASE AGG	4 MT 58-28 S	132	3.00	INCENTIVE AIR VOIDS HMA PAVEMENT 460.2010	INCENTIVE DENSITY HMA PAVEMENT 460.2000
	566+25	571+50	VARIOUS WIDTH SHOULDERS	BINDER LIFT	BASE AGG	4 MT 58-28 S	36	3.00	INCENTIVE AIR VOIDS HMA PAVEMENT 460.2010	INCENTIVE DENSITY HMA PAVEMENT 460.2000
	566+25	571+50	2-11FT DRIVING LANES	SURFACE LIFT	BINDER HMA	4 MT 58-28 S	132	2.00	INCENTIVE AIR VOIDS HMA PAVEMENT 460.2010	INCENTIVE DENSITY PWL HMA PAVEMENT 460.2005
	566+25	571+50	VARIOUS WIDTH SHOULDERS	SURFACE LIFT	BINDER HMA	4 MT 58-28 S	36	2.00	INCENTIVE AIR VOIDS HMA PAVEMENT 460.2010	INCENTIVE DENSITY HMA PAVEMENT 460.2000
2" MILL 2" OVERLAY	571+50	610+03	2-11FT DRIVING LANES	SURFACE LIFT	MILLED EXISTING HMA SURFACE	4 MT 58-28 S	1055	2.00	INCENTIVE AIR VOIDS HMA PAVEMENT 460.2010	INCENTIVE DENSITY PWL HMA PAVEMENT 460.2005
	571+50	610+03	2' PAVED SHOULDERS	SURFACE LIFT	ASPHALTIC SURFACE	4 MT 58-28 S	191	2.00	INCENTIVE AIR VOIDS HMA PAVEMENT 460.2010	INCENTIVE DENSITY HMA PAVEMENT 460.2000
	610+03	EoP	2-11FT DRIVING LANES	SURFACE LIFT	MILLED EXISTING HMA SURFACE	4 MT 58-28 S	1222	2.00	INCENTIVE AIR VOIDS HMA PAVEMENT 460.2010	INCENTIVE DENSITY PWL HMA PAVEMENT 460.2005
	SLIP LANE		1-20FT DRIVING LANE	SURFACE LIFT	MILLED EXISTING HMA SURFACE	4 MT 58-28 S	225	2.00	INCENTIVE AIR VOIDS HMA PAVEMENT 460.2010	INCENTIVE DENSITY HMA PAVEMENT 460.2000

3

CONCRETE SURFACE DRAINS SUMMARY

CATEGORY	STATION TO STATION	LOCATION	CONCRETE PAVEMENT 6-INCH 415.0060 SY	DRILLED TIE BARS 416.0610 EACH	CONCRETE CURB & GUTTER 4-INCH SLOPED 36-INCH TYPE TBT 601.0588 LF	CONCRETE SURFACE DRAINS 602.3010 CY	RIPRAP MEDIUM 606.0200 CY	*** GEOTEXTILE TYPE HR 645.0120 SY	REMARKS
0010	568+04	LT	-	-	-	2	3	10	
0010	567+92 - 568+48	LT	-	-	56	-	-	-	
0010	568+48 - 568+58	LT	3	3	-	-	-	-	
0010	567+90	RT	-	-	-	2	3	10	
0010	567+78 - 568+48	RT	-	-	70	-	-	-	
0010	568+48 - 568+58	RT	3	3	-	-	-	-	
		PROJECT TOTAL =	**6**	**6**	**126**	**4**	**6**	**20**	

*** ITEM ALSO INCLUDED IN STRUCTURE PLANS

3

BEAM GUARD SUMMARY

CATEGORY	STATION TO STATION	LOCATION	REMOVING GUARDRAIL 204.0165 LF	MGS GUARDRAIL 3 614.2300 LF	MGS THRIE BEAM TRANSITION 614.2500 LF	MGS GUARDRAIL TERMINAL EAT 614.2610 EACH	REMARKS
0010	566+70 - 568+50	RT	193	87.5	39.4	1	
0010	567+32 - 568+50	LT	131	25	39.4	1	
0010	569+09 - 570+27	RT	131	25	39.4	1	
0010	569+09 - 570+89	LT	206	87.5	39.4	1	
		PROJECT TOTALS =	**661**	**225**	**157.6**	**4**	

EROSION CONTROL ITEMS

CATEGORY	STATION TO STATION	LOCATION	SALVAGED TOPSOIL 625.0500 SY	EROSION MAT CLASS I TYPE B 628.2004 SY	EROSION MAT URBAN CLASS I TYPE A 628.2006 SY	TURBIDITY BARRIERS 628.6005 SY	TEMPORARY DITCH CHECKS 628.7504 LF	FERTILIZER TYPE B 629.0210 CWT	SEEDING MIXTURE NO. 20 630.0120 LB	SEEDING MIXTURE NO. 40 630.0140 LB	SEEDING TEMPORARY 630.0200 LB	SEED WATER 630.0500 MGAL	REMARKS
0010	255+31 - 255+75	STH 80 LT	191	-	191	-	20	0.13	-	8.6	5.2	9	SPRING VALLEY PE
0010	565+71 - 568+59	STH 80 RT	500	500	-	109	10	0.32	22.5	-	13.5	23	T-BARRIER = 10' TALL
0010	566+21 - 568+59	STH 80 LT	417	-	417	-	10	0.27	-	18.8	11.3	19	
0010	569+00 - 571+38	STH 80 RT	393	393	-	113	20	0.25	17.7	-	10.6	18	T-BARRIER = 10' TALL
0010	569+00 - 571+88	STH 80 LT	387	387	-	-	20	0.25	17.4	-	10.5	18	
		UNDISTRIBUTED	167	127	40	-	10	0.11	8.4	1.5	4.1	8	
		PROJECT TOTALS =	**2,055**	**1,407**	**648**	**222**	**90**	**1.33**	**66.0**	**28.9**	**55.2**	**95**	

3

WATER

CATEGORY	LOCATION	624.0100 MGAL	REMARKS
0010	STH 80	40	BAD 1 1/4-INCH
	PROJECT TOTAL =	**40**	

SILT FENCE AND ROCK BAG SUMMARY

CATEGORY	STATION	TO STATION	LOCATION	SILT FENCE 628.1504 LF	SILT FENCE MAINTENANCE 628.1520 LF	ROCK BAGS 628.7570 EACH	REMARKS
0010	565+71 -	568+59	STH 80 RT	282	282	17	
0010	566+21 -	568+59	STH 80 LT	243	243	17	
0010	569+00 -	571+38	STH 80 RT	257	257	17	
0010	569+00 -	571+88	STH 80 LT	287	287	17	
0010	565+71 -	571+88	UNDISTRIBUTED	268	268	7	
			PROJECT TOTALS =	**1,337**	**1,337**	**75**	

3

SIGNING SUMMARY

CATEGORY	LOCATION	SIGN CODE	SIGN SIZE INCHES	POSTS WOOD 4X6-INCH X 12-FT 634.0612 EACH	POSTS WOOD 4X6-INCH X 16-FT 634.0616 EACH	SIGNS TYPE II REFLECTIVE F 637.2230 SF	MOVING SIGNS TYPE II 638.2102 EACH	REMOVING SIGNS TYPE II 638.2602 EACH	REMOVING SMALL SIGN SUPPORTS 638.3000 EACH	REMARKS
0010	PROJECT LENGTH	-	-	-	16	-	16	-	16	
0010	STH 80 LT	W5-52L	12x36	1	-	3	-	1	1	BRIDGE HASH MARKER SIGN
0010	STH 80 RT	W5-52R	12x36	1	-	3	-	1	1	BRIDGE HASH MARKER SIGN
0010	STH 80 LT	W5-52L	12x36	1	-	3	-	1	1	BRIDGE HASH MARKER SIGN
0010	STH 80 RT	W5-52R	12x36	1	-	3	-	1	1	BRIDGE HASH MARKER SIGN
	PROJECT TOTAL =			**4**	**16**	**12**	**16**	**4**	**20**	

MOBILIZATION EROSION CONTROL ITEMS

CATEGORY	LOCATION	MOBILIZATIONS EROSION CONTROL 628.1905 EACH	MOBILIZATIONS EMERGENCY EROSION CONTROL 628.1910 EACH	REMARKS
0010	PROJECT LENGTH	3	3	
	PROJECT TOTALS =	**3**	**3**	

***FOR INFORMATIONAL PURPOSES ONLY

TRAFFIC CONTROL COVERING SIGNS TYPE II

STAGE	# CYCLES	# SIGNS	EACH (CYCLES X SIGNS)
DETOUR	1	12	12

TRAFFIC CONTROL SUMMARY

CATEGORY	LOCATION	DURATION (DAYS)	TRAFFIC CONTROL DRUMS 643.0300 DAY	TRAFFIC CONTROL BARRICADES TYPE III 643.0420 DAY	TRAFFIC CONTROL WARNING LIGHTS TYPE A 643.0705 DAY	TRAFFIC CONTROL SIGNS 643.0900 DAY	*** TRAFFIC CONTROL COVERING SIGNS TYPE II 643.0920 EACH	TRAFFIC CONTROL SIGNS PCMS 643.1050 DAY	REMARKS
0010	STH 80 CLOSURE/DETOUR	80	-	3,600	6,560	27,840	12	14	
0010	UNDISTRIBUTED		100	-	-	-	-	-	
	PROJECT TOTALS =		**100**	**3,600**	**6,560**	**27,840**	**12**	**14**	

3

PAVEMENT MARKING LINE SUMMARY

CATEGORY	STATION	TO	STATION	LOCATION	MARKING LINE EPOXY 4-INCH YELLOW 646.1020 LF	MARKING LINE EPOXY 4-INCH WHITE 646.1020 LF	MARKING LINE GROOVED WET REF EPOXY 6-INCH YELLOW 646.2040 LF	MARKING LINE GROOVED WET REF EPOXY 6-INCH WHITE 646.2040 LF	MARKING LINE GROOVED WET REF EPOXY 10-INCH WHITE 646.4040 LF	MARKING STOP LINE EPOXY 18-INCH WHITE 646.6120 LF	TEMPORARY MARKING LINE PAINT 6-INCH YELLOW 643.3165 LF	REMARKS
0010	187+70	-	189+63	STH 80	-	-	242	388	-	-	242	SOLID LT/DASH RT
0010	189+63	-	191+77	STH 80	-	-	50	427	-	-	50	DASH
0010	191+77	-	200+87	STH 80	-	-	1,138	1,820	-	-	1,138	SOLID RT/DASH LT
0010	200+87	-	270+00	STH 80	-	-	13,827	13,483	-	-	13,827	DOUBLE YELLOW
0010	270+00	-	278+53	STH 80	-	-	1,067	1,707	-	-	1,067	SOLID LT/DASH RT
0010	278+53	-	287+00	STH 80	-	-	1,059	1,694	-	-	1,059	SOLID RT/DASH LT
0010	287+00	-	288+10	STH 80	-	-	221	221	-	-	221	DOUBLE YELLOW
0010	288+10	-	296+46	STH 80	-	-	1,046	1,673	-	-	1,046	SOLID LT/DASH RT
0010	296+46	-	301+68	STH 80	-	-	125	1,044	-	-	125	DASH
0010	301+68	-	310+11	STH 80	141	-	1,054	1,494	-	33	1,054	SOLID RT/DASH LT
0010	310+11	-	318+86	STH 80	-	-	1,751	1,751	-	-	1,751	DOUBLE YELLOW
0010	318+86	-	326+98	STH 80	-	-	1,015	1,624	-	-	1,015	SOLID LT/DASH RT
0010	326+98	-	329+69	STH 80	-	-	62.5	543	-	-	63	DASH
0010	329+69	-	338+18	STH 80	-	-	1,061	1,445	-	-	1,061	SOLID RT/DASH LT
0010	338+18	-	362+11	STH 80	-	-	4,787	4,710	-	-	4,787	DOUBLE YELLOW
0010	362+11	-	370+58	STH 80	-	-	1,059	1,695	-	-	1,059	SOLID LT/DASH RT
0010	370+58	-	378+81	STH 80	-	-	1,029	1,647	-	-	1,029	SOLID RT/DASH LT
0010	378+81	-	461+42	STH 80	112	28	16,522	16,205	185	32	16,522	DOUBLE YELLOW
0010	461+42	-	470+23	STH 80	-	-	1,587	1,764	-	-	1,587	SOLID LT/DASH RT
0010	470+23	-	478+69	STH 80	-	-	1,057	1,691	-	-	1,057	SOLID RT/DASH LT
0010	478+69		537+43	STH 80	-	-	11,749	11,546	-	-	11,749	DOUBLE YELLOW
0010	537+43	-	545+38	STH 80	-	-	994	1,591	-	-	994	SOLID LT/DASH RT
0010	545+38	-	553+51	STH 80	-	-	200	1,627	-	-	200	DASH
0010	553+51	-	561+01	STH 80	-	-	938	1,500	-	-	938	SOLID RT/DASH LT
0010	561+01	-	569+21	STH 80	-	-	1,641	1,559	-	-	1,641	DOUBLE YELLOW
0010	569+21	-	574+98	STH 80	-	-	722	1,154	-	-	722	SOLID LT/DASH RT
0010	574+98	-	582+14	STH 80	-	-	175	1,432	-	-	175	DASH
0010	582+14	-	588+99	STH 80	-	-	857	1,372	-	-	857	SOLID RT/DASH LT
0010	588+99	-	590+22	STH 80	-	-	25	245	-	-	25	DASH
0010	590+22	-	596+46	STH 80	-	-	781	1,250	-	-	781	SOLID LT/DASH RT
0010	596+46	-	641+79	STH 80	-	-	1,137.5	8,760	-	-	1,138	DASH
0010	641+79	-	647+17	STH 80	-	-	672	1,075	-	-	672	SOLID RT/DASH LT
0010	647+17	-	EOP	STH 80	-	-	1,364	1,001	186	41	1,364	DOUBLE YELLOW
0010	1+74 'A'	-	10+59 'A'	STH 133/80 SLIP LANE	-	-	640	894	175	-	-	
				PROJECT SUBTOTALS =	**253**	**28**	**71,655**	**92,032**	**546**	**106**	**71,015**	
				PROJECT TOTALS =	**281**		**163,687**		**546**	**106**	**71,015**	

3

LOCATING NO-PASSING ZONES

CATEGORY	STATION	TO	STATION	LOCATION	648.0100 MI	REMARKS
0010	187+70	-	654+11	STH 80	8.83	
				PROJECT TOTAL =	**8.83**	

CONSTRUCTION STAKING STRUCTURE LAYOUT (STRUCTURE) 01. B-25-194

CATEGORY	STATION	TO	STATION	LOCATION	650.6501 EACH
0020	565+80	-	568+59	STH 80 STRUCTURE	1
				PROJECT TOTAL =	**1**

3

3

CONSTRUCTION STAKING SUMMARY

CATEGORY	STATION	TO	STATION	LOCATION	CONSTRUCTION STAKING SUBGRADE 650.4500 LF	CONSTRUCTION STAKING BASE 650.5000 LF	CONSTRUCTION STAKING CURB GUTTER AND CURB & GUTTER 650.5500 LF	CONSTRUCTION STAKING RESURFACING REFERENCE 650.8000 LF	CONSTRUCTION STAKING SUPPLEMENTAL CONTROL (PROJECT) 01. 5939-00-63 650.9911 EACH	CONSTRUCTION STAKING SLOPE STAKES 650.9920 LF
0010	187+70	-	566+25	STH 80	-	-	-	37,855	1	-
0010	565+80	-	568+59	STH 80 STRUCTURE	279	279	126	-	-	279
0010	569+00	-	571+80	STH 80 STRUCTURE	280	280	-	-	-	280
0010	571+50	-	654+11	STH 80	-	-	-	8,261	-	-
0010	1+75	-	3+21	SPRING VALLEY DWY	146	146	-	-	-	146
				PROJECT TOTALS =	**705**	**705**	**126**	**46,116**	**1**	**705**

SAWING ASPHALT

CATEGORY	STATION	TO	STATION	LOCATION	690.0150 LF	REMARKS
0010	566+25	-	571+50	STH 80	44	RECONSTRUCTION
0010	BOP	-	EOP	STH 80	360	DRIVEWAYS
				PROJECT TOTAL =	**404**	

PUBLIC LAND SURVEY MONUMENT VERIFY AND RESET

CATEGORY	STATION	OFFSET	LOCATION	680.0100 EACH	REMARKS
0010	198+80	1.05' LT	STH 80 CL	1	SECTION CORNER 7-1-067
0010	630+32	0.00'	STH 80 CL	1	SECTION CORNER 8-1-045
			PROJECT TOTALS =	**2**	

INSTALLING AND MAINTAINING BIRD DETERRENT SYSTEM (STATION) 01. 568+80

CATEGORY	STATION	TO	STATION	LOCATION	999.2000.S EACH
0010	565+80	-	568+59	STH 80 STRUCTURE	1
				PROJECT TOTAL =	**1**

RESIN BINDER HIGH FRICTION SURFACE TREATMENT

CATEGORY	STATION	TO	STATION	LOCATION	SPV.0180.02 SY	REMARKS
0030	407+14	-	418+89	STH 80 CL	2,677	MAINLINE
				PROJECT TOTAL =	**2,677**	

STATE OF WISCONSIN
DEPARTMENT OF TRANSPORTATION
TRANSPORTATION PROJECT PLAT TITLE SHEET
5939-00-23
COBB - AVOCA
MORREY CREEK TRIBUTARY
STH 80
IOWA

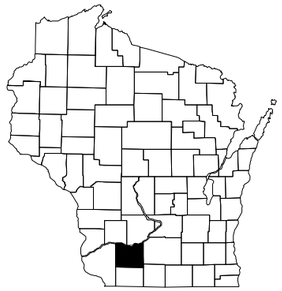

CONVENTIONAL SYMBOLS

SECTION LINE
QUARTER LINE
SIXTEENTH LINE
NEW REFERENCE LINE
NEW R/W LINE
EXISTING R/W OR HE LINE
PROPERTY LINE
LOT, TIE & OTHER MINOR LINES
SLOPE INTERCEPT
CORPORATE LIMITS
UNDERGROUND FACILITY (COMMUNICATIONS, ELECTRIC, ETC)
NEW R/W (FEE OR HE) (HATCHING VARIES BY OWNER)
TEMPORARY LIMITED EASEMENT AREA
EASEMENT AREA (PERMANENT LIMITED OR RESTRICTED DEVELOPMENT)
TRANSMISSION STRUCTURES
BUILDING
TO BE REMOVED
BRIDGE
CULVERT

SECTION CORNER SYMBOL
SECTION CORNER MONUMENT
GEODETIC SURVEY MONUMENT
SIXTEENTH CORNER MONUMENT
SIGN
OFF-PREMISE SIGN
R/W MONUMENT (TO BE SET)
NON-MONUMENTED R/W POINT
FOUND IRON PIN (1-INCH UNLESS NOTED)
PARCEL NUMBER
UTILITY NUMBER
PARALLEL OFFSETS

	COMPENSABLE	NON-COMPENSABLE
ELECTRIC POLE		
TELEPHONE POLE		
PEDESTAL (LABEL TYPE) (TV, TEL, ELEC, ETC.)		

ACCESS RESTRICTED BY ACQUISITION
NO ACCESS (BY STATUTORY AUTHORITY)
ACCESS RESTRICTED (BY PREVIOUS PROJECT OR CONTROL)
NO ACCESS (NEW HIGHWAY)

CONVENTIONAL ABBREVIATIONS

ACCESS RIGHTS	AR	POINT OF COMPOUND CURVE	PCC
ACRES	AC	POINT OF INTERSECTION	PI
AHEAD	AH	PROPERTY LINE	PL
ALUMINUM	ALUM	RECORD VALUE	(R)
AND OTHERS	ET AL	RECORDED AS	(100')
BACK	BK	REEL / IMAGE	R/I
BLOCK	BLK	REFERENCE LINE	R/L
CENTERLINE	C/L	REMAINING	REM
CERTIFIED SURVEY MAP	CSM	RESTRICTIVE DEVELOPMENT EASEMENT	RDE
CONCRETE	CONC	RIGHT	RT
COUNTY	CO	RIGHT OF WAY	R/W
COUNTY TRUNK HIGHWAY	CTH	SECTION	SEC
DISTANCE	DIST	SEPTIC VENT	SEPV
CORNER	COR	SQUARE FEET	SF
DOCUMENT NUMBER	DOC	STATE TRUNK HIGHWAY	STH
EASEMENT	EASE	STATION	STA
EXISTING	EX	TELEPHONE PEDESTAL	TP
GAS VALVE	GV	TEMPORARY LIMITED EASEMENT	TLE
GRID NORTH	GN	TRANSPORTATION PROJECT PLAT	TPP
HIGHWAY EASEMENT	HE	UNITED STATES HIGHWAY	USH
IDENTIFICATION	ID	VOLUME	V
LAND CONTRACT	LC		
LEFT	LT		
MEASURED VALUE	(M)		
MONUMENT	MON		
NATIONAL GEODETIC SURVEY	NGS		
NUMBER	NO		
OUTLOT	OL		
PAGE	P		
POINT OF TANGENCY	PT		
PERMANENT LIMITED EASEMENT	PLE		
POINT OF BEGINNING	POB		
POINT OF CURVATURE	PC		

CURVE DATA

LONG CHORD	LCH
LONG CHORD BEARING	LCB
RADIUS	R
DEGREE OF CURVE	D
CENTRAL ANGLE	Δ/DELTA
LENGTH OF CURVE	L
TANGENT	T
DIRECTION AHEAD	DA
DIRECTION BACK	DB

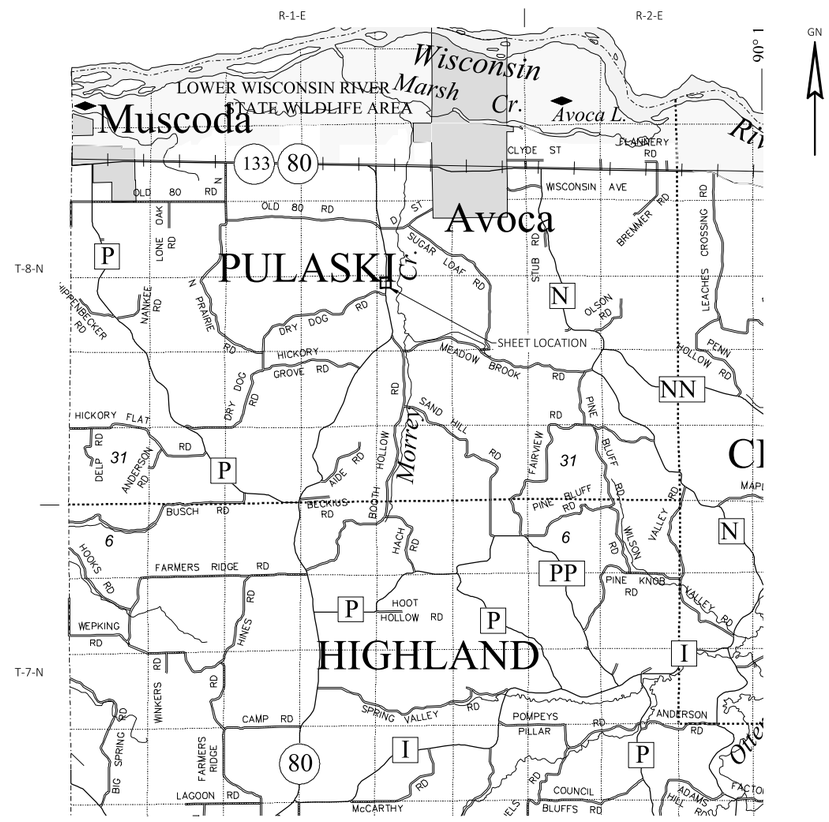

CONVENTIONAL UTILITY SYMBOLS

WATER — W —
GAS — G —
TELEPHONE — T —
OVERHEAD TRANSMISSION LINES — OH —
ELECTRIC — E —
CABLE TELEVISION — TV —
FIBER OPTIC — FO —
SANITARY SEWER — SAN —
STORM SEWER — SS —
ELECTRIC TOWER

LAYOUT
SCALE 0 — 1 MI.

THE NOTES,CONVENTIONAL SIGNS, AND ABBREVIATIONS ARE ASSOCIATED WITH EACH TRANSPORTATION PROJECT PLAT FOR PROJECT 5939-00-23

NOTES:

POSITIONS SHOWN ON THIS PLAT ARE WISCONSIN COORDINATE REFERENCE SYSTEM COORDINATES (WISCRS), IOWA COUNTY, NAD83(2011), IN U.S. SURVEY FEET. VALUES ARE GRID COORDINATES, GRID BEARINGS, AND GRID DISTANCES. GRID DISTANCES MAY BE USED AS GROUND DISTANCES.

ALL NEW RIGHT-OF-WAY MONUMENTS WILL BE TYPE 2 (TYPICALLY ¾" X 24" IRON REBARS), UNLESS OTHERWISE NOTED, AND WILL BE PLACED PRIOR TO THE COMPLETION OF THE PROJECT.

ALL RIGHT-OF-WAY LINES DEPICTED IN THE NON-ACQUISITION AREAS ARE INTENDED TO RE-ESTABLISH EXISTING RIGHT-OF-WAY LINES AS DETERMINED FROM PREVIOUS PROJECTS, OTHER RECORDED DOCUMENTS, OR FROM CENTERLINE OF EXISTING PAVEMENTS.

RIGHT-OF-WAY BOUNDARIES ARE DEFINED WITH COURSES OF THE PERIMETER OF THE HIGHWAY LANDS REFERENCED TO THE U.S. PUBLIC LAND SURVEY SYSTEM OR OTHER "SURVEYS" OF PUBLIC RECORD.

DIMENSIONING FOR THE NEW RIGHT-OF-WAY IS MEASURED ALONG AND PERPENDICULAR TO THE NEW REFERENCE LINES.

A TEMPORARY LIMITED EASEMENT (TLE) IS A RIGHT FOR CONSTRUCTION PURPOSES, AS DEFINED HEREIN, INCLUDING THE RIGHT TO OPERATE NECESSARY EQUIPMENT THEREON, THE RIGHT OF INGRESS AND EGRESS, AS LONG AS REQUIRED FOR SUCH PUBLIC PURPOSE, INCLUDING THE RIGHT TO PRESERVE, PROTECT, REMOVE, OR PLANT THEREON ANY VEGETATION THAT THE HIGHWAY AUTHORITIES MAY DEEM DESIRABLE. ALL (TLEs) ON THIS PLAT EXPIRE AT THE COMPLETION OF THE CONSTRUCTION PROJECT FOR WHICH THIS INSTRUMENT IS GIVEN.

A PERMANENT LIMITED EASEMENT (PLE) IS A RIGHT FOR CONSTRUCTION AND MAINTENANCE PURPOSES, AS DEFINED HEREIN, INCLUDING THE RIGHT TO OPERATE NECESSARY EQUIPMENT THEREON AND THE RIGHT OF INGRESS AND EGRESS, AS LONG AS REQUIRED FOR SUCH PUBLIC PURPOSE, INCLUDING THE RIGHT TO PRESERVE, PROTECT, REMOVE, OR PLANT THEREON ANY VEGETATION THAT THE HIGHWAY AUTHORITIES MAY DEEM DESIRABLE, BUT WITHOUT PREJUDICE TO THE OWNER'S RIGHTS TO MAKE OR CONSTRUCT IMPROVEMENTS ON SAID LANDS OR TO FLATTEN THE SLOPES, PROVIDING SAID ACTIVITIES WILL NOT IMPAIR OR OTHERWISE ADVERSELY AFFECT THE HIGHWAY FACILITIES.

AN EASEMENT FOR HIGHWAY PURPOSES (HE), AS LONG AS SO USED, INCLUDING THE RIGHT TO PRESERVE, PROTECT, REMOVE, OR PLANT THEREON ANY VEGETATION THAT THE HIGHWAY AUTHORITIES MAY DEEM DESIRABLE.

PROPERTY LINES SHOWN ON THIS PLAT ARE DRAWN FROM DATA DERIVED FROM MAPS AND DOCUMENTS OF PUBLIC RECORD AND/OR EXISTING OCCUPATIONAL LINES. THIS PLAT MAY NOT BE A TRUE REPRESENTATION OF EXISTING PROPERTY LINES, EXCLUDING RIGHT-OF-WAY, AND SHOULD NOT BE USED AS A SUBSTITUTE FOR AN ACCURATE FIELD SURVEY.

FOR THE CURRENT ACCESS/DRIVEWAY INFORMATION, CONTACT THE PLANNING UNIT OF THE WISCONSIN DEPARTMENT OF TRANSPORTATION OFFICE IN MADISON

PARCEL AND UTILITY IDENTIFICATION NUMBERS MAY NOT POINT TO ALL AREAS OF ACQUISITION, AS NOTED ON THE TPP DETAIL PAGES.

INFORMATION FOR THE BASIS OF EXISTING HIGHWAY RIGHT-OF-WAY POINTS OF REFERENCE AND ACCESS CONTROL ARE LISTED ON THE TPP DETAIL PAGES.

PROJECT NUMBER 5939-00-23 - 4. 01
SHEET 2 OF 2

FILE NAME : W:\7701_07\CAD\! XXXX-XX-XX\SHEETSPLAN\040101_RP REV.DWG
LAYOUT NAME: TPP-TITLE
PLOT DATE : 09/13/2023 PLOT BY : MCKANE, RYAN PLOT NAME :

384741

TRANSPORTATION PROJECT PLAT NO: 5939-00-23 - 4.01

THAT PART OF THE NORTHWEST QUARTER OF THE NORTHWEST QUARTER OF SECTION 23, TOWNSHIP 8 NORTH, RANGE 1 EAST, TOWN OF PULASKI, IOWA COUNTY, WISCONSIN.

RELOCATION ORDER STH 80 COBB - AVOCA MORREY CREEK TRIBUTARY IOWA COUNTY

TO PROPERLY ESTABLISH, LAY OUT, WIDEN, ENLARGE, EXTEND, CONSTRUCT, RECONSTRUCT, IMPROVE, OR MAINTAIN A PORTION OF THE HIGHWAY DESIGNATED ABOVE, THE STATE OF WISCONSIN DEPARTMENT OF TRANSPORTATION DEEMS IT NECESSARY TO RELOCATE OR CHANGE SAID HIGHWAY AND ACQUIRE CERTAIN LANDS AND INTERESTS OR RIGHTS IN LANDS FOR THE ABOVE PROJECT.

TO EFFECT THIS CHANGE, PURSUANT TO AUTHORITY GRANTED UNDER SECTION 84.02 (3), 84.09, AND 84.30, WISCONSIN STATUTES, THE DEPARTMENT OF TRANSPORTATION HEREBY ORDERS THAT:
1. THAT PORTION OF SAID HIGHWAY AS SHOWN ON THIS PLAT IS LAID OUT AND ESTABLISHED TO THE LINES AND WIDTHS AS SO SHOWN FOR THE ABOVE PROJECT
2. THE LANDS OR INTERESTS OR RIGHTS IN LANDS AS SHOWN ON THIS PLAT ARE REQUIRED BY THE DEPARTMENT FOR THE ABOVE PROJECT AND SHALL BE ACQUIRED IN THE NAME OF THE STATE OF WISCONSIN, PURSUANT TO THE PROVISIONS OF SECTION 84.09 (1) OR (2), WISCONSIN STATUTES.

NOTES:

POSITIONS SHOWN ON THIS PLAT ARE WISCONSIN COORDINATE REFERENCE SYSTEM COORDINATES (WISCRS), IOWA COUNTY, NAD83(2011), IN U.S. SURVEY FEET. VALUES ARE GRID COORDINATES, GRID BEARINGS, AND GRID DISTANCES. GRID DISTANCES MAY BE USED AS GROUND DISTANCES.

ALL NEW RIGHT-OF-WAY MONUMENTS WILL BE TYPE 2 (TYPICALLY 3/4" X 24" IRON REBARS), UNLESS OTHERWISE NOTED, AND WILL BE PLACED PRIOR TO THE COMPLETION OF THE PROJECT.

FOR THE CURRENT ACCESS/DRIVEWAY INFORMATION, CONTACT THE PLANNING UNIT OF THE WISCONSIN DEPARTMENT OF TRANSPORTATION OFFICE IN MADISON.

EXISTING HIGHWAY RIGHT-OF-WAY SHOWN HEREIN IS BASED ON THE FOLLOWING POINTS OF REFERENCE: EXISTING HIGHWAY RIGHT-OF-WAY FOR STH 80 AND DRY DOG ROAD ESTABLISHED FROM PREVIOUS PROJECTS 9348, SURVEYED CENTERLINE AND FOUND MONUMENTS.

PROJECT REFERENCE LINE IS NOT COINCIDENT WITH EXISTING CENTERLINE OF STH 80.

FOR ADDITIONAL INFORMATION REFER TO THE TITLE SHEET, RECORDED IN THE OFFICE OF THE REGISTER OF DEEDS, IN IOWA COUNTY, AS SHEET 2 OF 2 OF THIS DOCUMENT.

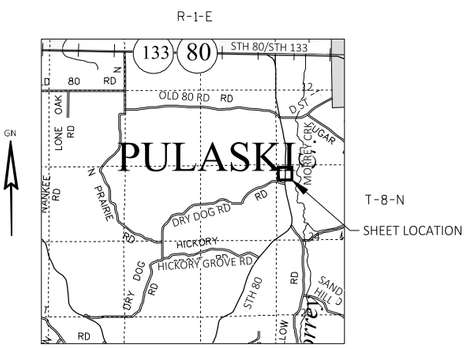

LAYOUT
SCALE 0 1 MI.

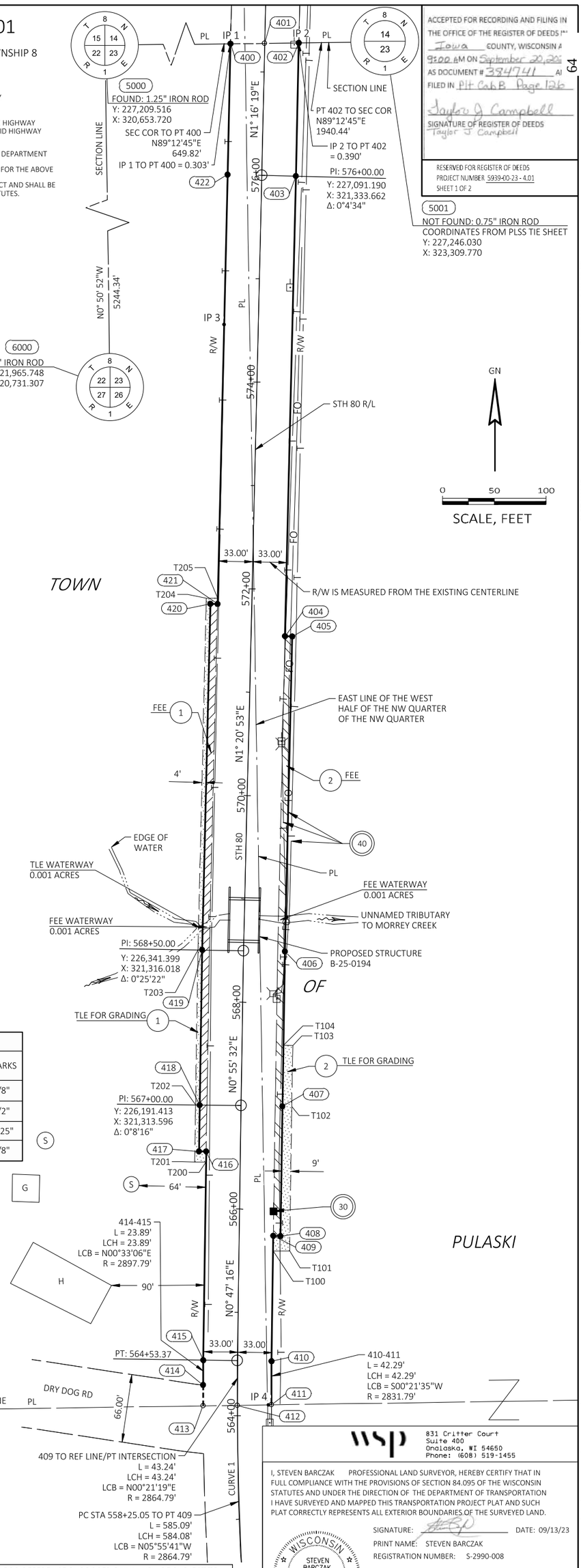

STATION & OFFSET TABLE		
POINT	STATION	OFFSET
400	577+26.56	33.00' LT
401	577+27.74	0.00' RT
402	577+28.93	33.00' RT
403	576+00.00	33.00' RT
404	571+54.93	33.00' RT
405	571+54.94	40.00' RT
406	568+49.85	40.00' RT
407	566+99.95	40.00' RT
408	565+74.47	40.00' RT
409	565+74.46	33.00' RT
410	564+53.37	33.00' RT
411	564+10.59	33.00' RT
412	564+10.14	0.00' RT
413	564+09.70	33.00' LT
414	564+29.76	33.00' LT
415	564+53.37	33.00' LT
416	566+55.21	33.00' LT
417	566+55.21	40.00' LT
418	566+99.99	40.00' LT
419	568+50.00	40.00' LT
420	571+84.63	40.00' LT
421	571+84.62	33.00' LT
422	576+00.02	33.00' LT

STATION & OFFSET TABLE		
POINT	STATION	OFFSET
T100	565+60.00	33.00' RT
T101	565+60.01	49.00' RT
T102	566+99.94	49.00' RT
T103	567+59.00	49.00' RT
T104	567+59.00	40.00' RT

STATION & OFFSET TABLE		
POINT	STATION	OFFSET
T200	566+45.00	33.00' LT
T201	566+45.00	44.00' LT
T202	567+00.00	44.00' LT
T203	568+50.00	44.00' LT
T204	571+89.99	44.00' LT
T205	571+90.00	33.00' LT

COURSE TABLE				
POINT	TO	POINT	COURSE	DISTANCE
400	-	401	N89° 12' 45"E	33.02'
401	-	402	N89° 12' 45"E	33.02'
402	-	403	S01° 16' 19"W	128.95'
403	-	404	S01° 20' 53"W	445.09'
404	-	405	S88° 41' 37"E	7.00'
405	-	406	S01° 20' 53"W	304.79'
406	-	407	S00° 55' 32"W	149.81'
407	-	408	S00° 47' 16"W	125.48'
408	-	409	N89° 17' 24"W	7.00'
409	-	410	S00° 47' 16"W	121.08'
410	-	411	SEE CURVE DATA	
411	-	412	S89° 09' 08"W	33.00'
412	-	413	S89° 09' 08"W	33.00'
413	-	414	N00° 06' 53"E	20.29'
414	-	415	SEE CURVE DATA	
415	-	416	N00° 47' 16"E	201.84'
416	-	417	N89° 11' 47"W	7.00'
417	-	418	N00° 47' 16"E	44.83'
418	-	419	N00° 55' 32"E	150.20'
419	-	420	N01° 20' 53"E	334.77'
420	-	421	S88° 37' 44"E	7.00'
421	-	422	N01° 20' 53"E	415.35'
422	-	400	N01° 16' 19"E	126.53'

NW-NW
SECTION 23
T8N, R1E

IP STATION & OFFSET TABLE					
POINT	STATION	OFFSET	Y COORDS	X COORDS	REMARKS
IP 1	577+26.45	33.28' LT	227218.344	321303.197	FIR 5/8"
IP 2	577+29.31	33.10' RT	227219.731	321369.627	FIR 1/2"
IP 3	574+55.00	33.04' LT	226947.011	321297.223	FIR 1.25"
IP 4	564+10.55	30.10' RT	225902.027	321340.037	FIR 7/8"

CURVE 1 (STH 80 R/L)
PI STA = 561+40.48
Y = 225629.417
X = 321305.869
DELTA = 12°34'00" RT
D = 02°00'00"
T = 315.43'
L = 628.33'
R = 2864.79'
PC STA = 558+25.05
Y = 225320.630
X = 321370.258
PT STA = 564+53.37
Y = 225944.816
X = 321310.205
DB = N11°46'44"W

SW-NW
SECTION 23
T8N, R1E

UTILITY INTERESTS REQUIRED		
UTILITY NUMBER	OWNER(S)	INTEREST REQUIRED
30	ALLIANT ENERGY	RELEASE OF RIGHTS
40	BRIGHTSPEED OF WESTERN WISCONSIN, LLC	RELEASE OF RIGHTS

UTILITY EASEMENT TABLE			
UTILITY NUMBER	PARCEL	RECORDING INFORMATION	NAME
30	2	DOC 37375, V127, P215	ALLIANT ENERGY
40	2	PRESCRIPTIVE RIGHTS	BRIGHTSPEED OF WESTERN WISCONSIN, LLC

SCHEDULE OF LANDS & INTERESTS REQUIRED		OWNER'S NAMES ARE SHOWN FOR REFERENCE PURPOSES ONLY AND ARE SUBJECT TO CHANGE PRIOR TO THE TRANSFER OF LAND INTERESTS TO THE DEPARTMENT				
PARCEL NUMBER	OWNER(S)	INTERESTS REQUIRED	R/W NEW ACRES	R/W EXISTING	R/W TOTAL ACRES	TLE ACRES
1	BENJAMIN J. MINTER & MARY C. MINTER REVOCABLE TRUST	FEE & TLE	0.085	1.195	1.280	0.053
2	TONY J. BOMKAMP & SHANNON L. BOMKAMP	FEE & TLE	0.093	0.802	0.895	0.043

ACCEPTED FOR RECORDING AND FILING IN THE OFFICE OF THE REGISTER OF DEEDS IN Iowa COUNTY, WISCONSIN AT 9:00 AM ON September 20, 2023 AS DOCUMENT # 384741 AND FILED IN Plt Cab B Page 126
Taylor J Campbell
SIGNATURE OF REGISTER OF DEEDS
Taylor J Campbell

RESERVED FOR REGISTER OF DEEDS
PROJECT NUMBER 5939-00-23 - 4.01
SHEET 1 OF 2

64

wsp
831 Critter Court
Suite 400
Onalaska, WI 54650
Phone: (608) 519-1455

I, STEVEN BARCZAK PROFESSIONAL LAND SURVEYOR, HEREBY CERTIFY THAT IN FULL COMPLIANCE WITH THE PROVISIONS OF SECTION 84.095 OF THE WISCONSIN STATUTES AND UNDER THE DIRECTION OF THE DEPARTMENT OF TRANSPORTATION I HAVE SURVEYED AND MAPPED THIS TRANSPORTATION PROJECT PLAT AND SUCH PLAT CORRECTLY REPRESENTS ALL EXTERIOR BOUNDARIES OF THE SURVEYED LAND.

WISCONSIN STEVEN BARCZAK S-2990 CHICAGO IL LAND SURVEYOR

SIGNATURE: DATE: 09/13/23
PRINT NAME: STEVEN BARCZAK
REGISTRATION NUMBER: S-2990-008

THIS PLAT AND RELOCATION ORDER ARE APPROVED FOR THE WISCONSIN DEPARTMENT OF TRANSPORTATION SOUTHWEST REGION-MADISON OFFICE
SIGNATURE: Cory Schlagel DATE: 09/13/23
PRINT NAME: CORY SCHLAGEL

PLOT SCALE : 1 IN:50 FT
PLOT NAME :
PLOT BY : McKane, Ryan
PLOT DATE : 9/14/2023 7:10 AM
PLOT DATE :
FILE NAME : W:\1701_07\CAD\ XXXX-XX-XX\SHEETSPLAN\040101_RP REV.DWG
APPRAISAL PLAT DATE : 9/13/2023

NOTES:
THIS EXHIBIT IS A GRAPHIC REPRESENTATION AND IS FOR REFERENCE PURPOSES ONLY.
REFER TO THE CONVEYANCE DOCUMENT FOR PARCEL RELATED DETAILS.

THE PURPOSE OF THE TLE IS FOR DRIVEWAY RECONSTRUCTION.

R/W PROJECT NUMBER: 5939-00-23	EXHIBIT NUMBER: 1

TLE ACQUISITION EXHIBIT
COBB - AVOCA
MORREY CREEK TRIBUTARY
STH 80 IOWA COUNTY

PART OF THE SW 1/4 OF THE NW 1/4, OF SECTION 15, T 7 N, R 1 E, TOWN OF HIGHLAND, IOWA COUNTY, WISCONSIN

4

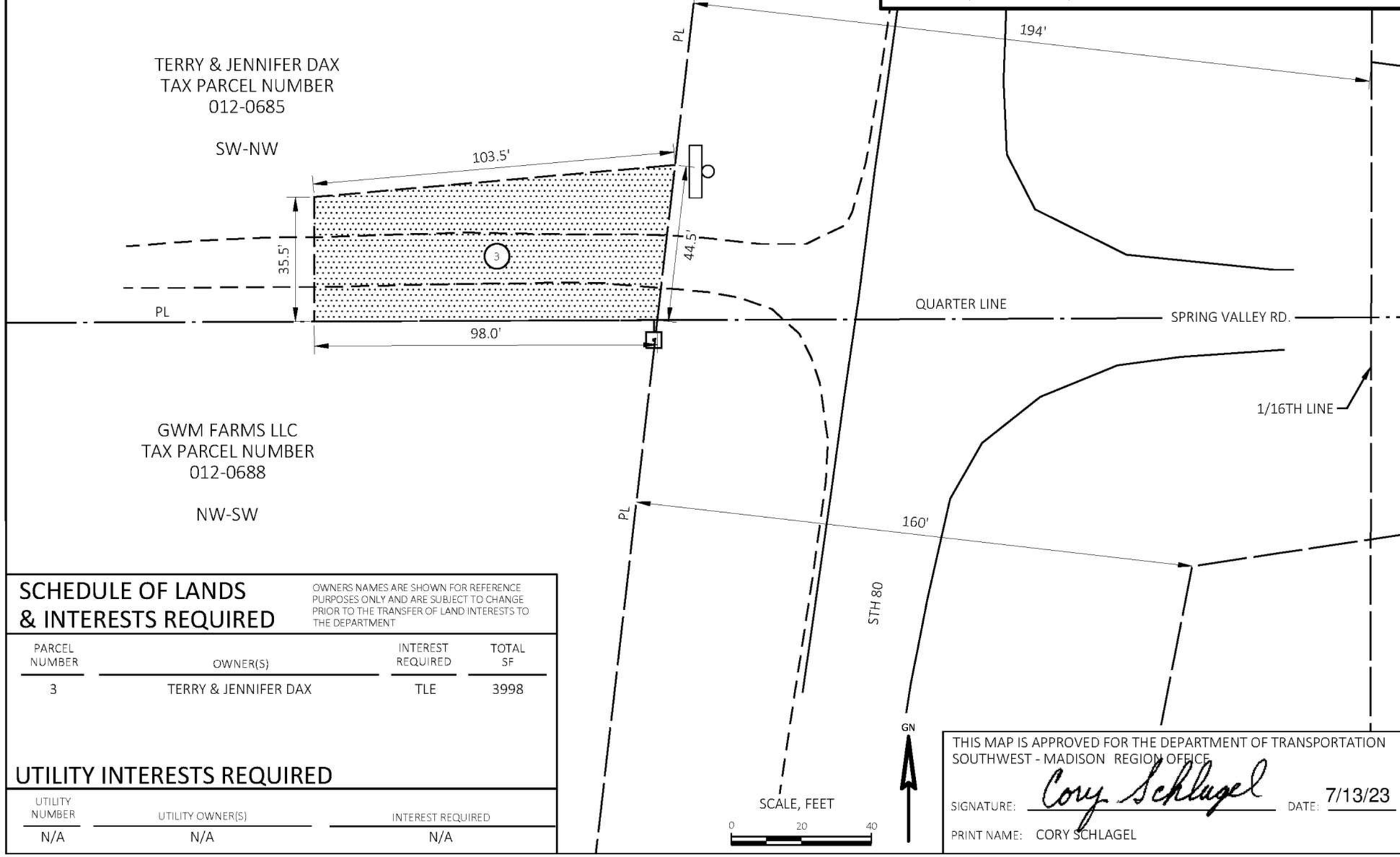

SCHEDULE OF LANDS & INTERESTS REQUIRED

OWNERS NAMES ARE SHOWN FOR REFERENCE PURPOSES ONLY AND ARE SUBJECT TO CHANGE PRIOR TO THE TRANSFER OF LAND INTERESTS TO THE DEPARTMENT

PARCEL NUMBER	OWNER(S)	INTEREST REQUIRED	TOTAL SF
3	TERRY & JENNIFER DAX	TLE	3998

UTILITY INTERESTS REQUIRED

UTILITY NUMBER	UTILITY OWNER(S)	INTEREST REQUIRED
N/A	N/A	N/A

THIS MAP IS APPROVED FOR THE DEPARTMENT OF TRANSPORTATION
SOUTHWEST - MADISON REGION OFFICE

SIGNATURE: Cory Schlagel DATE: 7/13/23

PRINT NAME: CORY SCHLAGEL

FILE NAME : TLE EXHIBIT.DWG PLOT DATE : 7/10/2023 3:57 PM R/W PROJECT: 5939-00-23

NOTES:
SEE SDD "CONCRETE SURFACE DRAINS FLUME TYPE AT STRUCTURES" FOR DETAILS. FINAL PLACEMENT OF THE CONCRETE SURFACE DRAIN FLUMES MUST MAINTAIN THE MINIMUM POST SEPARATION DISTANCES IN THE STANDARD DETAIL.

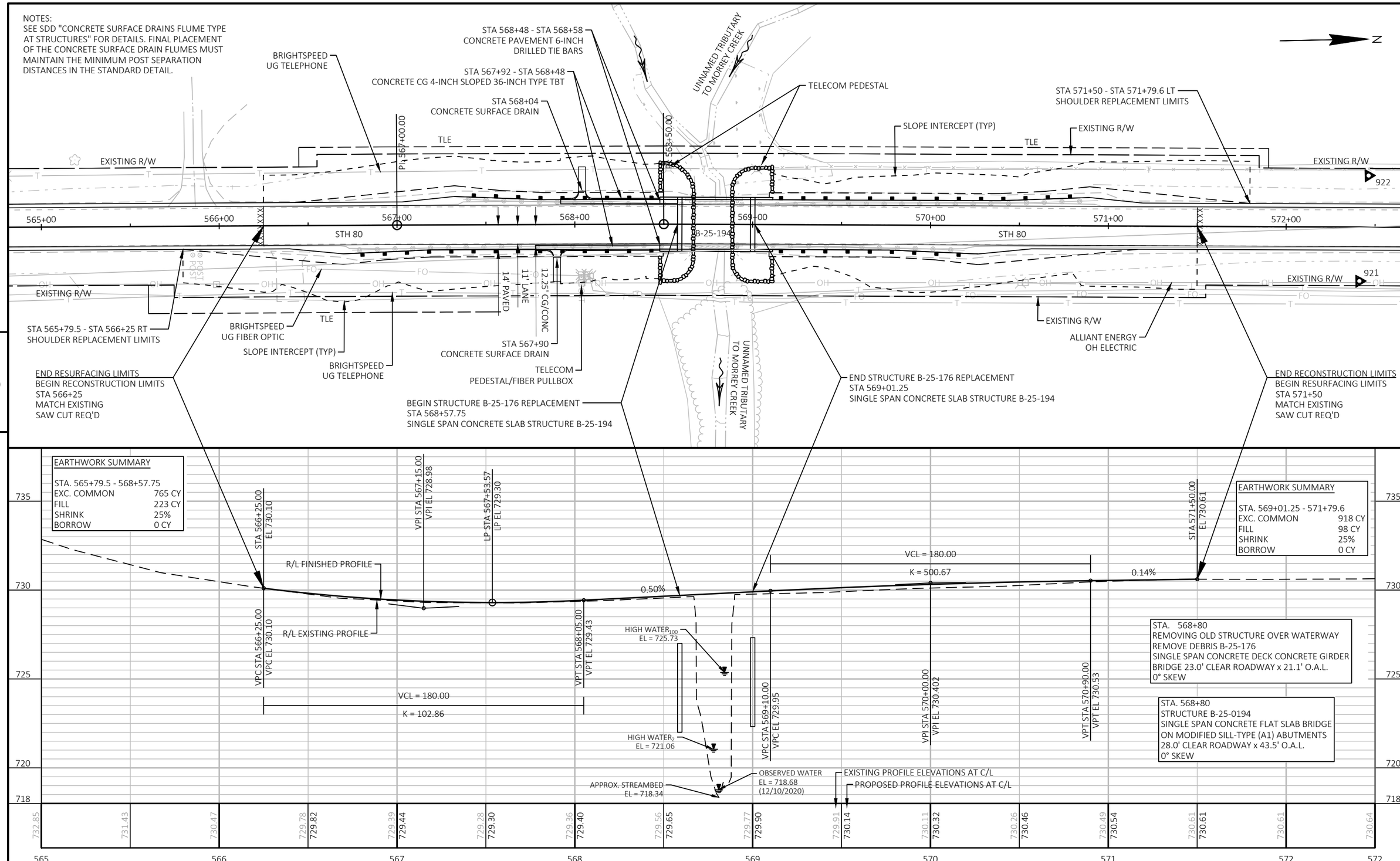

PROJECT NO: 5939-00-63	HWY: STH 80	COUNTY: IOWA	PLAN AND PROFILE: STH 80	SHEET 66	E

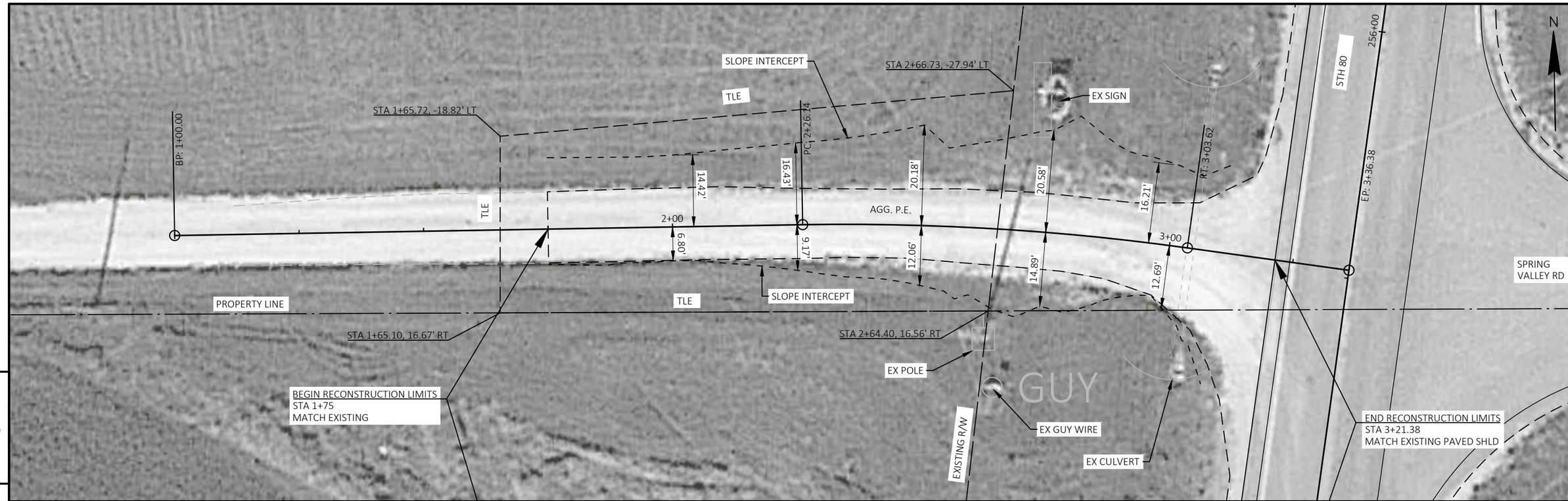

5

5

EARTHWORK SUMMARY

STA. 1+75 - 3+10	
EXC. COMMON	152 CY
FILL	0 CY
SHRINK	25%
BORROW	0 CY

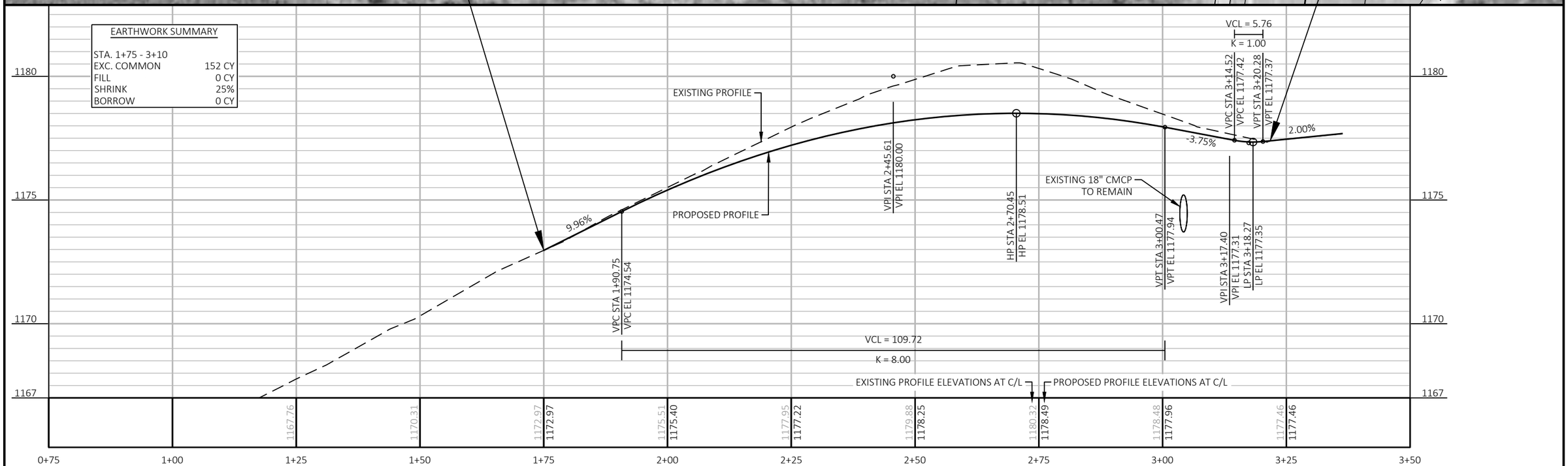

PROJECT NO: 5939-00-63	HWY: STH 80	COUNTY: IOWA	PLAN AND PROFILE: DRIVEWAY (SPRING VALLEY ROAD)	SHEET 67	E

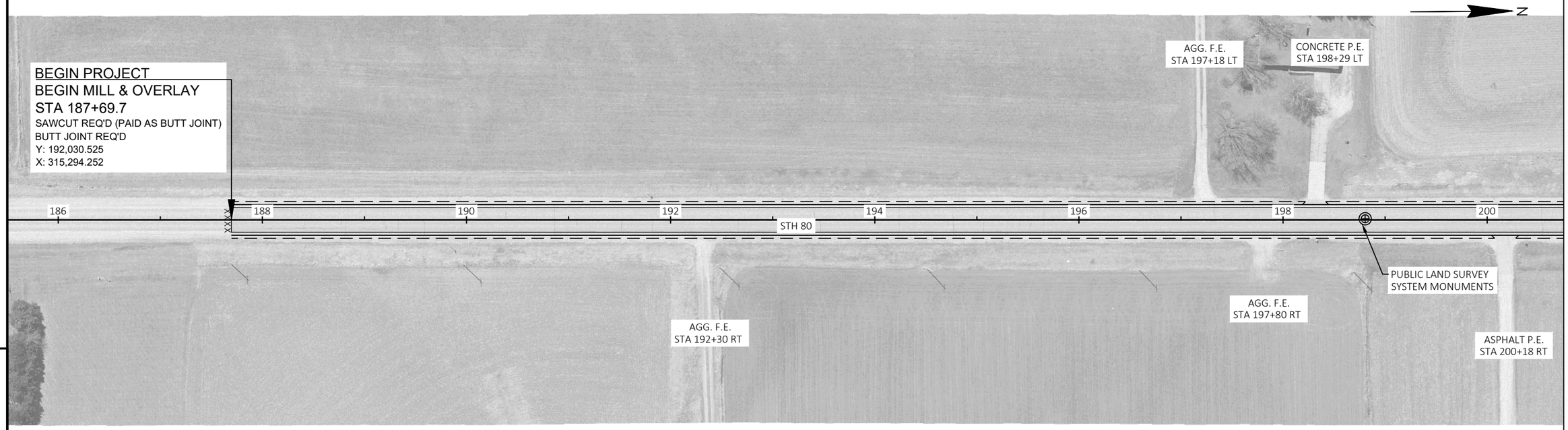

5

5

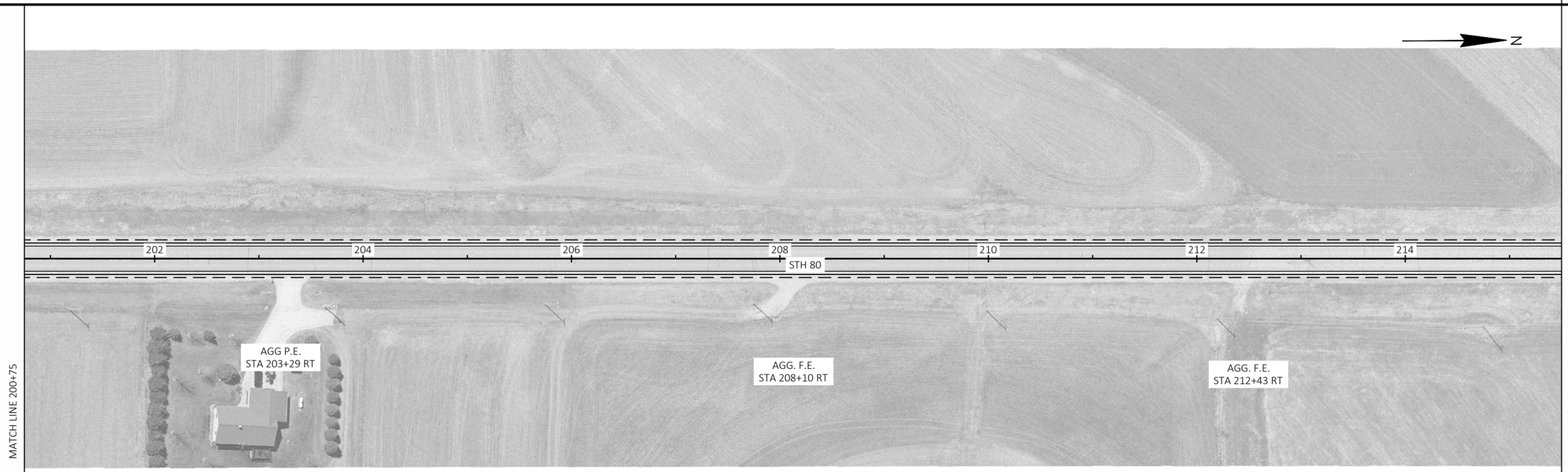

PROJECT NO: 5939-00-63	HWY: STH 80	COUNTY: IOWA	PLAN	SHEET 68	E

5

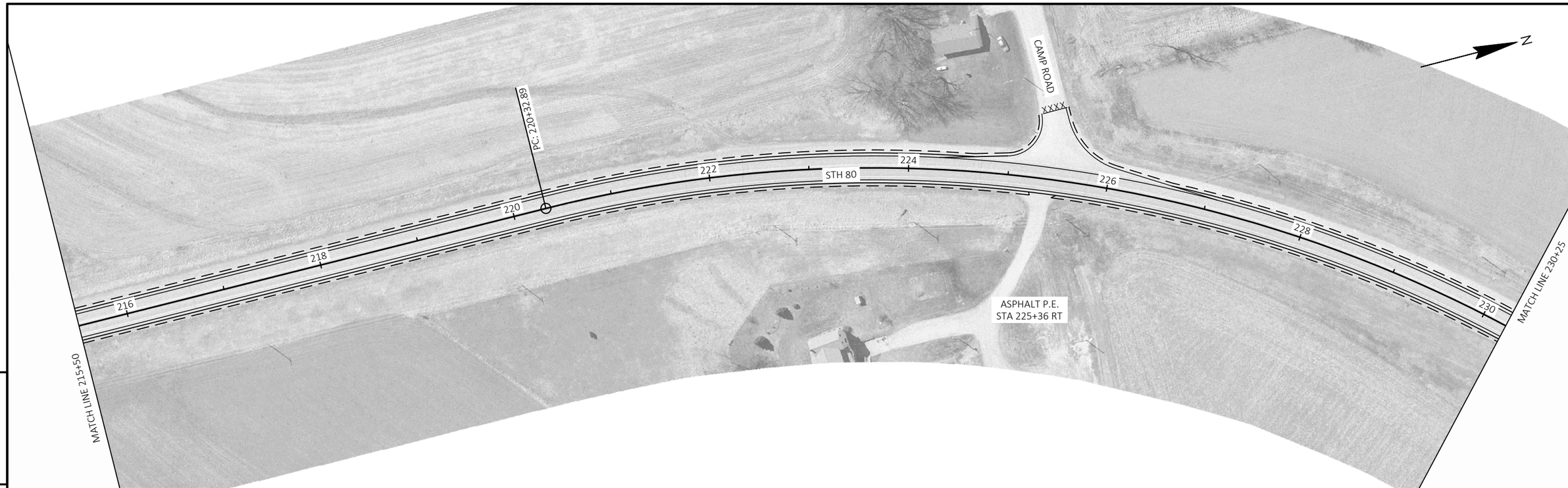

5

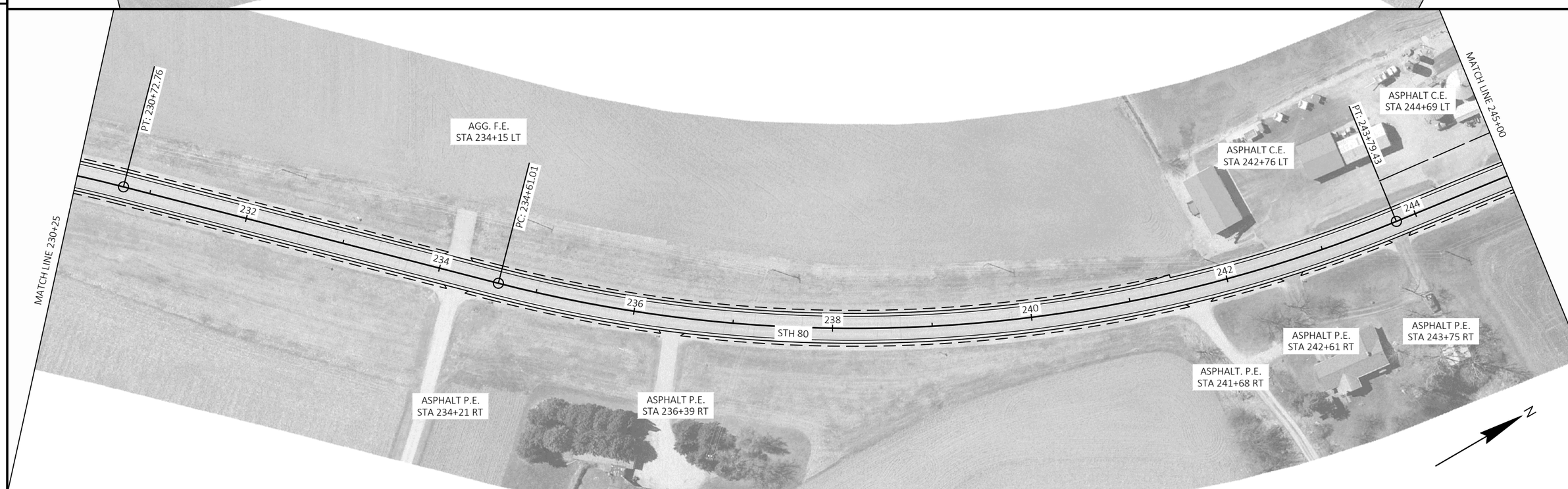

PROJECT NO: 5939-00-63	HWY: STH 80	COUNTY: IOWA	PLAN	SHEET 69	E

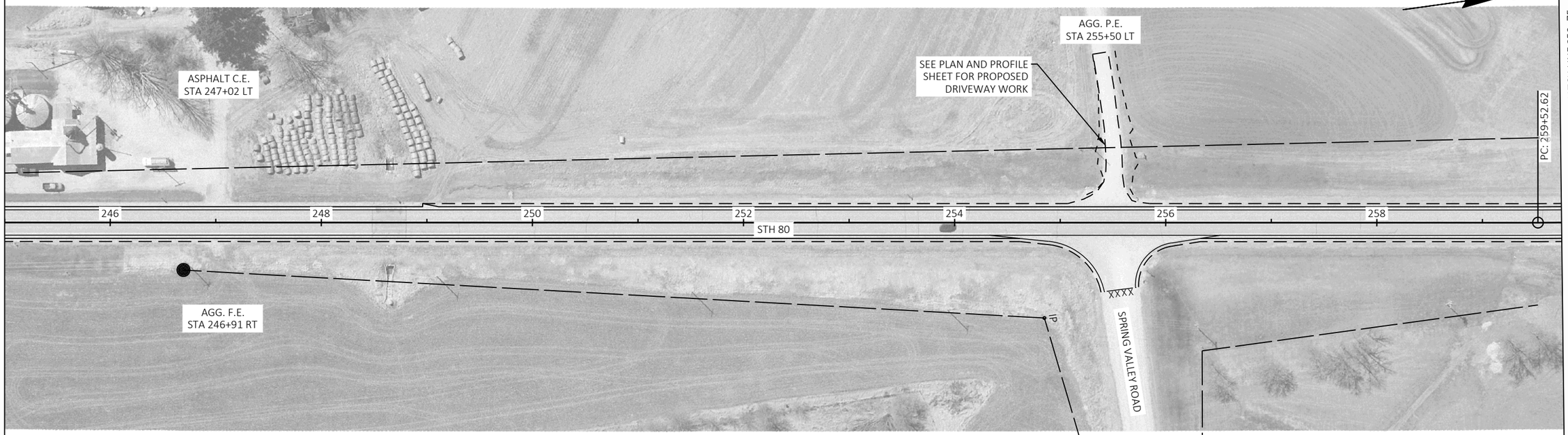

5

5

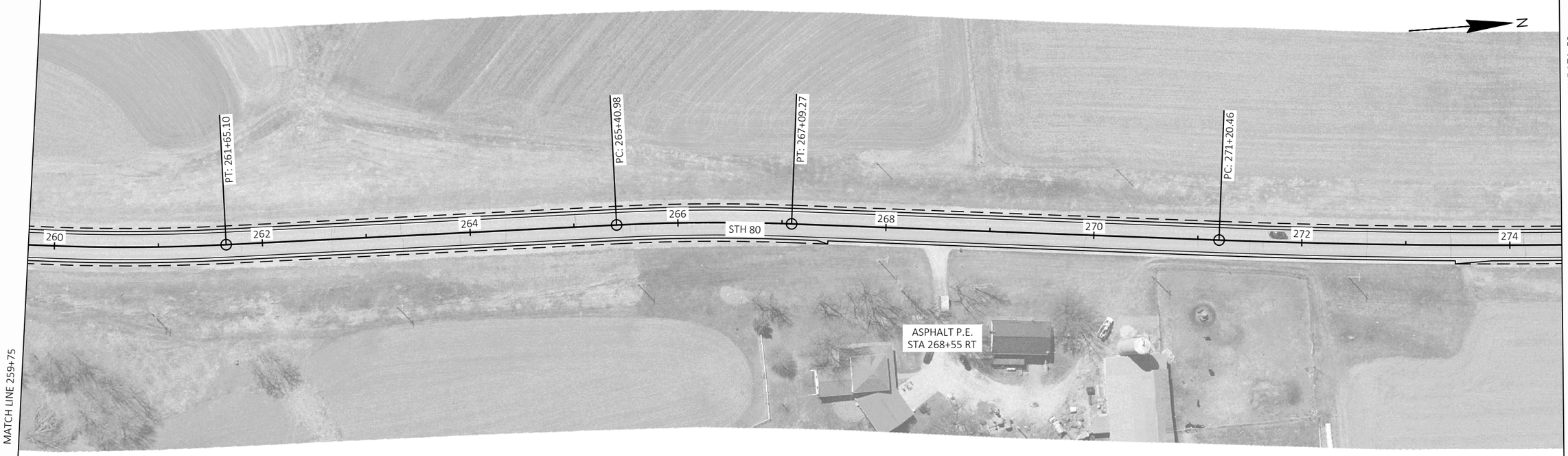

PROJECT NO: 5939-00-63	HWY: STH 80	COUNTY: IOWA	PLAN	SHEET 70	E

FILE NAME : W:\7701_07\CAD\! XXXX-XX-XX\SHEETSPLAN\050201-PN.DWG
LAYOUT NAME - 03
PLOT DATE : 4/15/2025 7:52 PM
PLOT BY : SEBESTA, MAXWELL
PLOT NAME :
PLOT SCALE : 1 IN:100 FT
WISDOT/CADDS SHEET 44

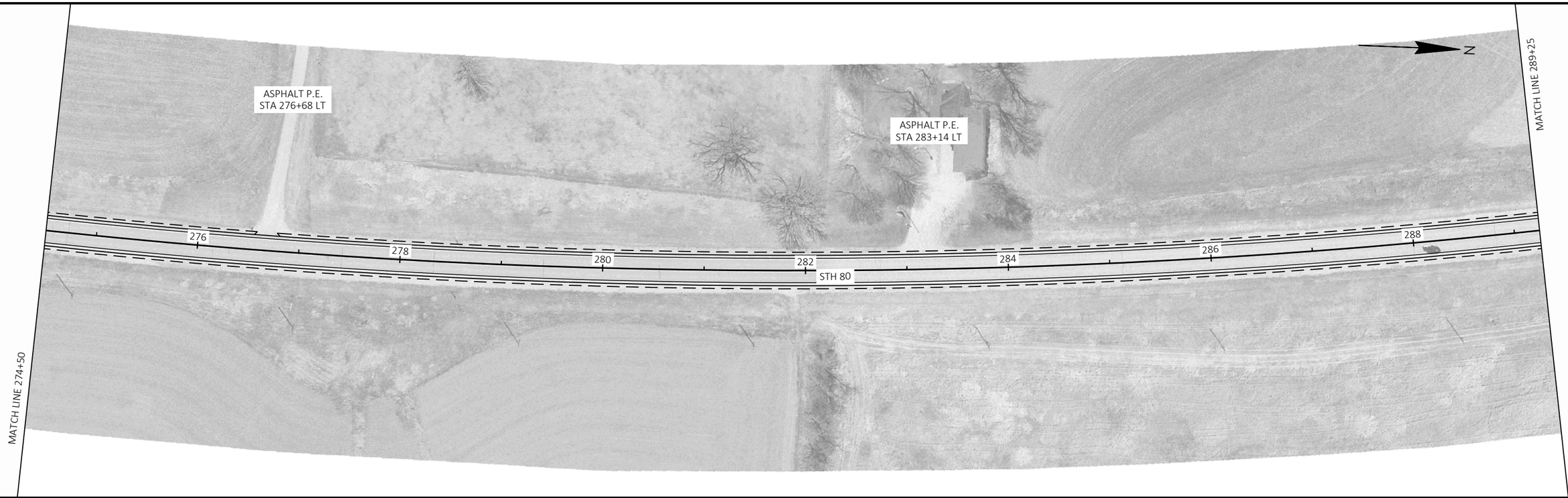

5

5

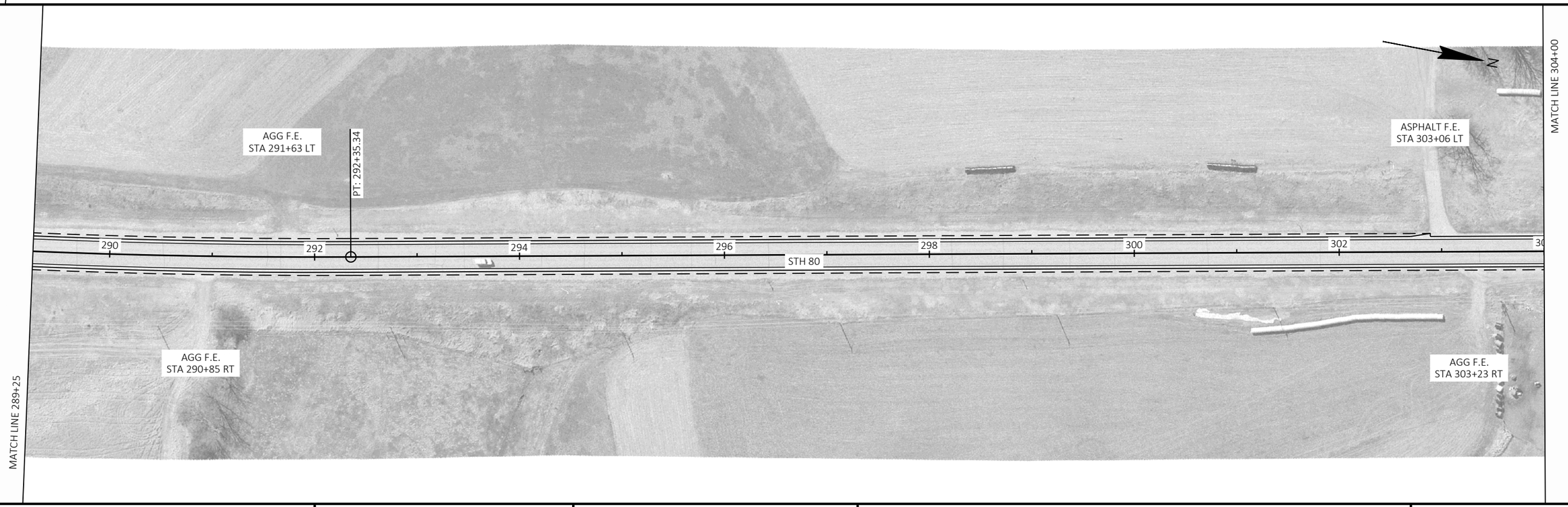

PROJECT NO: 5939-00-63	HWY: STH 80	COUNTY: IOWA	PLAN	SHEET 71	E

FILE NAME : W:\7701_07\CAD\! XXXX-XX-XX\SHEETSPLAN\050201-PN.DWG
LAYOUT NAME - 04
PLOT DATE : 4/15/2025 7:53 PM
PLOT BY : SEBESTA, MAXWELL
PLOT NAME :
PLOT SCALE : 1 IN:100 FT
WISDOT/CADDS SHEET 44

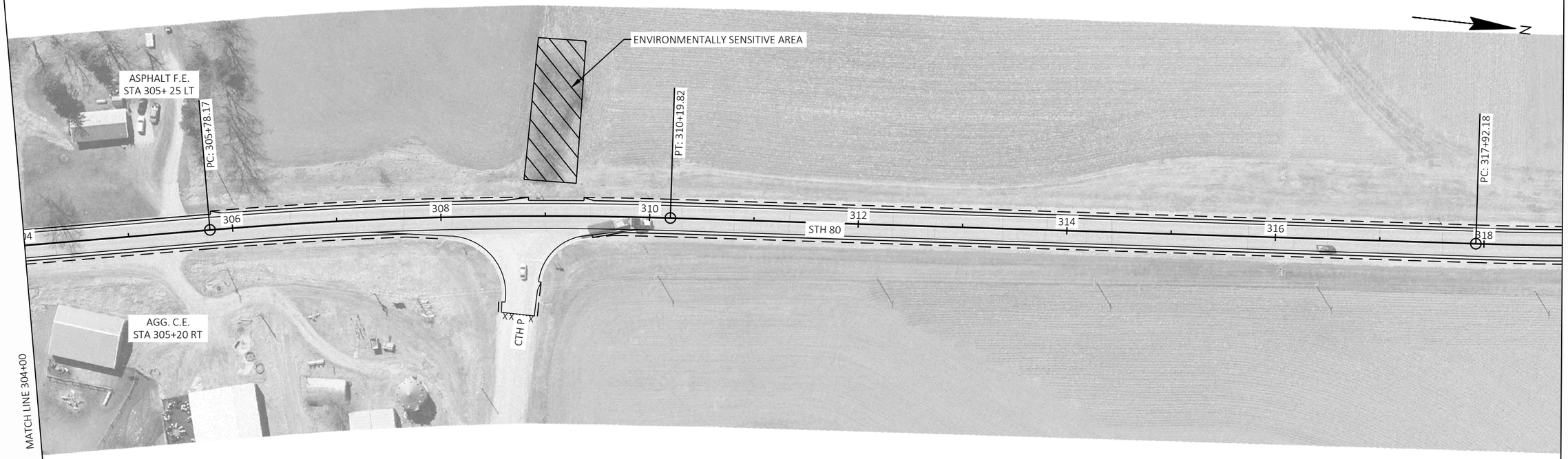

5

5

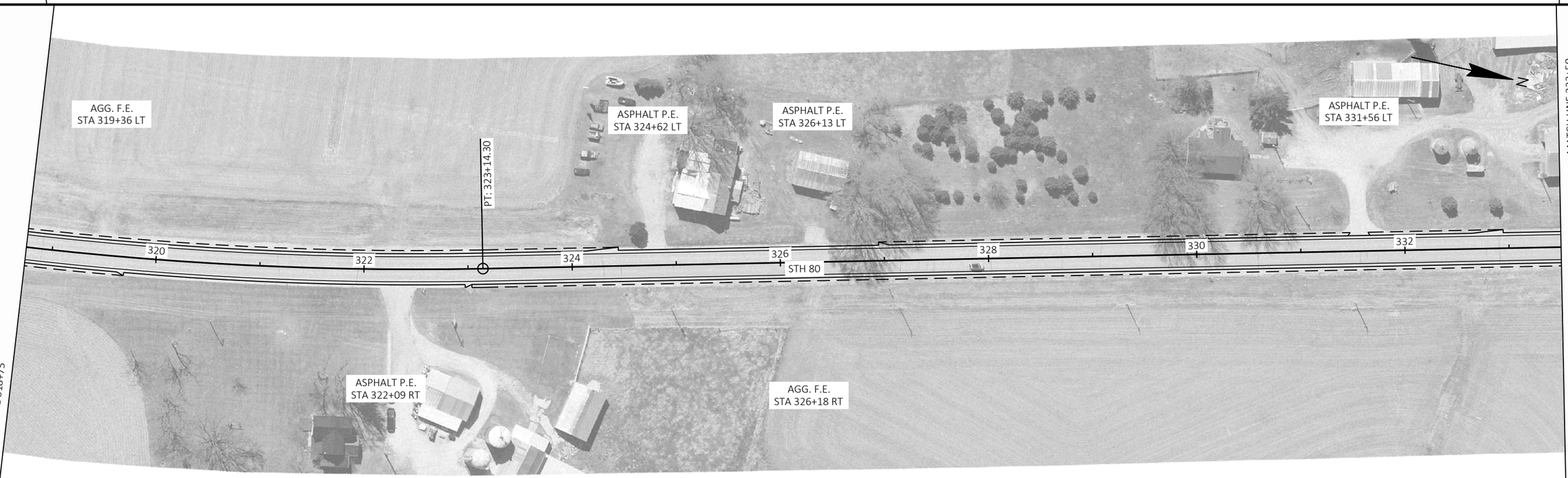

PROJECT NO: 5939-00-63	HWY: STH 80	COUNTY: IOWA	PLAN	SHEET 72	E

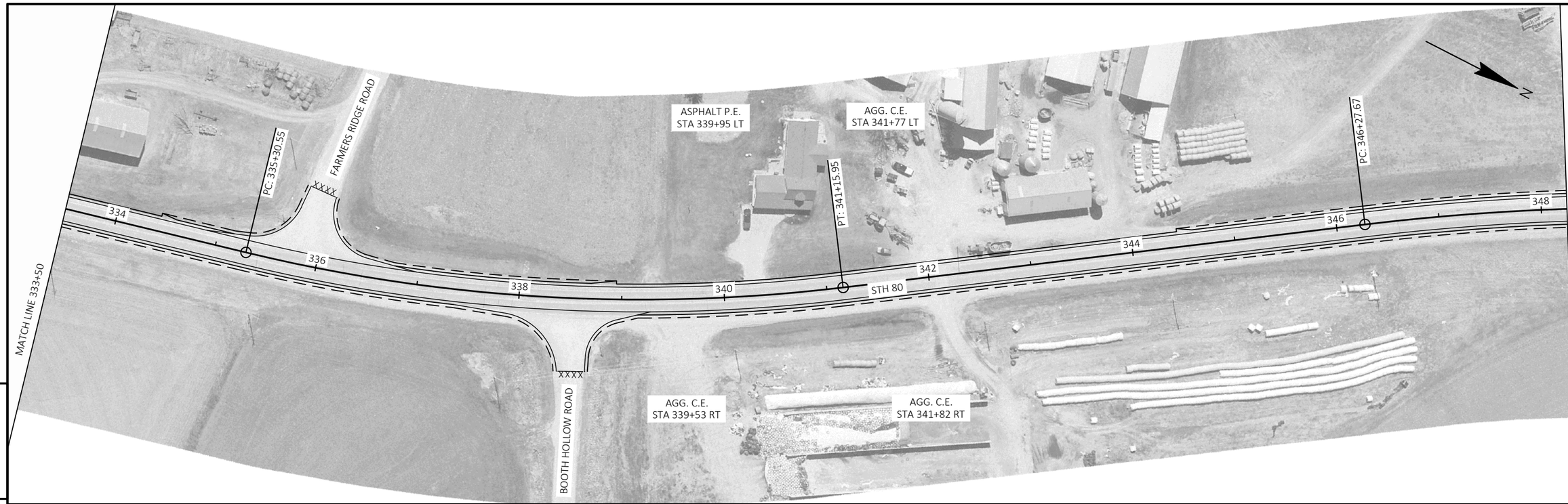

5

5

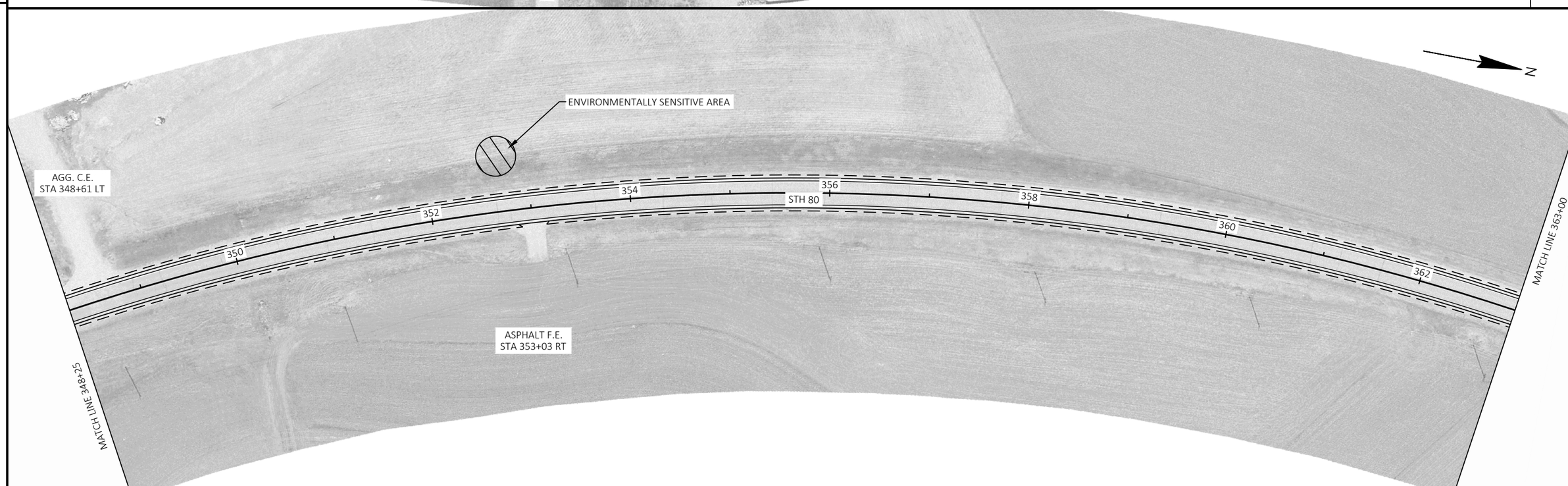

PROJECT NO: 5939-00-63	HWY: STH 80	COUNTY: IOWA	PLAN	SHEET 73	E

FILE NAME : W:\7701_07\CAD\! XXXX-XX-XX\SHEETSPLAN\050201-PN.DWG
LAYOUT NAME - 06
PLOT DATE : 4/15/2025 7:54 PM
PLOT BY : SEBESTA, MAXWELL
PLOT NAME :
PLOT SCALE : 1 IN:100 FT
WISDOT/CADDS SHEET 44

5

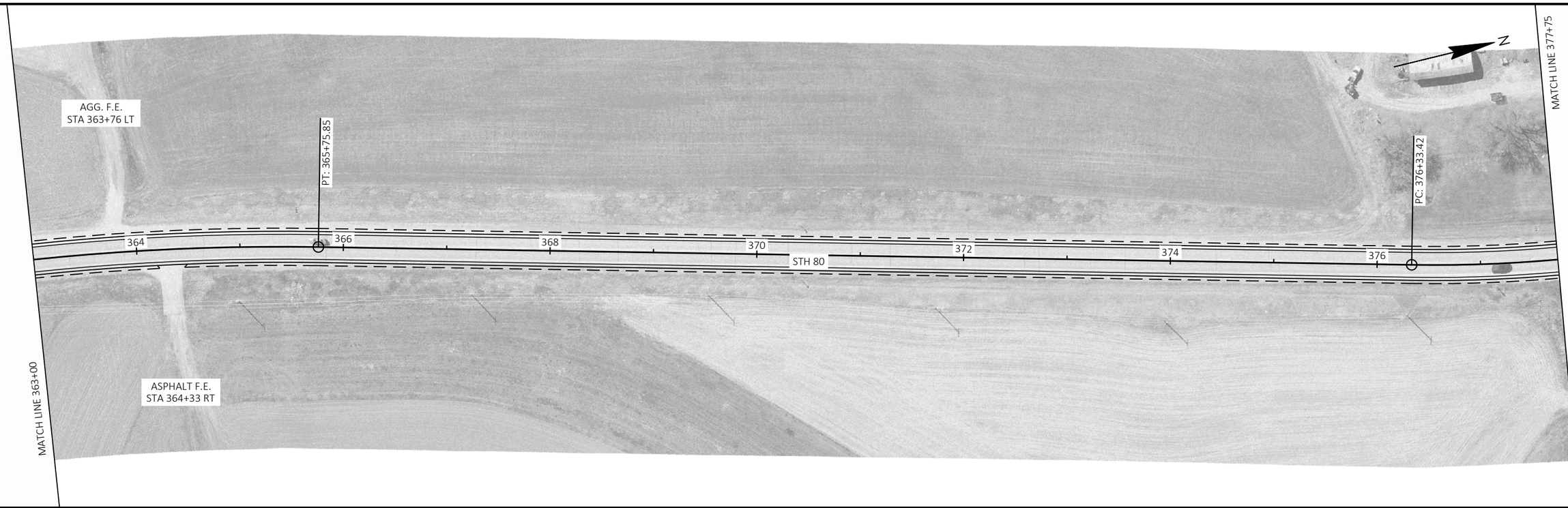

5

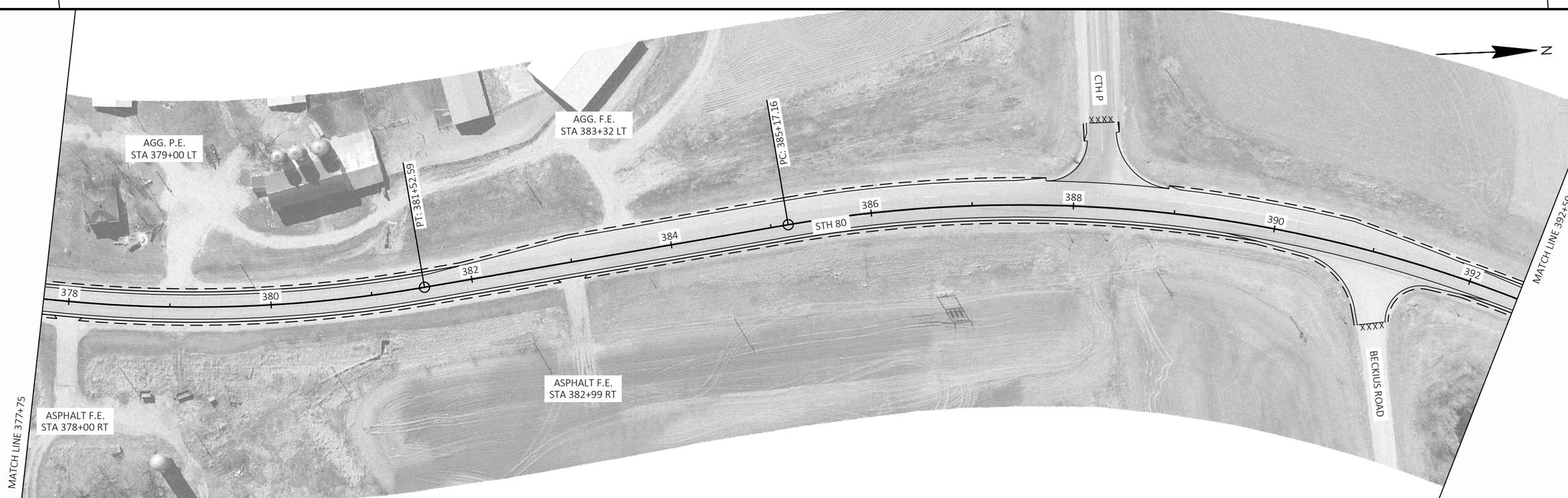

PROJECT NO: 5939-00-63	HWY: STH 80	COUNTY: IOWA	PLAN	SHEET 74	E

FILE NAME : W:\7701_07\CAD\! XXXX-XX-XX\SHEETSPLAN\050201-PN.DWG
LAYOUT NAME - 07
PLOT DATE : 4/15/2025 7:54 PM
PLOT BY : SEBESTA, MAXWELL
PLOT NAME :
PLOT SCALE : 1 IN:100 FT
WISDOT/CADDS SHEET 44

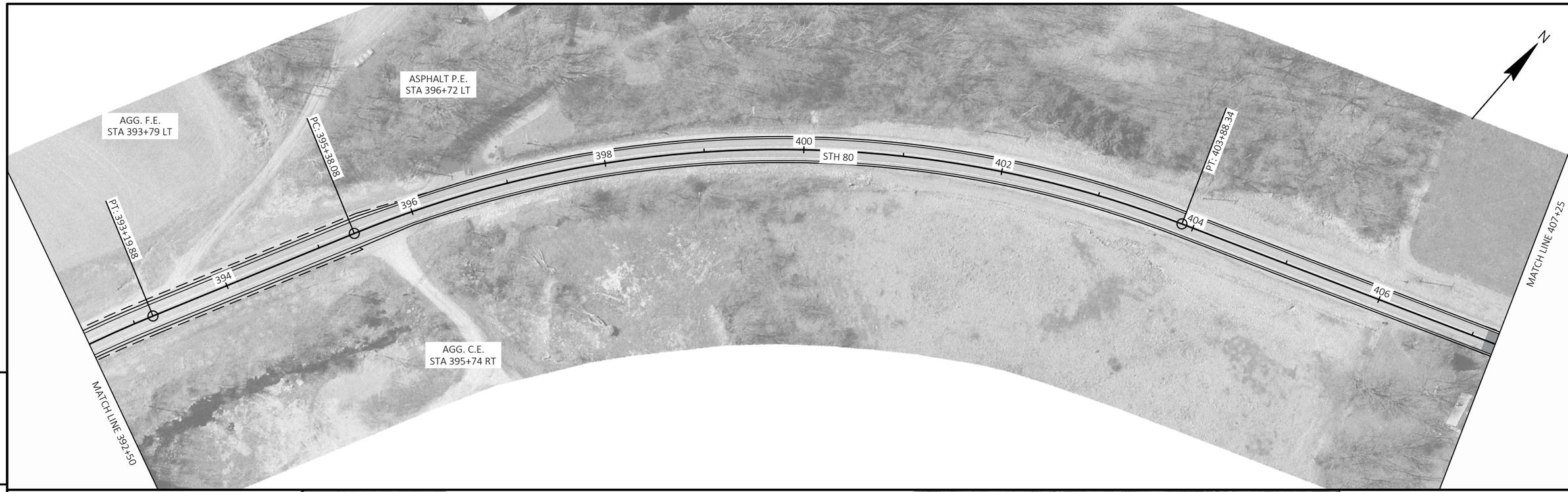

5

5

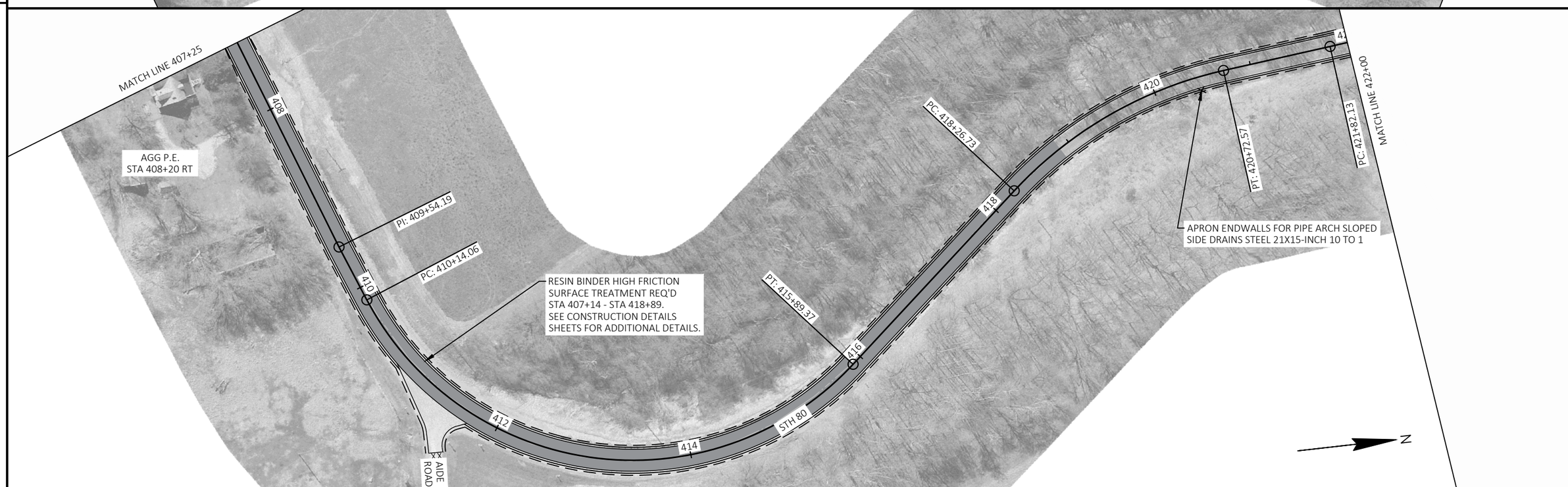

PROJECT NO: 5939-00-63	HWY: STH 80	COUNTY: IOWA	PLAN	SHEET 75	E

FILE NAME : W:\7701_07\CAD\! XXXX-XX-XX\SHEETSPLAN\050201-PN.DWG
LAYOUT NAME - 08
PLOT DATE : 4/15/2025 7:54 PM
PLOT BY : SEBESTA, MAXWELL
PLOT NAME :
PLOT SCALE : 1 IN:100 FT

WISDOT/CADDS SHEET 44

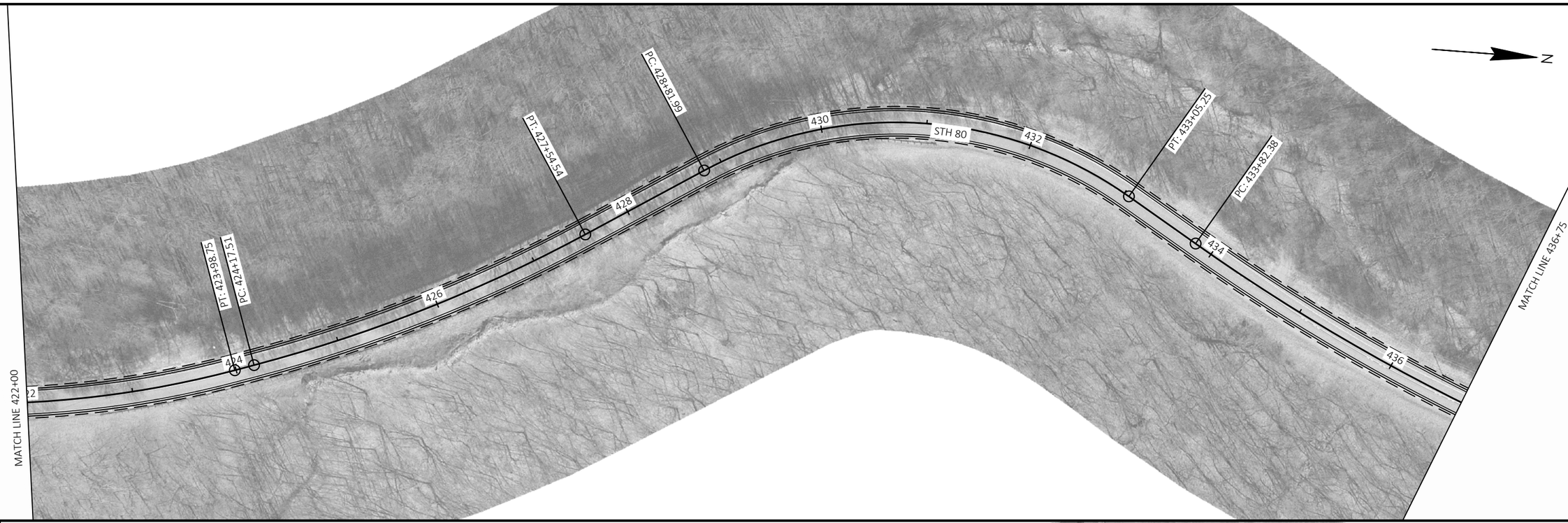

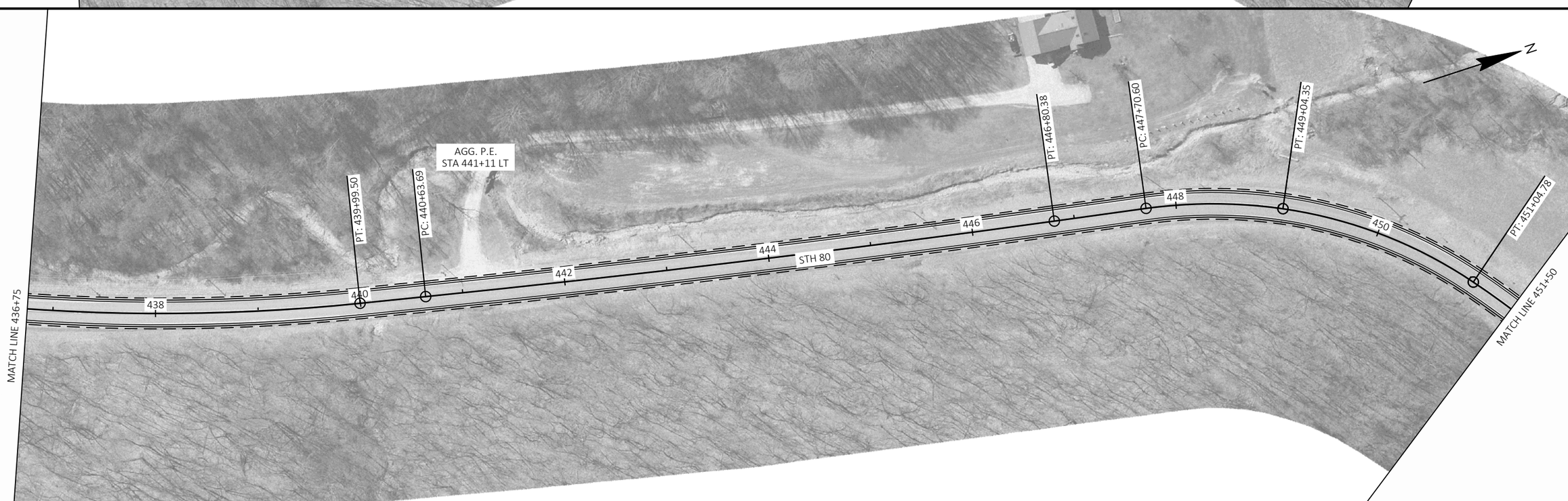

PROJECT NO: 5939-00-63	HWY: STH 80	COUNTY: IOWA	PLAN	SHEET 76	E

FILE NAME : W:\7701_07\CAD\! XXXX-XX-XX\SHEETSPLAN\050201-PN.DWG
LAYOUT NAME - 09
PLOT DATE : 4/15/2025 7:55 PM
PLOT BY : SEBESTA, MAXWELL
PLOT NAME :
PLOT SCALE : 1 IN:100 FT
WISDOT/CADDS SHEET 44

5

5

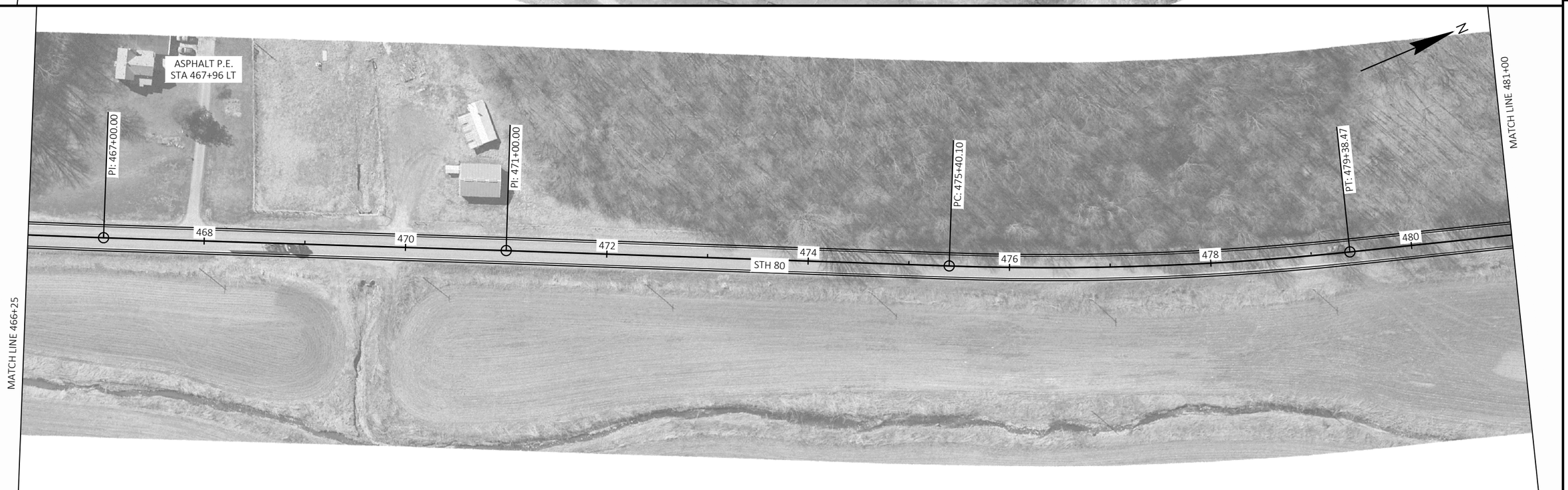

PROJECT NO: 5939-00-63	HWY: STH 80	COUNTY: IOWA	PLAN	SHEET 77	E

FILE NAME : W:\7701_07\CAD\! XXXX-XX-XX\SHEETSPLAN\050201-PN.DWG
LAYOUT NAME - 10
PLOT DATE : 4/15/2025 7:55 PM
PLOT BY : SEBESTA, MAXWELL
PLOT NAME :
PLOT SCALE : 1 IN:100 FT

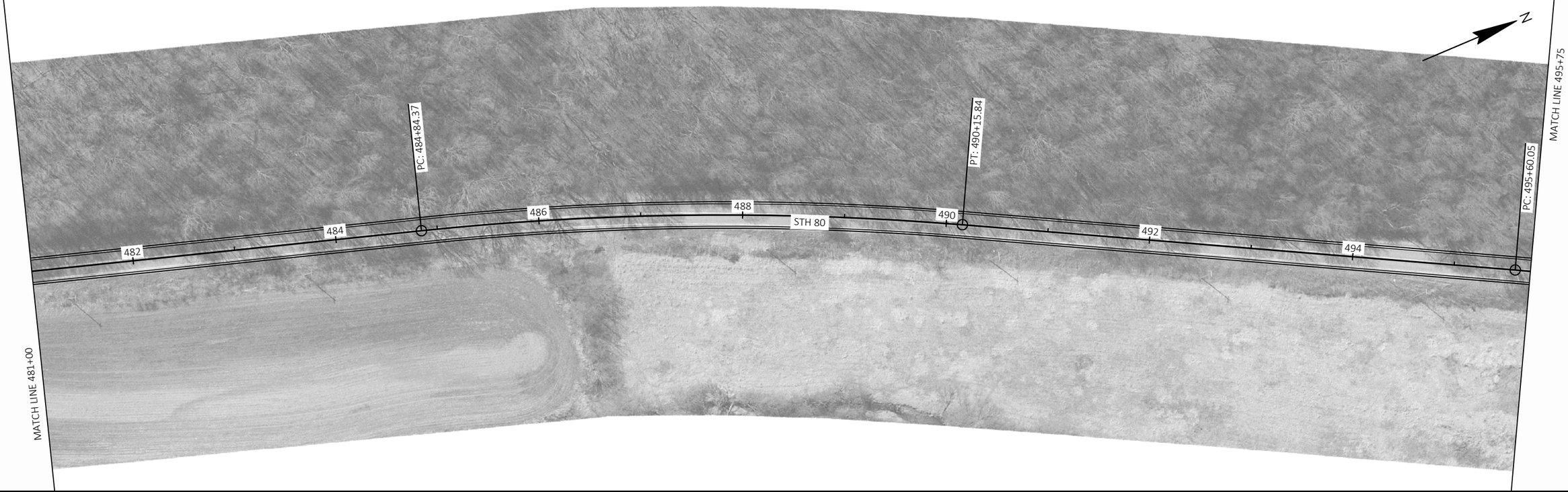

5

5

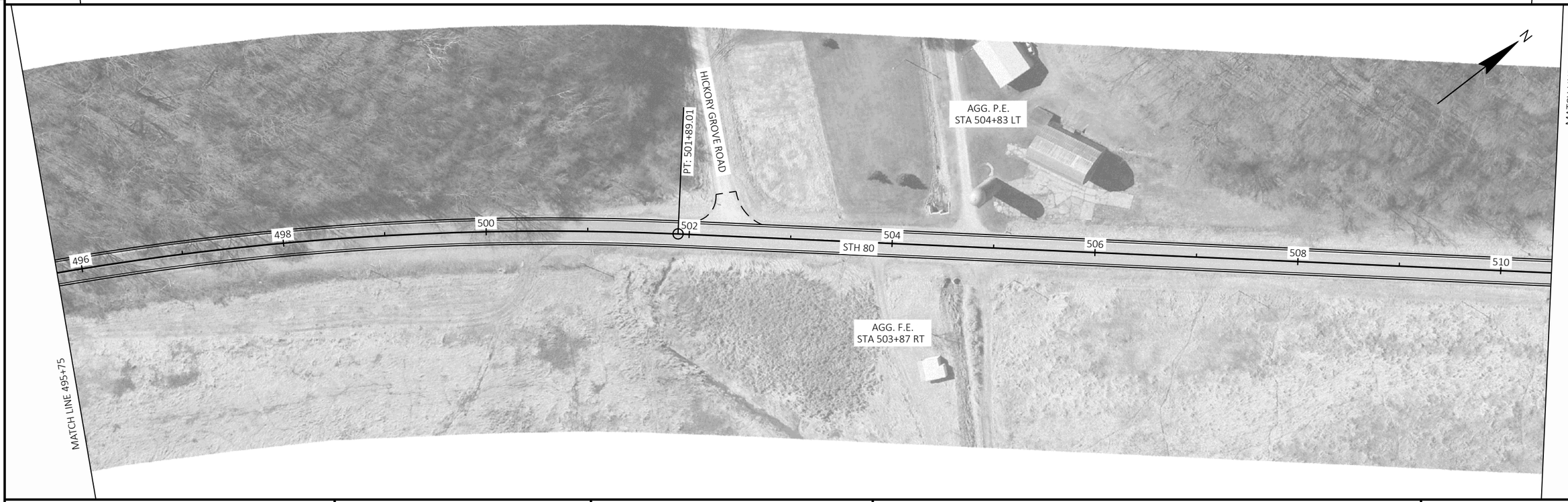

PROJECT NO: 5939-00-63	HWY: STH 80	COUNTY: IOWA	PLAN	SHEET 78	E

FILE NAME : W:\7701_07\CAD\! XXXX-XX-XX\SHEETSPLAN\050201-PN.DWG
LAYOUT NAME - 11
PLOT DATE : 4/15/2025 7:56 PM
PLOT BY : SEBESTA, MAXWELL
PLOT NAME :
PLOT SCALE : 1 IN:100 FT
WISDOT/CADDS SHEET 44

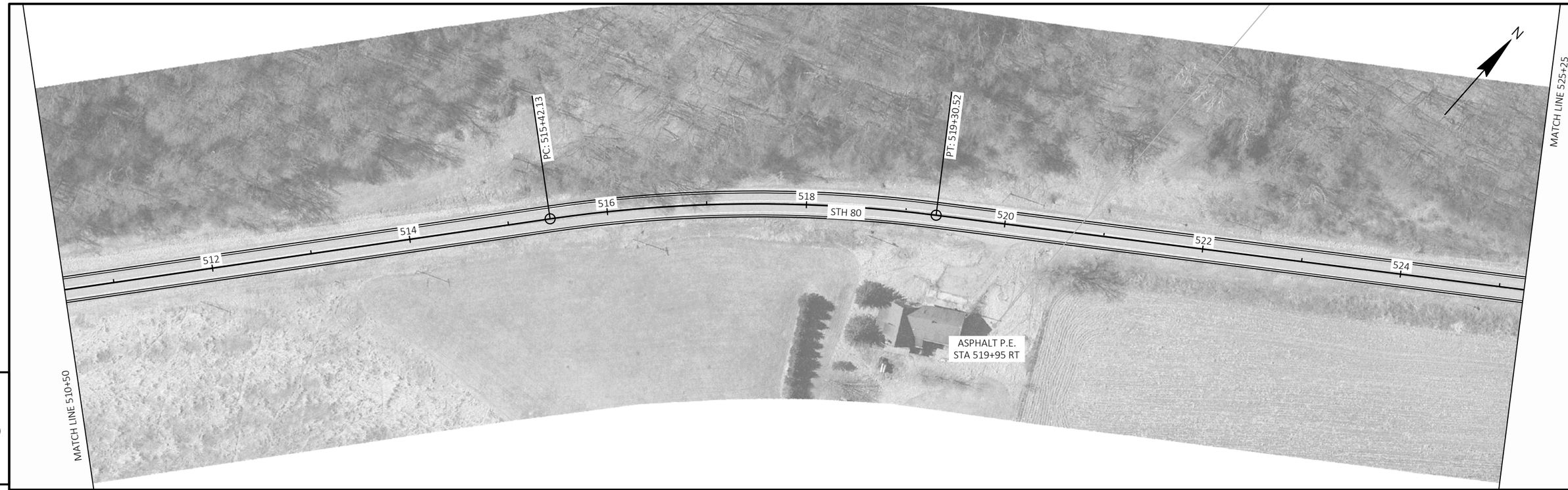

5

5

PROJECT NO: 5939-00-63	HWY: STH 80	COUNTY: IOWA	PLAN	SHEET 79	E

FILE NAME : W:\7701_07\CAD\! XXXX-XX-XX\SHEETSPLAN\050201-PN.DWG
LAYOUT NAME - 12
PLOT DATE : 4/15/2025 7:56 PM
PLOT BY : SEBESTA, MAXWELL
PLOT NAME :
PLOT SCALE : 1 IN:100 FT
WISDOT/CADDS SHEET 44

5

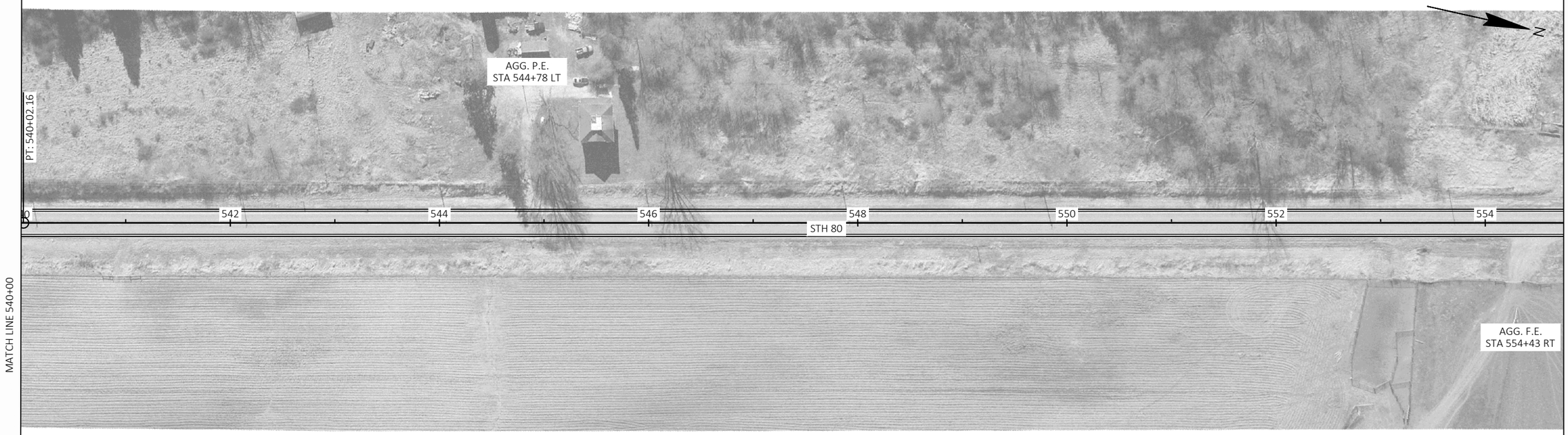

5

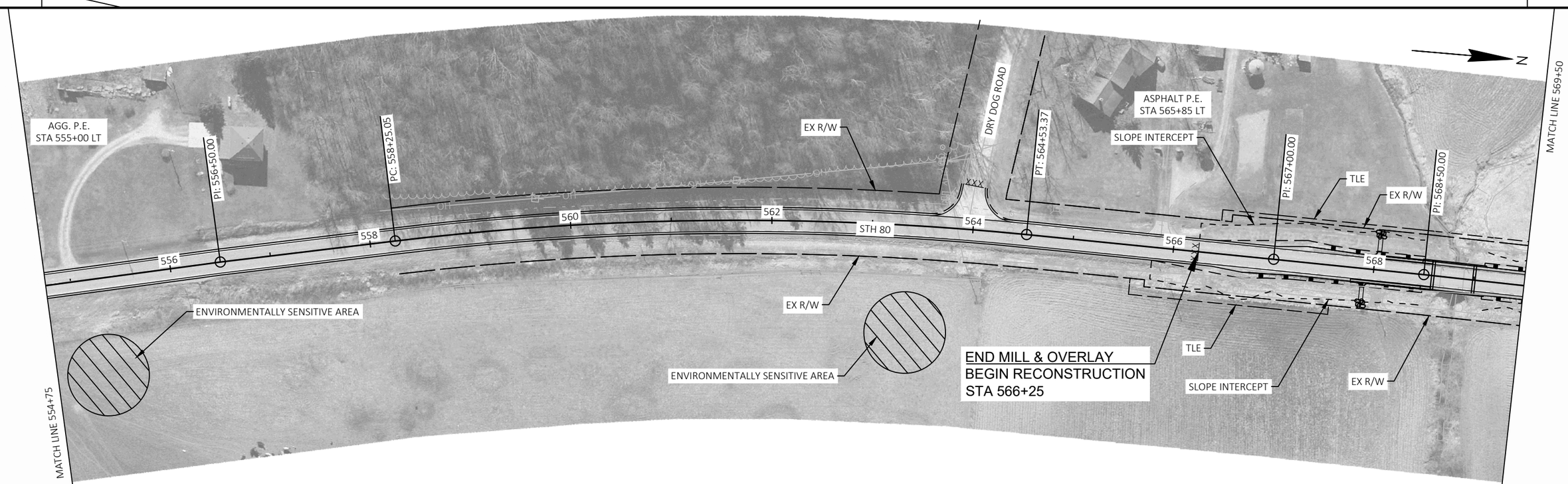

PROJECT NO: 5939-00-63	HWY: STH 80	COUNTY: IOWA	PLAN	SHEET 80	E

FILE NAME : W:\7701_07\CAD\! XXXX-XX-XX\SHEETSPLAN\050201-PN.DWG
LAYOUT NAME - 13
PLOT DATE : 4/15/2025 7:57 PM
PLOT BY : SEBESTA, MAXWELL
PLOT NAME :
PLOT SCALE : 1 IN:100 FT
WISDOT/CADDS SHEET 44

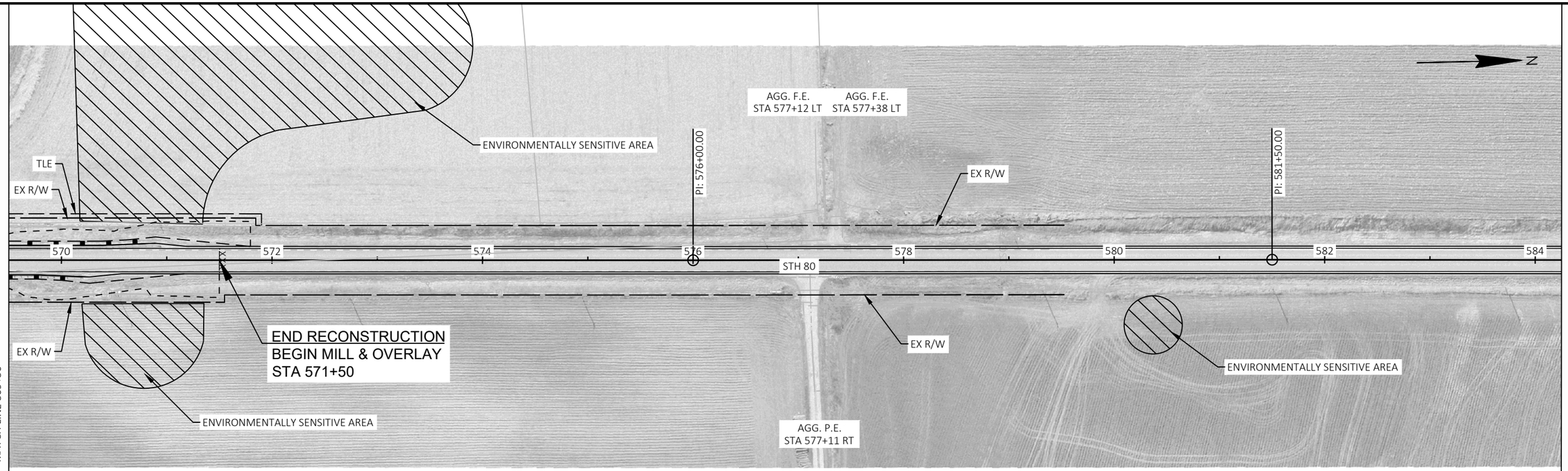

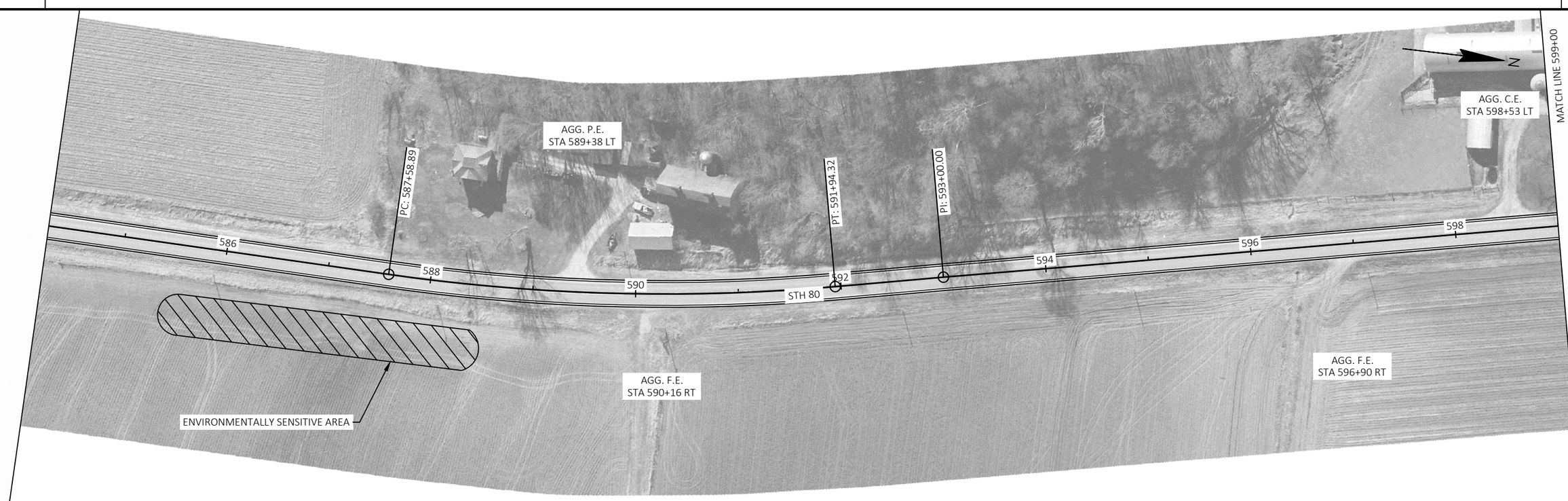

PROJECT NO: 5939-00-63	HWY: STH 80	COUNTY: IOWA	PLAN	SHEET 81	E

FILE NAME : W:\7701_07\CAD\! XXXX-XX-XX\SHEETSPLAN\050201-PN.DWG
LAYOUT NAME - 14
PLOT DATE : 4/15/2025 7:57 PM
PLOT BY : SEBESTA, MAXWELL
PLOT NAME :
PLOT SCALE : 1 IN:100 FT
WISDOT/CADDS SHEET 44

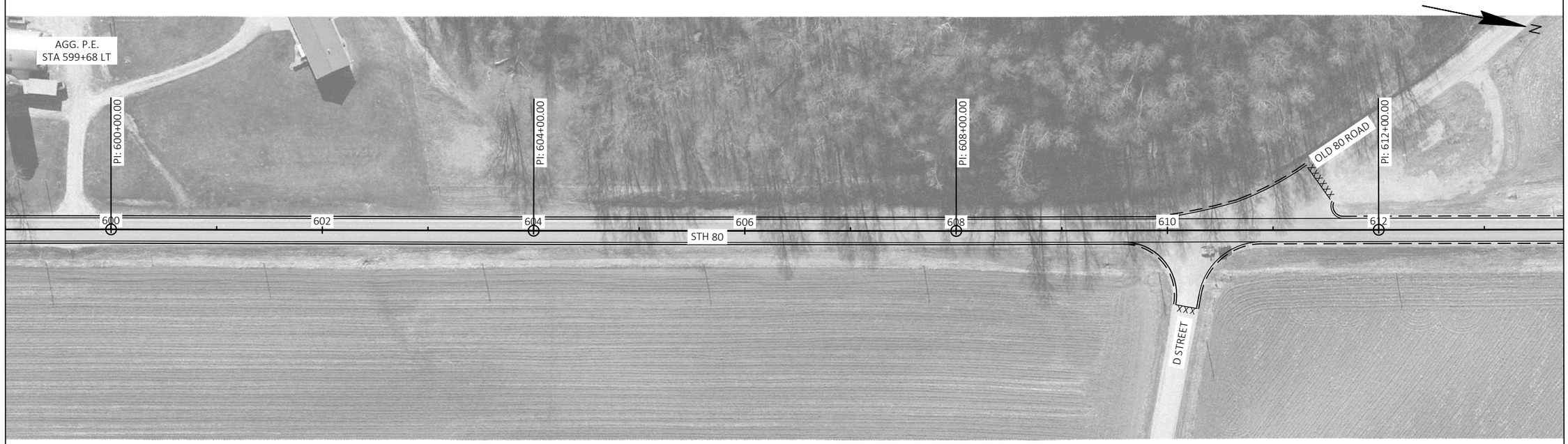

5

MATCH LINE 599+00

5

PROJECT NO: 5939-00-63	HWY: STH 80	COUNTY: IOWA	PLAN	SHEET 82	E

FILE NAME : W:\7701_07\CAD\! XXXX-XX-XX\SHEETSPLAN\050201-PN.DWG
LAYOUT NAME - 15
PLOT DATE : 4/15/2025 7:57 PM
PLOT BY : SEBESTA, MAXWELL
PLOT NAME :
PLOT SCALE : 1 IN:100 FT
WISDOT/CADDS SHEET 44

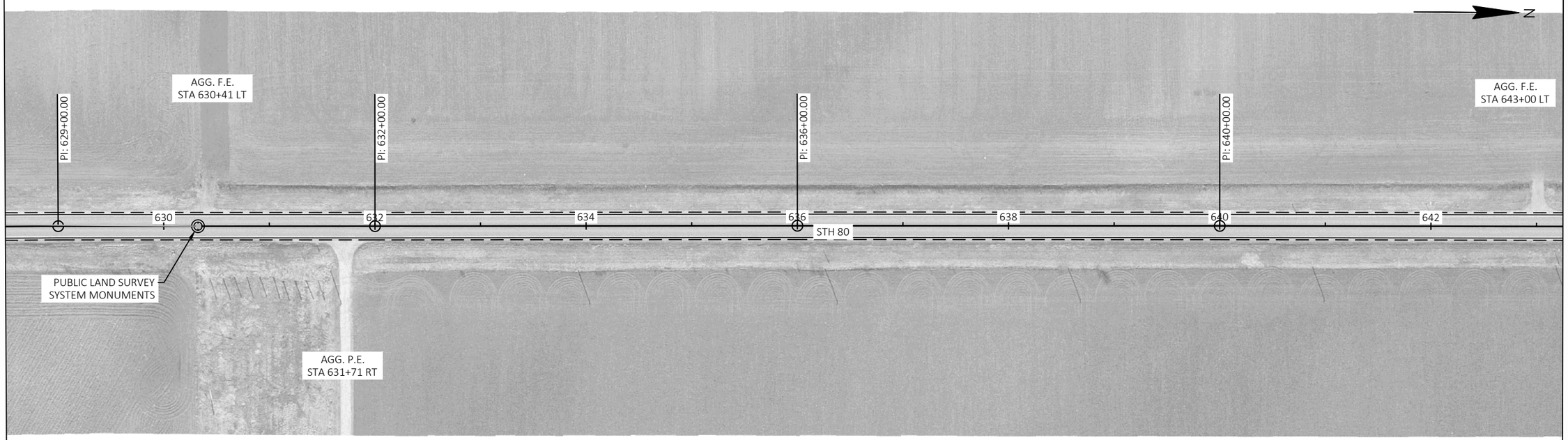

5

5

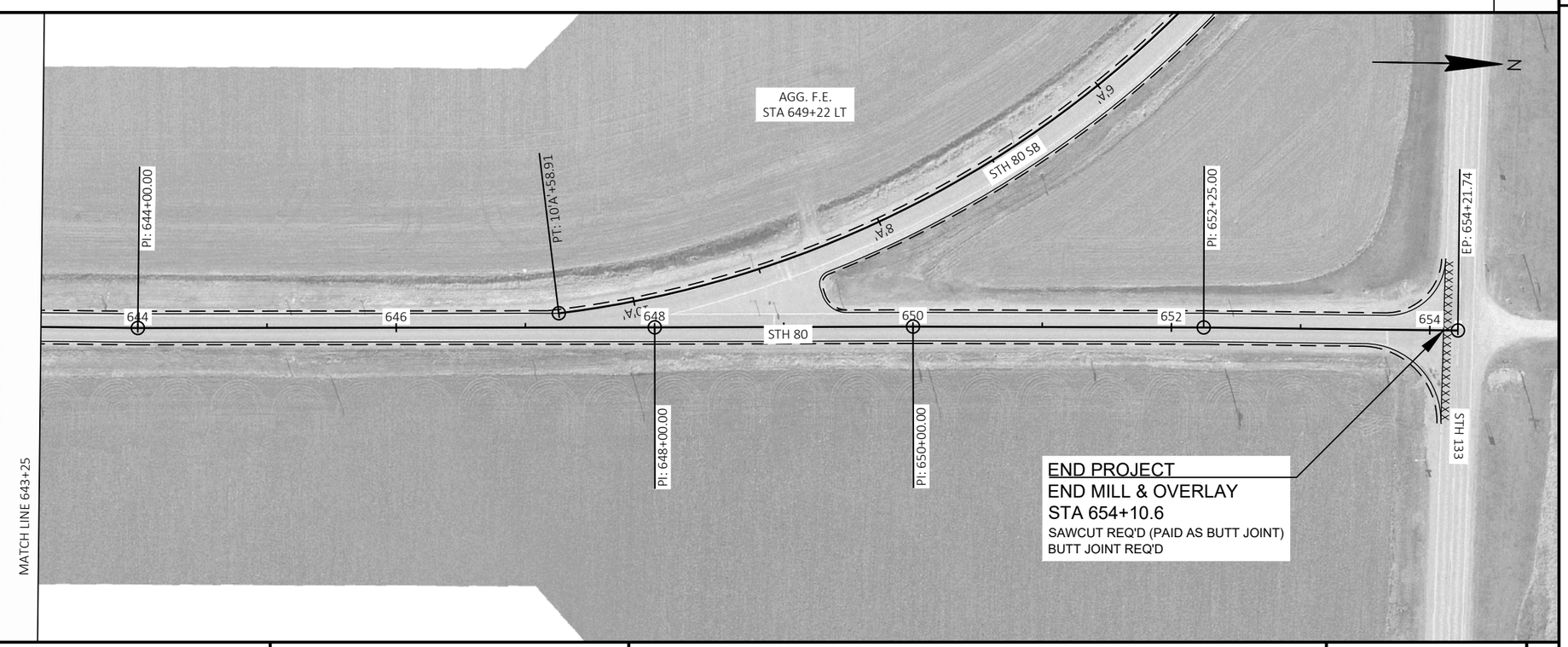

PROJECT NO: 5939-00-63	HWY: STH 80	COUNTY: IOWA	PLAN	SHEET 83	E

FILE NAME : W:\7701_07\CAD\! XXXX-XX-XX\SHEETSPLAN\050201-PN.DWG
LAYOUT NAME - 16
PLOT DATE : 4/15/2025 7:58 PM
PLOT BY : SEBESTA, MAXWELL
PLOT NAME :
PLOT SCALE : 1 IN:100 FT

WISDOT/CADDS SHEET 44

5

5

VIEW INTENTIONALLY LEFT BLANK

PROJECT NO: 5939-00-63	HWY: STH 80	COUNTY: IOWA	PLAN	SHEET 84	E

FILE NAME : W:\7701_07\CAD\! XXXX-XX-XX\SHEETSPLAN\050201-PN.DWG
LAYOUT NAME - 17
PLOT DATE : 4/15/2025 7:58 PM PLOT BY : SEBESTA, MAXWELL PLOT NAME : PLOT SCALE : 1 IN:100 FT

Standard Detail Drawing List

08D01-24A	CONCRETE CURB & GUTTER
08D01-24B	CONCRETE CURB, TIES AND CURB AND GUTTER APPLICATIONS
08D02-08A	CONCRETE SURFACE DRAINS FLUME TYPE AT STRUCTURES
08D02-08B	CONCRETE SURFACE DRAINS FLUME TYPE AT STRUCTURES
08D02-08C	CONCRETE SURFACE DRAINS FLUME TYPE AT STRUCTURES
08D22-01	DRIVEWAYS WITHOUT CURB & GUTTER RESURFACING PROJECTS RURAL
08E08-03	TYPICAL INSTALLATIONS OF EROSION BALES / TEMPORARY DITCH CHECKS
08E09-06	SILT FENCE
08E11-02	TURBIDITY BARRIER
08F07-05	STEEL APRON ENDWALLS FOR CULVERT PIPE AND PIPE ARCH SLOPED SIDE DRAINS
12A03-10	NAME PLATE (STRUCTURES)
13A03-07	CONCRETE PAVEMENT SHOULDERS
13A10-03A	SHOULDER RUMBLE STRIPS - ASPHALT
13A10-03G	SHOULDER AND EDGE LINE RUMBLE STRIPS - CROSSINGS, INTERSECTIONS, BRIDGES, DRIVEWAYS
13A10-03H	SHOULDER AND EDGE LINE RUMBLE STRIPS - RAILROAD, PASSING, CLIMBING AND BYPASS LANES
13A11-04A	CENTERLINE RUMBLE STRIPS - ASPHALT
13A11-04D	CENTERLINE RUMBLE STRIPS - INTERSECTIONS, DRIVEWAYS, BRIDGES, RAILROADS
13C01-19	CONCRETE PAVEMENT LONGITUDINAL JOINTS AND TIES
13C19-03	HMA LONGITUDINAL JOINTS
14B42-07A	MIDWEST GUARDRAIL SYSTEM (MGS) GUARDRAIL
14B42-07B	MIDWEST GUARDRAIL SYSTEM (MGS) GUARDRAIL
14B42-07C	MIDWEST GUARDRAIL SYSTEM (MGS) GUARDRAIL
14B42-07D	MIDWEST GUARDRAIL SYSTEM (MGS) GUARDRAIL
14B44-04A	MIDWEST GUARDRAIL SYSTEM ENERGY ABSORBING TERMINAL (MGS)
14B44-04B	MIDWEST GUARDRAIL SYSTEM ENERGY ABSORBING TERMINAL (MGS)
14B44-04C	MIDWEST GUARDRAIL SYSTEM ENERGY ABSORBING TERMINAL (MGS)
14B45-05A	MIDWEST GUARDRAIL SYSTEM THRIE BEAM TRANSITION (MGS)
14B45-05B	MIDWEST GUARDRAIL SYSTEM THRIE BEAM TRANSITION (MGS)
14B45-05C	MIDWEST GUARDRAIL SYSTEM THRIE BEAM TRANSITION (MGS)
14B45-05D	MIDWEST GUARDRAIL SYSTEM THRIE BEAM TRANSITION (MGS)
15C02-09A	BARRICADES AND SIGNS FOR MAINLINE CLOSURES
15C02-09B	BARRICADES AND SIGNS FOR VARIOUS CLOSURES
15C02-09C	DETOUR SIGNING FOR MAINLINE CLOSURES
15C02-09H	MODIFIED ROUTE ASSEMBLY FOR DETOUR SIGNING
15C03-05	BARRICADES AND SIGNS FOR SIDEROAD CLOSURES
15C06-12	SIGNING & MARKING FOR TWO LANE BRIDGES
15C08-24A	PERMANENT LONGITUDINAL PAVEMENT MARKINGS
15C08-24B	TEMPORARY LONGITUDINAL PAVEMENT MARKING
15C08-24C	PAVEMENT MARKING (TURN LANES)
15C08-24D	PAVEMENT MARKING (TURN LANES)
15C19-10A	MOVING PAVEMENT MARKING OPERATION TWO-LANE TWO-WAY ROADWAY
15C31-08C	PAVEMENT MARKING ENTRANCE RAMP AND PARALLEL ENTRANCE RAMP
15C33-05	STOP LINE AND CROSSWALK PAVEMENT MARKING
15C35-06A	PAVEMENT MARKING (INTERSECTIONS)
15D39-03	TRAFFIC CONTROL, DROP-OFF SIGNING
15D44-02	TRAFFIC CONTROL, SIGNING ON ROADWAYS WITH MILLED SURFACES
15D51-01	TRAFFIC CONTROL, MOBILE OPERATIONS ON AN UNDIVIDED ROADWAY

6

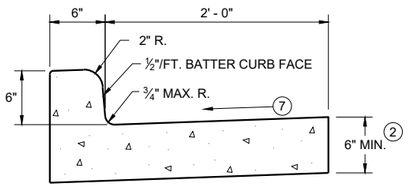

TYPES A (1) & D

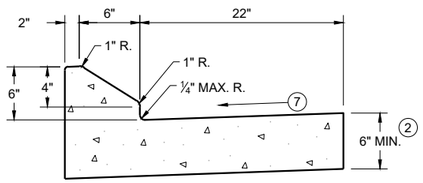

6" SLOPED CURB TYPES G (1) & J

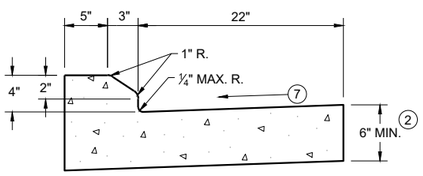

4" SLOPED CURB TYPES G (1) & J

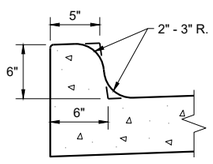

TYPES K (1) & L
(OPTIONAL CURB SHAPE)

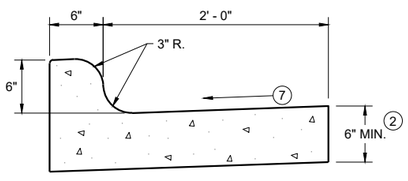

TYPES K (1) & L

CONCRETE CURB AND GUTTER 30"

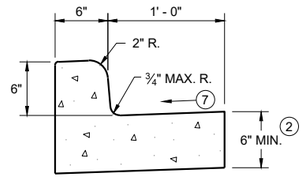

TYPES A (1) & D

CONCRETE CURB AND GUTTER 18"

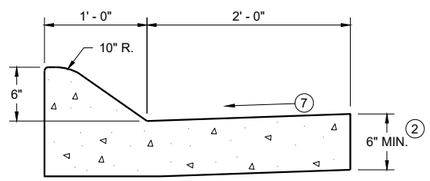

6" SLOPED CURB TYPES A (1) & D

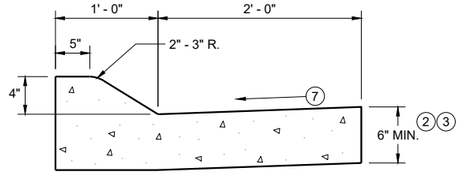

4" SLOPED CURB TYPES A (1) & D

CONCRETE CURB AND GUTTER 36"

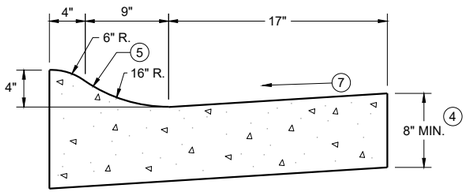

4" SLOPED CURB TYPES R (1) & T
CONCRETE CURB AND GUTTER 30"

TBT & TBTT	X
30"	22"
36"	28"

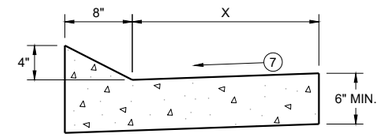

TYPES TBT & TBTT (1)

CONCRETE CURB AND GUTTER

PAVEMENT THICKNESS AND MAXIMUM CONCRETE PANEL WIDTH TABLE

PAVEMENT THICKNESS	MAXIMUM PANEL WIDTH
LESS THAN 10"	12'
10" & ABOVE	15'

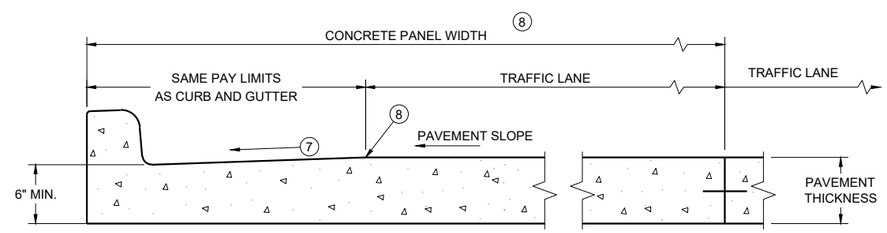

PARTIAL SECTION OF PAVEMENT WITH INTEGRAL CURB AND GUTTER *

* BIKE LANE IS NOT SHOWN

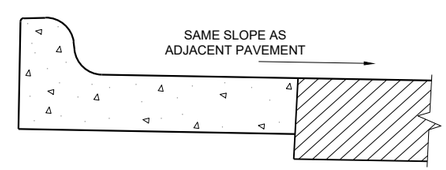

REVERSE SLOPE GUTTER (6)
(TYPICAL FOR ALL CURB & GUTTER TYPES)

GENERAL NOTES

DETAILS OF CONSTRUCTION AND WORKMANSHIP NOT SHOWN ON THIS DRAWING SHALL CONFORM TO THE PERTINENT REQUIREMENTS OF THE CONTRACT.

PAVEMENT TIES AND TIE BARS SHALL BE EPOXY COATED IN CONFORMANCE WITH SUBSECTION 505.2.6.2 OF THE STANDARD SPECIFICATIONS.

INTEGRAL CURB AND GUTTER SHALL CONFORM TO THE DETAILS SHOWN FOR CONCRETE CURB AND GUTTER INCLUDING THE TRANSVERSE GUTTER SLOPE.

UNLESS OTHERWISE SHOWN ON THE TYPICAL CROSS SECTIONS, THE BASE AGGREGATE AND COMMON EXCAVATION LIMITS ARE 2' - 0" BEHIND THE BACK OF CURBS.

(1) TIE BARS ARE REQUIRED FOR CURB AND GUTTERS TYPES A, G, K, R, AND TBTT.

(2) THE BOTTOM OF CURB AND GUTTER MAY BE CONSTRUCTED EITHER LEVEL OR PARALLEL TO THE SLOPE OF THE SUBGRADE OR BASE AGGREGATE PROVIDED A 6" MINIMUM GUTTER THICKNESS IS MAINTAINED.

(3) USE 8" MINIMUM GUTTER THICKNESS WHEN USED WITH AN ADJACENT CONCRETE TRUCK APRON PLACED BEHIND BACK OF CURB.

(4) THE BOTTOM OF CURB AND GUTTER MAY BE CONSTRUCTED EITHER LEVEL OR PARALLEL TO THE SLOPE OF THE SUBGRADE OR BASE AGGREGATE PROVIDED A 8" MINIMUM GUTTER THICKNESS IS MAINTAINED.

(5) UNLESS OTHERWISE NOTED, FOR STAKING PURPOSES THE FACE OF CURB IS 6" FROM THE BACK OF CURB.

(6) WHEN REVERSE SLOPE GUTTER IS REQUIRED, THE LOCATION(S) WILL BE SHOWN ELSEWHERE IN THE PLAN.

(7) USE 4% GUTTER CROSS SLOPE UNLESS OTHERWISE NOTED IN THE PLANS.

(8) INCLUDE LONGITUDINAL JOINT AND TIE BARS ALONG LANE EDGE WHEN CONCRETE PANEL WIDTH EXCEEDS THE MAXIMUM WIDTH PER TABLE BELOW. LONGITUDINAL JOINT(S) ARE NOT ALLOWED WITHIN TRAFFIC LANES AND BIKE LANES. LONGITUDINAL JOINT MAY BE SAWED.

(9) SLOPE TO BE REVERSE SLOPE MATCHING THE SLOPE OF THE PAVEMENT AND THE CIRCULATORY ROADWAY

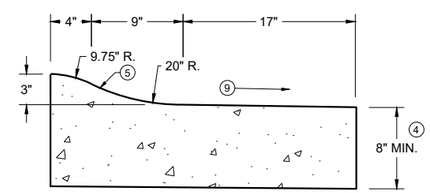

3" SLOPED CURB TYPES R (1) & T

CONCRETE CURB AND GUTTER

STATE OF WISCONSIN
DEPARTMENT OF TRANSPORTATION

6

SDD 08D01-24a

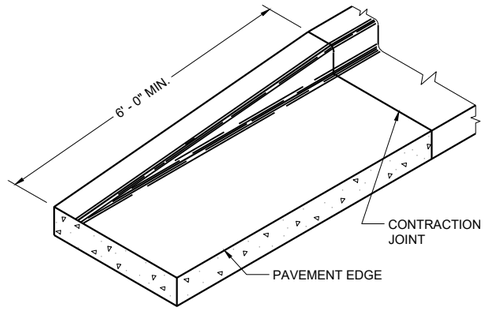

END SECTION CURB AND GUTTER

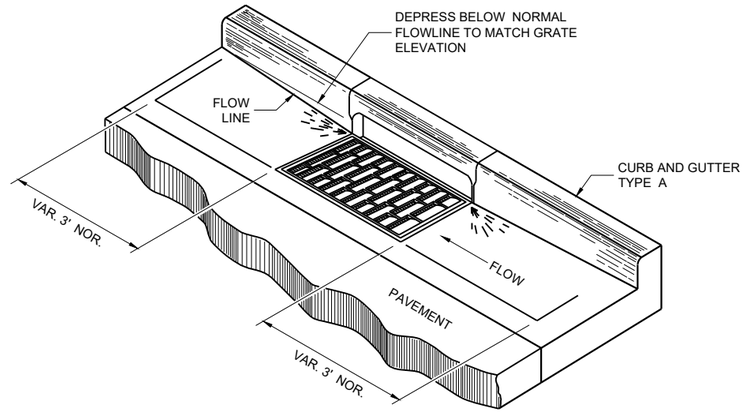

DETAIL OF CURB AND GUTTER AT INLETS

(TYPICAL H INLET COVER SHOWN)

GENERAL NOTES

DETAILS OF CONSTRUCTION AND WORKMANSHIP NOT SHOWN ON THIS DRAWING SHALL CONFORM TO THE PERTINENT REQUIREMENTS OF THE CONTRACT.

PAVEMENT TIES AND TIE BARS SHALL BE EPOXY COATED IN CONFORMANCE WITH SUBSECTION 505.2.6.2 OF THE STANDARD SPECIFICATIONS.

UNLESS OTHERWISE SHOWN ON THE TYPICAL CROSS SECTIONS, THE BASE AGGREGATE AND COMMON EXCAVATION LIMITS ARE 2' - 0" BEHIND THE BACK OF CURBS.

(1) TIE BARS ARE REQUIRED FOR CURB AND GUTTERS TYPES A, G, K, R, AND TBTT.

(2) THE BOTTOM OF CURB AND GUTTER MAY BE CONSTRUCTED EITHER LEVEL OR PARALLEL TO THE SLOPE OF THE SUBGRADE OR BASE AGGREGATE PROVIDED A 6" MINIMUM GUTTER THICKNESS IS MAINTAINED.

(10) REFER TO SDD 08D18 AND 08D19 FOR ADDITIONAL DRIVEWAY ENTRANCE CURB DETAILS.

(11) PLACE 1" THICK EXPANSION JOINT MATERIAL BETWEEN VERTICAL FACE CURB TYPES EXTENDING FROM THE TOP OF CURB TO 1 INCH BELOW THE ADJOINING CONCRETE SURFACE. RIGID CONCRETE STRUCTURES INCLUDE RAISED CONCRETE MEDIANS, CONCRETE SAFETY ISLANDS, SPLITTER ISLANDS, OR LOCATIONS IDENTIFIED ON THE PLANS.

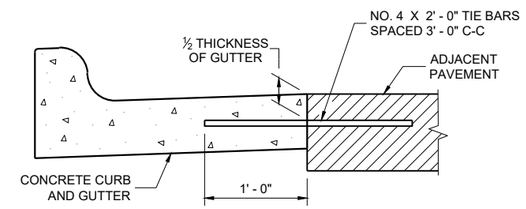

TYPICAL TIE BAR LOCATION (1)

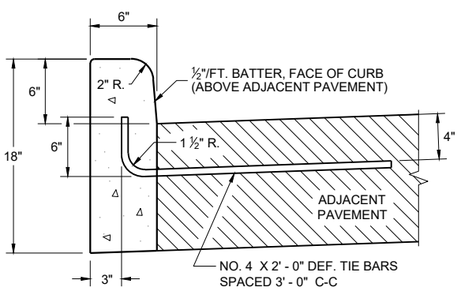

TYPES A (1) & D

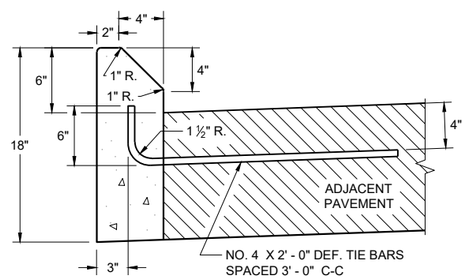

TYPES G (1) & J

CONCRETE CURB

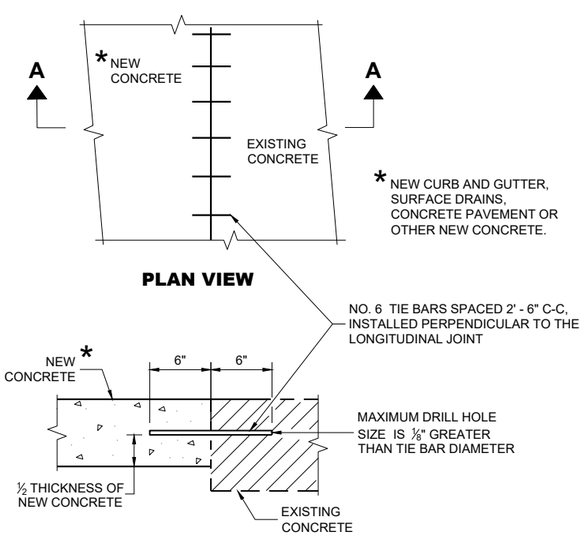

PLAN VIEW

SECTION A - A

TIE BARS DRILLED INTO EXISTING PAVEMENT

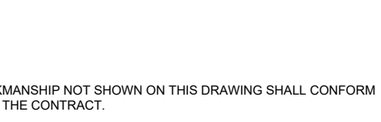

DRIVEWAY ENTRANCE CURB (10)

(WHEN DIRECTED BY THE ENGINEER)

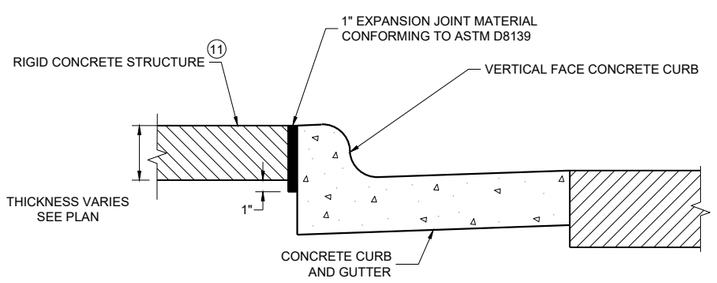

EXPANSION JOINT DETAIL FOR VERTICAL CURB ABUTTING A RIGID STRUCTURE (11)

CONCRETE CURB, TIES AND CURB AND GUTTER APPLICATIONS

STATE OF WISCONSIN
DEPARTMENT OF TRANSPORTATION

APPROVED
February 2025 — DATE
/S/ Rodnery Taylor — ROADWAY STANDARDS DEVELOPMENT UNIT SUPERVISOR
FHWA

GENERAL NOTES

DETAILS OF CONSTRUCTION, MATERIALS AND WORKMANSHIP NOT SHOWN ON THIS DRAWING SHALL CONFORM TO THE PERTINENT REQUIREMENTS OF THE STANDARD SPECIFICATIONS AND THE APPLICABLE SPECIAL PROVISIONS.

ALL STEEL REINFORCEMENT SHALL BE EMBEDDED 2 INCHES CLEAR UNLESS OTHERWISE SHOWN OR NOTED.

1. USE A JOINT SEALANT CONFORMING TO STANDARD SPECIFICATION 415.2.6.
2. NO. 4 X 2' - 0" TIE BARS SPACED AT 12" C-C TO BE PLACED BY BRIDGE CONTRACTOR OR DRILLED TIE BARS PLACED AS DIRECTED BY THE ENGINEER.
3. PAVED CONCRETE SHOULDER (SDD 13A03) OR CONCRETE DRAINAGE SLAB.
4. CONCRETE PAVEMENT APPROACH SLAB (SHOWN) OR STRUCTURE APPROACH SLAB AND CONCRETE PAVEMENT APPROACH SLAB. SEE SDD 13B02.
5. PAVED CONCRETE SHOULDER (SDD 13A03) OR ASPHALT SHOULDER.
6. CONCRETE CURB AND GUTTER 4-INCH SLOPED 36-INCH TYPE TBT OR TBTT. USE TYPE TBTT CURB WITH NO. 4 X 2' -0" TIE BARS SPACED AT 3' - 0" C-C ONLY WHEN ADJACENT TO CONCRETE PAVEMENTS.
7. PLACE FLUME BEFORE MSG THRIE BEAM TRANSITION POST 1 (SEE SDD 14B45)
8. CENTER FLUME BETWEEN POSTS. 6-INCH MINIMUM SEPARATION FROM OUTSIDE EDGE OF FLUME TO POSTS.
9. MINIMUM REINFORCEMENT SHALL BE 4" X 4" - W3.0 X W3.0 OR NO. 3 BARS LONGITUDINAL AND TRANSVERSE SPACING 12" C -C.
10. SEE ROADWAY PLANS FOR FLUME LOCATION.
11. START CURB AND GUTTER TRANSITION OR END SECTION.
12. DEPRESS FLOW LINE (SEE DETAIL)

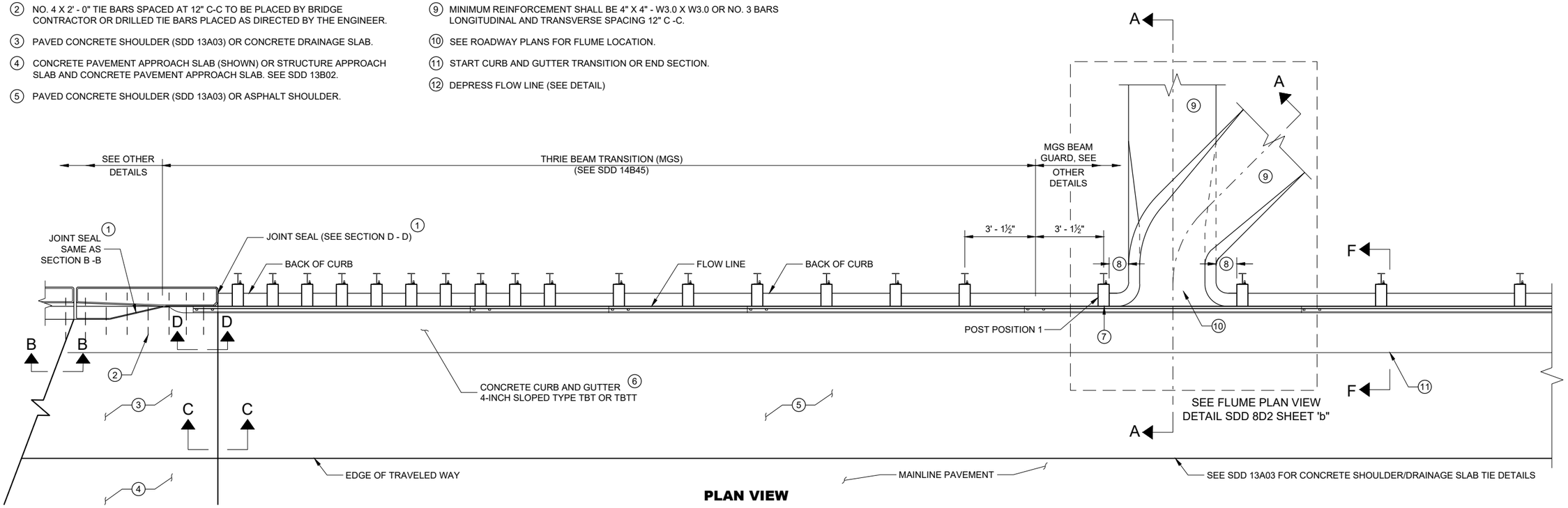

PLAN VIEW

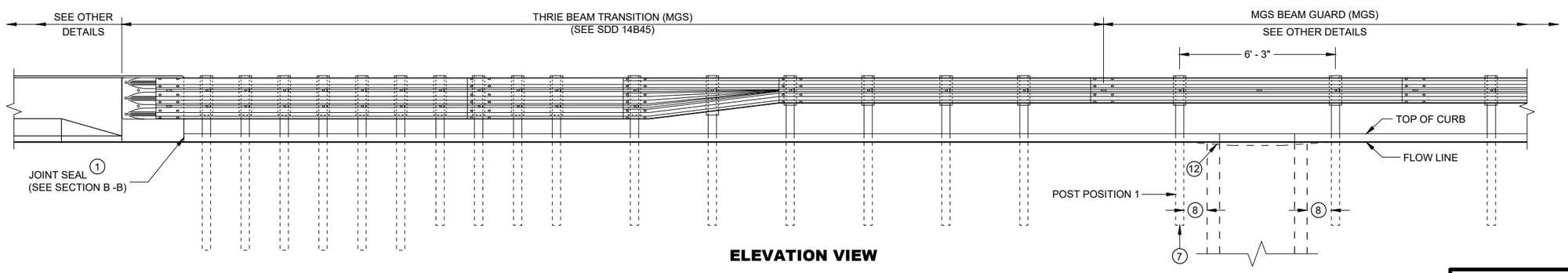

ELEVATION VIEW

CONCRETE SURFACE DRAINS FLUME TYPE AT STRUCTURES

STATE OF WISCONSIN
DEPARTMENT OF TRANSPORTAT

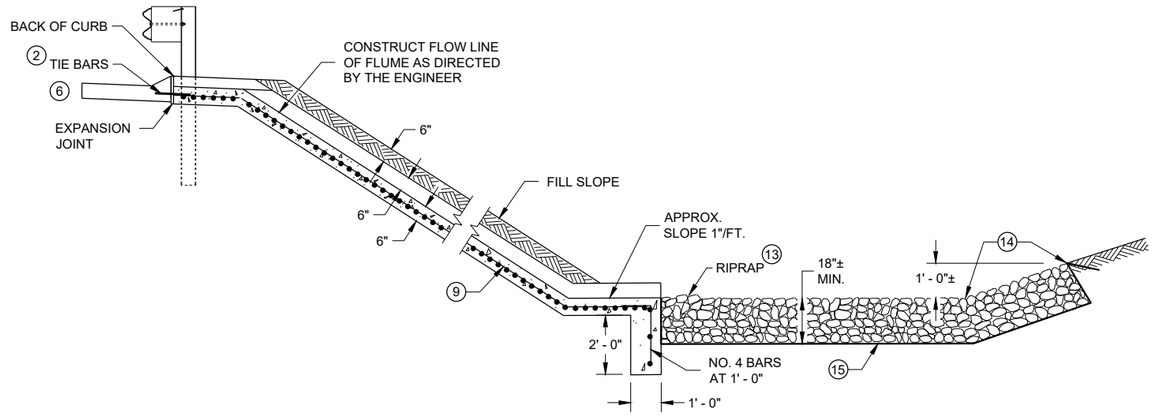

SECTION A - A

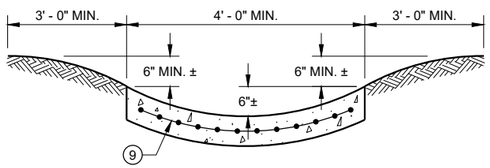

SECTION G - G

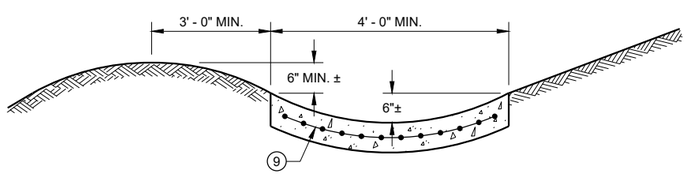

SECTION H - H

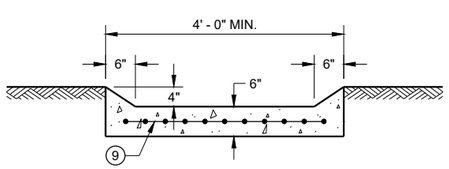

SECTION I - I

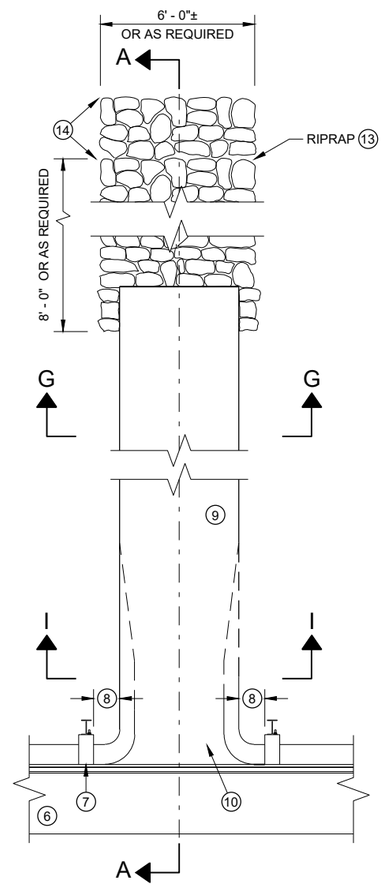

PLAN VIEW PERPENDICULAR FLUME

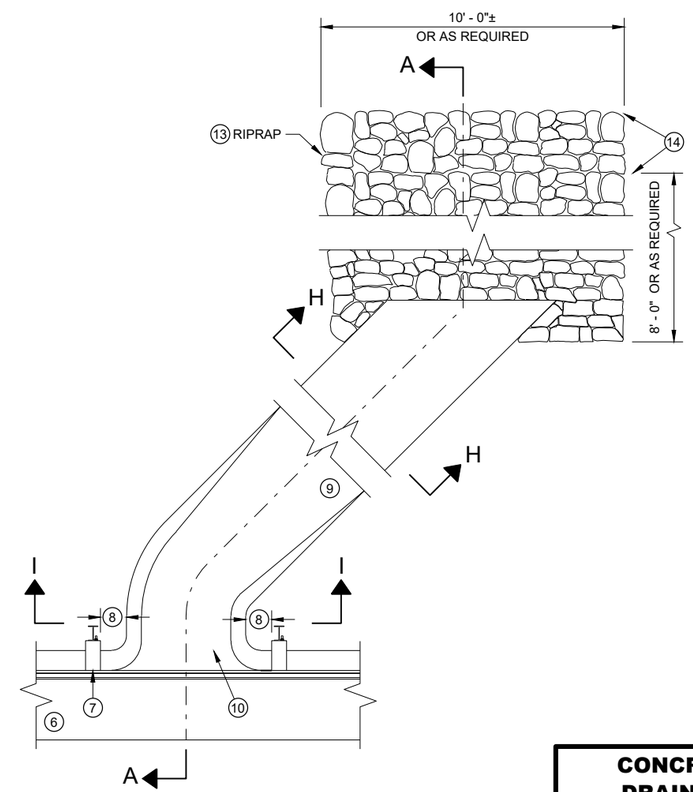

PLAN VIEW SKEWED FLUME

GENERAL NOTES

DETAILS OF CONSTRUCTION, MATERIALS AND WORKMANSHIP NOT SHOWN ON THIS DRAWING SHALL CONFORM TO THE PERTINENT REQUIREMENTS OF THE STANDARD SPECIFICATIONS AND THE APPLICABLE SPECIAL PROVISIONS.

ALL STEEL REINFORCEMENT SHALL BE EMBEDDED 2 INCHES CLEAR UNLESS OTHERWISE SHOWN OR NOTED.

1. USE A JOINT SEALANT CONFORMING TO STANDARD SPECIFICATION 415.2.6.
2. NO. 4 X 2' - 0" TIE BARS SPACED AT 12" C-C TO BE PLACED BY BRIDGE CONTRACTOR OR DRILLED TIE BARS PLACED AS DIRECTED BY THE ENGINEER.
3. PAVED CONCRETE SHOULDER (SDD 13A03) OR CONCRETE DRAINAGE SLAB.
4. CONCRETE PAVEMENT APPROACH SLAB (SHOWN) OR STRUCTURE APPROACH SLAB AND CONCRETE PAVEMENT APPROACH SLAB. SEE SDD 13B02 AND STRUCTURE PLANS.
5. PAVED CONCRETE SHOULDER (SDD 13A03) OR ASPHALT SHOULDER.
6. CONCRETE CURB AND GUTTER 4-INCH SLOPED 36-INCH TYPE TBT OR TBTT. USE TYPE TBTT CURB WITH NO. 4 X 2' -0" TIE BARS SPACED AT 3' - 0" C-C ONLY WHEN ADJACENT TO CONCRETE PAVEMENTS.
7. PLACE FLUME BEFORE MSG THRIE BEAM TRANSITION POST 1 (SEE SDD 14B45)
8. CENTER FLUME BETWEEN POSTS. 6-INCH MINIMUM SEPARATION FROM OUTSIDE EDGE OF FLUME TO POSTS.
9. MINIMUM REINFORCEMENT SHALL BE 4" X 4" - W3.0 X W3.0 OR NO. 3 BARS LONGITUDINAL AND TRANSVERSE SPACING 12" C -C.
10. SEE ROADWAY PLANS FOR FLUME LOCATION.
11. START CURB AND GUTTER TRANSITION OR END SECTION.
12. DEPRESS FLOW LINE (SEE DETAIL)
13. MEDIUM RIPRAP UNLESS OTHERWISE SPECIFIED.
14. LIMITS OF ADDITIONAL RIPRAP WHEN SPECIAL DITCH AS REQUIRED.
15. GEOTEXTILE TYPE HR.

CONCRETE SURFACE DRAINS FLUME TYPE AT STRUCTURES

STATE OF WISCONSIN
DEPARTMENT OF TRANSPORTAT

6

SDD 08D02 - 08b

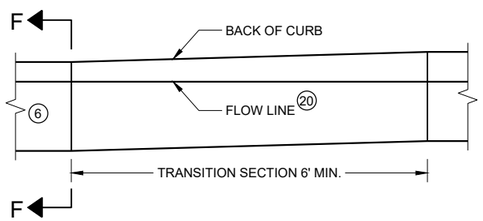

CURB AND GUTTER TRANSITION SECTION
CONCRETE CURB AND GUTTER 4-INCH SLOPED
36 INCH TYPE TBT OR TBTT

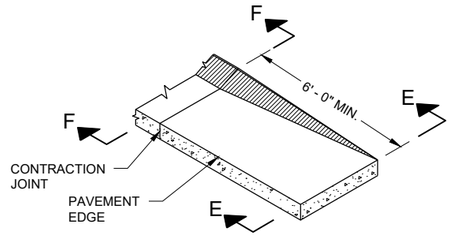

CURB AND GUTTER END SECTION
CONCRETE CURB AND GUTTER 4-INCH SLOPED
36 INCH TYPE TBT OR TBTT

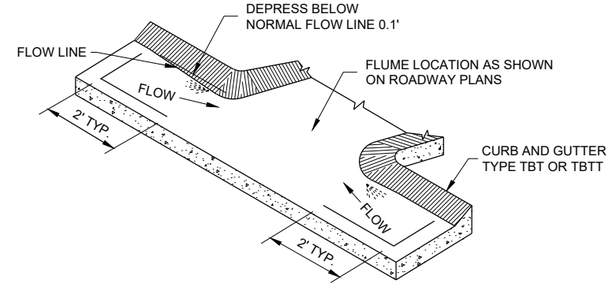

CURB AND GUTTER FLOW LINE DEPRESSION
AT FLUMES CONCRETE CURB AND GUTTER
4-INCH SLOPED 36 INCH TYPE TBT OR TBTT

GENERAL NOTES

DETAILS OF CONSTRUCTION, MATERIALS AND WORKMANSHIP NOT SHOWN ON THIS DRAWING SHALL CONFORM TO THE PERTINENT REQUIREMENTS OF THE STANDARD SPECIFICATIONS AND THE APPLICABLE SPECIAL PROVISIONS.

ALL STEEL REINFORCEMENT SHALL BE EMBEDDED 2 INCHES CLEAR UNLESS OTHERWISE SHOWN OR NOTED.

1. USE A JOINT SEALANT CONFORMING TO STANDARD SPECIFICATION 415.2.6.
2. NO. 4 X 2' - 0" TIE BARS SPACED AT 12" C-C TO BE PLACED BY BRIDGE CONTRACTOR OR DRILLED TIE BARS PLACED AS DIRECTED BY THE ENGINEER.
3. PAVED CONCRETE SHOULDER (SDD 13A03) OR CONCRETE DRAINAGE SLAB.
4. CONCRETE PAVEMENT APPROACH SLAB (SHOWN) OR STRUCTURE APPROACH SLAB AND CONCRETE PAVEMENT APPROACH SLAB. SEE SDD 13B02 AND STRUCTURE PLANS.
5. PAVED CONCRETE SHOULDER (SDD 13A03) OR ASPHALT SHOULDER.
6. CONCRETE CURB AND GUTTER 4-INCH SLOPED 36-INCH TYPE TBT OR TBTT. USE TYPE TBTT CURB WITH NO. 4 X 2' -0" TIE BARS SPACED AT 3' - 0" C-C ONLY WHEN ADJACENT TO CONCRETE PAVEMENTS.
7. PLACE FLUME BEFORE MSG THRIE BEAM TRANSITION POST 1 (SEE SDD 14B45)
8. CENTER FLUME BETWEEN POSTS. 6-INCH MINIMUM SEPARATION FROM OUTSIDE EDGE OF FLUME TO POSTS.
9. MINIMUM REINFORCEMENT SHALL BE 4" X 4" - W3.0 X W3.0 OR NO. 3 BARS LONGITUDINAL AND TRANSVERSE SPACING 12" C -C.
10. SEE ROADWAY PLANS FOR FLUME LOCATION.
11. START CURB AND GUTTER TRANSITION OR END SECTION.
12. DEPRESS FLOW LINE (SEE DETAIL)
13. MEDIUM RIPRAP UNLESS OTHERWISE SPECIFIED.
14. LIMITS OF ADDITIONAL RIPRAP WHEN SPECIAL DITCH IS REQUIRED.
15. GEOTEXTILE TYPE HR.
16. MINIMUM REINFORCEMENT SHALL BE 6" X 6" - W4.0 X W4.0 OR NO. 3 BARS LONGITUDINAL AND TRANSVERSE SPACING 12" C - C.
17. MSG THRIE BEAM TRANSITION POST 1. SEE SDD 14B45 FOR ADDITIONAL CONSTRUCTION DETAILS AND ACCEPTABLE MATERIALS.
18. MAINTAIN WIDTH, THICKNESS AND CROSS SLOPE OF ADJACENT TYPE TBT OR TBTT CURB. SEE NOTE 6 FOR TIE BAR SPACING.
19. ALIGN FACE OF POST BLOCK WITH FLOW LINE.
20. MAINTAIN FLOW LINE AT EDGE OF PAVEMENT/FACE OF BEAM GUARD AS APPLICABLE.
21. DO NOT CONSTRUCT AN EXPANSION JOINT OR INSTALL DOWEL BARS WHEN ABUTTING HMA PAVEMENTS.

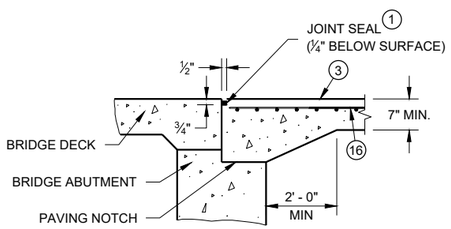

SECTION B-B 4

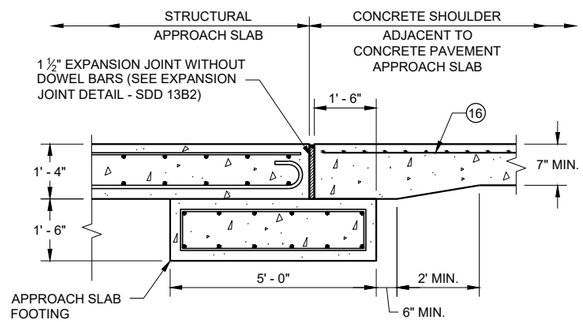

SECTION C - C
JOINT DETAIL FOR BRIDGE WITH STRUCTURAL APPROACH SLAB AND CONCRETE APPROACH SLAB

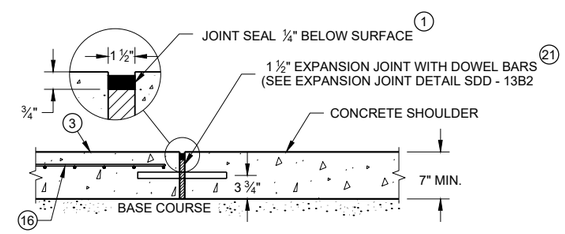

SECTION C - C
JOINT DETAIL FOR BRIDGE APPROACH WITH CONCRETE SHOULDERS

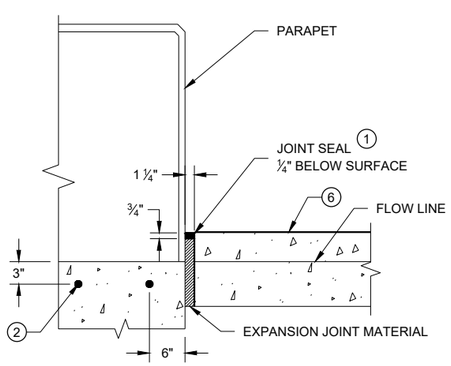

SECTION D - D

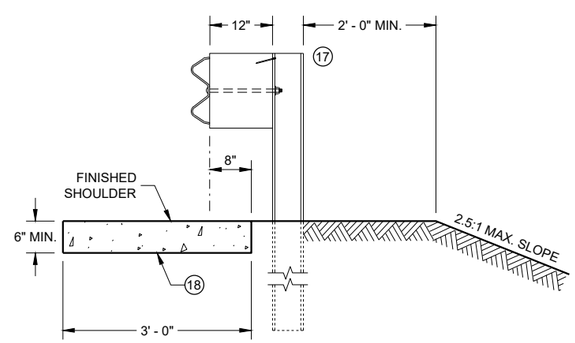

SECTION E - E

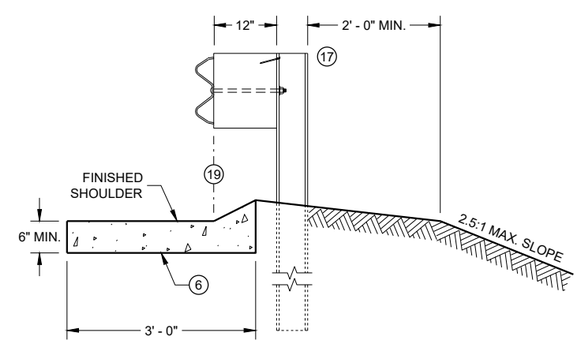

SECTION F - F

CONCRETE SURFACE DRAINS FLUME TYPE AT STRUCTURES

STATE OF WISCONSIN
DEPARTMENT OF TRANSPORTATION

APPROVED
May 2023 — DATE
/S/ Rodney Taylor — ROADWAY STANDARDS DEVE ENGINEER

FHWA

6

6

SDD 08D02 - 08c

SDD 08D02 - 08c

GENERAL NOTES

1. DESIGN WILL DETERMINE FINAL DRIVEWAY ASPHALTIC THICKNESS BASED ON TYPE OF USAGE AND LOADINGS.

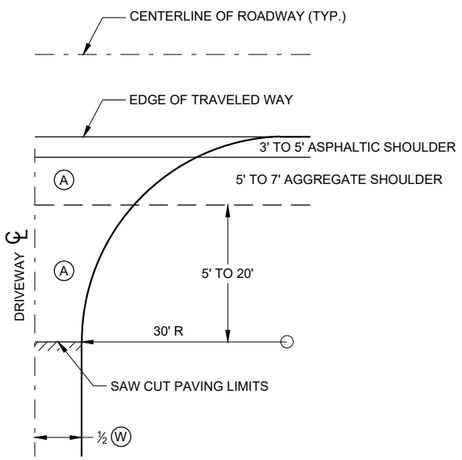

PLAN VIEW

A : PAID FOR AS ASPHALTIC SURFACE DRIVEWAYS AND FIELD ENTRANCES. (TON)

B : PAID FOR AS BASE AGGREGATE DENSE 1 ¼" (TON)

W : DRIVEWAY WIDTH 16' MIN. - 24' MAX.

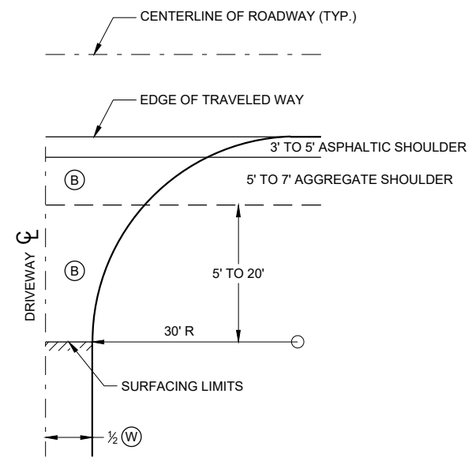

PLAN VIEW

HALF SECTION

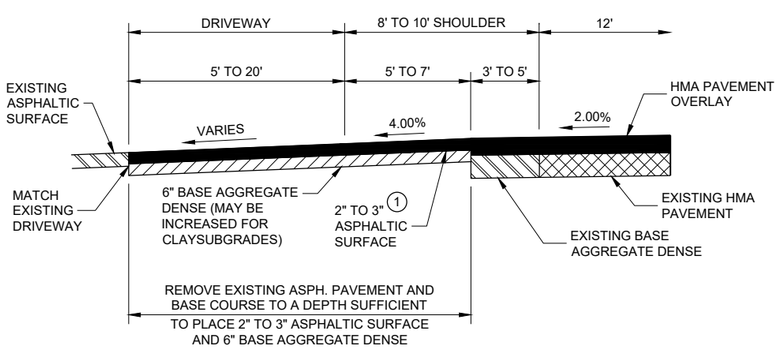

PROFILE VIEW

RURAL ENTRANCE WITH ASPHALTIC SURFACE

RESURFACING PROJECTS

PLAN VIEW

HALF SECTION

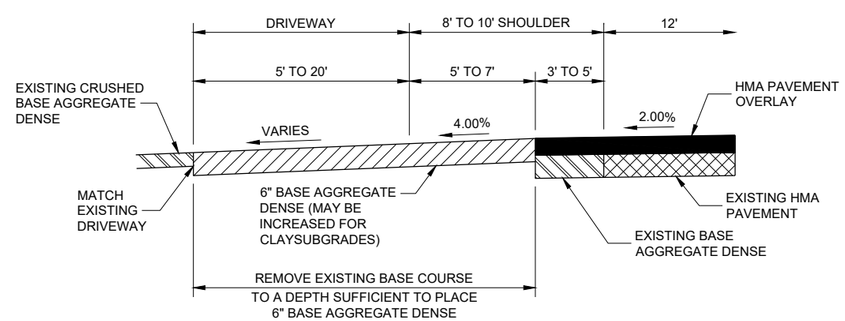

PROFILE VIEW

RURAL ENTRANCE WITH AGGREGATE SURFACE

6" BASE AGGREGATE DENSE RESURFACING PROJECTS

DRIVEWAYS WITHOUT CURB AND GUTTER RESURFACING PROJECTS RURAL

STATE OF WISCONSIN
DEPARTMENT OF TRANSPORTATION

APPROVED
December 2016 — DATE
/S/ Rodney Taylor — ROADWAY STANDARDS DEVE ENGINEER
FHWA

6

SDD 08D22 - 01

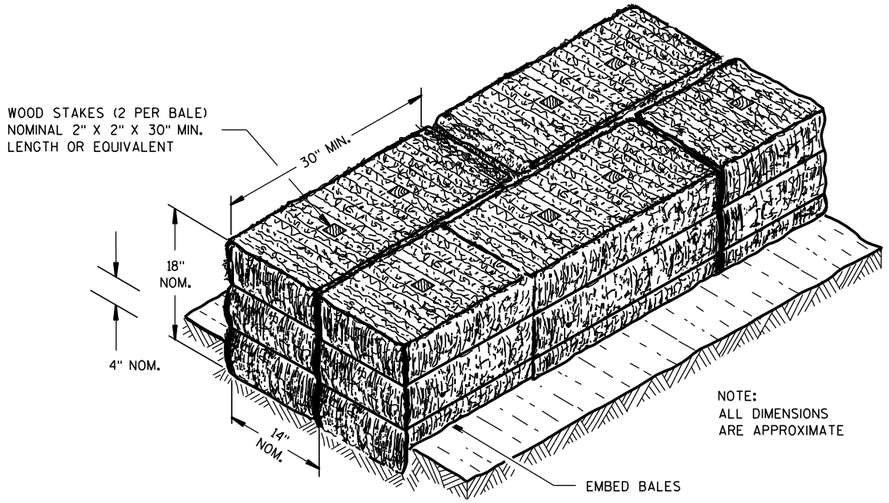

SECTION A-A

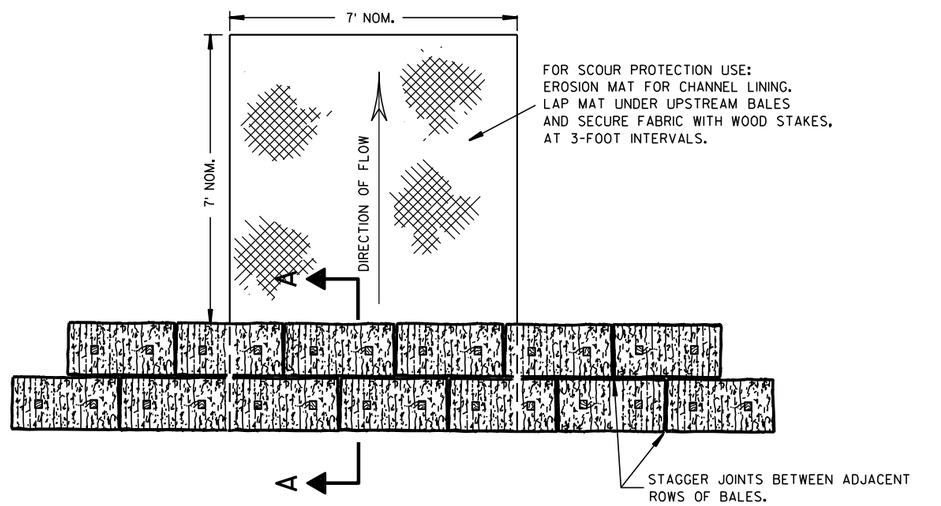

PLAN VIEW

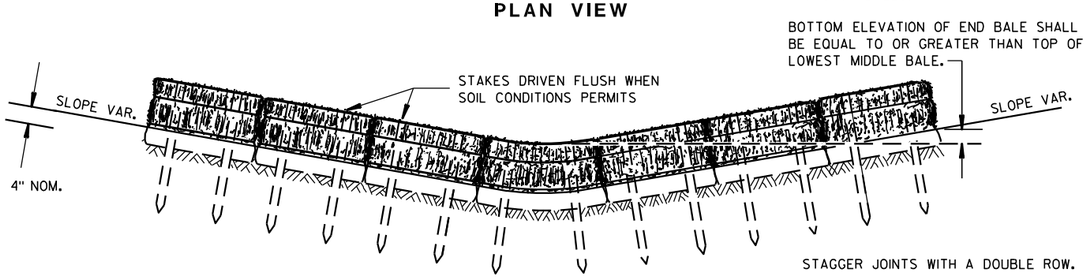

FRONT ELEVATION

TEMPORARY DITCH CHECK USING EROSION BALES ①

GENERAL NOTES

DETAILS OF CONSTRUCTION, MATERIALS AND WORKMANSHIP NOT SHOWN ON THIS DRAWING SHALL CONFORM TO THE PERTINENT REQUIREMENTS OF THE STANDARD SPECIFICATIONS AND THE APPLICABLE SPECIAL PROVISIONS.

① TEMPORARY DITCH CHECKS EITHER EROSION BALES OR MANUFACTURED SHALL BE PAID FOR UNDER THE BID ITEM OF TEMPORARY DITCH CHECK. THE DEPARTMENT WILL NOT PAY FOR TEMPORARY DITCH CHECKS CONSTRUCTED OF A SINGLE ROW OF EROSION BALES.

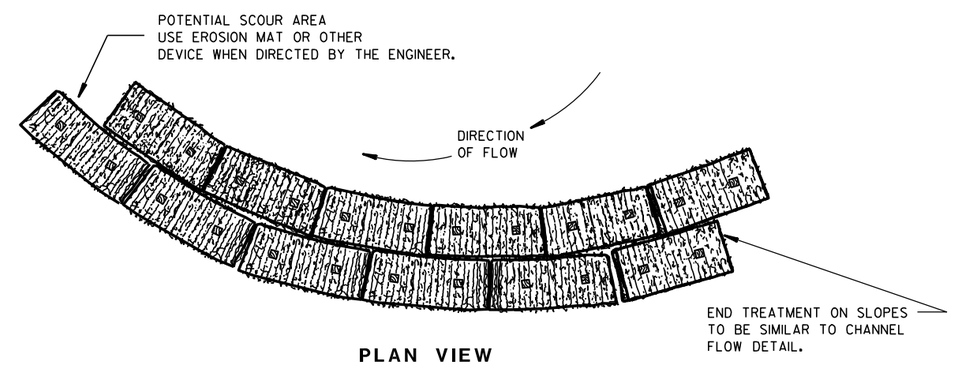

PLAN VIEW

WHEN ALTERING THE DIRECTION OF FLOW

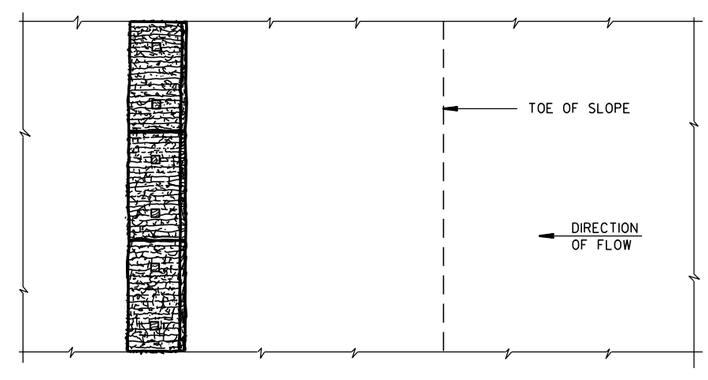

PLAN VIEW

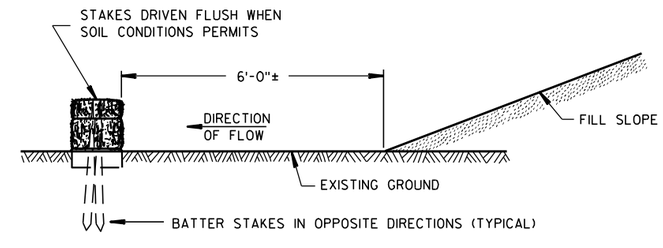

FRONT ELEVATION

WHEN EXISTING GROUND SLOPES AWAY FROM FILL SLOPE

EROSION BALES FOR SHEET FLOW

TYPICAL INSTALLATIONS OF EROSION BALES / TEMPORARY DITCH CHECKS

STATE OF WISCONSIN
DEPARTMENT OF TRANSPORTATION

APPROVED

6/04/02 — DATE

/S/ Beth Cann — CHIEF ROADWAY DEVELOPMENT ENGINEER

FHWA

6

6

S.D.D. 8 E 8-3

S.D.D. 8 E 8-3

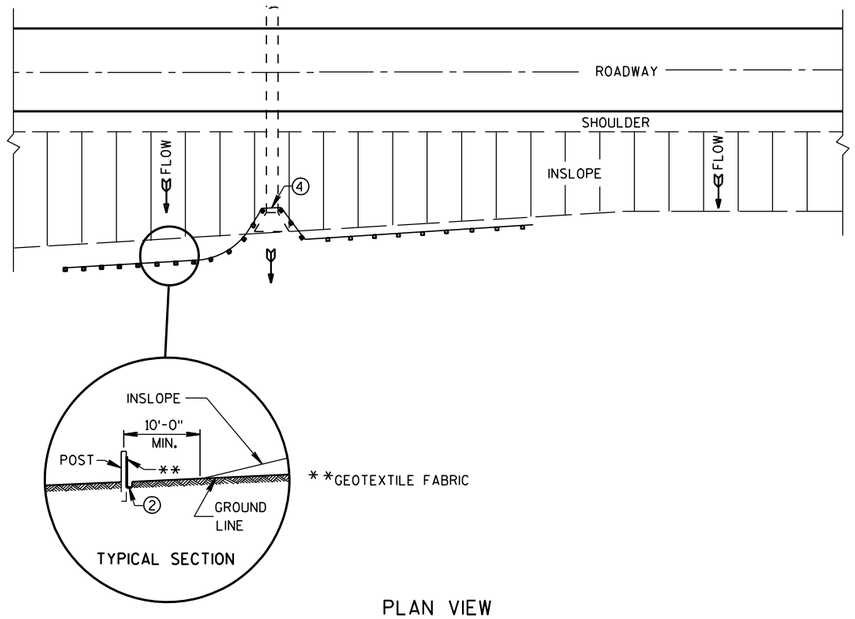

PLAN VIEW

TYPICAL APPLICATION OF SILT FENCE

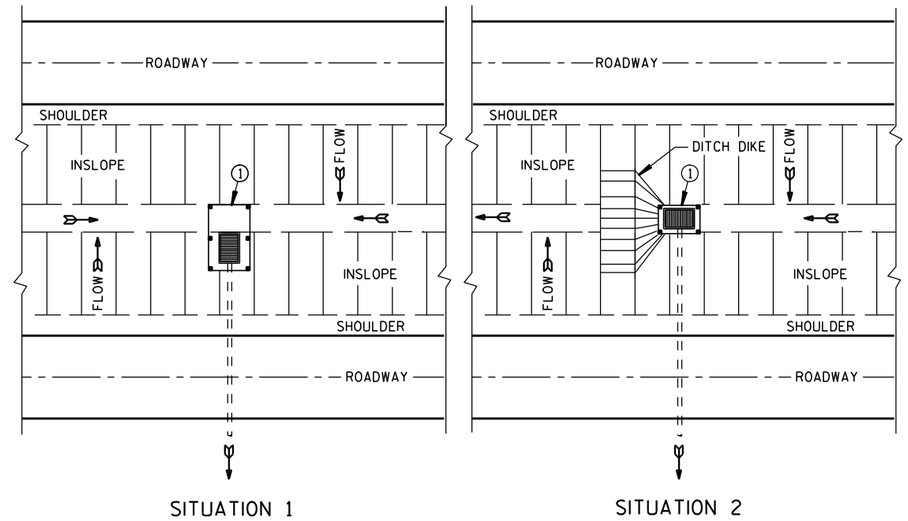

PLAN VIEW

SILT FENCE AT MEDIAN SURFACE DRAINS

GENERAL NOTES

DETAILS OF CONSTRUCTION NOT SHOWN ON THIS DRAWING SHALL CONFORM TO THE PERTINENT REQUIREMENTS OF THE STANDARD SPECIFICATIONS AND APPLICABLE SPECIAL PROVISIONS.

① HORIZONTAL BRACE REQUIRED WITH 2" X 4" WOODEN FRAME OR EQUIVALENT AT TOP OF POSTS.

② FOR MANUAL INSTALLATIONS THE TRENCH SHALL BE A MINIMUM OF 4" WIDE & 6" DEEP TO BURY AND ANCHOR THE GEOTEXTILE FABRIC. FOLD MATERIAL TO FIT TRENCH AND BACKFILL & COMPACT TRENCH WITH EXCAVATED SOIL.

③ WOOD POSTS SHALL BE A MINIMUM SIZE OF 1⅛" X 1⅛" OF OAK OR HICKORY.

④ SILT FENCE TO EXTEND ACROSS THE TOP OF THE PIPE.

⑤ CONSTRUCT SILT FENCE FROM A CONTINUOUS ROLL IF POSSIBLE BY CUTTING LENGTHS TO AVOID JOINTS. IF A JOINT IS NECESSARY USE ONE OF THE FOLLOWING TWO METHODS; A) OVERLAP THE END POSTS AND TWIST, OR ROTATE, AT LEAST 180 DEGREES. B) HOOK THE END OF EACH SILT FENCE LENGTH.

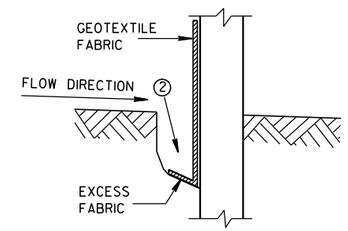

TRENCH DETAIL

NOTE: ADDITIONAL POST DEPTH OR TIE BACKS MAY BE REQUIRED IN UNSTABLE SOILS

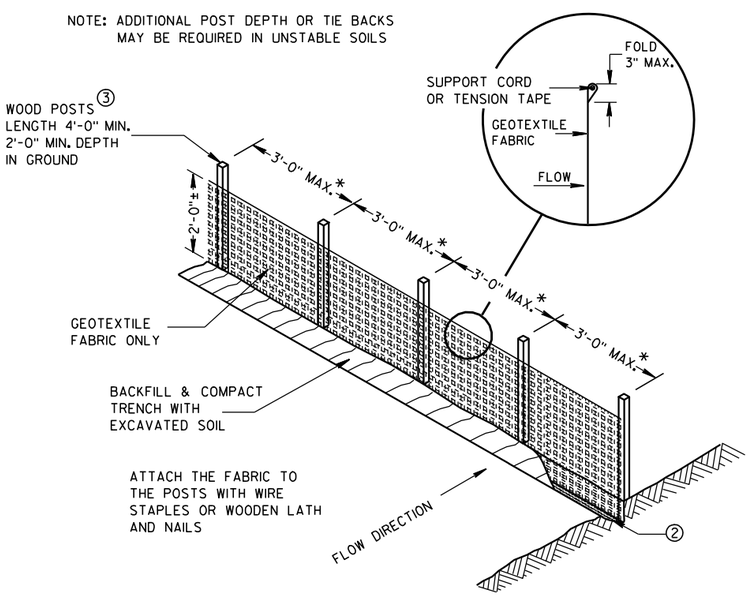

*NOTE: 8'-0" POST SPACING ALLOWED IF A WOVEN GEOTEXTILE FABRIC IS USED.

SILT FENCE

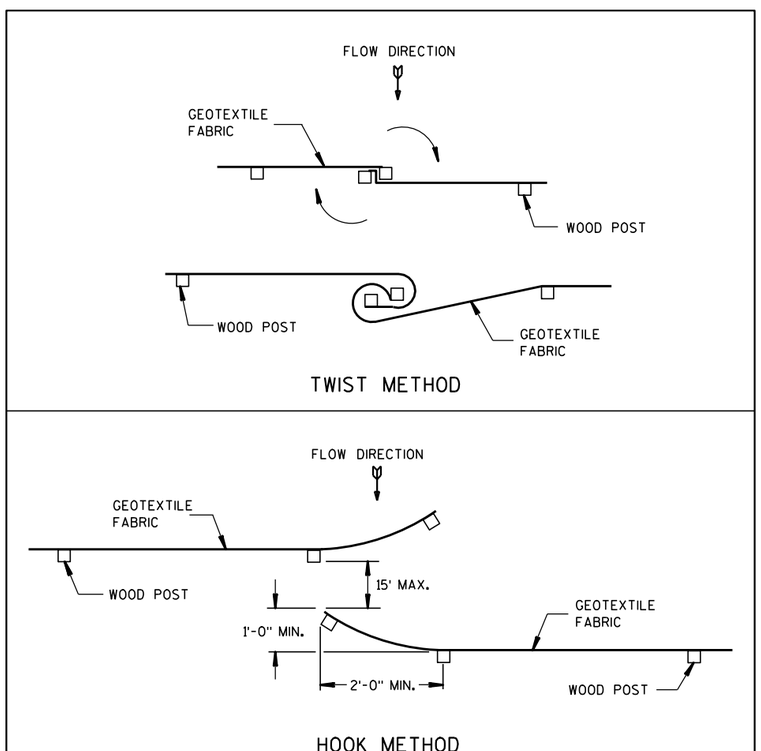

JOINING TWO LENGTHS OF SILT FENCE ⑤

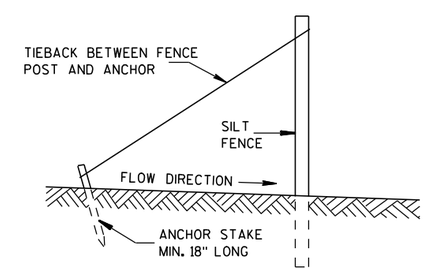

SILT FENCE TIE BACK

(WHEN REQUIRED BY THE ENGINEER)

SILT FENCE
STATE OF WISCONSIN DEPARTMENT OF TRANSPORTATION
APPROVED 4-29-05 /S/ Beth Cann----- DATE CHIEF ROADWAY DEVELOP ENGINEER FHWA

6

6

S.D.D. 8 E 9-6

S.D.D. 8 E 9-6

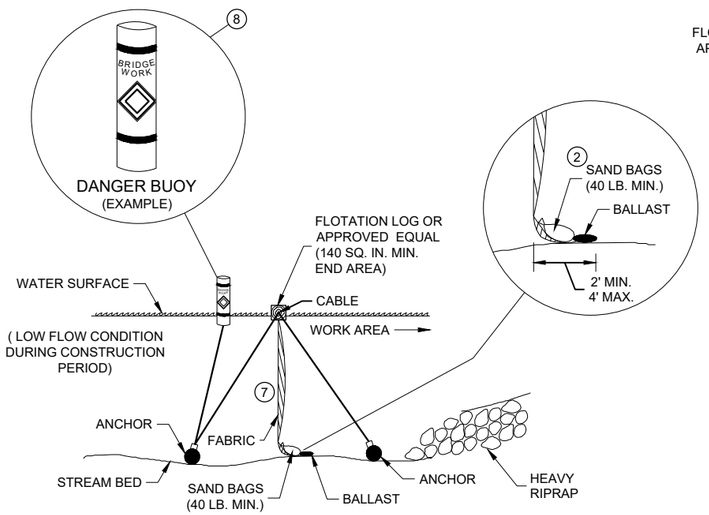

SECTION B - B

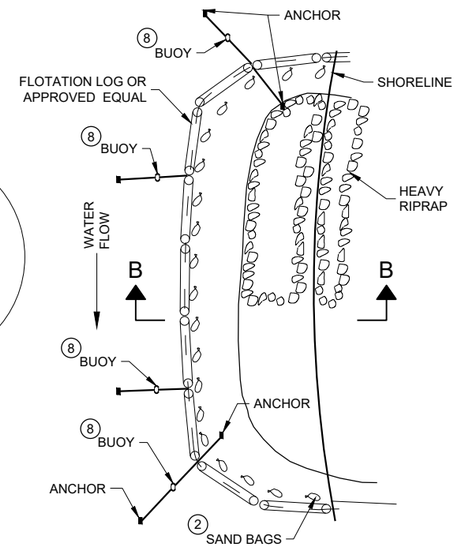

PLAN VIEW

TURBIDITY BARRIER - FLOAT ALTERNATIVE
CAUTION - SEE NOTE 6

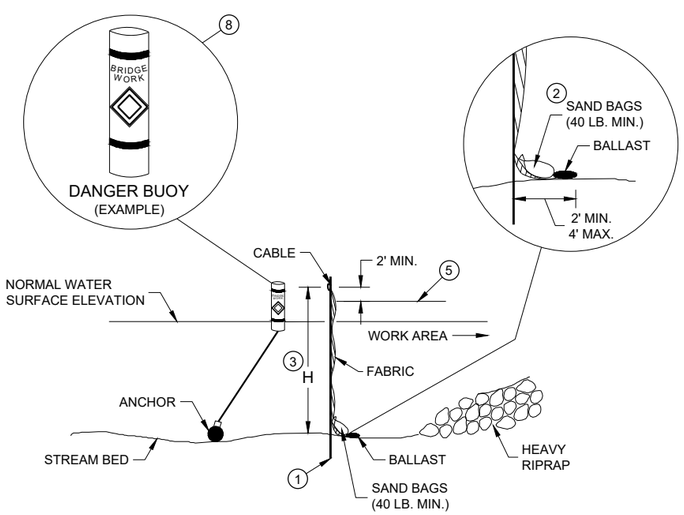

SECTION A - A

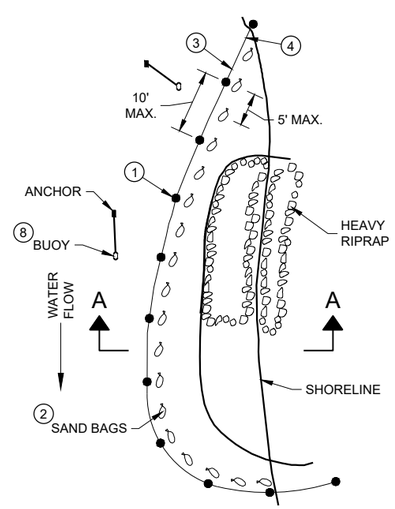

PLAN VIEW

TURBIDITY BARRIER - STANDARD POST INSTALLATION

TURBIDITY BARRIER PLACEMENT DETAILS

GENERAL NOTES

DETAILS OF CONSTRUCTION, MATERIALS AND WORKMANSHIP NOT SHOWN ON THIS DRAWING SHALL CONFORM TO THE PERTINENT REQUIREMENTS OF THE STANDARD SPECIFICATIONS AND THE APPLICABLE SPECIAL PROVISIONS.

TURBIDITY BARRIER MAY BE REMOVED AT THE ENGINEERS DISCRETION, WHEN PERMANENT EROSION CONTROL MEASURES HAVE BEEN ESTABLISHED.

1. DRIVEN STEEL POSTS, PIPES, OR CHANNELS. LENGTH SHALL BE SUFFICIENT TO SECURELY SUPPORT BARRIER AT HIGH WATER ELEVATIONS.
2. SAND BAGS TO BE USED AS ADDITIONAL BALLAST WHEN ORDERED BY THE ENGINEER TO MEET ADVERSE FIELD CONDITIONS. SPACE AS APPROPRIATE FOR SITE CONDITIONS.
3. WHEN BARRIER HEIGHT "H" EXCEEDS 8 FEET, POST SPACING MAY NEED TO BE DECREASED.
4. IN WATERWAYS SUBJECT TO FLUCTUATING WATER ELEVATIONS, PROVISIONS SHOULD BE MADE TO ALLOW THE WATER TO EQUALIZE ON EACH SIDE OF THE BARRIER. THIS MAY BE ACCOMPLISHED BY LEAVING A PORTION OF THE BARRIER OPEN ON THE UPSTREAM END.
5. ESTIMATED HIGH WATER ELEVATION DURING CONSTRUCTION PERIOD. MINIMUM BARRIER HEIGHT SHALL BE 2' GREATER THAN EITHER THE Q2 ELEVATION OR THE ESTIMATED HIGH WATER ELEVATION DURING CONSTRUCTION, WHICHEVER IS GREATER.
6. FLOAT ALTERNATIVE WILL ONLY BE ALLOWED WITH WRITTEN APPROVAL OF THE ENGINEER, AND IS MEANT FOR LOCATIONS WHERE BEDROCK PREVENTS THE INSTALLATION OF POSTS.
7. ALLOW SUFFICIENT SLACK VERTICALLY AND HORIZONTALLY SO THAT SEDIMENT BUILD UP WILL NOT SEPARATE OR LOWER THE TURBIDITY BARRIER.
8. USE AS DIRECTED BY COAST GUARD OR DNR PERMIT WHEN WORKING IN NAVIGABLE WATERWAYS.

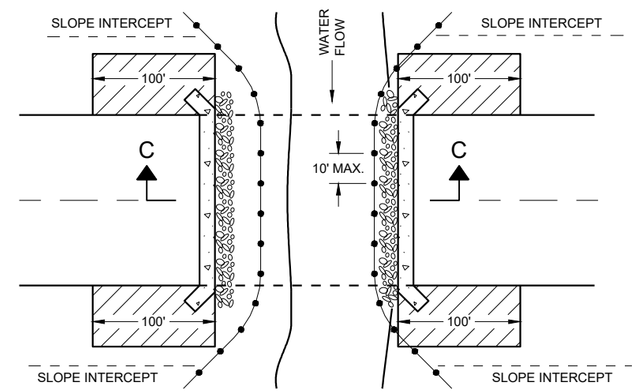

PLAN VIEW

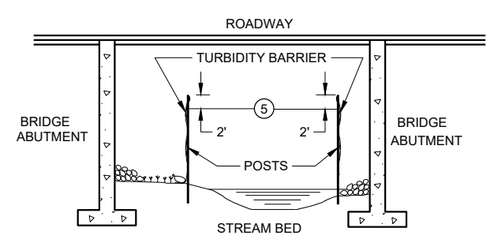

SECTION C - C

TURBIDITY BARRIER DETAIL SHOWING TYPICAL PLACEMENT AT STRUCTURES

TURBIDITY BARRIER

STATE OF WISCONSIN
DEPARTMENT OF TRANSPORTATION

APPROVED
6/4/02 — DATE
/S/ Beth Cannestra — CHIEF ROADWAY DEVELOPMENT ENGINEER
FHWA

6

6

SDD 08E11 - 02

SDD 08E11 - 02

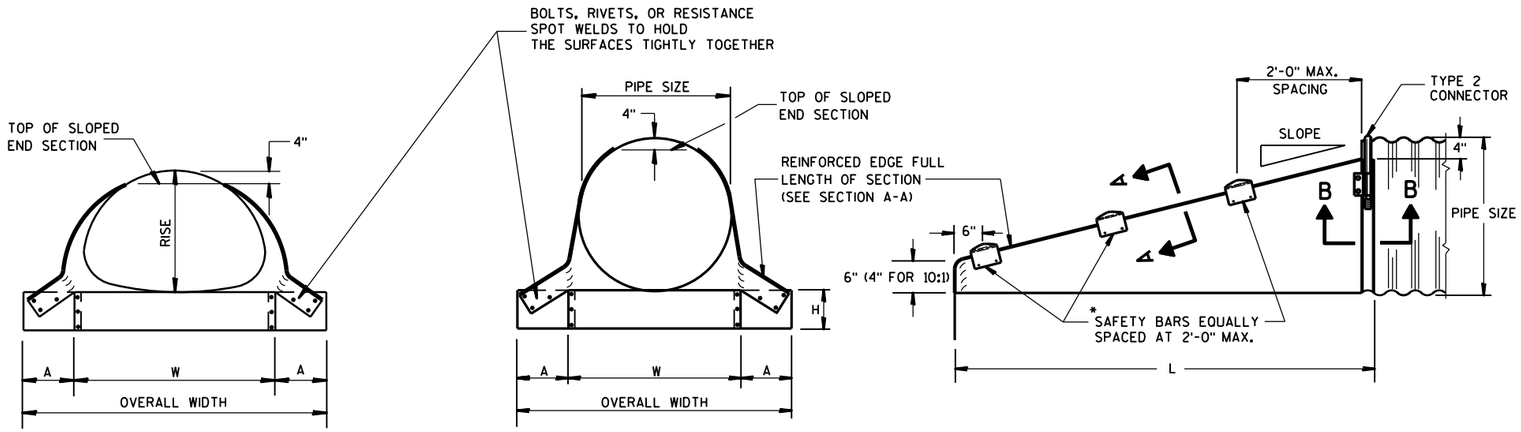

FRONT VIEW

FRONT VIEW

SIDE VIEW

GENERAL NOTES

DETAILS OF CONSTRUCTION, MATERIALS AND WORKMANSHIP NOT SHOWN ON THIS DRAWING SHALL CONFORM TO THE PERTINENT REQUIREMENTS OF THE STANDARD SPECIFICATIONS AND THE APPLICABLE SPECIAL PROVISIONS.

SLOPED END SECTIONS SHALL CONFORM TO THE REQUIREMENTS OF THE STANDARD SPECIFICATIONS, SECTION 521 FOR STEEL APRON ENDWALLS.

SAFETY BARS SHALL BE FABRICATED FROM GALVANIZED STEEL PIPE MEETING THE REQUIREMENTS OF ASTM A-53, GRADE B, SCHEDULE 40 OR APPROVED EQUAL.

STEEL APRON ENDWALLS FOR CULVERT PIPE SLOPED SIDE DRAINS

PIPE DIA. (IN.)	MIN. THICK. (Inches)	DIMENSIONS (Inches)				L DIMENSIONS					
		A	H	W	OVERALL WIDTH	SLOPE	LENGTH INCHES	SLOPE	LENGTH INCHES	SLOPE	LENGTH INCHES
15	.064	8	6	21	37	4:1	20	6:1	30	10:1	70
18	.064	8	6	24	40	4:1	32	6:1	48	10:1	100
21	.064	8	6	27	43	4:1	44	6:1	66	10:1	130
24	.064	8	6	30	46	4:1	56	6:1	84	10:1	160
30	.109	12	9	36	60	4:1	80	6:1	120	10:1	220
36	.109	12	9	42	66	4:1	104	6:1	156	10:1	280
42	.109	16	12	48	80	4:1	128	6:1	192	——	——
48	.109	16	12	54	86	4:1	152	6:1	228	——	——
54	.109	16	12	60	92	4:1	176	6:1	264	——	——
60	.109	16	12	66	98	4:1	200	6:1	300	——	——

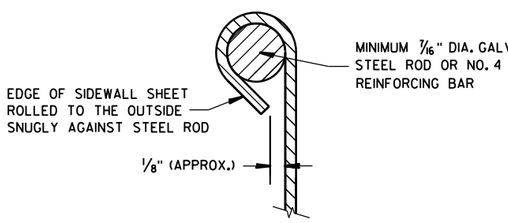

SECTION A-A

*NOTE:
THREE SAFETY BARS ARE SHOWN. ACTUAL NUMBER OF BARS REQUIRED AT A 2'-0" C-C MAX. SPACING WILL VARY DEPENDING ON THE LENGTH OF THE END SECTION.

3" GALVANIZED PIPE. FLATTEN ENDS, THEN BEND OUTSIDE 4" TO MATCH END SECTION SIDES.

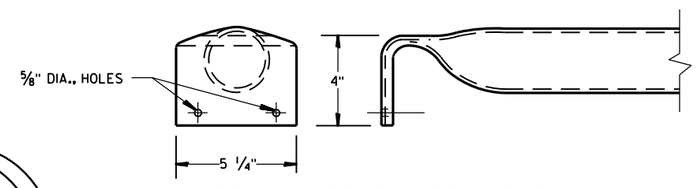

DETAIL OF SAFETY BAR

STEEL APRON ENDWALLS FOR PIPE ARCH SLOPED SIDE DRAINS

EQUIV. DIA. (Inches)	(Inches)		MIN. THICK. (Inches) ①	DIMENSIONS (Inches)				L DIMENSIONS					
	SPAN	RISE		A	H	W	OVERALL WIDTH	SLOPE	LENGTH INCHES	SLOPE	LENGTH INCHES	SLOPE	LENGTH INCHES
15	17	13	.064 *	7	6	30	44	4:1	19	6:1	30	10:1 ②	70
18	21	15	.064 *	8	6	27	43	4:1	20	6:1	30	10:1	70
21	24	18	.064 *	8	6	30	46	4:1	32	6:1	48	10:1	100
24	28	20	.064 *	8	6	34	50	4:1	40	6:1	60	10:1	120
30	35	24	.079 *	12	9	41	65	4:1	56	6:1	84	10:1	160
36	42	29	.109 *	12	9	48	72	4:1	76	6:1	114	10:1	210
42	49	33	.109	16	12	55	87	4:1	92	6:1	138	——	——
48	57	38	.109	16	12	63	95	4:1	112	6:1	168	——	——
54	64	43	.109	16	12	70	102	4:1	132	6:1	198	——	——

① * MINIMUM THICKNESS OF ALL 10:1 SLOPED SIDE DRAINS IS 0.109".
② ACTUAL SLOPE GREATER THAN 10:1.

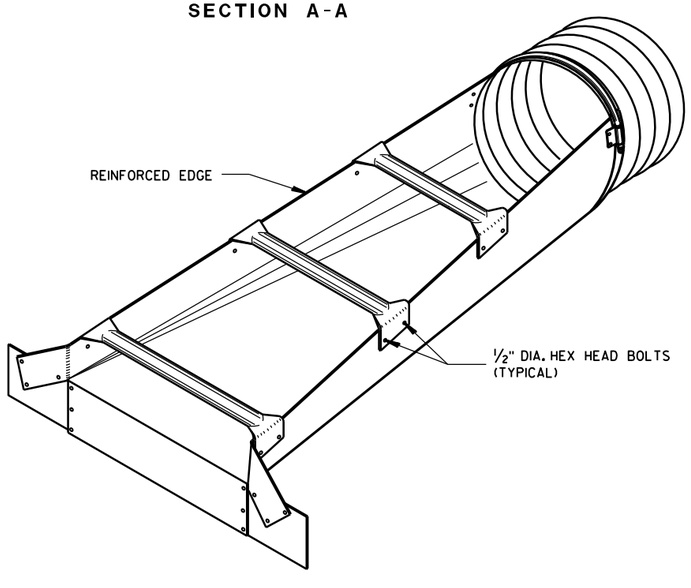

ISOMETRIC VIEW

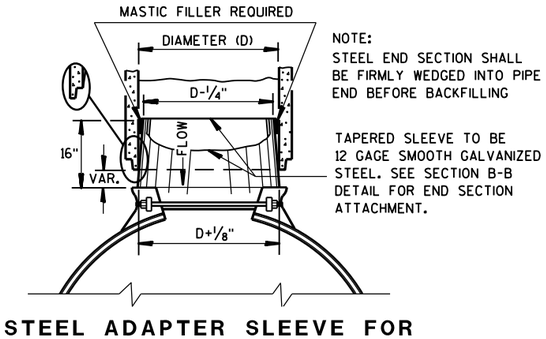

NOTE:
STEEL END SECTION SHALL BE FIRMLY WEDGED INTO PIPE END BEFORE BACKFILLING

TAPERED SLEEVE TO BE 12 GAGE SMOOTH GALVANIZED STEEL. SEE SECTION B-B DETAIL FOR END SECTION ATTACHMENT.

STEEL ADAPTER SLEEVE FOR CONCRETE PIPE

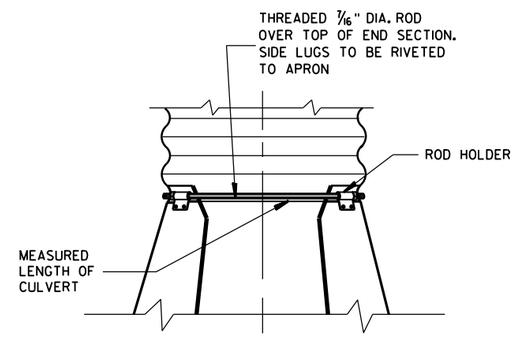

TYPE 2 CONNECTION DETAIL

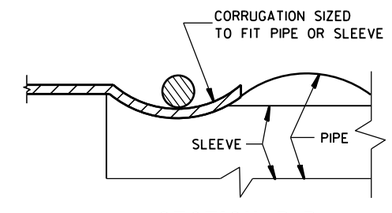

SECTION B-B

STEEL APRON ENDWALLS FOR CULVERT PIPE AND PIPE ARCH SLOPED SIDE DRAINS

STATE OF WISCONSIN
DEPARTMENT OF TRANSPORTATION

APPROVED
9/14/2012 — DATE
/S/ Jerry H. Zogg — ROADWAY STANDARDS DEVELOPMENT ENGINEER
FHWA

6

6

S.D.D. 8 F 7-5

S.D.D. 8 F 7-5

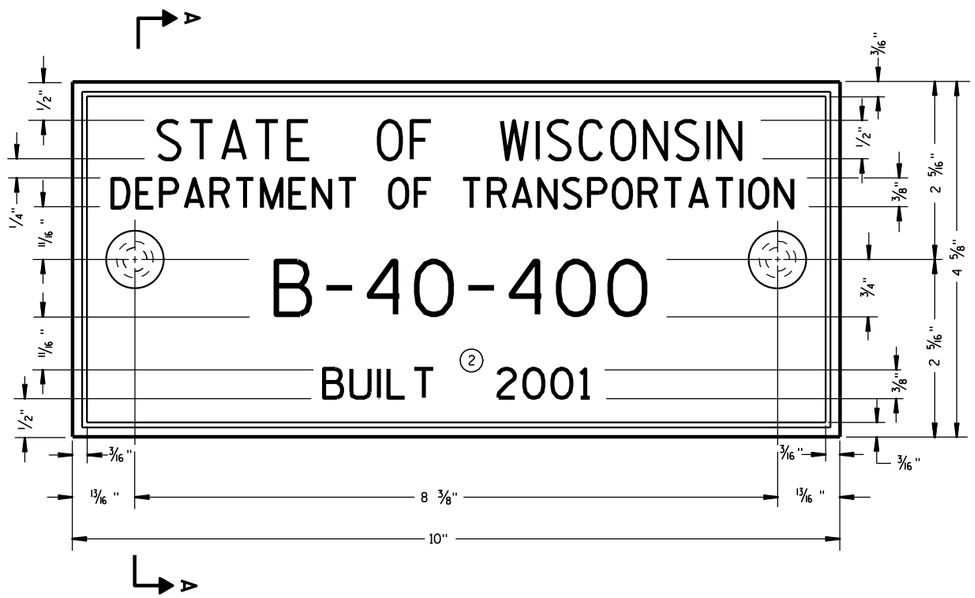

TYPICAL NAME PLATE

(BRIDGES, CULVERTS, AND RETAINING WALLS)

GENERAL NOTES

NAME PLATES TO BE INSTALLED ON BRIDGES, CULVERTS, AND RETAINING WALLS SHALL CONFORM TO THE REQUIREMENTS OF SECTION 502.3.11 OF THE STANDARD SPECIFICATIONS.

THE BRIDGE NUMBER AND YEAR BUILT SHOWN ON THIS DRAWING ARE EXAMPLES ONLY. SEE CONSTRUCTION PLANS FOR INDIVIDUAL NUMBERING AND YEAR BUILT.

① EPOXY RESIN SHALL BE FROM AN APPROVED MANUFACTURER AND USED IN ACCORDANCE WITH MANUFACTURER'S RECOMMENDATIONS.

② REHABILITATION OF AN EXISTING STRUCTURE SHOULD USE THE DATE OF ORIGINAL STRUCTURE CONSTRUCTION.

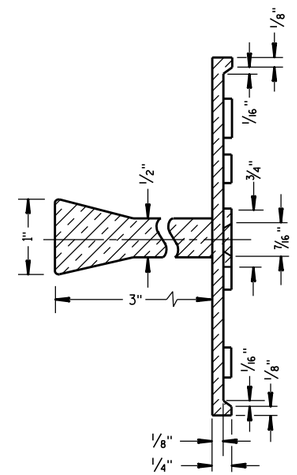

SECTION A-A

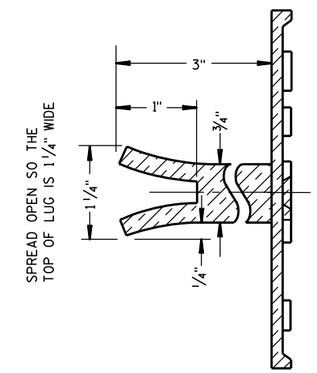

ALTERNATE LUG

FOR MULTI-UNIT STRUCTURES
LINE 3 ABOVE SHALL READ

B = BRIDGE
C = CULVERT
R = RETAINING WALL

COUNTY NO.

BRIDGE NO.

UNIT NO. FOR MULTIPLE
UNIT BRIDGE

B-40-400-1A

NUMBERING DESIGNATION
MULTI-UNIT STRUCTURES

① ADHERE ANCHOR LUG TO PRECAST RETAINING WALL WITH EPOXY RESIN.

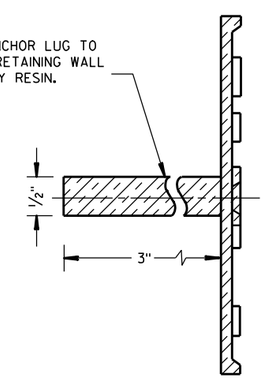

ALTERNATE LUG

(FOR ATTACHMENT TO PRECAST STRUCTURES)

NAME PLATE (STRUCTURES)		
STATE OF WISCONSIN DEPARTMENT OF TRANSPORTATION		
APPROVED		
3/26/10 DATE	/S/ Scot Beck CHIEF STRUCTURAL DEVELOPER	ENGINEER
FHWA		

6

6

S.D.D. 12 A 3-10

S.D.D. 12 A 3-10

GENERAL NOTES

DETAILS OF CONSTRUCTION, MATERIALS AND WORKMANSHIP NOT SHOWN ON THIS DRAWING SHALL CONFORM TO THE PERTINENT REQUIREMENTS OF THE STANDARD SPECIFICATIONS AND SPECIAL PROVISIONS.

TRANSVERSE JOINT DETAILS ARE SHOWN ELSEWHERE IN THE PLAN.

FINISH THE SHOULDER PAVEMENT CONFORMING TO SUBSECTION 415.3.8 OF THE STANDARD SPECIFICATIONS.

TIE BARS SHALL CONFORM TO SUBSECTION 505.2.4 OF THE STANDARD SPECIFICATIONS.

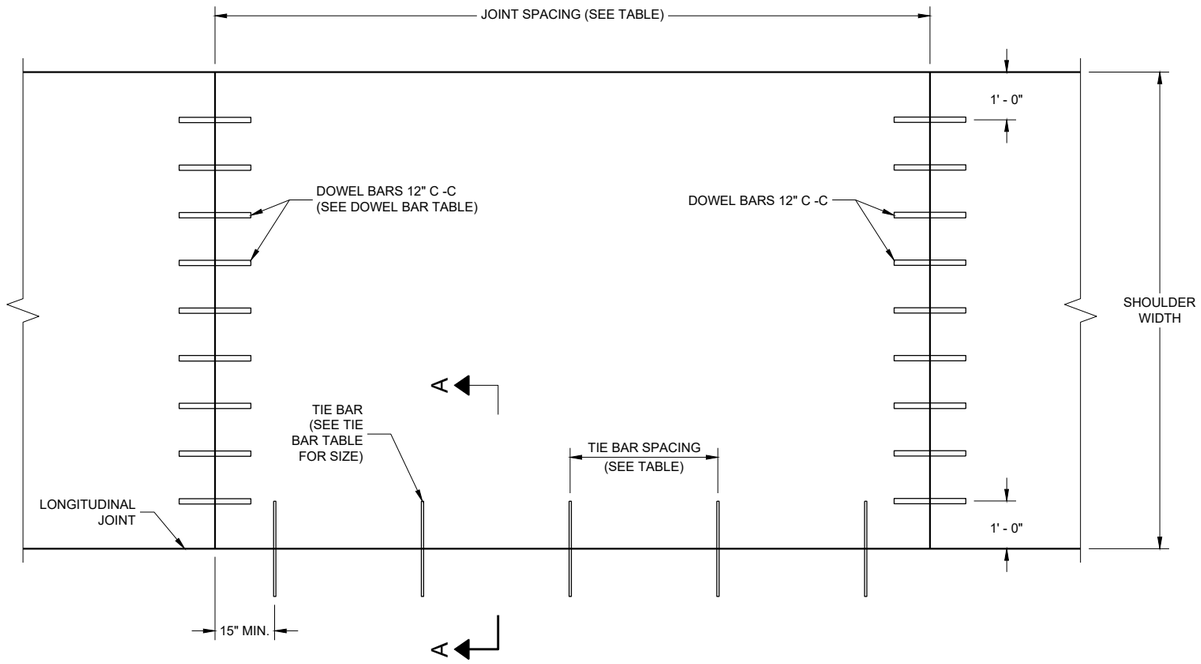

PLAN VIEW

CONCRETE PAVEMENT SHOULDER

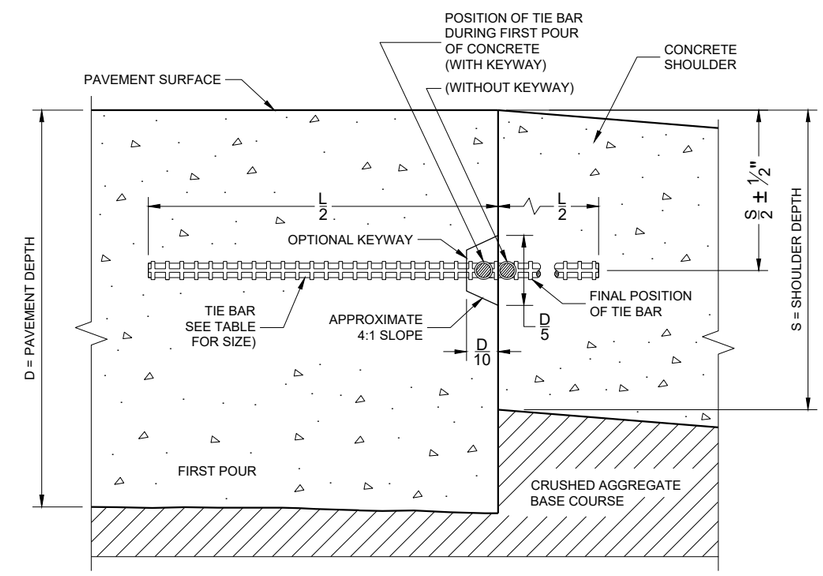

SECTION A - A

LONGITUDINAL CONSTRUCTION JOINT

TIE BAR TABLE

PAVEMENT DEPTH (D)	TIE BAR SIZE	TIE BAR LENGTH (L)	MAX. TIE BAR SPACING
<10 ½"	NO. 4	30"	36"
>10 ½"	NO. 5	36"	36"
	NO. 4 *	30"	24" **

* SUBSTITUTE BENT BATS AT LONGITUDINAL JOINTS WHEN EQUIPMENT LIMITATIONS DURING CONSTRUCTION WARRANT (e.g. AUXILIARY LANES OR TURN LANES.

** CONFORM TO 15" MINIMUM SPACING FROM TRANSVERSE JOINTS; SPACING BETWEEN TIE BARS WILL BE 30" AT TRANSVERSE JOINTS.

PAVEMENT DEPTH, DOWEL BAR SIZE AND JOINT SPACING TABLE

PAVEMENT DEPTH (D)	DOWEL BAR DIAMETER ***	CONTRACTION JOINT SPACING
6", 6 ½"	NONE	12"
7", 7 ½"	1"	14"
8" & ABOVE	1 ¼"	15"

*** FOR DOWELED CONCRETE SHOULDERS WITH TRAPEZOIDAL CROSS SECTIONS, CHOSE THE APPROPRIATE DOWEL BAR DIAMETER BASED ON THE SMALLER PAVEMENT DEPTH (LIKELY THE OUTSIDE EDGE OF THE SHOULDER). IF USING BASKETS, USE BASKETS FRO THE AVERAGE THICKNESS OF THE CROSS SECTION.

CONCRETE PAVEMENT SHOULDERS

STATE OF WISCONSIN
DEPARTMENT OF TRANSPORTATION

APPROVED
November 2022 — DATE
/S/ Peter Kemp — PAVEMENT SUPERVISOR

FHWA

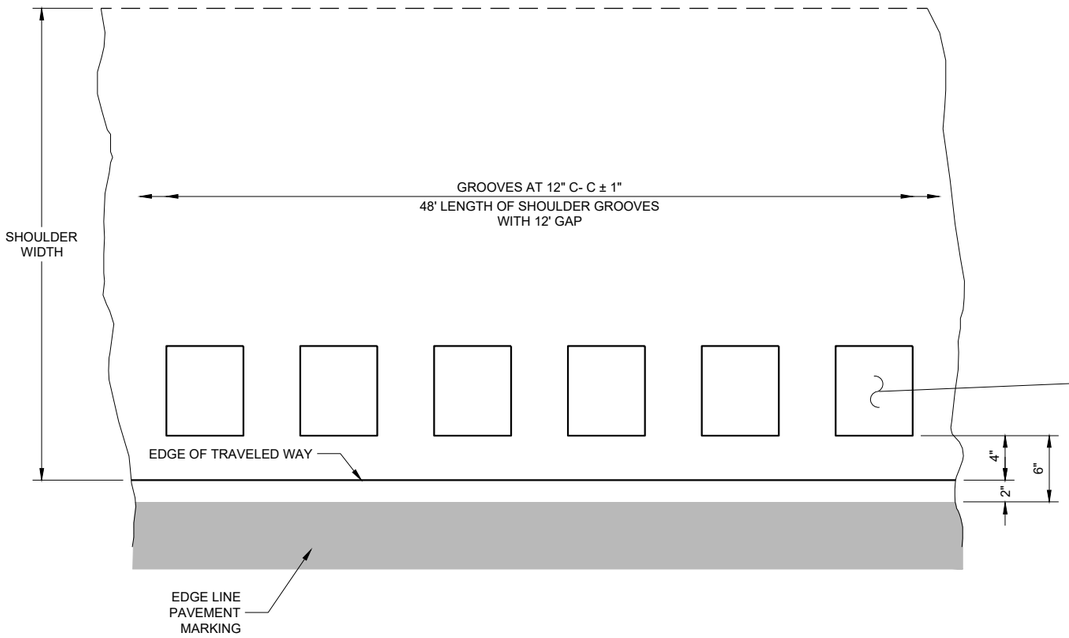

PLAN DETAIL VIEW
SHOULDER WITH GROOVES

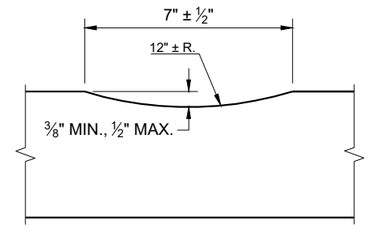

SECTION A - A

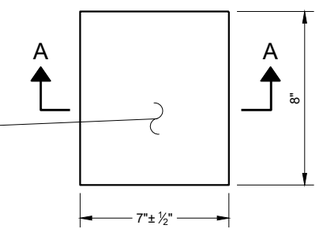

PLAN VIEW
(SINGLE GROOVE)

GENERAL NOTES

DO NOT MILL SHOULDER GROOVES THROUGH INTERSECTIONS, MARKED CROSSWALKS, NON-MOTORIZED PATH CROSSINGS, ETC. REFER TO SDD 13A10 SHEETS "g" AND "h".

SHOULDER GROOVES MAY BE OMITTED IN AREAS WITH HIGH CONCENTRATIONS OF DRIVEWAYS WHEN DIRECTED BY THE ENGINEER.

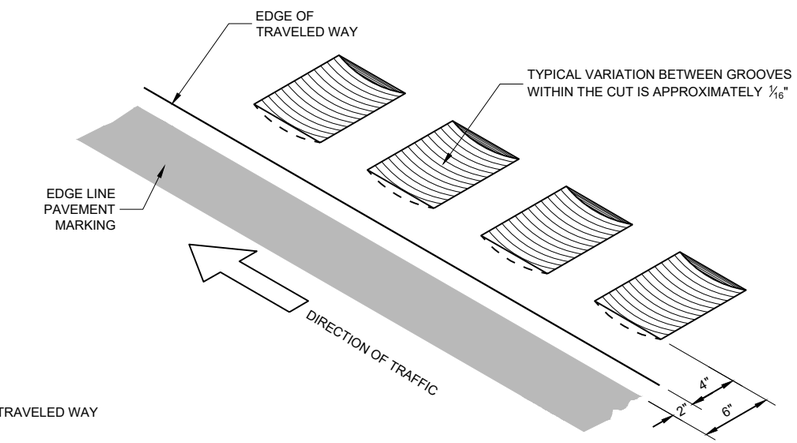

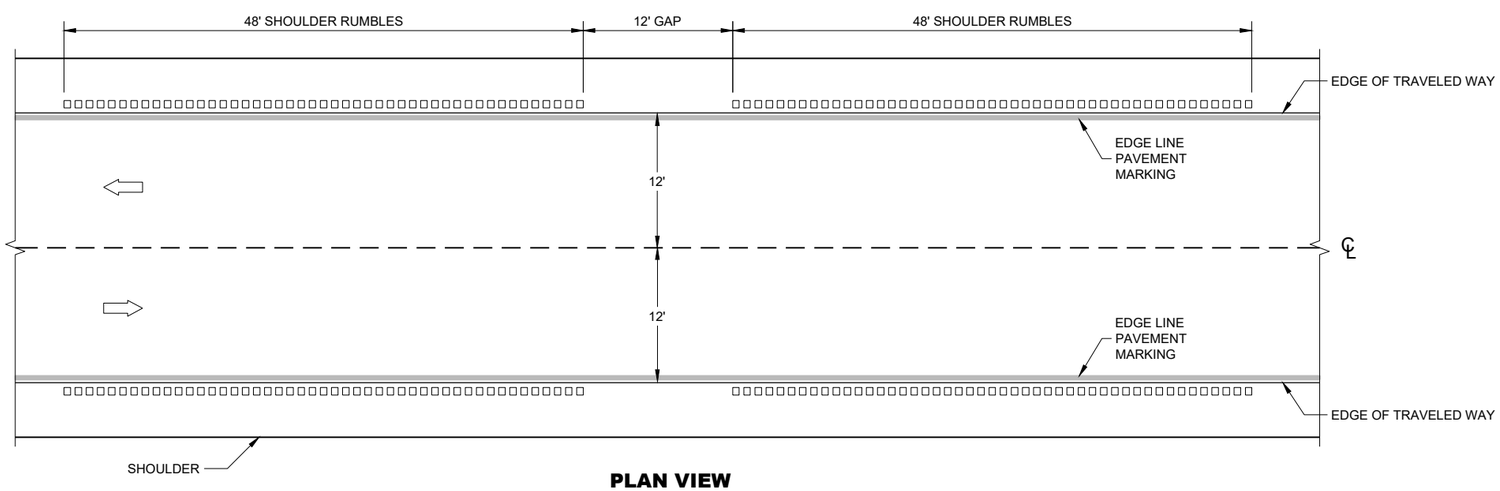

PLAN VIEW

SHOULDER RUMBLE STRIPS - ASPHALT

SHOULDER RUMBLE STRIPS ASPHALT

STATE OF WISCONSIN
DEPARTMENT OF TRANSPORTA

6

SDD 13A10 - 03a

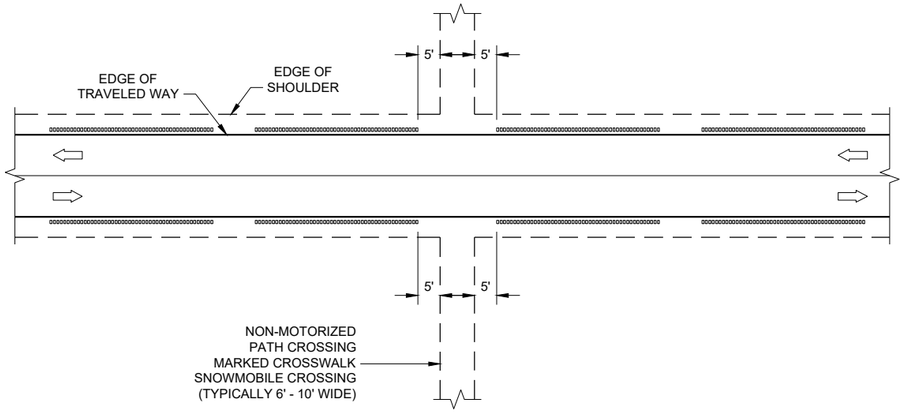

GROOVES AT MISCELLANEOUS CROSSINGS

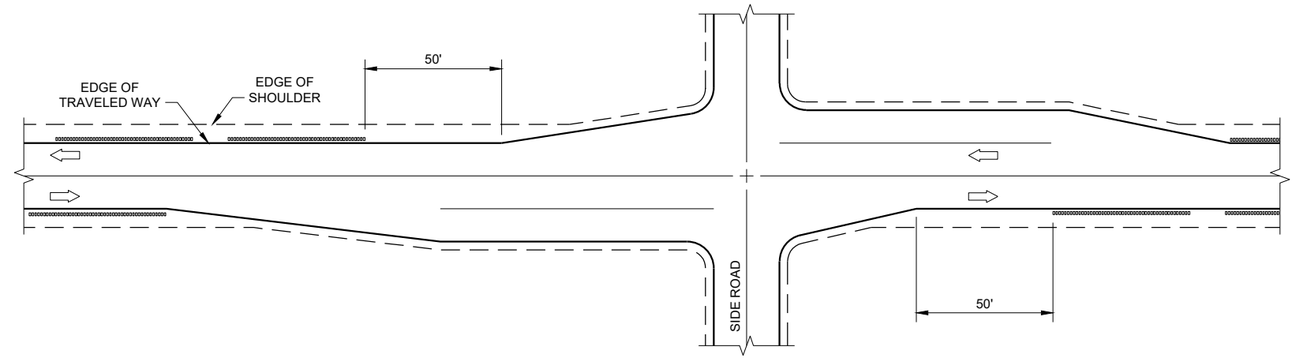

GROOVES AT RIGHT TURN LANE

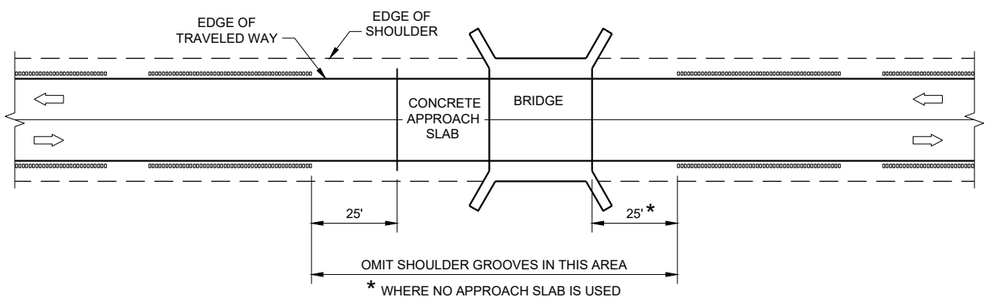

GROOVES AT BRIDGES

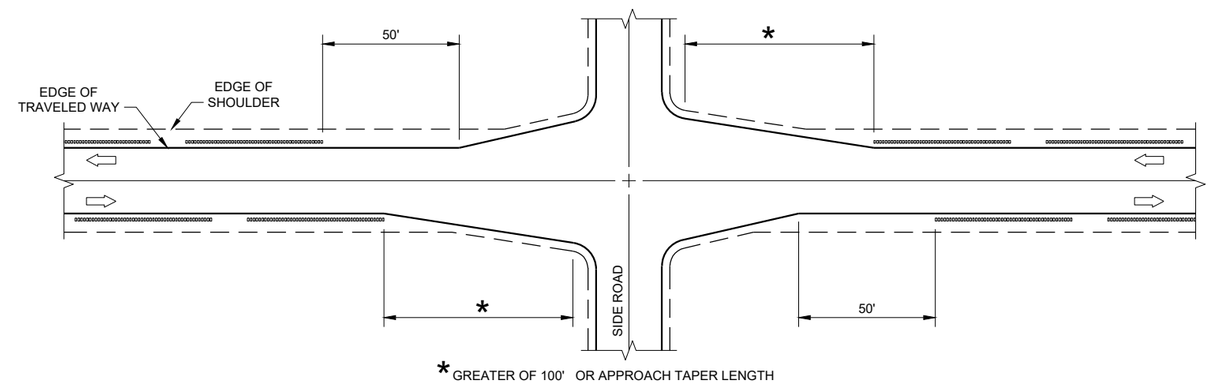

GROOVES AT INTERSECTIONS WITH APPROACH TAPER

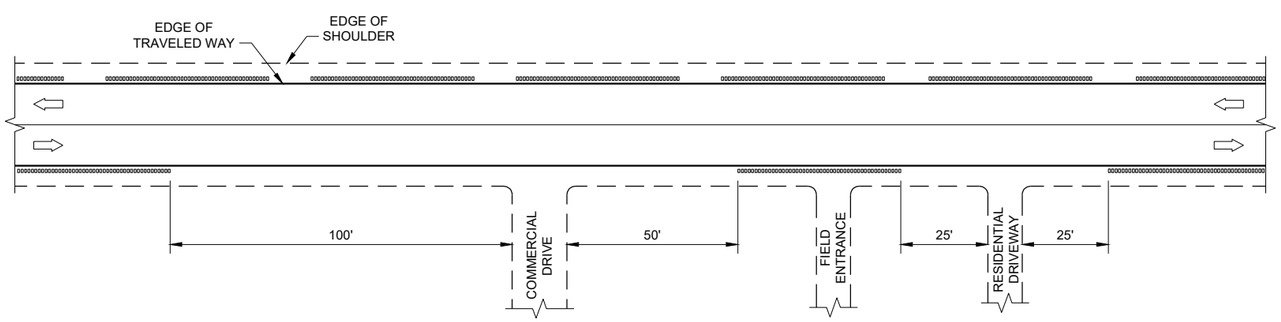

GROOVES AT DRIVEWAYS (1)

GENERAL NOTES

(1) SHOULDER GROOVES MAY BE OMITTED IN AREAS WITH HIGH CONCENTRATIONS OF DRIVEWAYS. WHEN DIRECTED BY THE ENGINEER.

SHOULDER AND EDGE LINE RUMBLE STRIPS CROSSINGS, INTERSECTIONS, BRIDGES, DRIVEWAYS

STATE OF WISCONSIN
DEPARTMENT OF TRANSPORTATION

6

SDD 13A10 - 03g

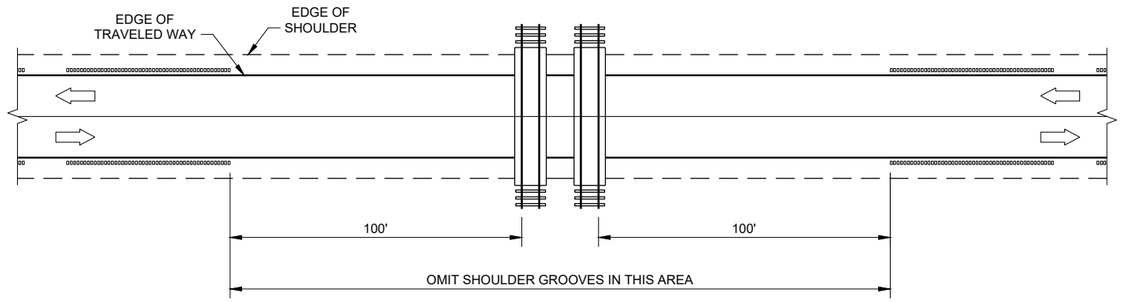

GROOVES AT RAILROADS

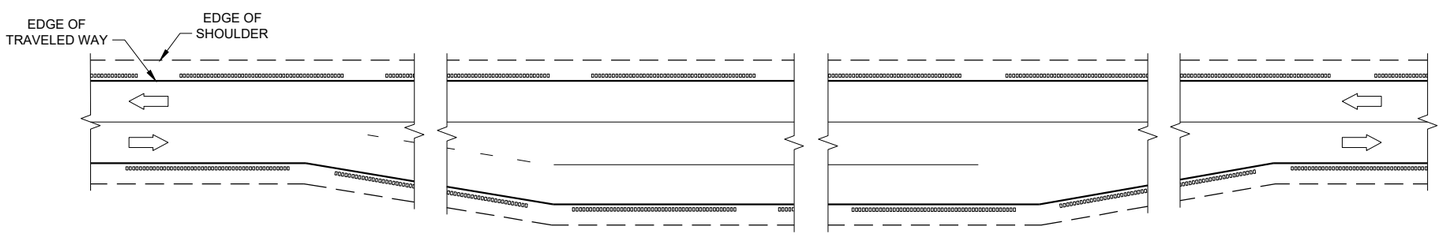

GROOVES AT PASSING AND CLIMBING LANES

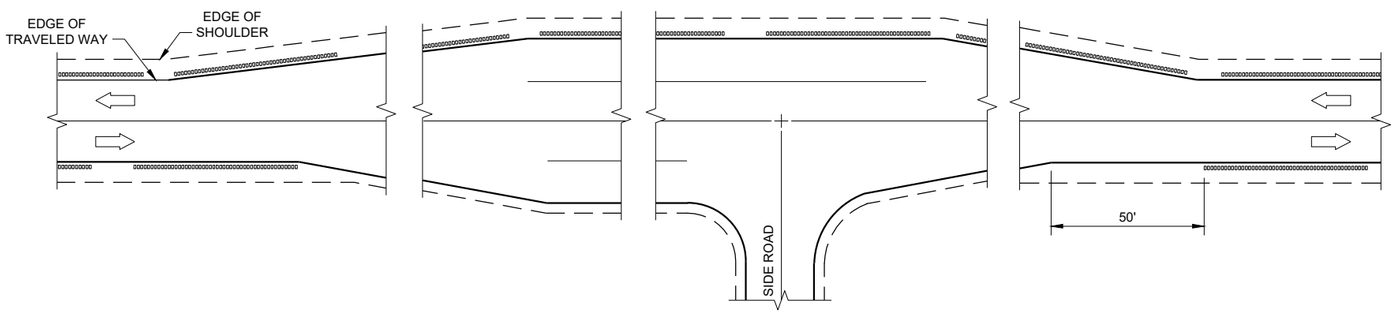

GROOVES AT BYPASS LANES

6

6

SHOULDER AND EDGE LINE RUMBLE STRIPS - RAILROAD, PASSING, CLIMBING AND BYPASS LANES

STATE OF WISCONSIN
DEPARTMENT OF TRANSPORTATION

APPROVED
May 2023 — DATE
/S/ John Jenkins — ROADWAY STANDARDS DEVE ENGINEER

FHWA

SDD 13A10 - 03h

SDD 13A10 - 03h

GENERAL NOTES

DO NOT MILL SHOULDER GROOVES THROUGH INTERSECTIONS, MARKED CROSSWALKS, NON-MOTORIZED PATH CROSSINGS, ETC. REFER TO SDD 13A11 SHEETS "d" AND "e".

CENTERLINE GROOVES MAY BE OMITTED IN AREAS WITH HIGH CONCENTRATIONS OF DRIVEWAYS WHEN DIRECTED BY THE ENGINEER.

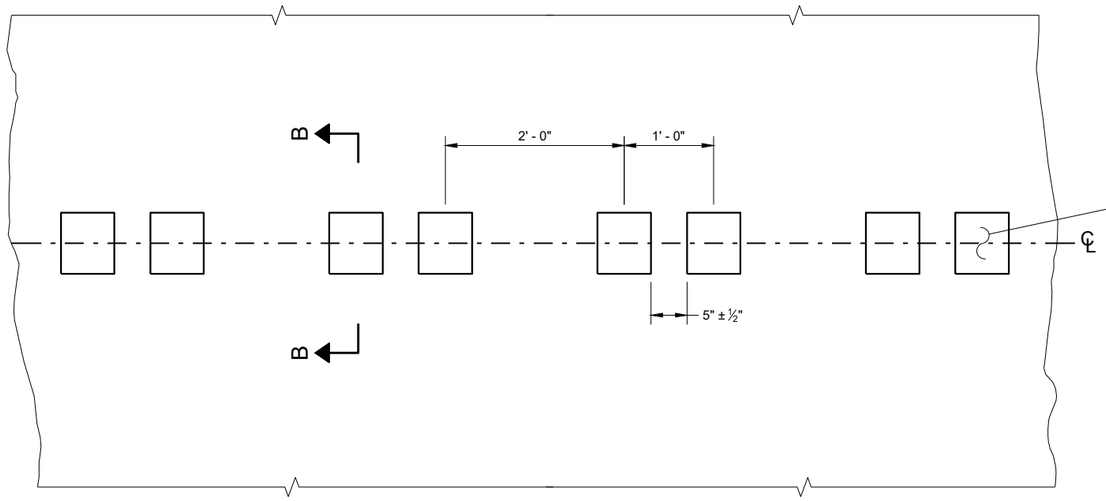

PLAN DETAIL VIEW

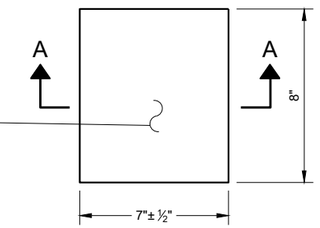

PLAN VIEW
(SINGLE GROOVE)

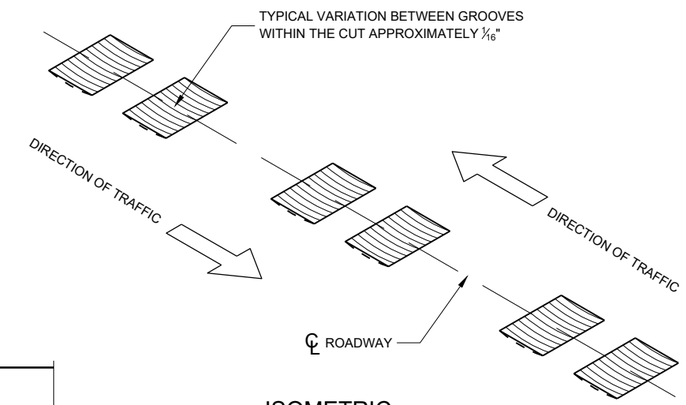

ISOMETRIC

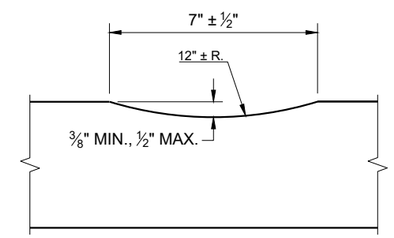

SECTION A - A

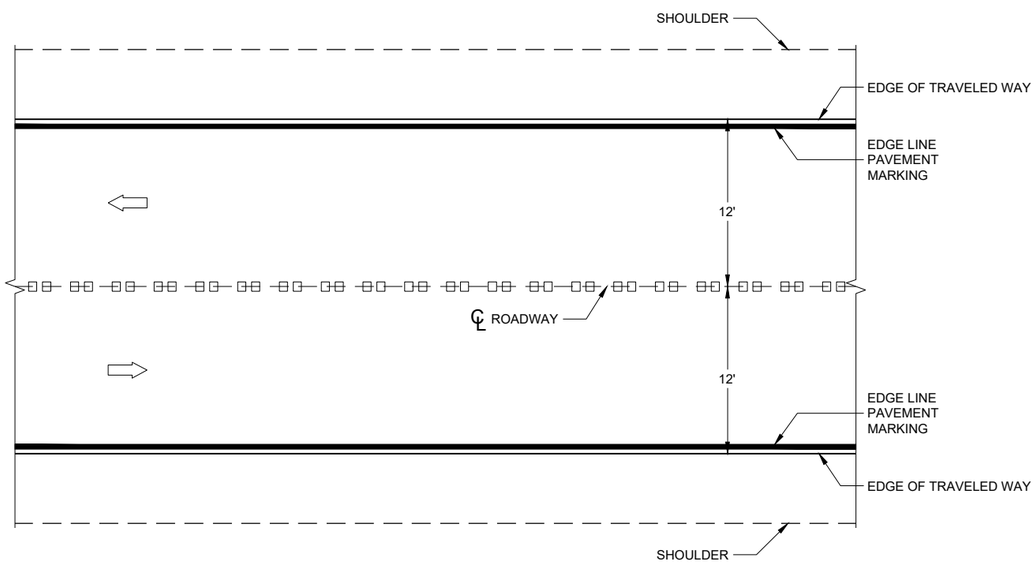

PLAN VIEW

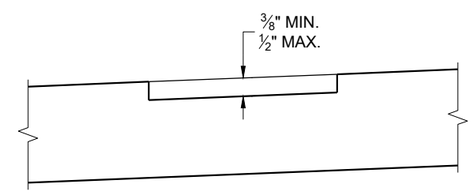

SECTION B - B
SUPERELEVATED ROADWAY

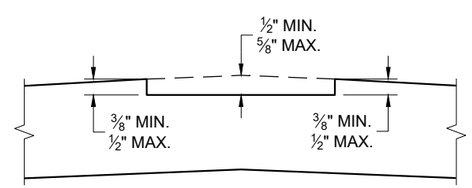

SECTION B - B
CROWNED ROADWAY

CENTERLINE RUMBLE STRIPS - ASPHALT

6

SDD 13A11 - 04a

CENTERLINE RUMBLE STRIPS - ASPHALT

STATE OF WISCONSIN
DEPARTMENT OF TRANSPORTAT

6

SDD 13A11 - 04a

GENERAL NOTES

1. CENTERLINE GROOVES MAY BE OMITTED IN AREAS WITH HIGH CONCENTRATIONS OF DRIVEWAYS WHEN DIRECTED BY THE ENGINEER.

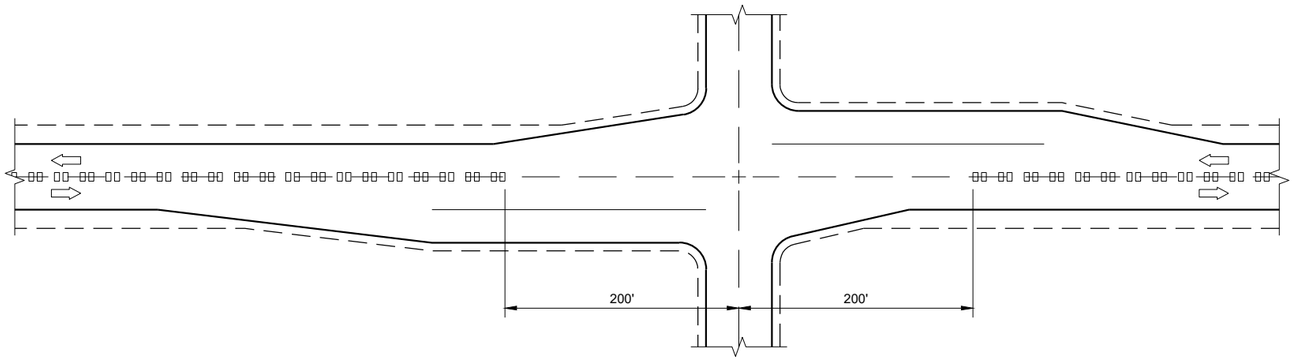

CENTERLINE GROOVES AT INTERSECTIONS

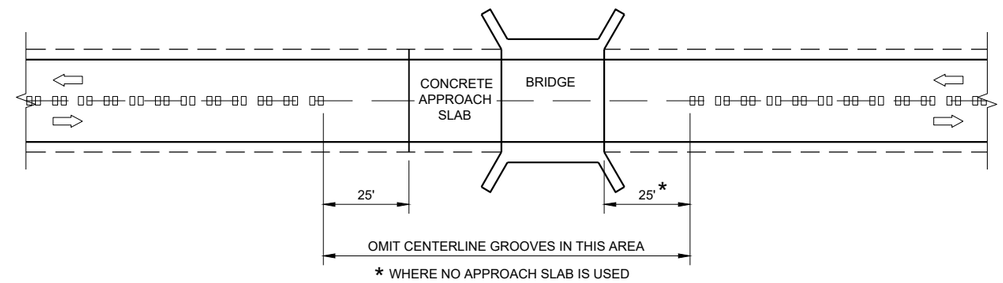

CENTERLINE GROOVES AT BRIDGES

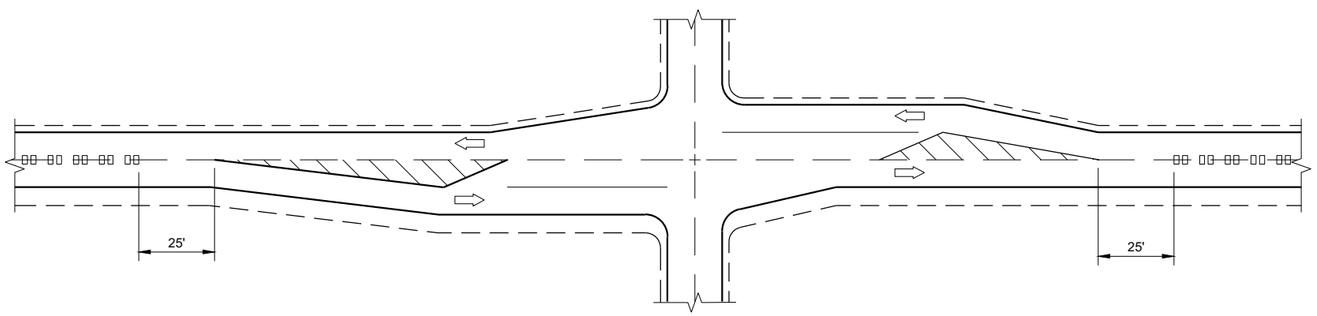

CENTERLINE GROOVES AT INTERSECTIONS (WITH LEFT TURN LANES)

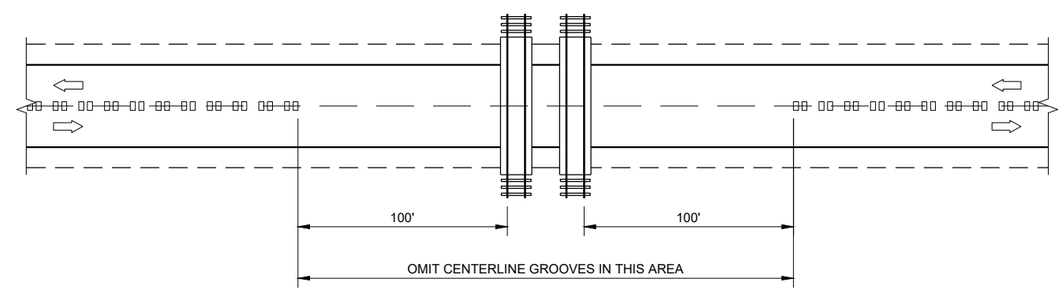

CENTERLINE GROOVES AT RAILROADS

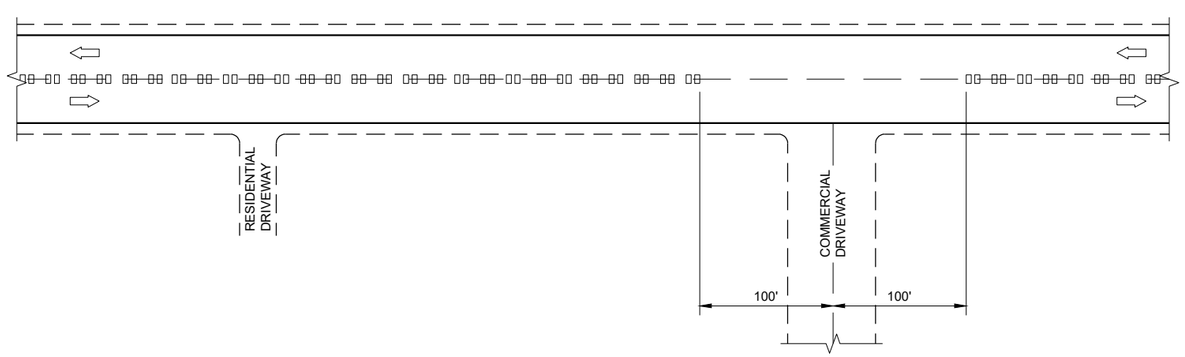

CENTERLINE GROOVES AT DRIVEWAYS (1)

CENTER LINE RUMBLE STRIPS - INTERSECTIONS, DRIVEWAYS, BRIDGES, RAIL ROADS	
STATE OF WISCONSIN DEPARTMENT OF TRANSPORTATION	
APPROVED May 2023 DATE	/S/ John Jenkins ROADWAY STANDARDS DEVE ENGINEER

FHWA

6

SDD 13A11 - 04d

6

SDD 13A11 - 04d

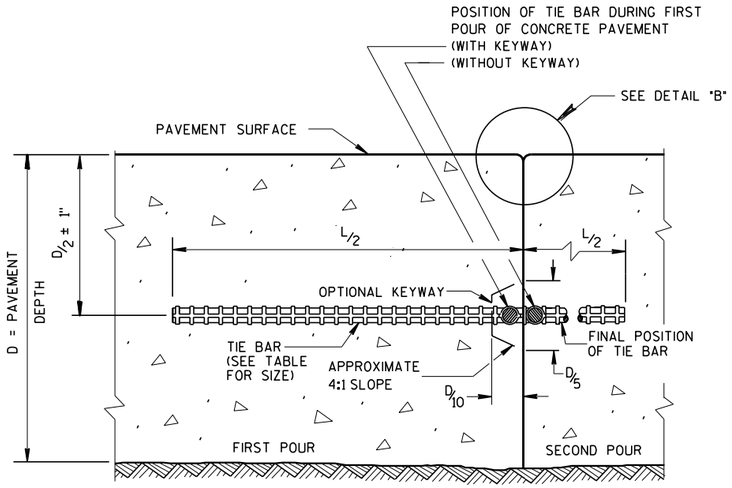

CONSTRUCTION JOINT

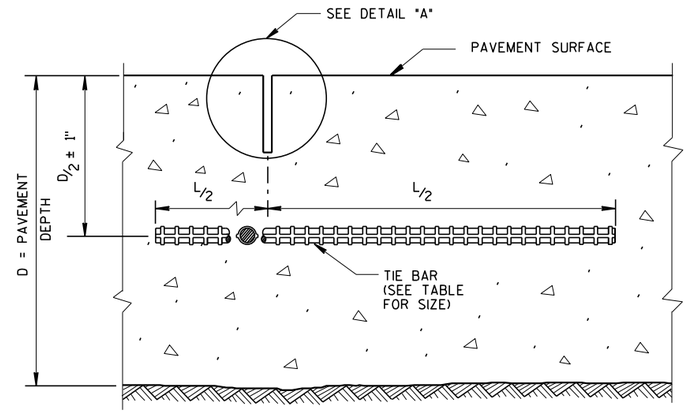

SAWED JOINT

GENERAL NOTES

CREATE A LONGITUDINAL JOINT FOR PAVEMENT WIDTHS GREATER THAN 15 FEET.

CORRELATE LONGITUDINAL JOINTS WITH LANE LINES WHEN POSSIBLE.

1. ANCHOR TIE BARS INTO DRILLED HOLES WITH AN EPOXY.
2. PAVEMENT THAT WAS IN PLACE PRIOR TO THE CONTRACT.

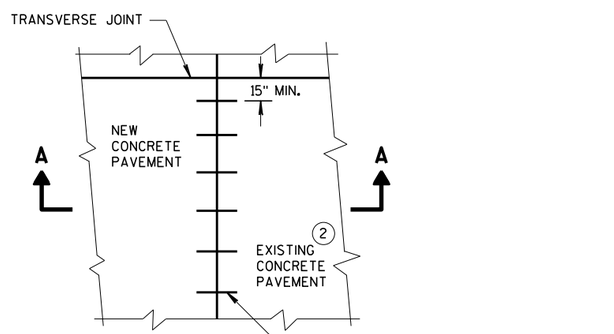

PLAN VIEW

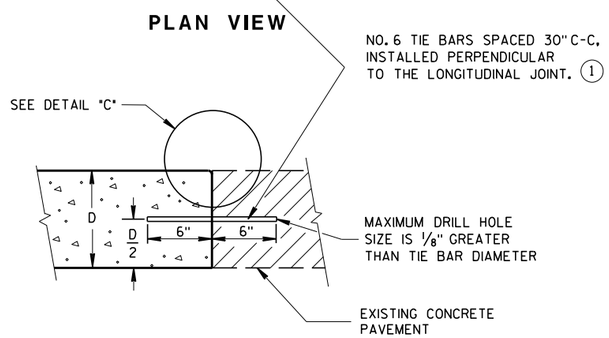

SECTION A-A
LONGITUDINAL CONSTRUCTION JOINT TIE BARS ANCHORED INTO EXISTING PAVEMENT

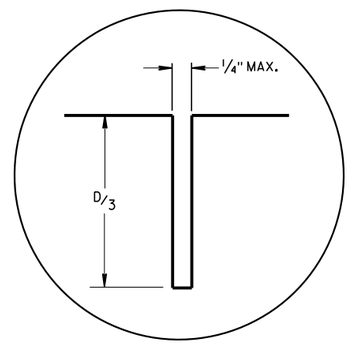

DETAIL "A"

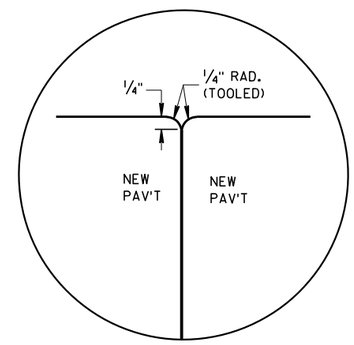

DETAIL "B"

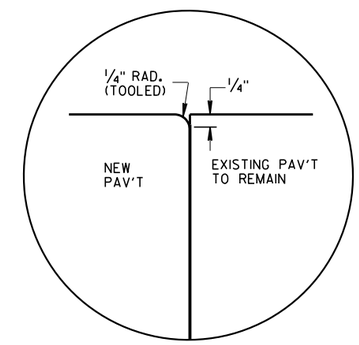

DETAIL "C"

TIE BAR TABLE

PAVEMENT DEPTH (D)	TIE BAR SIZE	TIE BAR LENGTH (L)	MAX. TIE BAR SPACING
< 10 1/2"	NO. 4	30"	36"
≥ 10 1/2"	NO. 5	36"	36"
	NO. 4 *	30"	24" **

* SUBSTITUTE BENT BARS AT LONGITUDINAL JOINTS WHEN EQUIPMENT LIMITATIONS DURING CONSTRUCTION WARRANT (e.g. AUXILIARY LANES OR TURN LANES)

** CONFORM TO 15" MINUMUM SPACING FROM TRANSVERSE JOINTS; SPACING BETWEEN TIE BARS WILL BE 30" AT TRANSVERSE JOINTS.

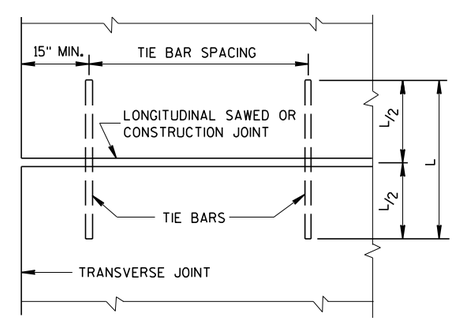

PLAN VIEW
SHOWING LOCATION OF TIE BARS

CONCRETE PAVEMENT
LONGITUDINAL JOINTS AND TIES

STATE OF WISCONSIN
DEPARTMENT OF TRANSPORTATION

APPROVED
March 2018 — DATE
/S/ Peter Kerr — PAVEMENT SUPE
FHWA

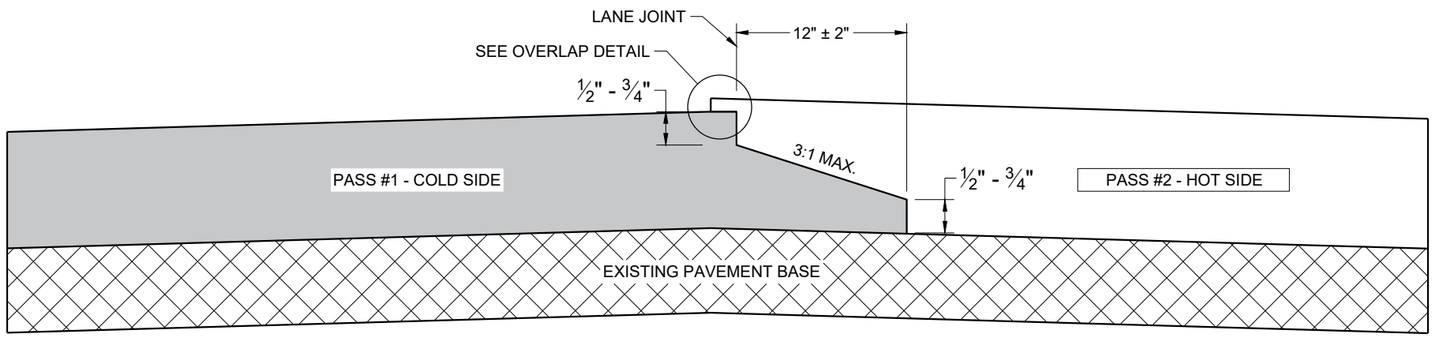

TYPICAL PAVEMENT CROSS SECTION
NOTCHED WEDGE JOINT

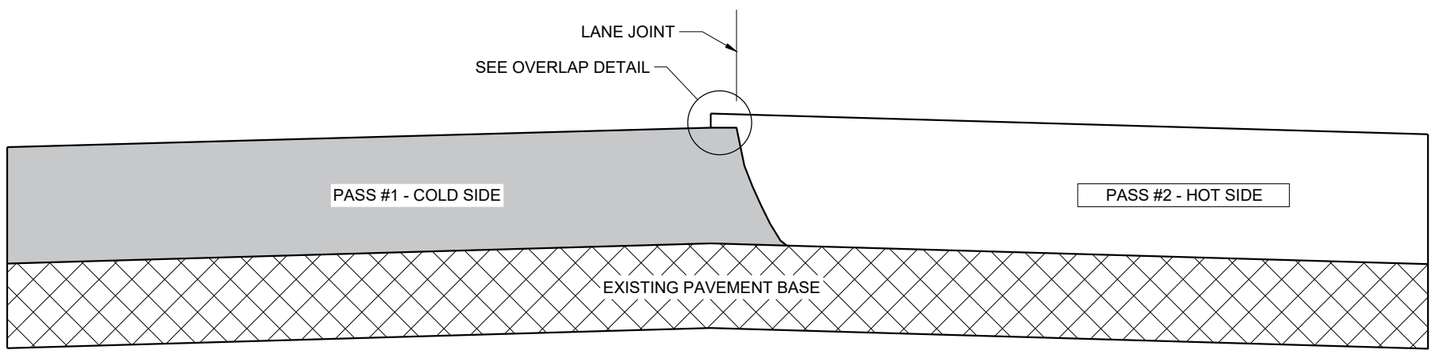

TYPICAL PAVEMENT CROSS SECTION
VERTICAL JOINT

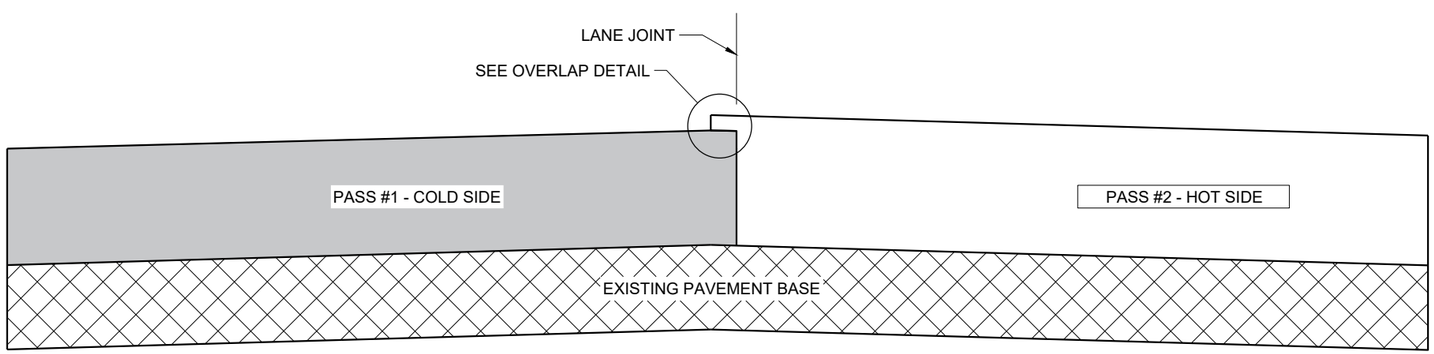

TYPICAL PAVEMENT CROSS SECTION
VERTICAL JOINT (MILLED)

GENERAL NOTES

IN ADDITION TO THE DETAILS PROVIDED IN THIS DRAWING, CONFORM TO STANDARD SPECIFICATION 450.3.2.8 FOR WHEN A NOTCHED WEDGE JOINT IS REQUIRED AND FOR GENERAL JOINT CONSTRUCTION REQUIREMENTS.

FOR ALL LONGITUDINAL JOINTS, ENSURE THE PAVER SCREED OVERLAPS THE PREVIOUSLY PLACED PAVEMENT BY 1" ± 0.5" AND THE HOT SIDE OF THE JOINT REMAINS HIGHER THAN THE COLD SIDE BY APPROXIMATELY 0.1" AFTER FINAL COMPACTION. (IT WILL BE FLUSH WHEN PAVING IN ECHELON.)

ONLY REMOVE THE LONGITUDINAL NOTCHED WEDGE JOINT FOR SMA PAVEMENT OR AS DIRECTED BY THE ENGINEER TO ADDRESS SPECIFIC LENGTHS OF JOINT DAMAGED BY TRAFFIC.

WHEN MILLING BACK OR REMOVING ANY LONGITUDINAL JOINT, LIMIT THE MATERIAL REMOVED TO 2" FROM THE TOP NOTCH OR FROM THE VERTICAL JOINT EDGE ON THE COLD SIDE OF THE JOINT.

USE LONGITUDINAL MILLED JOINT AS PLANS SHOW OR THE AS THE ENGINEER DIRECTS.

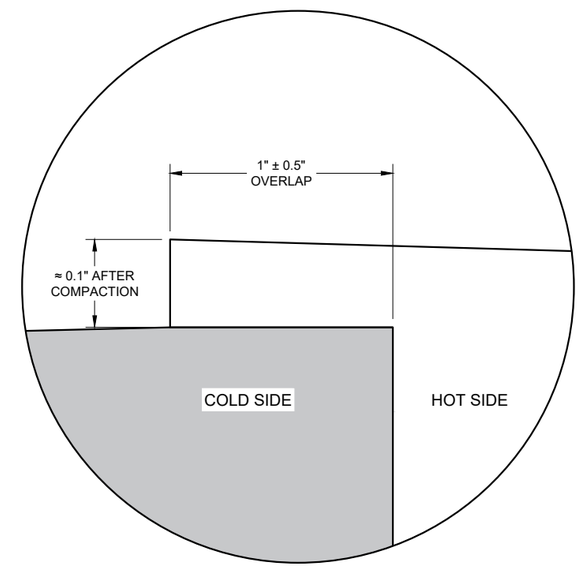

OVERLAP DETAIL (TYPICAL)

6

6

SDD 13C19 - 03

SDD 13C19 - 03

HMA LONGITUDINAL JOINTS

STATE OF WISCONSIN
DEPARTMENT OF TRANSPORTATION

APPROVED
November 2020 /S/ Steven Hefel
DATE HMA PAVEMENT ENGIN

FHWA

1. WOOD OR STEEL POSTS (w6X9 OR w6X8.5) MAY BE USED. DO NOT INTERMIX WOOD AND STEEL POSTS. INSTALL STEEL POSTS WITH HOLES ON APPROACHING TRAFFIC SIDE.
2. USE WOOD OR APPROVED PLASTIC BLOCKOUTS. WOOD BLOCKOUTS MAY BE CONSTRUCTED OUT OF TWO OR MORE WOOD BLOCKOUTS. SEE ALTERNATE WOOD BLOCKOUT DETAIL. DIMENSIONS OF APPROVED PLASTIC BLOCKOUTS MAY VARY.
3. IF ROCK IS ENCOUNTERED DURING EXCAVATION, PROVIDE A HOLE 12 INCHES IN DIAMETER EXTENDING 20 INCHES DEEP INTO THE ROCK. PLACE APPROXIMATELY 2 1/2" INCHES OF GRANULAR MATERIAL IN THE BOTTOM OF THE HOLE. CUT THE POSTS THE TO LENGTH AMD INSTALL. BACKFILL WITH EXCAVATED MATERIAL AND COMPACT. BACKFILL IS TO BE FREE OF LARGE ROCKS.
4. WHEN THE DISTANCE FROM BACK OF POST TO SHOULDER HINGE POINT IS LESS THAN 2 FEET INSTALL LONGER POST AT HALF POST SPACING (K).
5. FOR NEW MGS INSTALLATION TOP OF W-BEAM RAIL TOLERANCE IS ±1". FOR EXISTING MGS INSTALLATION TOP OF W-BEAM IS BETWEEN 27 ¾" TO 32".
6. WHEN USING STEEL POST AND WOOD BLOCKOUTS INSTALL FOUR 16D GALVANIZED NAILS. INSTALL NAILS AT THE BACK CORNERS OF THE BLOCK AND BEND THE NAILS OVER THE FLANGE OF THE STEEL POST.
7. TOTAL POST LENGTH FOR TYPE K IS 7' - 0". TOTAL POST LENGTH FOR OTHER MGS TYPES IS 6' - 0".

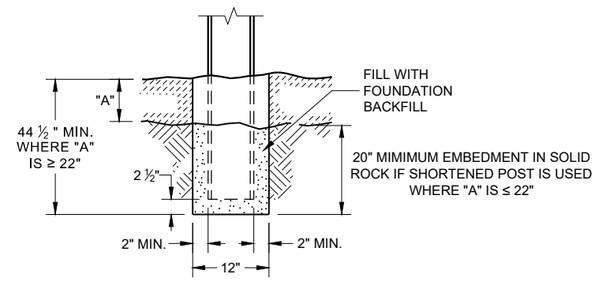

END VIEW
SETTING STEEL OR WOOD POST IN ROCK (3)

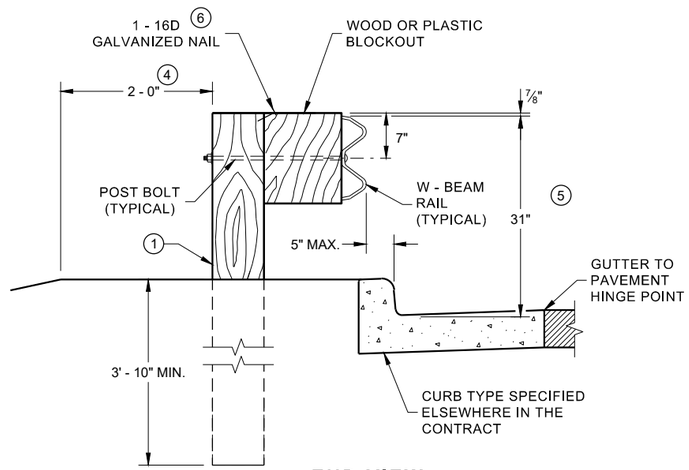

END VIEW
LOCATED ALONG A CURBED ROADWAY

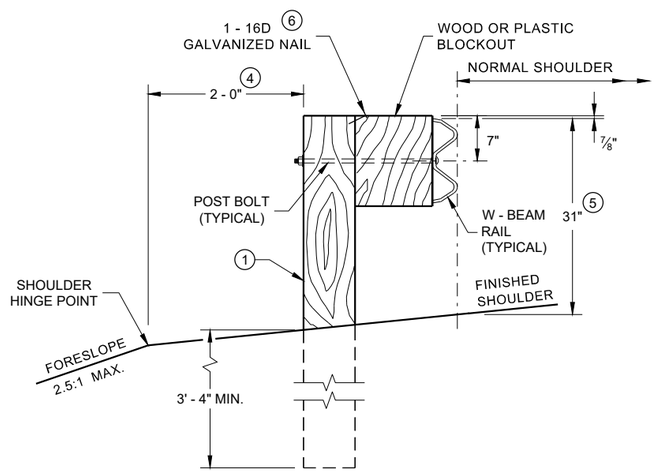

END VIEW
LOCATED ALONG A ROADWAY SHOULDER STANDARD INSTALLATION

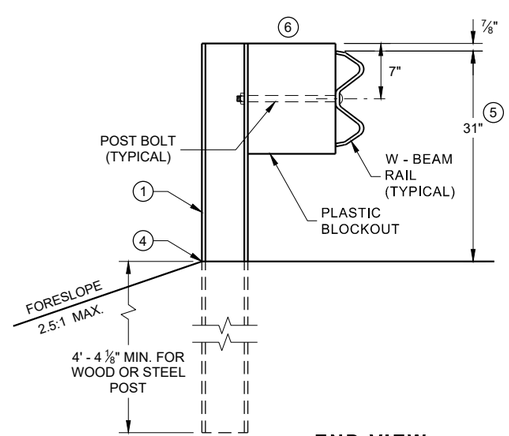

END VIEW
MGS LONGER POST AT HALFPOST SPACING W BEAM (K)

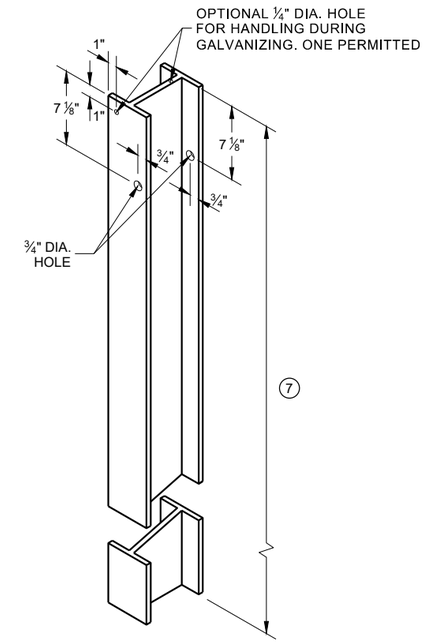

STEEL POST & HOLE PUNCHING DETAIL (W 6 X 9) (1)

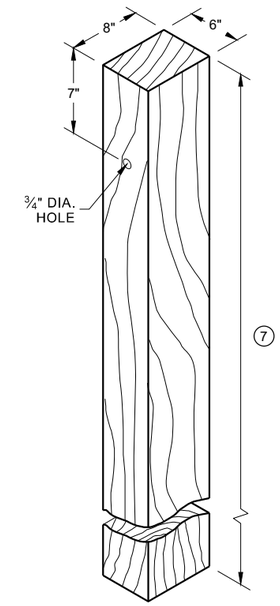

WOOD POST (6" X 8") NOMINAL (1)

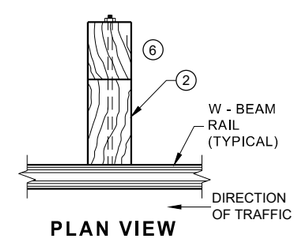

PLAN VIEW WOOD POST, BLOCKOUT & BEAM

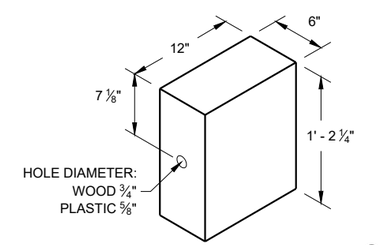

WOOD OR PLASTIC BLOCKOUT (2)

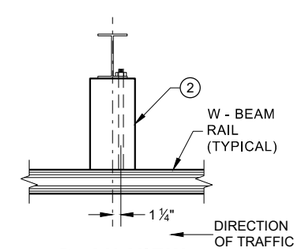

PLAN VIEW STEEL POST, PLASTIC BLOCKOUT & BEAM

MIDWEST GUARDRAIL SYSTEM (MGS) GUARDRAIL

STATE OF WISCONSIN
DEPARTMENT OF TRANSPORTA

6

SDD 14B42 - 07a

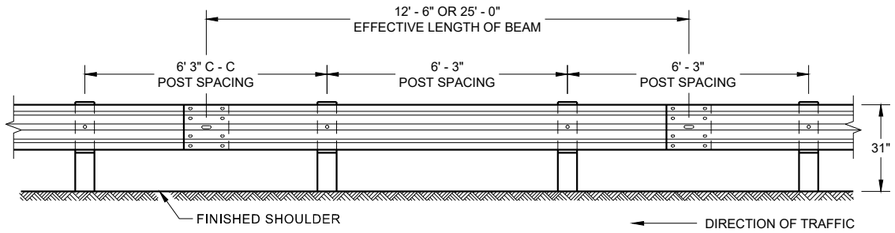

FRONT VIEW
POST SPACING STANDARD INSTALLATION

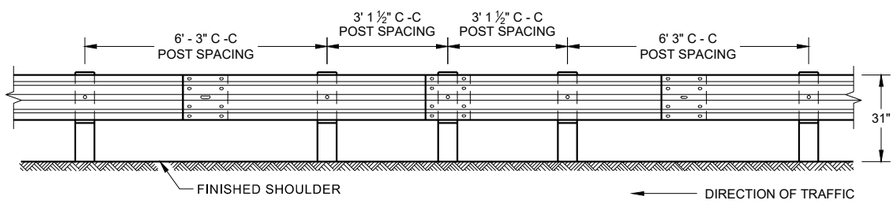

FRONT VIEW
HALF POST SPACING (HS) AND HALF POST SPACING WITH LONGER POSTS (K)

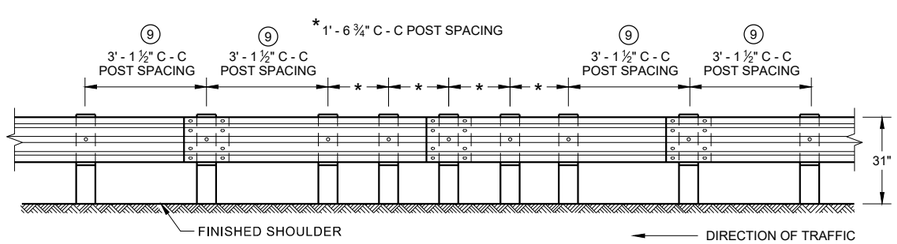

FRONT VIEW
QUARTER POST SPACING (QS)

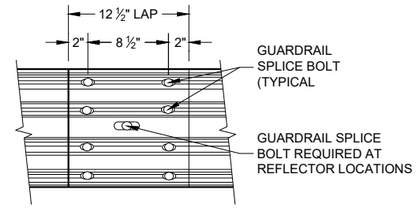

FRONT VIEW
MID-SPAN BEAM SPLICE

GENERAL NOTES

8 DO NOT INSTALL REFLECTORS ON THE FIRST 50 FEET OF THE APPROACH END OF THE ENERGY ABSORBING TERMINAL.

9 25 FEET OF HALF POST SPACING IS REQUIRED ON APPROACH AND DEPARTURE ENDS OF QUARTER POST SPACING.

POST BOLTS ARE A ⅝" DIAMETER ASTM A307 GUARDRAIL BOLT. A POST BOLT REQUIRES ⅝" DIAMETER A563A DOUBLE RECESSED (DR) HEAVY HEX NUT AND ⅝" DIAMETER F844 FLAT WASHER. POST BOLTS MAY BE LONGER IF MULTIPLE BLOCKOUTS ARE BEING USED.

GUARD RAIL SPLICE BOLTS ARE A ⅝" DIAMETER ASTM A307 GUARDRAIL HEAD BOLT. A GUARDRAIL SPLICE BOLT REQUIRES ⅝" DIAMETER A563A DOUBLE RECESSED (DR) HEAVY HEX NUT.

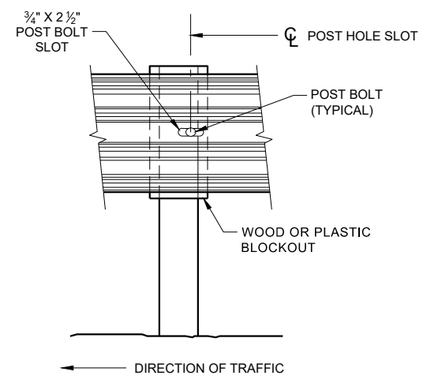

FRONT VIEW AT STEEL POST

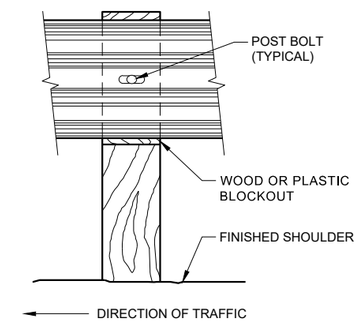

FRONT VIEW AT WOOD POST

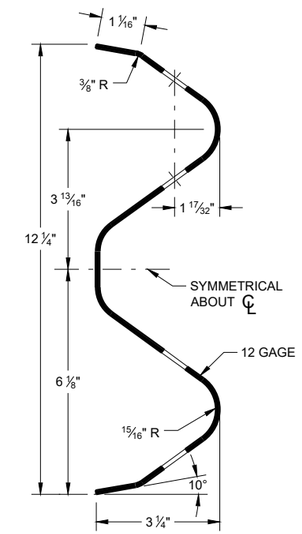

SECTION THRU W-BEAM RAIL

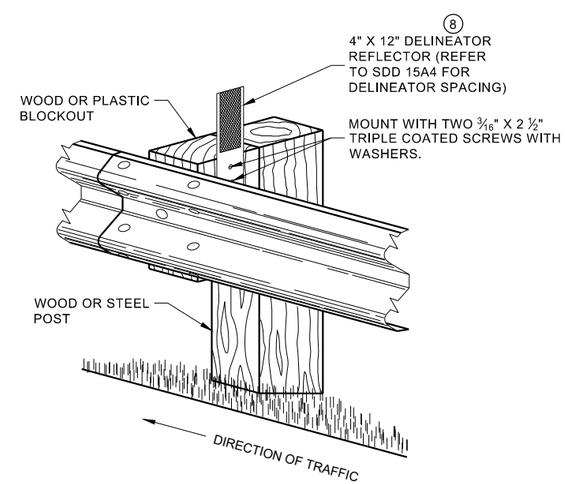

ONE SIDED REFLECTOR DETAIL AND TYPICAL INSTALLATION

MIDWEST GUARDRAIL SYSTEM (MGS) GUARDRAIL

STATE OF WISCONSIN
DEPARTMENT OF TRANSPORTAT

6

SDD 14B42 - 07b

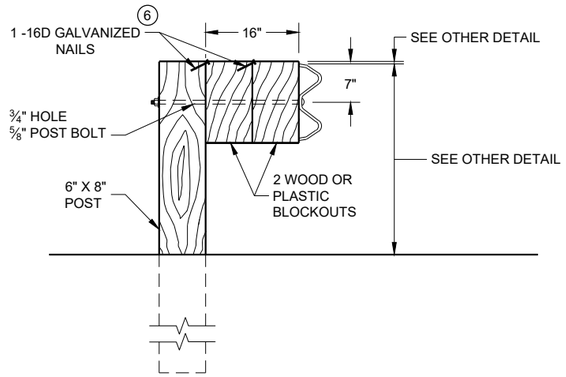

DETAIL FOR 16" BLOCKOUT DEPTH

IT IS ACCEPTABLE TO USE BLOCKOUTS UP TO 16" DEEP TO INCREASE THE POST OFFSET TO AVOID UNDERGROUND OBSTACLES. THERE IS NO LIMIT TO THE NUMBER OF POSTS THAT CAN HAVE ADDITIONAL BLOCKOUTS UP TO 16" DEEP.

NOTE:

1. ALL FILLETS SHALL HAVE A MINIMUM RADIUS OF 3/16".
2. IF THE BOLT EXTENDS MORE THAN ¼" FROM THE NUT THE BOLT SHOULD BE TRIMMED BACK.

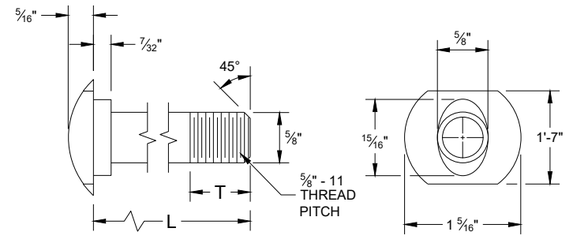

POST BOLT TABLE

L	T (MIN.)
1 ¼"	1 ⅛"
2"	1 ¾"
10"	4"
14"	4 1/16"
18"	4"
21"	4 1/16"
25"	4"

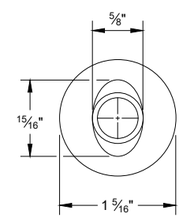

ALTERNATE BOLT HEAD

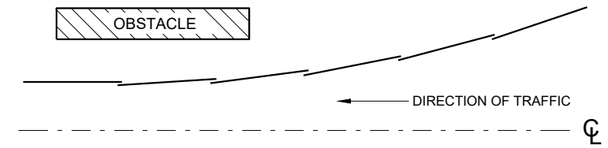

PLAN VIEW
BEAM LAPPING DETAIL

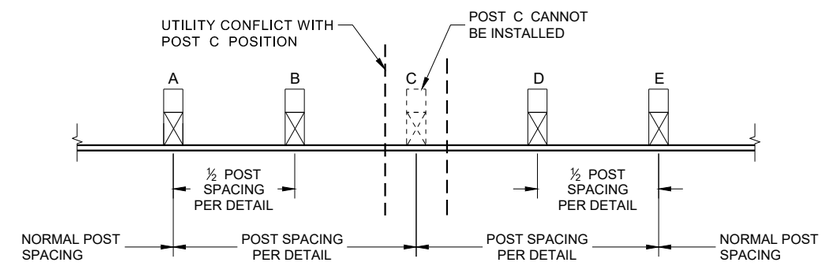

POST DRIVING FOR CONTINUOUS UNDERGROUND OBSTRUCTION

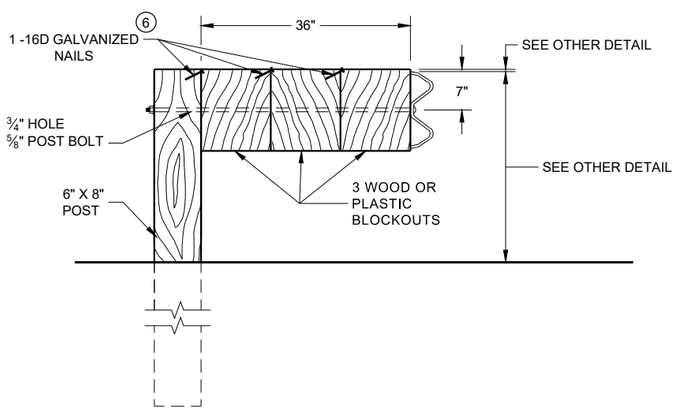

DETAIL FOR 36" BLOCKOUT DEPTH

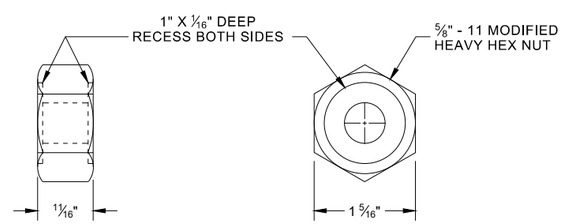

POST BOLT, SPLICE BOLT AND RECESS NUT

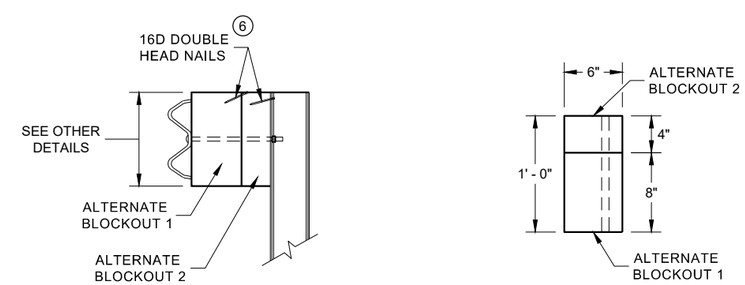

SIDE VIEW

PLAN VIEW

ALTERNATE WOOD BLOCKOUT DETAIL

NOTES: UNDER SPECIAL CIRCUMSTANCES, SUCH AS AVOIDING OBSTACLES THAT ARE NOT RELOCATED, IT IS ACCEPTABLE TO INSTALL ADDITIONAL BLOCKOUTS TO OBTAIN UP TO 36" DEPTH FOR ONE OR TWO POSTS IN A SECTION OF GUARDRAIL.

DO NOT USE 16" OR 36" BLOCKOUTS IF IT CAUSES THE POST TO BE DRIVEN BEYOND SHOULDER HINGE POINT OR CAUSES A FIXED OBJECT TO BE WITHIN THE DEFLECTION DISTANCE OF THE BARRIER.

(6) WHEN USING STEEL POST AD WOOD BLOCKOUTS, INSTALL FOUR 16D GALVANIZED NAILS. INSTALL NAILS AT THE BACK CORNERS OF THE BLOCK AND BEND THE NAILS OVER THE FLANGE OF THE STEEL POST.

MIDWEST GUARDRAIL SYSTEM (MGS) GUARDRAIL

STATE OF WISCONSIN
DEPARTMENT OF TRANSPORTA

6

SDD 14B42 - 07c

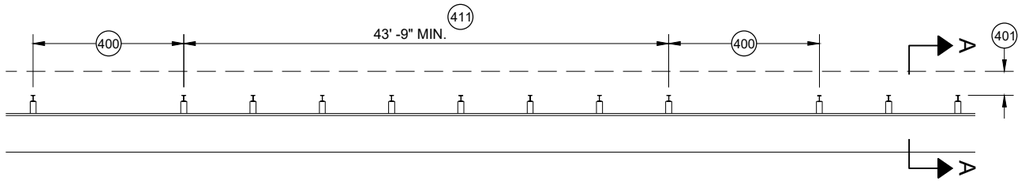

MISSING POST IN MGS GUARDRAIL

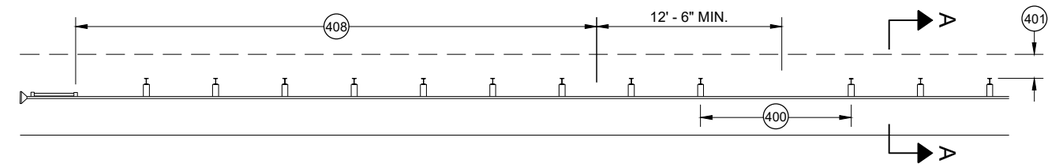

MISSING POST IN MGS GUARDRAIL NEAR EAT

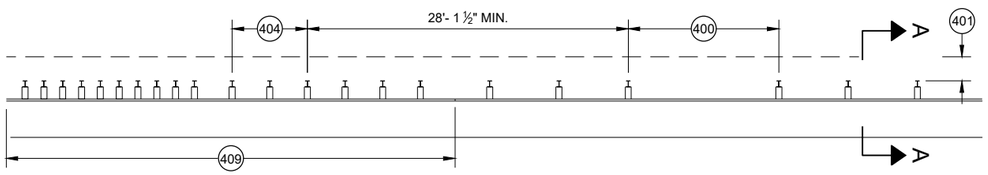

MISSING POST IN MGS GUARDRAIL NEAR AN APPROACH TRANSITION

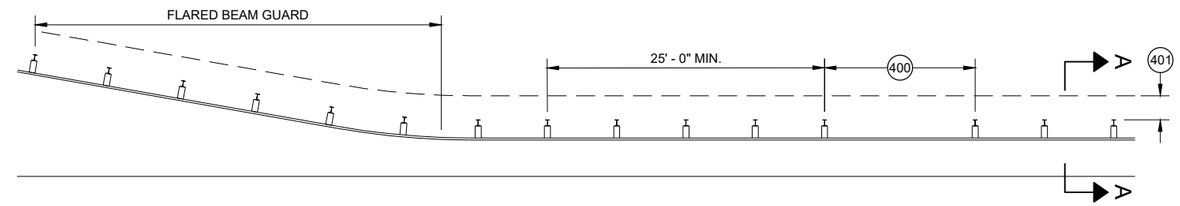

MISSING POST IN MGS GUARDRAIL NEAR FLARED BEAM GUARD

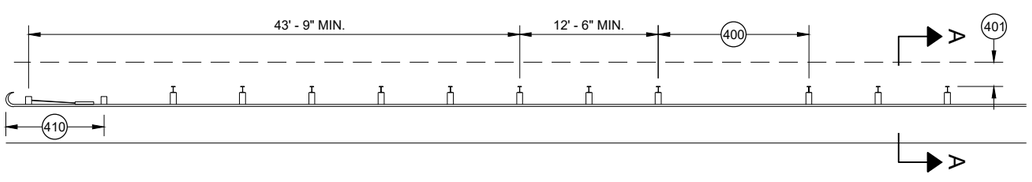

MISSING POST IN MGS GUARDRAIL NEAR A TYPE 2 END TERMINAL

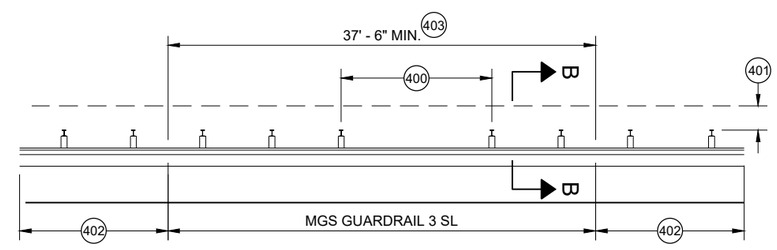

MISSING POST IN SHORT SPAN MGS GUARDRAIL NEAR CURB (SL) 407

400 MAX SPAN 12' - 6"
401 2' MIN.
402 MGS GUARDRAIL 3
403 NESTING BEAM GUARD
404 ASYMMETRIC TRANSITION
405 SOIL WELL DRAINED AND COMPACTED
406 SEE OTHER DRAWINGS IN THIS SDD
407 SEE OTHER DRAWINGS FOR MIN. SPACING BETWEEN SPANS
408 SEE SDD 14B44
409 SEE SDD 14B45
410 SEE SDD 14B47
411 MINIMUM DISTANCE BETWEEN MISSING POST SPANS.

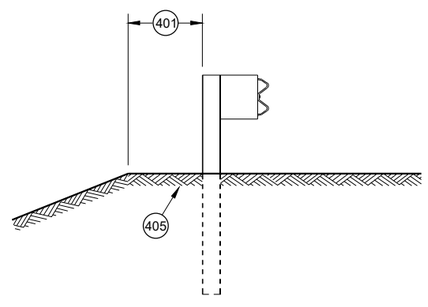

SECTION A - A 406

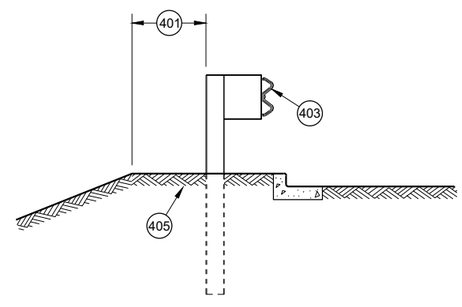

SECTION B - B 406

MIDWEST GUARDRAIL SYSTEM (MGS) GUARDRAIL

STATE OF WISCONSIN
DEPARTMENT OF TRANSPORTATION

APPROVED
May 2021 — DATE
/S/ Rodney Taylor — ROADWAY STANDARDS DEVE UNIT SUPERVISOR
FHWA

6

SDD 14B42 - 07d

GENERAL NOTES

(A) THE SLOPE IN THE AREA BOUNDED BY THE GRADELINE, THE HINGE POINT LINE (HPL) AND THE CLEAR ZONE LIMITS (CZL) SHALL BE 4:1 OR FLATTER.

(B) AFTER FINAL ASSEMBLY, RECHECK CABLE TO BE SURE IT IS TAUT AND HAS NOT RELAXED

(C) DIFFERENT MANUFACTURERS REQUIRE DIFFERENT PERFORATED W - BEAM RAIL END PANELS. SEE MANUFACTURER'S INFORMATION.

(D) ATTACH ALUMINUM SHEET TO E.A.T. HEAD USING 4 STAINLESS STEEL SELF - TAPPING SCREWS. ONE SCREW PER CORNER.

(E) HARDWARE MAY VARY BETWEEN MANUFACTURER. SEE MANUFACTURER'S DRAWING FOR INFORMATION.

DIMENSIONS MAY VARY, MANUFACTURER'S INFORMATION.

SEE SDD 14B42 FOR MORE INFORMATION.

* DO NOT ATTACH BLOCKOUTS TO POST 1 AND 2.

DO NOT INSTALL REFLECTORS ON THE FIRST 50 FEET OF THE APPROACH END OF THE ENERGY ABSORBING TERMINAL.

SEE MANUFACTURER'S DRAWING FOR SPLICE LOCATION, HARDWARE DIMENSIONS AND INSTALLATION INSTRUCTIONS.

THE CENTER OF THE UPPER 3 ½" DIAMETER HOLE ON POST NUMBER 3 THROUGH POST 9 IS TO BE FLUSH WITH THE GROUND LINE UP TO A MAXIMUM OF 2" ABOVE GROUND LINE. WOOD BLOCKS ON POSTS NUMBERED 3 THROUGH 9 MAY BE ADJUSTED UP TO 3" ABOVE THE TOP OF POST.

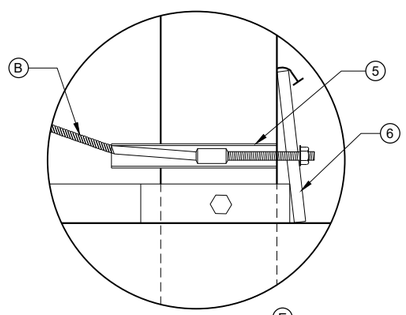

DETAIL "A" (E)

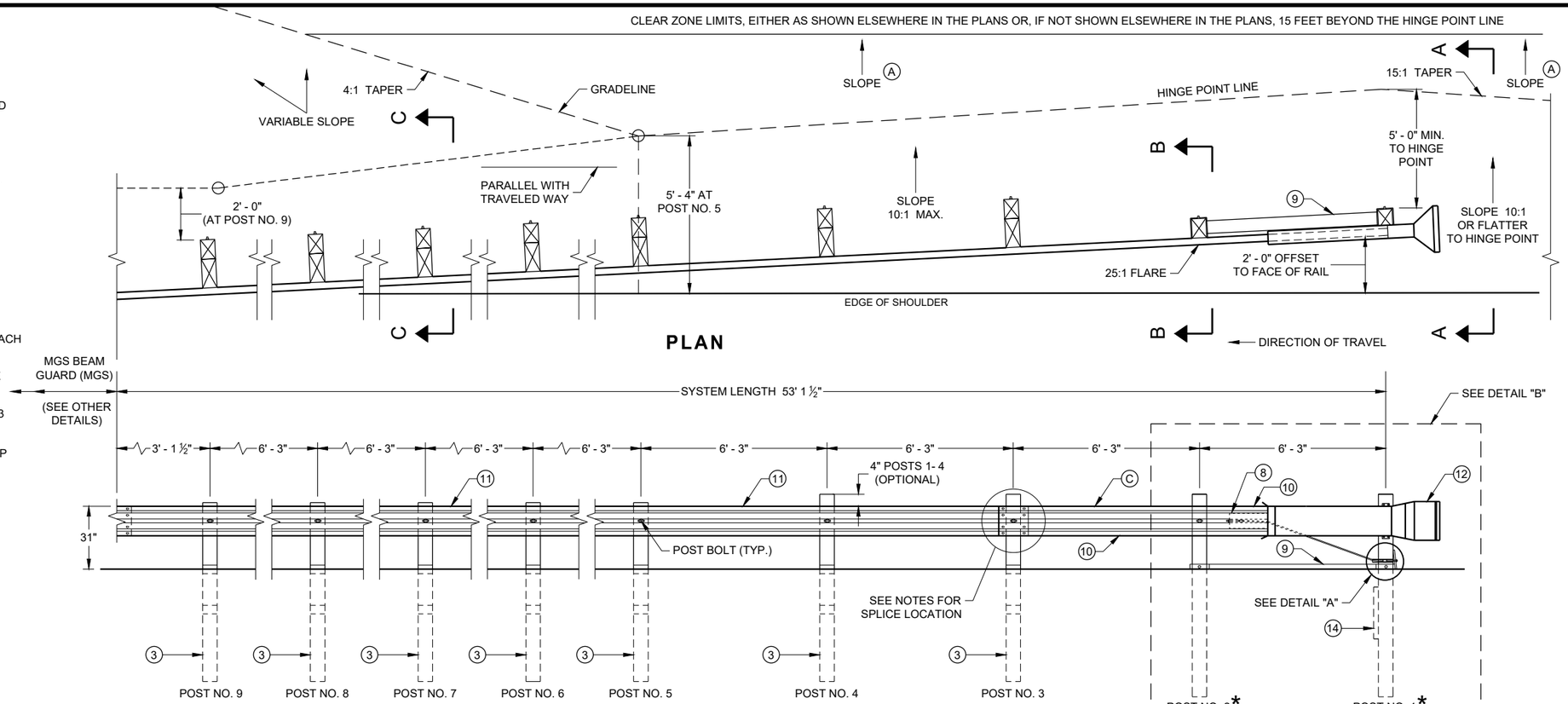

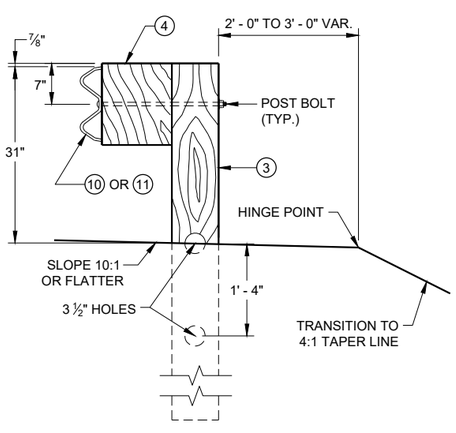

SECTION C - C
TYPICAL AT POST NOS. 3 - 9

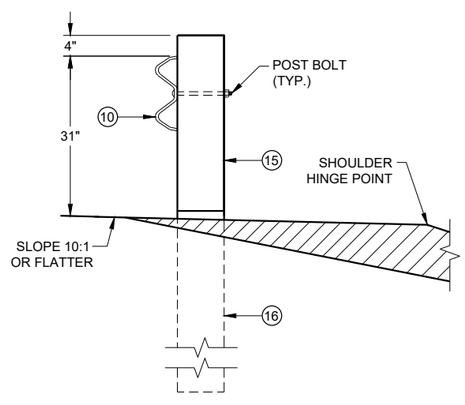

SECTION B - B
TYPICAL AT POST NO. 2*

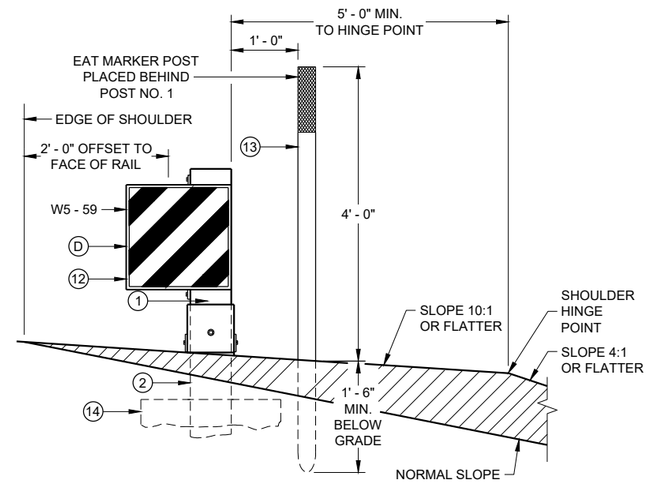

SECTION A - A
TYPICAL AT POST NO. 1*

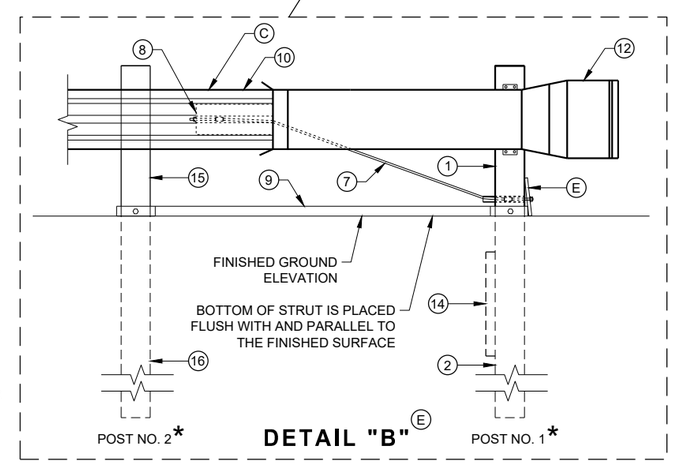

DETAIL "B" (E)

MIDWEST GUARDRAIL SYSTEM ENERGY ABSORBING TERMINAL (MGS)

STATE OF WISCONSIN
DEPARTMENT OF TRANSPORTATION

6

6

SDD 14B44 - 04a

SDD 14B44 - 04a

BILL OF MATERIALS

PART NO.	DESCRIPTION MATERIALS PROVIDED BY MGS EAT MANUFACTURER. SEE MANUGACTURER'S DETAILS FOR MORE INFORMATION.
1	UPPER POST NO. 1 6" X 6" TUBE
2	LOWER POST NO. 1
3	WOOD CRT
4	WOOD BLOCKOUT
5	PIPE SLEEVE
6	BEARING PLATE
7	BCT CABLE ASSEMBLY
8	ANCHOR CABLE BOX
9	GROUND STRUT
10	PERFORATED W-BEAM RAIL END PANEL, 12'-6" LONG.
11	STANDARD W-BEAM RAIL. MULTIPLE SECTIONS REQUIRED. SECTIONS VARY IN LENGTH.
12	IMPACT HEAD
13	EAT MARKER POST - YELLOW (SEE APPROVED PRODUCTS LIST)
14	SOIL PLATE
15	UPPER POST NO. 2
16	LOWER POST NO. 2

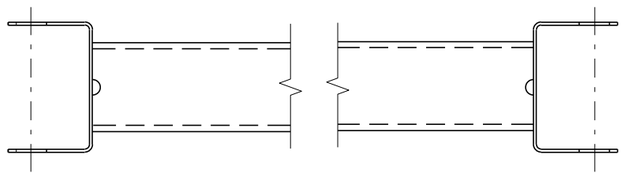

GENERIC GROUND STRUT 9 E

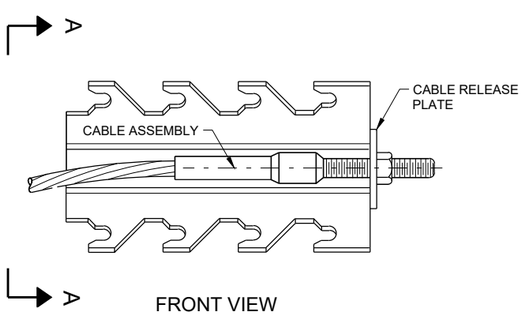

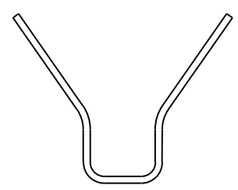

SECTION A - A

GENERIC ANCHOR CABLE BOX 9 E

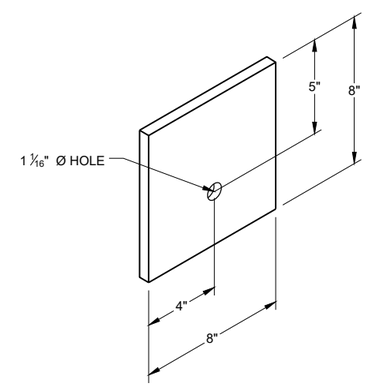

BEARING PLATE 6 E

6

6

SDD 14B44 - 04b

SDD 14B44 - 04b

MIDWEST GUARDRAIL SYSTEM ENERGY ABSORBING TERMINAL (MGS)

STATE OF WISCONSIN
DEPARTMENT OF TRANSPORTAT

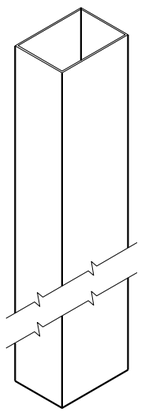

UPPER POST NO. 1 (1) (E)

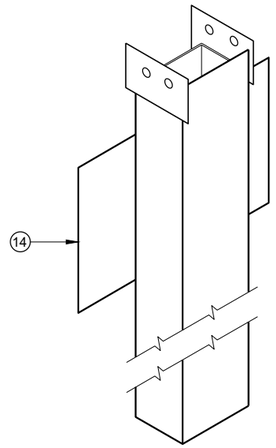

LOWER POST NO. 1 (2) (E)

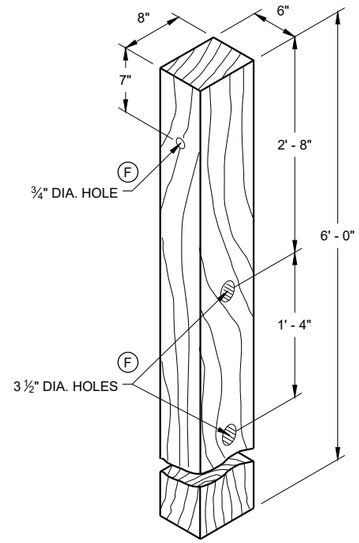

WOOD CRT POST (3) (E)

POSTS NUMBER 3-9

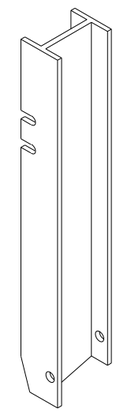

UPPER POST NO. 2 (15) (E)

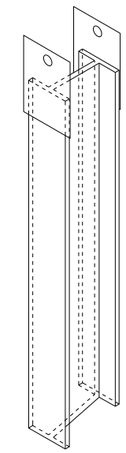

LOWER POST NO. 2 (16) (E)

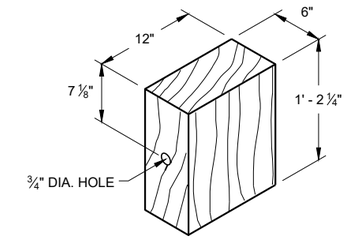

WOOD BLOCKOUT (4)

REQ'D. AT ALL POSTS EXCEPT POST NO'S 1 & 2

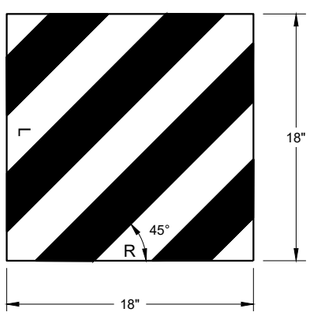

W5 - 59

REFLECTIVE SHEETING DETAIL (E)

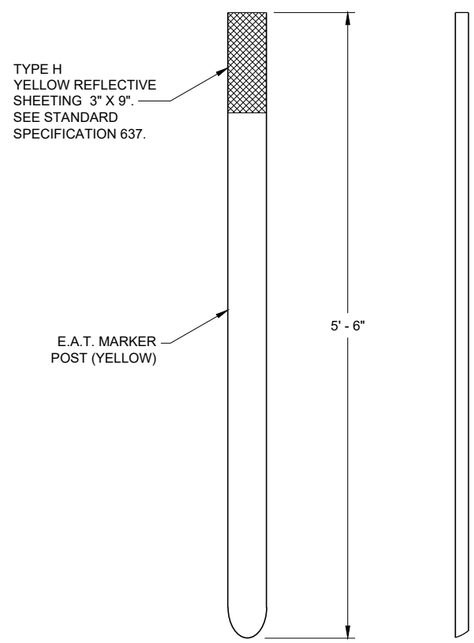

FRONT VIEW SIDE VIEW

E.A.T. MARKER POST (13)

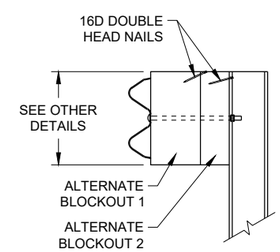

SIDE VIEW

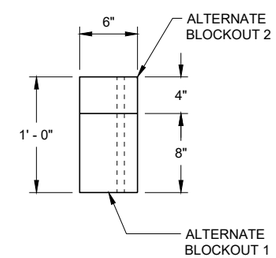

TOP VIEW

ALTERNATE WOOD BLOCKOUT DETAIL

MIDWEST GUARDRAIL SYSTEM ENERGY ABSORBING TERMINAL (MGS)

STATE OF WISCONSIN
DEPARTMENT OF TRANSPORTATION

APPROVED
7/2018 — DATE
/S/ Rodney Taylor — ROADWAY STANDARDS DEVE UNIT SUPERVISOR
FHWA

6

6

SDD 14B44 - 04c

SDD 14B44 - 04c

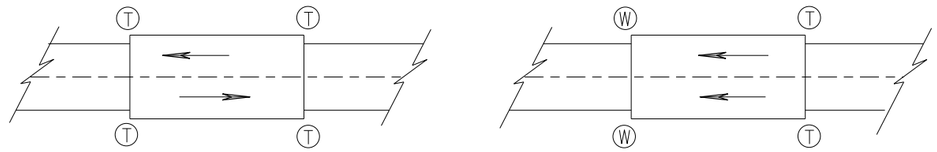

TWO WAY TRAFFIC **ONE WAY TRAFFIC**

(T) THRIE BEAM CONNECTION

(W) W-BEAM CONNECTION WHEN REQUIRED

TYPICAL LOCATIONS OF THRIE BEAM AND W-BEAM CONNECTIONS TO BRIDGE

GENERAL NOTES

IF ROCK IS ENCOUNTERED, REMOVE ROCK TO FULL DEPTH OF POST PLUS 2½", AND 12" DIAMETER AROUND POST. SEE 14B42 FOR MORE DETAILS.

TRANSITION USES STEEL POSTS ONLY.

SEE STANDARD DETAIL DRAWING 14 B 42 FOR MORE INFORMATION.

POST 2 THROUGH 17 USES STEEL POST ONLY

(1) BRIDGE RAILING TYPE "W" DOES NOT REQUIRE A TERMINAL CONNECTOR.

(2) OPTIONAL CURB AND GUTTER OR DRAINAGE FEATURE SEE PLAN FOR INFORMATION.

(13) STEEL OR WOOD POST IS ACCEPTABLE AT POST 1. SEE SDD14B42

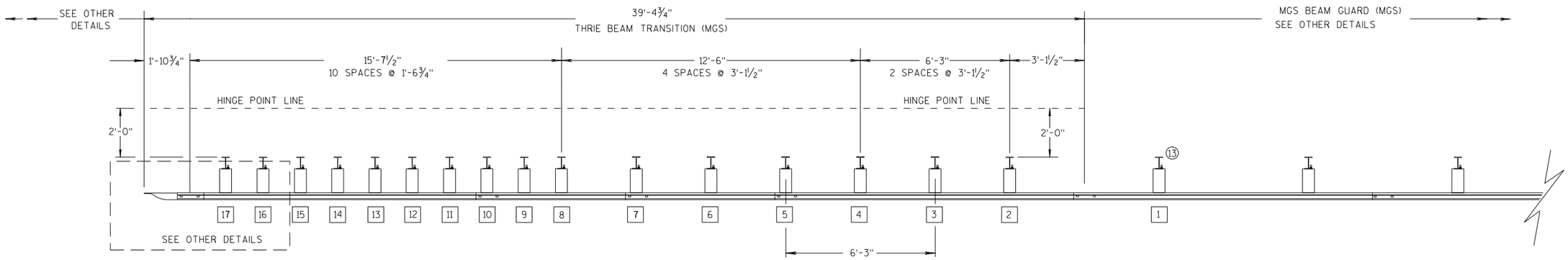

PLAN VIEW

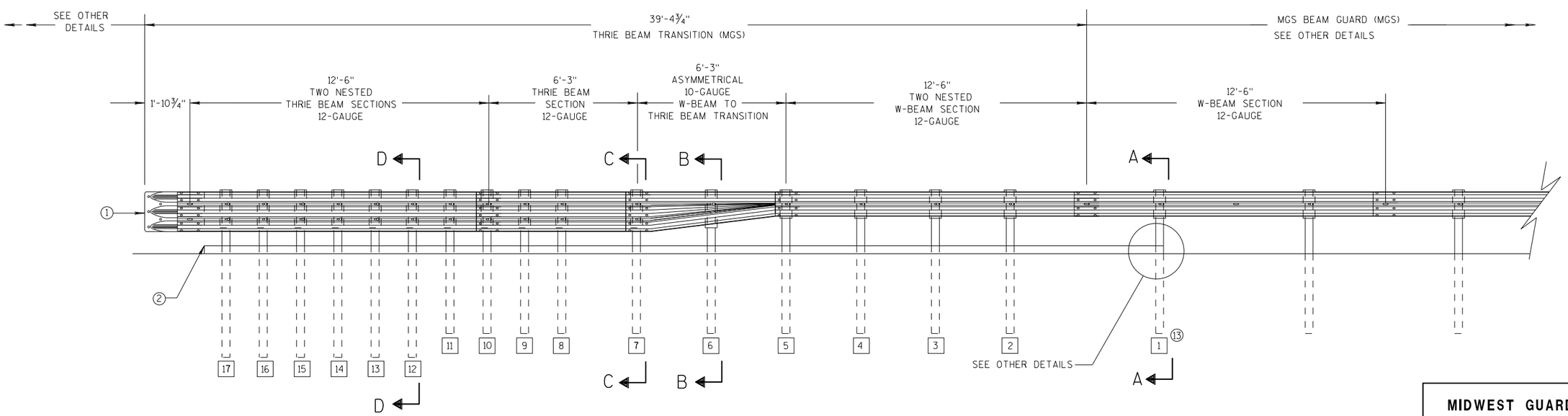

ELEVATION VIEW

MIDWEST GUARDRAIL SYSTEM THRIE BEAM TRANSITION

MIDWEST GUARDRAIL SYSTEM THRIE BEAM TRANSITION (MGS)

STATE OF WISCONSIN
DEPARTMENT OF TRANSPOR

6

S.D.D. 14 B 45-5a

GENERAL NOTES

(2) OPTIONAL CURB AND GUTTER OR DRAINAGE FEATURE SEE PLAN FOR INFORMATION.

(3) WHEN USING STEEL POSTS AND WOOD BLOCKOUTS INSTALL FOUR 10D GALVANIZED NAILS. INSTALL NAILS AT THE BACK CORNERS OF THE BLOCK AND BEND THE NAILS OVER THE FLANGE OF THE STEEL POST.

(4) TOLERANCE FOR TOP OF W-BEAM RAIL IS ± 1".

(13) STEEL OR WOOD POST IS ACCEPTABLE AT POST 1. SEE SDD 14B42

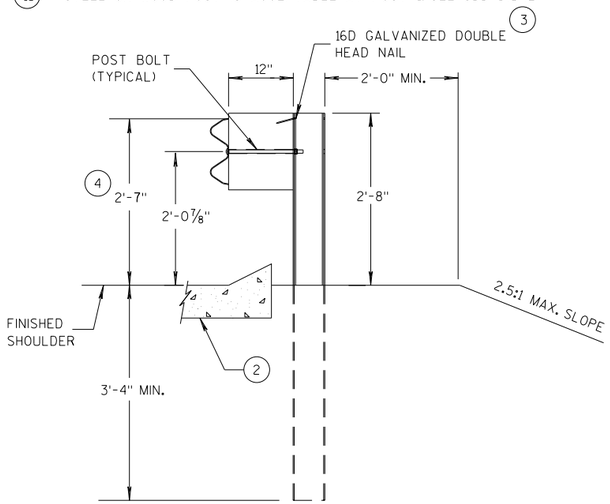

SECTION A-A (13)

POSTS 1-5

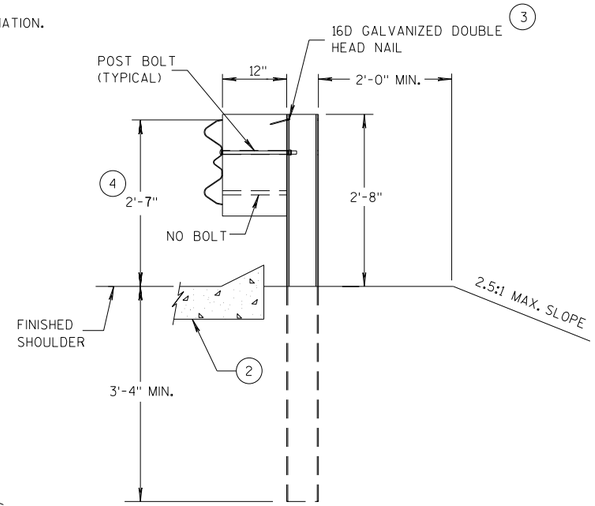

SECTION B-B

POST 6

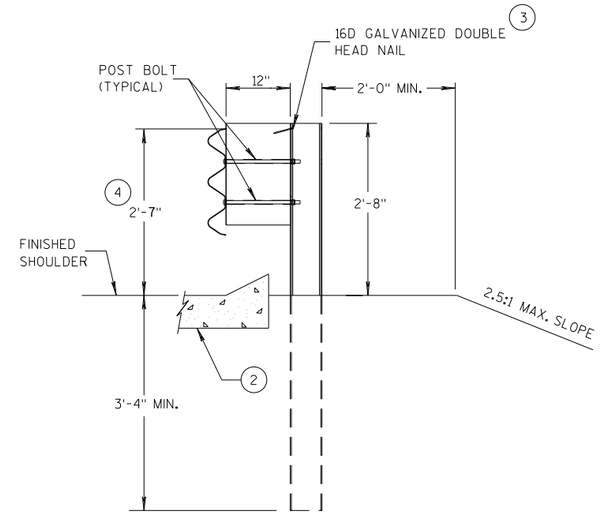

SECTION C-C

POSTS 7-11

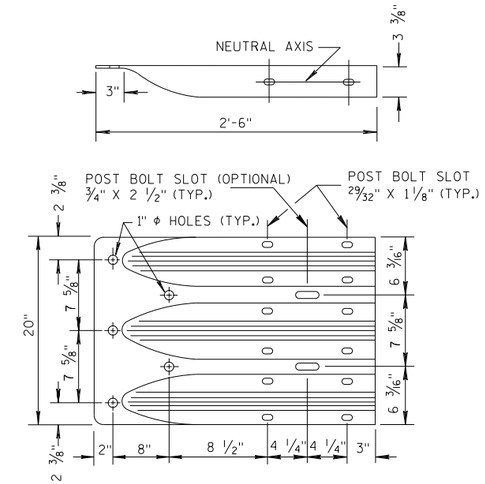

THRIE BEAM TERMINAL CONNECTOR

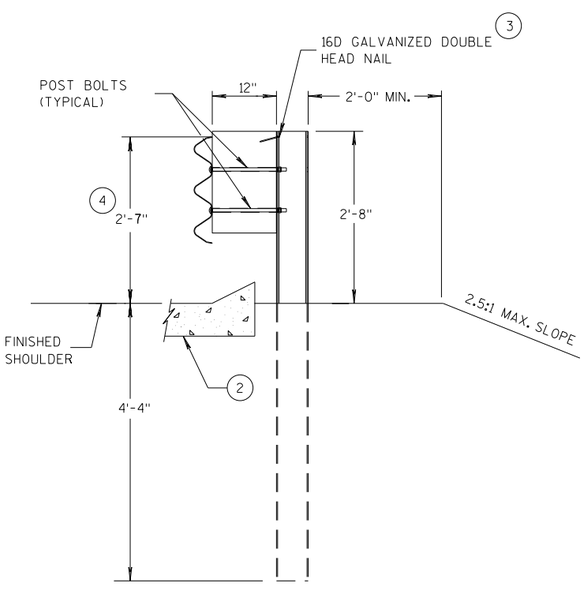

SECTION D-D

POSTS 12-17

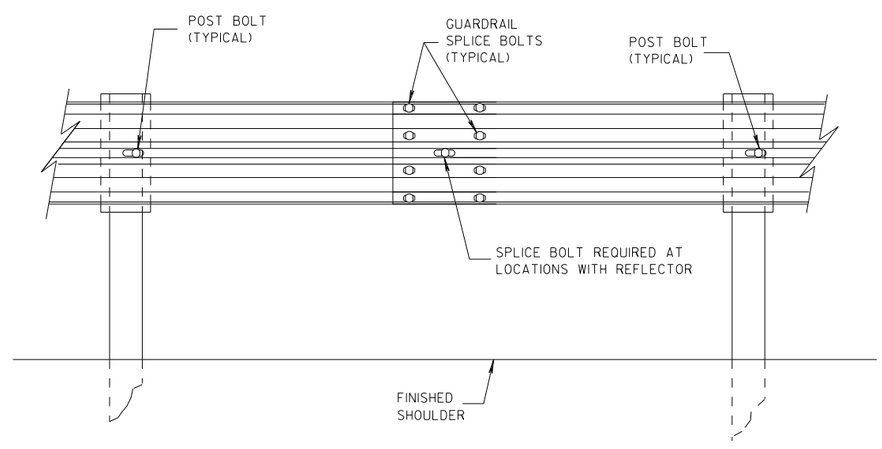

SPLICE DETAIL

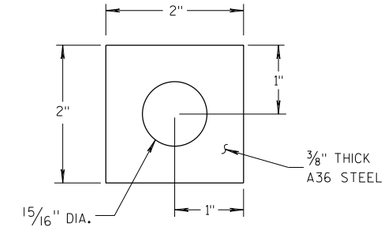

PLATE WASHER DETAIL

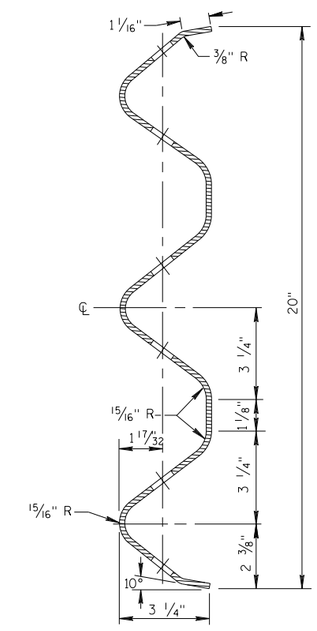

SECTION THRU THRIE BEAM RAIL ELEMENT

MIDWEST GUARDRAIL SYSTEM
THRIE BEAM TRANSITION (MGS)

STATE OF WISCONSIN
DEPARTMENT OF TRANSPOR

6

S.D.D. 14 B 45-5b

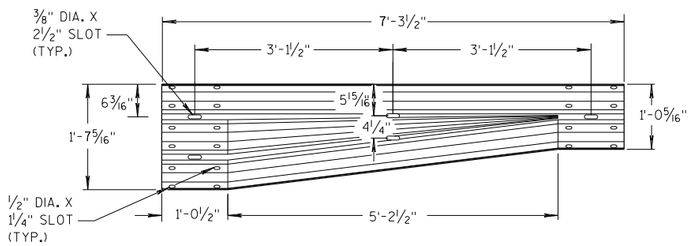

W-BEAM TO THRIE BEAM TRANSITION SECTION

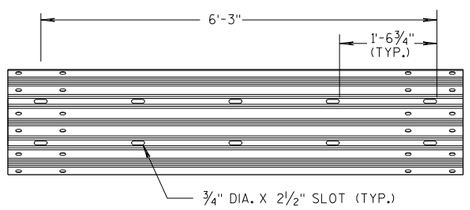

6'-3" THRIE BEAM SECTION

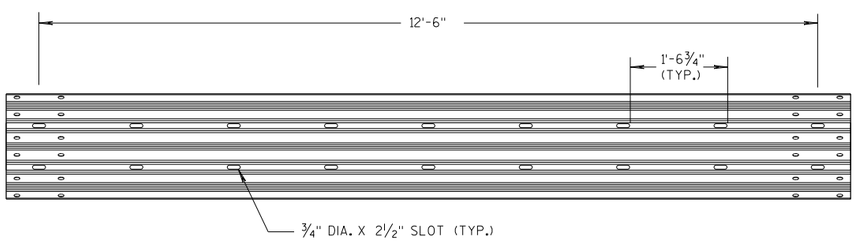

12'-6" THRIE BEAM SECTION

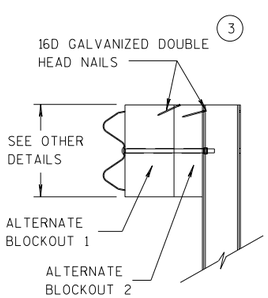

SIDE VIEW

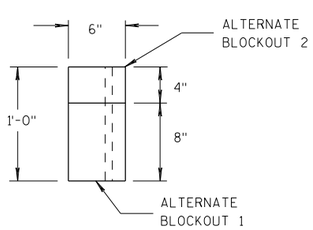

TOP VIEW

ALTERNATE WOOD BLOCKOUT DETAIL

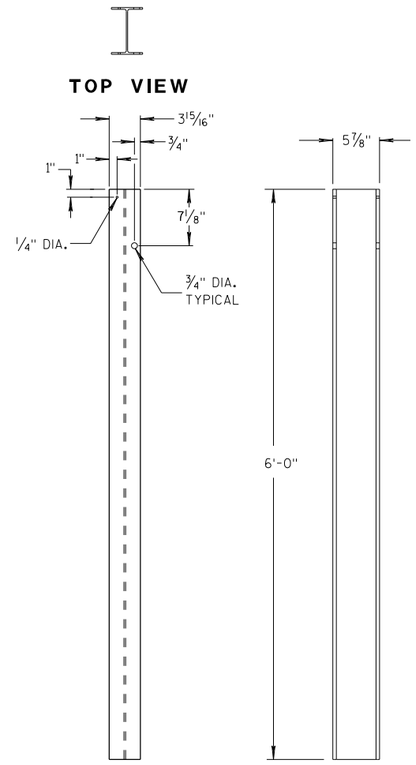

STEEL POSTS 1-5 (13)

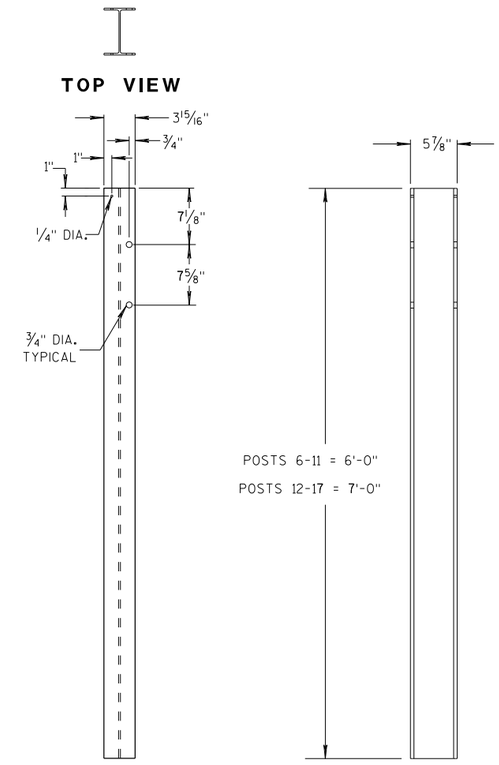

STEEL POSTS 6-17

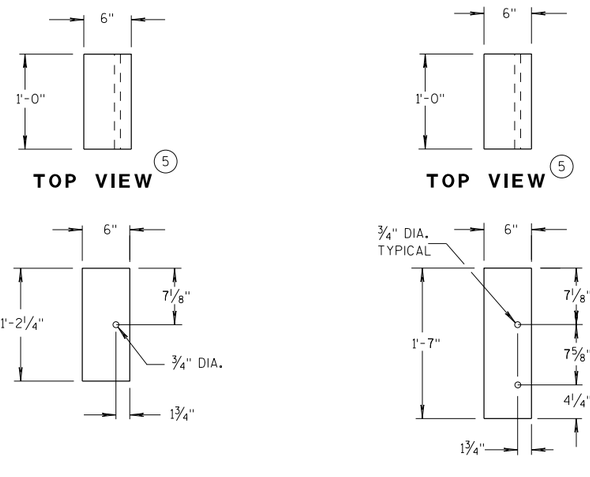

BLOCKOUT POSTS 1-5

BLOCKOUT POSTS 6-17

GENERAL NOTES

STEEL POSTS ARE W6X9 OR W6X8.5.

BOLT HOLES FOR POST ARE ON FRONT AND OF SIDE OF POST.

(3) WHEN USING STEEL POSTS AND WOOD BLOCKOUTS INSTALL FOUR 16D GALVANIZED NAILS. INSTALL NAILS AT THE BACK CORNERS OF THE BLOCK AND BEND THE NAILS OVER THE FLANGE OF THE STEEL POST.

(5) WOOD BLOCKS MAY BE CONSTRUCTED OUT OF 2 WOOD BLOCKS. SEE ALTERNATE WOOD BLOCK DETAIL.

(13) STEEL OR WOOD POST IS ACCEPTABLE AT POST 1. SEE SDD 14B42.

MIDWEST GUARDRAIL SYSTEM THRIE BEAM TRANSITION (MGS)

STATE OF WISCONSIN
DEPARTMENT OF TRANSPOR

6

S.D.D. 14 B 45-5c

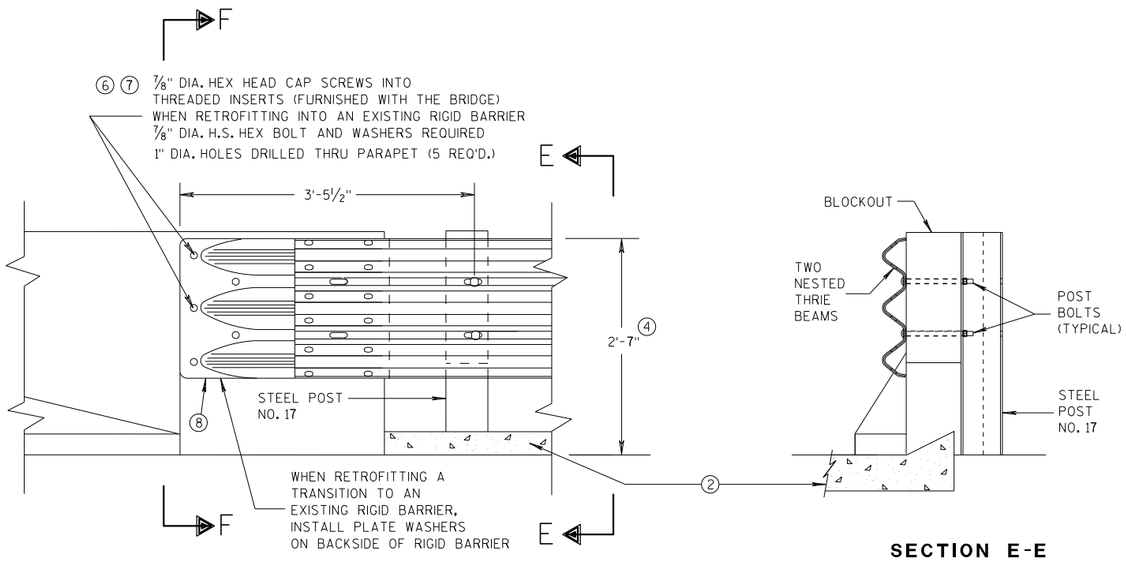

FRONT VIEW

SECTION E-E

THRIE BEAM CONNECTION TO BRIDGE PARAPET WITH SQUARE ENDS

GENERAL NOTES

THESE ARE TYPICAL CONNECTION DETAILS. ADJUST THE POSTION OF CONNECTIONS TO EXISTING BRIDGES TO FIT THE ACTUAL BRIDGE AND SITE DIMENSIONS.

② OPTIONAL CURB AND GUTTER OR DRAINAGE FEATURE SEE PLAN FOR INFORMATION.

④ TOLERANCE FOR TOP OF BEAM IS ± 1".

⑥ DRILLING BOLT HOLES THROUGH THE PARAPET, BOLTS, NUTS, WASHERS AND REPAIRING DAMAGED CONCRETE ARE INCIDENTAL TO THE CONTRACT.

⑦ BOLTS MAY BE A325 BOLTS OR A449 BOLTS. BOLT LENGTH AND THREADING LENGTH ARE TO ALLOW FOR A TIGHT CONNECTION BETWEEN RIGID BARRIER AND THRIE BEAM CONNECTION PLATE. CONTRACTOR IS TO FIELD VERIFY BOLT LENGTH AND THREAD LENGTH. ONE ROUND WASHER REQUIRED BETWEEN BOLT HEAD AND THRIE BEAM CONNECTOR PLATE. BOLTS THAT EXTEND THROUGH THE PARAPET AND OUT THE BACK FACE REQUIRE A HARDENED ROUND STEEL WASHER THAT IS 2" O.D. X 5/32" THICK AND ONE PLATE WASHER. REPAIR ANY DAMAGED CONCRETE FROM BOLT INSTALLATION.

⑧ THE RECESS FOR A W-BEAM CONNECTION, WHICH EXISTS ON SOME PARAPETS OF THIS TYPE, SHALL BE FILLED WITH A TREATED TIMBER BLOCKOUT. BLOCKOUT SIZE IS 1'-6" X 2'-0" X 3 1/2".

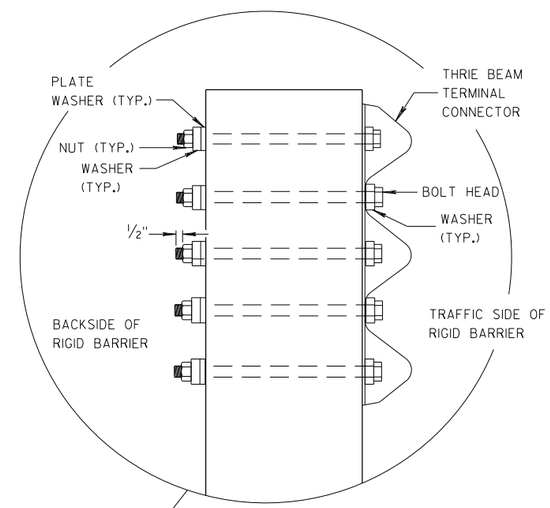

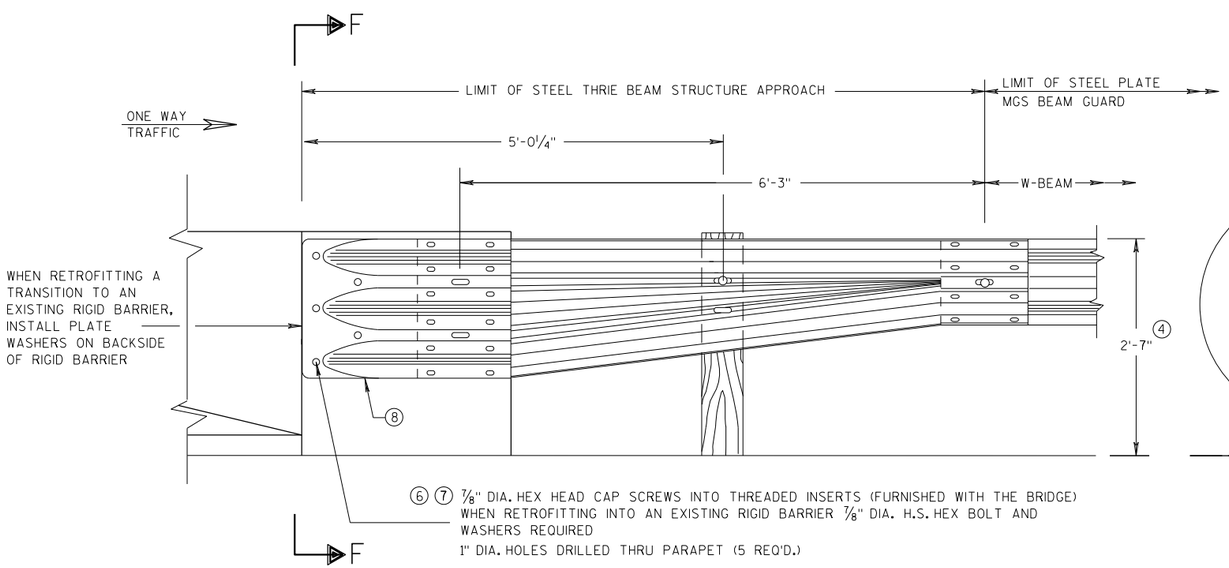

FRONT VIEW

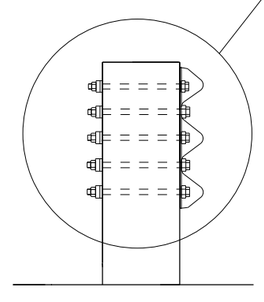

SECTION F-F

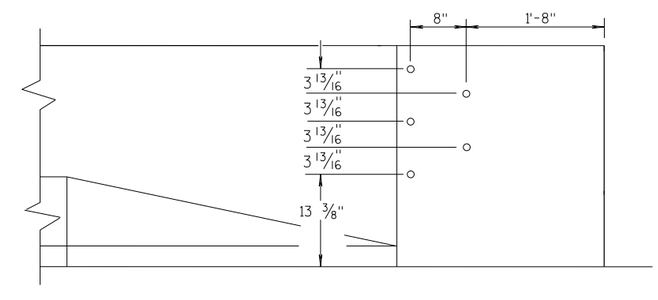

DRILL HOLE LOCATION

W BEAM TRANSITION AND CONNECTION TO BRIDGE PARAPETS WITH SQUARE ENDS

(USE ONLY ON THE TRAFFIC EXIT END OF ONE WAY BRIDGES)

MIDWEST GUARDRAIL SYSTEM THRIE BEAM TRANSITION (MGS)

STATE OF WISCONSIN
DEPARTMENT OF TRANSPORTATION

APPROVED
07/2018 — DATE
/S/ Rodney Taylor — ROADWAY STANDARDS D[illegible] UNIT SUPERVI[illegible]
FHWA

6

S.D.D. 14 B 45-5d

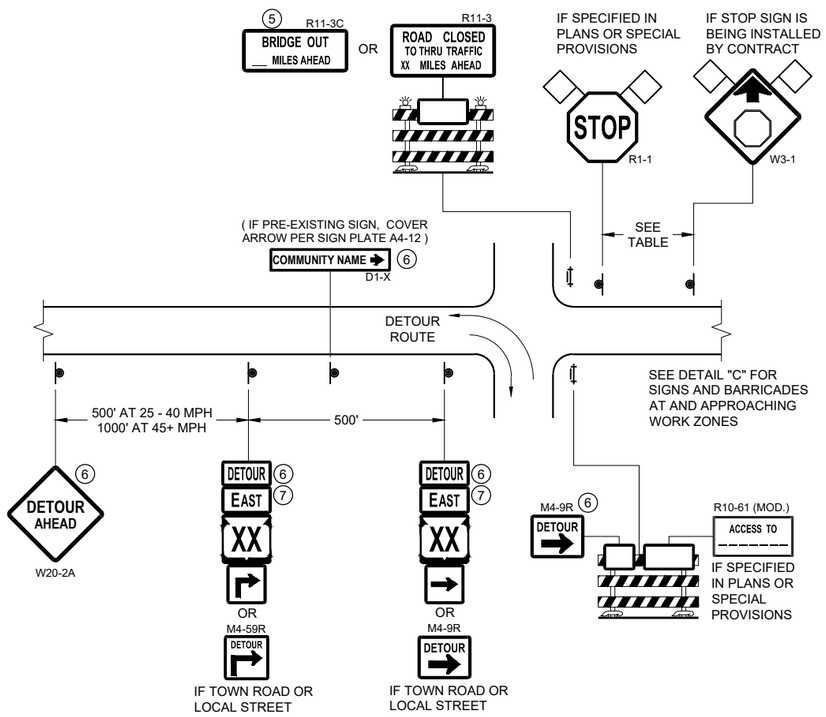

DETAIL A
MAINLINE CLOSURE WITH POSTED DETOUR

WORK ZONE GREATER THAN OR EQUAL TO ½ MILE FROM DETOUR ROUTE (1000 FEET IF URBAN)

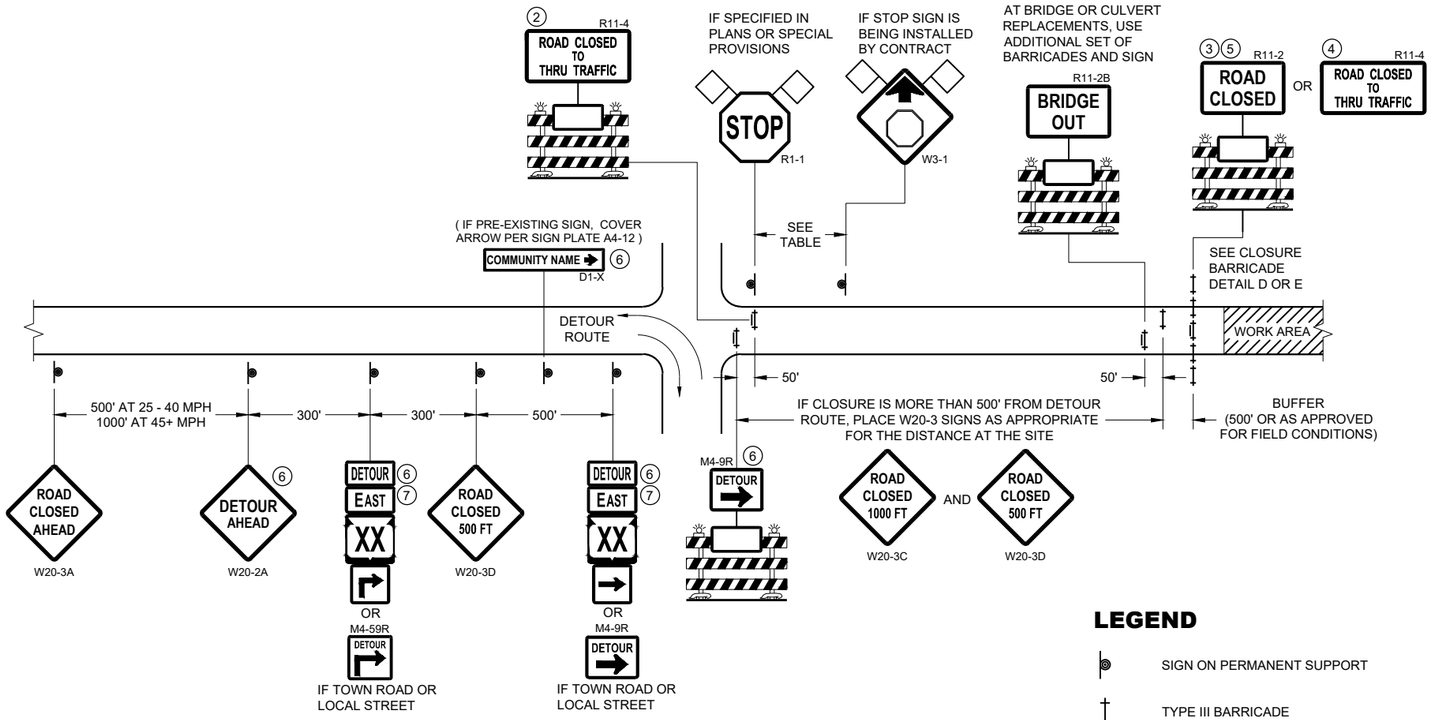

DETAIL B
MAINLINE CLOSURE WITH POSTED DETOUR

WORK ZONE LESS THAN ½ MILE FROM DETOUR ROUTE (1000 FEET IF URBAN)

LEGEND

- SIGN ON PERMANENT SUPPORT
- TYPE III BARRICADE
- TYPE III BARRICADE WITH ATTACHED SIGN
- TYPE "A" WARNING LIGHT (FLASHING)
- WORK AREA
- FLAGS, 16" X 16" MIN. (ORANGE)
- DETOUR — M4 - 8
- EAST — M3 - X
- XX (M1 - 4) OR XX (M1 - 6) OR COUNTY X (M1 - 5A)
- M05 - 1 OR M06 - 1

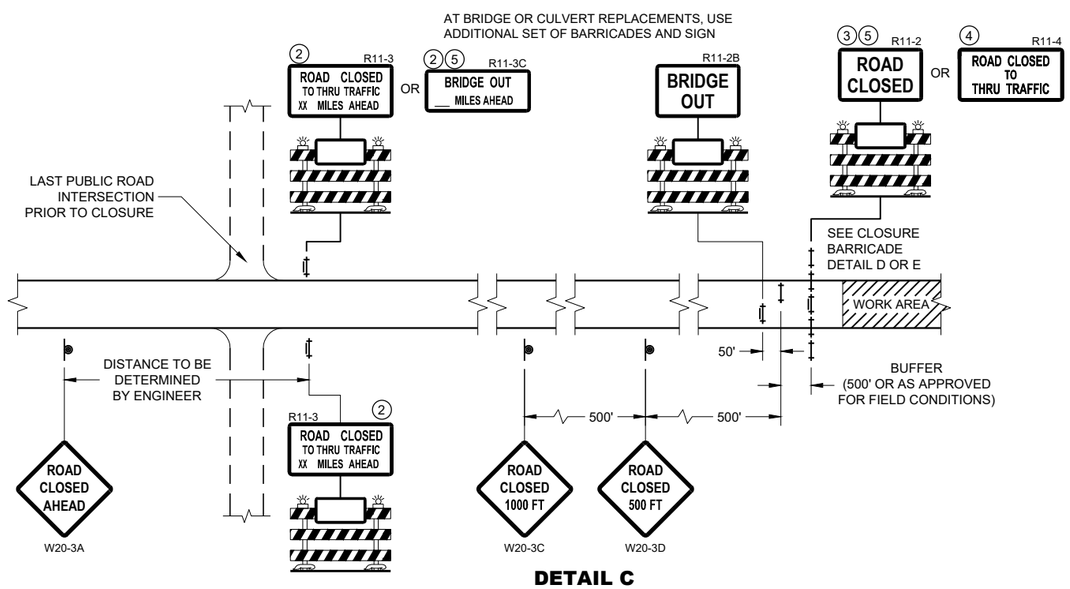

DETAIL C
MAINLINE CLOSURE, NO POSTED DETOUR

SPEED LIMIT (MPH)	"STOP AHEAD" ADVANCE WARNING DISTANCE (FT)
25	200
30	200
35	350
40	350
45	500
50	550
55	750

SEE SDD 15C2-SHEET "b" FOR GENERAL NOTES AND FOOTNOTES 1 THROUGH 7

BARRICADES AND SIGNS FOR MAINLINE CLOSURES

STATE OF WISCONSIN
DEPARTMENT OF TRANSPORTATION

APPROVED
May 2023 — DATE
/S/ Andrew Heidtke — WORK ZONE ENGINEER

FHWA

6

SDD 15C02 - 09a

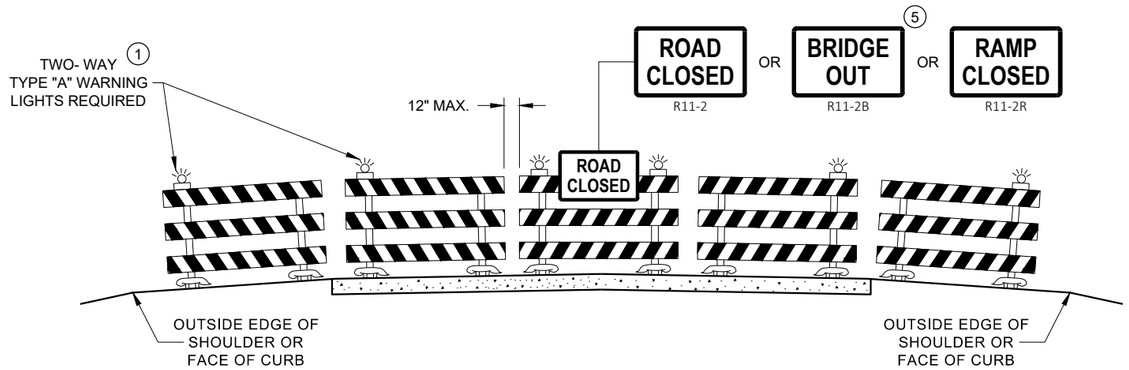

DETAIL D
ROAD CLOSURE BARRICADE DETAIL
APPROACH VIEW

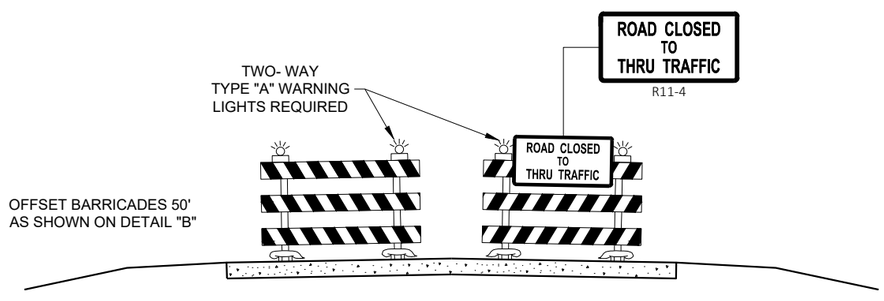

DETAIL E
LANE CLOSURE BARRICADE DETAIL
APPROACH VIEW

SEE SDD 15C2 - SHEET "a" FOR LEGEND

GENERAL NOTES

THE EXACT NUMBER, LOCATION, AND SPACING OF ALL SIGNS AND BARRICADES SHALL BE ADJUSTED TO FIT FIELD CONDITIONS AS APPROVED BY THE ENGINEER.

ANY SIGNS TEMPORARY OR EXISTING, WHICH CONFLICT WITH TRAFFIC CONTROL "IN USE", SHALL BE REMOVED OR COVERED AS NEEDED AND AS APPROVED BY THE ENGINEER.

THE SPACING BETWEEN TRAFFIC CONTROL SIGNS SHOULD BE ADJUSTED TO NOT CONFLICT WITH AND SHOULD PROVIDE A DESIRABLE MINIMUM OF 200 FEET CLEARANCE TO EXISTING SIGNS THAT WILL REMAIN IN PLACE.

BARRICADES THAT MUST BE MOVED FOR A WORK OPERATION SHALL BE IMMEDIATELY RE-ESTABLISHED UPON COMPLETION OF THE OPERATION, OR FOR CONTINUING OPERATIONS, AT THE END OF EACH WORKING DAY.

SIGNS THAT WILL BE IN PLACE LESS THAN 7 CONTINUOUS DAYS AND NIGHTS MAY BE MOUNTED ON PORTABLE SUPPORTS.

ALL TYPE III BARRICADES SHALL HAVE RAILS REFLECTORIZED ON BOTH FACES. STRIPES SHALL BE PROPERLY SLOPED DOWN TOWARD THE TRAFFIC SIDE OR AS SHOWN IN THE ROAD CLOSURE BARRICADE DETAIL "D" FOR FULL ROAD CLOSURES.

TYPE "A" LOW - INTENSITY FLASHING WARNING LIGHTS SHALL BE VISIBLE ON BOTH SIDES OF THE BARRICADE.

THE R11 - 2, R11 - 3, M4 - 9, R11 - 4, AND R10 - 61 SIGNS PLACED ON THE BARRICADES SHALL COVER NO MORE THAN THE TOP RAIL. THE SIGNS SHALL NOT COVER ANY PORTION OF THE MIDDLE RAIL OR BOTTOM RAILS.

"WO" AND "MO" SIGNS ARE THE SAME AS "W" AND "M" SIGNS EXCEPT THE BACKGROUND IS ORANGE.

ALL SIGNS SHALL BE 48" X 48" UNLESS OTHERWISE NOTED BELOW:
- R11 - 2 SHALL BE 48" X 30"
- R11 - 3 SHALL, R11 - 4 AND R10 - 61 SHALL BE 60 " X 30"
- M4 - 9 SHALL BE 30" X 24"
- M3 - X SHALL BE 24" X 12" (36" X 18" IF NEEDED TO MATCH EXISTING SIGNS)
- M4 - 8 SHALL BE 24" X 12" (36" X 18" IF NEEDED TO MATCH EXISTING SIGNS)
- M1 - 4, M1 - 5A AND M1 - 6 SHALL BE 24" X 24" (36" X 36" IF NEEDED TO MATCH EXISTING SIGNS)
- MO5 - 1 AND MO6 - 1 SHALL BE 21" X 21" (30" X 30" IF NEEDED TO MATCH EXISTING SIGNS)
- D1 - X SHALL BE AS SHOWN ON SPECIFIC PROJECT SIGNING DETAIL SHEETS.
- R1 - 1 SHALL BE 36" X 36"

1. TWO WARNING LIGHTS SHALL BE PROVIDED ON THE CENTER BARRICADE AND A MINIMUM OF ONE WARNING LIGHT SHALL BE PROVIDED ON EACH OF THE OTHER BARRICADES WITHIN THE ROADWAY LIMITS. SPACING OF THE WARNING LIGHTS SHALL BE UNIFORM TO THE EDGE OF ROADWAY AS SHOWN (APPROX. 8 FOOT LIGHT SPACING.
2. THESE SIGNS AND BARRICADES ARE NOT REQUIRED IF ROAD CLOSURE BEGINS AT AN INTERSECTION.
3. FOR ROAD CLOSURE WITHOUT LOCAL ACCESS TO PROJECT, SEE ROAD CLOSURE BARRICADE DETAIL "D".
4. FOR ROAD CLOSURE WITH LOCAL ACCESS TO PROJECT, SEE ROAD CLOSURE BARRICADE DETAIL "E".
5. FOR BRIDGE OR CULVERT REPLACEMENTS, SUBSTITUTE "BRIDGE OUT" INSTEAD OF "ROAD CLOSED" ON R11 - 2 AND R11 - 3 SIGNS.
6. INSTALL DETOUR AND COMMUNITY GUIDE SIGNS AND ARROWS ONLY IF SPECIFIED IN THE CONTRACT. IF THERE ARE EXISTING ROUTE MARKER ASSEMBLIES THAT WILL REMAIN IN PLACE, ADJUST THE LOCATION OF THE DETOUR ROUTE SIGNS TO CORRESPOND WITH THE EXISTING ASSEMBLIES. MODIFY EXISTING SIGNS WHERE POSSIBLE. SEE SPECIFIC PROJECT DETOUR SIGNING DETAIL SHEETS. IF DETOUR SIGNS ARE BEING INSTALLED BY OTHERS, PLACE THE CONTRACTED TRAFFIC CONTROL SIGNS TO ALLOW FOR PLACEMENT OF ALL WARNING, DETOUR AND GUIDE SIGNS AS SHOWN.
7. "EAST" CARDINAL DIRECTION MARKERS AND RIGHT TURN ARROWS ARE SHOWN. USE OTHER CARDINAL DIRECTIONS AND ARROWS AS APPROPRIATE.

BARRICADES AND SIGNS FOR VARIOUS CLOSURES

STATE OF WISCONSIN
DEPARTMENT OF TRANSPORTATION

APPROVED
May 2023 — DATE
/S/ Andrew Heidtke — WORK ZONE ENGINEE
FHWA

THIS DRAWING PROVIDES GENERAL GUIDANCE ON TYPICAL DETOUR SIGN LAYOUT AND SPACING. SEE PROJECT DETOUR SIGNING SHEETS FOR SPECIFIC DETAILS FOR EACH PROJECT.

LEGEND

- SIGN ON PERMANENT SUPPORT
- WORK AREA
- DETOUR — M4 - 8
- EAST — M3 - X
- XX — M1 - 4 OR XX — M1 - 6 OR COUNTY X — M1 - 5A
- M05 - 1 OR M06 - 1 OR M06 - 1

GENERAL NOTES

THE EXACT NUMBER, LOCATION AND SPACING OF ALL SIGNS SHALL BE ADJUSTED TO FIT FIELD CONDITIONS AS APPROVED BY THE ENGINEER.

IF THERE ARE EXISTING ROUTE MARKER ASSEMBLIES THAT WILL REMAIN IN PLACE, ADJUST THE LOCATION OF THE DETOUR ROUTE SIGNS TO CORRESPOND WITH THE EXISTING ASSEMBLIES. SEE SPECIFIC PROJECT DETOUR SIGNING DETAIL SHEETS. MODIFY EXISTING SIGNS WHERE POSSIBLE.

THE SPACING BETWEEN TRAFFIC CONTROL AND DETOUR SIGNS SHOULD BE ADJUSTED TO NOT CONFLICT WITH AND TO PROVIDE A DESIRABLE MINIMUM OF 200 FEET CLEARANCE TO EXISTING SIGNS THAT WILL REMAIN IN PLACE.

ANY SIGNS TEMPORARY OR EXISTING, WHICH CONFLICT WITH TRAFFIC CONTROL "IN USE" SHALL BE REMOVED OR COVERED AS NEEDED AND AS APPROVED BY THE ENGINEER.

SIGNS THAT WILL BE IN PLACE LESS THAN 7 CONTINUOUS DAYS AND NIGHTS MAY BE MOUNTED ON PORTABLE SUPPORTS.

"MO" SIGNS ARE THE SAME AS "M" SIGNS EXCEPT THE BACKGROUND IS ORANGE.

SIGN SIZES SHALL BE AS FOLLOWS:

M3-X SHALL BE 24" X 12" (36" X 18" IF NEEDED TO MATCH EXISTING SIGNS)
M4-8 SHALL BE 24" X 12" (36" X 18" IF NEEDED TO MATCH EXISTING SIGNS)
M1-4, M1-5A AND M1-6 SHALL BE 24" X 24" (36" X 36" IF NEEDED TO MATCH EXISTING SIGNS)
M05-1 AND M06-1 SHALL BE 21" X 21" (30" X 30" IF NEEDED TO MATCH EXISTING SIGNS)
M4-9 AND M4-59 SHALL BE 30" X 24"
M4-8a SHALL BE 24" X 18"
G20-51 SHALL BE 60" X 24"
W20-2A SHALL BE 48" X 48"
D1-X SHALL BE AS SHOWN ON SPECIFIC PROJECT SIGNING DETAIL SHEETS.

* OPTIONAL SIGNS. SEE SPECIFIC PROJECT DETOUR SIGNING DETAIL SHEETS.

** FOR A TOWN ROAD OR LOCAL STREET DETOURED ONTO A STATE TRUNK HIGHWAY, PLACE A ROAD NAME PLAQUE ABOVE THE M4-9 SIGN AS SPECIFIED IN THE CONTRACT.

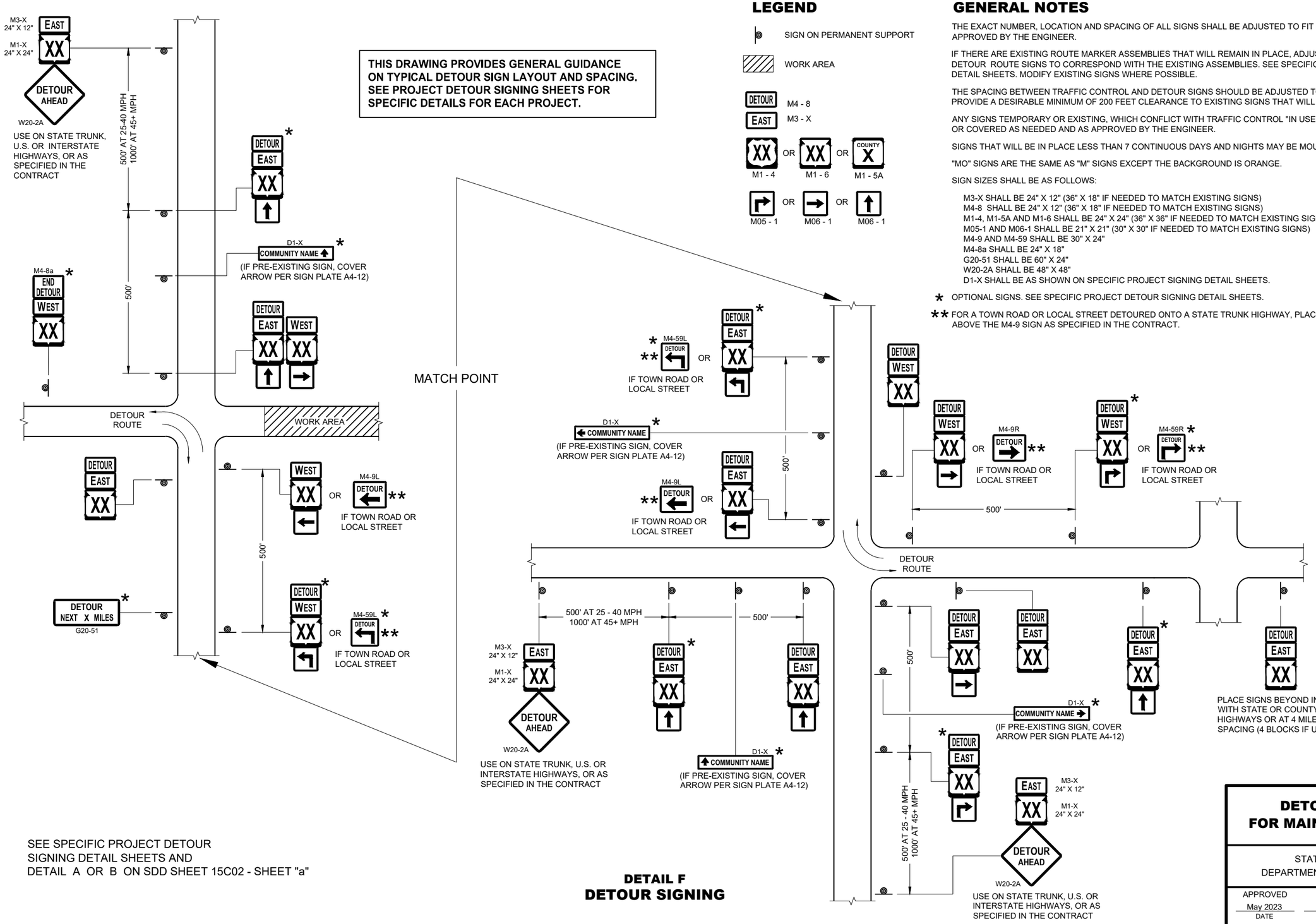

SEE SPECIFIC PROJECT DETOUR SIGNING DETAIL SHEETS AND DETAIL A OR B ON SDD SHEET 15C02 - SHEET "a"

DETAIL F
DETOUR SIGNING

DETOUR SIGNING FOR MAINLINE CLOSURES

STATE OF WISCONSIN
DEPARTMENT OF TRANSPORTATION

APPROVED
May 2023 — DATE
/S/ Andrew Heidtke — WORK ZONE ENGINEER
FHWA

6

SDD 15C02 - 09c

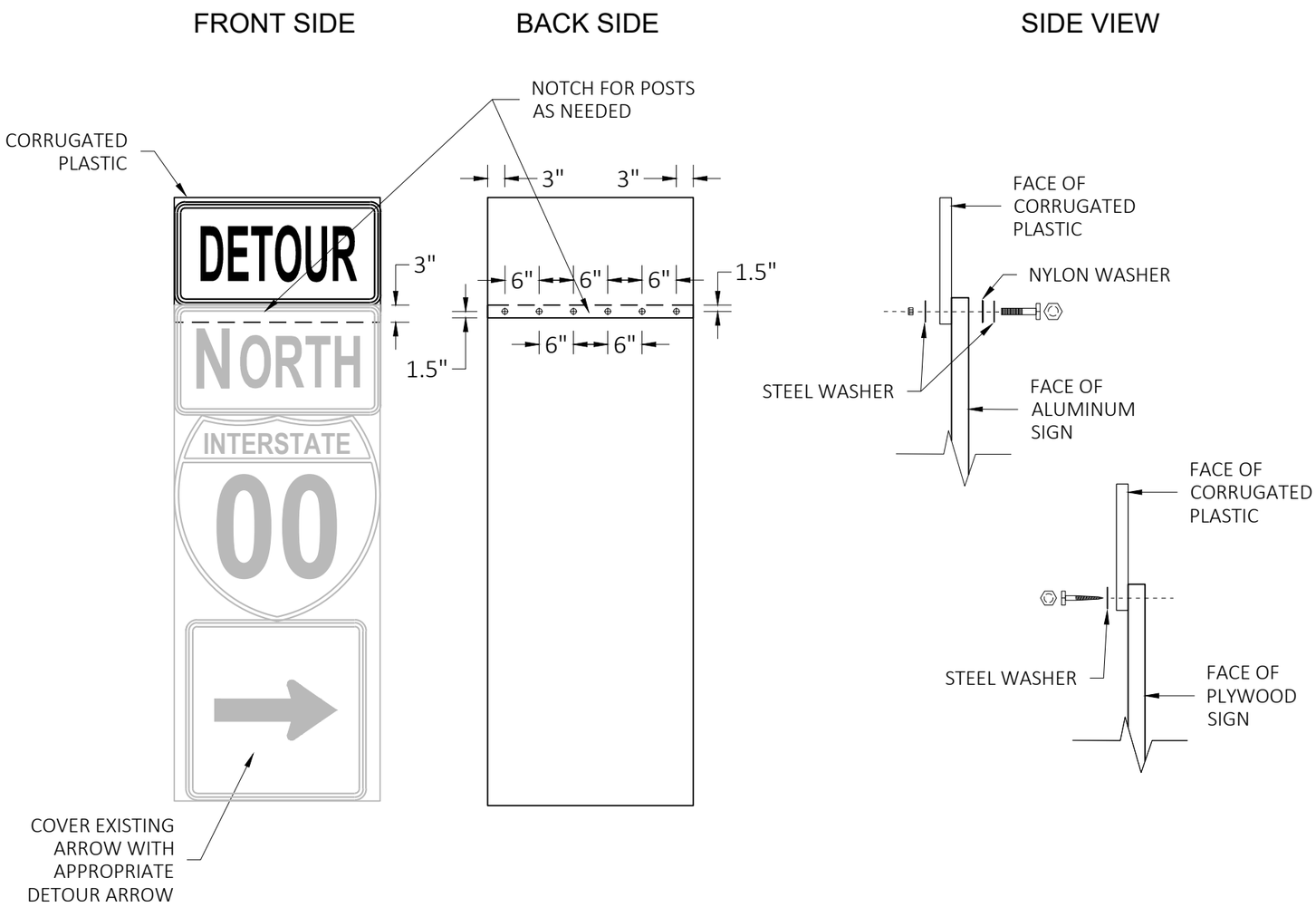

GENERAL NOTES

CELLS OF CORRUGATED PLASTIC SHALL BE VERTICALLY ORIENTED.

PROVIDE A 0.4-INCH THICK BASE CORRUGATED PLASTIC WITH A 0.035-INCH WALL THICKNESS AND 0.4-INCH CELL SIZE.

FOR 36" WIDE SIGNS: USE 6 FASTENERS AS SHOWN.

FOR 24" WIDE SIGNS: USE 4 FASTENERS WITH EDGE SPACING AS SHOWN AND 6" SPACING BETWEEN FASTENERS.

METAL WASHERS, NUTS, BOLTS AND LAGS SHALL HAVE HEXAGONAL HEADS AND SHALL BE EITHER:

A. HOT DIP GALVANIZED IN ACCORDANCE WITH ASTM DESIGNATION: A 153, CLASS D, OR SC 3.

B. ELECTRO-GALVANIZED IN ACCORDANCE WITH ASTM DESIGNATION: B 633, TYPE III, SC3

THREADS ON BOLTS AND NUTS SHALL BE MANUFACTURED WITH SUFFICIENT ALLOWANCE FOR THE CADMIUM PLATE OR GALVANIZED COATING TO PERMIT THE NUTS TO RUN FREELY ON THE BOLTS.

PLYWOOD SIGNS:
LAG SCREWS - 5/16" x 1"
ALUMINUM SIGNS:
MACHINE BOLTS - 5/16" x 1-1/4" LENGTH W/NUTS
WASHERS:
1-1/4" O.D. x 3/8" I.D. x 1/16" STEEL
1-1/4" O.D. x 3/8" I.D. x .080 NYLON

MODIFIED ROUTE ASSEMBLY FOR DETOUR SIGNING

MODIFIED ROUTE ASSEMBLY FOR DETOUR SIGNING

STATE OF WISCONSIN
DEPARTMENT OF TRANSPORTATION

APPROVED
May 2023 — DATE
/S/ Andrew Heidtke — ROADWAY STANDARDS DEVEL ENGINEER
FHWA

6
SDD 15C02-09h

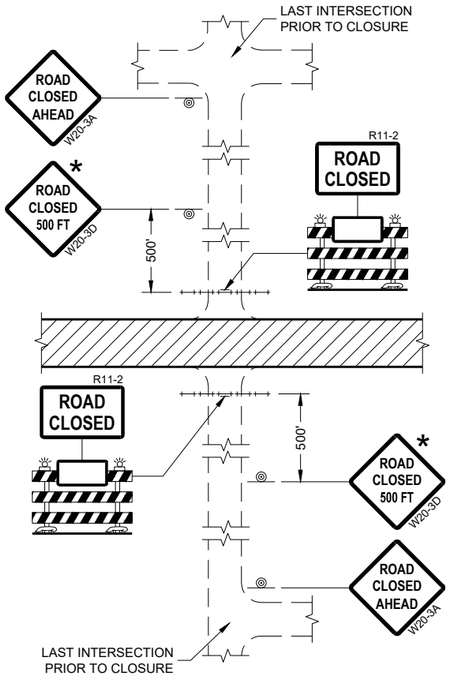

DETAIL 1
(NO ACCESS TO PROJECT)

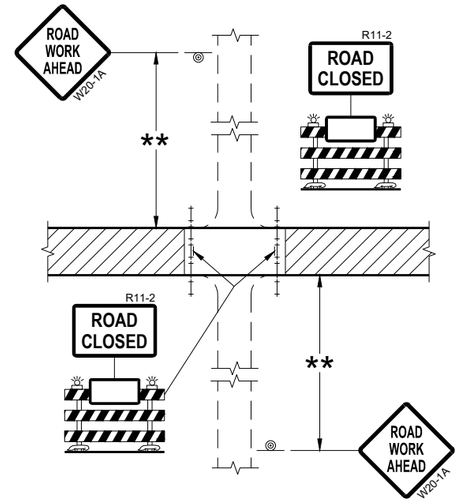

DETAIL 2
(PUBLIC CROSS-TRAFFIC MAINTAINED.
NO ACCESS TO PROJECT)

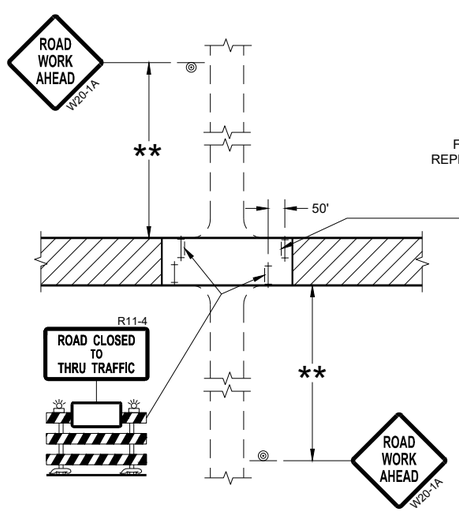

DETAIL 3
(PUBLIC CROSS-TRAFFIC MAINTAINED.
CONTRACTOR, LOCAL BUSINESS AND
RESIDENT ACCESS TO PROJECT)

FOR BRIDGE OR CULVERT
REPLACEMENT, USE ADDITIONAL
SIGN ON BARRICADE

BRIDGE OUT
XX MILES AHEAD
R11-3C

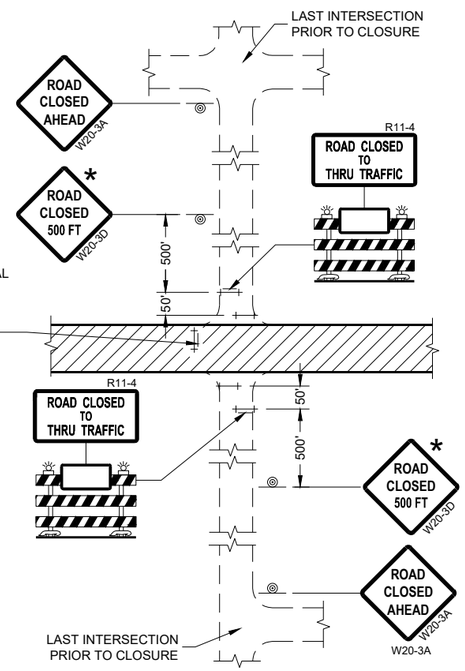

DETAIL 4
(CONTRACTOR, LOCAL BUSINESS AND
RESIDENT ACCESS TO PROJECT)

GENERAL NOTES

THE EXACT NUMBER, LOCATION, AND SPACING OF ALL SIGNS AND BARRICADES SHALL BE ADJUSTED TO FIT FIELD CONDITIONS AS APPROVED BY THE ENGINEER.

ANY SIGNS TEMPORARY OR EXISTING, WHICH CONFLICT WITH TRAFFIC CONTROL "IN USE" SHALL BE REMOVED OR COVERED AS NEEDED AND AS APPROVED BY THE ENGINEER.

THE SPACING BETWEEN TRAFFIC CONTROL SIGNS SHOULD BE ADJUSTED TO NOT CONFLICT WITH AND SHOULD PROVIDE A DESIRABLE MINIMUM OF 200 FEET CLEARANCE (500 FEET DESIRABLE) TO EXISTING SIGNS THAT WILL REMAIN IN PLACE.

IF A "STOP" SIGN MUST BE REMOVED FOR A WORK OPERATION, A TEMPORARY "STOP" SIGN SHALL BE PLACED PRIOR TO THE SIGN REMOVAL, OR A FLAGGER SHALL BE PROVIDED UNTIL THE SIGN IS REESTABLISHED.

BARRICADES THAT MUST BE MOVED FOR A WORK OPERATION SHALL BE IMMEDIATELY REESTABLISHED UPON COMPLETION OF THE OPERATION OR FOR CONTINUING OPERATIONS, AT THE END OF EACH WORKING DAY.

SIGNS THAT WILL BE IN PLACE LESS THAN SEVEN CONTINUOUS DAYS AND NIGHTS MAY BE MOUNTED ON PORTABLE SUPPORTS.

ALL TYPE III BARRICADES SHALL HAVE RAILS REFLECTORIZED ON BOTH FACES. STRIPES SHALL BE PROPERLY SLOPED DOWN TOWARD THE TRAFFIC SIDE OR AS SHOWN IN THE ROAD CLOSURE BARRICADE DETAIL "D" FOR FULL ROAD CLOSURES.

TYPE "A" LOW-INTENSITY FLASHING WARNING LIGHTS SHALL BE VISIBLE ON BOTH SIDES OF THE BARRICADE.

THE R11-2, R11-3, AND R11-4 SIGNS PLACED ON BARRICADES SHALL COVER NO MORE THAN THE TOP RAIL. THE SIGNS SHALL NOT COVER ANY PORTION OF THE MIDDLE OR BOTTOM RAILS.

ALL SIGNS SHALL BE 48" X 48" UNLESS OTHERWISE NOTED BELOW:
R11-2 SHALL BE 48" X 30".
R11-4 AND R11-3 SHALL BE 60" X 30".

* OMIT THE "ROAD CLOSED 500 FT." SIGN IF THE LAST INTERSECTION IS 500 FEET OR LESS FROM THE WORK ZONE.

** 500' MAX. OR AT LAST INTERSECTION, WHICHEVER IS CLOSEST.

LEGEND

- SIGN ON PERMANENT SUPPORT
- TYPE III BARRICADE
- TYPE III BARRICADE WITH ATTACHED SIGN
- TYPE "A" WARNING LIGHT (FLASHING)
- WORK AREA

BARRICADES AND SIGNS FOR SIDEROAD CLOSURES

STATE OF WISCONSIN
DEPARTMENT OF TRANSPORTATION

APPROVED
July 2018 — DATE
/S/ Andrew Heidtke — WORK ZONE ENGINEE
FHWA

6
SDD 15C03 - 05

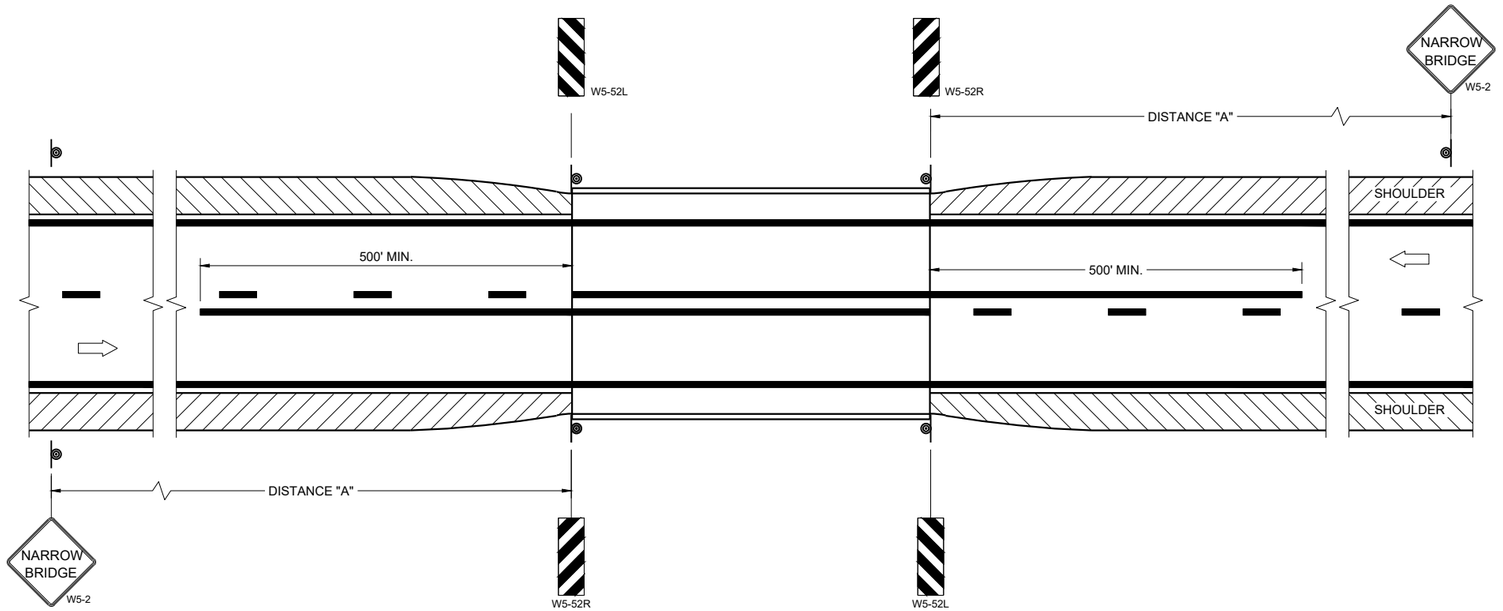

SITUATION 1

WARRANTING CRITERIA:
BRIDGE WIDTH IS AT LEAST 16 FEET BUT LESS THAN 24 FEET.

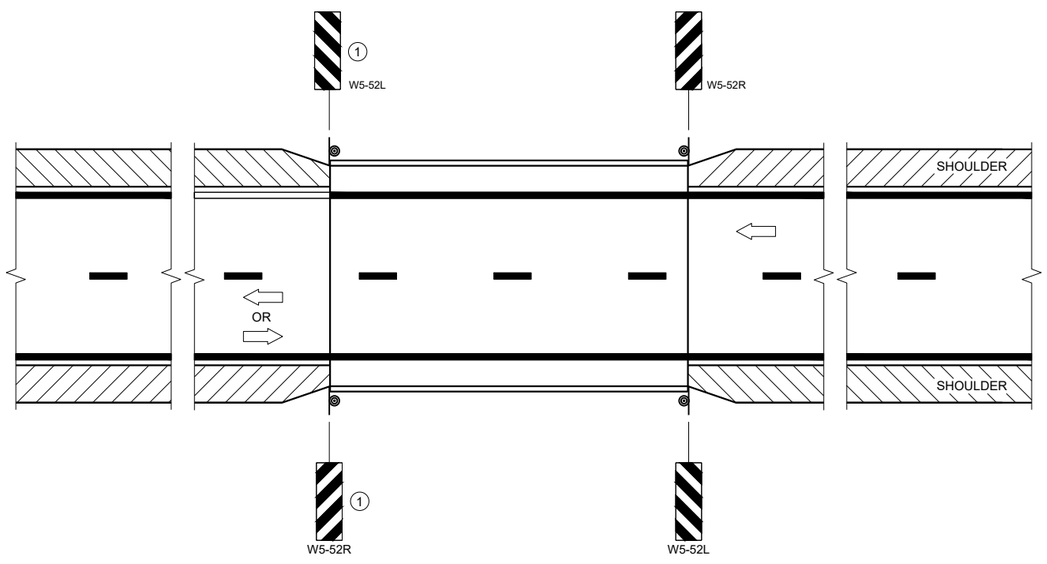

SITUATION 2

WARRANTING CRITERIA:
1. BRIDGE WIDTH IS AT LEAST 24 FEET AND
2. BRIDGE SHOULDER WIDTH IS LESS THAN 6 FEET

GENERAL NOTES

DETAILS OF TRAFFIC CONTROL DEVICES AND INSTALLATION NOT SHOWN ON THE DRAWING SHALL CONFORM TO THE PERTINENT REQUIREMENTS OF THE STANDARD SPECIFICATIONS, THE SPECIAL PROVISIONS, AND THE MANUAL ON UNIFORM TRAFFIC CONTROL DEVICES.

LOCATE W5-52 SIGN POST(S) BEHIND GUARDRAIL WHEN PRESENT.

PLACE THE EDGE OF THE W5-52 SIGN IN LINE WITH FACE OF CURB OR PARAPET.

ON BRIDGE ONLY PROJECTS, PLACE 300 FEET OF EDGELINE.

OMIT EDGELINES ON ROADWAYS WITHOUT EXISTING EDGELINES.

(1) OMIT ON ONE-WAY TRAVELED WAYS.

LEGEND

SIGN ON PERMANENT SUPPORT

DIRECTION OF TRAFFIC

DISTANCE TABLE

POSTED OR 85TH PERCENTILE SPEED	DISTANCE "A"
25	150'
30	200'
35	250'
40	300'
45	400'
50	550'
55	700'

SIGNING AND MARKING FOR TWO LANE BRIDGES

STATE OF WISCONSIN
DEPARTMENT OF TRANSPORTATION

APPROVED
May 2023 — DATE
/S/ Jeannie Silver — Statewide Pavement Marking Engineer
FHWA

6

SDD 15C06-12

GENERAL NOTES

DETAILS OF CONSTRUCTION NOT SHOWN ON THIS DRAWING SHALL CONFORM TO STANDARD SPECIFICATIONS AND SPECIAL PROVISIONS.

1. LOCATE THE NO PASSING ZONE W14-3 SIGN WITHIN 50 FEET OF THE "T" MARKING
2. MEASURE FROM EDGE OF MARKING TO JOINT LINE. THIS DOES NOT INCLUDE SPACE NEEDED FOR GROOVING OPERATIONS.

*CONFIRM MARKING LINE WIDTH WITH THE MISCELLANEOUS QUANTITIES

LEGEND

"T" MARKING

SIGN ON PERMANENT SUPPORT

DIRECTION OF TRAFFIC

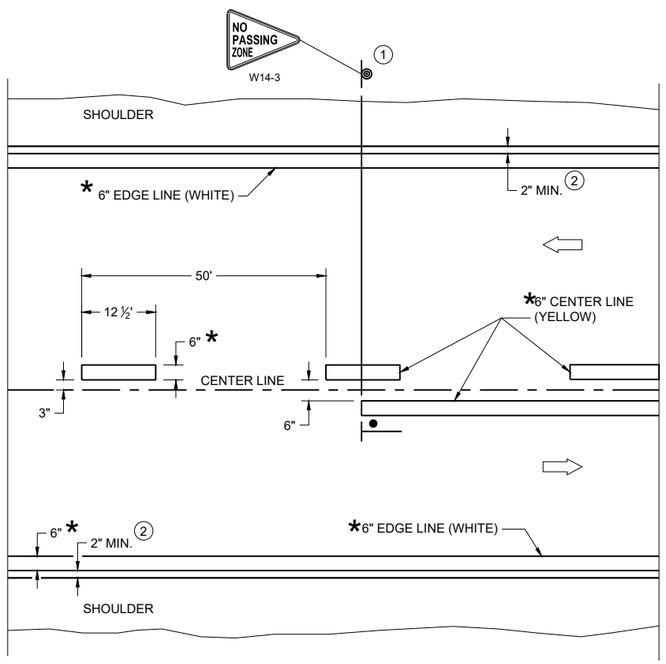

TWO WAY TRAFFIC

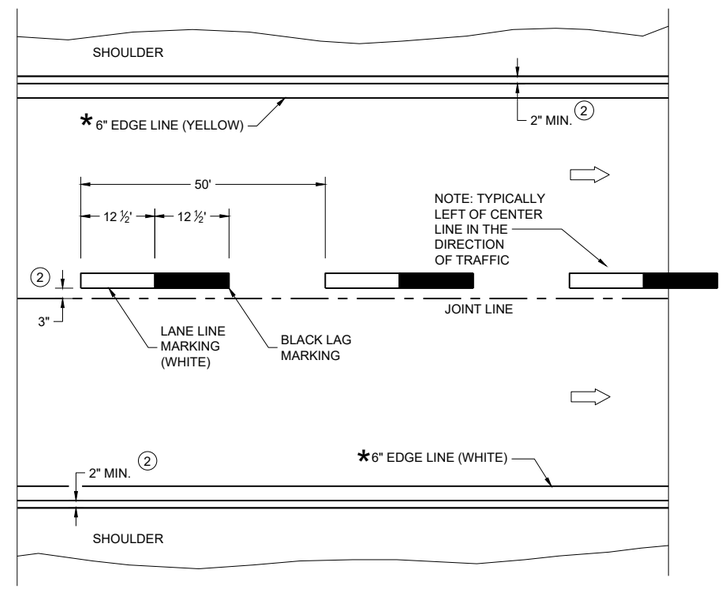

ONE WAY TRAFFIC

PERMANENT PAVEMENT MARKING

6

SDD 15C08-24a

PERMANENT LONGITUDINAL PAVEMENT MARKINGS

STATE OF WISCONSIN
DEPARTMENT OF TRANSPORTATION

APPROVED
December 2024 — DATE
/S/ Jeannie Silver — Statewide Pavement Marking Engineer
FHWA

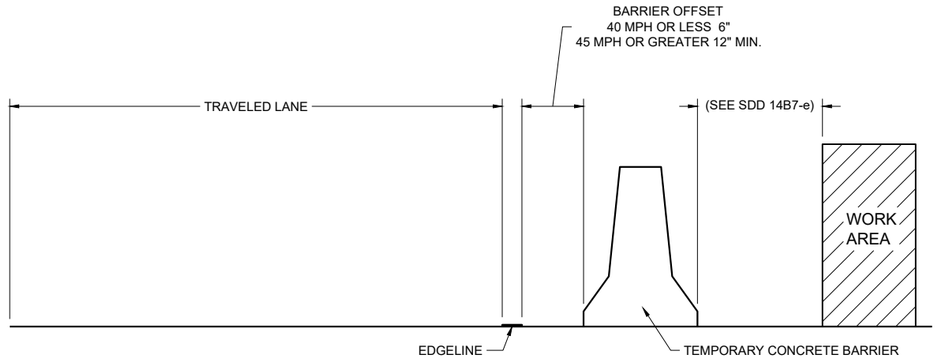

TEMPORARY BARRIER OFFSET FROM EDGELINE

GENERAL NOTES

DETAILS OF CONSTRUCTION NOT SHOWN ON THIS DRAWING SHALL CONFORM TO STANDARD SPECIFICATIONS AND SPECIAL PROVISIONS.

LEGEND

DIRECTION OF TRAFFIC

*CONFIRM MARKING LINE WIDTH WITH THE MISCELLANEOUS QUANTITIES

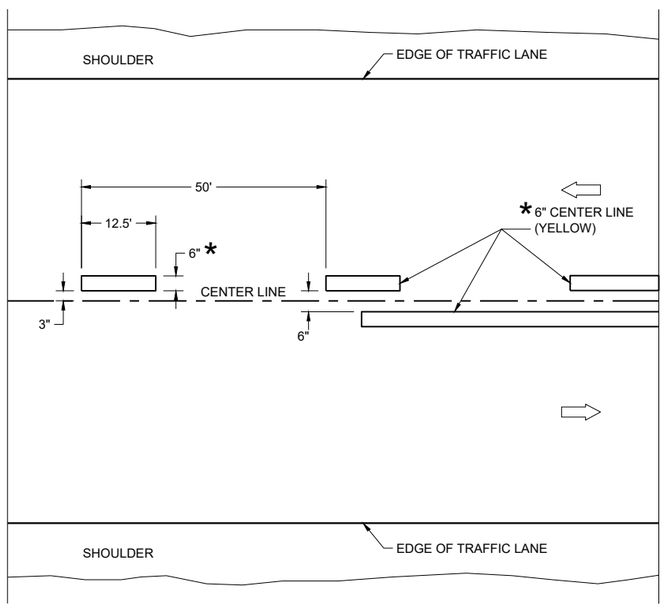

TWO WAY TRAFFIC

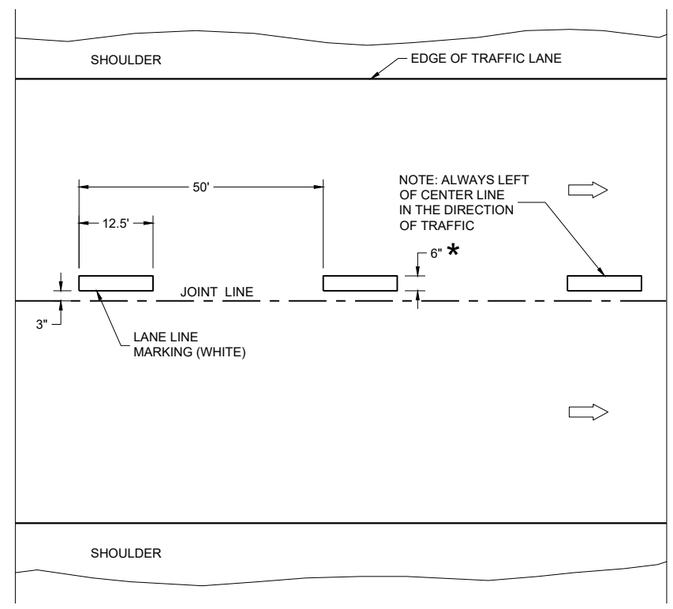

ONE WAY TRAFFIC

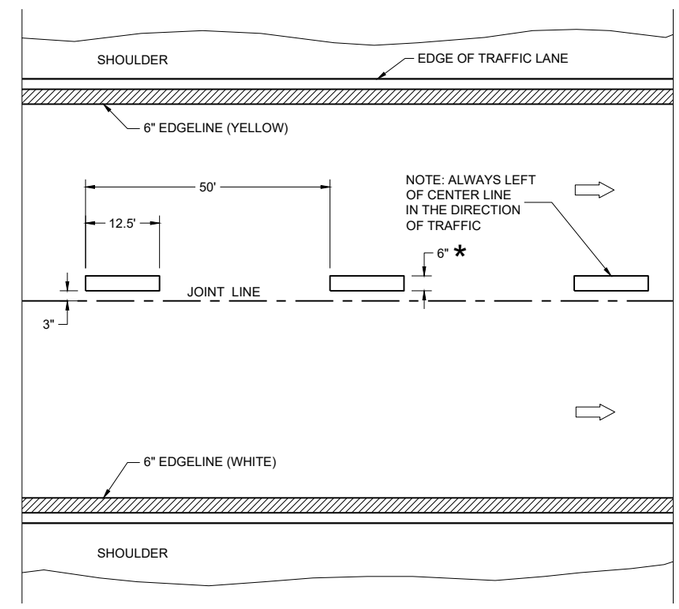

FREEWAYS AND EXPRESSWAYS

TEMPORARY PAVEMENT MARKING

TEMPORARY LONGITUDINAL PAVEMENT MARKING
STATE OF WISCONSIN DEPARTMENT OF TRANSPORTATION
APPROVED December 2024 — DATE /S/ Jeannie Silver — Statewide Pavement Marking Engineer FHWA

6

SDD 15C08-24b

6

SDD 15C08-24b

GENERAL NOTES

1. A SET OF ARROWS IS REQUIRED EVERY 400 FEET OR NEAR INTERSECTIONS OR DRIVEWAYS WITH TURNING TRAFFIC.
2. 10" WHITE
3. TURN BAY LENGTH OF LESS THAN 48' DOES NOT REQUIRE PAVEMENT ARROWS OR TEXT.

⇨ DIRECTION OF TRAFFIC

*CONFIRM MARKING LINE WIDTH WITH THE MISCELLANEOUS QUANTITIES

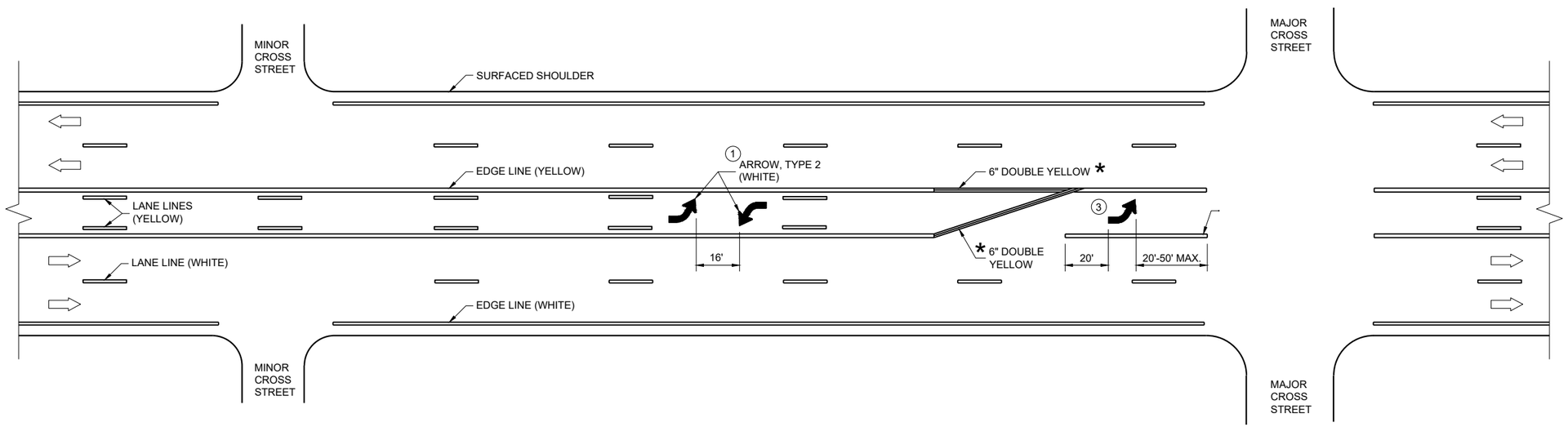

TWO WAY LEFT TURN LANE

PAVEMENT MARKING (TURN LANES)

STATE OF WISCONSIN
DEPARTMENT OF TRANSPORTATION

6
SDD 15C08-24c

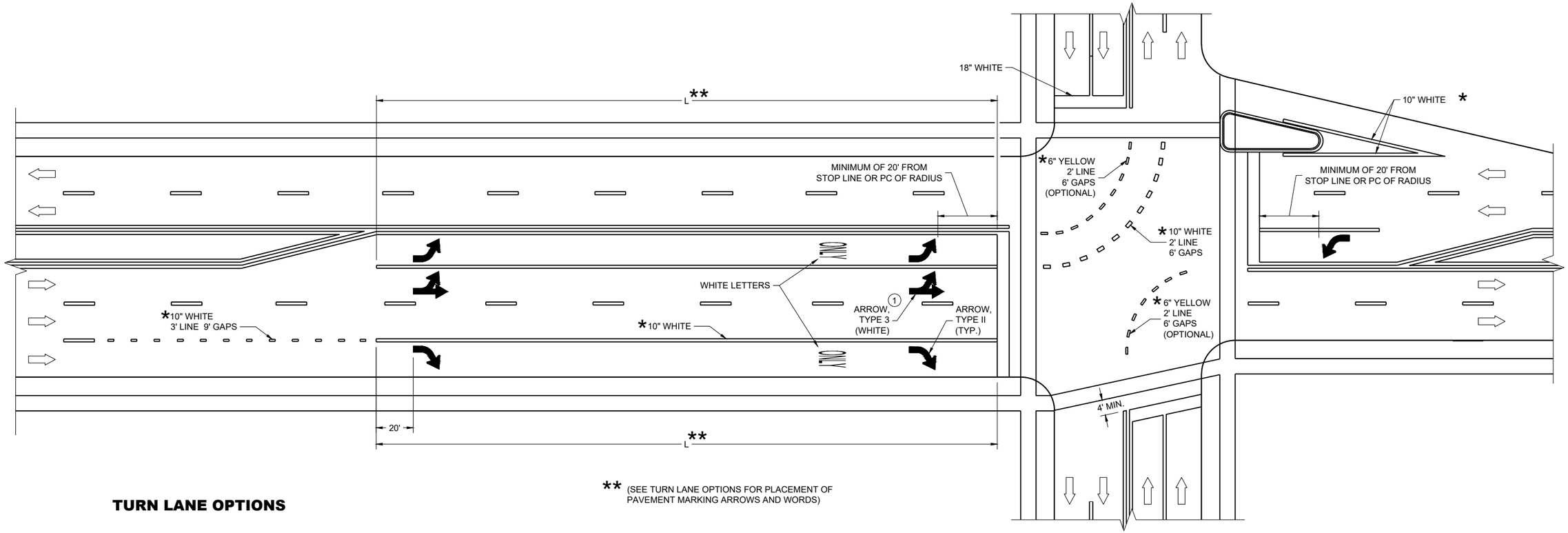

** (SEE TURN LANE OPTIONS FOR PLACEMENT OF PAVEMENT MARKING ARROWS AND WORDS)

TURN LANE OPTIONS

LENGTH OF TURN BAY (**L**) OF 0 - 47' DOES NOT REQUIRE PAVEMENT MARKING ARROWS OR WORDS

L = 48 - 87'

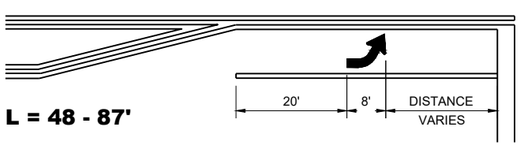

L = 88 - 166'

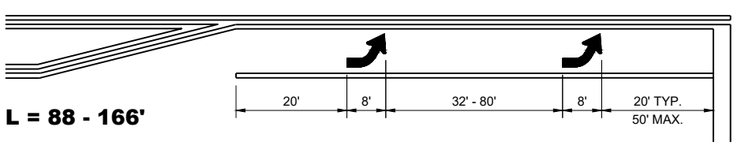

L = >166'

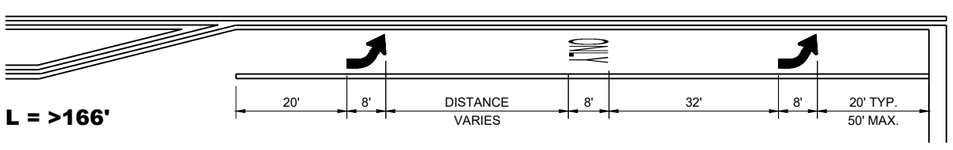

GENERAL NOTES

1. QUANTITY AND LOCATION OF TYPE 3 ARROWS ARE THE SAME AS THE TYPE II ARROWS IN THE ADJACENT TURN LANE. FOR TURN LANES WITH A PHYSICAL SEPARATION IN THE SAME DIRECTION OF TRAVEL, THE ARROWS AND "ONLY" MARKING MAY BE ELIMINATED.

⇨ DIRECTION OF TRAFFIC

L = LENGTH OF TURN BAY

*CONFIRM MARKING LINE WIDTH WITH THE MISCELLANEOUS QUANTITIES

PAVEMENT MARKING (TURN LANES)

STATE OF WISCONSIN
DEPARTMENT OF TRANSPORTATION

6

SDD 15C08-24d

LEGEND

V1 LEAD VEHICLE

V2 MARKING VEHICLE

V3 SHADOW VEHICLE

TRUCK MOUNTED ATTENUATOR (TMA)

SIGN ON TEMPORARY SUPPORT

DIRECTION OF TRAFFIC

GENERAL NOTES

ALL VEHICLES SHALL BE EQUIPPED WITH TWO 360 DEGREE HIGH INTENSITY YELLOW FLASHING LIGHTS OR STROBE LIGHTS AND OPERATED WITH HEADLIGHTS TURNED ON.

ALL VEHICLES SHALL BE EQUIPPED WITH REAR FACING TYPE B OR C FLASHING ARROW PANEL OPERATING IN CAUTION MODE. SIGNS PLACED ON VEHICLES MUST NOT OBSCURE THE ARROW PANEL.

ALL SIGNS ARE 48" X 48" UNLESS OTHERWISE SPECIFIED.

DISTANCE BETWEEN VEHICLES MAY VARY ACCORDING TO TERRAIN, SIGHT DISTANCE, PAINT DRYING TIME, AND OTHER FACTORS. WHENEVER ADEQUATE STOPPING SIGHT DISTANCE EXISTS TO THE REAR, SHADOW VEHICLES SHOULD MAINTAIN THE MINIMUM DISTANCE FROM THE WORK VEHICLE AND PROCEED AT THE SAME SPEED AS THE WORK VEHICLE. SHADOW VEHICLES SHOULD SLOW DOWN IN ADVANCE OF VERTICAL AND HORIZONTAL CURVES THAT RESTRICT SIGHT DISTANCE.

THE WORK AND SHADOW VEHICLES SHOULD PULL OVER PERIODICALLY TO ALLOW TRAFFIC TO PASS.

WHEN NO WORK ACTIVITY IS TAKING PLACE, REMOVE OR LAY STATIONARY SIGNS AND SUPPORTS FLAT ON THE GRADE WITH UPRIGHTS ORIENTED PARALLEL TO AND DOWNSTREAM FROM TRAFFIC.

WORKERS SHALL NOT PERFORM WORK FROM ANY SHADOW OR PROTECTION VEHICLES.

CONES SHOULD BE USED BETWEEN THE MARKING AND SHADOW VEHICLE AT 100 FOOT SPACING. CONES MAY BE OMITTED ON PAINTED LINE IF APPROVED BY THE ENGINEER. CONSIDER PAVEMENT MARKING DRY OR CURE TIMES AND TRAFFIC VOLUME.

CONES SHALL BE A MINIMUM OF 28" FOR WET PAVEMENT MARKING .

(1) SIGNS SHALL BE REPEATED APPROXIMATELY EVERY THREE MILES AND AFTER EVERY MAJOR INTERSECTION.

(2) IF CONSTRUCTION WORK ZONE SIGNS ARE IN PLACE, W20-1A OR W21-63 ARE NOT REQUIRED.

(3) V1 AND V2 CAN BE SWITCHED SO THAT THE MARKER IS THE LEAD VEHICLE.

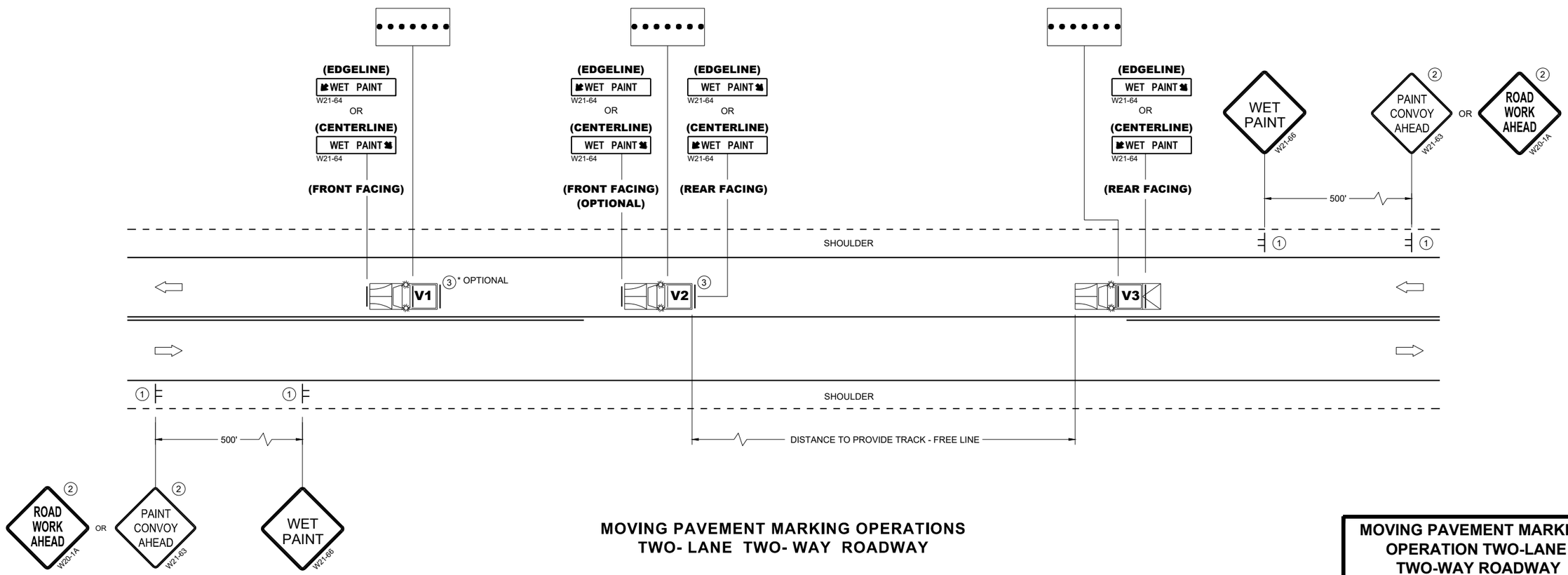

MOVING PAVEMENT MARKING OPERATIONS
TWO- LANE TWO- WAY ROADWAY

MOVING PAVEMENT MARKING OPERATION TWO-LANE TWO-WAY ROADWAY

STATE OF WISCONSIN
DEPARTMENT OF TRANSPORTATION

APPROVED
November 2025 — DATE
/S/ Andrew Heidtke — STATE ELECTRICAL ENGINEER

FHWA

6

SDD 15C19-11a

6

SDD 15C19-11a

GENERAL NOTES

PLACE GROOVE 3 INCHES LEFT OF JOINT.

LEGEND

DIRECTION OF TRAVEL

*CONFIRM MARKING LINE WIDTH WITH THE MISCELLANEOUS QUANTITIES

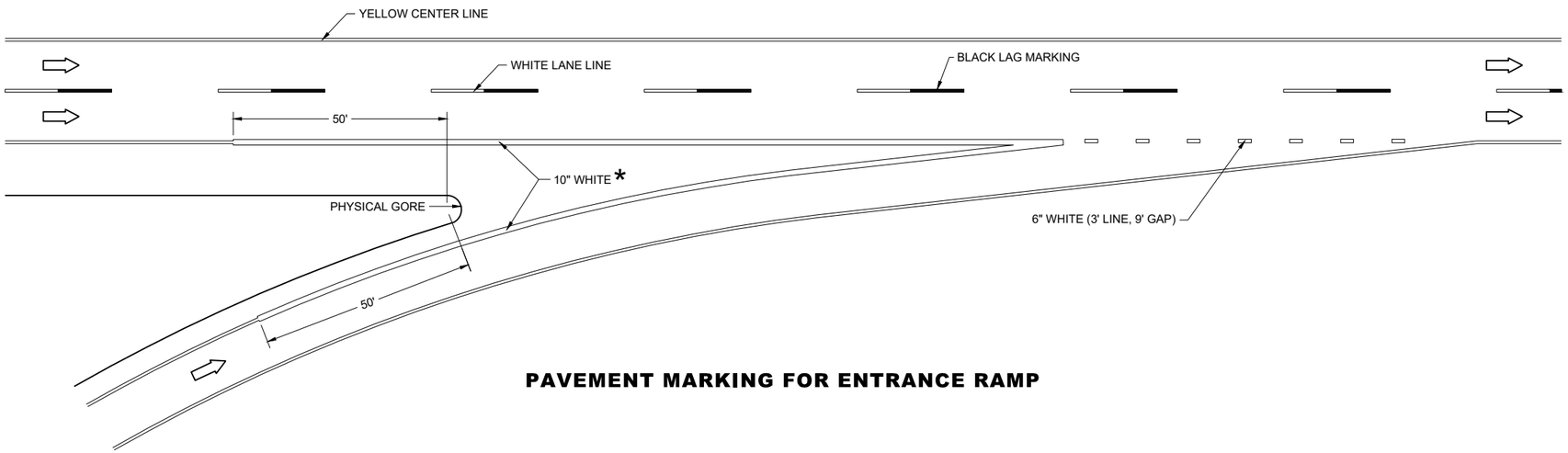

PAVEMENT MARKING FOR ENTRANCE RAMP

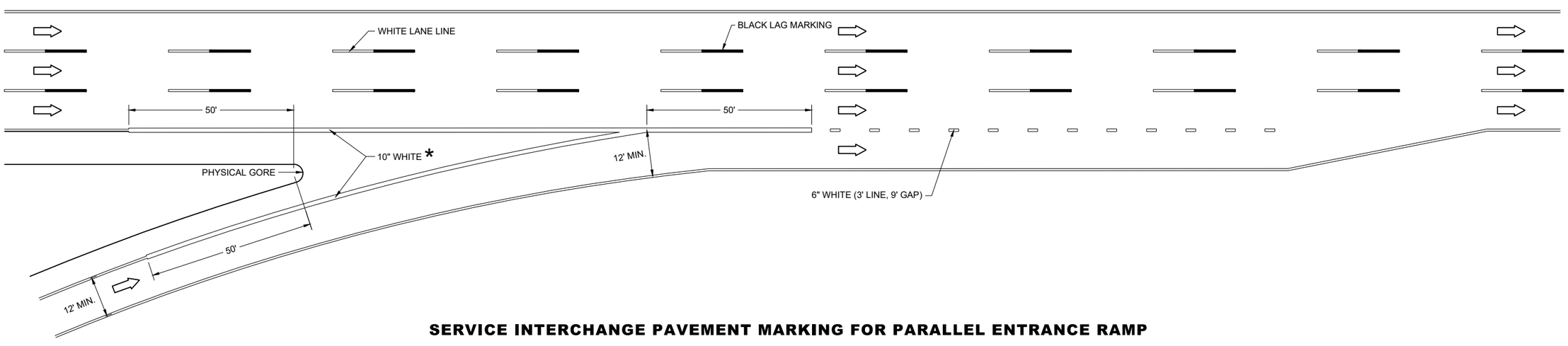

SERVICE INTERCHANGE PAVEMENT MARKING FOR PARALLEL ENTRANCE RAMP

PAVEMENT MARKING, ENTRANCE RAMP AND PARALLEL ENTRANCE RAMP

STATE OF WISCONSIN
DEPARTMENT OF TRANSPORTATION

6

SDD 15C31-08c

6

SDD 15C31-08c

GENERAL NOTES

STOP SIGN SHALL BE PLACED A MINIMUM OF 6 FEET TO A MAXIMUM OF 50 FEET FROM THE EDGELINE LOCATION.

1. 18-INCH STOP LINES MAY BE DELETED OR ADDED BY THE REGION MARKING ENGINEER BASED ON VISIBILITY AND SIGHT LINES.
2. NO STOP LINE IS REQUIRED IF STOP SIGN IS LESS THAN OR EQUAL TO 40 FEET FROM THE EDGELINE.
3. NO STOP LINE IS REQUIRED IF STOP SIGN IS LESS THAN OR EQUAL TO 30 FEET FROM THE FLANGE LINE EXTENSION.
4. MOVE CLOSER TO THE EDGE OF TRAVEL LINE AS NEEDED FOR VISIBILITY AND SIGHT LINES (NO CLOSER THAN 4 FEET).
5. LADDER BAR CROSSWALKS SHOULD ONLY BE USED FOR MID BLOCK CROSSINGS. USE 2 - 6" TRANSVERSE LINES.
6. POSTED SPEED LIMITS OF 40 MPH OR GREATER USE A MINIMUM WIDTH OF 8' FOR MIDBLOCK CROSSWALKS

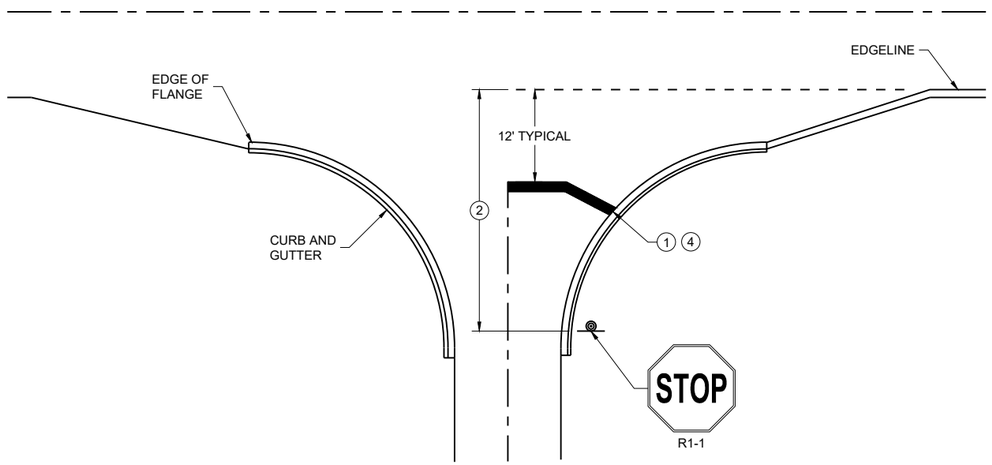

TYPICAL STOP LINE PAVEMENT MARKING WITH CURB AND GUTTER

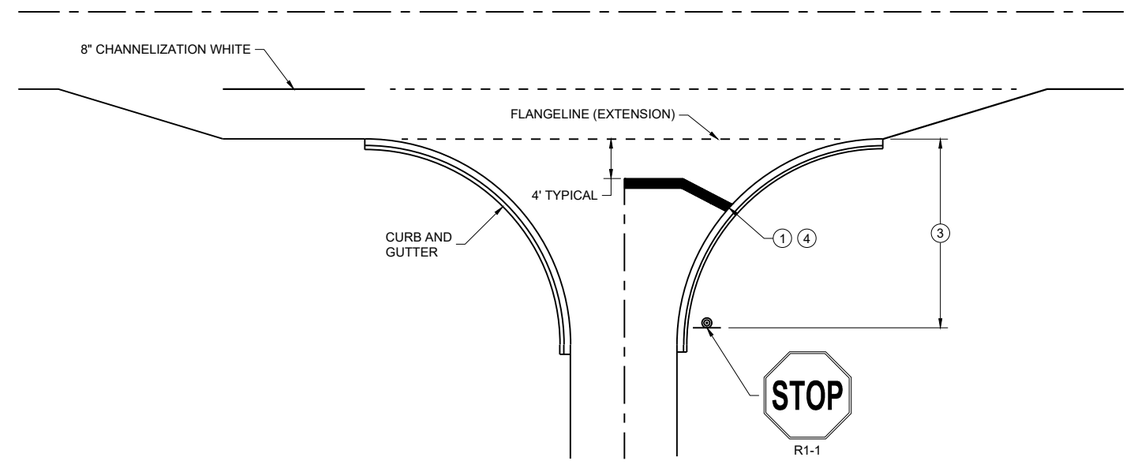

TYPICAL STOP LINE PAVEMENT MARKING FOR SIDE ROADS WITH RIGHT TURN LANE

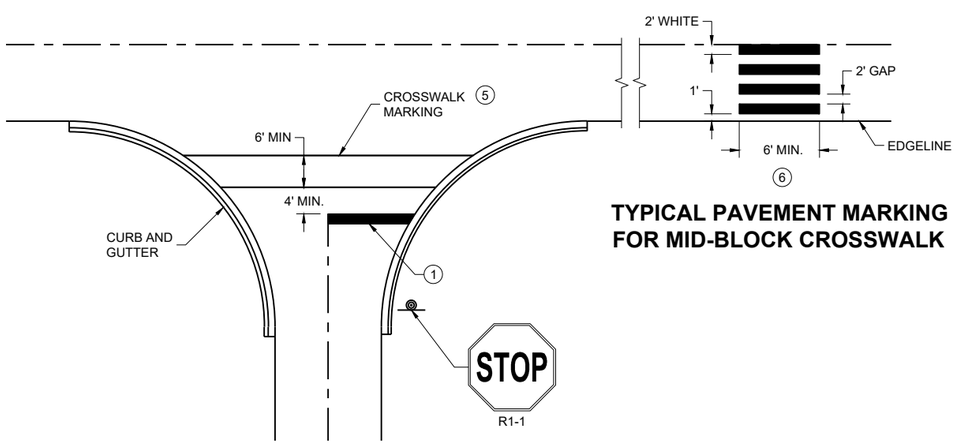

TYPICAL STOP LINE PAVEMENT MARKING FOR SIDE ROADS WITH CROSSWALK MARKING

TYPICAL PAVEMENT MARKING FOR MID-BLOCK CROSSWALK 5

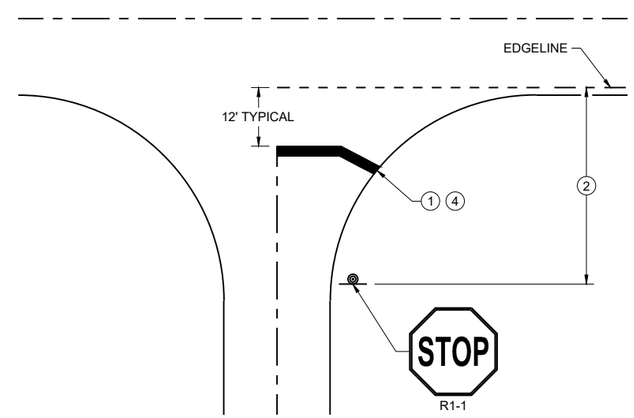

TYPICAL STOP LINE PAVEMENT MARKING WITHOUT CURB AND GUTTER

STOP LINE AND CROSSWALK PAVEMENT MARKING

STATE OF WISCONSIN
DEPARTMENT OF TRANSPORTATION

APPROVED
March 2024 — DATE
/S/ Matthew Rauch — STATE SIGNING AND MARKING ENGINEER
FHWA

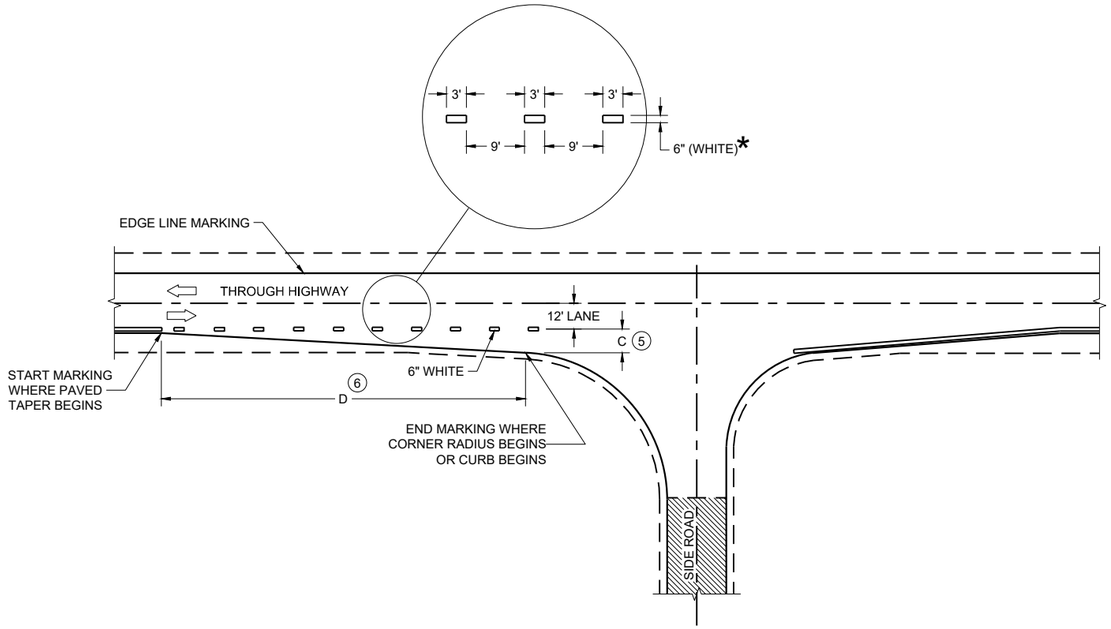

MINOR INTERSECTION

*CONFIRM MARKING LINE WIDTH WITH THE MISCELLANEOUS QUANTITIES

GENERAL NOTES

OMIT EDGE LINES THROUGH INTERSECTIONS. CONTINUE EDGE LINES THROUGH DRIVEWAYS.

1. WHEN DISTANCE "A" IS LESS THAN 250 FEET, OMIT LANE LINE.
2. WHEN DISTANCE "B" IS LESS THAN 100 FEET, OMIT CHANNELIZING LANE LINE.
3. BARRIER LINE ENDS AT SIDE ROAD PAVEMENT / SURFACE EDGE EXTENSION.
4. BARRIER LINE STARTS 500 FEET PRIOR TO THE BYPASS TAPER.
5. WHEN DISTANCE "C" IS LESS THAN 4 FEET, OMIT DOTTED EXTENSION.
6. WHEN DISTANCE "D" IS LESS THAN 50 FEET, OMIT DOTTED EXTENSION.

LEGEND

⇨ DIRECTION OF TRAVEL

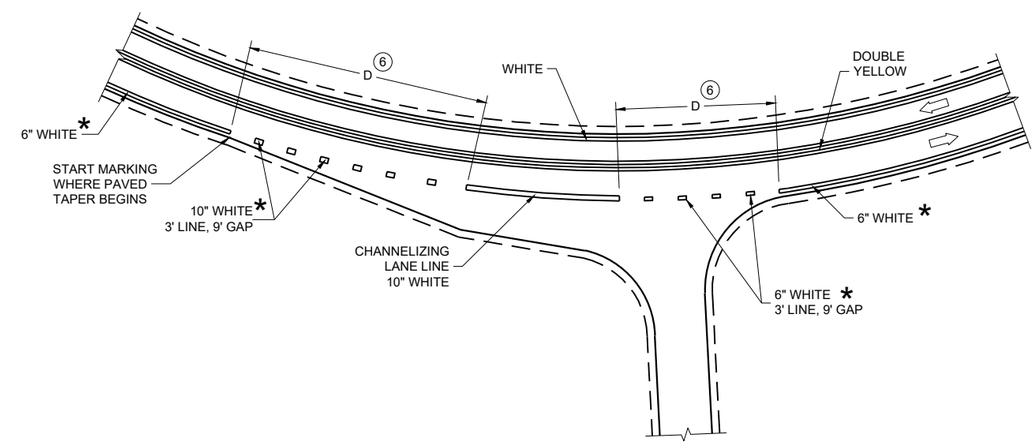

INTERSECTION ON OUTSIDE OF CURVE

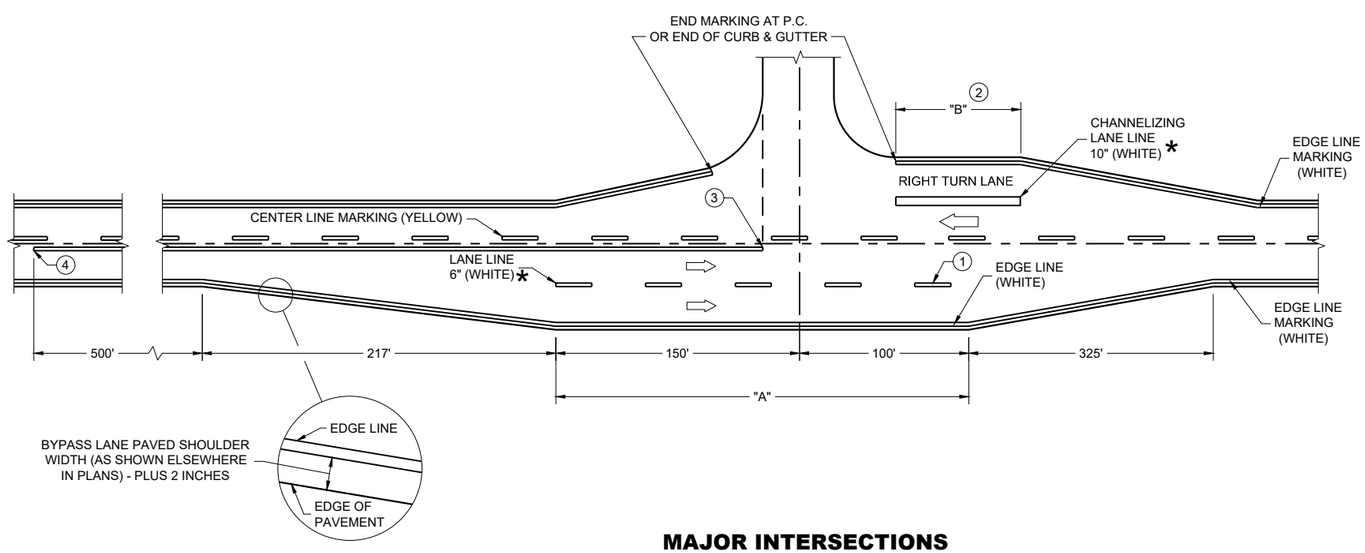

MAJOR INTERSECTIONS

(INTERSECTION WITH FULL RIGHT TURN LANE OR BYPASS LANE)

PAVEMENT MARKING (INTERSECTIONS)

STATE OF WISCONSIN
DEPARTMENT OF TRANSPORTATION

6
SDD 15C35-06a

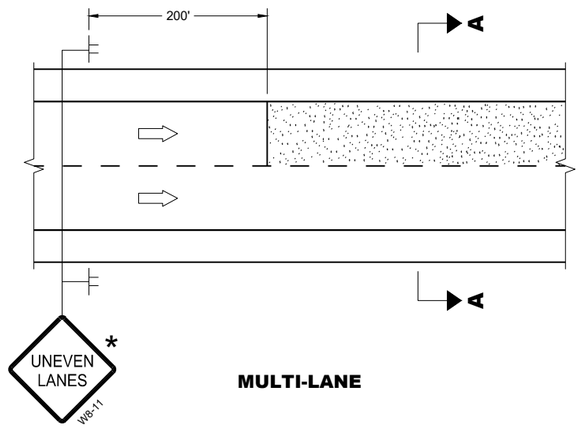

MULTI-LANE

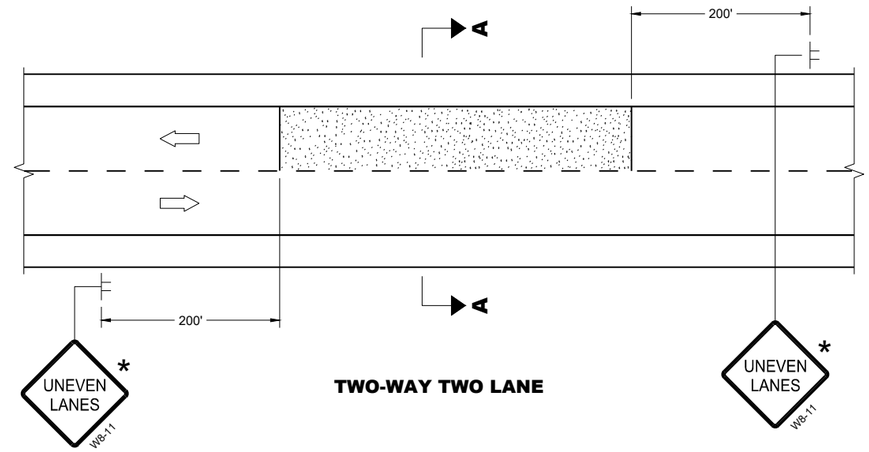

TWO-WAY TWO LANE

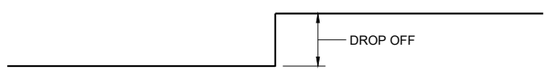

SECTION A - A

OR

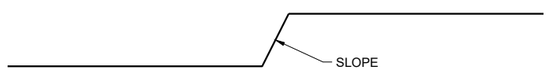

SECTION A - A

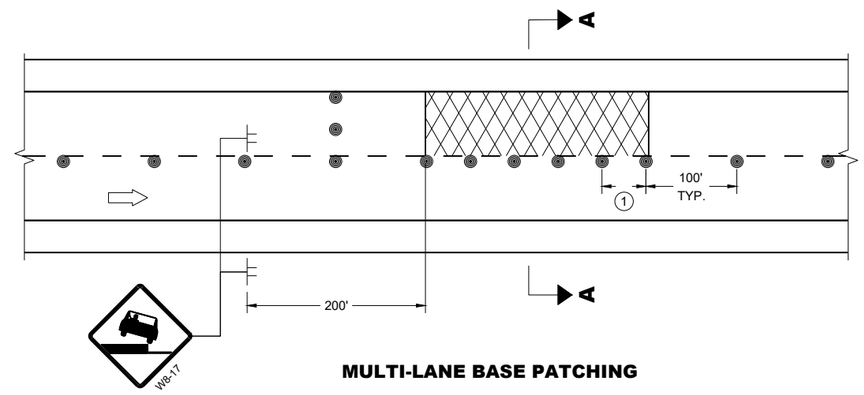

MULTI-LANE BASE PATCHING

ADJACENT LANE DROP-OFFS

GENERAL NOTES

FOR SPOT LOCATIONS USE ENGINEERING JUDGEMENT WHEN PLACING ADDITIONAL SIGNS.

ALL SIGNS ARE 48" X 48" UNLESS OTHERWISE NOTED.

"WO" SIGNS ARE THE SAME AS "W" SIGNS EXCEPT THE BACKGROUND IS ORANGE.

WARNING LIGHTS ARE NOT REQUIRED IF THE LANE CLOSURE IS A DAYTIME ONLY OPERATION.

* IF THE DROP-OFF IS CONTINUOUS ALONG THE PROJECT, PLACE ADDITIONAL SIGNS EVERY 1 MILE AND AFTER EVERY ENTRANCE RAMP.

(1) USE CLOSER SPACING WHEN DELINEATING DROP-OFF.

LEGEND

- SIGN ON TEMPORARY SUPPORT
- TRAFFIC CONTROL DRUM
- TYPE III BARRICADE WITH ATTACHED SIGN
- TYPE "A" WARNING LIGHT (FLASHING)
- DIRECTION OF TRAFFIC
- WORK AREA WITH DROP-OFF
- MILLED SURFACE

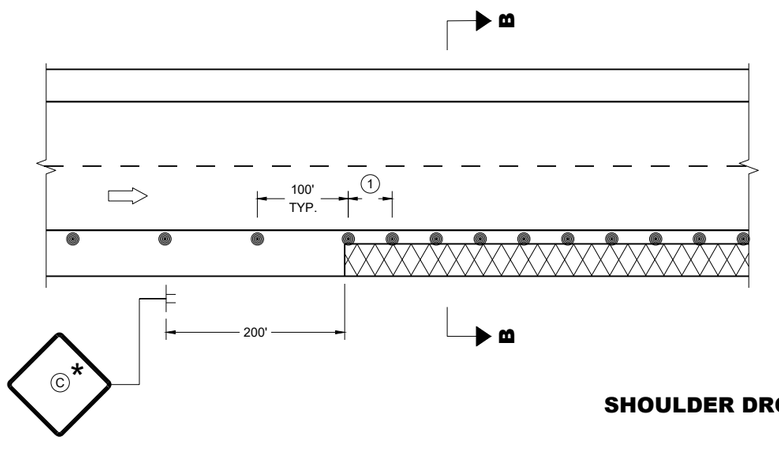

SHOULDER DROP-OFFS

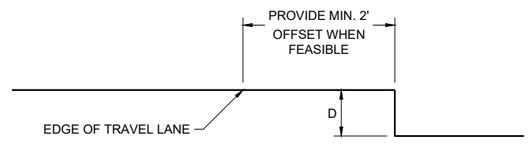

SECTION B - B

D	SIGN (C)
< 2" WITH A SLOPE STEEPER THAN 3:1	LOW SHOULDER WO8-9
2" < 6" WITH A SLOPE STEEPER THAN 3:1	SHOULDER DROP - OFF W8-9A
	PROVIDE A 3:1 OR FLATTER SLOPE OF MATERIAL ADJACENT TO THE PAVEMENT

TRAFFIC CONTROL, DROP-OFF SIGNING

STATE OF WISCONSIN
DEPARTMENT OF TRANSPORTATION

APPROVED
February 2025 — DATE
/S/ Andrew Heidtke — WORK ZONE ENGINEER

FHWA

6
SDD 15D39-03

GENERAL NOTES

DRAWING NOT TO SCALE. ALL SIGNS AND POSTS ON THIS SHEET SHALL BE PAID FOR WITH 'TRAFFIC CONTROL SIGNS' BID ITEM. ALL SIDE ROADS WHICH ARE UNDER CONSTRUCTION OF CURB AND GUTTER AND/OR GRADING SHALL BE ADEQUATELY SIGNED.

ALL SIGNS AND DEVICES SHALL BE IN CONFORMANCE WITH THE WISCONSIN MANUAL OF UNIFORM TRAFFIC CONTROL DEVICES (WMUTCD). SIGN LAYOUTS SHALL BE IN ACCORDANCE WITH THE WISDOT STANDARD SIGN PLATES.

"WO" SIGNS ARE THE SAME AS "W" SIGNS EXCEPT THAT THE BACKGROUND IS ORANGE.

ALL SIGNS ARE 48" X 48" UNLESS OTHERWISE NOTED.

THE EXACT NUMBER, LOCATION AND SPACING OF ALL SIGNS AND DEVICES SHALL BE ADJUSTED TO FIT FIELD CONDITIONS AS DIRECTED BY THE ENGINEER.

ALL SIGNS INAPPROPRIATE TO THE STATUS OF THE CONTROL ZONE, INCLUDING PRE-EXISTING SIGNS IN THE VICINITY, SHALL BE COVERED OR REMOVED AS DIRECTED BY THE ENGINEER.

SEE 15C34 FOR ADDITIONAL TRAFFIC CONTROL SIGNING WHEN CENTERLINE PAVEMENT MAKINGS ARE MISSING. 'DO NOT PASS' SIGNS MUST BE INSTALLED ON THE SAME DAY AS MILLING OPERATIONS.

(1) PLACE SIGNS 350' IN ADVANCE OF MILLED SURFACES AND AT 1 MILE INTERVALS, OR AS DIRECTED BY THE ENGINEER.

(2) PLACE SIGN 200' MIN. FROM INTERSECTION AND 200' MIN. AFTER ADVANCE WARNING SIGN SHOWN IN SDD 15C04.

LEGEND

SIGN ON TEMPORARY SUPPORT

DIRECTION OF TRAFFIC

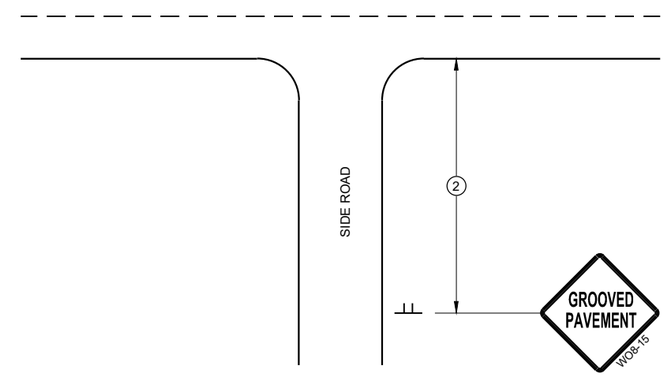

TYPICAL SIDE ROAD APPROACH SIGN DETAIL

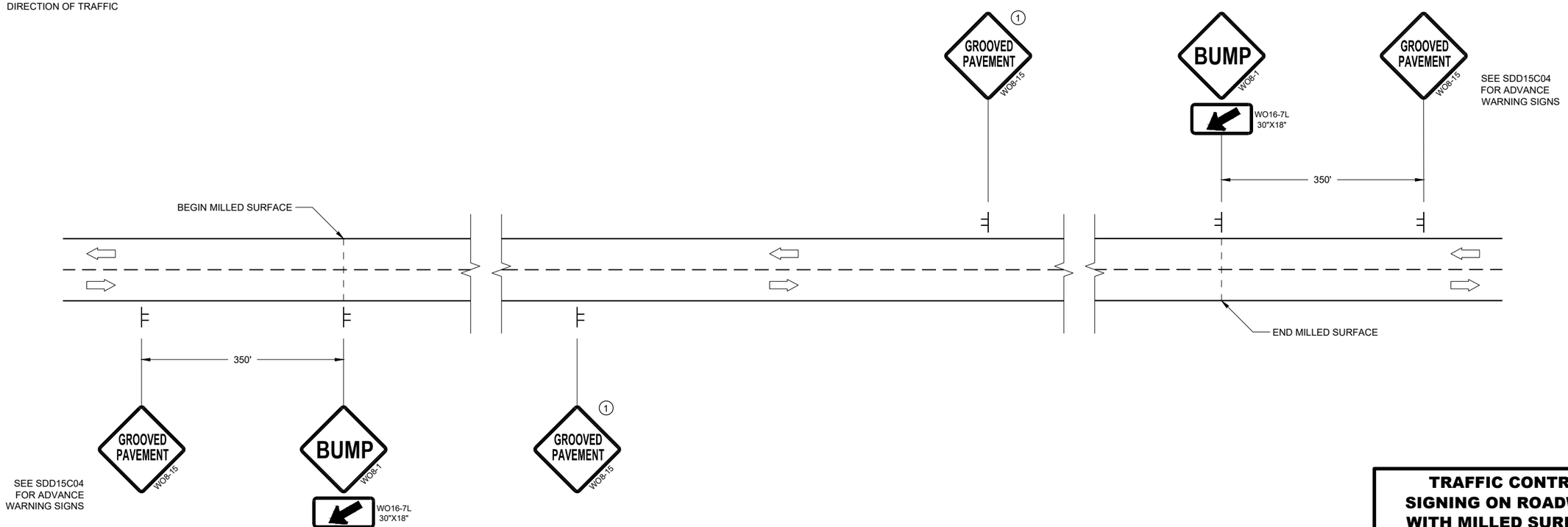

DETAIL FOR SIGNING ON MILLED SURFACES

TRAFFIC CONTROL, SIGNING ON ROADWAYS WITH MILLED SURFACES

STATE OF WISCONSIN
DEPARTMENT OF TRANSPORTATION

APPROVED
February 2020 — DATE
/S/ Andrew Heidtke — WORK ZONE ENGINEE
FHWA

6

SDD 15D44 - 02

6

SDD 15D44 - 02

LEGEND

V1 WORK VEHICLE

V2 SHADOW VEHICLE

TRUCK MOUNTED ATTENUATOR (TMA)

FLASHING ARROW PANEL (CAUTION)

WORK AREA

DIRECTION OF TRAFFIC

POSTED SPEED PRIOR TO WORK STARTING (MPH)	DECISION SIGHT DISTANCE (D)
0 - 25	550'
30	550'
35	700'
40	700'
45	900'
50	900'
55	1200'

GENERAL NOTES

ALL SIGNS ARE 48"X48" UNLESS OTHERWISE NOTED.

MOBILE IS WORK THAT MOVES CONTINUOUSLY OR MOVES AT LEAST THE DECISION SIGHT DISTANCE EVERY 15 MINUTES.

ALL VEHICLES SHALL BE EQUIPPED WITH TWO 360 DEGREE HIGH INTENSITY YELLOW FLASHING LIGHTS OR STROBE LIGHTS AND OPERATED WITH HEADLIGHTS TURNED ON.

ALL ARROW PANELS SHALL BE REAR FACING, TYPE "B" OR "C", AND DISPLAYING THE FLASHING CAUTION MODE. SIGNS PLACED ON VEHICLES MUST NOT OBSCURE THE ARROW PANEL.

USE AN ATTENUATOR ON THE REARMOST VEHICLE THAT BLOCKS ALL OR PART OF THE TRAFFIC LANE.

1 DISTANCE BETWEEN VEHICLES MAY INCREASE FROM THE ATTENUATOR'S ROLL AHEAD BASED ON TERRAIN, SIGHT DISTANCE, AND OTHER FACTORS. WHENEVER ADEQUATE STOPPING SIGHT DISTANCE EXISTS TO THE REAR, SHADOW VEHICLES SHOULD MAINTAIN THE MINIMUM DISTANCE FROM THE WORK VEHICLE AND PROCEED AT THE SAME SPEED AS THE WORK VEHICLE. SHADOW VEHICLES SHOULD SLOW DOWN IN ADVANCE OF VERTICAL OR HORIZONTAL CURVES THAT RESTRICT SIGHT DISTANCE.

2 ALIGN LEFT SIDE OF SHADOW VEHICLE WITH EDGE OF WORK AREA.

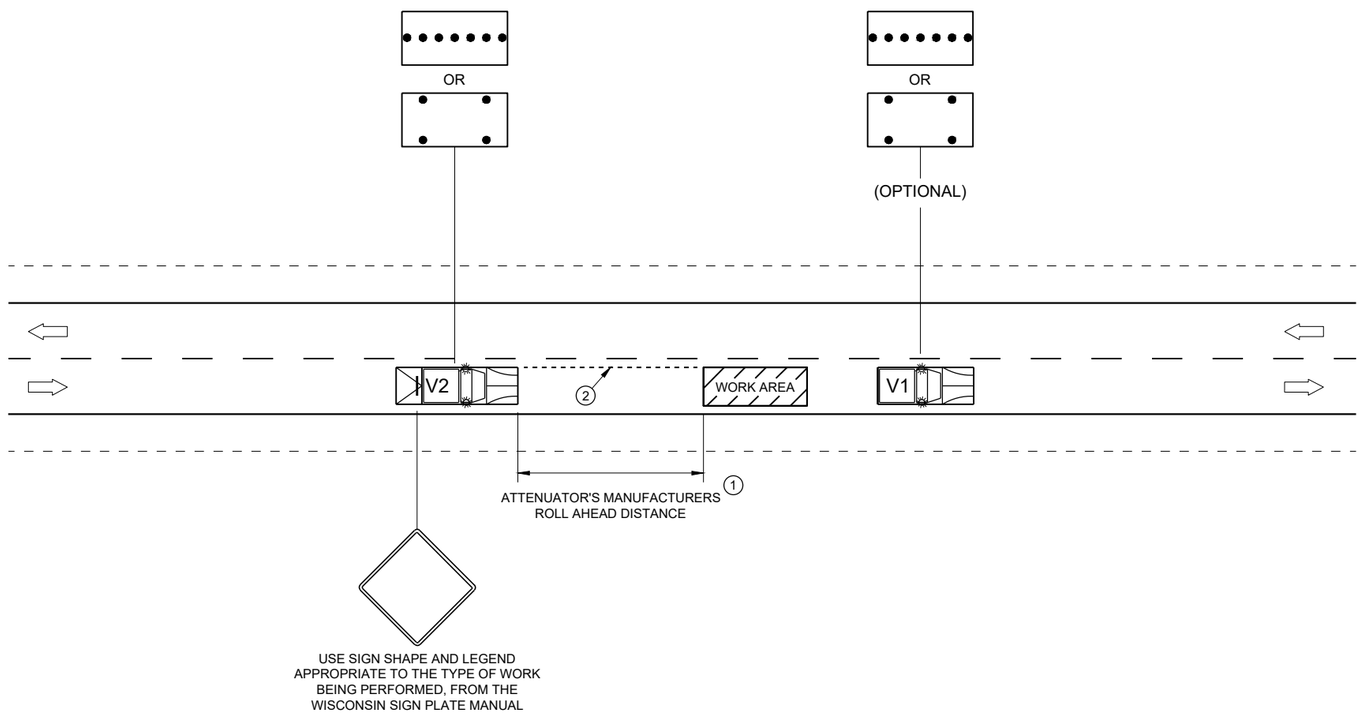

TRAFFIC CONTROL, MOBILE OPERATIONS ON AN UNDIVIDED ROADWAY

STATE OF WISCONSIN
DEPARTMENT OF TRANSPORTATION

APPROVED
February 2021 — DATE
/S/ Andrew Heidtke — STATEWIDE WORK ZONE T SAFETY ENGINEER
FHWA

URBAN AREA

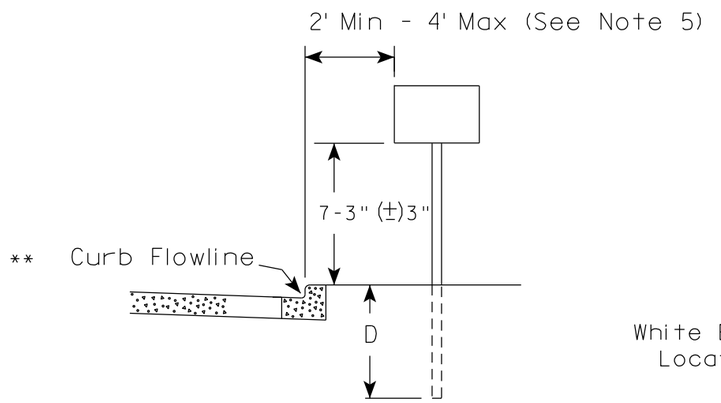

RURAL AREA (See Note 2)

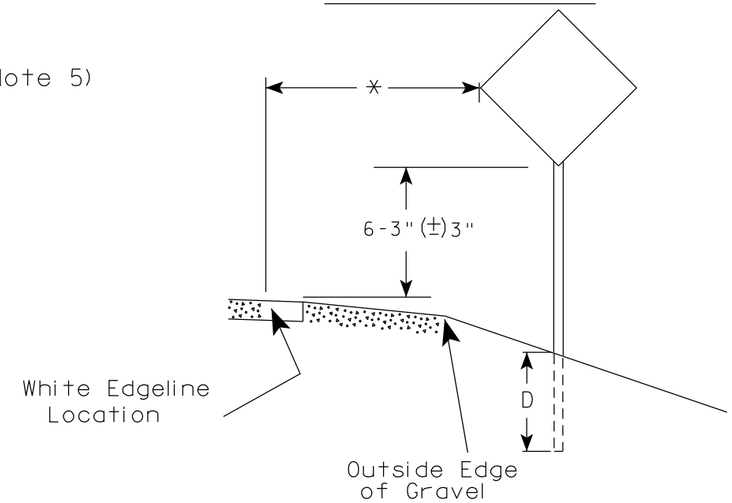

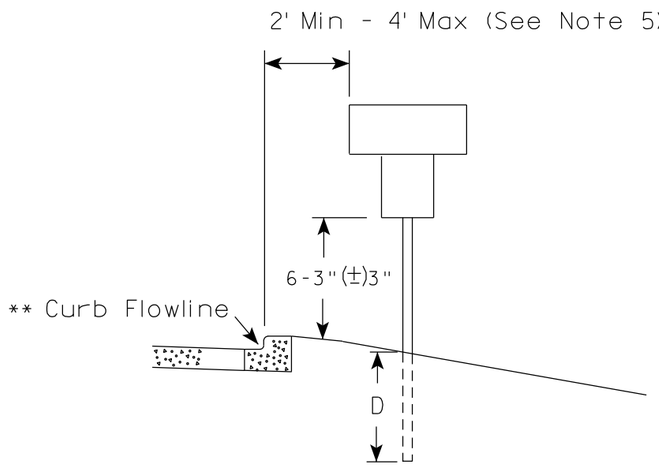

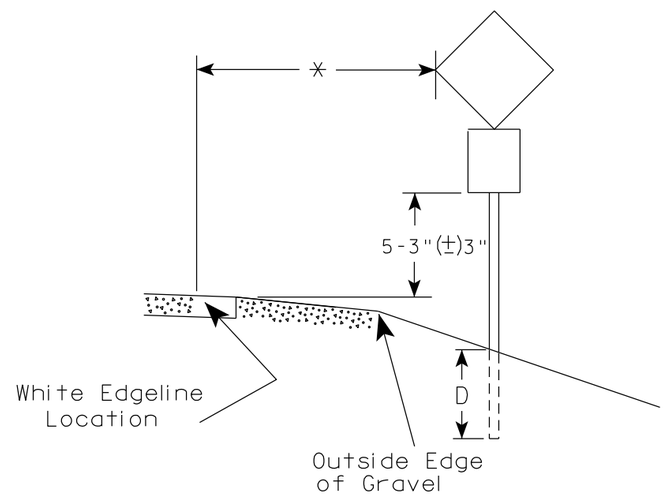

** The existence of curb and gutter does not in itself mandate the vertical clearance illustrated. That height is typically measured where there is sidewalk adjacent to the roadway or parking is permitted. In the absence of sidewalk vertical clearance is measured from the top of the curb. Offset of signs is measured from the flow line.

* 6 feet from edge of a paved shoulder or 12 feet from the edge of pavement (edge line location) or 2 feet from outside edge of gravel, whichever is greater unless directed by project engineer.

POST EMBEDMENT DEPTH

Area of Sign Installation (Sq. Ft.)	D (Min)
20 or Less	4'
Greater than 20	5'

GENERAL NOTES

1. Signs wider than 4 feet or 20 sq.ft or larger, shall be mounted on multiple posts. Refer to plate A4-4.
2. If signs are mounted on or behind barrier wall, see A4-10 sign plate.
   The Double Arrow sign (W12-1D) shall be mounted at a height of 2'-3" (±) 3". The Chevron sign (W1-8), Roundabout Chevron panel (R6-4B), Enhanced Reference Markers, Clearance Markers (W5-52), Mile Markers (D10 series), In Road Object Markers (W5-54) & End of Road Markers (W5-56) shall be mounted at a height of 4'-3" (±) 3".
3. For expressways and freeways, mounting height is 7'- 3" (±) 3" or 6'-3" (±) 3" depending upon existence of a sub-sign.
4. Minimum mounting height for signs mounted on traffic signal poles is 5'- 3" (±) 3".
5. Offset distance shall be consistent with existing signs or consistent throughout length of project.
6. Folding signs shall be mounted at a height of 5'-3" (±) 3" or as directd by the Engineer.

TYPICAL INSTALLATION OF PERMANENT TYPE II SIGNS ON SINGLE POSTS

WISCONSIN DEPT OF TRANSPORTATION

APPROVED Matthew R Rauch
for State Traffic Engineer

DATE 12/6/23 PLATE NO. A4-3.23

PROJECT NO:	HWY:	COUNTY:		SHEET NO: 133	E

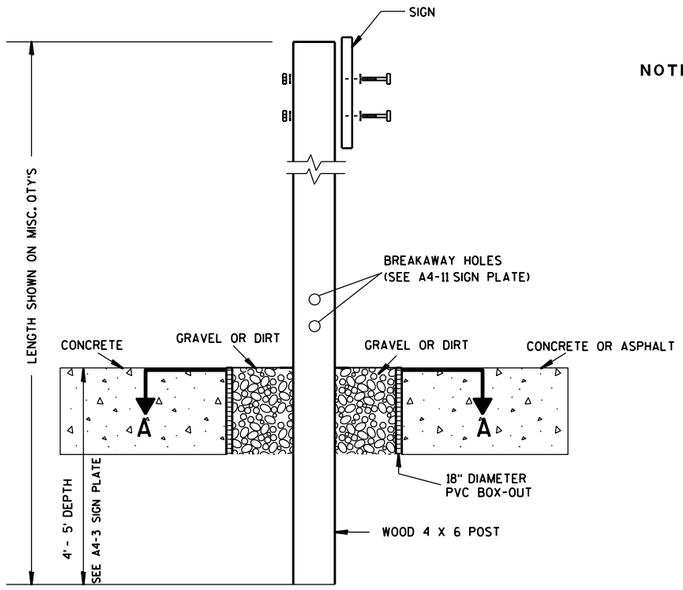

ELEVATION VIEW

DETAIL OF WOOD 4 X 6 SIGN POST IN BOX-OUT

NOTES:
1. ALL MATERIAL TO BE APPROVED BY ENGINEER PRIOR TO INSTALLATION
2. SEE SIGN PLATE A4-8 FOR SIGN HARDWARE REQUIREMENTS
3. 18 INCH X 18 INCH SQUARE BOX-OUTS MAY BE USED FOR INSTALLATIONS IN EXISTING CONCRETE OR ASPHALT LOCATIONS.

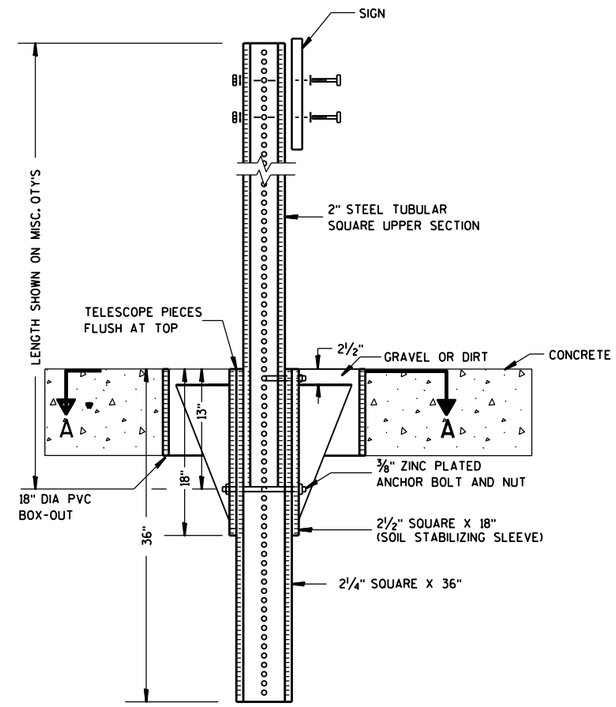

ELEVATION VIEW

DETAIL OF STEEL 2 X 2 SIGN POST IN BOX-OUT

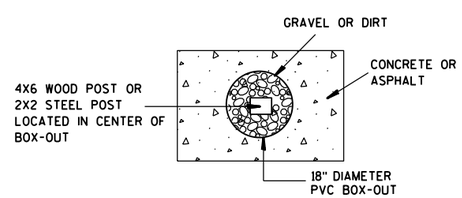

PLAN VIEW

FOR NEW CONCRETE/ASPHALT INSTALLATIONS

SIGN POST
BOX-OUTS
A4-3B

WISCONSIN DEPT OF TRANSPORTATION

APPROVED Matthew R Rauch
for State Traffic Engineer

DATE 1/27/14 PLATE NO. A4-3B.1

PROJECT NO:	HWY:	COUNTY:		SHEET NO:	E

URBAN AREA

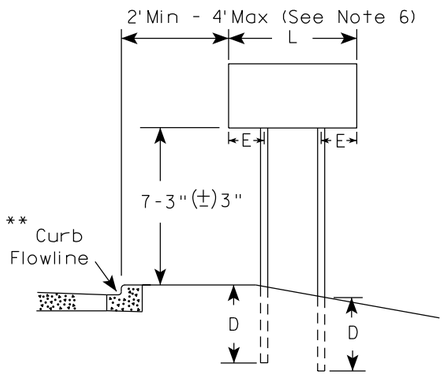

RURAL AREA (See Note 3)

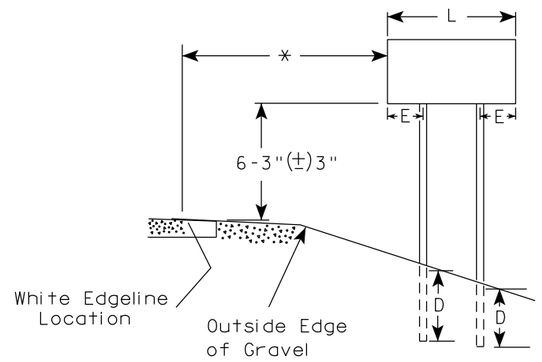

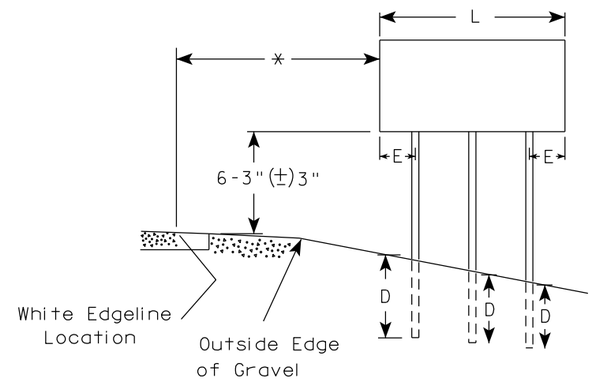

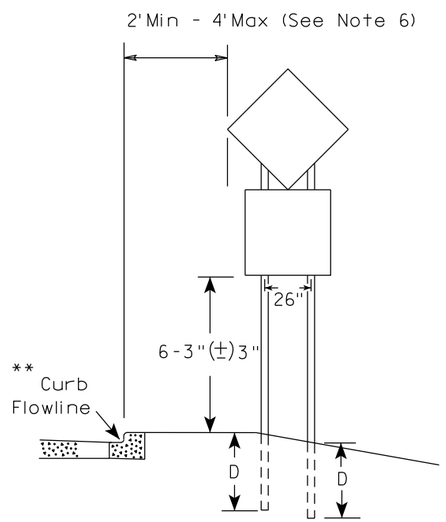

48" DIAMOND WARNING SIGN

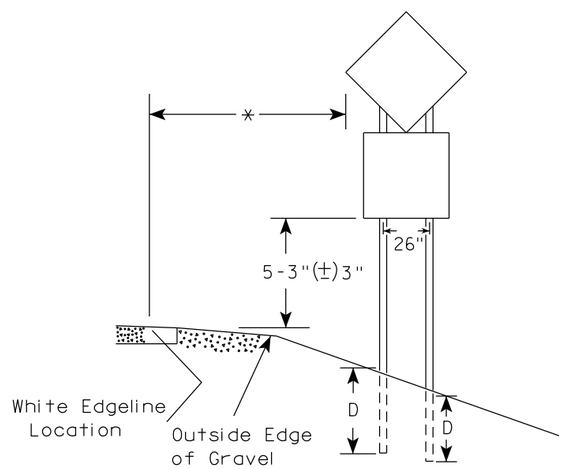

48" DIAMOND WARNING SIGN

GENERAL NOTES

1. For 3 or 4 post installations, individual post spacing shall be greater than 3'-6".
2. See tables below for required number of posts.
3. For expressways and freeways, mounting height is 7'-3" (±) 3" or 6'-3" (±) 3" depending upon existence of sub-sign.
4. The (±) tolerance for mounting height is 3 inches.
5. J-Assemblies are considered to be one sign for mounting height.
6. Offset distance shall be consistent with existing signs or consistent throughout length of project.
7. Folding signs shall be mounted at a height of 5'-3" (±) 3" or as directed by the engineer.
8. The Double Arrow sign (W12-1) shall be mounted at a height of 2'-3" (±) 3". The Chevron sign (W1-8), Roundabout Chevron panel (R6-4B), Clearance Markers (W5-52), Mile Markers (D10 series), In Road Object Markers (W5-54) & End of Road Markers (W5-56) shall be mounted at a height of 4"-3" (±) 3".

* 6 feet from edge of a paved shoulder or 12 feet from the edge of pavement (edge line location) or 2 feet from outside edge of gravel, whichever is greater unless directed by project engineer.

** The existence of curb and gutter does not in itself mandate the vertical clearance illustrated. That height is typically measured where there is sidewalk adjacent to the roadway or parking is permitted. In the absence of sidewalk vertical clearance is measured from the top of the curb. Offset of signs is measured from the flow line.

*** See A4-3 sign plate for signs 4' or less in width and less than 20 S.F. in area.

SIGN SHAPE OTHER THAN DIAMOND (TWO POSTS REQUIRED)	
L	E
*** Greater than 48" Less than 60"	12"
60" to 108"	L/5

SIGN SHAPE OTHER THAN DIAMOND (THREE POSTS REQUIRED)	
L	E
Greater than 108" to 144"	12"

POST EMBEDMENT DEPTH

Area of Sign Installation (Sq. Ft.)	D (Min)
20 or Less	4'
Greater than 20	5'

TYPICAL INSTALLATION OF TYPE II SIGNS ON MULTIPLE POSTS

WISCONSIN DEPT OF TRANSPORTATION

APPROVED Matthew R Rauch
for State Traffic Engineer

DATE 12/6/23 PLATE NO. A4-4.16

PROJECT NO:	HWY:	COUNTY:		SHEET NO: 135	E

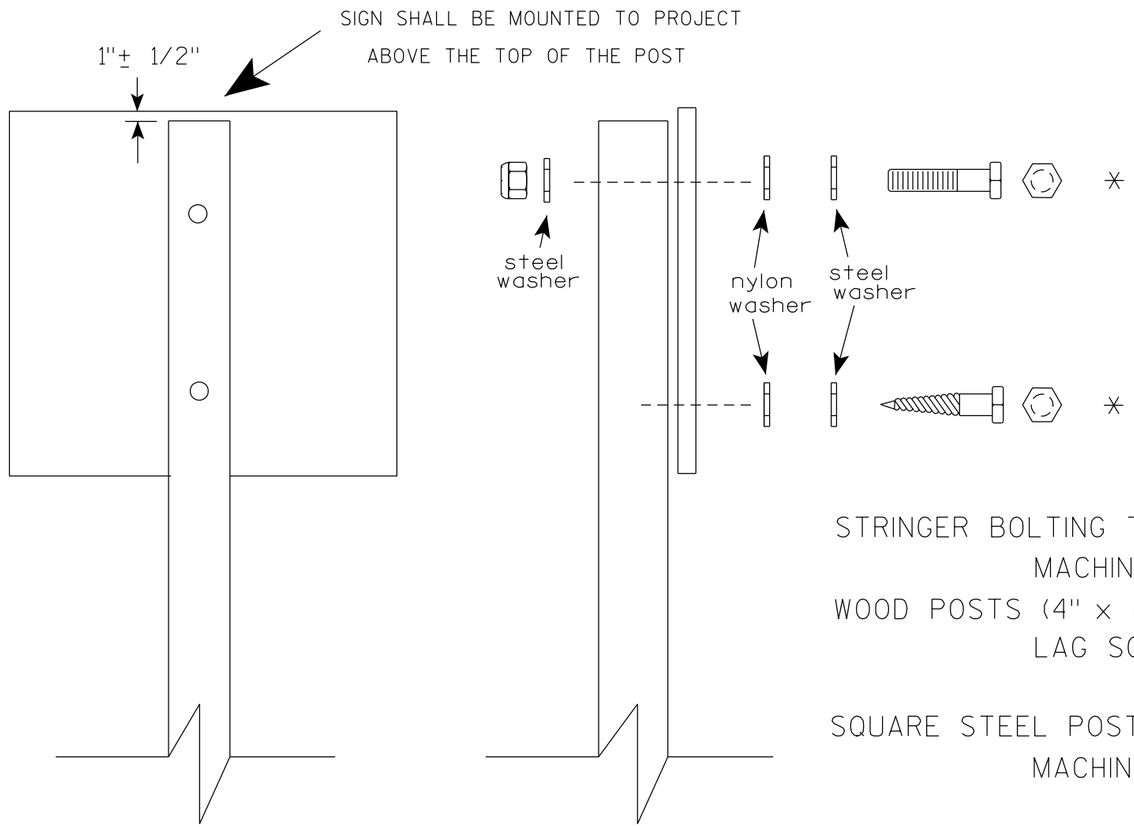

Nuts, bolts and lags used for mounting signs shall have hexagonal heads and shall be either :

a. Hot dip galvanized in accordance with ASTM Designation: A 153, Class D, or SC 3

b. Electro-galvanized in accordance with ASTM Designation : B 633, TYPE III, SC 3.

Threads on bolts and nuts shall be manufactured with sufficient allowance for the cadmium plate or galvanized coating to permit the nuts to run freely on the bolts.

STRINGER BOLTING TO ALUMINUM SIGNS (SEE SIGN PLATE A4-18)

MACHINE BOLTS - 5/16" X 1-3/4" Length w/ lock nuts

WOOD POSTS (4" x 6")

LAG SCREWS - 3/8" X 3" (NO STRINGERS ON BACK OF SIGN)
3/8" X 4" (STRINGERS ON BACK OF SIGN)

SQUARE STEEL POSTS (2" x 2")

MACHINE BOLTS - 3/8" X 3-1/4" Length w/ nuts (NO STRINGER ON BACK OF SIGN)
3/8" X 5" Length w/ nuts (STRINGERS ON BACK OF SIGN)

RIVETS - 9/32 " (6605-9-6) BULB-TITE, TRI-FOLD, ALUMINUM BODY/MANDREL
O.D. FLANGE .720-.765 INCH, GRIP RANGE .042-.375 INCH

WASHERS (ALL POSTS) -

1-1/4" O.D. X 3/8" I.D. X 1/16" STEEL
1-1/4" O.D. X 3/8" I.D. X .080 NYLON

* Two different fastening systems are shown for illustration purposes. On any individual sign, either one or the other system shall be used. Actual number of fasteners per sign varies with the sign area, but normally there are two. For a single post installation, all signs greater than 9 sq. ft. require the use of 3 fasteners.

ATTACHMENT OF SIGNS TO POSTS

WISCONSIN DEPT OF TRANSPORTATION

APPROVED Matthew R Rauch
for State Traffic Engineer

DATE 4/1/2020 PLATE NO. A4-8.9

TELESCOPIC TUBING ANCHORS
TWO PIECE SYSTEM

2 1/4 " SQUARE
12 GAUGE
PERFORATED
GALVANIZED FINISH

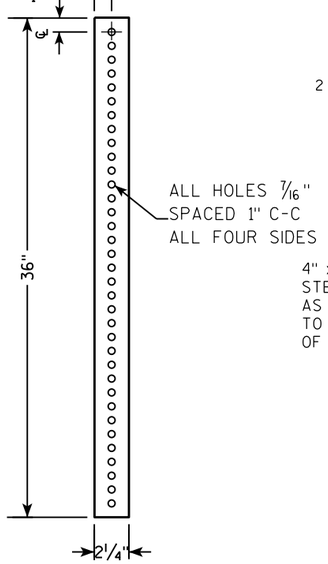

2 1/2 " SQUARE
12 GAUGE
OMNI-DIRECTIONAL
PERFORATED
SOIL STABILIZING SLEEVE
GALVANIZED FINISH

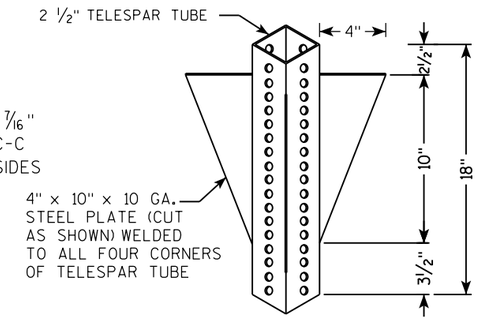

DETAIL OF TUBULAR STEEL SIGN POST
(IN POURED CONCRETE OR ASPHALT)

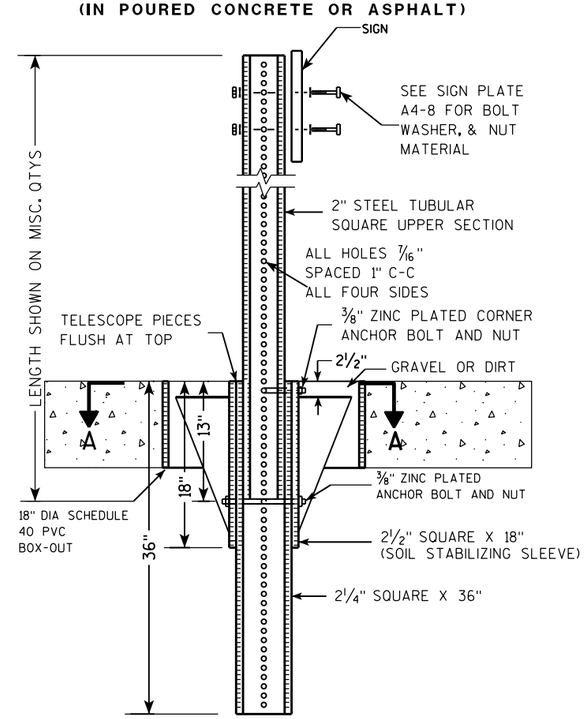

DETAIL OF TUBULAR STEEL SIGN POST
(IN LOCATIONS OTHER THAN POURED CONCRETE OR ASPHALT)

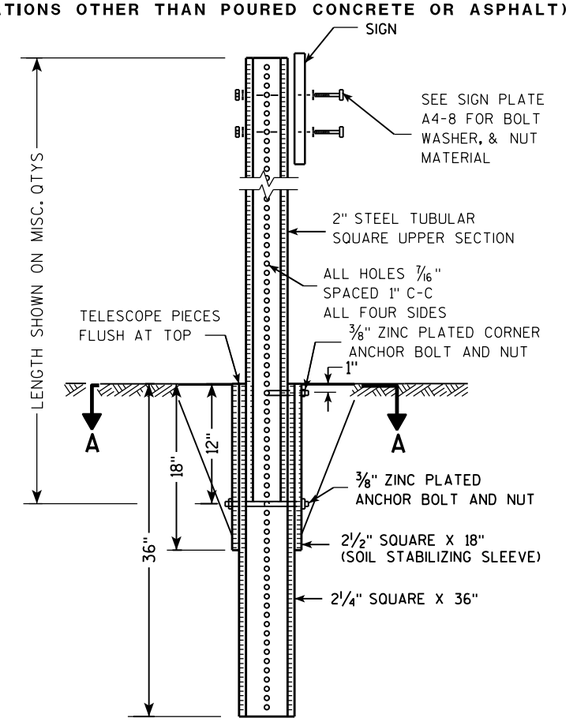

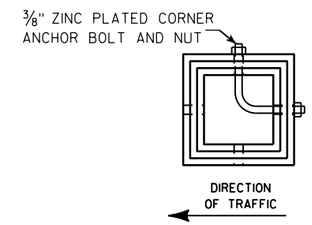

SECTION A-A

Area of Sign Installation (Sq. Ft.)	Number of Required Posts
9 or less	1
Greater than 9 less than or equal to 18	2
Greater than 18 less than or equal to 27	3

Signs wider than 3 feet or larger than 9 sq. ft shall be mounted on multiple posts (see above table).

TUBULAR STEEL
SIGN POST
A4-9

WISCONSIN DEPT OF TRANSPORTATION

APPROVED Matthew R Rauch
for State Traffic Engineer

DATE 2/05/15 PLATE A4-9.9

7 7

PROJECT NO:	HWY:	COUNTY:		SHEET NO:	E

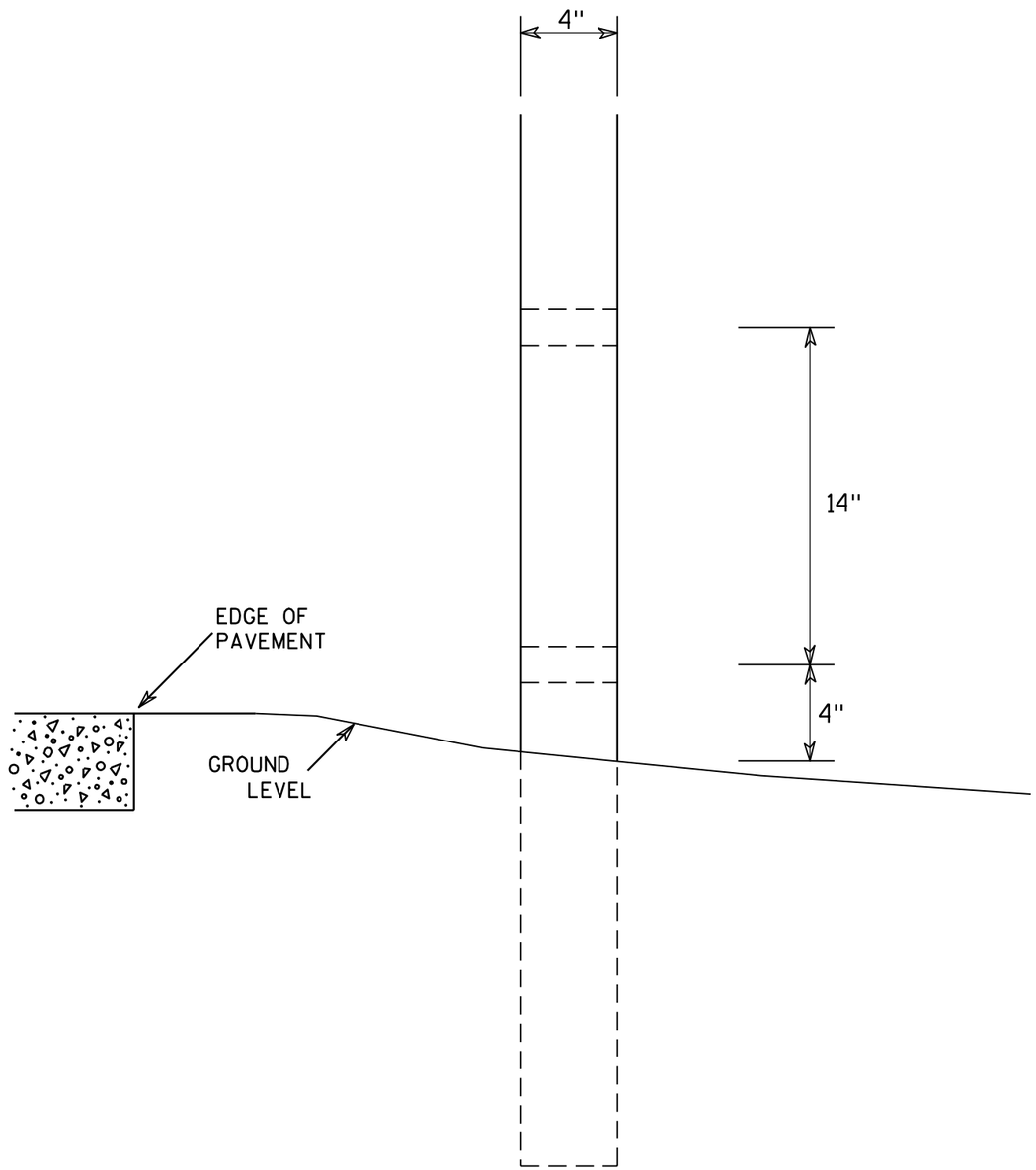

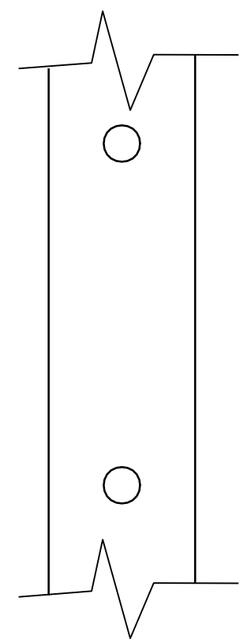

SIDE VIEW

GENERAL NOTES

1. All 4 x 6 Wood Posts shall be modified by having two 1½" diameter holes drilled perpendicular to the roadway centerline.

7

7

4 X 6 WOOD POST MODIFICATIONS

WISCONSIN DEPT OF TRANSPORTATION

APPROVED Chester J Spang for State Traffic Engineer

DATE 3/27/97 PLATE NO. A4-11.2

PROJECT NO:	HWY:	COUNTY:		SHEET NO: 138	E

BANDING

SINGLE SIGN

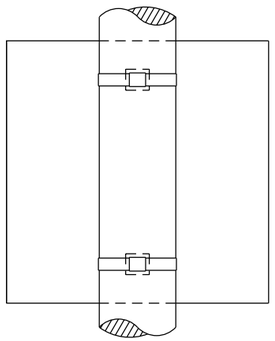

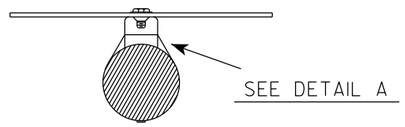

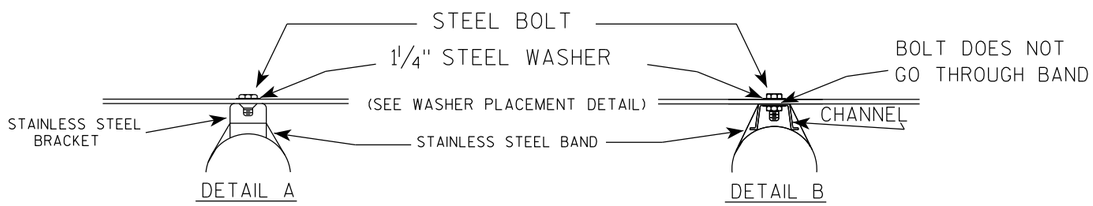

WASHER PLACEMENT

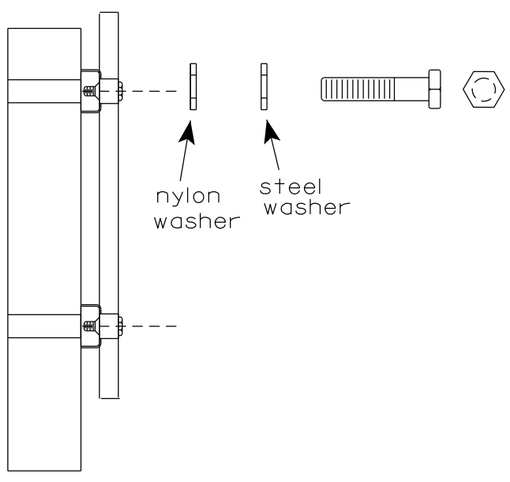

WASHERS (ALL POSTS) -
1-1/4" O.D. X 3/8" I.D. X 1/16" STEEL
1-1/4" O.D. X 3/8" I.D. X .080 NYLON
FOR ALL TYPE H SIGNS

GENERAL NOTES

1. Any sign over 3 feet in width shall use the V-Block banding method. See A5-10 standard plate.
2. Signs 3 feet or greater in height shall have three bracket bands installed. Signs less than 3 feet in height shall have two bracket bands installed.
3. Banding and assembly bracket shall be stainless steel. All bands shall be ¾" in width and 0.025" thickness.
4. ALL SIGN MOUNTING BOLTS AND WASHERS SHALL BE EITHER:
   a. Hot dip or mechanically galvanized in accordance with ASTM Designation: A 153, Class D
   b. Electro-galvanized in accordance with ASTM designation: B 633, Type III, SC 3

"J" ASSEMBLY

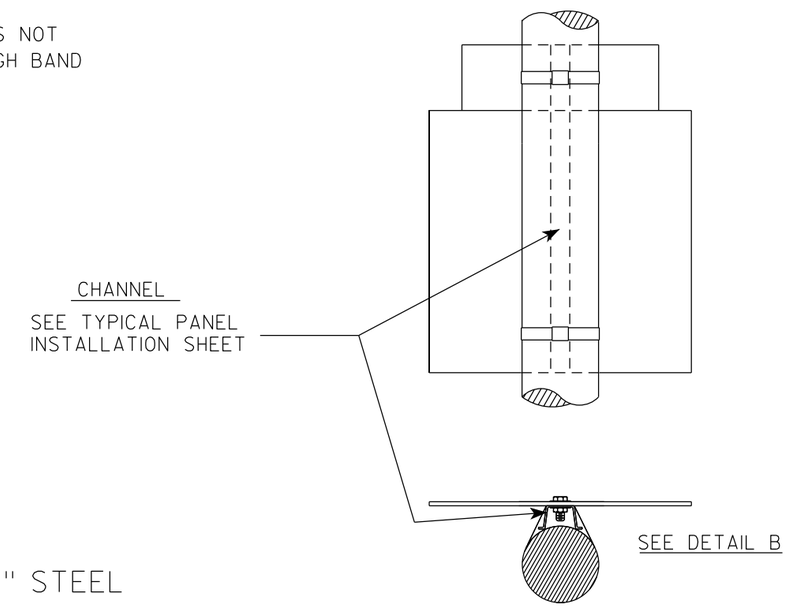

STANDARD SIGN
SIGN BANDING DETAILS

WISCONSIN DEPT OF TRANSPORTATION

APPROVED Matthew R Rauch for State Traffic Engineer

DATE 6/10/19 PLATE NO. A5-9.4

PROJECT NO:	HWY:	COUNTY:		SHEET NO: 139	E

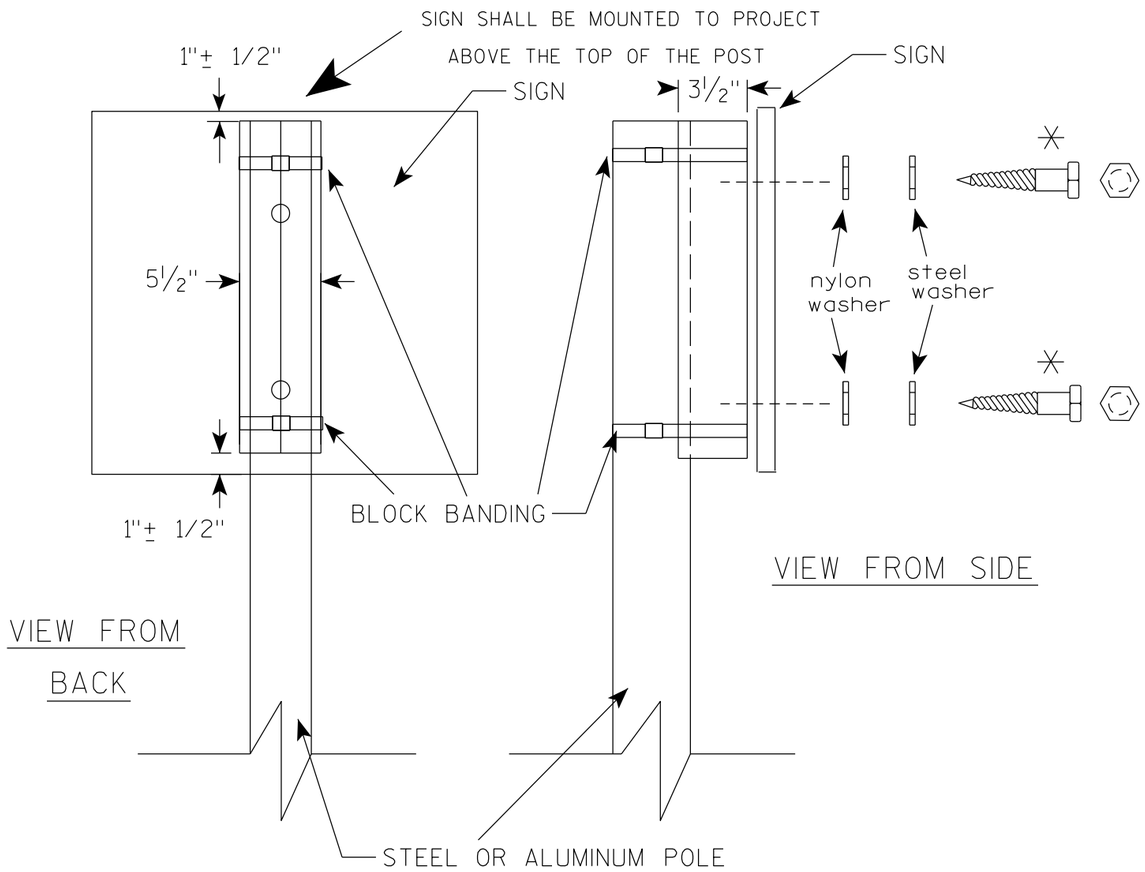

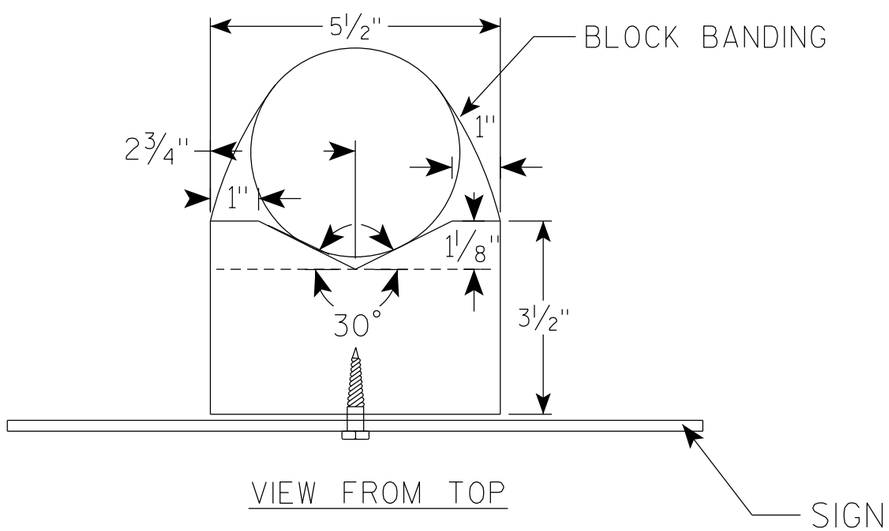

GENERAL NOTES

1. WOOD 4"X6" POST MATERIAL SHALL CONFORM TO 507.2.2 OF THE WisDOT STANDARD SPECIFICATIONS
2. BLOCK BANDING AND CLIPS SHALL BE STAINLESS STEEL, 3/4" WIDTH AND 0.025" THICKNESS
3. SIGNS 3' OR GREATER IN HEIGHT SHALL UTILIZE 3 BLOCK BANDS. SIGNS UNDER 3' IN HEIGHT SHALL UTILIZE 2 BLOCK BANDS
4. ACTUAL NUMBER OF FASTENERS PER SIGN VARIES WITH THE SIGN AREA, BUT NORNALLY THERE ARE TWO. FOR SIGNS GREATER THAN 9 S.F. 3 FASTENERS SHALL BE USED.
5. ALL SIGN MOUNTING BOLTS AND WASHERS SHALL BE EITHER:
   a. Hot dip or mechanically galvanized in accordance with ASTM Designation: A 153, Class D
   b. Electro-galvanized in accordance with ASTM Designation : B 633, TYPE III, SC 3
6. ALL BOLTS SHALL HAVE HEXAGONAL HEADS.
7. STEEL WASHERS SHALL BE 1 1/4" O.D. X 3/8" I.D. X 1/16"
8. NYLON WASHERS SHALL BE 1 1/4" O.D. X 3/8" I.D. X .080 FOR TYPE H OR TYPE F FACE SIGN

✳ LAG BOLTS SHALL BE 3/8" X 2 1/2"

7

7

BLOCK BANDING DETAIL
(V-BLOCK OPTION)

WISCONSIN DEPT OF TRANSPORTATION

APPROVED Matthew R Rauch
for State Traffic Engineer

DATE 4/19/2022 PLATE NO. A5-10.3

PROJECT NO:				SHEET NO: 140	E

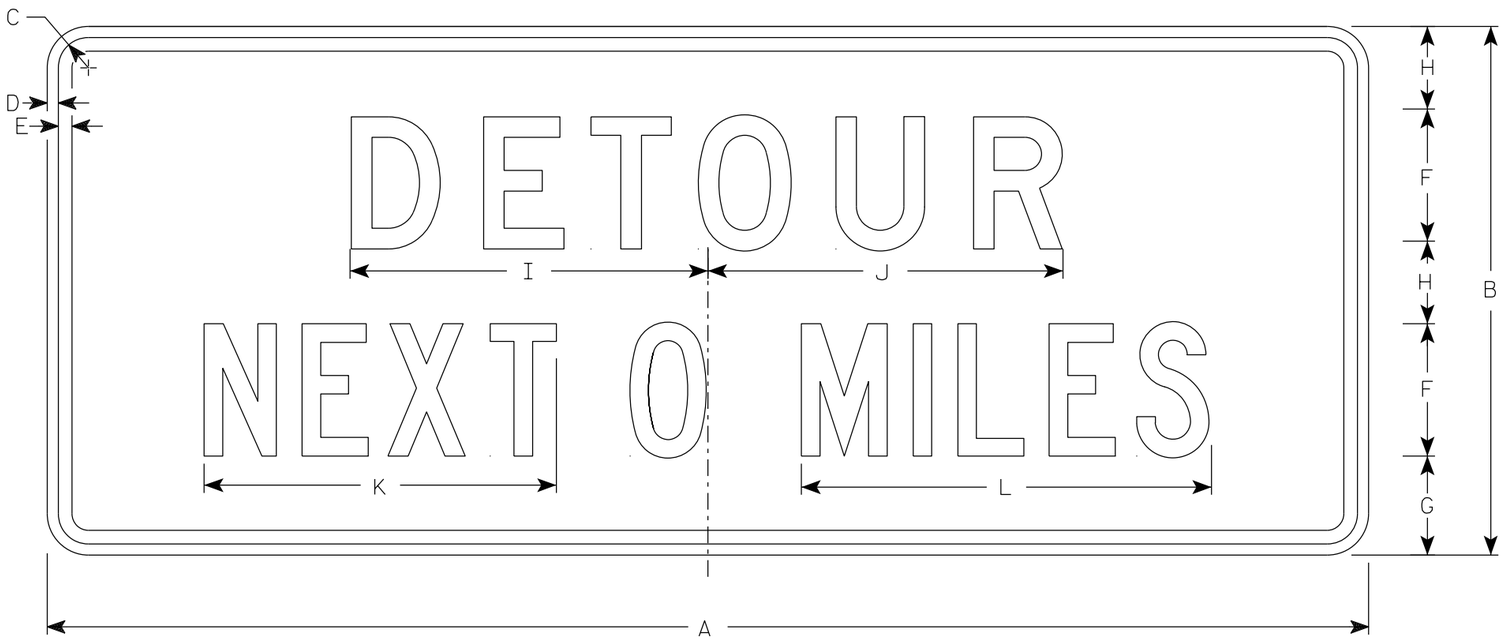

G20-51

NOTES

1. Sign is Type II - Type F Reflective
2. Color:
   Background - Orange
   Message - Black
3. Message Series - Line 1 is D and Line 2 is C
4. Corners may be square or rounded when base material is plywood but borders shall be rounded as shown. When base material is metal, the corners and borders shall be rounded.
5. Round distance to nearest whole Mile and substitute appropriate numerals and optically adjust spacing to achieve proper balance

SIZE	A	B	C	D	E	F	G	H	I	J	K	L	M	N	O	P	Q	R	S	T	U	V	W	X	Y	Z	Area sq. ft.
1																											
2	60	24	1 7/8	1/2	5/8	6	4 1/2	3 3/4	16 1/4	16 1/8	16	18 5/8															10.0
2M	60	24	1 7/8	1/2	5/8	6	4 1/2	3 3/4	16 1/4	16 1/8	16	18 5/8															10.0
3	60	24	1 7/8	1/2	5/8	6	4 1/2	3 3/4	16 1/4	16 1/8	16	18 5/8															10.0
4	60	24	1 7/8	1/2	5/8	6	4 1/2	3 3/4	16 1/4	16 1/8	16	18 5/8															10.0
5	60	24	1 7/8	1/2	5/8	6	4 1/2	3 3/4	16 1/4	16 1/8	16	18 5/8															10.0

STANDARD SIGN
G20-51

WISCONSIN DEPT OF TRANSPORTATION

APPROVED Matthew R Rauch
for State Traffic Engineer

DATE 1/26/2023 PLATE NO. G20-51.3

PROJECT NO: | HWY: | COUNTY: | SHEET NO: 141 | E

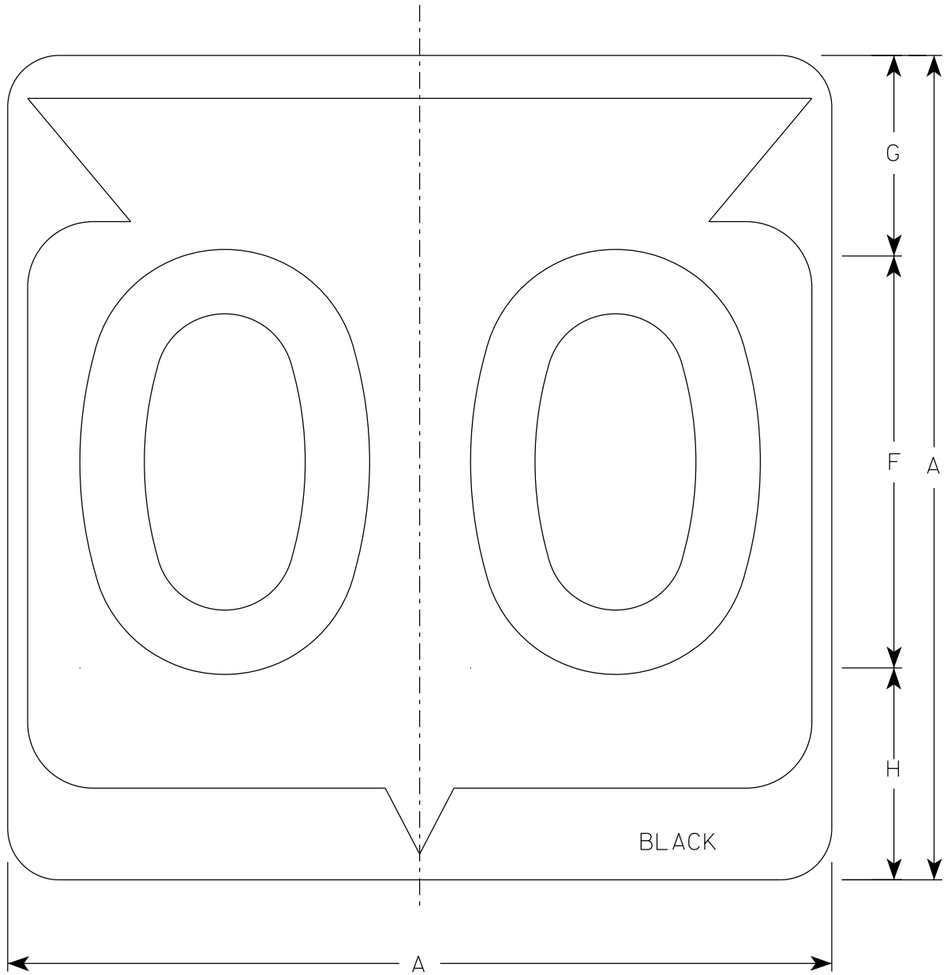

M1-6

NOTES

1. Sign is Type II - Type H Reflective
2. Color:
   Background - White
   Message - Black
3. Message Series - D except 3 number signs Series C

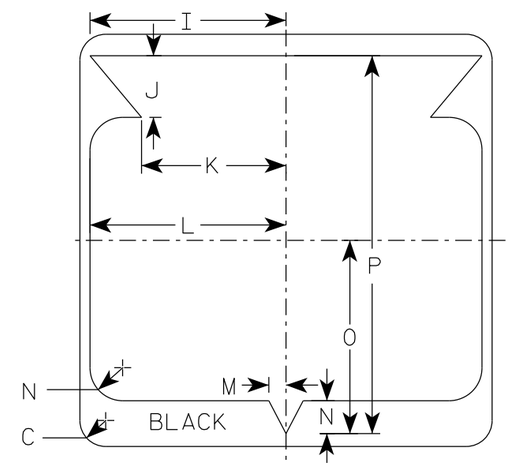

SIZE	A	B	C	D	E	F	G	H	I	J	K	L	M	N	O	P	Q	R	S	T	U	V	W	X	Y	Z	Area sq. ft.
1																											
2	24		1 1/2			12	5 1/2	6 1/2	10 1/4	2 1/2	8 7/8	11 1/2	1	1 7/8	11 1/4	21 7/8											4.0
2M	24		1 1/2			12	5 1/2	6 1/2	10 1/4	2 1/2	8 7/8	11 1/2	1	1 7/8	11 1/4	21 7/8											4.0
3	36		2 1/4			18	8 3/4	9 1/4	15 3/8	5 3/8	12 5/8	17 1/8	1 1/2	2 7/8	16 7/8	33											9.0
4	36		2 1/4			18	8 3/4	9 1/4	15 3/8	5 3/8	12 5/8	17 1/8	1 1/2	2 7/8	16 7/8	33											9.0
5	36		2 1/4			18	8 3/4	9 1/4	15 3/8	5 3/8	12 5/8	17 1/8	1 1/2	2 7/8	16 7/8	33											9.0

STATE ROUTE MARKER
M1-6 FOR ASSEMBLIES

WISCONSIN DEPT OF TRANSPORTATION

APPROVED Matthew R Rauch
for State Traffic Engineer

DATE 11/8/2022 PLATE NO. M1-6.11

PROJECT NO:	HWY:	COUNTY:		SHEET NO: 142	E

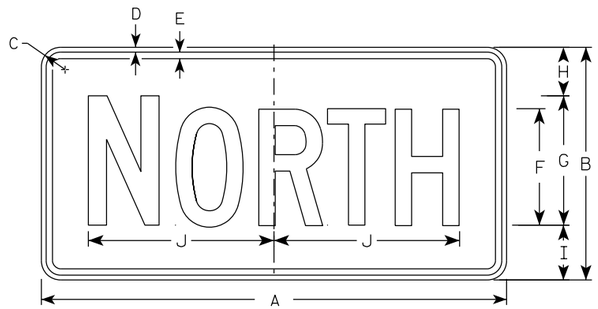

M3-1
MM3-1
MP3-1

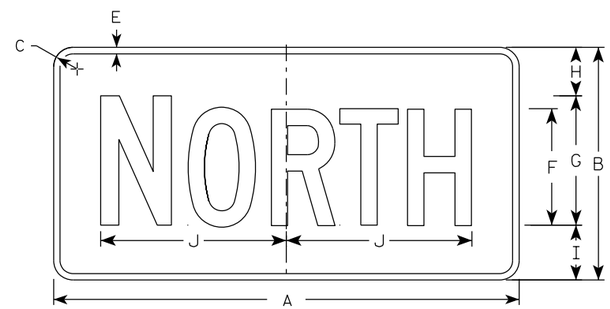

MB3-1
MK3-1
MN3-1

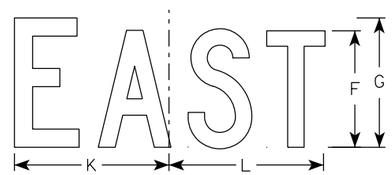

M3-2
MM3-2
MP3-2

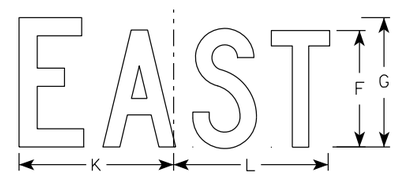

MB3-2
MK3-2
MN3-2

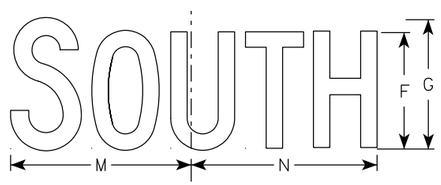

M3-3
MM3-3
MP3-3

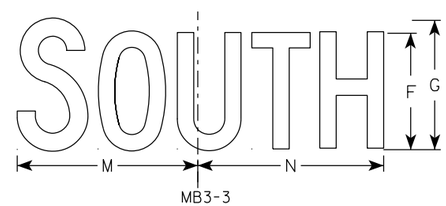

MB3-3
MK3-3
MN3-3

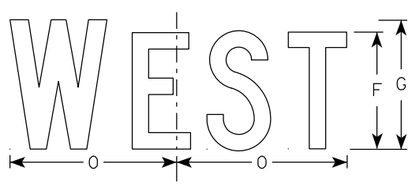

M3-4
MM3-4
MP3-4

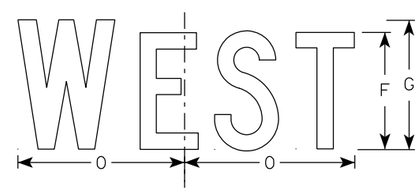

MB3-4
MK3-4
MN3-4

NOTES

1. All Signs Type II - Type H Reflective
2. Color:
   Background - See note 5
   Message - See note 5
3. Message Series - C
4. Corners may be square or rounded when base material is plywood but borders shall be rounded as shown. When base material is metal, the corners and borders shall be rounded.
5. M3-1 thru M3-4 Background - White
   Message - Black
   MB3-1 thru MB3-4 Background - Blue
   Message - White
   MK3-1 thru MK3-4 Background - Green
   Message - White
   MM3-1 thru MM3-4 Background - White
   Message - Green
   MN3-1 thru MN3-4 Background - Brown
   Message - White
   MP3-1 thru MP3-4 Background - White
   Message - Blue
6. Note the first letter of each direction is larger than the remainder of the message.

SIZE	A	B	C	D	E	F	G	H	I	J	K	L	M	N	O	P	Q	R	S	T	U	V	W	X	Y	Z	Area sq. ft.
1																											
2S	24	12	1 1/2	3/8	3/8	6	7	2 1/4	2 3/4	10 1/4	7 7/8	8 3/8	10 1/4	9 3/4	8 3/4												2.00
2M	24	12	1 1/2	3/8	3/8	6	7	2 1/4	2 3/4	10 1/4	7 7/8	8 3/8	10 1/4	9 3/4	8 3/4												2.00
3	36	18	1 1/2	3/8	1/2	9	10	3 3/4	4 1/4	14 3/8	12	12 1/8	14	14 1/8	13												4.5
4	36	18	1 1/2	3/8	1/2	9	10	3 3/4	4 1/4	14 3/8	12	12 1/8	14	14 1/8	13												4.5
5	36	18	1 1/2	3/8	1/2	9	10	3 3/4	4 1/4	14 3/8	12	12 1/8	14	14 1/8	13												4.5

STANDARD SIGNS
M3-1 THRU M3-4
SERIES

WISCONSIN DEPT OF TRANSPORTATION

APPROVED Matthew R Rauch
For State Traffic Engineer

DATE 2/8/2023 PLATE NO. M3-1.15

PROJECT NO: | HWY: | COUNTY: | SHEET NO: 143 | E

NOTES

1. Sign is Type II - Type F Reflective
2. Color:
   Background - Orange
   Message - Black
3. Message Series - B
4. Corners may be square or rounded when base material is plywood but borders shall be rounded as shown. When base material is metal, the corners and borders shall be rounded.

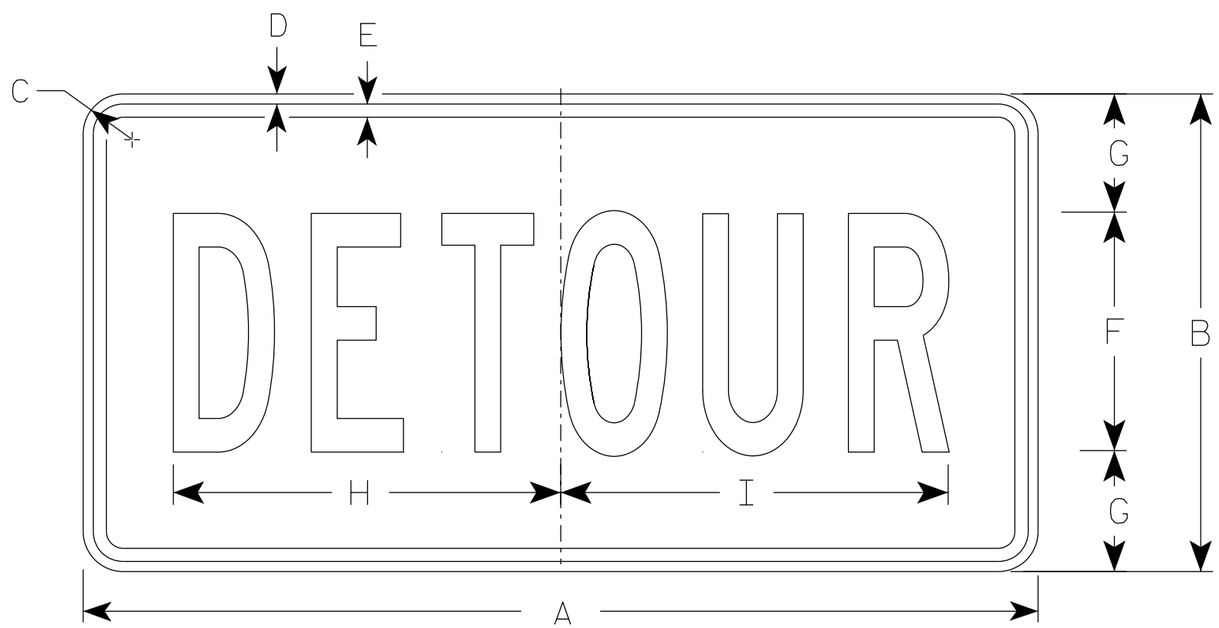

M4-8

SIZE	A	B	C	D	E	F	G	H	I	J	K	L	M	N	O	P	Q	R	S	T	U	V	W	X	Y	Z	Area sq. ft.
1																											
2	24	12	1 1/2	3/8	3/8	6	3	10	10 1/4																		2.0
2M	24	12	1 1/2	3/8	3/8	6	3	10	10 1/4																		2.0
3	36	18	1 1/2	3/8	1/2	9	4 1/2	14 5/8	14 1/2																		4.5
4	36	18	1 1/2	3/8	1/2	9	4 1/2	14 5/8	14 1/2																		4.5
5	36	18	1 1/2	3/8	1/2	9	4 1/2	14 5/8	14 1/2																		4.5

STANDARD SIGN
M4-8

WISCONSIN DEPT OF TRANSPORTATION

APPROVED Matthew R Rauch
for State Traffic Engineer

DATE 2/9/2023 PLATE NO. M4-8.4

PROJECT NO:	HWY:	COUNTY:		SHEET NO:	E

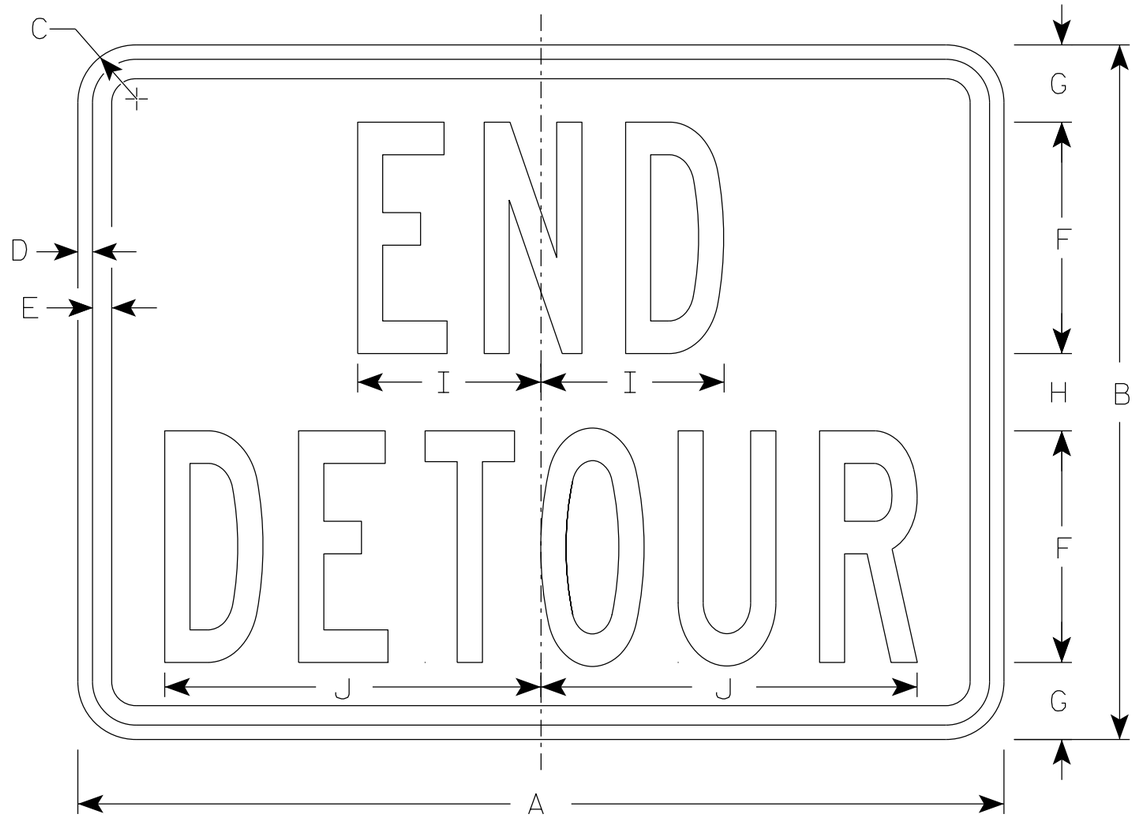

M4-8A

NOTES

1. Sign is Type II - Type F Reflective
2. Color:
   Background - Orange
   Message - Black
3. Message Series - B
4. Corners may be square or rounded when base material is plywood but borders shall be rounded as shown. When base material is metal, the corners and borders shall be rounded.

SIZE	A	B	C	D	E	F	G	H	I	J	K	L	M	N	O	P	Q	R	S	T	U	V	W	X	Y	Z	Area sq. ft.
1																											
2	24	18	1 1/2	3/8	1/2	6	2	2	4 3/4	9 3/4																	3.0
2M	24	18	1 1/2	3/8	1/2	6	2	2	4 3/4	9 3/4																	3.0
3	30	24	1 1/2	3/8	1/2	8	2 1/2	3	6 3/4	13																	5.0
4	30	24	1 1/2	3/8	1/2	8	2 1/2	3	6 3/4	13																	5.0
5	30	24	1 1/2	3/8	1/2	8	2 1/2	3	6 3/4	13																	5.0

STANDARD SIGN
M4-8A

WISCONSIN DEPT OF TRANSPORTATION

APPROVED Matthew R Rauch
for State Traffic Engineer

DATE 2/9/2023 PLATE NO. M4-8A.4

PROJECT NO: | HWY: | COUNTY: | SHEET NO: 145 | E

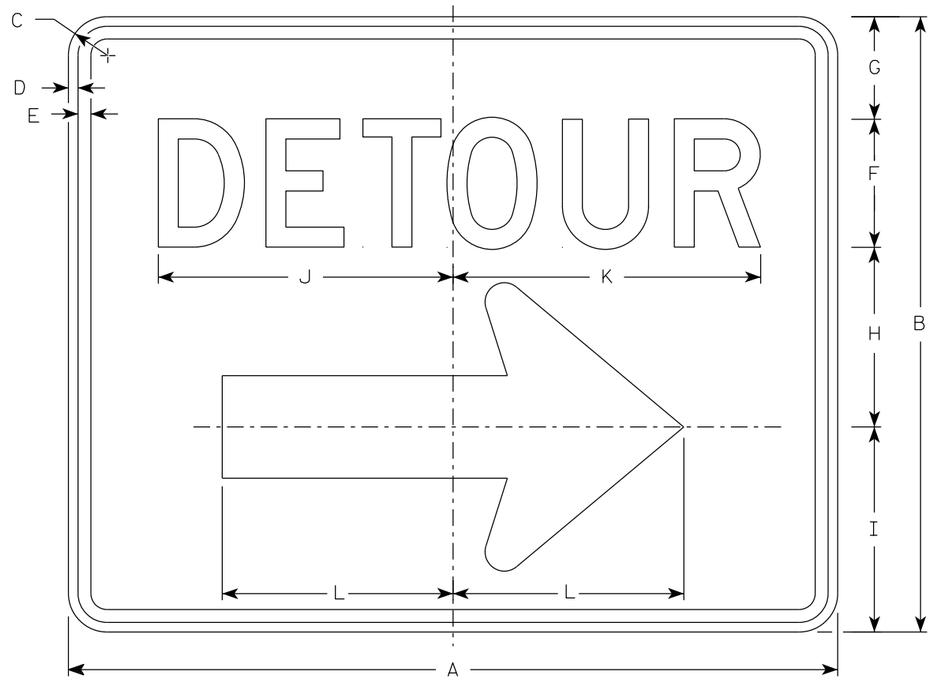

M4-9R

NOTES

1. Sign is Type II - Type F Reflective
2. Color:
   Background - Orange
   Message - Black
3. Message Series - D
4. Corners may be square or rounded when base material is plywood but borders shall be rounded as shown. When base material is metal, the corners and borders shall be rounded.
4. M4-9L is the same as M4-9R except the arrow is reversed.

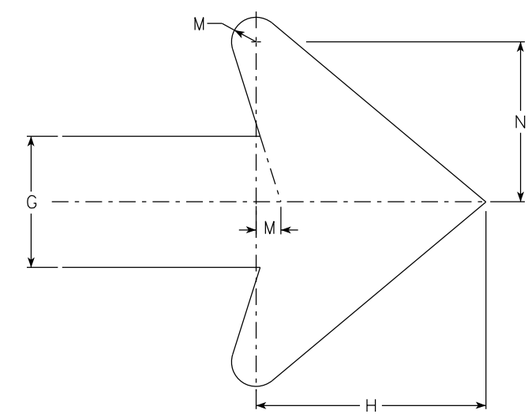

Arrow Detail

SIZE	A	B	C	D	E	F	G	H	I	J	K	L	M	N	O	P	Q	R	S	T	U	V	W	X	Y	Z	Area sq. ft.
1																											
2	30	24	1 1/2	3/8	1/2	5	4	7	8	11 1/2	12	9	3/4	4 7/8													5.00
2M	30	24	1 1/2	3/8	1/2	5	4	7	8	11 1/2	12	9	3/4	4 7/8													5.00
3	30	24	1 1/2	3/8	1/2	5	4	7	8	11 1/2	12	9	3/4	4 7/8													5.00
4	48	36	1 7/8	1/2	5/8	8	6	10 1/2	11 5/8	20 5/8	20 1/2	13 1/4	1 1/8	6 7/8													12.0
5	48	36	1 7/8	1/2	5/8	8	6	10 1/2	11 5/8	20 5/8	20 1/2	13 1/4	1 1/8	6 7/8													12.0

STANDARD SIGN
M4-9 R & L

WISCONSIN DEPT OF TRANSPORTATION

APPROVED Matthew R Rauch
For State Traffic Engineer

DATE 2/9/2023 PLATE NO. M4-9R.6

PROJECT NO: | HWY: | COUNTY: | SHEET NO: E

FILE NAME : C:\CAEfiles\Projects\tr_stdplate\M49R.dgn PLOT DATE : 21-MARCH 2023 1:40 PLOT BY : dotc4c PLOT NAME : PLOT SCALE : $$.....plotscale.....$$ WISDOT/CADDS SHEET 42

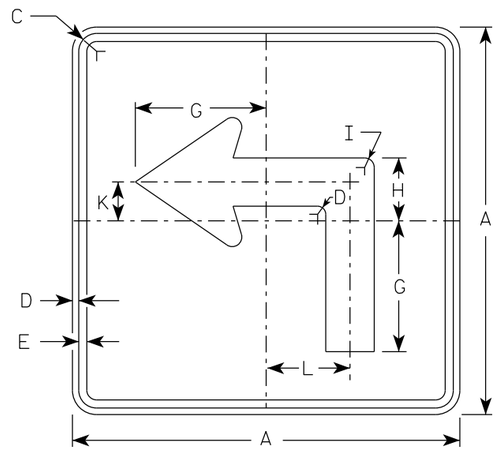

M5-1L
MM5-1L
MO5-1L
MP5-1L

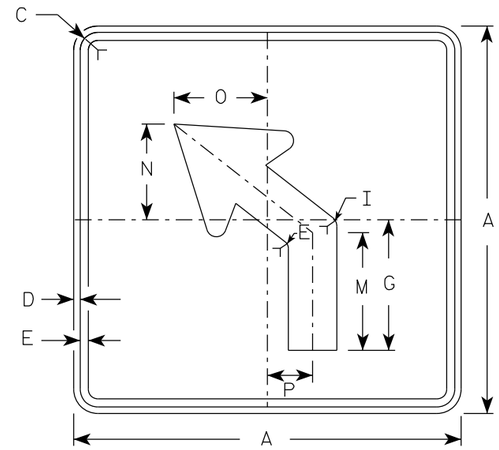

M5-2L
MM5-2L
MO5-2L
MP5-2L

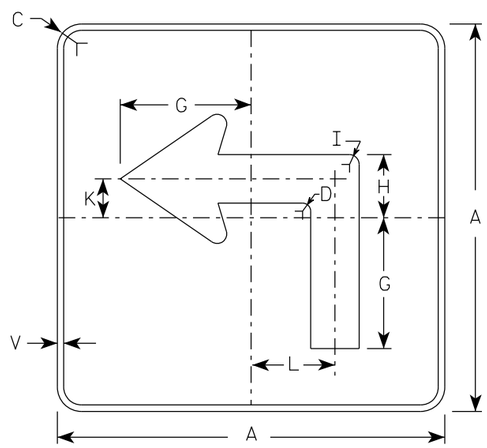

MB5-1L
MK5-1L
MN5-1L
MR5-1L

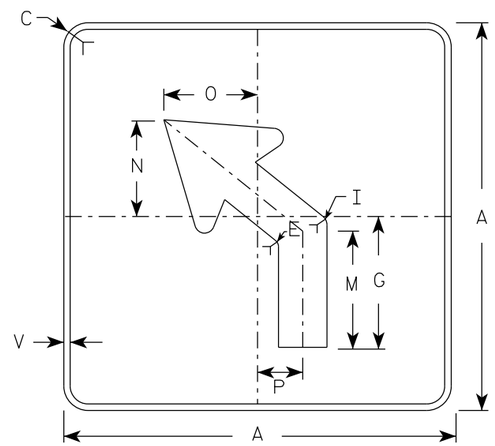

MB5-2L
MK5-2L
MN5-2L
MR5-2L

NOTES

1. Signs are Type II - Type H reflective except as shown
2. Color:
   Background - See note 4
   Message - See note 4
3. Corners may be square or rounded when base material is plywood but borders shall be rounded as shown. When base material is metal, the corners and borders shall be rounded.
4. M5-1 and M5-2 Background - White
   Message - Black
   MB5-1 and MB5-2 Background - Blue
   Message - White
   MK5-1 and MK5-2 Background - Green
   Message - White
   MM5-1 and MM5-2 Background - White
   Message - Green
   MN5-1 and MN5-2 Background - Brown
   Message - White
   MO5-1 and MO5-2 Background - Orange - Type F Reflective
   Message - Black
   MP5-1 and MP5-2 Background - White
   Message - Blue
   MR5-1 and MR5-2 Background - Brown
   Message - Yellow
5. M5-1R same as M5-1L except arrow points right.
6. M5-2R same as M5-2L except arrow tilts right.

ARROW DETAIL

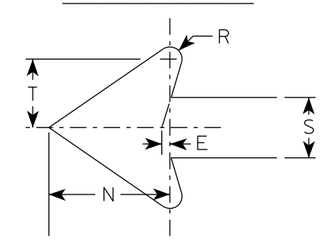

SIZE	A	B	C	D	E	F	G	H	I	J	K	L	M	N	O	P	Q	R	S	T	U	V	W	X	Y	Z	Area sq. ft.
1																											
2S	21		1 1/2	3/8	3/8		7	3 3/8	5/8		2 1/8	4 1/2	6 3/8	5 1/4	5	2 1/2		1/2	2 5/8	3		1/2					3.06
2M	21		1 1/2	3/8	3/8		7	3 3/8	5/8		2 1/8	4 1/2	6 3/8	5 1/4	5	2 1/2		1/2	2 5/8	3		1/2					3.06
3	30		1 7/8	1/2	5/8		10 1/8	4 7/8	7/8		3	6 1/2	9 1/8	7 1/2	7 1/4	3 1/2		3/4	3 3/4	4 1/4		1/2					6.25
4	30		1 7/8	1/2	5/8		10 1/8	4 7/8	7/8		3	6 1/2	9 1/8	7 1/2	7 1/4	3 1/2		3/4	3 3/4	4 1/4		1/2					6.25
5	30		1 7/8	1/2	5/8		10 1/8	4 7/8	7/8		3	6 1/2	9 1/8	7 1/2	7 1/4	3 1/2		3/4	3 3/4	4 1/4		1/2					6.25

STANDARD SIGN
M5-1 & M5-2

WISCONSIN DEPT OF TRANSPORTATION

APPROVED Matthew R Rauch
for State Traffic Engineer

DATE 2/13/2023 PLATE NO. M5-1.15

PROJECT NO: | HWY: | COUNTY: | SHEET NO: 147 | E

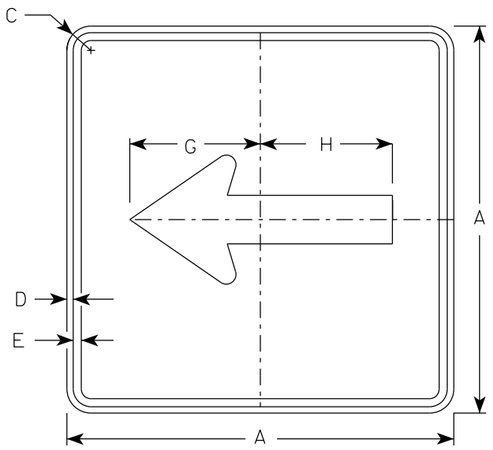

M6-1
MM6-1
MO6-1
MP6-1

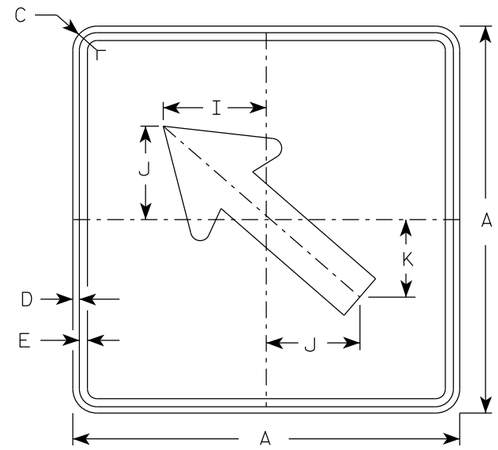

M6-2
MM6-2
MO6-2
MP6-2

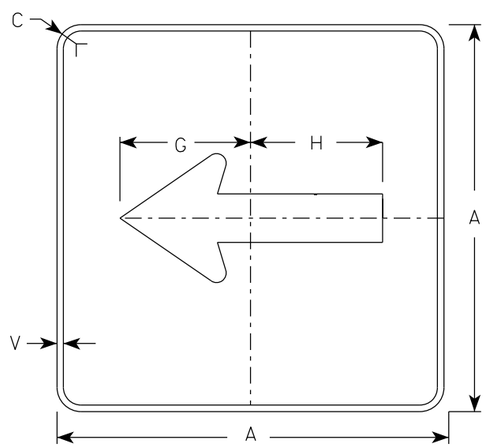

MB6-1
MK6-1
MN6-1
MR6-1

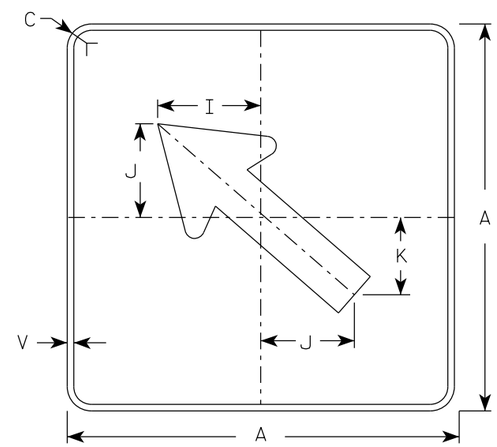

MB6-2
MK6-2
MN6-2
MR6-2

NOTES

1. Signs are Type II - Type H Reflective except as Shown
2. Color:
   Background - See note 4
   Message - See note 4
3. Corners may be square or rounded when base material is plywood but borders shall be rounded as shown. When base material is metal, the corners and borders shall be rounded.
4. M6-1 and M6-2 Background - White
   Message - Black
   MB6-1 and MB6-2 Background - Blue
   Message - White
   MK6-1 and MK6-2 Background - Green
   Message - White
   MM6-1 and MM6-2 Background - White
   Message - Green
   MN6-1 and MN6-2 Background - Brown
   Message - White
   MO6-1 and MO6-2 Background - Orange - Type F Reflective
   Message - Black
   MP6-1 and MP6-2 Background - White
   Message - Blue
   MR6-1 and MR6-2 Background - Brown
   Message - Yellow

ARROW DETAIL

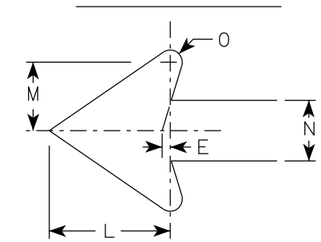

SIZE	A	B	C	D	E	F	G	H	I	J	K	L	M	N	O	P	Q	R	S	T	U	V	W	X	Y	Z	Area sq. ft.
1																											
2S	21		1 1/2	3/8	3/8		7 1/2	7 1/8	5 5/8	5	4 1/4	5 1/4	3	2 5/8	1/2							1/2					3.06
2M	21		1 1/2	3/8	3/8		7 1/2	7 1/8	5 5/8	5	4 1/4	5 1/4	3	2 5/8	1/2							1/2					3.06
3	30		1 7/8	1/2	5/8		10 3/4	10 1/4	8	7 1/4	6	7 1/2	4 1/4	3 3/4	3/4							1/2					6.25
4	30		1 7/8	1/2	5/8		10 3/4	10 1/4	8	7 1/4	6	7 1/2	4 1/4	3 3/4	3/4							1/2					6.25
5	30		1 7/8	1/2	5/8		10 3/4	10 1/4	8	7 1/4	6	7 1/2	4 1/4	3 3/4	3/4							1/2					6.25

STANDARD SIGN
M6-1 & M6-2
SERIES

WISCONSIN DEPT OF TRANSPORTATION

APPROVED Matthew R Rauch
for State Traffic Engineer

DATE 2/13/2023 PLATE NO. M6-1.16

PROJECT NO: | HWY: | COUNTY: | SHEET NO: 148 | E

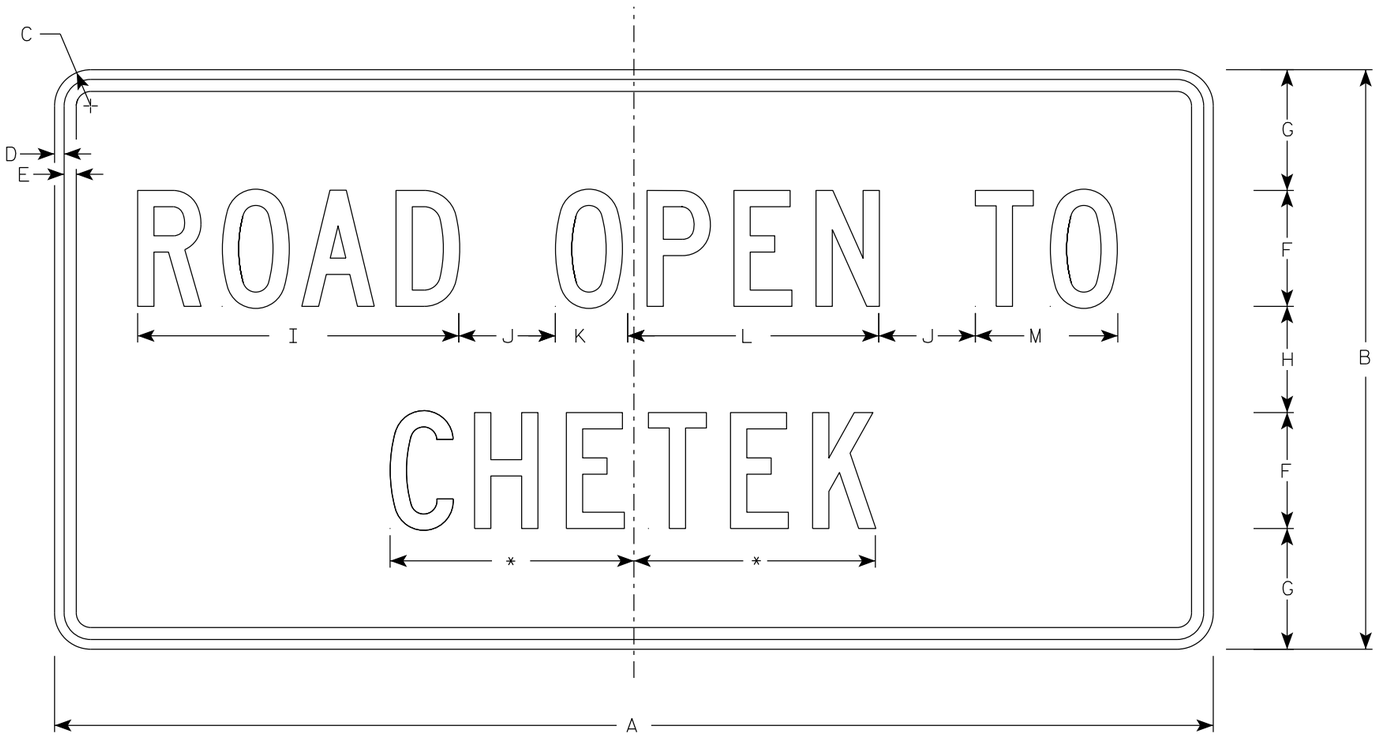

R10-61

*See note 5

NOTES

1. Sign is Type II - Type H Reflective
2. Color:
   Background - White
   Message - Black
3. Message Series - C
4. Corners may be square or rounded when base material is plywood but borders shall be rounded as shown. When base material is metal, the corners and borders shall be rounded.
5. Substitute appropriate message and optically balance.

SIZE	A	B	C	D	E	F	G	H	I	J	K	L	M	N	O	P	Q	R	S	T	U	V	W	X	Y	Z	Area sq. ft.
1	36	24	1 1/2	1/2	5/8	4	5 1/2	5	10 3/4	2	2 1/8	8 3/8	4 5/8														6.0
2S	60	30	1 7/8	1/2	5/8	6	6 1/4	5 1/2	16 5/8	5	3 3/4	13	7 3/8														12.5
2M	60	30	1 7/8	1/2	5/8	6	6 1/4	5 1/2	16 5/8	5	3 3/4	13	7 3/8														12.5
3																											
4																											
5																											

STANDARD SIGN
R10-61

WISCONSIN DEPT OF TRANSPORTATION

APPROVED Matthew R Rauch
for State Traffic Engineer

DATE 2/5/24 PLATE NO. R10-61.6

PROJECT NO: | HWY: | COUNTY: | SHEET NO: 149 | E

NOTES

1. Sign is Type II - Type H Reflective
2. Color:
   Background - White
   Message - Black
3. Message Series - C
4. Corners may be square or rounded when base material is plywood but borders shall be rounded as shown. When base material is metal, the corners and borders shall be rounded.
5. Substitute appropriate numerals to nearest quarter mile and optically adjust spacing to achieve proper balance.

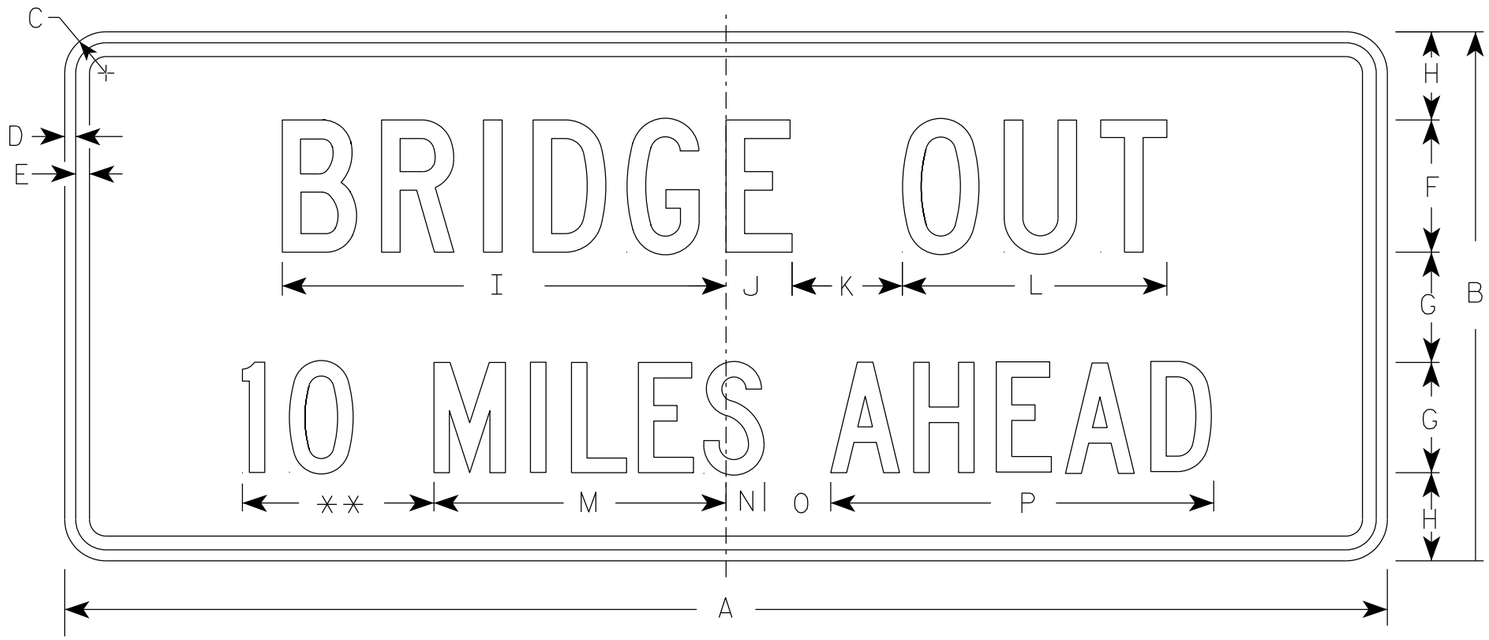

R11-3C

** See Note 5

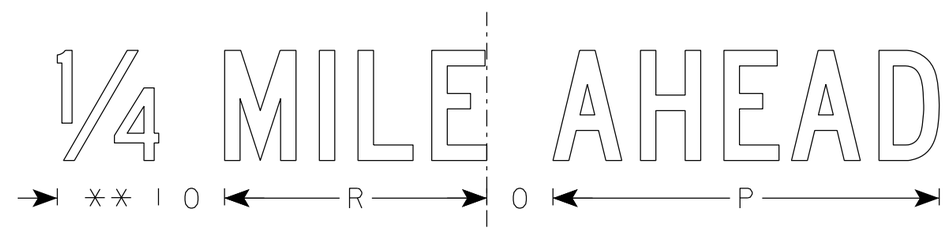

SIZE	A	B	C	D	E	F	G	H	I	J	K	L	M	N	O	P	Q	R	S	T	U	V	W	X	Y	Z	Area sq. ft.
1	36	15	1 1/2	1/2	5/8	4	3	2 1/2	13 1/4	2 1/4	3	8	8	1 1/2	2	10 3/4		7 1/8									3.75
2S	60	24	1 7/8	1/2	5/8	6	5	4	20 1/8	3	5	12	13 1/4	1 3/4	3	17 3/8		11 7/8									10.0
2M	60	24	1 7/8	1/2	5/8	6	5	4	20 1/8	3	5	12	13 1/4	1 3/4	3	17 3/8		11 7/8									10.0
3																											
4																											
5																											

STANDARD SIGN
R11-3C

WISCONSIN DEPT OF TRANSPORTATION

APPROVED Matthew R Rauch
for State Traffic Engineer

DATE 2/5/24 PLATE NO. R11-3C.4

PROJECT NO:

SHEET NO: 150 E

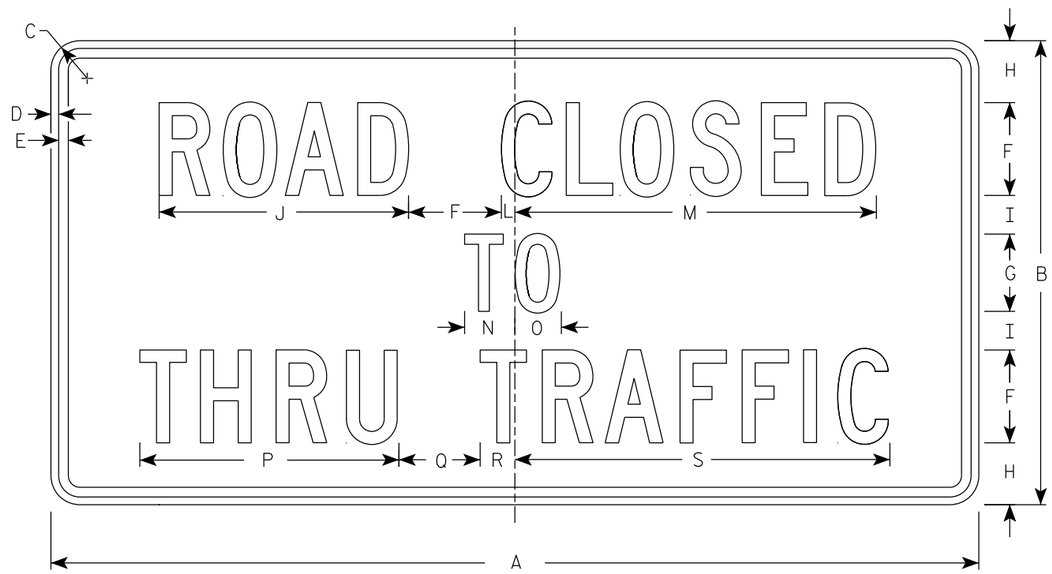

R11-4

NOTES

1. Sign is Type II - Type H Reflective
2. Color:
   Background - White
   Message - Black
3. Message Series - C
4. Corners may be square or rounded when base material is plywood but borders shall be rounded as shown. When base material is metal, the corners and borders shall be rounded.

SIZE	A	B	C	D	E	F	G	H	I	J	K	L	M	N	O	P	Q	R	S	T	U	V	W	X	Y	Z	Area sq. ft.
1																											
2S	60	30	1 7/8	1/2	5/8	6	5	4	2 1/2	16 1/8		7/8	23 3/8	3 1/4	3	16 3/4	5 1/4	2 1/4	24 1/4								12.5
2M	60	30	1 7/8	1/2	5/8	6	5	4	2 1/2	16 1/8		7/8	23 3/8	3 1/4	3	16 3/4	5 1/4	2 1/4	24 1/4								12.5
3																											
4																											
5																											

STANDARD SIGN
R11 - 4

WISCONSIN DEPT OF TRANSPORTATION

APPROVED Matthew R Rauch for State Traffic Engineer

DATE 2/5/24 PLATE NO. R11-4.4

PROJECT NO: | HWY: | COUNTY: | SHEET NO: 151 | E

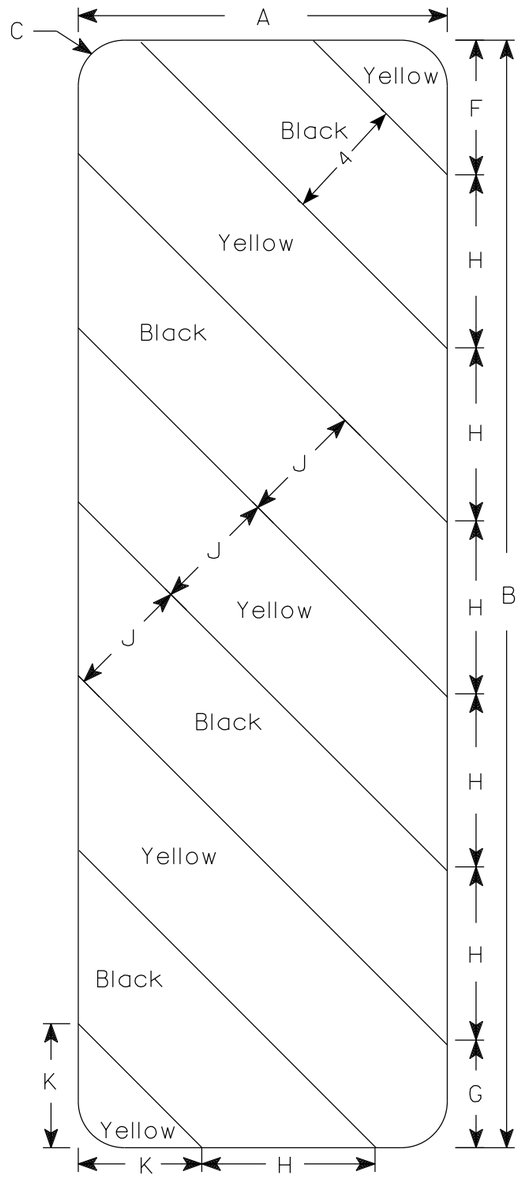

W5-52L

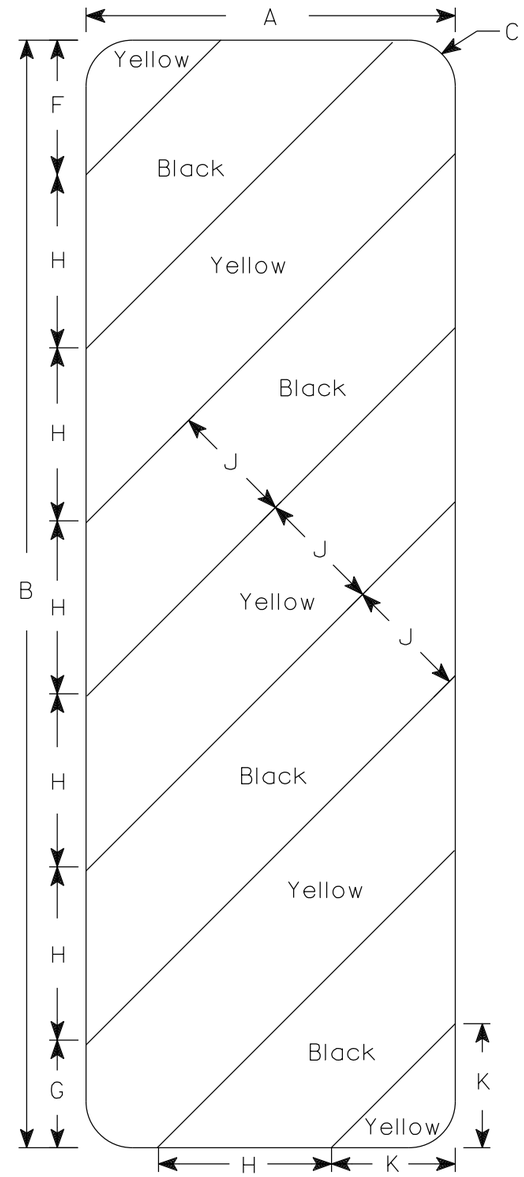

W5-52R

NOTES

1. Sign is Type II - Type F Reflective
2. Color:
   Background - Yellow
   Message - Black
3. Alternate colors of stripes as shown.

SIZE	A	B	C	D	E	F	G	H	I	J	K	L	M	N	O	P	Q	R	S	T	U	V	W	X	Y	Z	Area sq. ft.
1																											
2S	12	36	1 1/2			4 3/8	3 1/2	5 5/8	45°	4	4																3.0
2M	12	36	1 1/2			4 3/8	3 1/2	5 5/8	45°	4	4																3.0
3	18	54	1 1/2			6	5 1/2	8 1/2	45°	6	6 9/16																6.75
4																											
5																											

STANDARD SIGN

W5-52L & W5-52R

WISCONSIN DEPT OF TRANSPORTATION

APPROVED Matthew R Rauch
For State Traffic Engineer

DATE 3/4/2024 PLATE NO. W5-52.10

PROJECT NO: | HWY: | COUNTY: | SHEET NO: 152 | E

NOTES

1. Sign is Type II - Type F Reflective
2. Color:
   Background - Orange
   Message - Black
3. Message Series - C
4. Corners may be square or rounded when base material is plywood but borders shall be rounded as shown. When base material is metal, the corners and borders shall be rounded.

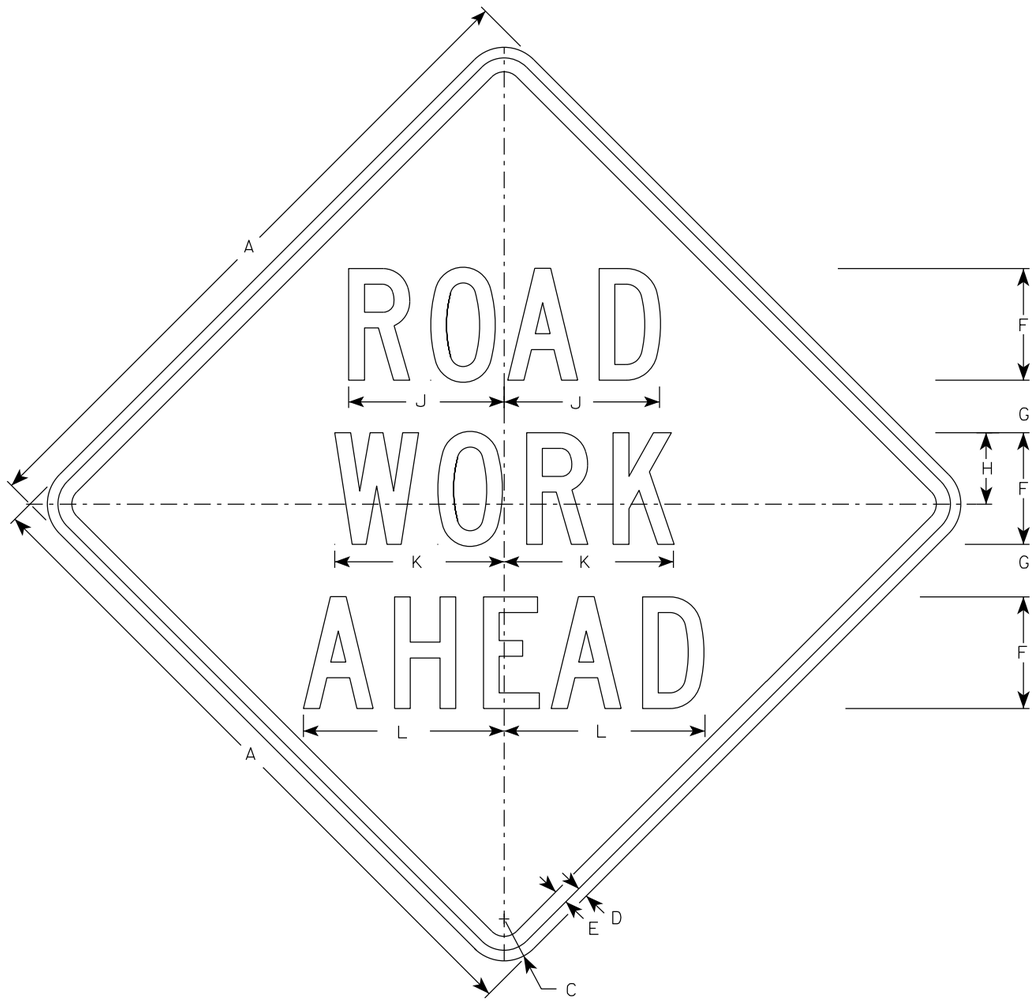

W20-1A

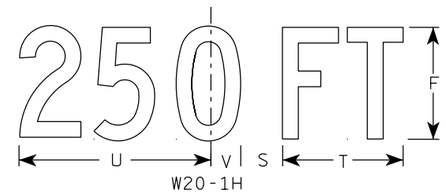

W20-1H

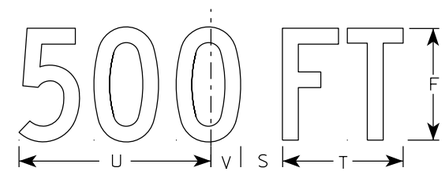

W20-1D

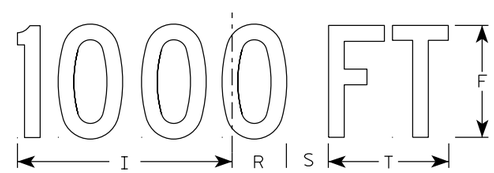

W20-1C

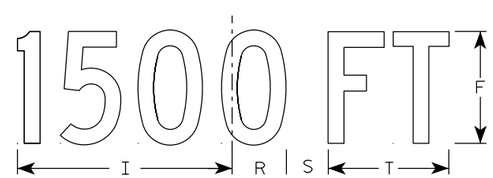

W20-1B

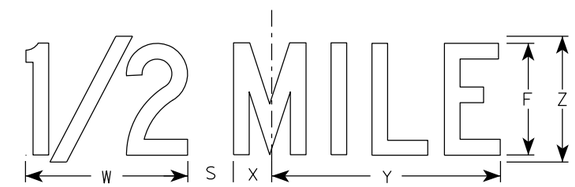

W20-1G

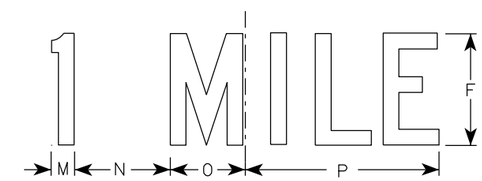

W20-1F

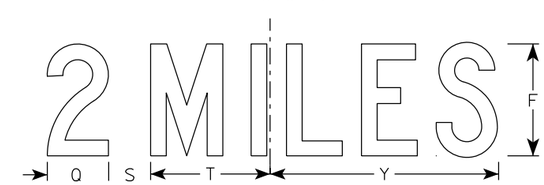

W20-1E

SIZE	A	B	C	D	E	F	G	H	I	J	K	L	M	N	O	P	Q	R	S	T	U	V	W	X	Y	Z	Area sq. ft.
1	36		2 1/4	5/8	3/4	5	2 5/8	3 1/4	10 1/8	7	7 5/8	8 7/8	1 1/8	4 1/2	3 1/2	9	3 1/4	2 1/2	2 1/4	5 5/8	9	1 3/8	8	1 3/4	10 3/4	6	9.0
2S	48		3	3/4	1	8	3 3/4	5 1/8	15 3/8	11 1/8	12 1/8	14 3/8	1 5/8	6 7/8	5 3/8	13 7/8	4 3/8	3 7/8	3	8 5/8	13 3/4	2 1/8	11 7/8	2 3/4	16 3/8	9	16.0
2M	48		3	3/4	1	8	3 3/4	5 1/8	15 3/8	11 1/8	12 1/8	14 3/8	1 5/8	6 7/8	5 3/8	13 7/8	4 3/8	3 7/8	3	8 5/8	13 3/4	2 1/8	11 7/8	2 3/4	16 3/8	9	16.0
3	48		3	3/4	1	8	3 3/4	5 1/8	15 3/8	11 1/8	12 1/8	14 3/8	1 5/8	6 7/8	5 3/8	13 7/8	4 3/8	3 7/8	3	8 5/8	13 3/4	2 1/8	11 7/8	2 3/4	16 3/8	9	16.0
4	48		3	3/4	1	8	3 3/4	5 1/8	15 3/8	11 1/8	12 1/8	14 3/8	1 5/8	6 7/8	5 3/8	13 7/8	4 3/8	3 7/8	3	8 5/8	13 3/4	2 1/8	11 7/8	2 3/4	16 3/8	9	16.0
5	48		3	3/4	1	8	3 3/4	5 1/8	15 3/8	11 1/8	12 1/8	14 3/8	1 5/8	6 7/8	5 3/8	13 7/8	4 3/8	3 7/8	3	8 5/8	13 3/4	2 1/8	11 7/8	2 3/4	16 3/8	9	16.0

STANDARD SIGN
W20-1A, B, C, D, E, F, G & H

WISCONSIN DEPT OF TRANSPORTATION

APPROVED Matthew R Rauch
For State Traffic Engineer

DATE 1/10/2024 PLATE NO. W20-1.12

PROJECT NO:

SHEET NO: 153 E

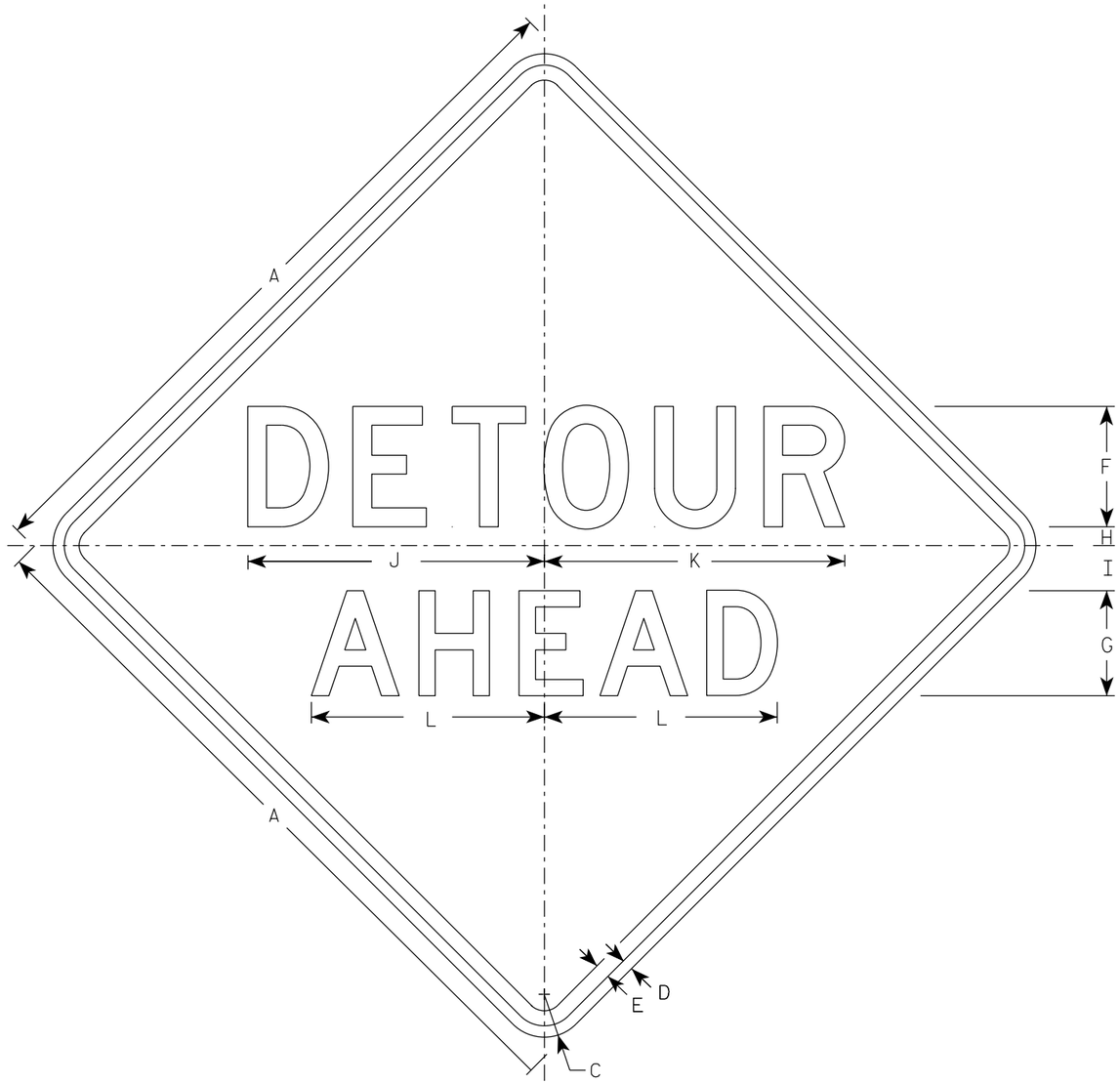

W20-2A

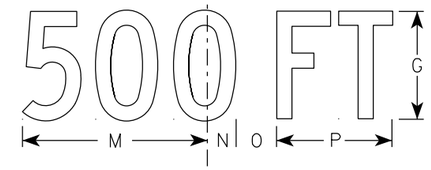

W20-2D

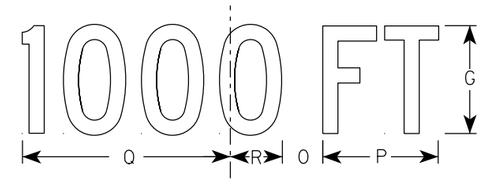

W20-2C

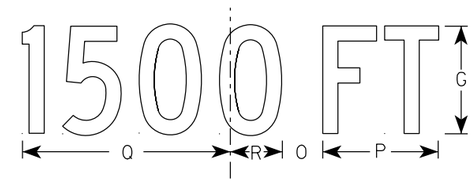

W20-2B

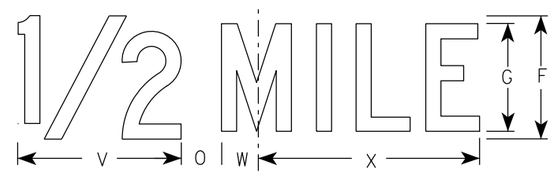

W20-2G

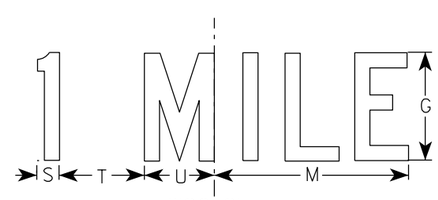

W20-2F

NOTES

1. Sign is Type II - Type F Reflective
2. Color:
   Background - Orange
   Message - Black
3. Message Series - See note 5
4. Corners may be square or rounded when base material is plywood but borders shall be rounded as shown. When base material is metal, the corners and borders shall be rounded.
5. Line 1 is Series D.
   Line 2 is Series D for AHEAD and Series C for all other distances.

SIZE	A	B	C	D	E	F	G	H	I	J	K	L	M	N	O	P	Q	R	S	T	U	V	W	X	Y	Z	Area sq. ft.
1	36		2 1/4	5/8	3/4	6	5	1	2 1/4	14 3/4	15	11 5/8	9	1 3/8	1 7/8	5 5/8	10 1/8	2 1/2	1 1/8	4 1/2	3 1/2	8	1 3/4	10 3/4			9.0
2S	48		3	3/4	1	8	7	1 1/4	3	19 3/4	20	15 1/2	12	1 7/8	2 5/8	7 1/2	13 1/2	3 3/8	1 1/2	6	4 5/8	10 5/8	2 3/8	14 3/8			16.0
2M	48		3	3/4	1	8	7	1 1/4	3	19 3/4	20	15 1/2	12	1 7/8	2 5/8	7 1/2	13 1/2	3 3/8	1 1/2	6	4 5/8	10 5/8	2 3/8	14 3/8			16.0
3	48		3	3/4	1	8	7	1 1/4	3	19 3/4	20	15 1/2	12	1 7/8	2 5/8	7 1/2	13 1/2	3 3/8	1 1/2	6	4 5/8	10 5/8	2 3/8	14 3/8			16.0
4	48		3	3/4	1	8	7	1 1/4	3	19 3/4	20	15 1/2	12	1 7/8	2 5/8	7 1/2	13 1/2	3 3/8	1 1/2	6	4 5/8	10 5/8	2 3/8	14 3/8			16.0
5	48		3	3/4	1	8	7	1 1/4	3	19 3/4	20	15 1/2	12	1 7/8	2 5/8	7 1/2	13 1/2	3 3/8	1 1/2	6	4 5/8	10 5/8	2 3/8	14 3/8			16.0

STANDARD SIGN
W20-2A,B,C,D,F & G

WISCONSIN DEPT OF TRANSPORTATION

APPROVED Matthew R Rauch
For State Traffic Engineer

DATE 1/10/2024 PLATE NO. W20-2.7

PROJECT NO: | HWY: | COUNTY: | SHEET NO: E

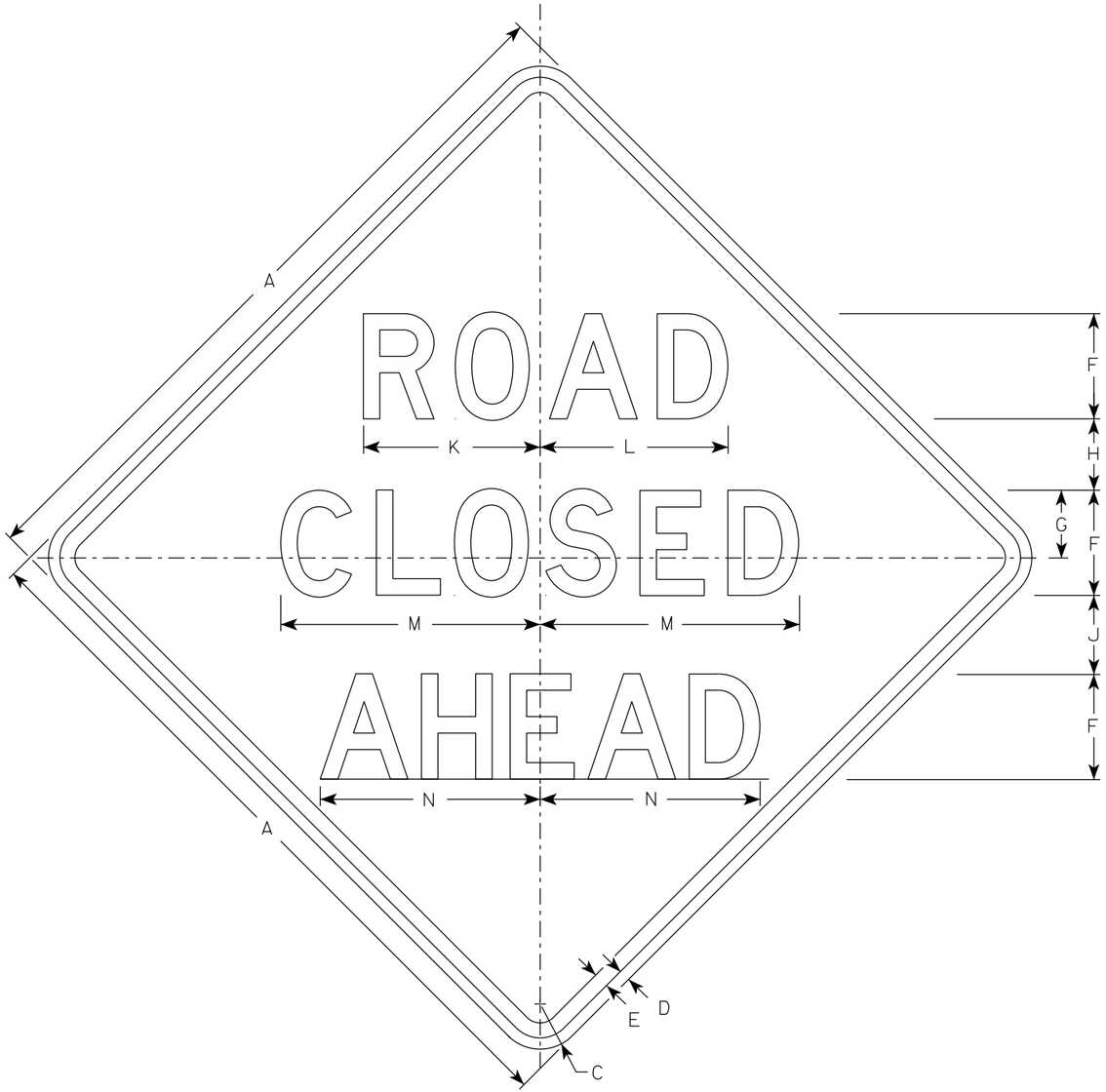

W20-3A

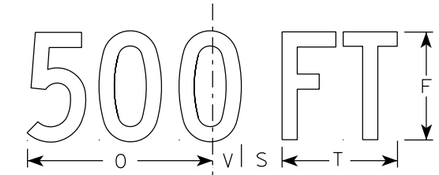

W20-3D

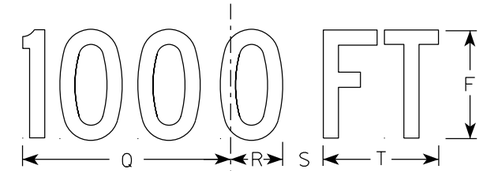

W20-3C

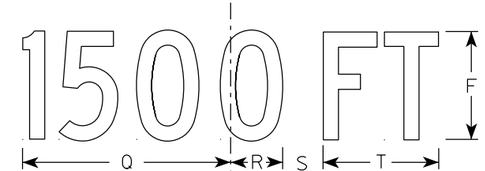

W20-3B

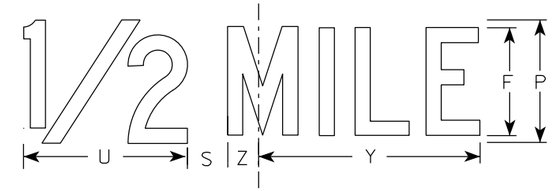

W20-3G

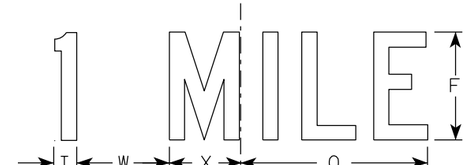

W20-3F

NOTES

1. Sign is Type II - Type F Reflective
2. Color:
   Background - Orange
   Message - Black
3. Message Series - see note 5
4. Corners may be square or rounded when base material is plywood but borders shall be rounded as shown. When base material is metal, the corners and borders shall be rounded.
5. Lines 1 and 2 are Series D.
   Line 3 is Series D for AHEAD and Series C for all other distances.

SIZE	A	B	C	D	E	F	G	H	I	J	K	L	M	N	O	P	Q	R	S	T	U	V	W	X	Y	Z	Area sq. ft.
1	36		2 1/4	5/8	3/4	5	3 3/8	3 1/2	1 1/8	4	8 3/8	8 7/8	12 1/2	11	9	6	10 1/8	2 1/2	1 7/8	5 5/8	8	1 3/8	4 1/2	3 1/2	10 3/4	1 3/4	9.0
2S	48		3	3/4	1	7	4 1/2	4 3/4	1 1/2	5 1/4	11 3/4	12 1/2	17 1/4	14 5/8	12	8	13 1/2	3 3/8	2 5/8	7 1/2	10 5/8	1 7/8	6	4 5/8	14 3/8	2 3/8	16.0
2M	48		3	3/4	1	7	4 1/2	4 3/4	1 1/2	5 1/4	11 3/4	12 1/2	17 1/4	14 5/8	12	8	13 1/2	3 3/8	2 5/8	7 1/2	10 5/8	1 7/8	6	4 5/8	14 3/8	2 3/8	16.0
3	48		3	3/4	1	7	4 1/2	4 3/4	1 1/2	5 1/4	11 3/4	12 1/2	17 1/4	14 5/8	12	8	13 1/2	3 3/8	2 5/8	7 1/2	10 5/8	1 7/8	6	4 5/8	14 3/8	2 3/8	16.0
4	48		3	3/4	1	7	4 1/2	4 3/4	1 1/2	5 1/4	11 3/4	12 1/2	17 1/4	14 5/8	12	8	13 1/2	3 3/8	2 5/8	7 1/2	10 5/8	1 7/8	6	4 5/8	14 3/8	2 3/8	16.0
5	48		3	3/4	1	7	4 1/2	4 3/4	1 1/2	5 1/4	11 3/4	12 1/2	17 1/4	14 5/8	12	8	13 1/2	3 3/8	2 5/8	7 1/2	10 5/8	1 7/8	6	4 5/8	14 3/8	2 3/8	16.0

STANDARD SIGN
W20-3A, B, C, D, F & G

WISCONSIN DEPT OF TRANSPORTATION

APPROVED Matthew R Rauch
for State Traffic Engineer

DATE 1/10/2024 PLATE NO. W20-3.8

PROJECT NO: | HWY: | COUNTY: | SHEET NO: E

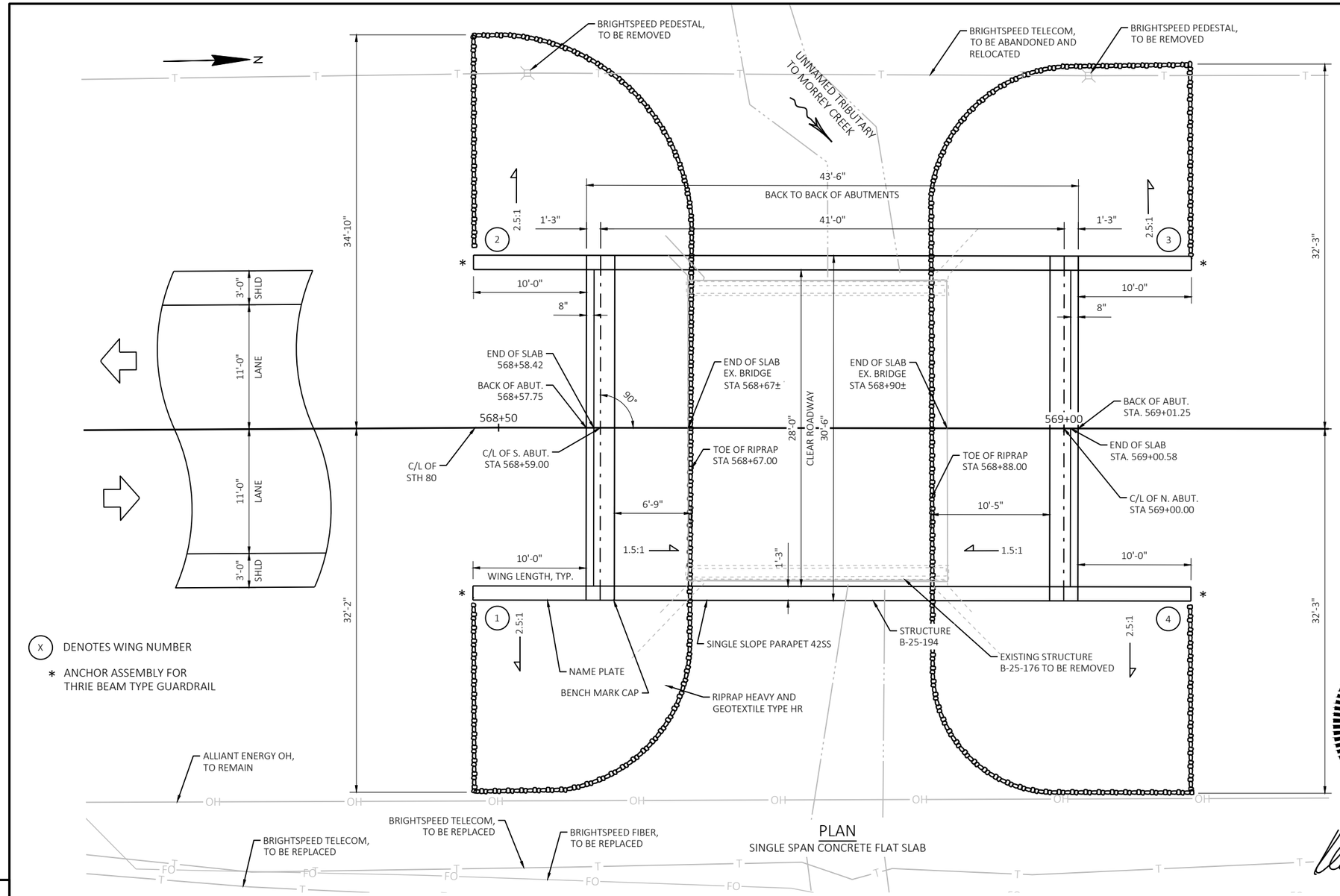

PLAN

SINGLE SPAN CONCRETE FLAT SLAB

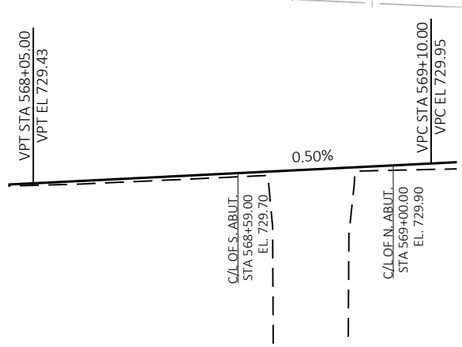

PROFILE GRADE LINE

C/L OF STH 80

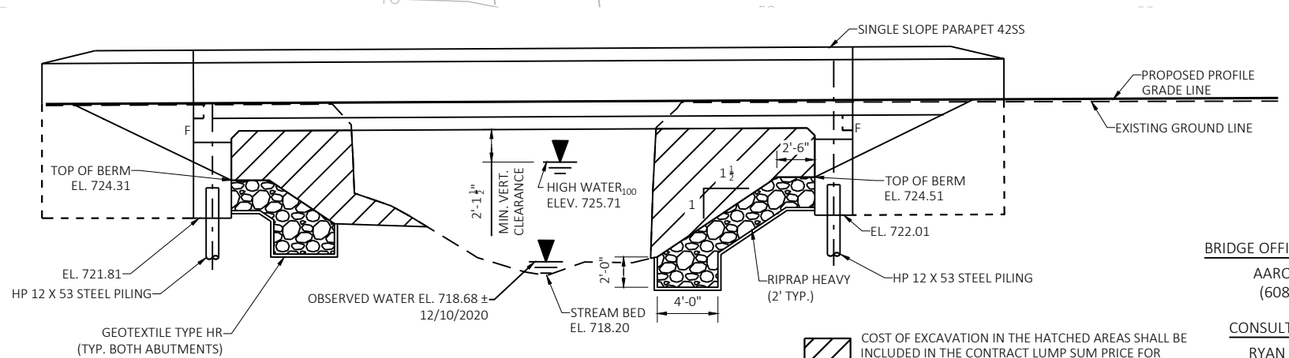

ELEVATION

LOOKING WEST

COST OF EXCAVATION IN THE HATCHED AREAS SHALL BE INCLUDED IN THE CONTRACT LUMP SUM PRICE FOR "EXCAVATION FOR STRUCTURES BRIDGES B-25-194"

DESIGN DATA

STATE PROJECT NUMBER

5939-00-63

LIVE LOAD
DESIGN LOADING: HL-93
INVENTORY RATING FACTOR: 1.08
OPERATION RATING FACTOR: 1.39
WISCONSIN STANDARD PERMIT VEHICLE (WIS-SPV): 250 kip
STRUCTURE IS DESIGNED FOR A FUTURE WEARING SURFACE OF 20 POUNDS PER SQUARE FOOT

MATERIAL PROPERTIES

CONCRETE MASONRY	-SLAB	f'c = 4,000 PSI
	-ALL OTHER	f'c = 3,500 PSI
HIGH-STRENGTH BAR REINFORCEMENT AASHTO GRADE 60		fy = 60,000 PSI

FOUNDATION DATA
ABUTMENTS TO BE SUPPORTED ON HP 12 X 53 STEEL PILES (WITH PILE POINTS) WITH A REQUIRED DRIVING RESISTANCE OF 220 TONS** PER PILE AT SOUTH ABUTMENT AND 220 TONS** AT NORTH ABUTMENT AS DETERMINED BY USING MODIFIED GATES DYNAMIC EQUATION. ESTIMATED 95'-0" LONG AT THE SOUTH ABUTMENT AND 95'-0" LONG AT THE NORTH ABUTMENT

**THE FACTORED AXIAL RESISTANCE OF PILES IN COMPRESSION USED FOR DESIGN IS THE REQUIRED DRIVING RESISTANCE MULTIPLIED BY A RESISTANCE FACTOR OF 0.5 USING MODIFIED GATES TO DETERMINE DRIVEN PILE CAPACITY.

HYDRAULIC DATA

100 YEAR FREQUENCY	2 YEAR FREQUENCY
Q_{100} = 610 CFS	Q_2 = 65 CFS
VELOCITY = 3.8 FT/SEC	VELOCITY = 4.2 FT/SEC
HW_{100} = 725.71	HW_2 = 720.50

DRAINAGE AREA = 1.2 SQ. MI.
SCOUR CRITICAL CODE = 5
WATERWAY AREA = 163 SQ. FT
DATUM = NAVD 88
ROADWAY OVERTOP = N/A

TRAFFIC DATA
ADT (2028) = 400
ADT (2048) = 460
DESIGN SPEED = 60 MPH

LIST OF DRAWINGS

NO.	SHEET TITLE
1	GENERAL PLAN
2	QUANTITIES AND NOTES
3	SUBSURFACE EXPLORATION
4	SOUTH ABUTMENT
5	SOUTH ABUTMENT DETAILS
6	SOUTH ABUTMENT WING DETAILS
7	NORTH ABUTMENT
8	NORTH ABUTMENT DETAILS
9	NORTH ABUTMENT WING DETAILS
10	SUPERSTRUCTURE
11	SUPERSTRUCTURE DETAILS & BILL OF BARS
12	SINGLE SLOPE PARAPET 42SS

WISCONSIN
KHALED ABOUEID
E-48167
SCHILLER PARK
IL
PROFESSIONAL ENGINEER

5/02/2025
DATE

NO.	DATE	REVISION	BY

WSP USA

STATE OF WISCONSIN DEPARTMENT OF TRANSPORATION

ACCEPTED EMK 05/09/25
CHIEF STRUCTURES DESIGN ENGINEER DATE

STRUCTURE B-25-194

STH 80 OVER UNNAMED TRIBUTARY TO MORREY CREEK

COUNTY IOWA | TOWN PULASKI

DESIGN SPEC. AASHTO LRFD BRIDGE DESIGN SPECIFICATION

DESIGNED BY BD | DESIGNED CK'D KA | DRAWN BY GM | PLANS CK'D KA

GENERAL PLAN

SHEET 1 OF 12
156

BRIDGE OFFICE CONTACT
AARON BONK, PE
(608) 261-0261

CONSULTANT CONTACT.
RYAN MCKANE, PE
(608) 519-1455

8

8

SCALE =

I.D. DATE:

STATE PROJECT NUMBER

5939-00-63

TOTAL ESTIMATED QUANTITIES

BID ITEM NUMBER	BID ITEMS	UNIT	S. ABUT	N. ABUT	SUPER	TOTAL
203.0250	REMOVING STRUCTURE OVER WATERWAY REMOVE DEBRIS (STRUCTURE) 01. B-25-176	EACH	-	-	-	1
206.1001	EXCAVATION FOR STRUCTURES BRIDGES (STRUCTURE) 01. B-25-194	EACH	-	-	-	1
210.1500	BACKFILL STRUCTURE TYPE A	TON	48	47	-	95
502.0100	CONCRETE MASONRY BRIDGES	CY	29.0	29.0	112.1	170
502.3200	PROTECTIVE SURFACE TREATMENT	SY	-	-	136	136
502.3210	PIGMENTED SURFACE SEALER	SY	-	-	50	50
505.0400	BAR STEEL REINFORCEMENT HS STRUCTURES	LB	1540	1540	-	3080
505.0600	BAR STEEL REINFORCEMENT HS COATED STRUCTURES	LB	1900	1400	24200	27500
516.0500	RUBBERIZED MEMBRANE WATERPROOFING	SY	9	9	-	18
550.0500	PILE POINTS	EACH	7	7	-	14
550.1120	PILING STEEL HP 12-INCH X 53 LB	LF	665	665	-	1330
606.0300	RIPRAP HEAVY	CY	60	77	-	137
612.0406	PIPE UNDERDRAIN WRAPPED 6-INCH	LF	81	81	-	162
614.0150	ANCHOR ASSEMBLIES FOR STEEL PLATE BEAM GUARD	EACH	2	2	-	4
645.0111	GEOTEXTILE TYPE DF SCHEDULE A	SY	27	27	-	54
645.0120	GEOTEXTILE TYPE HR	SY	141	169	-	310
(NON-BID ITEMS)	FILLER	SIZE	-	-	-	1/2" & 3/4"

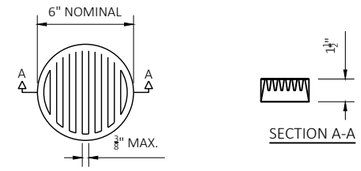

PIPE UNDERDRAIN RODENT SHIELD DETAIL

DIMENSIONS ARE APPROXIMATE. THE GRATE IS SIZED TO FIT INTO A PIPE COUPLING. ORIENT SO SLOTS ARE VERTICAL.

THE RODENT SHIELD, PIPE COUPLING AND SCREWS SHALL BE CONSIDERED INCIDENTAL TO THE BID ITEM "PIPE UNDERDRAIN WRAPPED 6-INCH".

THE RODENT SHIELD SHALL BE A PVC GRATE SIMILAR TO THIS DETAIL. THE GRATE IS COMMERCIALLY AVAILABLE AS A FLOOR STRAINER. A PIPE COUPLING IS REQUIRED FOR THE ATTACHMENT OF THIS SHIELD TO THE EXPOSED END OF THE PIPE UNDERDRAIN. THE SHIELD SHALL BE FASTENED TO THE PIPE COUPLING WITH TWO OR MORE NO. 10 X 1- INCH STAINLESS STEEL SHEET METAL SCREWS.

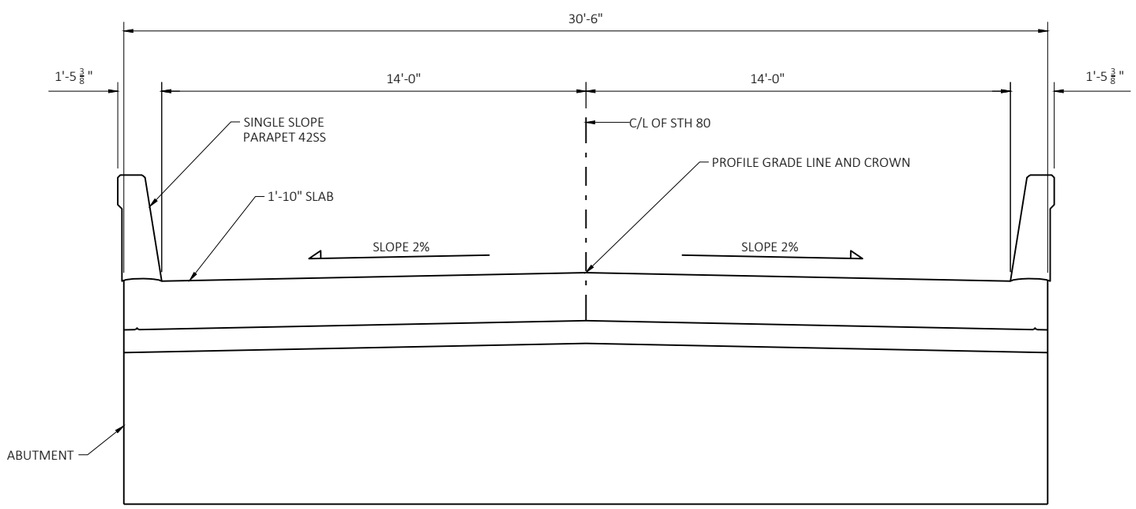

TYPICAL SECTION THRU BRIDGE

LOOKING NORTH

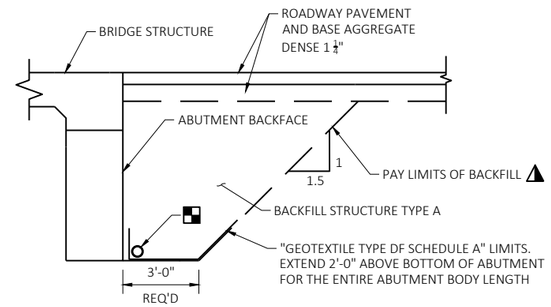

BACKFILL STRUCTURE DETAIL

(TYPICAL AT BOTH ABUTMENTS)

GENERAL NOTES

B-25-0176, BUILT IN 1930, IS A SINGLE SPAN CONCRETE GIRDER, CONCRETE SLAB WITH A CONCRETE ABUTMENT SUPPORTED ON TIMBER PILES, 23' CLEAR ROADWAY WIDTH X 23' END OF SLAB TO END OF SLAB

DRAWINGS SHALL NOT BE SCALED.

BAR STEEL REINFORCEMENT SHALL BE EMBEDDED 2" CLEAR UNLESS OTHERWISE SHOWN OR NOTED.

SLAB FALSEWORK SHALL BE SUPPORTED ON PILES OR THE SUBSTRUCTURE UNLESS AN ALTERNATE METHOD IS APPROVED BY THE ENGINEER.

THE FIRST OR FIRST 2 DIGITS OF THE BAR MARK SIGNIFIES THE BAR SIZE.

THE SLOPE OF THE FILL IN FRONT OF THE ABUTMENTS SHALL BE COVERED WITH HEAVY RIPRAP AND GEOTEXTILE TYPE 'HR' TO THE EXTENT SHOWN ON SHEET 1 AND IN THE ABUTMENT DETAILS.

AT THE BACKFACE OF ABUTMENT ALL VOLUME WHICH CANNOT BE PLACED BEFORE ABUTMENT CONSTRUCTION AND IS NOT OCCUPIED BY THE NEW STRUCTURE SHALL BE BACKFILLED WITH STRUCTURE BACKFILL.

THE UPPER LIMITS OF "EXCAVATION FOR STRUCTURES BRIDGES B-25-194" SHALL BE THE EXISTING GROUNDLINE.

THE BACKFILL QUANTITIES ARE BASED ON THE PAY LIMITS SHOWN ON THE PLANS AND MAY NOT REFLECT ACTUAL PLACED QUANTITIES. "BACKFILL STRUCTURE TYPE A" REQUIRED DIRECTLY BEHIND ABUTMENTS AND ABUTMENT WINGS FOR 3 FEET. BACKFILL PLACED BEYOND PAY LIMITS OR EXCEEDING PLAN QUANTITIES SHALL BE INCIDENTAL TO EXCAVATION FOR STRUCTURES.

EXCAVATION BELOW THE ABUTMENT AND ABUTMENT BEDDING MATERIALS REQUIRES ENGINEER APPROVAL. GEOTEXTILE SHALL BE SET AT THE BOTTOM OF EXCAVATION AND EXTEND 2'-0" ABOVE BOTTOM OF ABUTMENT.

BEVEL EXPOSED EDGES OF CONCRETE $\frac{3}{4}$" UNLESS NOTED OTHERWISE.

PROVIDE FOR THRIE BEAM GUARD RAIL ATTACHMENT. AT UNUSED ANCHOR ASSEMBLIES CAULK HOLES SHUT WITH "100% SILICONE CAULK"

PROTECTIVE SURFACE TREATMENT SHALL BE APPLIED PER STANDARD SPECIFICATIONS. APPLY TO THE TOP OF SLAB, TOPS OF WINGS, TO EXPOSED FRONT FACES OF WINGS, TO THE END 1'-0" OF THE ABUTMENT BODY FRONT FACES, AND TO THE FACE AND TOP OF PAVING NOTCHES.

PIGMENTED SURFACE SEALER SHALL BE APPLIED PER STANDARD SPECIFICATIONS. APPLY TO THE INSIDE FACES, TOP FACES, AND ENDS OF PARAPETS, INCLUDING PARAPETS ON ABUTMENT WINGS.

LEGEND

◭ BACKFILL PAY LIMITS. BACKFILL BEYOND BACKFILL PAY LIMITS SHALL BE INCIDENTAL TO EXCAVATION FOR STRUCTURES. LIMITS OF EXCAVATION SHALL BE DETERMINED BY THE CONTRACTOR.

◪ PIPE UNDERDRAIN WRAPPED (6-INCH). SLOPE 0.5% MIN. TO SUITABLE DRAINAGE. ATTACH RODENT SHIELD AT ENDS OF PIPE UNDERDRAIN (SEE DETAIL ON THIS SHEET).

BENCHMARK			
NO.	STATION	DESCRIPTION	ELEVATION
921	572+41.27	FENO MONUMENT	732.82
922	572+46.25	FENO MONUMENT	732.49

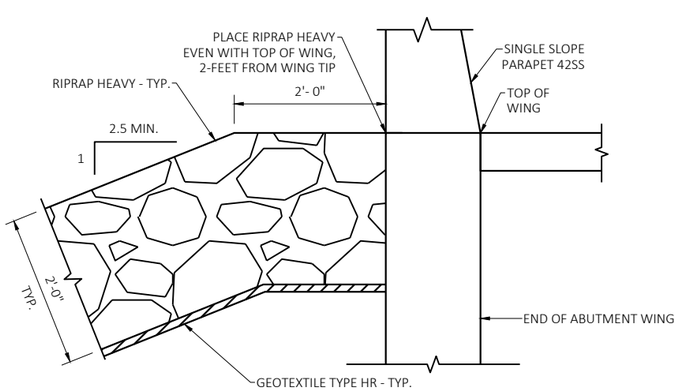

TYPICAL FILL SECTION AT WING TIPS

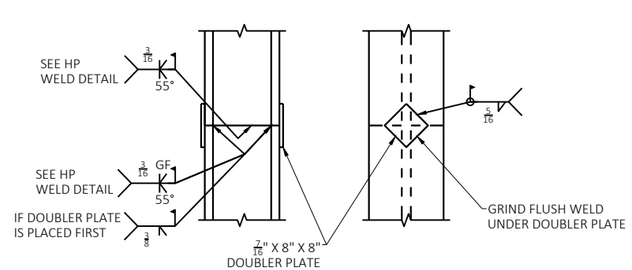

HP 12 x 53 SPLICE DETAIL

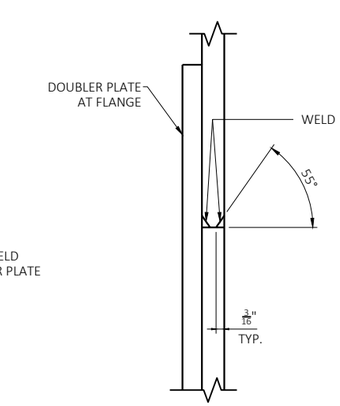

HP WELD DETAIL

FLANGE SHOWN, WEB SIMILAR

NO.	DATE	REVISION	BY

WSP USA

STRUCTURE B-25-194

DESIGNED BY	BD	DESIGNED CK'D	KA	DRAWN BY	GM	PLANS CK'D	KA

SHEET 2 OF 12

157

SCALE =

I.D.

DATE:

8

8

BORING #	DATE COMPLETED	NORTHING (Y)	EASTING (X)
B-1	9/13/2022	**226396.499**	321308.351
B-2	9/13/2022	**226350.181**	**321319.989**
BORINGS COMPLETED BY: CHOSEN VALLEY TESTING			
REPORT COMPLETED BY: CHOSEN VALLEY TESTING 10/26/2022			
ALL COORDINATES REFERENCED TO: WCCS NAD 83(91) IOWA COUNTY			

NOTES:

THE SUBSURFACE INFORMATION PRESENTED HEREIN IS AN ABBREVIATED VERSION OF THE INFORMATION PRESENTED IN THE GEOTECHNICAL ENGINEERING REPORT. REVIEW THE APPROPRIATE GEOTECHNICAL REPORT AND SOIL BORING LOGS FOR ADDITIONAL INFORMATION.

BORING STATIONS AND OFFSETS ARE BASED ON CENTERLINE OF ROAD.

THE GROUNDWATER ELEVATION WAS DETERMINED FROM WHERE THE SOIL SAMPLE WAS DESCRIBED AS WET.

STATE PROJECT NUMBER

5939-00-63

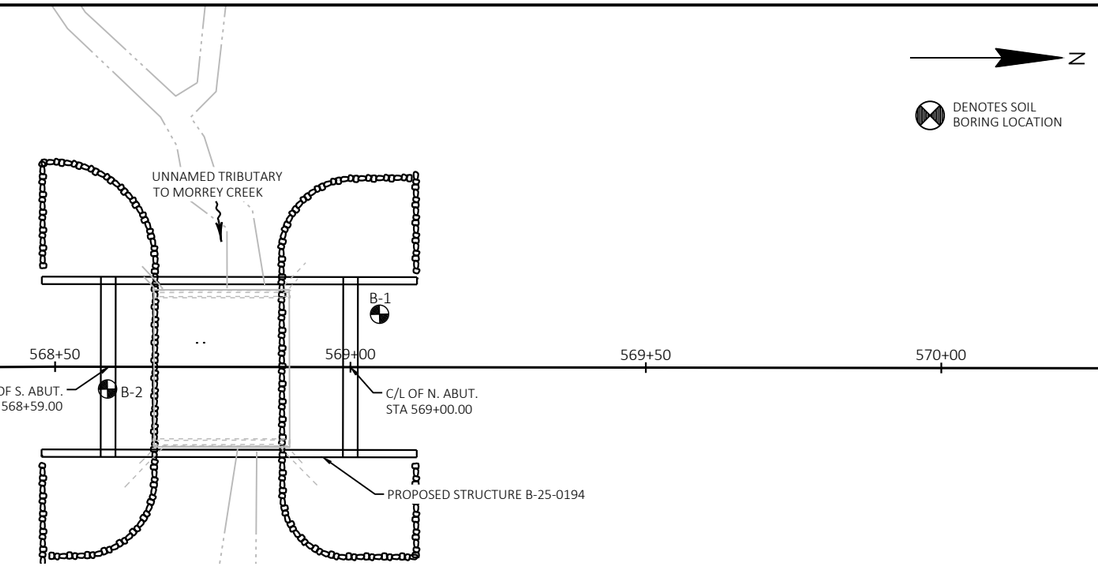

PLAN

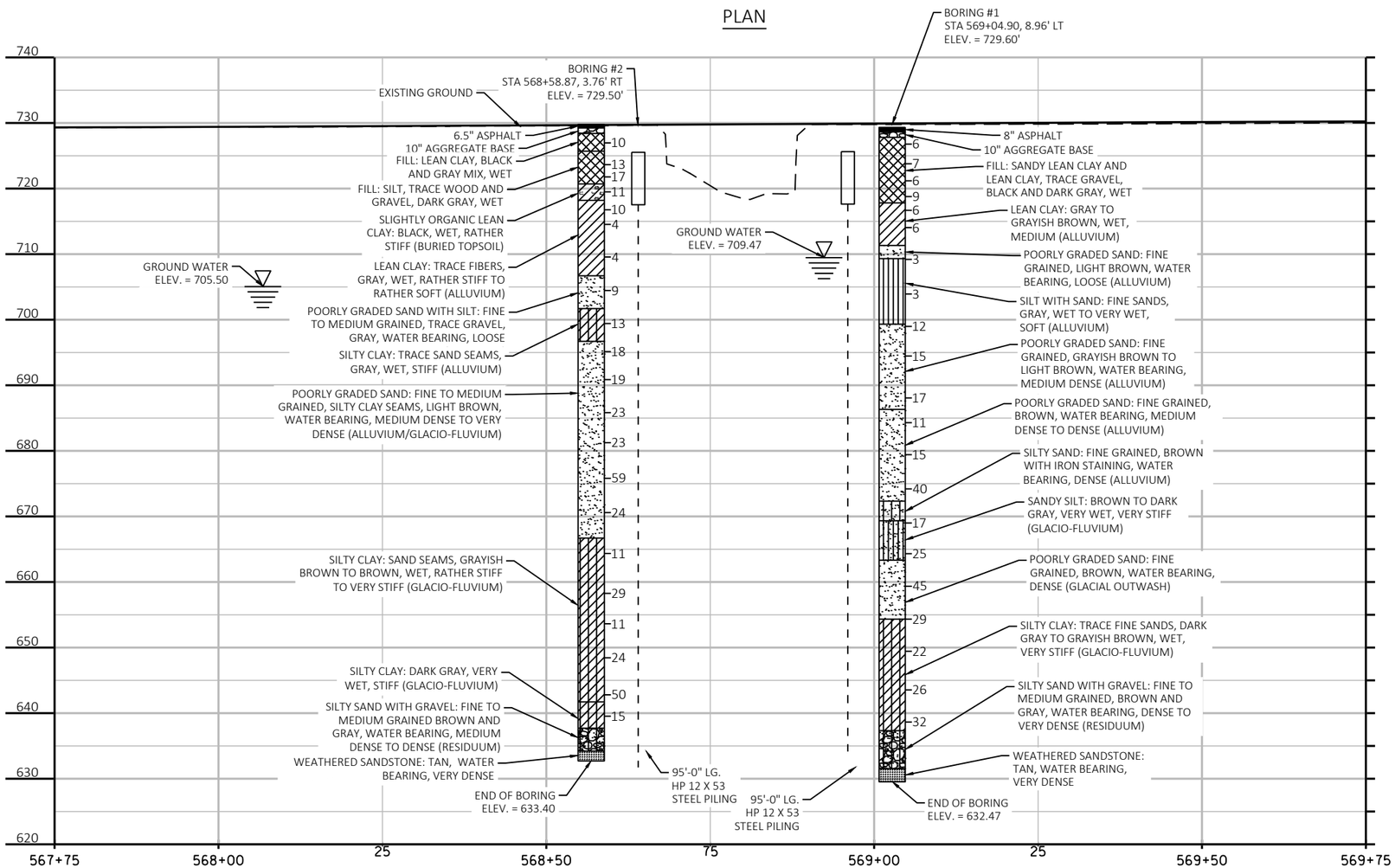

MATERIAL SYMBOLS

ASPHALT, TOPSOIL, PEAT, CONCRETE, FILL, GRAVEL, SAND, CLAY, SILT, BOULDERS OR COBBLES, LIMESTONE, BEDROCK (UNKNOWN), SHALE, SANDSTONE, IGNEOUS/ META

LEGEND OF BORING

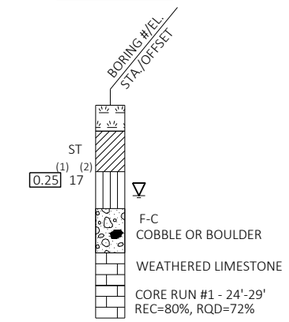

(1) UNCONFINED STRENGTH, AS DETERMINED BY A POCKET PENETROMETER (TSF)

(2) UNLESS OTHERWISE, SPECIFIED THE SPT 'N' VALUE IS BASED ON AASHTO T-206, STANDARD PENETRATION TEST. THE SPT 'N' VALUE PRESENTED HAS NOT BEEN CORRECTED FOR OVERBURDEN PRESSURE OR HAMMER EFFICIENCY.

GROUNDWATER ELEVATION

AT TIME OF DRILLING

END OF DRILLING

AFTER DRILLING

ABBREVIATIONS

F-FINE M-MEDIUM C-COARSE ST-SHELBY TUBE

SUBSURFACE EXPLORATION FOR FOUNDATION DESIGN AND BIDDERS INFORMATION

BORINGS WERE COMPLETED AT POINTS APPROXIMATELY AS INDICATED ON THIS DRAWING TO OBTAIN INFORMATION CONCERNING THE CHARACTER OF SUBSURFACE MATERIALS FOUND AT THE SITE. BECAUSE THE INVESTIGATED DEPTHS ARE LIMITED AND THE AREA OF THE BORINGS IS VERY SMALL IN RELATION TO THE ENTIRE SITE, THE WISCONSIN DEPARTMENT OF TRANSPORTATION DOES NOT WARRANT SIMILAR SUBSURFACE CONDITIONS BELOW, BETWEEN, OR BEYOND THESE BORINGS. VARIATIONS IN SOIL CONDITIONS SHOULD BE EXPECTED AND FLUCTUATIONS IN GROUNDWATER LEVELS MAY OCCUR.

NO.	DATE	REVISION	BY

WSP USA

STRUCTURE B-25-194

DESIGNED BY	BD	DESIGNED CK'D	KA	DRAWN BY	GM	PLANS CK'D	KA

SUBSURFACE EXPLORATION

SHEET 3 OF 12

158

8

8

SCALE =

I.D.

DATE:

STATE PROJECT NUMBER

5939-00-63

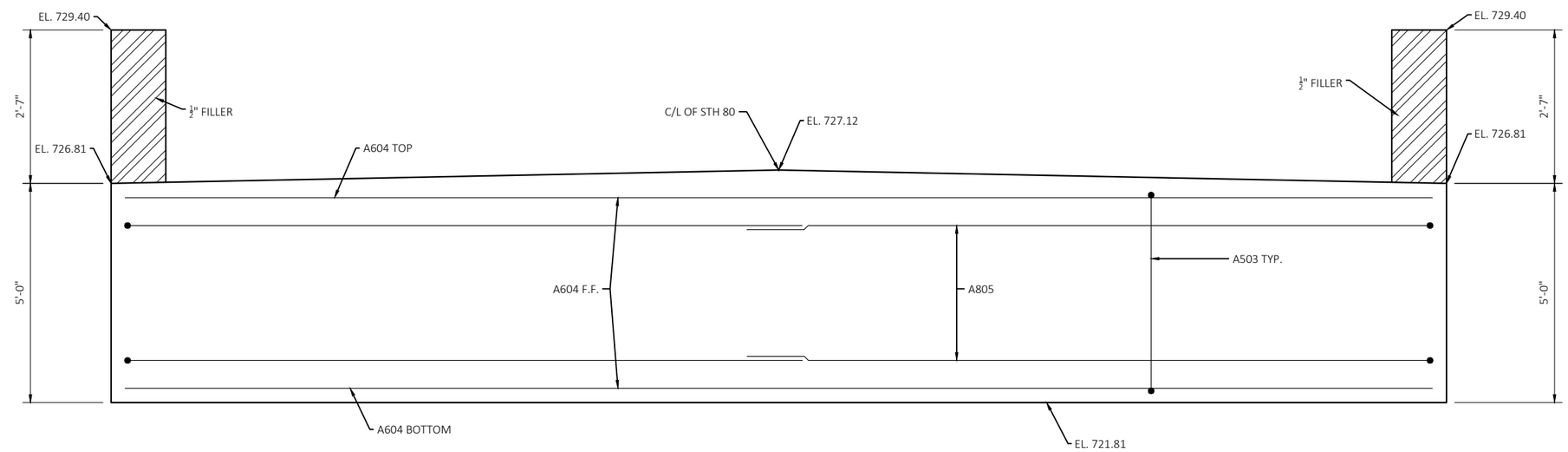

ELEVATION

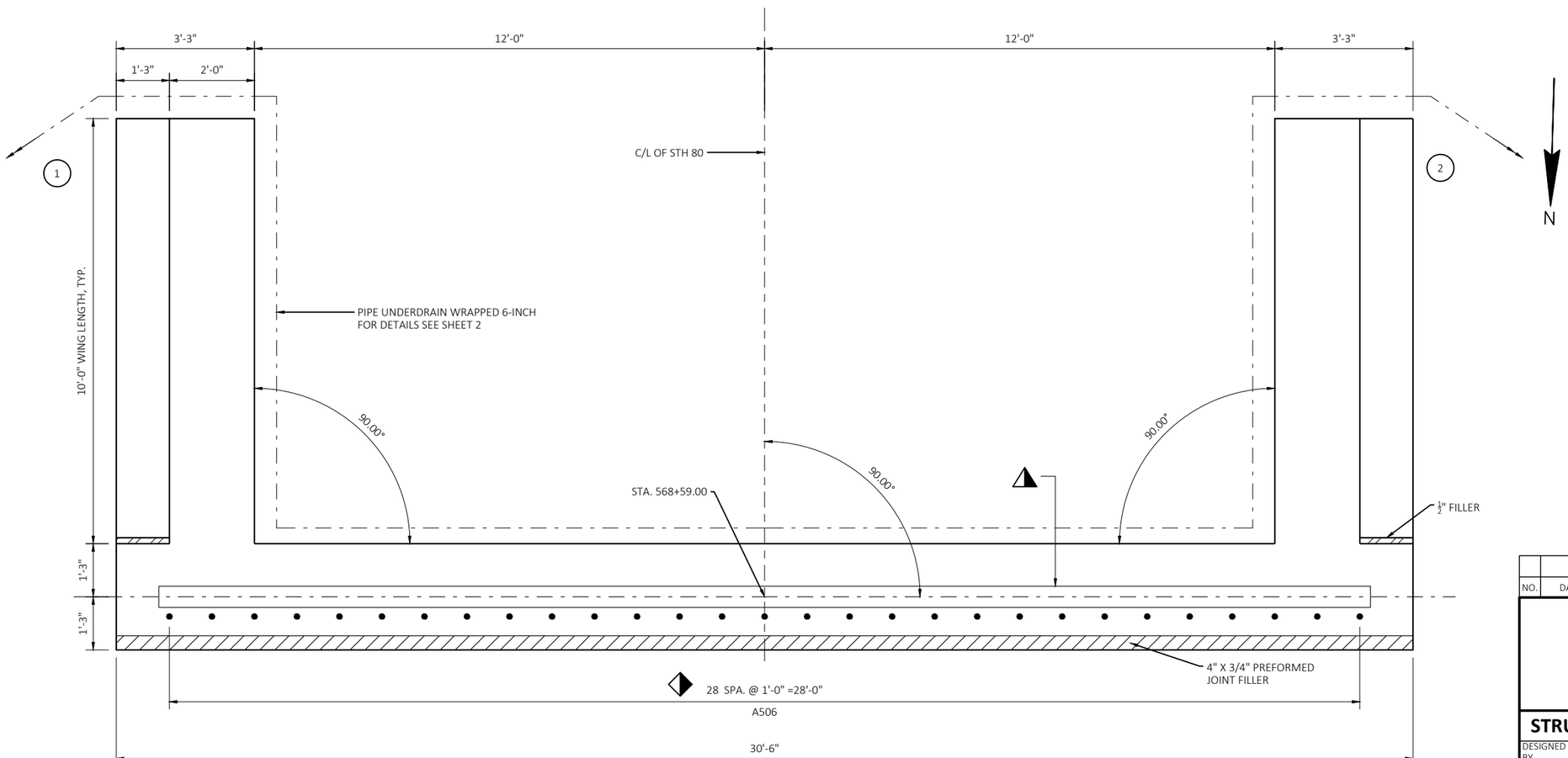

PLAN

NOTES:

- KEYED CONSTRUCTION JOINT FORMED BY BEVELED 2"X6".
- (X) DENOTES WING NUMBER
- THESE BARS MAY BE PLACED AFTER CONCRETE IS POURED BUT BEFORE INITIAL SET HAS TAKEN PLACE.
- 1/2" FILLER
- B.F. DENOTES BACK FACE
- F.F. DENOTES FRONT FACE
- E.F. DENOTES EACH FACE

NO.	DATE	REVISION	BY

WSP USA

STRUCTURE B-25-194

DESIGNED BY	DESIGNED CK'D	DRAWN BY	PLANS CK'D
BD	KA	GM	KA

SOUTH ABUTMENT

SHEET 4 OF 12

159

SCALE =

I.D.

DATE:

8

8

STATE PROJECT NUMBER

5939-00-63

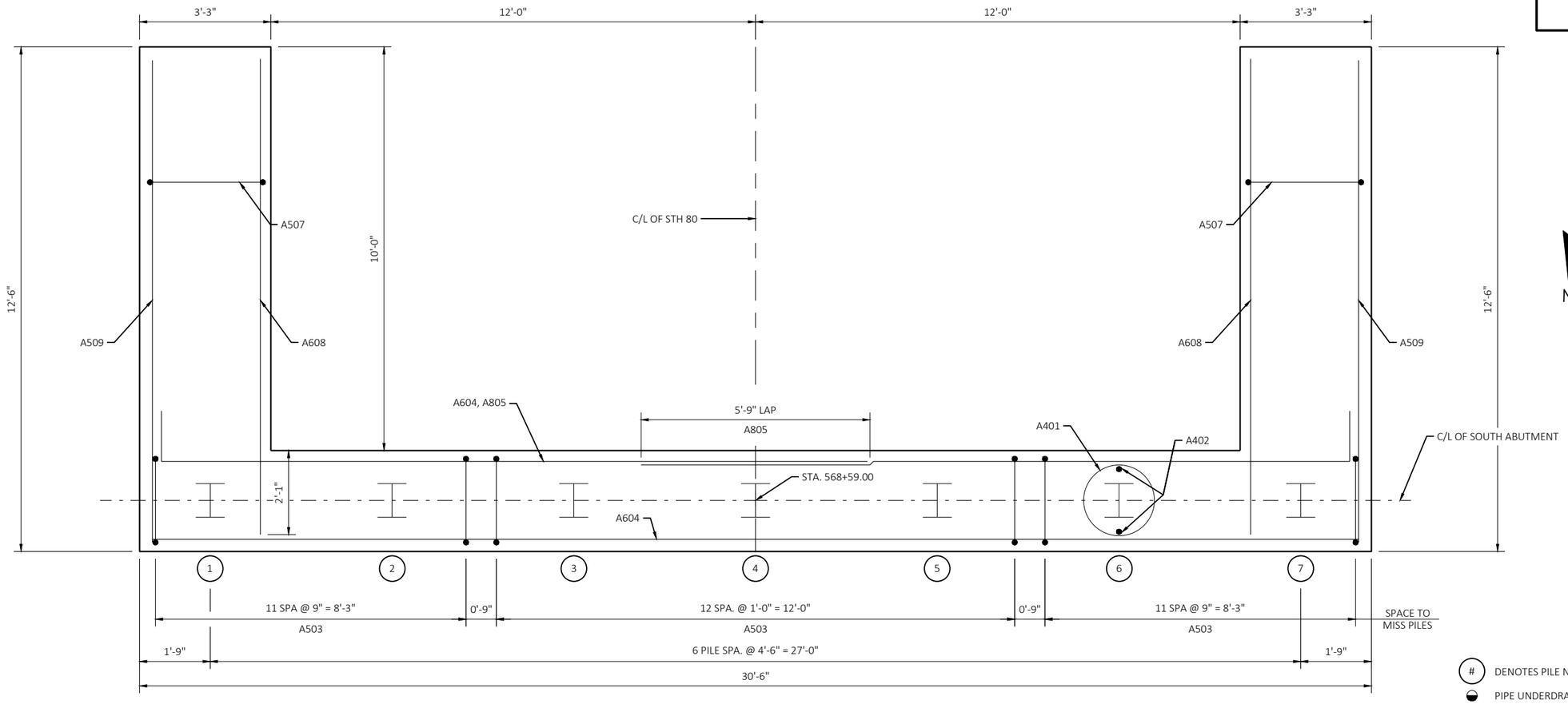

PILE LAYOUT

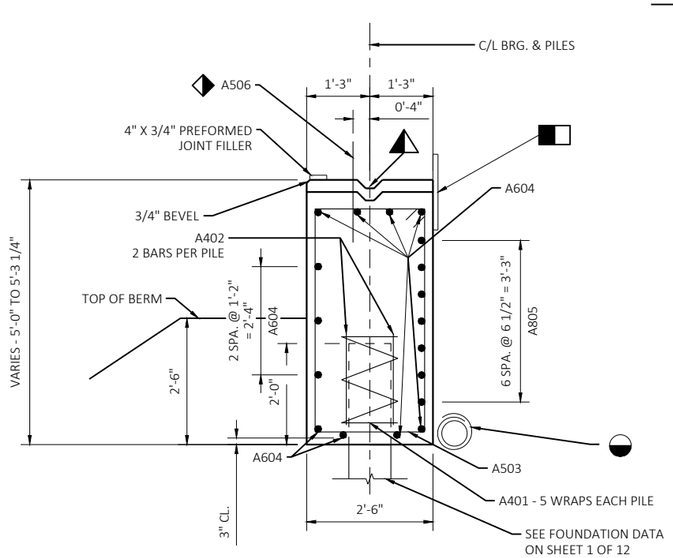

SECTION THRU BODY

(#) DENOTES PILE NUMBER

PIPE UNDERDRAIN WRAPPED 6-INCH. SLOPE 0.5% MIN. TO SUITABLE DRAINAGE. ATTACH RODENT SHIELD AT ENDS OF PIPE UNDERDRAIN AS DETAILED ON SHEET 2. RODENT SHIELD TO BE INCLUDED IN BID PRICE OF "PIPE UNDERDRAIN WRAPPED 6-INCH".

OPTIONAL CONST. JOINT FORMED BY BEVELED 2" X 6" KEYWAY WITH MEMBRANE ON BACKFACE

18" RUBBERIZED MEMBRANE WATERPROOFING. SEAL ALL HORIZONTAL AND VERTICAL JOINTS ON BACKFACE.

F.F DENOTES FRONT FACE

E.F. DENOTES EACH FACE

B.F. DENOTES BACK FACE

THESE BARS MAY BE PLACED AFTER CONCRETE IS POURED BUT BEFORE INITIAL SET HAS TAKEN PLACE.

8

NO.	DATE	REVISION	BY

WSP USA

STRUCTURE B-25-194

DESIGNED BY	BD	DESIGNED CK'D	KA	DRAWN BY	GM	PLANS CK'D	KA

SOUTH ABUTMENT DETAILS

SHEET 5 OF 12

160

SCALE =

I.D.

DATE:

8

STATE PROJECT NUMBER

5939-00-63

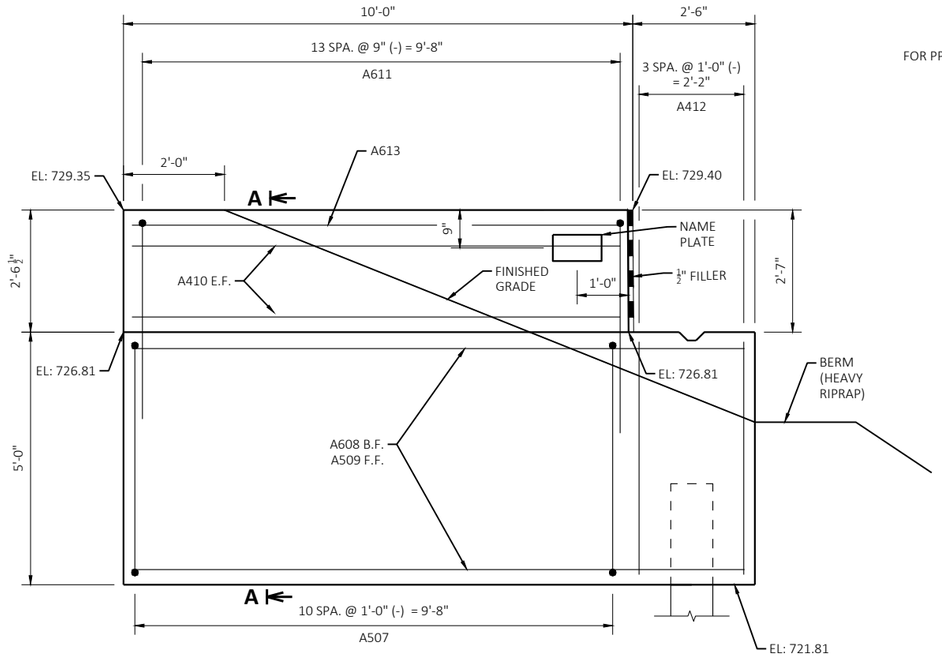

WING 1 ELEVATION

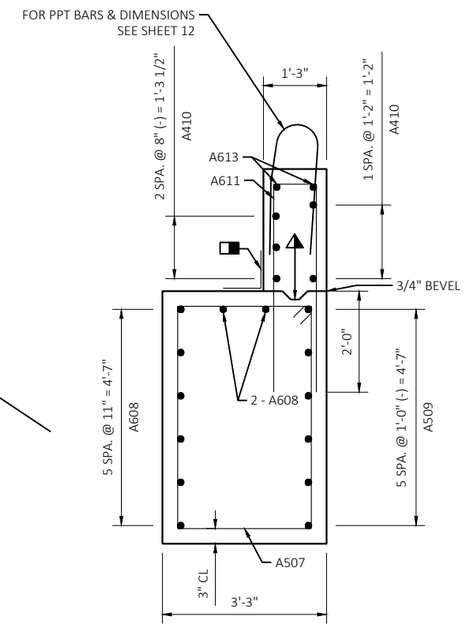

SECTION A-A

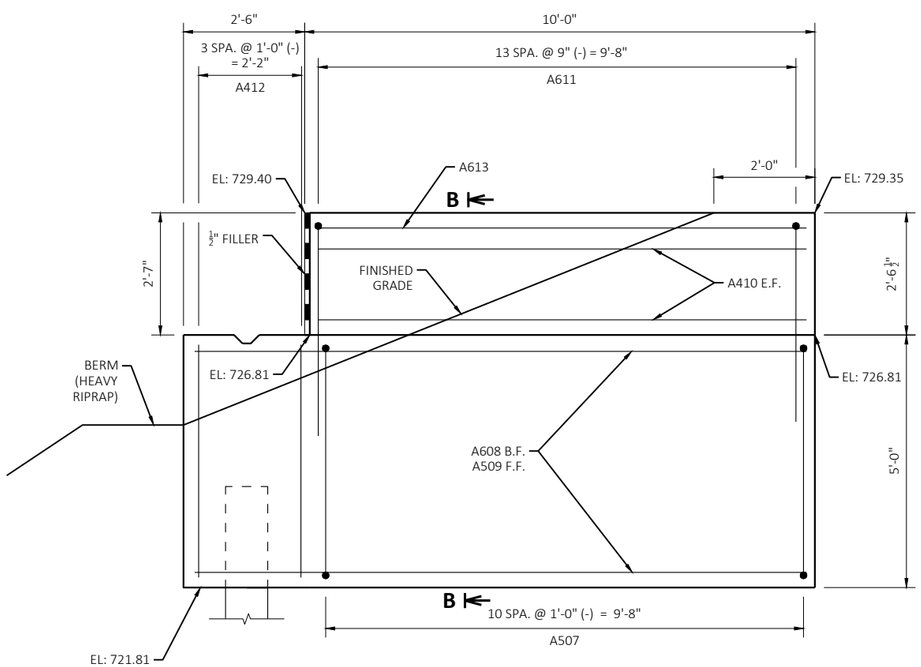

WING 2 ELEVATION

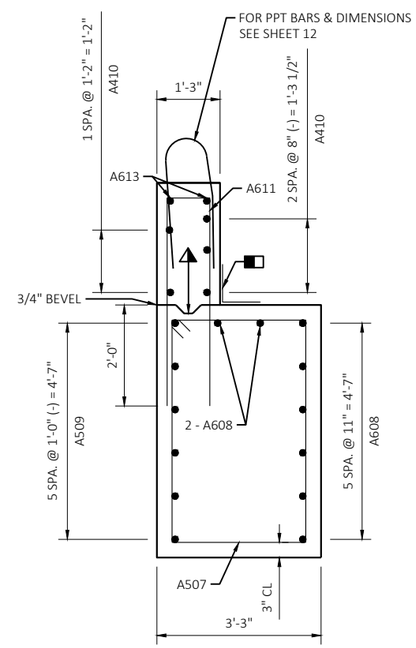

SECTION B-B

OPTIONAL CONST. JOINT FORMED BY BEVELED 2" X 6" KEYWAY WITH MEMBRANE ON BACKFACE

18" RUBBERIZED MEMBRANE WATERPROOFING. SEAL ALL HORIZONTAL AND VERTICAL JOINTS ON BACKFACE.

F.F DENOTES FRONT FACE

E.F. DENOTES EACH FACE

B.F. DENOTES BACK FACE

BILL OF BARS - SOUTH ABUTMENT					
BAR MARK	NUMBER REQUIRED	LENGTH	BENT	COAT	LOCATION
A401	7	28-0	X		BODY AT PILES
A402	14	2-3			BODY AT PILES
A503	37	14-0	X		BODY VERT.
A604	11	30-2			BODY HORIZ.
A805	7	19-1	X		BODY B.F. HORIZ.
A506	29	2-0		X	BODY DOWELS
A507	22	15-6	X	X	WING 1 & 2 VERT.
A608	16	11-11		X	WING 1 & 2 HORIZ. B.F.
A509	12	12-2		X	WING 1 & 2 HORIZ. F.F.
A410	10	9-8		X	WING 1 & 2 TOP
A611	28	9-5	X	X	WING 1 & 2 VERT.
A412	8	4-7		X	WING 1 & 2 VERT.
A613	4	9-8		X	WING 1 & 2 TOP

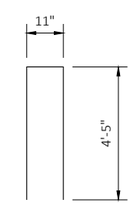

A611

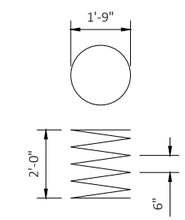

A401

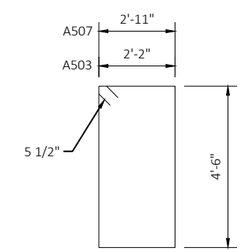

A503, A507

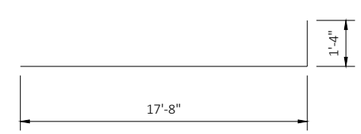

A805

NO.	DATE	REVISION	BY

WSP USA

STRUCTURE B-25-194

DESIGNED BY	BD	DESIGNED CK'D	KA	DRAWN BY	GM	PLANS CK'D	KA

SOUTH ABUTMENT WING DETAILS

SHEET 6 OF 12

161

SCALE =

I.D.

DATE:

8

8

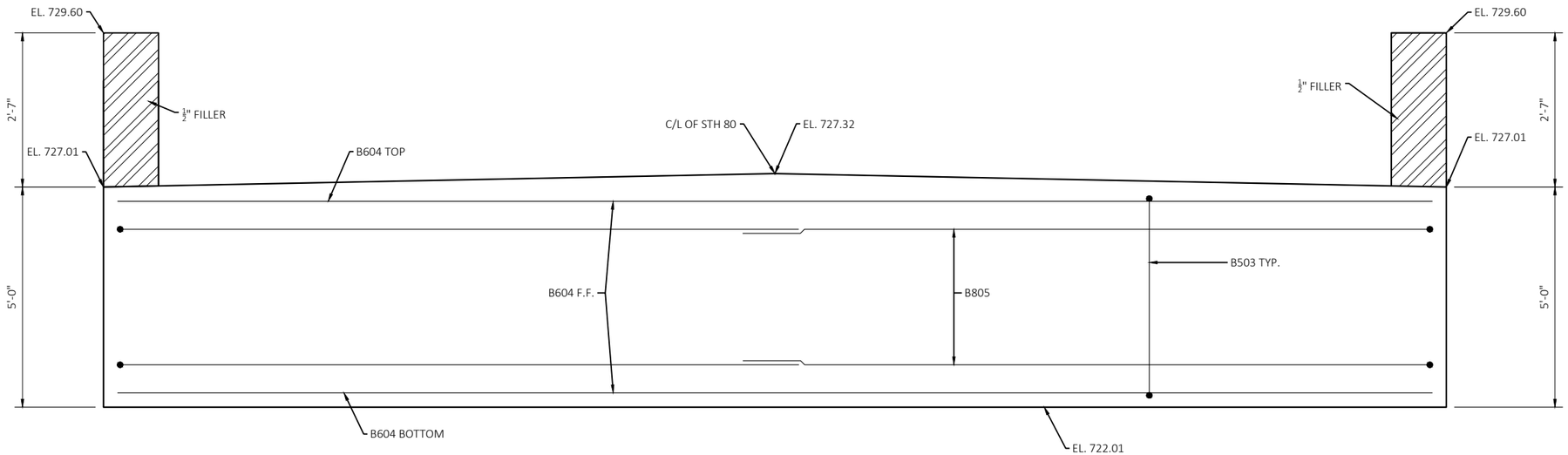

ELEVATION

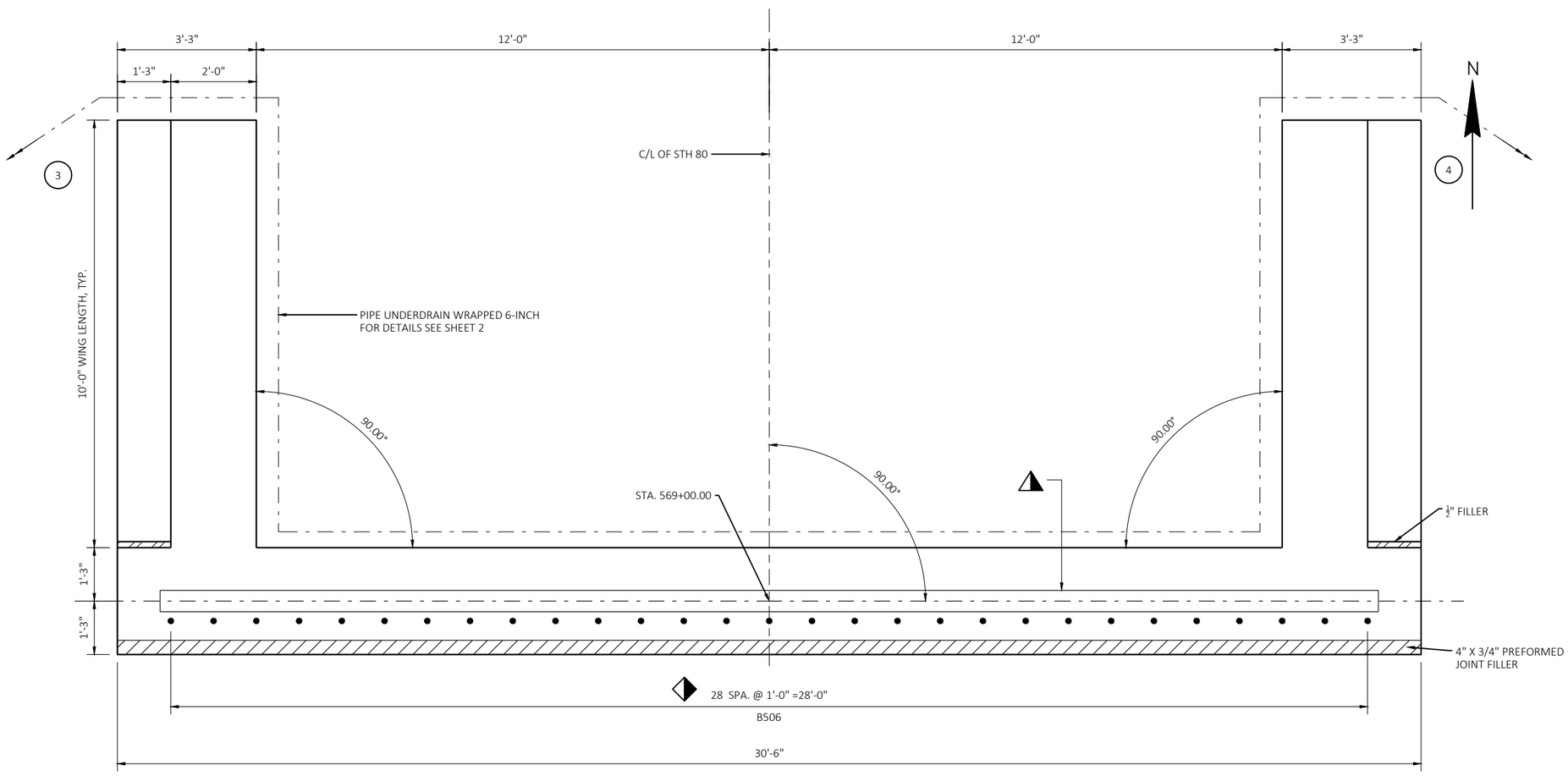

PLAN

STATE PROJECT NUMBER

5939-00-63

NOTES:

- KEYED CONSTRUCTION JOINT FORMED BY BEVELED 2"X6".
- (X) DENOTES WING NUMBER
- THESE BARS MAY BE PLACED AFTER CONCRETE IS POURED BUT BEFORE INITIAL SET HAS TAKEN PLACE.
- 1/2" FILLER
- B.F. DENOTES BACK FACE
- F.F. DENOTES FRONT FACE
- E.F. DENOTES EACH FACE

NO.	DATE	REVISION	BY

WSP USA

STRUCTURE B-25-194

DESIGNED BY	BD	DESIGNED CK'D	KA	DRAWN BY	GM	PLANS CK'D	KA

NORTH ABUTMENT

SHEET 7 OF 12

162

SCALE =

I.D.

DATE:

8

8

STATE PROJECT NUMBER

5939-00-63

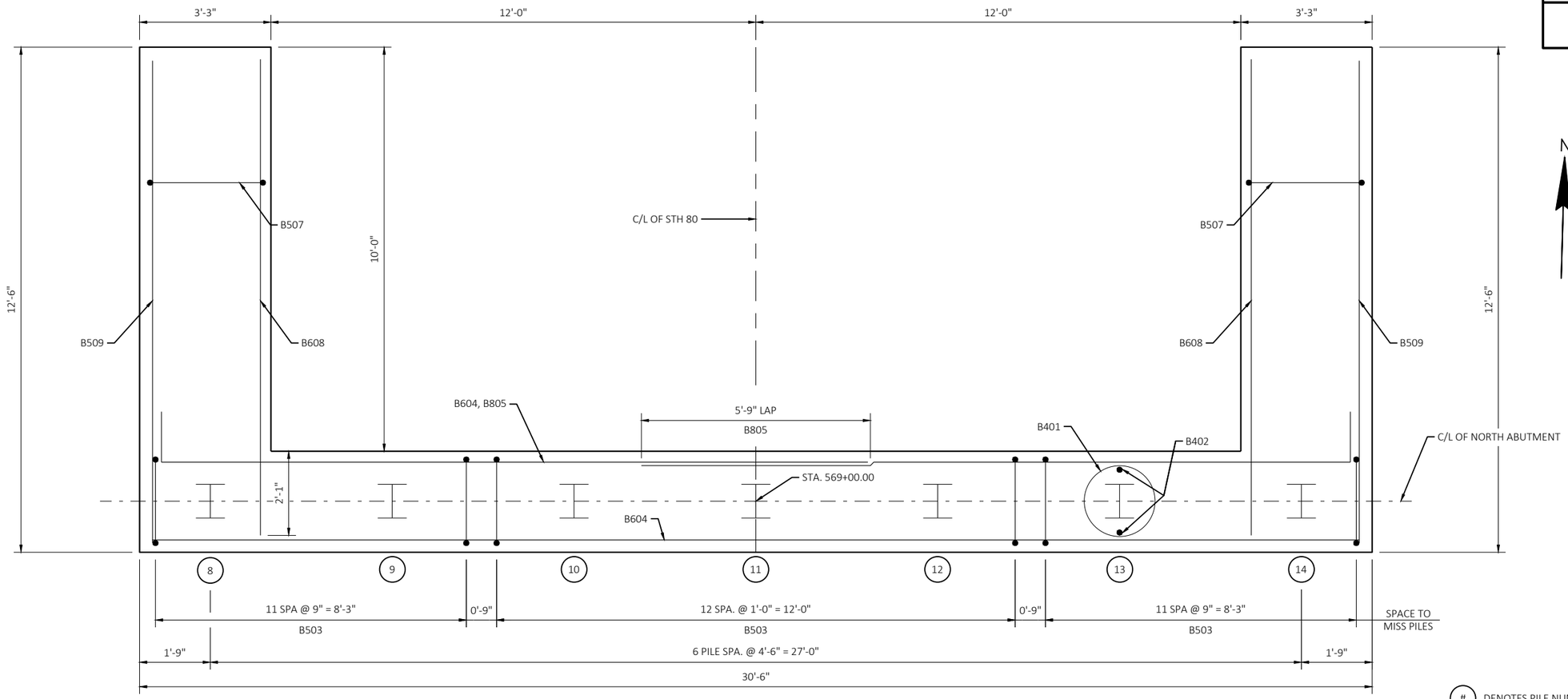

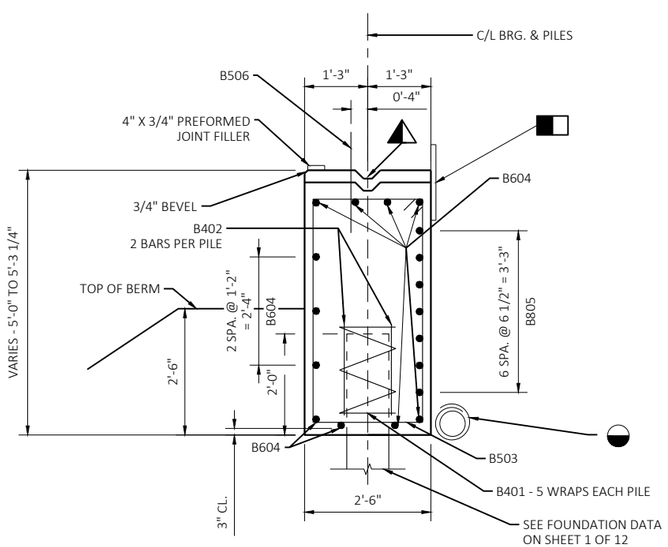

SECTION THRU BODY

(#) DENOTES PILE NUMBER

PIPE UNDERDRAIN WRAPPED 6-INCH. SLOPE 0.5% MIN. TO SUITABLE DRAINAGE. ATTACH RODENT SHIELD AT ENDS OF PIPE UNDERDRAIN AS DETAILED ON SHEET 2. RODENT SHIELD TO BE INCLUDED IN BID PRICE OF "PIPE UNDERDRAIN WRAPPED 6-INCH".

OPTIONAL CONST. JOINT FORMED BY BEVELED 2" X 6" KEYWAY WITH MEMBRANE ON BACKFACE

18" RUBBERIZED MEMBRANE WATERPROOFING. SEAL ALL HORIZONTAL AND VERTICAL JOINTS ON BACKFACE.

F.F DENOTES FRONT FACE

E.F. DENOTES EACH FACE

B.F. DENOTES BACK FACE

THESE BARS MAY BE PLACED AFTER CONCRETE IS POURED BUT BEFORE INITIAL SET HAS TAKEN PLACE.

NO.	DATE	REVISION	BY

WSP USA

STRUCTURE B-25-194

DESIGNED BY	BD	DESIGNED CK'D	KA	DRAWN BY	GM	PLANS CK'D	KA

NORTH ABUTMENT DETAILS

SHEET 8 OF 12

SCALE =

I.D.

DATE:

8

8

STATE PROJECT NUMBER

5939-00-63

OPTIONAL CONST. JOINT FORMED BY BEVELED 2" X 6" KEYWAY WITH MEMBRANE ON BACKFACE

18" RUBBERIZED MEMBRANE WATERPROOFING. SEAL ALL HORIZONTAL AND VERTICAL JOINTS ON BACKFACE.

F.F DENOTES FRONT FACE

E.F. DENOTES EACH FACE

B.F. DENOTES BACK FACE

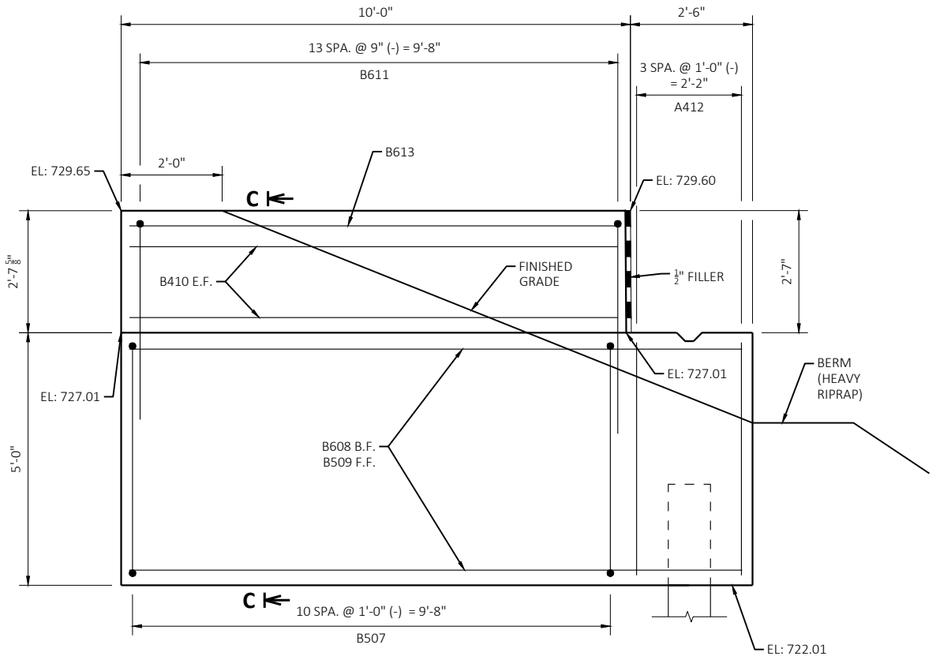

WING 3 ELEVATION

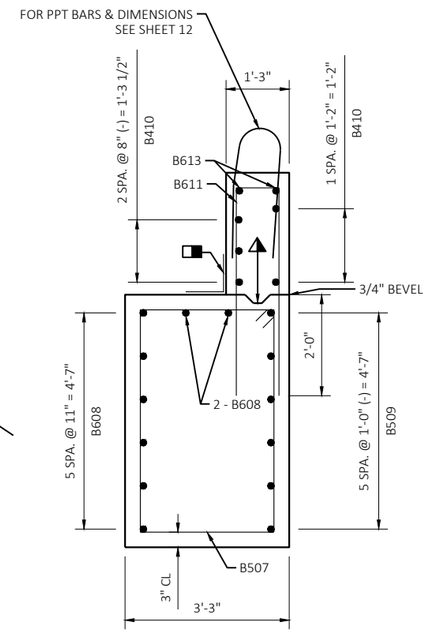

SECTION C-C

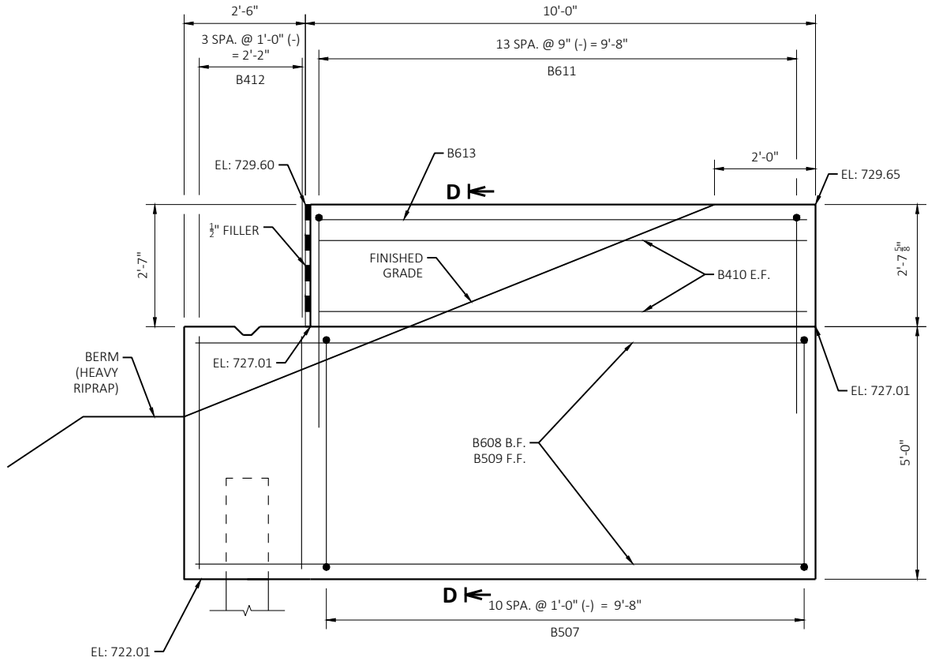

WING 4 ELEVATION

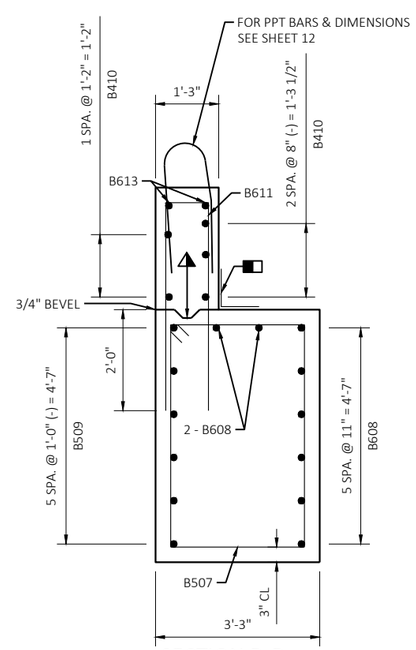

SECTION D-D

BILL OF BARS - NORTH ABUTMENT					
BAR MARK	NUMBER REQUIRED	LENGTH	BENT	COAT	LOCATION
B401	7	28-0	X		BODY AT PILES
B402	14	2-3			BODY AT PILES
B503	37	14-0	X		BODY VERT.
B604	11	30-2			BODY HORIZ.
B805	7	19-1	X		BODY B.F. HORIZ.
B506	29	2-0		X	BODY DOWELS
B507	22	15-6	X	X	WING 3 & 4 VERT.
B608	16	11-11		X	WING 3 & 4 HORIZ. B.F.
B509	12	12-2		X	WING 3 & 4 HORIZ. F.F.
B410	10	9-8		X	WING 3 & 4 TOP
B611	28	9-5	X	X	WING 3 & 4 VERT.
B412	8	4-7		X	WING 3 & 4 VERT.
B613	4	9-8		X	WING 3 & 4 TOP

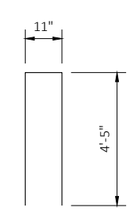

B611

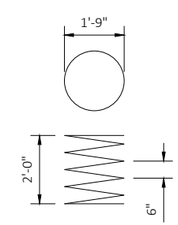

B401

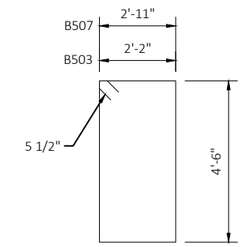

B503, B507

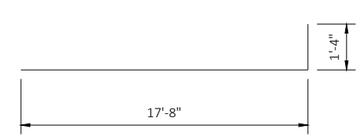

B805

NO.	DATE	REVISION	BY

WSP USA

STRUCTURE B-25-194

DESIGNED BY	BD	DESIGNED CK'D	KA	DRAWN BY	GM	PLANS CK'D	KA

NORTH ABUTMENT WING DETAILS

SHEET 9 OF 12

164

SCALE =

I.D.

DATE:

8

8

STATE PROJECT NUMBER

5939-00-63

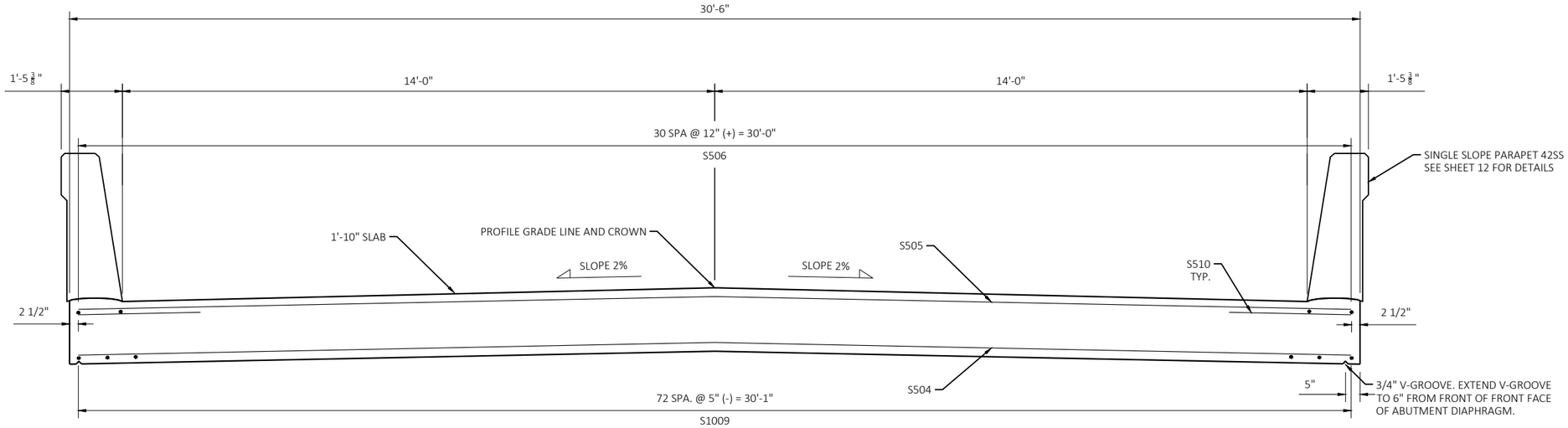

CROSS SECTION THRU ROADWAY

LOOKING NORTH

NOTES:

TOP TRANSVERSE BARS IN SLAB SHALL BE SUPPORTED BY INDIVUDUAL BAR CHAIRS AT APPROXIMATELY 3'-0" CENTER EACH WAY. BOTTOM LONGITUDINAL BARS SHALL BE SUPPORTED BY CONTINUOUS BAR CHAIRS AT APPROXIMATELY 4'-0" CENTERS.

ALL SLAB THICKNESS DIMENSIONS ARE MINIMUM. ANY TOLERANCES NECESSARY TO CORRECT CONSTRUCTION DISCREPANCIES ARE TO BE PLUS (+).

CAMBER SPANS AS SHOWN TO PROVIDE FOR DEAD LOAD DEFLECTION AND FUTURE CREEP. CAMBER DOES NOT INCLUDE ALLOWANCE FOR FORM SETTLEMENT.

PARAPETS PLACED ON TOP OF THE SLAB SHALL BE POURED AFTER FALSEWORK HAS BEEN RELEASED.

PRIOR TO RELEASING SLAB FALSEWORK, TAKE TOP OF SLAB ELEVATIONS AT THE C/L OF ABUTMENTS AT 5/10 PTS. TO VERIFY CAMBER. TAKE ELEVATIONS ALONG GUTTER LINES AND CROWN OR C/L.

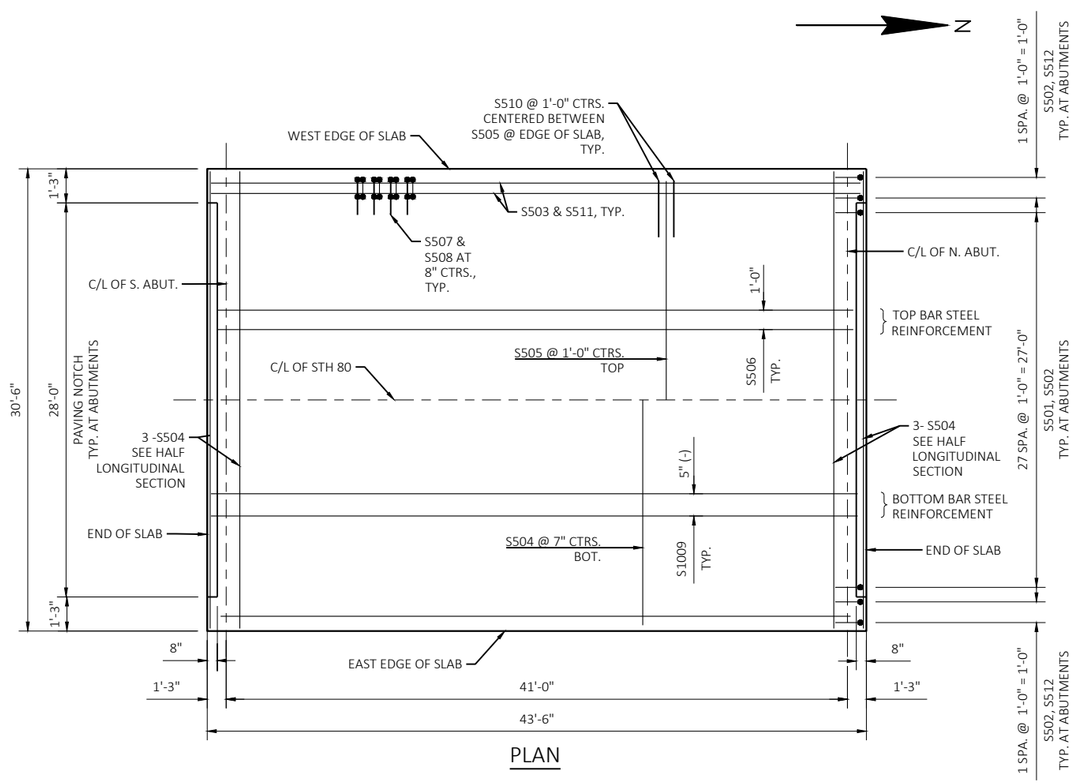

PLAN

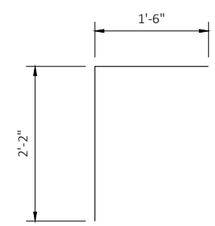

S502

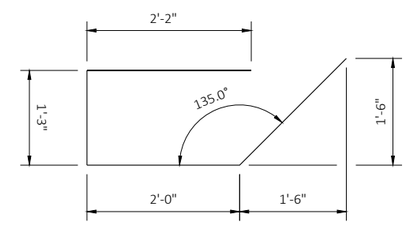

S501

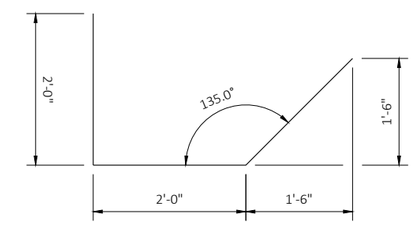

S512

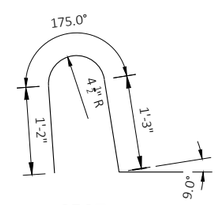

S507

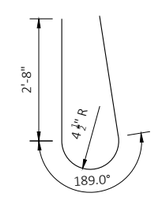

S508

8

8

NO.	DATE	REVISION	BY

WSP USA

STRUCTURE B-25-194

DESIGNED BY	BD	DESIGNED CK'D	KA	DRAWN BY	GM	PLANS CK'D	KA

SUPERSTRUCTURE

SHEET 10 OF 12

165

SCALE =

I.D.

DATE:

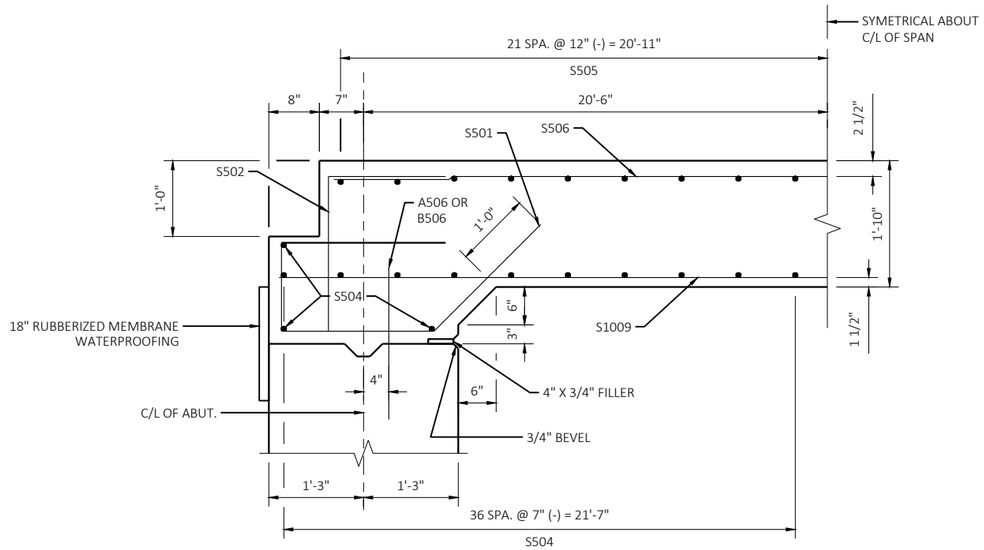

HALF LONGITUDINAL SECTION

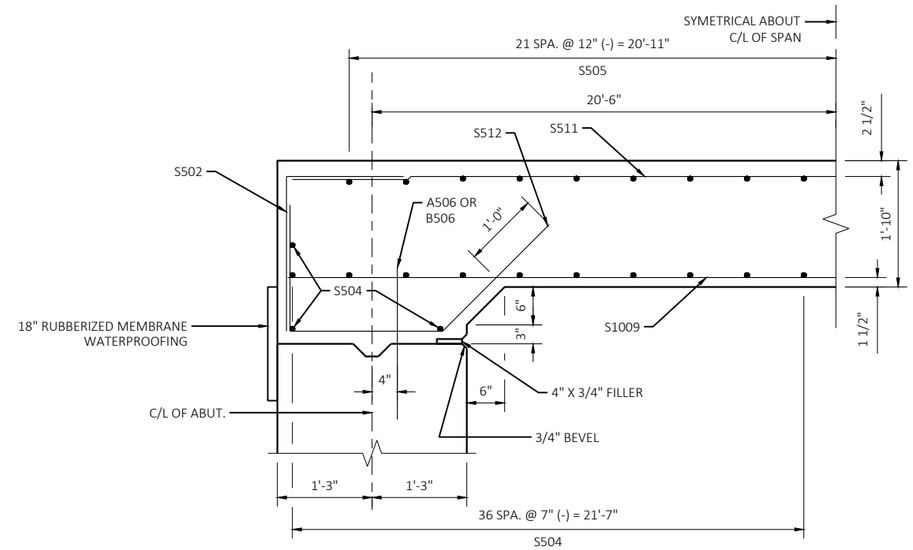

HALF LONGITUDINAL SECTION
BELOW PARAPET

STATE PROJECT NUMBER

5939-00-63

NOTES:

THE FIRST OR FIRST TWO DIGITS OF THE BAR MARK SIGNIFIES THE BAR SIZE

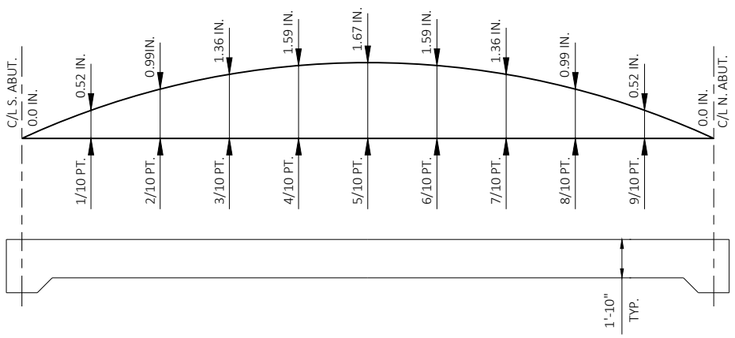

CAMBER DIAGRAM

CAMBER SHOWN IS BASED ON 3 TIMES DEAD LOAD DEFLECTIONS.

CAMBER SPANS AS SHOWN TO PROVIDE FOR DEAD LOAD DEFLECTION AND FUTURE CREEP. CAMBER DOES NOT INCLUDE ALLOWANCE FOR FORM SETTLEMENT.

PARAPETS, SIDEWALKS AND MEDIANS PLACED ON TOP OF THE SLAB SHALL BE POURED AFTER FALSEWORK HAS BEEN RELEASED, EXCEPT FOR STAGED CONSTRUCTION.

TO DETERMINE FALSEWORK ELEVATION AT EDGE OF SLAB, CROWN OR REFERENCE LINE FOLLOW THIS PROCEDURE:

	TOP OF SLAB ELEVATION AT FINAL GRADE
LESS	SLAB THICKENESS
PLUS	CAMBER
PLUS	FORM SETTLEMENT/DEFLECTION DUE TO PLACEMENT OF SLAB CONCRETE (TO BE COMPUTED BY THE CONTRACTOR)
EQUALS	TOP OF SLAB FALSEWORK ELEVATION.

BILL OF BARS - SUPERSTRUCTURE

BAR MARK	NUMBER REQUIRED	LENGTH	BENT	COAT	LOCATION
S501	56	7-3	X	X	END OF SLAB
S502	62	3-7	X	X	END OF SLAB
S503	16	43-2		X	PARAPET HORIZ.
S504	80	30-2		X	SLAB TRANS. BOT.
S505	44	30-2		X	SLAB TRANS. TOP
S506	31	41-10		X	SLAB LONG. TOP
S507	132	4-5	X	X	PARAPET VERT.
S508	132	6-8	X	X	PARAPET VERT.
S1009	73	43-2		X	SLAB LONG. BOT.
S510	88	5-0		X	SLAB-TOP TRANS.
S511	4	43-2		X	SLAB-TOP LONG.
S512	8	5-10	X	X	END OF SLAB

SURVEY TOP OF SLAB ELEVATIONS

	S ABUT.	$\frac{5}{10}$ PT.	N. ABUT
EAST EDGE OF SLAB			
C/L OF SUPERSTRUCTURE			
WEST EDGE OF SLAB			

LOCATION	C/L BRG. S. ABUT.	0.1 PT	0.2 PT	0.3 PT	0.4 PT	0.5 PT	0.6 PT	0.7 PT	0.8 PT	0.9 PT	C/L BRG. N. ABUT.
EAST EDGE OF DECK	729.42	729.44	729.46	729.48	729.50	729.52	729.54	729.56	729.58	729.60	729.62
C/L OF SUPERSTRUCTURE	729.70	729.72	729.74	729.76	729.78	729.80	729.82	729.84	729.86	729.88	729.90
WEST EDGE OF DECK	729.42	729.44	729.46	729.48	729.50	729.52	729.54	729.56	729.58	729.60	729.62

8

NO.	DATE	REVISION	BY

WSP USA

STRUCTURE B-25-194

DESIGNED BY	BD	DESIGNED CK'D	KA	DRAWN BY	GM	PLANS CK'D	KA

SUPERSTRUCTURE DETAILS & BILL OF BARS

SHEET 11 OF 12

166

I.D.

DATE:

SCALE =

STATE PROJECT NUMBER

5939-00-63

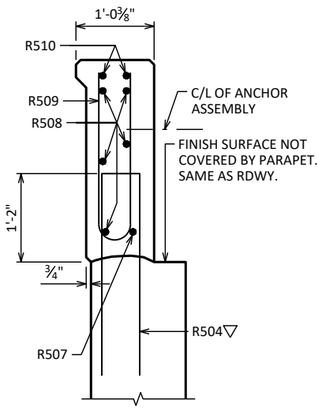

SECTION A-A

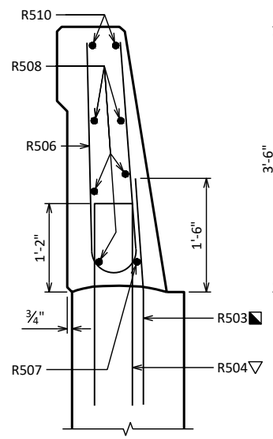

SECTION B-B

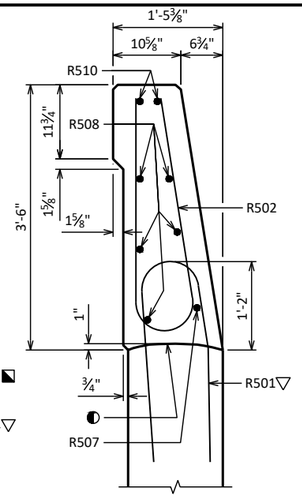

SECTION C-C

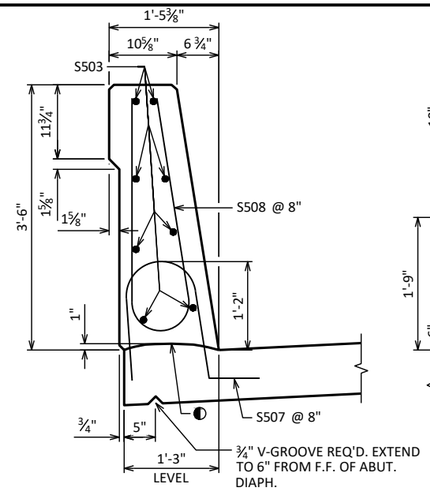

SECTION THRU PARAPET ON DECK

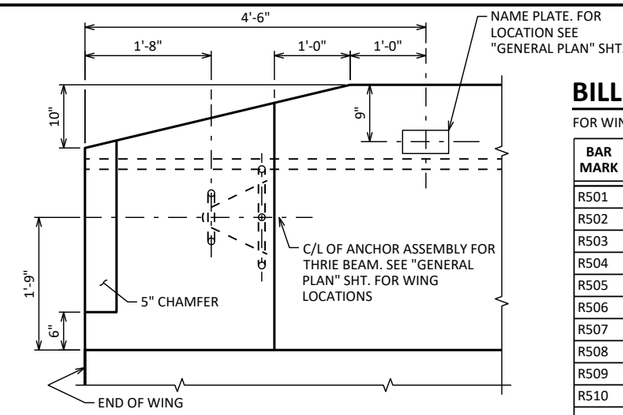

PARAPET END TREATMENT DETAIL

LOOKING AT INSIDE FACE OF PARAPET

BILL OF BARS

FOR WING PARAPETS

BAR MARK	COAT	N. ABUT.	S. ABUT.	LENGTH	BENT	BAR SERIES	LOCATION
R501	X	2	2	5'-10"	X		PARAPET VERT.
R502	X	2	2	6'-8"	X		PARAPET VERT.
R503	X	24	24	3'-0"	X		PARAPET VERT.
R504	X	34	34	5'-7"	X		PARAPET VERT.
R505	X	10	10	6'-5"	X		PARAPET VERT.
R506	X	12	12	6'-6"	X		PARAPET VERT.
R507	X	2	2	9'-6"	X		PARAPET HORIZ.
R508	X	10	10	9'-6"			PARAPET HORIZ.
R509	X	12	12	5'-5"	X	⚠	PARAPET VERT.
R510	X	4	4	9'-7"	X		PARAPET HORIZ.

⚠ LENGTH SHOWN FOR BAR IS AN AVERAGE AND SHOULD ONLY BE USED FOR BAR WEIGHT CALCULATIONS. SEE BAR SERIES TABLE FOR ACTUAL LENGTHS.

BAR SERIES TABLE

BUNDLE AND TAG EACH SERIES SEPARATELY.

BAR MARK	NO. REQ'D.	LENGTH
R509	4 SERIES OF 6	4'-9" TO 6'-1"

OPTIONAL CONSTRUCTION JOINTS IN THE PARAPETS MAY BE USED. RUN BAR REINF. THRU THE JOINT. LAP LONGIT. BARS A MIN. OF 1'-9". MIN. JOINT SPACING OF 80'-0". DEFINE CONST. JOINT WITH A ¾" - 'V' GROOVE

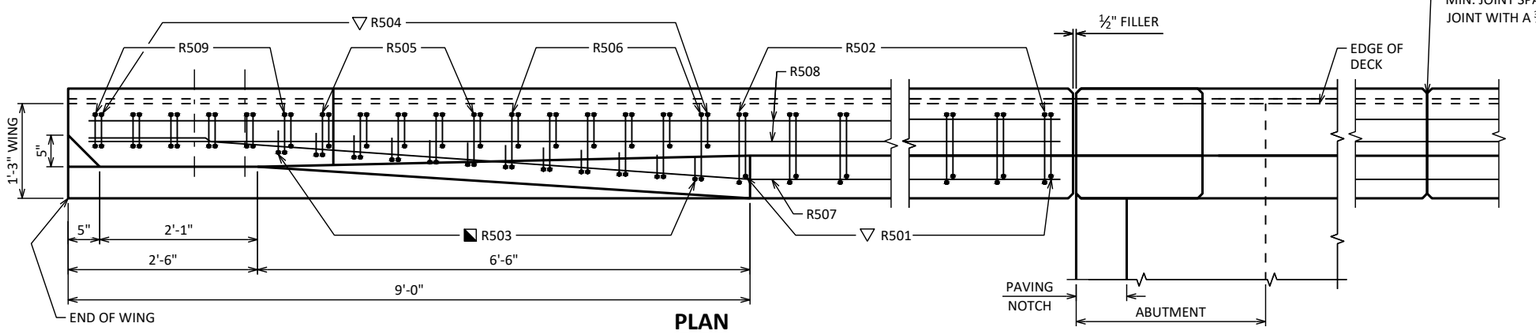

PLAN

SW CORNER SHOWN, OTHERS SIMILAR

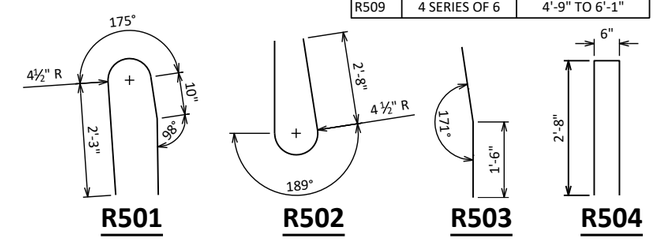

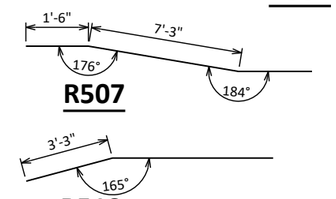

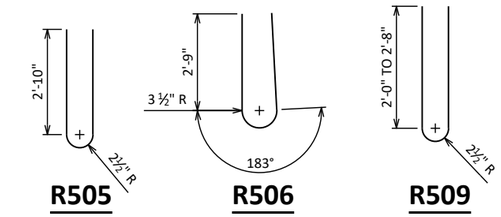

SEE "ABUTMENT" SHEETS FOR WING LENGTHG LENGTH

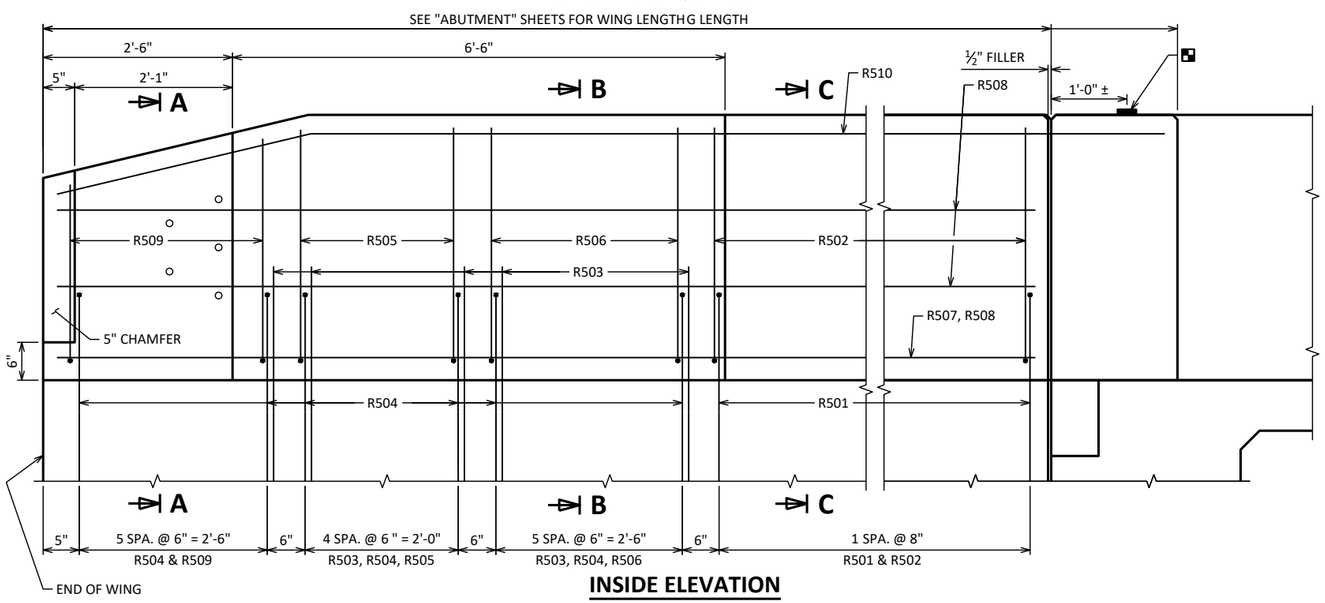

INSIDE ELEVATION

SW CORNER SHOWN, OTHERS SIMILAR

BENCH MARK CAP (WHEN SUPPLIED). AVOID PLACING A BENCH MARK CAP BELOW A RAIL OR FENCE SYSTEM THAT IS ATTACHED TO THE TOP OF THE PARAPET.

THREADED INSERTS FOR ⅞" DIA. X 2" LONG GALVANIZED HEX HEAD CAP SCREWS. CAP SCREWS TO BE THREADED A MIN. OF 1⅞" AND SHALL BE SUPPLIED, INCLUDING WASHERS, WITH ASSEMBLY. INSERTS TO BE THREADED A MINIMUM OF 1¾"

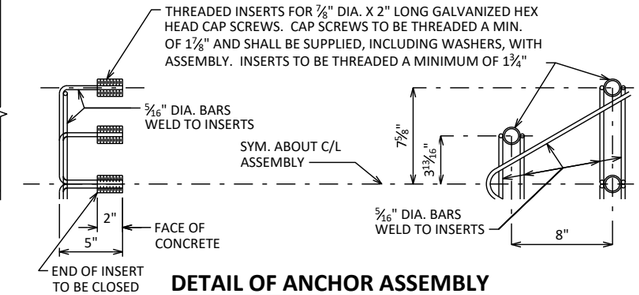

DETAIL OF ANCHOR ASSEMBLY

NOTE: HEX HEAD CAP SCREWS & WASHERS TO BE GALVANIZED IN ACCORDANCE WITH AASHTO M232 CLASS C.

ASSEMBLY SHALL BE BID ITEM "ANCHOR ASSEMBLIES FOR STEEL PLATE BEAM GUARD", EACH.

◐ CONST. JOINT - STRIKE OFF AS SHOWN

◪ R503 BARS MAY BE PLACED AFTER CONCRETE IS POURED BUT BEFORE INITIAL SET HAS TAKEN PLACE. USE CARE TO PLACE R503 BARS CORRECTLY ALONG TRANSITION OF PARAPET.

▽ R501 AND R504 BARS TO BE TIED TO WING STEEL BEFORE WING IS POURED.

NO.	DATE	REVISION	BY

WSP USA

STRUCTURE B-25-194

DRAWN BY CJO | PLANS CK'D KA

SINGLE SLOPE PARAPET 42SS

SHEET 12 OF 12

167

SCALE = 2.00

8

8

DIVISION 1 - STH 80, B-25-194 SOUTH APPROACH

STATION	REAL STATION	DISTANCE	AREA (SF)			INCREMENTAL VOL (CY) (UNADJUSTED)			CUMULATIVE VOL (CY)		
			CUT	SALVAGED/UNUSABLE PAVEMENT MATERIAL	FILL	CUT NOTE 1	SALVAGED/UNUSABLE PAVEMENT MATERIAL NOTE 2	FILL NOTE 3	CUT 1.00 NOTE 1	EXPANDED FILL 1.25	MASS ORDINATE NOTE 4
565+79.527	56579.53	0.00	4.93	0.00	12.15	0	0	0	0	0	0
566+00	56600.00	20.47	4.45	0.00	14.72	4	0	10	4	13	-9
566+25	56625.00	25.00	77.64	14.90	24.81	38	7	18	42	35	0
566+69.53	56669.53	44.53	87.50	14.92	15.09	136	25	33	178	76	70
566+94.52	56694.52	24.99	89.10	16.14	12.74	82	14	13	260	93	122
567+00	56700.00	5.48	89.53	16.22	15.86	18	3	3	278	96	133
567+19.52	56719.52	19.52	90.45	16.51	27.64	65	12	16	343	116	166
567+32.268	56732.27	12.75	92.81	16.64	27.15	43	8	13	386	133	185
567+57.27	56757.27	25.00	91.10	17.66	15.77	85	16	20	471	158	229
567+82.27	56782.27	25.00	90.38	17.52	11.51	84	16	13	555	174	280
568+00	56800.00	17.73	90.19	17.30	16.61	59	11	9	614	185	317
568+47.638	56847.64	47.64	81.38	15.71	17.51	151	29	30	765	223	402

DIVISION 1 - STH 80, B-25-194 NORTH APPROACH

STATION	REAL STATION	DISTANCE	AREA (SF)			INCREMENTAL VOL (CY) (UNADJUSTED)			CUMULATIVE VOL (CY)		
			CUT	SALVAGED/UNUSABLE PAVEMENT MATERIAL	FILL	CUT NOTE 1	SALVAGED/UNUSABLE PAVEMENT MATERIAL NOTE 2	FILL NOTE 3	CUT 1.00 NOTE 1	EXPANDED FILL 1.25	MASS ORDINATE NOTE 8
569+11.25	56911.25	0.00	77.84	15.75	14.16	0	0	0	0	0	0
569+76.83	56976.83	65.58	82.30	17.40	9.67	194	40	29	194	36	118
570+00	57000.00	23.17	84.57	17.50	16.85	72	15	11	266	50	161
570+01.83	57001.83	1.83	84.67	17.49	17.14	6	1	1	272	51	165
570+26.834	57026.83	25.00	86.90	16.47	18.21	79	16	16	351	71	208
570+39.34	57039.34	12.51	84.24	16.29	15.73	40	8	8	391	81	230
570+64.34	57064.34	25.00	88.50	16.17	6.56	80	15	10	471	94	282
570+89.337	57089.34	25.00	106.44	16.04	0.44	90	15	3	561	98	354
571+00	57100.00	10.66	109.92	14.92	0.01	43	6	0	604	98	391
571+50	57150.00	50.00	130.49	14.83	0.00	223	28	0	827	98	586
571+79.57	57179.57	29.57	36.12	0.00	0.00	91	8	0	918	98	669

NOTES:	
1 - CUT	CUT INCLUDES SALVAGED/UNUSABLE PAVEMENT MATERIAL
2 - SALVAGED/UNUSABLE PAVEMENT MATERIAL	THIS DOES NOT SHOW UP IN CROSS SECTIONS
3 - FILL	DOES NOT INCLUDE UNUSABLE PAVEMENT EXC VOLUME
4 - MASS ORDINATE	IF MARSH OR EBS TO BE BACKFILLED WITH COMMON OR BORROW: [(CUT - SALVAGED PAVT - EXPANDED MARSH EXC - EXPANDED EBS) - ((FILL - REDUCED MARSH IN FILL - REDUCED EBS IN FILL - EXPANDED ROCK) * FILL FACTOR)]

DIVISION 1 - SPRING VALLEY DRIVEWAY

STATION	REAL STATION	DISTANCE	AREA (SF)			INCREMENTAL VOL (CY) (UNADJUSTED)			CUMULATIVE VOL (CY)		
			CUT	SALVAGED/UNUSABLE PAVEMENT MATERIAL	FILL	CUT	SALVAGED/UNUSABLE PAVEMENT MATERIAL	FILL	CUT	EXPANDED FILL	MASS ORDINATE
						NOTE 1	NOTE 2	NOTE 3	1.00 NOTE 1	1.25	NOTE 8
01+75	175.00	0.00	9.29	0.00	0.01	0	0	0	0	0	0
01+80	180.00	5.00	9.02	0.00	0.02	2	0	0	2	0	2
01+85	185.00	5.00	9.18	0.00	0.03	2	0	0	4	0	4
01+90	190.00	5.00	9.40	0.00	0.02	2	0	0	6	0	6
01+95	195.00	5.00	9.21	0.00	0.01	2	0	0	8	0	8
02+00	200.00	5.00	10.05	0.00	0.00	2	0	0	10	0	10
02+05	205.00	5.00	11.91	0.00	0.00	2	0	0	12	0	12
02+10	210.00	5.00	14.68	0.00	0.00	2	0	0	14	0	14
02+15	215.00	5.00	17.41	0.00	0.00	3	0	0	17	0	17
02+20	220.00	5.00	20.67	0.00	0.00	4	0	0	21	0	21
02+25	225.00	5.00	24.74	0.00	0.00	4	0	0	25	0	25
02+30	230.00	5.00	28.96	0.00	0.00	5	0	0	30	0	30
02+35	235.00	5.00	33.73	0.00	0.00	6	0	0	36	0	36
02+40	240.00	5.00	39.28	0.00	0.00	7	0	0	43	0	43
02+45	245.00	5.00	45.94	0.00	0.00	8	0	0	51	0	51
02+50	250.00	5.00	52.54	0.00	0.00	9	0	0	60	0	60
02+55	255.00	5.00	44.84	0.00	0.00	9	0	0	69	0	69
02+60	260.00	5.00	50.11	0.00	0.00	9	0	0	78	0	78
02+65	265.00	5.00	56.10	0.00	0.00	10	0	0	88	0	88
02+70	270.00	5.00	58.45	0.00	0.00	11	0	0	99	0	99
02+75	275.00	5.00	51.96	0.00	0.00	10	0	0	109	0	109
02+80	280.00	5.00	58.71	0.00	0.00	10	0	0	119	0	119
02+85	285.00	5.00	45.23	0.00	0.00	10	0	0	129	0	129
02+90	290.00	5.00	35.20	0.00	0.00	7	0	0	136	0	136
02+95	295.00	5.00	27.98	0.00	0.00	6	0	0	142	0	142
03+00	300.00	5.00	21.32	0.00	0.06	5	0	0	147	0	147
03+05	305.00	5.00	13.64	0.00	0.55	3	0	0	150	0	150
03+10	310.00	5.00	12.55	0.00	2.00	2	0	0	152	0	152

NOTES:	
1 - CUT	CUT INCLUDES SALVAGED/UNUSABLE PAVEMENT MATERIAL
2 - SALVAGED/UNUSABLE PAVEMENT MATERIAL	THIS DOES NOT SHOW UP IN CROSS SECTIONS
3 - FILL	DOES NOT INCLUDE UNUSABLE PAVEMENT EXC VOLUME
4 - MASS ORDINATE	IF MARSH OR EBS TO BE BACKFILLED WITH COMMON OR BORROW: [(CUT - SALVAGED PAVT - EXPANDED MARSH EXC - EXPANDED EBS) - ((FILL - REDUCED MARSH IN FILL - REDUCED EBS IN FILL - EXPANDED ROCK) * FILL FACTOR)]

9

9

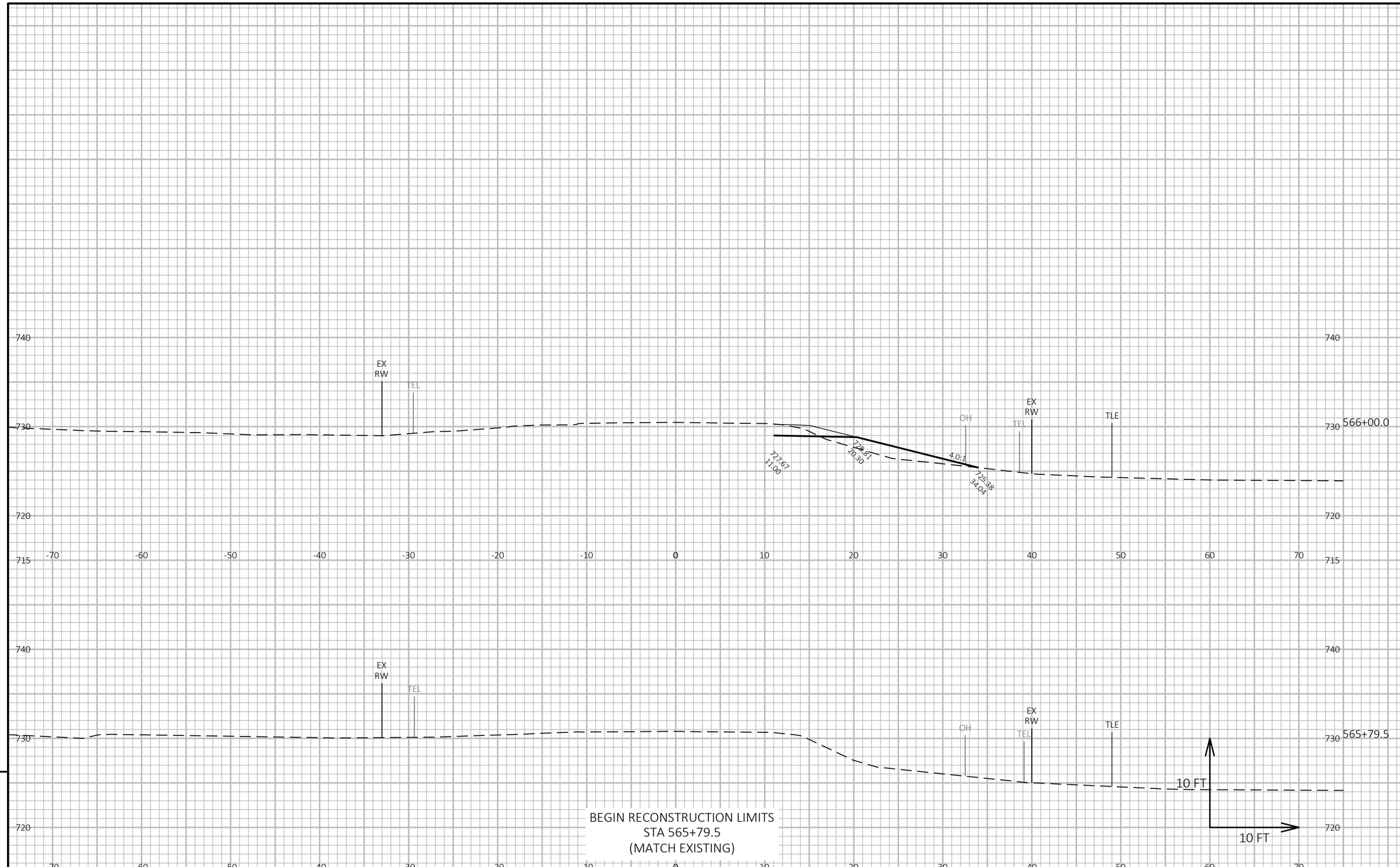

9

9

PROJECT NO: 5939-00-63	HWY: STH 80	COUNTY: IOWA	CROSS SECTIONS: STH 80	SHEET 170	E

FILE NAME : W:\7701_07\CAD\! XXXX-XX-XX\SHEETSPLAN\090201-XS.DWG
LAYOUT NAME - 01

PLOT DATE : 4/15/2025 8:59 PM PLOT BY : SEBESTA, MAXWELL PLOT NAME : **PLOT SCALE :** 1 IN:10 FT HORZ. / 1 IN:10 FT VERT.

WISDOT/CADDS SHEET 49

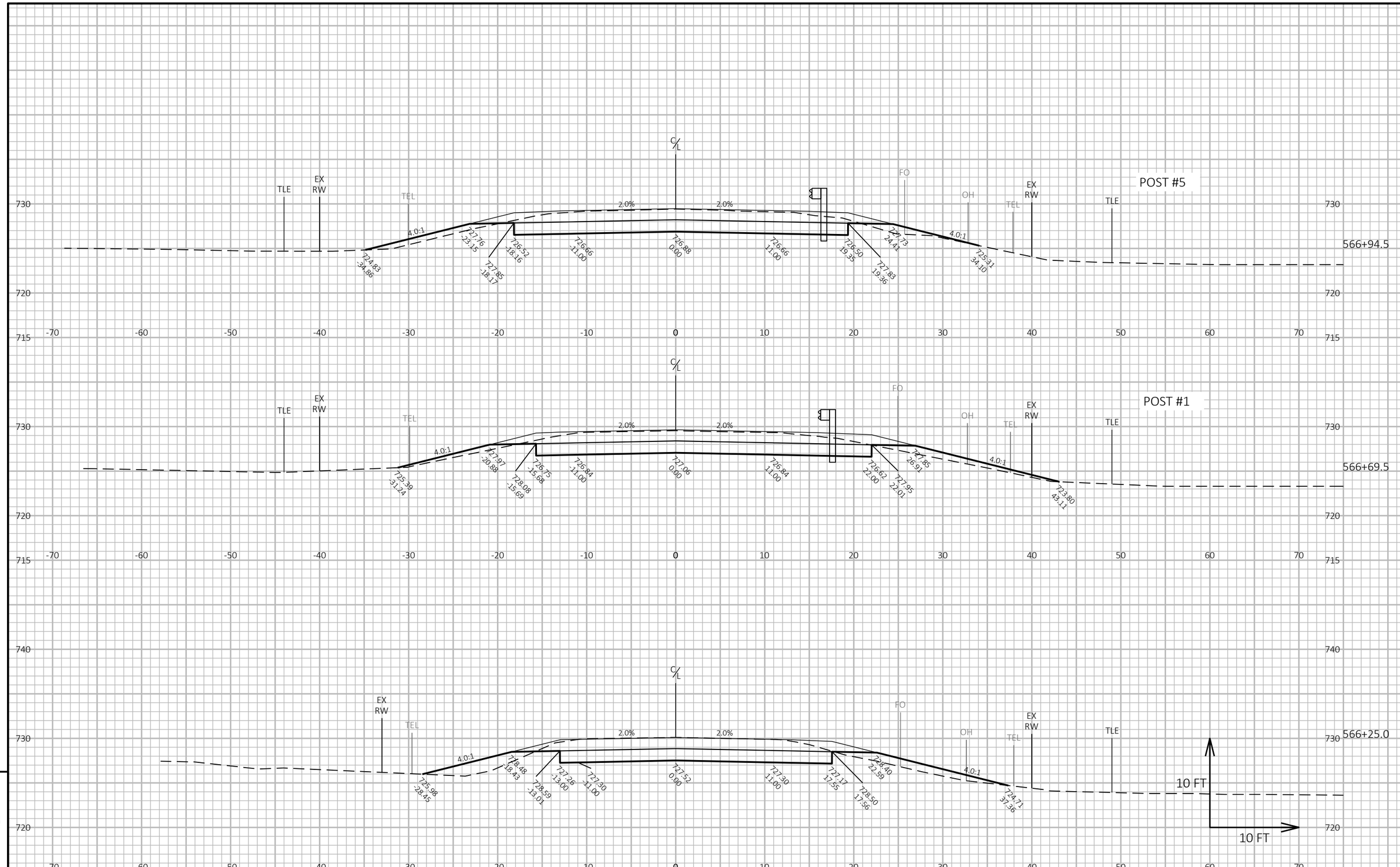

PROJECT NO: 5939-00-63	HWY: STH 80	COUNTY: IOWA	CROSS SECTIONS: STH 80	SHEET 171	E

FILE NAME : W:\7701_07\CAD\! XXXX-XX-XX\SHEETSPLAN\090201-XS.DWG
LAYOUT NAME - 02
PLOT DATE : 4/15/2025 8:59 PM
PLOT BY : SEBESTA, MAXWELL
PLOT NAME :
PLOT SCALE : 1 IN:10 FT HORZ. / 1 IN:10 FT VERT.
WISDOT/CADDS SHEET 49

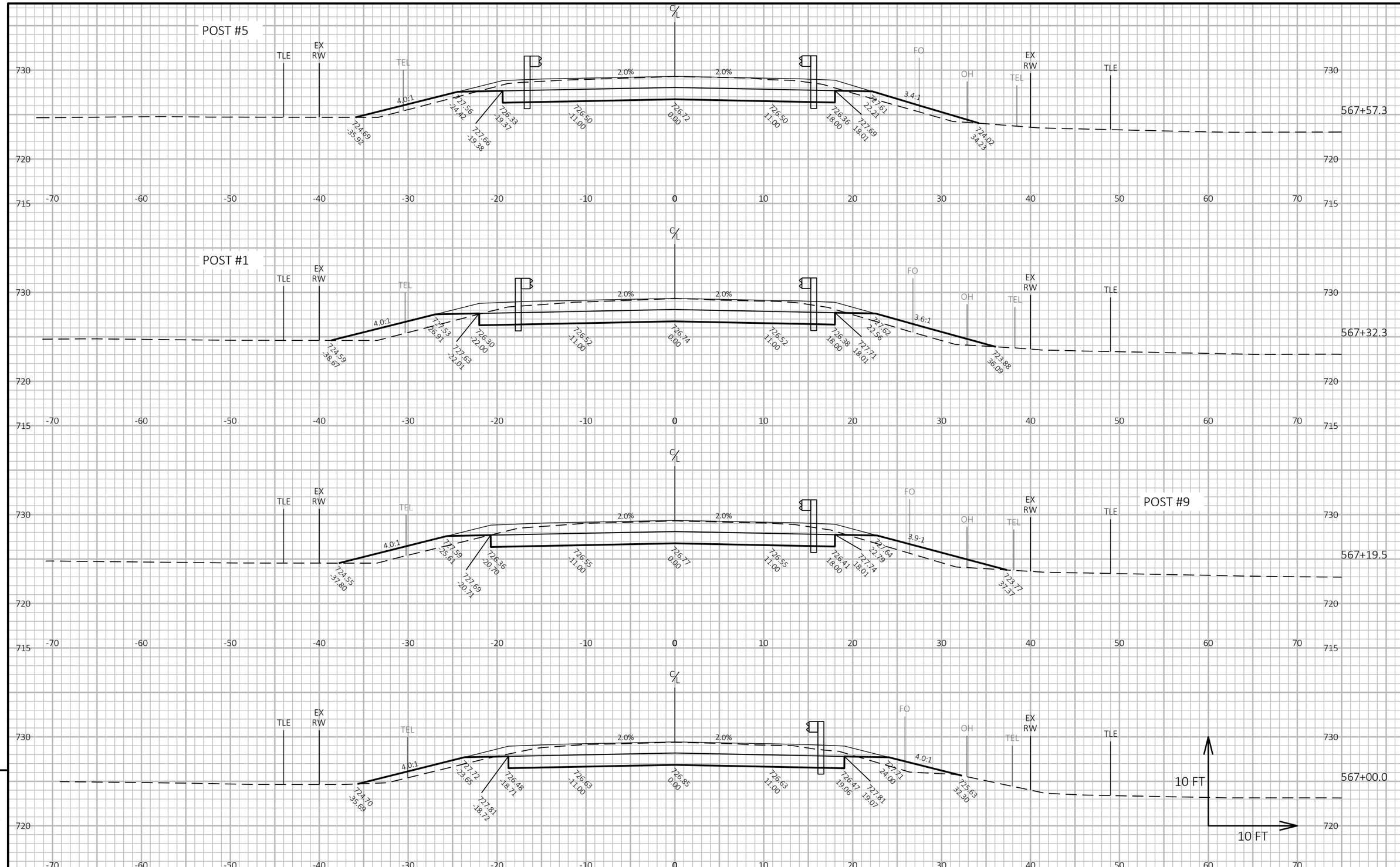

PROJECT NO: 5939-00-63	HWY: STH 80	COUNTY: IOWA	CROSS SECTIONS: STH 80	SHEET 172	E

FILE NAME : W:\7701_07\CAD\! XXXX-XX-XX\SHEETSPLAN\090201-XS.DWG
LAYOUT NAME - 03
PLOT DATE : 4/15/2025 8:59 PM
PLOT BY : SEBESTA, MAXWELL
PLOT NAME :
PLOT SCALE : 1 IN:10 FT HORZ. / 1 IN:10 FT VERT.
WISDOT/CADDS SHEET 49

STRUCTURE B-25-0194
STA 568+59 - STA 569+00

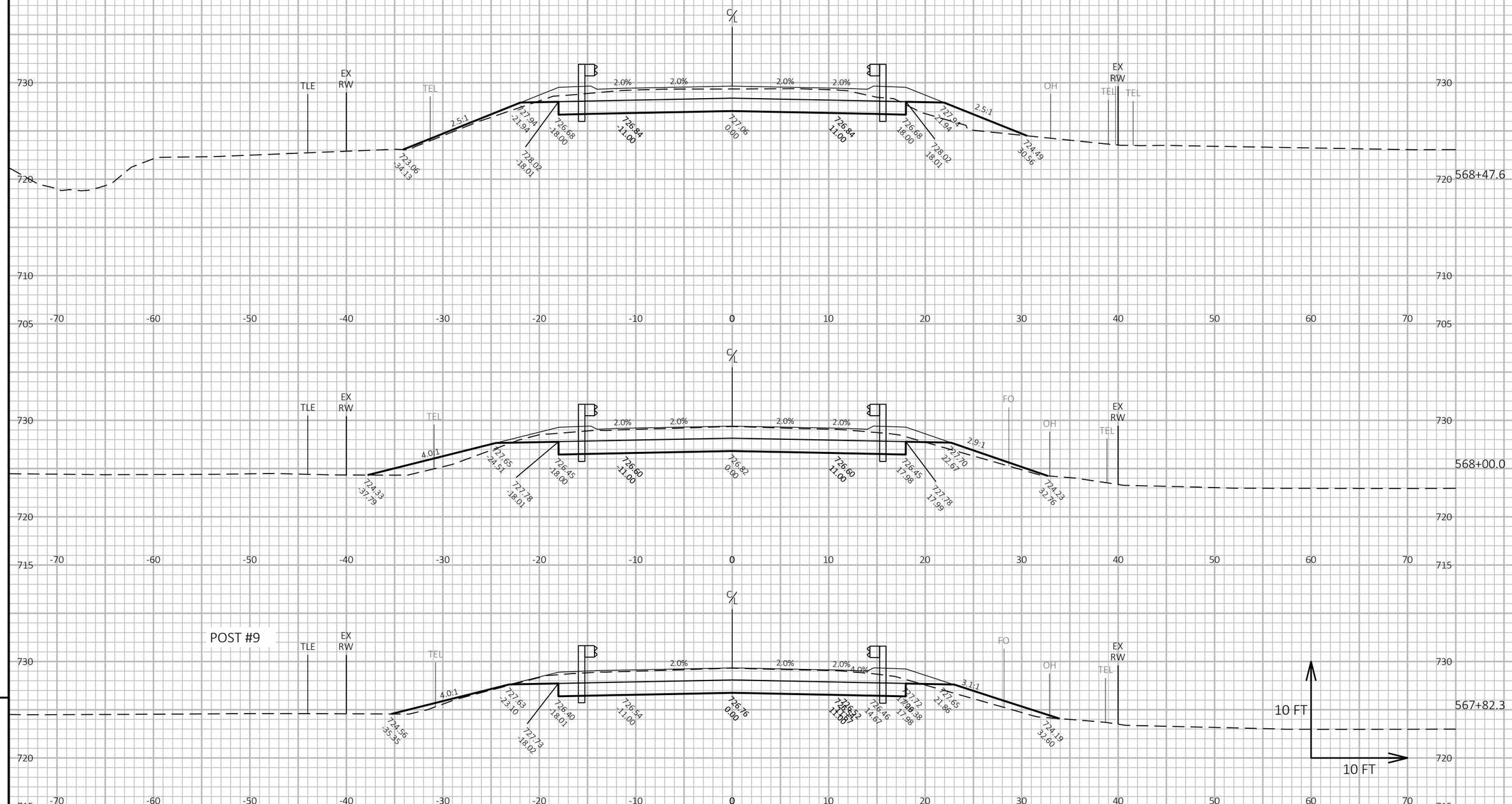

9

9

PROJECT NO: 5939-00-63	HWY: STH 80	COUNTY: IOWA	CROSS SECTIONS: STH 80	SHEET 173	E

FILE NAME : W:\7701_07\CAD\! XXXX-XX-XX\SHEETSPLAN\090201-XS.DWG
LAYOUT NAME - 04
PLOT DATE : 4/15/2025 8:59 PM
PLOT BY : SEBESTA, MAXWELL
PLOT NAME :
PLOT SCALE : 1 IN:10 FT HORZ. / 1 IN:10 FT VERT.
WISDOT/CADDS SHEET 49

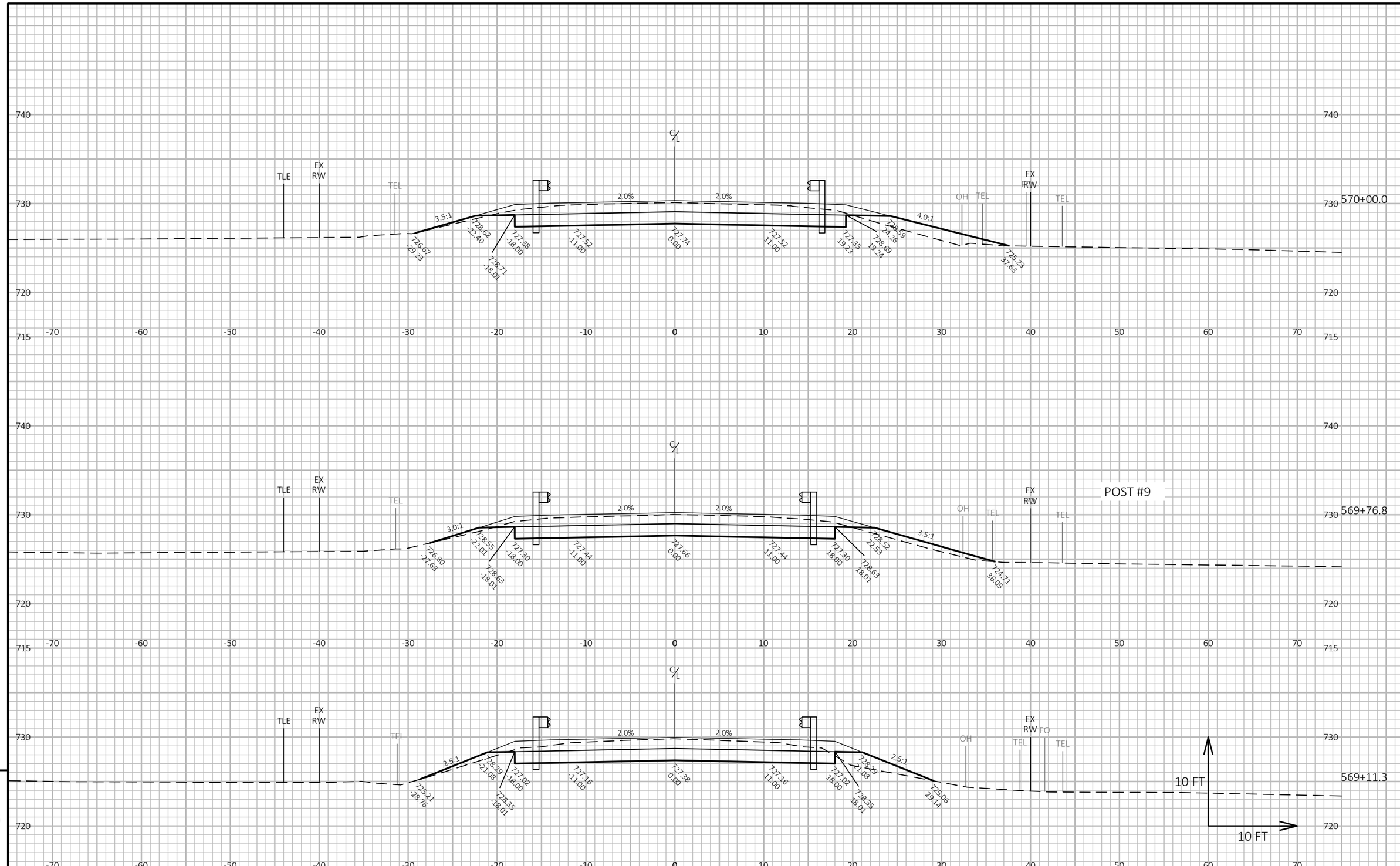

PROJECT NO: 5939-00-63	HWY: STH 80	COUNTY: IOWA	CROSS SECTIONS: STH 80	SHEET 174	E

FILE NAME : W:\7701_07\CAD\! XXXX-XX-XX\SHEETSPLAN\090201-XS.DWG
LAYOUT NAME - 05
PLOT DATE : 4/15/2025 8:59 PM
PLOT BY : SEBESTA, MAXWELL
PLOT NAME :
PLOT SCALE : 1 IN:10 FT HORZ. / 1 IN:10 FT VERT.
WISDOT/CADDS SHEET 49

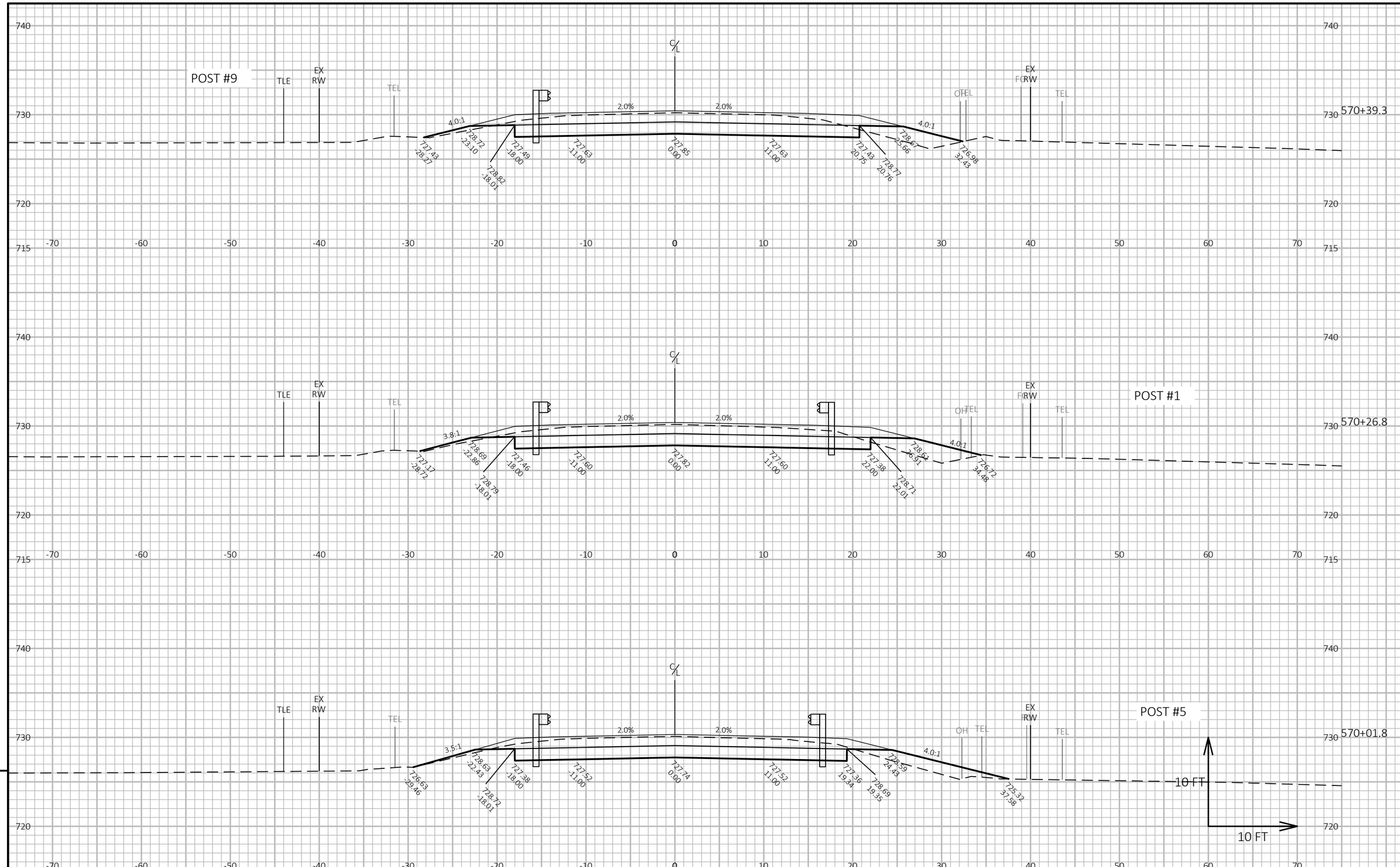

9

9

PROJECT NO: 5939-00-63	HWY: STH 80	COUNTY: IOWA	CROSS SECTIONS: STH 80	SHEET 175	E

FILE NAME : W:\7701_07\CAD\! XXXX-XX-XX\SHEETSPLAN\090201-XS.DWG
LAYOUT NAME - 06

PLOT DATE : 4/15/2025 8:59 PM PLOT BY : SEBESTA, MAXWELL PLOT NAME : PLOT SCALE : 1 IN:10 FT HORZ. / 1 IN:10 FT VERT.

WISDOT/CADDS SHEET 49

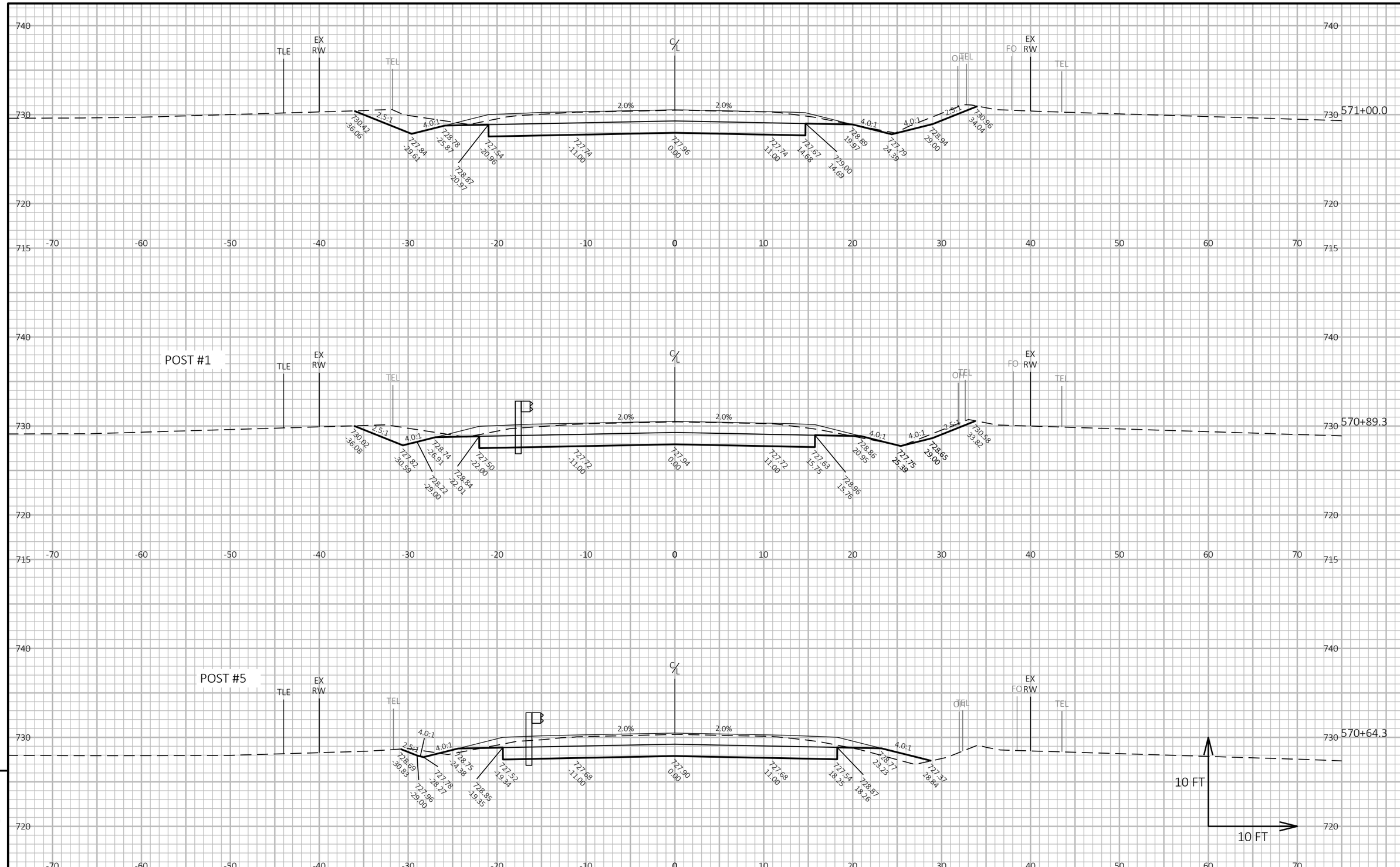

PROJECT NO: 5939-00-63	HWY: STH 80	COUNTY: IOWA	CROSS SECTIONS: STH 80	SHEET 176	E

FILE NAME : W:\7701_07\CAD\! XXXX-XX-XX\SHEETSPLAN\090201-XS.DWG
LAYOUT NAME - 07
PLOT DATE : 4/15/2025 8:59 PM
PLOT BY : SEBESTA, MAXWELL
PLOT NAME :
PLOT SCALE : 1 IN:10 FT HORZ. / 1 IN:10 FT VERT.
WISDOT/CADDS SHEET 49

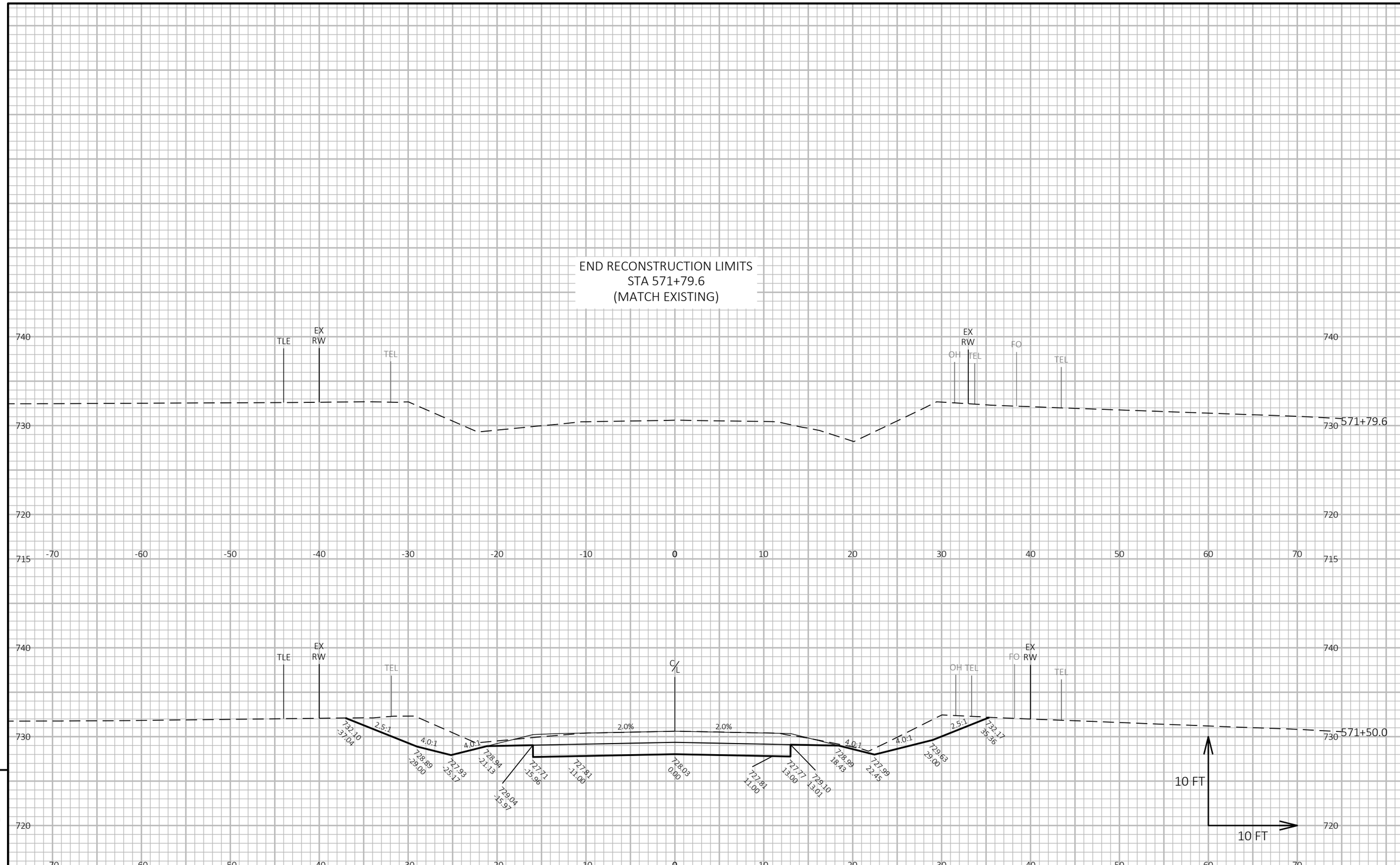

9

9

PROJECT NO: 5939-00-63	HWY: STH 80	COUNTY: IOWA	CROSS SECTIONS: STH 80	SHEET 177	E

FILE NAME : W:\7701_07\CAD\! XXXX-XX-XX\SHEETSPLAN\090201-XS.DWG
LAYOUT NAME - 08

PLOT DATE : 4/15/2025 8:59 PM

PLOT BY : SEBESTA, MAXWELL

PLOT NAME :

PLOT SCALE : 1 IN:10 FT HORZ. / 1 IN:10 FT VERT.

WISDOT/CADDS SHEET 49

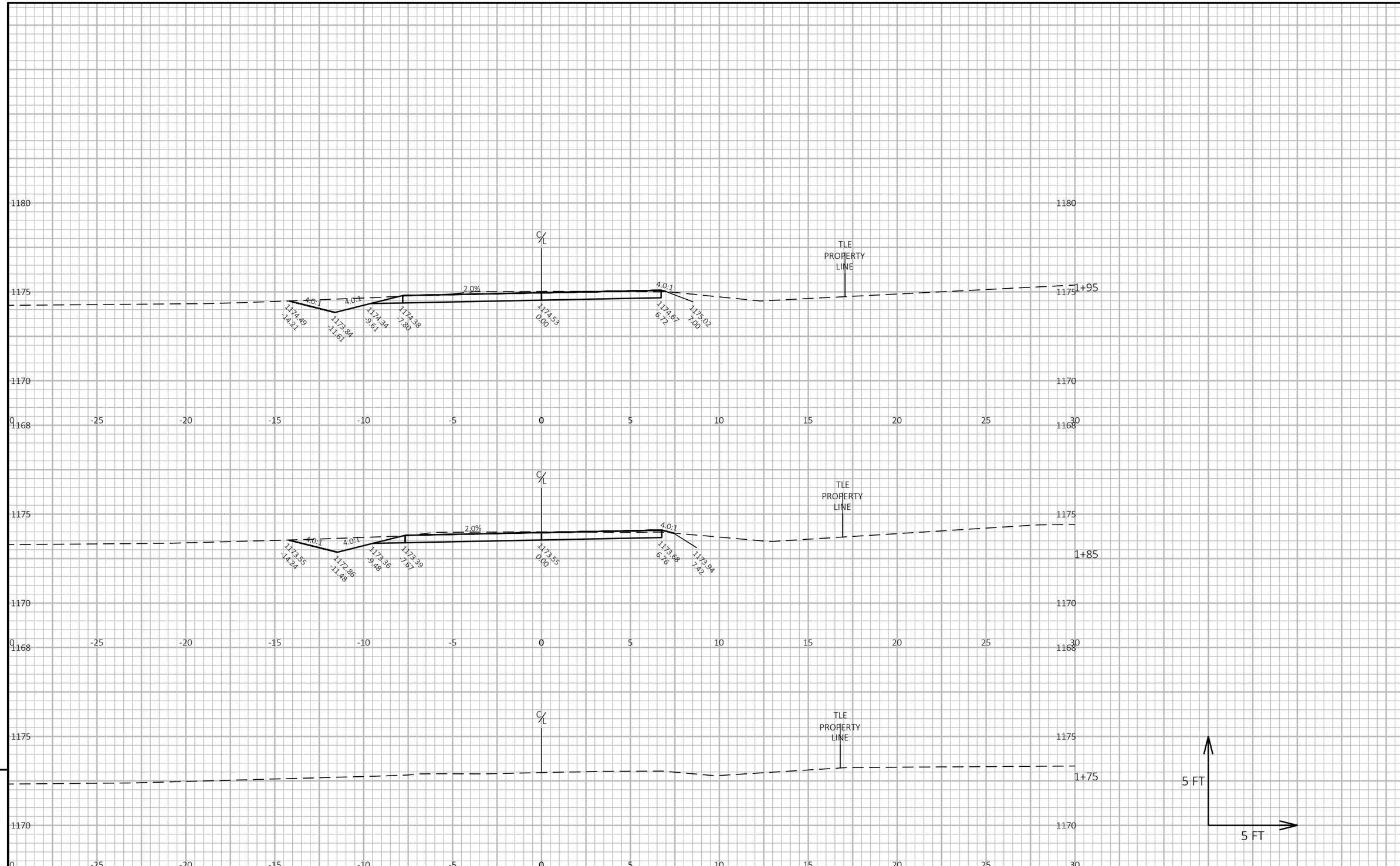

PROJECT NO: 5939-00-63	HWY: STH 80	COUNTY: IOWA	CROSS SECTIONS: DRIVEWAY (SPRING VALLEY ROAD)	SHEET 178	E

FILE NAME : W:\7701_07\CAD\! XXXX-XX-XX\SHEETSPLAN\090202-XS.DWG
LAYOUT NAME - 06
PLOT DATE : 4/28/2025 11:52 PM
PLOT BY : SEBESTA, MAXWELL
PLOT NAME :
PLOT SCALE : 1 IN:5 FT HORZ. / 1 IN:5 FT VERT.
WISDOT/CADDS SHEET 49

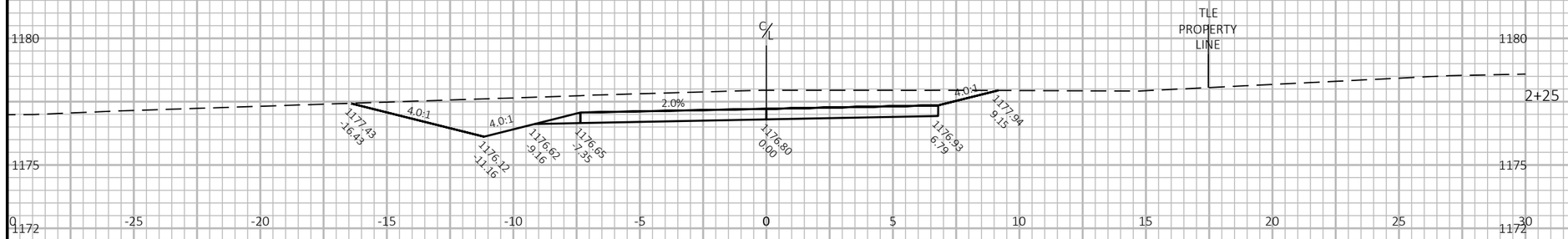

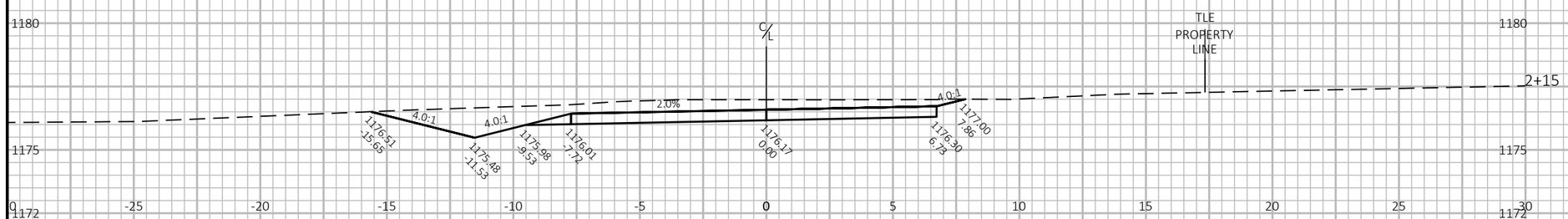

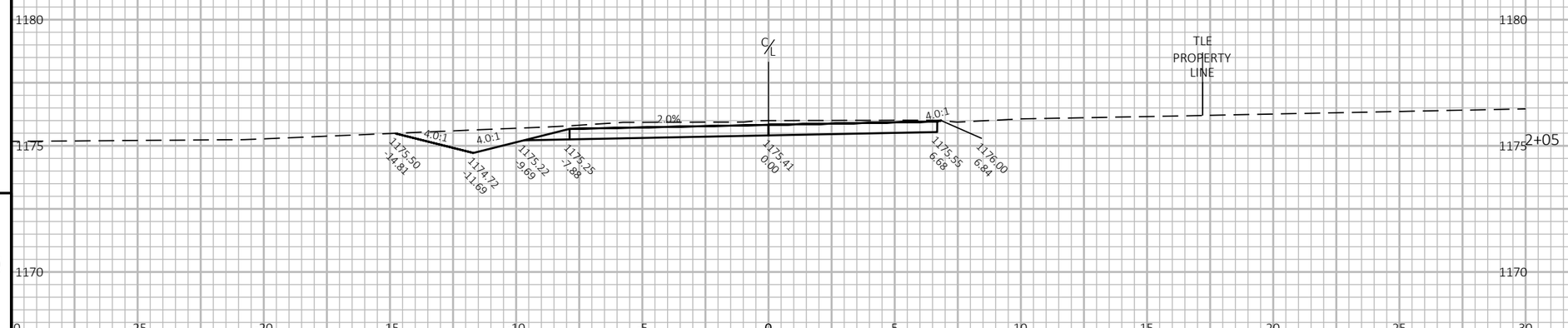

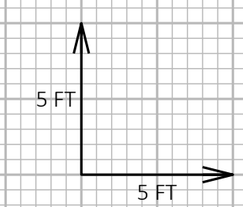

9

9

PROJECT NO: 5939-00-63	HWY: STH 80	COUNTY: IOWA	CROSS SECTIONS: DRIVEWAY (SPRING VALLEY ROAD)	SHEET 179	E

FILE NAME : W:\7701_07\CAD\! XXXX-XX-XX\SHEETSPLAN\090202-XS.DWG
LAYOUT NAME - 07
PLOT DATE : 4/28/2025 11:52 PM
PLOT BY : SEBESTA, MAXWELL
PLOT NAME :
PLOT SCALE : 1 IN:5 FT HORZ. / 1 IN:5 FT VERT.
WISDOT/CADDS SHEET 49

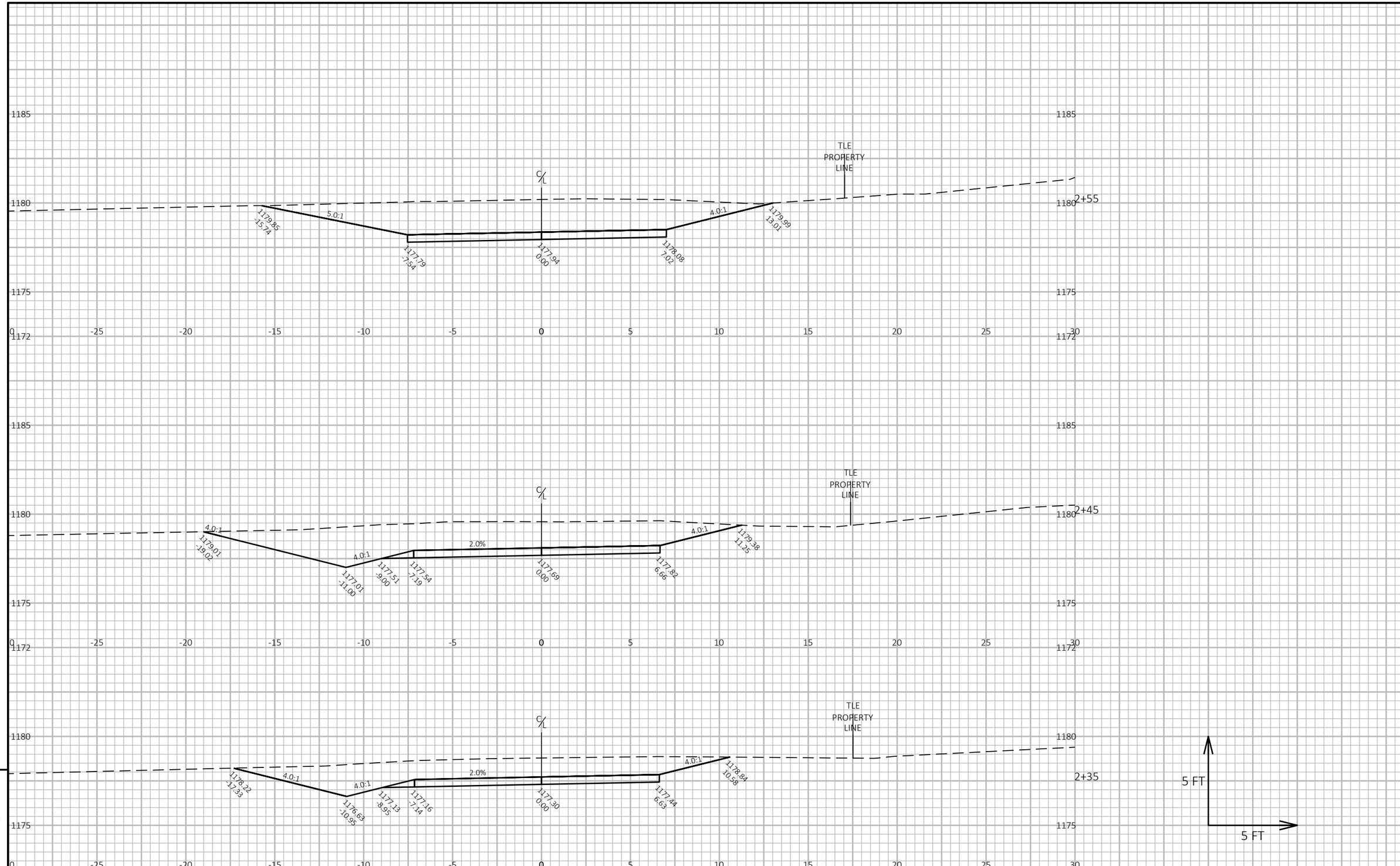

PROJECT NO: 5939-00-63	HWY: STH 80	COUNTY: IOWA	CROSS SECTIONS: DRIVEWAY (SPRING VALLEY ROAD)	SHEET 180	E

FILE NAME : W:\7701_07\CAD\! XXXX-XX-XX\SHEETSPLAN\090202-XS.DWG
LAYOUT NAME - 08
PLOT DATE : 4/28/2025 11:52 PM
PLOT BY : SEBESTA, MAXWELL
PLOT NAME :
PLOT SCALE : 1 IN:5 FT HORZ. / 1 IN:5 FT VERT.
WISDOT/CADDS SHEET 49

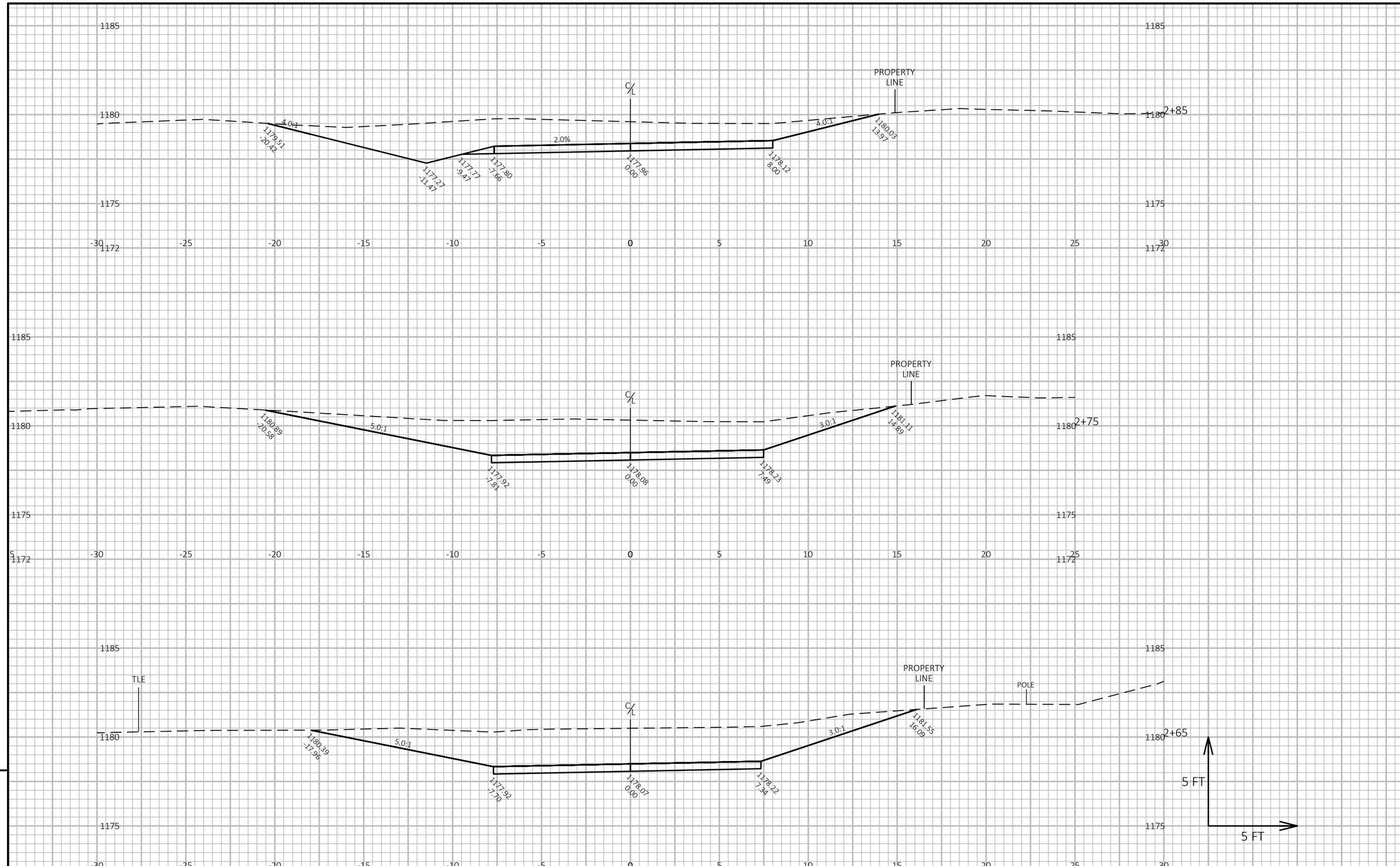

9

9

PROJECT NO: 5939-00-63	HWY: STH 80	COUNTY: IOWA	CROSS SECTIONS: DRIVEWAY (SPRING VALLEY ROAD)	SHEET 181	E

FILE NAME : W:\7701_07\CAD\! XXXX-XX-XX\SHEETSPLAN\090202-XS.DWG
LAYOUT NAME - 09

PLOT DATE : 4/28/2025 11:52 PM PLOT BY : SEBESTA, MAXWELL PLOT NAME : PLOT SCALE : 1 IN:5 FT HORZ. / 1 IN:5 FT VERT.

WISDOT/CADDS SHEET 49

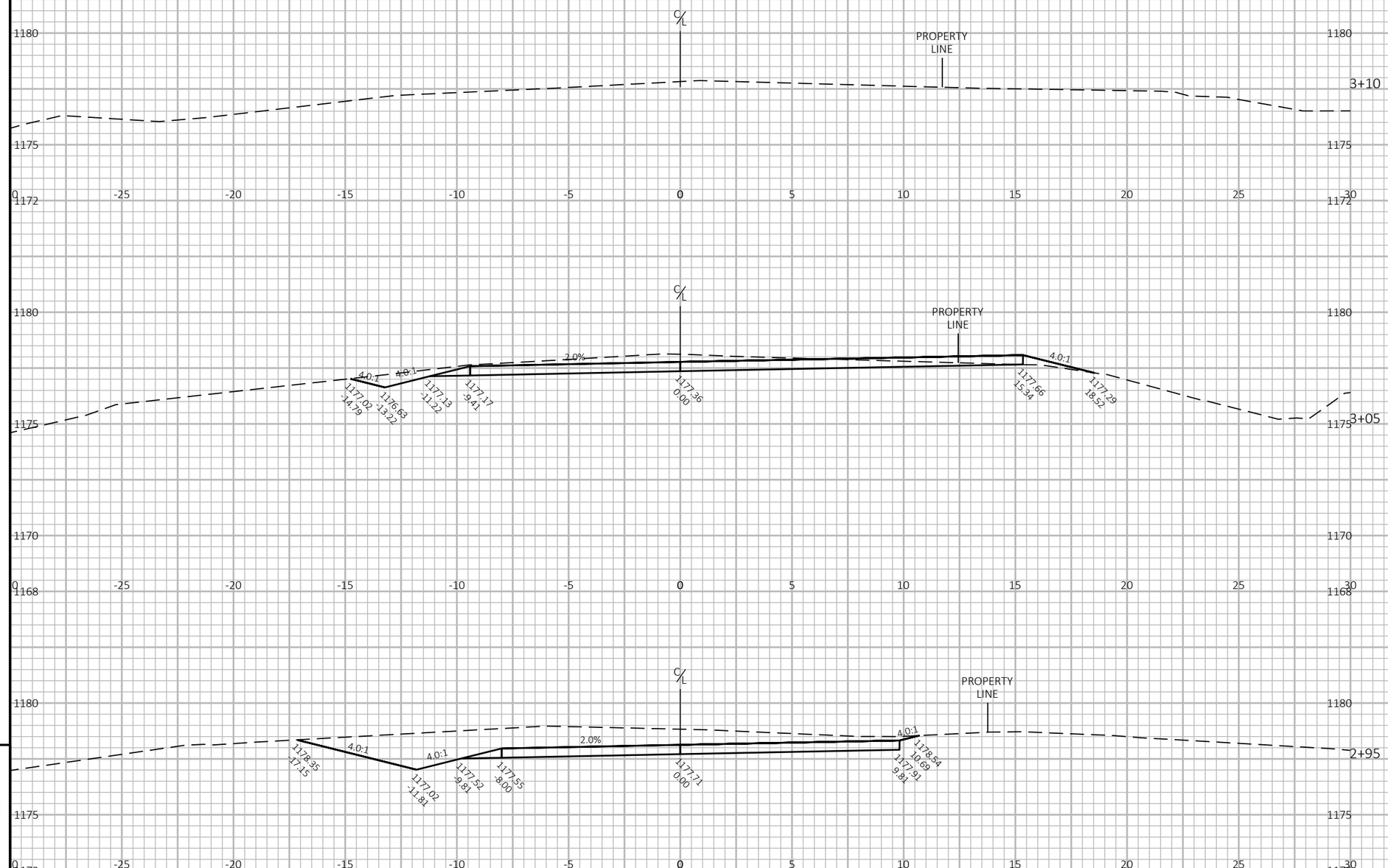

9

9

PROJECT NO: 5939-00-63	HWY: STH 80	COUNTY: IOWA	CROSS SECTIONS: DRIVEWAY (SPRING VALLEY ROAD)	SHEET 182	E

FILE NAME : W:\7701_07\CAD\! XXXX-XX-XX\SHEETSPLAN\090202-XS.DWG
LAYOUT NAME - 10
PLOT DATE : 4/28/2025 11:52 PM
PLOT BY : SEBESTA, MAXWELL
PLOT NAME :
PLOT SCALE : 1 IN:5 FT HORZ. / 1 IN:5 FT VERT.
WISDOT/CADDS SHEET 49

Notes

Wisconsin Department of Transportation

Dedicated people creating transportation solutions through innovation and exceptional service.

http://www.dot.wisconsin.gov