MAD

PROJECT ID: 1161-00-78

WITH: N/A

COUNTY: COLUMBIA

MARCH 2026

ORDER OF SHEETS

TOTAL SHEETS = 230

STATE OF WISCONSIN
DEPARTMENT OF TRANSPORTATION

PLAN OF PROPOSED IMPROVEMENT

PORTAGE - PACKWAUKEE

STH 78 TO USH 51

IH 39

COLUMBIA COUNTY

STATE PROJECT	FEDERAL PROJECT	
	PROJECT	CONTRACT
1161-00-78	—	—

STATE PROJECT NUMBER

1161-00-78

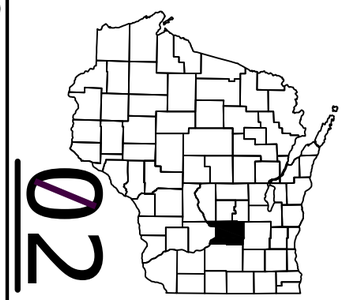

N

DESIGN DESIGNATION 1161-00-08

A.A.D.T.	(2028)	=	19400
A.A.D.T.	(2048)	=	19900
D.H.V.		=	2250
D.D.		=	60/40
T.		=	18.4%
DESIGN SPEED		=	70 MPH
ESALS		=	15,000,000

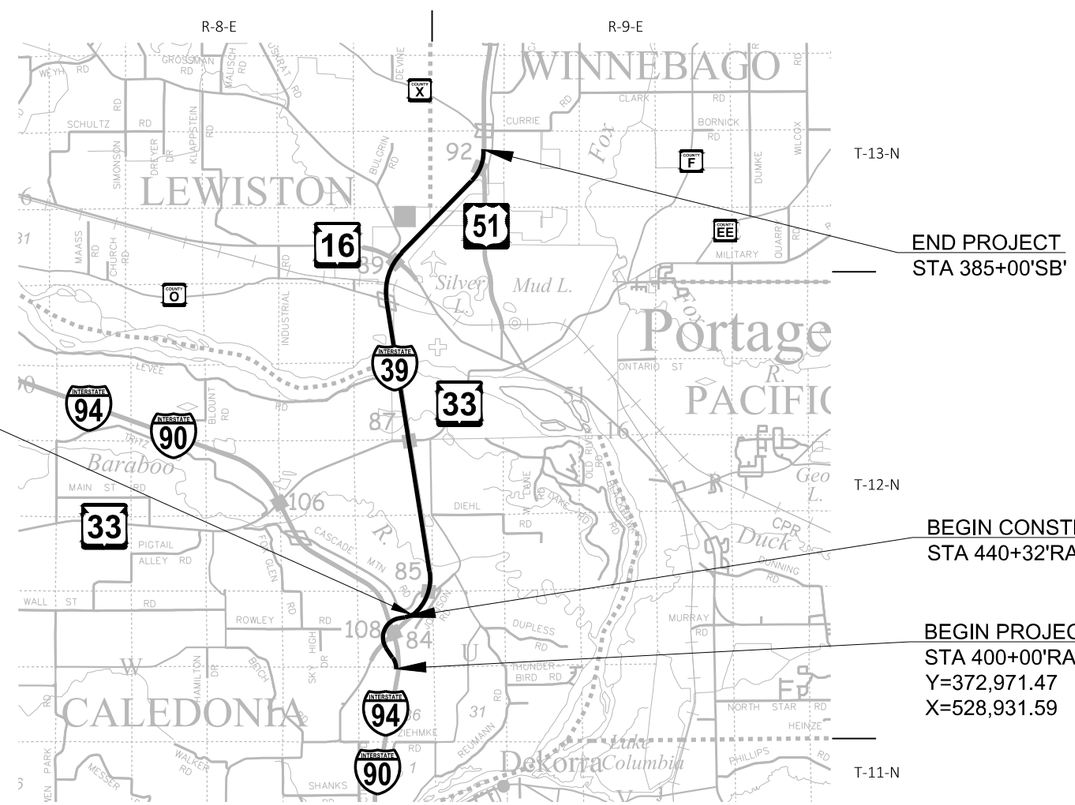

LAYOUT

SCALE 0 — 2 MI

TOTAL NET LENGTH OF CENTERLINE = 0.000 MI

HORIZONTAL POSITIONS SHOWN ON THIS PLAN ARE WISCONSIN COUNTY COORDINATE SYSTEM (WCCS), COLUMBIA COUNTY NAD83 (2011), IN U.S. SURVEY FEET. POSITIONS SHOWN ARE GRID COORDINATES, GRID BEARINGS, AND GRID DISTANCES. GRID DISTANCES ARE THE SAME AS GROUND DISTANCES.

ELEVATIONS ARE REFERENCED TO NAVD 88 (2012). GPS DERIVED ELEVATIONS ARE BASED ON GEOID 12A

CONVENTIONAL SYMBOLS

PLAN

- CORPORATE LIMITS
- PROPERTY LINE
- LOT LINE
- LIMITED HIGHWAY EASEMENT
- EXISTING RIGHT OF WAY
- PROPOSED OR NEW R/W LINE
- SLOPE INTERCEPT
- REFERENCE LINE (300'ER')
- EXISTING CULVERT
- PROPOSED CULVERT (Box or Pipe)
- COMBUSTIBLE FLUIDS (CAUTION)
- MARSH AREA
- WOODED OR SHRUB AREA

PROFILE

- GRADE LINE
- ORIGINAL GROUND
- MARSH OR ROCK PROFILE (To be noted as such) (ROCK)
- SPECIAL DITCH (LABEL)
- GRADE ELEVATION (95.36)
- CULVERT (Profile View)

UTILITIES

- ELECTRIC (E)
- FIBER OPTIC (FO)
- GAS (G)
- SANITARY SEWER (SAN)
- STORM SEWER (SS)
- TELEPHONE (T)
- WATER (W)
- UTILITY PEDESTAL
- POWER POLE
- TELEPHONE POLE

ORIGINAL PLANS PREPARED BY

DAAR ENGINEERING, INC.
www.daarcorp.com
Johnson Creek, WI 53038
414-225-9817

WISCONSIN PROFESSIONAL ENGINEER
TERESA A. SCHOPP
E-35843
JOHNSON CREEK
WISCONSIN

DATE: 10/23/2025 (DATE) Teresa Schopp (SIGNATURE)

STATE OF WISCONSIN
DEPARTMENT OF TRANSPORTATION

PREPARED BY

Surveyor	DAAR ENGINEERING INC
Designer	DAAR ENGINEERING INC
Project Manager	MAHESH SHRESTHA, P.E.
Regional Examiner	SW REGION
Regional Supervisor	MARC SCHWEIGER, P.E.

APPROVED FOR THE DEPARTMENT

Mahesh Shrestha

DATE: _____ (Signature)

E

GENERAL NOTES

CURVE DATA BASED ON THE ARC DEFINITION.

WHEN THE QUANTITY OF THE ITEMS OF BASE AGGREGATE, OR HMA IS MEASURED FOR PAYMENT BY THE TON OR CUBIC YARD, THE DEPTH OR THICKNESS OF THE LAYERS SHOWN ON THE PLAN IS APPROXIMATE AND THE ACTUALTHICKNESS WILL DEPEND ON THE DISTRIBUTION OF THE MATERIAL AS DIRECTED BY THE ENGINEER.

REMOVAL OF ANY SURVEY MARKER REQUIRES APPROVAL OF THE ENGINEER.

STATIONING OF CONCRETE PAVEMENT REPAIR & REPLACEMENT LOCATIONS IN PLAN ARE APPROXIMATE. VERIFY LOCATIONS WITH ENGINEER.

PLAN REMOVAL AREAS ARE APPORXIMATE. EXACT LIMITS SHALL BE DETERMINED IN THE FIELD.

SAWING CONCRETE WILL BE MEASURED AND PAID FOR ONLY ONCE WHEN REPAIRS ARE ADJACENT ALONG THE C/L OF THE NB LANES (IN BOTH OUTSIDE AND MEDIAN LANES).

OVERSAWING INTO PAVEMENT THAT IS TO REMAIN TO FACILITATE REMOVAL OF REPAIR AREAS SHALL BE SEALED WITH AN APPROVED EPOXY. THE OVERSAWING AND EPOXY ARE INCIDENTAL TO BID ITEMS 416.1710, 416.1715, 416.1720, & 416.1725.

IN CONCRETE PAVEMENT REPLACEMENT SECTIONS, THE NEW JOINTS SHOULD MATCH ADJACENT CONCRETE JOINT. THE NEW TINING SHOULD MATCH THE ADJACENT PAVEMENT PATTERN.

THE ENGINEER WILL DETERMINE THE EXACT LOCATION OF EROSION CONTROL ITEMS. MAINTAIN ALL EROSION CONTROL MEASURES UNTIL THE ENGINEER DETERMINES THE MEASURE IS NO LONGER NECESSARY. THE CONTRACTOR WILL REMOVE EROSION CONTROL ITEMS AT THE DIRECTION OF THE ENGINEER.

DO NOT DRIVE EQUIPMENT OR STORE EQUIPMENT OR MATERIAL IN WETLANDS, WATERWAYS OR ENVIRONMENTALLY SENSITIVE AREAS ADJACENT TO THE PROJECT.

HMA PAVEMENT WEIGHT CALCULATIONS BASED ON 112 LB/SY/IN

EXISTING ALIGNMENT FROM AS-BUILT AND SURVEY INFORMATION.

THE QUANTITY OF THE ITEMS FOR EROSION PROTECTION INCLUDES AN UNDISTRIBUTED AMOUNT FOR PROTECTION, CONTROL, AND ABATEMENT OF WATER POLLUTION RESULTING FROM SOIL EROSION. THE DISTIBUTION AND LOCATION OF THESE MATERIALS ARE TO BE DETERMINED BY THE ENGINEER.

DISTURBED AREAS WITHIN THE RIGHT OF WAY ARE TO BE TOPSOILED (SALVAGED), FERTILIZED, SEEDED, AND EMATTED AS DIRECTED BY THE ENGINEER.

THE EROSION CONTROL DEVICES AS SHOWN ON THE EROSION CONTROL SHEETS ARE AT SUGGESTED LOCATIONS. EXACT LOCATIONS WILL BE DETERMINED BY THE ENGINEER. EROSION CONTROL DEVICES SHALL BE PLACED IN SEQUENCE WITH CONSTRUCTION OPERATIONS OR AS DETERMINED BY THE ENGINEER.

NO TREES OR SHRUBS ARE TO BE REMOVED WITHOUT APPROVAL OF THE ENGINEER.

NUMBER, LOCATION, AND SPACING OF SIGNS AND DEVICES, AS SHOWN IN THE PLANS SHALL BE ADJUSTED TO FIT FIELD CONDITIONS.

EXISTING RIGHT OF WAY LINES SHOWN IN THE PLANS AND CROSS SECTIONS ARE APPROXIMATE.

APPLY TACK COAT BETWEEN LAYERS OF ASPHALT PAVEMENT AND TO MILLED SURFACES. THE APPLICATION RATE IS 0.05 GAL/SY BETWEEN LAYERS OF NEW HMA PAVEMENT AND 0.07 GAL/SY PLACED ON EXISTING ASPHALT, MILLED SURFACES AND CONCRETE PAVEMENT OR AS DIRECTED BY THE ENGINEER.

THE LOCATIONS OF EXISTING AND PROPOSED UTILITY INSTALLATIONS AS SHOWN ON THE PLANS ARE APPROXIMATE. THERE MAY BE OTHER UTILITY INSTALLATIONS WITHIN THE PROJECT AREA THAT ARE NOT SHOWN. THE CONTRACTOR SHALL COORDINATE THEIR CONSTRUCTION ACTIVITIES WITH A CALL TO DIGGERS HOTLINE AND/OR A DIRECT CALL TO THE UTILITIES THAT HAVE FACILITIES IN THE AREA. NOT ALL UTILITIES ARE MEMBERS OF DIGGERS HOTLINE.

STANDARD ABBREVIATIONS

AC	ACRE	NC	NORMAL CROWN
ADJ	ADJUST	N	NORTH
AH	AHEAD	NTS	NOT TO SCALE
ASPH	ASPHALT	Y	NORTH GRID COORDINATE
AVG	AVERAGE	NB	NORTHBOUND
ADT	AVERAGE DAILY TRAFFIC	NO	NUMBER
AMC	ADJUSTING MANHOLE COVER	OD	OUTSIDE DIAMETER
ASMC	ADJUSTING SANITARY MANHOLE COVER	PAVT	PAVEMENT
AWV	ADJUSTING WATER VALVE	PLE	PERMANENT LIMITED EASEMENT
BK	BACK	PT	POINT
BAD	BASE AGGREGATE DENSE	PC	POINT OF CURVATURE
BM	BENCHMARK	PI	POINT OF INTERSECTION
BMP	BEST MANAGEMENT PRACTICE	PT	POINT OF TANGENCY
CB	CATCH BASIN	PVC	POLYVINYL CHLORIDE
C/L	CENTER LINE	PCC	PORTLAND CEMENT CONCRETE
Δ	CENTRAL ANGLE OR DELTA	LB	POUND
CIR	CIRCULAR	PSF	POUNDS PER SQUARE FOOT
CL	CLASS	PSI	POUNDS PER SQUARE INCH
CONC	CONCRETE	PE	PRIVATE ENTRANCE
CONST	CONSTRUCTION	PGL	PROFILE GRADE LINE
CABC	CRUSHED AGGREGATE BASE COURSE	PL	PROPERTY LINE
CE	COMMERCIAL ENTRANCE	R	RADIUS
CFS	CUBIC FEET PER SECOND	R	RANGE
CY	CUBIC YARD	R/L	REFERENCE LINE
C&G	CURB AND GUTTER	REINF	REINFORCING OR REINFORCEMENT
D	DEGREE OF CURVE	REQD	REQUIRED
DHV	DESIGN HOUR VOLUME	RT	RIGHT
DIA	DIAMETER	R/W	RIGHT-OF-WAY
DD	DIRECTIONAL DISTRIBUTION	RD	ROAD
DWY	DRIVEWAY	RDWY	ROADWAY
E	EAST	SEC	SECTION
X	EAST GROUND COORDINATE	SHLDR	SHOULDER
EB	EASTBOUND	S	SOUTH
EL	ELEVATION	SB	SOUTHBOUND
ESALS	EQUIVALENT SINGLE AXLE LOADS	SCH	SCHEDULE
EXC	EXCAVATION	SQ	SQUARE
EBS	EXCAVATION BELOW SUBGRADE	SF	SQUARE FEET
EX	EXISTING	SW	SIDEWALK
FPS	FEET PER SECOND	SY	SQUARE YARD
FERT	FERTILIZE	SDD	STANDARD DETAIL DRAWINGS
FL	FLOWLINE	STH	STATE TRUNK HIGHWAYS
FT	FOOT	STA	STATION
HES	HIGH EARLY STRENGTH	SS	STORM SEWER
HP	HIGH POINT	SSPRC	STORM SEWER PIPE REINFORCED CONCRETE
HMA	HOT MIX ASPHALT	ST	STREET
CWT	HUNDREDWEIGHT	STR	STRUCTURE OR STRUCTURAL
HYD	HYDRANT	SE	SUPERELEVATION
INL	INLET	T	TANGENT
IC	INLET COVERS TYPE H	TEMP	TEMPORARY
IS	INLTES 2X3 AND INLET COVERS TYPE H	TI	TEMPORARY INTEREST
ID	INSIDE DIAMETER	TLE	TEMPORARY LIMITED EASEMENT
I	INTERSECTION ANGLE	T	TOWN
INV	INVERT	T%	TRUCKS (PERCENT OF)
IP	IRON PIPE OR PIN	TYP	TYPICAL
LT	LEFT	VAR	VARIABLE
LP	LOW POINT	VERT	VERTICAL
LS	LUMP SUM	V	DESIGN SPEED
MH	MANHOLE	VOL	VOLUME
MAX	MAXIMUM	WM	WATERMAIN
MGAL	MEGAGALLON	WV	WATER VALVE
MPH	MILES PER HOUR	W	WEST
MIN	MINIMUM	WB	WESTBOUND
MON	MONUMENT	YD	YARD

ORDER OF DETAIL SHEETS

2

UTILITIES CONTACTS

ALLIANT ENERGY
GAS/PETROLEUM
STEVE KOHLHAGEN
2777 COLUMBIA DRIVE
PORTAGE, WI 53901
PHONE: 608-742-0830
EMAIL: stevekohlhagen@alliantenergy.com

AT&T LEGACY
COMMUNICATION LINE
KENNETH M. NIN
110 N MAIN ST
CULVER, INDIANA 46511
PHONE: 574-842-8830
EMAIL: knine@jmceainc.com

CITY OF PORTAGE UTILITIES
SEWER
JERAD ROYAL
135 NORTHRIDGE DRIVE
PORTAGE, WI 53901
PHONE: 608-810-4162
EMAIL: jerad.royal@partagewi.gov

FRONTIER COMMUNICATIONS OF WI LLC
COMMUNICATION LINE
JEREMY ZEHM
1851 N. 14TH AVE
WAUSAU, WI 54401
PHONE: 715-243-9243
EMAIL: jeremy.zehm@ftr.com

EVERSTREAM
COMMUNICATION LINE
SHAD GARCIA
324 E WISCONSIN AVE, SUITE 730
MILWAUKEE, WI 53202
PHONE: 414-522-6685
EMAIL: sgarcia@everstream.net

ALLIANT ENERGY
ELECTRICITY
STEVE KOHLHAGEN
2777 COLUMBIA DRIVE
PORTAGE, WI 53901
PHONE: 608-742-0830
EMAIL: stevekohlhagen@alliantenergy.com

ATC MANAGEMENT, INC.
ELECTRICITY-TRANSMISSION
DOUG VOSBERG
2489 RINDEN ROAD
COTTAGE GROVE, WI 53527
PHONE: 608-877-7650
EMAIL: dvosberg@atcllc.com

SPECTRUM
COMMUNICATION LINE
GLEN JAKUSZ
2701 DANIELS ST
MADISON, WI 53718
PHONE: 608-209-3202
EMAIL: Glen.Jakusz@charter.com

CITY OF PORTAGE UTILITIES
WATER
JERAD ROYAL
135 NORTHRIDGE DRIVE
PORTAGE, WI 53901
PHONE: 608-810-4162
EMAIL: jerad.royal@portagewi.gov

WIN TECHNOLOGY
COMMUNICATION LINE
ERIC BECKER
4955 BULLIS FARM RD
EAU CLAIRE, WI 54701
PHONE: 715-797-2724
EMAIL: Eric.Becker@wintechnology.com

TDS METROCOM, LLC
COMMUNICATION LINE
COLE HOOKER
2900 N ZUEHLKE DR STE B
APPLETON, WI 54911
PHONE: 608-332-8243
EMAIL: cole.hooker@tdstelecom.com

WINDSTREAM KDL, LLC
COMMUNICATION LINE
LORI KETTER
969 WAUBE LANE
GREEN BAY, WI 54302-3526
PHONE: 920-410-6902
EMAIL: Lori.Ketter@Windstream.com

NORTHERN NATURAL GAS COMPANY
GAS/PETROLEUM
PHILLIP CURRY
5557 COUNTY D
PLATTEVILLE, WI 53818
PHONE: 402-530-2801
EMAIL: Phillip.Curry@nngco.com

WISDOT CONTACT

WISDOT PROJECT MANAGER
MAHESH SHRESTHA, P.E.
2101 WRIGHT ST.
MADISON WI 53704-2559
(608) 245-2674
mahesh.shrestha@dot.wi.gov

WDNR CONTACT

ANDREW BARTA
WISCONSIN DEPARTMENT OF NATURAL RESOURCES
3911 FISH HATCHERY ROAD
FITCHBURG, WI 53711
(608)-235-2955

Andrew.Barta@wisconsin.gov

COLUMBIA COUNTY CONTACT

DON NICHOLS , P.E.
HIGHWAY COMMISSIONER
WEST OLD HWY. 16
WYOCENA, WI 53969
(608)-429-2136
donald.nichols@columbiacountywi.gov

OTHER CONTACTS

DAAR ENGINEERING, INC
TERI SCHOPP, P.E.
540 VILLAGE WALK Ln, Ste F,
JOHNSON CREEK, WI 53038
(920) 342-2176
teri.schopp@daarcorp.com

RUNOFF COEFFICIENT TABLE

	HYDROLOGIC SOIL GROUP											
	A			B			C			D		
	SLOPE RANGE (PERCENT)			SLOPE RANGE (PERCENT)			SLOPE RANGE (PERCENT)			SLOPE RANGE (PERCENT)		
LAND USE:	0-2	2-6	6 & OVER	0-2	2-6	6 & OVER	0-2	2-6	6 & OVER	0-2	2-6	6 & OVER
ROW CROPS:	.08	.16	.22	.12	.20	.27	.15	.24	.33	.19	.28	.38
	.22	.30	.38	.26	.34	.44	.30	.37	.50	.34	.41	.56
MEDIAN STRIPTURF:	.19	.20	.24	.19	.22	.26	.20	.23	.30	.20	.25	.30
	.24	.26	.30	.25	.28	.33	.26	.30	.37	.27	.32	.40
SIDE SLOPETURF:			.25			.27			.28			.30
			.32			.34			.36			.38
PAVEMENT:												
ASPHALT:	.70 - .95											
CONCRETE:	.80 - .95											
BRICK:	.70 - .80											
DRIVES, WALKS:	.75 - .85											
ROOFS:	.75 - .95											
GRAVEL ROADS, SHOULDERS:	.40 - .60											

TOTAL PROJECT AREA = 38.25 ACRES
TOTAL AREA EXPECTED TO BE DISTURBED BY CONSTRUCTION ACTIVITIES = 0.07 ACRES

DIGGERS HOTLINE
Dial 811 or (800)242-8511
www.DiggersHotline.com

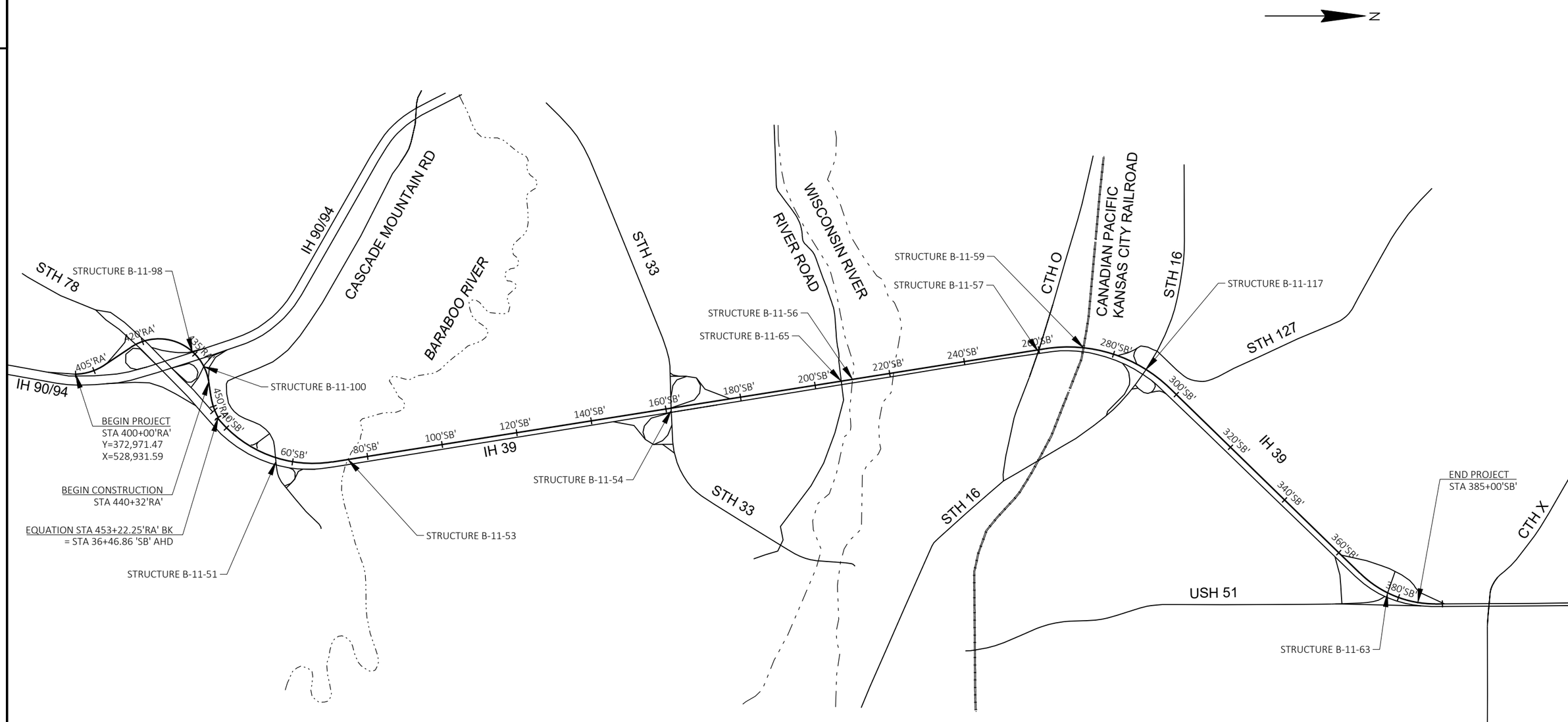

PROJECT NO: 1161-00-78	HWY: IH 39	COUNTY: COLUMBIA	PROJECT OVERVIEW	SHEET 4	E

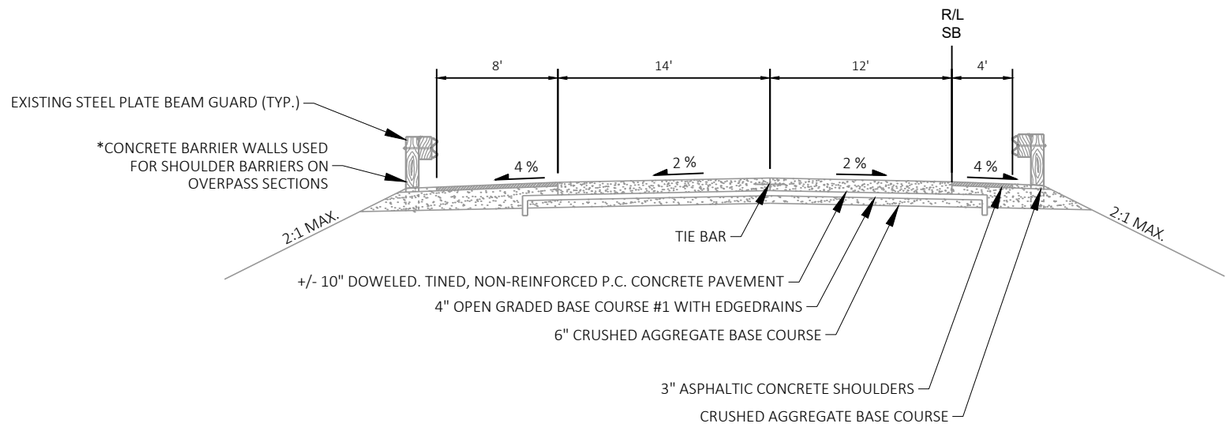

EXISTING TYPICAL SECTION, IH 39

STA 440+32'RA' - 443+13'RA'
STA 449+62'RA' - 453+22.25'RA'
STA 36+46.68'SB' - 37+14'SB'

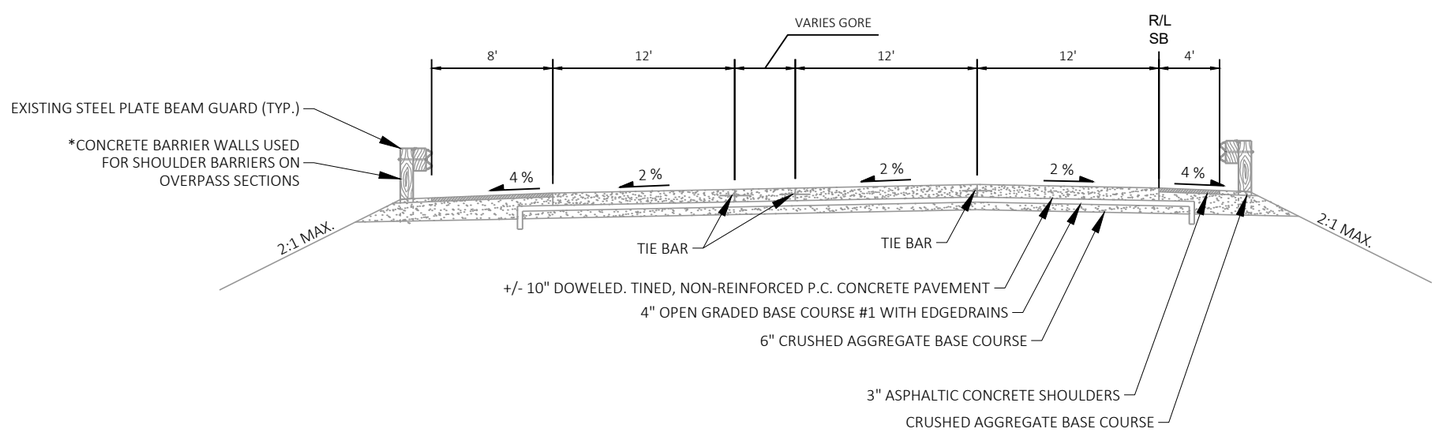

EXISTING TYPICAL SECTION, IH 39

STA 443+13'RA' - 449+62'RA'

2

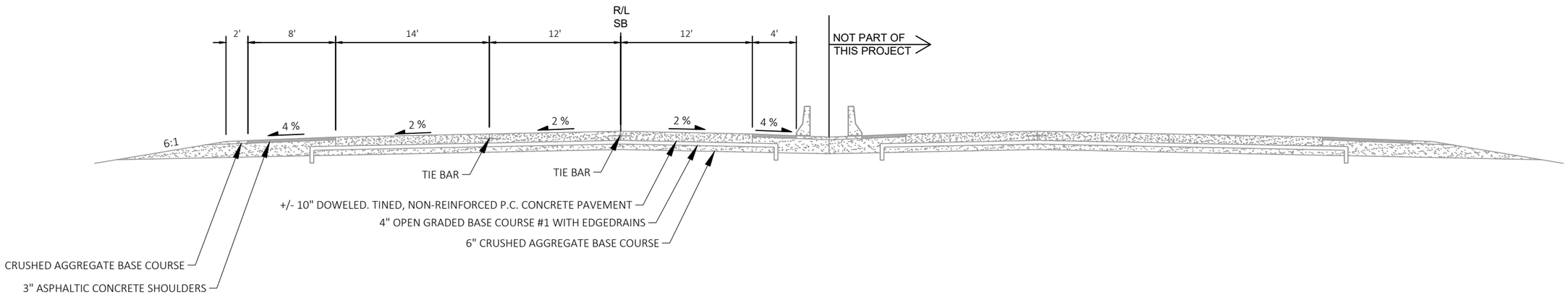

EXISTING TYPICAL SECTION, IH 39

STA 47+45'SB' - 51+07'SB'
STA 56+00'SB' - 68+13'SB'

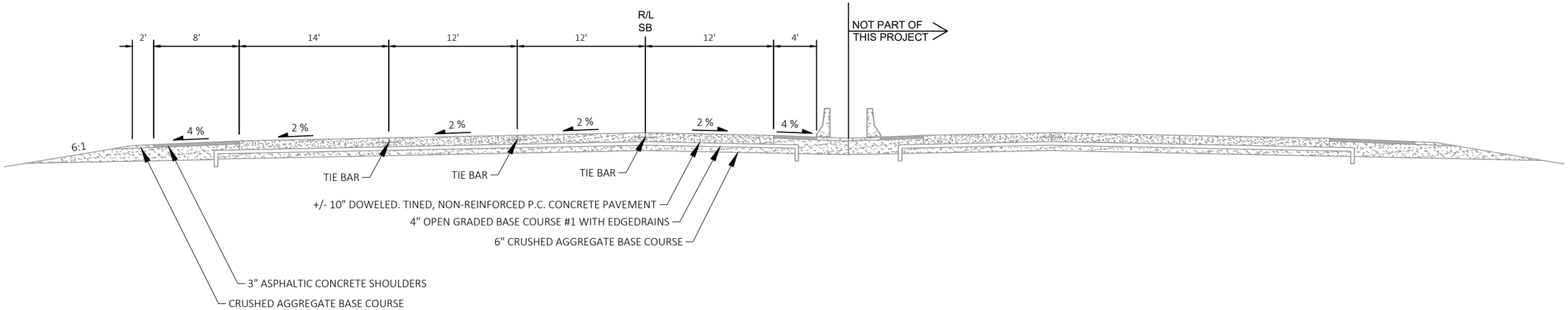

EXISTING TYPICAL SECTION, IH 39

STA 37+14'SB' - 47+45'SB'
STA 51+07'SB' - 56+00'SB'

PROJECT NO: 1161-00-78	HWY: IH 39	COUNTY: COLUMBIA	TYPICAL SECTIONS	SHEET 6	E

FILE NAME : C:\USERS\JACOBKIND\ONEDRIVE - DAAR CORPORATION\SW DESIGN - DOCUMENTS-SW-DESIGN\1161-00-08 IH39, SB LANES, COLUMBIA CTY\C3D\11610008\SHEETSPLAN\020301-TS.DWG PLOT DATE : 10/14/2025 12:34 PM PLOT BY : JACOB KIND PLOT NAME : PLOT SCALE : 1 IN:10 FT
LAYOUT NAME - 02

WISDOT/CADDS SHEET 42

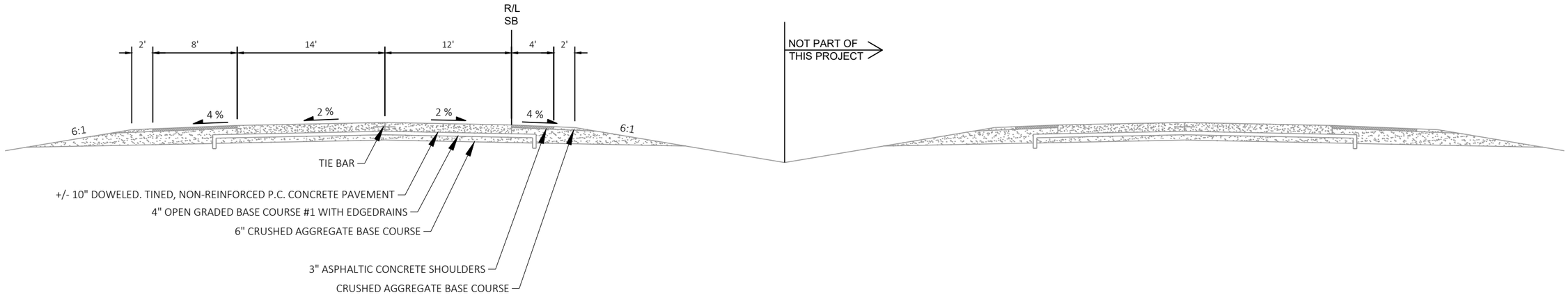

EXISTING TYPICAL SECTION, IH 39

STA 73+50'SB' - 152+76'SB'
STA 165+54'SB' - 173+75'SB'
STA 180+04'SB' - 274+13'SB'
STA 280+63'SB' - 288+27'SB'
STA 297+68'SB' - 357+19'SB'
STA 369+26'SB' - 385+00'SB'

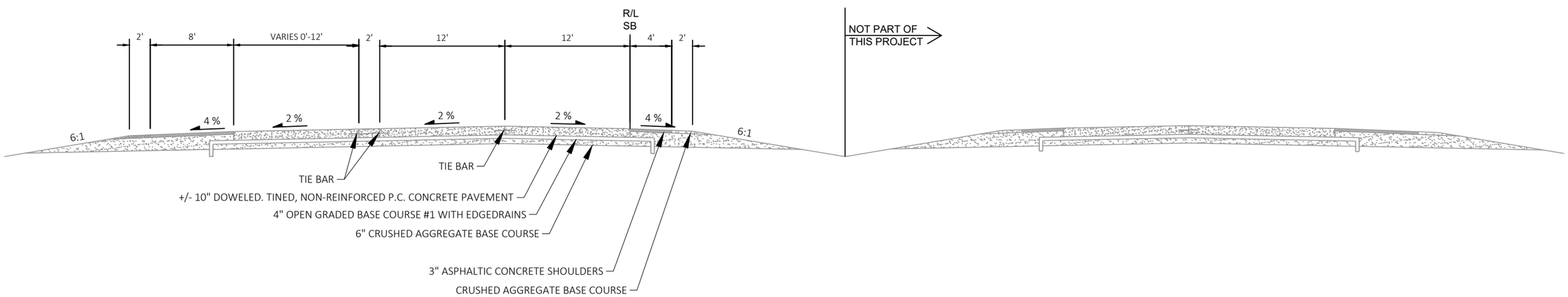

EXISTING TYPICAL SECTION, IH 39 (RAMP ACCELERATION/DECELERATION LANES)

STA 68+13'SB' - 73+50'SB'
STA 152+76'SB' - 165+54'SB'
STA 173+75'SB' - 180+04'SB'
STA 274+13'SB' - 280+63'SB'
STA 288+27'SB' - 297+68'SB'
STA 357+19'SB' - 369+26'SB'

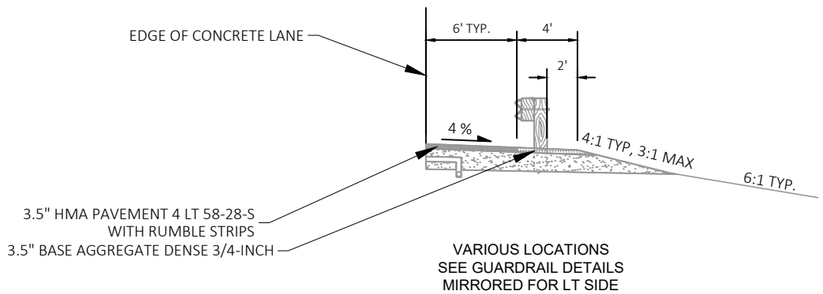

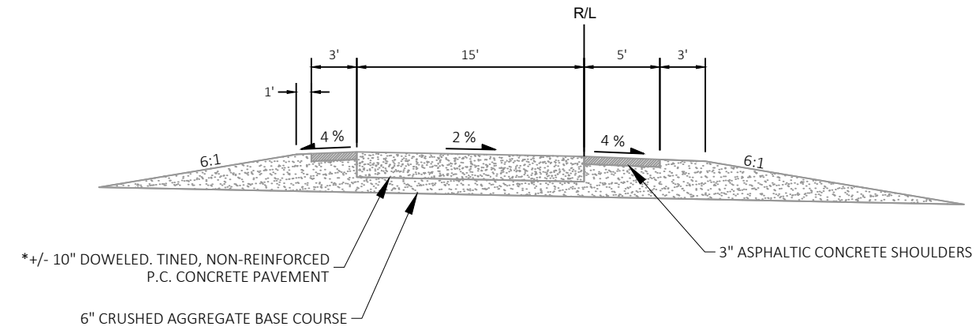

EXISTING RAMP TYPICAL SECTION (STH 16)

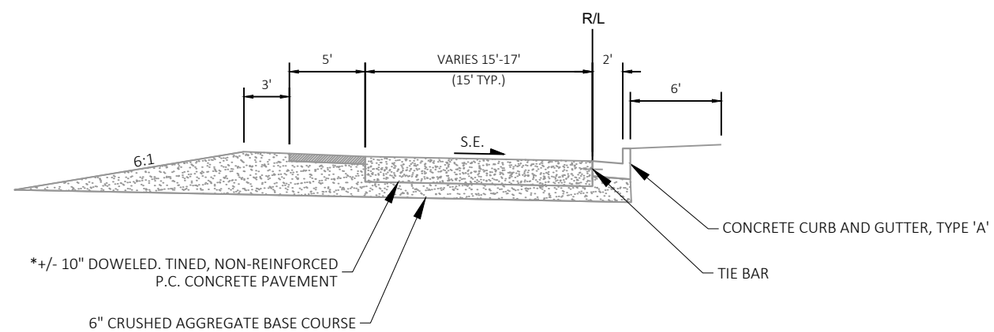

EXISTING RAMP TYPICAL SECTION WITH CURB & GUTTER (STH 16)

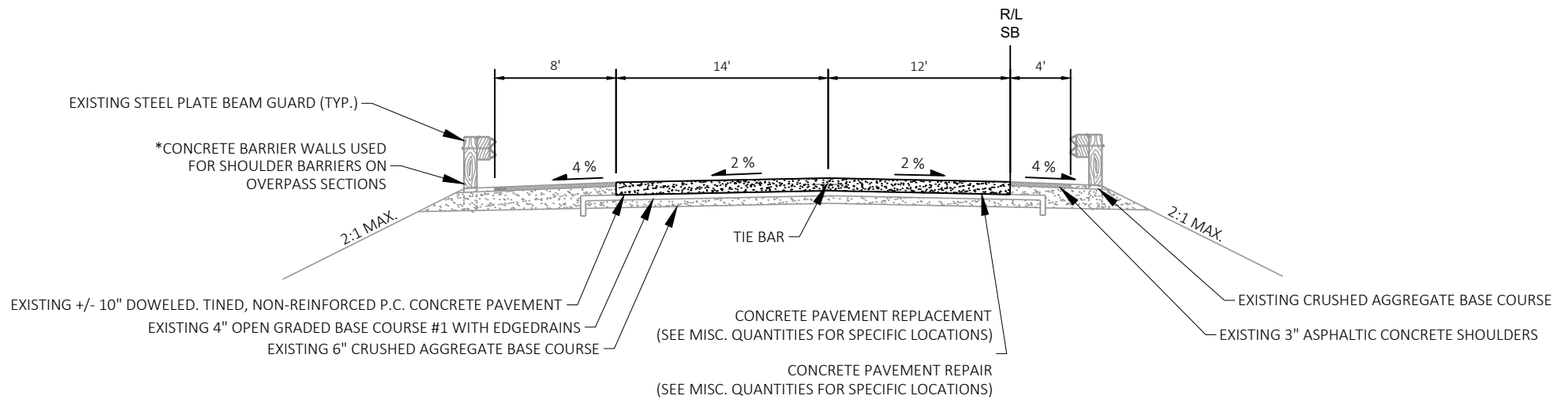

FINISHED TYPICAL SECTION, IH 39

STA 440+32'RA' - 443+13'RA'
STA 449+62'RA' - 453+22.25'RA'
STA 36+46.68'SB' - 37+14'SB'

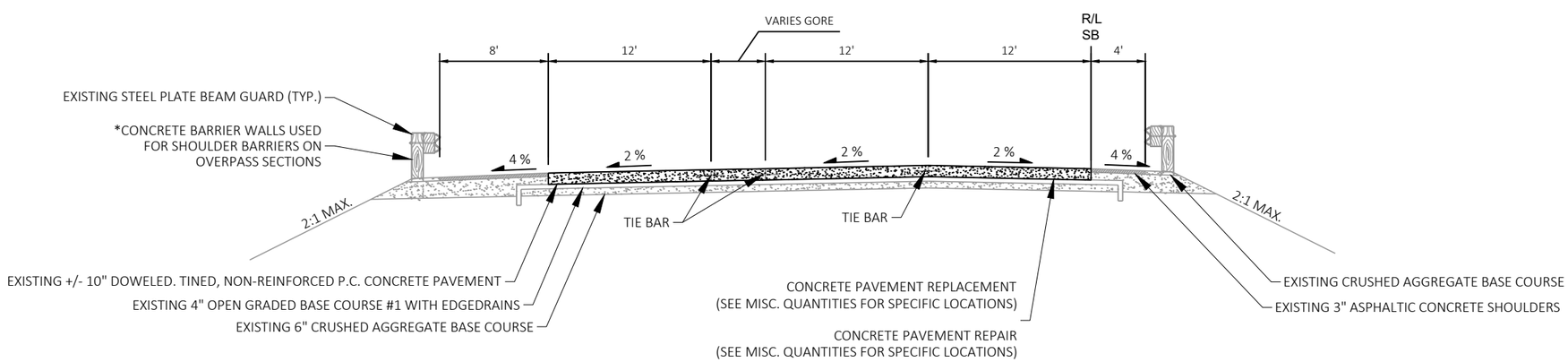

FINISHED TYPICAL SECTION, IH 39

STA 443+13'RA' - 449+62'RA'

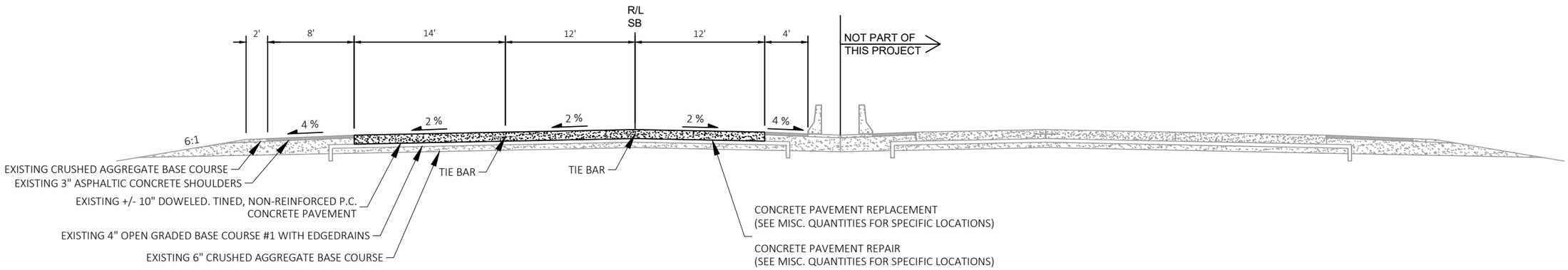

FINISHED TYPICAL SECTION, IH 39

STA 47+45'SB' - 51+07'SB'
STA 56+00'SB' - 68+13'SB'

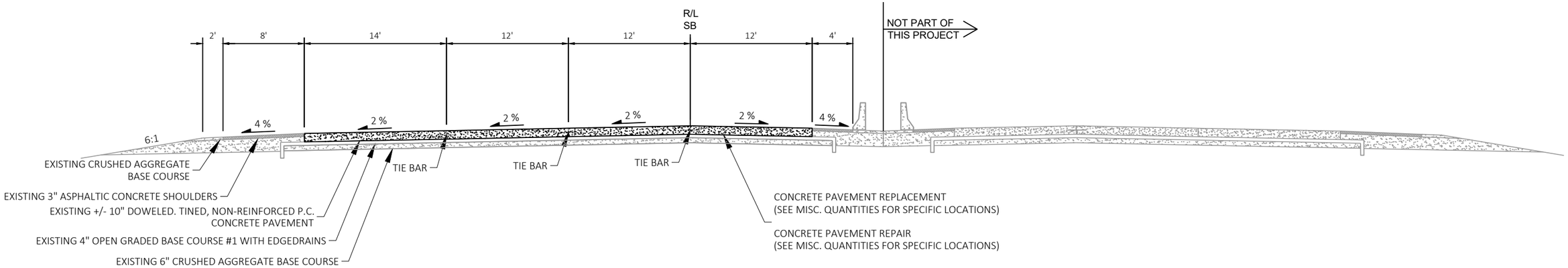

FINISHED TYPICAL SECTION, IH 39

STA 37+14'SB' - 47+45'SB'
STA 51+07'SB' - 56+00 'SB'

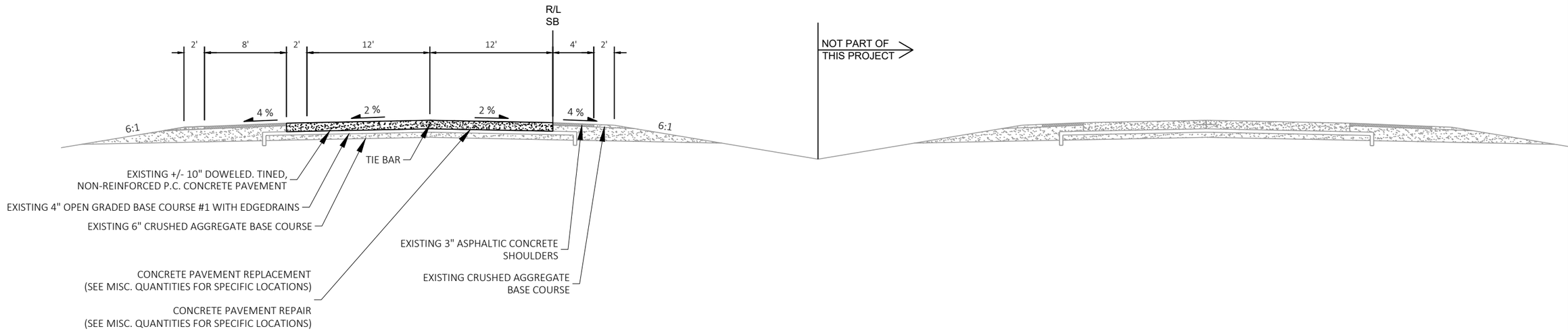

FINISHED TYPICAL SECTION, IH 39

STA 73+50'SB' - 152+76'SB'
STA 165+54'SB' - 173+75'SB'
STA 180+04'SB' - 274+13'SB'
STA 280+63'SB' - 288+27'SB'
STA 297+68'SB' - 357+19'SB'
STA 369+26'SB' - 385+00'SB'

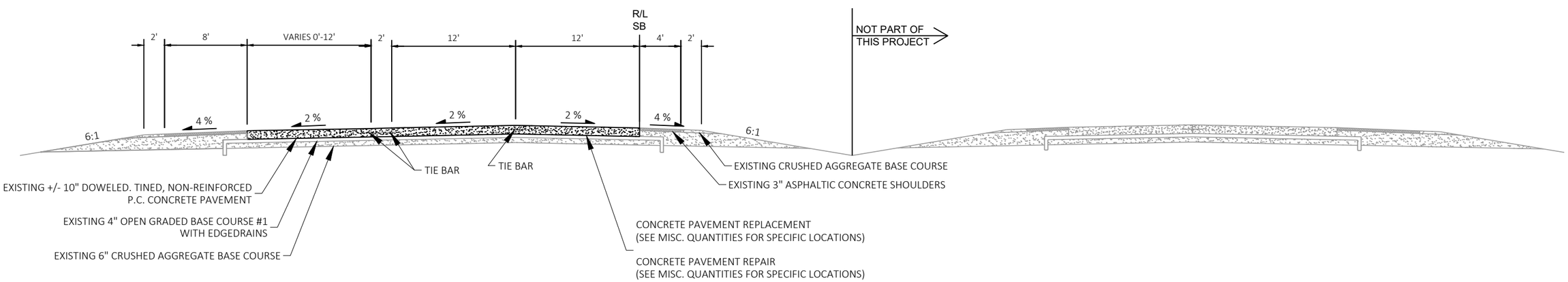

FINISHED TYPICAL SECTION, IH 39 (RAMP ACCELERATION/DECELERATION LANES)

STA 68+13'SB'- 73+50'SB'
STA 152+76'SB' - 165+54'SB'
STA 173+75'SB' - 180+04'SB'
STA 274+13'SB' - 280+63'SB'
STA 288+27'SB' - 297+68'SB'
STA 357+19'SB' - 369+26'SB'

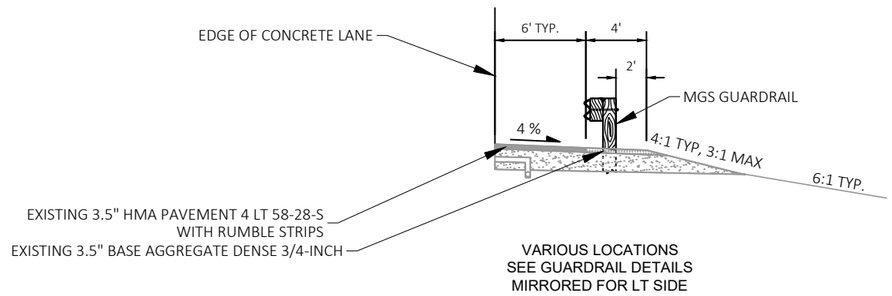

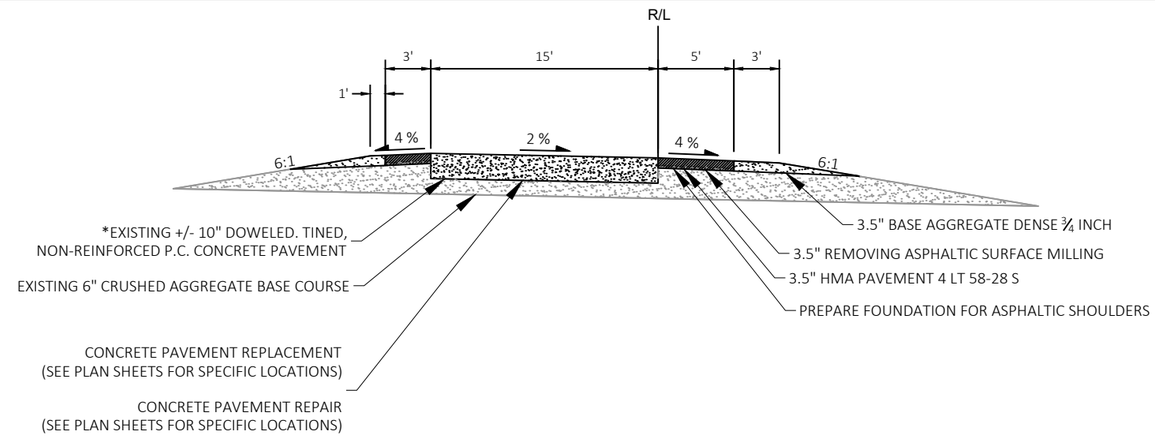

FINISHED RAMP TYPICAL SECTION (STH 16)
SEE PLAN DETAILS FOR LOCATIONS

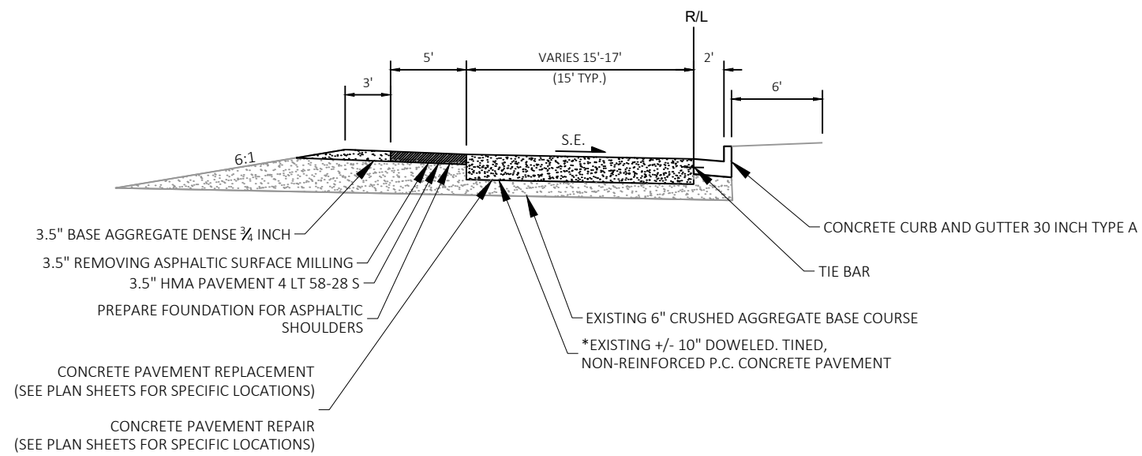

FINISHED RAMP TYPICAL SECTION WITH CURB & GUTTER (STH 16)
SEE PLAN DETAILS FOR LOCATIONS

NOTE: MILL 3.5" BELOW EDGE OF CONCRETE PAVEMENT GRADE

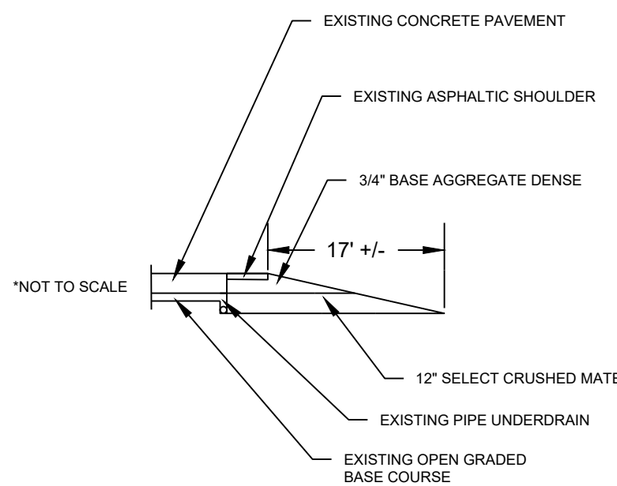

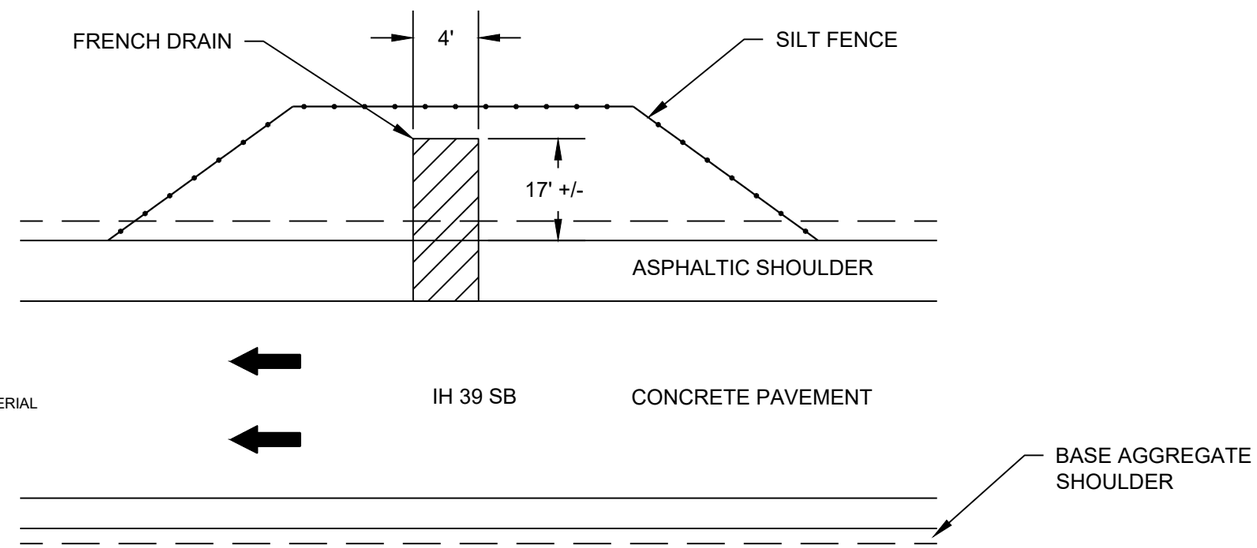

FRENCH DRAIN DETAIL

STA 96+37
STA 188+77
STA 252+27
STA 339+26

NOTE: EXCAVATION FOR FRENCH DRAIN IS
INCIDENTAL TO SELECT CRUSHED MATERIAL ITEM

NOTES:

* USE A JOINT SEALANT MEETING THE REQUIREMENTS OF ASTM D6690

** PLACE EXPANSION CAP ON THE END OF THE DOWEL THAT IS NOT TACK WELDED TO THE BASKET. DO NOT FORCE DOWEL BAR PAST THE DOWEL STOP.

*** STANDARD DOWEL BAR DIAMETER (SEE SDD 13C11 AND SDD 13C13)

SEE SDD 13C9 CONRETE PAVEMENT REPAIR AND REPLACEMENT FOR ADDITIONAL DETAILS.

JOINT SEALANT, DOWELS, DOWEL STOPS, AND FELT ARE INCIDENTAL TO CONCRETE PAVEMENT REPAIR AND REPLACEMENT BID ITEMS.

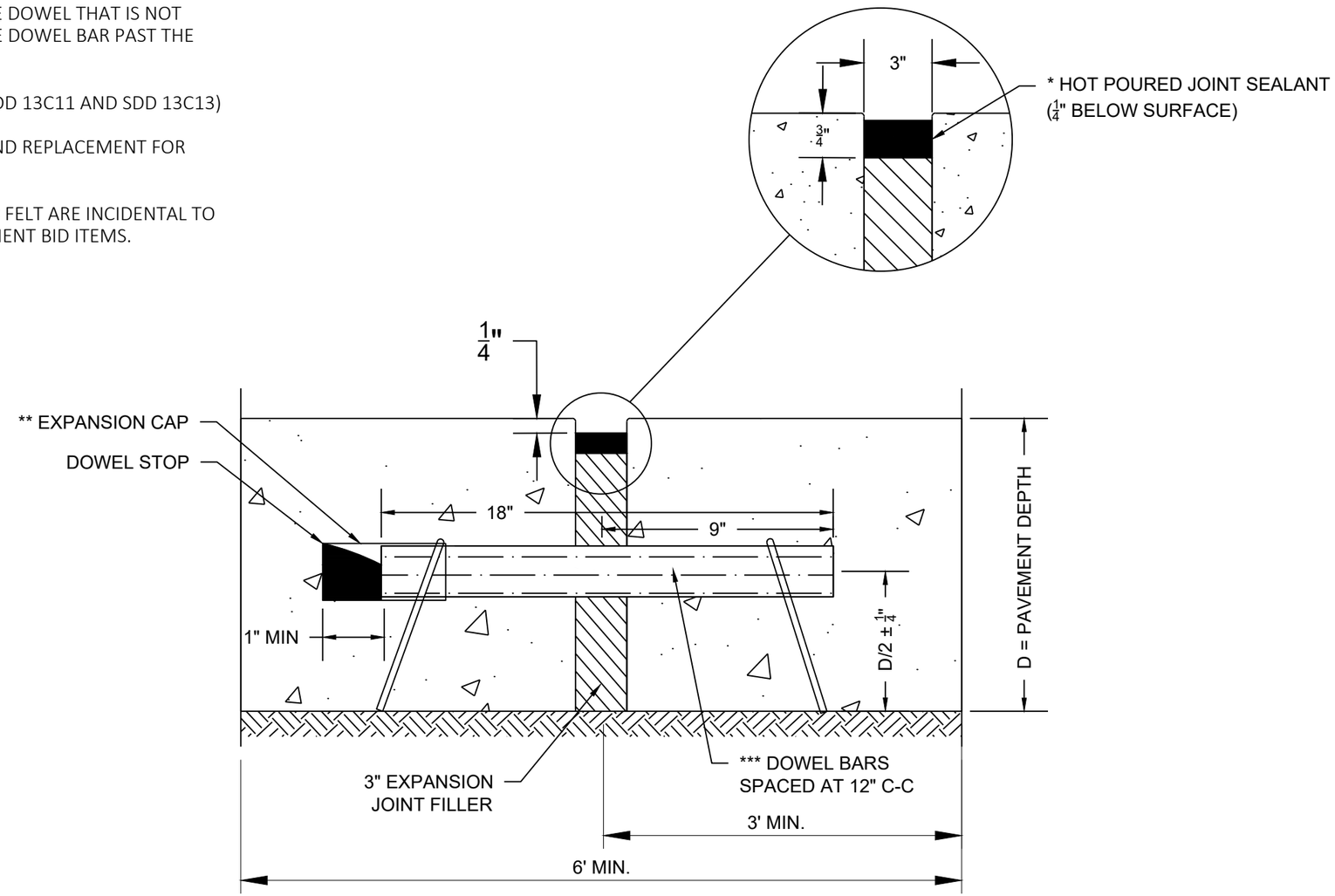

EXPANSION JOINT DETAIL

PATCH NUMBERS

40, 40A, 40B, 45, 45A, 87, 87A, 88, 88A, 106, 106A, 107, 107A, 152, 152A

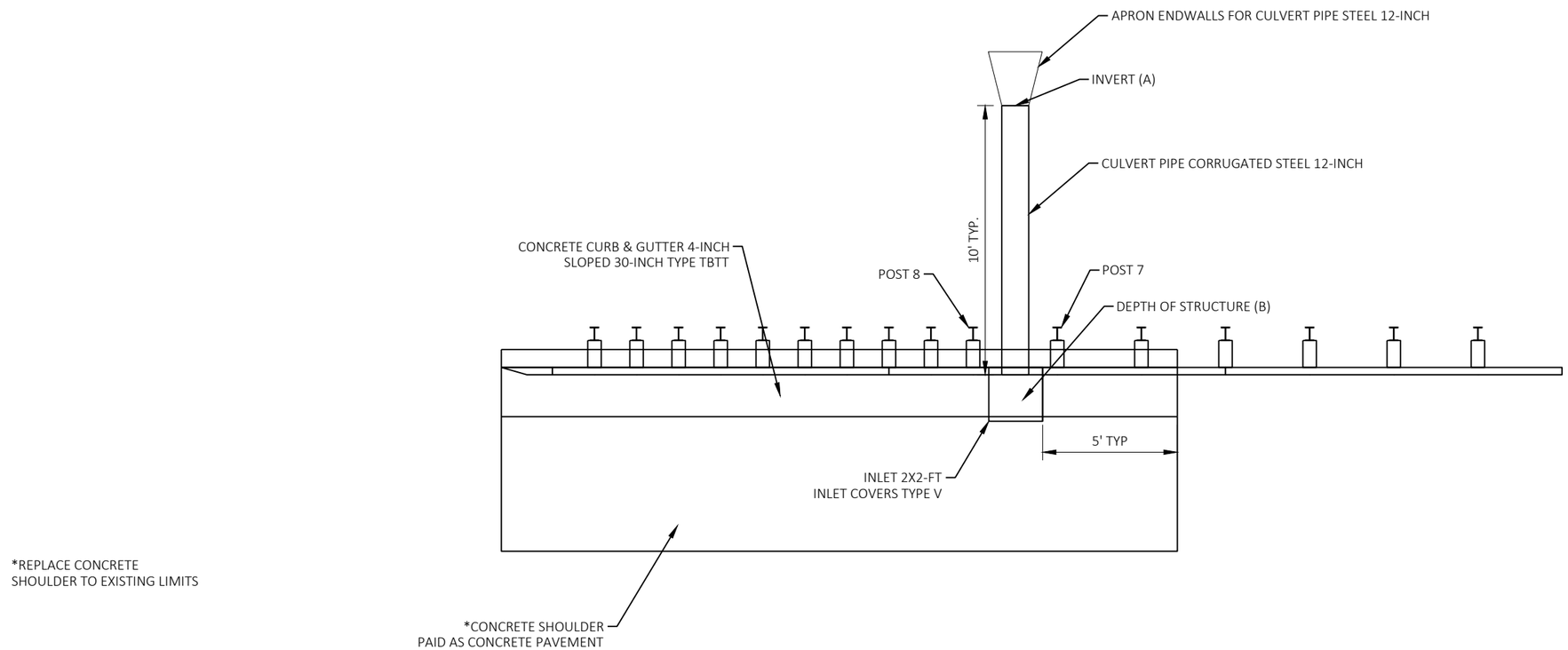

CONCRETE SURFACE DRAIN AT STRUCTURES

	A	B
B-11-100	820.62'	31"
B-11-117	837.64'	31"

2

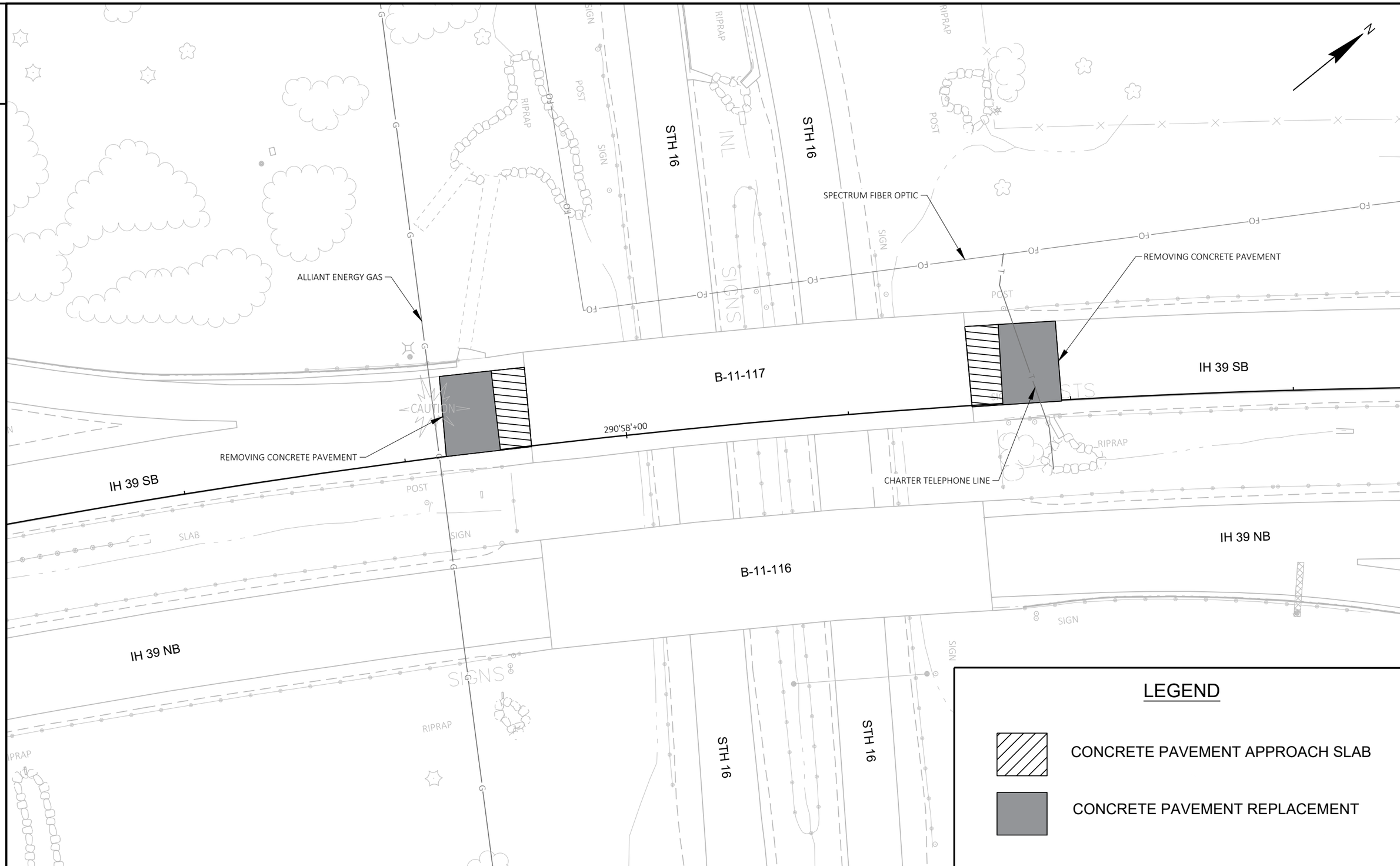

2

PROJECT NO: 1161-00-78	HWY: IH 39	COUNTY: COLUMBIA	CONSTRUCTION DETAILS - APPROACH SLABS	SHEET 16	E

FILE NAME : C:\USERS\JAMESGOLDEN\ONEDRIVE - DAAR CORPORATION\DOCUMENTS - SW DESIGN\1161-00-08 IH39, SB LANES, COLUMBIA CTY\C3D\11610008\SHEETSPLAN\021002-CD.DWG PLOT DATE : 4/28/2023 10:04 AM PLOT BY : JAMES GOLDEN PLOT NAME : PLOT SCALE : 1 IN:40 FT
LAYOUT NAME - 01

WISDOT/CADDS SHEET 42

2

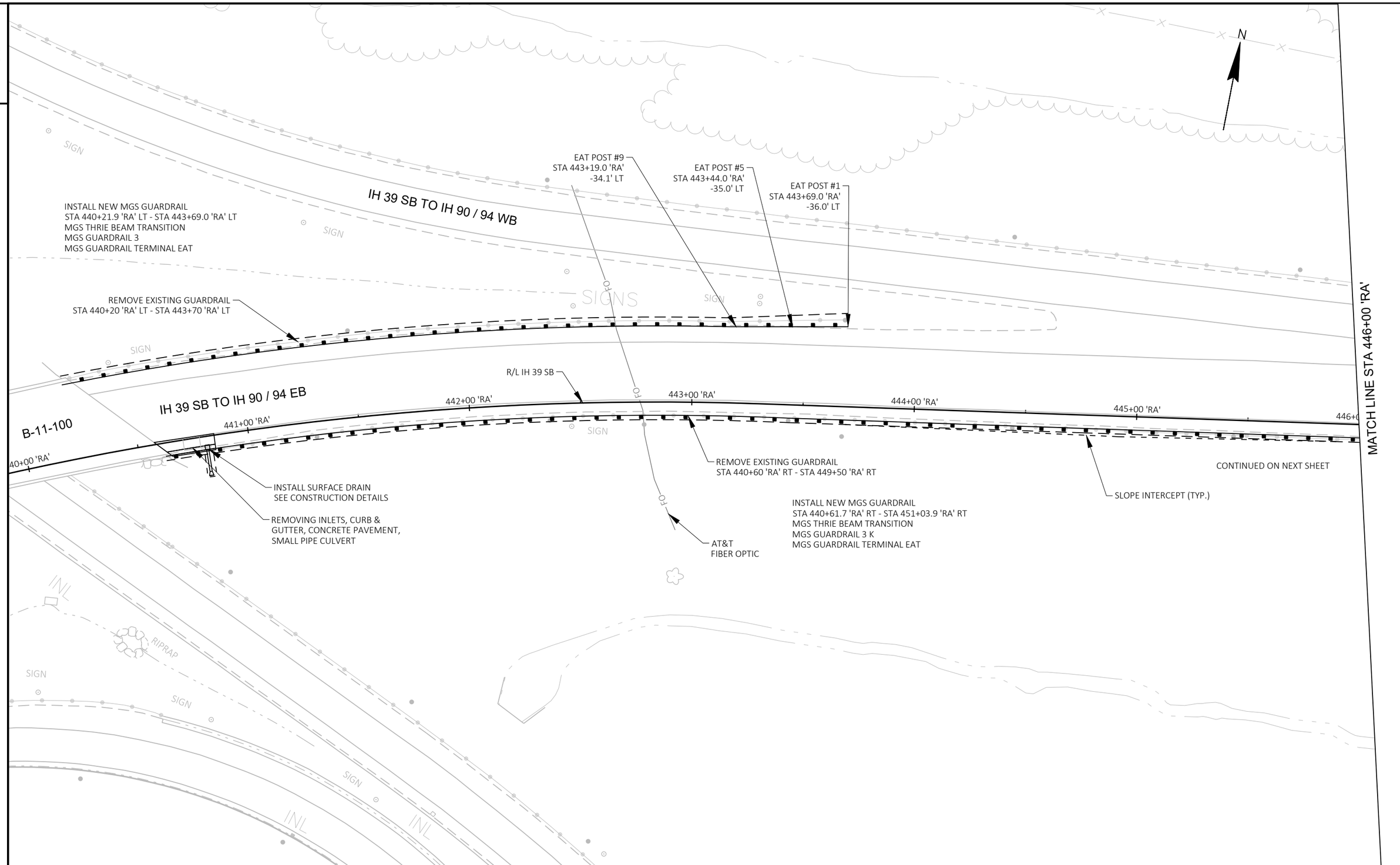

2

PROJECT NO: 1161-00-78	HWY: IH 39	COUNTY: COLUMBIA	GUARDRAIL DETAILS	SHEET 17	E

FILE NAME : C:\USERS\JAMES.GOLDEN\ONEDRIVE - DAAR CORPORATION\DOCUMENTS - SW DESIGN\1161-00-08 IH39, SB LANES, COLUMBIA CTY\C3D\11610008\SHEETSPLAN\021003-CD.DWG
LAYOUT NAME - 01
PLOT DATE : 1/20/2026 11:34 AM PLOT BY : JAMES GOLDEN PLOT NAME : PLOT SCALE : 1 IN:40 FT

WISDOT/CADDS SHEET 44

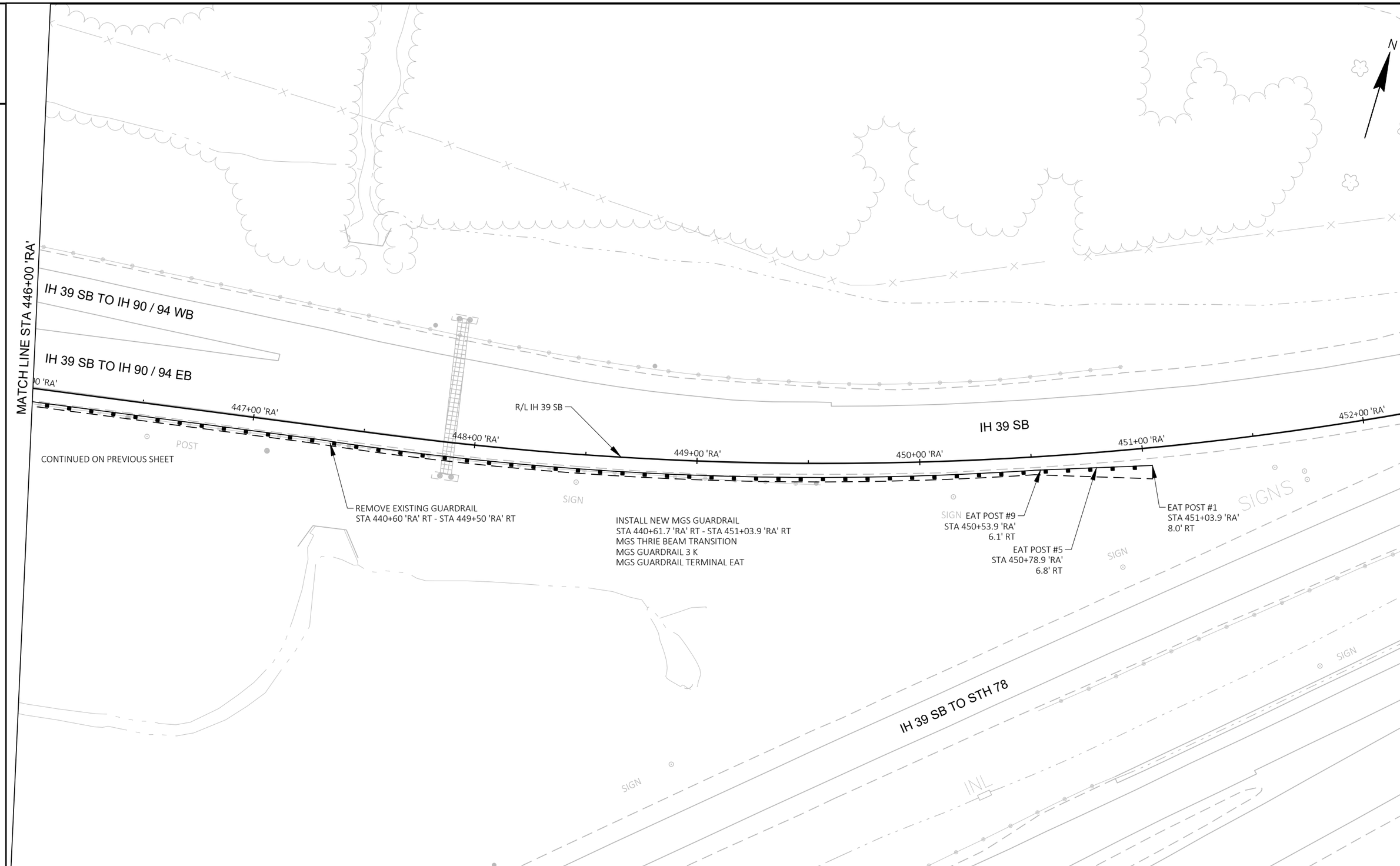
N
MATCH LINE STA 446+00 'RA'
IH 39 SB TO IH 90 / 94 WB
IH 39 SB TO IH 90 / 94 EB
447+00 'RA'
448+00 'RA'
449+00 'RA'
450+00 'RA'
451+00 'RA'
452+00 'RA'
R/L IH 39 SB
IH 39 SB
POST
CONTINUED ON PREVIOUS SHEET
SIGN
REMOVE EXISTING GUARDRAIL
STA 440+60 'RA' RT - STA 449+50 'RA' RT
INSTALL NEW MGS GUARDRAIL
STA 440+61.7 'RA' RT - STA 451+03.9 'RA' RT
MGS THRIE BEAM TRANSITION
MGS GUARDRAIL 3 K
MGS GUARDRAIL TERMINAL EAT
EAT POST #9
STA 450+53.9 'RA'
6.1' RT
EAT POST #5
STA 450+78.9 'RA'
6.8' RT
EAT POST #1
STA 451+03.9 'RA'
8.0' RT
SIGNS
IH 39 SB TO STH 78
INL

2

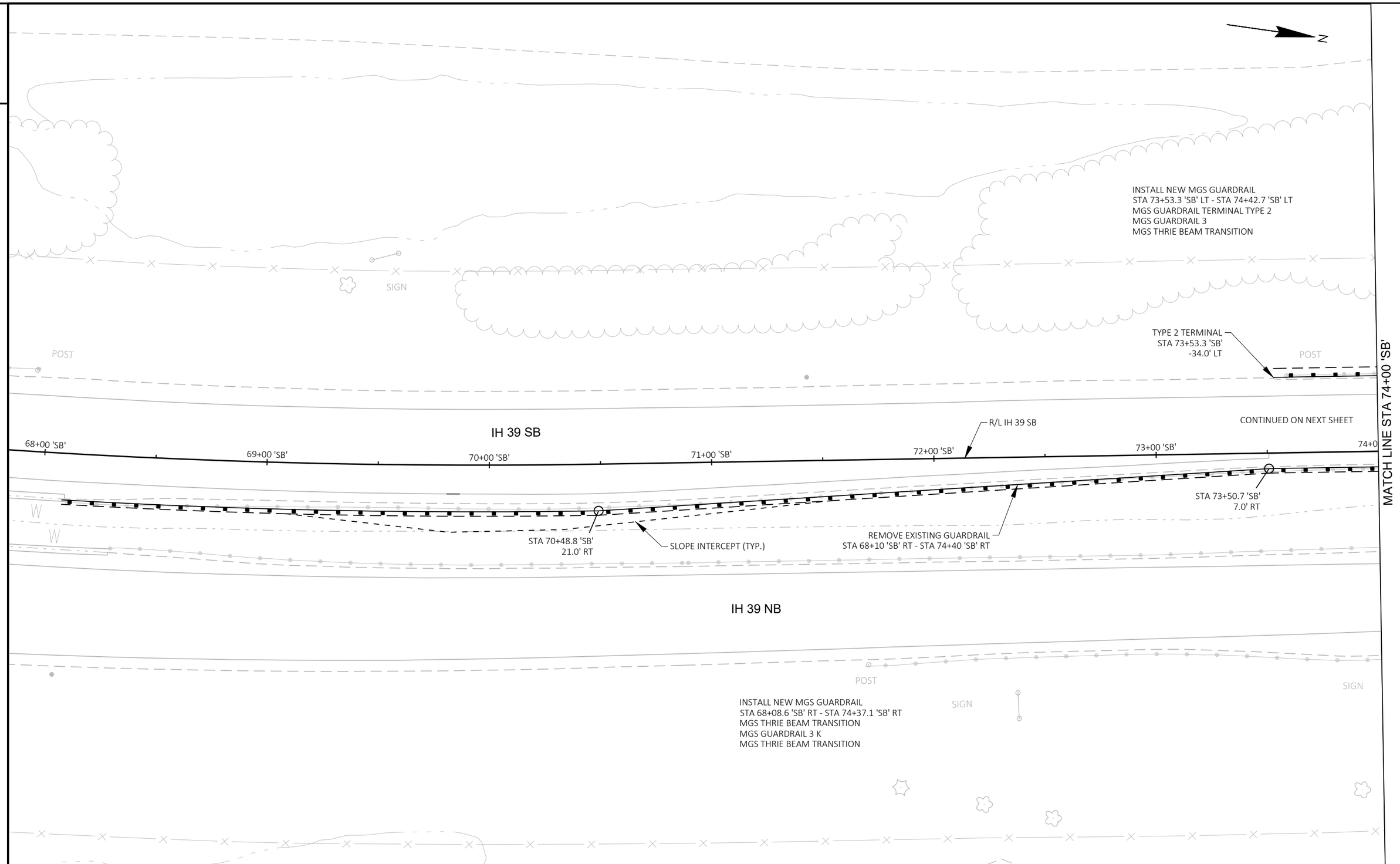

2

PROJECT NO: 1161-00-78	HWY: IH 39	COUNTY: COLUMBIA	GUARDRAIL DETAILS	SHEET 19	E

FILE NAME : C:\USERS\JAMES.GOLDEN\ONEDRIVE - DAAR CORPORATION\DOCUMENTS - SW DESIGN\1161-00-08 IH39, SB LANES, COLUMBIA CTY\C3D\11610008\SHEETSPLAN\021003-CD.DWG PLOT DATE : 1/20/2026 11:34 AM PLOT BY : JAMES GOLDEN PLOT NAME : PLOT SCALE : 1 IN:40 FT
LAYOUT NAME - 03

WISDOT/CADDS SHEET 44

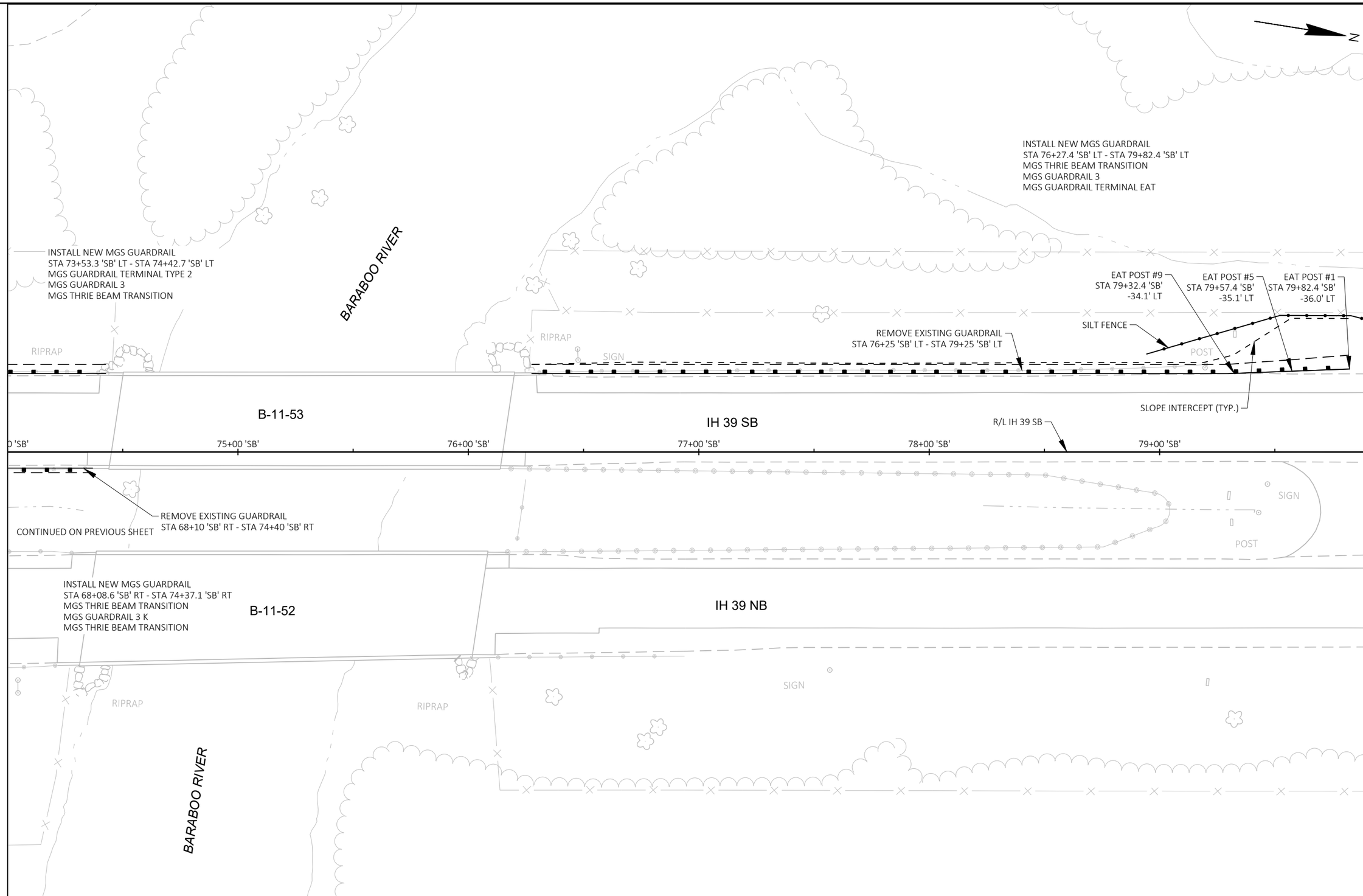
N
INSTALL NEW MGS GUARDRAIL
STA 76+27.4 'SB' LT - STA 79+82.4 'SB' LT
MGS THRIE BEAM TRANSITION
MGS GUARDRAIL 3
MGS GUARDRAIL TERMINAL EAT
INSTALL NEW MGS GUARDRAIL
STA 73+53.3 'SB' LT - STA 74+42.7 'SB' LT
MGS GUARDRAIL TERMINAL TYPE 2
MGS GUARDRAIL 3
MGS THRIE BEAM TRANSITION
BARABOO RIVER
EAT POST #9
STA 79+32.4 'SB'
-34.1' LT
EAT POST #5
STA 79+57.4 'SB'
-35.1' LT
EAT POST #1
STA 79+82.4 'SB'
-36.0' LT
SILT FENCE
REMOVE EXISTING GUARDRAIL
STA 76+25 'SB' LT - STA 79+25 'SB' LT
RIPRAP
RIPRAP
SIGN
POST
SLOPE INTERCEPT (TYP.)
B-11-53
IH 39 SB
R/L IH 39 SB
MATCH LINE STA 74+00 'SB'
0 'SB'
75+00 'SB'
76+00 'SB'
77+00 'SB'
78+00 'SB'
79+00 'SB'
SIGN
POST
REMOVE EXISTING GUARDRAIL
STA 68+10 'SB' RT - STA 74+40 'SB' RT
CONTINUED ON PREVIOUS SHEET
INSTALL NEW MGS GUARDRAIL
STA 68+08.6 'SB' RT - STA 74+37.1 'SB' RT
MGS THRIE BEAM TRANSITION
MGS GUARDRAIL 3 K
MGS THRIE BEAM TRANSITION
B-11-52
IH 39 NB
SIGN
RIPRAP
RIPRAP
BARABOO RIVER

2

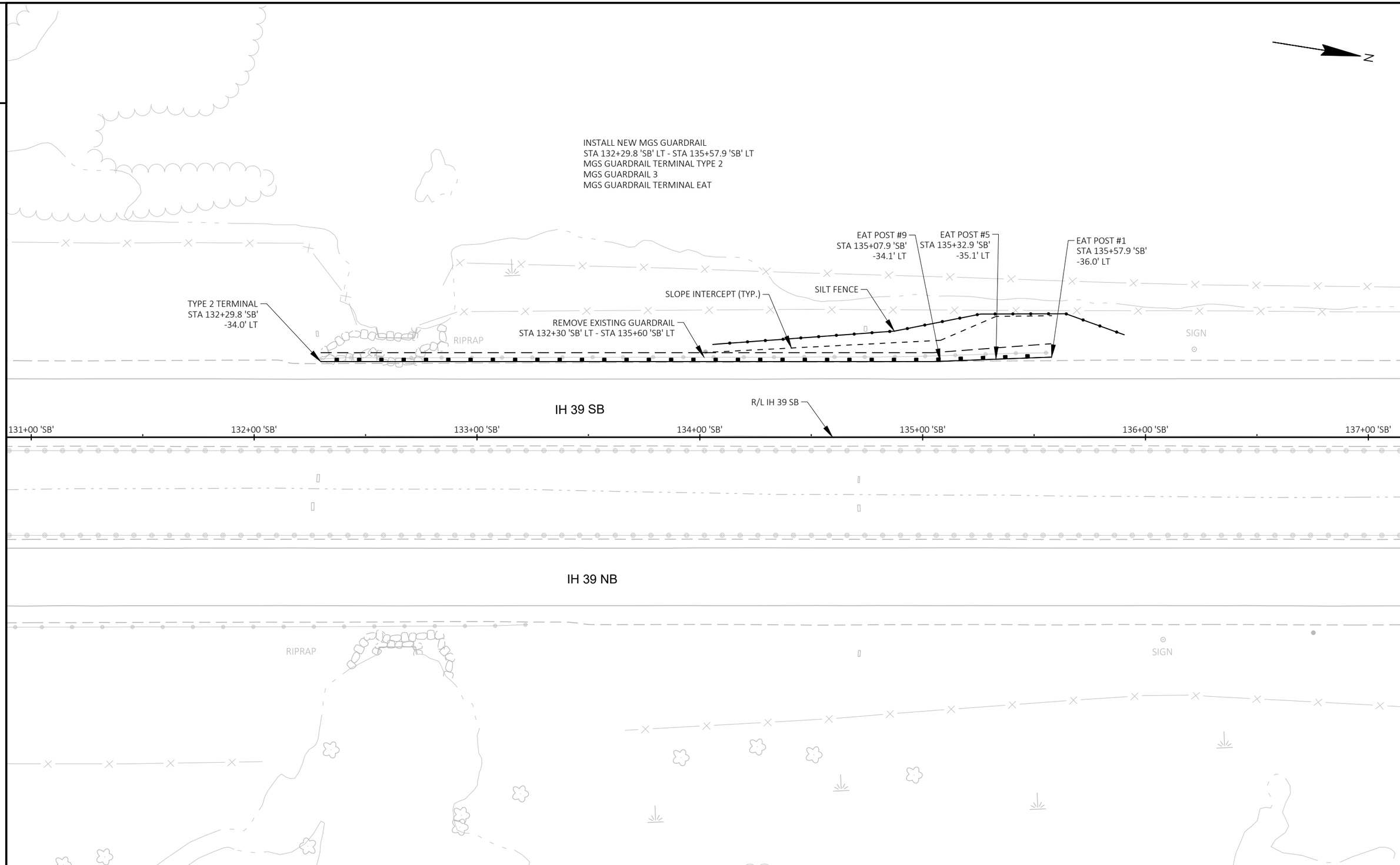

2

PROJECT NO: 1161-00-78	HWY: IH 39	COUNTY: COLUMBIA	GUARDRAIL DETAILS	SHEET 21	E

FILE NAME : C:\USERS\JAMES.GOLDEN\ONEDRIVE - DAAR CORPORATION\DOCUMENTS - SW DESIGN\1161-00-08 IH39, SB LANES, COLUMBIA CTY\C3D\11610008\SHEETSPLAN\021003-CD.DWG PLOT DATE : 1/20/2026 11:35 AM PLOT BY : JAMES GOLDEN PLOT NAME : PLOT SCALE : 1 IN:40 FT
LAYOUT NAME - 05

WISDOT/CADDS SHEET 44

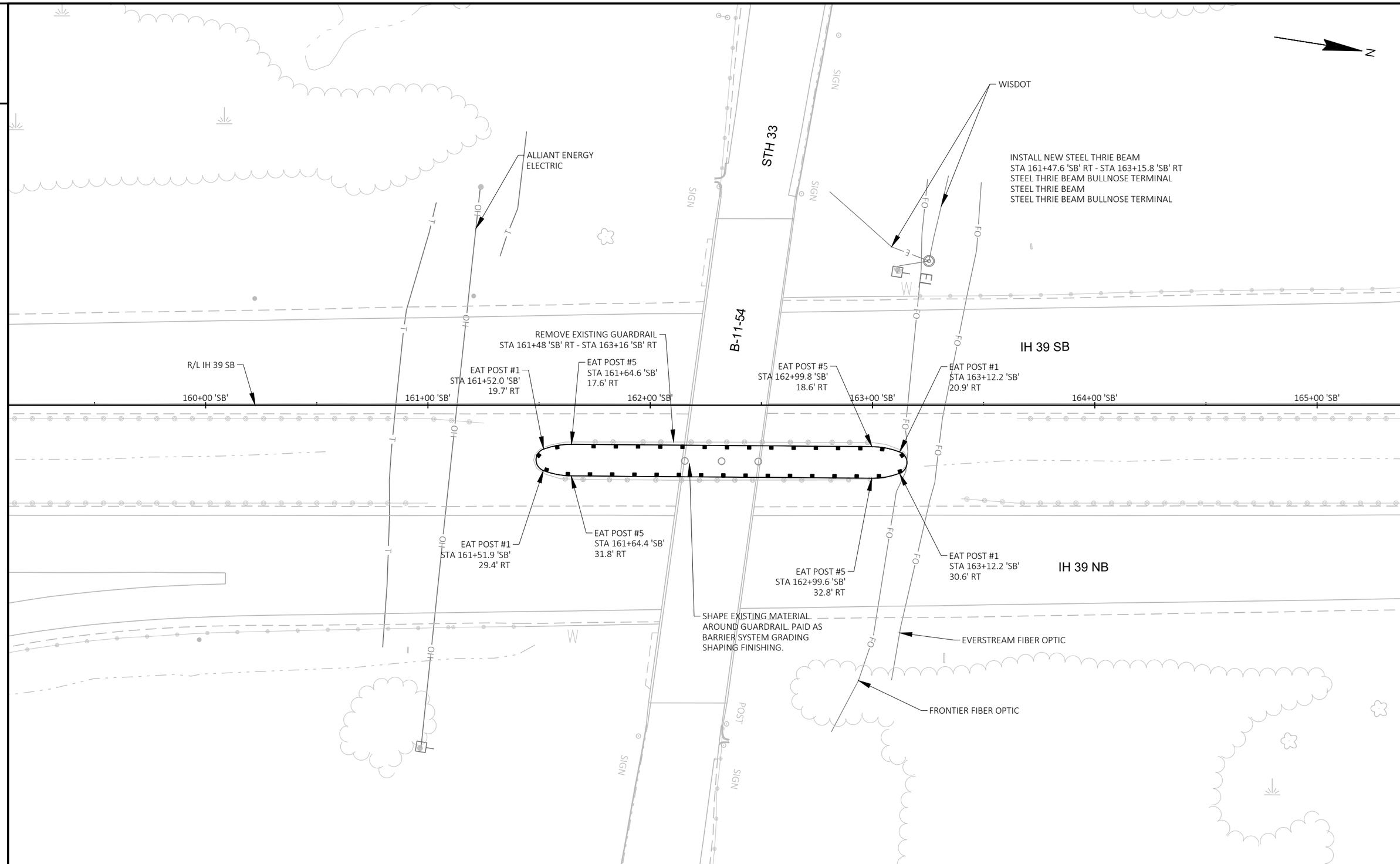
N
WISDOT
INSTALL NEW STEEL THRIE BEAM
STA 161+47.6 'SB' RT - STA 163+15.8 'SB' RT
STEEL THRIE BEAM BULLNOSE TERMINAL
STEEL THRIE BEAM
STEEL THRIE BEAM BULLNOSE TERMINAL
ALLIANT ENERGY
ELECTRIC
STH 33
B-11-54
IH 39 SB
IH 39 NB
REMOVE EXISTING GUARDRAIL
STA 161+48 'SB' RT - STA 163+16 'SB' RT
R/L IH 39 SB
EAT POST #1
STA 161+52.0 'SB'
19.7' RT
EAT POST #5
STA 161+64.6 'SB'
17.6' RT
EAT POST #5
STA 162+99.8 'SB'
18.6' RT
EAT POST #1
STA 163+12.2 'SB'
20.9' RT
160+00 'SB'
161+00 'SB'
162+00 'SB'
163+00 'SB'
164+00 'SB'
165+00 'SB'
EAT POST #1
STA 161+51.9 'SB'
29.4' RT
EAT POST #5
STA 161+64.4 'SB'
31.8' RT
EAT POST #5
STA 162+99.6 'SB'
32.8' RT
EAT POST #1
STA 163+12.2 'SB'
30.6' RT
SHAPE EXISTING MATERIAL
AROUND GUARDRAIL. PAID AS
BARRIER SYSTEM GRADING
SHAPING FINISHING.
EVERSTREAM FIBER OPTIC
FRONTIER FIBER OPTIC
SIGN
POST
OH
T
FO
E
W

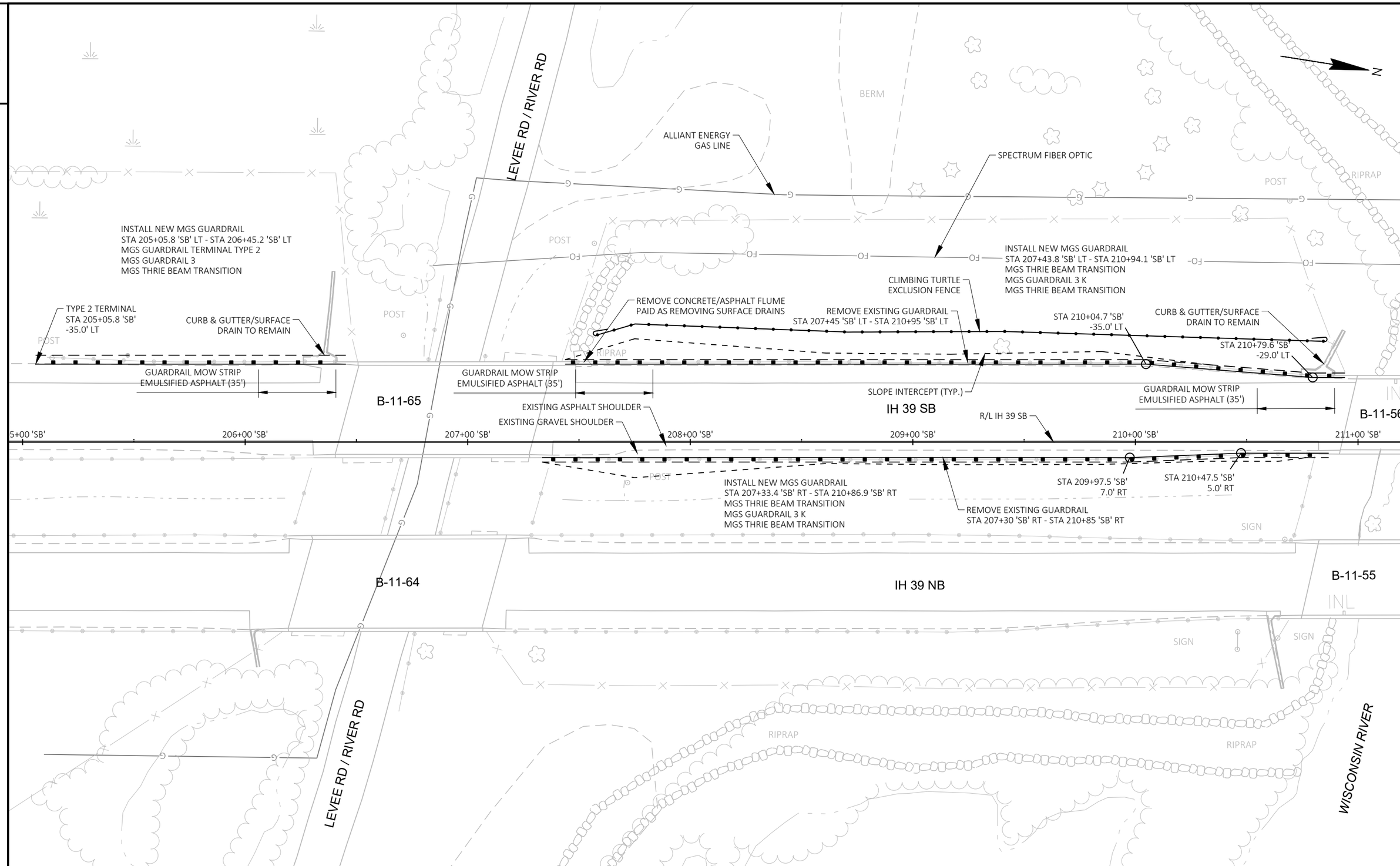

PROJECT NO: 1161-00-78	HWY: IH 39	COUNTY: COLUMBIA	GUARDRAIL DETAILS	SHEET 23	E

FILE NAME : C:\USERS\JAMES.GOLDEN\ONEDRIVE - DAAR CORPORATION\DOCUMENTS - SW DESIGN\1161-00-08 IH39, SB LANES, COLUMBIA CTY\C3D\11610008\SHEETSPLAN\021003-CD.DWG PLOT DATE : 1/20/2026 11:35 AM PLOT BY : JAMES GOLDEN PLOT NAME : PLOT SCALE : 1 IN:40 FT
LAYOUT NAME - 06

2

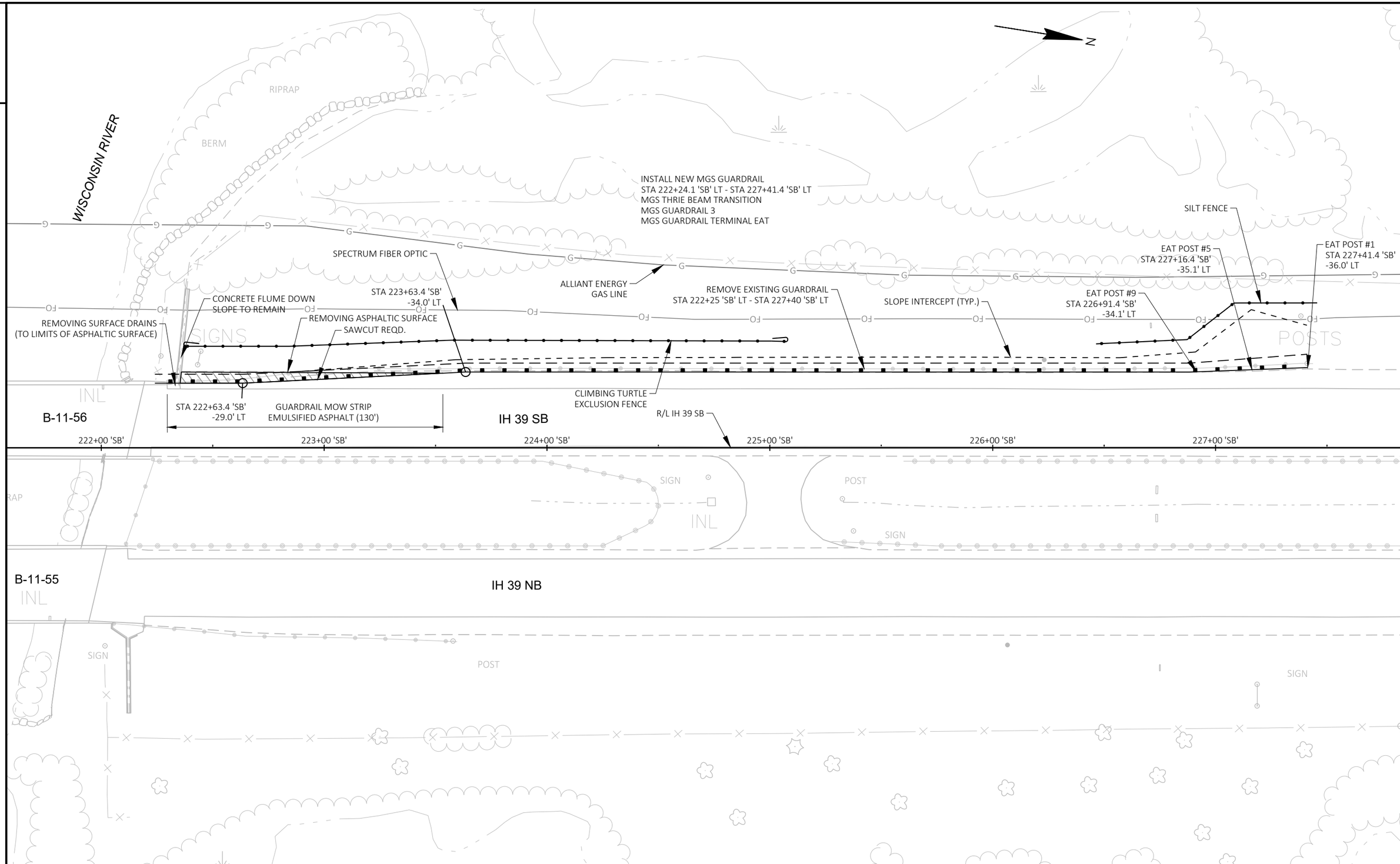

2

PROJECT NO: 1161-00-78	HWY: IH 39	COUNTY: COLUMBIA	GUARDRAIL DETAILS	SHEET 24	E

FILE NAME : C:\USERS\JAMES.GOLDEN\ONEDRIVE - DAAR CORPORATION\DOCUMENTS - SW DESIGN\1161-00-08 IH39, SB LANES, COLUMBIA CTY\C3D\11610008\SHEETSPLAN\021003-CD.DWG PLOT DATE : 1/20/2026 11:35 AM PLOT BY : JAMES GOLDEN PLOT NAME : PLOT SCALE : 1 IN:40 FT
LAYOUT NAME - 07

WISDOT/CADDS SHEET 44

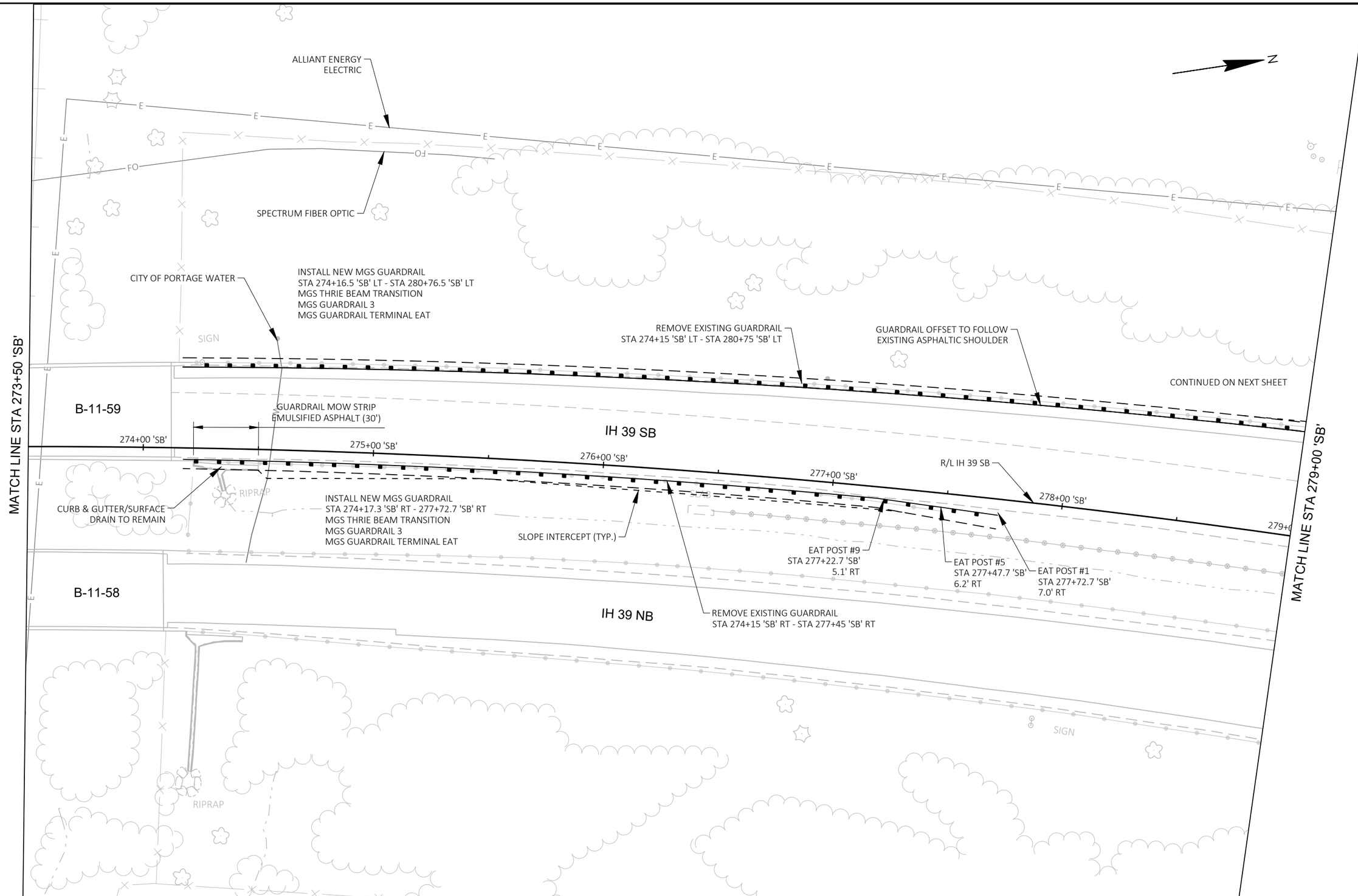
ALLIANT ENERGY
ELECTRIC
SPECTRUM FIBER OPTIC
CITY OF PORTAGE WATER
INSTALL NEW MGS GUARDRAIL
STA 274+16.5 'SB' LT - STA 280+76.5 'SB' LT
MGS THRIE BEAM TRANSITION
MGS GUARDRAIL 3
MGS GUARDRAIL TERMINAL EAT
REMOVE EXISTING GUARDRAIL
STA 274+15 'SB' LT - STA 280+75 'SB' LT
GUARDRAIL OFFSET TO FOLLOW
EXISTING ASPHALTIC SHOULDER
CONTINUED ON NEXT SHEET
SIGN
B-11-59
GUARDRAIL MOW STRIP
EMULSIFIED ASPHALT (30')
IH 39 SB
MATCH LINE STA 273+50 'SB'
MATCH LINE STA 279+00 'SB'
274+00 'SB'
275+00 'SB'
276+00 'SB'
277+00 'SB'
278+00 'SB'
R/L IH 39 SB
RIPRAP
CURB & GUTTER/SURFACE
DRAIN TO REMAIN
INSTALL NEW MGS GUARDRAIL
STA 274+17.3 'SB' RT - 277+72.7 'SB' RT
MGS THRIE BEAM TRANSITION
MGS GUARDRAIL 3
MGS GUARDRAIL TERMINAL EAT
SLOPE INTERCEPT (TYP.)
EAT POST #9
STA 277+22.7 'SB'
5.1' RT
EAT POST #5
STA 277+47.7 'SB'
6.2' RT
EAT POST #1
STA 277+72.7 'SB'
7.0' RT
B-11-58
IH 39 NB
REMOVE EXISTING GUARDRAIL
STA 274+15 'SB' RT - STA 277+45 'SB' RT
SIGN
RIPRAP

2

2

ALLIANT ENERGY
ELECTRIC

INSTALL NEW MGS GUARDRAIL
STA 274+16.5 'SB' LT - STA 280+76.5 'SB' LT
MGS THRIE BEAM TRANSITION
MGS GUARDRAIL 3
MGS GUARDRAIL TERMINAL EAT

REMOVE EXISTING GUARDRAIL
STA 274+15 'SB' LT - STA 280+75 'SB' LT

EAT POST #9
STA 280+27.3 'SB'
-49.8' LT

EAT POST #5
STA 280+51.9 'SB'
-51.6' LT

SLOPE INTERCEPT (TYP.)

CONTINUED ON PREVIOUS SHEET

SILT FENCE

EAT POST #1
STA 280+76.5 'SB'
-53.4' LT

STH 16 TO IH 39 SB

ASPHALT SHOULDER WORK
SEE STH 16 INTERCHANGE PLAN SHEETS

MATCH LINE STA 279+00 'SB'

R/L IH 39 SB

280+00 'SB'

281+00 'SB'

282+00 'SB'

283+00 'SB'

284+00 'SB'

IH 39 SB

IH 39 NB

IH 39 NB TO STH 16 EB

ASPHALT SHOULDER WORK
SEE STH 16 INTERCHANGE PLAN SHEETS

PROJECT NO: 1161-00-78	HWY: IH 39	COUNTY: COLUMBIA	GUARDRAIL DETAILS	SHEET 26	E

FILE NAME : C:\USERS\JAMES.GOLDEN\ONEDRIVE - DAAR CORPORATION\DOCUMENTS - SW DESIGN\1161-00-08 IH39, SB LANES, COLUMBIA CTY\C3D\11610008\SHEETSPLAN\021003-CD.DWG PLOT DATE : 1/20/2026 11:36 AM PLOT BY : JAMES GOLDEN PLOT NAME : PLOT SCALE : 1 IN:40 FT
LAYOUT NAME - 12

WISDOT/CADDS SHEET 44

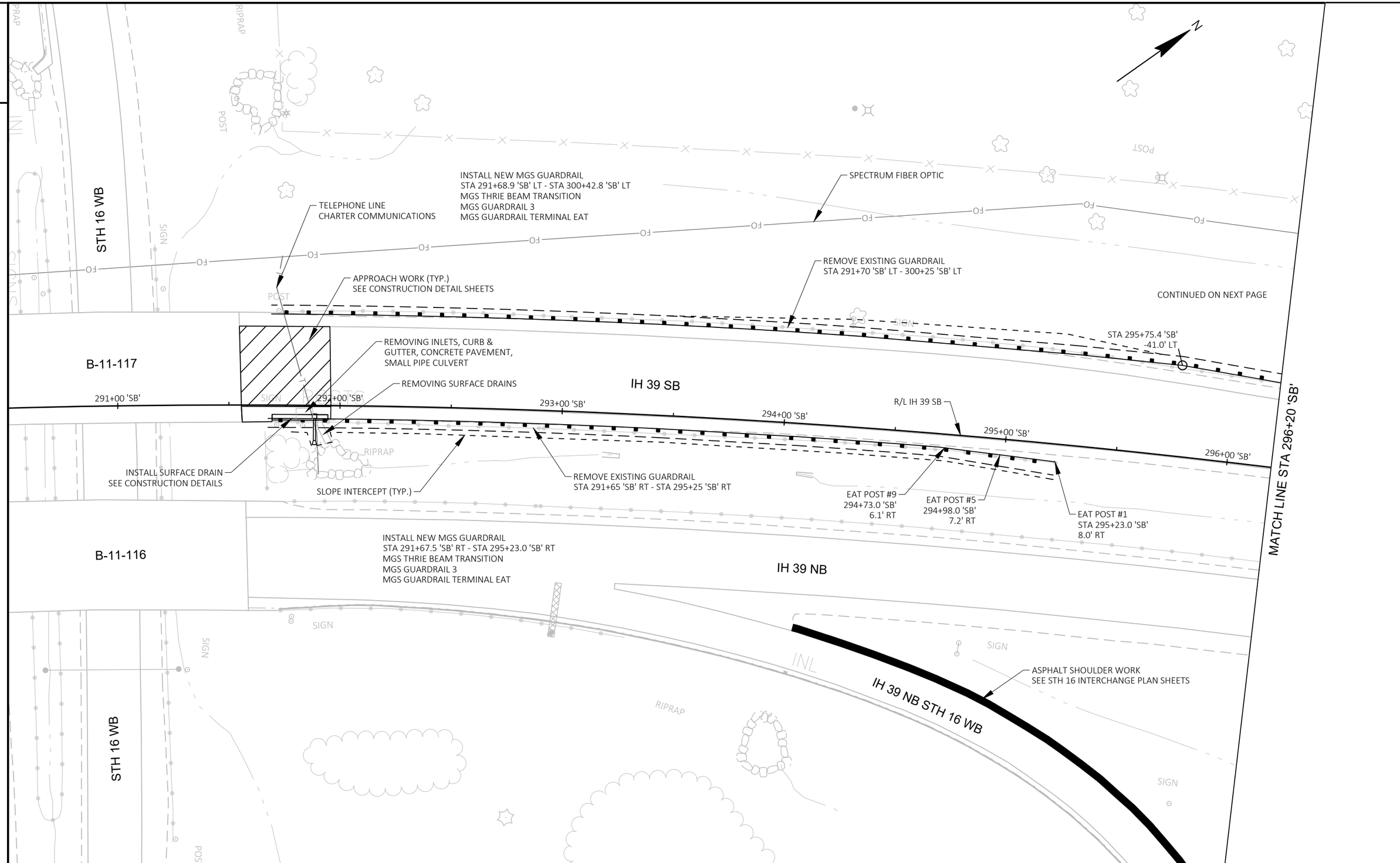
N
STH 16 WB
B-11-117
B-11-116
IH 39 SB
IH 39 NB
IH 39 NB STH 16 WB
MATCH LINE STA 296+20 'SB'
INSTALL NEW MGS GUARDRAIL
STA 291+68.9 'SB' LT - STA 300+42.8 'SB' LT
MGS THRIE BEAM TRANSITION
MGS GUARDRAIL 3
MGS GUARDRAIL TERMINAL EAT
SPECTRUM FIBER OPTIC
TELEPHONE LINE
CHARTER COMMUNICATIONS
APPROACH WORK (TYP.)
SEE CONSTRUCTION DETAIL SHEETS
REMOVE EXISTING GUARDRAIL
STA 291+70 'SB' LT - 300+25 'SB' LT
CONTINUED ON NEXT PAGE
STA 295+75.4 'SB'
-41.0' LT
REMOVING INLETS, CURB &
GUTTER, CONCRETE PAVEMENT,
SMALL PIPE CULVERT
REMOVING SURFACE DRAINS
291+00 'SB'
292+00 'SB'
293+00 'SB'
294+00 'SB'
295+00 'SB'
296+00 'SB'
R/L IH 39 SB
INSTALL SURFACE DRAIN
SEE CONSTRUCTION DETAILS
SLOPE INTERCEPT (TYP.)
REMOVE EXISTING GUARDRAIL
STA 291+65 'SB' RT - STA 295+25 'SB' RT
EAT POST #9
294+73.0 'SB'
6.1' RT
EAT POST #5
294+98.0 'SB'
7.2' RT
EAT POST #1
STA 295+23.0 'SB'
8.0' RT
INSTALL NEW MGS GUARDRAIL
STA 291+67.5 'SB' RT - STA 295+23.0 'SB' RT
MGS THRIE BEAM TRANSITION
MGS GUARDRAIL 3
MGS GUARDRAIL TERMINAL EAT
ASPHALT SHOULDER WORK
SEE STH 16 INTERCHANGE PLAN SHEETS
RIPRAP
SIGN
POST
FO
INL

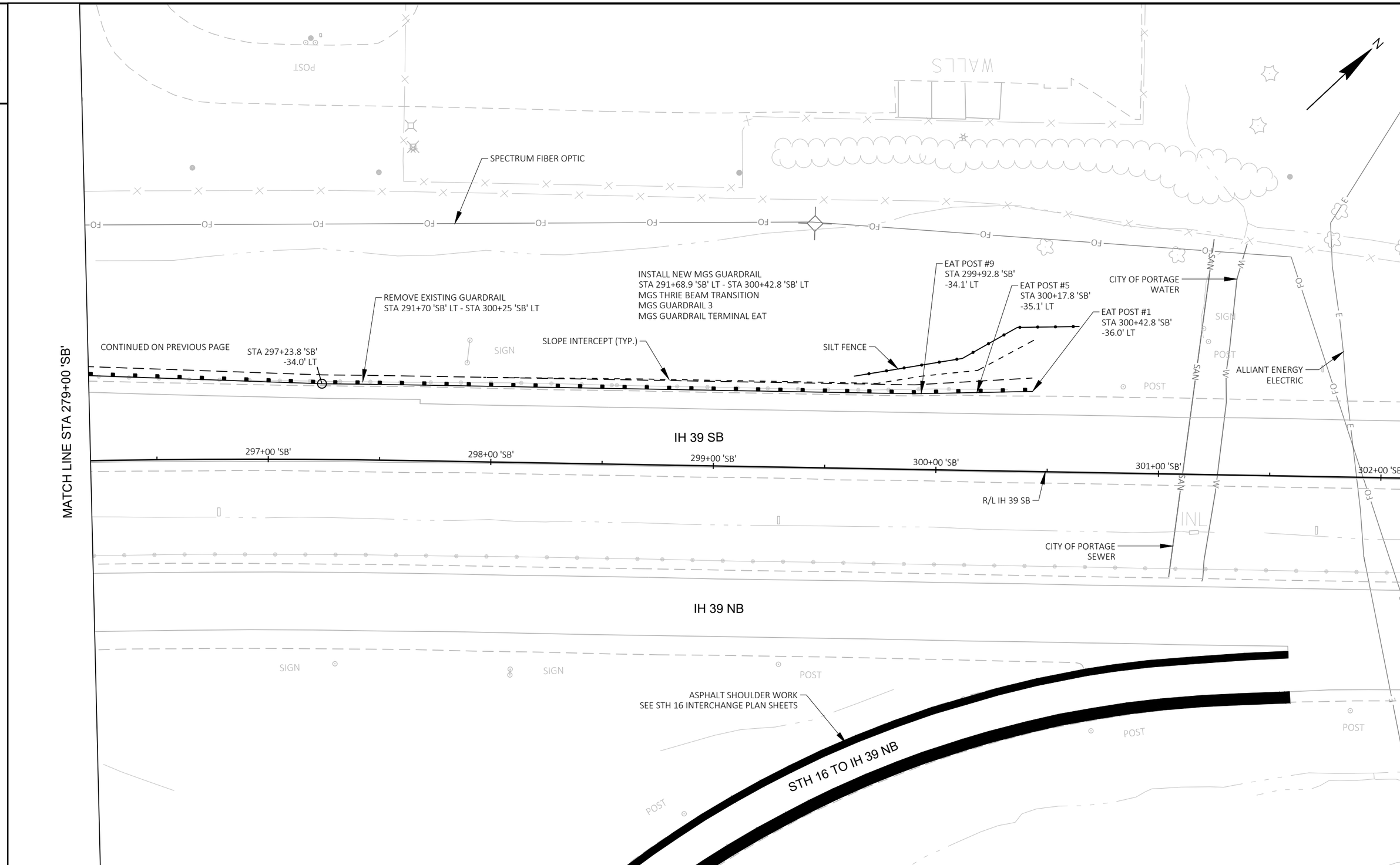

PROJECT NO: 1161-00-78	HWY: IH 39	COUNTY: COLUMBIA	GUARDRAIL DETAILS	SHEET 28	E

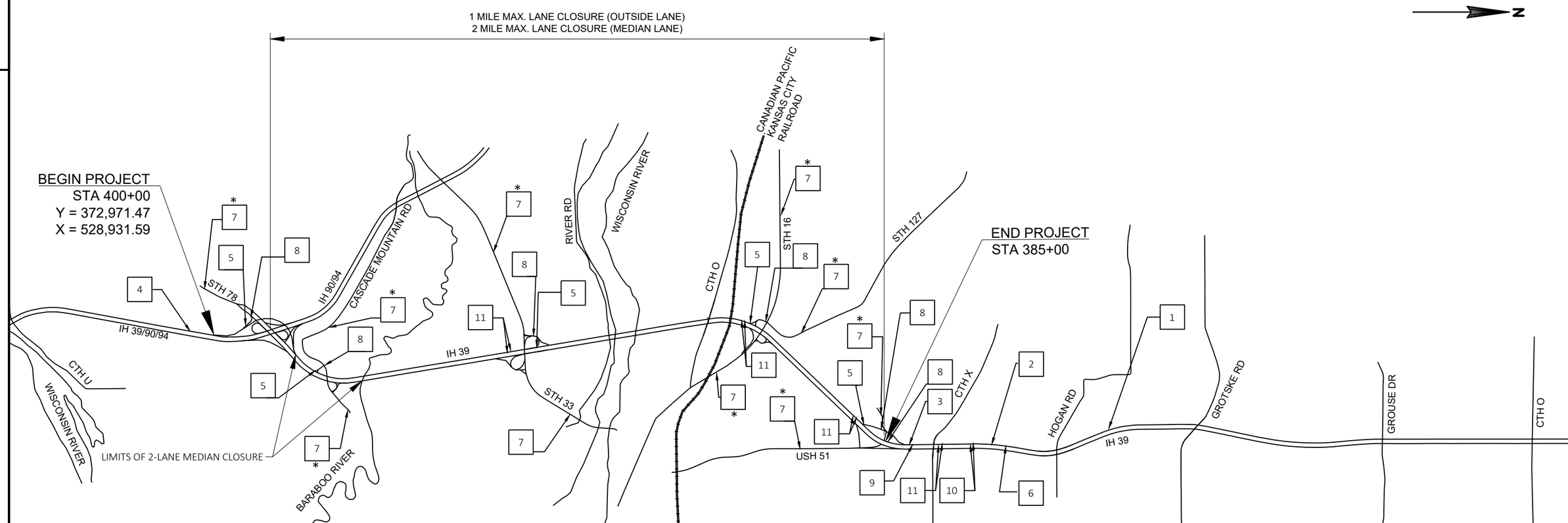

LEGEND

[#] TC POST MOUNTED SIGN

GENERAL NOTES:

INDIVIDUAL LANE CLOSURE LIMITS ARE LIMITED 1 MILE(OUTSIDE LANE) AND 2 MILES (MEDIAN LANE).

3 MILES OF NO RESTRICTIONS ARE REQUIRED BETWEEN ANY CONSECUTIVE LANE CLOSURES.

DRAWINGS SHOW TRAFFIC CONTROL FOR A TYPICAL SITUATION. ADDITIONAL TRAFFIC CONTROL DEVICES MAY BE REQUIRED AND/OR LAYOUT DETAILS MODIFIED DEPENDING ON FIELD CONDITIONS AND THE CONTRACTOR'S METHODS OF OPERATION.

POST TEMPORARY REGULATORY SPEED LIMIT SIGNS IN WORK ZONE ONLY DURING CONTINUOUS WORKER ACTIVITY. DURING PERIODS OF NO WORK ACTIVITY OR WHEN THE TRAFFIC CONTROLS ARE REMOVED FROM THE ROADWAY OR DURING CURING PERIODS, COVER OR REMOVE THE TEMPORARY SPEED LIMIT SIGNS. IF WORK LASTS LESS THAN 7 DAYS, MOUNT THE REGULATORY SPEED LIMIT SIGN ON A PORTABLE SIGN POST.

MAP SHOWN IS NOT TO SCALE.

SEE SDD "TRAFFIC CONTROL, LANE CLOSURE" FOR ADDITIONAL DETAILS.

SEE SDD "TRAFFIC CONTROL , RAMP WITHIN LANE CLOSURE" FOR ADDITIONAL DETAILS.

SEE SDD "TRAFFIC CONTROL , EXIT RAMP CLOSURE" FOR ADDITIONAL DETAILS.

SEE SDD "TRAFFIC CONTROL, SHOULDER CLOSURE ON DIVIDED ROADWAY, SPEEDS GREATER THAN 40 M.P.H." FOR ADDITIONAL DETAILS.

SEE SDD "ADVANCED WIDTH RESTRICTION SIGNING" FOR ADDITIONAL DETAILS.

ALL TRAFFIC CONTROL SIGNS ARE 48" X 48" UNLESS OTHERWISE STATED.

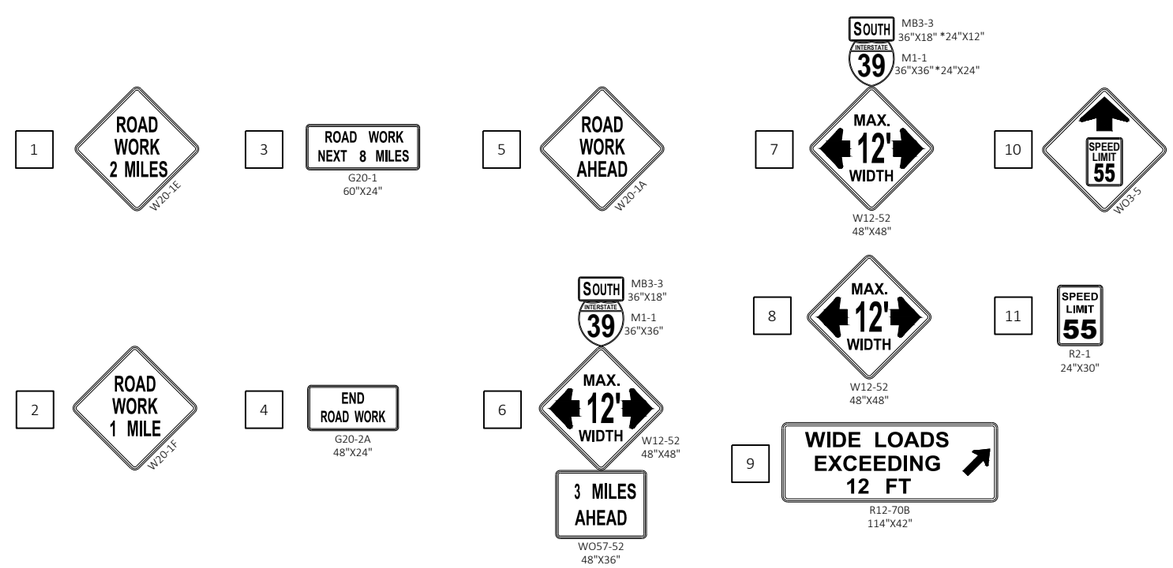

PROJECT NO: 1161-00-78	HWY: IH 39	COUNTY: COLUMBIA	TRAFFIC CONTROL OVERVIEW	SHEET 29	E

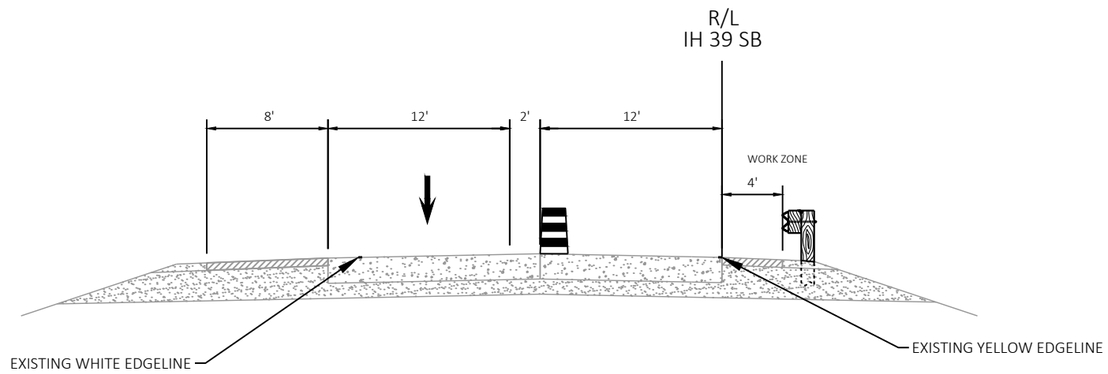

MEDIAN GUARDRAIL WORK
STA 440+61.7'RA' TO 451+03.9'RA' RT
STA 68+08.6'SB' TO 74+37.1'SB' RT
STA 207+33.4'SB' TO 210+86.9'SB' RT
STA 274+17.3'SB' TO 277+72.7'SB' RT
STA 291+67.5'SB' TO 295+23'SB' RT
STA 376+37.1'SB' TO 375+82.7'SB' RT

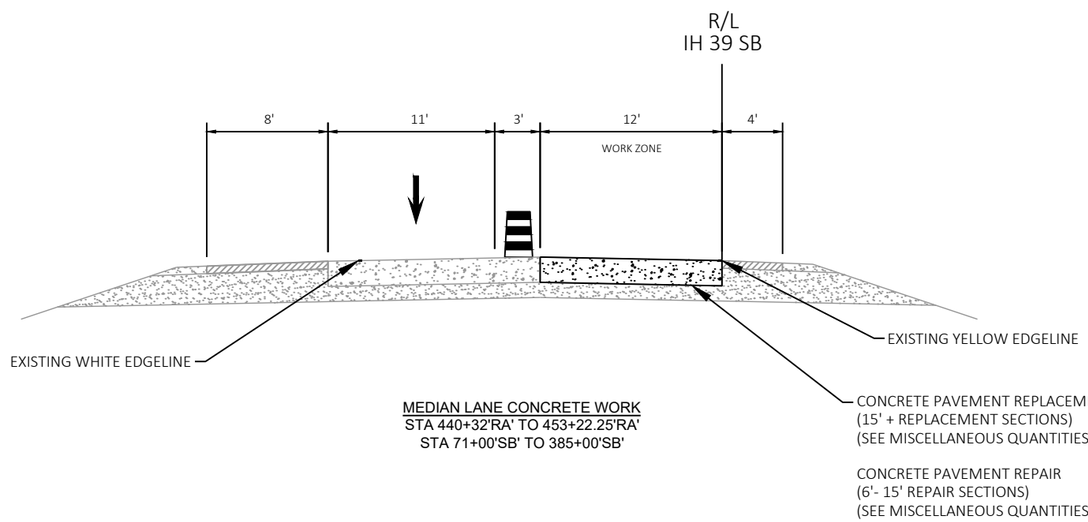

MEDIAN LANE CONCRETE WORK
STA 440+32'RA' TO 453+22.25'RA'
STA 71+00'SB' TO 385+00'SB'

NOTES

1. MOVE DRUM ONTO NEW PAVEMENT DURING 3 DAY CURING PERIOD

2. DO NOT REMOVE EXISTING EDGELINE MARKINGS

STAGE 1 CONSTRUCTION
STA 440+32'RA' TO 453+22.25'RA'
STA 71+00'SB' TO 385+00'SB'

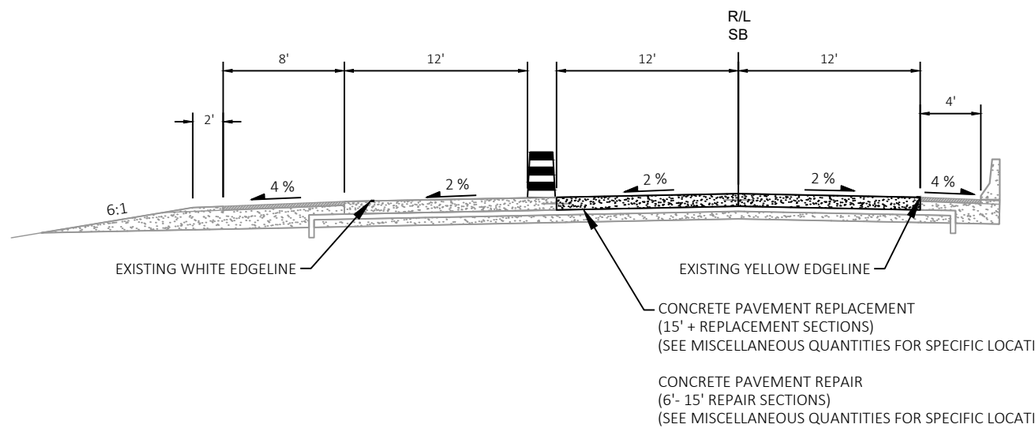

NOTES

1. MOVE DRUM ONTO NEW PAVEMENT DURING 3 DAY CURING PERIOD

2. DO NOT REMOVE EXISTING EDGELINE MARKINGS

MEDIAN TWO LANE CLOSURE CONCRETE WORK
STA 36+46.88'SB' TO 71+00'SB'

STAGE 1 CONSTRUCTION
STA 36+46.88'SB' TO 71+00'SB'

2

LEGEND

- TYPE III BARRICADE
- TYPE III BARRICADE WTH ATTACHED SIGN
- TRAFFIC CONTROL DRUM
- TRAFFIC CONTROL DRUM WITH TYPE C STEADY BURN LIGHT
- CONNECTED ARROW BOARD
- SIGN ON PERMANENT SUPPORT
- SIGN ON TEMPORARY SUPPORT
- WORK AREA
- DIRECTION OF TRAFFIC
- MB — PORTABLE CHANGEABLE MESSAGE BOARD

NOTES

1.SEE SDD 15D12-A TRAFFIC CONTROL, LANE CLOSURE FOR ADDITIONAL DETAILS

2-SEE SDD 15D15-E TRAFFIC CONTROL, PARALLEL EXIT RAMP WITHIN LEFT LANE CLOSURE FOR ADDITIONAL DETAILS

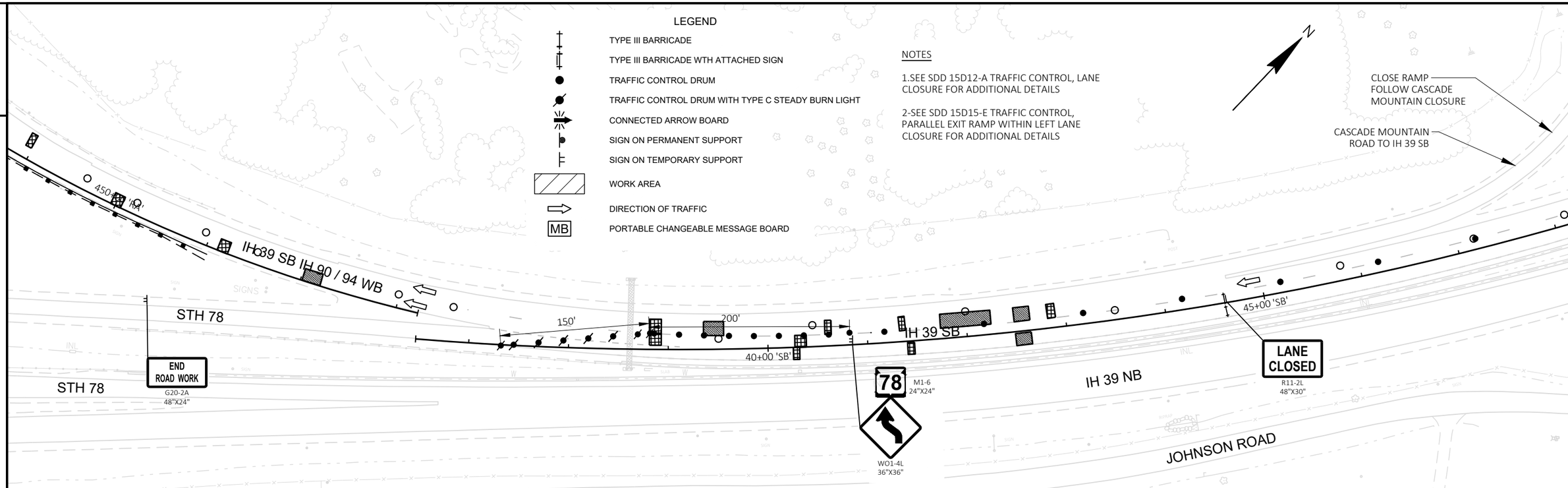

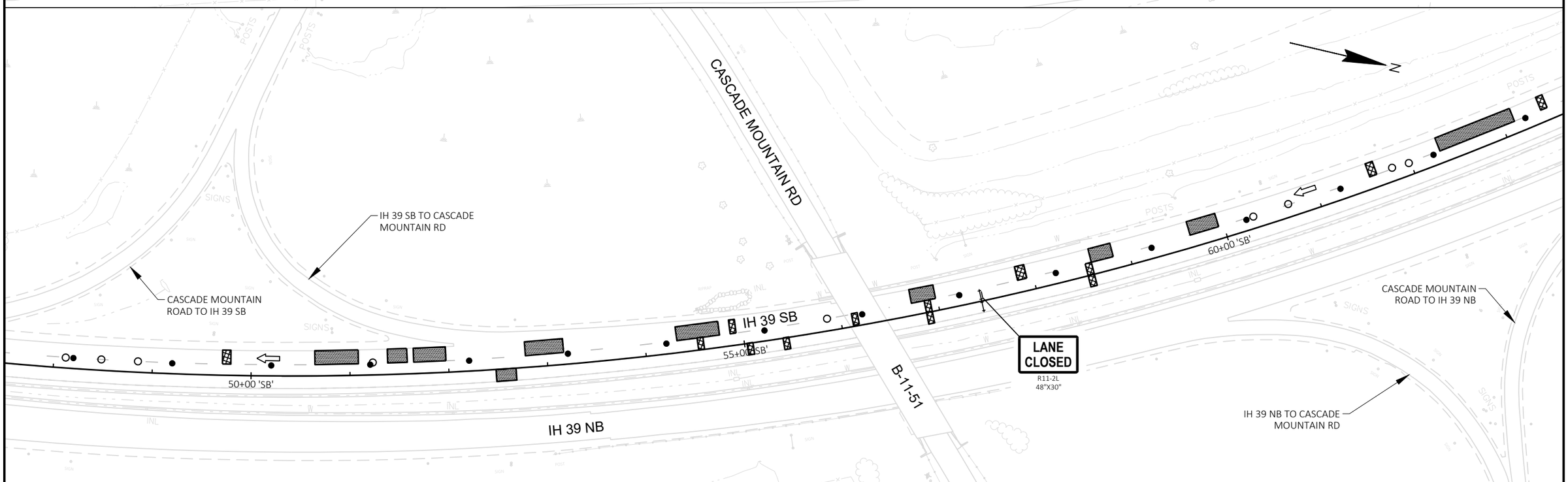

PROJECT NO: 1161-00-78	HWY: IH 39	COUNTY: COLUMBIA	TRAFFIC CONTROL STAGE 1 - STH 78 EXIT	SHEET 32	E

FILE NAME : C:\USERS\JAMES.GOLDEN\ONEDRIVE - DAAR CORPORATION\DOCUMENTS - SW DESIGN\1161-00-08 IH39, SB LANES, COLUMBIA CTY\C3D\11610008\SHEETSPLAN\025003-TC STH 78.DWG PLOT DATE : 1/20/2026 10:36 AM PLOT BY : JAMES GOLDEN PLOT NAME : PLOT SCALE : 1 IN:100 FT
LAYOUT NAME - 01

WISDOT/CADDS SHEET 42

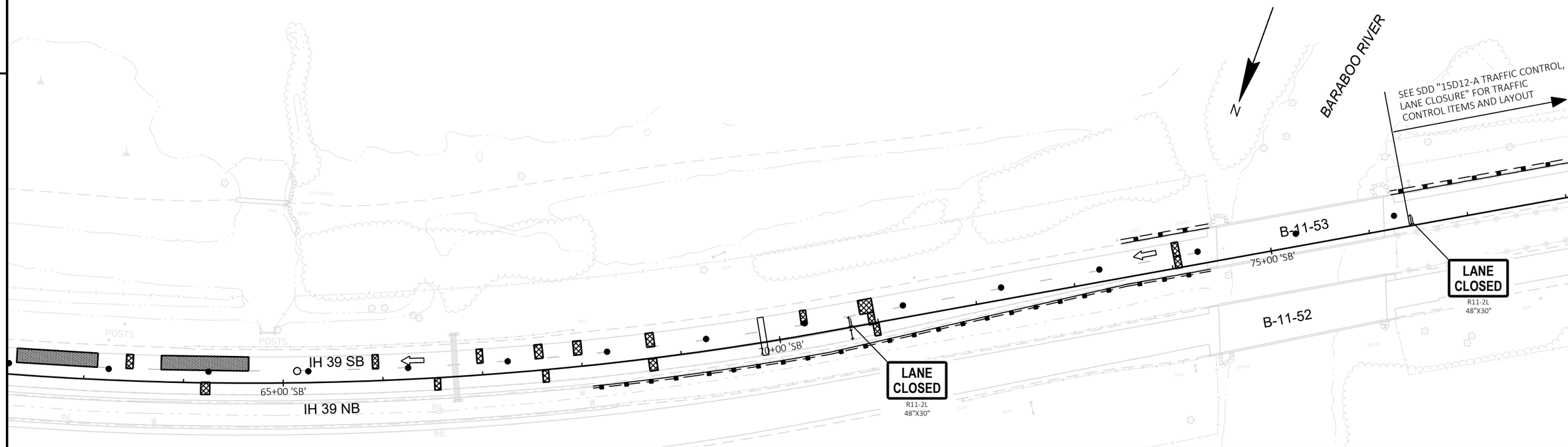

LEGEND

- TYPE III BARRICADE
- TYPE III BARRICADE WTH ATTACHED SIGN
- TRAFFIC CONTROL DRUM
- TRAFFIC CONTROL DRUM WITH TYPE C STEADY BURN LIGHT
- CONNECTED ARROW BOARD
- SIGN ON PERMANENT SUPPORT
- SIGN ON TEMPORARY SUPPORT
- WORK AREA
- DIRECTION OF TRAFFIC
- MB — PORTABLE CHANGEABLE MESSAGE BOARD

NOTES

1.SEE SDD 15D12-A TRAFFIC CONTROL, LANE CLOSURE FOR ADDITIONAL DETAILS

2-SEE SDD 15D15-E TRAFFIC CONTROL, PARALLEL EXIT RAMP WITHIN LEFT LANE CLOSURE FOR ADDITIONAL DETAILS

2

CANADIAN PACIFIC
KANSAS CITY RAILROAD

PLACE 1000' IN ADVANCE OF GORE

PLACE 500' IN ADVANCE OF GORE

ROAD WORK AHEAD
W20-1A

STH 16 TO IH 39 SB

WO4-5R
48"X48"

IH 39 SB TO STH 16

PLACE 800' IN ADVANCE OF GORE

WO4-4R

600'

300'

IH 39 SB

275+00 'SB'

280+00 'SB'

285+00 'SB'

B-11-59

B-11-58

IH 39 NB

LANE CLOSED
R11-2L
48"X30"

IH 39 NB TO STH 16

NOTES

1.SEE SDD 15D12-B TRAFFIC CONTROL, LANE CLOSURE FOR ADDITIONAL DETAILS

2.SEE SDD 15D15-A TRAFFIC CONTROL, PARALLEL ENTRANCE RAMP WITHIN RIGHT LANE CLOSURE FOR ADDITIONAL DETAILS

LEGEND

- TYPE III BARRICADE
- TYPE III BARRICADE WTH ATTACHED SIGN
- TRAFFIC CONTROL DRUM
- TRAFFIC CONTROL DRUM WITH TYPE C STEADY BURN LIGHT
- CONNECTED ARROW BOARD
- SIGN ON PERMANENT SUPPORT
- SIGN ON TEMPORARY SUPPORT
- WORK AREA
- DIRECTION OF TRAFFIC
- MB PORTABLE CHANGEABLE MESSAGE BOARD

IH 39 SB TO STH 16

END ROAD WORK
G20-2A
48"X24"

EXIT
E5-1
72"X60"

STH 16

STH 16

RIGHT LANE MUST EXIT
R3-33R
78"X36"

B-11-117

290+00 'SB'

IH 39 SB

295+00 'SB'

B-11-116

IH 39 NB

300+00 'SB'

LANE CLOSED
R11-2L
48"X30"

IH 39 NB TO STH 16

PROJECT NO: 1161-00-78	HWY: IH 39	COUNTY: COLUMBIA	TRAFFIC CONTROL STAGE 1 - STH 16	SHEET 34	E

FILE NAME : C:\USERS\JAMES.GOLDEN\ONEDRIVE - DAAR CORPORATION\DOCUMENTS - SW DESIGN\1161-00-08 IH39, SB LANES, COLUMBIA CTY\C3D\11610008\SHEETSPLAN\025008A-TC.DWG PLOT DATE : 1/20/2026 10:43 AM PLOT BY : JAMES GOLDEN PLOT NAME : PLOT SCALE : 1 IN:100 FT
LAYOUT NAME - 01

WISDOT/CADDS SHEET 44

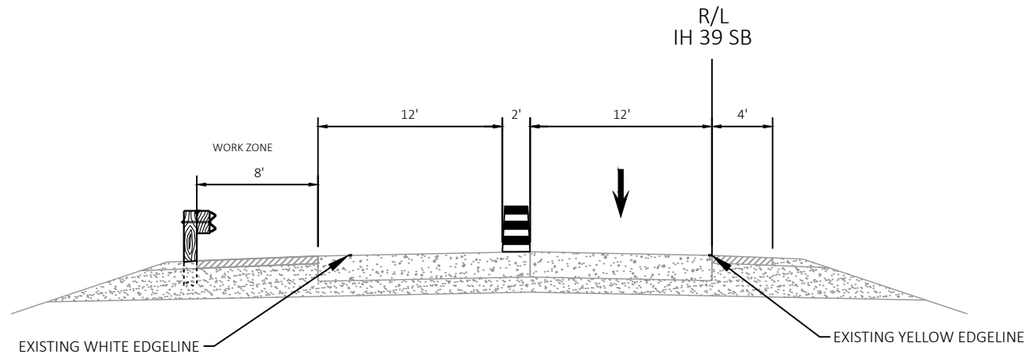

OUTSIDE GUARDRAIL WORK
STA 440+21.9'RA' TO 440+60.3'RA' LT
STA 76+27.4'SB' TO 79+57.4'SB' LT
STA 132+29.8'SB' TO 135+57.9'SB' LT
STA 207+43.8'SB' TO 210+94.1'SB' LT
STA 222+24.1'SB' TO 222+63.4'SB' LT
STA 260+00.4'SB' TO 272+55.4'SB' LT
STA 274+16.5'SB' TO 280+76.5'SB' LT
STA 291+68.9'SB' TO 300+42.8'SB' LT
STA 384+78.5'SB' TO 385+31.6'SB' LT

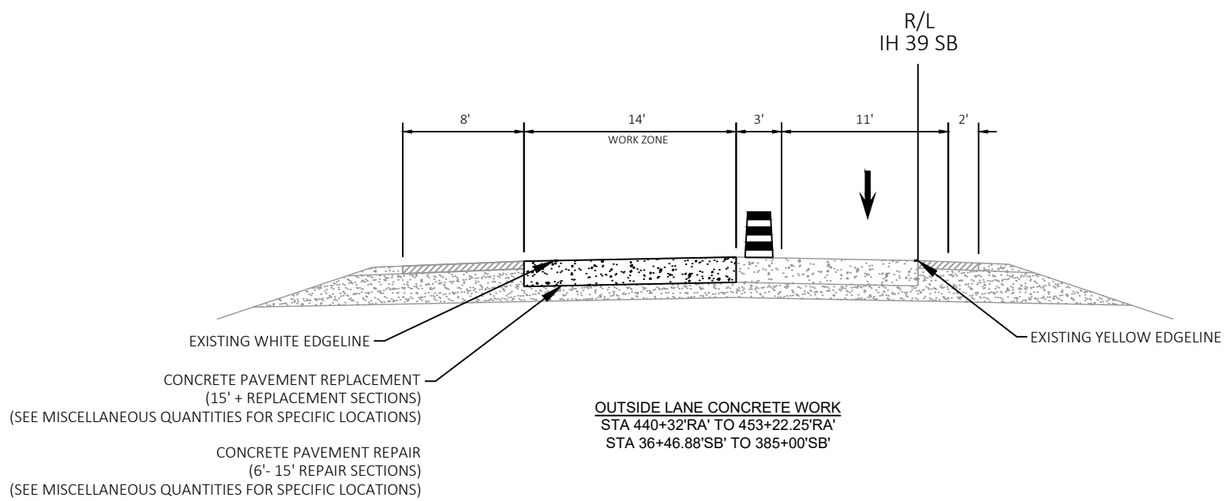

OUTSIDE LANE CONCRETE WORK
STA 440+32'RA' TO 453+22.25'RA'
STA 36+46.88'SB' TO 385+00'SB'

NOTES

1. MOVE DRUM ONTO NEW PAVEMENT DURING 3 DAY CURING PERIOD

2. DO NOT REMOVE EXISTING EDGELINE MARKINGS

STAGE 2 CONSTRUCTION
STA 440+32'RA' TO 453+22.25'RA'
STA 36+46.68'SB' TO 385+00'SB'

2

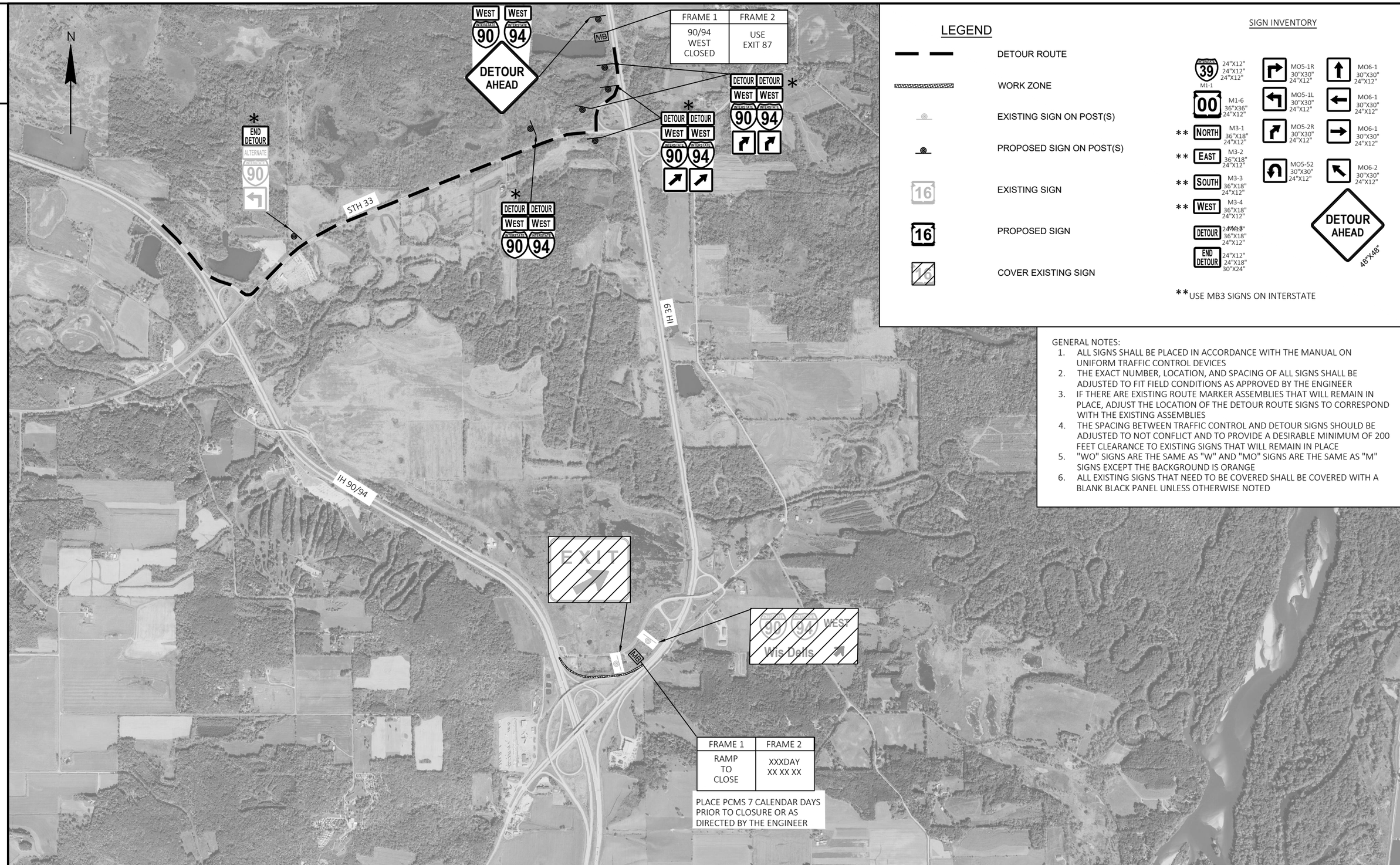

LEGEND

- DETOUR ROUTE
- WORK ZONE
- EXISTING SIGN ON POST(S)
- PROPOSED SIGN ON POST(S)
- EXISTING SIGN
- PROPOSED SIGN
- COVER EXISTING SIGN

SIGN INVENTORY

INTERSTATE 39 M1-1	24"X12" 24"X12" 24"X12"	
00 M1-6	36"X36" 24"X12"	
** NORTH M3-1	36"X18" 24"X12"	
** EAST M3-2	36"X18" 24"X12"	
** SOUTH M3-3	36"X18" 24"X12"	
** WEST M3-4	36"X18" 24"X12"	
DETOUR M3-5	24"X18" 36"X18" 24"X12"	
END DETOUR	24"X12" 24"X18" 30"X24"	
MO5-1R	30"X30" 24"X12"	
MO5-1L	30"X30" 24"X12"	
MO5-2R	30"X30" 24"X12"	
MO5-52	30"X30" 24"X12"	
MO6-1	30"X30" 24"X12"	
MO6-1	30"X30" 24"X12"	
MO6-1	30"X30" 24"X12"	
MO6-2	30"X30" 24"X12"	
DETOUR AHEAD	48"X48"	

**USE MB3 SIGNS ON INTERSTATE

GENERAL NOTES:

1. ALL SIGNS SHALL BE PLACED IN ACCORDANCE WITH THE MANUAL ON UNIFORM TRAFFIC CONTROL DEVICES
2. THE EXACT NUMBER, LOCATION, AND SPACING OF ALL SIGNS SHALL BE ADJUSTED TO FIT FIELD CONDITIONS AS APPROVED BY THE ENGINEER
3. IF THERE ARE EXISTING ROUTE MARKER ASSEMBLIES THAT WILL REMAIN IN PLACE, ADJUST THE LOCATION OF THE DETOUR ROUTE SIGNS TO CORRESPOND WITH THE EXISTING ASSEMBLIES
4. THE SPACING BETWEEN TRAFFIC CONTROL AND DETOUR SIGNS SHOULD BE ADJUSTED TO NOT CONFLICT AND TO PROVIDE A DESIRABLE MINIMUM OF 200 FEET CLEARANCE TO EXISTING SIGNS THAT WILL REMAIN IN PLACE
5. "WO" SIGNS ARE THE SAME AS "W" AND "MO" SIGNS ARE THE SAME AS "M" SIGNS EXCEPT THE BACKGROUND IS ORANGE
6. ALL EXISTING SIGNS THAT NEED TO BE COVERED SHALL BE COVERED WITH A BLANK BLACK PANEL UNLESS OTHERWISE NOTED

2

PROJECT NO: 1161-00-78	HWY: IH 39	COUNTY: COLUMBIA	TRAFFIC CONTROL STAGE 2 - IH 39 TO 90/94 WEST ON RAMP DETOUR	SHEET 36	E

FILE NAME : C:\USERS\JAMES.GOLDEN\ONEDRIVE - DAAR CORPORATION\DOCUMENTS - SW DESIGN\1161-00-08 IH39, SB LANES, COLUMBIA CTY\C3D\11610008\SHEETSPLAN\027002-DT.DWG PLOT DATE : 10/23/2025 1:54 PM PLOT BY : JAMES GOLDEN PLOT NAME : PLOT SCALE : 1 IN:2000 FT
LAYOUT NAME - 01

WISDOT/CADDS SHEET 42

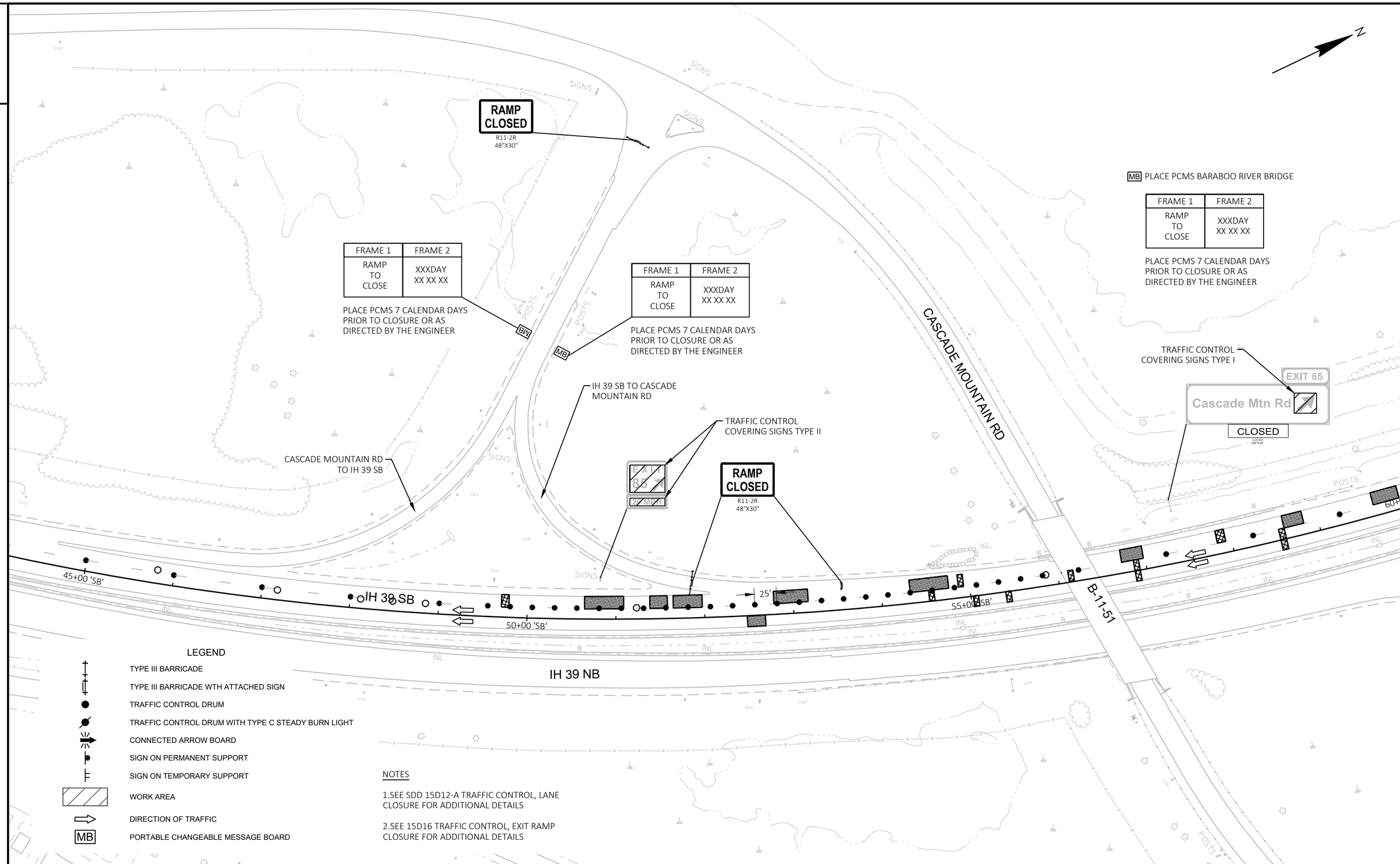

PROJECT NO: 1161-00-78	HWY: IH 39	COUNTY: COLUMBIA	TRAFFIC CONTROL STAGE 2 - CASCADE MOUNTAIN CLOSURE	SHEET 37	E

FILE NAME : C:\USERS\JAMES.GOLDEN\ONEDRIVE - DAAR CORPORATION\DOCUMENTS - SW DESIGN\1161-00-08 IH39, SB LANES, COLUMBIA CTY\C3D\11610008\SHEETSPLAN\025005-TC CASCADE.DWG LAYOUT NAME - 01 PLOT DATE : 1/20/2026 10:33 AM PLOT BY : JAMES GOLDEN PLOT NAME : PLOT SCALE : 1 IN:100 FT

WISDOT/CADDS SHEET 42

2

LEGEND

- TYPE III BARRICADE
- TYPE III BARRICADE WTH ATTACHED SIGN
- TRAFFIC CONTROL DRUM
- TRAFFIC CONTROL DRUM WITH TYPE C STEADY BURN LIGHT
- CONNECTED ARROW BOARD
- SIGN ON PERMANENT SUPPORT
- SIGN ON TEMPORARY SUPPORT
- WORK AREA
- DIRECTION OF TRAFFIC
- MB — PORTABLE CHANGEABLE MESSAGE BOARD

NOTES

1.SEE SDD 15D12-A TRAFFIC CONTROL, LANE CLOSURE FOR ADDITIONAL DETAILS

2.SEE SDD 15D15-C TRAFFIC CONTROL, TAPERED ENTRANCE RAMP WITHIN RIGHT LANE CLOSURE FOR ADDITIONAL DETAILS

3.SEE SDD 15D15-E TRAFFIC CONTROL, PARALLEL EXIT RAMP WITHIN LEFT LANE CLOSURE FOR ADDITIONAL DETAILS

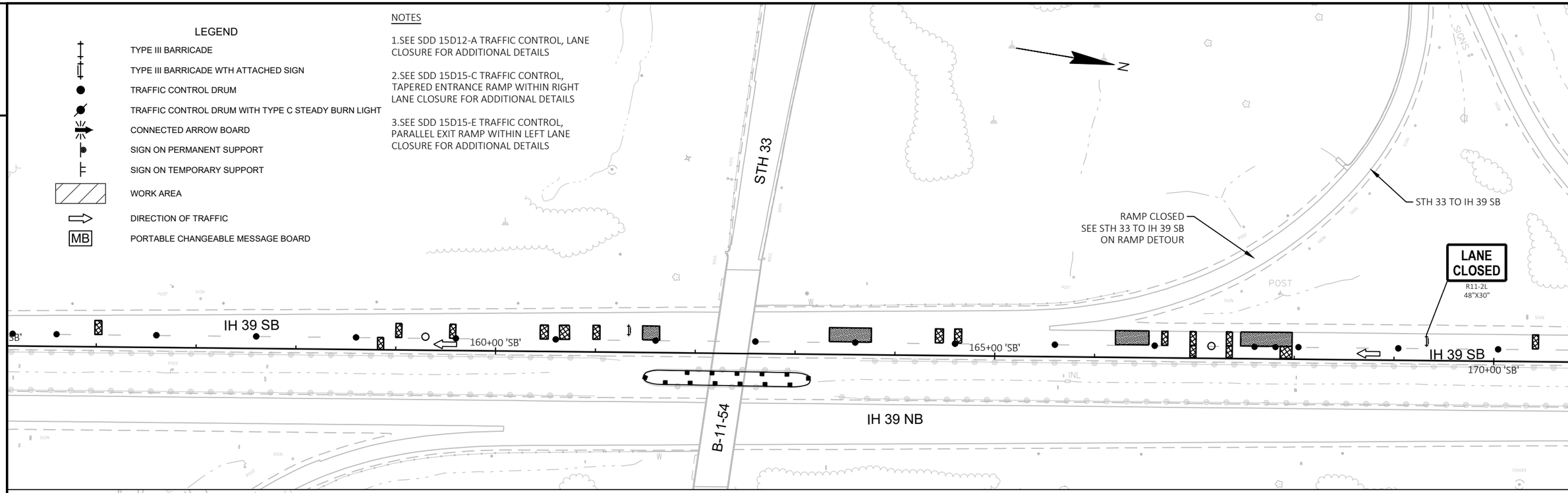

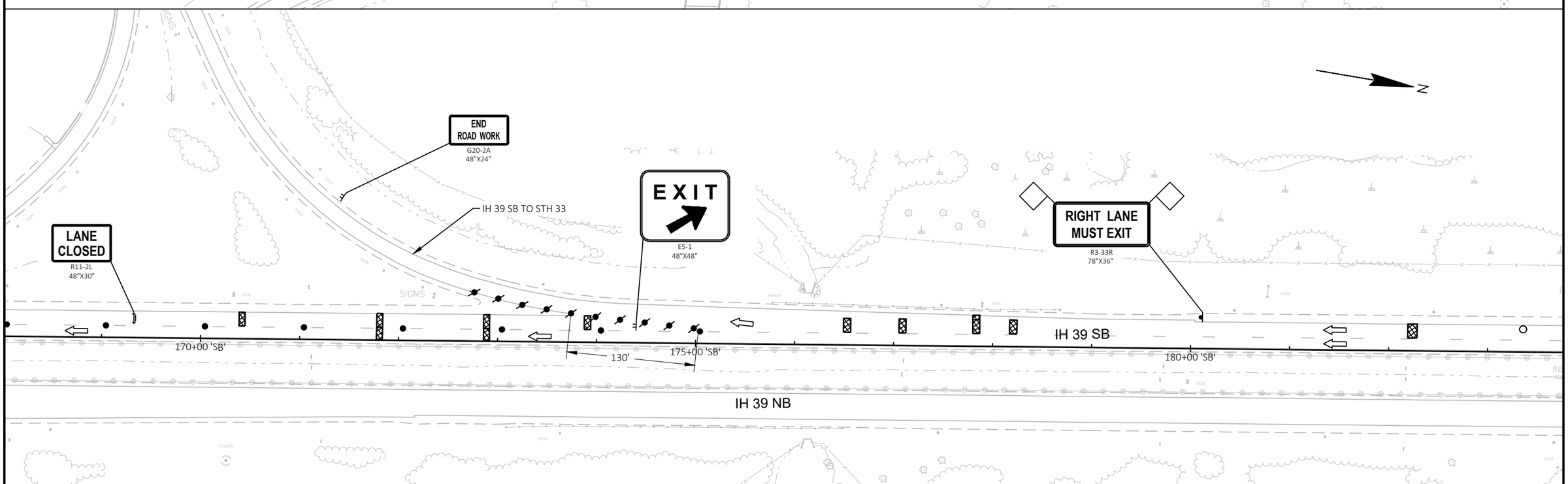

2

PROJECT NO: 1161-00-78	HWY: IH 39	COUNTY: COLUMBIA	TRAFFIC CONTROL STAGE 2 - STH 33	SHEET 38	E

FILE NAME : C:\USERS\JAMES.GOLDEN\ONEDRIVE - DAAR CORPORATION\DOCUMENTS - SW DESIGN\1161-00-08 IH39, SB LANES, COLUMBIA CTY\C3D\11610008\SHEETSPLAN\025006A-TC STH 33.DWGPLOT DATE : 1/20/2026 10:38 AM PLOT BY : JAMES GOLDEN PLOT NAME : PLOT SCALE : 1 IN:100 FT
LAYOUT NAME - 01

WISDOT/CADDS SHEET 42

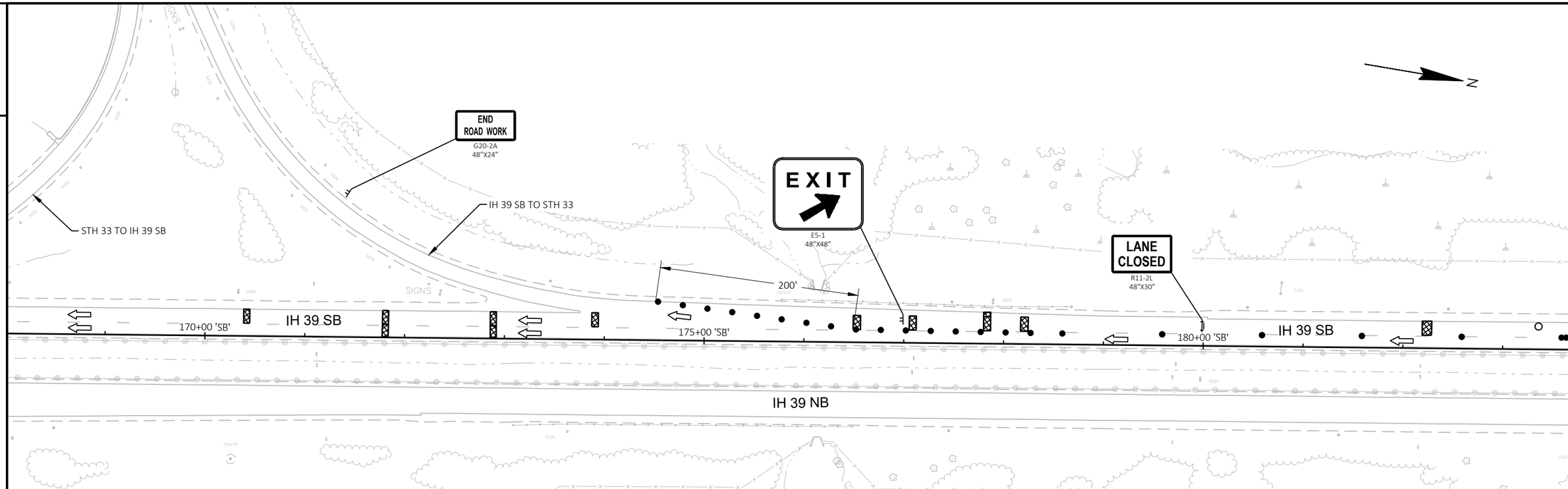

LEGEND

- TYPE III BARRICADE
- TYPE III BARRICADE WTH ATTACHED SIGN
- TRAFFIC CONTROL DRUM
- TRAFFIC CONTROL DRUM WITH TYPE C STEADY BURN LIGHT
- CONNECTED ARROW BOARD
- SIGN ON PERMANENT SUPPORT
- SIGN ON TEMPORARY SUPPORT
- WORK AREA
- DIRECTION OF TRAFFIC
- MB — PORTABLE CHANGEABLE MESSAGE BOARD

NOTES

1.SEE SDD 15D12-A TRAFFIC CONTROL, LANE CLOSURE FOR ADDITIONAL DETAILS

2.SEE SDD 15D15-E TRAFFIC CONTROL, PARALLEL EXIT RAMP WITHIN LEFT LANE CLOSURE FOR ADDITIONAL DETAILS

2

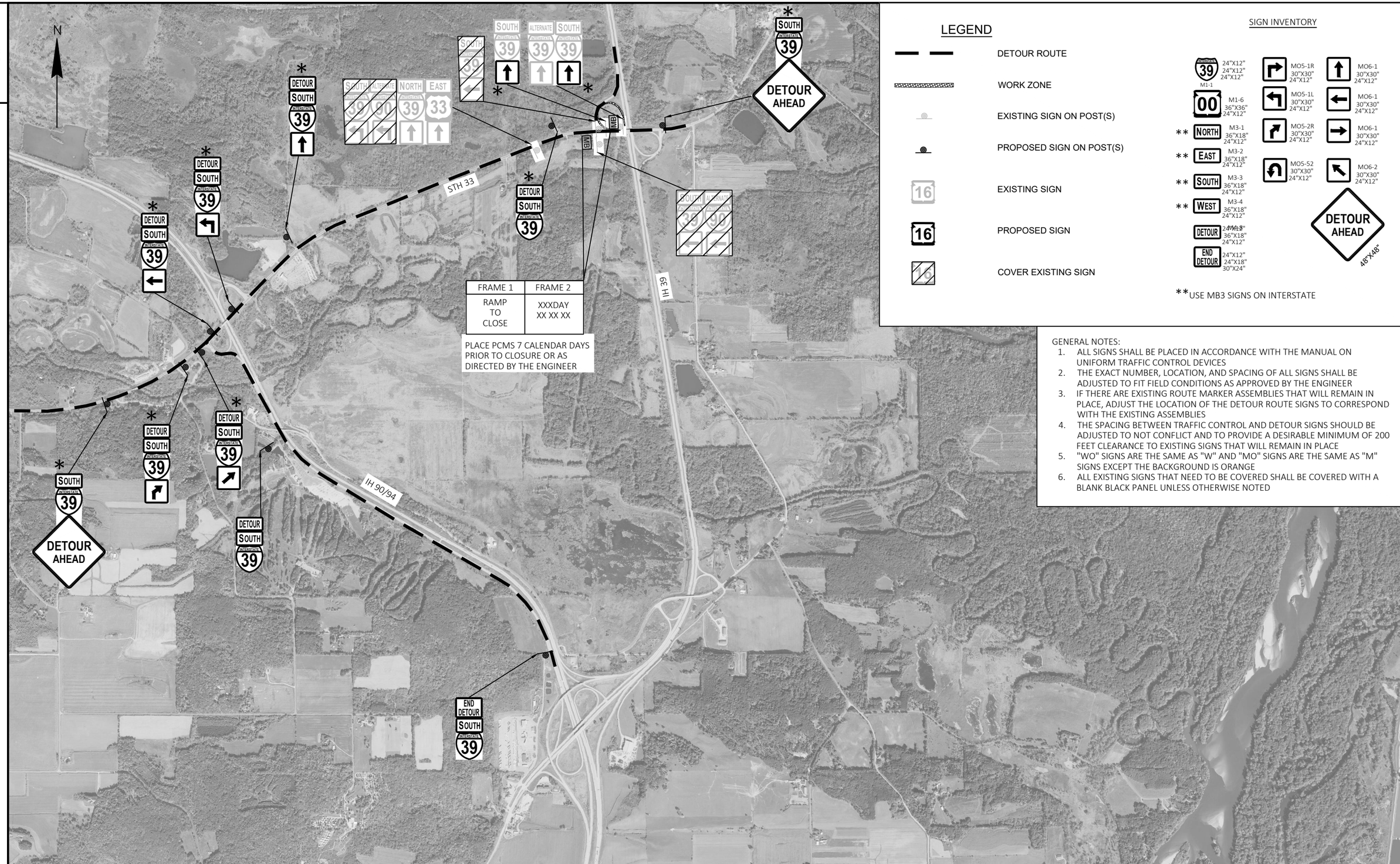

LEGEND

- DETOUR ROUTE
- WORK ZONE
- EXISTING SIGN ON POST(S)
- PROPOSED SIGN ON POST(S)
- EXISTING SIGN
- PROPOSED SIGN
- COVER EXISTING SIGN

SIGN INVENTORY

INTERSTATE 39	M1-1	24"X12" 24"X12" 24"X12"
00	M1-6	36"X36" 24"X12"
** NORTH	M3-1	36"X18" 24"X12"
** EAST	M3-2	36"X18" 24"X12"
** SOUTH	M3-3	36"X18" 24"X12"
** WEST	M3-4	36"X18" 24"X12"
DETOUR	M3-5	36"X18" 24"X12"
END DETOUR		24"X12" 24"X18" 30"X24"
	MO5-1R	30"X30" 24"X12"
	MO5-1L	30"X30" 24"X12"
	MO5-2R	30"X30" 24"X12"
	MO5-52	30"X30" 24"X12"
	MO6-1	30"X30" 24"X12"
	MO6-1	30"X30" 24"X12"
	MO6-1	30"X30" 24"X12"
	MO6-2	30"X30" 24"X12"
DETOUR AHEAD		48"X48"

**USE MB3 SIGNS ON INTERSTATE

GENERAL NOTES:

1. ALL SIGNS SHALL BE PLACED IN ACCORDANCE WITH THE MANUAL ON UNIFORM TRAFFIC CONTROL DEVICES
2. THE EXACT NUMBER, LOCATION, AND SPACING OF ALL SIGNS SHALL BE ADJUSTED TO FIT FIELD CONDITIONS AS APPROVED BY THE ENGINEER
3. IF THERE ARE EXISTING ROUTE MARKER ASSEMBLIES THAT WILL REMAIN IN PLACE, ADJUST THE LOCATION OF THE DETOUR ROUTE SIGNS TO CORRESPOND WITH THE EXISTING ASSEMBLIES
4. THE SPACING BETWEEN TRAFFIC CONTROL AND DETOUR SIGNS SHOULD BE ADJUSTED TO NOT CONFLICT AND TO PROVIDE A DESIRABLE MINIMUM OF 200 FEET CLEARANCE TO EXISTING SIGNS THAT WILL REMAIN IN PLACE
5. "WO" SIGNS ARE THE SAME AS "W" AND "MO" SIGNS ARE THE SAME AS "M" SIGNS EXCEPT THE BACKGROUND IS ORANGE
6. ALL EXISTING SIGNS THAT NEED TO BE COVERED SHALL BE COVERED WITH A BLANK BLACK PANEL UNLESS OTHERWISE NOTED

2

PROJECT NO: 1161-00-78	HWY: IH 39	COUNTY: COLUMBIA	TRAFFIC CONTROL STAGE 2 - STH 33 TO IH 39 SB ON RAMP DETOUR	SHEET 40	E

FILE NAME : C:\USERS\JAMES.GOLDEN\ONEDRIVE - DAAR CORPORATION\DOCUMENTS - SW DESIGN\1161-00-08 IH39, SB LANES, COLUMBIA CTY\C3D\11610008\SHEETSPLAN\027002-DT.DWG PLOT DATE : 10/23/2025 1:54 PM PLOT BY : JAMES GOLDEN PLOT NAME : PLOT SCALE : 1 IN:2000 FT
LAYOUT NAME - 02

WISDOT/CADDS SHEET 42

2

LEGEND

- TYPE III BARRICADE
- TYPE III BARRICADE WTH ATTACHED SIGN
- TRAFFIC CONTROL DRUM
- TRAFFIC CONTROL DRUM WITH TYPE C STEADY BURN LIGHT
- CONNECTED ARROW BOARD
- SIGN ON PERMANENT SUPPORT
- SIGN ON TEMPORARY SUPPORT
- WORK AREA
- DIRECTION OF TRAFFIC
- MB — PORTABLE CHANGEABLE MESSAGE BOARD

NOTES

1.SEE SDD 15D12-A TRAFFIC CONTROL, LANE CLOSURE FOR ADDITIONAL DETAILS

2.SEE SDD 15D40-D TRAFFIC CONTROL, PARTIAL LANE SHIFT MULTILANE DIVIDED 50 MPH AND GREATER

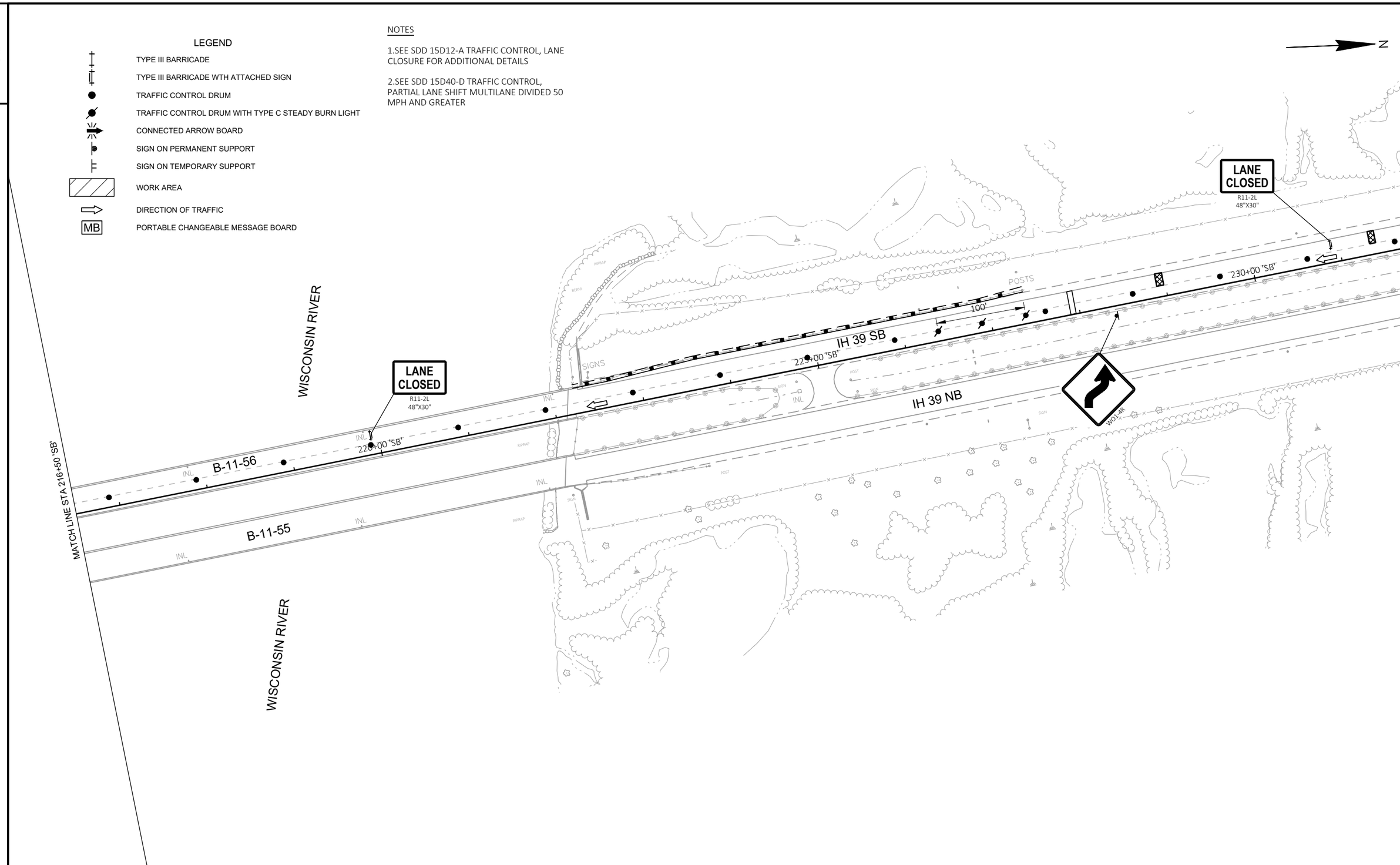

PROJECT NO: 1161-00-78	HWY: IH 39	COUNTY: COLUMBIA	TRAFFIC CONTROL STAGE 2 - WISCONSIN RIVER BRIDGE	SHEET 41	E

FILE NAME : C:\USERS\JAMES.GOLDEN\ONEDRIVE - DAAR CORPORATION\DOCUMENTS - SW DESIGN\1161-00-08 IH39, SB LANES, COLUMBIA CTY\C3D\11610008\SHEETSPLAN\025009-TC WRB.DWG PLOT DATE : 1/20/2026 11:50 AM PLOT BY : JAMES GOLDEN PLOT NAME : PLOT SCALE : 1 IN:100 FT
LAYOUT NAME - 01

WISDOT/CADDS SHEET 42

2

LEGEND

- TYPE III BARRICADE
- TYPE III BARRICADE WTH ATTACHED SIGN
- TRAFFIC CONTROL DRUM
- TRAFFIC CONTROL DRUM WITH TYPE C STEADY BURN LIGHT
- CONNECTED ARROW BOARD
- SIGN ON PERMANENT SUPPORT
- SIGN ON TEMPORARY SUPPORT
- WORK AREA
- DIRECTION OF TRAFFIC
- MB — PORTABLE CHANGEABLE MESSAGE BOARD

NOTES

1.SEE SDD 15D12-A TRAFFIC CONTROL, LANE CLOSURE FOR ADDITIONAL DETAILS

2.SEE SDD 15D40-D TRAFFIC CONTROL, PARTIAL LANE SHIFT MULTILANE DIVIDED 50 MPH AND GREATER

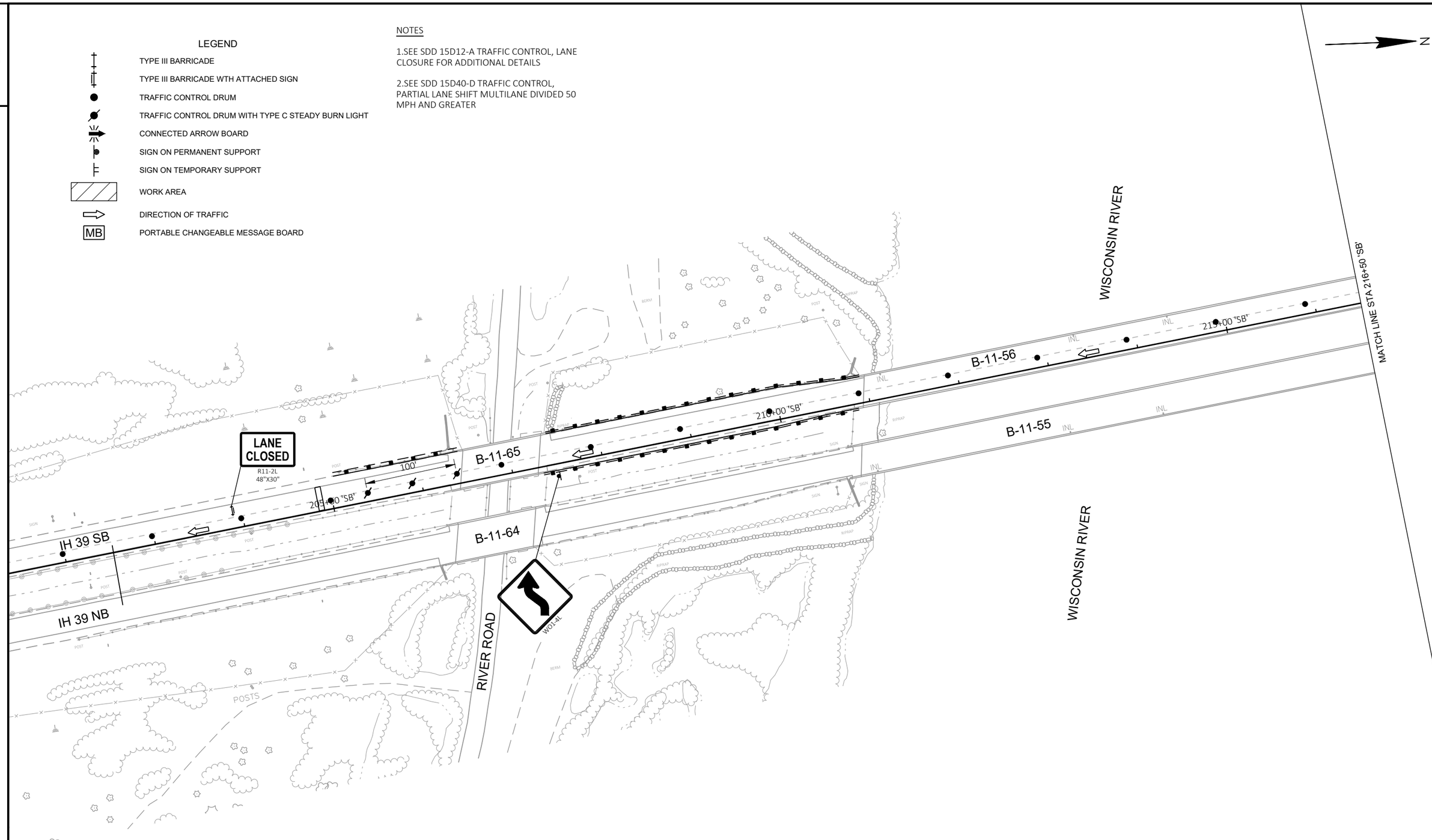

2

PROJECT NO: 1161-00-78	HWY: IH 39	COUNTY: COLUMBIA	TRAFFIC CONTROL STAGE 2 - WISCONSIN RIVER BRIDGE	SHEET 42	E

FILE NAME : C:\USERS\JAMES.GOLDEN\ONEDRIVE - DAAR CORPORATION\DOCUMENTS - SW DESIGN\1161-00-08 IH39, SB LANES, COLUMBIA CTY\C3D\11610008\SHEETSPLAN\025009-TC WRB.DWG PLOT DATE : 1/20/2026 11:50 AM PLOT BY : JAMES GOLDEN PLOT NAME : PLOT SCALE : 1 IN:100 FT
LAYOUT NAME - 02

WISDOT/CADDS SHEET 42

2

PLACE 1000' IN ADVANCE OF GORE

PLACE 500' IN ADVANCE OF GORE

ROAD WORK AHEAD
W20-1A

STH 16 TO IH 39 SB

WO4-5R
48"X48"

IH 39 SB TO STH 16

PLACE 800' IN ADVANCE OF GORE

WO4-1R

CANADIAN PACIFIC
KANSAS CITY RAILROAD

LANE CLOSED
R11-2L
48"X30"

600'

300'

275+00 'SB'

IH 39 SB

280+00 'SB'

285+00 'SB'

B-11-59

B-11-58

IH 39 NB

DETOUR
EAST
16

IH 39 NB TO STH 16

LEGEND

- TYPE III BARRICADE
- TYPE III BARRICADE WTH ATTACHED SIGN
- TRAFFIC CONTROL DRUM
- TRAFFIC CONTROL DRUM WITH TYPE C STEADY BURN LIGHT
- CONNECTED ARROW BOARD
- SIGN ON PERMANENT SUPPORT
- SIGN ON TEMPORARY SUPPORT
- WORK AREA
- DIRECTION OF TRAFFIC
- MB PORTABLE CHANGEABLE MESSAGE BOARD

NOTES

1.SEE SDD 15D12-A TRAFFIC CONTROL, LANE CLOSURE FOR ADDITIONAL DETAILS

2.SEE SDD 15D15-A TRAFFIC CONTROL, PARALLEL ENTRANCE RAMP WITHIN RIGHT LANE CLOSURE FOR ADDITIONAL DETAILS

3.SEE SDD 15D16 TRAFFIC CONTROL, EXIT RAMP CLOSURE FOR ADDITIONAL DETAILS

4.SEE IH 39 TO STH 16 OFF RAMP DETOUR PLAN SHEET FOR ADDITIONAL DETOUR DETAILS

EXIT 89 B-A
25 MPH

TRAFFIC CONTROL COVERING SIGNS TYPE II

IH 39 SB TO STH 16

RAMP CLOSED
R11-2R
48"X30"

RAMP CLOSED
R11-2R
48"X30"

LANE CLOSED
R11-2L
48"X30"

25'

STH 16

STH 16

B-11-117

290+00 'SB'

B-11-116

IH 39 SB

IH 39 NB

IH 39 NB TO STH 16

LANE CLOSED
R11-2L
48"X30"

295+00 'SB'

DETOUR
EAST
16

EAST
16

DETOUR
AHEAD

EXITS 89 B-A

16

127

Portage
Wis Dells

TRAFFIC CONTROL COVERING SIGNS TYPE I

FRAME 1	FRAME 2
RAMP CLOSED	USE EXIT 87

LANE CLOSED
R11-2L
48"X30"

MB

300+00 'SB'

2

PROJECT NO: 1161-00-78	HWY: IH 39	COUNTY: COLUMBIA	TRAFFIC CONTROL STAGE 2 - STH 16	SHEET 43	E

FILE NAME : C:\USERS\JAMES.GOLDEN\ONEDRIVE - DAAR CORPORATION\DOCUMENTS - SW DESIGN\1161-00-08 IH39, SB LANES, COLUMBIA CTY\C3D\11610008\SHEETSPLAN\025008B-TC.DWG
LAYOUT NAME - 02
PLOT DATE : 1/20/2026 10:44 AM
PLOT BY : JAMES GOLDEN
PLOT NAME :
PLOT SCALE : 1 IN:100 FT

2

LEGEND

- TYPE III BARRICADE
- TYPE III BARRICADE WTH ATTACHED SIGN
- TRAFFIC CONTROL DRUM
- TRAFFIC CONTROL DRUM WITH TYPE C STEADY BURN LIGHT
- CONNECTED ARROW BOARD
- SIGN ON PERMANENT SUPPORT
- SIGN ON TEMPORARY SUPPORT
- WORK AREA
- DIRECTION OF TRAFFIC
- MB — PORTABLE CHANGEABLE MESSAGE BOARD

NOTES

1.SEE SDD 15D12-A TRAFFIC CONTROL, LANE CLOSURE FOR ADDITIONAL DETAILS

2.SEE SDD 15D15-A TRAFFIC CONTROL, PARALLEL ENTRANCE RAMP WITHIN RIGHT LANE CLOSURE FOR ADDITIONAL DETAILS

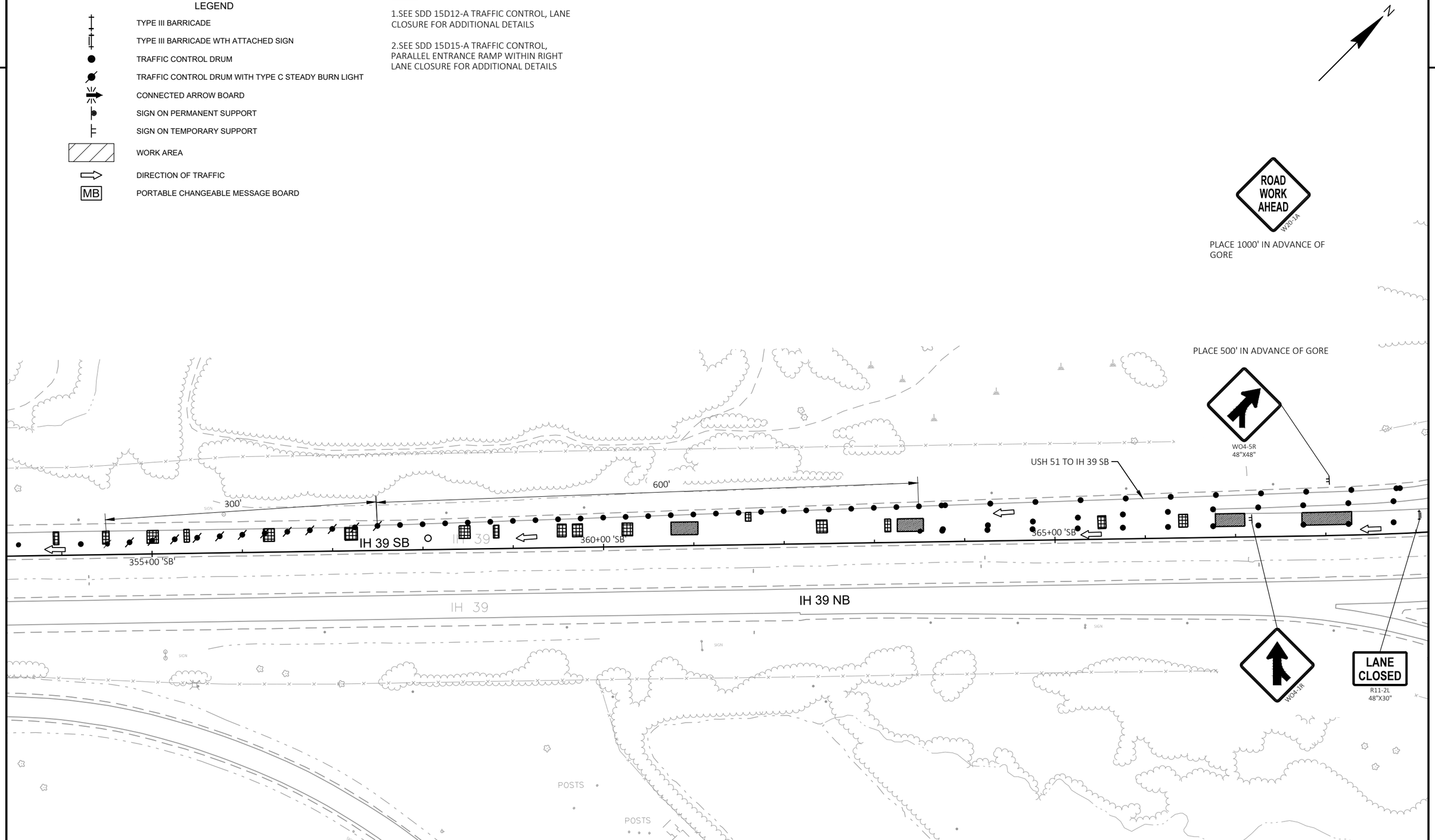

PROJECT NO: 1161-00-78	HWY: IH 39	COUNTY: COLUMBIA	TRAFFIC CONTROL STAGE 2 - USH 51 SB ENTRANCE	SHEET 44	E

FILE NAME : C:\USERS\JAMES.GOLDEN\ONEDRIVE - DAAR CORPORATION\DOCUMENTS - SW DESIGN\1161-00-08 IH39, SB LANES, COLUMBIA CTY\C3D\11610008\SHEETSPLAN\025007A-TC.DWG PLOT DATE : 1/20/2026 10:40 AM PLOT BY : JAMES GOLDEN PLOT NAME : PLOT SCALE : 1 IN:100 FT
LAYOUT NAME - 01

WISDOT/CADDS SHEET 42

2

LEGEND

- TYPE III BARRICADE
- TYPE III BARRICADE WTH ATTACHED SIGN
- TRAFFIC CONTROL DRUM
- TRAFFIC CONTROL DRUM WITH TYPE C STEADY BURN LIGHT
- CONNECTED ARROW BOARD
- SIGN ON PERMANENT SUPPORT
- SIGN ON TEMPORARY SUPPORT
- WORK AREA
- DIRECTION OF TRAFFIC
- MB — PORTABLE CHANGEABLE MESSAGE BOARD

NOTES

1.SEE SDD 15D12-A TRAFFIC CONTROL, LANE CLOSURE FOR ADDITIONAL DETAILS

2.SEE SDD 15D15-A TRAFFIC CONTROL, PARALLEL ENTRANCE RAMP WITHIN RIGHT LANE CLOSURE FOR ADDITIONAL DETAILS

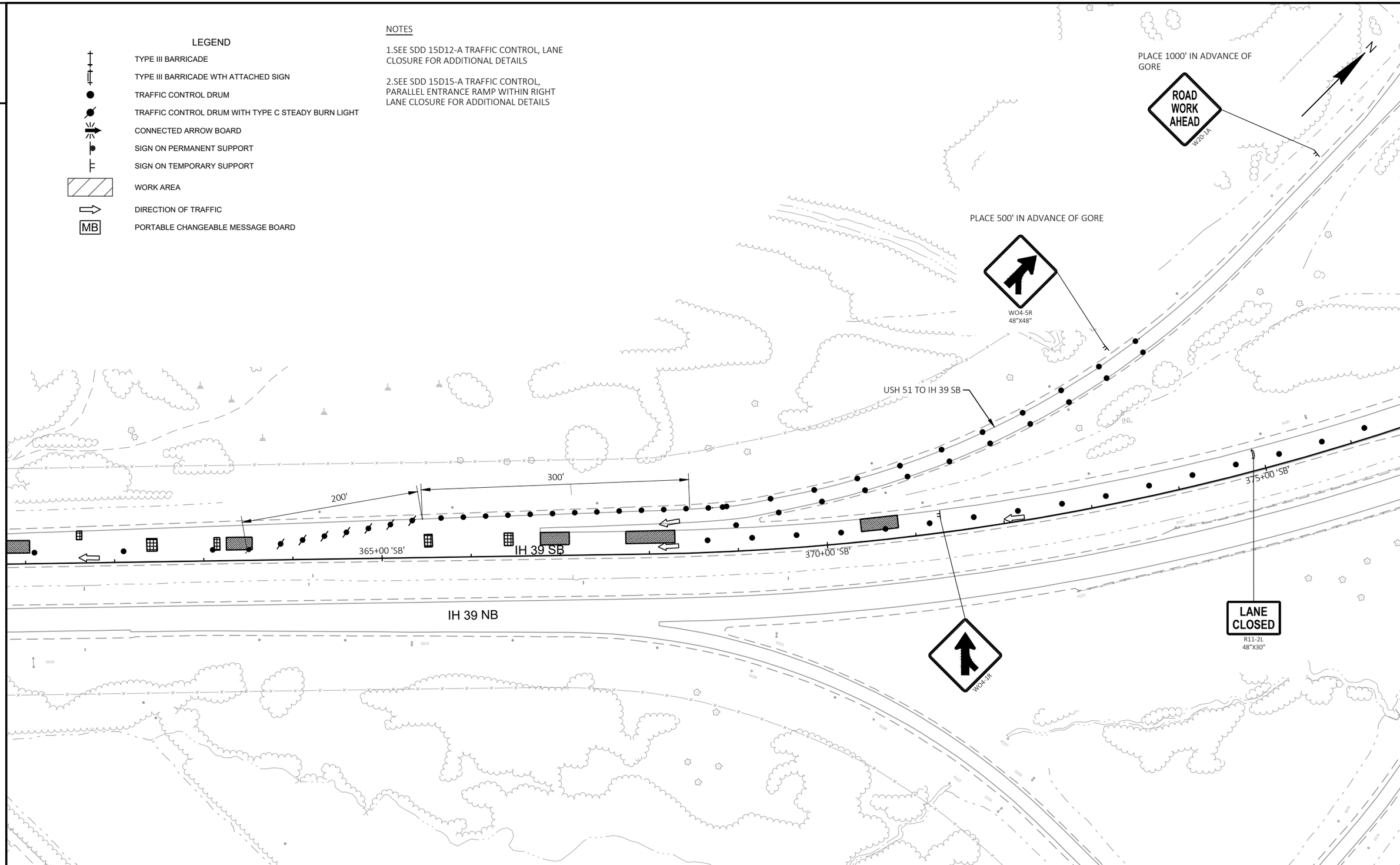

2

PROJECT NO: 1161-00-78	HWY: IH 39	COUNTY: COLUMBIA	TRAFFIC CONTROL STAGE 2 - USH 51 SB ENTRANCE	SHEET 45	E

FILE NAME : C:\USERS\JAMES.GOLDEN\ONEDRIVE - DAAR CORPORATION\DOCUMENTS - SW DESIGN\1161-00-08 IH39, SB LANES, COLUMBIA CTY\C3D\11610008\SHEETSPLAN\025007B-TC.DWG PLOT DATE : 1/20/2026 10:42 AM PLOT BY : JAMES GOLDEN PLOT NAME : PLOT SCALE : 1 IN:100 FT
LAYOUT NAME - 01

WISDOT/CADDS SHEET 42

2

GENERAL NOTES:

1. ALL SIGNS SHALL BE PLACED IN ACCORDANCE WITH THE MANUAL ON UNIFORM TRAFFIC CONTROL DEVICES
2. THE EXACT NUMBER, LOCATION, AND SPACING OF ALL SIGNS SHALL BE ADJUSTED TO FIT FIELD CONDITIONS AS APPROVED BY THE ENGINEER
3. IF THERE ARE EXISTING ROUTE MARKER ASSEMBLIES THAT WILL REMAIN IN PLACE, ADJUST THE LOCATION OF THE DETOUR ROUTE SIGNS TO CORRESPOND WITH THE EXISTING ASSEMBLIES
4. THE SPACING BETWEEN TRAFFIC CONTROL AND DETOUR SIGNS SHOULD BE ADJUSTED TO NOT CONFLICT AND TO PROVIDE A DESIRABLE MINIMUM OF 200 FEET CLEARANCE TO EXISTING SIGNS THAT WILL REMAIN IN PLACE
5. "WO" SIGNS ARE THE SAME AS "W" AND "MO" SIGNS ARE THE SAME AS "M" SIGNS EXCEPT THE BACKGROUND IS ORANGE
6. ALL EXISTING SIGNS THAT NEED TO BE COVERED SHALL BE COVERED WITH A BLANK BLACK PANEL UNLESS OTHERWISE NOTED

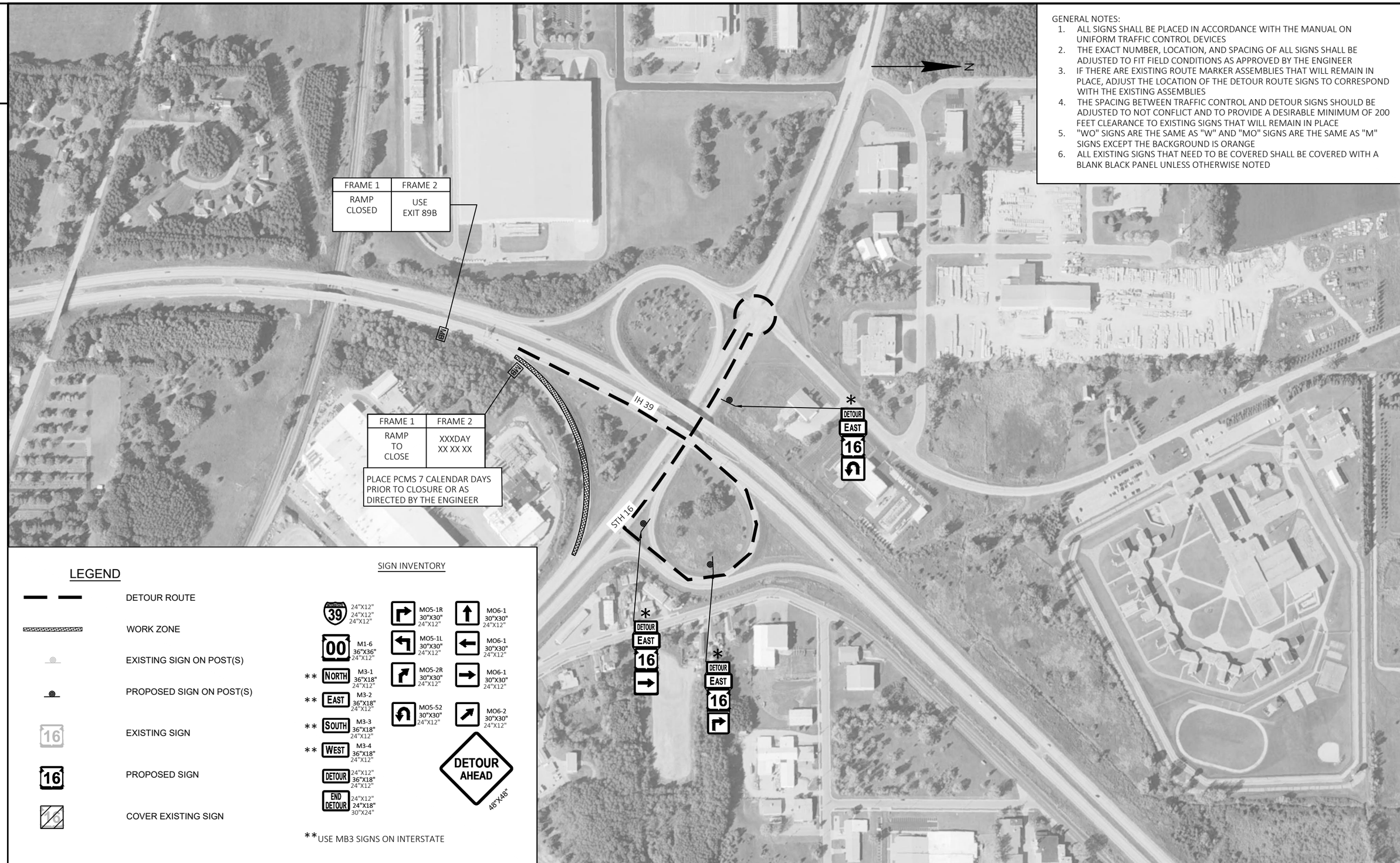

2

PROJECT NO: 1161-00-78	HWY: IH 39	COUNTY: COLUMBIA	TRAFFIC CONTROL STAGE 3 - IH 39 NB TO STH 16 EAST OFF RAMP DETOUR	SHEET 46	E

FILE NAME : C:\USERS\JAMES.GOLDEN\ONEDRIVE - DAAR CORPORATION\DOCUMENTS - SW DESIGN\1161-00-08 IH39, SB LANES, COLUMBIA CTY\C3D\11610008\SHEETSPLAN\027001-DT.DWG PLOT DATE : 10/23/2025 9:32 AM PLOT BY : JAMES GOLDEN PLOT NAME : PLOT SCALE : 1 IN:400 FT
LAYOUT NAME - 04

WISDOT/CADDS SHEET 42

2

GENERAL NOTES:

1. ALL SIGNS SHALL BE PLACED IN ACCORDANCE WITH THE MANUAL ON UNIFORM TRAFFIC CONTROL DEVICES
2. THE EXACT NUMBER, LOCATION, AND SPACING OF ALL SIGNS SHALL BE ADJUSTED TO FIT FIELD CONDITIONS AS APPROVED BY THE ENGINEER
3. IF THERE ARE EXISTING ROUTE MARKER ASSEMBLIES THAT WILL REMAIN IN PLACE, ADJUST THE LOCATION OF THE DETOUR ROUTE SIGNS TO CORRESPOND WITH THE EXISTING ASSEMBLIES
4. THE SPACING BETWEEN TRAFFIC CONTROL AND DETOUR SIGNS SHOULD BE ADJUSTED TO NOT CONFLICT AND TO PROVIDE A DESIRABLE MINIMUM OF 200 FEET CLEARANCE TO EXISTING SIGNS THAT WILL REMAIN IN PLACE
5. "WO" SIGNS ARE THE SAME AS "W" AND "MO" SIGNS ARE THE SAME AS "M" SIGNS EXCEPT THE BACKGROUND IS ORANGE
6. ALL EXISTING SIGNS THAT NEED TO BE COVERED SHALL BE COVERED WITH A BLANK BLACK PANEL UNLESS OTHERWISE NOTED

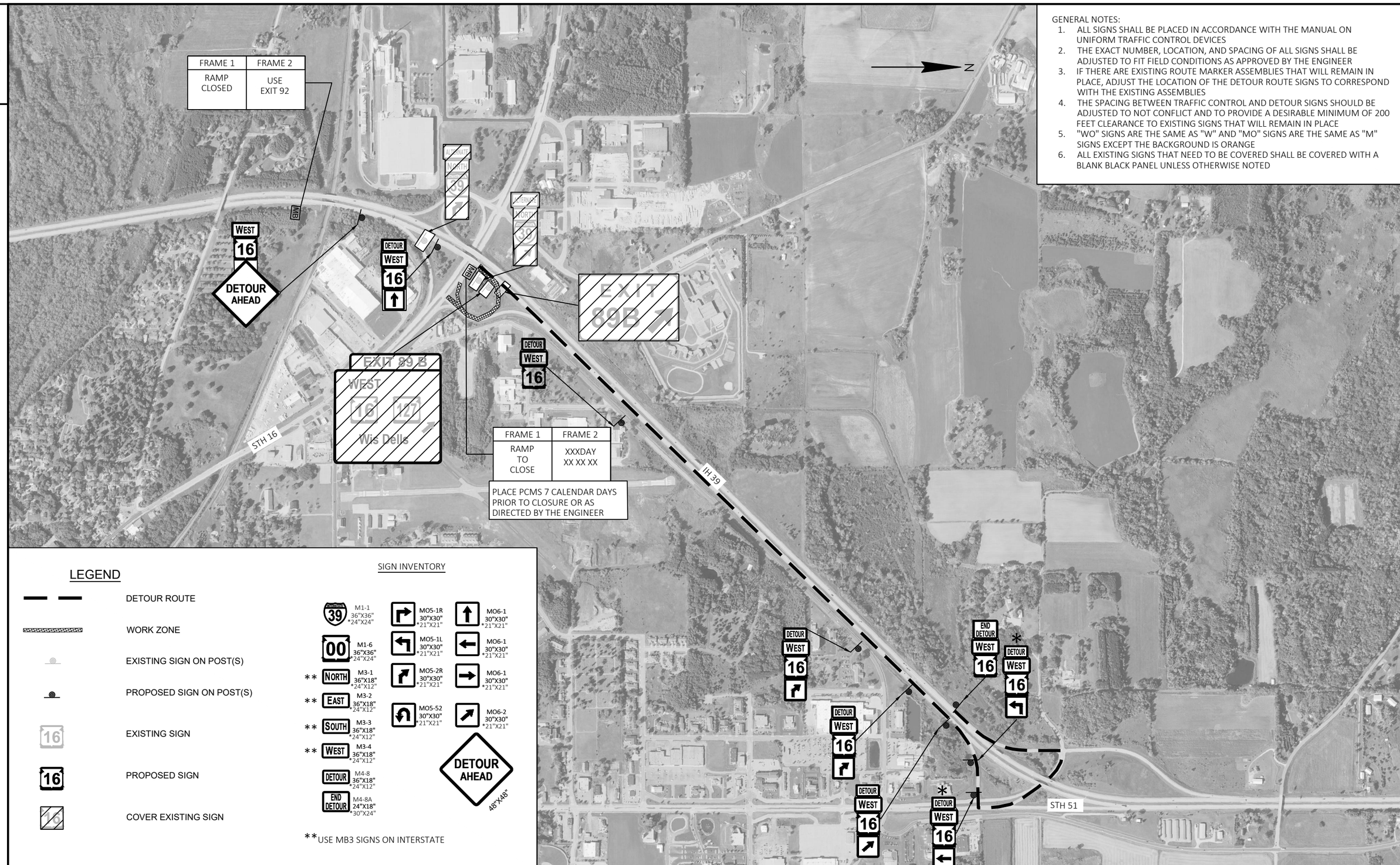

LEGEND

- DETOUR ROUTE
- WORK ZONE
- EXISTING SIGN ON POST(S)
- PROPOSED SIGN ON POST(S)
- EXISTING SIGN
- PROPOSED SIGN
- COVER EXISTING SIGN

SIGN INVENTORY

M1-1 36"X36" *24"X24"	MO5-1R 30"X30" *21"X21"	MO6-1 30"X30" *21"X21"
M1-6 36"X36" *24"X24"	MO5-1L 30"X30" *21"X21"	MO6-1 30"X30" *21"X21"
** M3-1 36"X18" *24"X12"	MO5-2R 30"X30" *21"X21"	MO6-1 30"X30" *21"X21"
** M3-2 36"X18" *24"X12"	MO5-52 30"X30" *21"X21"	MO6-2 30"X30" *21"X21"
** M3-3 36"X18" *24"X12"		
** M3-4 36"X18" *24"X12"		
M4-8 36"X18" *24"X12"		
M4-8A 24"X18" *30"X24"		

DETOUR AHEAD 48"X48"

**USE MB3 SIGNS ON INTERSTATE

PROJECT NO: 1161-00-78	HWY: IH 39	COUNTY: COLUMBIA	TRAFFIC CONTROL STAGE 3 - IH 39 NB TO STH 16 WEST OFF RAMP DETOUR	SHEET 47	E

FILE NAME : C:\USERS\JAMES.GOLDEN\ONEDRIVE - DAAR CORPORATION\DOCUMENTS - SW DESIGN\1161-00-08 IH39, SB LANES, COLUMBIA CTY\C3D\11610008\SHEETSPLAN\027001-DT.DWG PLOT DATE : 10/23/2025 9:32 AM PLOT BY : JAMES GOLDEN PLOT NAME : PLOT SCALE : 1 IN:1000 FT
LAYOUT NAME - 01

WISDOT/CADDS SHEET 42

2

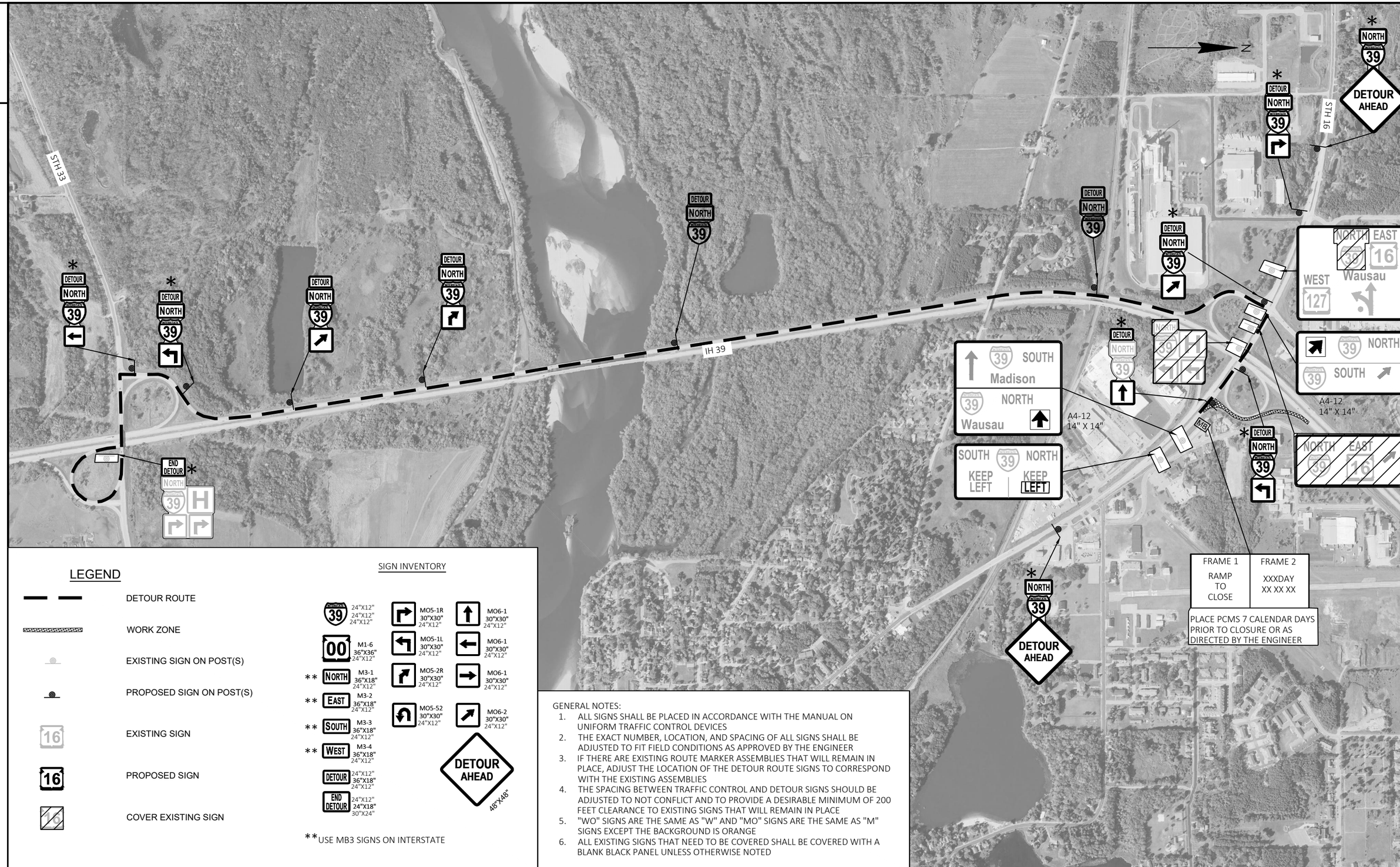

LEGEND

- DETOUR ROUTE
- WORK ZONE
- EXISTING SIGN ON POST(S)
- PROPOSED SIGN ON POST(S)
- EXISTING SIGN
- PROPOSED SIGN
- COVER EXISTING SIGN

SIGN INVENTORY

39 24"X12" 24"X12" 24"X12"	MO5-1R 30"X30" 24"X12"	MO6-1 30"X30" 24"X12"
00 M1-6 36"X36" 24"X12"	MO5-1L 30"X30" 24"X12"	MO6-1 30"X30" 24"X12"
** NORTH M3-1 36"X18" 24"X12"	MO5-2R 30"X30" 24"X12"	MO6-1 30"X30" 24"X12"
** EAST M3-2 36"X18" 24"X12"	MO5-52 30"X30" 24"X12"	MO6-2 30"X30" 24"X12"
** SOUTH M3-3 36"X18" 24"X12"		
** WEST M3-4 36"X18" 24"X12"		
DETOUR 24"X12" 36"X18" 24"X12"		
END DETOUR 24"X12" 24"X18" 30"X24"		

DETOUR AHEAD 48"X48"

**USE MB3 SIGNS ON INTERSTATE

GENERAL NOTES:

1. ALL SIGNS SHALL BE PLACED IN ACCORDANCE WITH THE MANUAL ON UNIFORM TRAFFIC CONTROL DEVICES
2. THE EXACT NUMBER, LOCATION, AND SPACING OF ALL SIGNS SHALL BE ADJUSTED TO FIT FIELD CONDITIONS AS APPROVED BY THE ENGINEER
3. IF THERE ARE EXISTING ROUTE MARKER ASSEMBLIES THAT WILL REMAIN IN PLACE, ADJUST THE LOCATION OF THE DETOUR ROUTE SIGNS TO CORRESPOND WITH THE EXISTING ASSEMBLIES
4. THE SPACING BETWEEN TRAFFIC CONTROL AND DETOUR SIGNS SHOULD BE ADJUSTED TO NOT CONFLICT AND TO PROVIDE A DESIRABLE MINIMUM OF 200 FEET CLEARANCE TO EXISTING SIGNS THAT WILL REMAIN IN PLACE
5. "WO" SIGNS ARE THE SAME AS "W" AND "MO" SIGNS ARE THE SAME AS "M" SIGNS EXCEPT THE BACKGROUND IS ORANGE
6. ALL EXISTING SIGNS THAT NEED TO BE COVERED SHALL BE COVERED WITH A BLANK BLACK PANEL UNLESS OTHERWISE NOTED

PROJECT NO: 1161-00-78	HWY: IH 39	COUNTY: COLUMBIA	TRAFFIC CONTROL STAGE 3 - STH 16 TO IH 39 NB ON RAMP DETOUR	SHEET 48	E

FILE NAME : C:\USERS\JAMES.GOLDEN\ONEDRIVE - DAAR CORPORATION\DOCUMENTS - SW DESIGN\1161-00-08 IH39, SB LANES, COLUMBIA CTY\C3D\11610008\SHEETSPLAN\027001-DT.DWG
LAYOUT NAME - 02
PLOT DATE : 10/23/2025 9:32 AM PLOT BY : JAMES GOLDEN PLOT NAME : PLOT SCALE : 1 IN:1000 FT

WISDOT/CADDS SHEET 42

2

GENERAL NOTES:

1. ALL SIGNS SHALL BE PLACED IN ACCORDANCE WITH THE MANUAL ON UNIFORM TRAFFIC CONTROL DEVICES
2. THE EXACT NUMBER, LOCATION, AND SPACING OF ALL SIGNS SHALL BE ADJUSTED TO FIT FIELD CONDITIONS AS APPROVED BY THE ENGINEER
3. IF THERE ARE EXISTING ROUTE MARKER ASSEMBLIES THAT WILL REMAIN IN PLACE, ADJUST THE LOCATION OF THE DETOUR ROUTE SIGNS TO CORRESPOND WITH THE EXISTING ASSEMBLIES
4. THE SPACING BETWEEN TRAFFIC CONTROL AND DETOUR SIGNS SHOULD BE ADJUSTED TO NOT CONFLICT AND TO PROVIDE A DESIRABLE MINIMUM OF 200 FEET CLEARANCE TO EXISTING SIGNS THAT WILL REMAIN IN PLACE
5. "WO" SIGNS ARE THE SAME AS "W" AND "MO" SIGNS ARE THE SAME AS "M" SIGNS EXCEPT THE BACKGROUND IS ORANGE
6. ALL EXISTING SIGNS THAT NEED TO BE COVERED SHALL BE COVERED WITH A BLANK BLACK PANEL UNLESS OTHERWISE NOTED

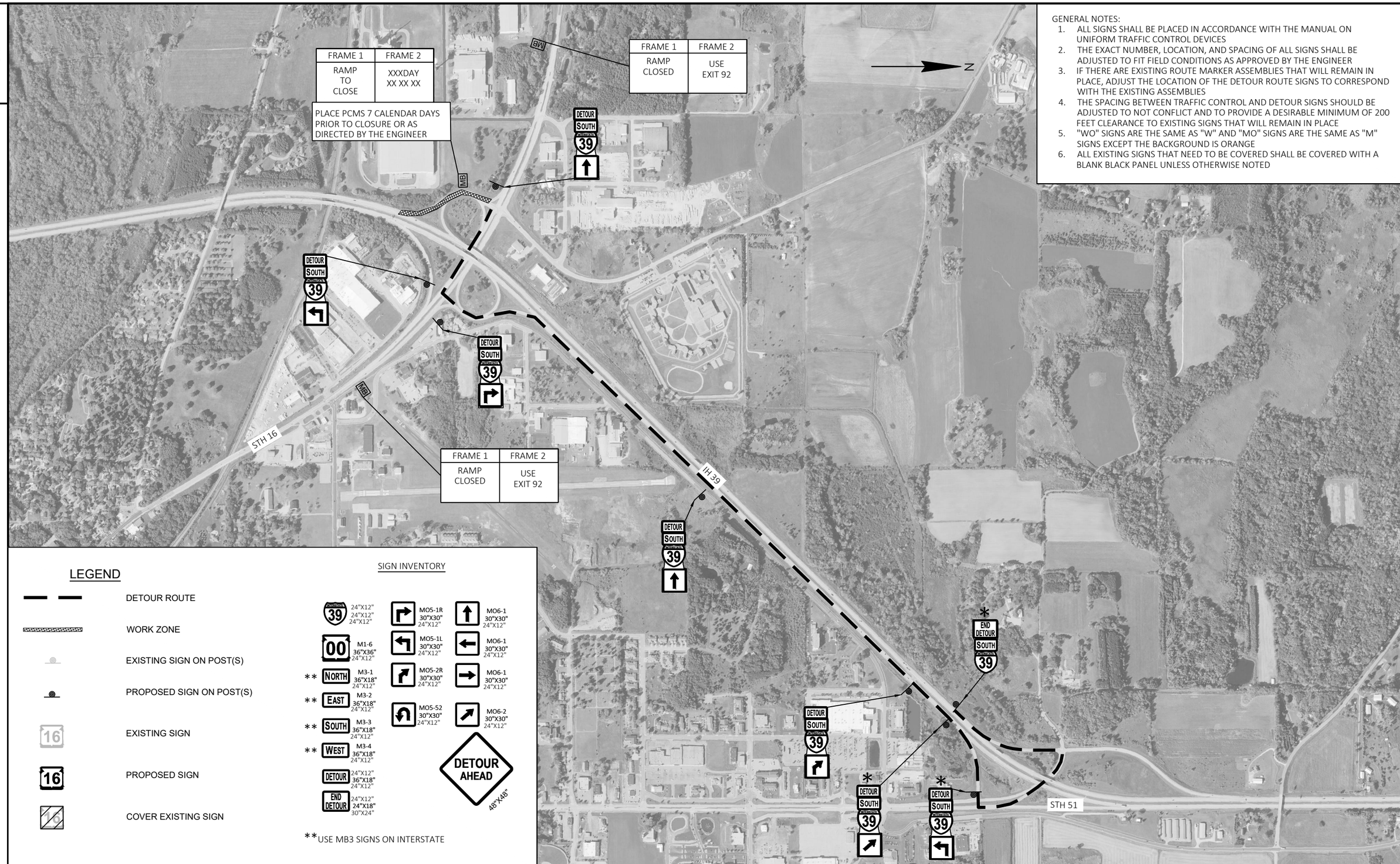

LEGEND

- DETOUR ROUTE
- WORK ZONE
- EXISTING SIGN ON POST(S)
- PROPOSED SIGN ON POST(S)
- EXISTING SIGN
- PROPOSED SIGN
- COVER EXISTING SIGN

SIGN INVENTORY

39	24"X12" 24"X12" 24"X12"
00 M1-6	36"X36" 24"X12"
** NORTH M3-1	36"X18" 24"X12"
** EAST M3-2	36"X18" 24"X12"
** SOUTH M3-3	36"X18" 24"X12"
** WEST M3-4	36"X18" 24"X12"
DETOUR	24"X12" 36"X18" 24"X12"
END DETOUR	24"X12" 24"X18" 30"X24"
MO5-1R	30"X30" 24"X12"
MO5-1L	30"X30" 24"X12"
MO5-2R	30"X30" 24"X12"
MO5-52	30"X30" 24"X12"
MO6-1	30"X30" 24"X12"
MO6-1	30"X30" 24"X12"
MO6-1	30"X30" 24"X12"
MO6-2	30"X30" 24"X12"
DETOUR AHEAD	48"X48"

**USE MB3 SIGNS ON INTERSTATE

PROJECT NO: 1161-00-78	HWY: IH 39	COUNTY: COLUMBIA	TRAFFIC CONTROL STAGE 3 - STH 16 TO IH 39 SB ON RAMP DETOUR	SHEET 49	E

FILE NAME : C:\USERS\JAMES.GOLDEN\ONEDRIVE - DAAR CORPORATION\DOCUMENTS - SW DESIGN\1161-00-08 IH39, SB LANES, COLUMBIA CTY\C3D\11610008\SHEETSPLAN\027001-DT.DWG PLOT DATE : 10/23/2025 9:32 AM PLOT BY : JAMES GOLDEN PLOT NAME : PLOT SCALE : 1 IN:1000 FT
LAYOUT NAME - 05

WISDOT/CADDS SHEET 42

2

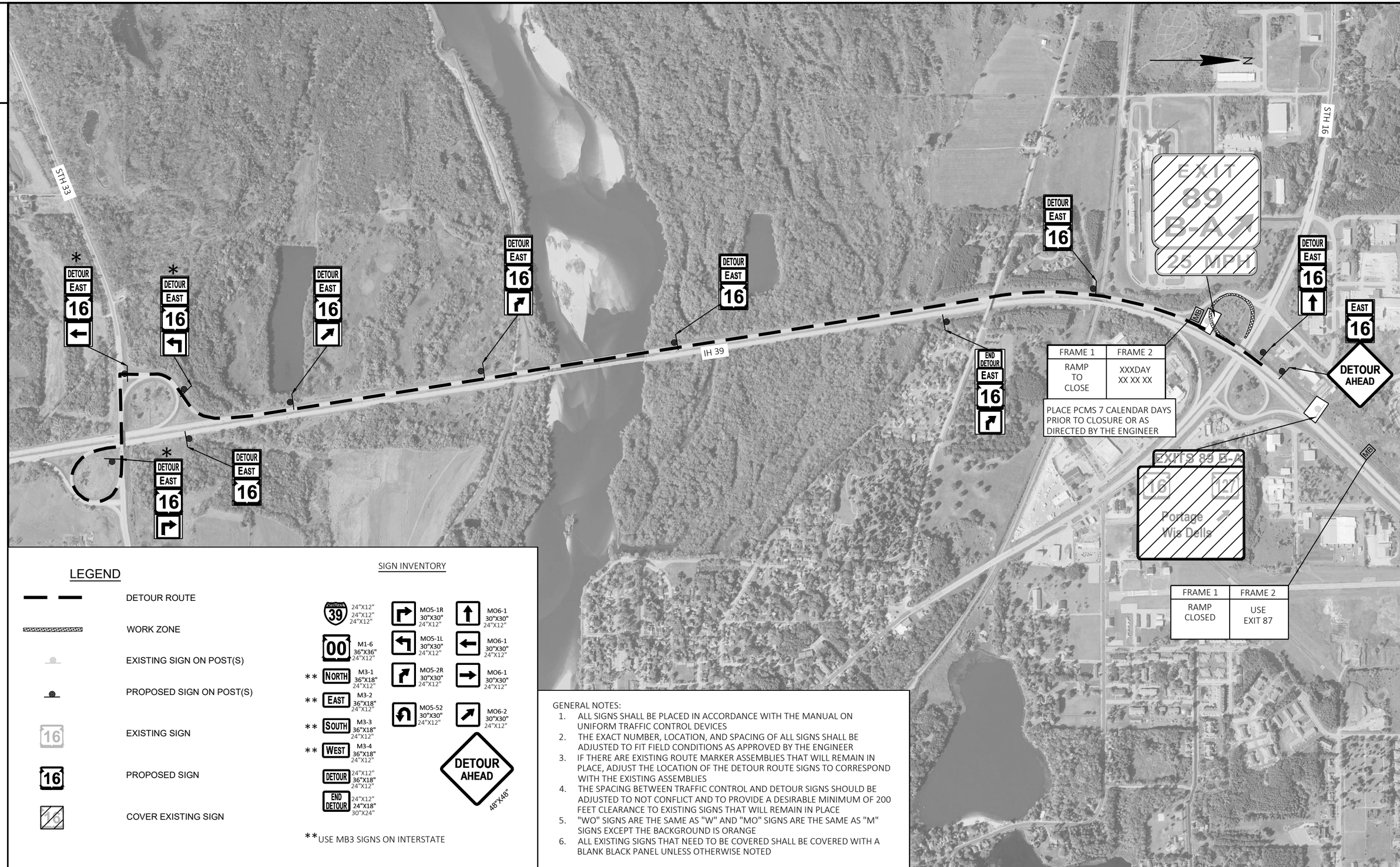

LEGEND

- DETOUR ROUTE
- WORK ZONE
- EXISTING SIGN ON POST(S)
- PROPOSED SIGN ON POST(S)
- EXISTING SIGN
- PROPOSED SIGN
- COVER EXISTING SIGN

SIGN INVENTORY

39	24"X12" 24"X12" 24"X12"	
00 M1-6	36"X36" 24"X12"	
** NORTH M3-1	36"X18" 24"X12"	
** EAST M3-2	36"X18" 24"X12"	
** SOUTH M3-3	36"X18" 24"X12"	
** WEST M3-4	36"X18" 24"X12"	
DETOUR	24"X12" 36"X18" 24"X12"	
END DETOUR	24"X12" 24"X18" 30"X24"	
MO5-1R	30"X30" 24"X12"	
MO5-1L	30"X30" 24"X12"	
MO5-2R	30"X30" 24"X12"	
MO5-52	30"X30" 24"X12"	
MO6-1	30"X30" 24"X12"	
MO6-1	30"X30" 24"X12"	
MO6-1	30"X30" 24"X12"	
MO6-2	30"X30" 24"X12"	
DETOUR AHEAD	48"X48"	

**USE MB3 SIGNS ON INTERSTATE

GENERAL NOTES:

1. ALL SIGNS SHALL BE PLACED IN ACCORDANCE WITH THE MANUAL ON UNIFORM TRAFFIC CONTROL DEVICES
2. THE EXACT NUMBER, LOCATION, AND SPACING OF ALL SIGNS SHALL BE ADJUSTED TO FIT FIELD CONDITIONS AS APPROVED BY THE ENGINEER
3. IF THERE ARE EXISTING ROUTE MARKER ASSEMBLIES THAT WILL REMAIN IN PLACE, ADJUST THE LOCATION OF THE DETOUR ROUTE SIGNS TO CORRESPOND WITH THE EXISTING ASSEMBLIES
4. THE SPACING BETWEEN TRAFFIC CONTROL AND DETOUR SIGNS SHOULD BE ADJUSTED TO NOT CONFLICT AND TO PROVIDE A DESIRABLE MINIMUM OF 200 FEET CLEARANCE TO EXISTING SIGNS THAT WILL REMAIN IN PLACE
5. "WO" SIGNS ARE THE SAME AS "W" AND "MO" SIGNS ARE THE SAME AS "M" SIGNS EXCEPT THE BACKGROUND IS ORANGE
6. ALL EXISTING SIGNS THAT NEED TO BE COVERED SHALL BE COVERED WITH A BLANK BLACK PANEL UNLESS OTHERWISE NOTED

PROJECT NO: 1161-00-78	HWY: IH 39	COUNTY: COLUMBIA	TRAFFIC CONTROL STAGE 3 - IH 39 SB TO STH 16 OFF RAMP DETOUR	SHEET 50	E

Estimate Of Quantities

1161-00-78

Line	Item	Item Description	Unit	Total	Qty
0002	203.0100	Removing Small Pipe Culverts	EACH	2.000	2.000
0004	204.0100	Removing Concrete Pavement	SY	370.000	370.000
0006	204.0110	Removing Asphaltic Surface	SY	50.000	50.000
0008	204.0120	Removing Asphaltic Surface Milling	SY	1,940.000	1,940.000
0010	204.0150	Removing Curb & Gutter	LF	135.000	135.000
0012	204.0165	Removing Guardrail	LF	6,505.000	6,505.000
0014	204.0180	Removing Delineators and Markers	EACH	185.000	185.000
0016	204.0190	Removing Surface Drains	EACH	3.000	3.000
0018	204.0220	Removing Inlets	EACH	2.000	2.000
0020	211.0400	Prepare Foundation for Asphaltic Shoulders	STA	48.000	48.000
0022	213.0100	Finishing Roadway (project) 01. 1161-00-78	EACH	1.000	1.000
0024	305.0110	Base Aggregate Dense 3/4-Inch	TON	670.000	670.000
0026	312.0110	Select Crushed Material	TON	30.000	30.000
0028	415.0100	Concrete Pavement 10-Inch	SY	50.000	50.000
0030	415.0410	Concrete Pavement Approach Slab	SY	120.000	120.000
0032	415.6000.S	Rout and Seal	LF	4,470.000	4,470.000
0034	416.0610	Drilled Tie Bars	EACH	1,348.000	1,348.000
0036	416.0620	Drilled Dowel Bars	EACH	6,624.000	6,624.000
0038	416.0754.S	Concrete Pavement Partial Depth Repair Surface Repair	SF	640.000	640.000
0040	416.1710	Concrete Pavement Repair	SY	2,912.000	2,912.000
0042	416.1715	Concrete Pavement Repair SHES	SY	275.000	275.000
0044	416.1720	Concrete Pavement Replacement	SY	4,562.000	4,562.000
0046	416.1725	Concrete Pavement Replacement SHES	SY	868.000	868.000
0048	420.1000	Continuous Diamond Grinding Concrete Pavement	SY	1,200.000	1,200.000
0050	455.0605	Tack Coat	GAL	136.000	136.000
0052	460.2000	Incentive Density HMA Pavement	DOL	260.000	260.000
0054	460.5224	HMA Pavement 4 LT 58-28 S	TON	400.000	400.000
0056	465.0510	Asphaltic Rumble Strips, Shoulder Divided Roadway	LF	1,990.000	1,990.000
0058	521.1012	Apron Endwalls for Culvert Pipe Steel 12-Inch	EACH	2.000	2.000
0060	521.3112	Culvert Pipe Corrugated Steel 12-Inch	LF	20.000	20.000
0062	601.0409	Concrete Curb & Gutter 30-Inch Type A	LF	80.000	80.000
0064	601.0586	Concrete Curb & Gutter 4-Inch Sloped 30-Inch Type TBTT	LF	55.000	55.000
0066	611.0654	Inlet Covers Type V	EACH	2.000	2.000
0068	611.3220	Inlets 2x2-FT	EACH	2.000	2.000
0070	614.0010	Barrier System Grading Shaping Finishing	EACH	15.000	15.000
0072	614.0220	Steel Thrie Beam Bullnose Terminal	EACH	2.000	2.000
0074	614.0230	Steel Thrie Beam	LF	72.000	72.000
0076	614.0397	Guardrail Mow Strip Emulsified Asphalt	SY	117.000	117.000
0078	614.2300	MGS Guardrail 3	LF	3,264.000	3,264.000
0080	614.2330	MGS Guardrail 3 K	LF	2,050.000	2,050.000
0082	614.2500	MGS Thrie Beam Transition	LF	628.000	628.000
0084	614.2610	MGS Guardrail Terminal EAT	EACH	9.000	9.000
0086	614.2620	MGS Guardrail Terminal Type 2	EACH	3.000	3.000
0088	618.0100	Maintenance and Repair of Haul Roads (project) 01. 1161-00-78	EACH	1.000	1.000
0090	619.1000	Mobilization	EACH	1.000	1.000
0092	624.0100	Water	MGAL	6.000	6.000
0094	628.1504	Silt Fence	LF	920.000	920.000
0096	628.1520	Silt Fence Maintenance	LF	920.000	920.000
0098	628.1905	Mobilizations Erosion Control	EACH	2.000	2.000

Estimate Of Quantities

1161-00-78

Line	Item	Item Description	Unit	Total	Qty
0100	628.1910	Mobilizations Emergency Erosion Control	EACH	2.000	2.000
0102	633.0100	Delineator Posts Steel	EACH	185.000	185.000
0104	633.0500	Delineator Reflectors	EACH	185.000	185.000
0106	642.5001	Field Office Type B	EACH	1.000	1.000
0108	643.0300	Traffic Control Drums	DAY	7,460.000	7,460.000
0110	643.0420	Traffic Control Barricades Type III	DAY	554.000	554.000
0112	643.0705	Traffic Control Warning Lights Type A	DAY	1,098.000	1,098.000
0114	643.0715	Traffic Control Warning Lights Type C	DAY	1,790.000	1,790.000
0116	643.0810	Traffic Control Connected Arrow Boards	DAY	90.000	90.000
0118	643.0900	Traffic Control Signs	DAY	9,217.000	9,217.000
0120	643.0910	Traffic Control Covering Signs Type I	EACH	1.000	1.000
0122	643.0920	Traffic Control Covering Signs Type II	EACH	38.000	38.000
0124	643.1050	Traffic Control Signs PCMS	DAY	98.000	98.000
0126	643.1055.S	Truck or Trailer Mounted Attenuator	DAY	4.000	4.000
0128	643.5000	Traffic Control	EACH	1.000	1.000
0130	646.2020	Marking Line Epoxy 6-Inch	LF	6,650.000	6,650.000
0132	646.4020	Marking Line Epoxy 10-Inch	LF	400.000	400.000
0134	646.5520	Marking Outfall Epoxy	EACH	145.000	145.000
0136	650.8000	Construction Staking Resurfacing Reference	LF	36,144.000	36,144.000
0138	650.9911	Construction Staking Supplemental Control (project) 01. 1161-00-78	EACH	1.000	1.000
0140	690.0150	Sawing Asphalt	LF	174.000	174.000
0142	690.0250	Sawing Concrete	LF	22,286.000	22,286.000
0144	715.0720	Incentive Compressive Strength Concrete Pavement	DOL	500.000	500.000
0146	999.2100.S	Installing and Maintaining Climbing Turtle Exclusion Fence	LF	600.000	600.000
0148	SPV.0060	Special 01. Removing Raised Pavement Markers And Filling Voids	EACH	370.000	370.000

3

REMOVING ASPHALTIC SURFACE

ROADWAY	LOCATION	204.0120 REMOVING ASPHALTIC SURFACE MILLING SY	REMARKS
IH 39 SB	LT/RT	670	STH 16 TO IH 39 SB RAMP
IH 39 SB	LT	340	IH 39 NB TO STH 16 EB RAMP
IH 39 SB	LT	140	IH 39 NB TO STH 16 RAMP
IH 39 SB	LT/RT	790	STH 16 TO IH 39 NB RAMP
	TOTAL 0010	1,940	

REMOVALS

ROADWAY	STATION	TO	STATION	LOCATION	203.0100 REMOVING SMALL PIPE CULVERTS EACH	204.0100 REMOVING CONCRETE PAVEMENT SY	204.0110 REMOVING ASPHALTIC SURFACE SY	204.0190 REMOVING SURFACE DRAINS EACH	204.0220 REMOVING INLETS EACH	REMARKS
IH 39 SB	222+35'SB'	-	223+53'SB'	LT	-	-	50	-	-	
IH 39 SB	289+19'SB'	-	291+96'SB'	STH 16	-	320	-	-	-	APPROACH SLABS
IH 39 SB	207+48'SB	-	207+56'SB'	LT	-	-	-	1	-	
IH 39 SB	222+29'SB'	-	222+35'SB'	LT	-	-	-	1	-	
IH 39 SB	291+56'SB'	-	291+96'SB'	RT	1	30	-	1	1	
IH 39 SB	440+58'RA'	-	440+85'RA'	RT	1	20	-	-	1	
				TOTAL 0010	2	370	50	3	2	

BASE AGGREGATE

ROADWAY	LOCATION	305.0110 BASE AGGREGATE DENSE 3/4-INCH TON	312.0110 SELECT CRUSHED MATERIAL TON	624.0100 WATER MGAL	REMARKS
IH 39 SB	STH 16	50	-	-	IH 39 NB TO STH 16 EB
IH 39 SB	STH 16	20	-	-	IH 39 NB TO STH 16 WB
IH 39 SB	STH 16	120	-	-	STH 16 TO IH 39 NB
IH 39 SB	STH 16	110	-	-	STH 16 TO IH 39 SB
IH 39 SB		350	-	-	GUARDRAIL LOCATIONS
IH 39 SB		20	30		FRENCH DRAIN LOCATIONS
IH 39 SB	UNDISTRIBUTED	-	-	6	
	TOTAL 0010	670	30	6	

3

CONCRETE APPROACH SLABS

ROADWAY	STATION	TO	STATION	LOCATION	415.0100 CONCRETE PAVEMENT 10-INCH SY	415.0410 CONCRETE PAVEMENT APPROACH SLAB SY	* 416.1720 CONCRETE PAVEMENT REPLACEMENT SY	REMARKS
IH 39 SB	289+19'SB'	-	291+96'SB'	LT/RT	-	120	200	STH 16
IH 39 SB	291+56'SB'	-	291+96'SB'	RT	30	-	-	SHOULDER
IH 39 SB	440+58'RA'	-	440+85'RA'	RT	20	-	-	SHOULDER
				TOTAL 0010	50	120	200	

*ADDITIONAL QUANTITIES LISTED ELSEWHERE

3

3

CONCRETE PAVEMENT REPAIR AND REPLACEMENT (1 OF 6)

ROADWAY	PATCH #	STATION	TO	STATION	ALIGNMENT	LOCATION	* 416.0610 DRILLED TIE BARS EACH	* 416.0620 DRILLED DOWEL BARS EACH	416.1710 CONCRETE PAVEMENT REPAIR SY	* 416.1720 CONCRETE PAVEMENT REPLACEMENT SY	* 420.1000 CONTINUOUS DIAMOND GRINDING CONCRETE PAVEMENT SY	* 690.0250 SAWING CONCRETE LF	REMARKS
IH 39 SB	1	441+12	-	441+20	'RA'	MEDIAN	2	16	10.7	-	-	44	
IH 39 SB	2	444+77	-	444+85	'RA'	MEDIAN	-	16	10.7	-	-	44	
IH 39 SB	4	446+24	-	446+32	'RA'	MEDIAN	-	16	10.7	-	-	44	
IH 39 SB	5	447+53	-	447+60	'RA'	MEDIAN	-	16	9.3	-	-	31	
IH 39 SB	7	449+95	-	450+06	'RA'	MEDIAN	3	16	14.7	-	-	47	
IH 39 SB	8	451+11	-	451+22	''RA'	MEDIAN	3	16	14.7	-	-	47	
IH 39 SB	8A	452+02	-	452+21	''RA'	MEDIAN	5	16	-	25.3	-	67	
IH 39 SB	11	40+25	-	40+31	'SB'	MEDIAN	-	16	8.3	-	-	30	
IH 39 SB	14	41+40	-	41+47	'SB'	MEDIAN	1	16	9.3	-	-	31	
IH 39 SB	16	42+48	-	42+64	'SB'	MEDIAN	4	16	-	21.3	-	64	
IH 39 SB	20	52+48	-	52+68	'SB'	MEDIAN	6	16	-	26.7	-	68	
IH 39 SB	24	55+03	-	55+09	'SB'	MEDIAN	1	16	8.0	-	-	30	
IH 39 SB	25	55+39	-	55+45	'SB'	MEDIAN	1	16	8.0	-	-	30	
IH 39 SB	26A	55+87	-	55+93	'SB'	MEDIAN	-	16	8.0	-	-	30	
IH 39 SB	26C	58+54	-	58+61	'SB'	MEDIAN	1	16	8.7	-	-	31	
IH 39 SB	32	64+17	-	64+26	'SB'	MEDIAN	2	16	12.0	-	-	45	
IH 39 SB	33	66+51	-	66+57	'SB'	MEDIAN	1	16	8.0	-	-	30	
IH 39 SB	36	67+60	-	67+66	'SB'	MEDIAN	1	16	8.0	-	-	30	
IH 39 SB	39	68+67	-	68+75	'SB'	MEDIAN	2	16	10.7	-	-	44	
IH 39 SB	40	69+81	-	69+87	'SB'	MEDIAN	-	16	8.0	-	-	30	EXPANSION JOINT
IH 39 SB	43	70+95	-	71+01	'SB'	MEDIAN	-	16	8.0	-	-	30	
IH 39 SB	44	74+03	-	74+10	'SB'	MEDIAN	-	16	8.7	-	-	31	
IH 39 SB	45	79+60	-	79+66	'SB'	MEDIAN	-	16	8.0	-	-	30	EXPANSION JOINT
IH 39 SB	46	82+99	-	83+10	'SB'	MEDIAN	3	16	15.3	-	-	48	
IH 39 SB	48C	97+01	-	97+11	'SB'	MEDIAN	2	16	13.3	-	-	46	
IH 39 SB	58	120+72	-	120+83	'SB'	MEDIAN	3	16	14.7	-	-	47	
IH 39 SB	69	158+82	-	158+88	'SB'	MEDIAN	1	16	8.0	-	-	30	
IH 39 SB	75B	166+96	-	167+02	'SB'	MEDIAN	-	16	8.0	-	-	30	
IH 39 SB	75E	167+32	-	167+38	'SB'	MEDIAN	-	16	8.0	-	-	30	
IH 39 SB	76	167+86	-	167+98	'SB'	MEDIAN	-	16	16.0	-	-	48	
IH 39 SB	77	171+77	-	171+83	'SB'	MEDIAN	-	16	8.0	-	-	30	
IH 39 SB	77B	172+86	-	172+92	'SB'	MEDIAN	-	16	8.0	-	-	30	
IH 39 SB	86	199+09	-	199+21	'SB'	MEDIAN	-	16	15.6	-	-	48	
IH 39 SB	87	204+84	-	204+90	'SB'	MEDIAN	-	16	8.0	-	-	30	EXPANSION JOINT
IH 39 SB	88	227+90	-	227+96	'SB'	MEDIAN	-	16	8.0	-	-	30	EXPANSION JOINT
IH 39 SB	92	246+99	-	247+06	'SB'	MEDIAN	1	16	9.3	-	-	31	
IH 39 SB	97	260+17	-	260+41	'SB'	MEDIAN	3	16	-	32.0	-	84	
IH 39 SB	99	280+02	-	280+47	'SB'	MEDIAN	11	16	-	60.0	-	141	
IH 39 SB	106	286+11	-	286+17	'SB'	MEDIAN	-	16	8.0	-	-	30	EXPANSION JOINT
IH 39 SB	107	301+08	-	301+14	'SB'	MEDIAN	-	16	8.0	-	-	30	EXPANSION JOINT
IH 39 SB	110	302+29	-	302+35	'SB'	MEDIAN	1	16	8.0	-	-	30	
IH 39 SB	110A	303+21	-	303+27	'SB'	MEDIAN	-	16	8.0	-	-	30	
IH 39 SB	111E	310+30	-	310+39	'SB'	MEDIAN	-		12.0	-	-	45	
IH 39 SB	111G	310+97	-	311+09	'SB'	MEDIAN	-	16	16.0	-	-	48	
IH 39 SB	111I	311+65	-	311+73	'SB'	MEDIAN	2	16	10.7	-	-	44	
IH 39 SB	115	319+94	-	320+08	'SB'	MEDIAN	-	16	18.7	-	-	50	
IH 39 SB	120	325+40	-	325+80	'SB'	MEDIAN	12	16	-	53.3	-	124	
IH 39 SB	121	325+97	-	326+19	'SB'	MEDIAN	6	16	-	29.3	-	82	
IH 39 SB	128A	339+73	-	339+80	'SB'	MEDIAN	1	16	9.3	-	-	31	
IH 39 SB	129	339+92	-	339+98	'SB'	MEDIAN	1	16	8.0	-	-	30	
IH 39 SB	152	376+70	-	376+76	'SB'	MEDIAN	-	16	8.0	-	-	30	EXPANSION JOINT
					MEDIAN LANE SUBTOTAL		80	800	448	248	140**	2,213	

** UNDISTRIBUTED, AS DIRECTED BY ENGINEER

3

CONCRETE PAVEMENT REPAIR AND REPLACEMENT (CONT 2 OF 6)

ROADWAY	PATCH #	STATION	TO	STATION	ALIGNMENT	LOCATION	416.0610 DRILLED TIE BARS EACH	416.0620 DRILLED DOWEL BARS EACH	416.1710 CONCRETE PAVEMENT REPAIR SY	416.1720 CONCRETE PAVEMENT REPLACEMENT SY	420.1000 CONTINUOUS DIAMOND GRINDING CONCRETE PAVEMENT SY	690.0250 SAWING CONCRETE LF	REMARKS
IH 39 SB	9	38+81	-	38+93	'SB'	MIDDLE	-	16	16.0	-	-	48	
IH 39 SB	11A	40+27	-	40+39	'SB'	MIDDLE	1	16	16.0	-	-	48	
IH 39 SB	23	54+53	-	54+59	'SB'	MIDDLE	-	16	8.0	-	-	30	
IH 39 SB	25A	56+12	-	56+18	'SB'	MIDDLE	1	16	8.0	-	-	30	
IH 39 SB	26B	56+87	-	56+93	'SB'	MIDDLE	-	16	8.0	-	-	30	
IH 39 SB	26D	58+54	-	58+61	'SB'	MIDDLE	1	16	9.3	-	-	31	
IH 39 SB	40A	69+81	-	69+87	'SB'	MIDDLE	-	16	8.0	-	-	30	EXPANSION JOINT
IH 39 SB	42A	70+91	-	70+97	'SB'	MIDDLE	-	16	8.0	-	-	30	
					MIDDLE LANE SUBTOTAL		3	128	81	0	20**	277	

** UNDISTRIBUTED, AS DIRECTED BY ENGINEER

3

CONCRETE PAVEMENT REPAIR AND REPLACEMENT (CONT 3 OF 6)

ROADWAY	PATCH #	STATION	TO	STATION	ALIGNMENT	LOCATION	416.0610 DRILLED TIE BARS EACH	416.0620 DRILLED DOWEL BARS EACH	416.1710 CONCRETE PAVEMENT REPAIR SY	416.1720 CONCRETE PAVEMENT REPLACEMENT SY	420.1000 CONTINUOUS DIAMOND GRINDING CONCRETE PAVEMENT SY	690.0250 SAWING CONCRETE LF	REMARKS
IH 39 SB	2A	444+77	-	444+85	'RA'	OUTSIDE	-	18	12.4	-	-	50	
IH 39 SB	3	446+06	-	446+12	'RA'	OUTSIDE	1	18	9.3	-	-	34	
IH 39 SB	4A	446+24	-	446+32	'RA'	OUTSIDE	-	18	12.4	-	-	50	
IH 39 SB	5A	447+54	-	447+61	'RA'	OUTSIDE	-	18	10.9	-	-	35	
IH 39 SB	6	448+92	-	448+99	'RA'	OUTSIDE	1	18	10.9	-	-	35	
IH 39 SB	9A	38+81	-	38+93	'SB'	OUTSIDE	-	18	18.7	-	-	54	
IH 39 SB	10	39+36	-	39+56	'SB'	OUTSIDE	6	18	-	31.1	-	76	
IH 39 SB	12	40+58	-	40+64	'SB'	OUTSIDE	1	18	9.3	-	-	34	
IH 39 SB	13	41+32	-	41+38	'SB'	OUTSIDE	1	18	9.3	-	-	34	
IH 39 SB	14A	41+74	-	42+25	'SB'	OUTSIDE	16	18	-	79.3	-	177	
IH 39 SB	15	42+48	-	42+64	'SB'	OUTSIDE	4	18	-	24.9	-	72	
IH 39 SB	17	42+82	-	42+90	'SB'	OUTSIDE	2	18	12.4	-	-	50	
IH 39 SB	17A	49+71	-	49+79	'SB'	OUTSIDE	2	18	13.1	-	-	50	
IH 39 SB	18	50+65	-	51+09	'SB'	OUTSIDE	14	18	-	68.4	-	156	
IH 39 SB	19	51+38	-	51+58	'SB'	OUTSIDE	6	18	-	31.1	-	76	
IH 39 SB	19A	51+65	-	51+97	'SB'	OUTSIDE	10	18	-	50.4	-	116	
IH 39 SB	21	52+78	-	53+17	'SB'	OUTSIDE	12	18	-	60.7	-	137	
IH 39 SB	22	54+33	-	54+76	'SB'	OUTSIDE	11	18	-	66.9	-	155	
IH 39 SB	23A	54+87	-	54+93	'SB'	OUTSIDE	1	18	9.3	-	-	34	
IH 39 SB	26	56+73	-	56+98	'SB'	OUTSIDE	4	18	-	38.9	-	95	
IH 39 SB	26B	57+84	-	57+93	'SB'	OUTSIDE	2	18	14.0	-	-	51	
IH 39 SB	27	58+61	-	58+84	'SB'	OUTSIDE	7	18	-	35.8	-	93	
IH 39 SB	27A	59+65	-	59+95	'SB'	OUTSIDE	9	18	-	46.7	-	114	
IH 39 SB	28	61+56	-	61+64	'SB'	OUTSIDE	2	18	12.4	-	-	50	
IH 39 SB	29	62+32	-	63+13	'SB'	OUTSIDE	26	18	-	126.0	-	263	
IH 39 SB	30	63+42	-	63+49	'SB'	OUTSIDE	1	18	10.9	-	-	35	
IH 39 SB	31	63+77	-	64+65	'SB'	OUTSIDE	28	18	-	136.9	-	284	
IH 39 SB	32A	65+90	-	65+96	'SB'	OUTSIDE	1	18	9.3		-	34	
IH 39 SB	34	66+95	-	67+01	'SB'	OUTSIDE	1	18	9.3	-	-	34	
IH 39 SB	35	67+54	-	67+62	'SB'	OUTSIDE	2	18	12.4	-	-	50	
IH 39 SB	37	67+93	-	68+01	'SB'	OUTSIDE	2	18	12.4	-	-	50	
IH 39 SB	38	68+67	-	68+75	'SB'	OUTSIDE	2	18	12.4	-	-	50	
IH 39 SB	40B	69+81	-	69+87	'SB'	OUTSIDE	-	18	9.3	-	-	34	EXPANSION JOINT
IH 39 SB	41	70+24	-	70+30	'SB'	OUTSIDE	1	18	9.3	-	-	34	
IH 39 SB	42	70+83	-	70+97	'SB'	OUTSIDE	1	18	21.8	-	-	56	
IH 39 SB	44A	74+02	-	74+09	'SB'	OUTSIDE	-	18	10.1	-	-	35	
IH 39 SB	45A	79+60	-	79+66	'SB'	OUTSIDE	-	18	9.3	-	-	34	EXPANSION JOINT
IH 39 SB	46A	84+32	-	84+74	'SB'	OUTSIDE	13	18	-	65.3	-	140	
IH 39 SB	47	89+96	-	90+22	'SB'	OUTSIDE	8	18	-	40.4	-	96	
IH 39 SB	48	92+10	-	92+17	'SB'	OUTSIDE	1	18	10.9	-	-	35	
IH 39 SB	48A	92+47	-	92+72	'SB'	OUTSIDE	7	18	-	38.9	-	95	
IH 39 SB	48B	96+06	-	96+12	'SB'	OUTSIDE	1	18	9.3	-	-	34	
IH 39 SB	48D	98+82	-	98+98	'SB'	OUTSIDE	4	18	-	24.9	-	72	
IH 39 SB	49	99+32	-	99+77	'SB'	OUTSIDE	14	18	-	70.0	-	157	
IH 39 SB	50	100+99	-	101+05	'SB'	OUTSIDE	1	18	9.3	-	-	34	
IH 39 SB	51	104+13	-	104+19	'SB'	OUTSIDE	1	18	9.3	-	-	34	
IH 39 SB	52	106+29	-	106+93	'SB'	OUTSIDE	20	18	-	99.6	-	218	
IH 39 SB	53	110+99	-	111+06	'SB'	OUTSIDE	1	18	10.9	-	-	35	
IH 39 SB	53A	111+36	-	111+42	'SB'	OUTSIDE	1	18	9.3	-	-	34	
IH 39 SB	54	112+04	-	112+50	'SB'	OUTSIDE	14	18	-	71.6	-	158	
IH 39 SB	55	113+85	-	113+93	'SB'	OUTSIDE	2	18	12.4	-	-	50	
IH 39 SB	56	114+39	-	114+48	'SB'	OUTSIDE	2	18	14.0	-	-	51	
IH 39 SB	56A	114+77	-	114+84	'SB'	OUTSIDE	1	18	10.9	-	-	35	
IH 39 SB	56B	116+07	-	116+13	'SB'	OUTSIDE	1	18	9.3	-	-	34	
IH 39 SB	57	116+25	-	117+00	'SB'	OUTSIDE	24	18	-	116.7	-	243	
					PAGE SUBTOTAL		293	990	387	1,324	250**	4,376	

** UNDISTRIBUTED, AS DIRECTED BY ENGINEER

3

CONCRETE PAVEMENT REPAIR AND REPLACEMENT (CONT 4 OF 6)

ROADWAY	PATCH #	STATION	TO	STATION	ALIGNMENT	LOCATION	416.0610 DRILLED TIE BARS EACH	416.0620 DRILLED DOWEL BARS EACH	416.1710 CONCRETE PAVEMENT REPAIR SY	416.1720 CONCRETE PAVEMENT REPLACEMENT SY	420.1000 CONTINUOUS DIAMOND GRINDING CONCRETE PAVEMENT SY	690.0250 SAWING CONCRETE LF	REMARKS
IH 39 SB	58A	121+40	-	121+73	'SB'	OUTSIDE	10	18	-	51.3	-	117	
IH 39 SB	58B	122+73	-	122+81	'SB'	OUTSIDE	2	18	12.4	-	-	50	
IH 39 SB	58C	123+66	-	123+72	'SB'	OUTSIDE	1	18	9.3	-	-	34	
IH 39 SB	58D	127+81	-	127+87	'SB'	OUTSIDE	1	18	9.3	-	-	34	
IH 39 SB	59	127+99	-	128+23	'SB'	OUTSIDE	7	18	-	37.3	-	94	
IH 39 SB	60	128+33	-	128+41	'SB'	OUTSIDE	2	18	12.4	-	-	50	
IH 39 SB	61	128+88	-	128+96	'SB'	OUTSIDE	2	18	12.4	-	-	50	
IH 39 SB	61A	129+08	-	129+50	'SB'	OUTSIDE	13	18	-	65.3	-	140	
IH 39 SB	61B	129+88	-	130+57	'SB'	OUTSIDE	22	18	-	107.3	-	223	
IH 39 SB	62	131+44	-	132+04	'SB'	OUTSIDE	19	18	-	93.3	-	200	
IH 39 SB	62A	133+36	-	133+42	'SB'	OUTSIDE	1	18	9.3	-	-	34	
IH 39 SB	62B	134+09	-	134+15	'SB'	OUTSIDE	1	18	9.3	-	-	34	
IH 39 SB	62C	134+97	-	135+05	'SB'	OUTSIDE	2	18	12.4	-	-	50	
IH 39 SB	63	135+16	-	135+23	'SB'	OUTSIDE	1	18	10.9	-	-	35	
IH 39 SB	63A	136+42	-	136+50	'SB'	OUTSIDE	2	18	12.4	-	-	50	
IH 39 SB	63B	136+63	-	136+69	'SB'	OUTSIDE	1	18	9.3	-	-	34	
IH 39 SB	63C	137+72	-	137+96	'SB'	OUTSIDE	7	18	-	37.3	-	94	
IH 39 SB	63D	138+20	-	138+52	'SB'	OUTSIDE	10	18	-	49.8	-	116	
IH 39 SB	64	141+89	-	142+46	'SB'	OUTSIDE	18	18	-	88.7	-	197	
IH 39 SB	65	142+76	-	143+09	'SB'	OUTSIDE	10	18	-	51.3	-	117	
IH 39 SB	66	143+29	-	143+36	'SB'	OUTSIDE	1	18	10.9	-	-	35	
IH 39 SB	67	145+72	-	146+08	'SB'	OUTSIDE	11	18	-	56.0	-	134	
IH 39 SB	67A	147+83	-	147+89	'SB'	OUTSIDE	1	18	9.3	-	-	34	
IH 39 SB	67B	150+53	-	150+60	'SB'	OUTSIDE	1	18	10.9	-	-	35	
IH 39 SB	67C	152+75	-	152+81	'SB'	OUTSIDE	1	18	9.3	-	-	34	
IH 39 SB	67D	154+91	-	154+98	'SB'	OUTSIDE	1	18	10.9	-	-	35	
IH 39 SB	68	155+98	-	156+05	'SB'	OUTSIDE	1	18	10.9	-	-	35	
IH 39 SB	69A	159+00	-	159+06	'SB'	OUTSIDE	1	18	9.3	-	-	34	
IH 39 SB	70	159+54	-	159+60	'SB'	OUTSIDE	1	18	9.3	-	-	34	
IH 39 SB	71	160+45	-	160+53	'SB'	OUTSIDE	2	18	12.4	-	-	50	
IH 39 SB	72	160+64	-	160+74	'SB'	OUTSIDE	2	18	15.6	-	-	52	
IH 39 SB	73	160+97	-	161+04	'SB'	OUTSIDE	1	18	10.9	-	-	35	
IH 39 SB	74	161+47	-	161+64	'SB'	OUTSIDE	5	18	-	26.4	-	73	
IH 39 SB	74A	163+34	-	163+76	'SB'	OUTSIDE	13	18	-	65.3	-	140	
IH 39 SB	74B	164+40	-	164+48	'SB'	OUTSIDE	2	18	12.4	-	-	50	
IH 39 SB	74C	164+60	-	164+67	'SB'	OUTSIDE	1	18	10.9	-	-	35	
IH 39 SB	75	166+21	-	166+54	'SB'	OUTSIDE	10	18	-	51.3	-	117	
IH 39 SB	75A	166+67	-	166+73	'SB'	OUTSIDE	1	18	9.3	-	-	34	
IH 39 SB	75C	166+96	-	167+02	'SB'	OUTSIDE	-	18	9.3	-	-	34	
IH 39 SB	75D	167+32	-	167+38	'SB'	OUTSIDE	-	18	9.3	-	-	34	
IH 39 SB	75F	167+46	-	167+98	'SB'	OUTSIDE	12	18	-	80.9	-	178	
IH 39 SB	76A	170+39	-	170+45	'SB'	OUTSIDE	1	18	9.3	-	-	34	
IH 39 SB	77A	171+78	-	171+84	'SB'	OUTSIDE	-	18	9.3	-	-	34	
IH 39 SB	77C	172+86	-	172+92	'SB'	OUTSIDE	-	18	9.3	-	-	34	
IH 39 SB	78	173+87	-	173+94	'SB'	OUTSIDE	1	18	10.9	-	-	35	
IH 39 SB	79	176+49	-	176+56	'SB'	OUTSIDE	1	18	10.9	-	-	35	
IH 39 SB	79A	177+05	-	177+12	'SB'	OUTSIDE	1	18	10.9	-	-	35	
IH 39 SB	79B	177+80	-	177+87	'SB'	OUTSIDE	1	18	10.9	-	-	35	
IH 39 SB	80	178+17	-	178+25	'SB'	OUTSIDE	2	18	11.7	-	-	50	
IH 39 SB	81	182+19	-	182+28	'SB'	OUTSIDE	2	18	14.0	-	-	51	
IH 39 SB	82	189+55	-	189+86	'SB'	OUTSIDE	9	18	-	48.2	-	115	
IH 39 SB	84	192+63	-	192+76	'SB'	OUTSIDE	3	18	20.2	-	-	55	
IH 39 SB	85	193+28	-	193+37	'SB'	OUTSIDE	2	18	14.0	-	-	51	
IH 39 SB	86A	199+09	-	199+21	'SB'	OUTSIDE	-	18	18.7	-	-	54	
IH 39 SB	87A	204+84	-	204+90	'SB'	OUTSIDE	-	18	9.3	-	-	34	EXPANSION JOINT
					PAGE SUBTOTAL		225	990	450	910	220**	3,647	

** UNDISTRIBUTED, AS DIRECTED BY ENGINEER

3

3

CONCRETE PAVEMENT REPAIR AND REPLACEMENT (CONT 5 OF 6)

ROADWAY	PATCH #	STATION	TO	STATION	ALIGNMENT	LOCATION	416.0610 DRILLED TIE BARS EACH	416.0620 DRILLED DOWEL BARS EACH	416.1710 CONCRETE PAVEMENT REPAIR SY	416.1720 CONCRETE PAVEMENT REPLACEMENT SY	420.1000 CONTINUOUS DIAMOND GRINDING CONCRETE PAVEMENT SY	690.0250 SAWING CONCRETE LF	REMARKS
IH 39 SB	88A	227+90	-	227+96	'SB'	OUTSIDE	-	18	9.3	-	-	34	EXPANSION JOINT
IH 39 SB	89	228+90	-	228+98	'SB'	OUTSIDE	2	18	12.4	-	-	50	
IH 39 SB	89A	231+34	-	231+41	'SB'	OUTSIDE	1	18	10.9	-	-	35	
IH 39 SB	89B	232+62	-	232+74	'SB'	OUTSIDE	3	18	18.7	-	-	54	
IH 39 SB	89C	235+61	-	235+68	'SB'	OUTSIDE	1	18	10.9	-	-	35	
IH 39 SB	90	236+37	-	236+46	'SB'	OUTSIDE	2	18	14.0	-	-	51	
IH 39 SB	90A	237+13	-	237+22	'SB'	OUTSIDE	2	18	14.0	-	-	51	
IH 39 SB	90B	241+97	-	242+04	'SB'	OUTSIDE	1	18	10.9	-	-	35	
IH 39 SB	91	244+07	-	244+28	'SB'	OUTSIDE	6	18	-	32.7	-	77	
IH 39 SB	92A	247+56	-	247+78	'SB'	OUTSIDE	6	18	-	34.2	-	92	
IH 39 SB	93	249+09	-	249+16	'SB'	OUTSIDE	1	18	10.9	-	-	35	
IH 39 SB	94	251+98	-	252+27	'SB'	OUTSIDE	9	18	-	45.1	-	113	
IH 39 SB	95	252+37	-	252+46	'SB'	OUTSIDE	2	18	14.0	-	-	51	
IH 39 SB	95A	254+42	-	254+54	'SB'	OUTSIDE	3	18	18.7	-	-	54	
IH 39 SB	96	254+99	-	255+08	'SB'	OUTSIDE	2	18	14.0	-	-	51	
IH 39 SB	96A	256+23	-	256+44	'SB'	OUTSIDE	6	18	-	32.7	-	77	
IH 39 SB	96B	256+54	-	256+66	'SB'	OUTSIDE	3	18	18.7	-	-	54	
IH 39 SB	96C	257+13	-	257+38	'SB'	OUTSIDE	7	18	-	38.9	-	95	
IH 39 SB	98	260+27	-	260+61	'SB'	OUTSIDE	6	18	-	52.9	-	118	
IH 39 SB	100	280+22	-	280+28	'SB'	OUTSIDE	-	18	9.3	-	-	34	
IH 39 SB	102	280+81	-	281+25	'SB'	OUTSIDE	14	18	-	68.4	-	156	
IH 39 SB	102A	281+70	-	281+82	'SB'	OUTSIDE	3	18	18.7	-	-	54	
IH 39 SB	102B	283+73	-	283+85	'SB'	OUTSIDE	3	18	18.7	-	-	54	
IH 39 SB	103	284+69	-	284+77	'SB'	OUTSIDE	2	18	12.4	-	-	50	
IH 39 SB	103A	284+90	-	284+96	'SB'	OUTSIDE	1	18	9.3	-	-	34	
IH 39 SB	104	285+27	-	285+34	'SB'	OUTSIDE	1	18	10.9	-	-	35	
IH 39 SB	105	286+02	-	286+11	'SB'	OUTSIDE	2	18	14.0	-	-	51	
IH 39 SB	106A	286+11	-	286+17	'SB'	OUTSIDE	-	-	9.3	-	-	34	EXPANSION JOINT
IH 39 SB	106B	296+00	-	296+25	'SB'	OUTSIDE	7	18	-	14.9	-	25	
IH 39 SB	106C	298+39	-	298+45	'SB'	OUTSIDE	1	18	9.3	-	-	34	
IH 39 SB	107A	301+08	-	301+14	'SB'	OUTSIDE	-	18	9.3	-	-	34	EXPANSION JOINT
IH 39 SB	108	301+17	-	301+23	'SB'	OUTSIDE	1	18	9.3	-	-	34	
IH 39 SB	109	301+58	-	301+69	'SB'	OUTSIDE	3	18	17.1	-	-	53	
IH 39 SB	110B	303+21	-	303+27	'SB'	OUTSIDE	-	18	9.3	-	-	34	
IH 39 SB	110C	303+54	-	303+66	'SB'	OUTSIDE	3	18	18.7	-	-	54	
IH 39 SB	111	304+70	-	304+77	'SB'	OUTSIDE	1	18	10.9	-	-	35	
IH 39 SB	111A	305+46	-	305+54	'SB'	OUTSIDE	2	18	12.4	-	-	50	
IH 39 SB	111B	307+33	-	307+39	'SB'	OUTSIDE	1	18	9.3	-	-	34	
IH 39 SB	111C	309+01	-	309+08	'SB'	OUTSIDE	1	18	10.9	-	-	35	
IH 39 SB	111D	309+95	-	310+02	'SB'	OUTSIDE	1	18	10.9	-	-	35	
IH 39 SB	111F	310+30	-	310+84	'SB'	OUTSIDE	14	18	-	84.0	-	180	
IH 39 SB	111H	310+97	-	311+09	'SB'	OUTSIDE	-	18	18.7	-	-	54	
IH 39 SB	111J	314+82	-	314+88	'SB'	OUTSIDE	1	18	9.3	-	-	34	
IH 39 SB	111K	315+18	-	315+25	'SB'	OUTSIDE	1	18	10.9	-	-	35	
IH 39 SB	112	316+12	-	316+18	'SB'	OUTSIDE	1	18	9.3	-	-	34	
IH 39 SB	113	316+67	-	316+77	'SB'	OUTSIDE	2	18	15.6	-	-	52	
IH 39 SB	114	317+02	-	317+65	'SB'	OUTSIDE	20	18	-	98.0	-	203	
IH 39 SB	114A	319+04	-	319+11	'SB'	OUTSIDE	1	18	10.9	-	-	35	
IH 39 SB	115A	319+94	-	320+08	'SB'	OUTSIDE	-	18	21.8	-	-	56	
IH 39 SB	116	320+15	-	320+22	'SB'	OUTSIDE	1	18	10.9	-	-	35	
IH 39 SB	117	320+89	-	320+97	'SB'	OUTSIDE	2	18	12.4	-	-	50	
IH 39 SB	118	322+59	-	322+66	'SB'	OUTSIDE	1	18	10.9	-	-	35	
IH 39 SB	118A	323+86	-	323+92	'SB'	OUTSIDE	1	18	9.3	-	-	34	
IH 39 SB	119	325+00	-	325+07	'SB'	OUTSIDE	1	18	10.9	-	-	35	
IH 39 SB	121A	326+27	-	326+35	'SB'	OUTSIDE	2	18	12.4	-	-	50	
IH 39 SB	122	327+75	-	327+81	'SB'	OUTSIDE	1	18	9.3	-	-	34	
IH 39 SB	122A	328+40	-	328+53	'SB'	OUTSIDE	3	18	20.2	-	-	55	
					PAGE SUBTOTAL		165	1,008	600	502	200**	3,132	

** UNDISTRIBUTED, AS DIRECTED BY ENGINEER

3

CONCRETE PAVEMENT REPAIR AND REPLACEMENT (CONT 6 OF 6)

ROADWAY	PATCH #	STATION	TO	STATION	ALIGNMENT	LOCATION	416.0610 DRILLED TIE BARS EACH	416.0620 DRILLED DOWEL BARS EACH	416.1710 CONCRETE PAVEMENT REPAIR SY	416.1720 CONCRETE PAVEMENT REPLACEMENT SY	420.1000 CONTINUOUS DIAMOND GRINDING CONCRETE PAVEMENT SY	690.0250 SAWING CONCRETE LF	REMARKS
IH 39 SB	122B	328+97	-	329+05	'SB'	OUTSIDE	2	18	12.4	-	-	50	
IH 39 SB	123	329+15	-	329+23	'SB'	OUTSIDE	2	18	12.4	-	-	50	
IH 39 SB	124	332+28	-	332+52	'SB'	OUTSIDE	7	18	-	37.3	-	94	
IH 39 SB	125	332+64	-	333+31	'SB'	OUTSIDE	21	18	-	104.2	-	221	
IH 39 SB	125A	335+14	-	335+21	'SB'	OUTSIDE	1	18	10.9	-	-	35	
IH 39 SB	126	335+51	-	335+59	'SB'	OUTSIDE	2	18	12.4	-	-	50	
IH 39 SB	126A	337+31	-	337+43	'SB'	OUTSIDE	3	18	18.7	-	-	54	
IH 39 SB	127	338+29	-	338+55	'SB'	OUTSIDE	8	18	-	40.4	-	96	
IH 39 SB	128	339+56	-	339+62	'SB'	OUTSIDE	1	18	9.3	-	-	34	
IH 39 SB	130	340+68	-	341+10	'SB'	OUTSIDE	13	18	-	65.3	-	140	
IH 39 SB	130A	341+56	-	341+62	'SB'	OUTSIDE	1	18	9.3	-	-	34	
IH 39 SB	130B	342+63	-	342+71	'SB'	OUTSIDE	2	18	12.4	-	-	50	
IH 39 SB	131	344+41	-	344+55	'SB'	OUTSIDE	4	18	21.8	-	-	56	
IH 39 SB	132	344+68	-	344+74	'SB'	OUTSIDE	1	18	9.3	-	-	34	
IH 39 SB	133	345+72	-	346+15	'SB'	OUTSIDE	13	18	-	66.9	-	155	
IH 39 SB	134	346+67	-	346+73	'SB'	OUTSIDE	1	18	9.3	-	-	34	
IH 39 SB	134A	347+20	-	347+28	'SB'	OUTSIDE	2	18	12.4	-	-	50	
IH 39 SB	135	347+39	-	347+47	'SB'	OUTSIDE	2	18	12.4	-	-	50	
IH 39 SB	136	349+02	-	349+28	'SB'	OUTSIDE	8	18	-	40.4	-	96	
IH 39 SB	137	349+38	-	349+44	'SB'	OUTSIDE	1	18	9.3	-	-	34	
IH 39 SB	137A	350+46	-	350+54	'SB'	OUTSIDE	2	18	12.4	-	-	50	
IH 39 SB	137B	352+45	-	352+51	'SB'	OUTSIDE	1	18	9.3	-	-	34	
IH 39 SB	137C	352+82	-	352+89	'SB'	OUTSIDE	1	18	10.9	-	-	35	
IH 39 SB	138	353+91	-	353+97	'SB'	OUTSIDE	1	18	9.3	-	-	34	
IH 39 SB	139	354+46	-	354+53	'SB'	OUTSIDE	1	18	10.9	-	-	35	
IH 39 SB	139A	354+95	-	355+07	'SB'	OUTSIDE	3	18	18.7	-	-	54	
IH 39 SB	140	355+36	-	355+42	'SB'	OUTSIDE	1	18	9.3	-	-	34	
IH 39 SB	140A	356+24	-	356+36	'SB'	OUTSIDE	3	18	18.7	-	-	54	
IH 39 SB	140B	357+14	-	357+28	'SB'	OUTSIDE	4	18	21.8	-	-	56	
IH 39 SB	140C	358+40	-	358+52	'SB'	OUTSIDE	3	18	18.7	-	-	54	
IH 39 SB	140D	358+78	-	358+84	'SB'	OUTSIDE	1	18	9.3	-	-	34	
IH 39 SB	141	359+49	-	359+59	'SB'	OUTSIDE	2	18	15.6	-	-	52	
IH 39 SB	142	359+66	-	359+77	'SB'	OUTSIDE	3	18	17.1	-	-	53	
IH 39 SB	143	360+21	-	360+32	'SB'	OUTSIDE	3	18	17.1	-	-	53	
IH 39 SB	144	360+75	-	361+05	'SB'	OUTSIDE	9	18	-	46.7	-	114	
IH 39 SB	144A	361+58	-	361+64	'SB'	OUTSIDE	1	18	6.3	-	-	6	
IH 39 SB	145	362+36	-	362+48	'SB'	OUTSIDE	3	18	18.7	-	-	54	
IH 39 SB	146	363+12	-	363+18	'SB'	OUTSIDE	1	18	9.3	-	-	34	
IH 39 SB	147	363+26	-	363+55	'SB'	OUTSIDE	9	18	-	45.1	-	113	
IH 39 SB	148	365+48	-	365+57	'SB'	OUTSIDE	2	18	14.0	-	-	51	
IH 39 SB	149	366+37	-	366+47	'SB'	OUTSIDE	2	18	15.6	-	-	52	
IH 39 SB	150	366+78	-	367+10	'SB'	OUTSIDE	10	18	-	49.8	-	116	
IH 39 SB	150A	367+74	-	368+29	'SB'	OUTSIDE	17	18	-	85.6	-	181	
IH 39 SB	151	370+40	-	370+82	'SB'	OUTSIDE	13	18	-	65.3	-	140	
IH 39 SB	152A	376+69	-	376+75	'SB'	OUTSIDE	-	18	9.3	-	-	34	EXPANSION JOINT
IH 39 SB	152B	377+03	-	377+09	'SB'	OUTSIDE	1	18	9.3	-	-	34	
					PAGE SUBTOTAL		190	828	454	647	180**	2,978	
					OUTSIDE LANE SUBTOTAL		872	3,816	1,892	3,383	850	14,133	
					UNDISTRIBUTED		200	950	490	730	-	3,330	
					TOTAL 0010		1,156	5,694	2,912	4,362	1,010**	19,954	
							*	*		*	*	*	

*ADDITIONAL QUANTITIES LISTED ELSEWHERE

** UNDISTRIBUTED, AS DIRECTED BY ENGINEER

3

3

SHES CONCRETE

ROADWAY	PATCH #	STATION	TO	STATION	LOCATION	* 416.0610 DRILLED TIE BARS EACH	* 416.0620 DRILLED DOWEL BARS EACH	416.1715 CONCRETE PAVEMENT REPAIR SHES SY	416.1725 CONCRETE PAVEMENT REPLACEMENT SHES SY	* 420.1000 CONTINUOUS DIAMOND GRINDING CONCRETE PAVEMENT SY	* 690.0250 SAWING CONCRETE LF	REMARKS
STH 16 SB ON S	153	-		-	STH 16 RAMP	-	22	-	100	-	150	
STH 16 NB OFF S	154	-		-	STH 16 RAMP	-	22	10	-	-	30	
STH 16 NB OFF S	155	-		-	STH 16 RAMP	-	22	10	-	-	30	
STH 16 NB OFF S	156	-		-	STH 16 RAMP	-	22	10	-	-	30	
STH 16 NB OFF S	157	-		-	STH 16 RAMP	-	22	10	-	-	30	
STH 16 NB OFF S	158	-		-	STH 16 RAMP	-	22	10	-	-	30	
STH 16 NB OFF S	159	-		-	STH 16 RAMP	-	22	10	-	-	30	
STH 16 NB OFF S	160	-		-	STH 16 RAMP	-	22	10	-	-	30	
STH 16 NB OFF N	161	-		-	STH 16 RAMP	7	26	-	46	-	85	
STH 16 NB OFF N	162	-		-	STH 16 RAMP	7	26	-	47	-	85	
STH 16 NB OFF N	163	-		-	STH 16 RAMP	1	26	11	-	-	34	
STH 16 NB OFF N	164	-		-	STH 16 RAMP	1	26	11	-	-	34	
STH 16 NB OFF N	165	-		-	STH 16 RAMP	1	26	11	-	-	34	
STH 16 NB OFF N	166	-		-	STH 16 RAMP	4	26	27	-	-	51	
STH 16 NB OFF N	167	-		-	STH 16 RAMP	1	26	11	-	-	34	
STH 16 NB OFF N	168	-		-	STH 16 RAMP	13	26	-	81	-	119	
STH 16 NB OFF N	169	-		-	STH 16 RAMP	2	26	11	-	-	34	
STH 16 NB OFF N	170	-		-	STH 16 RAMP	2	26	11	-	-	34	
STH 16 NB ON N	171	-		-	STH 16 RAMP	33	26	-	101	-	153	
STH 16 NB ON N	172	-		-	STH 16 RAMP	5	22	-	30	-	60	
STH 16 NB ON N	173	-		-	STH 16 RAMP	26	22	-	61	-	195	
STH 16 NB ON N	174	-		-	STH 16 RAMP	1	22	10	-	-	30	
STH 16 NB ON N	175	-		-	STH 16 RAMP	1	22	10	-	-	30	
STH 16 NB ON N	176	-		-	STH 16 RAMP	1	22	10	-	-	30	
STH 16 NB ON N	177	-		-	STH 16 RAMP	10	22	-	55	-	90	
STH 16 NB ON N	178	-		-	STH 16 RAMP	7	22	-	39	-	75	
STH 16 NB ON N	179	-		-	STH 16 RAMP	7	22	-	44	-	75	
STH 16 NB ON N	180	-		-	STH 16 RAMP	1	22	10	-	-	30	
STH 16 NB ON N	181	-		-	STH 16 RAMP	5	22	-	31	-	60	
STH 16 NB ON N	182	-		-	STH 16 RAMP	10	22	-	54	-	90	
STH 16 NB ON N	183	-		-	STH 16 RAMP	1	22	10	-	-	30	
STH 16 NB ON N	184	-		-	STH 16 RAMP	5	22	-	29	-	60	
STH 16 NB ON N	185	-		-	STH 16 RAMP	1	22	10	-	-	30	
					UNDISTRIBUTED	40	160	50	150	-	390	
					TOTAL 0010	192	930	275	868	190 **	2,332	

*ADDITIONAL QUANTITIES LISTED ELSEWHERE

** UNDISTRIBUTED, AS DIRECTED BY ENGINEER

3

SURFACE REPAIRS

ROADWAY	SR #	STATION	LOCATION	416.0754.S CONCRETE PAVEMENT PARTIAL DEPTH REPAIR SURFACE REPAIR SF	REMARKS
IH 39 SB	1	442+64'RA'	OUTSIDE	16	
IH 39 SB	2	442+99'RA'	OUTSIDE	16	
IH 39 SB	3	444+08'RA'	OUTSIDE	16	
IH 39 SB	4	444+45'RA'	OUTSIDE	16	
IH 39 SB	5	445+39'RA'	OUTSIDE	16	
IH 39 SB	6	445+75'RA'	OUTSIDE	16	
IH 39 SB	7	445+93'RA'	MEDIAN	16	
IH 39 SB	8	448+31'RA'	OUTSIDE	16	
IH 39 SB	9	449+63'RA'	MEDIAN	16	
IH 39 SB	10	450+19'RA'	MEDIAN	16	
IH 39 SB	11	450+95'RA'	MEDIAN	16	
IH 39 SB	12	451+51'RA'	MEDIAN	16	
IH 39 SB	13	452+99'RA'	MEDIAN	16	
IH 39 SB	14	36+82'SB'	OUTSIDE	16	
IH 39 SB	15	39+50'SB'	MEDIAN	16	
IH 39 SB	16	40+45'SB'	OUTSIDE	16	
IH 39 SB	17	42+00'SB'	OUTSIDE	16	
IH 39 SB	18	43+50'SB'	MEDIAN	16	
IH 39 SB	19	45+81'SB'	MEDIAN	16	
IH 39 SB	20	47+18'SB'	MEDIAN	16	
IH 39 SB	21	48+12'SB'	MEDIAN	16	
IH 39 SB	22	48+48'SB'	MEDIAN	16	
IH 39 SB	23	48+85'SB'	MEDIAN	16	
IH 39 SB	24	51+23'SB'	MEDIAN	16	
IH 39 SB	25	55+86'SB'	MEDIAN	16	
IH 39 SB	26	60+31'SB'	MEDIAN	16	
IH 39 SB	27	60+69'SB'	MEDIAN	16	
IH 39 SB	28	61+80'SB'	MEDIAN	16	
IH 39 SB	29	61+98'SB'	MEDIAN	16	
IH 39 SB	30	65+14'SB'	MEDIAN	16	
IH 39 SB	31	133+57'SB'	OUTSIDE	16	
IH 39 SB	32	159+30'SB'	MEDIAN	16	
IH 39 SB	33	167+17'SB'	MEDIAN	16	
IH 39 SB	34	183+36'SB'	OUTSIDE	16	
IH 39 SB	35	188+10'SB'	OUTSIDE	16	
IH 39 SB	36	233+81'SB'	OUTSIDE	16	
IH 39 SB	37	324+27'SB'	MEDIAN	16	
IH 39 SB	38	324+77'SB'	MEDIAN	16	
IH 39 SB	39	358+06'SB'	MEDIAN	16	
IH 39 SB	40	377+17'SB'	MEDIAN	16	
			TOTAL 0010	640	

3

ASPHALT ITEMS

ROADWAY	LOCATION	211.0400 PREPARE FOUNDATION FOR ASPHALTIC SHOULDERS STA	415.6000.S ROUT AND SEAL LF	455.0605 TACK COAT GAL	460.5224 HMA PAVEMENT 4 LT 58-28 S TON	465.0510 ASPHALTIC RUMBLE STRIPS, SHOULDER DIVIDED ROADWAY LF	REMARKS
IH 39 SB	LT/RT	15	1,410	47	140	910	STH 16 TO IH 39 SB RAMP
IH 39 SB	LT	11	1,010	24	70	-	IH 39 NB TO STH 16 EB RAMP
IH 39 SB	LT	5	420	10	30	-	IH 39 NB TO STH 16 RAMP
IH 39 SB	LT/RT	17	1,630	55	160	1,080	STH 16 TO IH 39 NB RAMP
	TOTAL 0010	48	4,470	136	400	1,990	

CURB & GUTTER

ROADWAY	STATION	TO	STATION	LOCATION	204.0150 REMOVING CURB & GUTTER LF	601.0409 CONCRETE CURB & GUTTER 30-INCH TYPE A LF	601.0586 CONCRETE CURB & GUTTER 4-INCH SLOPED 30-INCH TYPE TBTT LF	REMARKS
IH 39 SB	-	-	-	LT	80	80	-	STH 16 TO IH 39 SB RAMP
IH 39 SB	291+56'SB'	-	291+96'SB'	RT	30	-	30	
IH 39 SB	440+58'RA'	-	440+85'RA'	RT	25	-	25	
				TOTAL 0010	135	80	55	

3

3

3

CULVERT ITEMS

ROADWAY	STATION	TO	STATION	LOCATION	521.1012 APRON ENDWALLS FOR CULVERT PIPE STEEL 12-INCH EACH	521.3112 CULVERT PIPE CORRUGATED STEEL 12-INCH LF	REMARKS
IH 39 SB	291+56'SB'	-	291+96'SB'	RT	1	10	
IH 39 SB	440+58'RA'	-	440+85'RA'	RT	1	10	
				TOTAL 0010	2	20	

INLET ITEMS

ROADWAY	STATION	TO	STATION	LOCATION	611.0654 INLET COVERS TYPE V EACH	611.3220 INLETS 2X2-FT EACH	REMARKS
IH 39 SB	291+56'SB'	-	291+96'SB'	RT	1	1	
IH 39 SB	440+58'RA'	-	440+85'RA'	RT	1	1	
				TOTAL 0010	2	2	

3

GUARDRAIL ITEMS

ROADWAY	STATION	TO	STATION	LOCATION	204.0165 REMOVING GUARDRAIL LF	614.0010 BARRIER SYSTEM GRADING SHAPING FINISHING EACH	614.0220 STEEL THRIE BEAM BULLNOSE TERMINAL EACH	614.0230 STEEL THRIE BEAM LF	614.0397 GUARDRAIL MOW STRIP EMULSIFIED ASPHALT SY	614.2300 MGS GUARDRAIL 3 LF	614.2330 MGS GUARDRAIL 3 K LF	614.2500 MGS THRIE BEAM TRANSITION LF	614.2610 MGS GUARDRAIL TERMINAL EAT EACH	614.2620 MGS GUARDRAIL TERMINAL TYPE 2 EACH	628.1504 SILT FENCE LF	628.1520 SILT FENCE MAINTENANCE LF	999.2100.S INSTALLING AND MAINTAINING CLIMBING TURTLE EXCLUSION FENCE LF	REMARKS
IH 39 SB	68+09'SB'	-	74+37'SB'	RT	630	1	-	-	-	-	550	78	-	-	-	-	-	
IH 39 SB	73+53'SB'	-	74+43'SB'	LT	90	1	-	-	-	50	-	39	-	1	-	-	-	
IH 39 SB	76+27'SB'	-	79+82'SB'	LT	300	1	-	-	-	263	-	39	1	-	100	100	-	
IH 39 SB	132+30'SB'	-	135+58'SB'	LT	330	1	-	-	-	275	-	-	1	1	190	190	-	
IH 39 SB	161+50'SB'		164+50'SB'	RT	350	1	2	72	-	-	-	-	-	-	-	-	-	
IH 39 SB	205+06'SB'	-	206+45'SB'	LT	140	1	-	-	14	100	-	39	-	1	-	-	-	
IH 39 SB	207+33'SB'	-	210+87'SB'	RT	355	1	-	-	-	-	275	78	-	-	-	-	-	
IH 39 SB	207+44'SB'	-	210+94'SB'	LT	350	1	-	-	28	-	275	78	-	-	-	-	330	
IH 39 SB	222+24'SB'	-	227+41'SB'	LT	515	1	-	-	51	425	-	39	1	-	110	110	270	
IH 39 SB	274+17'SB'	-	277+73'SB'	RT	330	1	-	-	12	263	-	39	1	-	-	-	-	
IH 39 SB	274+17'SB'	-	280+77'SB'	LT	660	1	-	-	-	575	-	39	1	-	150	150	-	
IH 39 SB	291+68'SB'	-	295+23'SB'	RT	360	1	-	-	12	263	-	39	1	-	-	-	-	
IH 39 SB	291+69'SB'	-	300+43'SB'	LT	855	1	-	-	-	788	-	39	1	-	110	110	-	
IH 39 SB	440+22'RA'	-	443+69'RA'	LT	350	1	-	-	-	263	-	39	1	-	-	-	-	
IH 39 SB	440+62'RA'	-	451+04'RA'	RT	890	1	-	-	-	-	950	39	1	-	-	-	-	
IH 39 SB		-		UNDISTRIBUTED	-	-	-	-	-	-	-	-	-	-	260	260	-	FRENCH DRAINS
				TOTAL 0010	6,505	15	2	72	117	3,264	2,050	628	9	3	920	920	600	

FOR INFORMATION ONLY

ROADWAY	STATION	TO	STATION	LOCATION	TOPSOIL SY	EROSION MAT URBAN CLASS I TYPE B SY	FERTILIZER TYPE B CWT	SEEDING MIXTURE NO. 30 LB	SEED WATER MGAL
IH 39 SB	68+09'SB'	-	74+37'SB'	RT	104	104	0.1	5	2
IH 39 SB	73+53'SB'	-	74+43'SB'	LT	10	10	0.1	1	1
IH 39 SB	76+27'SB'	-	79+82'SB'	LT	103	103	0.1	5	2
IH 39 SB	132+30'SB'	-	135+58'SB'	LT	97	97	0.1	5	2
IH 39 SB	161+50'SB'		164+50'SB'	RT	10	10	0.1	1	1
IH 39 SB	205+06'SB'	-	206+45'SB'	LT	10	10	0.1	1	1
IH 39 SB	207+33'SB'	-	210+87'SB'	RT	78	78	0.1	4	1
IH 39 SB	207+44'SB'	-	210+94'SB'	LT	123	123	0.1	6	2
IH 39 SB	222+24'SB'	-	227+41'SB'	LT	189	189	0.2	9	3
IH 39 SB	274+17'SB'	-	277+73'SB'	RT	39	39	0.1	2	1
IH 39 SB	274+17'SB'	-	280+77'SB'	LT	85	85	0.1	4	1
IH 39 SB	291+68'SB'	-	295+23'SB'	RT	80	80	0.1	4	1
IH 39 SB	291+69'SB'	-	300+43'SB'	LT	126	126	0.1	6	2
IH 39 SB	440+22'RA'	-	443+68'RA'	LT	10	10	0.1	1	1
IH 39 SB	440+62'RA'	-	451+04'RA'	RT	19	19	0.1	1	1
				TOTAL	1,083	1,083	1.6	55	22

NOTE: GRADING REQUIREMENTS FOR MOST AREAS COULD BE ACHIEVED WITH BASE AGGREGATE

EROSION CONTROL MOBILIZATIONS

CATEGORY	STATION	TO	STATION	LOCATION	628.1905 MOBILIZATIONS EROSION CONTROL EACH	628.1910 MOBILIZATIONS EMERGENCY EROSION CONTROL EACH
0010	400+00'RA'	-	385+00'SB'	LT/RT	2	2
				TOTAL 0010	2	2

3

3

DELINEATORS

ROADWAY	STATION	TO	STATION	LOCATION	204.0180 REMOVING DELINEATORS AND MARKERS EACH	633.0100 DELINEATOR POSTS STEEL EACH	633.0500 DELINEATOR REFLECTORS EACH	REMARKS
IH 39 SB	440+32'RA'	-	385+00'SB'	UNDISTRUBUTED	185	185	185	
				TOTAL 0010	185	185	185	

3

TRAFFIC CONTROL ITEMS

ROADWAY	STATION	TO	STATION	DURATION	643.0300 TRAFFIC CONTROL DRUMS DAY	643.0420 TRAFFIC CONTROL BARRICADES TYPE III DAY	643.0705 TRAFFIC CONTROL WARNING LIGHTS TYPE A DAY	643.0715 TRAFFIC CONTROL WARNING LIGHTS TYPE C DAY	643.0810 TRAFFIC CONTROL CONNECTED ARROW BOARDS DAY	643.0900 TRAFFIC CONTROL SIGNS DAY	643.0910 TRAFFIC CONTROL COVERING SIGNS TYPE I CYCLES	643.0910 EACH	643.0920 TRAFFIC CONTROL COVERING SIGNS TYPE II CYCLES	643.0920 EACH	643.1050 TRAFFIC CONTROL SIGNS PCMS DAY	643.1055.S TRUCK OR TRAILER MOUNTED ATTENUATOR DAY	REMARKS
IH 39 SB	400+00'RA'	-	385+00'SB'	151 DAYS	-	-	-	-	-	7,100	-	-	-	-	-	-	ADVANCE WARNING SIGNAGE
IH 39 SB	400+00'RA'	-	385+00'SB'	4 DAYS PER WEEK	7,460	470	930	1,790	90	1,197	-	-	-	-	-	-	LANE CLOSURES
IH 39 SB	400+00'RA'	-	385+00'SB'	4 DAYS	-	84	168	-	-	920	1	1	1	38	98	-	DETOUR SIGNAGE
IH 39 SB		-		4 DAYS	-	-	-	-	-	-	-	-	-	-	-	4	PAVEMENT MARKING
				TOTAL 0010	7,460	554	1,098	1,790	90	9,217		1		38	98	4	

PAVEMENT MARKING ITEMS

ROADWAY	STATION	TO	STATION	LOCATION	646.2020 MARKING LINE EPOXY 6-INCH YELLOW LF	646.2020 WHITE LF	646.2020 WHITE (12.5' LINE, 37.5' GAP) LF	646.2020 BLACK (12.5' LINE, 37.5' GAP) LF	646.2020 WHITE (3' LINE, 9' GAP) LF	646.4020 MARKING LINE EPOXY 10-INCH WHITE LF	646.4020 WHITE (3' LINE, 6' GAP) LF	646.4020 BLACK (3' LINE, 6' GAP) LF	646.5520 MARKING OUTFALL EPOXY EACH	SPV.0060.01 SPECIAL (01. REMOVING RAISED PAVEMENT MARKERS AND FILLING VOIDS) EACH	REMARKS
IH 39 SB	440+32'RA'	-	385+00'SB'	PROJECT	520	2,900	1,040	1,040	40	340	-	-	145	370	
IH 39 SB	40+25'SB'	-	68+75'SB'	STH 78 RAMP	-	-	-	-	-	-	30	30	-	-	
IH 39 SB				STH 16	50	50	-	-	-	-	-	-	-	-	IH 39 NB TO STH 16 EB
IH 39 SB				STH 16	200	200	-	-	-	-	-	-	-	-	IH 39 NB TO STH 16 WB
IH 39 SB				STH 16	230	260	-	-	-	-	-	-	-	-	STH 16 TO IH 39 NB
IH 39 SB				STH 16	60	60	-	-	-	-	-	-	-	-	STH 16 TO IH 39 SB
				SUBTOTAL	1,060	3,470	1,040	1,040	40	340	30	30	-	-	
				TOTAL 0010			6,650				400		145	370	

3

CONSTRUCTION STAKING ITEMS

ROADWAY	STATION	TO	STATION	LOCATION	650.8000 CONSTRUCTION STAKING RESURFACING REFERENCE LF	650.9911.01 CONSTRUCTION STAKING SUPPLEMENTAL CONTROL (PROJECT) (01. 1161-00-78) EACH	REMARKS
IH 39 SB	440+32'RA'	-	385+00'SB'	PROJECT	36,144	1	
				TOTAL 0010	36,144	1	

SAWING ITEMS

ROADWAY	LOCATION	690.0150 SAWING ASPHALT LF	REMARKS
IH 39 SB	STH 16	6	IH 39 NB TO STH 16 EB
IH 39 SB	STH 16	6	IH 39 NB TO STH 16 WB
IH 39 SB	STH 16	16	STH 16 TO IH 39 NB
IH 39 SB	STH 16	16	STH 16 TO IH 39 SB
IH 39 SB		130	GUARDRAIL
	TOTAL 0010	174	

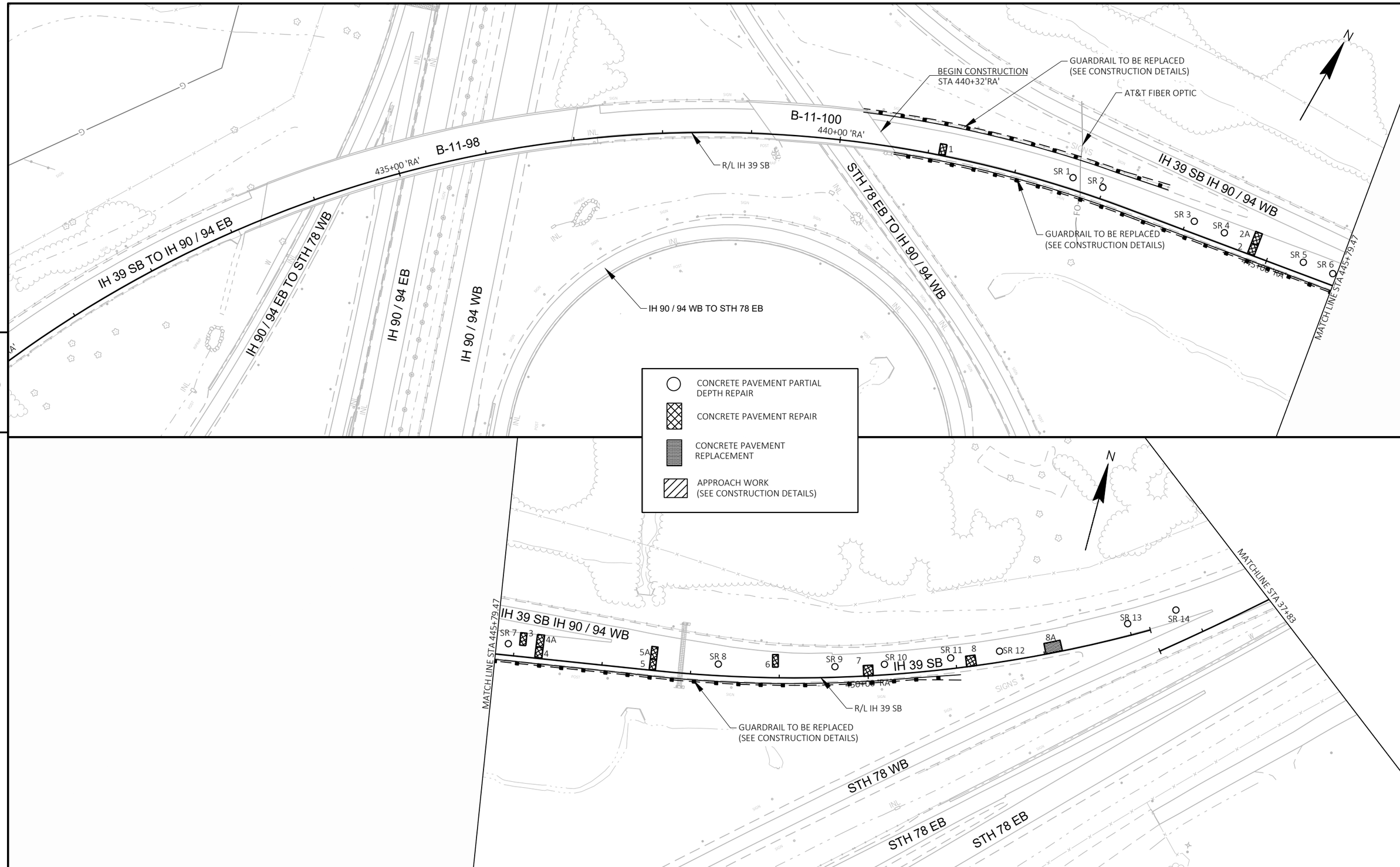

5

5

PROJECT NO: 1161-00-78	HWY: IH 39	COUNTY: COLUMBIA	PLAN	SHEET 68	E

FILE NAME : C:\USERS\JAMES.GOLDEN\ONEDRIVE - DAAR CORPORATION\DOCUMENTS - SW DESIGN\1161-00-08 IH39, SB LANES, COLUMBIA CTY\C3D\11610008\SHEETSPLAN\050201-PN.DWG
LAYOUT NAME - 01
PLOT DATE : 10/23/2025 11:33 AM
PLOT BY : JAMES GOLDEN
PLOT NAME :
PLOT SCALE : 1 IN:100 FT
WISDOT/CADDS SHEET 44

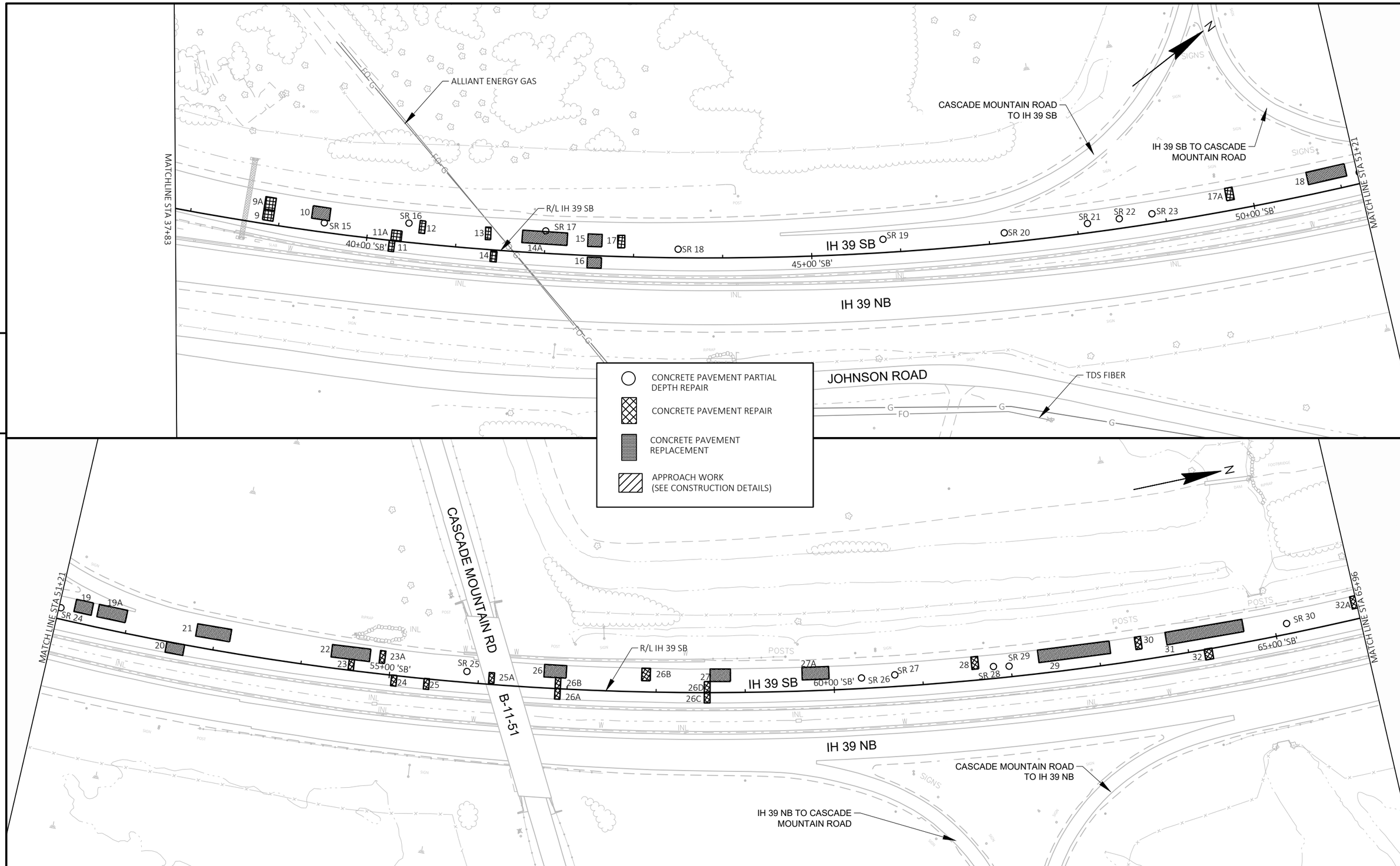

PROJECT NO: 1161-00-78	HWY: IH 39	COUNTY: COLUMBIA	PLAN	SHEET 69	E

FILE NAME : C:\USERS\JAMES.GOLDEN\ONEDRIVE - DAAR CORPORATION\DOCUMENTS - SW DESIGN\1161-00-08 IH39, SB LANES, COLUMBIA CTY\C3D\11610008\SHEETSPLAN\050201-PN.DWG PLOT DATE : 10/23/2025 11:33 AM PLOT BY : JAMES GOLDEN PLOT NAME : PLOT SCALE : 1 IN:100 FT
LAYOUT NAME - 02

WISDOT/CADDS SHEET 44

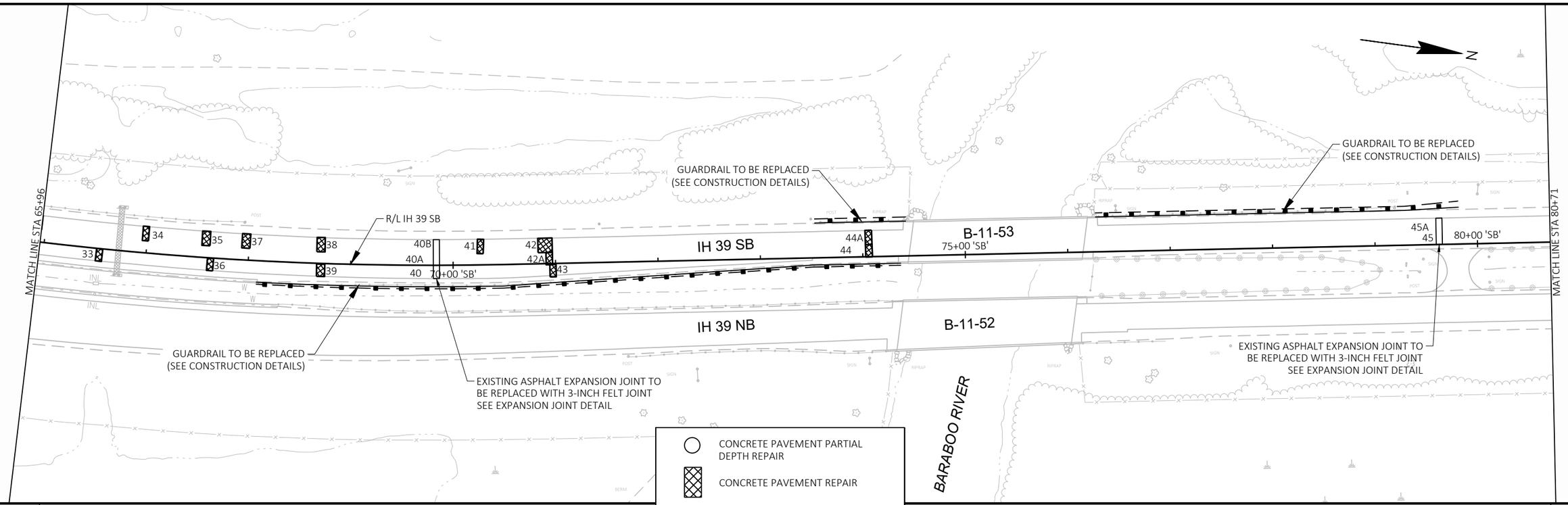

PROJECT NO: 1161-00-78	HWY: IH 39	COUNTY: COLUMBIA	PLAN	SHEET 70	E

FILE NAME : C:\USERS\JAMES.GOLDEN\ONEDRIVE - DAAR CORPORATION\DOCUMENTS - SW DESIGN\1161-00-08 IH39, SB LANES, COLUMBIA CTY\C3D\11610008\SHEETSPLAN\050201-PN.DWG PLOT DATE : 10/23/2025 11:33 AM PLOT BY : JAMES GOLDEN PLOT NAME : PLOT SCALE : 1 IN:100 FT
LAYOUT NAME - 03

WISDOT/CADDS SHEET 44

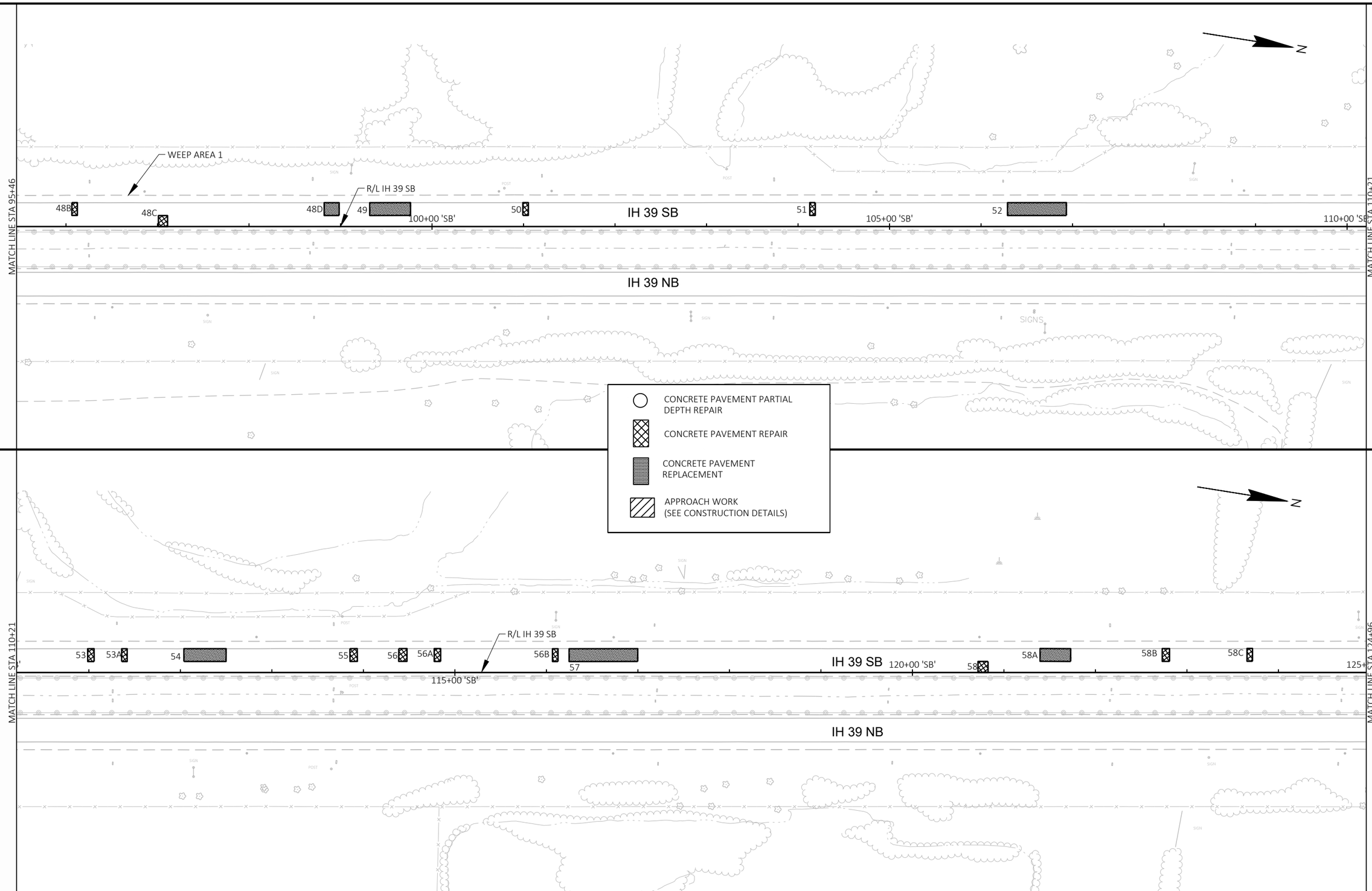

5

5

PROJECT NO: 1161-00-78	HWY: IH 39	COUNTY: COLUMBIA	PLAN	SHEET 71	E

FILE NAME : C:\USERS\JAMES.GOLDEN\ONEDRIVE - DAAR CORPORATION\DOCUMENTS - SW DESIGN\1161-00-08 IH39, SB LANES, COLUMBIA CTY\C3D\11610008\SHEETSPLAN\050201-PN.DWG PLOT DATE : 10/23/2025 11:34 AM PLOT BY : JAMES GOLDEN PLOT NAME : PLOT SCALE : 1 IN:100 FT

LAYOUT NAME - 04

WISDOT/CADDS SHEET 44

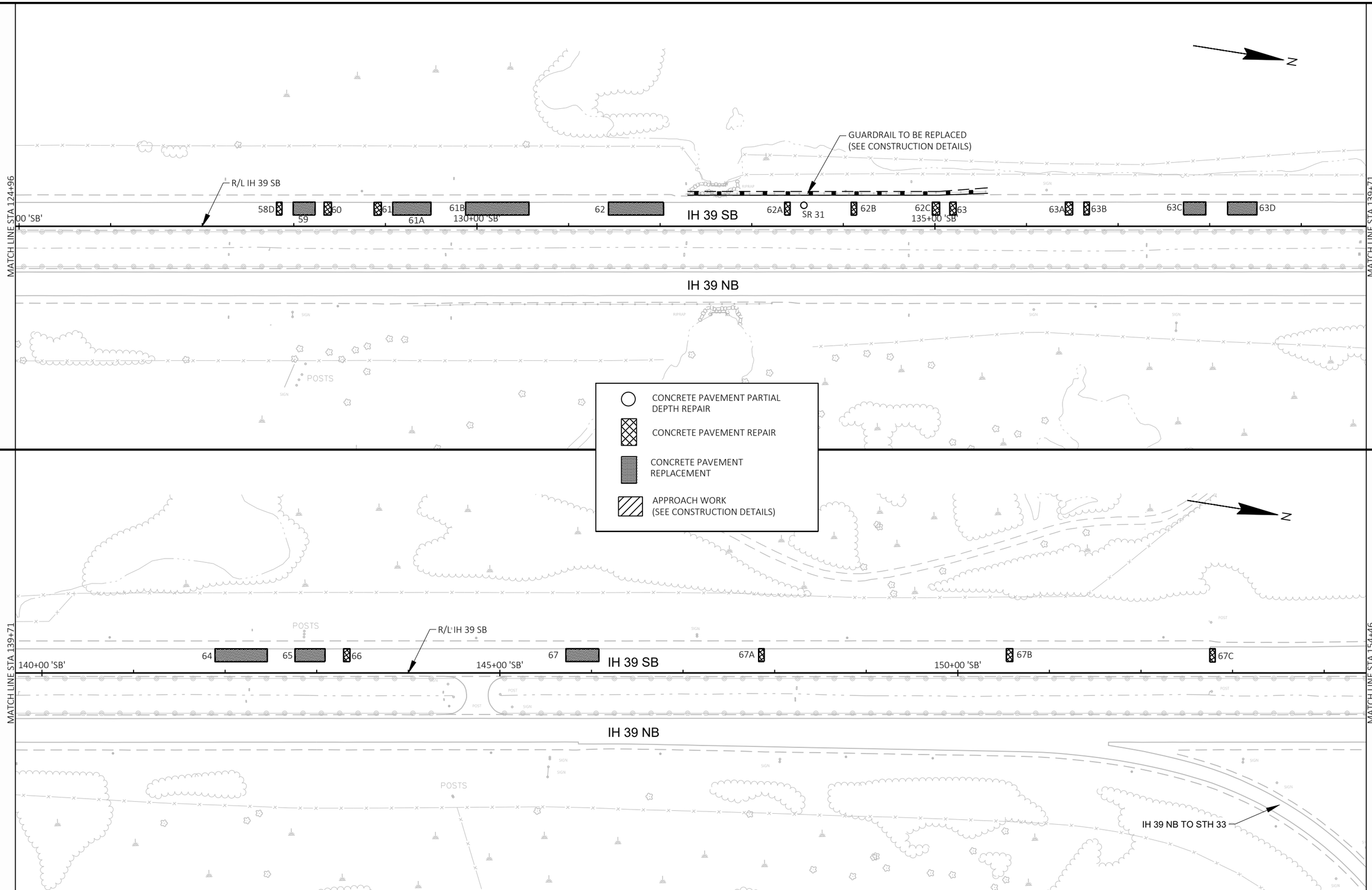

5

5

PROJECT NO: 1161-00-78	HWY: IH 39	COUNTY: COLUMBIA	PLAN	SHEET 72	E

FILE NAME : C:\USERS\JAMES.GOLDEN\ONEDRIVE - DAAR CORPORATION\DOCUMENTS - SW DESIGN\1161-00-08 IH39, SB LANES, COLUMBIA CTY\C3D\11610008\SHEETSPLAN\050201-PN.DWG PLOT DATE : 10/23/2025 11:34 AM PLOT BY : JAMES GOLDEN PLOT NAME : PLOT SCALE : 1 IN:100 FT
LAYOUT NAME - 05

WISDOT/CADDS SHEET 44

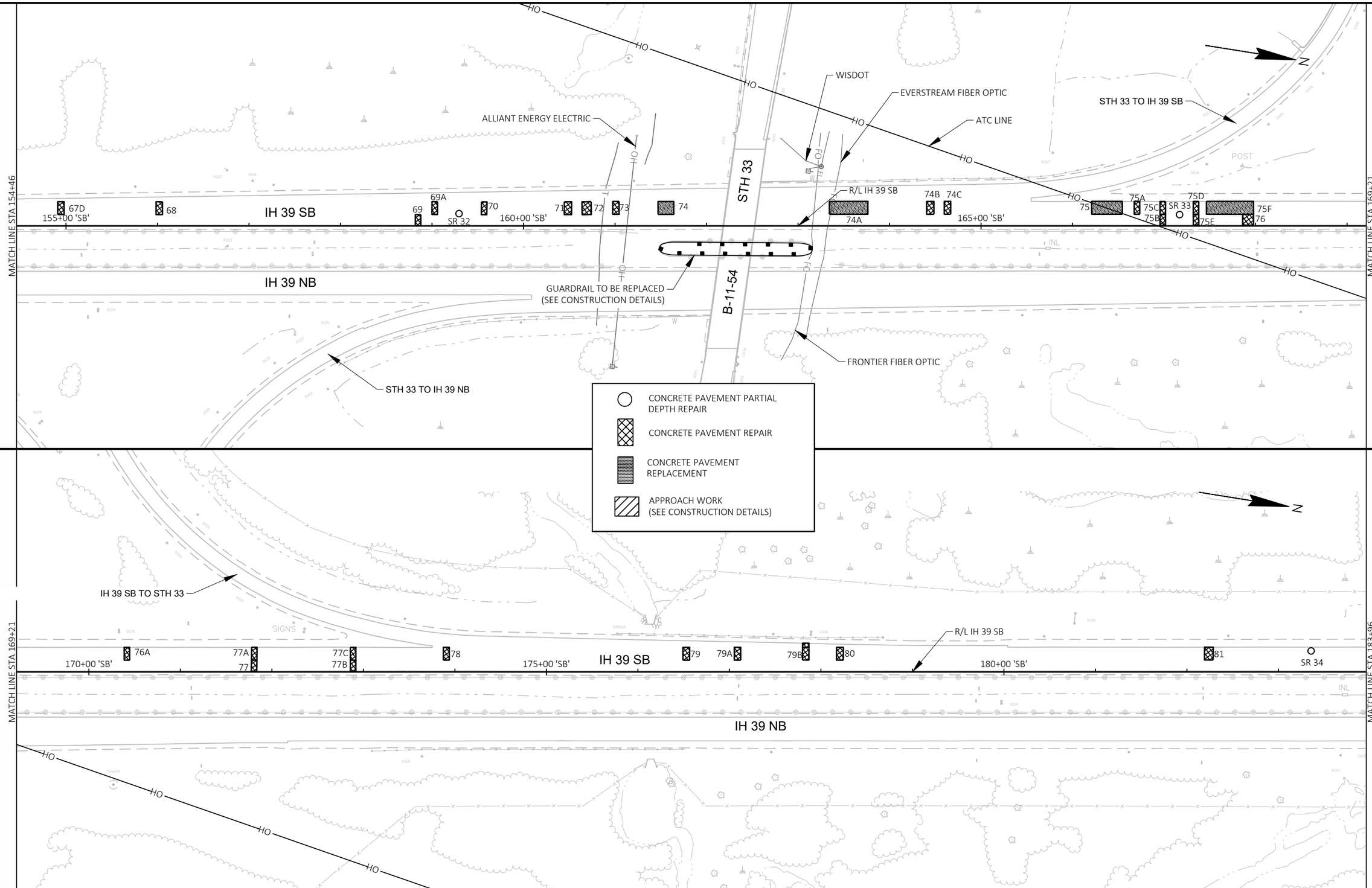

PROJECT NO: 1161-00-78	HWY: IH 39	COUNTY: COLUMBIA	PLAN	SHEET 73	E

FILE NAME : C:\USERS\JAMES.GOLDEN\ONEDRIVE - DAAR CORPORATION\DOCUMENTS - SW DESIGN\1161-00-08 IH39, SB LANES, COLUMBIA CTY\C3D\11610008\SHEETSPLAN\050201-PN.DWG PLOT DATE : 10/23/2025 11:35 AM PLOT BY : JAMES GOLDEN PLOT NAME : PLOT SCALE : 1 IN:100 FT
LAYOUT NAME - 06

WISDOT/CADDS SHEET 44

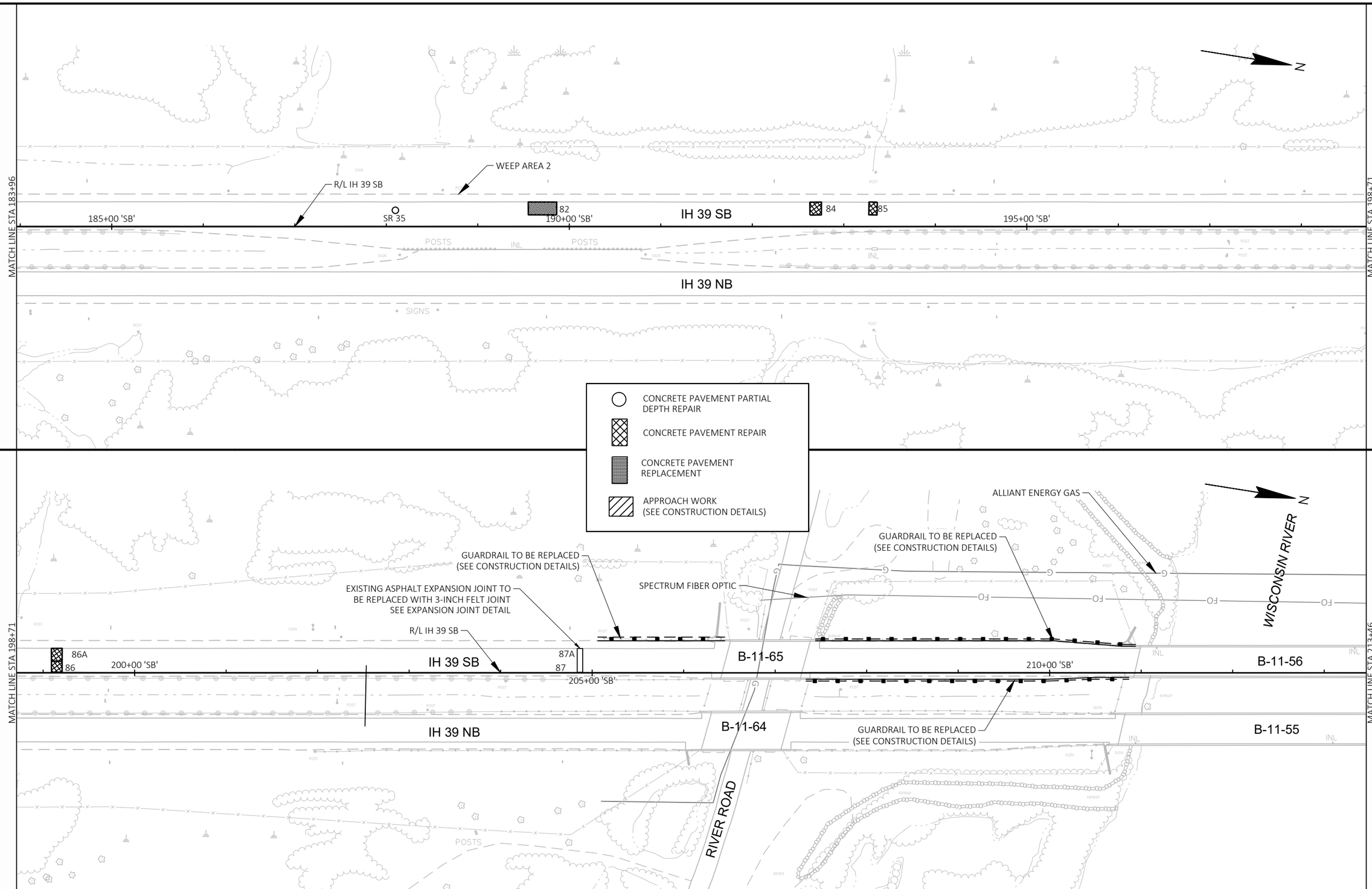

PROJECT NO: 1161-00-78	HWY: IH 39	COUNTY: COLUMBIA	PLAN	SHEET 74	E

FILE NAME : C:\USERS\JAMES.GOLDEN\ONEDRIVE - DAAR CORPORATION\DOCUMENTS - SW DESIGN\1161-00-08 IH39, SB LANES, COLUMBIA CTY\C3D\11610008\SHEETSPLAN\050201-PN.DWG
LAYOUT NAME - 07
PLOT DATE : 10/23/2025 11:35 AM
PLOT BY : JAMES GOLDEN
PLOT NAME :
PLOT SCALE : 1 IN:100 FT

WISDOT/CADDS SHEET 44

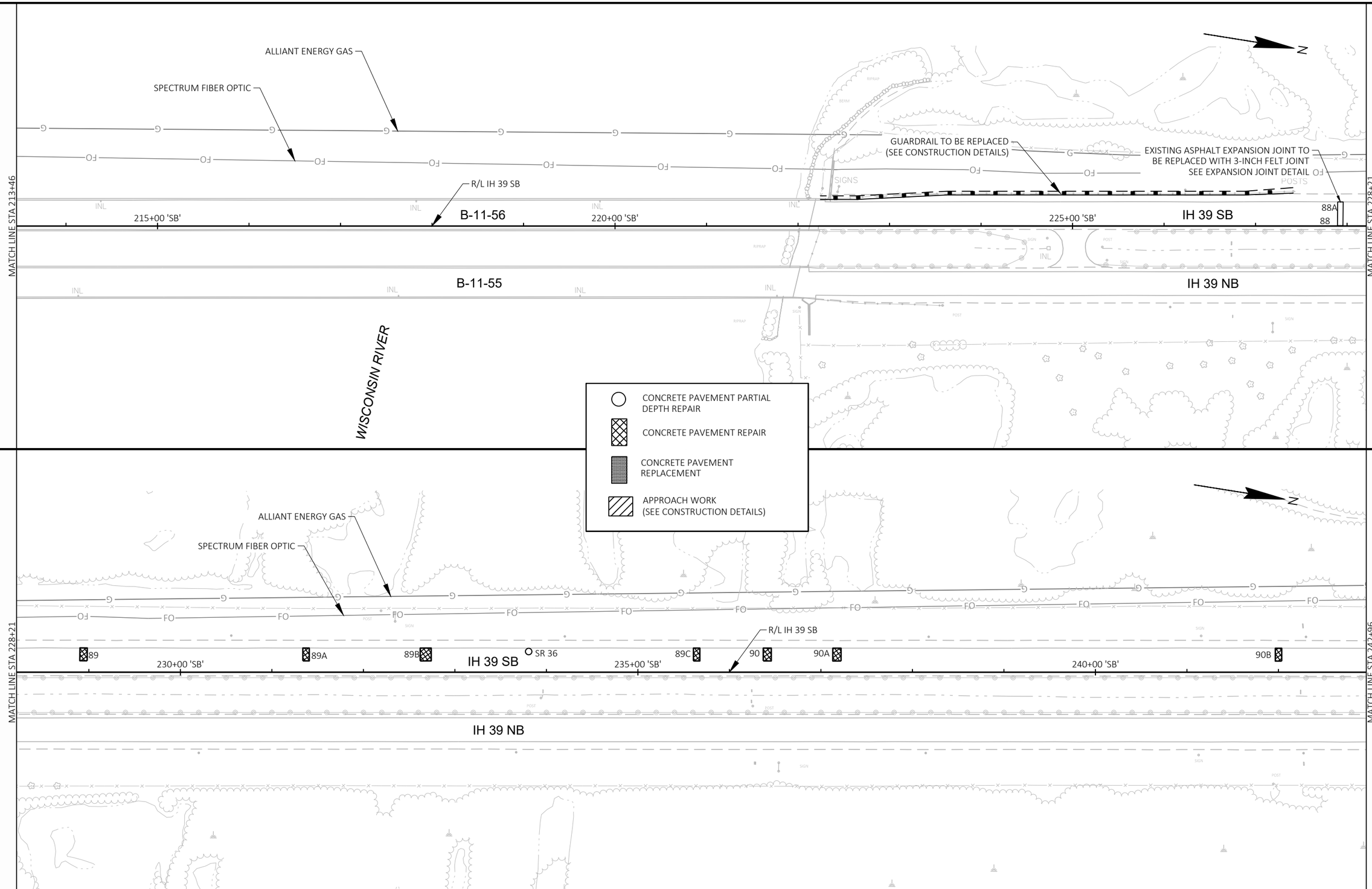

5

5

PROJECT NO: 1161-00-78	HWY: IH 39	COUNTY: COLUMBIA	PLAN	SHEET 75	E

FILE NAME : C:\USERS\JAMES.GOLDEN\ONEDRIVE - DAAR CORPORATION\DOCUMENTS - SW DESIGN\1161-00-08 IH39, SB LANES, COLUMBIA CTY\C3D\11610008\SHEETSPLAN\050201-PN.DWG PLOT DATE : 10/23/2025 11:36 AM PLOT BY : JAMES GOLDEN PLOT NAME : PLOT SCALE : 1 IN:100 FT
LAYOUT NAME - 08

WISDOT/CADDS SHEET 44

5

ALLIANT ENERGY GAS

SPECTRUM FIBER OPTIC

WEEP AREA 3

R/L IH 39 SB

MATCH LINE STA 242+96

MATCH LINE STA 257+71

91 92 92A 93 94 95 95A 96 96A 96B 96C

245+00 'SB' 250+00 'SB' 255+00 'SB'

IH 39 SB

IH 39 NB

N

CONCRETE PAVEMENT PARTIAL DEPTH REPAIR

CONCRETE PAVEMENT REPAIR

CONCRETE PAVEMENT REPLACEMENT

APPROACH WORK (SEE CONSTRUCTION DETAILS)

ALLIANT ENERGY GAS

SPECTRUM FIBER OPTIC

CTH Q

R/L IH 39 SB

265+00 'SB' IH 39 SB

270+00 'SB'

260+00 'SB'

98 97

CAUTION

B-11-57

IH 39 NB

MATCH LINE STA 257+71

MATCH LINE STA 272+46

ALLIANT ENERGY ELECTRIC

N

5

PROJECT NO: 1161-00-78	HWY: IH 39	COUNTY: COLUMBIA	PLAN	SHEET 76	E

FILE NAME : C:\USERS\JAMES.GOLDEN\ONEDRIVE - DAAR CORPORATION\DOCUMENTS - SW DESIGN\1161-00-08 IH39, SB LANES, COLUMBIA CTY\C3D\11610008\SHEETSPLAN\050201-PN.DWG PLOT DATE : 10/23/2025 11:36 AM PLOT BY : JAMES GOLDEN PLOT NAME : PLOT SCALE : 1 IN:100 FT

LAYOUT NAME - 09

WISDOT/CADDS SHEET 44

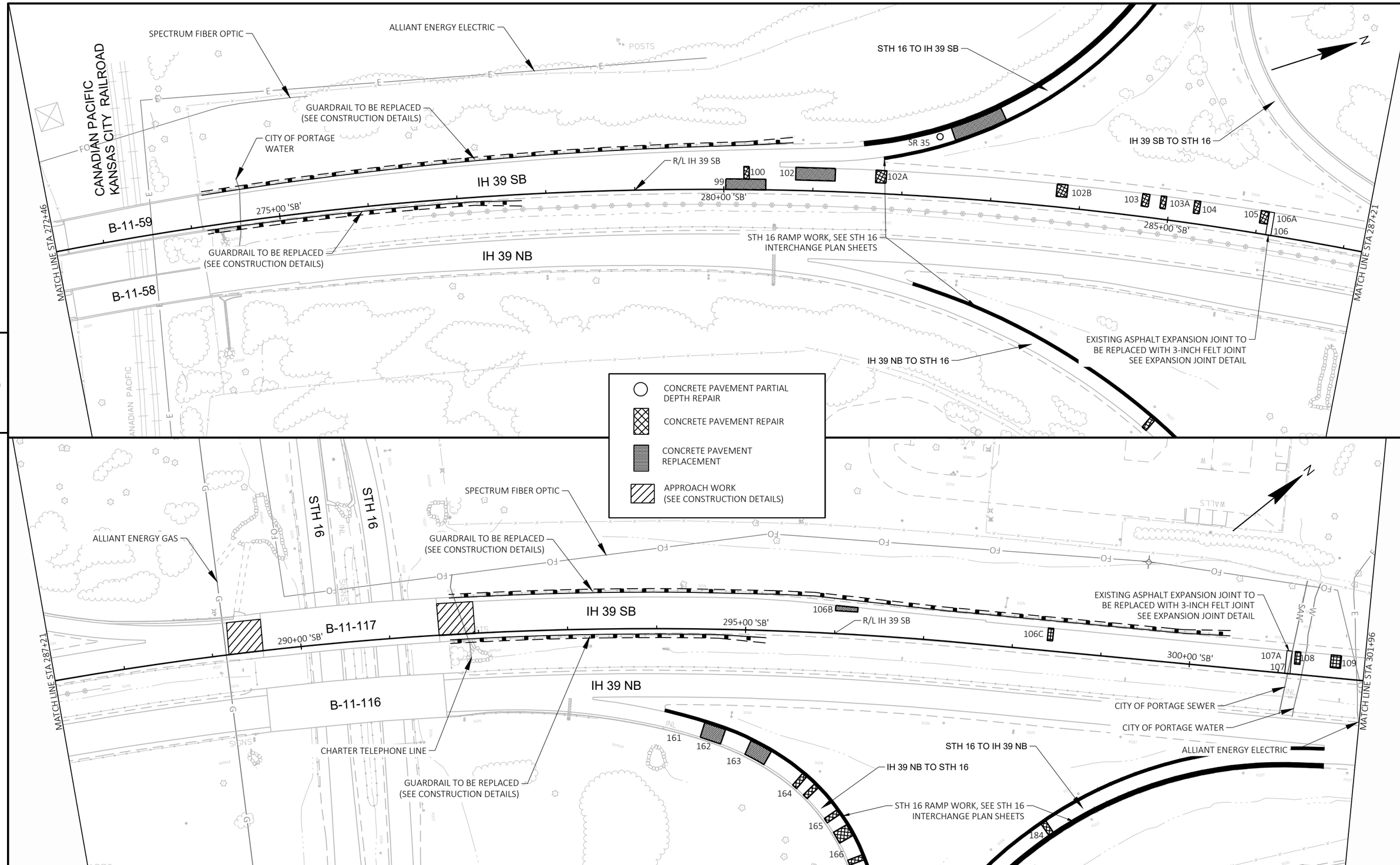

PROJECT NO: 1161-00-78	HWY: IH 39	COUNTY: COLUMBIA	PLAN	SHEET 77	E

FILE NAME : C:\USERS\JAMES.GOLDEN\ONEDRIVE - DAAR CORPORATION\DOCUMENTS - SW DESIGN\1161-00-08 IH39, SB LANES, COLUMBIA CTY\C3D\11610008\SHEETSPLAN\050201-PN.DWG
LAYOUT NAME - 10
PLOT DATE : 10/23/2025 11:37 AM
PLOT BY : JAMES GOLDEN
PLOT NAME :
PLOT SCALE : 1 IN:100 FT
WISDOT/CADDS SHEET 44

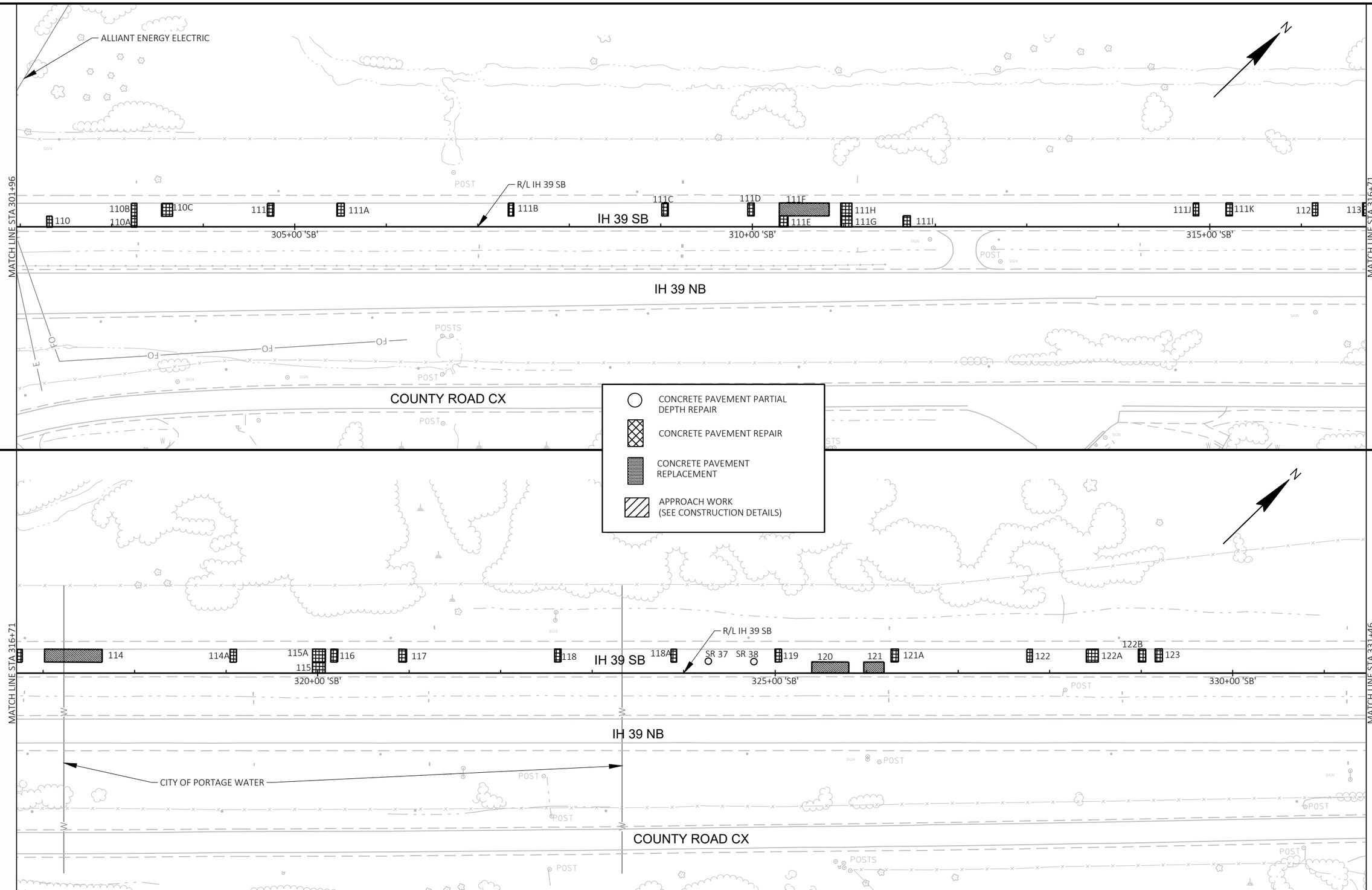

5

5

PROJECT NO: 1161-00-78	HWY: IH 39	COUNTY: COLUMBIA	PLAN	SHEET 78	E

FILE NAME : C:\USERS\JAMES.GOLDEN\ONEDRIVE - DAAR CORPORATION\DOCUMENTS - SW DESIGN\1161-00-08 IH39, SB LANES, COLUMBIA CTY\C3D\11610008\SHEETSPLAN\050201-PN.DWG PLOT DATE : 10/23/2025 11:37 AM PLOT BY : JAMES GOLDEN PLOT NAME : PLOT SCALE : 1 IN:100 FT
LAYOUT NAME - 11

WISDOT/CADDS SHEET 44

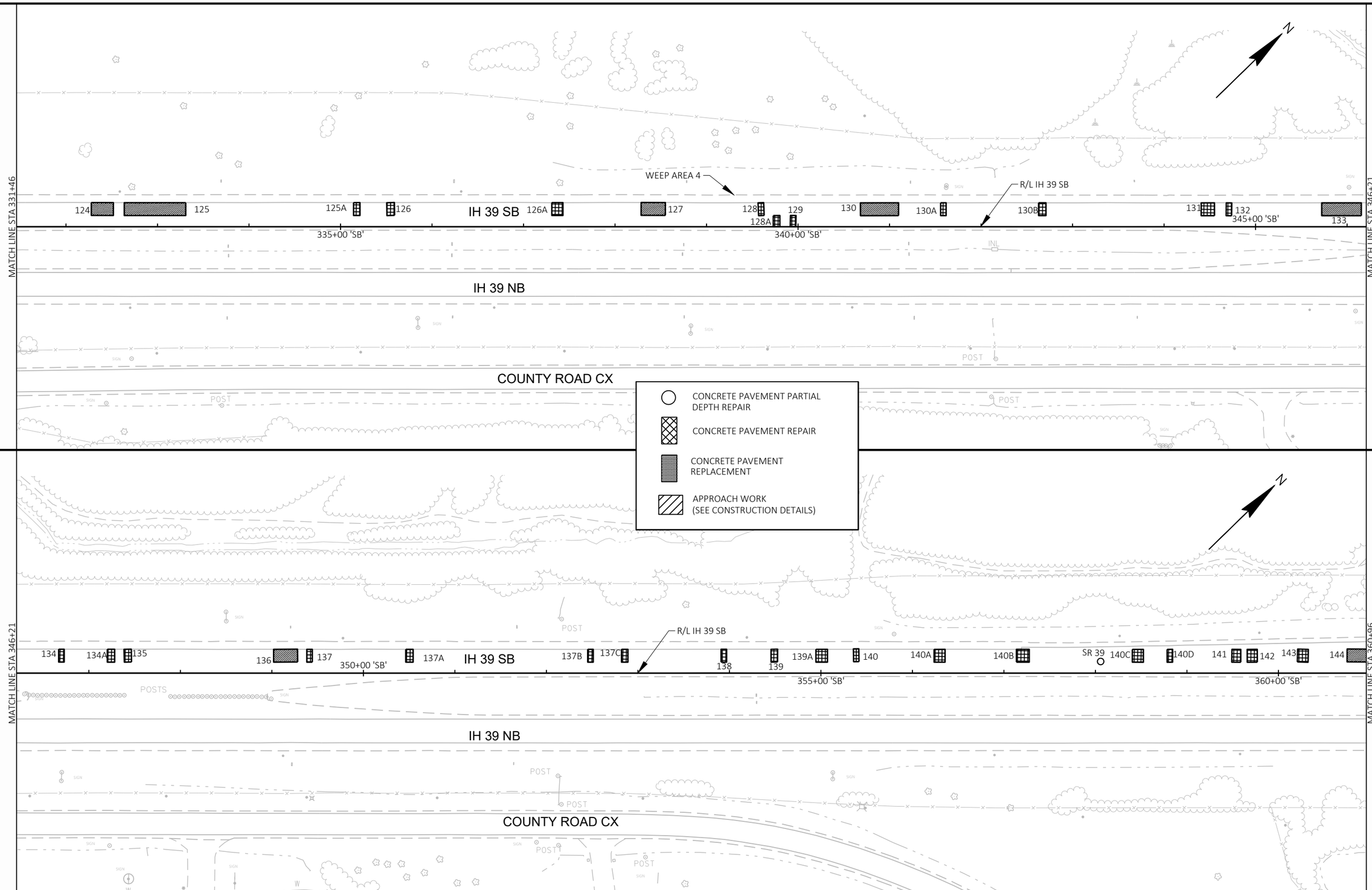

5

5

PROJECT NO: 1161-00-78	HWY: IH 39	COUNTY: COLUMBIA	PLAN	SHEET 79	E

FILE NAME : C:\USERS\JAMES.GOLDEN\ONEDRIVE - DAAR CORPORATION\DOCUMENTS - SW DESIGN\1161-00-08 IH39, SB LANES, COLUMBIA CTY\C3D\11610008\SHEETSPLAN\050201-PN.DWG PLOT DATE : 10/23/2025 11:38 AM PLOT BY : JAMES GOLDEN PLOT NAME : PLOT SCALE : 1 IN:100 FT
LAYOUT NAME - 12

WISDOT/CADDS SHEET 44

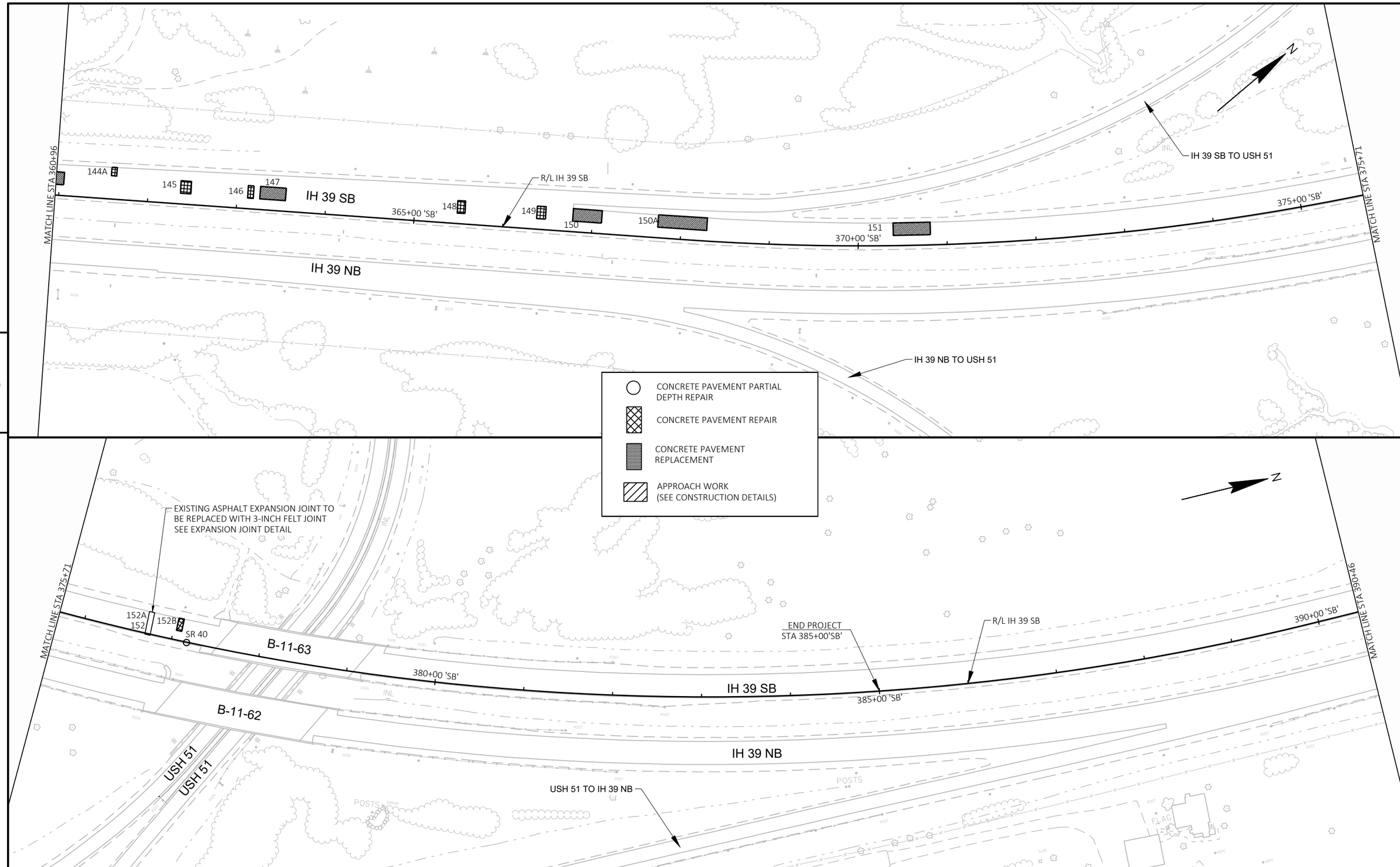

PROJECT NO: 1161-00-78	HWY: IH 39	COUNTY: COLUMBIA	PLAN	SHEET 80	E

FILE NAME : C:\USERS\JAMES.GOLDEN\ONEDRIVE - DAAR CORPORATION\DOCUMENTS - SW DESIGN\1161-00-08 IH39, SB LANES, COLUMBIA CTY\C3D\11610008\SHEETSPLAN\050201-PN.DWG PLOT DATE : 10/23/2025 11:38 AM PLOT BY : JAMES GOLDEN PLOT NAME : PLOT SCALE : 1 IN:100 FT
LAYOUT NAME - 13

WISDOT/CADDS SHEET 44

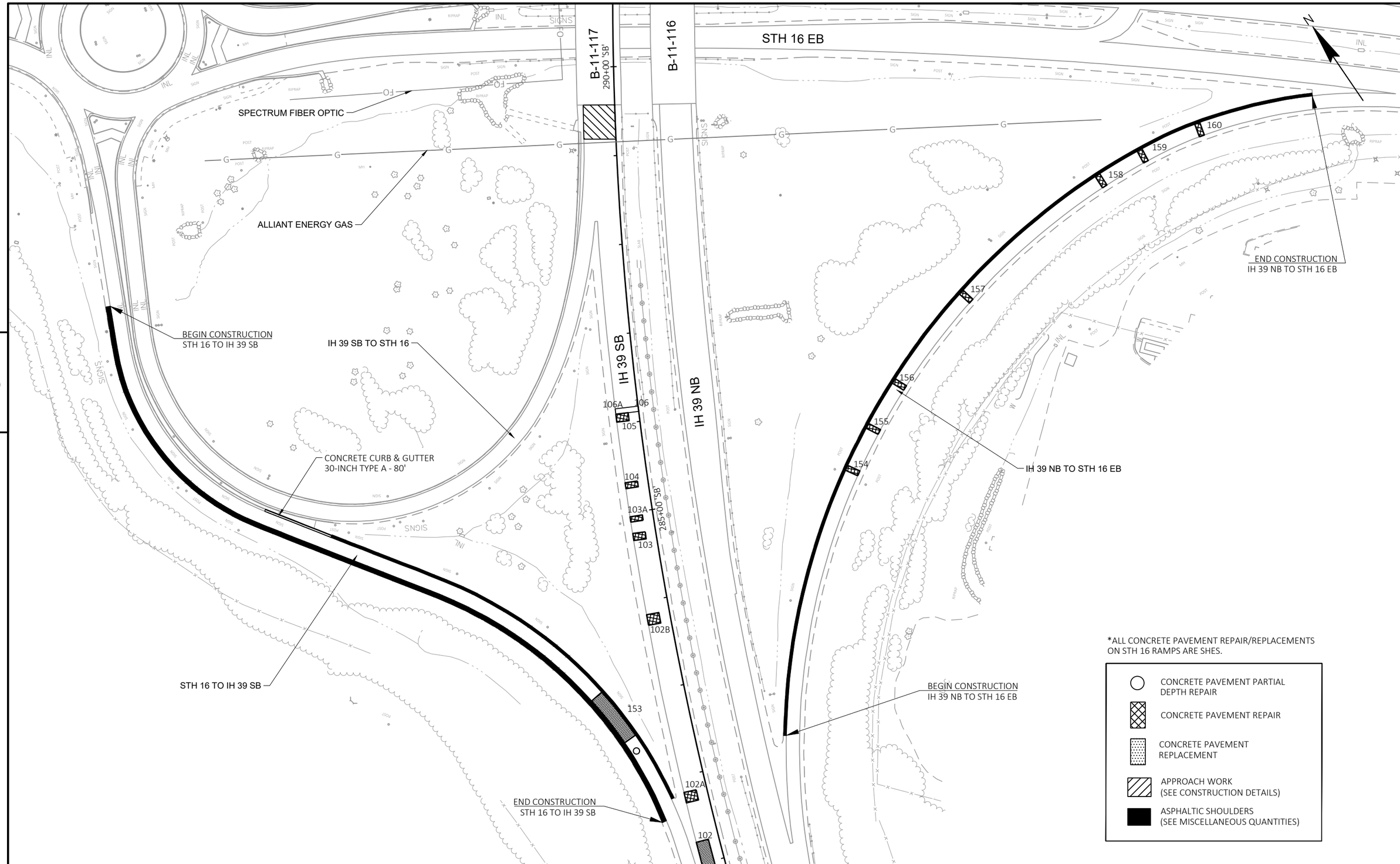

PROJECT NO: 1161-00-78	HWY: IH 39	COUNTY: COLUMBIA	STH 16 INTERCHANGE	SHEET 81	E

FILE NAME : C:\USERS\JAMES.GOLDEN\ONEDRIVE - DAAR CORPORATION\DOCUMENTS - SW DESIGN\1161-00-08 IH39, SB LANES, COLUMBIA CTY\C3D\11610008\SHEETSPLAN\050202-PN.DWG PLOT DATE : 10/23/2025 11:42 AM PLOT BY : JAMES GOLDEN PLOT NAME : PLOT SCALE : 1 IN:100 FT
LAYOUT NAME - 01

WISDOT/CADDS SHEET 44

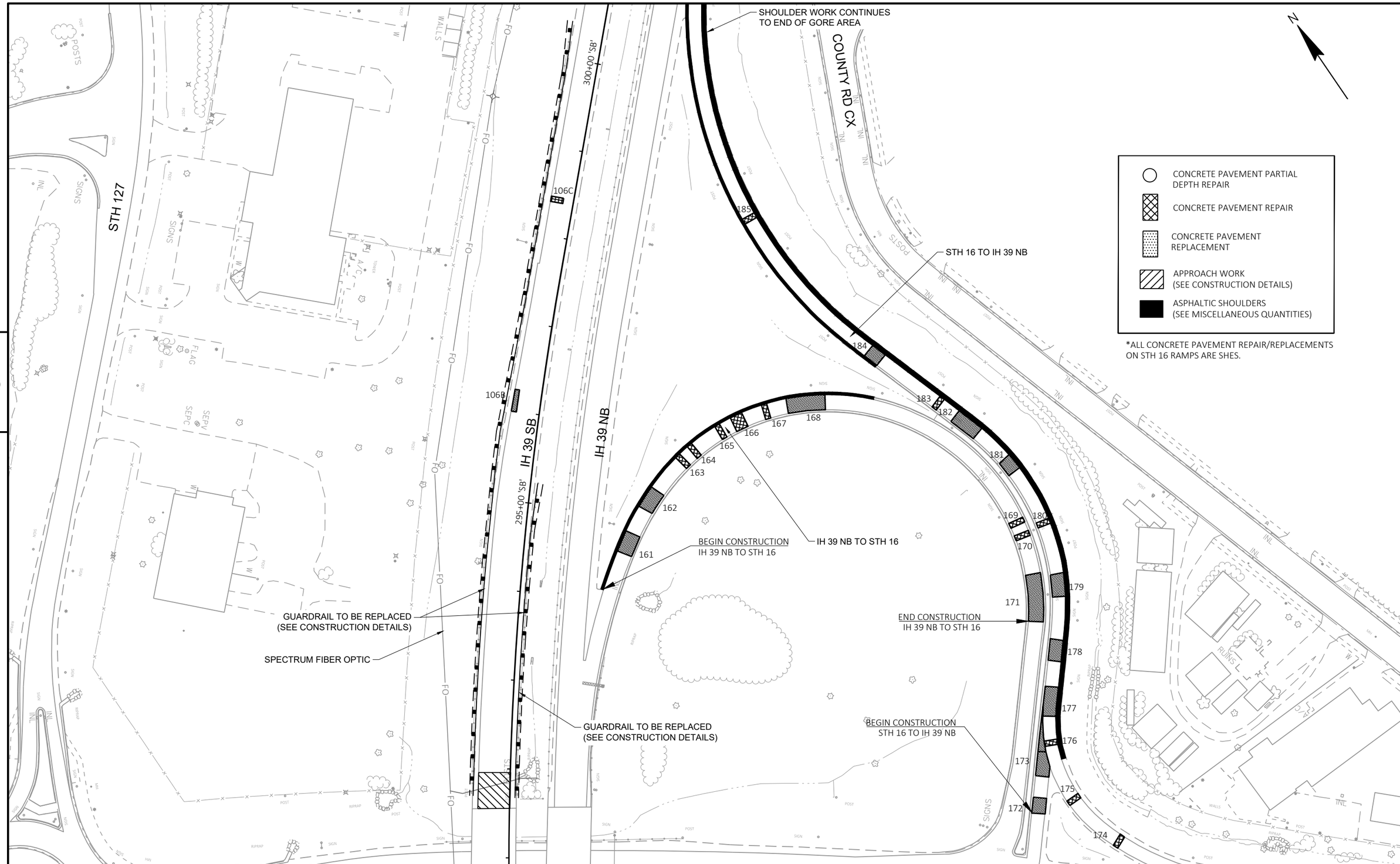

5

5

PROJECT NO: 1161-00-78	HWY: IH 39	COUNTY: COLUMBIA	STH 16 INTERCHANGE	SHEET 82	E

FILE NAME : C:\USERS\JAMES.GOLDEN\ONEDRIVE - DAAR CORPORATION\DOCUMENTS - SW DESIGN\1161-00-08 IH39, SB LANES, COLUMBIA CTY\C3D\11610008\SHEETSPLAN\050202-PN.DWG
LAYOUT NAME - 02
PLOT DATE : 10/23/2025 11:42 AM
PLOT BY : JAMES GOLDEN
PLOT NAME :
PLOT SCALE : 1 IN:100 FT

WISDOT/CADDS SHEET 44

Standard Detail Drawing List

08A05-22D	INLET COVERS TYPE V, V-B, & VV-B
08C07-03	INLETS 2X2-FT, 2X2.5-FT, 2X3-FT, 2.5X3-FT & 2X3.5-FT
08D01-24A	CONCRETE CURB & GUTTER
08D01-24B	CONCRETE CURB, TIES AND CURB AND GUTTER APPLICATIONS
08E09-06	SILT FENCE
08F01-11	APRON ENDWALLS FOR CULVERT PIPE
13A03-07	CONCRETE PAVEMENT SHOULDERS
13A05-06A	SHOULDER RUMBLE STRIPS, DIVIDED ROADWAY
13A05-06B	SHOULDER RUMBLE STRIPS, DIVIDED ROADWAY
13B02-09A	CONCRETE PAVEMENT APPROACH SLAB
13B02-09B	STRUCTURAL APPROACH SLAB AND CONCRETE PAVEMENT APPROACH SLAB
13C01-19	CONCRETE PAVEMENT LONGITUDINAL JOINTS AND TIES
13C08-02	CONCRETE PAVEMENT PARTIAL DEPTH REPAIR
13C09-17A	CONCRETE PAVEMENT REPAIR AND REPLACEMENT
13C09-17B	CONCRETE PAVEMENT REPAIR AND REPLACEMENT
13C09-17C	CONCRETE PAVEMENT REPAIR AND REPLACEMENT
13C11-14A	RURAL DOWELED CONCRETE PAVEMENT
13C11-14B	RURAL DOWELED CONCRETE PAVEMENT
13C13-11	URBAN DOWELED CONCRETE PAVEMENT
13C18-08A	CONCRETE PAVEMENT JOINTING
13C18-08B	CONCRETE PAVEMENT STEEL REINFORCEMENT
13C18-08C	CONCRETE PAVEMENT JOINT TYPES
13C18-08D	CONCRETE PAVEMENT JOINTING AT UTILITY FIXTURES
13C18-08F	CONCRETE PAVEMENT INTERSECTION BOXOUT FOR INTEGRAL CURB AND GUTTER
13C18-08G	CONCRETE PAVEMENT JOINTING ACCELERATION/DECELERATION LANE
14B26-05A	STEEL THRIE BEAM BULLNOSE TERMINAL
14B26-05B	STEEL THRIE BEAM BULLNOSE TERMINAL
14B26-05C	STEEL THRIE BEAM BULLNOSE TERMINAL
14B26-05D	STEEL THRIE BEAM BULLNOSE TERMINAL
14B26-05E	STEEL THRIE BEAM BULLNOSE TERMINAL
14B26-05F	STEEL THRIE BEAM BULLNOSE TERMINAL
14B26-05G	STEEL THRIE BEAM BULLNOSE TERMINAL
14B26-05H	STEEL THRIE BEAM BULLNOSE TERMINAL
14B28-04A	GUARDRAIL MOW STRIP
14B28-04B	GUARDRAIL MOW STRIP
14B42-07A	MIDWEST GUARDRAIL SYSTEM (MGS) GUARDRAIL
14B42-07B	MIDWEST GUARDRAIL SYSTEM (MGS) GUARDRAIL
14B42-07C	MIDWEST GUARDRAIL SYSTEM (MGS) GUARDRAIL
14B42-07D	MIDWEST GUARDRAIL SYSTEM (MGS) GUARDRAIL
14B44-04A	MIDWEST GUARDRAIL SYSTEM ENERGY ABSORBING TERMINAL (MGS)
14B44-04B	MIDWEST GUARDRAIL SYSTEM ENERGY ABSORBING TERMINAL (MGS)
14B44-04C	MIDWEST GUARDRAIL SYSTEM ENERGY ABSORBING TERMINAL (MGS)
14B45-05A	MIDWEST GUARDRAIL SYSTEM THRIE BEAM TRANSITION (MGS)
14B45-05B	MIDWEST GUARDRAIL SYSTEM THRIE BEAM TRANSITION (MGS)
14B45-05C	MIDWEST GUARDRAIL SYSTEM THRIE BEAM TRANSITION (MGS)
14B45-05D	MIDWEST GUARDRAIL SYSTEM THRIE BEAM TRANSITION (MGS)
14B45-05E	MIDWEST GUARDRAIL SYSTEM THRIE BEAM TRANSITION (MGS)
14B45-05F	MIDWEST GUARDRAIL SYSTEM THRIE BEAM TRANSITION (MGS)
14B45-05G	MIDWEST GUARDRAIL SYSTEM THRIE BEAM TRANSITION (MGS)
14B45-05H	MIDWEST GUARDRAIL SYSTEM THRIE BEAM TRANSITION (MGS)
14B45-05I	MIDWEST GUARDRAIL SYSTEM THRIE BEAM TRANSITION (MGS)
14B45-05J	MIDWEST GUARDRAIL SYSTEM THRIE BEAM TRANSITION (MGS)
14B45-05K	MIDWEST GUARDRAIL SYSTEM THRIE BEAM TRANSITION (MGS)
14B45-05L	MIDWEST GUARDRAIL SYSTEM THRIE BEAM TRANSITION (MGS)
14B47-06A	MIDWEST GUARDRAIL SYSTEM (MGS) TYPE 2 TERMINAL
14B47-06B	MIDWEST GUARDRAIL SYSTEM (MGS) TYPE 2 TERMINAL
14B47-06C	MIDWEST GUARDRAIL SYSTEM (MGS) TYPE 2 TERMINAL
14B47-06D	MIDWEST GUARDRAIL SYSTEM (MGS) TYPE 2 TERMINAL
14B47-06E	MIDWEST GUARDRAIL SYSTEM (MGS) TYPE 2 TERMINAL
14B47-06F	MIDWEST GUARDRAIL SYSTEM (MGS) TYPE 2 TERMINAL
14B47-06G	MIDWEST GUARDRAIL SYSTEM (MGS) TYPE 2 TERMINAL
14D01-01	TURTLE EXCLUSION FENCE CLIMBING TURTLE
15A04-08C	DELINEATOR POST WITH REFLECTIVE SHEETING
15A04-08E	DELINEATOR POST WITH REFLECTIVE SHEETING
15C02-09A	BARRICADES AND SIGNS FOR MAINLINE CLOSURES
15C02-09B	BARRICADES AND SIGNS FOR VARIOUS CLOSURES

6

Standard Detail Drawing List

15C02-09C	DETOUR SIGNING FOR MAINLINE CLOSURES
15C02-09D	ON RAMP LANE CLOSURE
15C02-09E	OFF RAMP LANE CLOSURE
15C02-09F	ADVANCED WIDTH RESTRICTION SIGNING
15C02-09G	TRAFFIC CONTROL FOR ENTRANCE RAMP CLOSURE
15C04-05	TRAFFIC CONTROL, ADVANCE WARNING SIGNS 45 M.P.H. OR GREATER TWO-WAY UNDIVIDED ROAD OPEN TO TRAFFIC
15C08-24A	PERMANENT LONGITUDINAL PAVEMENT MARKINGS
15C08-24B	TEMPORARY LONGITUDINAL PAVEMENT MARKING
15C11-10B	CHANNELIZING DEVICES DRUMS, CONES, BARRICADES AND VERTICAL PANELS
15D12-15A	TRAFFIC CONTROL, VEHICLE ENTRANCE/EXIT OR HAUL ROAD
15D12-15B	TRAFFIC CONTROL, LANE CLOSURE, SPEED REDUCTION
15D15-08A	TRAFFIC CONTROL, PARALLEL ENTRANCE RAMP WITHIN LANE CLOSURE
15D15-08B	TRAFFIC CONTROL, ENTRANCE RAMP WITHIN LANE CLOSURE
15D15-08C	TRAFFIC CONTROL, TAPERED ENTRANCE RAMP WITHIN LANE CLOSURE
15D15-08D	TRAFFIC CONTROL, TAPERED ENTRANCE RAMP WITHIN LANE CLOSURE
15D15-08E	TRAFFIC CONTROL, PARALLEL EXIT RAMP WITHIN LANE CLOSURE
15D16-06	TRAFFIC CONTROL, EXIT RAMP CLOSURE
15D27-04	TRAFFIC CONTROL, SHOULDER CLOSURE ON DIVIDED ROADWAY, SPEEDS GREATER THAN 40 MPH
15D40-06D	TRAFFIC CONTROL, PARTIAL LANE SHIFT MULTILANE DIVIDED 50 MPH AND GREATER

6

GENERAL NOTES

DETAILS OF CONSTRUCTION, MATERIALS AND WORKMANSHIP NOT SHOWN ON THIS DRAWING SHALL CONFORM TO THE PERTINENT REQUIREMENTS OF THE STANDARD SPECIFICATIONS AND THE APPLICABLE SPECIAL PROVISIONS.

DETAIL DRAWINGS FOR PROPOSED ALTERNATE DESIGNS FOR INLET COVERS SHALL BE SUBMITTED TO THE ENGINEER FOR APPROVAL PROVIDING THAT SUCH ALTERNATE DESIGNS MAKE PROVISION FOR EQUIVALENT CAPACITY AND STRENGTH.

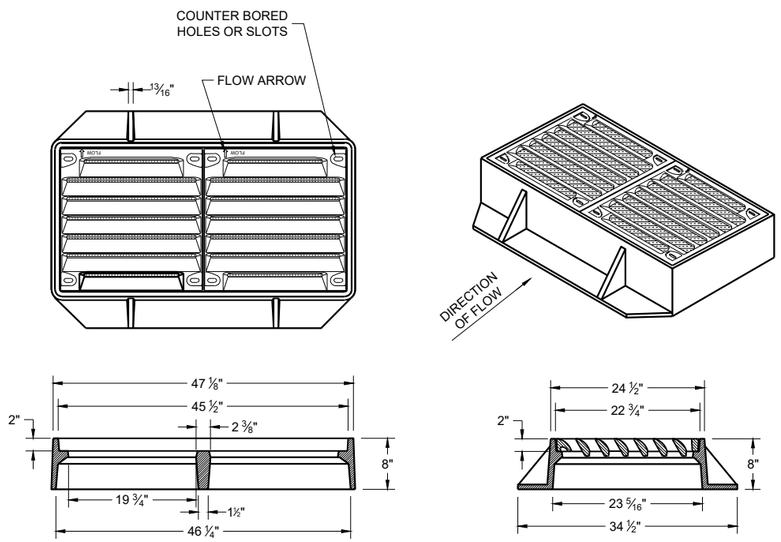

TYPE "VV-B"

NOTES: ALL HARDWARE TO BE SUPPLIED BY CASTING MANUFACTURER
ALL DRILLING AND TAPPING GRATES AND FRAMES BY CASTING MANUFACTURER

TYPE V
FRAME - CAST GRAY IRON ASTM A48 CLASS 35B
3/8" DIA. X 1/16" DRILL START IN 8 LOCATIONS
GRATE - CAST GRAY IRON ASTM A-48, CLASS 35B

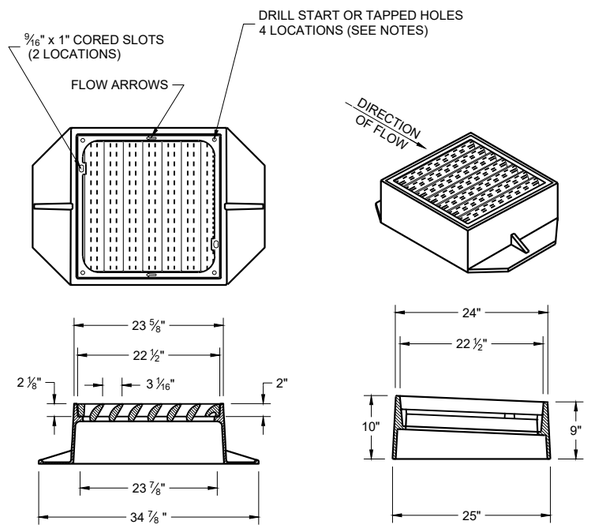

TYPE "V"

NOTES: ALL HARDWARE TO BE SUPPLIED BY CASTING MANUFACTURER ALL DRILLING AND TAPPING GRATES AND FRAMES BY CASTING MANUFACTURER

TYPE V
FRAME - CAST GRAY IRON ASTM A48 CLASS 40A
3/8" DIA. X 1/16" DRILL START IN 4 LOCATIONS
GRATE - CAST GRAY IRON ASTM A-48, CLASS 35B

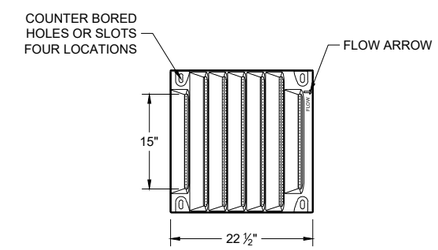

BOLT DOWN GRATE FOR TYPE "V" AND "VV-B" COVER

NOTES: ALL HARDWARE TO BE SUPPLIED BY CASTING MANUFACTURER NOTED AS TYPE "V-B" OR "VV-B" (FOR DOUBLE GRATE) ON DRAINAGE TABLE

TAP 1/2" -13 HOLES IN FOUR LOCATIONS PER GRATE IN FRAME TO BOLT GRATE(S).
FRAME - CAST GRAY IRON ASTM A48 CLASS 40A

GRATE - CAST DUCTILE IRON ASTM A536, 55+KSI YIELD
BOLTS - 1/2" -13 STAINLESS STEEL BOLTS WITH WASHERS TORQUE BOLTS TO MANUFACTURER SPECIFICATION DO NOT OVERTIGHTEN.

INLET COVERS
TYPES V, V-B, AND VV-B

STATE OF WISCONSIN
DEPARTMENT OF TRANSPORTATION

APPROVED
February 2025 — DATE
/S/ Rodney Taylor — ROADWAY STANDARDS DEVELOPMENT UNIT SUPERVISOR

FHWA

6

SDD 08A05-22d

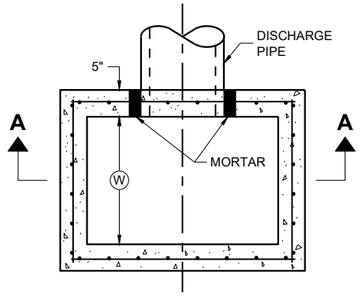

PLAN VIEW

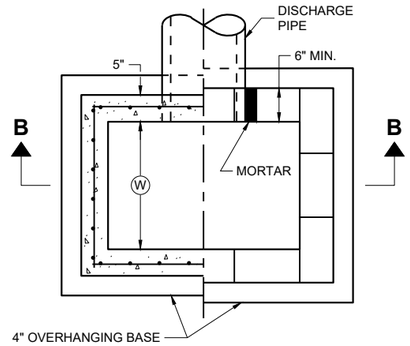

PLAN VIEW

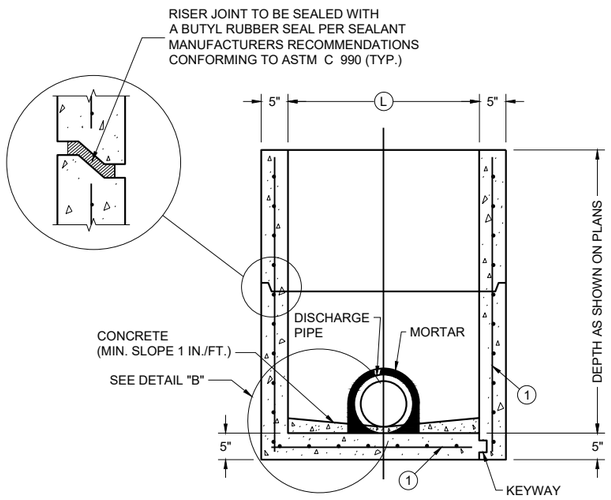

PRECAST REINFORCED CONCRETE WITH MONOLITHIC BASE

PRECAST REINFORCED CONCRETE WITH INTEGRAL BASE

SECTION A - A

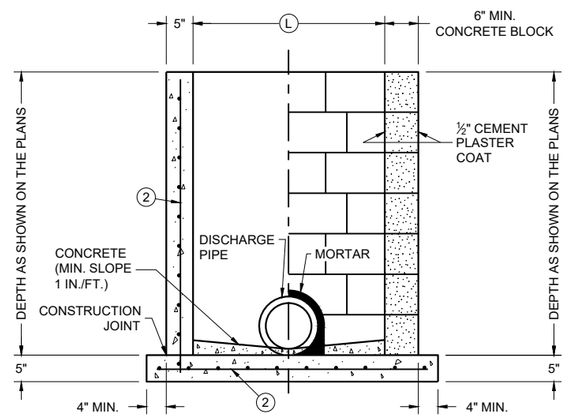

CAST IN PLACE REINFORCED CONCRETE

CONCRETE BLOCK WITH CAST IN PLACE OR PRECAST REINFORCED CONCRETE BASE (1)

SECTION B - B

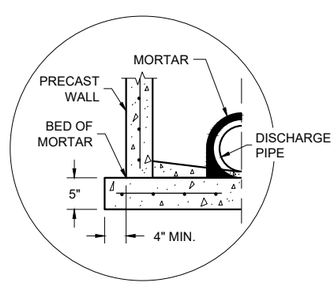

SEPARATE PRECAST REINFORCED CONCRETE BASE OPTION

DETAIL "B"

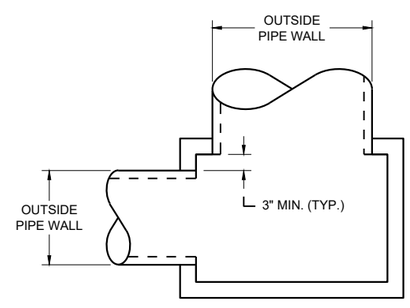

DETAIL "A"

GENERAL NOTES

DETAILS OF CONSTRUCTION, MATERIALS AND WORKMANSHIP N0T SHOWN ON THIS DRAWING SHALL CONFORM TO THE PERTINENT REQUIREMENTS OF THE STANDARD SPECIFICATIONS AND THE APPLICABLE SPECIAL PROVISIONS.

UNLESS OTHERWISE AUTHORIZED IN WRITING BY THE ENGINEER, THE CONTRACTOR SHALL NOT ORDER AND DELIVER PRECAST INLET UNITS REQUIRED FOR THE PROJECT UNTIL A LIST OF SIZES IS FURNISHED BY THE ENGINEER.

DETAILED DRAWINGS FOR PROPOSED ALTERNATE DESIGNS FOR UNDERGROUND DRAINAGE STRUCTURES SHALL BE SUBMITTED TO THE ENGINEER FOR APPROVAL PROVIDING THAT SUCH ALTERNATE DESIGNS MAKE PROVISION FOR EQUIVALENT CAPACITY AND STRENGTH.

ALL PRECAST INLET UNITS SHALL CONFORM TO THE PERTINENT REQUIREMENTS OF ASTM C 913.

ALL DRAINAGE STRUCTURES ARE DESIGNATED ON THE PLANS AS "MANHOLES 3X3-L", "CATCH BASINS 4-B", "INLETS 2X3-H", ETC. THE FIRST NUMBERS DESIGNATES THE SIZE OF THE STRUCTURE, AND THE FOLLOWING LETTER DESIGNATES THE TYPE OF COVER TO BE USED TO COMPRISE THE COMPLETE UNIT.

BASES SHALL BE PLACED ON A BED OF MATERIAL AT LEAST 6 INCHES IN DEPTH, WHICH MEETS THE REQUIREMENTS OF FOUNDATION BACKFILL. THIS BEDDING SHALL BE COMPACTED AND PROVIDE UNIFORM SUPPORT FOR THE ENTIRE AREA OF THE BASE.

ALL BAR STEEL REINFORCEMENT SHALL BE EMBEDDED 2 INCHES CLEAR UNLESS OTHERWISE SHOWN OR NOTED.

PRECAST REINFORCED RISERS SHALL HAVE A TONGUE AND GROOVE JOINT WITH TONGUE UP OR DOWN.

4" OVERHANGING BASES ARE REQUIRED FOR CAST-IN-PLACE REINFORCED CONCRETE AND CONCRETE BLOCK INSTALLATIONS. 4" OVERHANG IS REQUIRED WHEN SEPARATE PRECAST BASE IS PROVIDED. OVERHANG IS NOT REQUIRED ON PRECAST STRUCTURES WITH AN INTEGRAL OR MONOLITHIC BASE.

MAXIMUM INSIDE PIPE DIAMETER DETERMINED BY 3" CLEARANCE ON EACH SIDE OF THE OUTSIDE WALL OF THE PIPE. SEE DETAIL "A". ASSUMES PIPE ENTERS PERPENDICULAR TO THE STRUCTURE.

(1) FOR PRECAST INLETS AND REINFORCED CONCRETE BASES PROVIDE REINFORCING STEEL IN ACCORDANCE TO ASTM C 913

(2) CONTRACTOR TO PROVIDE DRAWING(S) STAMPED BY A PROFESSIONAL ENGINEER FOR STEEL REINFORCING DESIGN FOR CAST-IN-PLACE STRUCTURES.

CATCH BASIN COVER MATRIX

INLET SIZE	WIDTH (W) (FT.)	LENGTH (L) (FT.)	INLET COVER TYPE									
			ALL A'S	ALL B'S	BW	F	ALL H'S	S	T	V	WM	V V-B
2 X 2-FT	2	2	X	X				X				
2 X 2.5-FT	2	2.5			X			X	X	X	X	
2 X 3-FT	2	3					X					
2.5 X 3-FT	2.5	3				X						
2 X 3.5-FT	2	3.5										X

PIPE MATRIX

CATCH BASIN SIZE	MAXIMUM INSIDE PIPE DIAMETER FOR TWO PIPES	
	WIDTH (IN)	LENGTH (IN)
2 X 2-FT	12	12
2 X 2.5-FT	12	18
2 X 3-FT	12	24
2.5 X 3-FT	18	24
2 X 3.5-FT	12	30

INLETS 2 X 2-FT, 2 X 2.5-FT, 2 X 3-FT, 2.5 X 3-FT AND 2X3.5-FT

INLETS 2 X 2-FT, 2 X 2.5-FT, 2 X 3-FT, 2.5 X 3-FT AND 2 X 3.5-FT

STATE OF WISCONSIN
DEPARTMENT OF TRANSPORTATION

APPROVED
December 2023 — DATE
/S/ Rodney Taylor — ROADWAY STANDARDS DEVELOPMENT UNIT SUPERVISOR
FHWA

6

SDD 08C07-03

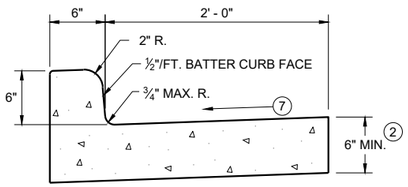

TYPES A (1) & D

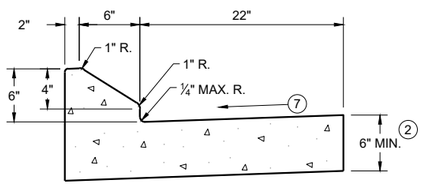

6" SLOPED CURB TYPES G (1) & J

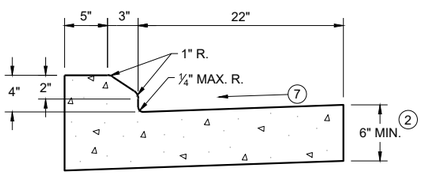

4" SLOPED CURB TYPES G (1) & J

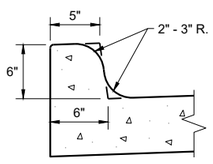

TYPES K (1) & L
(OPTIONAL CURB SHAPE)

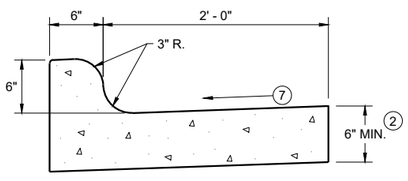

TYPES K (1) & L

CONCRETE CURB AND GUTTER 30"

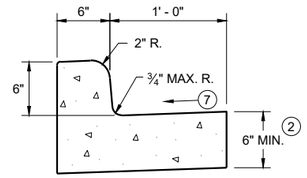

TYPES A (1) & D

CONCRETE CURB AND GUTTER 18"

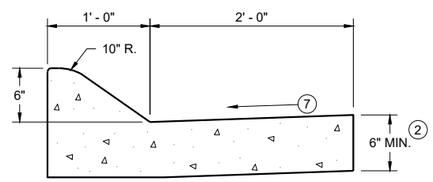

6" SLOPED CURB TYPES A (1) & D

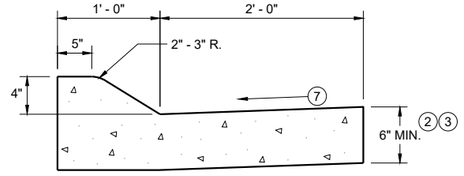

4" SLOPED CURB TYPES A (1) & D

CONCRETE CURB AND GUTTER 36"

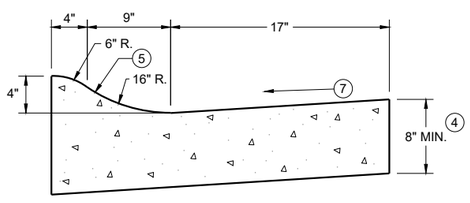

4" SLOPED CURB TYPES R (1) & T
CONCRETE CURB AND GUTTER 30"

TBT & TBTT	X
30"	22"
36"	28"

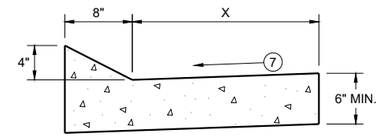

TYPES TBT & TBTT (1)

CONCRETE CURB AND GUTTER

PAVEMENT THICKNESS AND MAXIMUM CONCRETE PANEL WIDTH TABLE

PAVEMENT THICKNESS	MAXIMUM PANEL WIDTH
LESS THAN 10"	12'
10" & ABOVE	15'

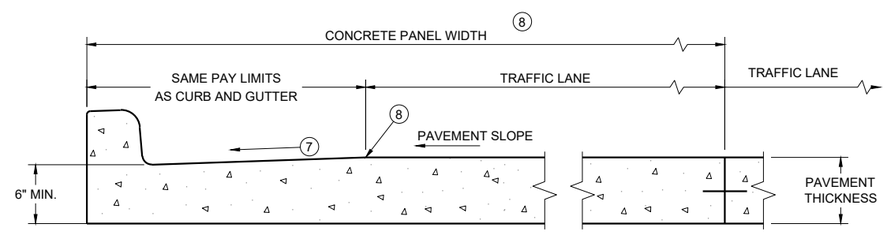

PARTIAL SECTION OF PAVEMENT WITH INTEGRAL CURB AND GUTTER *

* BIKE LANE IS NOT SHOWN

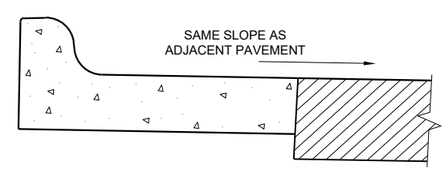

REVERSE SLOPE GUTTER (6)
(TYPICAL FOR ALL CURB & GUTTER TYPES)

GENERAL NOTES

DETAILS OF CONSTRUCTION AND WORKMANSHIP NOT SHOWN ON THIS DRAWING SHALL CONFORM TO THE PERTINENT REQUIREMENTS OF THE CONTRACT.

PAVEMENT TIES AND TIE BARS SHALL BE EPOXY COATED IN CONFORMANCE WITH SUBSECTION 505.2.6.2 OF THE STANDARD SPECIFICATIONS.

INTEGRAL CURB AND GUTTER SHALL CONFORM TO THE DETAILS SHOWN FOR CONCRETE CURB AND GUTTER INCLUDING THE TRANSVERSE GUTTER SLOPE.

UNLESS OTHERWISE SHOWN ON THE TYPICAL CROSS SECTIONS, THE BASE AGGREGATE AND COMMON EXCAVATION LIMITS ARE 2' - 0" BEHIND THE BACK OF CURBS.

(1) TIE BARS ARE REQUIRED FOR CURB AND GUTTERS TYPES A, G, K, R, AND TBTT.

(2) THE BOTTOM OF CURB AND GUTTER MAY BE CONSTRUCTED EITHER LEVEL OR PARALLEL TO THE SLOPE OF THE SUBGRADE OR BASE AGGREGATE PROVIDED A 6" MINIMUM GUTTER THICKNESS IS MAINTAINED.

(3) USE 8" MINIMUM GUTTER THICKNESS WHEN USED WITH AN ADJACENT CONCRETE TRUCK APRON PLACED BEHIND BACK OF CURB.

(4) THE BOTTOM OF CURB AND GUTTER MAY BE CONSTRUCTED EITHER LEVEL OR PARALLEL TO THE SLOPE OF THE SUBGRADE OR BASE AGGREGATE PROVIDED A 8" MINIMUM GUTTER THICKNESS IS MAINTAINED.

(5) UNLESS OTHERWISE NOTED, FOR STAKING PURPOSES THE FACE OF CURB IS 6" FROM THE BACK OF CURB.

(6) WHEN REVERSE SLOPE GUTTER IS REQUIRED, THE LOCATION(S) WILL BE SHOWN ELSEWHERE IN THE PLAN.

(7) USE 4% GUTTER CROSS SLOPE UNLESS OTHERWISE NOTED IN THE PLANS.

(8) INCLUDE LONGITUDINAL JOINT AND TIE BARS ALONG LANE EDGE WHEN CONCRETE PANEL WIDTH EXCEEDS THE MAXIMUM WIDTH PER TABLE BELOW. LONGITUDINAL JOINT(S) ARE NOT ALLOWED WITHIN TRAFFIC LANES AND BIKE LANES. LONGITUDINAL JOINT MAY BE SAWED.

(9) SLOPE TO BE REVERSE SLOPE MATCHING THE SLOPE OF THE PAVEMENT AND THE CIRCULATORY ROADWAY

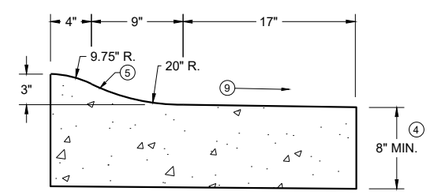

3" SLOPED CURB TYPES R (1) & T

CONCRETE CURB AND GUTTER

STATE OF WISCONSIN
DEPARTMENT OF TRANSPORTATION

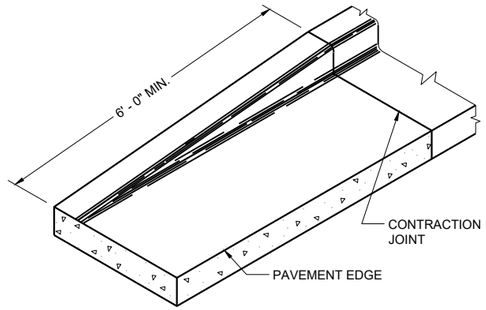

END SECTION CURB AND GUTTER

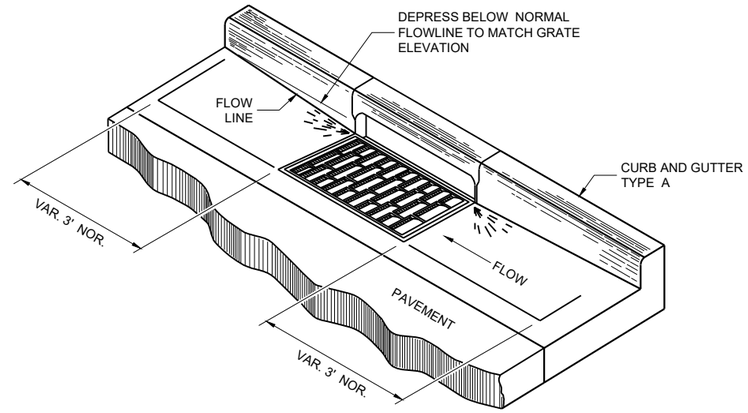

DETAIL OF CURB AND GUTTER AT INLETS

(TYPICAL H INLET COVER SHOWN)

GENERAL NOTES

DETAILS OF CONSTRUCTION AND WORKMANSHIP NOT SHOWN ON THIS DRAWING SHALL CONFORM TO THE PERTINENT REQUIREMENTS OF THE CONTRACT.

PAVEMENT TIES AND TIE BARS SHALL BE EPOXY COATED IN CONFORMANCE WITH SUBSECTION 505.2.6.2 OF THE STANDARD SPECIFICATIONS.

UNLESS OTHERWISE SHOWN ON THE TYPICAL CROSS SECTIONS, THE BASE AGGREGATE AND COMMON EXCAVATION LIMITS ARE 2' - 0" BEHIND THE BACK OF CURBS.

(1) TIE BARS ARE REQUIRED FOR CURB AND GUTTERS TYPES A, G, K, R, AND TBTT.

(2) THE BOTTOM OF CURB AND GUTTER MAY BE CONSTRUCTED EITHER LEVEL OR PARALLEL TO THE SLOPE OF THE SUBGRADE OR BASE AGGREGATE PROVIDED A 6" MINIMUM GUTTER THICKNESS IS MAINTAINED.

(10) REFER TO SDD 08D18 AND 08D19 FOR ADDITIONAL DRIVEWAY ENTRANCE CURB DETAILS.

(11) PLACE 1" THICK EXPANSION JOINT MATERIAL BETWEEN VERTICAL FACE CURB TYPES EXTENDING FROM THE TOP OF CURB TO 1 INCH BELOW THE ADJOINING CONCRETE SURFACE. RIGID CONCRETE STRUCTURES INCLUDE RAISED CONCRETE MEDIANS, CONCRETE SAFETY ISLANDS, SPLITTER ISLANDS, OR LOCATIONS IDENTIFIED ON THE PLANS.

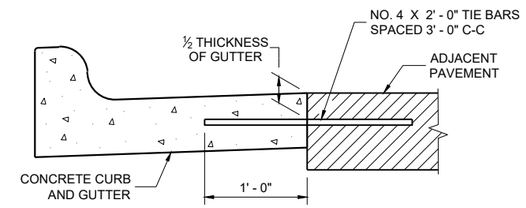

TYPICAL TIE BAR LOCATION (1)

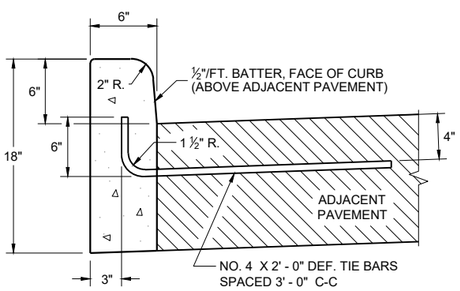

TYPES A (1) & D

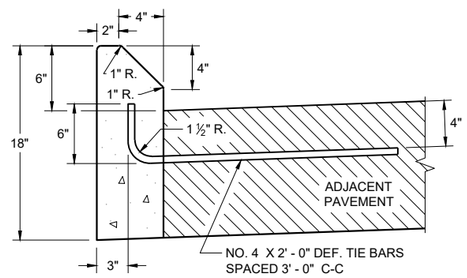

TYPES G (1) & J

CONCRETE CURB

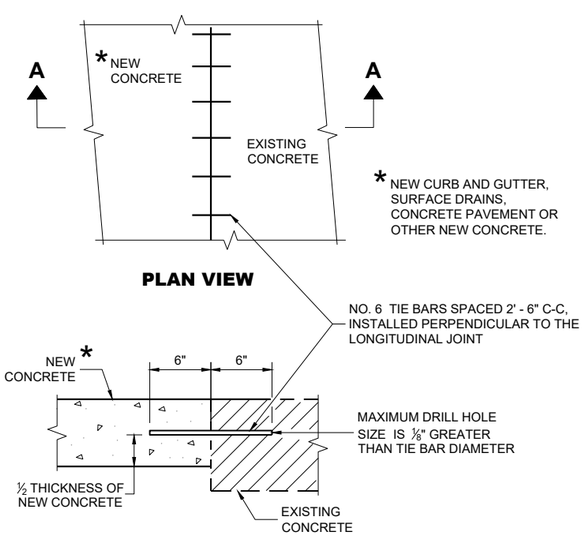

PLAN VIEW

SECTION A - A

TIE BARS DRILLED INTO EXISTING PAVEMENT

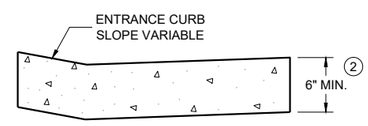

DRIVEWAY ENTRANCE CURB (10)

(WHEN DIRECTED BY THE ENGINEER)

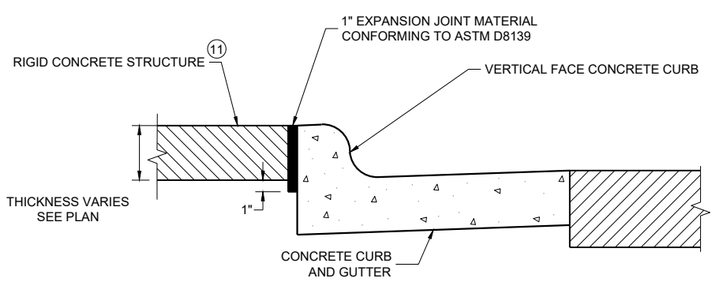

EXPANSION JOINT DETAIL FOR VERTICAL CURB ABUTTING A RIGID STRUCTURE (11)

CONCRETE CURB, TIES AND CURB AND GUTTER APPLICATIONS

STATE OF WISCONSIN
DEPARTMENT OF TRANSPORTATION

APPROVED
February 2025 — DATE
/S/ Rodnery Taylor — ROADWAY STANDARDS DEVELOPMENT UNIT SUPERVISOR
FHWA

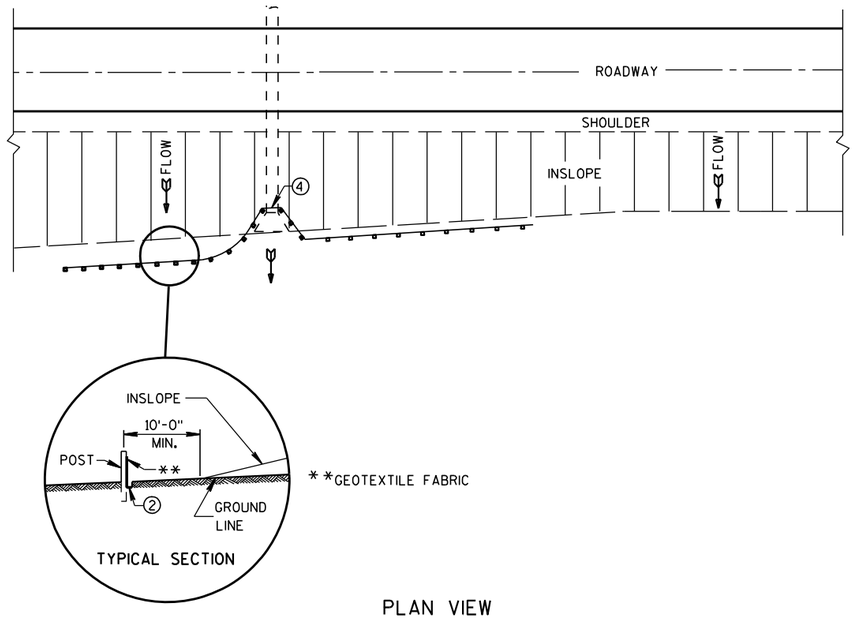

PLAN VIEW

TYPICAL APPLICATION OF SILT FENCE

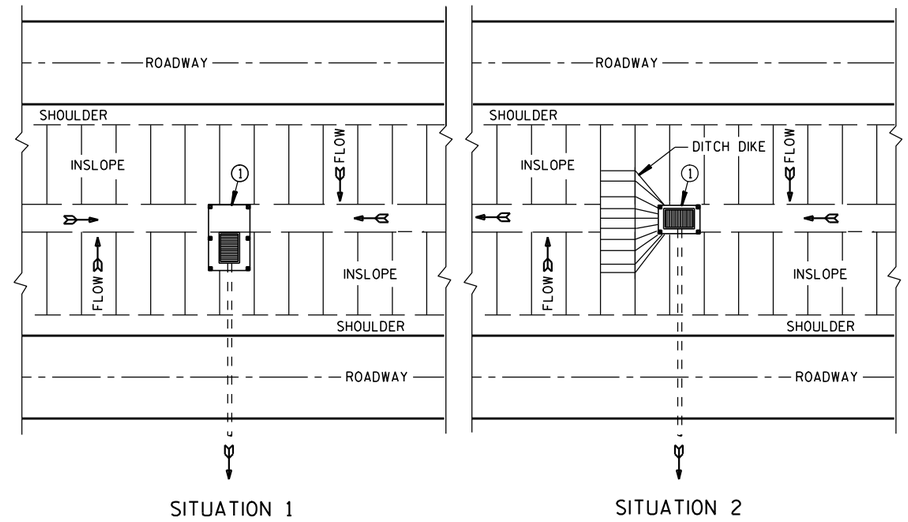

PLAN VIEW

SILT FENCE AT MEDIAN SURFACE DRAINS

GENERAL NOTES

DETAILS OF CONSTRUCTION NOT SHOWN ON THIS DRAWING SHALL CONFORM TO THE PERTINENT REQUIREMENTS OF THE STANDARD SPECIFICATIONS AND APPLICABLE SPECIAL PROVISIONS.

① HORIZONTAL BRACE REQUIRED WITH 2" X 4" WOODEN FRAME OR EQUIVALENT AT TOP OF POSTS.

② FOR MANUAL INSTALLATIONS THE TRENCH SHALL BE A MINIMUM OF 4" WIDE & 6" DEEP TO BURY AND ANCHOR THE GEOTEXTILE FABRIC. FOLD MATERIAL TO FIT TRENCH AND BACKFILL & COMPACT TRENCH WITH EXCAVATED SOIL.

③ WOOD POSTS SHALL BE A MINIMUM SIZE OF 1⅛" X 1⅛" OF OAK OR HICKORY.

④ SILT FENCE TO EXTEND ACROSS THE TOP OF THE PIPE.

⑤ CONSTRUCT SILT FENCE FROM A CONTINUOUS ROLL IF POSSIBLE BY CUTTING LENGTHS TO AVOID JOINTS. IF A JOINT IS NECESSARY USE ONE OF THE FOLLOWING TWO METHODS; A) OVERLAP THE END POSTS AND TWIST, OR ROTATE, AT LEAST 180 DEGREES. B) HOOK THE END OF EACH SILT FENCE LENGTH.

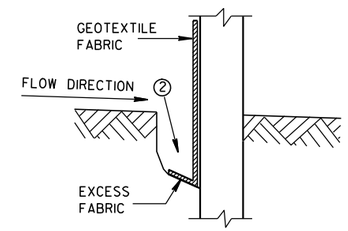

TRENCH DETAIL

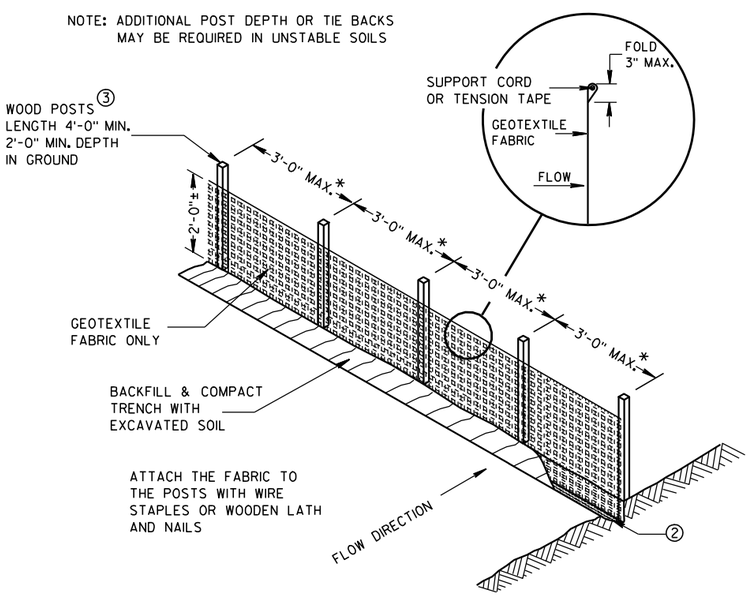

*NOTE: 8'-0" POST SPACING ALLOWED IF A WOVEN GEOTEXTILE FABRIC IS USED.

SILT FENCE

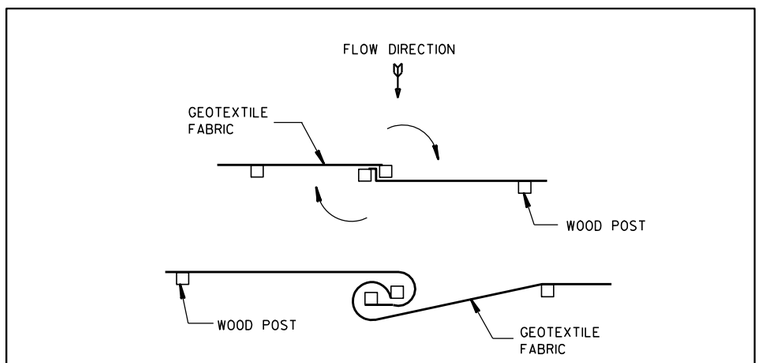

TWIST METHOD

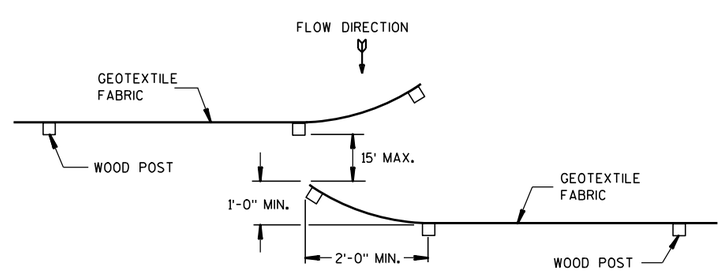

HOOK METHOD

JOINING TWO LENGTHS OF SILT FENCE ⑤

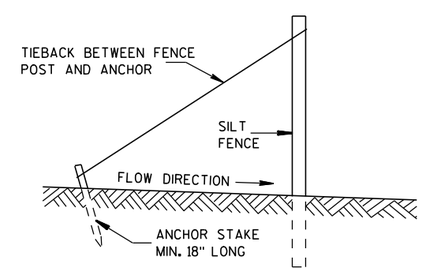

SILT FENCE TIE BACK

(WHEN REQUIRED BY THE ENGINEER)

SILT FENCE
STATE OF WISCONSIN DEPARTMENT OF TRANSPORTATION
APPROVED 4-29-05 DATE — /S/ Beth Cann-- CHIEF ROADWAY DEVELOP ENGINEER FHWA

6

6

S.D.D. 8 E 9-6

S.D.D. 8 E 9-6

METAL APRON ENDWALLS

PIPE DIA. (IN.)	MIN. THICK. (Inches) STEEL	MIN. THICK. (Inches) ALUM.	DIMENSIONS (Inches) A (±1")	B (MAX.)	H (±1")	L (±1 1/2")	L1 ①	L2 ①	W (±2")	APPROX. SLOPE	BODY
12	.064	.060	6	6	6	21	12	17 1/2	24	2 1/2 to 1	1 Pc.
15	.064	.060	7	8	6	26	14	21 3/4	30	2 1/2 to 1	1 Pc.
18	.064	.060	8	10	6	31	15	28 1/4	36	2 1/2 to 1	1 Pc.
21	.064	.060	9	12	6	36	18	29 5/8	42	2 1/2 to 1	1 Pc.
24	.064	.075	10	13	6	41	18	37 1/4	48	2 1/2 to 1	1 Pc.
30	.079	.075	12	16	8	51	18	52 1/4	60	2 1/2 to 1	1 Pc.
36	.079	.105	14	19	9	60	24	59 3/4	72	2 1/2 to 1	2 Pc.
42	.109	.105	16	22	11	69	24	75 5/8	84	2 1/2 to 1	2 Pc.
48	.109	.105	18	27	12	78	24	81	90	2 1/4 to 1	3 Pc.
54	.109	.105	18	30	12	84	30	85 1/2	102	2 1/4 to 1	3 Pc.
60	.109×	.105×	18	33	12	87	—	—	114	2 to 1	3 Pc.
66	.109×	.105×	18	36	12	87	—	—	120	2 to 1	3 Pc.
72	.109×	.105×	18	39	12	87	—	—	126	2 to 1	3 Pc.
78	.109×	.105×	18	42	12	87	—	—	132	1 1/2 to 1	3 Pc.
84	.109×	.105×	18	45	12	87	—	—	138	1 1/2 to 1	3 Pc.
90	.109×	.105×	18	37	12	87	—	—	144	1 1/2 to 1	3 Pc.
96	.109×	.105×	18	35	12	87	—	—	150	1 1/2 to 1	3 Pc.

× EXCEPT CENTER PANEL
SEE GENERAL NOTES

REINFORCED CONCRETE APRON ENDWALLS

PIPE DIA. (IN.)	DIMENSIONS (Inches) T	A	B	C	D	E	G	APPROX. SLOPE
12	2	4	24	48 7/8	72 7/8	24	2	3 to 1
15	2 1/4	6	27	46	73	30	2 1/4	3 to 1
18	2 1/2	9	27	46	73	36	2 1/2	3 to 1
21	2 3/4	9	36	37 1/2	73 1/2	42	2 3/4	3 to 1
24	3	9 1/2	43 1/2	30	73 1/2	48	3	3 to 1
27	3 1/4	10 1/2	49 1/2	24	73 1/2	54	3 1/4	3 to 1
30	3 1/2	12	54	19 3/4	73 1/2	60	3 1/2	3 to 1
36	4	15	63	34 3/4	97 3/4	72	4	3 to 1
42	4 1/2	21	63	35	98	78	4 1/2	3 to 1
48	5	24	72	26	98	84	5	3 to 1
54	5 1/2	27	65	*33 1/4-**35	*98 1/4-**100	90	5 1/2	2 2/5 to 1
60	6	*30-**35	60	39	99	96	5	2 to 1
66	6 1/2	*24-**30	*72-**78	*21-**27	99	102	5 1/2	2 to 1
72	7	*24-**36	78	21	99	108	6	2 to 1
78	7 1/2	*24-**36	78	21	99	114	6 1/2	2 to 1
84	8	36	90 1/2	21	111 1/2	120	6 1/2	1 1/2 to 1
90	8 1/2	41	87 1/2	24	111 1/2	132	6 1/2	1 1/2 to 1

*MINIMUM
**MAXIMUM

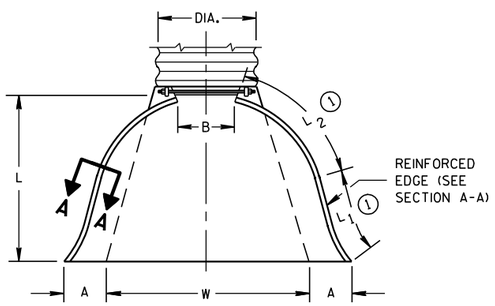

PLAN VIEW

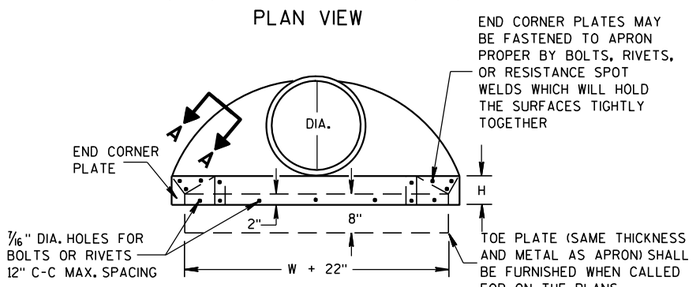

END VIEW

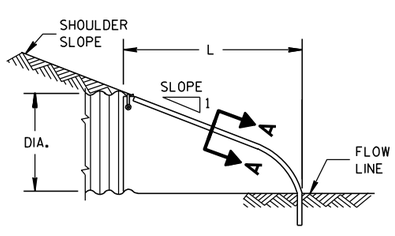

SIDE ELEVATION

METAL ENDWALLS

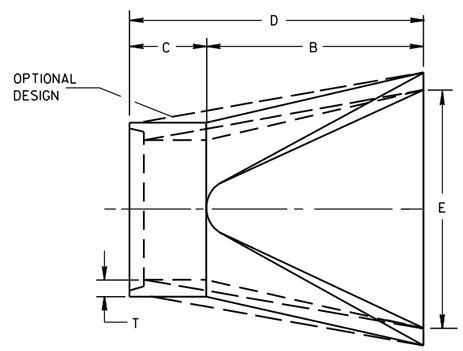

PLAN

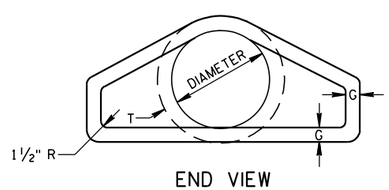

END VIEW

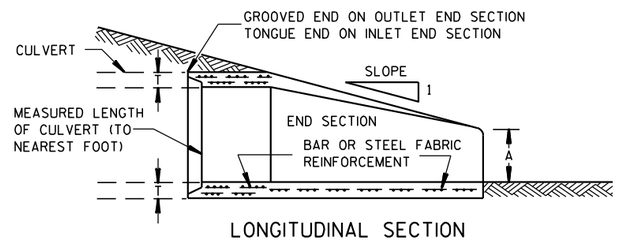

LONGITUDINAL SECTION

CONCRETE ENDWALLS

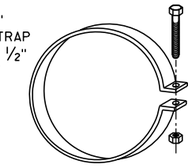

ALTERNATE FOR TYPE 1 CONNECTION

END SECTION CONNECTOR STRAP

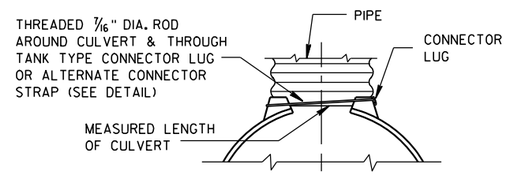

TYPE 1
FOR 12" THRU 24" CORR. PIPE

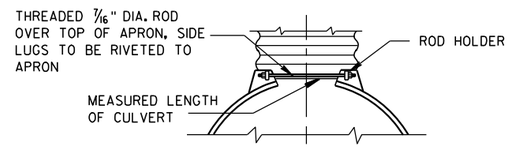

TYPE 2
FOR 30" THRU 96" CORR. PIPE

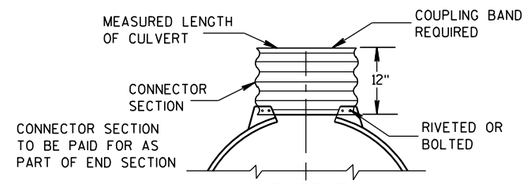

TYPE 3
FOR 42" THRU 96" CORR. PIPE

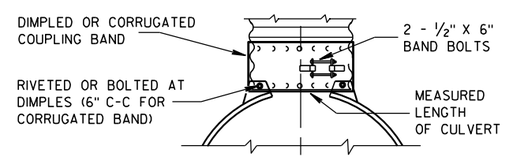

TYPE 5
ALTERNATE FOR:
ALL SIZES CORRUGATED CIRCULAR PIPE

NOTE: DIMPLED BAND FITS OVER OUTSIDE OF ENDWALL, AND CORRUGATED BAND FITS INSIDE ENDWALL. DIMPLED BAND MAY BE USED WITH HELICALLY CORRUGATED PIPE.

FOR CIRCUMFERENTIALLY CORRUGATED PIPE USE ENDWALL CONNECTION DETAILS 1, 2, 3 OR 5 AS APPLICABLE.

FOR HELICALLY CORRUGATED PIPE USE ENDWALL CONNECTION DETAILS 1, 2 OR 5.

FOR HELICALLY CORRUGATED PIPES WITH TWO CIRCUMFERENTIAL CORRUGATIONS AT EACH END USE ENDWALL CONNECTION DETAILS 1, 2 OR 3.

CONNECTION DETAILS

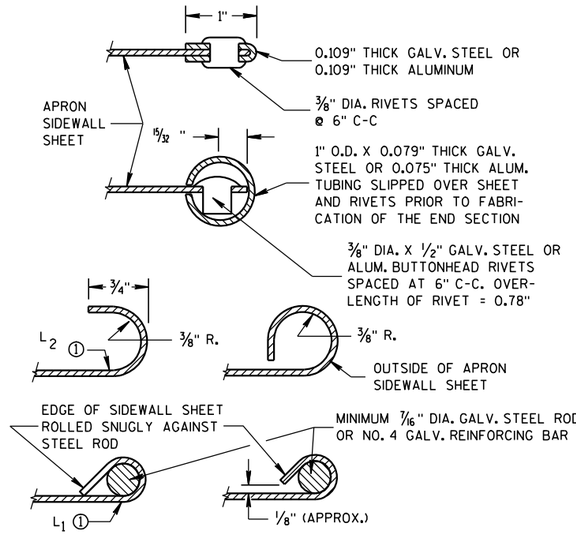

SECTION A-A

GENERAL NOTES

DETAILS OF CONSTRUCTION, MATERIALS AND WORKMANSHIP NOT SHOWN ON THIS DRAWING SHALL CONFORM TO THE PERTINENT REQUIREMENTS OF THE STANDARD SPECIFICATIONS AND THE APPLICABLE SPECIAL PROVISIONS.

CONCRETE CULVERT ENDWALLS MAY NOT BE USED WITH GALVANIZED STEEL OR ALUMINUM CULVERT PIPE OR VISE VERSA. GALVANIZED STEEL OR ALUMINUM ENDWALLS SHALL NORMALLY BE INSTALLED ON CULVERT PIPE OF THE SAME METAL.

ALL THREE PIECE STEEL APRON ENDWALLS FOR 60" DIAMETER PIPE AND LARGER SHALL HAVE 0.109" SIDES AND 0.138" CENTER PANELS. ALL THREE PIECE ALUMINUM APRON ENDWALLS FOR 60" DIAMETER PIPE AND LARGER SHALL HAVE 0.105" SIDES AND 0.134" CENTER PANELS. THE WIDTH OF CENTER PANELS SHALL BE GREATER THAN 20 PERCENT OF THE PIPE PERIMETER.

LAP SEAMS SHALL BE TIGHTLY JOINED BY GALVANIZED RIVETS OR BOLTS FOR STEEL UNITS AND ALUMINUM RIVETS AND BOLTS FOR ALUMINUM UNITS. FOR THE 60" THROUGH 96" DIAMETER APRON ENDWALL SIZES, THE REINFORCED EDGES AND CENTER PANEL SEAMS SHALL BE FURTHER REINFORCED WITH GALVANIZED STEEL OR ALUMINUM STIFFENER ANGLES. THE ANGLES SHALL BE ATTACHED BY GALVANIZED NUTS AND BOLTS FOR STEEL UNITS AND ALUMINUM NUTS AND BOLTS FOR ALUMINUM UNITS.

WHERE TWO OR MORE PIPES WITH APRON ENDWALLS ARE LAID ADJACENT TO EACH OTHER, THEY SHALL BE SEPARATED BY A DISTANCE SUFFICIENT TO PROVIDE A MINIMUM CLEARANCE OF 6 INCHES BETWEEN APRON ENDWALLS.

① FOR PIPE SIZES UP TO 60" DIAMETER, A 180° ROLLED EDGE MAY BE USED INSTEAD OF STEEL ROD REINFORCEMENT. SEE SECTION A-A.

APRON ENDWALLS FOR CULVERT PIPE

STATE OF WISCONSIN
DEPARTMENT OF TRANSPORTATION

APPROVED
11/30/94 — DATE
/S/ Rory L. Rhinesmith — CHIEF ROADWAY DEVELOPMENT ENGINEER
FHWA

6
S.D.D. 8 F 1-11

GENERAL NOTES

DETAILS OF CONSTRUCTION, MATERIALS AND WORKMANSHIP NOT SHOWN ON THIS DRAWING SHALL CONFORM TO THE PERTINENT REQUIREMENTS OF THE STANDARD SPECIFICATIONS AND SPECIAL PROVISIONS.

TRANSVERSE JOINT DETAILS ARE SHOWN ELSEWHERE IN THE PLAN.

FINISH THE SHOULDER PAVEMENT CONFORMING TO SUBSECTION 415.3.8 OF THE STANDARD SPECIFICATIONS.

TIE BARS SHALL CONFORM TO SUBSECTION 505.2.4 OF THE STANDARD SPECIFICATIONS.

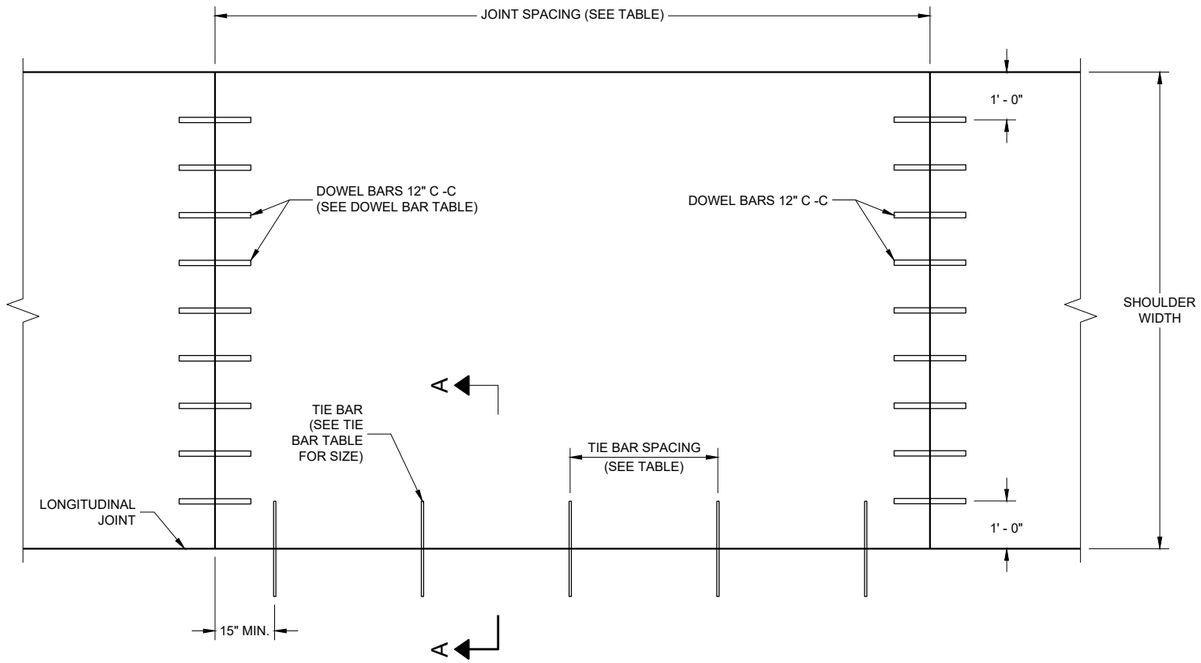

PLAN VIEW

CONCRETE PAVEMENT SHOULDER

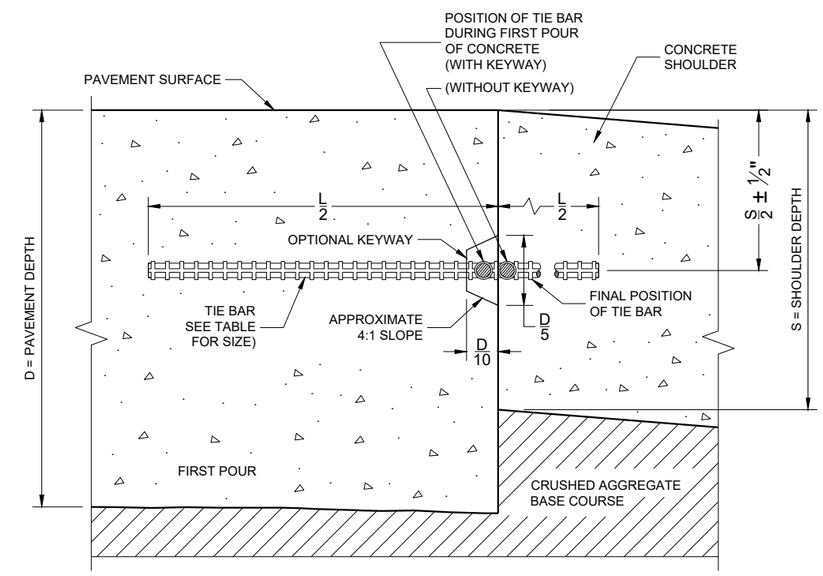

SECTION A - A

LONGITUDINAL CONSTRUCTION JOINT

TIE BAR TABLE

PAVEMENT DEPTH (D)	TIE BAR SIZE	TIE BAR LENGTH (L)	MAX. TIE BAR SPACING
<10 ½"	NO. 4	30"	36"
>10 ½"	NO. 5	36"	36"
	NO. 4 *	30"	24" **

* SUBSTITUTE BENT BATS AT LONGITUDINAL JOINTS WHEN EQUIPMENT LIMITATIONS DURING CONSTRUCTION WARRANT (e.g. AUXILIARY LANES OR TURN LANES.

** CONFORM TO 15" MINIMUM SPACING FROM TRANSVERSE JOINTS; SPACING BETWEEN TIE BARS WILL BE 30" AT TRANSVERSE JOINTS.

PAVEMENT DEPTH, DOWEL BAR SIZE AND JOINT SPACING TABLE

PAVEMENT DEPTH (D)	DOWEL BAR DIAMETER ***	CONTRACTION JOINT SPACING
6", 6 ½"	NONE	12"
7", 7 ½"	1"	14"
8" & ABOVE	1 ¼"	15"

*** FOR DOWELED CONCRETE SHOULDERS WITH TRAPEZOIDAL CROSS SECTIONS, CHOSE THE APPROPRIATE DOWEL BAR DIAMETER BASED ON THE SMALLER PAVEMENT DEPTH (LIKELY THE OUTSIDE EDGE OF THE SHOULDER). IF USING BASKETS, USE BASKETS FRO THE AVERAGE THICKNESS OF THE CROSS SECTION.

CONCRETE PAVEMENT SHOULDERS

STATE OF WISCONSIN
DEPARTMENT OF TRANSPORTATION

APPROVED
November 2022 — DATE
/S/ Peter Kemp — PAVEMENT SUPERVISOR

FHWA

GENERAL NOTES

SDD 13A5, SHEET "b" SHOWS THE LOCATION OF THE RUMBLE STRIPS AT RAMP AND GORE LOCATIONS.

RUMBLE STRIPS ON EXPRESSWAYS:
DO NOT INSTALL SHOULDER RUMBLE STRIPS ACROSS SIDE ROAD INTERSECTIONS, COMMERCIAL AND PRIVATE DRIVEWAYS, ADJACENT TO RIGHT TURN LANES, LEFT TURN LANES, TURN LANE TAPERS, 25' IN ADVANCE OF BRIDGE DECKS, 25' IN ADVANCE OF BRIDGE APPROACHES, OR 100 FEET IN ADVANCE OF RAILROAD CROSSINGS.

(1) CONCRETE PAVEMENT - RUMBLE STRIPS SHALL BE A MINIMUM OF 6 INCHES AWAY FROM TRANSVERSE JOINTS.

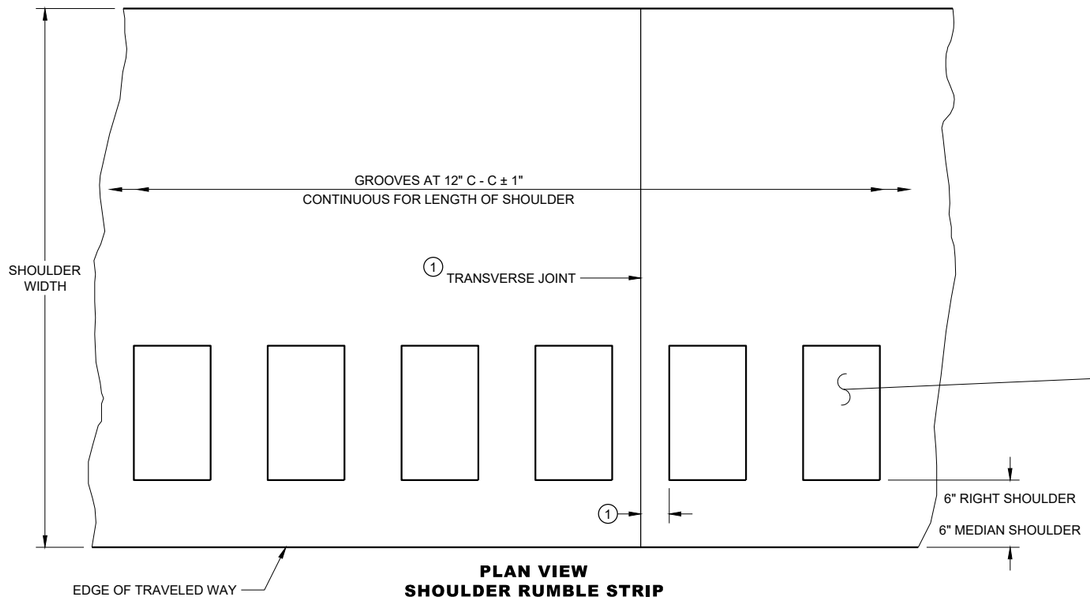

PLAN VIEW
SHOULDER RUMBLE STRIP

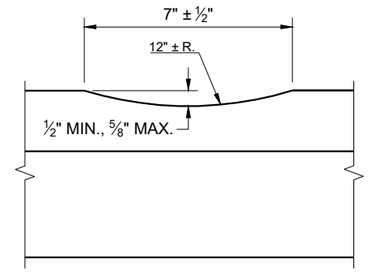

SECTION A - A

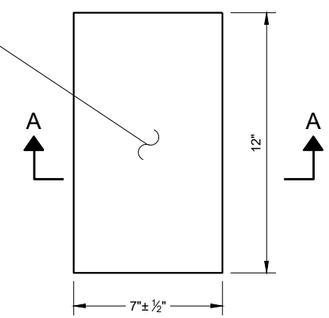

PLAN VIEW
(SINGLE GROOVE)

PLACEMENT DETAIL FOR RUMBLE STRIP

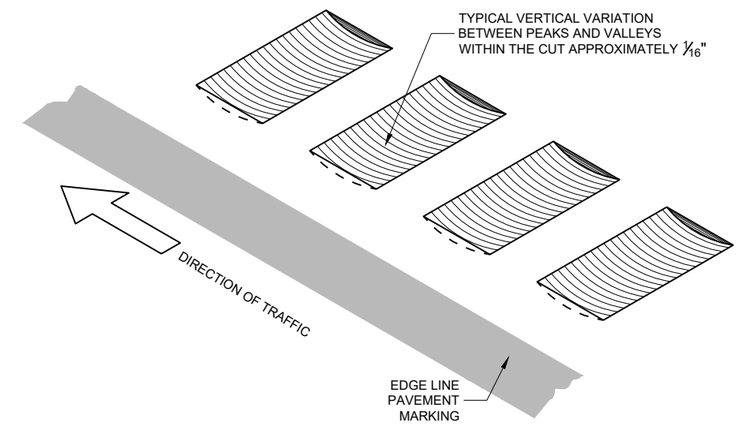

ISOMETRIC

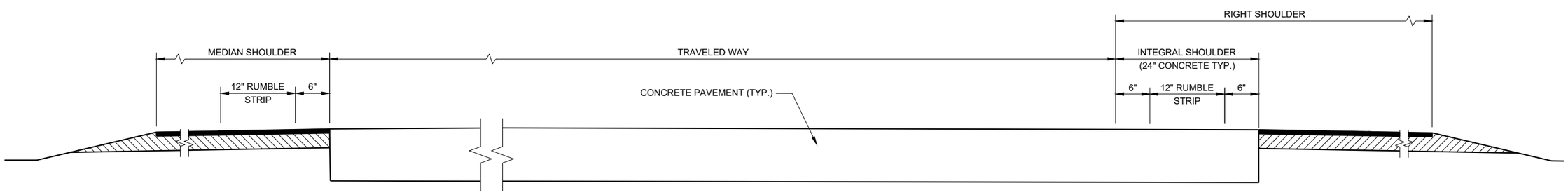

SECTION VIEW

TYPICAL SHOULDER RUMBLE STRIPS
(ONE ROADWAY IS SHOWN)

SHOULDER RUMBLE STRIPS, DIVIDED ROADWAY

STATE OF WISCONSIN
DEPARTMENT OF TRANSPORTATION

6
SDD 13A05-06a

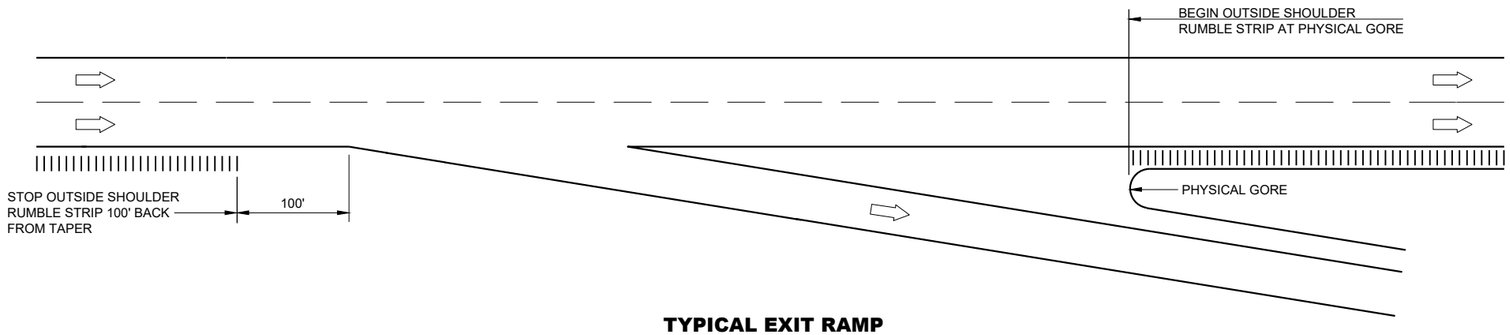

TYPICAL EXIT RAMP

GENERAL NOTES

NO RUMBLE STRIP ON EXIT, DIRECTIONAL OR ENTRANCE RAMPS, EXCEPT NEAR THE ENTRANCE TAPER END AND ALONG THE PARALLEL RAMP AREA AS SHOWN.

RUMBLE STRIPS ON EXPRESSWAYS:
DO NOT INSTALL SHOULDER RUMBLE STRIPS ACROSS SIDE ROAD INTERSECTIONS, COMMERCIALAND PRIVATE DRIVEWAYS, ADJACENT TO RIGHT TURN LANES, LEFT TURN LANES, TURN LANE TAPERS, 25' IN ADVANCE OF BRIDGE DECKS, 25' IN ADVANCE OF BRIDGE APPROACHES, OR 100 FEET IN ADVANCE OF RAILROAD CROSSINGS.

LEGEND

DIRECTION OF TRAFFIC

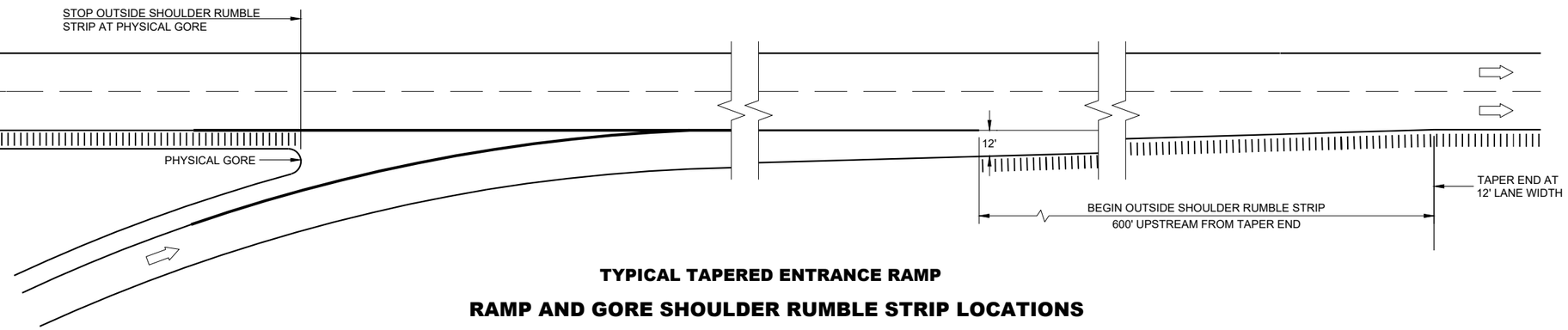

TYPICAL TAPERED ENTRANCE RAMP

RAMP AND GORE SHOULDER RUMBLE STRIP LOCATIONS

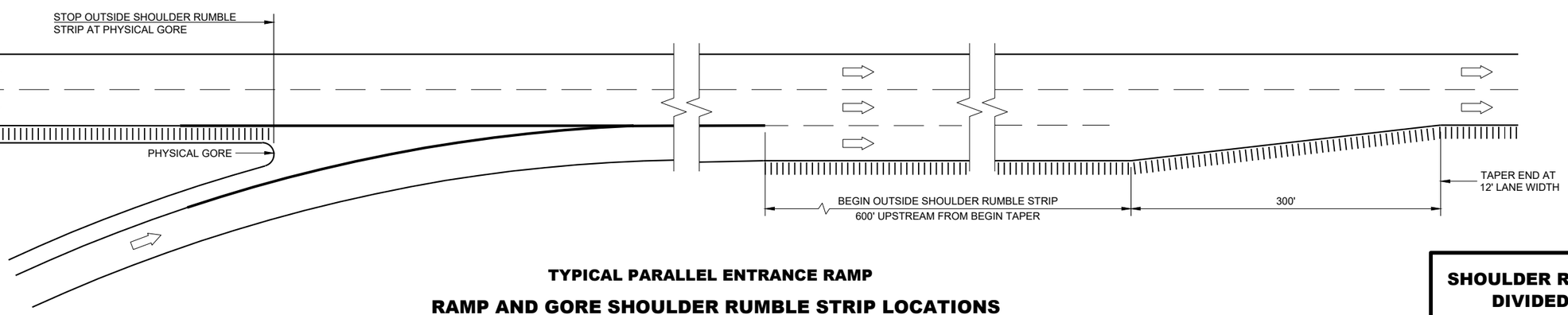

TYPICAL PARALLEL ENTRANCE RAMP

RAMP AND GORE SHOULDER RUMBLE STRIP LOCATIONS

SHOULDER RUMBLE STRIPS, DIVIDED ROADWAY

STATE OF WISCONSIN
DEPARTMENT OF TRANSPORTATION

APPROVED
May 2023 — DATE
/S/ Rodney Taylor — ROADWAY DESIGN STANDARDS UNIT SUPERVISOR
FHWA

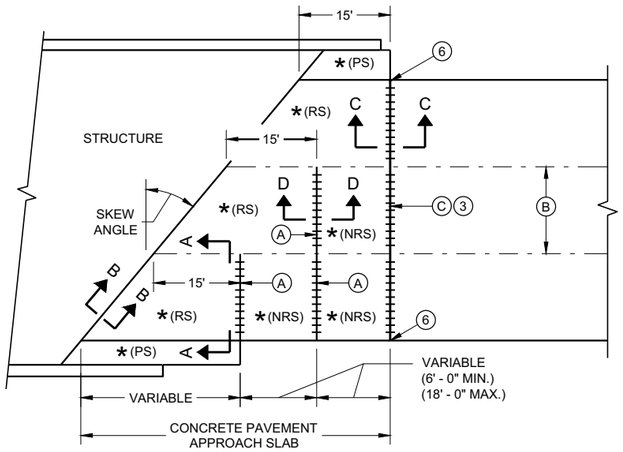

SKEWED APPROACH
(PAVEMENT MORE THAN TWO LANES)

* (RS) = REINFORCED CONCRETE SLAB

* (PS) = PAVED CONCRETE SHOULDER OR CONCRETE DRAINAGE SLAB

* (NRS) - NON - REINFORCED CONCRETE SLAB

*** STANDARD DOWEL BAR DIAMETER (SEE SDD 13C11 AND SDD 13C13)

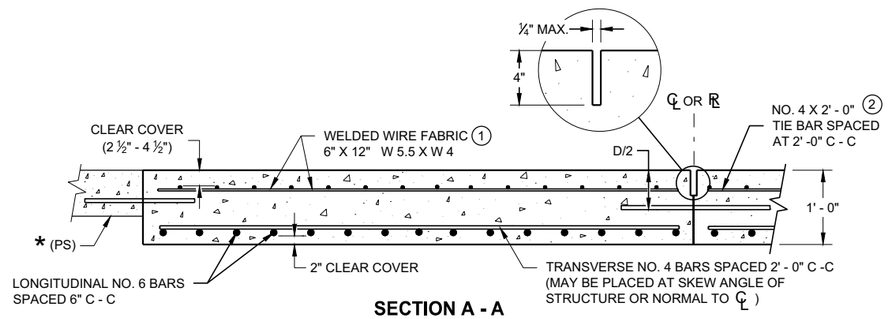

SECTION A - A
REINFORCEMENT POSITIONING DETAIL

GENERAL NOTES

THE CONTRACTOR MAY SPLICE NO. 6 BARS IN THE APPROACH SLAB FOR SKEWED STRUCTURES ONLY. STAGGER SPLICES WITH A MAXIMUM OF ONE SPLICE PER BAR. THE LENGTH OF LAP IS 20 INCHES.

TACK WELD DOWEL BARS TO THE BASKETS ON ALTERNATE ENDS.

1. THE CONTRACTOR MAY USE NO. 4 BARS SPACED AT 2' - 0 " C - C IN BOTH THE LONGITUDINAL AND TRANSVERSE DIRECTIONS FOR TOP REINFORCEMENT AS AN ALTERNATIVE TO THE WELDED WIRE FABRIC.
2. THE CONTRACTOR MAY OMIT THE BARS BETWEEN REINFORCED SLABS WHERE SLAB REINFORCEMENT BARS EXTEND ACROSS THE CENTERLINE OR REFERENCE LINE.
3. DO NOT CONSTRUCT AN EXPANSION JOINT OR INSTALL DOWEL BARS WHEN ABUTTING AN HMA PAVEMENT.
4. USE A JOINT SEALANT CONFORMING TO STANDARD SPECIFICATION 415.2.6.
5. PLACE EXPANSION CAP ON THE END OF THE DOWEL THAT IS NOT TACK WELDED TO THE BASKET. DO NOT FORCE DOWEL BAR PAST THE DOWEL STOP.
6. EXTEND EXPANSION JOINT THROUGH ANY ADJACENT TIED CONCRETE.

A. STANDARD CONTRACTION JOINT NORMAL TO ℄ OR ℞.

B. STANDARD LONGITUDINAL JOINT WITH TIE BARS.

C. 1 ½" EXPANSION JOINT WITH DOWEL BARS NORMAL TO ℄ OR ℞ .

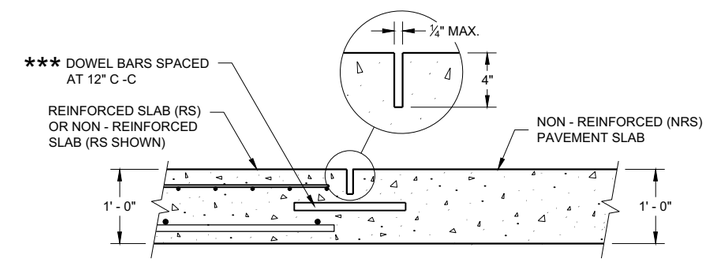

SECTION D - D
CONTRACTION JOINT

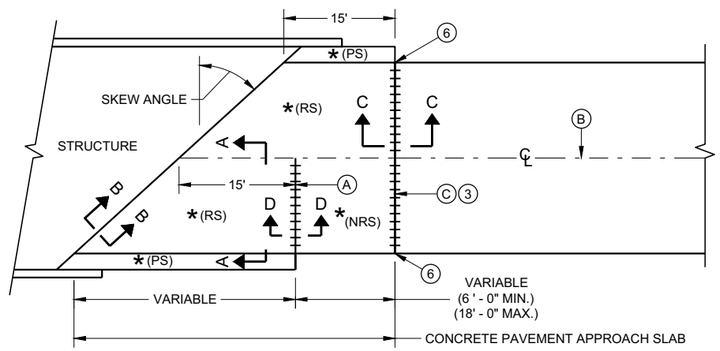

SKEWS > 20°
(PAVEMENT WIDTH ≤ 30')

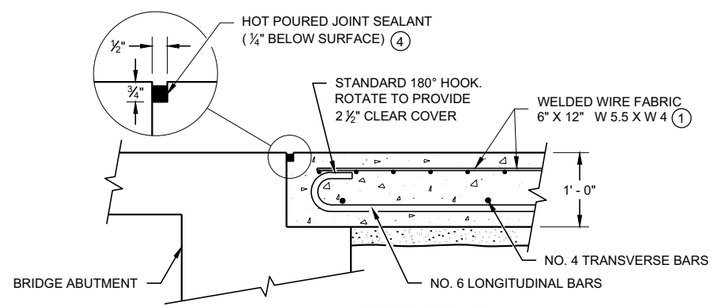

SECTION B - B
BEND DETAIL
BOTTOM REINFORCEMENT

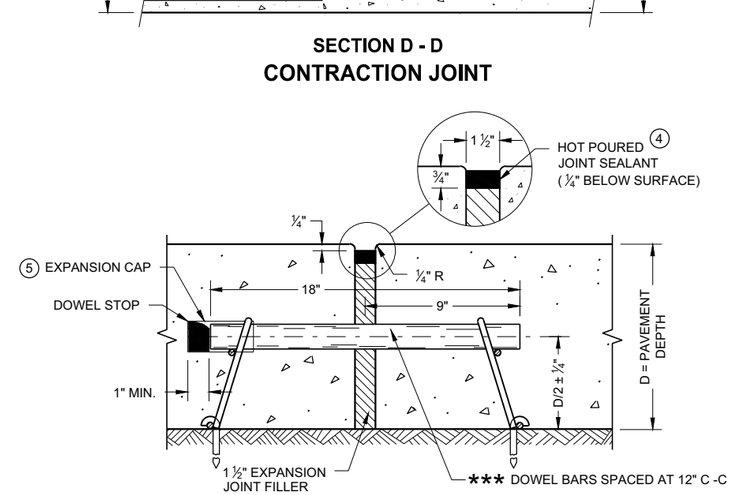

EXPANSION JOINT DETAIL

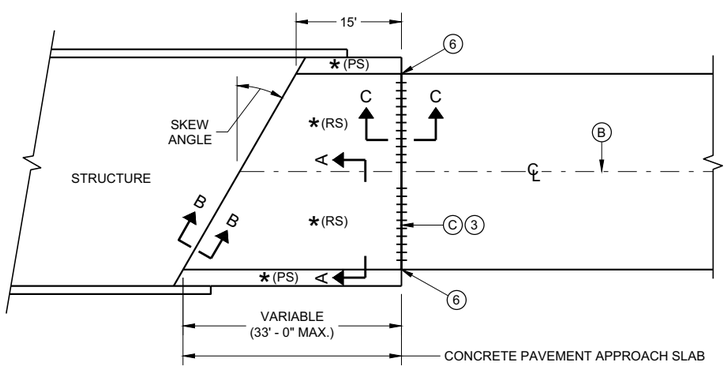

SKEWS ≤ 20°
(PAVEMENT WIDTH ≤ 30')

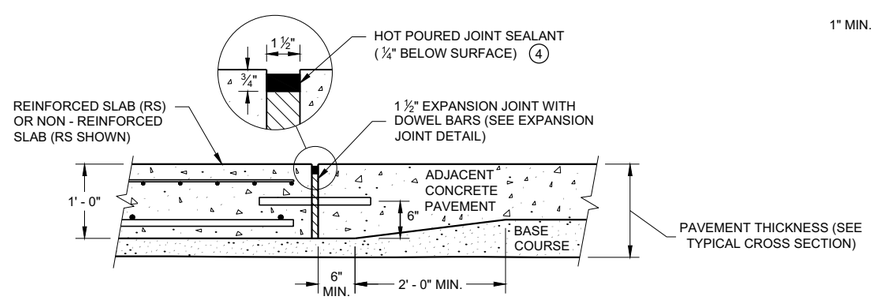

SECTION C - C
TRANSITION DETAIL
APPROACH SLAB TO ADJACENT PAVEMENT

APPROACH SLAB AND ADJACENT PAVEMENT

CONCRETE PAVEMENT APPROACH SLAB

STATE OF WISCONSIN
DEPARTMENT OF TRANSPORTATION

APPROVED
November 2018 /S/ Peter Kemp, P.E.
DATE PAVEMENT SUPERVIS
FHWA

6

SDD 13B02 - 09a

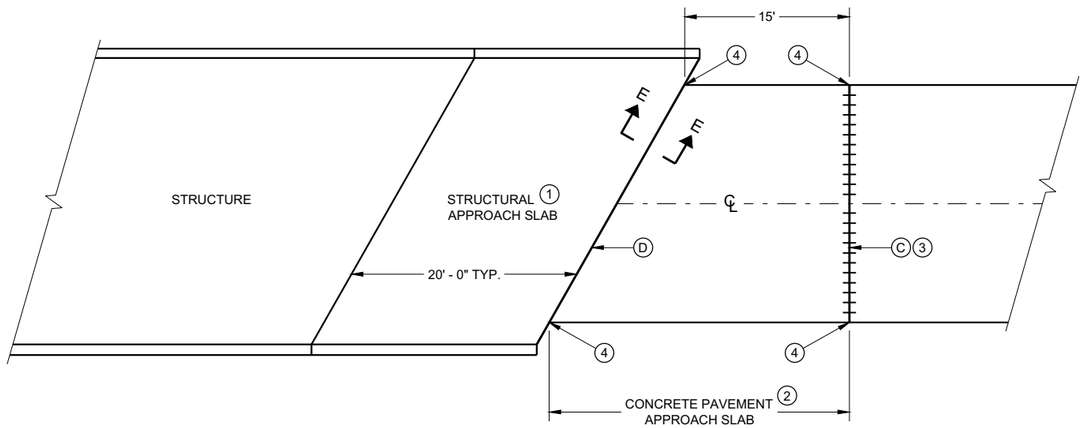

BRIDGE APPROACHES

GENERAL NOTES

ALL PROJECTS THAT INVOLVE A STRUCTURAL APPROACH SLAB WILL ALSO HAVE A CONCRETE PAVEMENT APPROACH SLAB.

1. SEE BRIDGE PLAN.
2. CONFORM TO SDD 13B02 SHEET A FOR CONCRETE PAVEMENT APPROACH SLAB DETAILS
3. DO NOT CONSTRUCT AN EXPANSION JOINT OR INSTALL DOWEL BARS WHEN ABUTTING AN HMA PAVEMENT.
4. EXTEND EXPANSION JOINT THROUGH ANY ADJACENT TIED CONCRETE.

C. 1 ½" EXPANSION JOINT WITH DOWEL BARS NORMAL TO ℄ OR ℞.

D. 1 ½" EXPANSION JOINT (NO DOWELS)

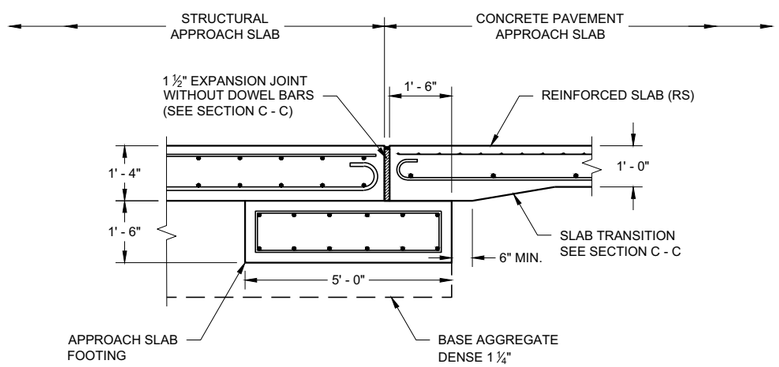

SECTION E - E
FOOTING DETAIL
STRUCTURAL APPROACH SLAB TO CONCRETE BRIDGE APPROACH

6

6

SDD 13B02 - 09b

SDD 13B02 - 09b

STRUCTURAL APPROACH SLAB AND CONCRETE PAVEMENT APPROACH SLAB

STATE OF WISCONSIN
DEPARTMENT OF TRANSPORTATION

APPROVED
November 2018 /S/ Peter Kemp P.E.
DATE PAVEMENT SUPERVISOR
FHWA

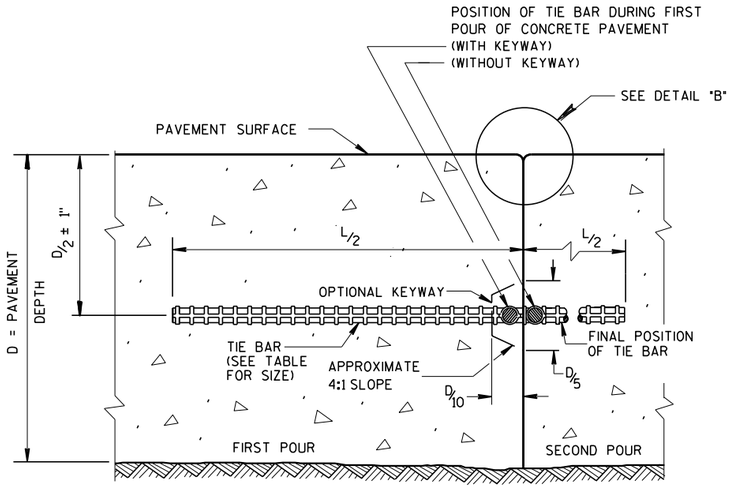

CONSTRUCTION JOINT

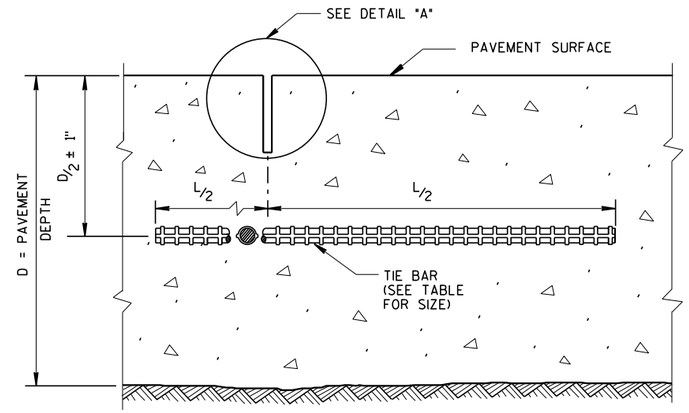

SAWED JOINT

GENERAL NOTES

CREATE A LONGITUDINAL JOINT FOR PAVEMENT WIDTHS GREATER THAN 15 FEET.

CORRELATE LONGITUDINAL JOINTS WITH LANE LINES WHEN POSSIBLE.

1. ANCHOR TIE BARS INTO DRILLED HOLES WITH AN EPOXY.
2. PAVEMENT THAT WAS IN PLACE PRIOR TO THE CONTRACT.

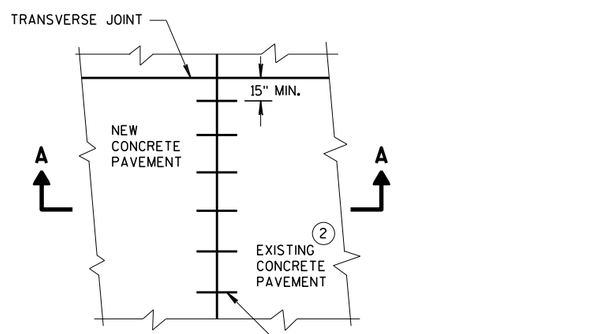

PLAN VIEW

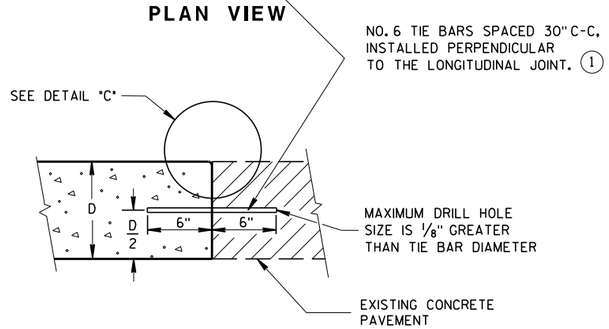

SECTION A-A
LONGITUDINAL CONSTRUCTION JOINT TIE BARS ANCHORED INTO EXISTING PAVEMENT

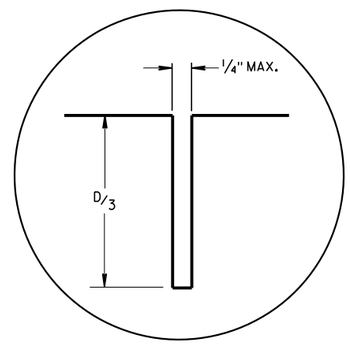

DETAIL "A"

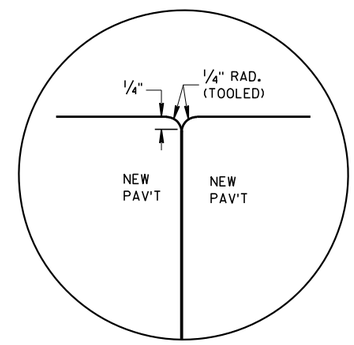

DETAIL "B"

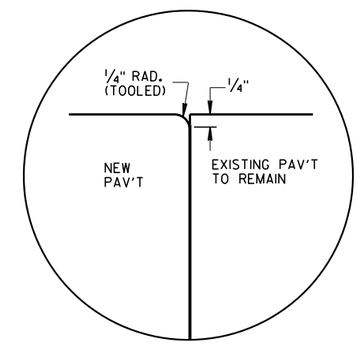

DETAIL "C"

TIE BAR TABLE

PAVEMENT DEPTH (D)	TIE BAR SIZE	TIE BAR LENGTH (L)	MAX. TIE BAR SPACING
< 10 1/2"	NO. 4	30"	36"
≥ 10 1/2"	NO. 5	36"	36"
	NO. 4 *	30"	24" **

* SUBSTITUTE BENT BARS AT LONGITUDINAL JOINTS WHEN EQUIPMENT LIMITATIONS DURING CONSTRUCTION WARRANT (e.g. AUXILIARY LANES OR TURN LANES)

** CONFORM TO 15" MINUMUM SPACING FROM TRANSVERSE JOINTS; SPACING BETWEEN TIE BARS WILL BE 30" AT TRANSVERSE JOINTS.

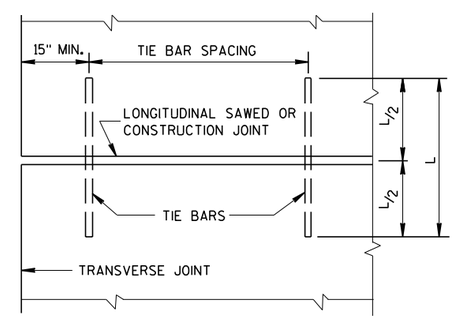

PLAN VIEW
SHOWING LOCATION OF TIE BARS

CONCRETE PAVEMENT
LONGITUDINAL JOINTS AND TIES

STATE OF WISCONSIN
DEPARTMENT OF TRANSPORTATION

APPROVED
March 2018 — DATE
/S/ Peter Kerr — PAVEMENT SUPE
FHWA

6

S.D.D. 13 C 1-19

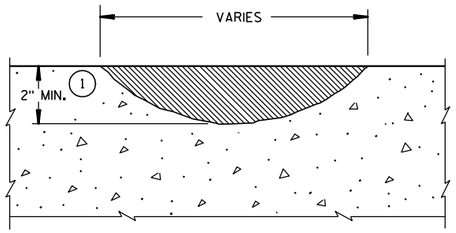

PROFILE VIEW

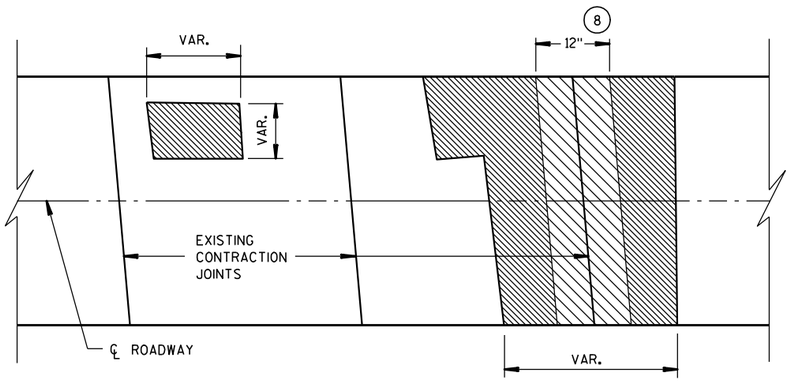

PLAN VIEW

SURFACE REPAIR

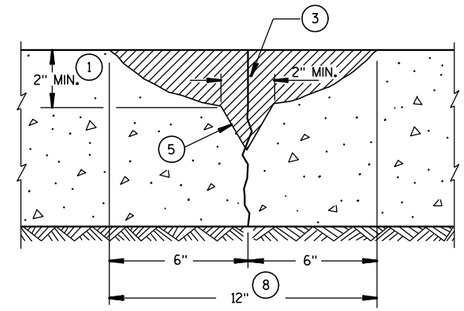

SECTION A-A

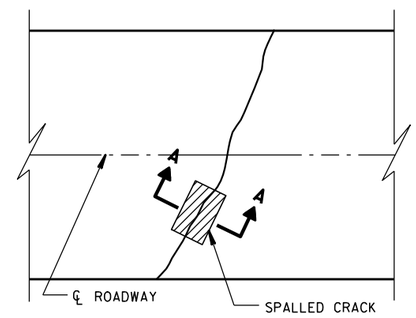

PLAN VIEW

CRACK REPAIR

GENERAL NOTES

1. REMOVE ALL CONCRETE, TO LIMITS SHOWN, TO A MAXIMUM OF ½ THE PAVEMENT DEPTH OR TOP OF DOWELS.
2. IF REPAIR IS DEEPER THAN ANTICIPATED SAWCUT, COMPRESSION RELIEF MATERIAL MUST BE USED. THE THICKNESS OF COMPRESSION RELIEF MATERIAL MUST BE EQUAL TO OR GREATER THAN THE WIDTH OF THE JOINT OR CRACK (1/4"). THIS MATERIAL SHOULD EXTEND FULL DEPTH OF THE REPAIR.
3. COMPRESSION RELIEF MATERIAL MUST BE USED. THE THICKNESS OF COMPRESSION RELIEF MATERIAL MUST BE EQUAL TO OR GREATER THAN THE WIDTH OF THE JOINT OR CRACK (1/4"). THIS MATERIAL SHOULD EXTEND FULL DEPTH OF THE REPAIR.
4. CLEAN, DRY SAND WHEN NECESSARY.
5. REMOVE UNSOUND MATERIAL BY CHIPPING AT 1:1 SLOPE.
6. 1/4" MINIMUM PREFORMED JOINT FILLER IF ADJACENT TO CONCRETE. EDGING REQUIRED. FULLY FORMED EDGE IF ADJACENT TO SHOULDER.
7. PAVEMENT TIES AS SHOWN. ALL EMBEDMENTS 6" MINIMUM AND INSTALLED WITH GROUT.
8. OVER 12" (NOMINAL WIDTH) WILL BE PAID AS SURFACE REPAIR.
9. PAID AS JOINT OR CRACK REPAIR.
10. FULL-DEPTH ADJUSTMENT SHALL BE CHIPPED TO BOTTOM OF PCC PAVEMENT AT 1:1 SLOPE.
11. BEYOND 18" WILL BE PAID AS SURFACE REPAIR.

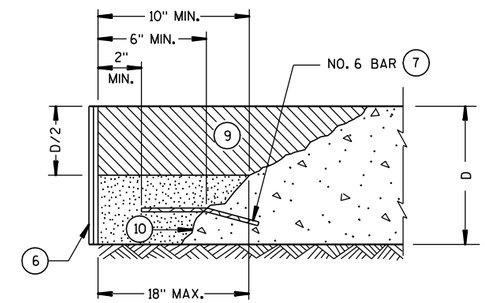

PROFILE VIEW

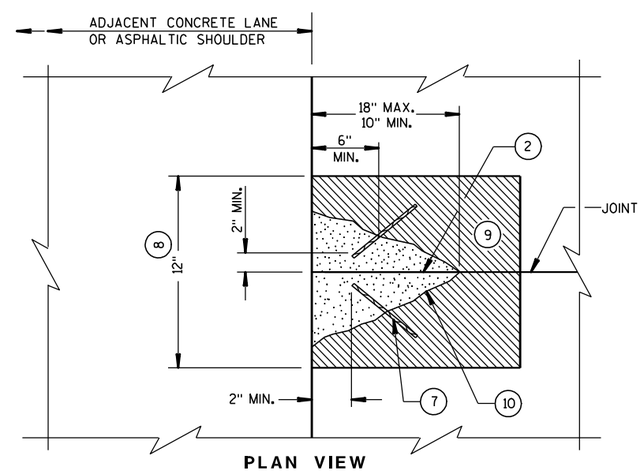

PLAN VIEW

FULL DEPTH REPAIR ADJUSTMENT

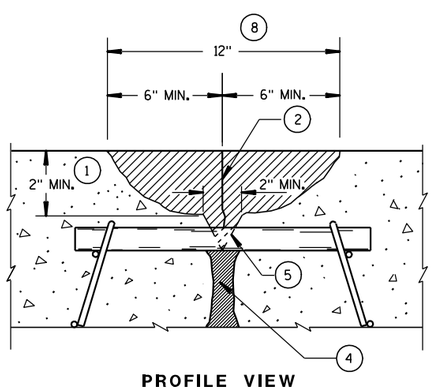

PROFILE VIEW

JOINT REPAIR

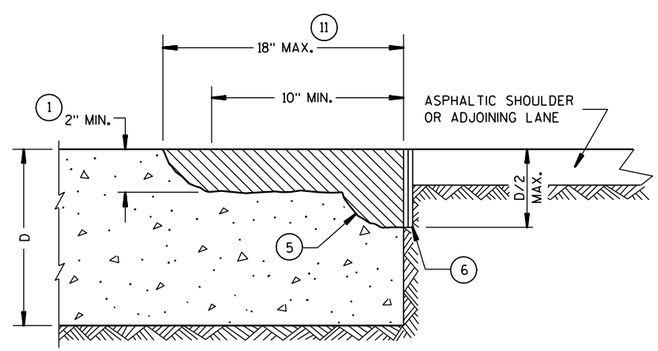

PROFILE VIEW

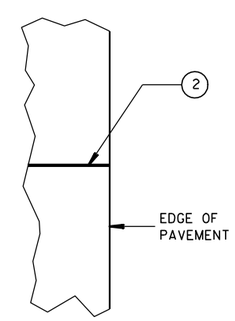

PLAN VIEW

EDGE REPAIR

CONCRETE PAVEMENT
PARTIAL DEPTH REPAIR

STATE OF WISCONSIN
DEPARTMENT OF TRANSPORTATION

APPROVED

3/21/03 — DATE

/S/ Bill Duckett — PAVEMENT ENGIN

FHWA

6

6

S.D.D. 13 C 8-2

S.D.D. 13 C 8-2

GENERAL NOTES

SAW CUT, DRILL, AND LIFT OUT EXISTING CONCRETE PAVEMENT WITHIN THE BOUNDARIES OF CONCRETE REPAIR AREAS. THE CONTRACTOR MAY MAKE ADDITIONAL SAW CUTS INSIDE THE REPAIR LIMITS TO REDUCE WEIGHT AND SIZE OF CONCRETE PIECES.

PROVIDE A 6 FOOT MINIMUM DISTANCE FROM BOUNDARIES OF CONCRETE REPAIR AREA TO ADJACENT TRANSVERSE JOINT OR CRACK.

THE LENGTH OF THE REPAIRS MAY VARY FROM THE DIMENSIONS SHOWN IF THE EXISTING CONCRETE PAVEMENT IS NON-DOWELED AND THE PAVEMENT IS TO BE OVERLAID AFTER REPAIRING.

(1) DOWEL BARS MAY NOT BE PRESENT.

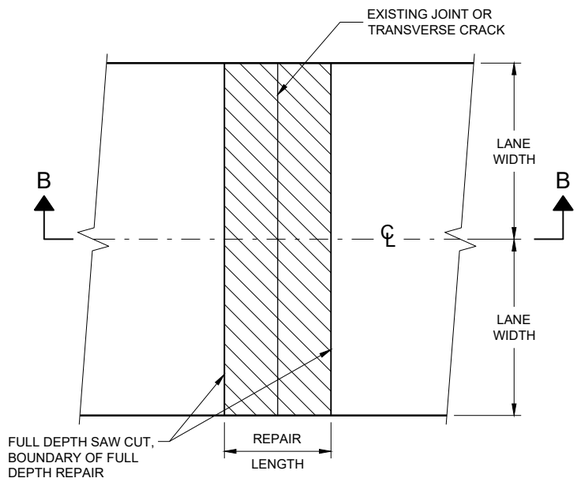

PLAN VIEW (DOUBLE LANE REPAIR)

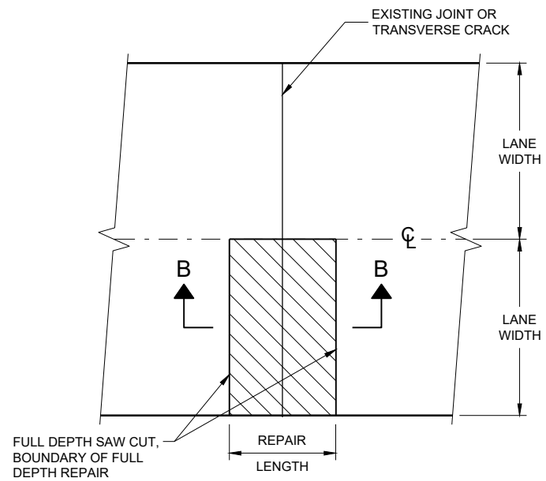

PLAN VIEW (SINGLE LANE REPAIR)

FULL DEPTH CONCRETE PAVEMENT REMOVAL

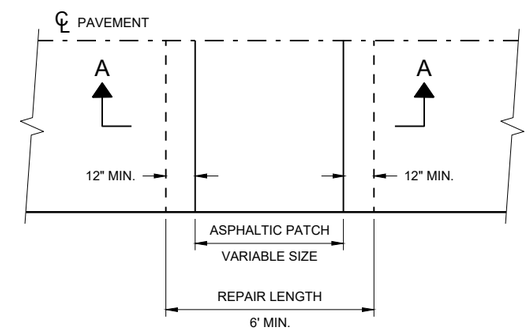

PLAN VIEW

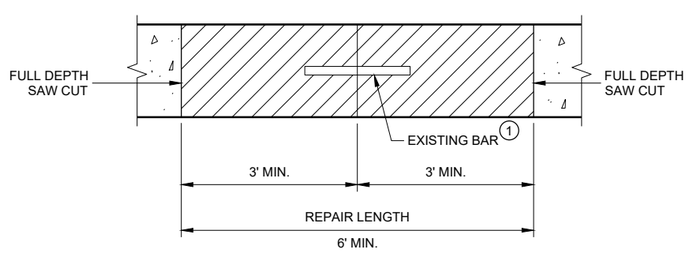

SECTION B - B

CONCRETE REMOVAL

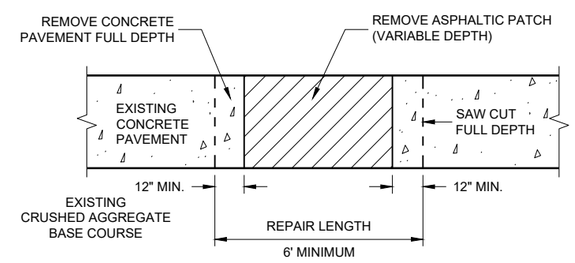

SECTION A - A

HMA PATCH REMOVAL

CONCRETE PAVEMENT REPAIR AND REPLACEMENT

STATE OF WISCONSIN
DEPARTMENT OF TRANSPORTAT

6

SDD 13C09 - 17a

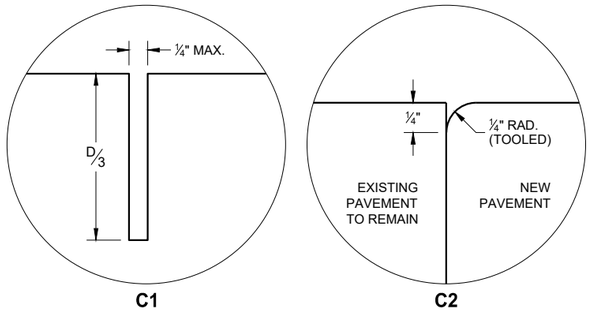

TRANSVERSE JOINTS

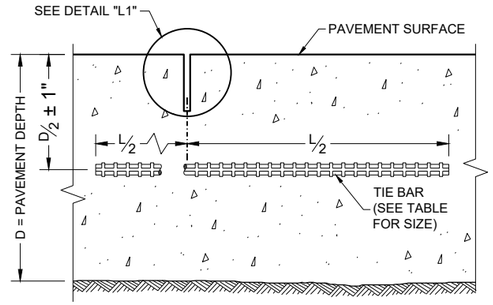

SECTION C - C

SAWED LONGITUDINAL JOINT

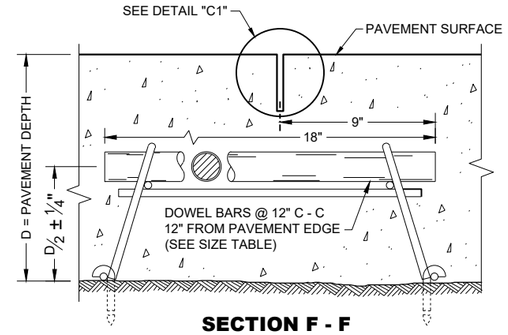

SECTION F - F

DOWELED CONTRACTION JOINT

GENERAL NOTES

INSTALL DOWEL BARS PARALLEL TO THE PAVEMENT CENTERLINE AND PAVEMENT SURFACE.

CONCRETE PAVEMENT REPAIRS OF EXISTING NON-DOWELED CONCRETE PAVEMENTS DO NOT NEED TO BE DOWELED.

ANCHOR DOWEL BARS AND TIE BARS INTO DRILLED HOLES WITH AN EPOXY.

FOR MULTI-LANE CONCRETE PAVEMENT REPLACEMENTS, PROVIDE A MINIMUM DISTANCE OF 15 INCHES FROM ALL TRANSVERSE JOINTS OR EDGES OF REPLACEMENT TO THE CENTER OF THE TIE BAR NEAREST THAT JOINT OR EDGE.

(1) APPLY A THIN UNIFORM COATING OF SURFACE TREATMENT TO THE FREE END OF DOWEL BARS TO PREVENT BONDING.

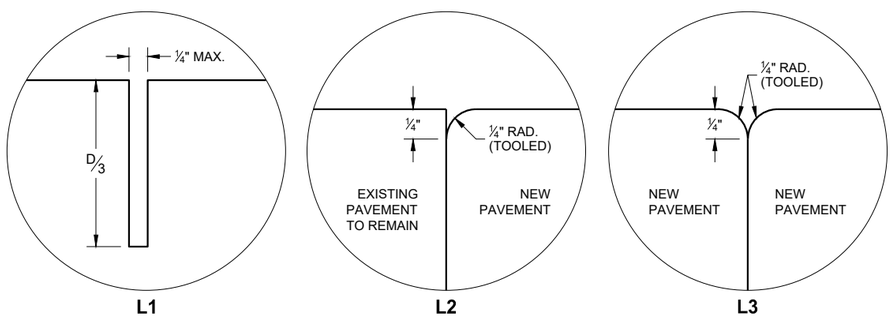

LONGITUDINAL JOINTS

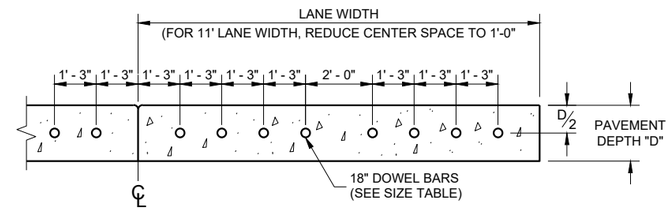

SECTION E - E

DRILLED DOWEL BAR CONSTRUCTION JOINT

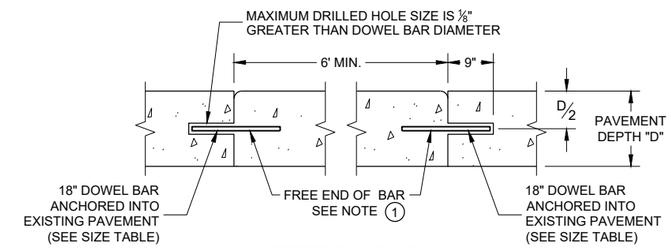

SECTION D - D

TIE BAR TABLE

PAVEMENT DEPTH (D)	TIE BAR SIZE	TIE BAR LENGTH (L)	MAX. TIE BAR SPACING
< 10½"	NO. 4	30"	36"
≥ 10½"	NO. 5	36"	36"
	NO. 4 *	30"	24" **

* SUBSTITUTE BENT BARS AT LONGITUDINAL JOINTS WHEN EQUIPMENT LIMITATIONS DURING CONSTRUCTION WARRANT (e.g. AUXILIARY LANES OR TURN LANES)

** CONFORM TO 15" MINIMUM SPACING FROM TRANSVERSE JOINTS; SPACING BETWEEN TIE BARS WILL BE 30" AT TRANSVERSE JOINTS.

PAVEMENT DEPTH, DOWEL BAR SIZE AND JOINT SPACING TABLE

PAVEMENT DEPTH (D)	DOWEL BAR DIAMETER	DRILLED DOWEL BAR DIAMETER	CONTRACTION JOINT SPACING
6", 6½"	NONE	NONE	12'
7", 7½"	1"	1"	14'
8" & ABOVE	1¼"	1¼"	15'

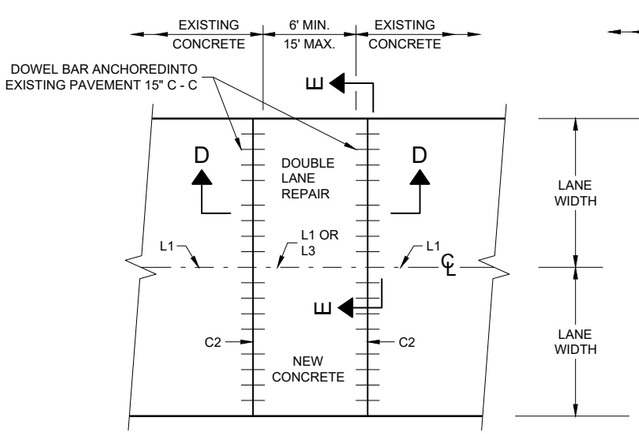

PLAN VIEW

MULTILANE CONCRETE PAVEMENT REPAIR

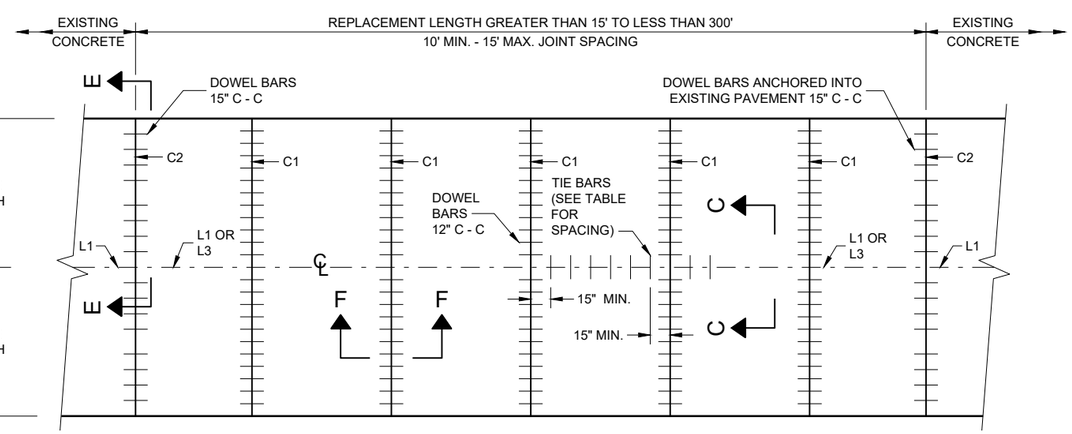

PLAN VIEW

MULTILANE CONCRETE PAVEMENT REPLACEMENT

CONCRETE PAVEMENT REPAIR AND REPLACEMENT

STATE OF WISCONSIN
DEPARTMENT OF TRANSPORTATION

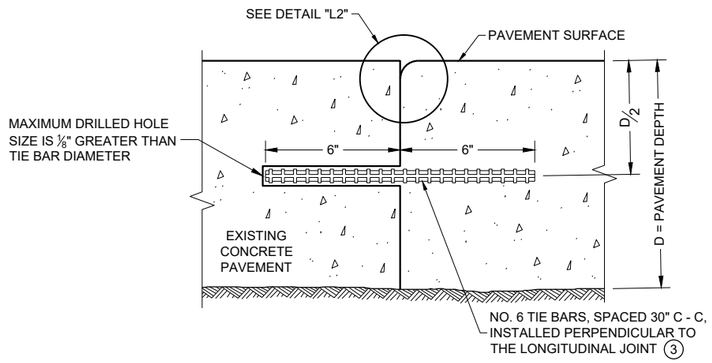

SECTION G - G

TIE BARS ANCHORED INTO EXISTING PAVEMENT

GENERAL NOTES

1. WITH THE APPROVAL OF THE ENGINEER, FOR SINGLE LANE PAVEMENT REPLACEMENTS LESS THAN 30 FEET IN LENGTH, THE CONTRACTOR MAY INSTALL DRILLED TIE BARS ON 6:1 SKEW HORIZONTALLY, DIRECTION OF SKEW ALTERNATING WITH EACH SUCCESSIVE BAR. DRIVE SKEWED TIE BARS TO A DEPTH OF 6 INCHES IN A HOLE OF SUCH A DIAMETER AS TO PROVIDE A TIGHT DRIVEN FIT.
2. USE AN ENGINEER APPROVED BOND BREAKER (E.G. RELEASE AGENT, CURING COMPOUND) FOR SINGLE LANE REPAIRS UP TO 15 FEET IN LENGTH.
3. ANCHOR TIE BARS INTO DRILLED HOLES WITH AN EPOXY.

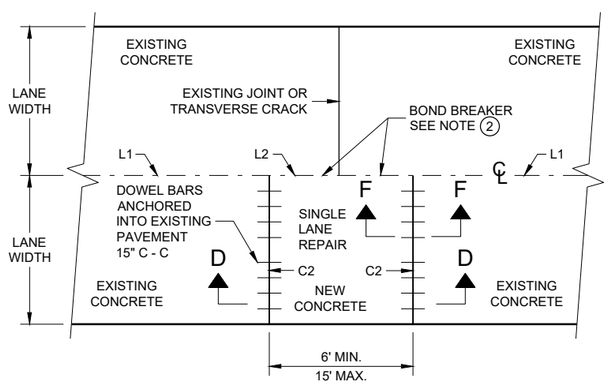

PLAN VIEW

SINGLE LANE CONCRETE PAVEMENT REPAIR

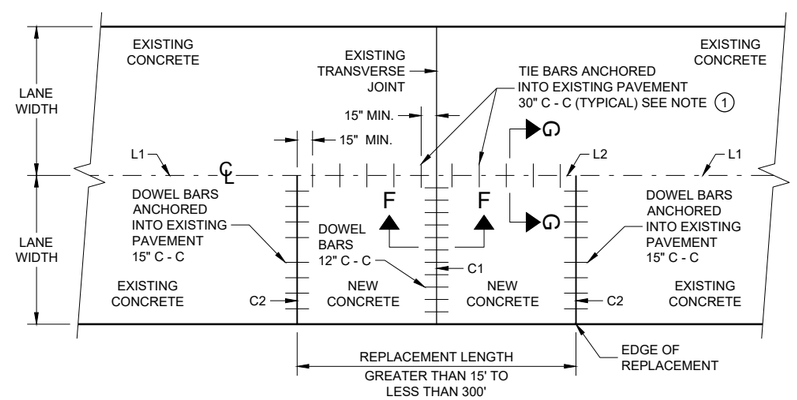

PLAN VIEW

SINGLE LANE CONCRETE PAVEMENT REPLACEMENT

CONCRETE REPAIR AND REPLACEMENT

STATE OF WISCONSIN
DEPARTMENT OF TRANSPORTATION

APPROVED
November 2022 /S/ Peter Kemp P.E.
DATE PAVEMENT SUPERVISOR
FHWA

6

SDD 13C09 - 17c

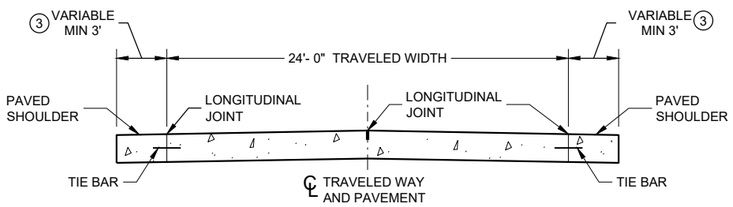

SECTION A - A

TWO-LANE TWO-WAY HIGHWAY 1

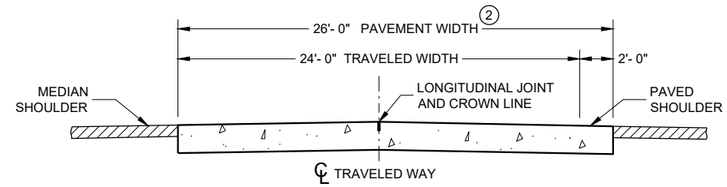

SECTION B - B

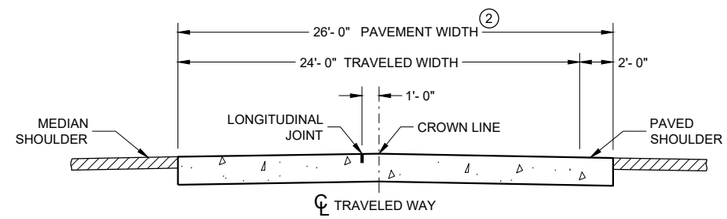

ALTERNATIVE SECTION B - B

DIVIDED HIGHWAY 1

GENERAL NOTES

CONTRACTION JOINTS

CONSTRUCT TRANSVERSE CONTRACTION JOINTS NORMAL TO THE CENTERLINE. SHOW THE LOCATION OF CONTRACTION JOINTS THROUGH INTERSECTIONS ON THE PLANS OR AS DIRECTED BY THE ENGINEER.

INSTALL DOWEL BARS PARALLEL TO THE PAVEMENT CENTERLINE AND PAVEMENT SURFACE.

FOR PAVEMENT SLABS OF VARYING WIDTHS, LOCATE THE OUTER MOST DOWEL BAR SO THAT THE CENTER OF THE BAR IS A MINIMUM OF 6 INCHES FROM AND A MAXIMUM OF 18 INCHES FROM THE FREE EDGE OF PAVEMENT.

CONSTRUCTION JOINTS

LOCATE CONSTRUCTION JOINTS A MINIMUM OF 6 FEET FROM THE NEAREST CONTRACTION JOINT AND ALIGN PARALLEL TO THE CONTRACTION JOINTS.

1. REFER TO TYPICAL CROSS SECTIONS FOR ADDITIONAL DETAILS.
2. MEASURE THE ENTIRE PAVED WIDTH INCLUDING THE PORTION(S) LABELED "PAVED SHOULDER" AS CONCRETE PAVEMENT.
3. SHOULDER WIDTHS LESS THAN 3 FEET SHALL BE PAVED INTEGRAL TO THE MAINLINE CONCRETE PAVEMENT, SEE SECTION B-B.

PAVEMENT DEPTH, DOWEL BAR SIZE AND JOINT SPACING TABLE

PAVEMENT DEPTH (D)	DOWEL BAR DIAMETER	CONTRACTION JOINT SPACING
6", 6 ½"	NONE	12'
7", 7 ½"	1"	14'
8" & ABOVE	1 ¼"	15'

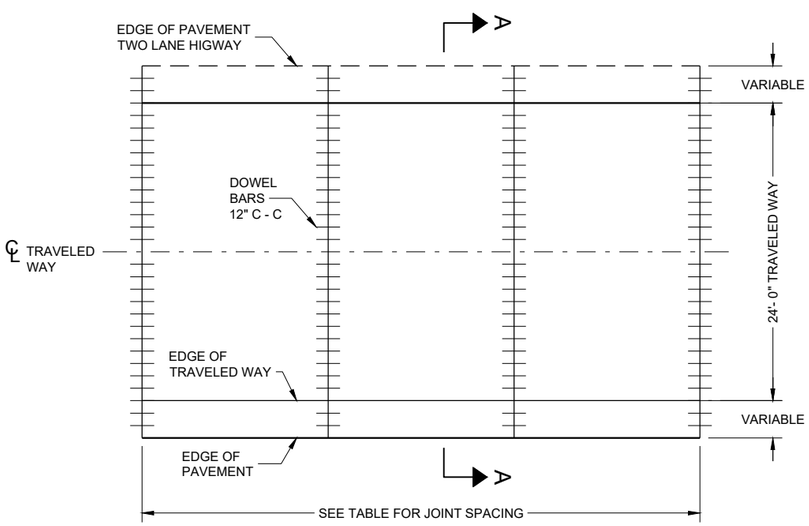

CONTRACTION JOINT LAYOUT FOR TWO-LANE TWO-WAY HIGHWAY

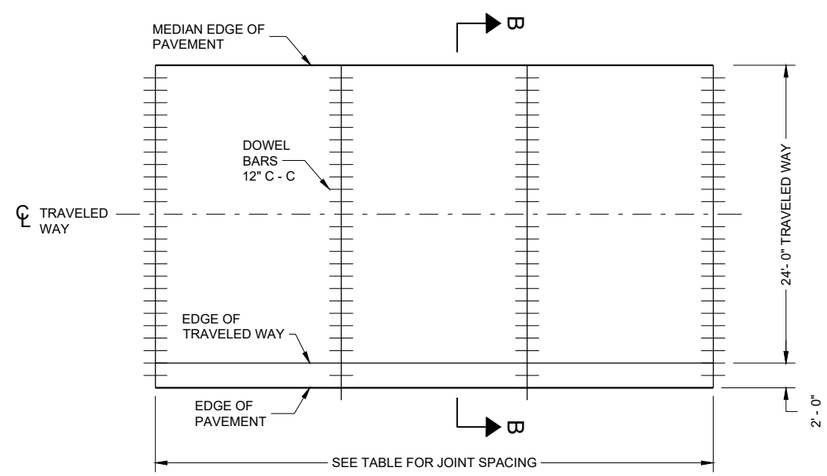

CONTRACTION JOINT LAYOUT FOR DIVIDED HIGHWAY

RURAL DOWELED CONCRETE PAVEMENT

STATE OF WISCONSIN
DEPARTMENT OF TRANSPORTAT

6

SDD 13C11 - 14a

GENERAL NOTES

1. OBTAIN THE ENGINEER'S APPROVAL FOR THE USE OF ALTERNATIVE DESIGNS OF THE DOWEL ASSEMBLY. USE MECHANICAL DOWEL BAR INSERTERS OR DOWEL ASSEMBLIES WHEN CONSTRUCTION CONTRACTION JOINTS.
2. SECURE BASKETS WITH ANCHORS TO HOLD DOWEL BARS IN THE CORRECT POSITION AND ALIGNMENT. TYPE, LOCATION, NUMBER AND LENGTH OF ANCHORS ARE DEPENDENT UPON FIELD CONDITIONS.
3. FORM OR SAW CONSTRUCTION JOINTS. PROVIDE A ¼" RADIUS AT FORMED JOINTS.
4. PROVIDE A SMOOTH VERTICAL FACE FOR THE ENTIRE DEPTH OF THE PAVEMENT WHEN FORMING CONSTRUCTION JOINTS.
5. INSTALL DOWEL BARS AT CONSTRUCTION JOINTS BY FORMING OR DRILLING. INSTALL FORMED DOWEL BARS 12 INCHES C - C AND 12 INCHES FROM PAVEMENT EDGE. REMOVE EXCESS CONCRETE FROM THE FREE END OF THE DOWEL BAR IF DOWEL BARS ARE FORMED THROUGH A HEADER BOARD. INSTALL DRILLED DOWEL BARS ACCORDING TO THE "DRILLED DOWEL BAR CONSTRUCTION JOINT" DETAIL.
6. APPLY A THIN UNIFORM COATING OF SURFACE TREATMENT TO THE FREE END OF DOWEL BARS TO PREVENT BONDING.
7. ANCHOR DOWEL BARS AND TIE BARS INTO DRILLED HOLES WITH AN EPOXY. MAXIMUM DRILLED HOLE SIZE IS ⅛" GREATER THAN DOWEL BAR DIAMETER, 9 INCHES IN LENGTH.

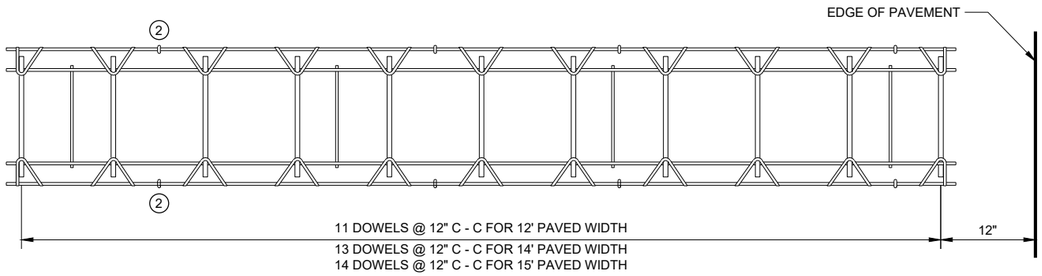

PLAN VIEW

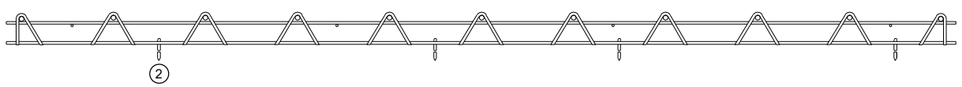

SIDE VIEW

(NORMAL TO CENTERLINE)

CONTRACTION JOINT DOWEL ASSEMBLY (1)

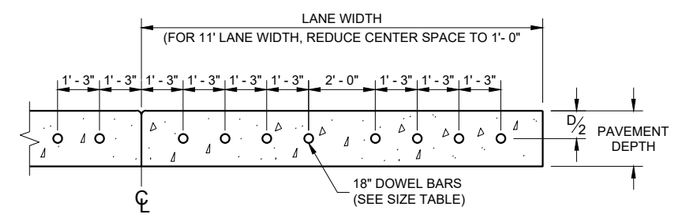

DRILLED DOWEL BAR CONSTRUCTION JOINT (7)

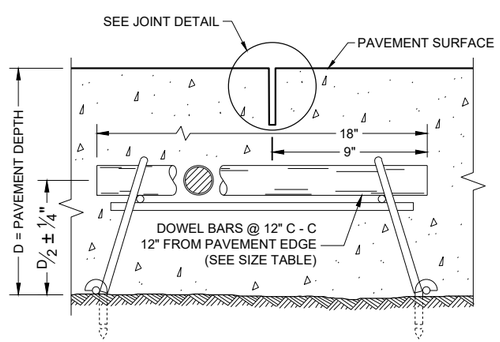

DOWELED CONTRACTION JOINT

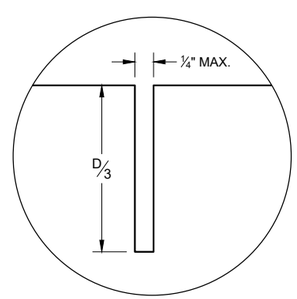

JOINT DETAIL

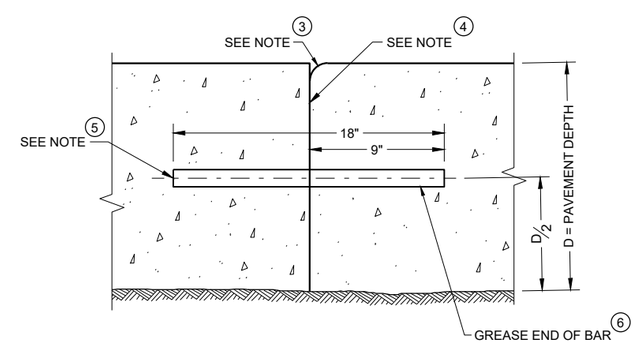

TRANSVERSE CONSTRUCTION JOINT

RURAL DOWELED CONCRETE PAVEMENT

STATE OF WISCONSIN
DEPARTMENT OF TRANSPORTATION

APPROVED
November 2022 — DATE
/S/ Peter Kemp P.E. — PAVEMENT SUPERVISOR
FHWA

6
SDD 13C11 - 14b

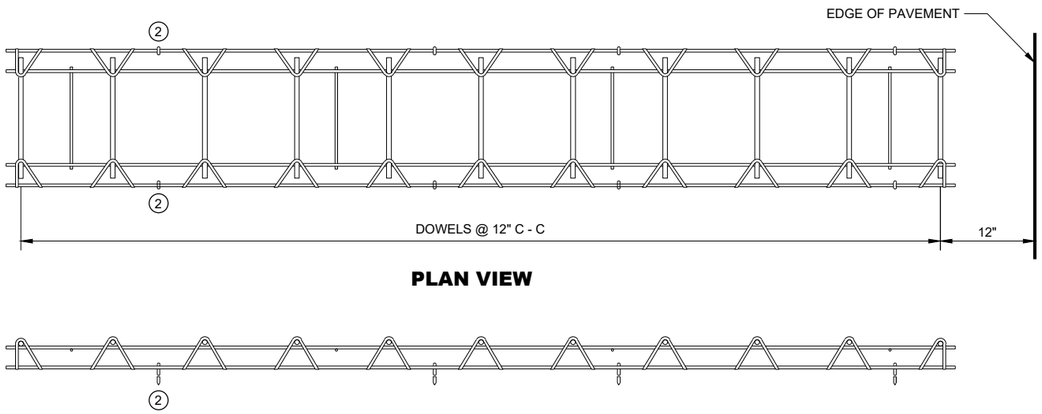

PLAN VIEW

SIDE VIEW

CONTRACTION JOINT DOWEL ASSEMBLY (1)

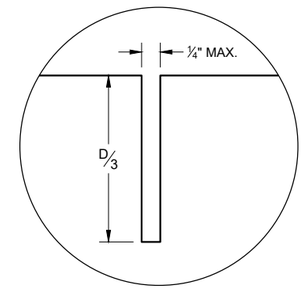

JOINT DETAIL

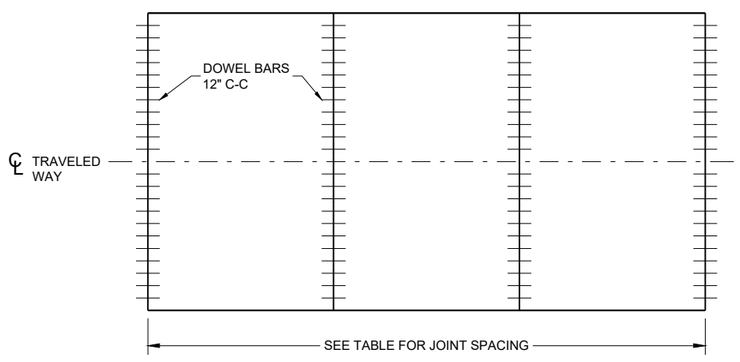

CONTRACTION JOINT LOCATIONS

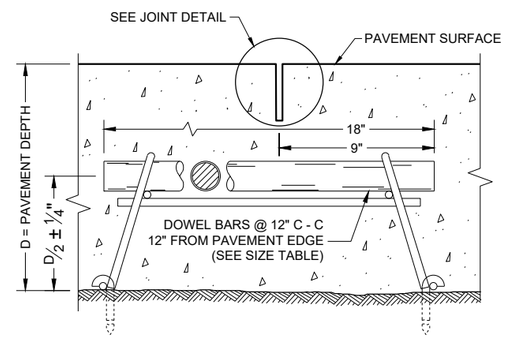

DOWELED CONTRACTION JOINT

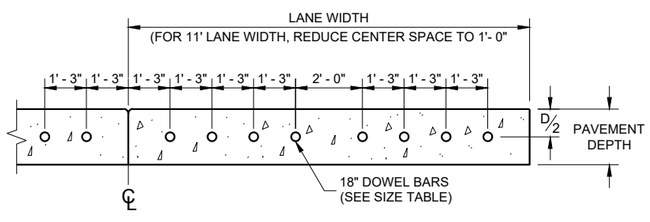

DRILLED DOWEL BAR CONSTRUCTION JOINT (7)

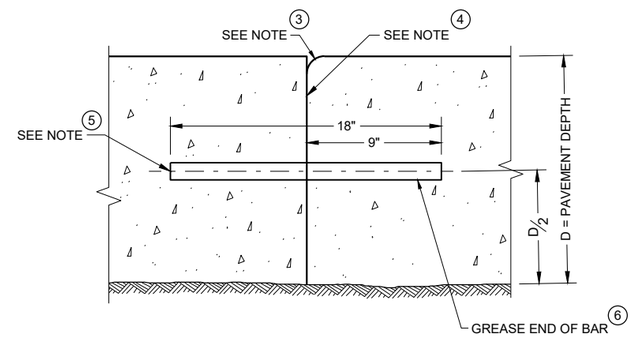

TRANSVERSE CONSTRUCTION JOINT

GENERAL NOTES

CONTRACTION JOINTS

CONSTRUCT TRANSVERSE CONTRACTION JOINTS NORMAL TO THE CENTERLINE. SHOW THE LOCATION OF CONTRACTION JOINTS THROUGH INTERSECTIONS ON THE PLANS OR AS DIRECTED BY THE ENGINEER.

INSTALL DOWEL BARS PARALLEL TO THE PAVEMENT CENTERLINE AND PAVEMENT SURFACE.

FOR PAVEMENT SLABS OF VARYING WIDTHS, LOCATE THE OUTER MOST DOWEL BAR SO THAT THE CENTER OF THE BAR IS A MINIMUM OF 6 INCHES FROM AND A MAXIMUM OF 18 INCHES FROM THE FREE EDGE OF PAVEMENT.

CONSTRUCTION JOINTS

LOCATE CONSTRUCTION JOINTS A MINIMUM OF 6 FEET FROM THE NEAREST CONTRACTION JOINT AND ALIGN PARALLEL TO THE CONTRACTION JOINTS.

(1) OBTAIN THE ENGINEER'S APPROVAL FOR THE USE OF ALTERNATIVE DESIGNS OF THE DOWEL ASSEMBLY. USE MECHANICAL DOWEL BAR INSERTERS OR DOWEL ASSEMBLIES WHEN CONSTRUCTION CONTRACTION JOINTS.

(2) SECURE BASKETS WITH ANCHORS TO HOLD DOWEL BARS IN THE CORRECT POSITION AND ALIGNMENT. TYPE, LOCATION, NUMBER AND LENGTH OF ANCHORS ARE DEPENDENT UPON FIELD CONDITIONS.

(3) FORM OR SAW CONSTRUCTION JOINTS. PROVIDE A ¼" RADIUS AT FORMED JOINTS.

(4) PROVIDE A SMOOTH VERTICAL FACE FOR THE ENTIRE DEPTH OF THE PAVEMENT WHEN FORMING CONSTRUCTION JOINTS.

(5) INSTALL DOWEL BARS AT CONSTRUCTION JOINTS BY FORMING OR DRILLING. INSTALL FORMED DOWEL BARS 12 INCHES C - C AND 12 INCHES FROM PAVEMENT EDGE. REMOVE EXCESS CONCRETE FROM THE FREE END OF THE DOWEL BAR IF DOWEL BARS ARE FORMED THROUGH A HEADER BOARD. INSTALL DRILLED DOWEL BARS ACCORDING TO THE "DRILLED DOWEL BAR CONSTRUCTION JOINT" DETAIL.

(6) APPLY A THIN UNIFORM COATING OF SURFACE TREATMENT TO THE FREE END OF DOWEL BARS TO PREVENT BONDING.

(7) ANCHOR DOWEL BARS AND TIE BARS INTO DRILLED HOLES WITH AN EPOXY. MAXIMUM DRILLED HOLE SIZE IS ⅛" GREATER THAN DOWEL BAR DIAMETER, 9 INCHES IN LENGTH.

PAVEMENT DEPTH, DOWEL BAR SIZE AND JOINT SPACING TABLE

PAVEMENT DEPTH (D)	DOWEL BAR DIAMETER	CONTRACTION JOINT SPACING
6", 6 ½"	NONE	12'
7", 7 ½"	1"	14'
8" & ABOVE	1 ¼"	15'

URBAN DOWELED CONCRETE PAVEMENT

STATE OF WISCONSIN
DEPARTMENT OF TRANSPORTATION

APPROVED
November 2022 /S/ Peter Kemp P.E.
DATE PAVEMENT SUPERVISOR
FHWA

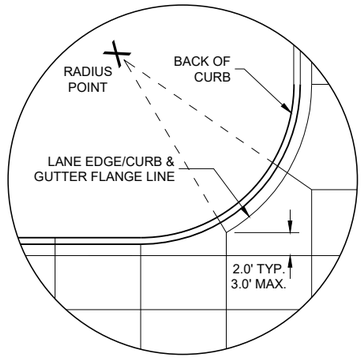

DETAIL "A"

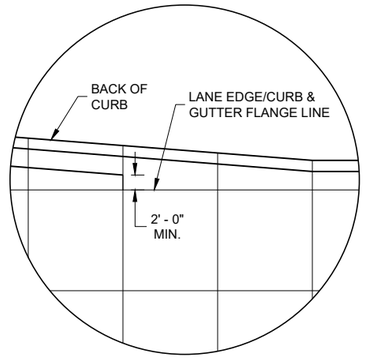

DETAIL "B"

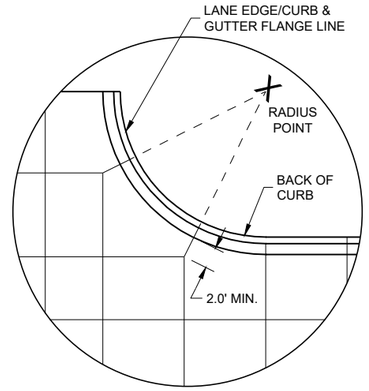

DETAIL "C"

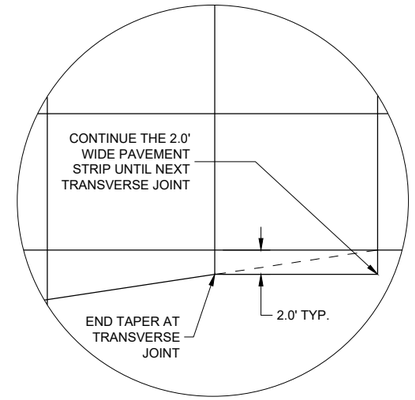

DETAIL "D"

GENERAL NOTES

THE PRIMARY ROADWAY CONTROLS THE TRANSVERSE JOINT PATTERN.

ALIGN NEW JOINTS WITH EXISTING JOINTS OR CRACKS.

CONSTRUCT TRANSVERSE JOINTS PERPENDICULAR TO THE ROADWAY.

ADJUST TRANSVERSE JOINTS TO ALIGN WITH UTILITY FIXTURES (E.G MANHOLES AND INLETS) IN THE PAVEMENT STRUCTURE WHEN POSSIBLE. WATER VALVES DO NOT REQUIRE JOINT ADJUSTMENT.

AVOID SLABS LESS THAN 2 FEET WIDE OR GREATER THAN 15 FEET WIDE.

SEE TABLE FOR TRANSVERSE JOINT SPACING. JOINT SPACING SPECIFIED IS MAXIMUM AND ACTUAL SPACING CAN BE ADJUSTED TO ACCOMMODATE INTERSECTIONS.

AVOID ANGLES LESS THAN 60° BY DOGLEGGING JOINTS THROUGH CURVE RADIUS POINTS. USE 90° ANGLES WHEN POSSIBLE.

CORRELATE LONGITUDINAL JOINTS WITH LANE LINES WHEN POSSIBLE.

1. PROVIDE TRANSVERSE JOINTS AT ALL PAVEMENT WIDTH CHANGES.
2. CONSTRUCT DOWELED EXPANSION JOINT ON THE SIDE ROAD OF AN INTERSECTION IF THE SIDE ROAD IS CONCRETE PAVEMENT AND GREATER THAN 300 FEET IN LENGTH. ALIGN EXPANSION JOINT WITH EDGE OF RADIUS.
3. THE ENGINEER MAY APPROVE SLIGHT VARIATIONS FROM THESE JOINTING DETAILS.

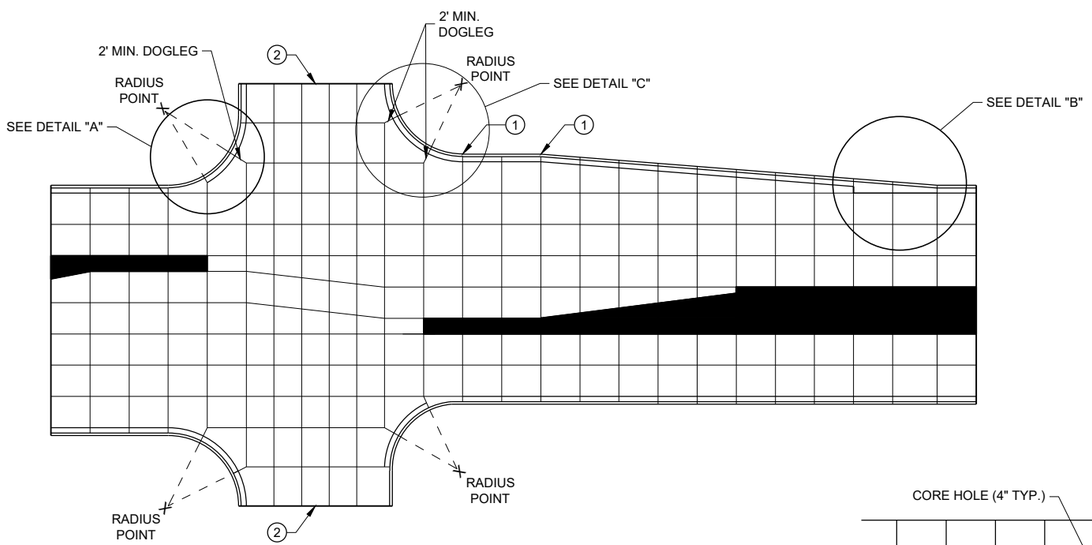

STANDARD INTERSECTION

PAVEMENT DEPTH AND JOINT SPACING TABLE

PAVEMENT DEPTH (D)	CONTRACTION JOINT SPACING
6", 6 ½"	12'
7", 7 ½"	14'
8" & ABOVE	15'

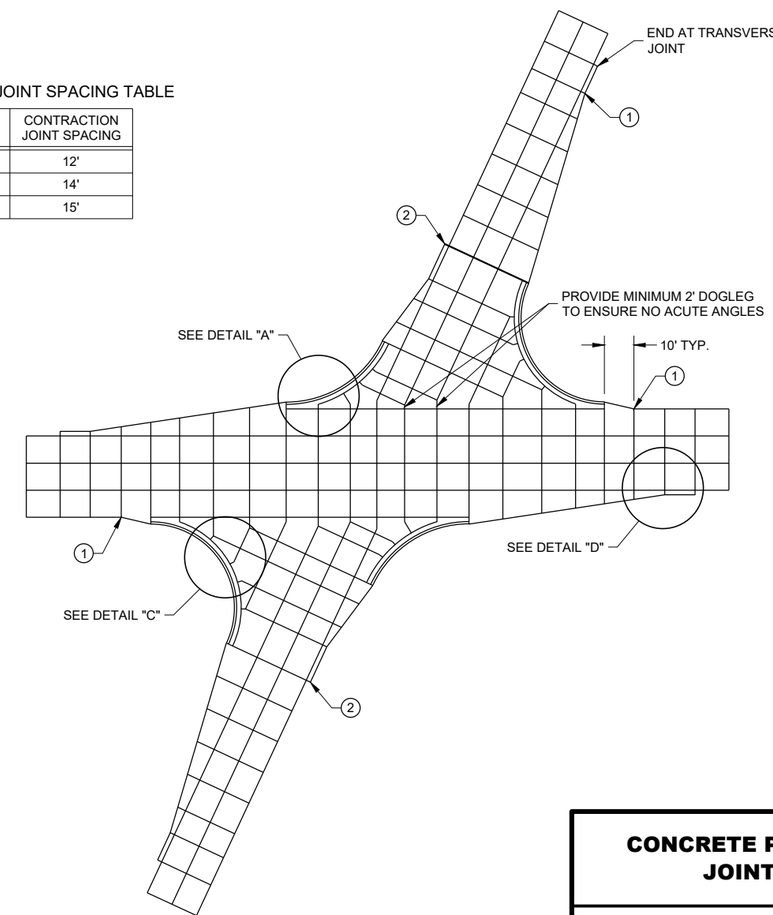

SKEWED INTERSECTION

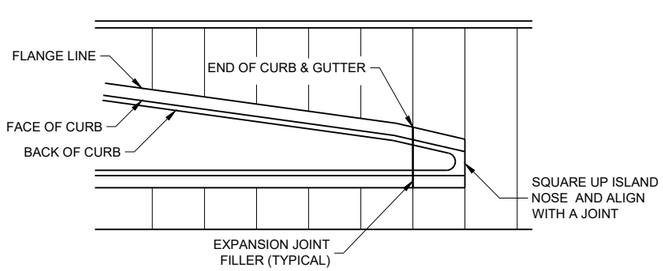

APPROACH TO MEDIAN

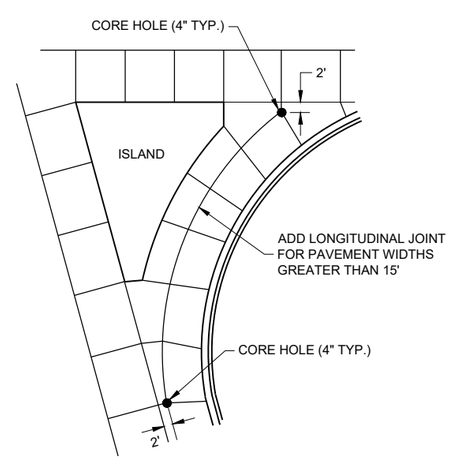

LARGE RIGHT TURN

CONCRETE PAVEMENT JOINTING

STATE OF WISCONSIN
DEPARTMENT OF TRANSPORTA

6

SDD 13C18 - 08a

LEGEND

POTENTIAL DOWELED EXPANSION JOINT

DOWELED JOINT

TIED JOINT

GENERAL NOTES

USE AN EXPANSION JOINT FILLER MEETING THE REQUIREMENTS OF STANDARD SPECIFICATION 415.

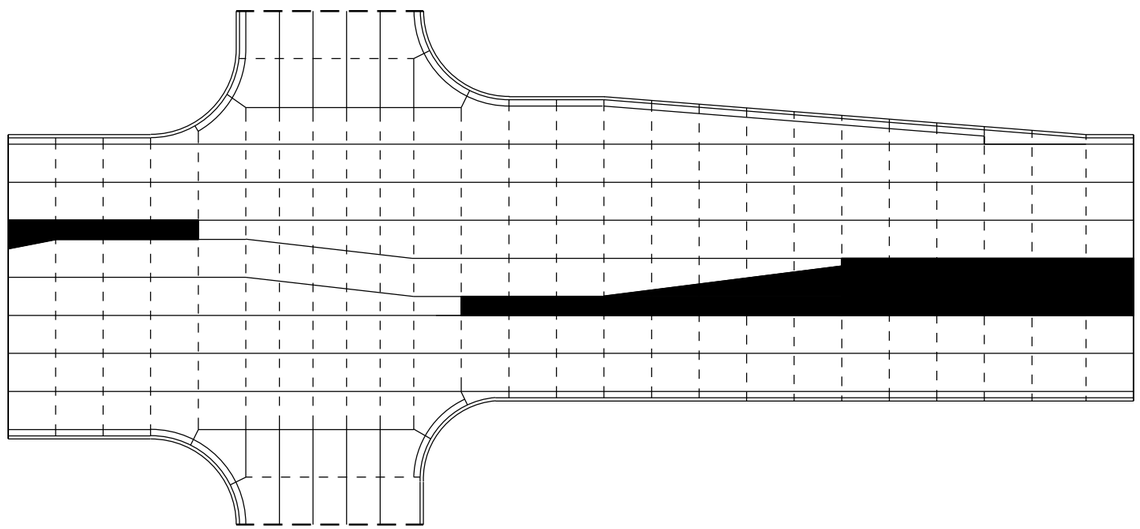

STANDARD INTERSECTION

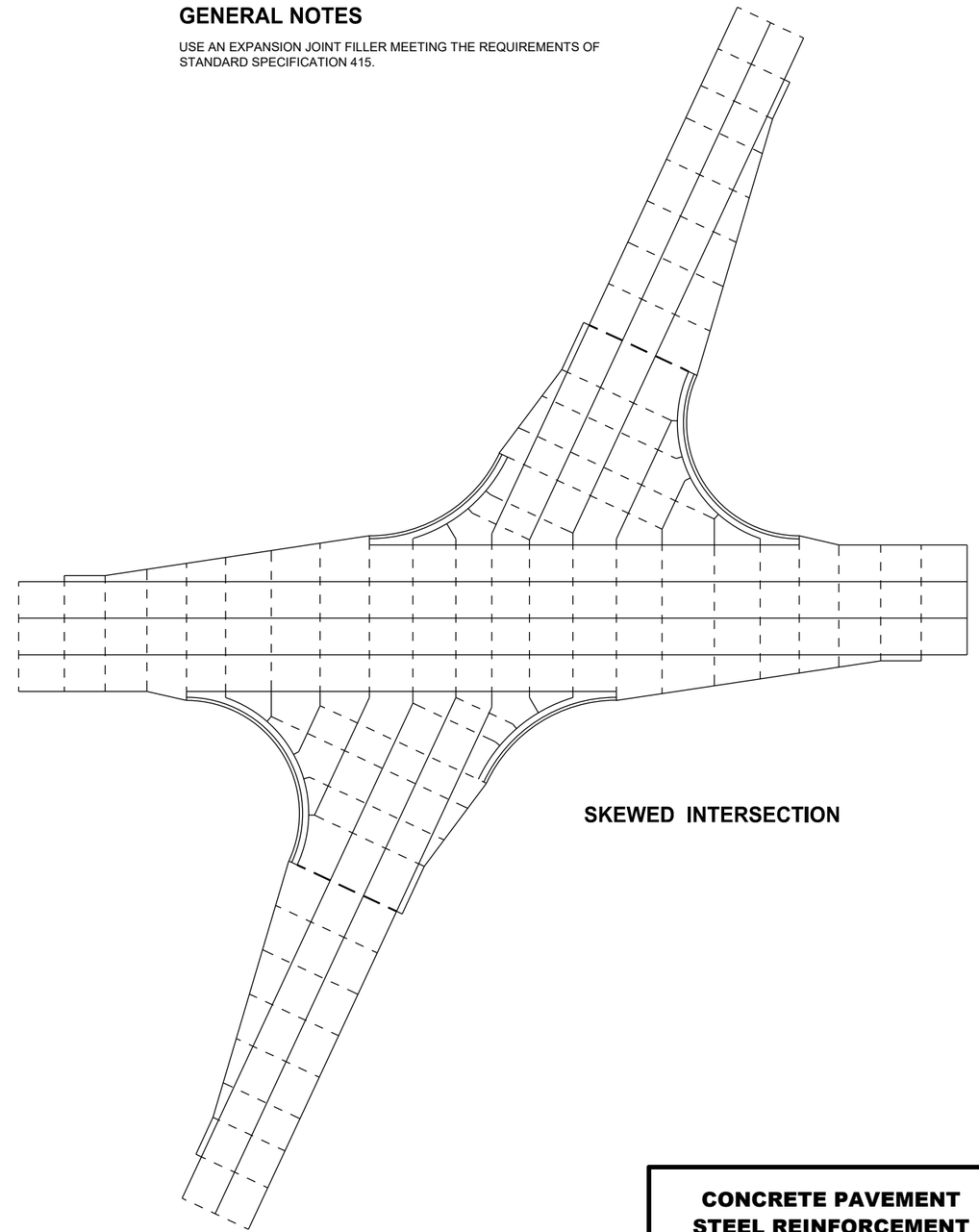

SKEWED INTERSECTION

CONCRETE PAVEMENT STEEL REINFORCEMENT

STATE OF WISCONSIN
DEPARTMENT OF TRANSPORTA

6

SDD 13C18 - 08b

6

SDD 13C18 - 08b

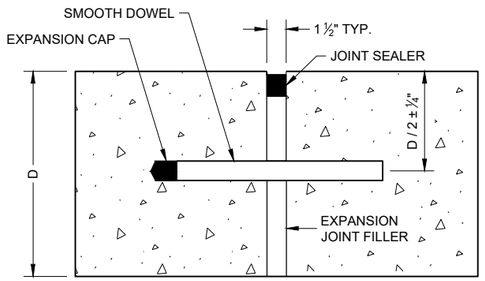

DOWELED TRANSVERSE (1)

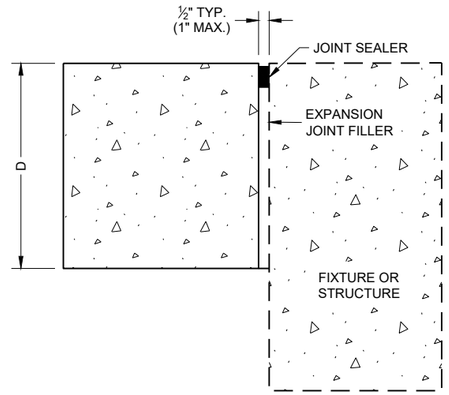

UNTIED - LONGITUDINAL

EXPANSION JOINTS

TIE BAR TABLE

PAVEMENT DEPTH (D)	TIE BAR SIZE	TIE BAR LENGTH (L)	MAX. TIE BAR SPACING
< 10 ½"	NO. 4	30"	36"
≥ 10 ½"	NO. 5	36"	36"
	NO. 4 *	30"	24" **

* SUBSTITUTE BENT BARS AT LONGITUDINAL JOINTS WHEN EQUIPMENT LIMITATIONS DURING CONSTRUCTION WARRANT (e.g. AUXILIARY LANES OR TURN LANES)

** CONFORM TO 15" MINIMUM SPACING FROM TRANSVERSE JOINTS; SPACING BETWEEN TIE BARS WILL BE 30" AT TRANSVERSE JOINTS.

GENERAL NOTES

1. USE DOWELED EXPANSION JOINTS ON SIDE ROADS AT INTERSECTIONS (TO ISOLATETHE SIDE ROAD FROM THE THROUGH STREET) IF THE SIDE ROAD IS CONCRETE PAVEMENT AND GREATER THAN 300 FEET IN LENGTH.
2. SPACE CONTRACTION JOINTS IN ACCORDANCE WITH SDD 13C4, 13C11 OR 13C13.
3. LOCATE CONSTRUCTION JOINTS A MINIMUM OF 6 FEET FROM THE NEAREST CONTRACTION JOINT AND ALIGN PARALLEL TO CONTRACTION JOINTS.
4. CONSTRUCTION JOINTS CAN BE FORMED OR SAWED.
5. IF JOINT IS FORMED, PROVIDE A ¼" RADIUS.
6. ANCHOR TIE BARS INTO DRILLED HOLES WITH AN EPOXY.

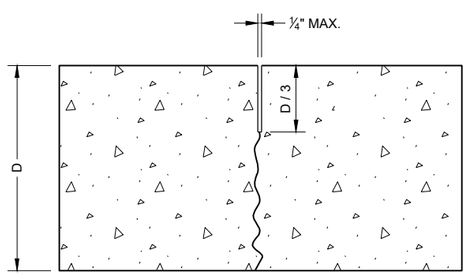

UNDOWELED TRANSVERSE

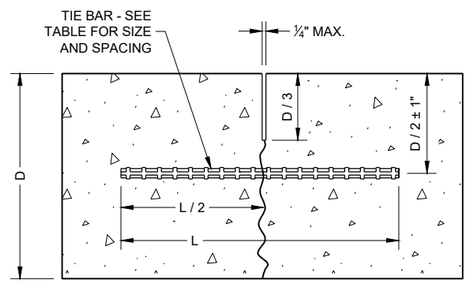

TIED LONGITUDINAL

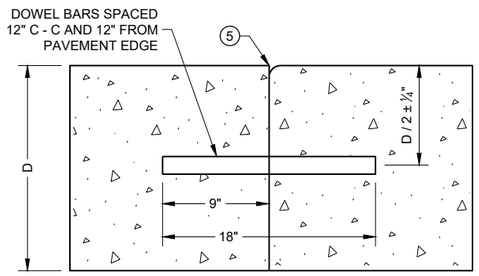

DOWELED TRANSVERSE (3)

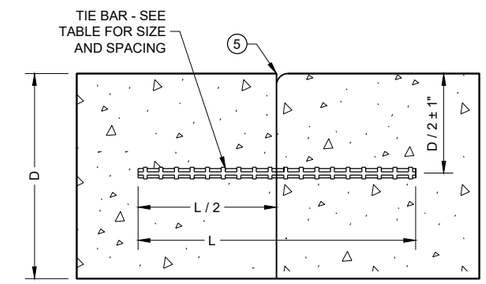

TIED LONGITUDINAL

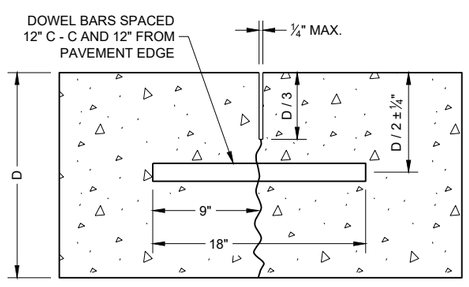

DOWELED TRANSVERSE

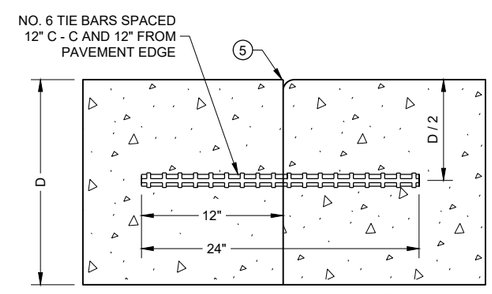

TIED TRANSVERSE (3)
(FOR USE ON NON-DOWELED PAVEMENTS ONLY)

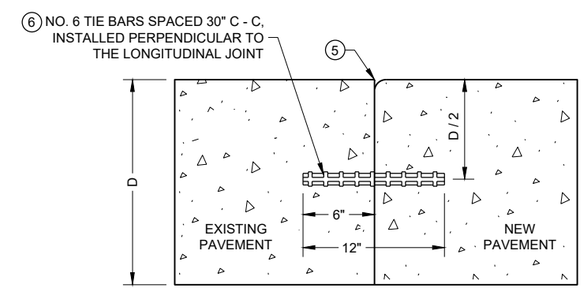

TIED LONGITUDINAL TO EXISTING

CONTRACTION JOINTS (2)

CONSTRUCTION JOINTS (4)

CONCRETE PAVEMENT JOINT TYPES

STATE OF WISCONSIN
DEPARTMENT OF TRANSPORTAT

6

SDD 13C18 - 08c

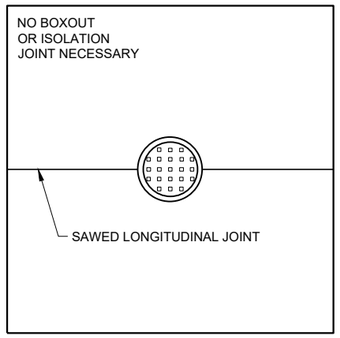

MANHOLE WITH LONGITUDINAL JOINT

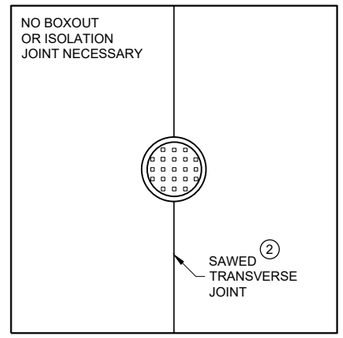

MANHOLE WITH TRANSVERSE JOINT

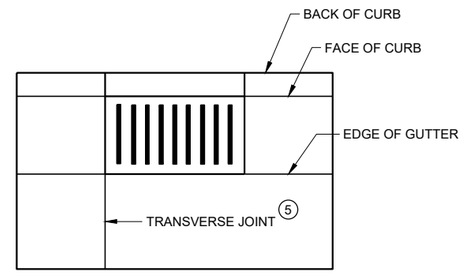

INLET WITH TRANSVERSE JOINT

GENERAL NOTES

1. USE BOXOUTS WHEN UTILITY STRUCTURE IS IN THE PATH OF CONSTRUCTION JOINTS. PROVIDE A 1 FOOT MINIMUM CLEARANCE BETWEEN THE EXTERIOR LIMIT OF THE STRUCTURE TO THE DIAMOND BOXOUT.
2. ADJUST TRANSVERSE JOINT TO INTERSECT MANHOLE IF POSSIBLE.
3. IF DISTANCE BETWEEN THE LONGITUDINAL JOINT AND THE EDGE OF MANHOLE IS 2 FEET OR LESS, DIVERT THE LONGITUDINAL JOINT AT A 2:1 TAPER RATE TO THE CENTER OF THE MANHOLE. IF THE DISTANCE IS GREATER THAN 2 FEET, DO NOT DIVERT THE JOINT AND SAW AS NORMAL. PLACE REINFORCEMENT REBAR AROUND THE MANHOLE.
4. IF THE DISTANCE FROM THE EDGE OF THE MANHOLE TO THE NEAREST TRANSVERSE JOINT IS LESS 4 FEET OR LESS, REDIRECT JOINT TO INTERSECT THE CENTER OF THE MANHOLE. IF DISTANCE IS GREATER THAN 4 FEET, DO NOT DIVERT THE JOINT AND SAW AS NORMAL. PLACE REINFORCEMENT REBAR AROUND THE MANHOLE.
5. ALIGN TRANSVERSE JOINT WITH ONE EDGE OF INLET WHEN PRACTICAL.

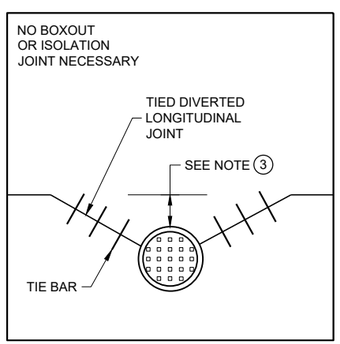

MANHOLE WITH DIVERTED LONGITUDINAL CONTRACTION JOINT

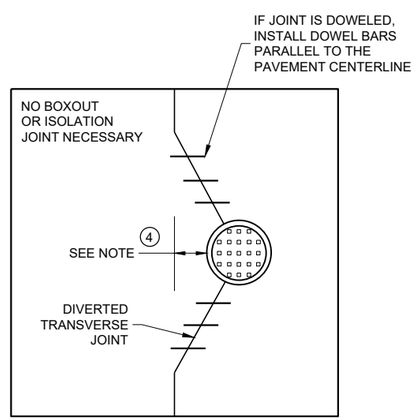

MANHOLE WITH DIVERTED TRANSVERSE CONTRACTION JOINT

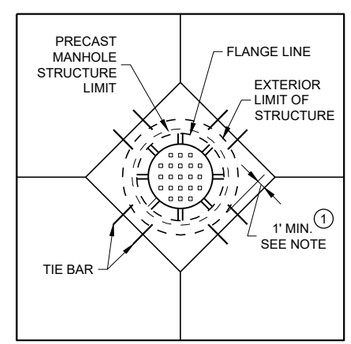

DIAGONAL MANHOLE BOXOUT FOR CONSTRUCTION JOINTS

CONCRETE PAVEMENT JOINTING AT UTILITY FIXTURES

STATE OF WISCONSIN
DEPARTMENT OF TRANSPORTATION

APPROVED
May 2023 — DATE
/S/ Peter Kemp P.E. — PAVEMENT SUPERVISO
FHWA

6

SDD 13C18 - 08d

LEGEND

- - - - - - DOWELED JOINT
——— TIED JOINT
EXPANSION JOINT
— — POTENTIAL DOWELED EXPANSION JOINT (1)
DIRECTION OF TRAFFIC

GENERAL NOTES

(1) CONSTRUCT DOWELED EXPANSION JOINT ON THE SIDE ROAD OF AN INTERSECTION IF THE SIDE ROAD IS CONCRETE PAVEMENT AND GREATER THAN 300 FEET IN LENGTH. ALIGN EXPANSION JOINT WITH THE EDGE OF RADIUS.

(2) PROVIDE TIED JOINT AT THE FLANGE OF SCAB ON CURB IF SCAB ON CURB AND GUTTER IS USE.

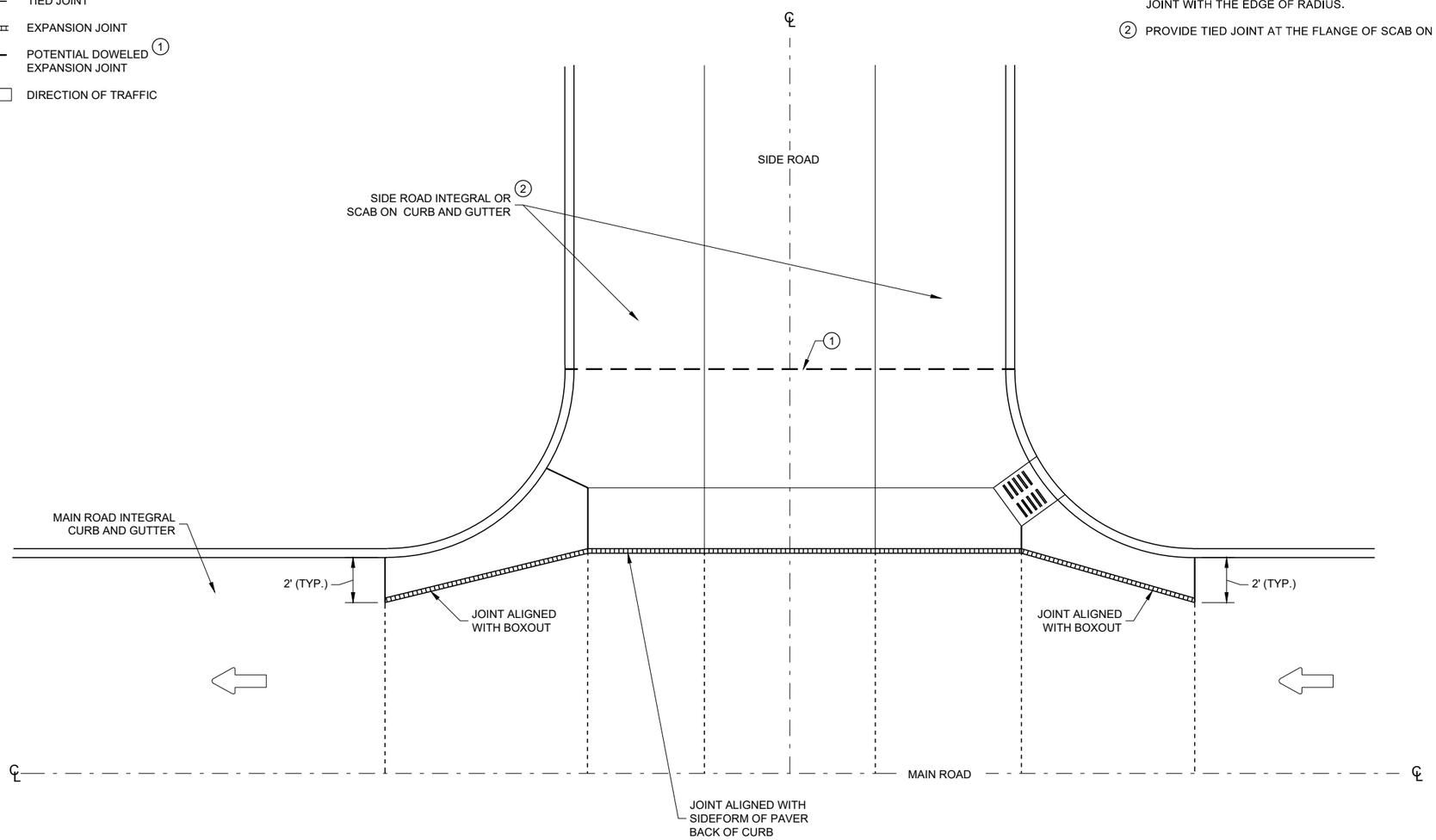

INTERSECTION BOXOUT FOR INTEGRAL CURB AND GUTTER

CONCRETE PAVEMENT INTERSECTION BOXOUT FOR INTEGRAL CURB AND GUTTER

STATE OF WISCONSIN
DEPARTMENT OF TRANSPORTATION

APPROVED
May 2023 — DATE
/S/ Peter Kemp P.E. — PAVEMENT SUPERVISOR
FHWA

6
SDD 13C18 - 08f

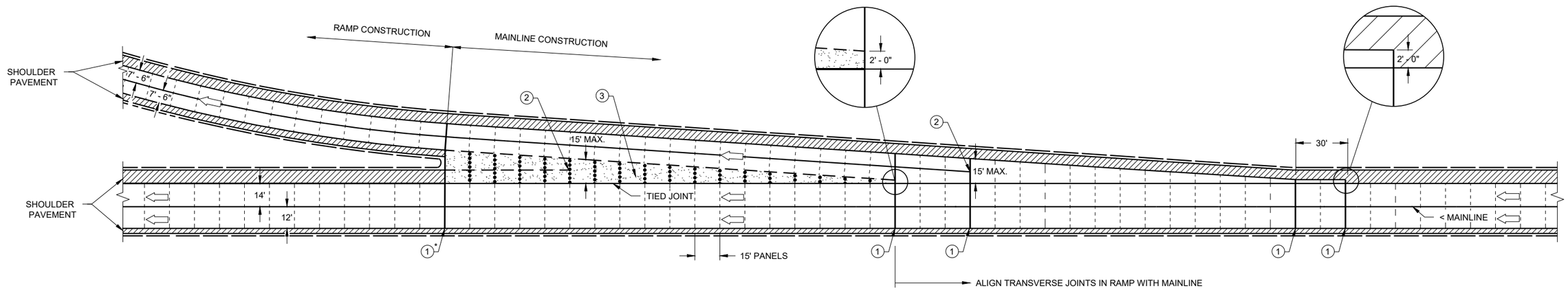

DECELERATION LANE

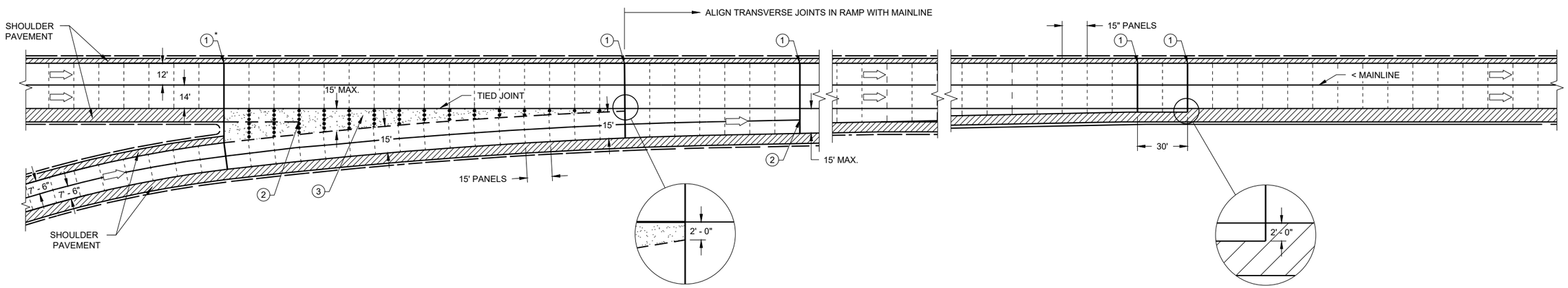

ACCELERATION LANE

GENERAL NOTES

PAVEMENT AND BASE THICKNESS, PANEL LENGTHS, JOINTS AND REINFORCEMENT FOR THE DECELERATION AND ACCELERATION LANES, INCLUDING TAPERS, SHALL BE THE SAME AS THE MAINLINE, EXCEPT WHERE OTHERWISE NOTED.

ALL REINFORCEMENT BARS SHALL BE EPOXY COATED CONFORMING TO SUBSECTION 505.2.6 OF THE STANDARD SPECIFICATIONS.

LANE AND SHOULDER WIDTHS MAY VARY FROM SHOWN. SEE CONSTRUCTION PLANS FOR ACTUAL PROPOSED WIDTHS.

(1) CRITICAL TRANSVERSE JOINT LOCATIONS AT PAVEMENT WIDTH CHANGES. ((1)* IS NOT A CRITICAL TRANSVERSE JOINT WHEN ASPHALTIC GORE IS INSTALLED).

(2) STOP LONGITUDINAL JOINT WITH CORE HOLE (2" TYP.) WHEN IT MEETS THE FIRST TRANSVERSE JOINT LESS THAN 15' WIDE OR STOP LONGITUDINAL JOINT WHEN IT MEETS 2' AWAY FROM THE TIED JOINT OF THE MAINLINE.

(3) DISREGARD THE JOINT DETAILS IN AND AROUND THE GORE WHEN ASPHALTIC GORE IS INSTALLED.

LEGEND

- DOWELED JOINT
- UNDOWELED JOINT
- TIED JOINT
- UNTIED JOINT
- GORE
- DIRECTION OF TRAVEL

CONCRETE PAVEMENT JOINTING ACCELERATION/ DECELERATION LANE

STATE OF WISCONSIN
DEPARTMENT OF TRANSPORTATION

APPROVED
May 2023 — DATE
/S/ Peter Kemp P.E. — PAVEMENT SUPERVIS
FHWA

6

SDD 13C18 - 08g

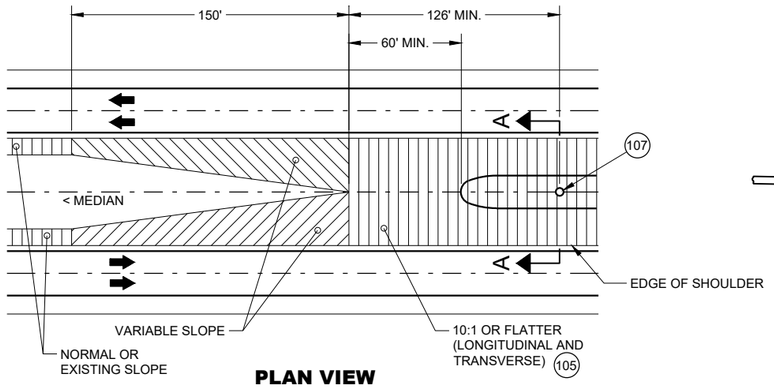

PLAN VIEW
GRADING AT BULLNOSE
(ALL INSTALLATIONS)

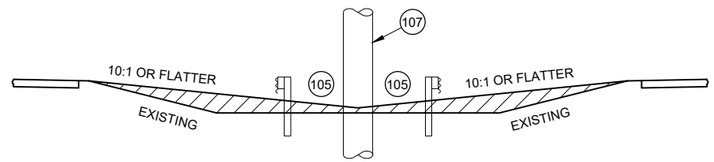

SECTION A -A
MEDIAN GRADING
(ALL INSTALLATIONS)

GENERAL NOTES

THRIE BEAM RAILS MAY NEED TO BE FIELD BENT TO FIT THE LOCATION.

SEE STANDARD DETAIL DRAWINGS 14B26 SHEETS a-h.

IF ROCK IS ENCOUNTERED, REMOVE ROCK TO FULL DEPTH OF POST PLUS 2 ½". MINIMUM DIAMETER OF THE ROCK REMOVAL IS 12" DIAMETER

- E1 UNBENT STANDARD THRIE BEAM RAIL B1 (POST 8 TO POST 10 AND POST 10 TO POST 12)
- E2 SLOTTED THRIE BEAM RAIL E1 (POST 1 TO POST 1)
- E3 SLOTTED THRIE BEAM RAIL B3 (POST 5 TO POST 8)
- E4 SLOTTED THRIE BEAM RAIL E4 (POST 1 TO POST 5)
- 5 BEYOND POST 12: CONSTRUCT STEEL THRIE BEAM - USE UNBENT STANDARD THRIE BEAM RAIL NO. 5.
- 100 DIMENSIONS ARE FROM BACK OF RAIL TO BACK OF RAIL WHERE RAIL IS BOLTED TO POST OR BLOCK.
- 101 U-BOLT CABLE CLIPS (3 PER CABLE) SPACED OUT ON NOSE, TO HOLD CABLE TO BACKSIDE OF THE RAIL.
- 102 NOSE CABLE WITH SWAGGED END BUTTONS.
- 103 NOSE CABLE ANCHOR PLATE (BACKSIDE OF SPLICE).
- 104 THE SLACK IN THE NOSE CABLES SHALL BE EVENLY DISTRIBUTED BETWEEN THE CABLE CLIP FASTENERS AND POST NO. 1 ON EITHER SIDE OF THE NOSE.
- 105 MINIMUM WORKING WIDTH 4' - 2".
- 106 MAX. WIDTH OF SYSTEM IS 14' - 2 ½" MEASURED FROM THE BACK OF RAIL TO BACK OF RAIL WHERE RAIL IS BOLTED TO A POST OR BLOCK.
- 107 FIXED OBJECT OR OTHER HAZARD.
- 108 PLAN IS TO PROVIDE STATION OFFSET TO CENTER OF POST 5 IN PLANS.

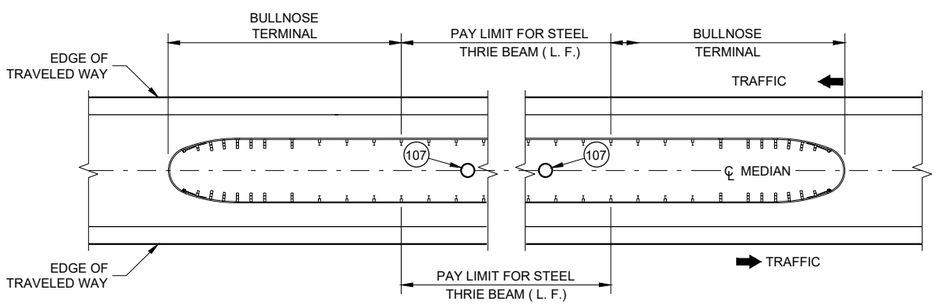

MEDIAN HAZARD PROTECTION PAY LIMITS

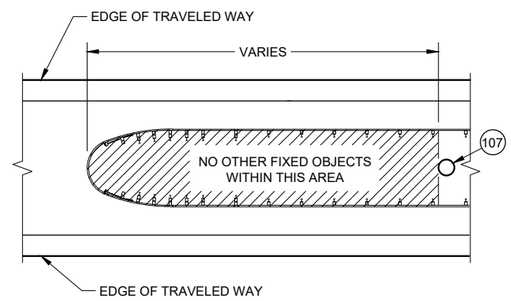

HAZARD FREE AREA
INSIDE BULLNOSE

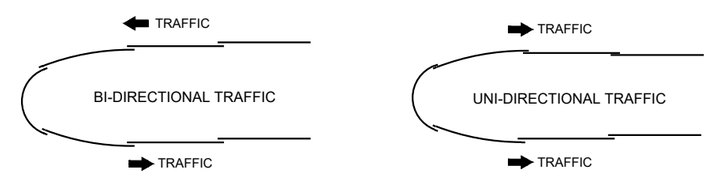

LAPPING DETAIL

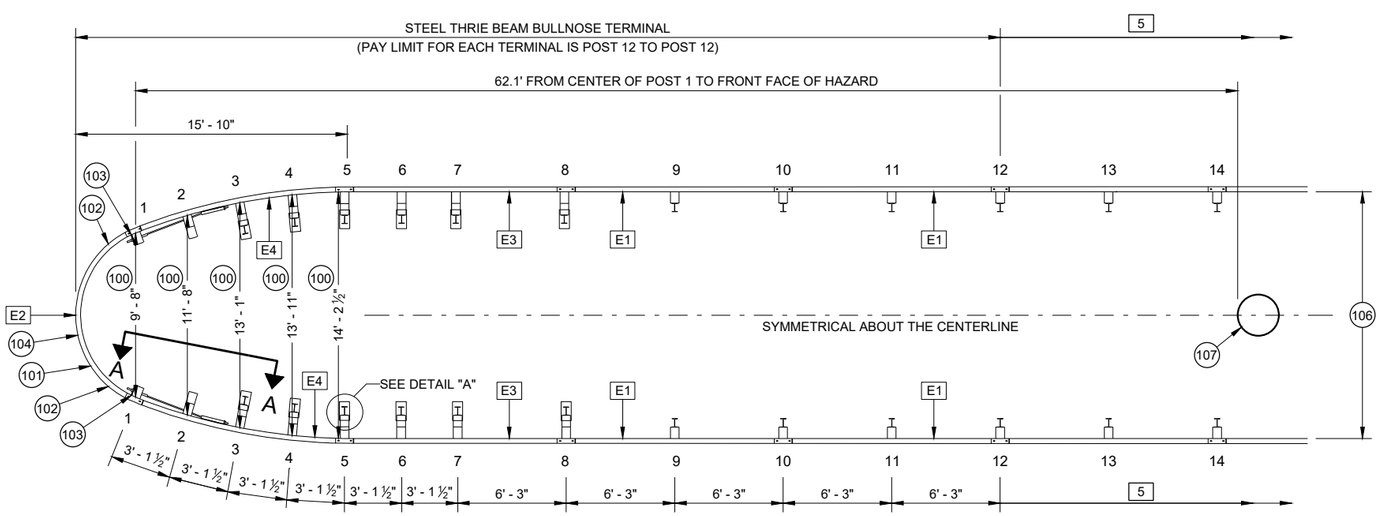

PLAN VIEW
TYPICAL BULLNOSE LAYOUT

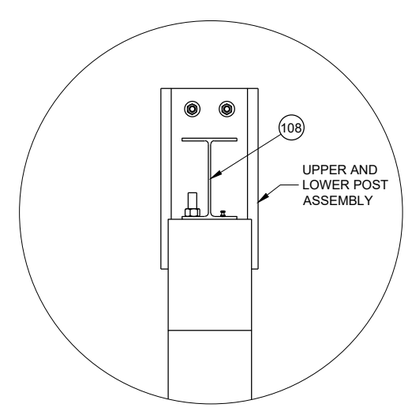

DETAIL "A"

STEEL THRIE BEAM
BULLNOSE TERMINAL

STATE OF WISCONSIN
DEPARTMENT OF TRANSPORTAT

6

SDD 14B26 - 05a

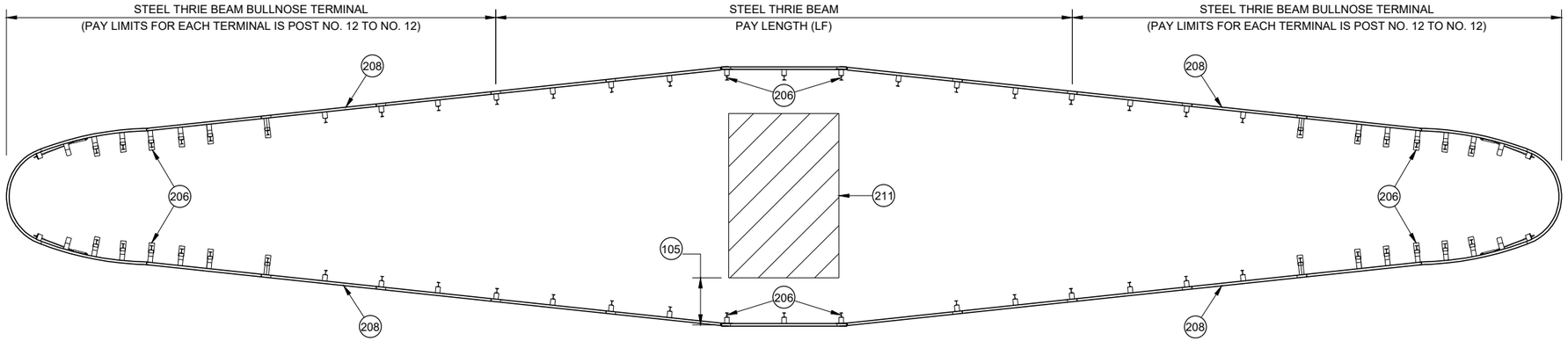

VARIABLE WIDTH BULLNOSE

GENERAL NOTES

200 6' - 3" ASYMMETRICAL 10-GAUGE W-BEAM TO THRIE BEAM GUARD TRANSITION. SEE SDD 14B45 FOR MORE INFORMATION.

201 W-BEAM RAIL. SEE SDD 14B42 FOR MORE INFORMATION.

202 SEE POST NO. 9 AND ALL STEEL THRIE BEAM POST BEYOND DETAIL.

203 SEE SDD 14B42 FOR INSTALLATION INFORMATION.

204 SEE SDD 14B45 FOR INSTALLATION DETAILS. REPLACE ASYMMETRICAL W-BEAM TO THRIE BEAM TRANSITION AND W-BEAM RAIL WITH E1. PAY FOR MODIFIED THRIE BEAM TRANSITION.

205 CONCRETE BARRIER OR BRIDGE RAIL.

206 SEE PLAN FOR STATION AND OFFSET TO CENTER OF POST.

207 SEE PLAN FOR STATION AND OFFSET TO CENTER OF SPLICE.

208 SEE PLAN FOR FLARE RATE.

209 A MINIMUM OF 25 FT OF THRIE BEAM TANGENT BEFORE TRANSITIONING TO BEAM GUARD OR THRIE BEAM TRANSITION.

210 NOT ALL BULLNOSE HARDWARE SHOWN. SEE OTHER SHEETS IN 14B26.

211 WIDER HAZARD TO BE SHIELDED.

212 TRANSITION RAIL HEIGHT TO 31" OVER THE LENGTH OF A 12' - 6" BEAM SECTION.

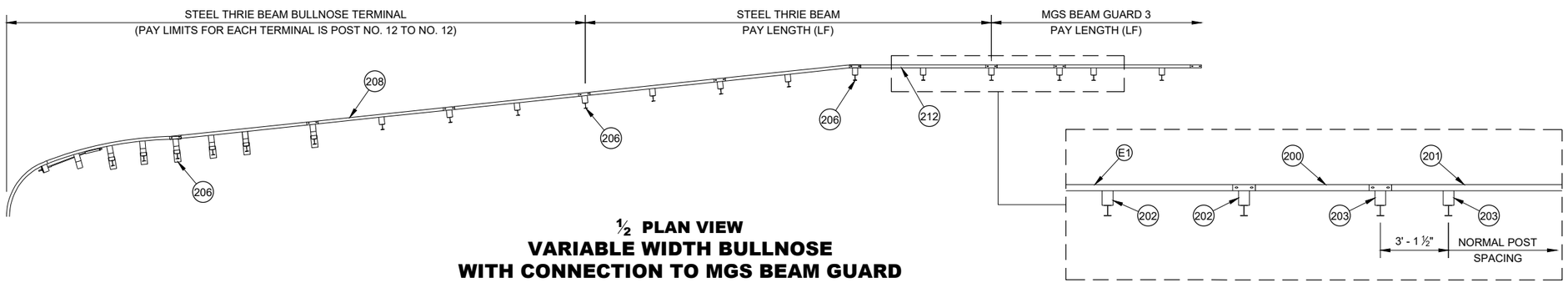

½ PLAN VIEW
VARIABLE WIDTH BULLNOSE
WITH CONNECTION TO MGS BEAM GUARD

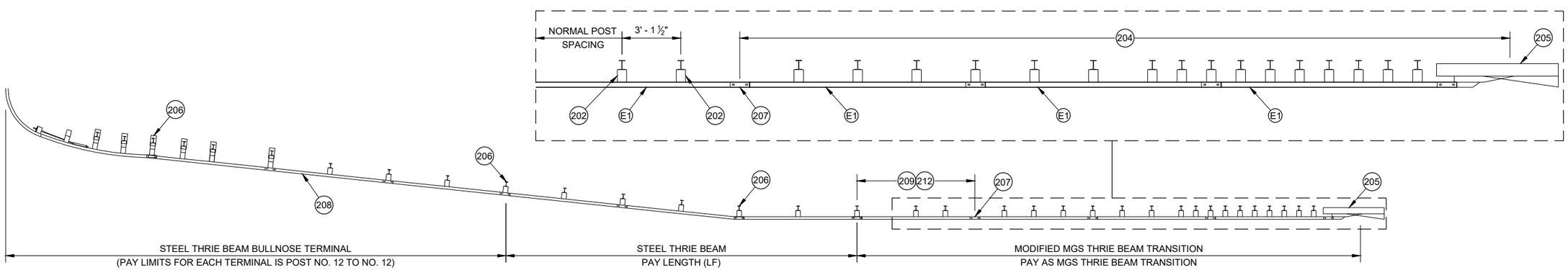

½ PLAN VIEW
VARIABLE WIDTH BULLNOSE
WITH CONNECTION TO RIGID BARRIER

STEEL THRIE BEAM BULLNOSE TERMINAL

STATE OF WISCONSIN
DEPARTMENT OF TRANSPORTAT

6

SDD 14B26 - 05b

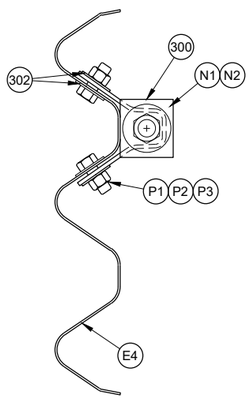

PROFILE VIEW

CABLE ANCHOR ASSEMBLY CONNECTION

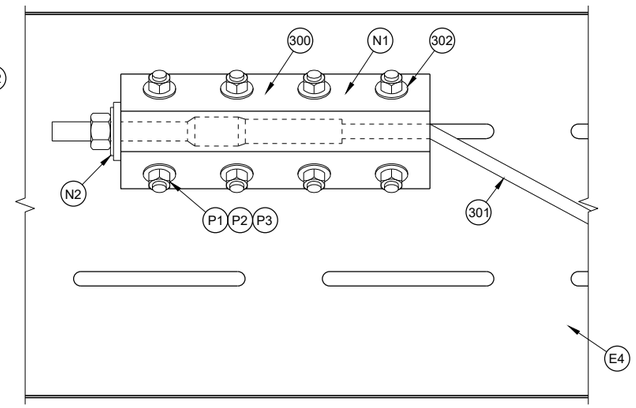

CABLE ANCHOR ASSEMBLY

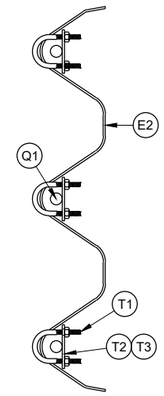

NOSE CABLE RETAINING CLIP

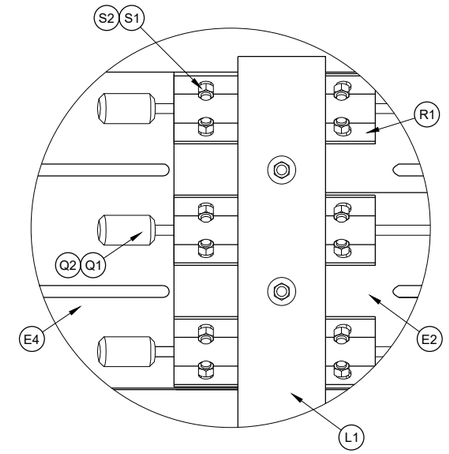

DETAIL "A"

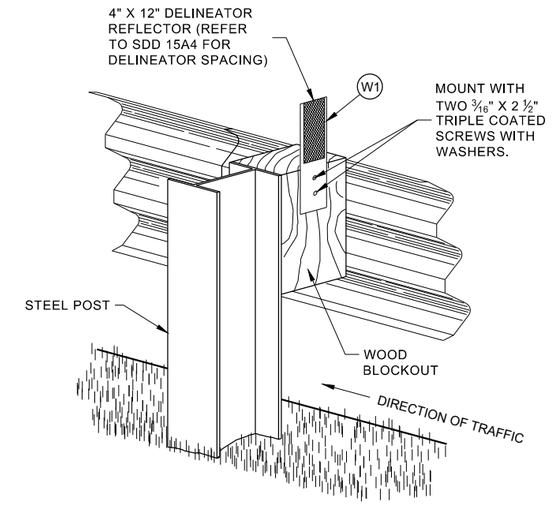

ONE SIDED REFLECTOR DETAIL AND TYPICAL INSTALLATION

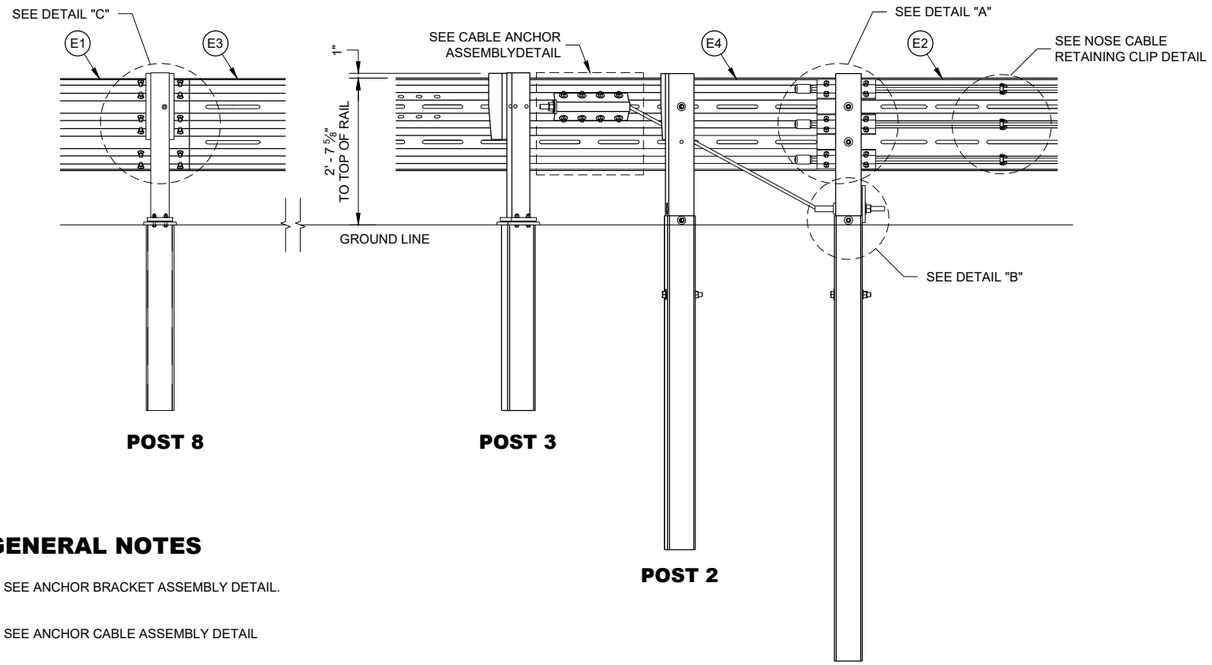

POST 8

POST 3

POST 2

POST 1

CROSS SECTION A - A

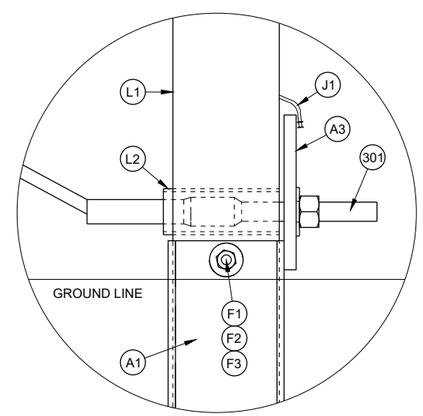

DETAIL "B"

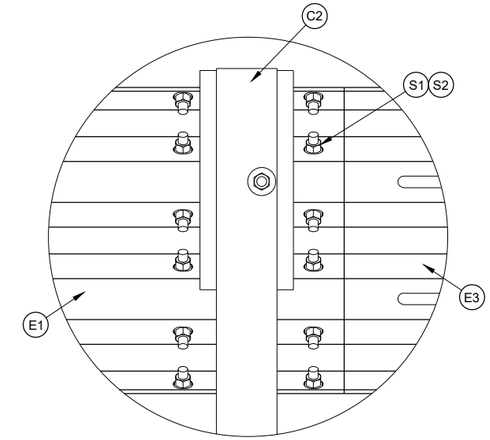

DETAIL "C" THRIE BEAM SPLICE

GENERAL NOTES

300 SEE ANCHOR BRACKET ASSEMBLY DETAIL.

301 SEE ANCHOR CABLE ASSEMBLY DETAIL

302 ONE WASHER BETWEEN BOLT HEAD AND RAIL AND BETWEEN NUT AND ANCHOR BRACKET ASSEMBLY.

303 ONE WASHER BETWEEN BOLD HEAD AND FOUNDATION TUBE AND BETWEEN NUT AND FOUNDATION TUBE.

STEEL THRIE BEAM BULLNOSE TERMINAL

STATE OF WISCONSIN
DEPARTMENT OF TRANSPORTAT

6

SDD 14B26 - 05c

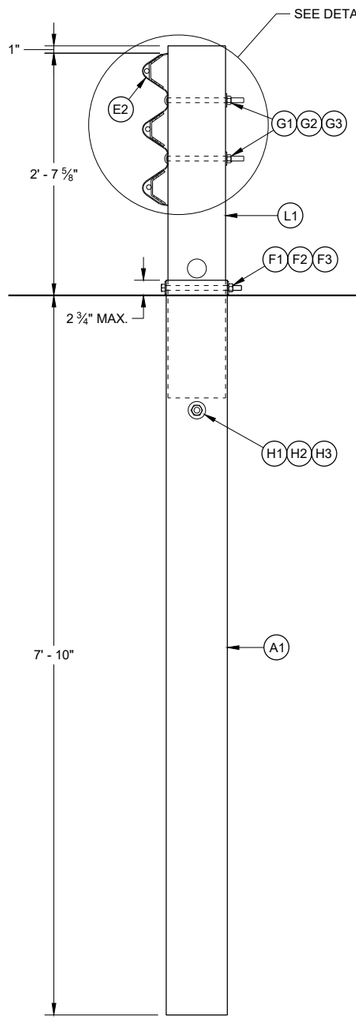

POST NO. 1

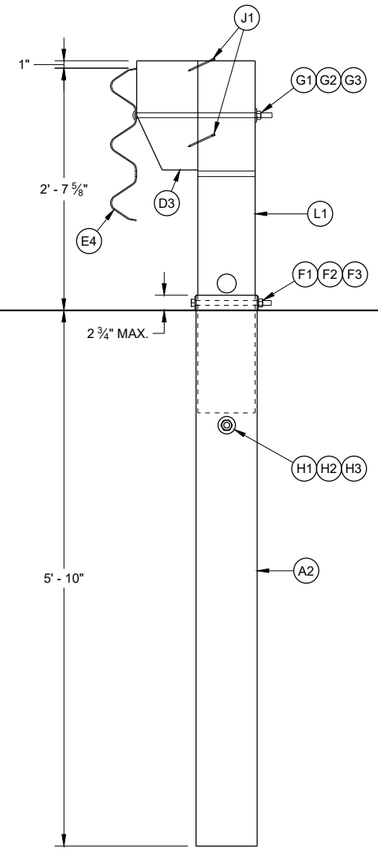

POST NO. 2

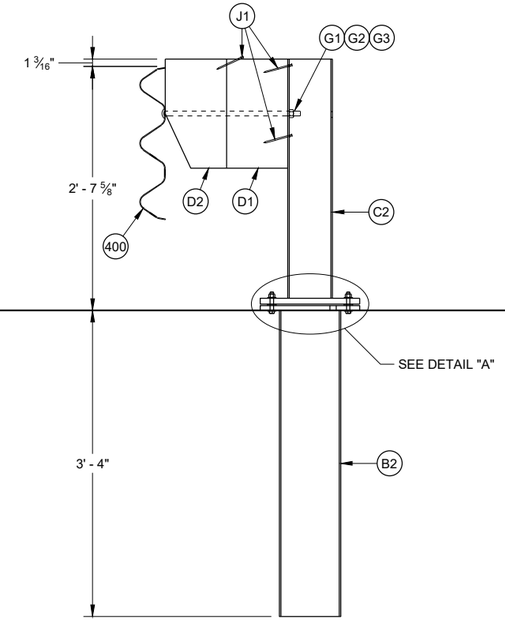

POST NOS. 3-8

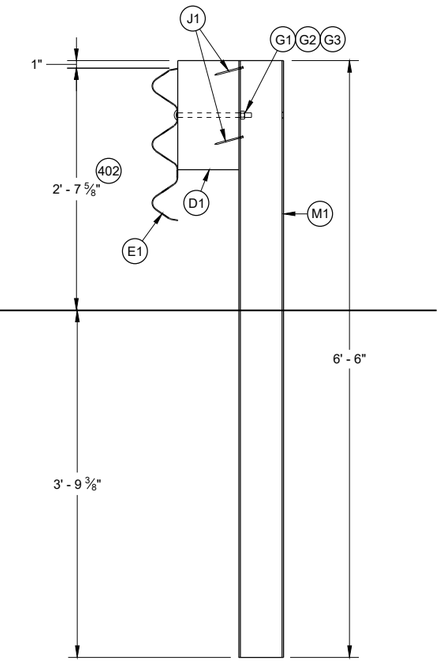

POST NOS. 9 AND ALL STEEL THRIE BEAM POSTS BEYOND

GENERAL NOTES

400 RAIL CAN BE E3 OR E4 DEPENDING ON POST LOCATION.

401 TORQUE BOLD BETWEEN 60-75 FT-LB

402 HEIGHT WILL VARY WITHIN HEIGHT TRANSITION TO OTHER HARDWARE. SEE NOTE 213, SHEET "b".

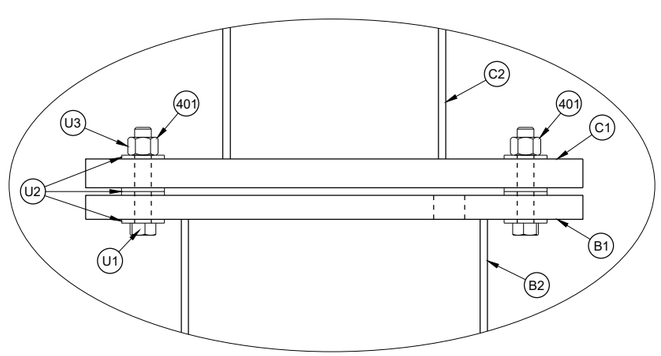

DETAIL "A"

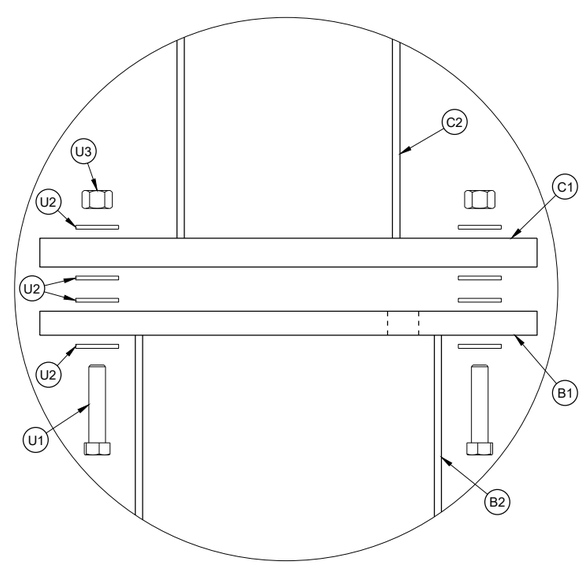

EXPLODED VIEW
DETAIL "A"

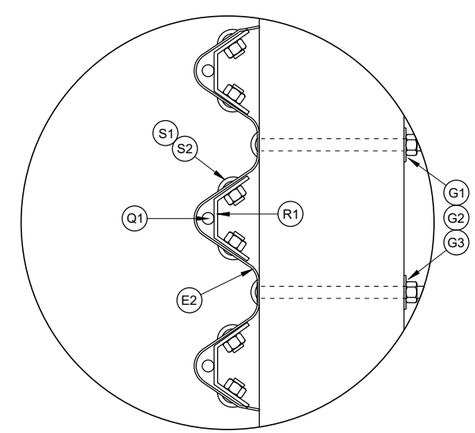

DETAIL "B"

STEEL THRIE BEAM BULLNOSE TERMINAL

STATE OF WISCONSIN
DEPARTMENT OF TRANSPORTAT

6

6

SDD 14B26 - 05d

SDD 14B26 - 05d

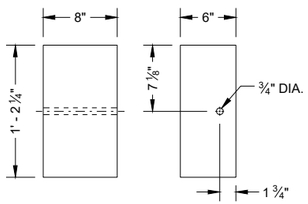

ELEVATION PROFILE
BLOCKOUT (D1)

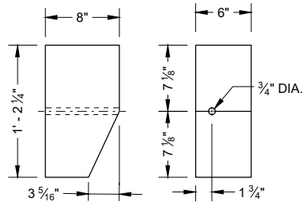

ELEVATION PROFILE
BLOCKOUT (D2)

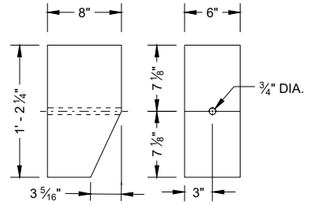

ELEVATION PROFILE
BLOCKOUT (D3)

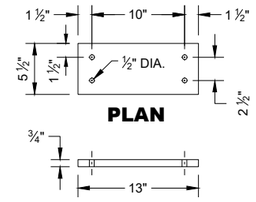

PLAN
PROFILE
UPPER SHEAR PLATE (C1)

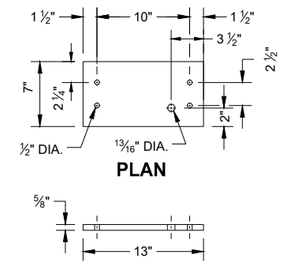

PLAN
PROFILE
LOWER SHEAR PLATE (B1)

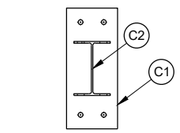

PLAN

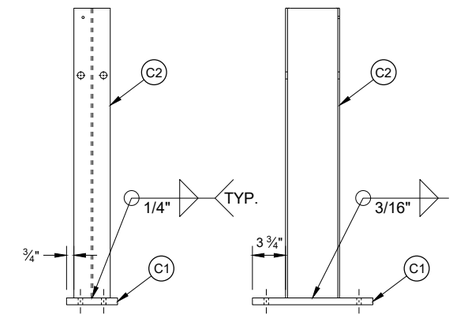

ELEVATION PROFILE
UPPER POST ASSEMBLY

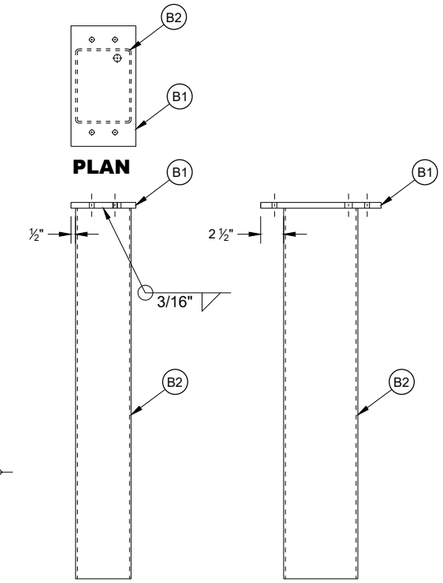

PLAN
ELEVATION PROFILE
LOWER POST ASSEMBLY

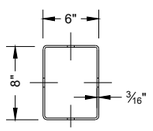

PLAN

PART	LENGTH "X"
A1	8' - 0"
A2	6' - 0"
B2	3' - 4"

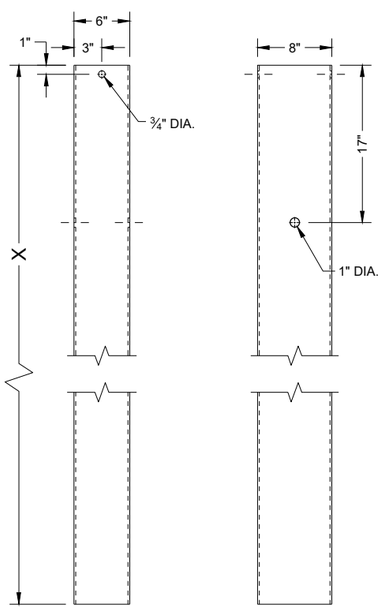

ELEVATION PROFILE
FOUNDATION TUBE

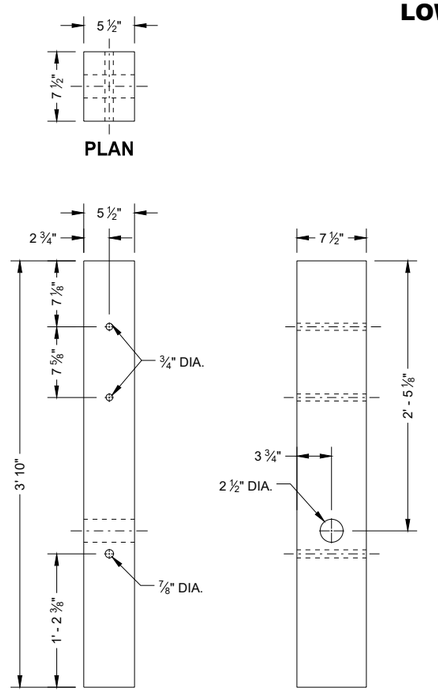

ELEVATION PROFILE
BCT POST (L1)

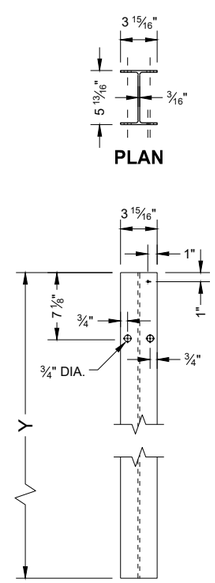

PLAN
ELEVATION
POST

PART	LENGTH "Y"
M1	6' - 6"
M2	5' - 8 5/8"
C2	2' - 7 5/8"

STEEL THRIE BEAM BULLNOSE TERMINAL

STATE OF WISCONSIN
DEPARTMENT OF TRANSPORTAT

6

SDD 14B26 - 05e

6

SDD 14B26 - 05e

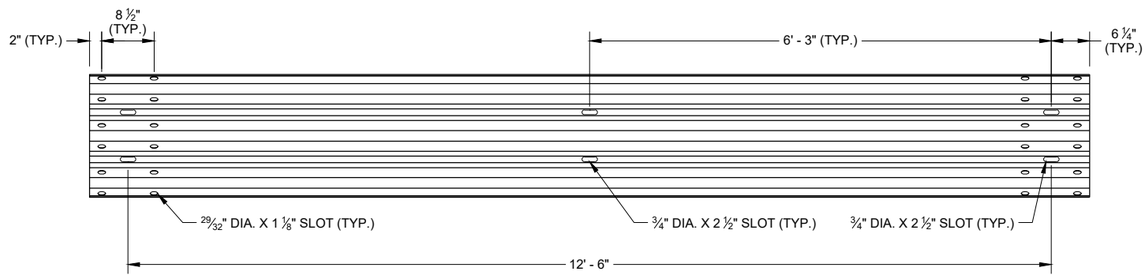

SLOTTED THRIE BEAM RAIL E1

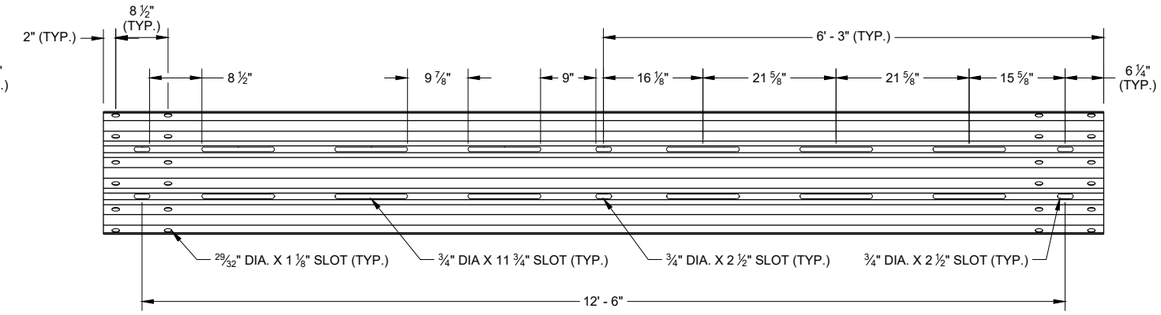

SLOTTED THRIE BEAM RAIL E3

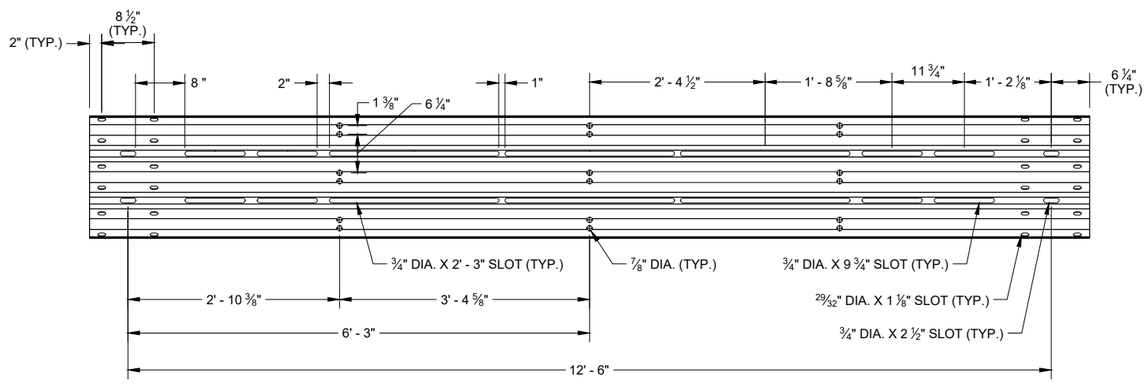

ELEVATION VIEW NON - RADIUSED
SLOTTED THRIE BEAM RAIL E2

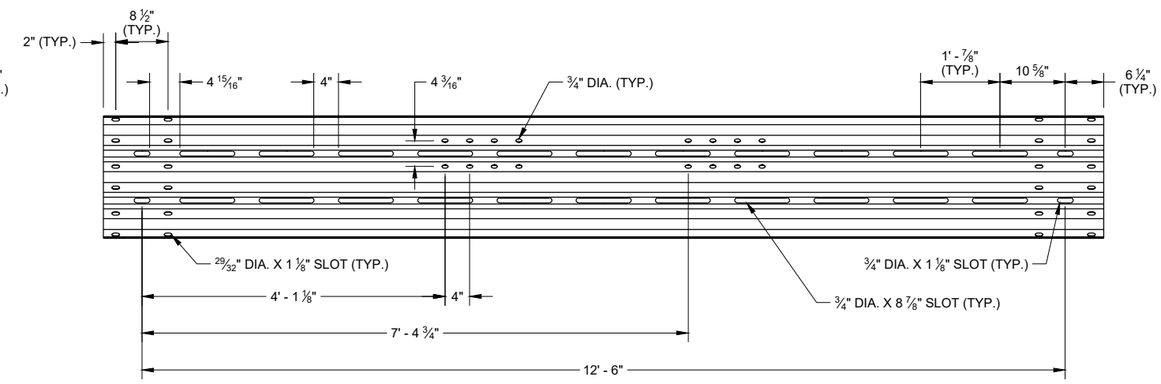

ELEVATION VIEW NON - RADIUSED
SLOTTED THRIE BEAM RAIL E4

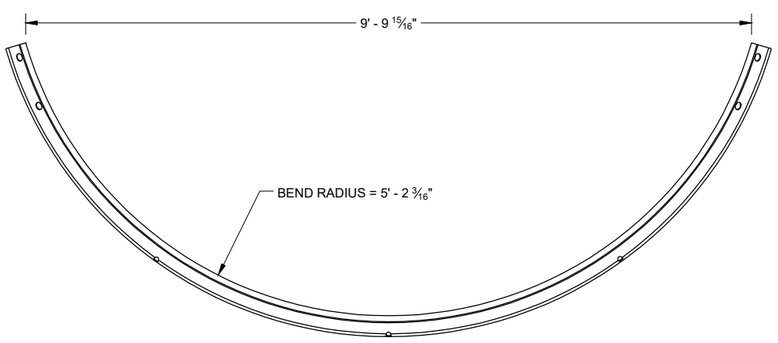

PLAN VIEW
SLOTTED THRIE BEAM RAIL E2

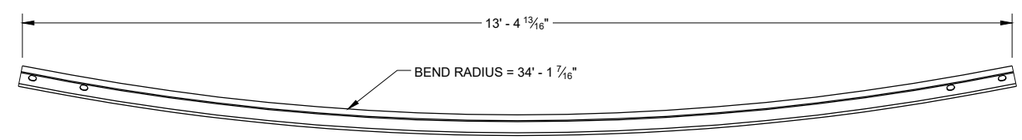

PLAN VIEW
SLOTTED THRIE BEAM RAIL E4

STEEL THRIE BEAM BULLNOSE TERMINAL

STATE OF WISCONSIN
DEPARTMENT OF TRANSPORTA

6

6

SDD 14B26 - 05f

SDD 14B26 - 05f

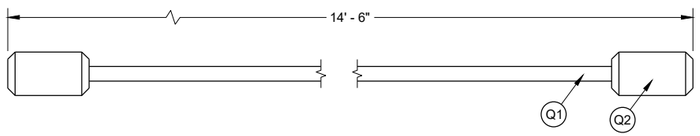

NOSE CABLE AND SWAGE BUTTON

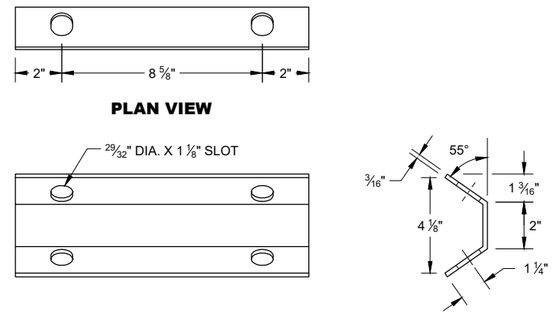

ELEVATION VIEW **PROFILE VIEW**

NOSE CABLE ANCHOR (R1)

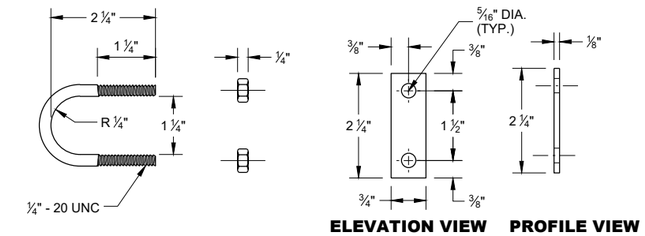

ELEVATION VIEW **PROFILE VIEW**

U - BOLT (T1) **U - BOLT NUT (T3)** **U - BOLT PLATE WASHER (T2)**

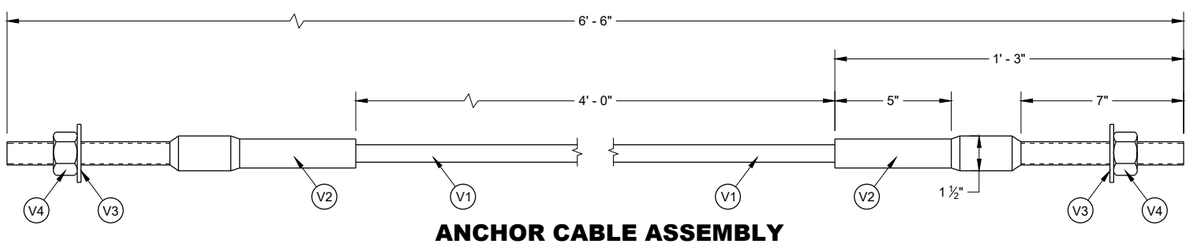

ANCHOR CABLE ASSEMBLY

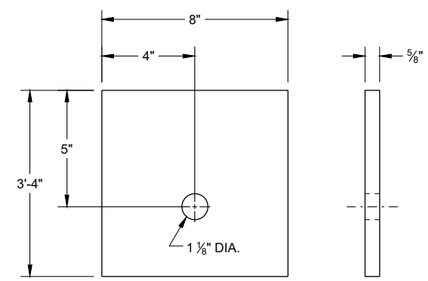

ELEVATION VIEW **PROFILE VIEW**

BCT BEARING PLATE (A3)

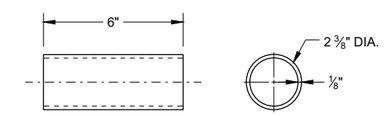

ELEVATION VIEW **PROFILE VIEW**

BCT POST SLEEVE (L2)

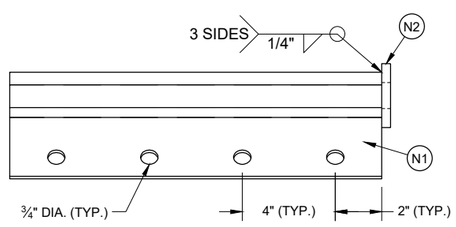

PLAN VIEW

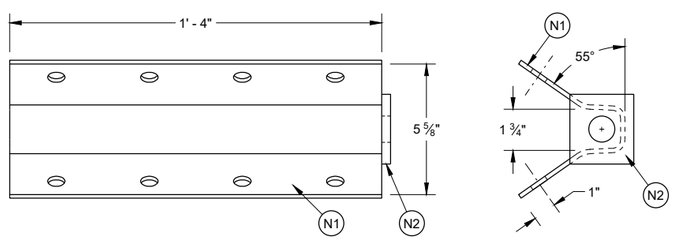

ELEVATION VIEW **PROFILE VIEW**

ANCHOR BRACKET ASSEMBLY (N1)

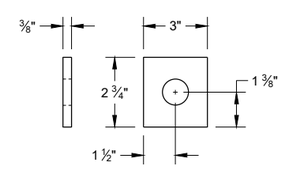

ANCHOR BRACKET END PLATE (N2)

STEEL THRIE BEAM BULLNOSE TERMINAL

STATE OF WISCONSIN
DEPARTMENT OF TRANSPORTAT

6

6

SDD 14B26 - 05g

SDD 14B26 - 05g

BILL OF MATERIALS LIST

PART NUMBER	DESCRIPTION	MATERIAL SPECIFICATION
A1	LONG FOUNDATION TUBE	AASHTO M111/ASTM A123 ASTM A500 GRADE B OR ASTM A-501
A2	FOUNDATION TUBE	AASHTO M111/ASTM A123 ASTM A500 GRADE B OR ASTM A-501
A3	BEARING PLATE AT POST	AASHTO M111/ASTM A123 ASTM A36 MIN STRENGTH 36 KSI, OR ASTM A529 MAX. STRENGTH 50 KSI, OR ASTM A572 MAX. STRENGTH 50 KSI, OR ASTM A709 MAX. STRENGTH 50 KSI, OR ASTM A992 MAX. STRENGTH 50 KSI
B1	LOWER SLIP POST ASSEMBLY - PLATE	AASHTO M111/ASTM A123 ASTM A36 MIN STRENGTH 36 KSI, OR ASTM A529 MAX. STRENGTH 50 KSI, OR ASTM A572 MAX. STRENGTH 50 KSI, OR ASTM A709 MAX. STRENGTH 50 KSI, OR ASTM A992 MAX. STRENGTH 50 KSI
B2	LOWER SLIP POST ASSEMBLY - TUBE	AASHTO M111/ASTM A123 ASTM A500 GRADE B OR ASTM A-501
C1	UPPER SLIP POST ASSEMBLY - PLATE	AASHTO M111/ASTM A123 ASTM A36 MIN STRENGTH 36 KSI, OR ASTM A529 MAX. STRENGTH 50 KSI, OR ASTM A572 MAX. STRENGTH 50 KSI, OR ASTM A709 MAX. STRENGTH 50 KSI, OR ASTM A992 MAX. STRENGTH 50 KSI
C2	UPPER SLIP POST ASSEMBLY - POST	AASHTO M111/ASTM A123 ASTM A6 W6X9 OR W6X8.5 ASTM A36 MIN STRENGTH 36 KSI, OR ASTM A529 MAX. STRENGTH 50 KSI, OR ASTM A572 MAX. STRENGTH 50 KSI, OR ASTM A709 MAX. STRENGTH 50 KSI, OR ASTM A992 MAX. STRENGTH 50 KSI
D1	BLOCK FOR STEEL POST - WOOD	WISDOT SPEC. 614
D2	TAPERED BLOCK FOR STEEL POST - WOOD	WISDOT SPEC. 614
D3	TAPERED BLOCK FOR BCT POST - WOOD	WISDOT SPEC. 614
E1	THRIE BEAM RAIL	AASHTO M180 CLASS A TYPE 2 APPROVED PRODUCER
E2	THRIE BEAM RAIL - SHOP BENT AND PUNCHED	AASHTO M180 CLASS A TYPE 2 APPROVED PRODUCER. INDICATE RADIUS BEAM GUARD IS BENT TO ON THE BACKSIDE OF RAIL. FOLLOW AASHTO M180. MARK RADIUS.
E3	THRIE BEAM RAIL - PUNCHED	AASHTO M180 CLASS A TYPE 2 APPROVED PRODUCER
E4	THRIE BEAM RAIL - SHOP BENT AND PUNCHED	AASHTO M180 CLASS A TYPE 2 APPROVED PRODUCER. INDICATE RADIUS BEAM GUARD IS BENT TO ON THE BACKSIDE OF RAIL. FOLLOW AASHTO M180. MARK RADIUS.
F1	5/8" DIA. HEX HEAD GROUND STRUT AND YOKE BOLT	HOT DIP AASHTO M232 CLASS / ASTM A153 CLASS C / ASTM F2329 C OR MECHANICAL GAL. TO AASHTO M298 CLASS 50 TYPE 1/ ASTM B695 CLASS 50 TYPE 1 UNC HEAVY HEX HEAD ASTM A307 GRADE B OR SAE J429 GRADE 2 OR ASTM F1554 GRADE 36
F2	5/8" DIA. GROUND STRUT AND YOKE BOLT - WASHER	HOT DIP AASHTO M232 CLASS / ASTM A153 CLASS C / ASTM F2329 C OR MECHANICAL GAL. TO AASHTO M298 CLASS 50 TYPE 1/ ASTM B695 CLASS 50 TYPE 1 F436 TYPE 1 (HARDEN WASHER ONLY)
F3	GROUND STRUT AND YOKE BOLT - NUT	HOT DIP AASHTO M232 CLASS / ASTM A153 CLASS C / ASTM F2329 C OR MECHANICAL GAL. TO AASHTO M298 CLASS 50 TYPE 1/ ASTM B695 CLASS 50 TYPE 1 UNC OVER TAP NUTS AS SPECIFIED IN AASHTO 291/ASTM A 563 HEAVY HEX HEAD ASTM A563DH OR SAE J995 GRADE 5
G1	5/8 " DIA. POST BOLT	HOT DIP AASHTO M232 CLASS / ASTM A153 CLASS C / ASTM F2329 C OR MECHANICAL GAL. TO AASHTO M298 CLASS 50 TYPE 1/ ASTM B695 CLASS 50 TYPE 1 F436 TYPE 1 (HARDEN WASHER TYPICALLY USED WITH STEEL POSTS) OR ASTM F844 (UNHARDENED WASHER TYPICALLY USED WITH WOOD)
G2	POST BOLT - WASHER	HOT DIP AASHTO M232 CLASS / ASTM A153 CLASS C / ASTM F2329 C OR MECHANICAL GAL. TO AASHTO M298 CLASS 50 TYPE 1/ ASTM B695 CLASS 50 TYPE 1 F436 TYPE 1 (HARDEN WASHER TYPICALLY USED WITH STEEL POSTS) OR ASTM F844 (UNHARDENED WASHER TYPICALLY USED WITH WOOD)
G3	POST BOLT - NUT	HOT DIP AASHTO M232 CLASS / ASTM A153 CLASS C / ASTM F2329 C OR MECHANICAL GAL. TO AASHTO M298 CLASS 50 TYPE 1/ ASTM B695 CLASS 50 TYPE 1 UNC OVER TAP NUTS AS SPECIFIED IN AASHTO 291/ASTM A 563 AASHTO M180 RECESSED HEAVY HEX HEAD ASTM A563DH OR SAE J995 GRADE 5
H1	7/8" DIA. SOIL TUBE BOLT	HOT DIP AASHTO M232 CLASS / ASTM A153 CLASS C / ASTM F2329 C OR MECHANICAL GAL. TO AASHTO M298 CLASS 50 TYPE 1/ ASTM B695 CLASS 50 TYPE 1 UNC OVER TAP NUTS AS SPECIFIED IN AASHTO 291/ASTM A 563 HEAVY HEX HEAD 7/8" ASTM A563DH OR SAE J995 GRADE 5
H2	SOIL TUBE BOLT - WASHER	HOT DIP AASHTO M232 CLASS / ASTM A153 CLASS C / ASTM F2329 C OR MECHANICAL GAL. TO AASHTO M298 CLASS 50 TYPE 1/ ASTM B695 CLASS 50 TYPE 1 7/8" ASTM F844 TYPE 1 (HARDEN WASHER ONLY)
H3	SOIL TUBE BOLT - NUT	HOT DIP AASHTO M232 CLASS / ASTM A153 CLASS C / ASTM F2329 C OR MECHANICAL GAL. TO AASHTO M298 CLASS 50 TYPE 1/ ASTM B695 CLASS 50 TYPE 1 UNC OVER TAP NUTS AS SPECIFIED IN AASHTO 291/ASTM A 563 HEAVY HEX HEAD 7/8" ASTM A563DH OR SAE J995 GRADE 5
J1	16D DOUBLE HEAD NAIL	ASTM A153 HOT DIPPED CLASS D DOUBLE HEAD ASTM F1667 TYPE 1 STYLE 12 (16 DOUBLE HEADED)
L1	BCT TIMBER POST	WISDOT SPEC. 614 S4S FINISH ON 4 SIDE
L2	BCT POST SLEEVE	AASHTO M111/ASTM A123 2 3/8" OD ASTM 53 GRADE B
M1	W6X8.5 OR W6X9 STEEL POST	AASHTO M111/ASTM A123 ASTM A6 W6X9 OR W6X8.5 ASTM A36 MIN. STRENGTH 36 KSI, OR ASTM A529 MAX. STRENGTH 50 KSI, OR ASTM A572 MAX. STRENGTH 50 KSI, OR ASTM A709 MAX. STRENGTH 50 KSI, OR ASTM A992 MAX. STRENGTH 50 KSI
M2	W6X8.5 OR W6X9 STEEL POST	AASHTO M111/ASTM A123 ASTM A6 W6X9 OR W6X8.5 ASTM A36 MIN. STRENGTH 36 KSI, OR ASTM A529 MAX. STRENGTH 50 KSI, OR ASTM A572 MAX. STRENGTH 50 KSI, OR ASTM A709 MAX. STRENGTH 50 KSI, OR ASTM A992 MAX. STRENGTH 50 KSI
N1	ANCHOR BRACKET	AASHTO M111/ASTM A123 ASTM A36 MIN. STRENGTH 36 KSI, OR ASTM A529 MAX. STRENGTH 50 KSI, OR ASTM A572 MAX. STRENGTH 50 KSI, OR ASTM A709 MAX. STRENGTH 50 KSI, OR ASTM A992 MAX. STRENGTH 50 KSI
N2	ANCHOR BRACKET - BEARING PLATE	AASHTO M111/ASTM A123 ASTM A36 MIN. STRENGTH 36 KSI, OR ASTM A529 MAX. STRENGTH 50 KSI, OR ASTM A572 MAX. STRENGTH 50 KSI, OR ASTM A709 MAX. STRENGTH 50 KSI, OR ASTM A992 MAX. STRENGTH 50 KSI

PART NUMBER	DESCRIPTION	MATERIAL SPECIFICATION
P1	5/8" DIA. ANCHOR BRACKET BOLT	HOT DIP AASHTO M232 CLASS / ASTM A153 CLASS C / ASTM F2329 C OR MECHANICAL GAL. TO AASHTO M298 CLASS 50 TYPE 1/ ASTM B695 CLASS 50 TYPE 1 UNC HEAVY HEX HEAD 5/8" ASTM A307 GRADE B OR SAE J429 GRADE 2 OR ASTM F1554 GRADE 36
P2	ANCHOR BRACKET BOLT - WASHER	HOT DIP AASHTO M232 CLASS / ASTM A153 CLASS C / ASTM F2329 C OR MECHANICAL GAL. TO AASHTO M298 CLASS 50 TYPE 1/ ASTM B695 CLASS 50 TYPE 1 F436 TYPE 1 (HARDEN WASHER ONLY)
P3	SOIL TUBE BOLT - NUT	HOT DIP AASHTO M232 CLASS / ASTM A153 CLASS C / ASTM F2329 C OR MECHANICAL GAL. TO AASHTO M298 CLASS 50 TYPE 1/ ASTM B695 CLASS 50 TYPE 1 UNC OVER TAP NUTS AS SPECIFIED IN AASHTO 291/ASTM A 563 HEAVY HEX HEAD ASTM A563DH OR SAE J995 GRADE 5
Q1	5/8" DIA. NOSE CABLE	6X19 AASTHO M30 / ASTM A741 XIPS INDEPENDENT WIRE CORE (IWRC) PR 6X25 XIPS, IWRC NOMINAL BREAKING STRENGTH OF 41.2 KIPS.
Q2	NOSE CABLE-SWAGE BUTTON	COLD TUFF BUTTON, S-409 SIZE NO. 12 STOCK NUMBER 1040395 OR ANY OTHER SIMILAR SIZED WAGED-GRIP-BUTTON FERRULES. ASTM A576 GRADE 1035 SWAGE FITTING ARE TO BE FIELD SWAGED PER MANUFACTURERS RECOMMENDATION. NOMINAL BREAKING STRENGTH OF 41.2 KIPS.
R1	NOSE CABLE ANCHOR BRACKET	AASHTO M111/ASTM A123 ASTM A36 MIN. STRENGTH 36 KSI, OR ASTM A529 MAX. STRENGTH 50 KSI, OR ASTM A572 MAX. STRENGTH 50 KSI, OR ASTM A709 MAX. STRENGTH 50 KSI, OR ASTM A992 MAX. STRENGTH 50 KSI
S1	5/8" DIA. SPLICE BOLT - BOLT	HOT DIP AASHTO M232 CLASS / ASTM A153 CLASS C / ASTM F2329 C OR MECHANICAL GAL. TO AASHTO M298 CLASS 50 TYPE 1 / ASTM B695 CLASS 50 TYPE 1 UNC AASHTO M180 HEAD ASTM A307 GRADE B OR SAE J429 GRADE 2 OR ASTM F1554 GRADE 36
S2	SPLICE - BOLT NUT	HOT DIP AASHTO M232 CLASS / ASTM A153 CLASS C / ASTM F2329 C OR MECHANICAL GAL. TO AASHTO M298 CLASS 50 TYPE 1 / ASTM B695 CLASS 50 TYPE 1 UNC OVER TAP NUTS AS SPECIFIED IN AASHTO 291/ASTM A 563 AASHTO M180 RECESSED HEAVY HEX HEAD 5/8" ASTM A563DH OR SAE J995 GRADE 5
T1	1/4" DIA. NOSE CABLE - U BOLT	HOT DIP AASHTO M232 CLASS / ASTM A153 CLASS C / ASTM F2329 C OR MECHANICAL GAL. TO AASHTO M298 CLASS 50 TYPE 1 / ASTM B695 CLASS 50 TYPE 1 UNC HEAVY HEX HEAD ASTM A307 GRADE B OR SAE J429 GRADE 2 OR ASTM F1554 GRADE 36
T2	U-BOLT - PLATE WASHER	HOT DIP AASHTO M232 CLASS / ASTM A153 CLASS C / ASTM F2329 C OR MECHANICAL GAL. TO AASHTO M298 CLASS 50 TYPE 1 / ASTM B695 CLASS 50 TYPE 1 F436 TYPE 1 (HARDEN WASHER ONLY)
T3	U-BOLT NUT	HOT DIP AASHTO M232 CLASS / ASTM A153 CLASS C / ASTM F2329 C OR MECHANICAL GAL. TO AASHTO M298 CLASS 50 TYPE 1/ ASTM B695 CLASS 50 TYPE 1 UNC OVER TAP NUTS AS SPECIFIED IN AASHTO 291 / ASTM A 563 HEAVY HEX HEAD ASTM A563DH OR SAE J995 GRADE 5
U1	7/16" DIA. SLIP POST ASSEMBLY - BREAKAWAY BOLT	ASTM A153 OR B695 CLASS 55 OR F2329 UNC FULLY THREADED HEX HEAD TAP BOLT ASTM A449 OR SAE J429 GRADE 5
U2	7/16" DIA. SLIP POST ASSEBLY - BREAKAWAY BOLT - WASHER	ASTM F436 TYPE I (HARDEN TYPICALLY USED WITH STEEL) GALV. AASHTO M111/ASTM A 123 OR GALV. HOT DIP. TO POST BOLT CLASS C / ASTM F2329 OR GALV. MECHANICALLY TO AASHTO M232 CLASS C / ASTM A153 CLASS C / ASTM AASHTO M298 CLASS 50, TYPE 1 / ASTM B695 CLASS 55, F2329
U3	SLIP POST ASSEBLY - BREAKAWAY BOLT - NUT	HOT DIP AASHTO M232 CLASS / ASTM A153 CLASS C / ASTM F2329 C OR MECHANICAL GAL. TO AASHTO M298 CLASS 50 TYPE 1 / STM B695 CLASS 50 TYPE 1 UNC OVER TAP NUTS AS SPECIFIED IN AASHTO 291/ASTM A 563 HEAVY HEX HEAD ASTM A563DH OR SAE J995 GRADE 5
V1	¾" DIA. BCT CABLE	AASHTO M30 / ASTM A741 6X19 INDEPENDENT WIRE CORE (IWRC) IMPROVED PLOW STEEL (IPS), 6X19 INDEPENDENT WIRE CORE (IWRC) IMPROVED PLOW STEEL (IPS) TYPE II OR IIC, CLASS C ZINC COATED MIN BREAKING STRENGTH OF 42.7 KIPS
V2	ANCHOR CABLE-SWAGE FITTING	UNC ASTM A576 GRADE 1035 SWAGE FITTING ARE TO BE FACTORY SWAGED. MIN. BREAKING STRENGTH OF 42.7 KIPS. ASME B30.26 "FORGED, CAST, OR DIE STAMPED WITH THE FOLLOWING IN TO CONNECTION: NAME OF MANUFACTURE OR TRADEMARK OF CONNECTION'S MANUFACTURER, SIZE OR RATED LOAD, GRADE FOR ALLOY EYEBOLTS."
V3	1" DIA. ANCHOR CABLE-WASHER	HOT DIP AASHTO M232 CLASS / ASTM A153 CLASS C / ASTM F2329 C OR MECHANICAL GAL. TO AASHTO M298 CLASS 50 TYPE 1 / ASTM B695 CLASS 50 TYPE 1 F436 TYPE 1 (HARDEN WASHER ONLY)
V4	1" DIA. ANCHOR CABLE-NUT	HOT DIP AASHTO M232 CLASS / ASTM A153 CLASS C / ASTM F2329 C OR MECHANICAL GAL. TO AASHTO M298 CLASS 50 TYPE 1/ ASTM B695 CLASS 50 TYPE 1 UNC OVER TAP NUTS AS SPECIFIED IN AASHTO 291 / ASTM A 563 HEAVY HEX HEAD ASTM A563DH OR SAE J995 GRADE 5
W1	REFLECTOR	SEE SDD 15A4

6

6

STEEL THRIE BEAM BULLNOSE TERMINAL

STATE OF WISCONSIN
DEPARTMENT OF TRANSPORTATION

APPROVED
November 2022 — DATE
/S/ Rodney Taylor — ROADWAY STANDARDS DEVE ENGINEER
FHWA

SDD 14B26 - 05h

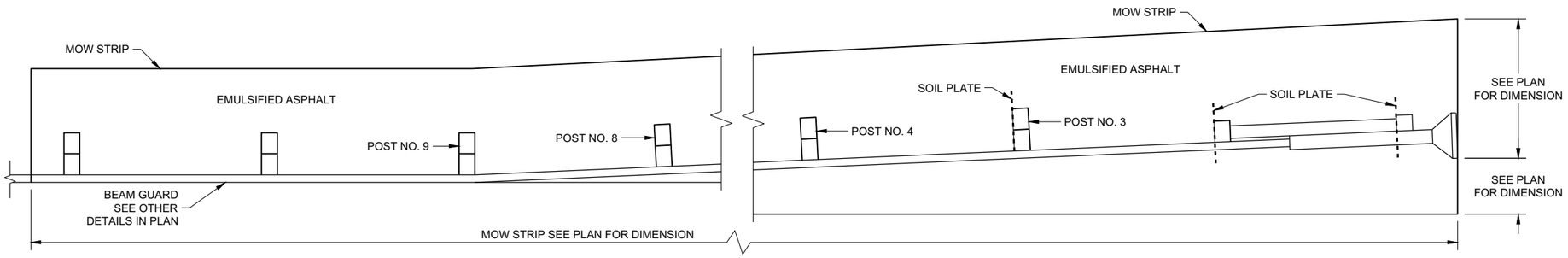

PLAN VIEW
MOW STRIP LAYOUT FOR ENERGY ABSORBING TERMINAL

GENERAL NOTES

ONLY USE STEEL POSTS IN CONCRETE AND ASPHALT MOW STRIPS.

1. CONTROLLED LOW-STRENGTH BACKFILL OR EMULSIFIED ASPHALT.
2. DEPTH OF MOW STRIP:
   ASPHALT - 4"
   CONCRETE - 4"
   EMULSIFIED ASPHALT - 1" OR LESS
3. FOR EMULSIFIED ASPHALT, MOW STRIP STRIP LEAVE OUTS NOT REQUIRED. (TYPICAL FOR ALL POSTS)

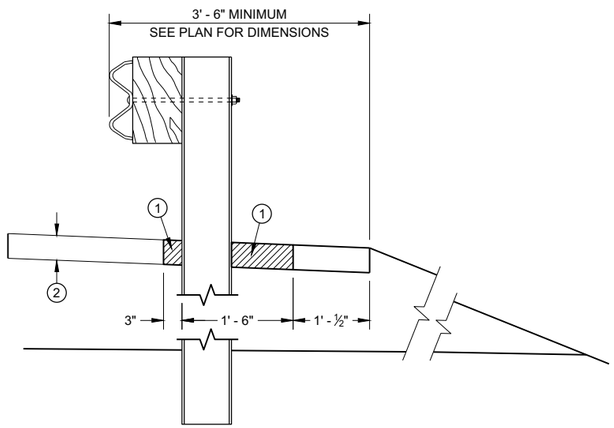

SECTION A - A

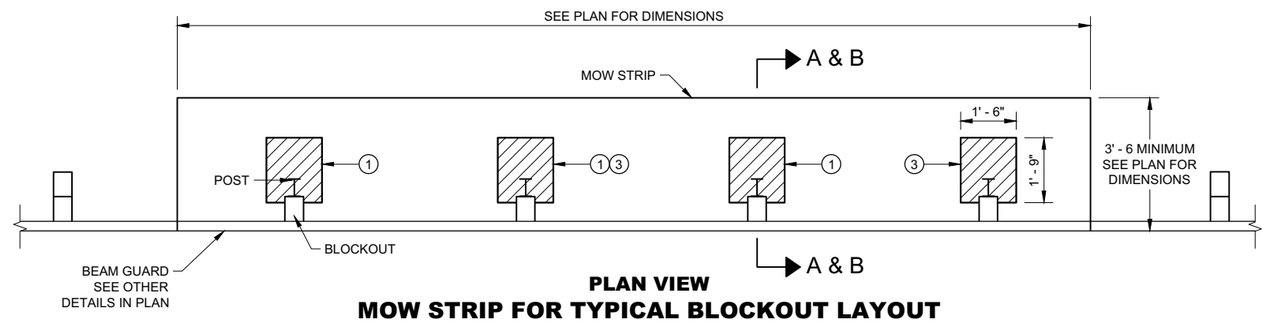

PLAN VIEW
MOW STRIP FOR TYPICAL BLOCKOUT LAYOUT

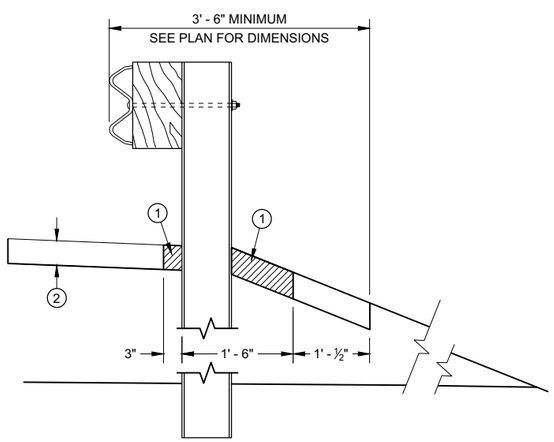

SECTION B - B

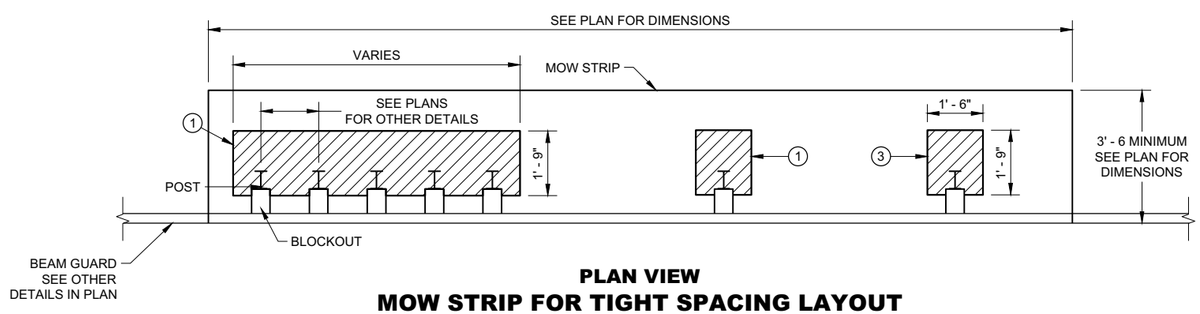

PLAN VIEW
MOW STRIP FOR TIGHT SPACING LAYOUT

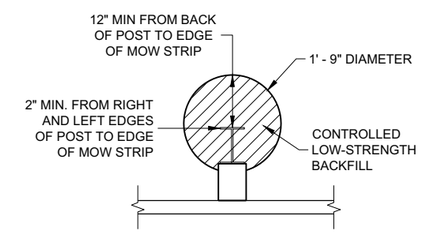

ALTERNATIVE HMA MOW STRIP DESIGN

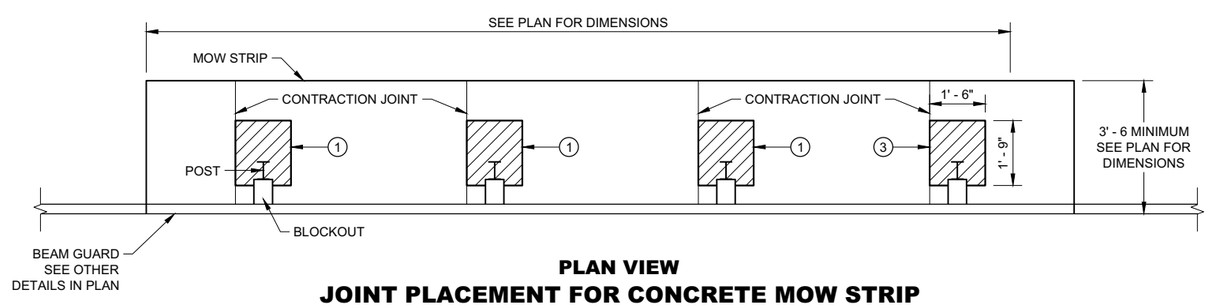

PLAN VIEW
JOINT PLACEMENT FOR CONCRETE MOW STRIP

GUARDRAIL MOW STRIP

STATE OF WISCONSIN
DEPARTMENT OF TRANSPORTA

6

SDD 14B28 - 04a

LEGEND

CONCRETE, ASPHALT, OR EMULSIFIED ASPHALT MOW STRIP (SEE OTHER DETAILS)

EMULSIFIED ASPHALT MOW STRIP (SEE OTHER DETAILS)

GENERAL NOTES

EXISTING THRIE BEAM BULLNOSES MAY HAVE WOOD POSTS. NEW THRIE BEAM BULLNOSE WILL HAVE STEEL POSTS.

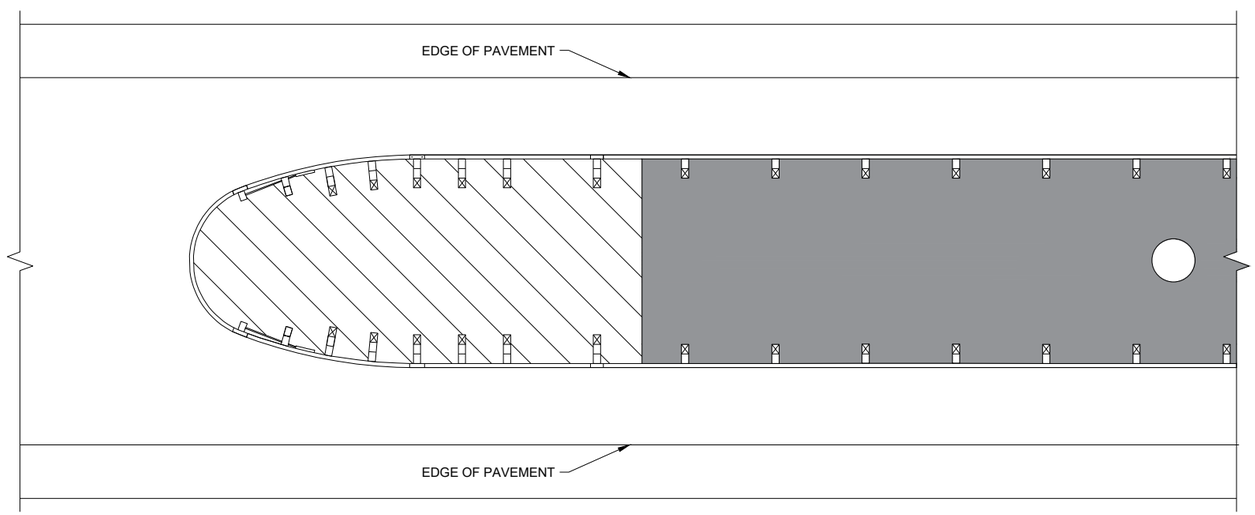

THRIE BEAM BULLNOSE

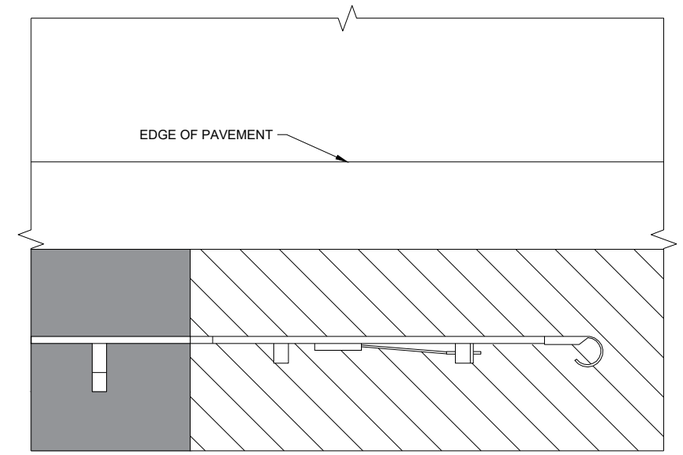

TYPE 2 TERMINAL

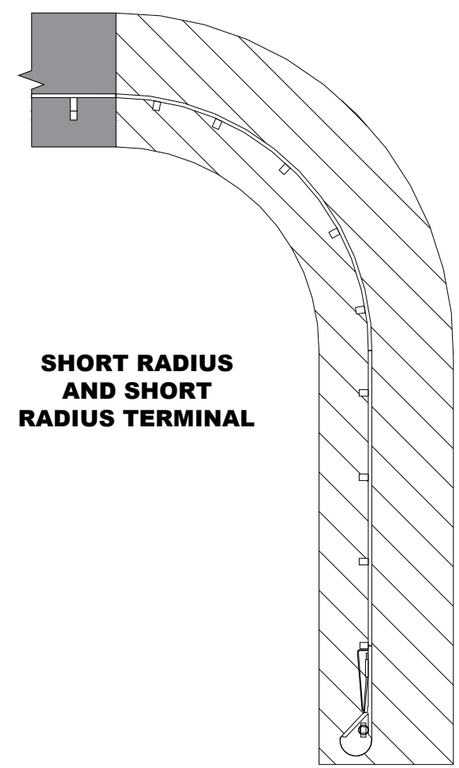

SHORT RADIUS AND SHORT RADIUS TERMINAL

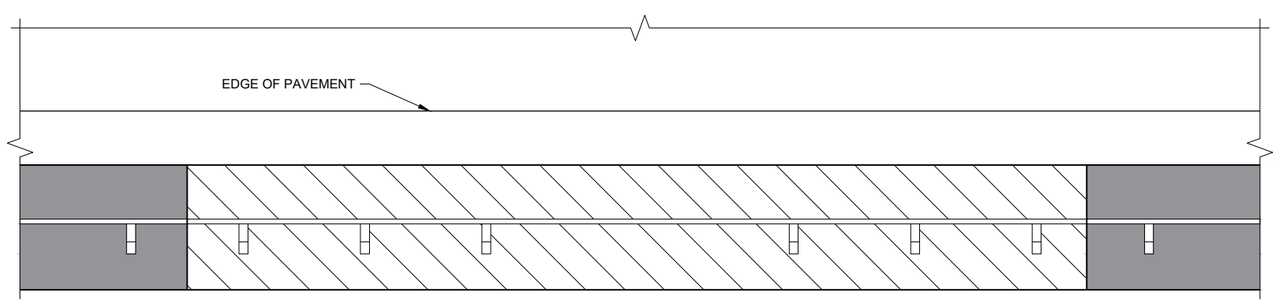

LONG - SPAN

6

SDD 14B28 - 04b

GUARDRAIL MOW STRIP

STATE OF WISCONSIN
DEPARTMENT OF TRANSPORTATION

APPROVED
August 2020 — DATE
/S/ Rodney Taylor — ROADWAY STANDARDS DEVE ENGINEER
FHWA

6

SDD 14B28 - 04b

1. WOOD OR STEEL POSTS (w6X9 OR w6X8.5) MAY BE USED. DO NOT INTERMIX WOOD AND STEEL POSTS. INSTALL STEEL POSTS WITH HOLES ON APPROACHING TRAFFIC SIDE.
2. USE WOOD OR APPROVED PLASTIC BLOCKOUTS. WOOD BLOCKOUTS MAY BE CONSTRUCTED OUT OF TWO OR MORE WOOD BLOCKOUTS. SEE ALTERNATE WOOD BLOCKOUT DETAIL. DIMENSIONS OF APPROVED PLASTIC BLOCKOUTS MAY VARY.
3. IF ROCK IS ENCOUNTERED DURING EXCAVATION, PROVIDE A HOLE 12 INCHES IN DIAMETER EXTENDING 20 INCHES DEEP INTO THE ROCK. PLACE APPROXIMATELY 2 1/2" INCHES OF GRANULAR MATERIAL IN THE BOTTOM OF THE HOLE. CUT THE POSTS THE TO LENGTH AMD INSTALL. BACKFILL WITH EXCAVATED MATERIAL AND COMPACT. BACKFILL IS TO BE FREE OF LARGE ROCKS.
4. WHEN THE DISTANCE FROM BACK OF POST TO SHOULDER HINGE POINT IS LESS THAN 2 FEET INSTALL LONGER POST AT HALF POST SPACING (K).
5. FOR NEW MGS INSTALLATION TOP OF W-BEAM RAIL TOLERANCE IS ±1". FOR EXISTING MGS INSTALLATION TOP OF W-BEAM IS BETWEEN 27 ¾" TO 32".
6. WHEN USING STEEL POST AND WOOD BLOCKOUTS INSTALL FOUR 16D GALVANIZED NAILS. INSTALL NAILS AT THE BACK CORNERS OF THE BLOCK AND BEND THE NAILS OVER THE FLANGE OF THE STEEL POST.
7. TOTAL POST LENGTH FOR TYPE K IS 7' - 0". TOTAL POST LENGTH FOR OTHER MGS TYPES IS 6' - 0".

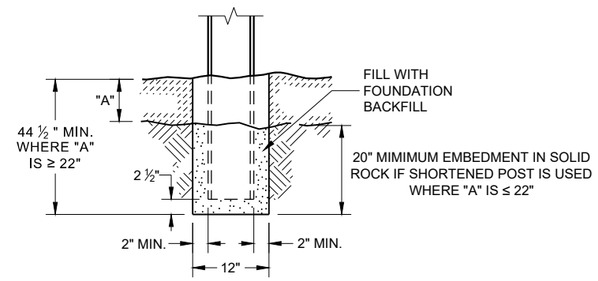

END VIEW
SETTING STEEL OR WOOD POST IN ROCK (3)

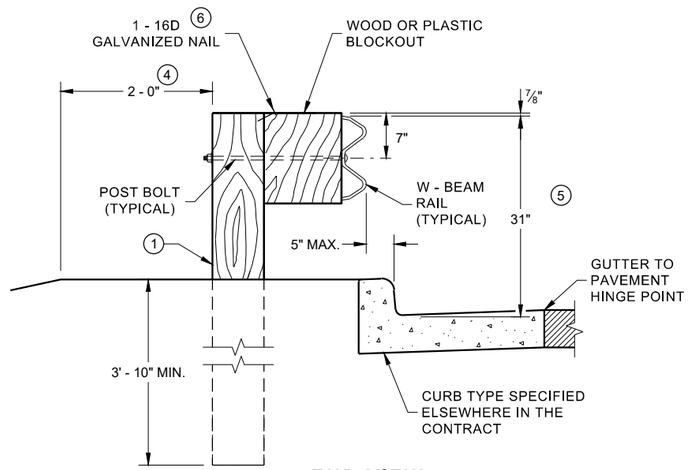

END VIEW
LOCATED ALONG A CURBED ROADWAY

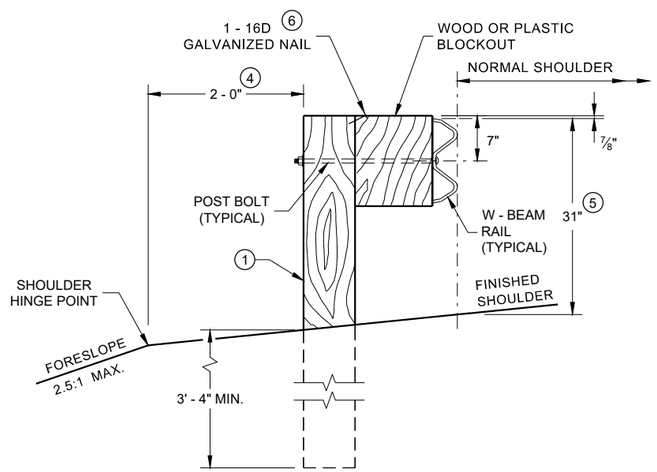

END VIEW
LOCATED ALONG A ROADWAY SHOULDER STANDARD INSTALLATION

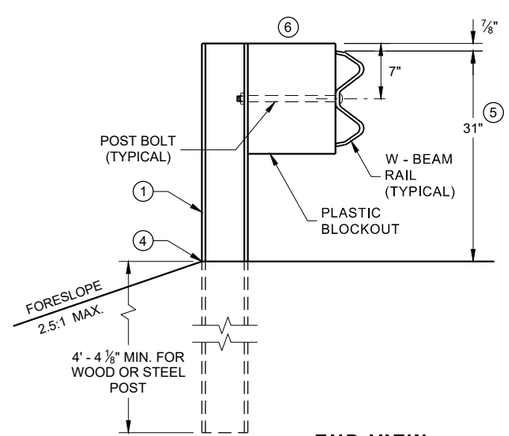

END VIEW
MGS LONGER POST AT HALFPOST SPACING W BEAM (K)

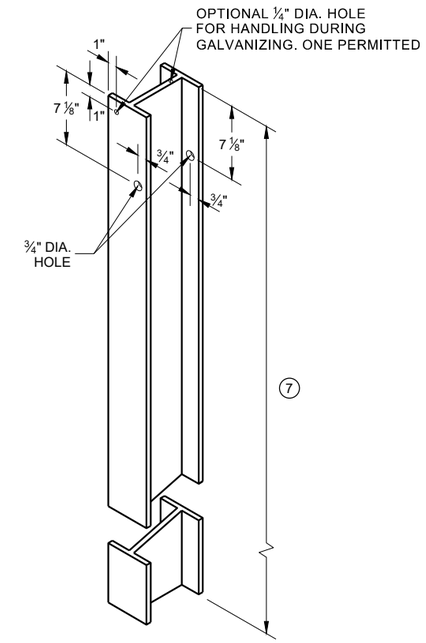

STEEL POST & HOLE PUNCHING DETAIL (W 6 X 9) (1)

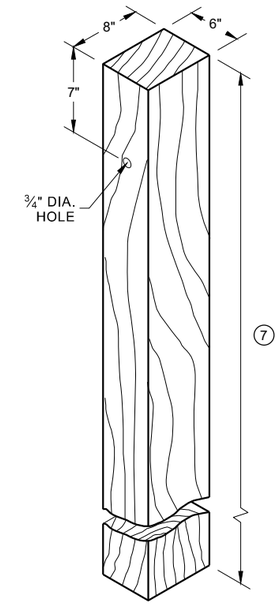

WOOD POST (6" X 8") NOMINAL (1)

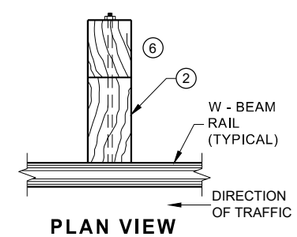

PLAN VIEW WOOD POST, BLOCKOUT & BEAM

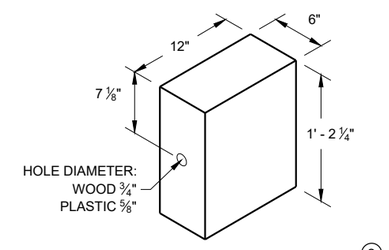

WOOD OR PLASTIC BLOCKOUT (2)

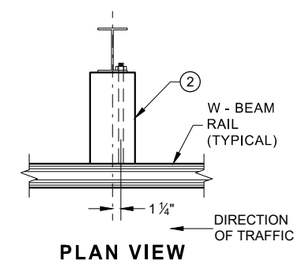

PLAN VIEW STEEL POST, PLASTIC BLOCKOUT & BEAM

MIDWEST GUARDRAIL SYSTEM (MGS) GUARDRAIL

STATE OF WISCONSIN
DEPARTMENT OF TRANSPORTA

6

SDD 14B42 - 07a

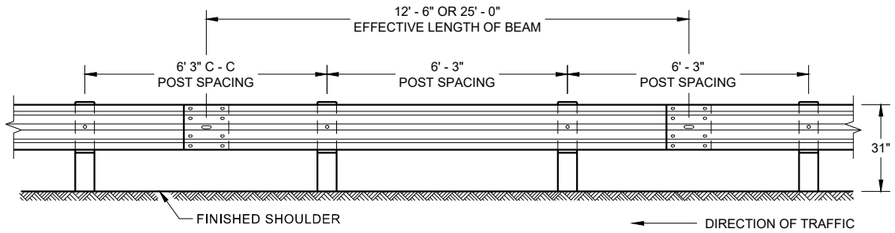

FRONT VIEW
POST SPACING STANDARD INSTALLATION

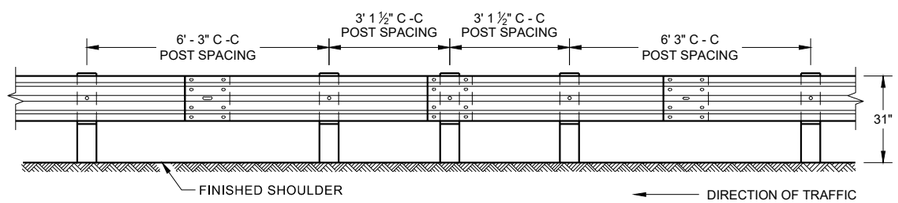

FRONT VIEW
HALF POST SPACING (HS) AND HALF POST SPACING WITH LONGER POSTS (K)

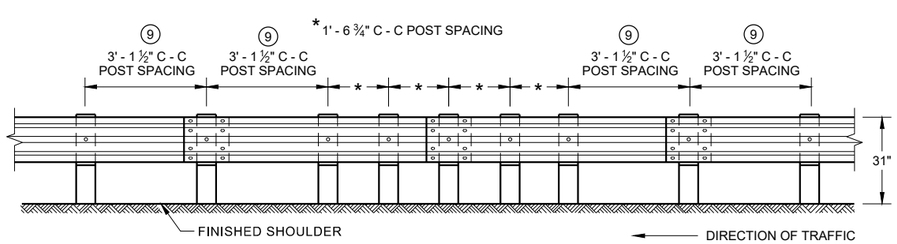

FRONT VIEW
QUARTER POST SPACING (QS)

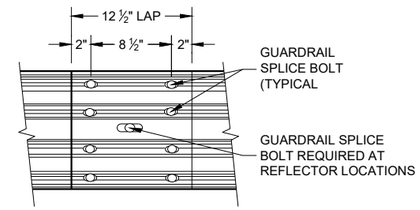

FRONT VIEW
MID-SPAN BEAM SPLICE

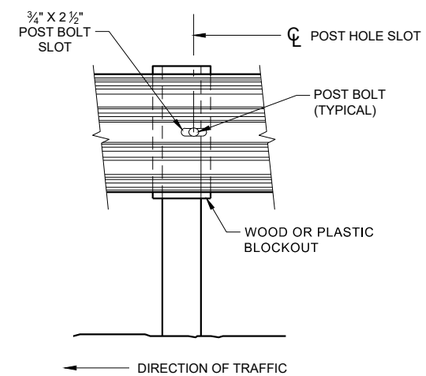

FRONT VIEW AT STEEL POST

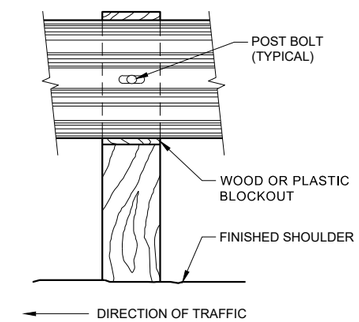

FRONT VIEW AT WOOD POST

GENERAL NOTES

8 DO NOT INSTALL REFLECTORS ON THE FIRST 50 FEET OF THE APPROACH END OF THE ENERGY ABSORBING TERMINAL.

9 25 FEET OF HALF POST SPACING IS REQUIRED ON APPROACH AND DEPARTURE ENDS OF QUARTER POST SPACING.

POST BOLTS ARE A ⅝" DIAMETER ASTM A307 GUARDRAIL BOLT. A POST BOLT REQUIRES ⅝" DIAMETER A563A DOUBLE RECESSED (DR) HEAVY HEX NUT AND ⅝" DIAMETER F844 FLAT WASHER. POST BOLTS MAY BE LONGER IF MULTIPLE BLOCKOUTS ARE BEING USED.

GUARD RAIL SPLICE BOLTS ARE A ⅝" DIAMETER ASTM A307 GUARDRAIL HEAD BOLT. A GUARDRAIL SPLICE BOLT REQUIRES ⅝" DIAMETER A563A DOUBLE RECESSED (DR) HEAVY HEX NUT.

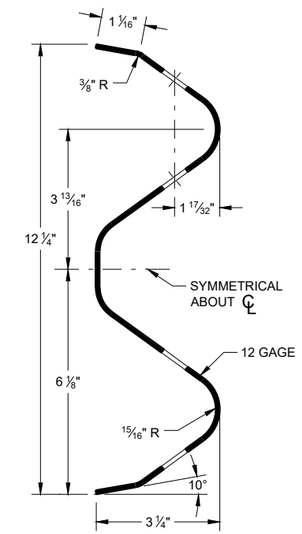

SECTION THRU W-BEAM RAIL

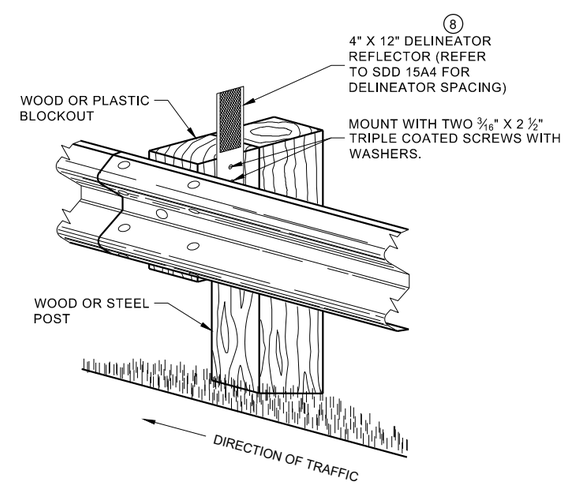

ONE SIDED REFLECTOR DETAIL AND TYPICAL INSTALLATION

MIDWEST GUARDRAIL SYSTEM (MGS) GUARDRAIL

STATE OF WISCONSIN
DEPARTMENT OF TRANSPORTATION

6

6

SDD 14B42 - 07b

SDD 14B42 - 07b

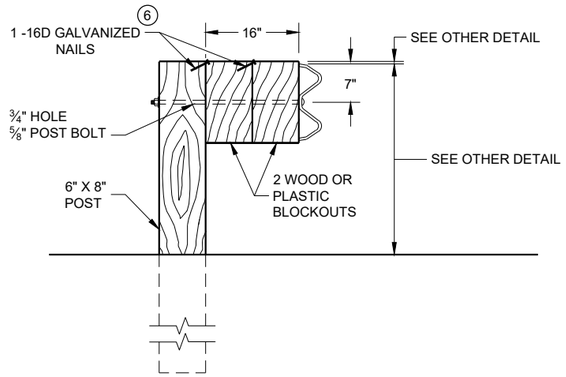

DETAIL FOR 16" BLOCKOUT DEPTH

IT IS ACCEPTABLE TO USE BLOCKOUTS UP TO 16" DEEP TO INCREASE THE POST OFFSET TO AVOID UNDERGROUND OBSTACLES. THERE IS NO LIMIT TO THE NUMBER OF POSTS THAT CAN HAVE ADDITIONAL BLOCKOUTS UP TO 16" DEEP.

NOTE:

1. ALL FILLETS SHALL HAVE A MINIMUM RADIUS OF 3/16".
2. IF THE BOLT EXTENDS MORE THAN ¼" FROM THE NUT THE BOLT SHOULD BE TRIMMED BACK.

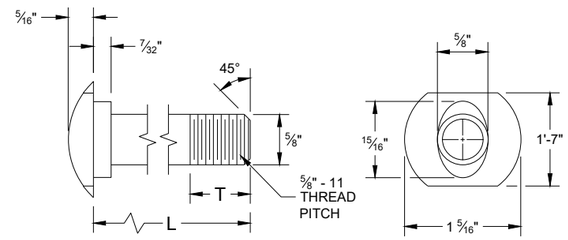

POST BOLT TABLE

L	T (MIN.)
1 ¼"	1 ⅛"
2"	1 ¾"
10"	4"
14"	4 1/16"
18"	4"
21"	4 1/16"
25"	4"

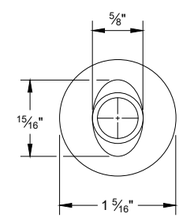

ALTERNATE BOLT HEAD

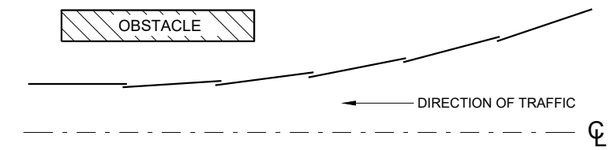

PLAN VIEW
BEAM LAPPING DETAIL

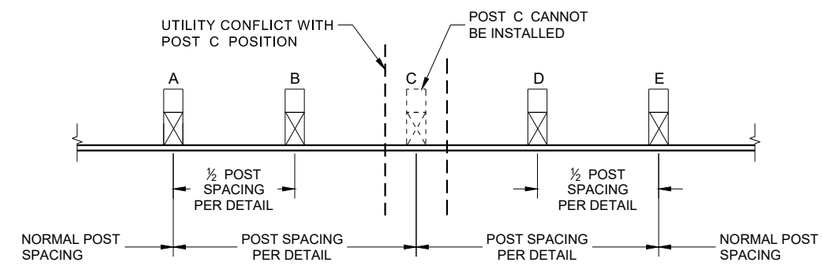

POST DRIVING FOR CONTINUOUS UNDERGROUND OBSTRUCTION

6

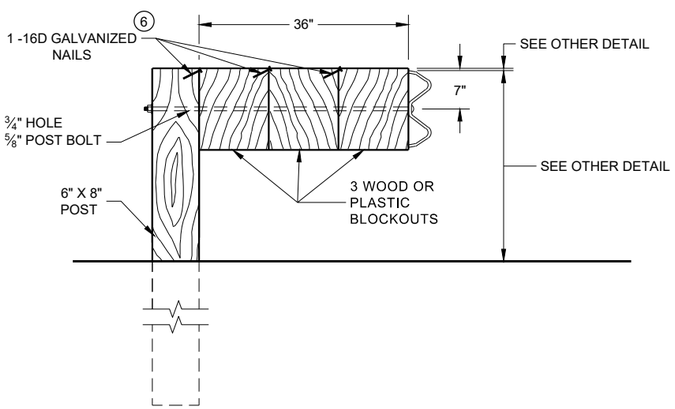

DETAIL FOR 36" BLOCKOUT DEPTH

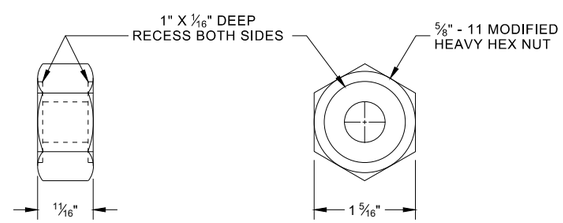

POST BOLT, SPLICE BOLT AND RECESS NUT

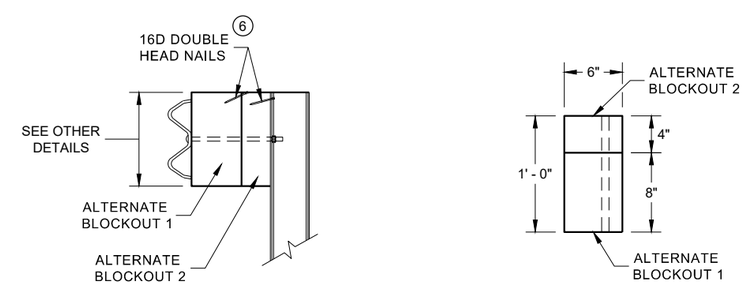

SIDE VIEW

PLAN VIEW

ALTERNATE WOOD BLOCKOUT DETAIL

NOTES: UNDER SPECIAL CIRCUMSTANCES, SUCH AS AVOIDING OBSTACLES THAT ARE NOT RELOCATED, IT IS ACCEPTABLE TO INSTALL ADDITIONAL BLOCKOUTS TO OBTAIN UP TO 36" DEPTH FOR ONE OR TWO POSTS IN A SECTION OF GUARDRAIL.

DO NOT USE 16" OR 36" BLOCKOUTS IF IT CAUSES THE POST TO BE DRIVEN BEYOND SHOULDER HINGE POINT OR CAUSES A FIXED OBJECT TO BE WITHIN THE DEFLECTION DISTANCE OF THE BARRIER.

(6) WHEN USING STEEL POST AD WOOD BLOCKOUTS, INSTALL FOUR 16D GALVANIZED NAILS. INSTALL NAILS AT THE BACK CORNERS OF THE BLOCK AND BEND THE NAILS OVER THE FLANGE OF THE STEEL POST.

MIDWEST GUARDRAIL SYSTEM (MGS) GUARDRAIL

STATE OF WISCONSIN
DEPARTMENT OF TRANSPORTA

SDD 14B42 - 07c

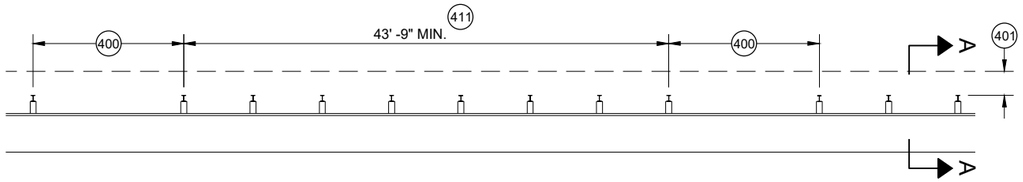

MISSING POST IN MGS GUARDRAIL

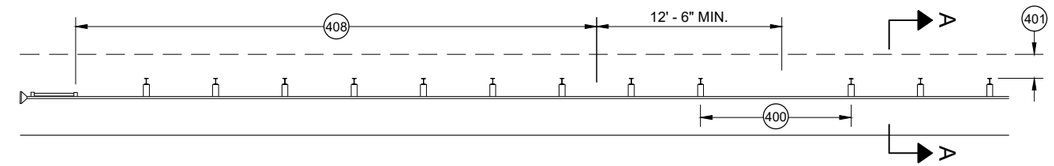

MISSING POST IN MGS GUARDRAIL NEAR EAT

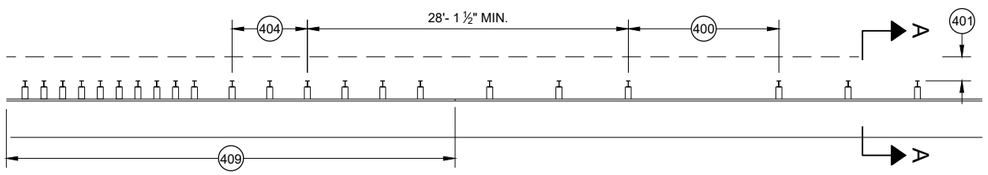

MISSING POST IN MGS GUARDRAIL NEAR AN APPROACH TRANSITION

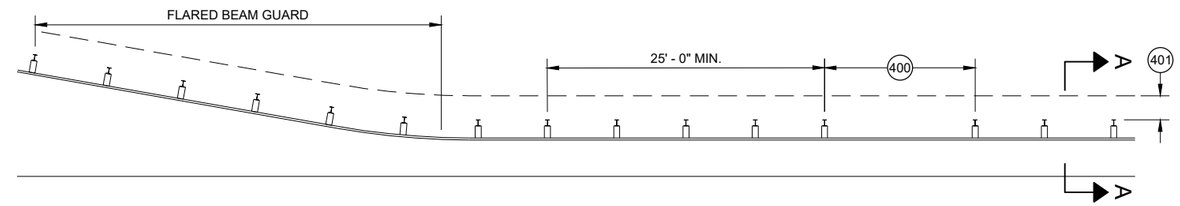

MISSING POST IN MGS GUARDRAIL NEAR FLARED BEAM GUARD

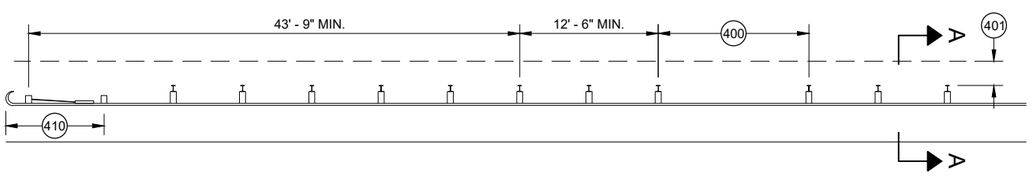

MISSING POST IN MGS GUARDRAIL NEAR A TYPE 2 END TERMINAL

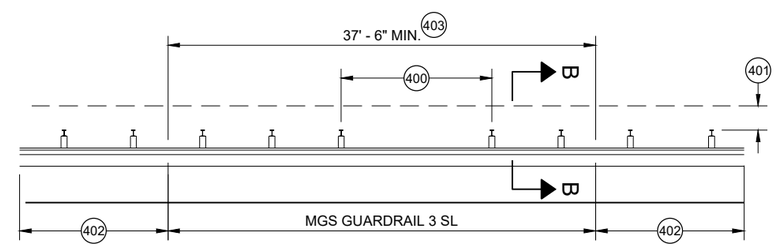

MISSING POST IN SHORT SPAN MGS GUARDRAIL NEAR CURB (SL) 407

400 MAX SPAN 12' - 6"
401 2' MIN.
402 MGS GUARDRAIL 3
403 NESTING BEAM GUARD
404 ASYMMETRIC TRANSITION
405 SOIL WELL DRAINED AND COMPACTED
406 SEE OTHER DRAWINGS IN THIS SDD
407 SEE OTHER DRAWINGS FOR MIN. SPACING BETWEEN SPANS
408 SEE SDD 14B44
409 SEE SDD 14B45
410 SEE SDD 14B47
411 MINIMUM DISTANCE BETWEEN MISSING POST SPANS.

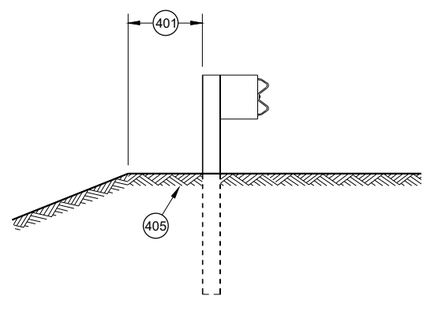

SECTION A - A 406

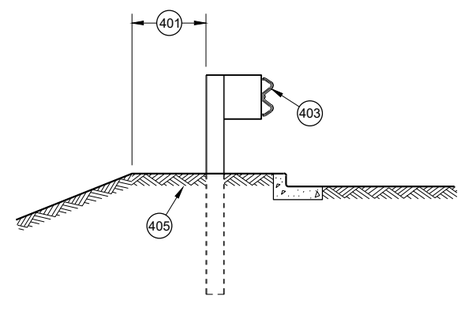

SECTION B - B 406

MIDWEST GUARDRAIL SYSTEM (MGS) GUARDRAIL

STATE OF WISCONSIN
DEPARTMENT OF TRANSPORTATION

APPROVED
May 2021 — DATE
/S/ Rodney Taylor — ROADWAY STANDARDS DEVE UNIT SUPERVISOR
FHWA

6

SDD 14B42 - 07d

GENERAL NOTES

(A) THE SLOPE IN THE AREA BOUNDED BY THE GRADELINE, THE HINGE POINT LINE (HPL) AND THE CLEAR ZONE LIMITS (CZL) SHALL BE 4:1 OR FLATTER.

(B) AFTER FINAL ASSEMBLY, RECHECK CABLE TO BE SURE IT IS TAUT AND HAS NOT RELAXED

(C) DIFFERENT MANUFACTURERS REQUIRE DIFFERENT PERFORATED W - BEAM RAIL END PANELS. SEE MANUFACTURER'S INFORMATION.

(D) ATTACH ALUMINUM SHEET TO E.A.T. HEAD USING 4 STAINLESS STEEL SELF - TAPPING SCREWS. ONE SCREW PER CORNER.

(E) HARDWARE MAY VARY BETWEEN MANUFACTURER. SEE MANUFACTURER'S DRAWING FOR INFORMATION.

DIMENSIONS MAY VARY, MANUFACTURER'S INFORMATION.

SEE SDD 14B42 FOR MORE INFORMATION.

* DO NOT ATTACH BLOCKOUTS TO POST 1 AND 2.

DO NOT INSTALL REFLECTORS ON THE FIRST 50 FEET OF THE APPROACH END OF THE ENERGY ABSORBING TERMINAL.

SEE MANUFACTURER'S DRAWING FOR SPLICE LOCATION, HARDWARE DIMENSIONS AND INSTALLATION INSTRUCTIONS.

THE CENTER OF THE UPPER 3 ½" DIAMETER HOLE ON POST NUMBER 3 THROUGH POST 9 IS TO BE FLUSH WITH THE GROUND LINE UP TO A MAXIMUM OF 2" ABOVE GROUND LINE. WOOD BLOCKS ON POSTS NUMBERED 3 THROUGH 9 MAY BE ADJUSTED UP TO 3" ABOVE THE TOP OF POST.

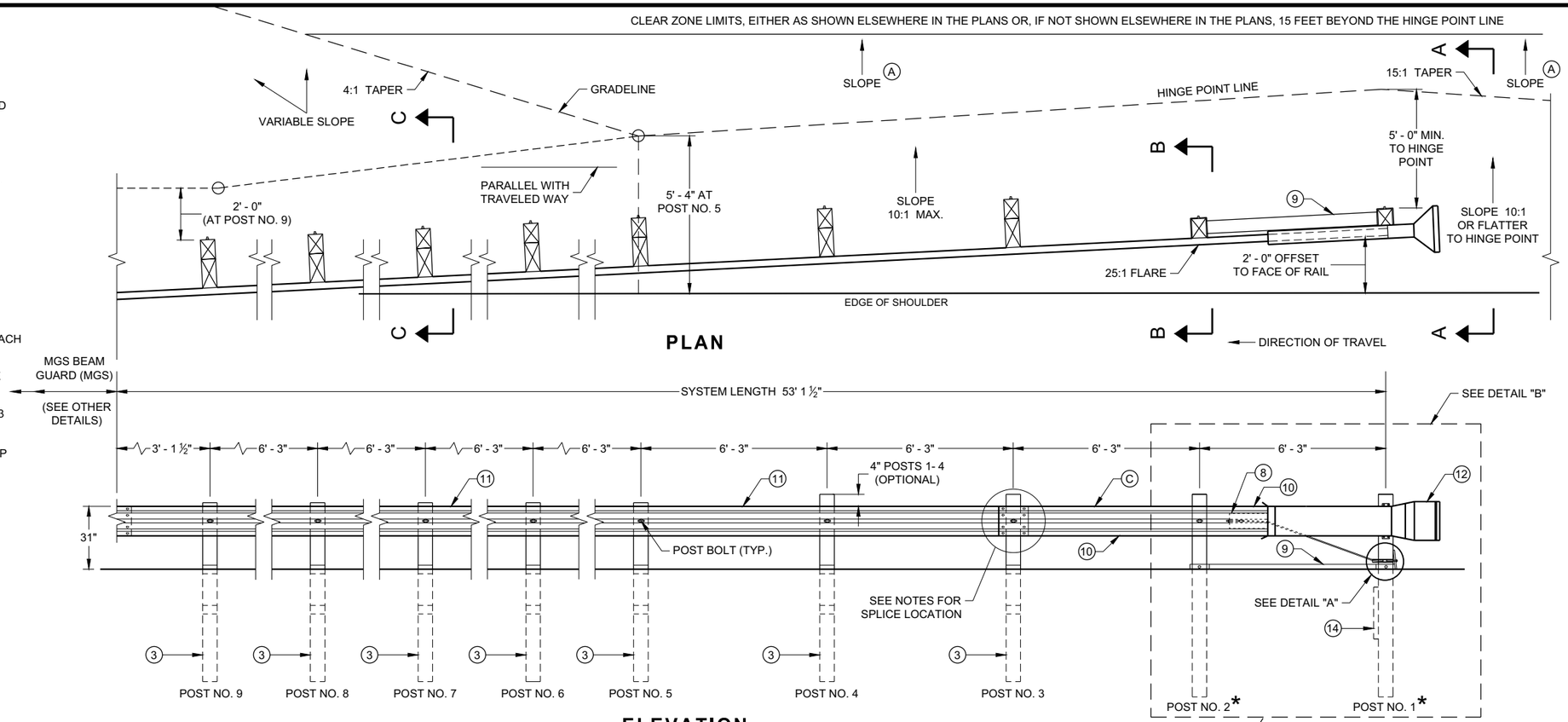

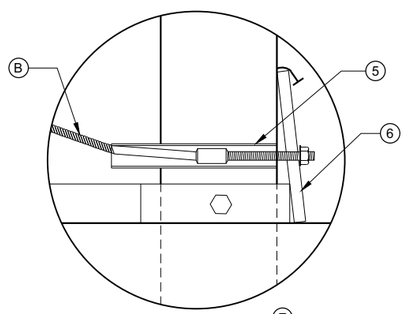

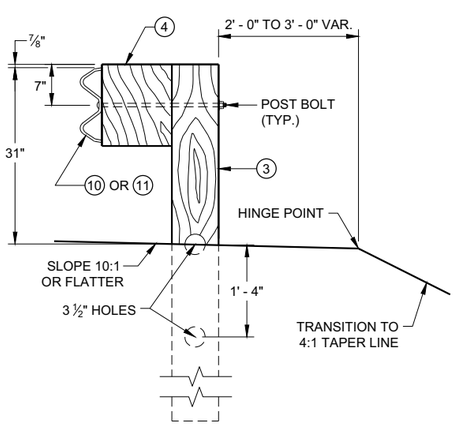

SECTION C - C
TYPICAL AT POST NOS. 3 - 9

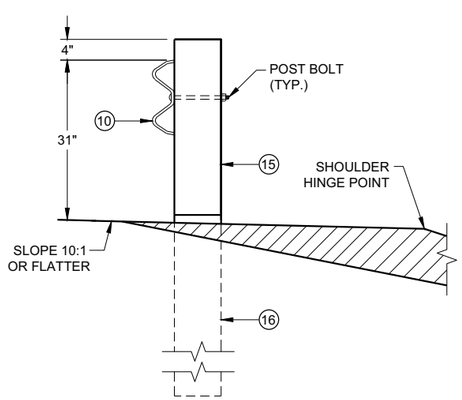

SECTION B - B
TYPICAL AT POST NO. 2*

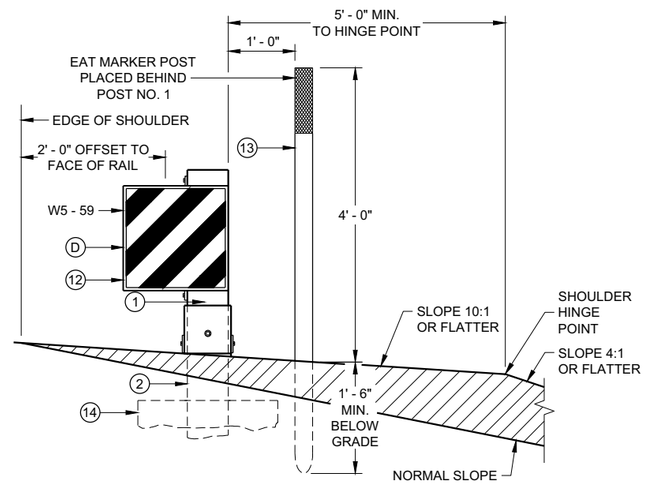

SECTION A - A
TYPICAL AT POST NO. 1*

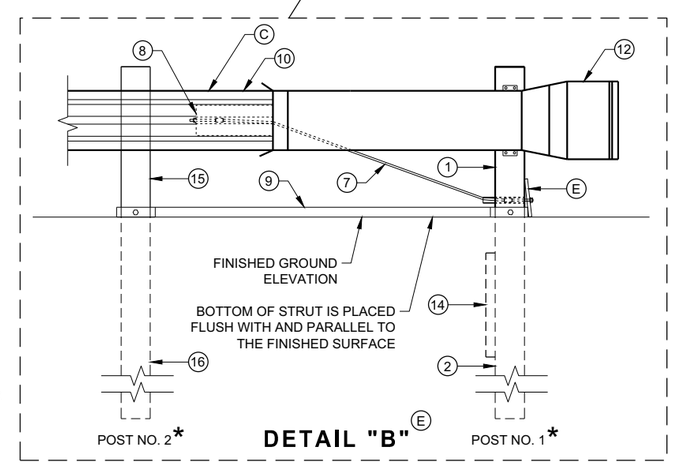

MIDWEST GUARDRAIL SYSTEM ENERGY ABSORBING TERMINAL (MGS)

STATE OF WISCONSIN
DEPARTMENT OF TRANSPORTATION

6

6

SDD 14B44 - 04a

SDD 14B44 - 04a

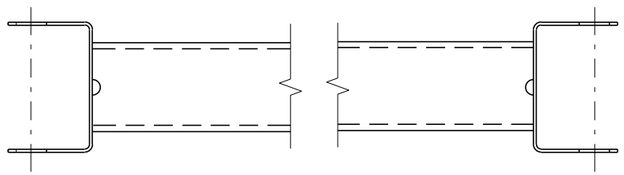

GENERIC GROUND STRUT 9 E

BILL OF MATERIALS

PART NO.	DESCRIPTION MATERIALS PROVIDED BY MGS EAT MANUFACTURER. SEE MANUGACTURER'S DETAILS FOR MORE INFORMATION.
1	UPPER POST NO. 1 6" X 6" TUBE
2	LOWER POST NO. 1
3	WOOD CRT
4	WOOD BLOCKOUT
5	PIPE SLEEVE
6	BEARING PLATE
7	BCT CABLE ASSEMBLY
8	ANCHOR CABLE BOX
9	GROUND STRUT
10	PERFORATED W-BEAM RAIL END PANEL, 12'-6" LONG.
11	STANDARD W-BEAM RAIL. MULTIPLE SECTIONS REQUIRED. SECTIONS VARY IN LENGTH.
12	IMPACT HEAD
13	EAT MARKER POST - YELLOW (SEE APPROVED PRODUCTS LIST)
14	SOIL PLATE
15	UPPER POST NO. 2
16	LOWER POST NO. 2

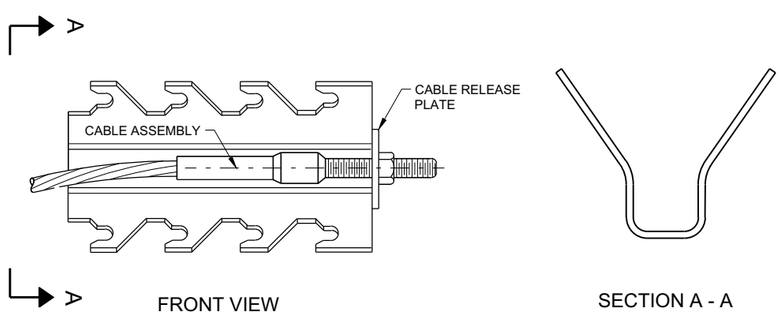

GENERIC ANCHOR CABLE BOX 9 E

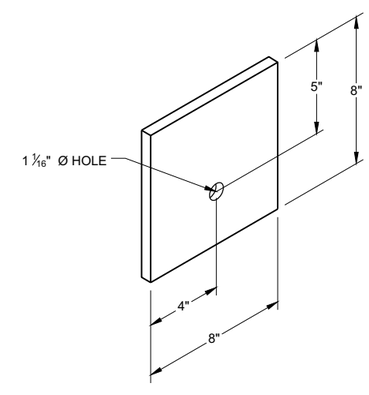

BEARING PLATE 6 E

6

6

SDD 14B44 - 04b

SDD 14B44 - 04b

MIDWEST GUARDRAIL SYSTEM ENERGY ABSORBING TERMINAL (MGS)

STATE OF WISCONSIN
DEPARTMENT OF TRANSPORTAT

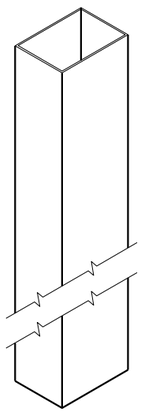

UPPER POST NO. 1 (1) (E)

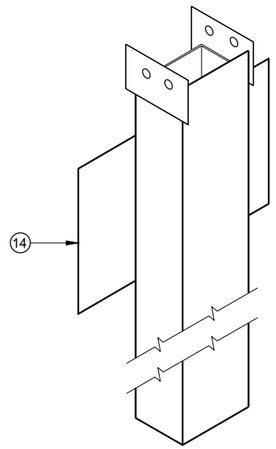

LOWER POST NO. 1 (2) (E)

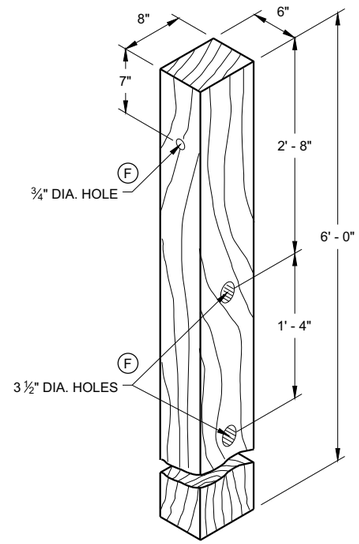

WOOD CRT POST (3) (E)

POSTS NUMBER 3-9

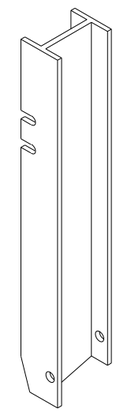

UPPER POST NO. 2 (15) (E)

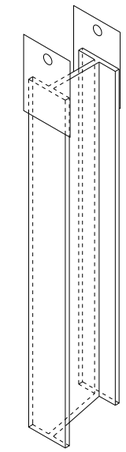

LOWER POST NO. 2 (16) (E)

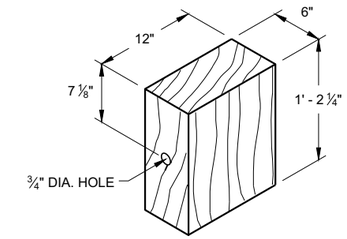

WOOD BLOCKOUT (4)

REQ'D. AT ALL POSTS EXCEPT POST NO'S 1 & 2

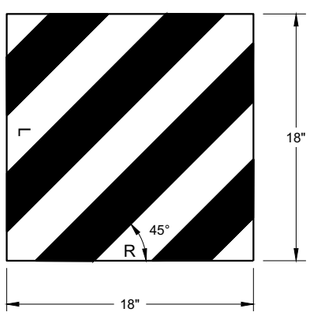

W5 - 59

REFLECTIVE SHEETING DETAIL (E)

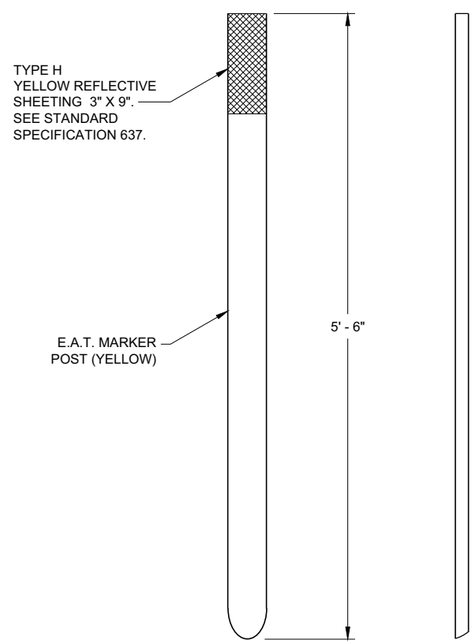

FRONT VIEW SIDE VIEW

E.A.T. MARKER POST (13)

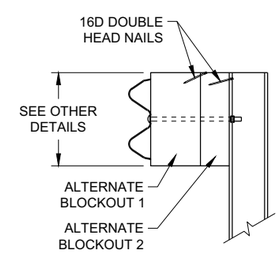

SIDE VIEW

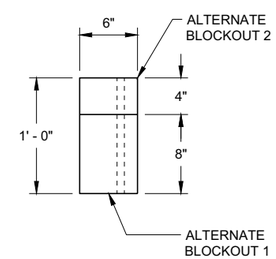

TOP VIEW

ALTERNATE WOOD BLOCKOUT DETAIL

MIDWEST GUARDRAIL SYSTEM ENERGY ABSORBING TERMINAL (MGS)

STATE OF WISCONSIN
DEPARTMENT OF TRANSPORTATION

APPROVED
7/2018 — DATE
/S/ Rodney Taylor — ROADWAY STANDARDS DEVE UNIT SUPERVISOR
FHWA

6

6

SDD 14B44 - 04c

SDD 14B44 - 04c

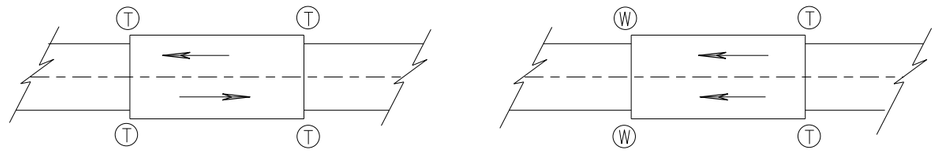

TWO WAY TRAFFIC **ONE WAY TRAFFIC**

(T) THRIE BEAM CONNECTION

(W) W-BEAM CONNECTION WHEN REQUIRED

TYPICAL LOCATIONS OF THRIE BEAM AND W-BEAM CONNECTIONS TO BRIDGE

GENERAL NOTES

IF ROCK IS ENCOUNTERED, REMOVE ROCK TO FULL DEPTH OF POST PLUS 2½", AND 12" DIAMETER AROUND POST. SEE 14B42 FOR MORE DETAILS.

TRANSITION USES STEEL POSTS ONLY.

SEE STANDARD DETAIL DRAWING 14 B 42 FOR MORE INFORMATION.

POST 2 THROUGH 17 USES STEEL POST ONLY

(1) BRIDGE RAILING TYPE "W" DOES NOT REQUIRE A TERMINAL CONNECTOR.

(2) OPTIONAL CURB AND GUTTER OR DRAINAGE FEATURE SEE PLAN FOR INFORMATION.

(13) STEEL OR WOOD POST IS ACCEPTABLE AT POST 1. SEE SDD14B42

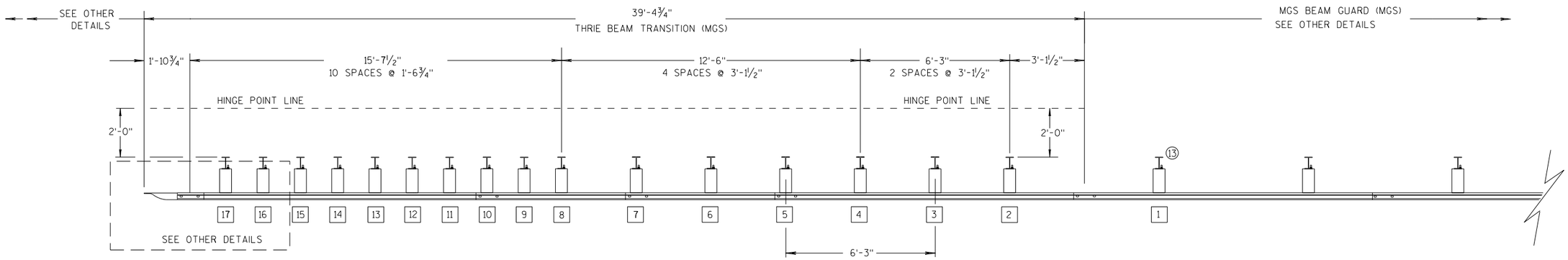

PLAN VIEW

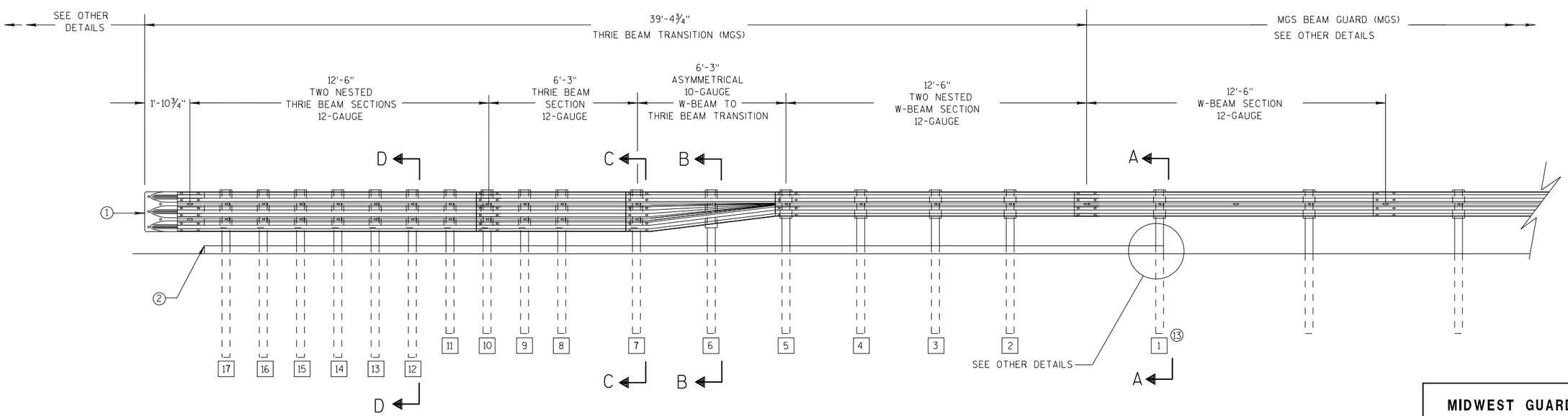

ELEVATION VIEW

MIDWEST GUARDRAIL SYSTEM THRIE BEAM TRANSITION

MIDWEST GUARDRAIL SYSTEM THRIE BEAM TRANSITION (MGS)

STATE OF WISCONSIN
DEPARTMENT OF TRANSPOR

6

S.D.D. 14 B 45-5a

GENERAL NOTES

(2) OPTIONAL CURB AND GUTTER OR DRAINAGE FEATURE SEE PLAN FOR INFORMATION.

(3) WHEN USING STEEL POSTS AND WOOD BLOCKOUTS INSTALL FOUR 10D GALVANIZED NAILS. INSTALL NAILS AT THE BACK CORNERS OF THE BLOCK AND BEND THE NAILS OVER THE FLANGE OF THE STEEL POST.

(4) TOLERANCE FOR TOP OF W-BEAM RAIL IS ± 1".

(13) STEEL OR WOOD POST IS ACCEPTABLE AT POST 1. SEE SDD 14B42

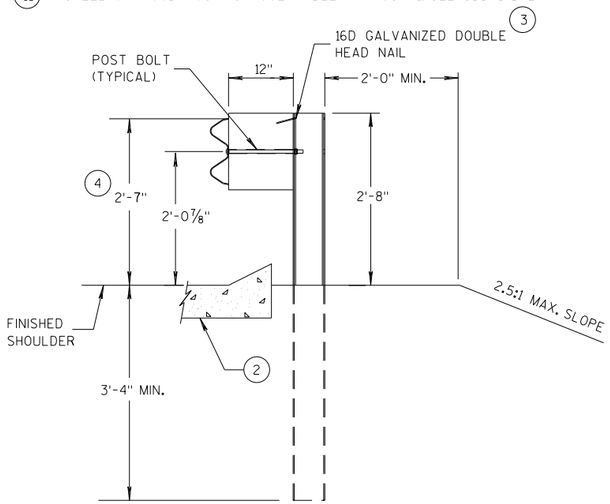

SECTION A-A (13)

POSTS 1-5

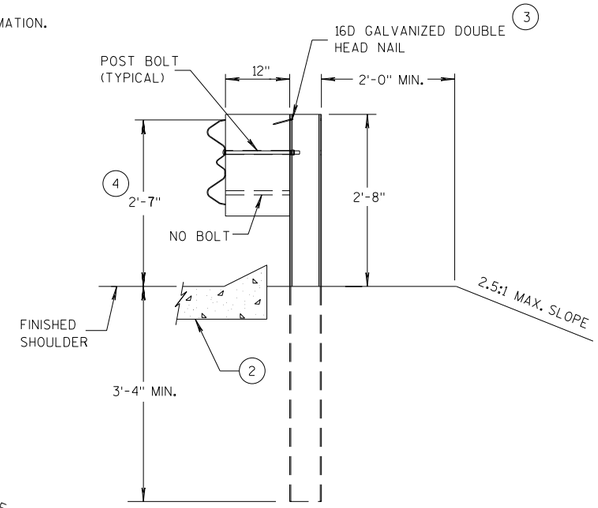

SECTION B-B

POST 6

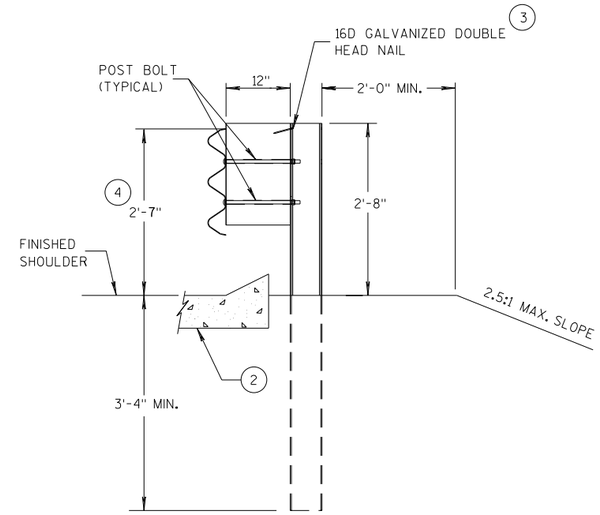

SECTION C-C

POSTS 7-11

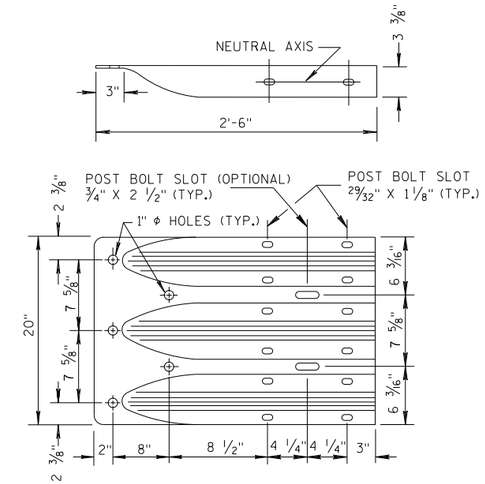

THRIE BEAM TERMINAL CONNECTOR

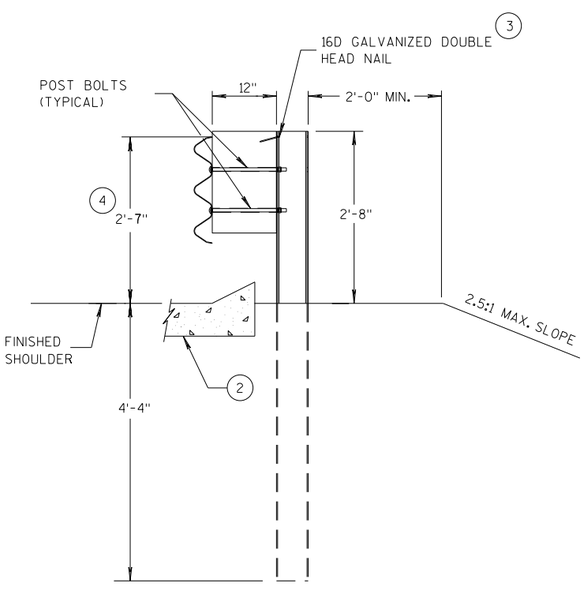

SECTION D-D

POSTS 12-17

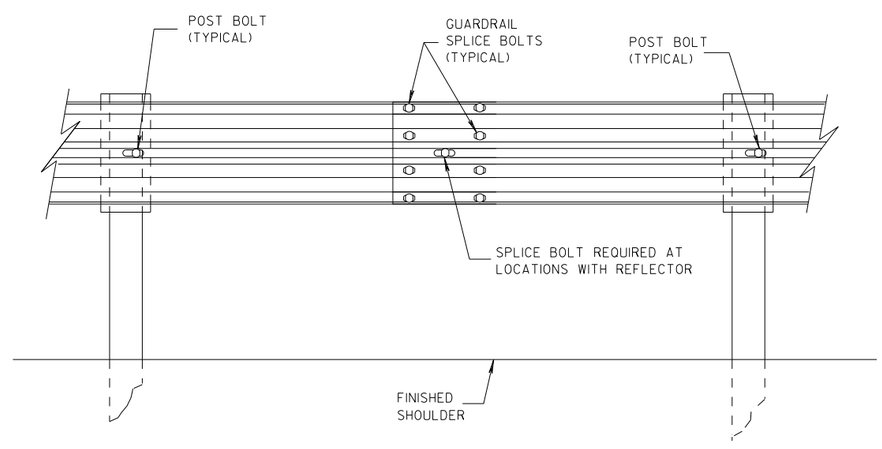

SPLICE DETAIL

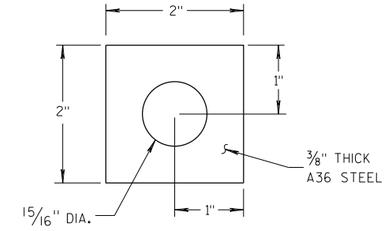

PLATE WASHER DETAIL

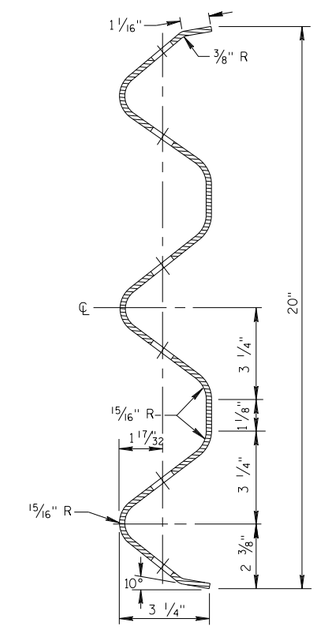

SECTION THRU THRIE BEAM RAIL ELEMENT

MIDWEST GUARDRAIL SYSTEM
THRIE BEAM TRANSITION (MGS)

STATE OF WISCONSIN
DEPARTMENT OF TRANSPOR

6

S.D.D. 14 B 45-5b

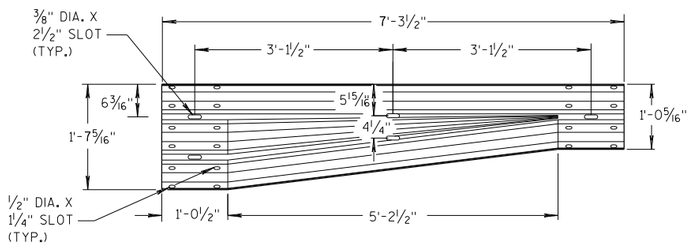

W-BEAM TO THRIE BEAM TRANSITION SECTION

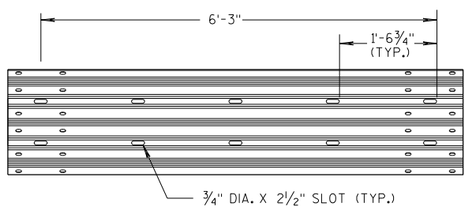

6'-3" THRIE BEAM SECTION

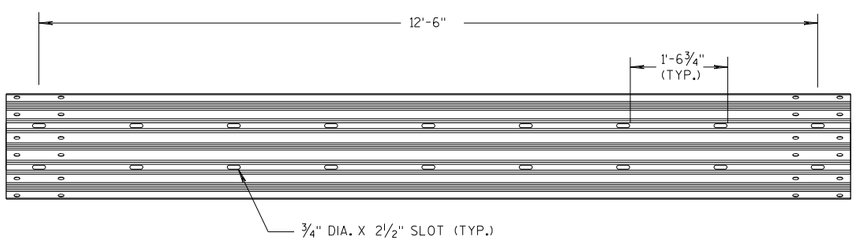

12'-6" THRIE BEAM SECTION

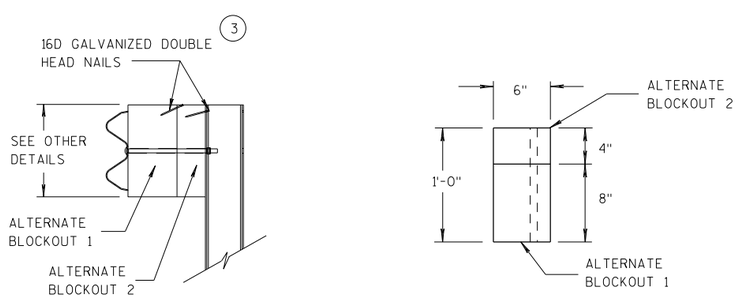

ALTERNATE WOOD BLOCKOUT DETAIL

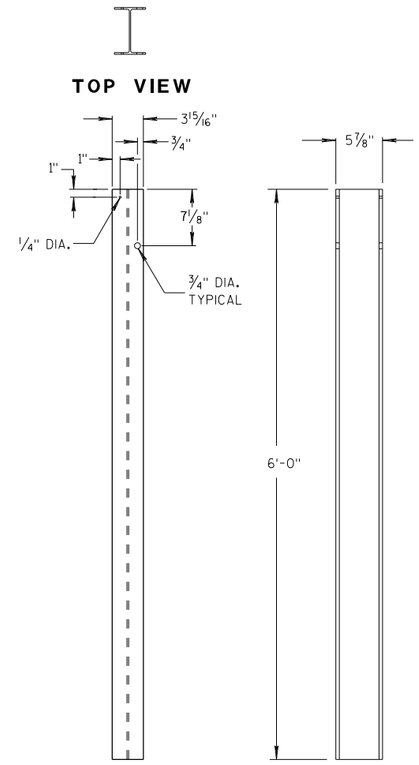

STEEL POSTS 1-5 (13)

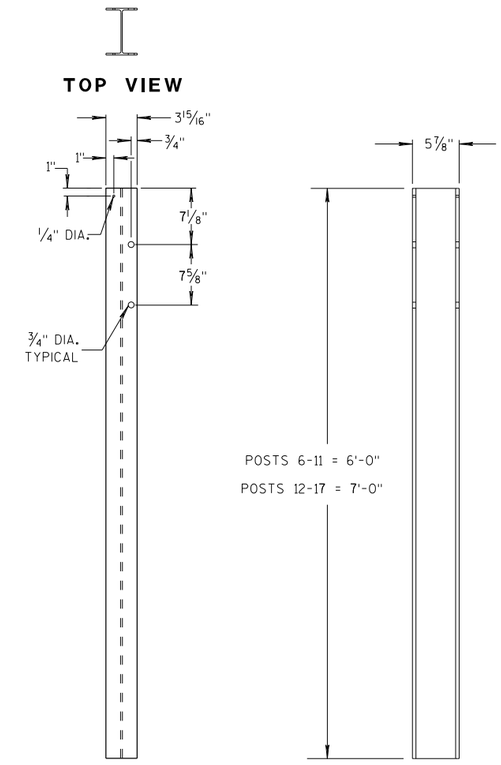

STEEL POSTS 6-17

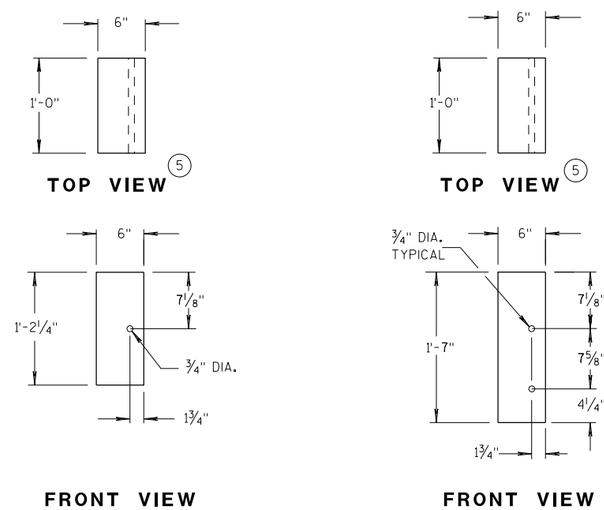

BLOCKOUT POSTS 1-5

BLOCKOUT POSTS 6-17

GENERAL NOTES

STEEL POSTS ARE W6X9 OR W6X8.5.

BOLT HOLES FOR POST ARE ON FRONT AND OF SIDE OF POST.

(3) WHEN USING STEEL POSTS AND WOOD BLOCKOUTS INSTALL FOUR 16D GALVANIZED NAILS. INSTALL NAILS AT THE BACK CORNERS OF THE BLOCK AND BEND THE NAILS OVER THE FLANGE OF THE STEEL POST.

(5) WOOD BLOCKS MAY BE CONSTRUCTED OUT OF 2 WOOD BLOCKS. SEE ALTERNATE WOOD BLOCK DETAIL.

(13) STEEL OR WOOD POST IS ACCEPTABLE AT POST 1. SEE SDD 14B42.

MIDWEST GUARDRAIL SYSTEM
THRIE BEAM TRANSITION (MGS)

STATE OF WISCONSIN
DEPARTMENT OF TRANSPOR

6

S.D.D. 14 B 45-5c

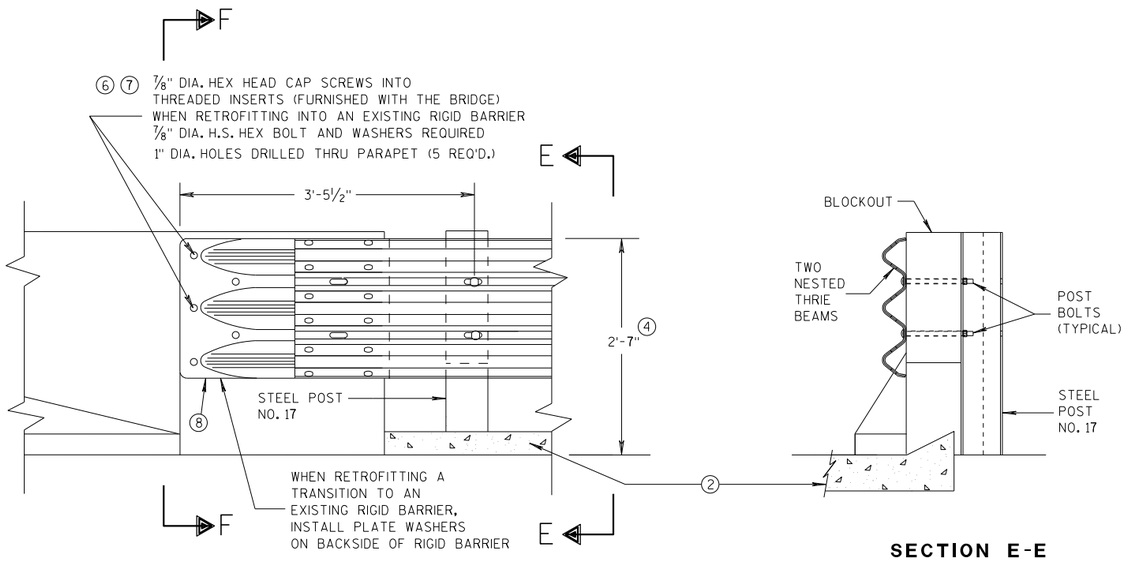

FRONT VIEW

SECTION E-E

THRIE BEAM CONNECTION TO BRIDGE PARAPET WITH SQUARE ENDS

GENERAL NOTES

THESE ARE TYPICAL CONNECTION DETAILS. ADJUST THE POSTION OF CONNECTIONS TO EXISTING BRIDGES TO FIT THE ACTUAL BRIDGE AND SITE DIMENSIONS.

② OPTIONAL CURB AND GUTTER OR DRAINAGE FEATURE SEE PLAN FOR INFORMATION.

④ TOLERANCE FOR TOP OF BEAM IS ± 1".

⑥ DRILLING BOLT HOLES THROUGH THE PARAPET, BOLTS, NUTS, WASHERS AND REPAIRING DAMAGED CONCRETE ARE INCIDENTAL TO THE CONTRACT.

⑦ BOLTS MAY BE A325 BOLTS OR A449 BOLTS. BOLT LENGTH AND THREADING LENGTH ARE TO ALLOW FOR A TIGHT CONNECTION BETWEEN RIGID BARRIER AND THRIE BEAM CONNECTION PLATE. CONTRACTOR IS TO FIELD VERIFY BOLT LENGTH AND THREAD LENGTH. ONE ROUND WASHER REQUIRED BETWEEN BOLT HEAD AND THRIE BEAM CONNECTOR PLATE. BOLTS THAT EXTEND THROUGH THE PARAPET AND OUT THE BACK FACE REQUIRE A HARDENED ROUND STEEL WASHER THAT IS 2" O.D. X 5/32" THICK AND ONE PLATE WASHER. REPAIR ANY DAMAGED CONCRETE FROM BOLT INSTALLATION.

⑧ THE RECESS FOR A W-BEAM CONNECTION, WHICH EXISTS ON SOME PARAPETS OF THIS TYPE, SHALL BE FILLED WITH A TREATED TIMBER BLOCKOUT. BLOCKOUT SIZE IS 1'-6" X 2'-0" X 3 1/2".

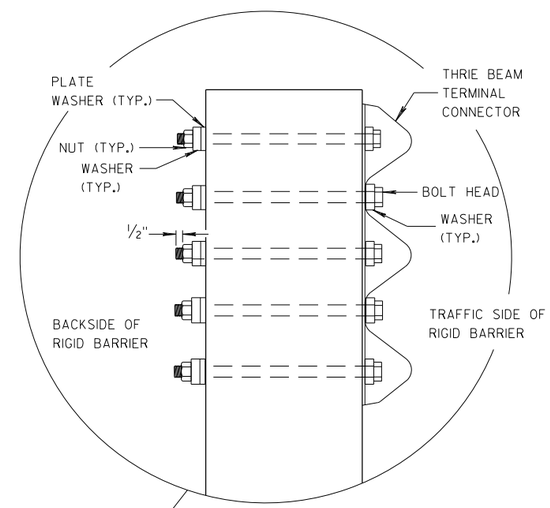

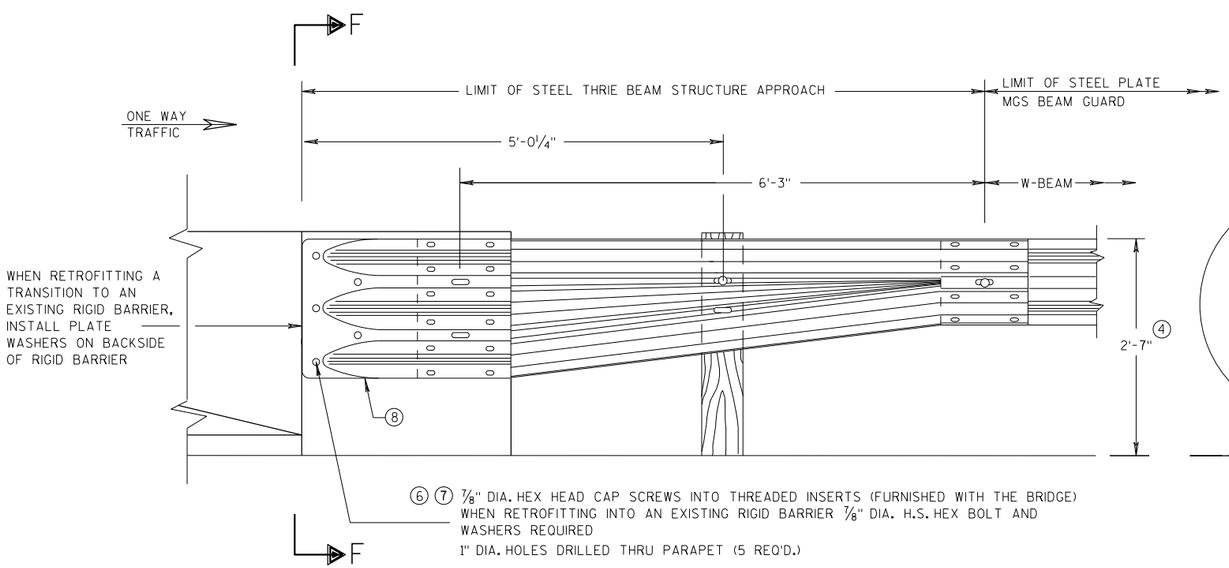

FRONT VIEW

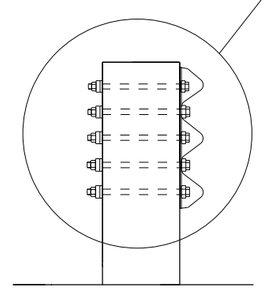

SECTION F-F

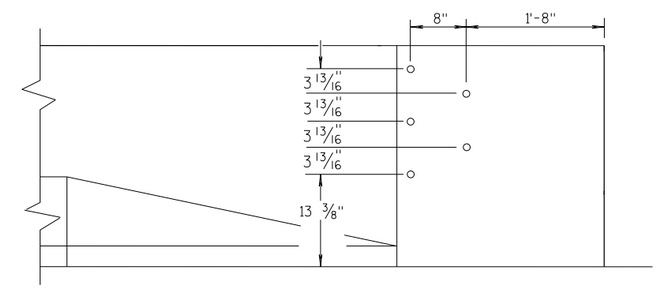

DRILL HOLE LOCATION

W BEAM TRANSITION AND CONNECTION TO BRIDGE PARAPETS WITH SQUARE ENDS

(USE ONLY ON THE TRAFFIC EXIT END OF ONE WAY BRIDGES)

MIDWEST GUARDRAIL SYSTEM THRIE BEAM TRANSITION (MGS)

STATE OF WISCONSIN
DEPARTMENT OF TRANSPORTATION

APPROVED
07/2018 — DATE
/S/ Rodney Taylor — ROADWAY STANDARDS D[illegible] UNIT SUPERVI[illegible]
FHWA

6

S.D.D. 14 B 45-5d

GENERAL NOTES

THESE ARE TYPICAL CONNECTION DETAILS. ADJUST THE POSTION OF CONNECTIONS TO EXISTING BRIDGES TO FIT THE ACTUAL BRIDGE AND SITE DIMENSIONS.

(2) OPTIONAL CURB AND GUTTER OR DRAINAGE FEATURE SEE PLAN FOR INFORMATION.

(4) TOLERANCE FOR TOP OF BEAM IS ± 1".

(6) DRILLING BOLT HOLES THROUGH THE PARAPET, BOLTS, NUTS, WASHERS AND REPAIRING DAMAGED CONCRETE ARE INCIDENTAL TO THE CONTRACT.

(7) BOLTS MAY BE A325 BOLTS OR A449 BOLTS. BOLT LENGTH AND THREADING LENGTH ARE TO ALLOW FOR A TIGHT CONNECTION BETWEEN RIGID BARRIER AND THRIE BEAM CONNECTION PLATE. CONTRACTOR IS TO FIELD VERIFY BOLT LENGTH AND THREAD LENGTH. ONE ROUND WASHER REQUIRED BETWEEN BOLT HEAD AND THRIE BEAM CONNECTOR PLATE. BOLTS THAT EXTEND THROUGH THE PARAPET AND OUT THE BACK FACE REQUIRE A HARDENED ROUND STEEL WASHER THAT IS 2" O.D. X 5/32" THICK AND ONE PLATE WASHER. REPAIR ANY DAMAGED CONCRETE FROM BOLT INSTALLATION.

(8) THE RECESS FOR A W-BEAM CONNECTION, WHICH EXISTS ON SOME PARAPETS OF THIS TYPE, SHALL BE FILLED WITH A TREATED TIMBER BLOCKOUT. BLOCKOUT SIZE IS 1'-6" X 2'-0" X 3 1/2".

(9) BOLT, NUT AND WASHERS NOT REQUIRED FOR THIS LOCATION WHEN RETROFITTING AN EXISTING PAPAPET AND THE HOLE IS EITHER ABOVE PARAPET OR WITHIN 4 INCHES OF THE EDGE OF PARAPET.

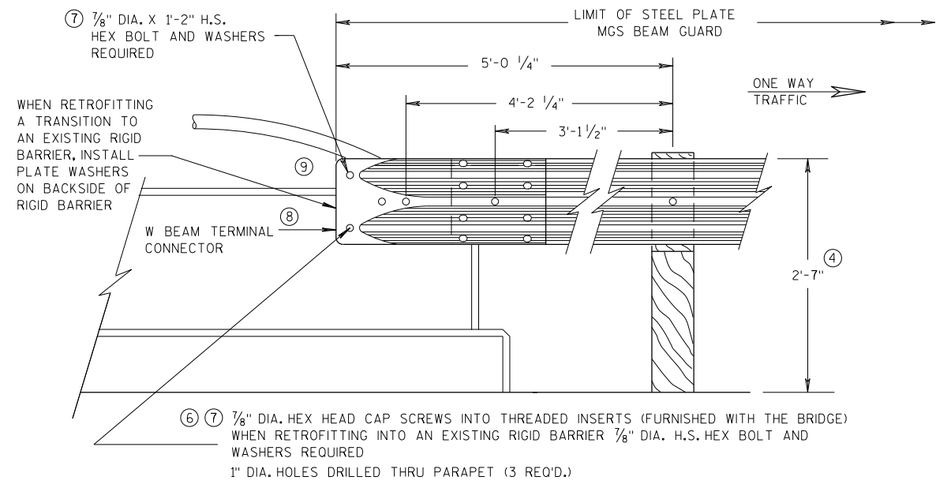

FRONT VIEW

W BEAM CONNECTION TO VERTICAL FACE PARAPET

(USE ONLY ON THE TRAFFIC EXIT END OF ONE WAY BRIDGES)

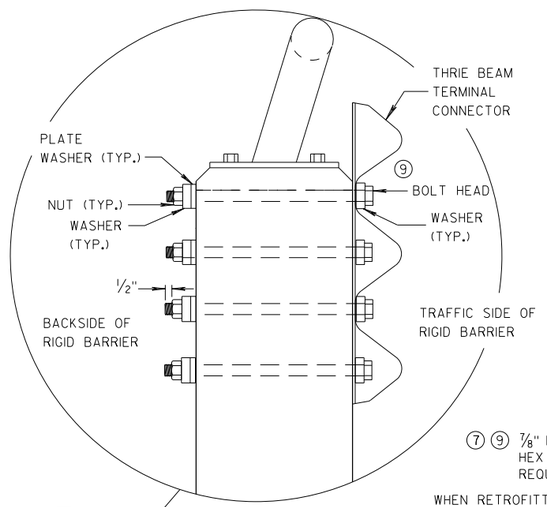

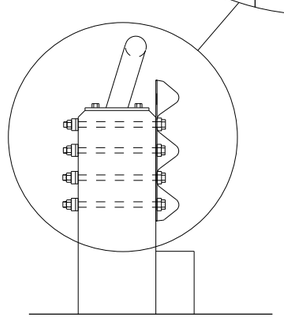

SECTION G-G

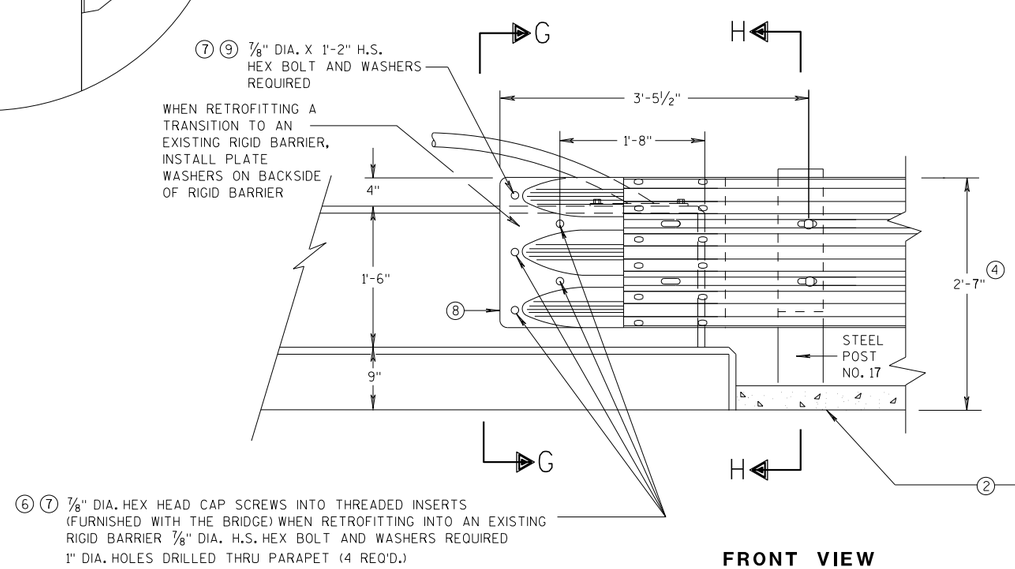

FRONT VIEW

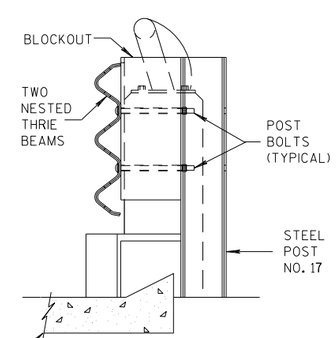

SECTION H-H

THRIE BEAM CONNECTION TO VERTICAL FACED PARAPETS

MIDWEST GUARDRAIL SYSTEM
THRIE BEAM TRANSITION (MGS)

STATE OF WISCONSIN
DEPARTMENT OF TRANSPORTATION

APPROVED
07/2018 — DATE
/S/ Rodney Taylor
ROADWAY STANDARDS D[illegible] UNIT SUPERVI[illegible]
FHWA

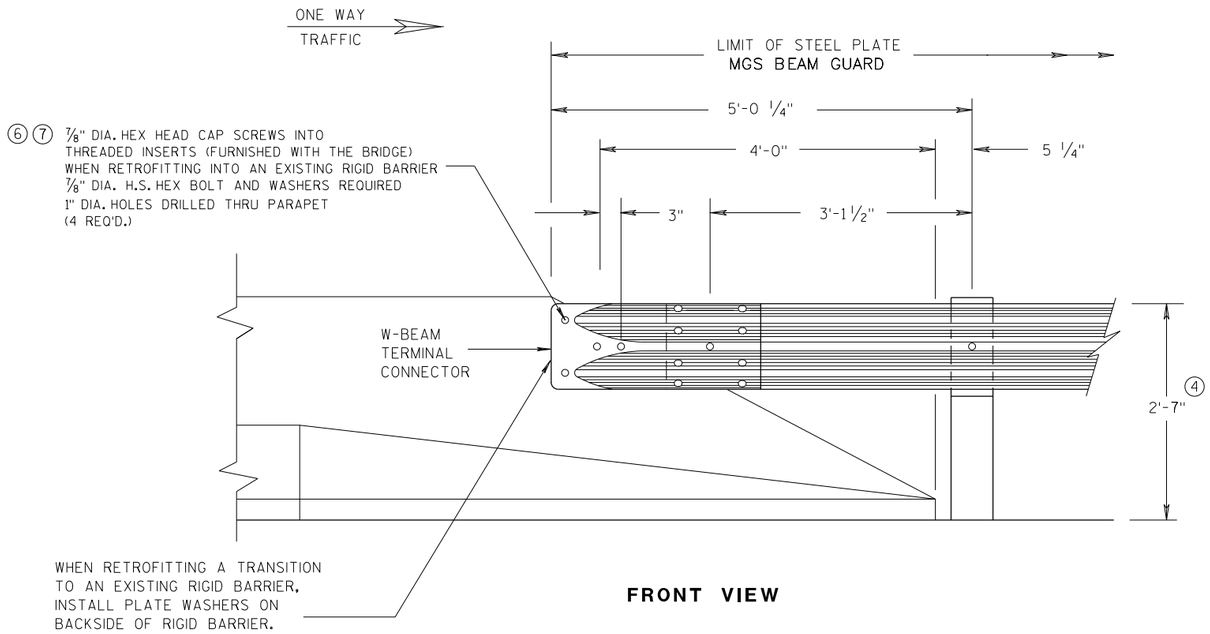

FRONT VIEW

W BEAM CONNECTION TO PARAPETS WITH SLOPED ENDS

(USE ONLY AT TRAFFIC EXIT END OF ONE WAY BRIDGE)

GENERAL NOTES

② OPTIONAL CURB AND GUTTER OR DRAINAGE FEATURE SEE PLAN FOR INFORMATION.

④ TOLERANCE FOR TOP OF BEAM IS ± 1".

⑥ DRILLING BOLT HOLES THROUGH THE PARAPET, BOLTS, NUTS, WASHERS AND REPAIRING DAMAGED CONCRETE ARE INCIDENTAL TO THE CONTRACT.

⑦ BOLTS MAY BE A325 BOLTS OR A449 BOLTS. BOLT LENGTH AND THREADING LENGTH ARE TO ALLOW FOR A TIGHT CONNECTION BETWEEN RIGID BARRIER AND THRIE BEAM CONNECTION PLATE. CONTRACTOR IS TO FIELD VERIFY BOLT LENGTH AND THREAD LENGTH. ONE ROUND WASHER REQUIRED BETWEEN BOLT HEAD AND THRIE BEAM CONNECTOR PLATE. BOLTS THAT EXTEND THROUGH THE PARAPET AND OUT THE BACK FACE REQUIRE A HARDENED ROUND STEEL WASHER THAT IS 2" O.D. X 5/32" THICK AND ONE PLATE WASHER. REPAIR ANY DAMAGED CONCRETE FROM BOLT INSTALLATION.

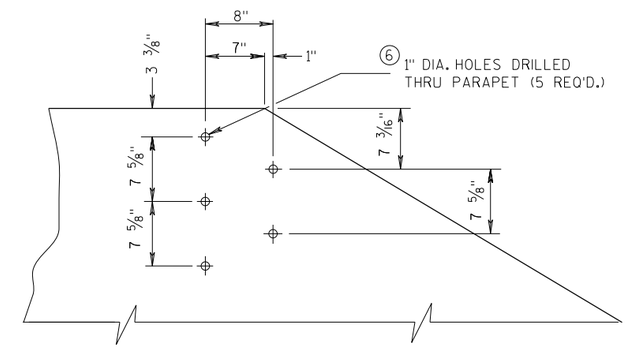

DRILL HOLE LOCATION AND PATTERN FOR THRIE BEAM CONNECTION

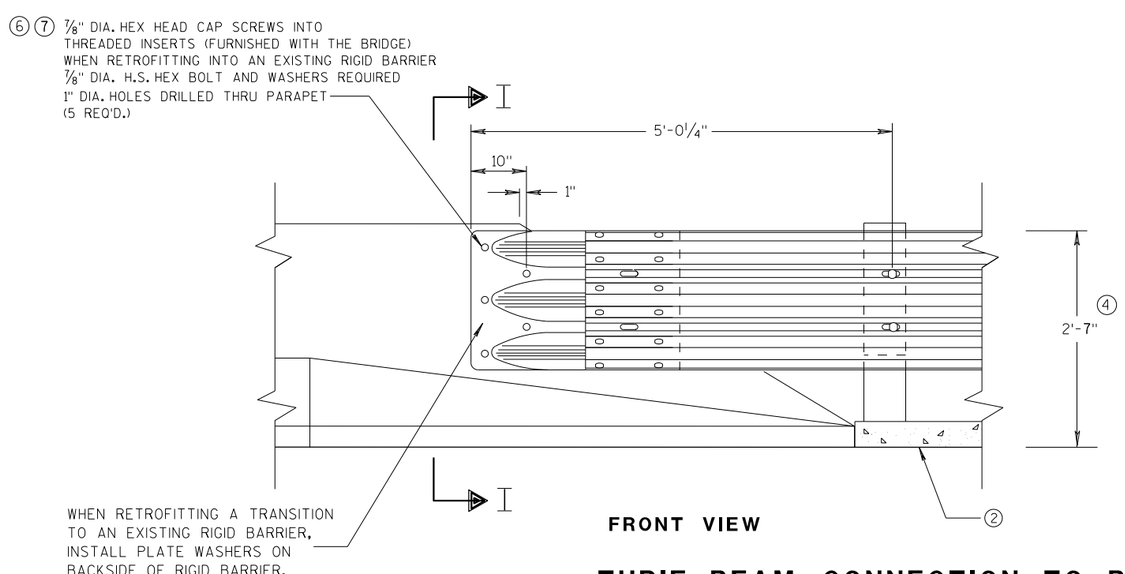

FRONT VIEW

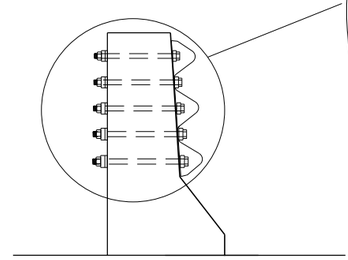

SECTION I-I

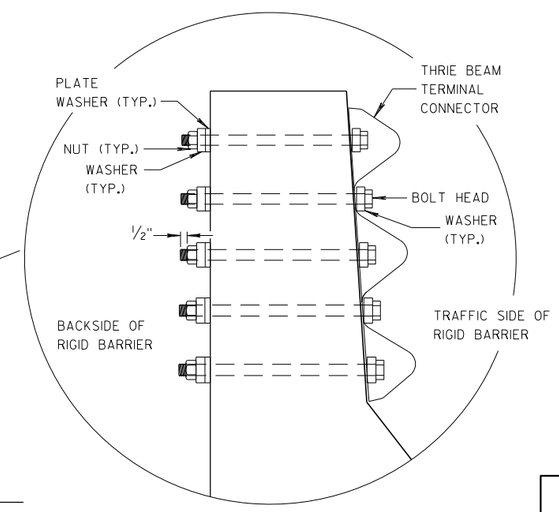

THRIE BEAM CONNECTION TO BRIDGE PARAPETS WITH SLOPED ENDS

MIDWEST GUARDRAIL SYSTEM THRIE BEAM TRANSITION (MGS)

STATE OF WISCONSIN
DEPARTMENT OF TRANSPORTATION

APPROVED
07/2018 — DATE
/S/ Rodney Taylor
ROADWAY STANDARDS DEVELOPMENT UNIT SUPERVISOR
FHWA

6

S.D.D. 14 B 45-5f

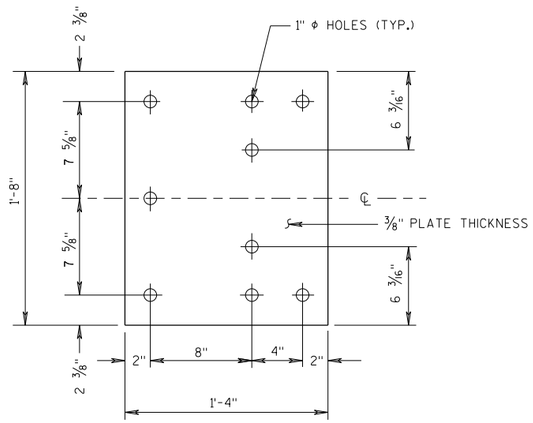

BACK-UP PLATE DETAIL

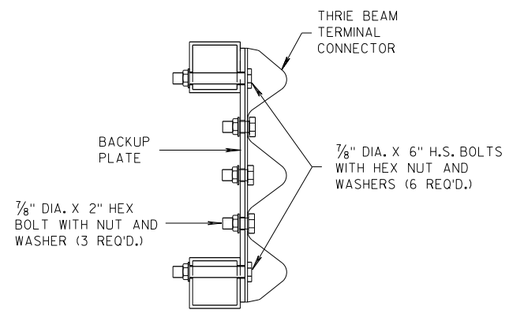

SECTION J-J

GENERAL NOTES

(4) TOLERANCE FOR TOP OF BEAM IS ± 1".

(6) DRILLING HOLES THROUGH THE PAPRPET, BOLTS, NUTS, WASHERS AND REPAIRING DAMAGED CONCRETE ARE INCIDENTAL TO THE CONTRACT.

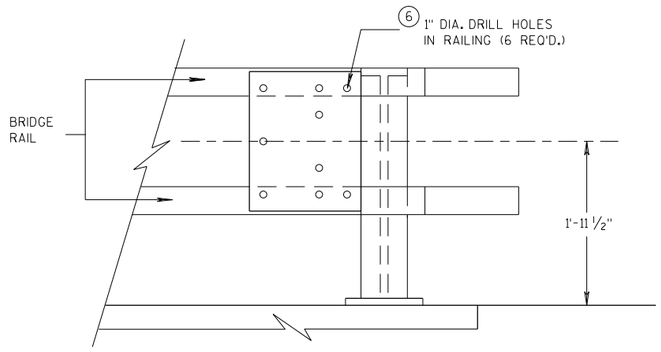

BACK-UP PLATE MOUNTING ONTO BRIDGE RAILING

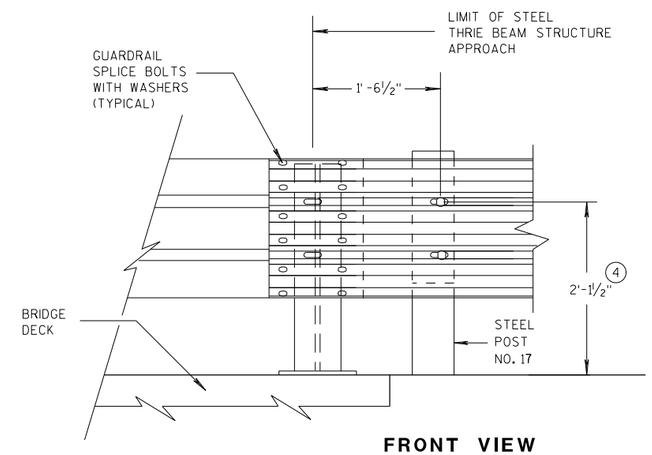

FRONT VIEW

THRIE BEAM CONNECTION TO STEEL RAILING TYPE "W"

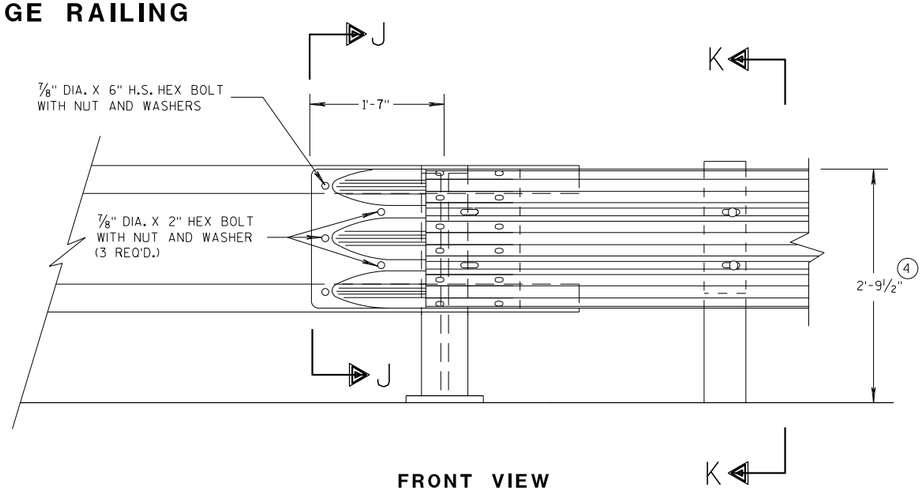

FRONT VIEW

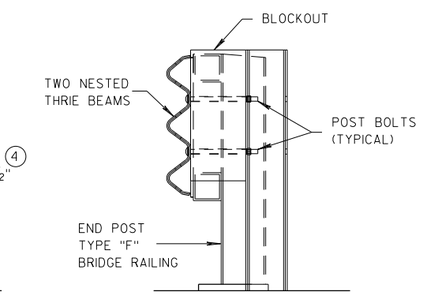

SECTION K-K

THRIE BEAM CONNECTION TO TUBULAR RAILING TYPE "F"

MIDWEST GUARDRAIL SYSTEM THRIE BEAM TRANSITION (MGS)

STATE OF WISCONSIN
DEPARTMENT OF TRANSPORTATION

APPROVED 07/2018 — DATE — FHWA

/S/ Rodney Taylor — ROADWAY STANDARDS DEVELOPMENT UNIT SUPERVISOR

S.D.D. 14 B 45-5g

GENERAL NOTES

(4) TOLERANCE FOR TOP OF W-BEAM RAIL IS ± 1".

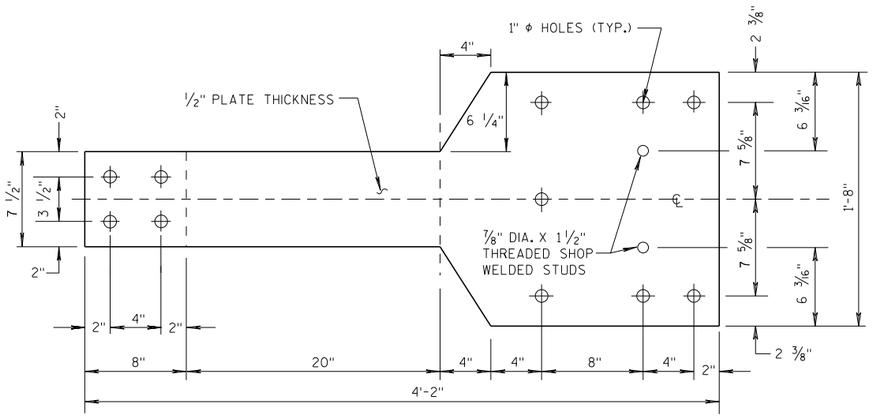

FRONT VIEW

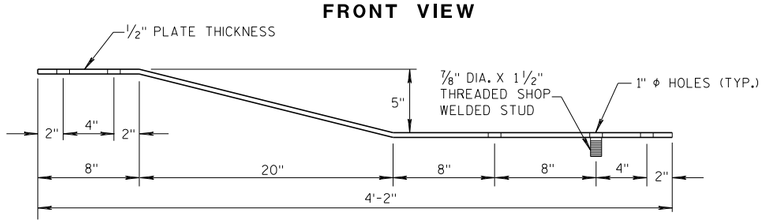

PLAN VIEW

BACK-UP PLATE DETAIL, TYPE "M"

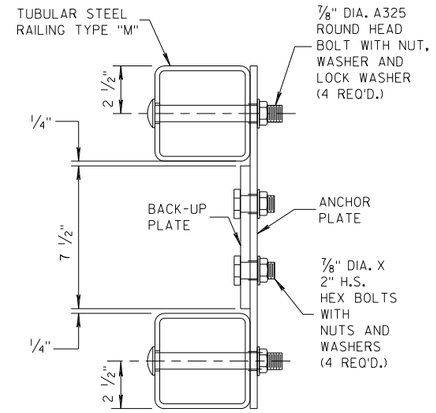

SECTION L-L

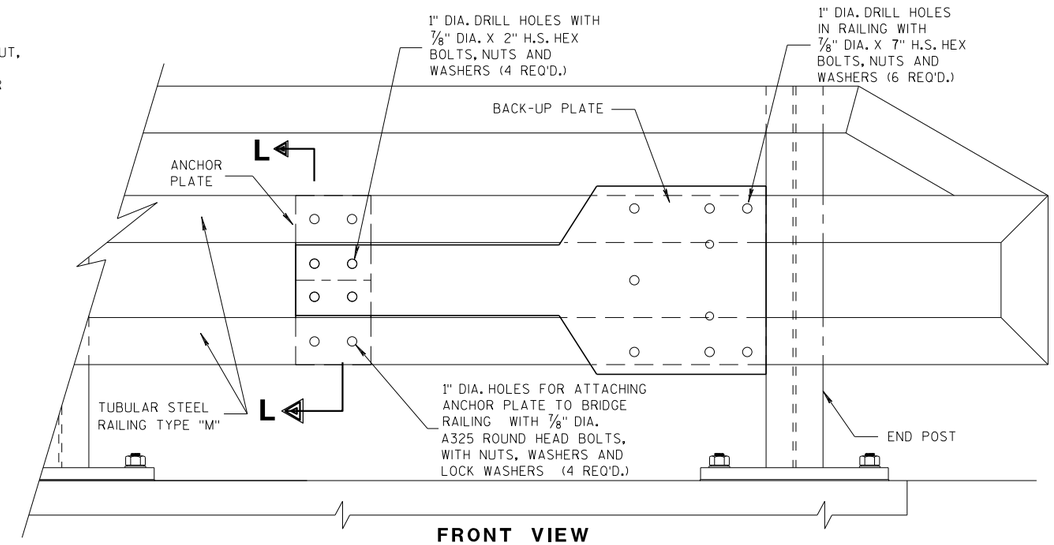

FRONT VIEW

ANCHOR AND BACK-UP PLATE MOUNTING TO BRIDGE RAILING, TYPE "M"

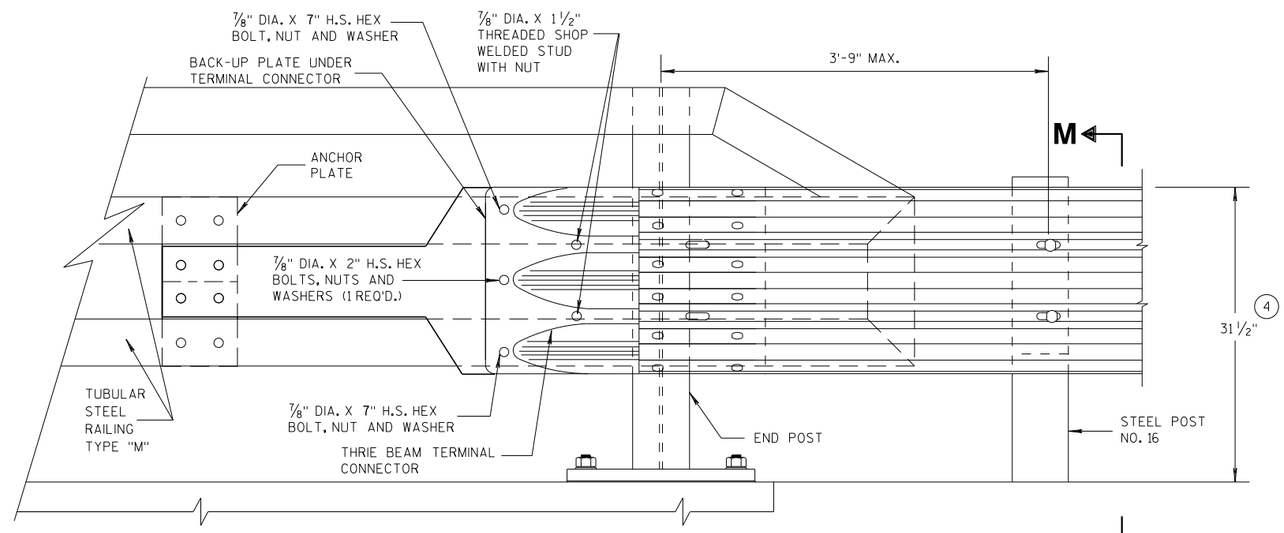

FRONT VIEW

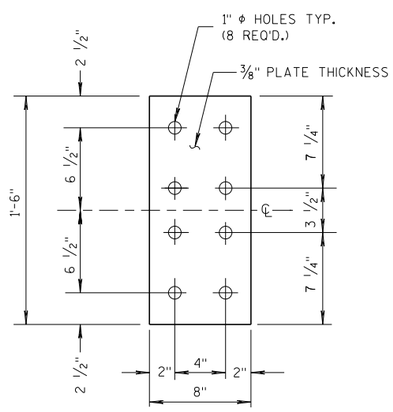

FRONT VIEW

ANCHOR PLATE DETAIL, TYPE "M"

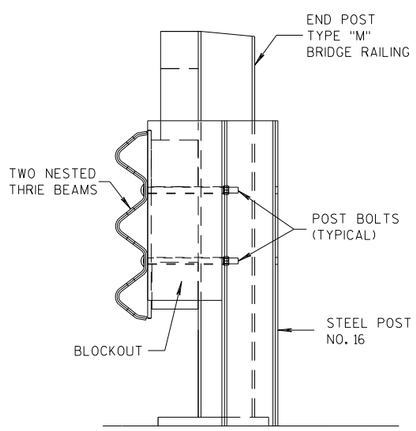

SECTION M-M

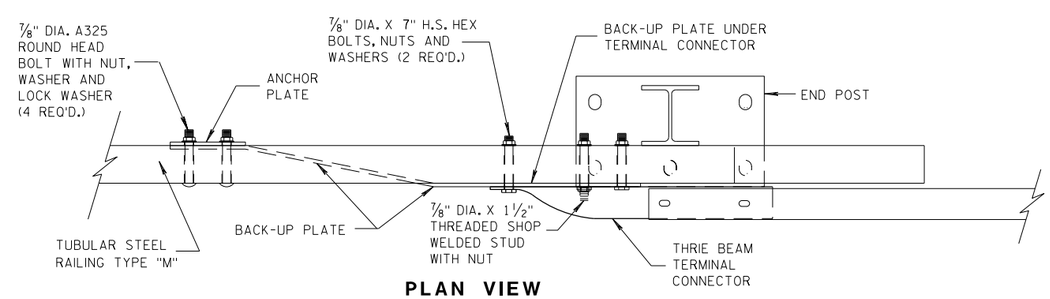

PLAN VIEW

THRIE BEAM CONNECTION TO TUBULAR RAILING, TYPE "M"

MIDWEST GUARDRAIL SYSTEM THRIE BEAM TRANSITION (MGS)

STATE OF WISCONSIN
DEPARTMENT OF TRANSPORTATION

APPROVED
07/2018 — DATE
/S/ Rodney Taylor — ROADWAY STANDARDS DEVELOPMENT UNIT SUPERVISOR
FHWA

6

S.D.D. 14 B 45-5h

GENERAL NOTES

COVER PLATE PANELS ARE 3/16" THICK.

ALL STIFFENERS ARE 1/4" THICK.

CONNECTOR PLATE SHALL BE FABRICATED FROM ASTM GRADE A36 STEEL AND GALVANIZED.

FOR GALVANIZED REQUIREMENTS, SEE SECTION 614 OF THE STANDARD SPECIFICATIONS.

ALL HOLE DIAMETERS SHALL BE 1".

FOR OPPOSITE SIDE INSTALLATION MIRROR DRAWINGS.

(10) STIFFENERS LOCATED AT THE OUTSIDE EDGES OF THE COVER PLATES SHALL BE WELDED AS FOLLOWS:
SINGLE BEVEL GROOVE WELD ON EXTERNAL SIDES AND 3/16" FILLET WELD BY 1" LONG SPACED AT 2" ON INTERNAL SIDES.

(11) STIFFENERS LOCATED ON THE INSIDE OF THE COVER PLATE SHALL BE WELDED AS FOLLOWS:
3/16" FILLET WELD BY 1" LONG SPACED AT 2".

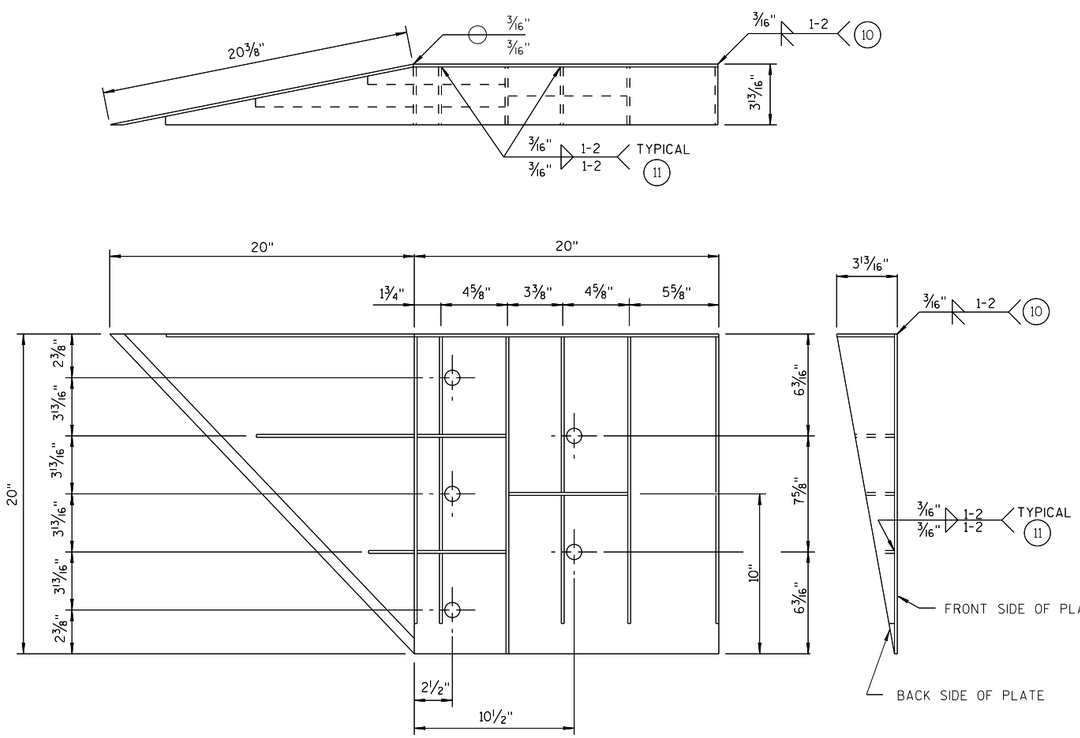

WELDING INSTRUCTION

(VIEWED FROM BACK SIDE OF PLATE)

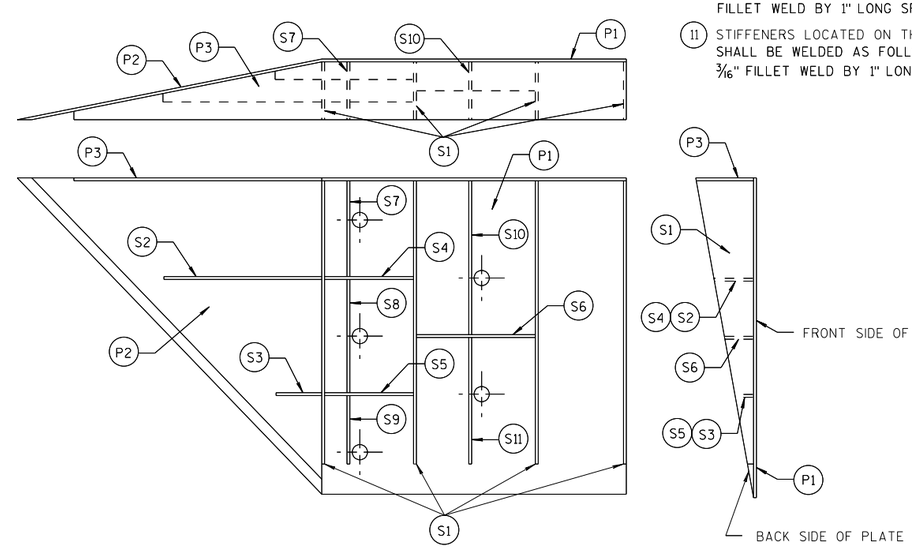

PLATE AND STIFFENER IDENTIFICATION

(VIEWED FROM BACK SIDE OF PLATE)

CONNECTOR PLATE DIMENSION (PER ASSEMBLY)

PLATE	QUANTITY	SHAPE	SIZE (A x B x C x D)	THICKNESS
P1	1		20" x 20"	3/16"
P2	1		20" x 20" x 28 9/16"	3/16"
P3	1		39" x 3 5/8" x 20" x 19 5/16"	3/16"
S1	4		18 7/16" x 3 5/8" x 18 3/4"	1/4"
S2	1		10 1/4" x 2 7/16" x 10 3/8" x 1/2"	1/4"
S3	1		3" x 1 1/16" x 3 1/8" x 1/2"	1/4"
S4	1		6 1/8" x 2 7/16"	1/4"
S5	1		6 1/8" x 1 1/16"	1/4"
S6	1		7 3/4" x 1 3/4"	1/4"
S7	1		2 9/16" x 6" x 3 5/8" x 5 7/8"	1/4"
S8	1		1 5/32" x 7 1/2" x 2 1/2" x 7 3/8"	1/4"
S9	1		6 1/16" x 6 3/16" x 1 3/32"	1/4"
S10	1		1 7/8" x 9 7/8" x 3 5/8" x 9 11/16"	1/4"
S11	1		8 1/2" x 8 3/4" x 1 13/16"	1/4"

SINGLE SLOPE CONNECTION PLATE

MIDWEST GUARDRAIL SYSTEM THRIE BEAM TRANSITION (MGS)

STATE OF WISCONSIN
DEPARTMENT OF TRANSPORTATION

APPROVED
7/2018 /S/ Rodney Taylor
DATE ROADWAY STANDARDS DEVELOPMENT UNIT SUPERVISOR
FHWA

GENERAL NOTES

CONNECTOR PLATE, DRILLING BOLT HOLES THROUGH THE PARAPET, BOLTS, NUTS, WASHERS AND REPAIRING DAMAGED CONCRETE ARE INCIDENTAL TO THE CONTRACT.

(2) OPTIONAL CURB AND GUTTER OR DRAINAGE FEATURE SEE PLAN FOR INFORMATION.

(7) BOLTS MAY BE A325 BOLTS OR A449 BOLTS. BOLT LENGTH AND THREADING LENGTH ARE TO ALLOW FOR A TIGHT CONNECTION BETWEEN RIGID BARRIER AND THRIE BEAM CONNECTION PLATE. CONTRACTOR IS TO FIELD VERIFY BOLT LENGTH AND THREAD LENGTH. ONE ROUND WASHER REQUIRED BETWEEN BOLT HEAD AND THRIE BEAM CONNECTOR PLATE. BOLTS THAT EXTEND THROUGH THE PARAPET AND OUT THE BACK FACE REQUIRE A HARDENED ROUND STEEL WASHER THAT IS 2" O.D. X 5/32" THICK AND ONE PLATE WASHER. REPAIR ANY DAMAGED CONCRETE FROM BOLT INSTALLATION.

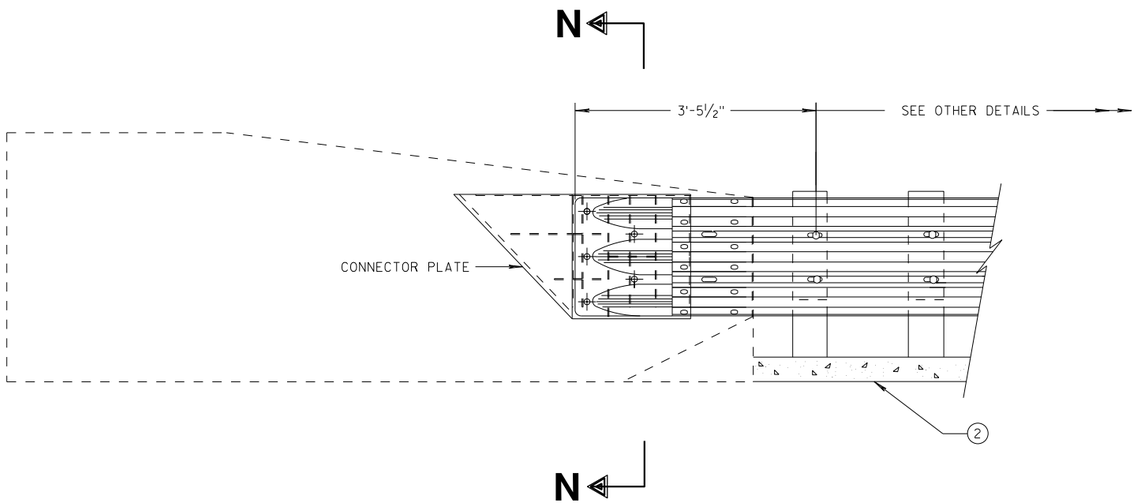

THRIE BEAM CONNECTION TO SINGLE SLOPE BARRIER

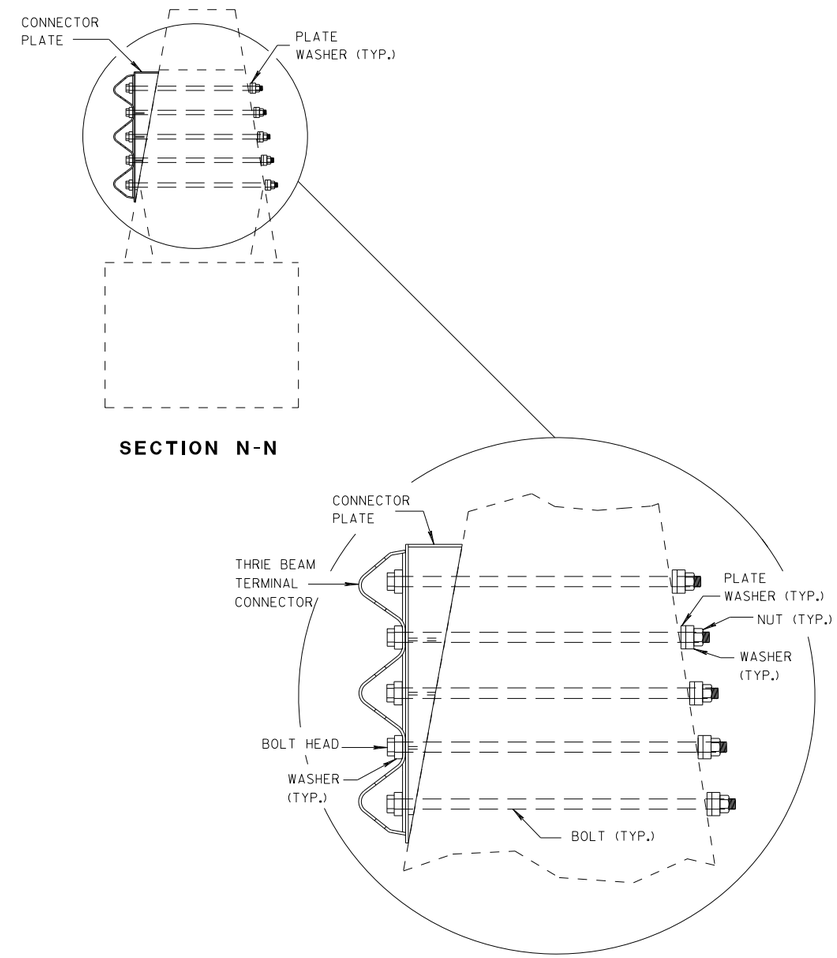

SECTION N-N

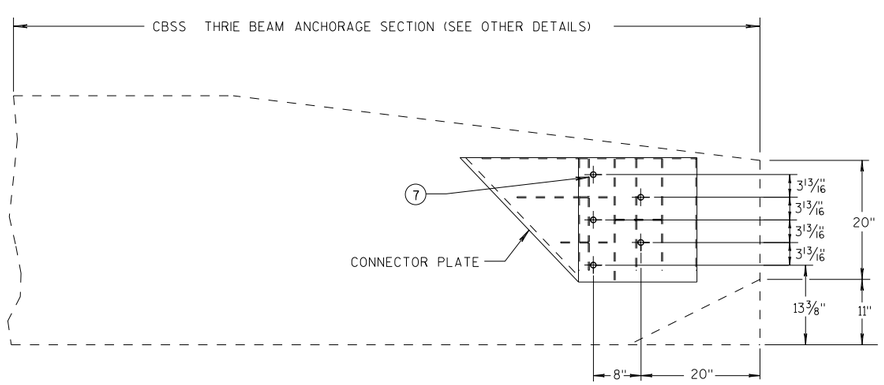

SINGLE SLOPE CONNECTION PLATE PLACEMENT

MIDWEST GUARDRAIL SYSTEM THRIE BEAM TRANSITION (MGS)

STATE OF WISCONSIN
DEPARTMENT OF TRANSPORTATION

APPROVED
7/2018 — DATE
/S/ Rodney Taylor — ROADWAY STANDARDS DI[illegible] UNIT SUPERVIS[illegible]
FHWA

6
S.D.D. 14 B 45-5j

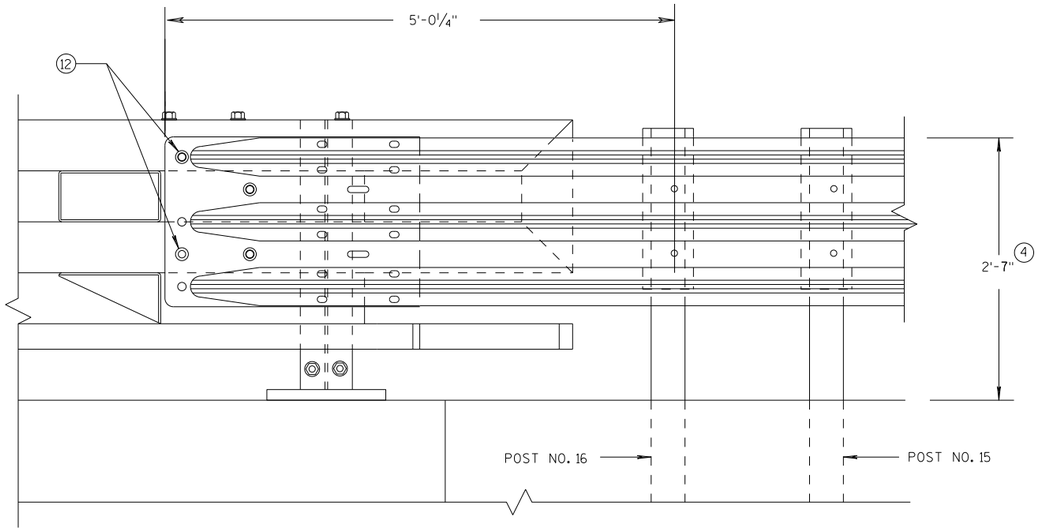

ELEVATION OF DETAIL AT NY3 END POST

THRIE BEAM RAIL ATTACHMENT

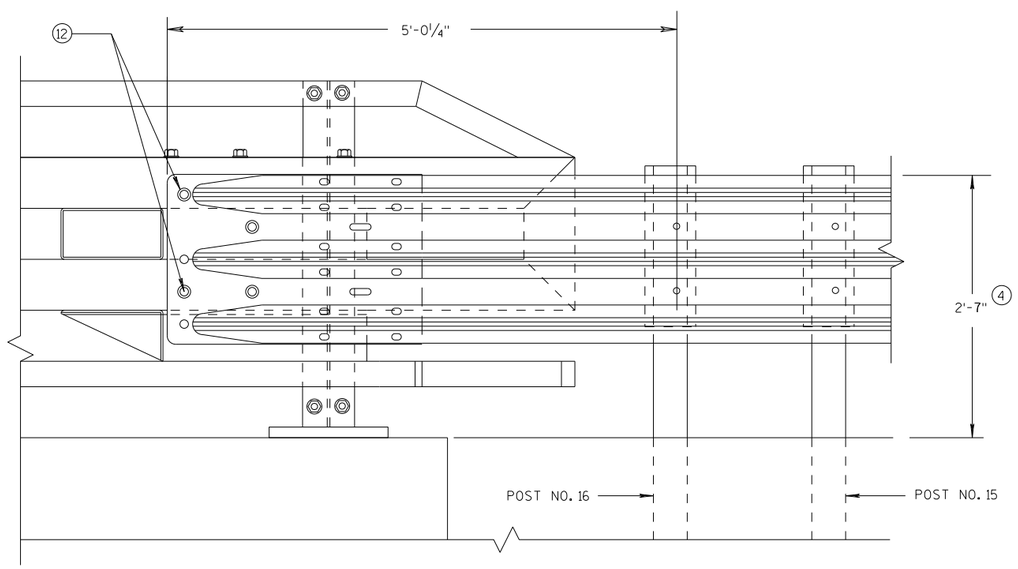

ELEVATION OF DETAIL AT NY4 END POST

THRIE BEAM RAIL ATTACHMENT

GENERAL NOTES

(4) TOLERANCE FOR TOP OF BEAM IS ± 1".

(12) BOLTS MAY BE A325 BOLTS OR A449 BOLTS. BOLT LENGTH AND THREADING LENGTH ARE TO ALLOW FOR A TIGHT CONNECTION BETWEEN RIGID BARRIER AND THRIE BEAM CONNECTION PLATE. CONTRACTOR IS TO FIELD VERIFY BOLT LENGTH AND THREAD LENGTH. ONE ROUND WASHER REQUIRED BETWEEN BOLT HEAD AND THRIE BEAM CONNECTOR PLATE. ON BACKSIDE OF PARAPET ONE ROUND WASHER, AND NUT REQUIRED. BOLT THREAD IS TO EXTEND ½-INCH BEYOND NUT.

MIDWEST GUARDRAIL SYSTEM
THRIE BEAM TRANSITION (MGS)

STATE OF WISCONSIN
DEPARTMENT OF TRANSPORTATION

APPROVED
7/2018
DATE
FHWA

/S/ Rodney Taylor
ROADWAY STANDARDS D
UNIT SUPERVIS

NT

6
S.D.D. 14 B 45-5k

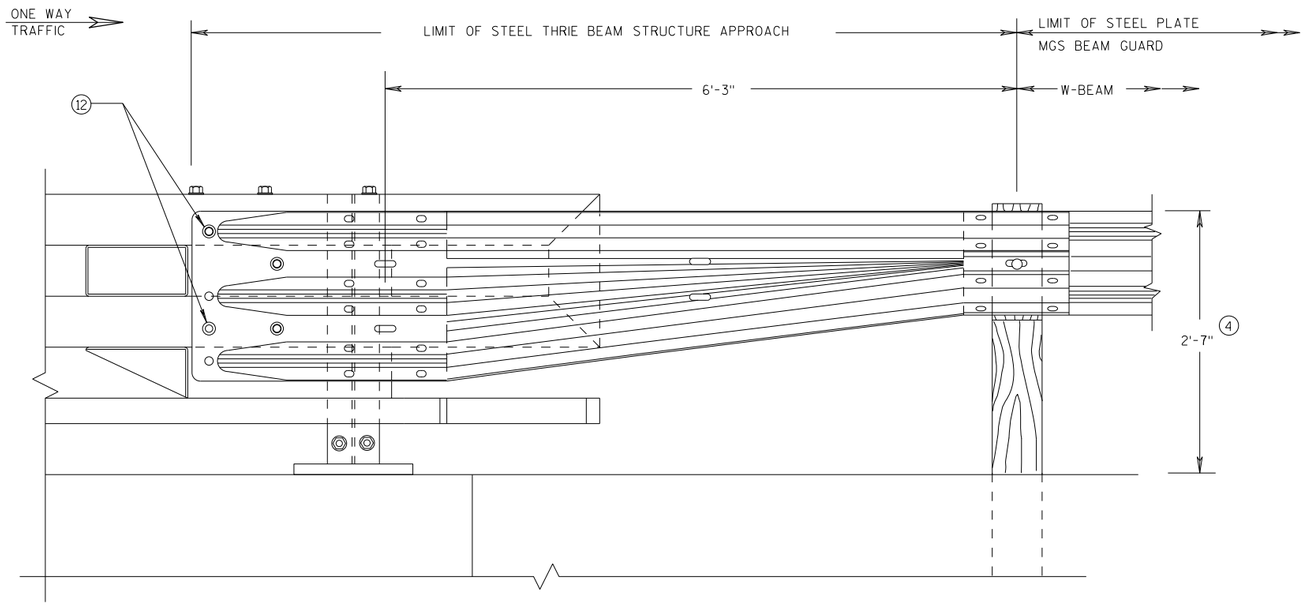

FRONT VIEW

W BEAM TRANSITION AND CONNECTION TO BRIDGE RAILING TYPE "NY3"

(USE ONLY ON THE TRAFFIC EXIT END OF ONE WAY BRIDGES)

GENERAL NOTES

(4) TOLERANCE FOR TOP OF BEAM IS ± 1".

(12) BOLTS MAY BE A325 BOLTS OR A449 BOLTS. BOLT LENGTH AND THREADING LENGTH ARE TO ALLOW FOR A TIGHT CONNECTION BETWEEN RIGID BARRIER AND THRIE BEAM CONNECTION PLATE. CONTRACTOR IS TO FIELD VERIFY BOLT LENGTH AND THREAD LENGTH. ONE ROUND WASHER REQUIRED BETWEEN BOLT HEAD AND THRIE BEAM CONNECTOR PLATE. ON BACKSIDE OF PARAPET ONE ROUND WASHER, AND NUT REQUIRED. BOLT THREAD IS TO EXTEND ½-INCH BEYOND NUT.

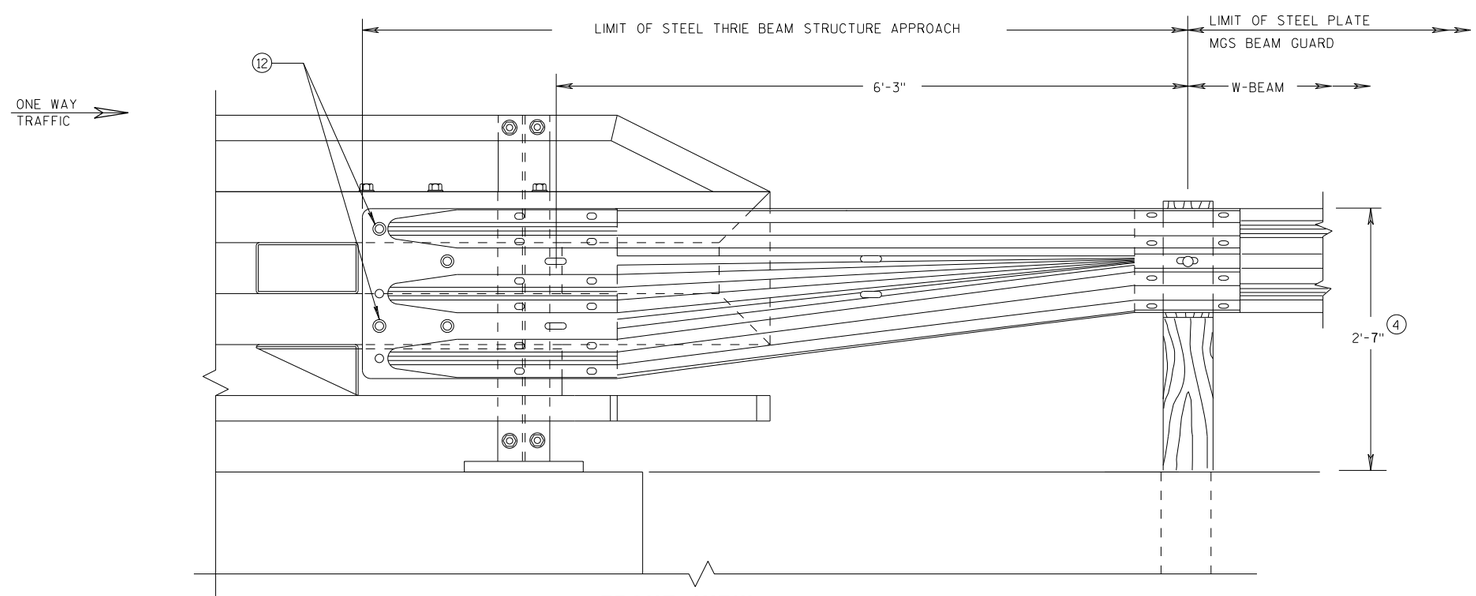

FRONT VIEW

W BEAM TRANSITION AND CONNECTION TO BRIDGE RAILING TYPE "NY4"

(USE ONLY ON THE TRAFFIC EXIT END OF ONE WAY BRIDGES)

MIDWEST GUARDRAIL SYSTEM THRIE BEAM TRANSITION (MGS)

STATE OF WISCONSIN
DEPARTMENT OF TRANSPORTATION

APPROVED
7/2018 — DATE
/S/ Rodney Taylor — ROADWAY STANDARDS DEVELOPMENT UNIT SUPERVISOR
FHWA

NT

6

S.D.D. 14 B 45-5L

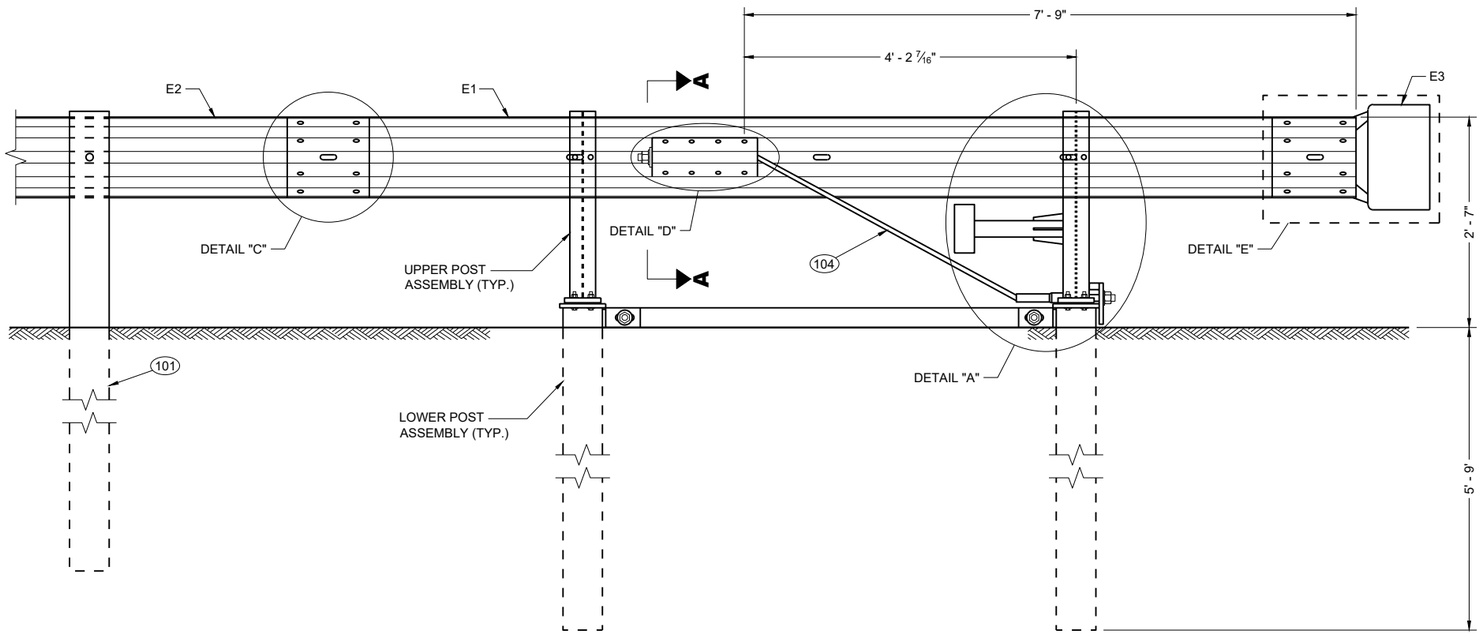

BACK VIEW

TYPE 2 TERMINAL

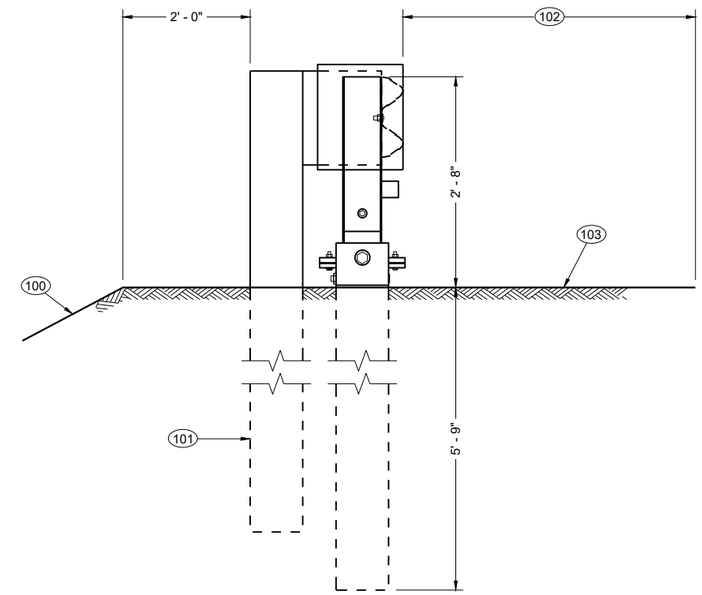

SIDE VIEW

TYPE 2 TERMINAL

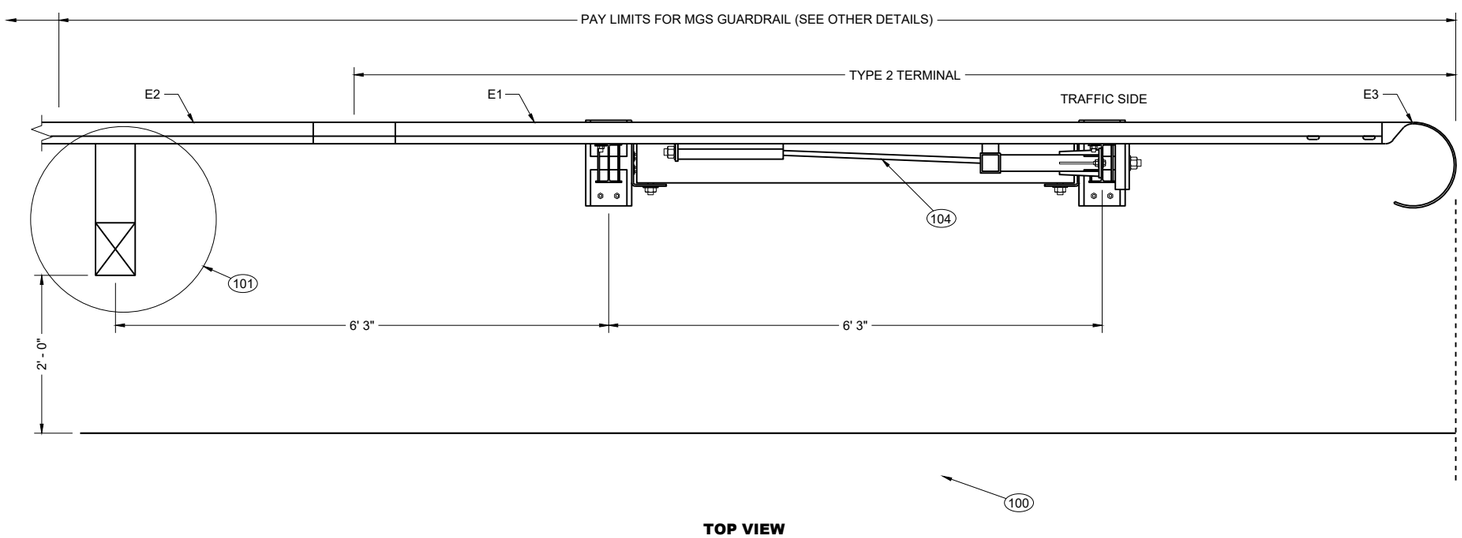

TOP VIEW

TYPE 2 TERMINAL

GENERAL NOTES

SEE SDD 14B42 FOR MORE INFORMATION

100 MAXIMUM SLOPE IS 2.5:1.

101 SEE SDD 14B42 FOR MORE INFORMATION.

102 SHOULDER

103 MAXIMUM SLOPE IS 10:1.

104 AFTER ASSEMBLY, CABLE IS TO BE TIGHTENED WITHOUT TWISTING THE CABLE.

MIDWEST GUARDRAIL SYSTEM (MGS)
TYPE 2 TERMINAL

STATE OF WISCONSIN
DEPARTMENT OF TRANSPORTATION

6

SDD 14B47-07a

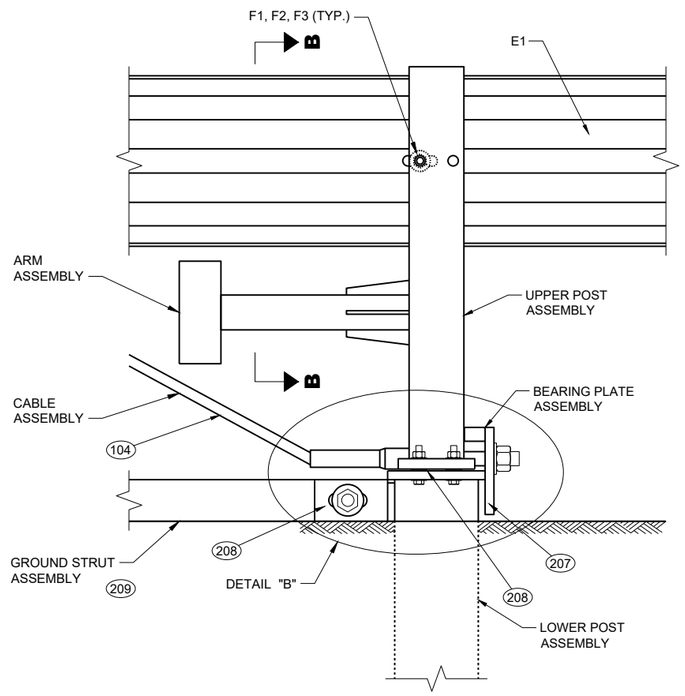

DETAIL "A"

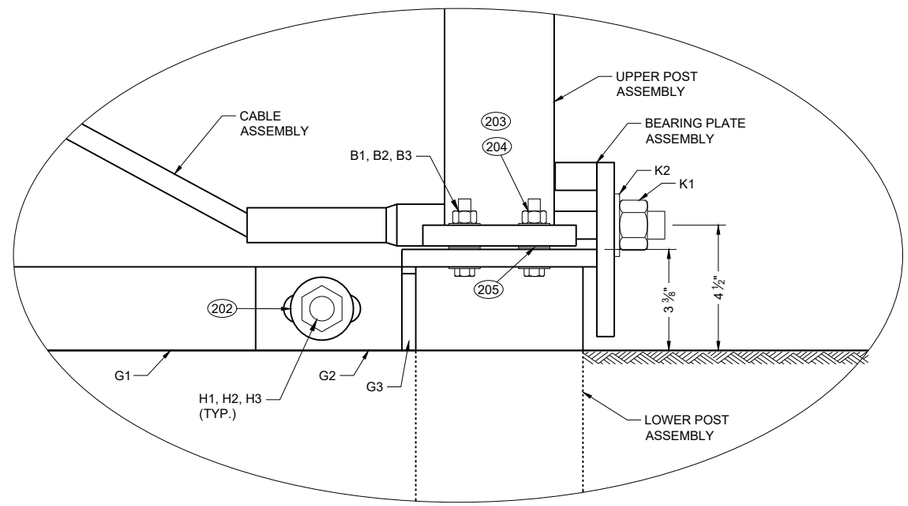

DETAIL "B"

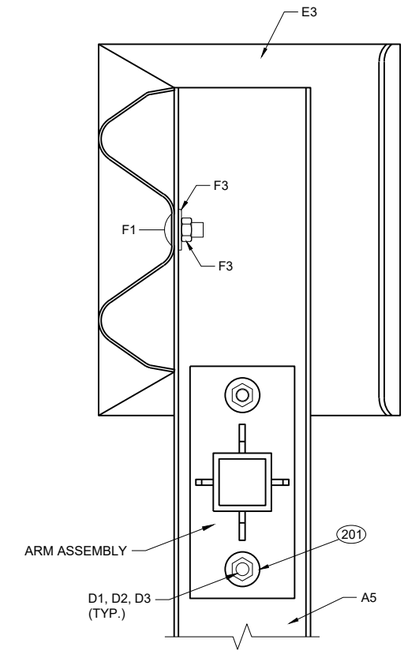

SECTION B - B

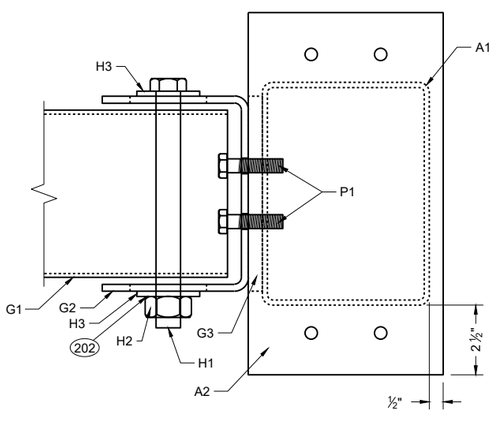

TOP VIEW

GROUND STRUT CONNECTION DETAIL

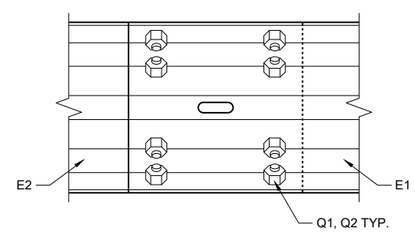

DETAIL "C"

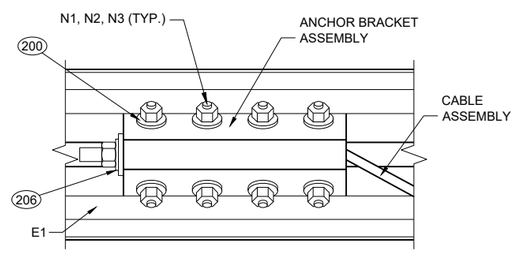

DETAIL "D"

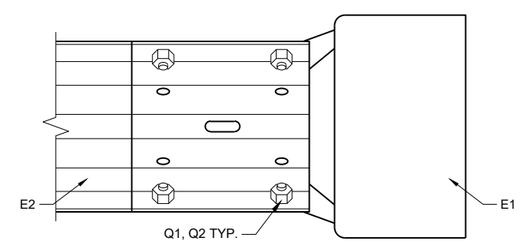

DETAIL "E"

GENERAL NOTES

200 INSTALL ONE WASHER UNDER BOLT HEAD AND RAIL AND ON WASHER BETWEEN NUT AND ANCHOR BRACKET ASSEMBLY.

201 INSTALL ONE WASHER UNDER BOLT HEAD AND UPPER POST ASSEMBLY AND ONE WASHER BETWEEN NUT AND ARM PLATE.

202 INSTALL ONE WASHER UNDER BOLT HEAD AND GROUND STRUT CONNECTOR AND ONE WASHER BETWEEN NUT AND GROUND STRUT CONNECTOR.

203 INSTALL ONE WASHER UNDER BOLT HEAD AND LOWER POST ASSEMBLY AND ONE WASHER BETWEEN NUT AND UPPER POST ASSEMBLY.

204 TORQUE VALUE IS BETWEEN 60 - 75 FT-LB.

205 TWO WASHERS BETWEEN UPPER AND LOWER POST ASSEMBLY.

206 INSTALL ONE WASHER BETWEEN NUT AND ANCHOR BRACKET ASSEMBLY.

207 NO MATERIAL IS TO BE PLACED AGAINST THE VERTICAL FACES OF BEARING PLATE.

208 PREVENT OR REMOVE MATERIALS THAT BLOCK ACCESS TO BOLTS FOR POST ASSEMBLIES AND GROUND STRUT.

209 PREVENT OR REMOVE MATERIALS THAT IMPEDE REMOVAL OF GROUND STRUT.

MIDWEST GUARDRAIL SYSTEM (MGS) TYPE 2 TERMINAL

STATE OF WISCONSIN
DEPARTMENT OF TRANSPORTATION

6

SDD 14B47-07b

GENERAL NOTES

300 TAP FOR 1/2" AFTER GALVANIZATION

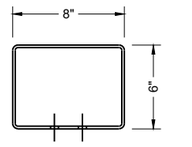

TOP VIEW

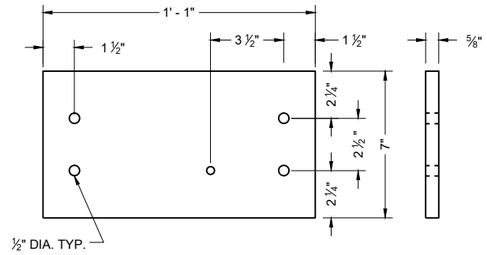

LOWER PLATE (A2)

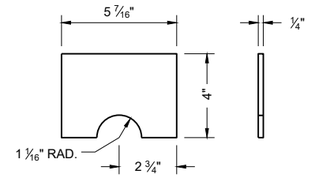

POST GUSSET (A3)

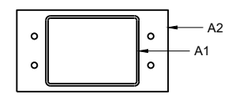

PLAN VIEW

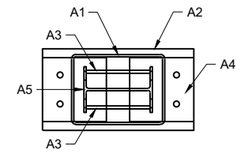

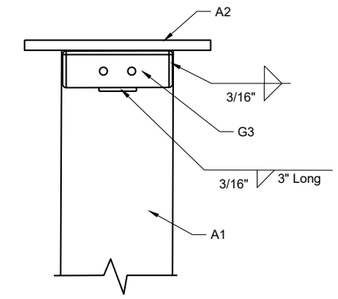

WELDING DETAIL
G3 AND A1

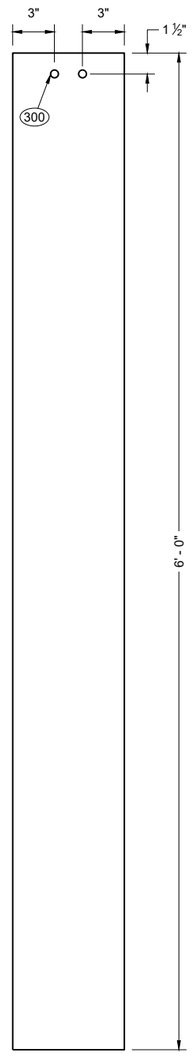

SIDE VIEW

FOUNDATION
TUBE (A1)

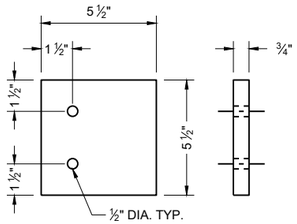

UPPER PLATE (A4)

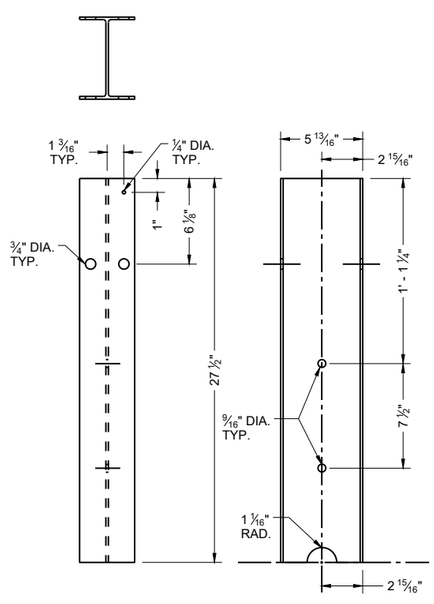

FRONT VIEW SIDE VIEW

TYPE 2 POST (A5)

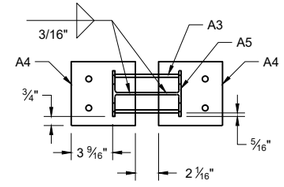

PLAN VIEW

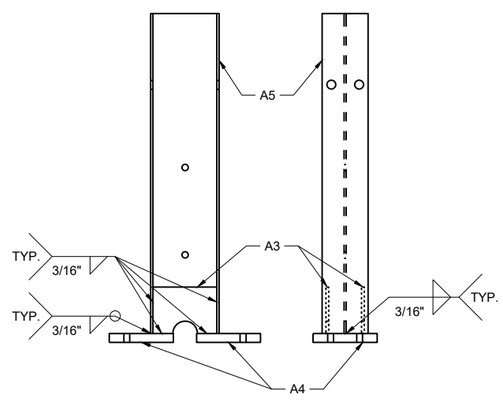

SIDE VIEW FRONT VIEW

UPPER POST ASSEMBLY

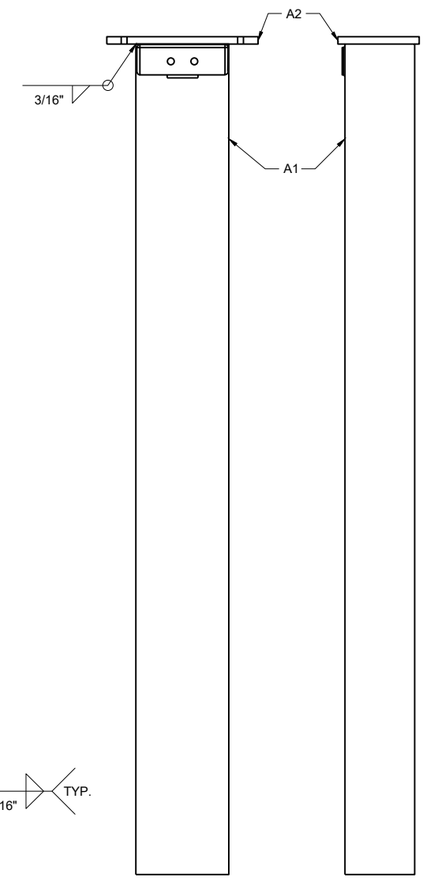

FRONT VIEW SIDE VIEW

LOWER POST ASSEMBLY

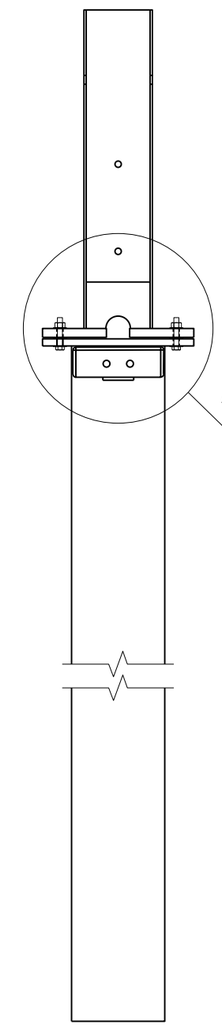

ASSEMBLED POST

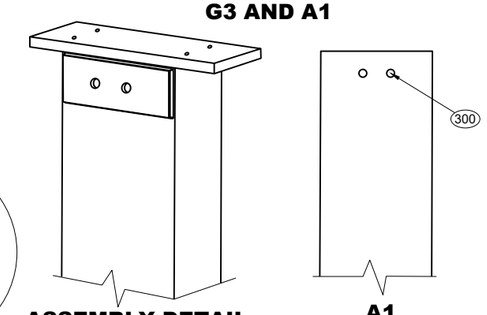

ASSEMBLY DETAIL
ISOMETRIC

A1

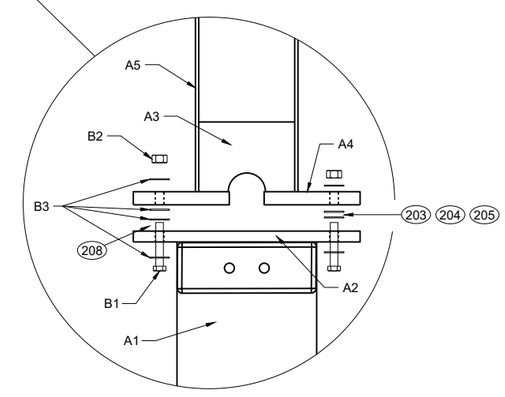

POST CONNECTION DETAIL

MIDWEST GUARDRAIL SYSTEM (MGS) TYPE 2 TERMINAL

STATE OF WISCONSIN
DEPARTMENT OF TRANSPORTATION

6

SDD 14B47-07c

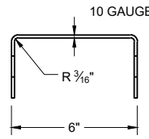

SIDE VIEW

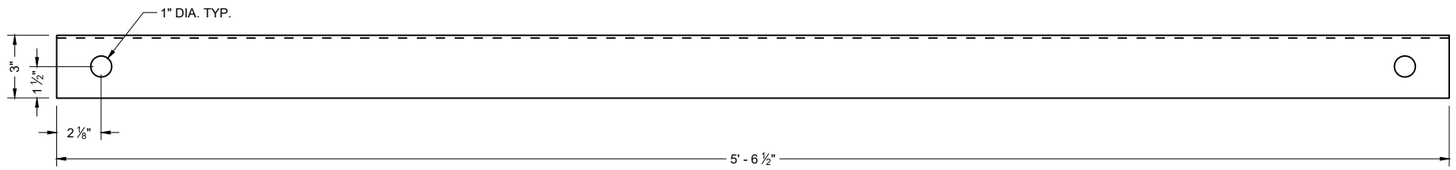

FRONT VIEW

GROUND STRUT CHANNEL (G1)

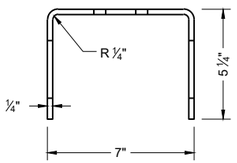

TOP VIEW

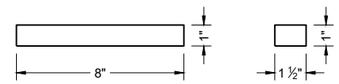

BEARING PLATE FLANGE (L2)

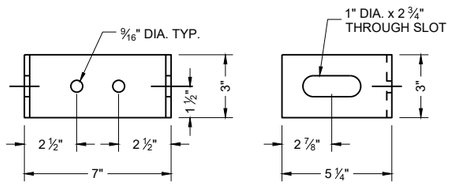

FRONT VIEW SIDE VIEW

GROUND STRUT CONNECTOR (G2)

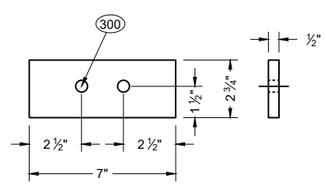

GROUND STRUT PLATE (G3)

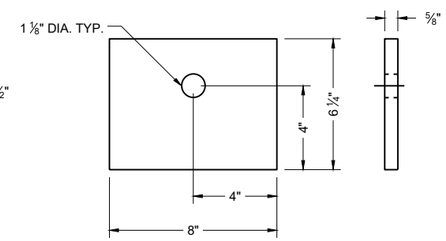

BEARING PLATE (L1)

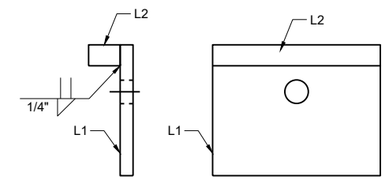

SIDE VIEW FRONT VIEW

BEARING PLATE ASSEMBLY

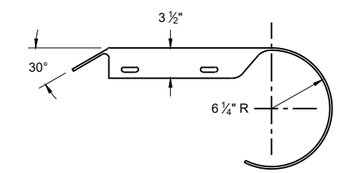

PLAN VIEW

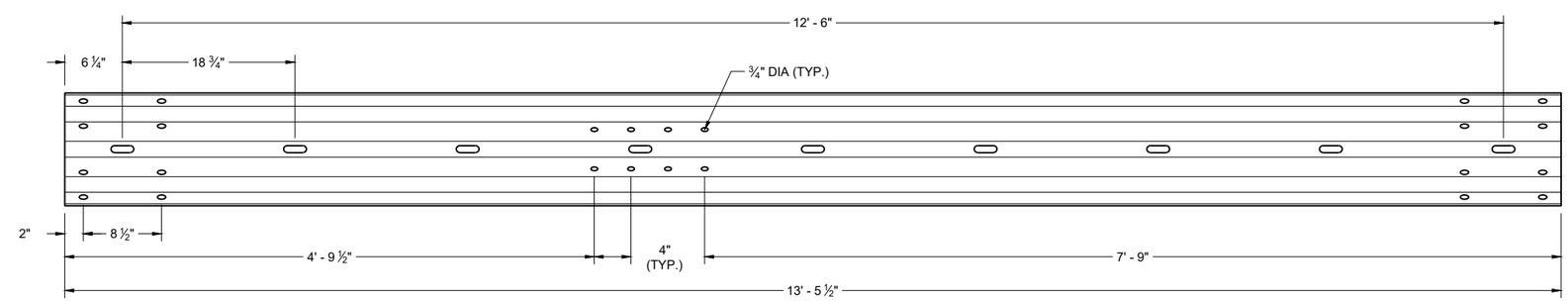

TYPE 2 GUARDRAIL (E1)

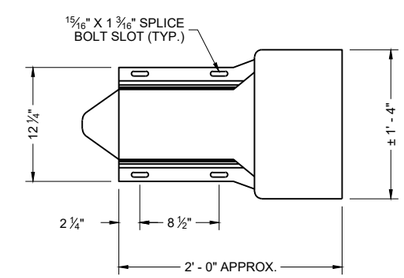

ELEVATION VIEW

ROUNDED BUFFER END (E3)

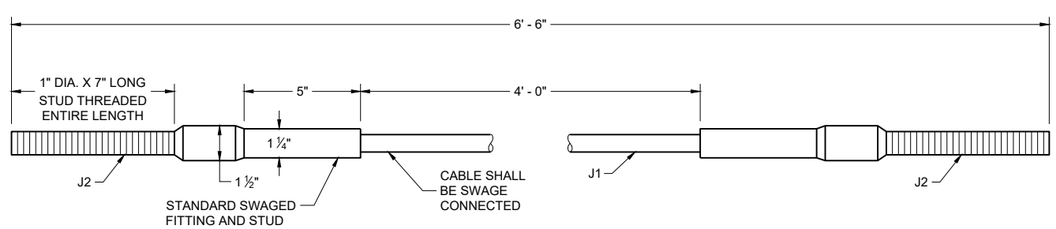

CABLE ASSEMBLY

MIDWEST GUARDRAIL SYSTEM (MGS) TYPE 2 TERMINAL

STATE OF WISCONSIN
DEPARTMENT OF TRANSPORTATION

6

SDD 14B47-07d

6

SDD 14B47-07d

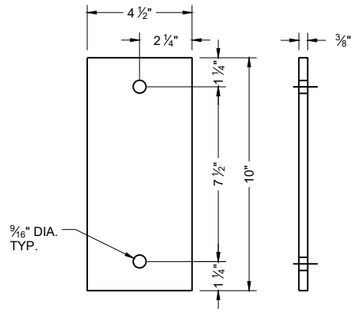

ARM PLATE (C1)

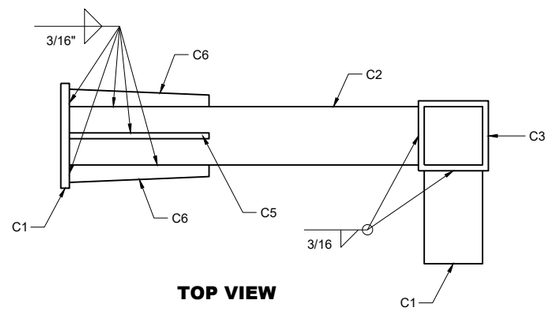

TOP VIEW
ARM ASSEMBLY

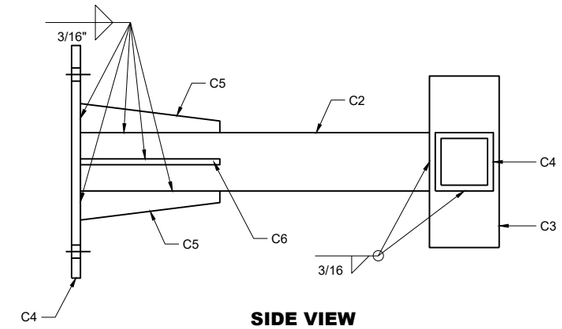

SIDE VIEW
ARM ASSEMBLY

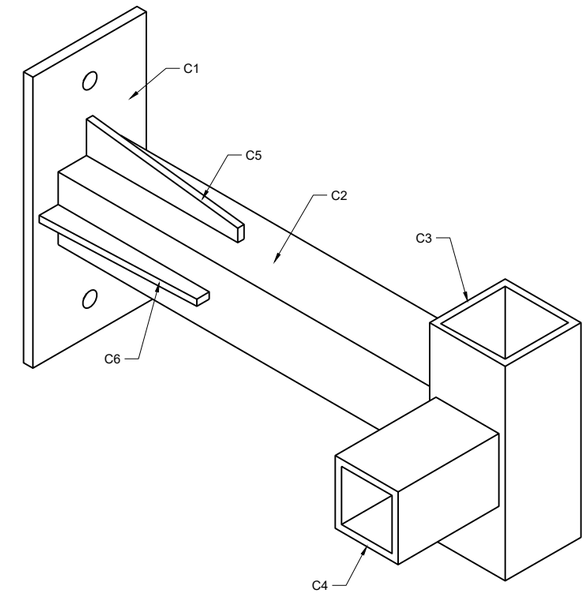

ISOMETRIC VIEW
ARM ASSEMBLY

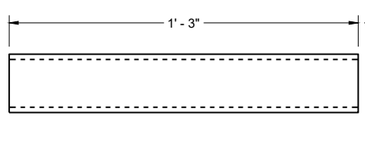

ARM TUBE 1 (C2)

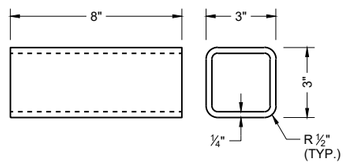

ARM TUBE 2 (C3)

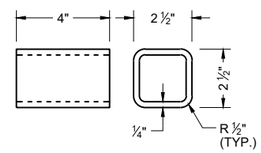

ARM TUBE 3 (C4)

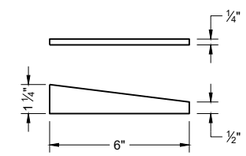

ARM GUSSET PLATE 1 (C5)

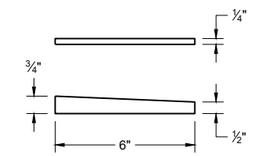

ARM GUSSET PLATE 2 (C6)

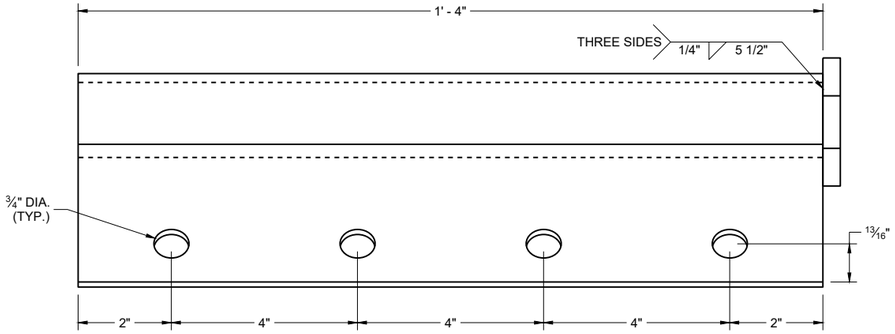

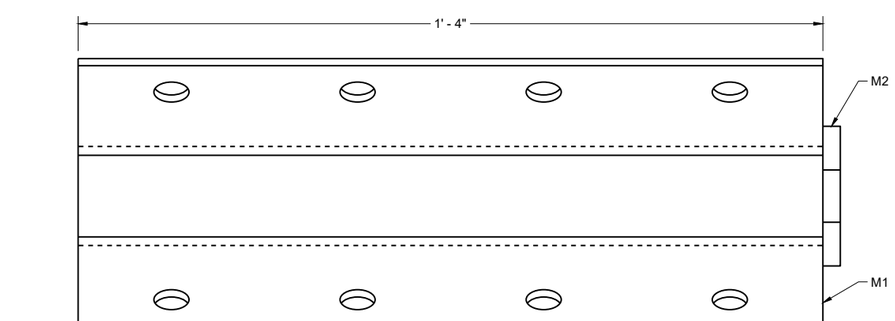

ANCHOR BRACKET (M1, M2)

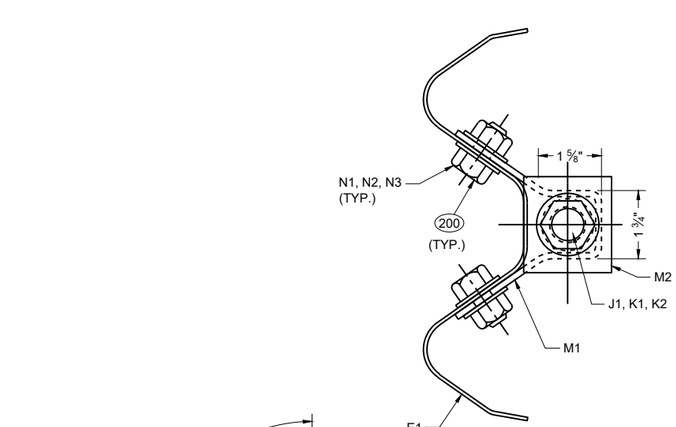

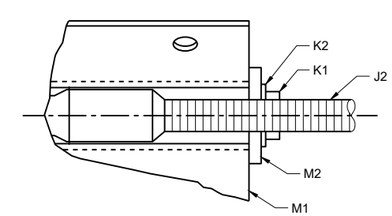

SECTION A - A

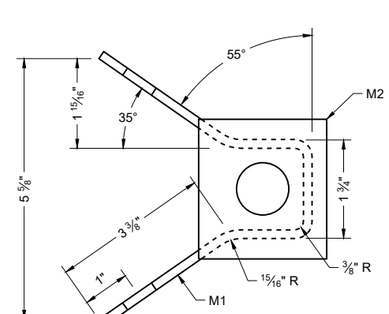

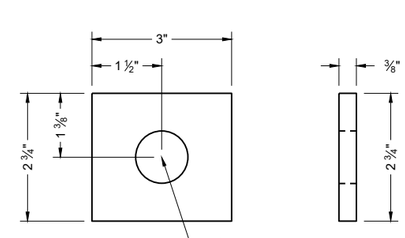

ANCHOR BRACKET BEARING PLATE (M2)

MIDWEST GUARDRAIL SYSTEM (MGS) TYPE 2 TERMINAL

STATE OF WISCONSIN
DEPARTMENT OF TRANSPORTATION

6

6

SDD 14B47-07e

SDD 14B47-07e

BILL OF MATERIALS - TYPE 2 TERMINAL (MGS)

PART	DESCRIPTION	MATERIALS SPECIFICATIONS	NOTES
A1	TYPE 2 FOUNDATION TUBE	AASHTO M111 / ASTM A123 ASTM A500 GRADE B OR ASTM A-501	TS 8" x 6" x 3/16"
A2	LOWER PLATE	AASHTO M111 / ASTM A123 ASTM A36 MIN. STRENGTH 36 KSI, OR ASTM A529 MAX. STRENGTH 50 KSI, OR ASTM A572 MAX STRENGTH 50 KSI, OR ASTM A709 MAX STRENGTH 50 KSI, OR ASTM A992 MAX STRENGTH 50 KSI	5/8" THICKNESS
A3	POST GUSSET	AASHTO M111 / ASTM A123 ASTM A36 MIN. STRENGTH 36 KSI, OR ASTM A529 MAX. STRENGTH 50 KSI, OR ASTM A572 MAX STRENGTH 50 KSI, OR ASTM A709 MAX STRENGTH 50 KSI, OR ASTM A992 MAX STRENGTH 50 KSI	1/4" THICKNESS
A4	UPPER PLATE	AASHTO M111 / ASTM A123 ASTM A36 MIN. STRENGTH 36 KSI, OR ASTM A529 MAX. STRENGTH 50 KSI, OR ASTM A572 MAX STRENGTH 50 KSI, OR ASTM A709 MAX STRENGTH 50 KSI, OR ASTM A992 MAX STRENGTH 50 KSI	3/4" THICKNESS
A5	TYPE 2 POST	AASHTO M111 / ASTM A123 ASTM A36 MIN. STRENGTH 36 KSI, OR ASTM A529 MAX. STRENGTH 50 KSI, OR ASTM A572 MAX STRENGTH 50 KSI, OR ASTM A709 MAX STRENGTH 50 KSI, OR ASTM A992 MAX STRENGTH 50 KSI, w6x9 or w6x8.5	
B1	BREAKAWAY BOLT	HOT DIP AASHTO M232 CLASS / ASTM A153 CLASS C / ASTM F2329 C OR MECHANICAL GAL. TO AASHTO M298 CLASS 50 TYPE 1 / ASTM B695 CLASS 50 TYPE 1 UNC HEAVY HEX HEAD ASTM F3125 GRADE A325 TYPE 1 HEAVY HEX HEAD OR SAE J429 GRADE 5 HEAVY HEX HEAD / ASTM A449 TYPE 1 HEAVY HEX HEAD. BOLTS MAY BE FULLY THREADED . PROVIDE ENOUGH THREADING FOR PROPER TIGHTENING OF BOLT.	7/16" DIA.
B2	BREAKAWAY BOLT WASHER	HOT DIP AASHTO M232 CLASS / ASTM A153 CLASS C / ASTM F2329 C OR MECHANICAL GAL. TO AASHTO M298 CLASS 50 TYPE 1 / ASTM B695 CLASS 50 TYPE 1 F436 TYPE 1 (HARDEN WASHER ONLY)	7/16" DIA.
B3	BREAKAWAY BOLT NUT	HOT DIP AASHTO M232 CLASS / ASTM A153 CLASS C / ASTM F2329 C OR MECHANICAL GAL. TO AASHTO M298 CLASS 50 TYPE 1 / ASTM B695 CLASS 50 TYPE 1 UNC OVER TAP NUTS AS SPECIFIED IN AASHTO 291/ASTM A 563 HEAVY HEX HEAD ASTM A563DH OR SAE J995 GRADE 5	
C1	ARM ASSEMBLY PLATE	AASHTO M111 / ASTM A123 ASTM A36 MIN. STRENGTH 36 KSI, OR ASTM A529 MAX. STRENGTH 50 KSI, OR ASTM A572 MAX STRENGTH 50 KSI, OR ASTM A709 MAX STRENGTH 50 KSI, OR ASTM A992 MAX STRENGTH 50 KSI	3/8" THICKNESS
C2	ARM ASSEMBLY TUBE 1	AASHTO M111 / ASTM A123 ASTM A500 GRADE B OR ASTM A-501	TS 8" x 6" x 3/16"
C3	ARM ASSEMBLY TUBE 2	AASHTO M111 / ASTM A123 ASTM A500 GRADE B OR ASTM A-501	TS 3" x 3" x 1/4"
C4	ARM ASSEMBLY TUBE 3	AASHTO M111 / ASTM A123 ASTM A500 GRADE B OR ASTM A-501	TS 2 1/2" x 2 1/2" X 1/4"
C5	ARM ASSEMBLY GUSSET PLATE 1	AASHTO M111 / ASTM A123 ASTM A36 MIN. STRENGTH 36 KSI, OR ASTM A529 MAX. STRENGTH 50 KSI, OR ASTM A572 MAX STRENGTH 50 KSI, OR ASTM A709 MAX STRENGTH 50 KSI, OR ASTM A992 MAX STRENGTH 50 KSI	1/4" THICKNESS
C6	ARM ASSEMBLY GUSSET PLATE 2	AASHTO M111 / ASTM A123 ASTM A36 MIN. STRENGTH 36 KSI, OR ASTM A529 MAX. STRENGTH 50 KSI, OR ASTM A572 MAX STRENGTH 50 KSI, OR ASTM A709 MAX STRENGTH 50 KSI, OR ASTM A992 MAX STRENGTH 50 KSI	1/4" THICKNESS
D1	ARM ASSEMBLY BOLT	HOT DIP AASHTO M232 CLASS / ASTM A153 CLASS C / ASTM F2329 C OR MECHANICAL GAL. TO AASHTO M298 CLASS 50 TYPE 1 / ASTM B695 CLASS 50 TYPE 1 UNC HEAVY HEX HEAD ASTM A307 GRADE B OR SAE J429 GRADE 2 OR ASTM F1554 GRADE 36	1/2" DIA.
D2	ARM ASSEMBLY WASHER	HOT DIP AASHTO M232 CLASS / ASTM A153 CLASS C / ASTM F2329 C OR MECHANICAL GAL. TO AASHTO M298 CLASS 50 TYPE 1 / ASTM B695 CLASS 50 TYPE 1 F436 TYPE 1 (HARDEN WASHER ONLY)	1/2" DIA.
D3	ARM ASSEMBLY NUT	HOT DIP AASHTO M232 CLASS / ASTM A153 CLASS C / ASTM F2329 C OR MECHANICAL GAL. TO AASHTO M298 CLASS 50 TYPE 1 / ASTM B695 CLASS 50 TYPE 1 UNC OVER TAP NUTS AS SPECIFIED IN AASHTO 291 / ASTM A 563 HEAVY HEX HEAD ASTM A563DH OR SAE J995 GRADE 5	1/2" DIA.
E1	TYPE 2 GUARD RAIL	AASHTO M180 CLASS A TYPE 2 12 GAUGE APPROVED PRODUCER	
E2	BEAM GUARD RAIL	AASHTO M180 CLASS A TYPE 2 12 GAUGE APPROVED PRODUCER	
E3	BEAM GUARD ROUNDED BUFFER END	AASHTO M180 CLASS A TYPE 2 12 GAUGE APPROVED PRODUCER	
F1	POST BOLT	HOT DIP AASHTO M232 CLASS / ASTM A153 CLASS C / ASTM F2329 C OR MECHANICAL GAL. TO AASHTO M298 CLASS 50 TYPE 1 / ASTM B695 CLASS 50 TYPE 1 UNC UNC HEAVY HEX HEAD ASTM A307 GRADE B OR SAE J429 GRADE 2 OR ASTM F1554 GRADE 36	5/8" DIA.
F2	POST BOLT WASHER	HOT DIP AASHTO M232 CLASS / ASTM A153 CLASS C / ASTM F2329 C OR MECHANICAL GAL. TO AASHTO M298 CLASS 50 TYPE 1 / ASTM B695 CLASS 50 TYPE 1 F436 TYPE 1 (HARDEN WASHER ONLY)	5/8" DIA.
F3	POST BOLT NUT	HOT DIP AASHTO M232 CLASS / ASTM A153 CLASS C / ASTM F2329 C OR MECHANICAL GAL. TO AASHTO M298 CLASS 50 TYPE 1 / ASTM B695 CLASS 50 TYPE 1 UNC OVER TAP NUTS AS SPECIFIED IN AASHTO 291/ASTM A 563 AASHTO M180 RECESSED HEAVY HEX HEAD ASTM A563DH OR SAE J995 GRADE 5	
G1	GROUND STRUT CHANNEL	AASHTO M111 / ASTM A123 ASTM A36 MIN. STRENGTH 36 KSI, OR ASTM A529 MAX. STRENGTH 50 KSI, OR ASTM A572 MAX STRENGTH 50 KSI, OR ASTM A709 MAX STRENGTH 50 KSI, OR ASTM A992 MAX STRENGTH 50 KSI	1/2" x 11 3/4" x 10 GAUGE
G2	GROUND STRUT CONNECTOR	AASHTO M111 / ASTM A123 ASTM A36 MIN. STRENGTH 36 KSI, OR ASTM A529 MAX. STRENGTH 50 KSI, OR ASTM A572 MAX STRENGTH 50 KSI, OR ASTM A709 MAX STRENGTH 50 KSI, OR ASTM A992 MAX STRENGTH 50 KSI	1/4" THICKNESS
G3	GROUND STRUT PLATE	AASHTO M111 / ASTM A123 ASTM A36 MIN. STRENGTH 36 KSI, OR ASTM A529 MAX. STRENGTH 50 KSI, OR ASTM A572 MAX STRENGTH 50 KSI, OR ASTM A709 MAX STRENGTH 50 KSI, OR ASTM A992 MAX STRENGTH 50 KSI	1/2" THICKNESS

MIDWEST GUARDRAIL SYSTEM (MGS) TYPE 2 TERMINAL

STATE OF WISCONSIN
DEPARTMENT OF TRANSPORTATION

6

SDD 14B47-07f

BILL OF MATERIALS - TYPE 2 TERMINAL (MGS)

PART	DESCRIPTION	MATERIALS SPECIFICATIONS	NOTES
H1	GROUND STRUT BOLT	HOT DIP AASHTO M232 CLASS / ASTM A153 CLASS C / ASTM F2329 C OR MECHANICAL GAL. TO AASHTO M298 CLASS 50 TYPE 1 / ASTM B695 CLASS 50 TYPE 1 UNC HEAVY HEX HEAD ASTM A307 GRADE B OR SAE J429 GRADE 2 OR ASTM F1554 GRADE 36	7/8" DIA.
H2	GROUND STRUT BOLT WASHER	HOT DIP AASHTO M232 CLASS / ASTM A153 CLASS C / ASTM F2329 C OR MECHANICAL GAL. TO AASHTO M298 CLASS 50 TYPE 1/ ASTM B695 CLASS 50 TYPE 1 F436 TYPE 1 (HARDEN WASHER ONLY)	7/8" DIA.
H3	GROUND STRUT BOLT NUT	HOT DIP AASHTO M232 CLASS / ASTM A153 CLASS C / ASTM F2329 C OR MECHANICAL GAL. TO AASHTO M298 CLASS 50 TYPE 1 / ASTM B695 CLASS 50 TYPE 1 UNC HEAVY HEX HEAD 5/8" ASTM A307 GRADE B OR SAE J429 GRADE 2 OR ASTM F1554 GRADE 36	
J1	BCT CABLE	AASHTO M30 / ASTM A741 6 x 19 INDEPENDENT WIRE CORE (IWRC) IMPROVED PLOW STEEL (IPS), 6 x 19 INDEPENDENT WIRE CORE (IWRC) IMPROVED PLOW STEEL (IPS) TYPE II OR IIC, CLASS C ZINC COATED MIN. BREAKING STRENGTH OF 42.7 KIPS	3/4" DIA.
J2	BCT CABLE	UNC 1" ASTM A576 GRADE 1035 SWAGE FITTINGS ARE TO BE FACTORY SWEDGED. MIN BREAKING STRENGTH OF 42.7 KIPS ASME B30.26 "FORGED, CAST, OR DIE STAMPED WITH THE FOLLOWING IN TO CONNECTION: NAME OF MANUFACTURE OR TRADEMARK OF CONNECTION'S MANUFACTURER, SIZE OR RATED LOAD, GRADE FOR ALLOY EYEBOLTS."	
K1	CABLE ASSEMBLY NUT	HOT DIP AASHTO M232 CLASS / ASTM A153 CLASS C / ASTM F2329 C OR MECHANICAL GAL. TO AASHTO M298 CLASS 50 TYPE 1 / ASTM B695 CLASS 50 TYPE 1 UNC OVER TAP NUTS AS SPECIFIED IN AASHTO 291 / ASTM A 563 HEAVY HEX HEAD ASTM A563DH OR SAE J995 GRADE 5	1" DIA.
K2	CABLE ASSEMBLY WASHER	HOT DIP AASHTO M232 CLASS / ASTM A153 CLASS C / ASTM F2329 C OR MECHANICAL GAL. TO AASHTO M298 CLASS 50 TYPE 1	1" DIA.
L1	BEARING PLATE	AASHTO M111 / ASTM A123 ASTM A36 MIN. STRENGTH 36 KSI, OR ASTM A529 MAX. STRENGTH 50 KSI, OR ASTM A572 MAX STRENGTH 50 KSI, OR ASTM A709 MAX STRENGTH 50 KSI, OR ASTM A992 MAX STRENGTH 50 KSI	5/8" THICKNESS
L2	BEARING PLATE FLANGE	AASHTO M111 / ASTM A123 ASTM A36 MIN. STRENGTH 36 KSI, OR ASTM A529 MAX. STRENGTH 50 KSI, OR ASTM A572 MAX STRENGTH 50 KSI, OR ASTM A709 MAX STRENGTH 50 KSI, OR ASTM A992 MAX STRENGTH 50 KSI	1" THICKNESS
M1	BEAM GUARD ANCHOR BRACKET	AASHTO M111 / ASTM A123 ASTM A36 MIN. STRENGTH 36 KSI, OR ASTM A529 MAX. STRENGTH 50 KSI, OR ASTM A572 MAX STRENGTH 50 KSI, OR ASTM A709 MAX STRENGTH 50 KSI, OR ASTM A992 MAX STRENGTH 50 KSI	
M2	BEAM GUARD ANCHOR END PLATE	AASHTO M111 / ASTM A123 ASTM A36 MIN. STRENGTH 36 KSI, OR ASTM A529 MAX. STRENGTH 50 KSI, OR ASTM A572 MAX STRENGTH 50 KSI, OR ASTM A709 MAX STRENGTH 50 KSI, OR ASTM A992 MAX STRENGTH 50 KSI	3/8" THICKNESS
N1	ANCHOR BRACKET BOLT	HOT DIP AASHTO M232 CLASS / ASTM A153 CLASS C / ASTM F2329 C OR MECHANICAL GAL. TO AASHTO M298 CLASS 50 TYPE 1 / ASTM B695 CLASS 50 TYPE 1 UNC AASHTO M180 HEAD ASTM A307 GRADE B OR SAE J429 GRADE 2 OR ASTM F1554 GRADE 36	5/8" DIA.
N2	ANCHOR BRACKET BOLT WASHER	HOT DIP AASHTO M232 CLASS / ASTM A153 CLASS C / ASTM F2329 C OR MECHANICAL GAL. TO AASHTO M298 CLASS 50 TYPE 1/ ASTM B695 CLASS 50 TYPE 1 F436 TYPE 1 (HARDEN WASHER ONLY)	5/8" DIA.
N3	ANCHOR BRACKET BOLT NUT	HOT DIP AASHTO M232 CLASS / ASTM A153 CLASS C / ASTM F2329 C OR MECHANICAL GAL. TO AASHTO M298 CLASS 50 TYPE 1 / ASTM B695 CLASS 50 TYPE 1 UNC OVER TAP NUTS AS SPECIFIED IN AASHTO 291 /ASTM A 563 HEAVY HEX HEAD ASTM A563DH OR SAE J995 GRADE 5	
P1	FOUNDATION TUBE BOLT	HOT DIP AASHTO M232 CLASS / ASTM A153 CLASS C / ASTM F2329 C OR MECHANICAL GAL. TO AASHTO M298 CLASS 50 TYPE 1/ ASTM B695 CLASS 50 TYPE 1 UNC OVER TAP NUTS AS SPECIFIED IN AASHTO 291 / ASTM A 563 HEAVY HEX HEAD ASTM A563DH OR SAE J995 GRADE 5	1/2" DIA.
Q1	SPLICE BOLT	HOT DIP AASHTO M232 CLASS / ASTM A153 CLASS C / ASTM F2329 C OR MECHANICAL GAL. TO AASHTO M298 CLASS 50 TYPE 1 / ASTM B695 CLASS 50 TYPE 1 UNC AASHTO M180 HEAD ASTM A307 GRADE B OR SAE J429 GRADE 2 OR ASTM F1554 GRADE 36	
Q2	SPLICE NUT	HOT DIP AASHTO M232 CLASS / ASTM A153 CLASS C / ASTM F2329 C OR MECHANICAL GAL. TO AASHTO M298 CLASS 50 TYPE 1 / ASTM B695 CLASS 50 TYPE 1 UNC OVER TAP NUTS AS SPECIFIED IN AASHTO 291 / ASTM A 563 AASHTO M180 RECESSED HEAVY HEX HEAD ASTM A563DH OR SAE J995 GRADE 5	5/8" DIA.

MIDWEST GUARDRAIL SYSTEM (MGS) TYPE 2 TERMINAL

STATE OF WISCONSIN
DEPARTMENT OF TRANSPORTATION

APPROVED
June 2025 — DATE
/S/ Rodney Taylor — <position>
FHWA

6

SDD 14B47-07g

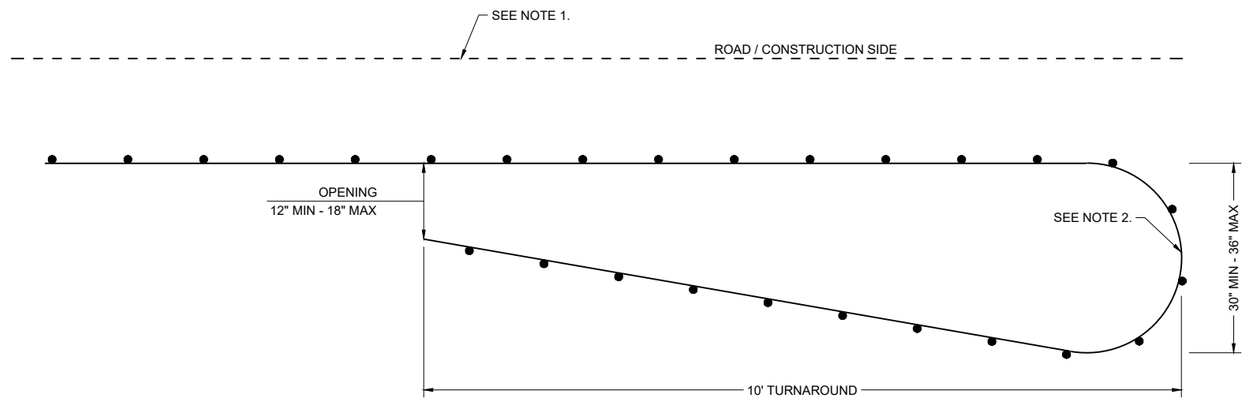

PLAN VIEW

CLIMBING TURTLE EXCLUSION FENCE DETAIL

GENERAL NOTES:

1. WHERE SILT FENCE IS REQUIRED, IT SHALL BE PLACED ON THE CONSTRUCTION SIDE OF THE EXCLUSION FENCING, OR COMBINED WITH THE EXCLUSION FENCING AS ALLOWED IN THE SPECIFICATIONS. STAKES ON THIS DETAIL ARE OPPOSITE OF STANDARD SILT FENCE FOR SEDIMENT CONTROL.
2. PLACE TURNAROUNDS AT ALL TERMINI ENDS OF THE EXCLUSION FENCING.
3. IF TEMPORARY ACCESS POINTS ARE NEEDED DURING CONSTRUCTION THAT REQUIRE OPENINGS IN THE EXCLUSION FENCING, ACCESS OPENINGS SHOULD BE TIGHTLY SECURED WITH BALES OF HAY OR STRAW WHENEVER CONSTRUCTION RELATED ACTIVITIES ARE NOT OCCURRING. REINSTALL EXCLUSION FENCING WHEN THE WORK REQUIRING THE TEMPORARY ACCESS OPENING IS COMPLETED.
4. THE FENCE CAP MAY BE A 6" UNDER DRAIN PIPE, SLIT DOWN THE CENTER AND PLACED OVER THE FENCE. COMMERCIALLY AVAILABLE SAFETY CAPS WITH A LIP MAY BE USED. OTHER DNR APPROVED METHODS TO PREVENT TURTLES FROM PASSING OVER THE TOP OF THE FENCE MAY BE USED.

   SECURELY FASTEN THE CAP TO PREVENT IT FROM BEING DISLODGED.

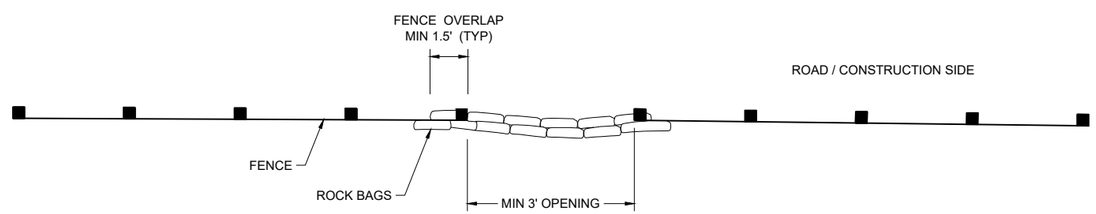

PLAN VIEW

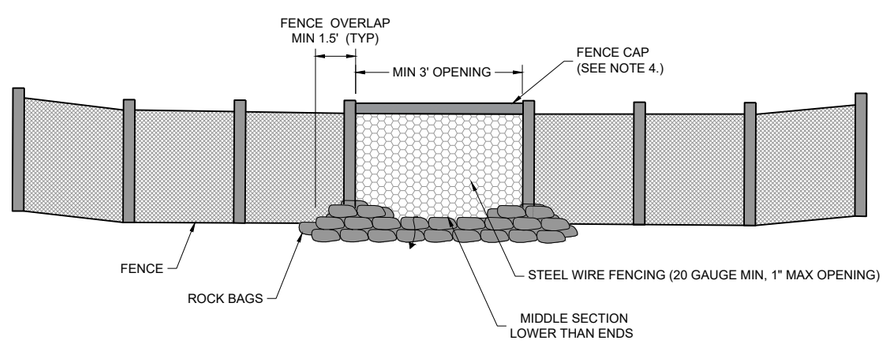

FRONT VIEW

CLIMBING TURTLE FENCE RELIEF DETAIL

TURTLE EXCLUSION FENCE
CLIMBING TURTLE

STATE OF WISCONSIN
DEPARTMENT OF TRANSPORTATION

APPROVED
AUGUST 2025 — DATE
/S/ ALYSSA BARRETTE
CHIEF STATEWIDE ENVIRONMENTAL SERVICES
BUREAU OF TECHNICAL SER

FHWA

6
SDD 14D01-01

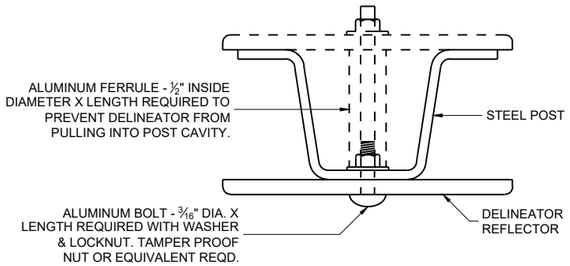

MOUNTING DETAIL FOR DELINEATOR REFLECTOR

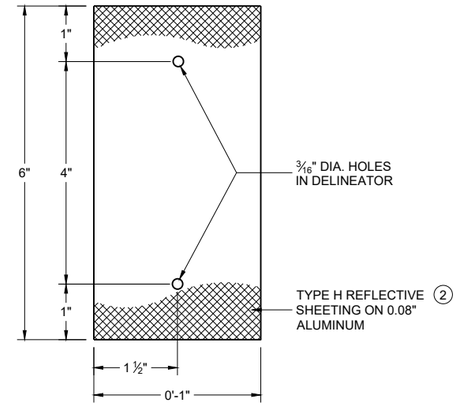

DETAIL "A" 3" X 6" DELINEATOR REFLECTOR

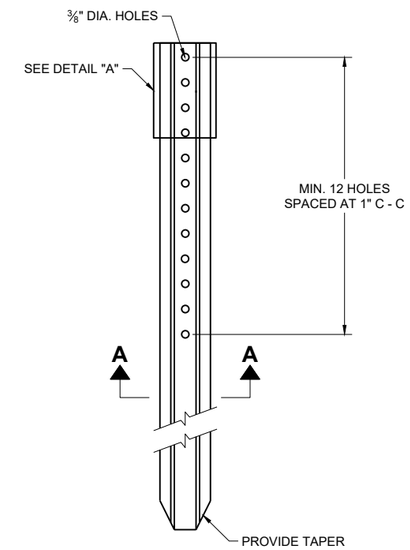

DELINEATOR POST

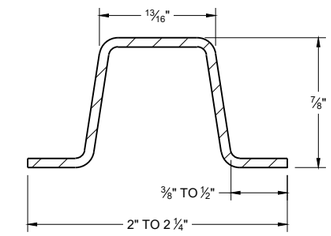

SECTION A - A

WEIGHT 1.12 LBS PER FT. \ 0.1 LB.

REFLECTOR SPACING TABLE

REFLECTOR SPACING	LOCATION
* 100' C-C	RAMPS
400' C-C	MAINLINE

* START AT BEGINNING OF RAMP TAPER AND END AT END OF RAMP TAPER

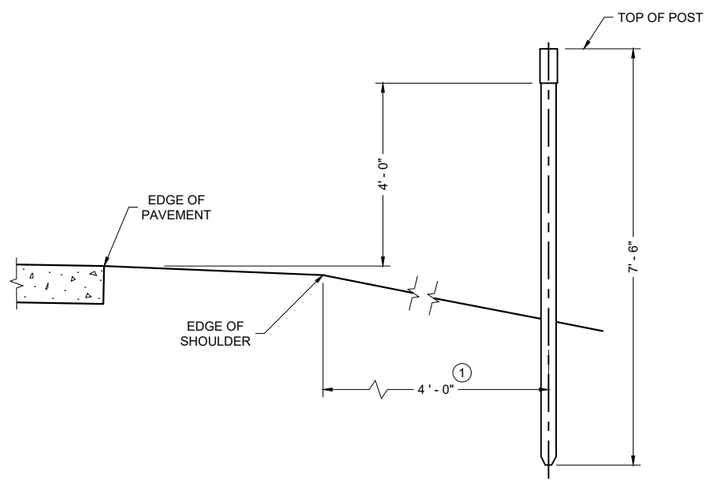

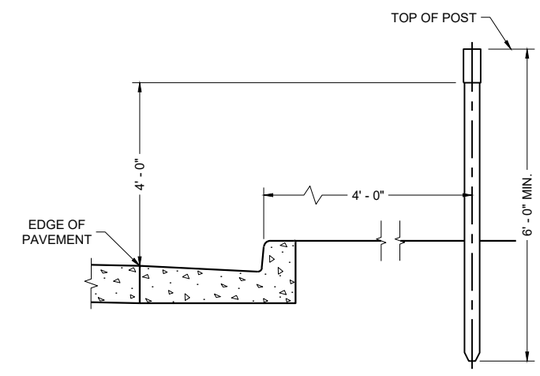

TYPICAL INSTALLATIONS OF DELINEATOR POSTS

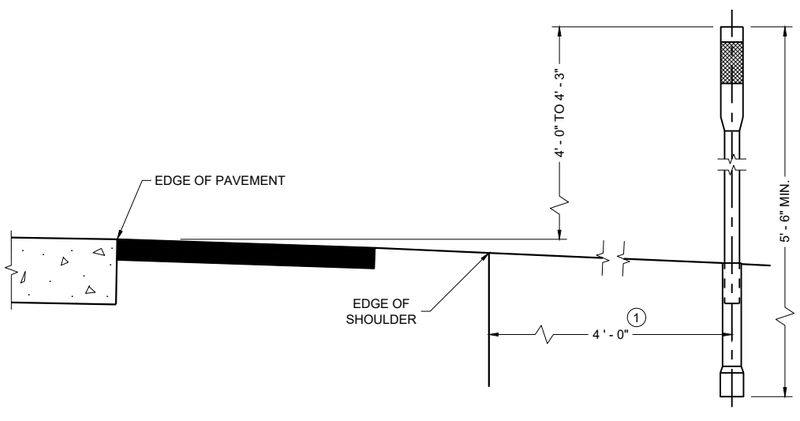

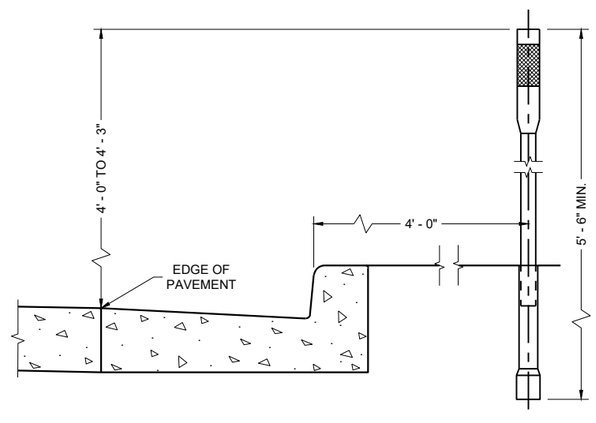

TYPICAL INSTALLATIONS OF FLEXIBLE DELINEATOR POSTS

GENERAL NOTES

DETAILS OF CONSTRUCTION NOT SHOWN ON THIS DRAWING SHALL CONFORM TO THE PERTINENT REQUIREMENTS OF TEH STANDARD SPECIFICATIONS AND THE APPLICABLE SPECIAL PROVISIONS.

1. DELINEATORS SHALL BE PLACED AT A CONSTANT DISTANCE FROM THE EDGE OF THE SHOULDER FOR THE LENGTH OF THE INSTALLATION.
2. FURNISH TYPE H SHEETING FROM THE APPROVED PRODUCTS LIST.

DELINEATOR POST WITH REFLECTIVE SHEETING

STATE OF WISCONSIN
DEPARTMENT OF TRANSPORTATION

APPROVED
March 2024 — DATE
/S/ Jeannie Silver — Statewide Pavement Marking Engineer
FHWA

6

SDD 15A04-08c

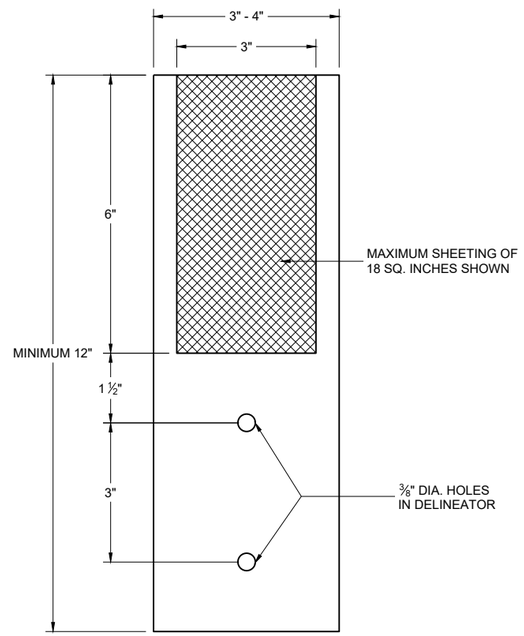

4" x 12" DELINEATOR WITH REFLECTIVE SHEETING

REFLECTOR SPACING TABLE

REFLECTOR SPACING	MINIMUM NUMBER OF REFLECTORS
100' C-C	3

DELINEATOR POST WITH REFLECTIVE SHEETING

STATE OF WISCONSIN
DEPARTMENT OF TRANSPORTATION

APPROVED
March 2024 — DATE
/S/ Jeannie Silver — Statewide Pavement Marking Engineer
FHWA

6

SDD 15A04-08e

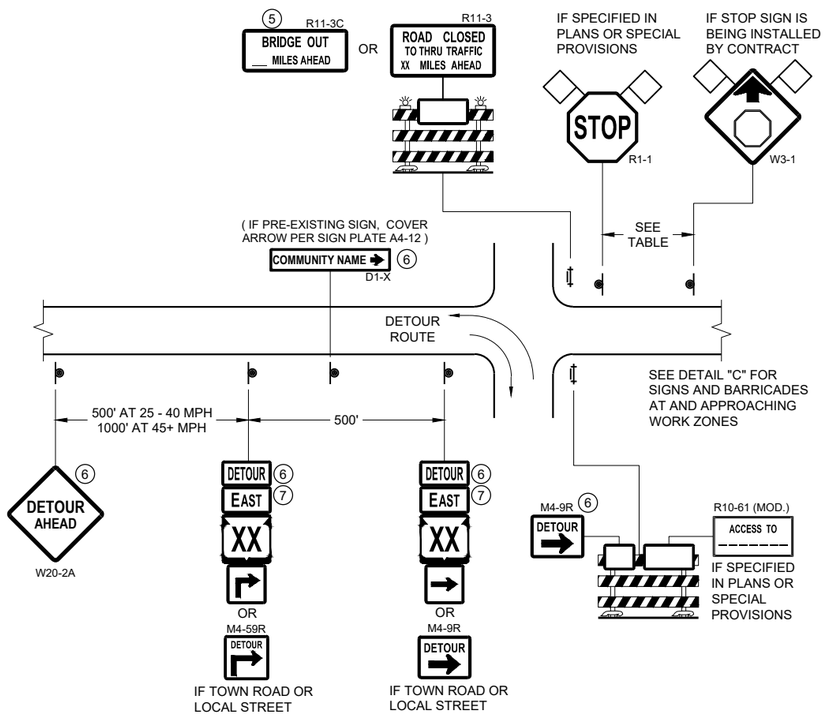

DETAIL A
MAINLINE CLOSURE WITH POSTED DETOUR

WORK ZONE GREATER THAN OR EQUAL TO ½ MILE FROM DETOUR ROUTE (1000 FEET IF URBAN)

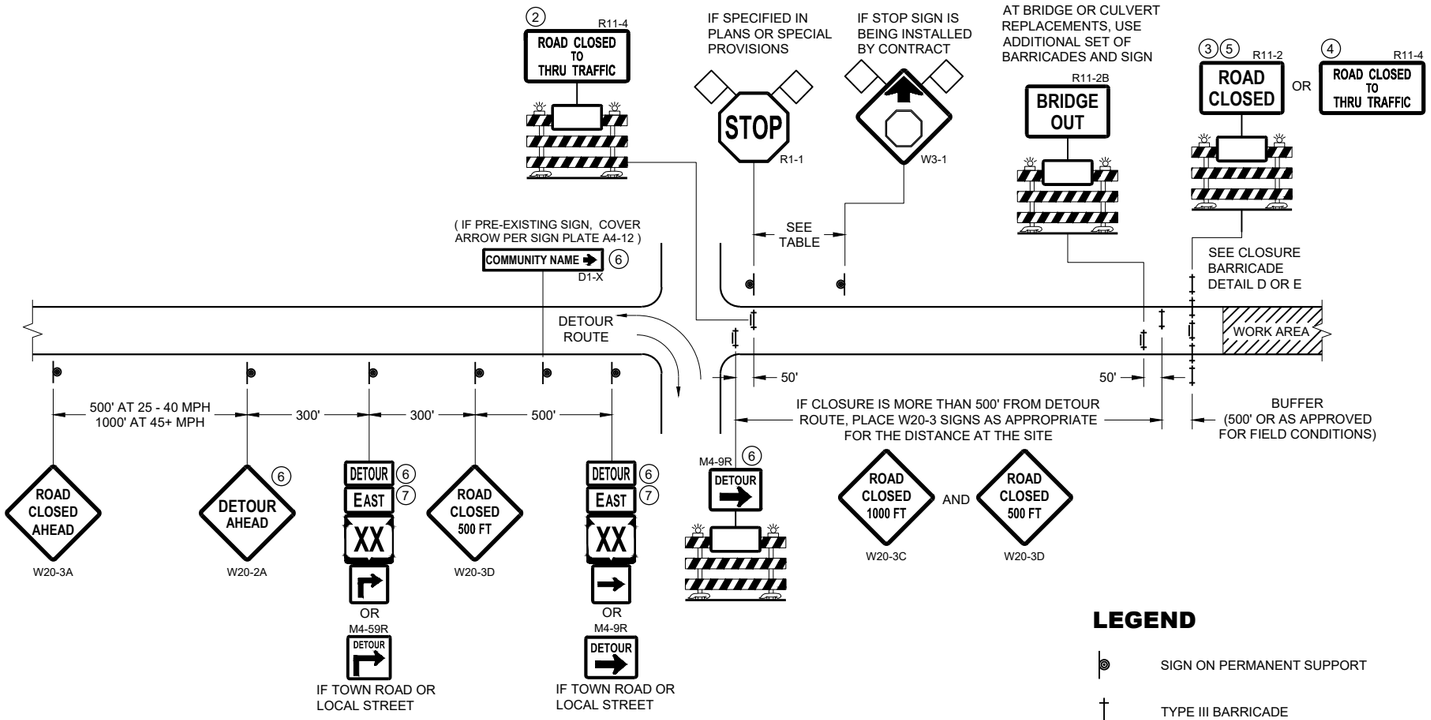

DETAIL B
MAINLINE CLOSURE WITH POSTED DETOUR

WORK ZONE LESS THAN ½ MILE FROM DETOUR ROUTE (1000 FEET IF URBAN)

LEGEND

- SIGN ON PERMANENT SUPPORT
- TYPE III BARRICADE
- TYPE III BARRICADE WITH ATTACHED SIGN
- TYPE "A" WARNING LIGHT (FLASHING)
- WORK AREA
- FLAGS, 16" X 16" MIN. (ORANGE)
- DETOUR M4 - 8
- EAST M3 - X
- XX M1 - 4 OR XX M1 - 6 OR COUNTY X M1 - 5A
- M05 - 1 OR M06 - 1

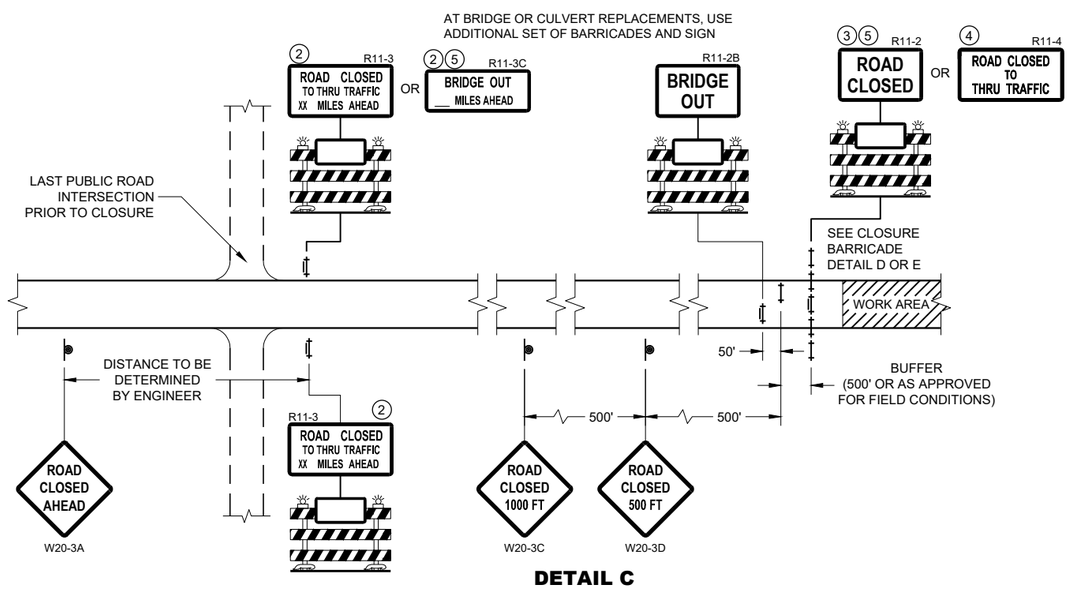

DETAIL C
MAINLINE CLOSURE, NO POSTED DETOUR

SPEED LIMIT (MPH)	"STOP AHEAD" ADVANCE WARNING DISTANCE (FT)
25	200
30	200
35	350
40	350
45	500
50	550
55	750

SEE SDD 15C2-SHEET "b" FOR GENERAL NOTES AND FOOTNOTES 1 THROUGH 7

BARRICADES AND SIGNS FOR MAINLINE CLOSURES

STATE OF WISCONSIN
DEPARTMENT OF TRANSPORTATION

APPROVED
May 2023 — DATE
/S/ Andrew Heidtke — WORK ZONE ENGINEER

FHWA

6

SDD 15C02 - 09a

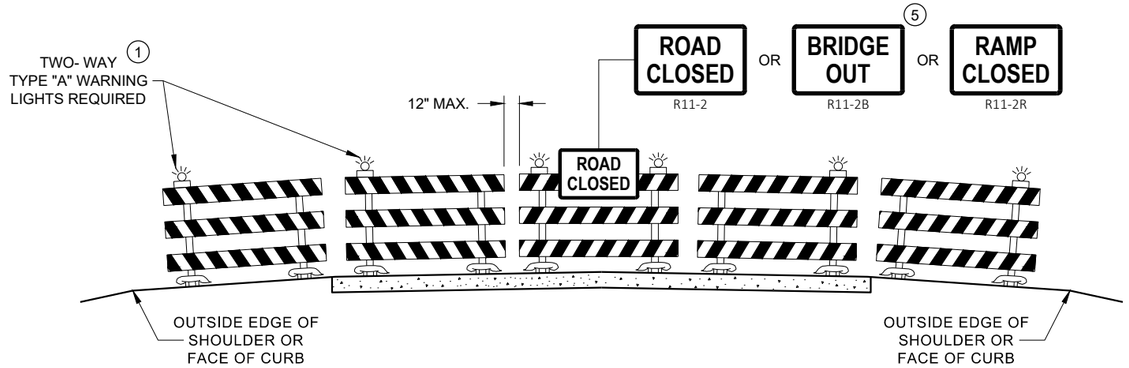

DETAIL D
ROAD CLOSURE BARRICADE DETAIL
APPROACH VIEW

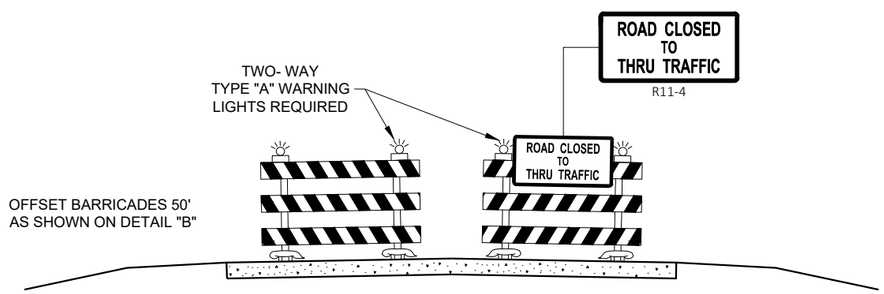

DETAIL E
LANE CLOSURE BARRICADE DETAIL
APPROACH VIEW

SEE SDD 15C2 - SHEET "a" FOR LEGEND

GENERAL NOTES

THE EXACT NUMBER, LOCATION, AND SPACING OF ALL SIGNS AND BARRICADES SHALL BE ADJUSTED TO FIT FIELD CONDITIONS AS APPROVED BY THE ENGINEER.

ANY SIGNS TEMPORARY OR EXISTING, WHICH CONFLICT WITH TRAFFIC CONTROL "IN USE", SHALL BE REMOVED OR COVERED AS NEEDED AND AS APPROVED BY THE ENGINEER.

THE SPACING BETWEEN TRAFFIC CONTROL SIGNS SHOULD BE ADJUSTED TO NOT CONFLICT WITH AND SHOULD PROVIDE A DESIRABLE MINIMUM OF 200 FEET CLEARANCE TO EXISTING SIGNS THAT WILL REMAIN IN PLACE.

BARRICADES THAT MUST BE MOVED FOR A WORK OPERATION SHALL BE IMMEDIATELY RE-ESTABLISHED UPON COMPLETION OF THE OPERATION, OR FOR CONTINUING OPERATIONS, AT THE END OF EACH WORKING DAY.

SIGNS THAT WILL BE IN PLACE LESS THAN 7 CONTINUOUS DAYS AND NIGHTS MAY BE MOUNTED ON PORTABLE SUPPORTS.

ALL TYPE III BARRICADES SHALL HAVE RAILS REFLECTORIZED ON BOTH FACES. STRIPES SHALL BE PROPERLY SLOPED DOWN TOWARD THE TRAFFIC SIDE OR AS SHOWN IN THE ROAD CLOSURE BARRICADE DETAIL "D" FOR FULL ROAD CLOSURES.

TYPE "A" LOW - INTENSITY FLASHING WARNING LIGHTS SHALL BE VISIBLE ON BOTH SIDES OF THE BARRICADE.

THE R11 - 2, R11 - 3, M4 - 9, R11 - 4, AND R10 - 61 SIGNS PLACED ON THE BARRICADES SHALL COVER NO MORE THAN THE TOP RAIL. THE SIGNS SHALL NOT COVER ANY PORTION OF THE MIDDLE RAIL OR BOTTOM RAILS.

"WO" AND "MO" SIGNS ARE THE SAME AS "W" AND "M" SIGNS EXCEPT THE BACKGROUND IS ORANGE.

ALL SIGNS SHALL BE 48" X 48" UNLESS OTHERWISE NOTED BELOW:
- R11 - 2 SHALL BE 48" X 30"
- R11 - 3 SHALL, R11 - 4 AND R10 - 61 SHALL BE 60 " X 30"
- M4 - 9 SHALL BE 30" X 24"
- M3 - X SHALL BE 24" X 12" (36" X 18" IF NEEDED TO MATCH EXISTING SIGNS)
- M4 - 8 SHALL BE 24" X 12" (36" X 18" IF NEEDED TO MATCH EXISTING SIGNS)
- M1 - 4, M1 - 5A AND M1 - 6 SHALL BE 24" X 24" (36" X 36" IF NEEDED TO MATCH EXISTING SIGNS)
- MO5 - 1 AND MO6 - 1 SHALL BE 21" X 21" (30" X 30" IF NEEDED TO MATCH EXISTING SIGNS)
- D1 - X SHALL BE AS SHOWN ON SPECIFIC PROJECT SIGNING DETAIL SHEETS.
- R1 - 1 SHALL BE 36" X 36"

1. TWO WARNING LIGHTS SHALL BE PROVIDED ON THE CENTER BARRICADE AND A MINIMUM OF ONE WARNING LIGHT SHALL BE PROVIDED ON EACH OF THE OTHER BARRICADES WITHIN THE ROADWAY LIMITS. SPACING OF THE WARNING LIGHTS SHALL BE UNIFORM TO THE EDGE OF ROADWAY AS SHOWN (APPROX. 8 FOOT LIGHT SPACING.
2. THESE SIGNS AND BARRICADES ARE NOT REQUIRED IF ROAD CLOSURE BEGINS AT AN INTERSECTION.
3. FOR ROAD CLOSURE WITHOUT LOCAL ACCESS TO PROJECT, SEE ROAD CLOSURE BARRICADE DETAIL "D".
4. FOR ROAD CLOSURE WITH LOCAL ACCESS TO PROJECT, SEE ROAD CLOSURE BARRICADE DETAIL "E".
5. FOR BRIDGE OR CULVERT REPLACEMENTS, SUBSTITUTE "BRIDGE OUT" INSTEAD OF "ROAD CLOSED" ON R11 - 2 AND R11 - 3 SIGNS.
6. INSTALL DETOUR AND COMMUNITY GUIDE SIGNS AND ARROWS ONLY IF SPECIFIED IN THE CONTRACT. IF THERE ARE EXISTING ROUTE MARKER ASSEMBLIES THAT WILL REMAIN IN PLACE, ADJUST THE LOCATION OF THE DETOUR ROUTE SIGNS TO CORRESPOND WITH THE EXISTING ASSEMBLIES. MODIFY EXISTING SIGNS WHERE POSSIBLE. SEE SPECIFIC PROJECT DETOUR SIGNING DETAIL SHEETS. IF DETOUR SIGNS ARE BEING INSTALLED BY OTHERS, PLACE THE CONTRACTED TRAFFIC CONTROL SIGNS TO ALLOW FOR PLACEMENT OF ALL WARNING, DETOUR AND GUIDE SIGNS AS SHOWN.
7. "EAST" CARDINAL DIRECTION MARKERS AND RIGHT TURN ARROWS ARE SHOWN. USE OTHER CARDINAL DIRECTIONS AND ARROWS AS APPROPRIATE.

BARRICADES AND SIGNS FOR VARIOUS CLOSURES

STATE OF WISCONSIN
DEPARTMENT OF TRANSPORTATION

APPROVED
May 2023 — DATE
/S/ Andrew Heidtke — WORK ZONE ENGINEE
FHWA

THIS DRAWING PROVIDES GENERAL GUIDANCE ON TYPICAL DETOUR SIGN LAYOUT AND SPACING. SEE PROJECT DETOUR SIGNING SHEETS FOR SPECIFIC DETAILS FOR EACH PROJECT.

LEGEND

- SIGN ON PERMANENT SUPPORT
- WORK AREA
- DETOUR — M4 - 8
- EAST — M3 - X
- XX — M1 - 4 OR XX — M1 - 6 OR COUNTY X — M1 - 5A
- M05 - 1 OR M06 - 1 OR M06 - 1

GENERAL NOTES

THE EXACT NUMBER, LOCATION AND SPACING OF ALL SIGNS SHALL BE ADJUSTED TO FIT FIELD CONDITIONS AS APPROVED BY THE ENGINEER.

IF THERE ARE EXISTING ROUTE MARKER ASSEMBLIES THAT WILL REMAIN IN PLACE, ADJUST THE LOCATION OF THE DETOUR ROUTE SIGNS TO CORRESPOND WITH THE EXISTING ASSEMBLIES. SEE SPECIFIC PROJECT DETOUR SIGNING DETAIL SHEETS. MODIFY EXISTING SIGNS WHERE POSSIBLE.

THE SPACING BETWEEN TRAFFIC CONTROL AND DETOUR SIGNS SHOULD BE ADJUSTED TO NOT CONFLICT WITH AND TO PROVIDE A DESIRABLE MINIMUM OF 200 FEET CLEARANCE TO EXISTING SIGNS THAT WILL REMAIN IN PLACE.

ANY SIGNS TEMPORARY OR EXISTING, WHICH CONFLICT WITH TRAFFIC CONTROL "IN USE" SHALL BE REMOVED OR COVERED AS NEEDED AND AS APPROVED BY THE ENGINEER.

SIGNS THAT WILL BE IN PLACE LESS THAN 7 CONTINUOUS DAYS AND NIGHTS MAY BE MOUNTED ON PORTABLE SUPPORTS.

"MO" SIGNS ARE THE SAME AS "M" SIGNS EXCEPT THE BACKGROUND IS ORANGE.

SIGN SIZES SHALL BE AS FOLLOWS:

M3-X SHALL BE 24" X 12" (36" X 18" IF NEEDED TO MATCH EXISTING SIGNS)
M4-8 SHALL BE 24" X 12" (36" X 18" IF NEEDED TO MATCH EXISTING SIGNS)
M1-4, M1-5A AND M1-6 SHALL BE 24" X 24" (36" X 36" IF NEEDED TO MATCH EXISTING SIGNS)
M05-1 AND M06-1 SHALL BE 21" X 21" (30" X 30" IF NEEDED TO MATCH EXISTING SIGNS)
M4-9 AND M4-59 SHALL BE 30" X 24"
M4-8a SHALL BE 24" X 18"
G20-51 SHALL BE 60" X 24"
W20-2A SHALL BE 48" X 48"
D1-X SHALL BE AS SHOWN ON SPECIFIC PROJECT SIGNING DETAIL SHEETS.

* OPTIONAL SIGNS. SEE SPECIFIC PROJECT DETOUR SIGNING DETAIL SHEETS.

** FOR A TOWN ROAD OR LOCAL STREET DETOURED ONTO A STATE TRUNK HIGHWAY, PLACE A ROAD NAME PLAQUE ABOVE THE M4-9 SIGN AS SPECIFIED IN THE CONTRACT.

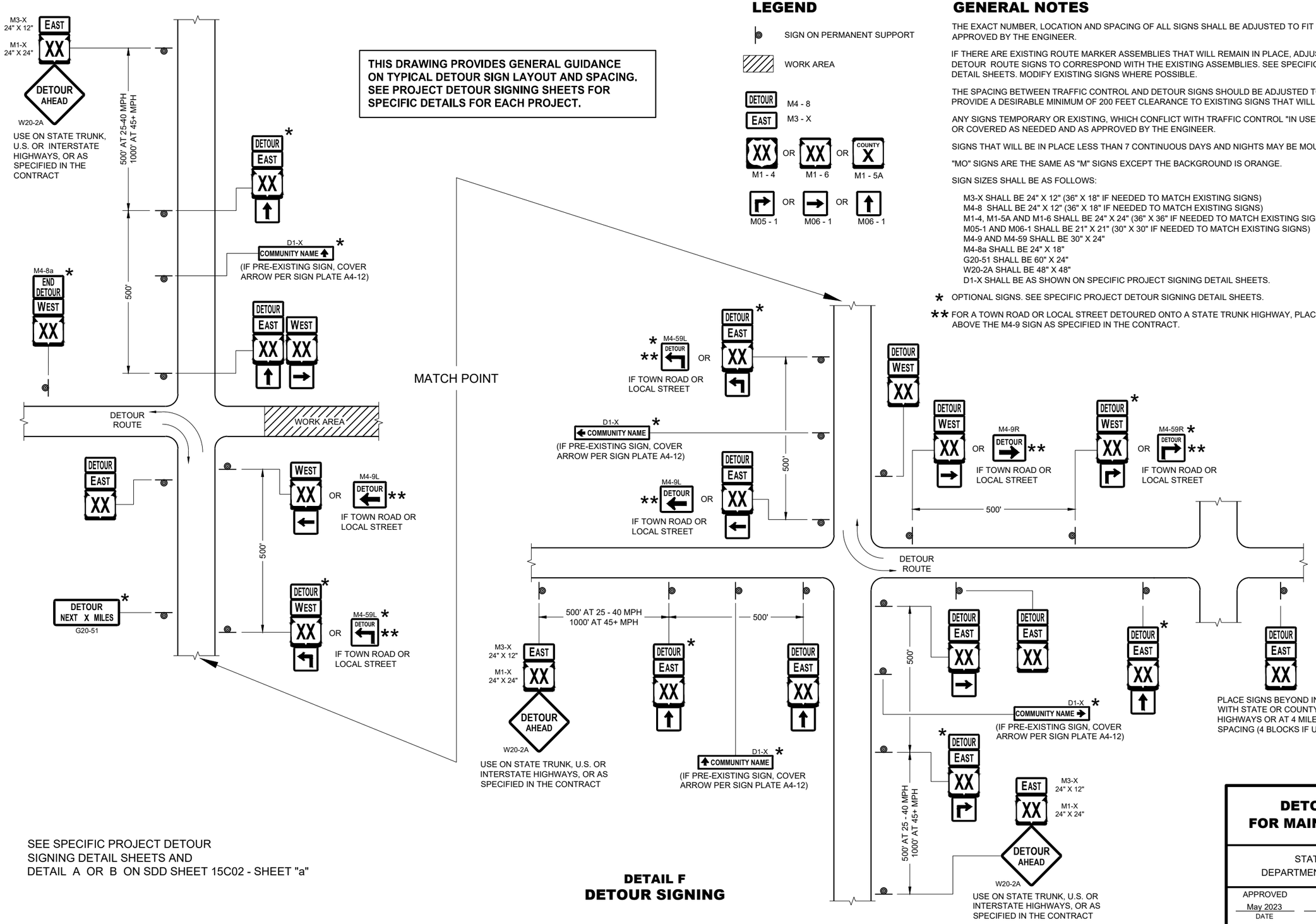

SEE SPECIFIC PROJECT DETOUR SIGNING DETAIL SHEETS AND DETAIL A OR B ON SDD SHEET 15C02 - SHEET "a"

DETAIL F
DETOUR SIGNING

DETOUR SIGNING FOR MAINLINE CLOSURES

STATE OF WISCONSIN
DEPARTMENT OF TRANSPORTATION

APPROVED
May 2023 — DATE
/S/ Andrew Heidtke — WORK ZONE ENGINEER
FHWA

THIS DRAWING PROVIDES GENERAL GUIDANCE ON TYPICAL TO SIGN LAYOUT AND SPACING. SEE PROJECT TO SIGNING SHEETS FOR SPECIFIC DETAILS FOR EACH PROJECT.

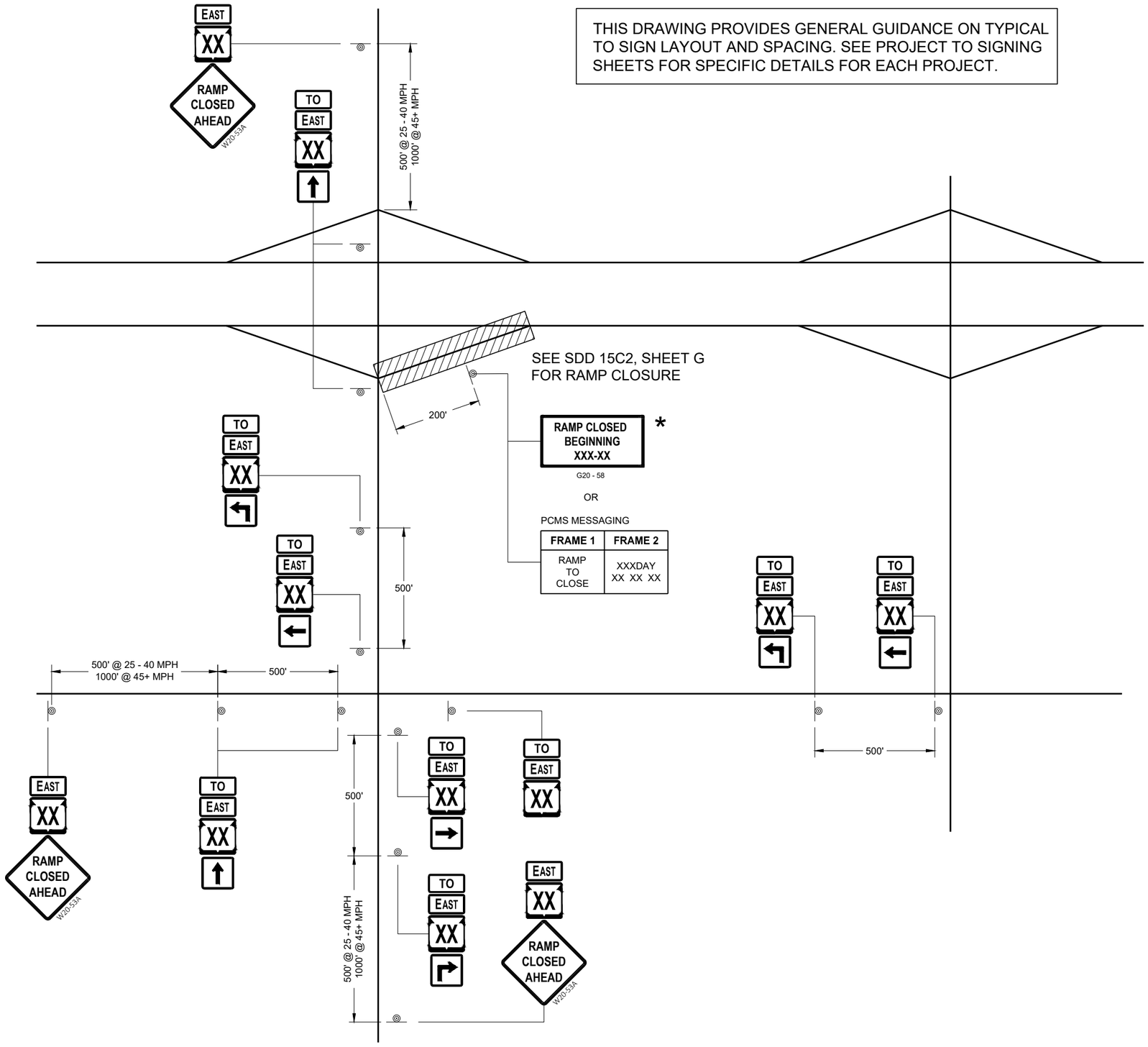

LEGEND

SIGN ON PERMANENT SUPPORT

TO / EAST — MO4 - 5, M3 - X

XX M1 - 6 OR XX M1 - 4 OR INTERSTATE XX M1 - 1

M05 - 1 OR M06 - 1 OR M06 - 1

GENERAL NOTES

THE EXACT NUMBER, LOCATION AND SPACING OF ALL SIGNS SHALL BE ADJUSTED TO FIT FIELD CONDITIONS AS APPROVED BY THE ENGINEER.

IF THERE ARE ANY ROUTE MARKER ASSEMBLIES THAT WILL REMAIN IN PLACE, ADJUST THE LOCATION OF THE TO ROUTE SIGNS TO CORRESPOND WITH THE EXISTING ASSEMBLIES. SEE SPECIFIC PROJECT TO SIGNING DETAIL SHEETS. MODIFY EXISTING SIGNS WHERE POSSIBLE.

THE SPACING BETWEEN TRAFFIC CONTROL AND TO SIGNS SHOULD BE ADJUSTED TO NOT CONFLICT WITH AND TO PROVIDE A DESIRABLE MINIMUM OF 200 FEET CLEARANCE TO EXISTING SIGNS THAT WILL REMAIN IN PLACE.

ANY SIGNS TEMPORARY OR EXISTING, WHICH CONFLICT WITH TRAFFIC CONTROL " IN USE" SHALL BE REMOVED OR COVERED AS NEEDED AND AS APPROVED BY THE ENGINEER.

SIGNS THAT SHALL BE IN PLACE LESS THAN 7 CONTINUOUS DAYS AND NIGHTS MAY BE MOUNTED ON PORTABLE SUPPORTS.

"MO" SIGNS ARE THE SAME AS "M" SIGNS EXCEPT THE BACKGROUND IS ORANGE.

SIGN SIZES SHALL BE AS FOLLOW:
- M3 - X SHALL BE 24" X 12". (36" X 18" IF NEEDED TO MATCH EXISTING SIGNS).
- MO4 - 5 SHALL BE 24" X 12". (36" X 18" IF NEEDED TO MATCH EXISTING SIGNS).
- M1 - 1, M1 - 4, AND M1 - 6 SHALL BE 24" X 24" (36" X 36" IF NEEDED TO MATCH EXISTING SIGNS).
- MO5 - 1, MO5 - 2, AND MO6 - 1, SHALL BE 21" X 21". (30" X 30" IF NEEDED TO MATCH EXISTING SIGNS).
- W20 - 53A SHALL BE 48" X 48"

* PLACE "RAMP CLOSED BEGINNING" SIGN 7 CALENDAR DAYS PRIOR TO CLOSURE OR AS DIRECTED BY THE ENGINEER. SEE WISCONSIN STANDARD SIGN PLATES FOR LAYOUT.

ON RAMP LANE CLOSURE

STATE OF WISCONSIN
DEPARTMENT OF TRANSPORTATION

APPROVED
May 2023 — DATE
/S/ Andrew Heidtke — WORK ZONE ENGINEE
FHWA

THIS DRAWING PROVIDES GENERAL GUIDANCE ON TYPICAL "TO" MO-4 SIGN LAYOUT AND SPACING. SEE PROJECT TO SIGNING SHEETS FOR SPECIFIC DETAILS FOR EACH PROJECT.

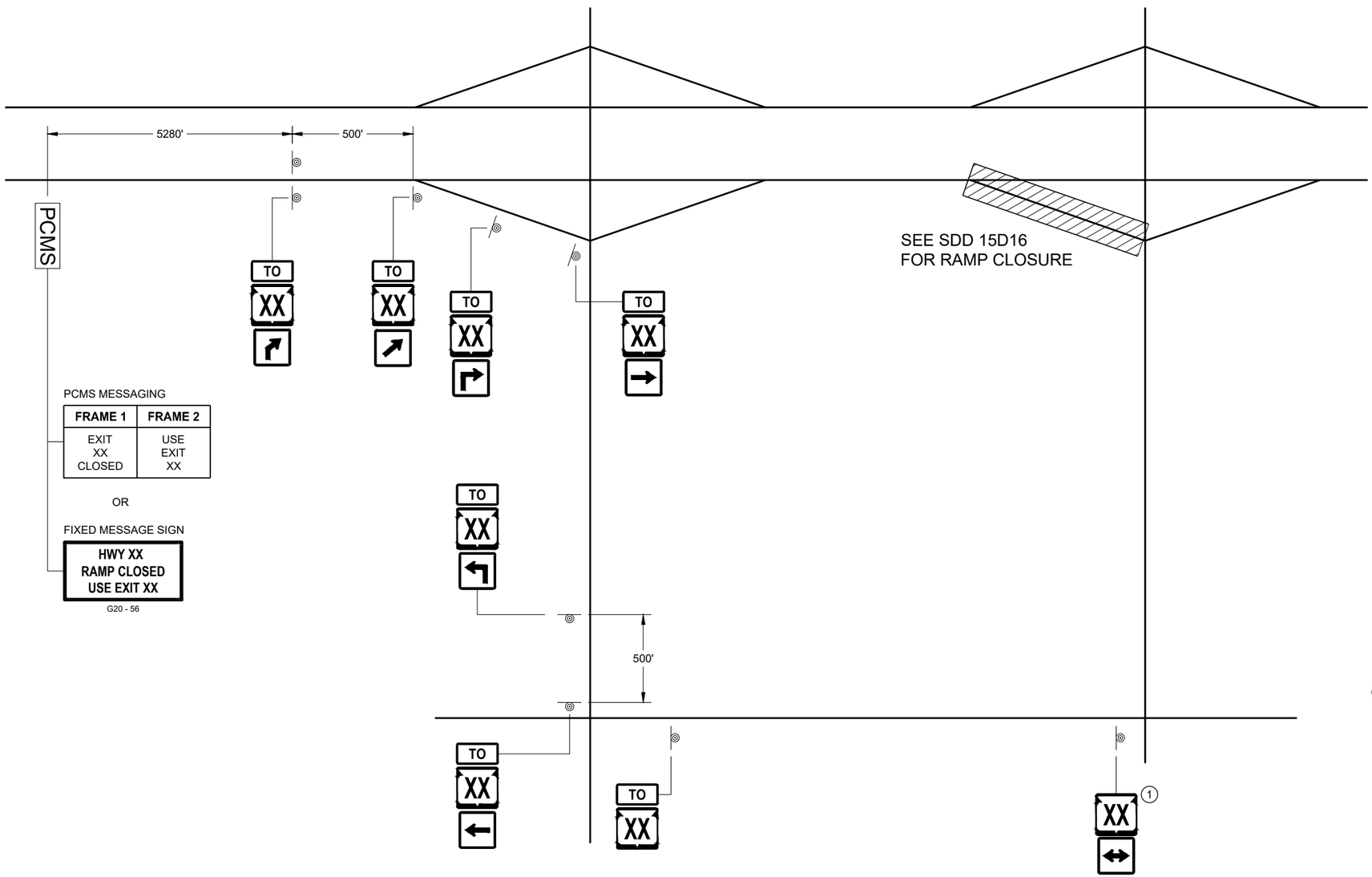

PCMS MESSAGING

FRAME 1	FRAME 2
EXIT XX CLOSED	USE EXIT XX

OR

FIXED MESSAGE SIGN

HWY XX
RAMP CLOSED
USE EXIT XX

G20 - 56

LEGEND

SIGN ON PERMANENT SUPPORT

PCMS PORTABLE CHANGEABLE MESSAGE SIGN

TO MO4 - 5

XX M1 - 4 OR XX M1 - 6 OR COUNTY X M1 - 5A

M05 - 1 OR M05 - 2 OR M06 - 1 OR M06 - 2 OR M06 - 4

GENERAL NOTES

SEE SDD 15D16 "TRAFFIC CONTROL, EXIT RAMP CLOSURE" DETAIL FOR TRAFFIC CONTROL AT EXIT RAMP CLOSURE.

THE EXACT NUMBER, LOCATION AND SPACING OF ALL SIGNS SHALL BE ADJUSTED TO FIT FIELD CONDITIONS AS APPROVED BY THE ENGINEER.

IF THERE ARE ANY ROUTE MARKER ASSEMBLIES THAT WILL REMAIN IN PLACE, ADJUST THE LOCATION OF THE "TO" MO-4 ROUTE SIGNS TO CORRESPOND WITH THE EXISTING ASSEMBLIES. SEE SPECIFIC PROJECT TO SIGNING DETAIL SHEETS. MODIFY EXISTING SIGNS WHERE POSSIBLE.

THE SPACING BETWEEN TRAFFIC CONTROL AND "TO" MO-4 SIGNS SHOULD BE ADJUSTED TO NOT CONFLICT WITH AND TO PROVIDE A DESIRABLE MINIMUM OF 200 FEET CLEARANCE TO EXISTING SIGNS THAT WILL REMAIN IN PLACE.

ANY SIGNS TEMPORARY OR EXISTING, WHICH CONFLICT WITH TRAFFIC CONTROL " IN USE" SHALL BE REMOVED OR COVERED AS NEEDED AND AS APPROVED BY THE ENGINEER.

SIGNS THAT SHALL BE IN PLACE LESS THAN 7 CONTINUOUS DAYS AND NIGHTS MAY BE MOUNTED ON PORTABLE SUPPORTS.

"MO" SIGNS ARE THE SAME AS "M" SIGNS EXCEPT THE BACKGROUND IS ORANGE.

SIGN SIZES SHALL BE AS FOLLOW:
- MO4 - 5 SHALL BE 24" X 12". (36" X 18" IF NEEDED TO MATCH EXISTING SIGNS).
- M1 - 4, M1 - 5A, AND M1 - 6 SHALL BE 24" X 24" (36" X 36" IF NEEDED TO MATCH EXISTING SIGNS).
- MO5 - 1, MO5 - 2, AND MO6 - 1, SHALL BE 21" X 21". (30" X 30" IF NEEDED TO MATCH EXISTING SIGNS).

(1) ONLY ADD IF THERE ARE NO EXISTING ROUTE MARKERS FOR THE INTERSECTING ROADWAY.

OFF RAMP LANE CLOSURE

STATE OF WISCONSIN
DEPARTMENT OF TRANSPORTATION

APPROVED
May 2023 — DATE
/S/ Andrew Heidtke — WORK ZONE ENGINEE
FHWA

6

SDD 15C02 - 09e

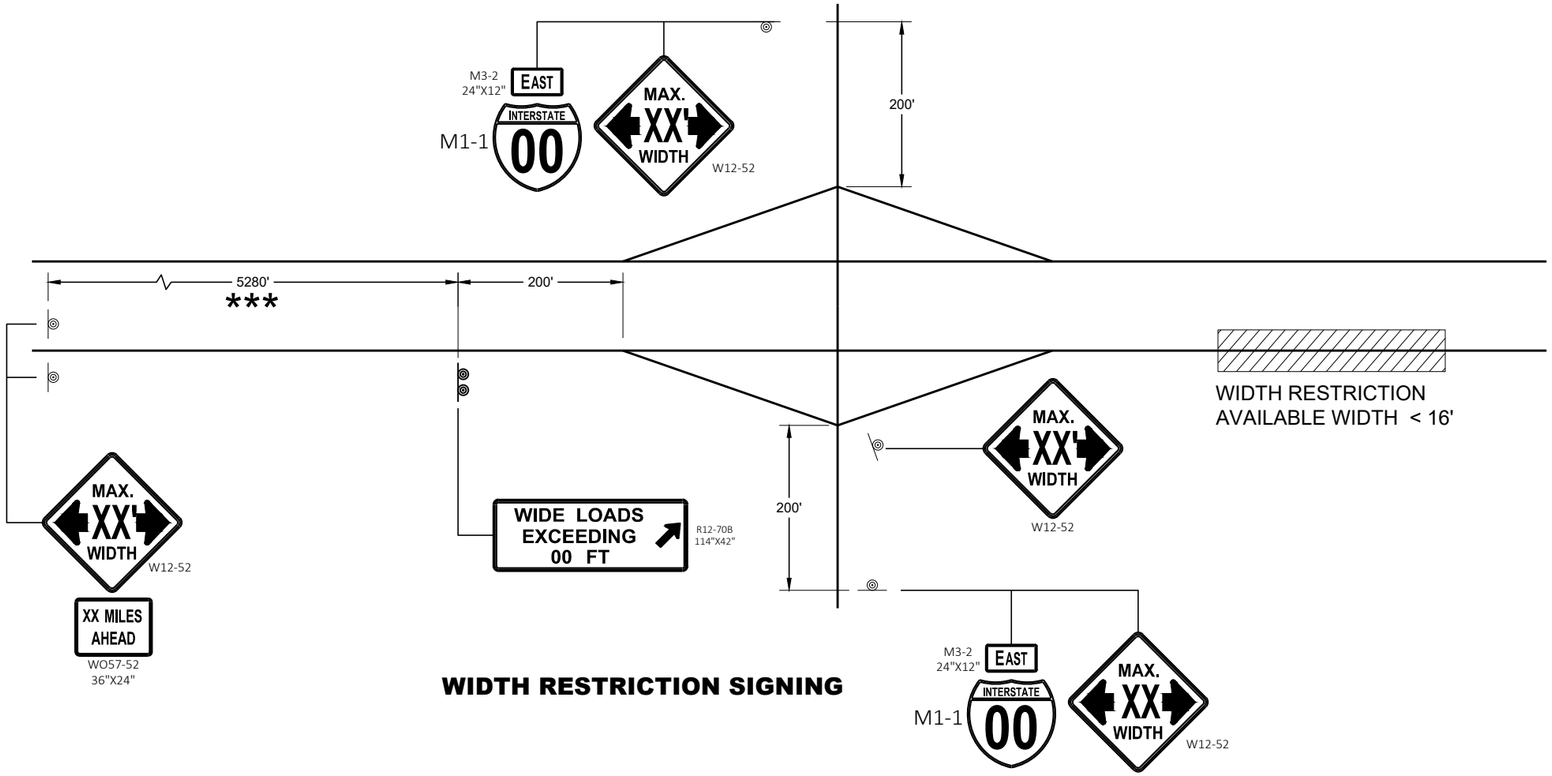

WIDTH RESTRICTION SIGNING

LEGEND

◎ SIGN ON PERMANENT SUPPORT

GENERAL NOTES

THE EXACT NUMBER, LOCATION AND SPACING OF ALL SIGNS SHALL BE ADJUSTED TO FIT FIELD CONDITIONS AS APPROVED BY THE ENGINEER.

THE SPACING BETWEEN SIGNS SHOULD BE ADJUSTED TO NOT CONFLICT WITH AND TO PROVIDE A DESIRABLE MINIMUM OF 200 FEET CLEARANCE TO EXISTING SIGNS THAT WILL REMAIN IN PLACE.

ANY SIGNS TEMPORARY OR EXISTING, WHICH CONFLICT WITH TRAFFIC CONTROL " IN USE" SHALL BE REMOVED OR COVERED AS NEEDED AND AS APPROVED BY THE ENGINEER.

ALL SIGNS ARE 48" X 48" UNLESS OTHERWISE NOTED.

"WO" SIGNS ARE THE SAME AS "W" SIGNS EXCEPT THE BACKGROUND IS ORANGE.

WIDTH ON SIGN TO BE APPROXIMATELY ONE FOOT LESS THAN AVAILABLE WIDTH.

* PLACE 500 FEET AFTER THE W20 - 1A AND 500 FEET BEFORE ADDITIONAL SIGNS FOR ROADWAYS WITH A PRE - CONSTRUCTION SPEED LIMIT OF 45 MPH OR MORE. FOR 35-40 MPH, USE 350 FOOT TYPICAL SPACING. FOR 25-30 MPH, USE 200 FOOT TYPICAL SPACING.

** SIGN SHALL BE VISIBLE FROM ROADWAY.

*** ADDITIONAL SIGNS NEEDED IF THERE IS AN ON RAMP BETWEEN SIGNS.

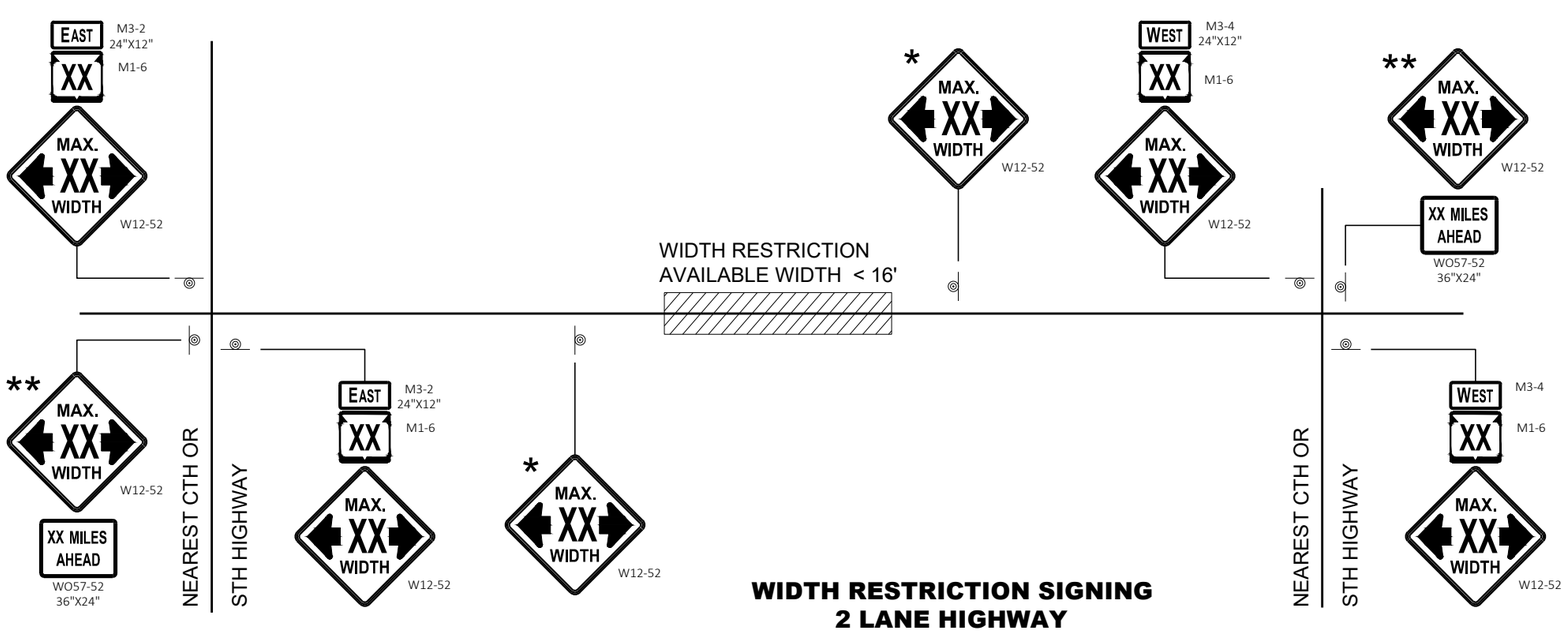

WIDTH RESTRICTION SIGNING
2 LANE HIGHWAY

WIDTH ON SIGN TO BE APPROX. 1 - FOOT LESS THAN AVAILABLE WIDTH

ADVANCED WIDTH RESTRICTION SIGNING

STATE OF WISCONSIN
DEPARTMENT OF TRANSPORTATION

APPROVED
May 2023 — DATE
/S/ Andrew Heidtke — WORK ZONE ENGINEER
FHWA

6

SDD 15C02 - 09f

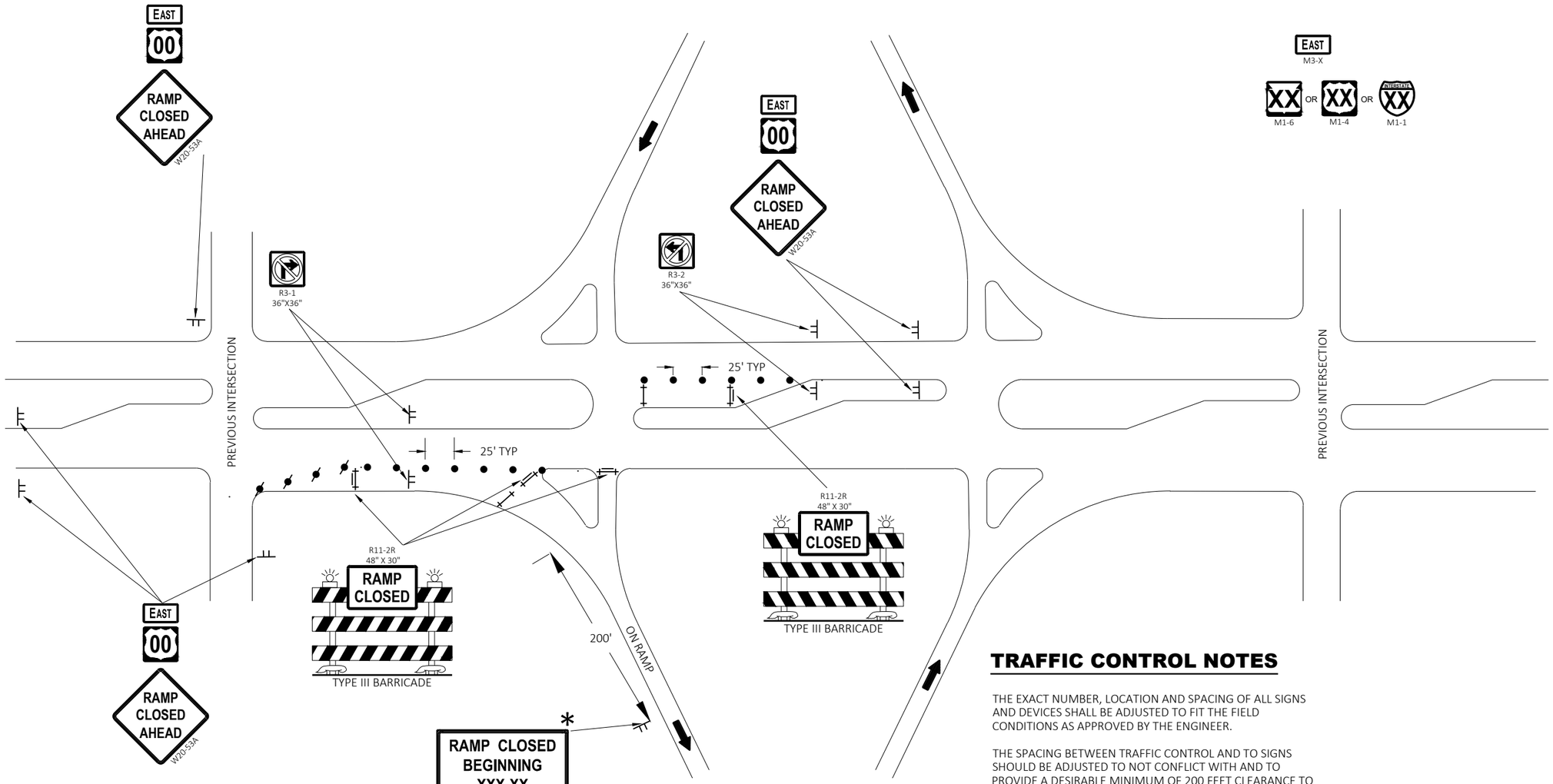

LEGEND

- TRAFFIC CONTROL DRUM
- TRAFFIC CONTROL DRUM WITH TYPE "C" STEADY BURN LIGHT
- TYPE III BARRICADE
- TYPE III BARRICADE WITH ATTACHED SIGN
- SIGN ON PERMANENT SUPPORT
- SIGN ON TEMPORARY SUPPORT
- DIRECTION OF TRAFFIC

* RAMP CLOSED BEGINNING XXX-XX

G20-58

OR

PCMS MESSAGING

FRAME 1	FRAME 2
RAMP TO CLOSE	XXX DAY XX XX XX

TRAFFIC CONTROL NOTES

THE EXACT NUMBER, LOCATION AND SPACING OF ALL SIGNS AND DEVICES SHALL BE ADJUSTED TO FIT THE FIELD CONDITIONS AS APPROVED BY THE ENGINEER.

THE SPACING BETWEEN TRAFFIC CONTROL AND TO SIGNS SHOULD BE ADJUSTED TO NOT CONFLICT WITH AND TO PROVIDE A DESIRABLE MINIMUM OF 200 FEET CLEARANCE TO EXISTING SIGNS THAT WILL REMAIN IN PLACE.

ANY SIGNS TEMPORARY OR EXISTING, WHICH CONFLICT WITH THE TRAFFIC CONTROL "IN USE" SHALL BE REMOVED OR COVERED AS NEEDED AND AS APPROVED BY THE ENGINEER.

SIGNS THAT SHALL BE IN PLACE LESS THAN 7 CONTINUOUS DAYS AND NIGHTS MAY BE MOUNTED ON PORTABLE SUPPORTS.

SIGN SIZES SHALL BE AS FOLLOWS:

- M3-X SHALL BE 24"x24" (36" x18" IF NEEDED TO MATCH EXISTING SIGNS)
- M1-1, M1-4, AND M1-6 SHALL BE 24"x24" (36"x36" IF NEEDED TO MATCH EXISTING SIGNS)
- W20-53A SHALL BE 48"X48"

* PLACE "RAMP CLOSED BEGINNING" SIGN 7 CALENDAR DAYS PRIOR TO CLOSURE OR AS DIRECTED BY THE ENGINEER. SEE WISCONSIN STANDARD SIGN PLATES FOR LAYOUT.

TRAFFIC CONTROL FOR ENTRANCE RAMP CLOSURE

TRAFFIC CONTROL FOR ENTRANCE RAMP CLOSURE

STATE OF WISCONSIN
DEPARTMENT OF TRANSPORTATION

APPROVED

May 2023	/S/ Andrew Heidtke
DATE	WORK ZONE ENGINEE

FHWA

6

SDD 15C02-09g

6

SDD 15C02-09g

GENERAL NOTES

THE EXACT NUMBER, LOCATION, AND SPACING OF ALL SIGNS AND DEVICES SHALL BE ADJUSTED TO FIT FIELD CONDITIONS.

THE SPACING BETWEEN TRAFFIC CONTROL SIGNS SHOULD BE ADJUSTED TO NOT CONFLICT WITH AND SHOULD PROVIDE A MINIMUM OF 200 FEET (500 FEET DESIRABLE) CLEARANCE TO EXISTING SIGNS THAT WILL REMAIN IN PLACE.

ALL SIGNS ARE 48" X 48" UNLESS OTHERWISE NOTED.

SIGNS THAT WILL BE IN PLACE LESS THAN SEVEN CONTINUOUS DAYS AND NIGHTS MAY BE MOUNTED ON PORTABLE SUPPORTS.

IF A "STOP" SIGN MUST BE REMOVED FOR A WORK OPERATION, A TEMPORARY "STOP" SIGN SHALL BE PLACED PRIOR TO THE SIGN REMOVAL, OR A FLAGGER SHALL BE PROVIDED UNTIL THE SIGN IS REESTABLISHED.

* OMIT G20-1 SIGNS IF LENGTH OF WORK AREA IS 2 MILES OR LESS

** PLACE AN ADDITIONAL W20-1A "ROAD WORK AHEAD" SIGN IF WORK AREA WITHIN THE PROJECT IS SEPARATED BY MORE THAN 2 MILES FROM PREVIOUS WORK AREA.

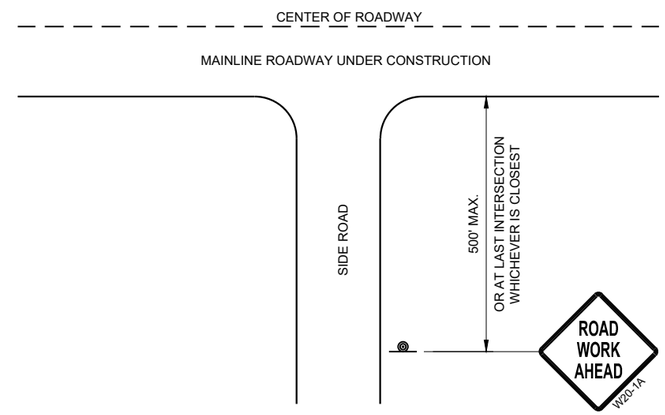

TYPICAL SIDE ROAD APPROACH WARNING SIGN DETAIL

LEGEND

- SIGN ON PERMANENT SUPPORT
- DIRECTION OF TRAFFIC
- WORK AREA

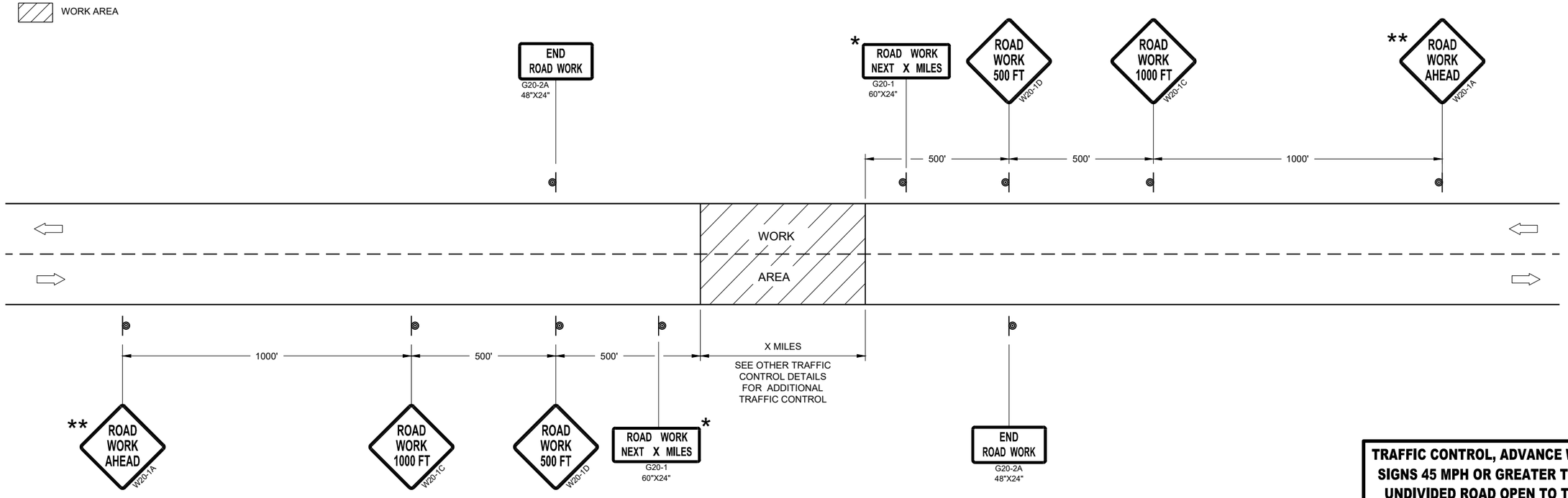

TRAFFIC CONTROL, ADVANCE WARNING SIGNS 45MPH OR GREATER

TRAFFIC CONTROL, ADVANCE WARNING SIGNS 45 MPH OR GREATER TWO-WAY UNDIVIDED ROAD OPEN TO TRAFFIC

STATE OF WISCONSIN
DEPARTMENT OF TRANSPORTATION

APPROVED
July 2018 — DATE
/S/ Andrew Heidtke — WORK ZONE ENGINEE
FHWA

6

SDD 15C04 - 05

*CONFIRM MARKING LINE WIDTH WITH THE MISCELLANEOUS QUANTITIES

GENERAL NOTES

DETAILS OF CONSTRUCTION NOT SHOWN ON THIS DRAWING SHALL CONFORM TO STANDARD SPECIFICATIONS AND SPECIAL PROVISIONS.

1. LOCATE THE NO PASSING ZONE W14-3 SIGN WITHIN 50 FEET OF THE "T" MARKING
2. MEASURE FROM EDGE OF MARKING TO JOINT LINE. THIS DOES NOT INCLUDE SPACE NEEDED FOR GROOVING OPERATIONS.

LEGEND

"T" MARKING

SIGN ON PERMANENT SUPPORT

DIRECTION OF TRAFFIC

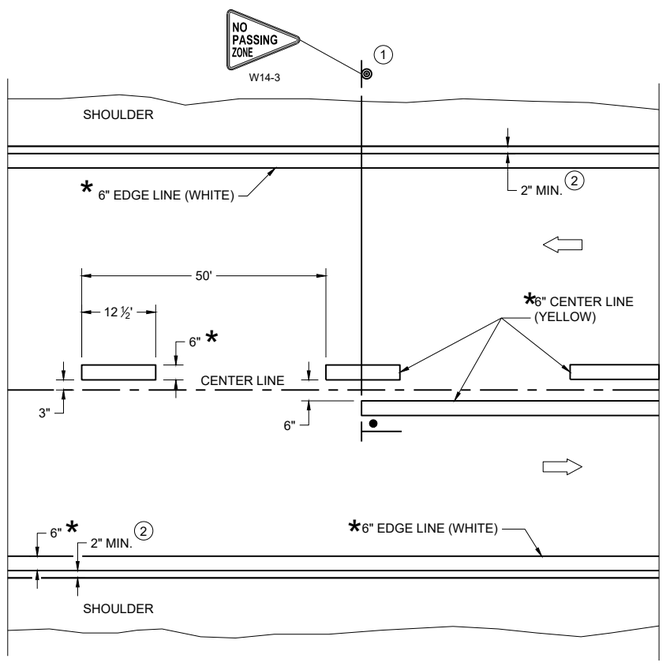

TWO WAY TRAFFIC

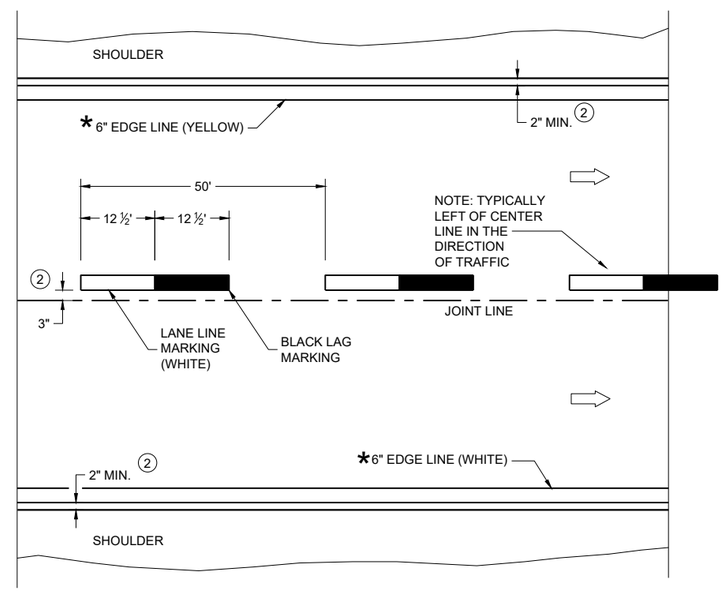

ONE WAY TRAFFIC

PERMANENT PAVEMENT MARKING

6

SDD 15C08-24a

PERMANENT LONGITUDINAL PAVEMENT MARKINGS

STATE OF WISCONSIN
DEPARTMENT OF TRANSPORTATION

APPROVED
December 2024 — DATE
/S/ Jeannie Silver — Statewide Pavement Marking Engineer
FHWA

6

SDD 15C08-24a

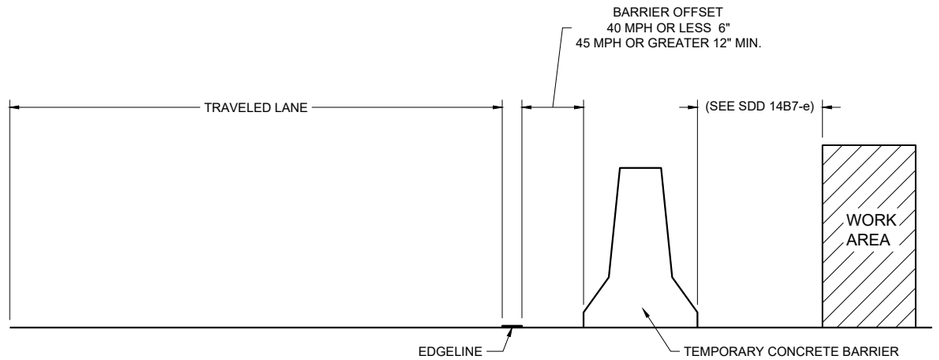

TEMPORARY BARRIER OFFSET FROM EDGELINE

GENERAL NOTES

DETAILS OF CONSTRUCTION NOT SHOWN ON THIS DRAWING SHALL CONFORM TO STANDARD SPECIFICATIONS AND SPECIAL PROVISIONS.

LEGEND

DIRECTION OF TRAFFIC

*CONFIRM MARKING LINE WIDTH WITH THE MISCELLANEOUS QUANTITIES

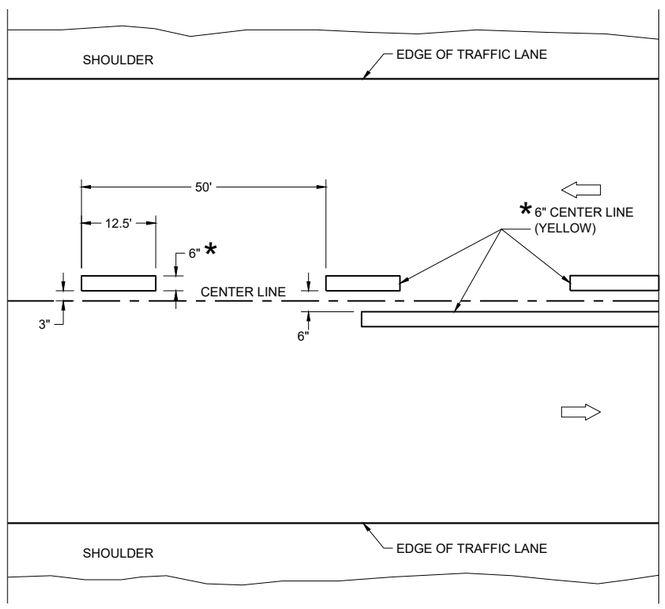

TWO WAY TRAFFIC

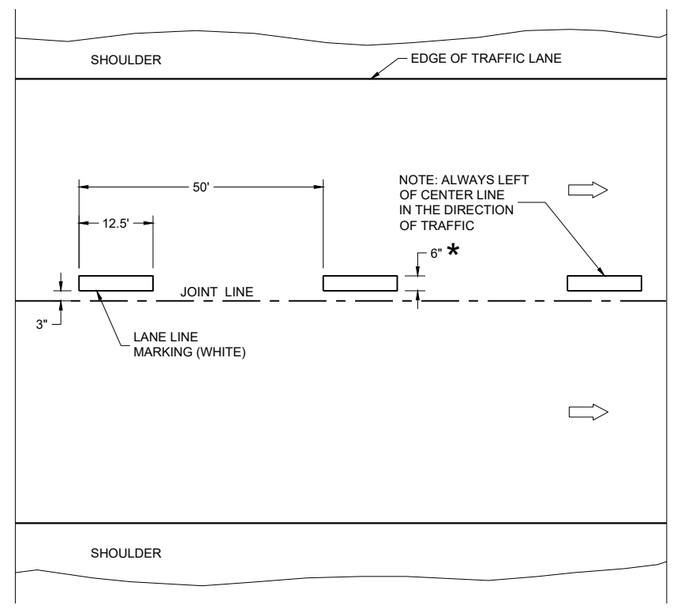

ONE WAY TRAFFIC

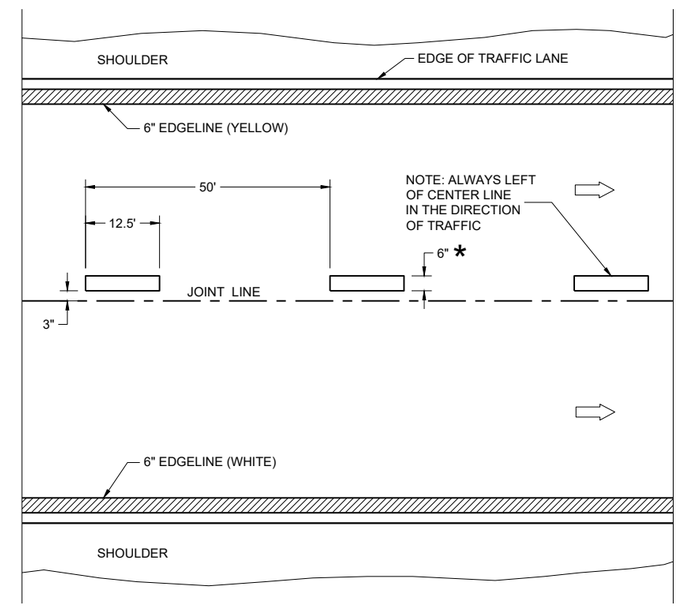

FREEWAYS AND EXPRESSWAYS

TEMPORARY PAVEMENT MARKING

TEMPORARY LONGITUDINAL PAVEMENT MARKING
STATE OF WISCONSIN DEPARTMENT OF TRANSPORTATION
APPROVED December 2024 — DATE /S/ Jeannie Silver — Statewide Pavement Marking Engineer FHWA

6

SDD 15C08-24b

6

SDD 15C08-24b

GENERAL NOTES

1. REFLECTIVE SHEETING SHALL FOLLOW THE REQUIREMENTS IN THE APPROVED PRODUCTS LISTING FOR SIGN SHEETING.
2. LOCATION OF WARNING LIGHTS WHEN SHOWN ON THE PLAN.

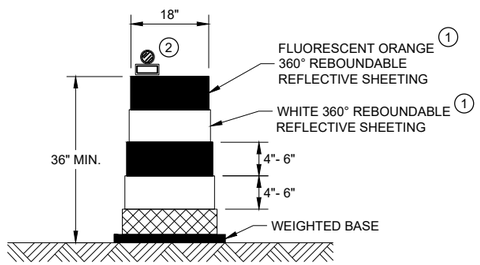

DRUM

BALLAST WIDTHS
RANGE FROM 24"-36"

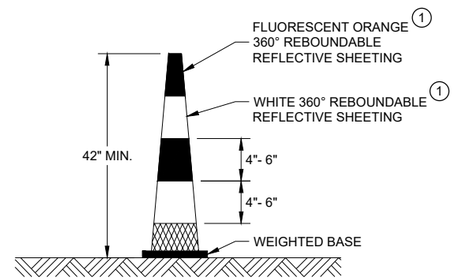

42" CONE

DO NOT USE IN TAPERS
½ SPACING OF DRUMS

BALLAST WIDTHS
RANGE FROM 14"-20"

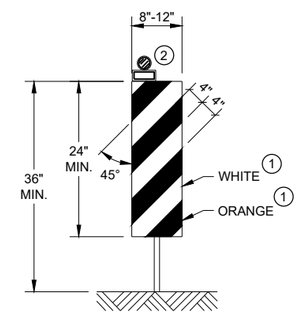

VERTICAL PANEL

THE STRIPES SHALL SLOPE DOWNWARD TO
THE TRAFFIC SIDE FOR CHANNELIZATION.

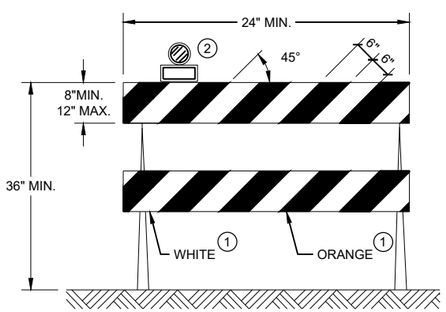

TYPE II BARRICADE

FOR RAILS LESS THAN 36" LONG, 4" WIDE STRIPES
MAY BE USED. ALL STRIPES SHALL SLOPE DOWNWARD
TO THE TRAFFIC SIDE FOR CHANNELIZATION.

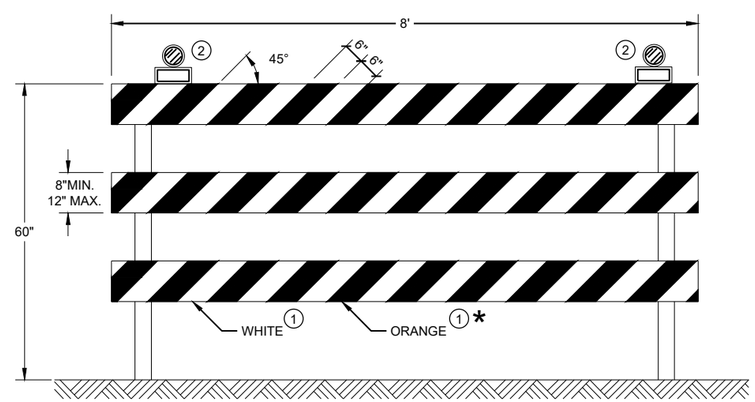

TYPE III BARRICADE

IF SIGN MOUNTED, DO NOT COVER MORE THAN 50% OF THE TOP
TWO RAILS OR 33% OF THE TOTAL AREA OF THE THREE RAILS.

* IF USED FOR A PERMANENT APPLICATION USE RED SHEETING.

CHANNELIZING DEVICES
DRUMS, CONES, BARRICADES
AND VERTICAL PANELS

STATE OF WISCONSIN
DEPARTMENT OF TRANSPORTATION

APPROVED
November 2022 /S/ Andrew Heidtke
DATE WORK ZONE ENGINEE
FHWA

6

6

SDD 15C11 - 10b

SDD 15C11 - 10b

GENERAL NOTES

THE EXACT NUMBER, LOCATION, AND SPACING OF ALL SIGNS AND DEVICES SHALL BE ADJUSTED TO FIT FIELD CONDITIONS AS APPROVED BY THE ENGINEER.

THE SPACING BETWEEN SIGNS SHOULD BE ADJUSTED TO NOT CONFLICT WITH AND TO PROVIDE A MINIMUM OF 200 FEET (500 FEET DESIRABLE) CLEARANCE TO EXISTING SIGNS.

THIS LANE CLOSURE IS TYPICAL FOR CLOSING RIGHT LANE - REVERSE FOR CLOSING LEFT LANE.

ALL SIGNS ARE 48" x 48" UNLESS OTHERWISE NOTED.

"WO" IS THE SAME AS "W" EXCEPT THE BACKGROUND IS ORANGE.

ANY SIGNS TEMPORARY OR EXISTING, WHICH CONFLICT WITH TRAFFIC CONTROL "IN USE" SHALL BE REMOVED OR COVERED AS NEEDED OR AS APPROVED BY THE ENGINEER.

FOR A LANE CLOSURE THAT IS IN PLACE LESS THAN 7 CONTINUOUS DAYS AND NIGHTS, THE ADVANCED WARNING SIGNS MAY BE MOUNTED ON PORTABLE SUPPORTS.

REMOVE PAVEMENT MARKINGS AND PLACE TEMPORARY PAVEMENT MARKING LINE IF LANE CLOSURE IS TO BE IN PLACE 4 OR MORE CONTINUOUS DAYS AND NIGHTS.

IF THE HORIZONTAL ALIGNMENT IS SUCH THAT A CURVE MAY REQUIRE ADDITIONAL DELINEATION, THE DEVICE SPACING MAY BE DECREASED TO 50 FEET.

WARNING LIGHTS ARE NOT REQUIRED IF THE LANE CLOSURE IS A DAYTIME ONLY OPERATION.

ADJUSTMENTS IN BUFFER SPACE NEED TO BE INCORPORATED WHEN THE LANE CLOSURE OCCURS NEAR AN INTERCHANGE EXIT OR ENTRANCE RAMP OR INTERSECTION. THE LANE CLOSURE MUST TAKE PLACE FAR ENOUGH IN ADVANCE OF AN EXIT OR ENTRANCE RAMP TO STILL ALLOW FOR ADEQUATE BUFFER SPACE. THE MINIMUM LENGTH OF THE BUFFER SPACE BEFORE AN EXIT RAMP SHOULD BE ONE HALF THE LENGTH OF THE TRANSITION AREA. THE ENTRANCE RAMP SHOULD BE FOLLOWED BY THE ORIGINAL BUFFER SPACE LENGTH OF 800 FEET DESIRABLE PRIOR TO ANOTHER TRAFFIC CONTROL CHANGE SUCH AS A CROSSOVER MANEUVER.

CONSIDER ROADWAY GEOMETRICS WHEN LOCATING SIGNS AND ARROW BOARD SO THE DRIVER HAS A CLEAR VIEW OF THE ARROW BOARD AND LANE CLOSURE DRUMS.

(1) DRUMS IN A CLOSED LANE THAT MUST BE MOVED FOR A WORK OPERATION SHALL BE IMMEDIATELY REESTABLISHED UPON COMPLETION OF THE OPERATION, OR FOR CONTINUING OPERATIONS, AT THE END OF EACH WORKING DAY.

LEGEND

- SIGN ON PERMANENT SUPPORT
- TRAFFIC CONTROL DRUM
- TRAFFIC CONTROL DRUM WITH TYPE "C" STEADY BURN LIGHT
- TYPE III BARRICADE WITH ATTACHED SIGN
- TYPE "A" WARNING LIGHT (FLASHING)
- REMOVING PAVEMENT MARKINGS
- DIRECTION OF TRAFFIC
- WORK AREA
- CONNECTED ARROW BOARD
- (S) WZ START LOCATION MARKER
- (E) WZ END LOCATION MARKER

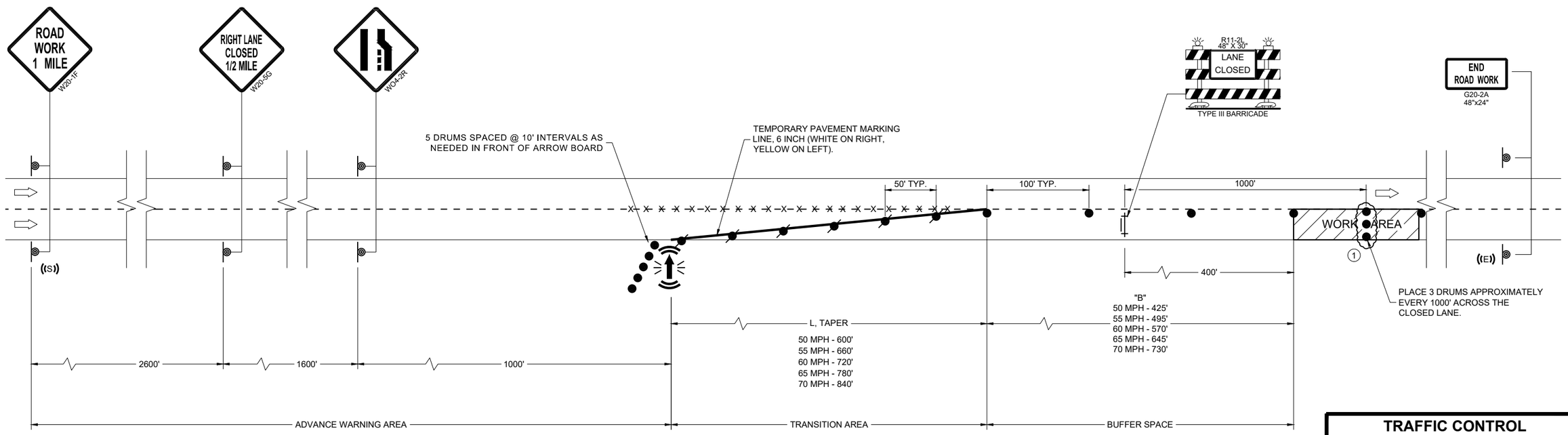

TRAFFIC CONTROL LANE CLOSURE

STATE OF WISCONSIN
DEPARTMENT OF TRANSPORTATION

APPROVED
November 2025 /S/ Andrew Heidtke
DATE ROADWAY STANDARDS DEVELOPMENT UNIT SUPERVISOR

FHWA

6

SDD 15D12-16a

GENERAL NOTES

THE EXACT NUMBER, LOCATION, AND SPACING OF ALL SIGNS AND DEVICES SHALL BE ADJUSTED TO FIT FIELD CONDITIONS AS APPROVED BY THE ENGINEER.

THE SPACING BETWEEN SIGNS SHOULD BE ADJUSTED TO NOT CONFLICT WITH AND TO PROVIDE A MINIMUM OF 200 FEET (500 FEET DESIRABLE) CLEARANCE TO EXISTING SIGNS.

THIS LANE CLOSURE IS TYPICAL FOR CLOSING RIGHT LANE - REVERSE FOR CLOSING LEFT LANE.

ALL SIGNS ARE 48" x 48" UNLESS OTHERWISE NOTED.

"WO" SIGNS ARE THE SAME AS "W" SIGNS EXCEPT THE BACKGROUND IS ORANGE.

ANY SIGNS TEMPORARY OR EXISTING, WHICH CONFLICT WITH TRAFFIC CONTROL "IN USE" SHALL BE REMOVED OR COVERED AS NEEDED OR AS APPROVED BY THE ENGINEER.

CONSIDER ROADWAY GEOMETRICS WHEN LOCATING SIGNS AND ARROW BOARD SO THE DRIVER HAS A CLEAR VIEW OF THE ARROW BOARD AND LANE CLOSURE DRUMS.

FOR A LANE CLOSURE THAT IS IN PLACE LESS THAN 7 CONTINUOUS DAYS AND NIGHTS, THE ADVANCED WARNING SIGNS MAY BE MOUNTED ON PORTABLE SUPPORTS.

REMOVE PAVEMENT MARKINGS AND PLACE TEMPORARY PAVEMENT MARKING LINE IF LANE CLOSURE IS TO BE IN PLACE 4 OR MORE CONTINUOUS DAYS AND NIGHTS.

WARNING LIGHTS ARE NOT REQUIRED IF THE LANE CLOSURE IS A DAYTIME ONLY OPERATION.

IF THE HORIZONTAL ALIGNMENT IS SUCH THAT A CURVE MAY REQUIRE ADDITIONAL DELINEATION, THE DEVICE SPACING MAY BE DECREASED TO 50 FEET.

ADJUSTMENTS IN BUFFER SPACE NEED TO BE INCORPORATED WHEN THE LANE CLOSURE OCCURS NEAR AN INTERCHANGE EXIT OR ENTRANCE RAMP OR INTERSECTION. THE LANE CLOSURE MUST TAKE PLACE FAR ENOUGH IN ADVANCE OF AN EXIT OR ENTRANCE RAMP TO STILL ALLOW FOR ADEQUATE BUFFER SPACE. THE MINIMUM LENGTH OF THE BUFFER SPACE BEFORE AN EXIT RAMP SHOULD BE ONE HALF THE LENGTH OF THE TRANSITION AREA. THE ENTRANCE RAMP SHOULD BE FOLLOWED BY THE ORIGINAL BUFFER SPACE LENGTH OF 800 FEET DESIRABLE PRIOR TO ANOTHER TRAFFIC CONTROL CHANGE SUCH AS A CROSSOVER MANEUVER.

(1) A SPEED LIMIT SIGN SHALL BE LOCATED 1500 FEET BEYOND THE END OF THE ACCELERATION LANE OF EACH ENTRANCE RAMP. PLACE A SPEED LIMIT SIGN A MINIMUM OF EVERY 3 MILES.

(2) DRUMS IN A CLOSED LANE THAT MUST BE MOVED FOR A WORK OPERATION SHALL BE IMMEDIATELY REESTABLISHED UPON COMPLETION OF THE OPERATION, OR FOR CONTINUING OPERATIONS, AT THE END OF EACH WORKING DAY.

(3) POST NON-CONSTRUCTION SPEED LIMIT.

LEGEND

- SIGN ON PERMANENT SUPPORT
- TRAFFIC CONTROL DRUM
- TRAFFIC CONTROL DRUM WITH TYPE "C" STEADY BURN LIGHT
- TYPE III BARRICADE WITH ATTACHED SIGN
- TYPE "A" WARNING LIGHT (FLASHING)
- REMOVING PAVEMENT MARKINGS
- DIRECTION OF TRAFFIC
- WORK AREA
- CONNECTED ARROW BOARD
- (S) WZ START LOCATION MARKER
- (E) WZ END LOCATION MARKER

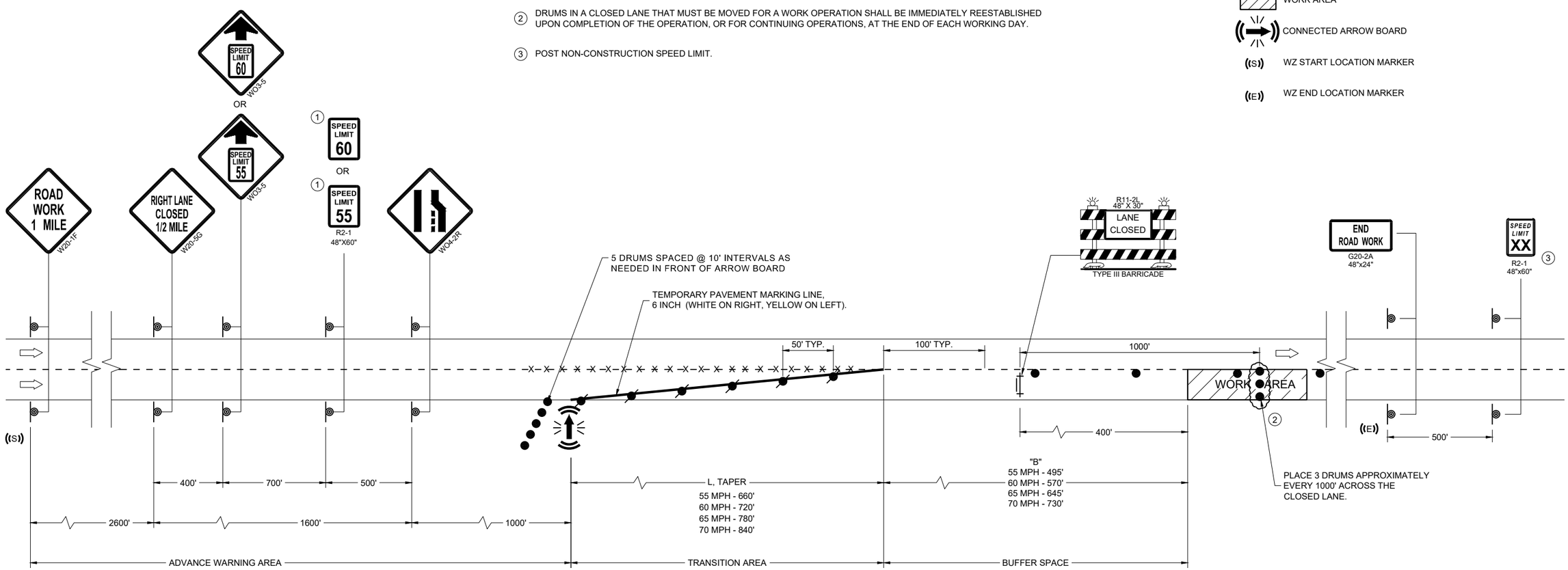

TRAFFIC CONTROL, LANE CLOSURE, SPEED REDUCTION

STATE OF WISCONSIN
DEPARTMENT OF TRANSPORTATION

APPROVED
November 2025 — /S/ Andrew Heidtke
DATE — ROADWAY STANDARDS DEVELOPMENT UNIT SUPERVISOR

FHWA

6
SDD 15D12-16b

LEGEND

SIGN ON PERMANENT SUPPORT

SIGN ON TEMPORARY SUPPORT

TRAFFIC CONTROL DRUM

TRAFFIC CONTROL DRUM WITH TYPE "C" STEADY BURN LIGHT

REMOVING PAVEMENT MARKING (SEE GENERAL NOTES)

TYPE III BARRICADE WITH ATTACHED SIGN

DIRECTION OF TRAFFIC

GENERAL NOTES

THE INSTALLATIONS SHOWN ON THIS SHEET ARE TYPICAL EXAMPLES AND ARE NOT INTENDED TO REPRESENT ANY PARTICULAR RAMP. AT SPECIFIC FIELD LOCATIONS, SIMILAR INSTALLATIONS SHALL BE USED AND ADJUSTED TO THE GEOMETRICS OF THE RAMP AS COORDINATED WITH THE ENGINEER.

THE EXACT NUMBER, LOCATION, AND SPACING OF ALL SIGNS AND DEVICES SHALL BE ADJUSTED TO FIT FIELD CONDITIONS AS APPROVED BY THE ENGINEER.

THE SPACING BETWEEN TRAFFIC CONTROL SIGNS SHOULD BE ADJUSTED TO NOT CONFLICT WITH AND SHOULD PROVIDE A MINIMUM OF 200 FEET (500 FEET DESIRABLE) CLEARANCE TO EXISTING SIGNS THAT WILL REMAIN IN PLACE.

ALL SIGNS ARE 48" X 48" UNLESS OTHERWISE NOTED.

"WO" IS THE SAME AS "W" EXCEPT THE BACKGROUND IS ORANGE.

SEE SEPARATE LANE CLOSURE DETAIL FOR TYPICAL SPACING OF TYPE III BARRICADES AND R11-2L "LANE CLOSED" SIGNS.

SIGNS THAT WILL BE IN PLACE LESS THAN 7 CONSECUTIVE DAYS AND NIGHTS OR THAT WILL BE PLACED IN A CLOSED LANE, MAY BE MOUNTED ON PORTABLE SUPPORTS. USE SUPPORTS THAT PROVIDE A MINIMUM OF 5 FEET FROM THE BOTTOM OF THE SIGN TO THE PAVEMENT.

IF INDICATED IN MISCELLANEOUS QUANTITIES, SUBSTITUTE FLEXIBLE TUBULAR MARKERS FOR DRUMS IN THE GORE BETWEEN THE ENTRANCE RAMP AND MAINLINE TRAFFIC.

ANY SIGNS TEMPORARY OR EXISTING, WHICH CONFLICT WITH TRAFFIC CONTROL "IN USE" SHALL BE REMOVED OR COVERED AS NEEDED AND AS APPROVED BY THE ENGINEER.

REMOVE PAVEMENT MARKINGS AND PLACE TEMPORARY PAVEMENT MARKING LINES IF LANE CLOSURE IS TO BE IN PLACE FOR 4 OR MORE CONTINUOUS DAYS AND NIGHTS.

WARNING LIGHTS ARE NOT REQUIRED IF THE LANE CLOSURE IS A DAYTIME ONLY OPERATION.

1. EXTEND THE LENGTH OF THE MERGE ARE IF THE ENTERING (DESIGN) SPEED IS LESS THAN 50MPH OR IF THE MAINLINE GRADE EXCEEDS ±2.2%.
2. END TEMPORARY PAVEMENT MARKING LINE AT 1/2 THE LENGTH OF FULL WIDTH OF THE ACCELERATION LANE.
3. IF LOCATED AFTER INITIAL LANE CLOSURE BARRICADE AND "LANE CLOSED" SIGN, USE 3 DRUMS IN PLACE OF BARRICADE AND SIGN.

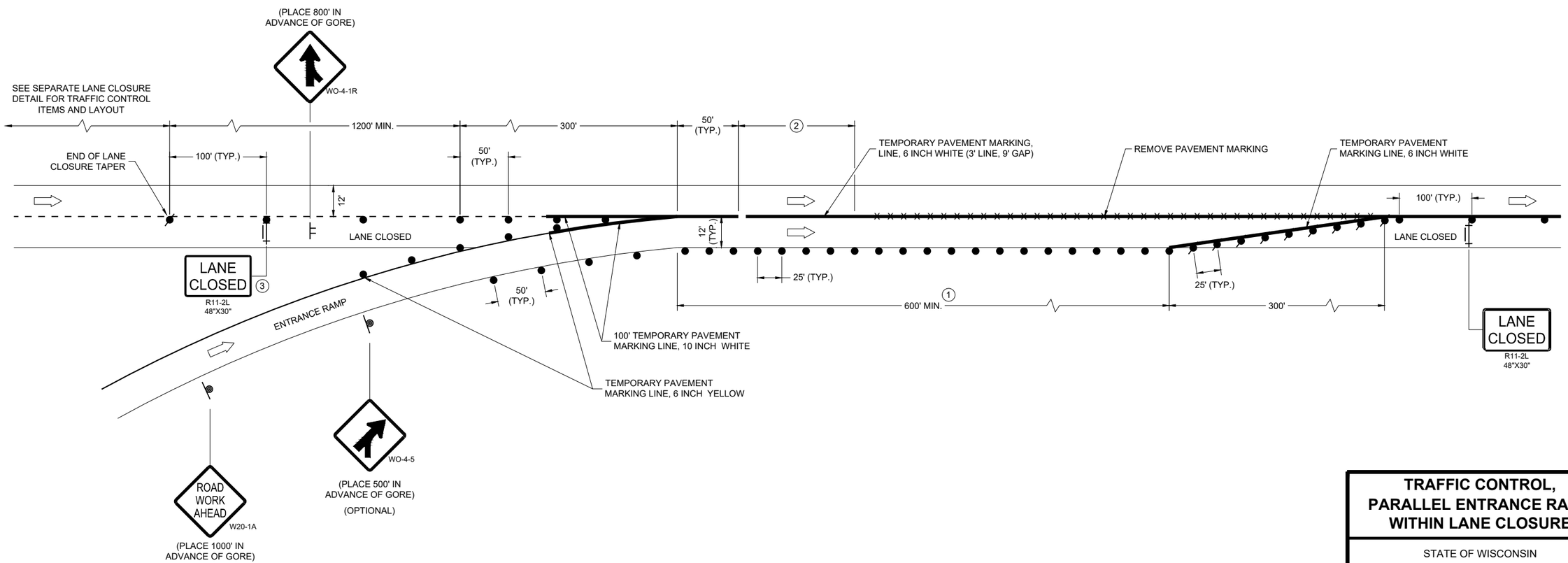

TRAFFIC CONTROL, PARALLEL ENTRANCE RAMP WITHIN LANE CLOSURE

STATE OF WISCONSIN
DEPARTMENT OF TRANSPORTATION

APPROVED
February 2025 — DATE
/S/ Andrew Heidtke — WORK ZONE ENGINEER
FHWA

6

SDD 15D15-08a

LEGEND

- SIGN ON PERMANENT SUPPORT
- SIGN ON TEMPORARY SUPPORT
- TRAFFIC CONTROL DRUM
- TRAFFIC CONTROL DRUM WITH TYPE "C" STEADY BURN LIGHT
- REMOVING PAVEMENT MARKING (SEE GENERAL NOTES)
- TYPE III BARRICADE WITH ATTACHED SIGN
- DIRECTION OF TRAFFIC

GENERAL NOTES

THE INSTALLATIONS SHOWN ON THIS SHEET ARE TYPICAL EXAMPLES AND ARE NOT INTENDED TO REPRESENT ANY PARTICULAR RAMP. AT SPECIFIC FIELD LOCATIONS, SIMILAR INSTALLATIONS SHALL BE USED AND ADJUSTED TO THE GEOMETRICS OF THE RAMP AS COORDINATED WITH THE ENGINEER.

THE EXACT NUMBER, LOCATION, AND SPACING OF ALL SIGNS AND DEVICES SHALL BE ADJUSTED TO FIT FIELD CONDITIONS AS APPROVED BY THE ENGINEER.

THE SPACING BETWEEN TRAFFIC CONTROL SIGNS SHOULD BE ADJUSTED TO NOT CONFLICT WITH AND SHOULD PROVIDE A MINIMUM OF 200 FEET (500 FEET DESIRABLE) CLEARANCE TO EXISTING SIGNS THAT WILL REMAIN IN PLACE.

ALL SIGNS ARE 48" X 48" UNLESS OTHERWISE NOTED.

"WO" IS THE SAME AS "W" EXCEPT THE BACKGROUND IS ORANGE.

SEE SEPARATE LANE CLOSURE DETAIL FOR TYPICAL SPACING OF TYPE III BARRICADES AND R11-2L "LANE CLOSED" SIGNS.

SIGNS THAT WILL BE IN PLACE LESS THAN 7 CONSECUTIVE DAYS AND NIGHTS OR THAT WILL BE PLACED IN A CLOSED LANE, MAY BE MOUNTED ON PORTABLE SUPPORTS.

IF INDICATED IN MISCELLANEOUS QUANTITIES, SUBSTITUTE FLEXIBLE TUBULAR MARKERS /OR DRUMS IN THE GORE BETWEEN THE EXIT RAMP AND MAINLINE TRAFFIC.

ANY SIGNS TEMPORARY OR EXISTING, WHICH CONFLICT WITH TRAFFIC CONTROL "IN USE" SHALL BE REMOVED OR COVERED AS NEEDED AND AS APPROVED BY THE ENGINEER.
REMOVE PAVEMENT MARKINGS AND PLACE TEMPORARY PAVEMENT MARKING LINES IF LANE CLOSURE IS TO BE IN PLACE FOR 4 OR MORE CONTINUOUS DAYS AND NIGHTS.

WARNING LIGHTS ARE NOT REQUIRED IF THE LANE CLOSURE IS A DAYTIME ONLY OPERATION.

(1) EXTEND THE LENGTH OF THE MERGE AREA IF THE ENTERING (DESIGN) SPEED OF THE RAMP IS LESS THAN 50 MPH OR IF THE MAINLINE GRADE EXCEEDS ±2.2%.

(2) END TEMPORARY PAVEMENT MARKING LINE AT 1/2 THE LENGTH OF FULL WIDTH OF THE ACCELERATION LANE.

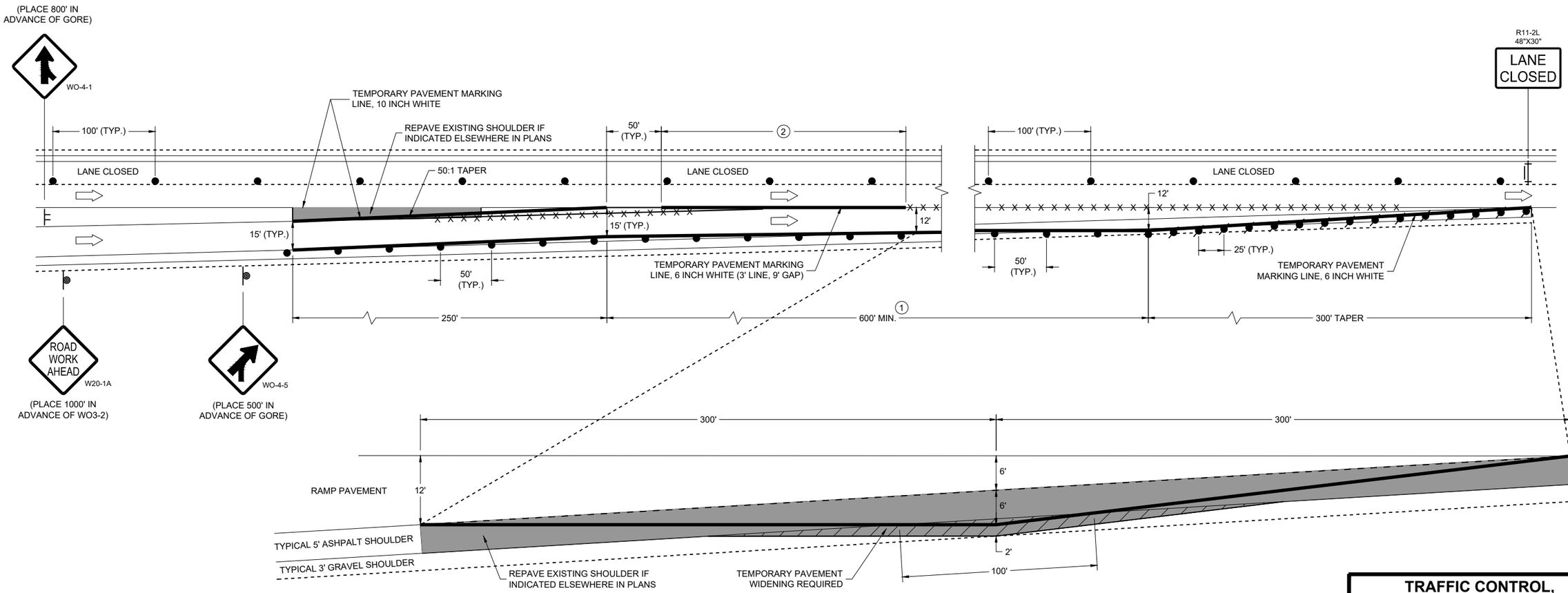

TEMPORARY PAVEMENT DETAIL

(EXISTING RAMP DIMENSIONS MAY VARY, ADJUST TEMPORARY PAVEMENT ACCORDINGLY)

TRAFFIC CONTROL, ENTRANCE RAMP WITHIN LANE CLOSURE

STATE OF WISCONSIN
DEPARTMENT OF TRANSPORTATION

APPROVED
February 2025 — DATE
/S/ Andrew Heidtke — WORK ZONE ENGINEER
FHWA

6

SDD 15D15-08b

LEGEND

SIGN ON PERMANENT SUPPORT

SIGN ON TEMPORARY SUPPORT

TRAFFIC CONTROL DRUM

TRAFFIC CONTROL DRUM WITH TYPE "C" STEADY BURN LIGHT

REMOVING PAVEMENT MARKING (SEE GENERAL NOTES)

TYPE III BARRICADE WITH ATTACHED SIGN

FLAGS, 16" X 16" MIN., ORANGE

DIRECTION OF TRAFFIC

GENERAL NOTES

THE INSTALLATIONS SHOWN ON THIS SHEET ARE TYPICAL EXAMPLES AND ARE NOT INTENDED TO REPRESENT ANY PARTICULAR RAMP. AT SPECIFIC FIELD LOCATIONS, SIMILAR INSTALLATIONS SHALL BE USED AND ADJUSTED TO THE GEOMETRICS OF THE RAMP AS COORDINATED WITH THE ENGINEER.

THE EXACT NUMBER, LOCATION, AND SPACING OF ALL SIGNS AND DEVICES SHALL BE ADJUSTED TO FIT FIELD CONDITIONS AS APPROVED BY THE ENGINEER.

THE SPACING BETWEEN TRAFFIC CONTROL SIGNS SHOULD BE ADJUSTED TO NOT CONFLICT WITH AND SHOULD PROVIDE A MINIMUM OF 200 FEET (500 FEET DESIRABLE) CLEARANCE TO EXISTING SIGNS THAT WILL REMAIN IN PLACE.

ALL SIGNS ARE 48" X 48" UNLESS OTHERWISE NOTED.

"WO" IS THE SAME AS "W" EXCEPT THE BACKGROUND IS ORANGE.

SEE SEPARATE LANE CLOSURE DETAIL FOR TYPICAL SPACING OF TYPE III BARRICADES AND R11-2L "LANE CLOSED" SIGNS.

YIELD SIGN AND WARNING SIGNS ON ENTRANCE RAMP ARE ALSO APPROPRIATE FOR CLOSURE OF THE MAINLINE LEFT LANE. OMIT THE YIELD SIGN IF MORE THAN ONE LANE REMAINS OPEN ON THE MAINLINE AND THE RAMP TAPER IS AT LEAST AS LONG AS THE NORMAL ENTRANCE RAMP TAPER AT THE SITE.

SIGNS THAT WILL BE IN PLACE LESS THAN 7 CONSECUTIVE DAYS AND NIGHTS OR THAT WILL BE PLACED IN A CLOSED LANE, MAY BE MOUNTED ON PORTABLE SUPPORTS. USE SUPPORTS THAT PROVIDE A MINIMUM OF 5 FEET FROM THE BOTTOM OF THE SIGN TO THE PAVEMENT.

IF INDICATED IN MISCELLANEOUS QUANTITIES, SUBSTITUTE FLEXIBLE TUBULAR MARKERS FOR DRUMS IN THE GORE BETWEEN THE ENTRANCE RAMP AND MAINLINE TRAFFIC.

ANY SIGNS TEMPORARY OR EXISTING, WHICH CONFLICT WITH TRAFFIC CONTROL "IN USE" SHALL BE REMOVED OR COVERED AS NEEDED AND AS APPROVED BY THE ENGINEER.

REMOVE PAVEMENT MARKINGS AND PLACE TEMPORARY PAVEMENT MARKING LINES IF LANE CLOSURE IS TO BE IN PLACE FOR 4 OR MORE CONTINUOUS DAYS AND NIGHTS.

WARNING LIGHTS ARE NOT REQUIRED IF THE LANE CLOSURE IS A DAYTIME ONLY OPERATION.

(1) CONSULT WITH REGIONAL WORK ZONE ENGINEER IF NEED TO REDUCE LENGTH EXISTS.

(2) IF LOCATED AFTER INITIAL LANE CLOSURE BARRICADE AND "LANE CLOSED" SIGN, USE 3 DRUMS IN PLACE OF BARRICADE AND SIGN.

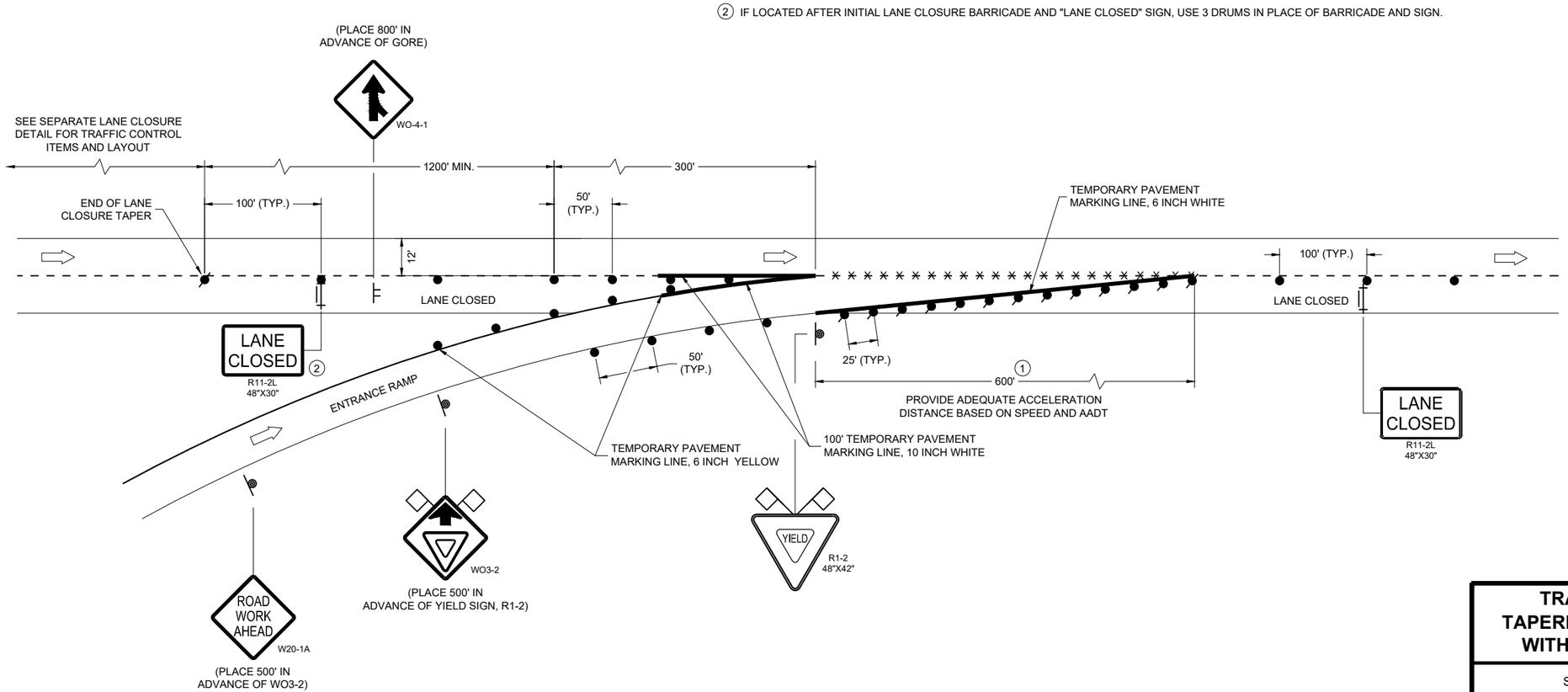

TRAFFIC CONTROL, TAPERED ENTRANCE RAMP WITHIN LANE CLOSURE

STATE OF WISCONSIN
DEPARTMENT OF TRANSPORTATION

APPROVED
February 2025 — DATE
/S/ Andrew Heidtke — <position>

FHWA

6
SDD 15D15-08c

LEGEND

SIGN ON PERMANENT SUPPORT

SIGN ON TEMPORARY SUPPORT

TRAFFIC CONTROL DRUM

TRAFFIC CONTROL DRUM WITH TYPE "C" STEADY BURN LIGHT

TYPE III BARRICADE WITH ATTACHED SIGN

FLAGS, 16" X 16" MIN., ORANGE

DIRECTION OF TRAFFIC

GENERAL NOTES

THE INSTALLATIONS SHOWN ON THIS SHEET ARE TYPICAL EXAMPLES AND ARE NOT INTENDED TO REPRESENT ANY PARTICULAR RAMP. AT SPECIFIC FIELD LOCATIONS, SIMILAR INSTALLATIONS SHALL BE USED AND ADJUSTED TO THE GEOMETRICS OF THE RAMP AS COORDINATED WITH THE ENGINEER.

THE EXACT NUMBER, LOCATION, AND SPACING OF ALL SIGNS AND DEVICES SHALL BE ADJUSTED TO FIT FIELD CONDITIONS AS APPROVED BY THE ENGINEER.

THE SPACING BETWEEN TRAFFIC CONTROL SIGNS SHOULD BE ADJUSTED TO NOT CONFLICT WITH AND SHOULD PROVIDE A MINIMUM OF 200 FEET (500 FEET DESIRABLE) CLEARANCE TO EXISTING SIGNS THAT WILL REMAIN IN PLACE.

ALL SIGNS ARE 48" X 48" UNLESS OTHERWISE NOTED.

"WO" IS THE SAME AS "W" EXCEPT THE BACKGROUND IS ORANGE.

SEE SEPARATE LANE CLOSURE DETAIL FOR TYPICAL SPACING OF TYPE III BARRICADES AND R11-2L "LANE CLOSED" SIGNS.

YIELD SIGN AND WARNING SIGNS ON ENTRANCE RAMP ARE ALSO APPROPRIATE FOR CLOSURE OF THE MAINLINE LEFT LANE. OMIT THE YIELD SIGN IF MORE THAN ONE LANE REMAINS OPEN ON THE MAINLINE AND THE RAMP TAPER IS AT LEAST AS LONG AS THE NORMAL ENTRANCE RAMP TAPER AT THE SITE.

SIGNS THAT WILL BE IN PLACE LESS THAN 7 CONSECUTIVE DAYS AND NIGHTS OR THAT WILL BE PLACED IN A CLOSED LANE, MAY BE MOUNTED ON PORTABLE SUPPORTS. USE SUPPORTS THAT PROVIDE A MINIMUM OF 5 FEET FROM THE BOTTOM OF THE SIGN TO THE PAVEMENT.

IF INDICATED IN MISCELLANEOUS QUANTITIES, SUBSTITUTE FLEXIBLE TUBULAR MARKERS FOR DRUMS IN THE GORE BETWEEN THE ENTRANCE RAMP AND MAINLINE TRAFFIC.

ANY SIGNS TEMPORARY OR EXISTING, WHICH CONFLICT WITH TRAFFIC CONTROL "IN USE" SHALL BE REMOVED OR COVERED AS NEEDED AND AS APPROVED BY THE ENGINEER.

WARNING LIGHTS ARE NOT REQUIRED IF THE LANE CLOSURE IS A DAYTIME ONLY OPERATION.

(1) PLACE YIELD SIGN TO PROVIDE ADEQUATE SIGHT DISTANCE AND ACCELERATION DISTANCE.

(2) IF LOCATED AFTER INITIAL LANE CLOSURE BARRICADE AND "LANE CLOSED" SIGN, USE 3 DRUMS IN PLACE OF BARRICADE AND SIGN.

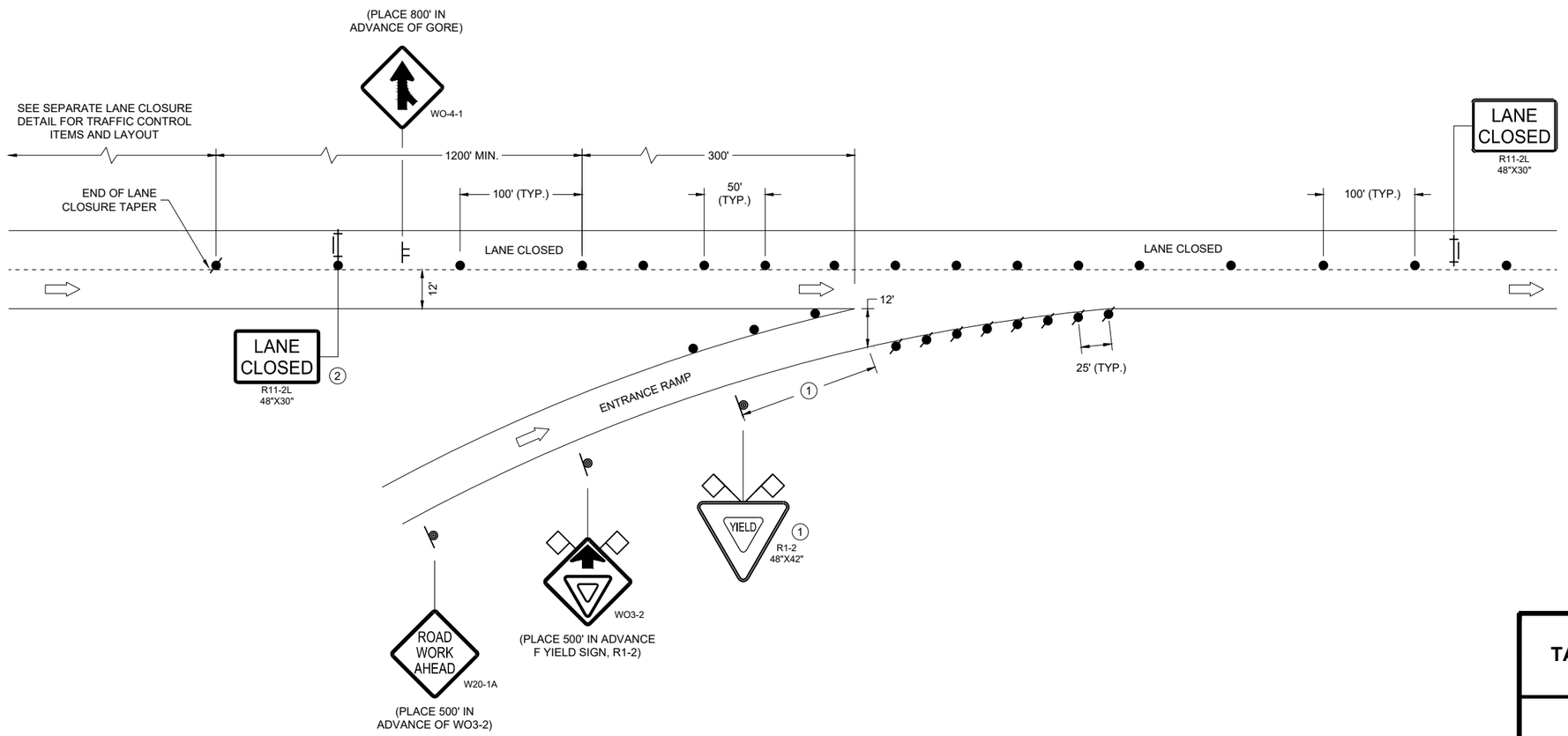

TRAFFIC CONTROL, TAPERED ENTRANCE RAMP WITHIN LANE CLOSURE

STATE OF WISCONSIN
DEPARTMENT OF TRANSPORTATION

APPROVED
February 2025 — DATE
/S/ Andrew Heidtke — WORK ZONE ENGINEER
FHWA

6
SDD 15D15-08d

LEGEND

SIGN ON PERMANENT SUPPORT

SIGN ON TEMPORARY SUPPORT

TRAFFIC CONTROL DRUM

TRAFFIC CONTROL DRUM WITH TYPE "C" STEADY BURN LIGHT

REMOVING PAVEMENT MARKING (SEE GENERAL NOTES)

TYPE III BARRICADE WITH ATTACHED SIGN

DIRECTION OF TRAFFIC

GENERAL NOTES

THE INSTALLATIONS SHOWN ON THIS SHEET ARE TYPICAL EXAMPLES AND ARE NOT INTENDED TO REPRESENT ANY PARTICULAR RAMP. AT SPECIFIC FIELD LOCATIONS, SIMILAR INSTALLATIONS SHALL BE USED AND ADJUSTED TO THE GEOMETRICS OF THE RAMP AS COORDINATED WITH THE ENGINEER.

THE EXACT NUMBER, LOCATION, AND SPACING OF ALL SIGNS AND DEVICES SHALL BE ADJUSTED TO FIT FIELD CONDITIONS AS APPROVED BY THE ENGINEER.

THE SPACING BETWEEN TRAFFIC CONTROL SIGNS SHOULD BE ADJUSTED TO NOT CONFLICT WITH AND SHOULD PROVIDE A MINIMUM OF 200 FEET (500 FEET DESIRABLE) CLEARANCE TO EXISTING SIGNS THAT WILL REMAIN IN PLACE.

ALL SIGNS ARE 48" X 48" UNLESS OTHERWISE NOTED.

"WO" IS THE SAME AS "W" EXCEPT THE BACKGROUND IS ORANGE.

SEE SEPARATE LANE CLOSURE DETAIL FOR TYPICAL SPACING OF TYPE III BARRICADES AND R11-2L "LANE CLOSED" SIGNS.

SIGNS THAT WILL BE IN PLACE LESS THAN 7 CONSECUTIVE DAYS AND NIGHTS OR THAT WILL BE PLACED IN A CLOSED LANE, MAY BE MOUNTED ON PORTABLE SUPPORTS.

IF INDICATED IN MISCELLANEOUS QUANTITIES, SUBSTITUTE FLEXIBLE TUBULAR MARKERS FOR DRUMS IN THE GORE BETWEEN THE EXIT RAMP AND MAINLINE TRAFFIC.

ANY SIGNS TEMPORARY OR EXISTING, WHICH CONFLICT WITH TRAFFIC CONTROL "IN USE" SHALL BE REMOVED OR COVERED AS NEEDED AND AS APPROVED BY THE ENGINEER.

REMOVE PAVEMENT MARKINGS AND PLACE TEMPORARY PAVEMENT MARKING LINES IF LANE CLOSURE IS TO BE IN PLACE FOR 4 OR MORE CONTINUOUS DAYS AND NIGHTS.

WARNING LIGHTS ARE NOT REQUIRED IF THE LANE CLOSURE IS A DAYTIME ONLY OPERATION.

(1) IF LOCATED AFTER INITIAL LANE CLOSURE BARRICADE AND "LANE CLOSED" SIGN, USE 3 DRUMS IN PLACE OF BARRICADE AND SIGN.

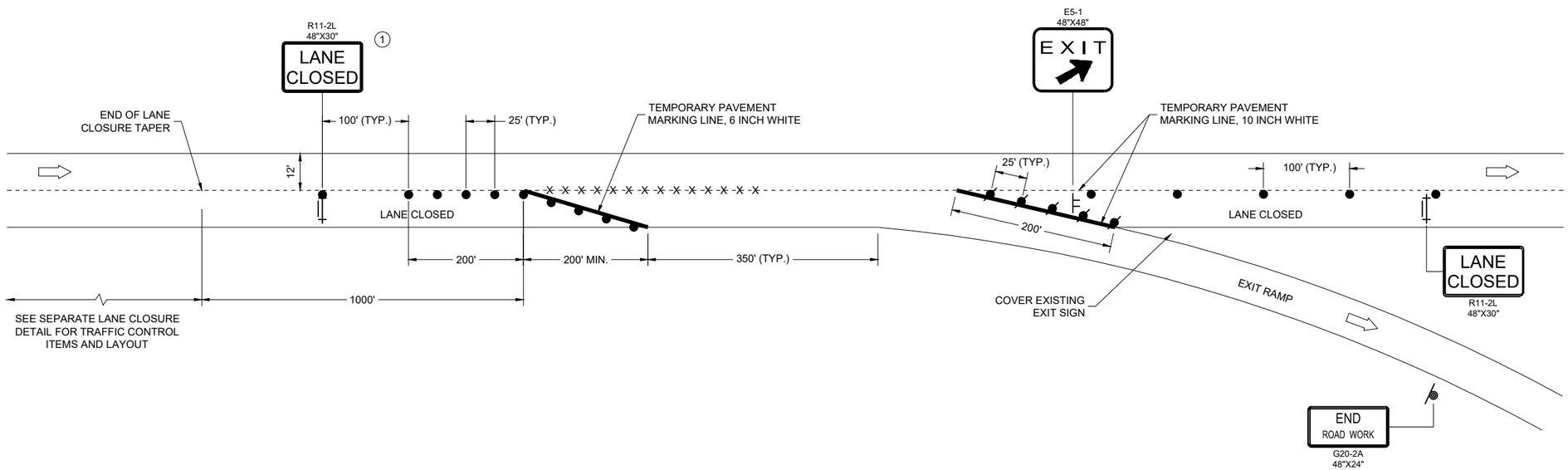

TRAFFIC CONTROL, PARALLEL EXIT RAMP WITHIN LANE CLOSURE

STATE OF WISCONSIN
DEPARTMENT OF TRANSPORTATION

APPROVED
February 2025 — DATE
/S/ Andrew Heidtke — WORK ZONE ENGINEER
FHWA

6
SDD 15D15-08e

LEGEND

- TYPE III BARRICADE
- TYPE III BARRICADE WITH ATTACHED SIGN
- TRAFFIC CONTROL DRUM
- SIGN ON PERMANENT SUPPORT
- TYPE "A" WARNING LIGHT (FLASHING)
- DIRECTION OF TRAFFIC

GENERAL NOTES

THIS RAMP CLOSURE DETAIL IS TYPICAL FOR CLOSING A RIGHT SIDE EXIT RAMP. FOR A LEFT SIDE EXIT RAMP, REVERSE THE TRAFFIC CONTROL.

THE EXACT NUMBER, LOCATION, AND SPACING OF ALL SIGNS AND DEVICES SHALL BE ADJUSTED TO FIT FIELD CONDITIONS AS APPROVED BY THE ENGINEER.

THE SPACING BETWEEN TRAFFIC CONTROL SIGNS SHOULD BE ADJUSTED TO NOT CONFLICT WITH AND SHOULD PROVIDE A MINIMUM OF 200 FEET (500 FEET DESIRABLE) CLEARANCE TO EXISTING SIGNS THAT WILL REMAIN IN PLACE.

ALL SIGNS ARE 48" X 48" UNLESS OTHERWISE NOTED.

SIGNS THAT WILL BE IN PLACE LESS THAN 7 CONTINUOUS DAYS AND NIGHTS MAY BE MOUNTED ON PORTABLE SUPPORTS.

ANY SIGNS, TEMPORARY OR EXISTING, WHICH CONFLICT WITH TRAFFIC CONTROL "IN USE" SHALL BE REMOVED OR COVERED AS NEEDED AND AS APPROVED BY THE ENGINEER.

PLACE TEMPORARY PAVEMENT MARKING LINE IF RAMP CLOSURE IS TO BE IN PLACE 4 OR MORE CONTINUOUS DAYS AND NIGHTS.

WORK AREAS WITH A DROP OFF ALONG THE EDGE OF AN OPEN TRAVEL LANE SHALL BE LEVELED WITH TEMPORARY FILL WHEN THE CONTRACTOR IS NOT WORKING ADJACENT TO THE TRAVEL LANE. DRUMS SHALL BE PLACED ENTIRELY OUTSIDE THE TRAVEL LANE, ALLOWING THE FULL UNOBSTRUCTED LANE WIDTH, WHEN WORK IS NOT IN PROGRESS.

WHERE MEDIAN BARRIER IS IN PLACE, SIGNS SHOWN ON LEFT SIDE OF ROADWAY MAY BE OMITTED FOR RIGHT SIDE RAMP CLOSURES OF LESS THAN 12 - HOUR DURATION.

1. W20 - 1A AND G20 - 2A SIGNS ARE NOT REQUIRED IF THE RAMP CLOSURE IS WITHIN A LARGER WORK ZONE WHERE THESE SIGNS ARE ALREADY PRESENT.
2. PLACE "RAMP CLOSED BEGINNING" SIGN OR PCMS 7 CALENDAR DAYS PRIOR TO CLOSURE OR AS DIRECTED BY THE ENGINEER. SEE WISCONSIN STANDARD SIGN PLATES FOR SIGN LAYOUT.

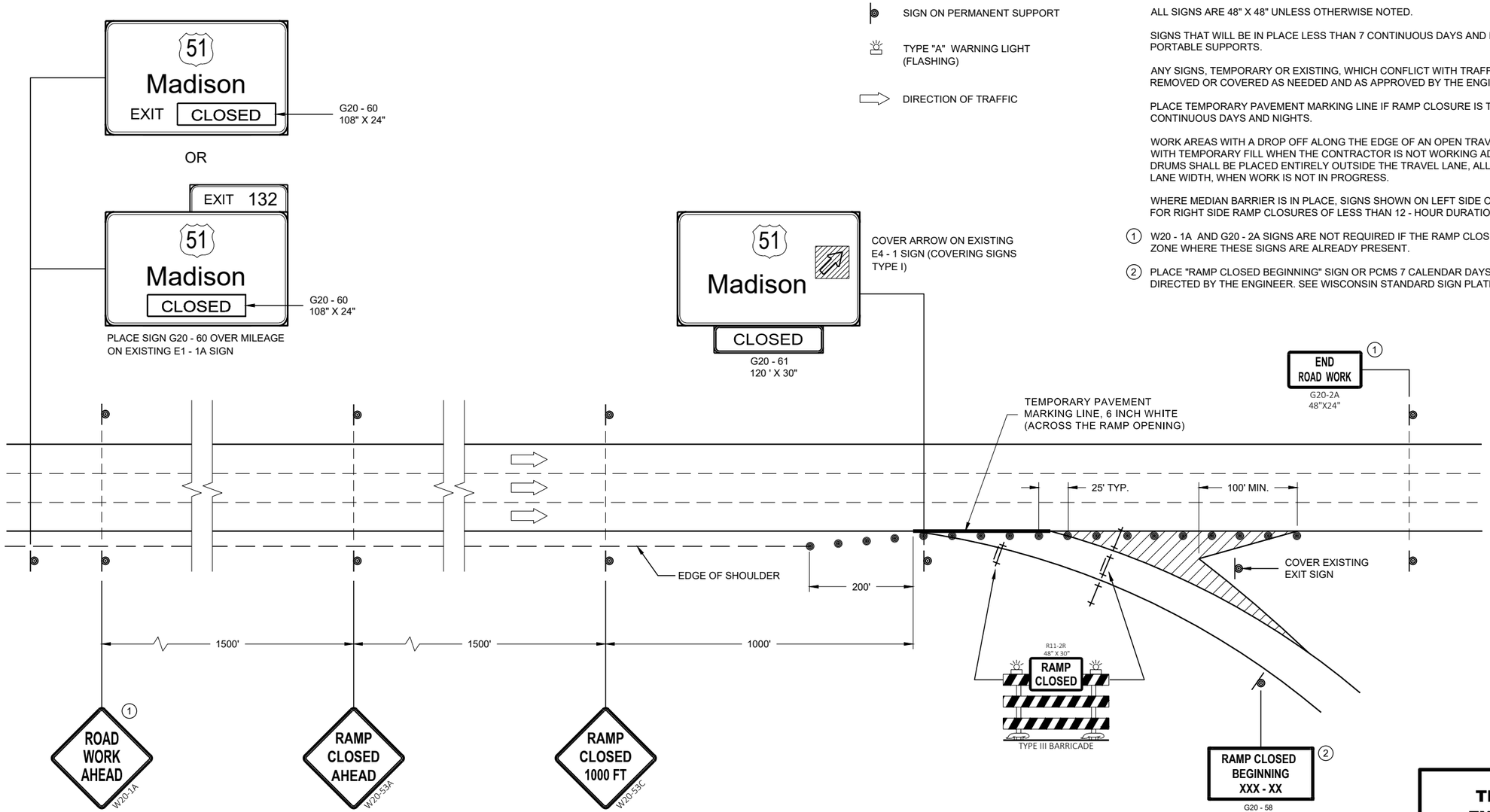

OR

PCMS MESSAGING

FRAME 1	FRAME 2
RAMP TO CLOSE	XXXDAY XX XX XX

TRAFFIC CONTROL, EXIT RAMP CLOSURE

STATE OF WISCONSIN
DEPARTMENT OF TRANSPORTATION

APPROVED
May 2023 — DATE
/S/ Andrew Heidtke — ROADWAY STANDARDS DEVE ENGINEER

FHWA

LEGEND

- SIGN ON PERMANENT SUPPORT
- TRAFFIC CONTROL DRUM
- DIRECTION OF TRAFFIC
- CONNECTED ARROW BOARD
- WORK AREA
- ((S)) WZ START LOCATION MARKER
- ((E)) WZ END LOCATION MARKER

GENERAL NOTES

THIS DETAIL IS TYPICAL FOR CLOSING THE RIGHT SHOULDER. FOR CLOSING THE LEFT SHOULDER, REVERSE THE TRAFFIC CONTROL.

THIS DETAIL MAY BE USED FOR DIVIDED ROADWAYS WITH ANY NUMBER OF TRAVEL LANES.

ALL SIGNS ARE 48"X48" UNLESS OTHERWISE NOTED.

ANY SIGNS TEMPORARY OR EXISTING, WHICH CONFLICT WITH THE TRAFFIC CONTROL "IN USE" SHALL BE REMOVED OR COVERED AS NEEDED AND AS APPROVED BY THE ENGINEER.

THE EXACT NUMBER, LOCATION, AND SPACING OF ALL SIGNS AND DEVICES SHALL BE ADJUSTED TO FIT FIELD CONDITIONS AS APPROVED BY THE ENGINEER.

WHEN A RAMP OR SIDE ROAD INTERSECTS THE FACILITY ON WHICH THE WORK IS BEING PERFORMED, ADDITIONAL TRAFFIC CONTROLS SHALL BE PROVIDED AS SPECIFIED IN THE PLANS AND/OR SPECIAL PROVISIONS OR AS APPROVED BY THE ENGINEER.

CHANNELIZING DEVICES PLACED ADJACENT TO WORK AREA SHALL BE PULLED BACK FROM THE TRAVEL LANE WHEN WORK IS NOT IN PROGRESS.

SIGNS THAT WILL BE IN PLACE LESS THAN 7 CONTINUOUS DAYS AND NIGHTS MAY BE MOUNTED ON PORTABLE SUPPORTS.

SIGN LAYOUTS SHALL BE IN ACCORDANCE WITH THE FHWA'S MANUAL OF STANDARD HIGHWAY SIGNS OR THE WISCONSIN STANDARD SIGN PLATES.

(1) FOR SHORT DURATION SHOULDER WORK OF LESS THAN ONE HOUR THE W21-5A SIGN MAY BE OMITTED.

(2) IF ALREADY PRESENT WITHIN PROJECT , DO NOT INCLUDE ADDITIONAL DEVICE.

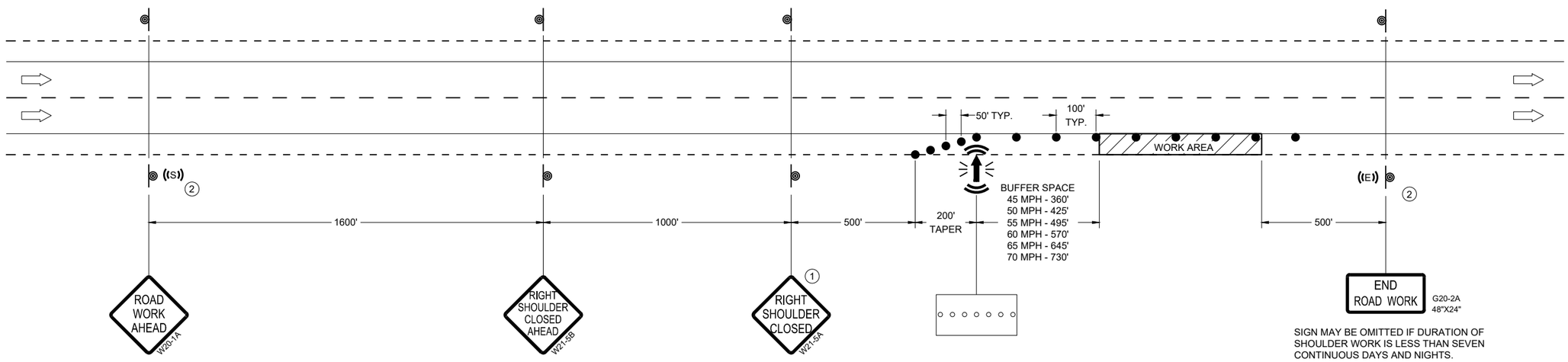

TRAFFIC CONTROL, SHOULDER CLOSURE ON DIVIDED ROADWAY, SPEEDS GREATER THAN 40 MPH

STATE OF WISCONSIN
DEPARTMENT OF TRANSPORTATION

APPROVED

Noveber 2025	/S/ Andrew Heidtke
DATE	STATEWIDE WORK ZONE TRAFFIC SAFETY ENGINEER

FHWA

6
SDD 15D27-05

LEGEND

- TYPE III BARRICADE WITH ATTACHED SIGN
- SIGN ON PERMANENT SUPPORT
- TRAFFIC CONTROL DRUM
- TRAFFIC CONTROL DRUM WITH TYPE "C" STEADY BURN LIGHT
- TYPE "A" WARNING LIGHT (FLASHING)
- DIRECTION OF TRAFFIC
- WORK AREA
- REMOVING PAVEMENT MARKING (SEE GENERAL NOTES)
- CONCRETE BARRIER TEMPORARY PRECAST

GENERAL NOTES

THE EXACT NUMBER, LOCATION, AND SPACING OF ALL SIGNS AND DEVICES SHALL BE ADJUSTED TO FIT FIELD CONDITIONS AS APPROVED BY THE ENGINEER.

THE SPACING BETWEEN SIGNS SHOULD BE ADJUSTED TO NOT CONFLICT WITH AND TO PROVIDE A MINIMUM OF 200 FEET, (500 FEET DESIRABLE) DISTANCE TO EXISTING SIGNS.

THIS LANE CLOSURE IS TYPICAL FOR LANE SHIFT LEFT - REVERSE FOR SHIFTING RIGHT.

ALL SIGNS ARE 48"x48" UNLESS OTHERWISE NOTED.

"WO" IS THE SAME AS "W" EXCEPT THE BACKGROUND IS ORANGE.

ANY SIGNS TEMPORARY OR EXISTING, WHICH CONFLICT WITH TRAFFIC CONTROL "IN USE" SHALL BE REMOVED OR COVERED AS NEEDED AND AS APPROVED BY THE ENGINEER. NO WARNING LIGHTS SHALL BE WORKING ON ANY "COVERED" OR "DOWNED" SIGNS.

CONSIDER GEOMETRICS WHEN LOCATING SIGNS AND ARROW BOARDS SO THE DRIVER HAS A CLEAR VIEW OF THE ARROW BOARD AND LANE CLOSURE DRUMS FOR A MINIMUM 1500 FEET IN FRONT OF DRUMS.

FOR A LANE CLOSURE THAT IS IN PLACE LESS THAN 7 CONTINUOUS DAYS AND NIGHTS, THE ADVANCED WARNING SIGNS MAY BE MOUNTED ON PORTABLE SUPPORTS.

REMOVE PAVEMENT MARKINGS AND PLACE TEMPORARY PAVEMENT MARKING LINES IF LANE CLOSURE IS TO BE IN PLACE FOR 4 OR MORE CONTINUOUS DAYS AND NIGHTS.

WARNING LIGHTS ARE NOT REQUIRED IF THE LANE CLOSURE IS A DAYTIME ONLY OPERATION.

IF THE HORIZONTAL ALIGNMENT IS SUCH THAT A CURVE MAY REQUIRE ADDITIONAL DELINEATION, THE DEVICE SPACING MAY BE DECREASED TO 50 FEET.

ADJUSTMENTS IN BUFFER SPACE NEED TO BE INCORPORATED WHEN THE LANE SHIFT OCCURS NEAR AN INTERCHANGE EXIT OR ENTRANCE RAMP. THE LANE SHIFT MUST TAKE PLACE FAR ENOUGH IN ADVANCE OF AN EXIT OR ENTRANCE RAMP TO STILL ALLOW FOR ADEQUATE BUFFER SPACE. THE MINIMUM LENGTH OF THE BUFFER SPACE BEFORE AN EXIT RAMP SHOULD BE 1/2 THE LENGTH OF THE TRANSITION AREA. THE ENTRANCE RAMP SHOULD BE FOLLOWED BY THE ORIGINAL BUFFER SPACE LENGTH OF 800 FEET DESIRABLE PRIOR TO ANOTHER TRAFFIC CONTROL CHANGE SUCH AS A CROSSOVER MANEUVER.

1. USE ONLY WHEN T<600', OMIT WO1-4R.
2. IF NEEDED, USE ONLY IF DESIGN SPEED IS 10 MPH BELOW POSTED SPEED.
3. IF THE BEGINNING OF LANE SHIFT TAPER IS 1200 FEET OR LESS FROM END OF LANE CLOSURE TAPER, PLACE THE WO1-4L SIGN 200 FEET AFTER THE END OF THE LANE CLOSURE TAPER.
4. IF THE BEGINNING OF THE SECOND LANE SHIFT TAPER IS 1200 FEET OR LESS FROM END OF THE FIRST LANE CLOSURE TAPER, PLACE THE WO1-4L SIGN 200 FEET AFTER THE END OF THE FIRST LANE CLOSURE TAPER.
5. DRUMS IN A CLOSED LANE THAT MUST BE MOVED FOR A WORK OPERATION SHALL BE IMMEDIATELY REESTABLISHED UPON COMPLETION OF THE OPERATION, OR FOR CONTINUING OPERATIONS, AT THE END OF EACH WORKING DAY.

POSTED SPEED LIMIT PRIOR TO WORK STARTING (MPH)	SHIFTING TAPER L/2 W, LATERAL OFFSET (FT)									BUFFER SPACE (B) FEET
	1	2	3	4	5	6	7	8	9	
50	25	50	75	100	125	150	175	200	225	425
55	28	55	83	110	138	165	193	220	248	495
60	30	60	90	120	150	180	210	240	270	570
65	33	65	98	130	163	195	228	260	293	645
70	35	70	105	140	175	210	245	280	315	730

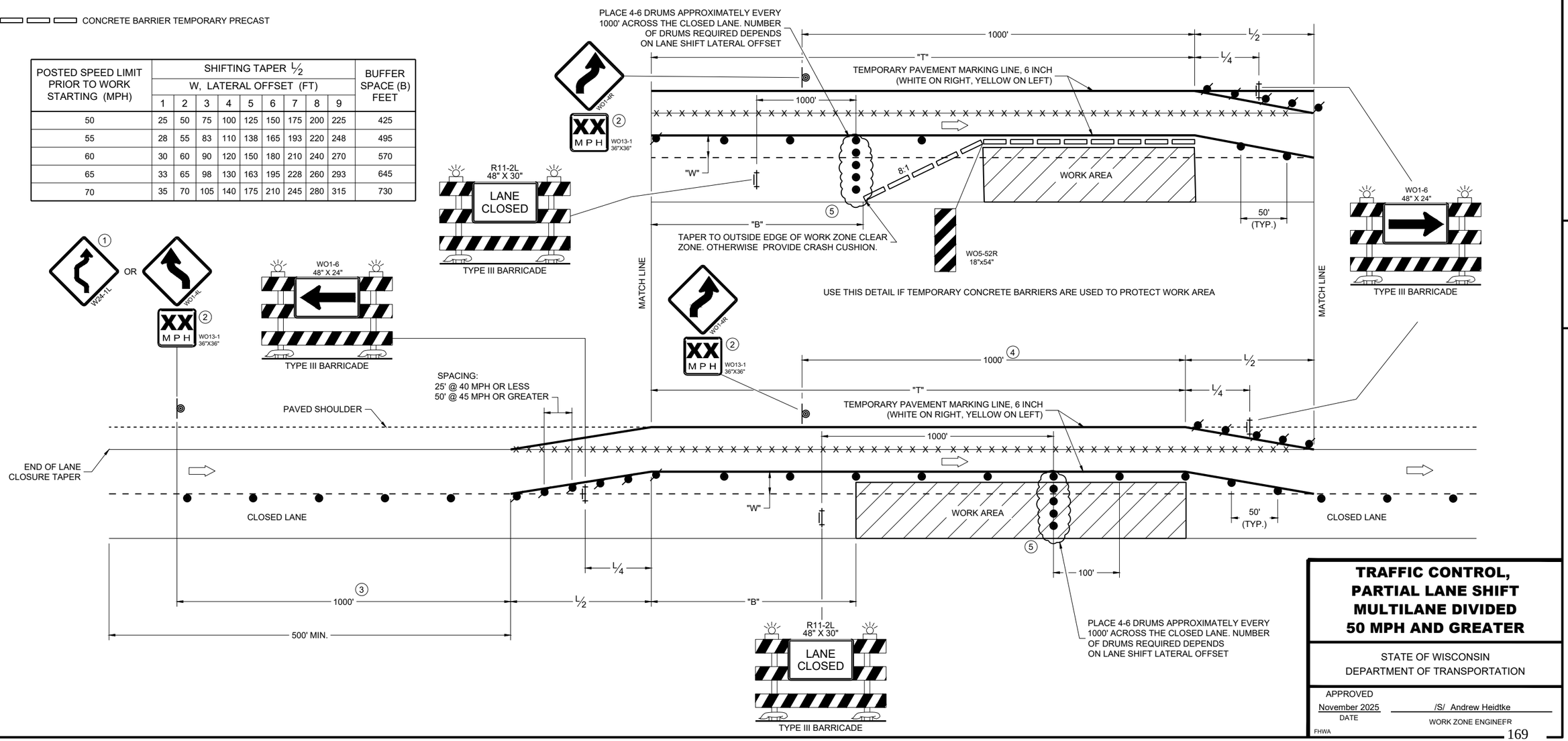

TRAFFIC CONTROL, PARTIAL LANE SHIFT MULTILANE DIVIDED 50 MPH AND GREATER

STATE OF WISCONSIN
DEPARTMENT OF TRANSPORTATION

APPROVED
November 2025 — DATE
/S/ Andrew Heidtke — WORK ZONE ENGINEER
FHWA

6

SDD 15D40-07d

URBAN AREA

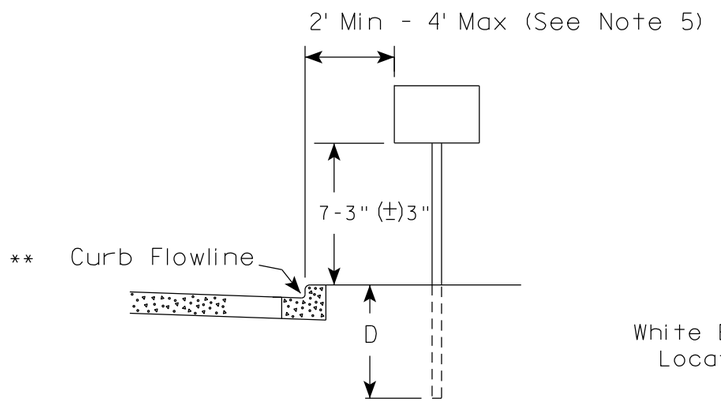

RURAL AREA (See Note 2)

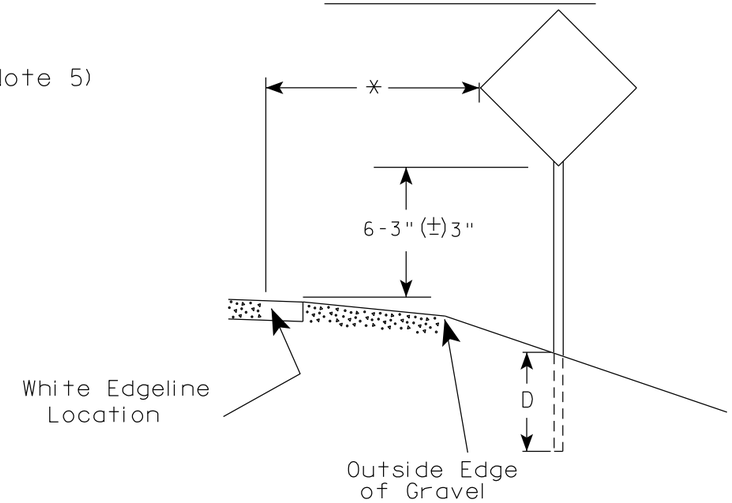

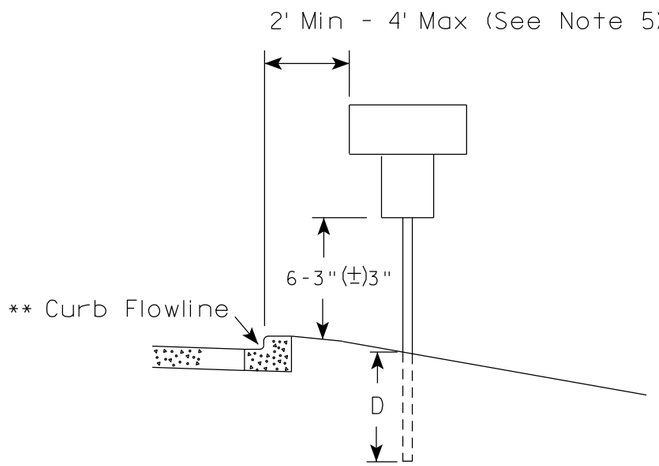

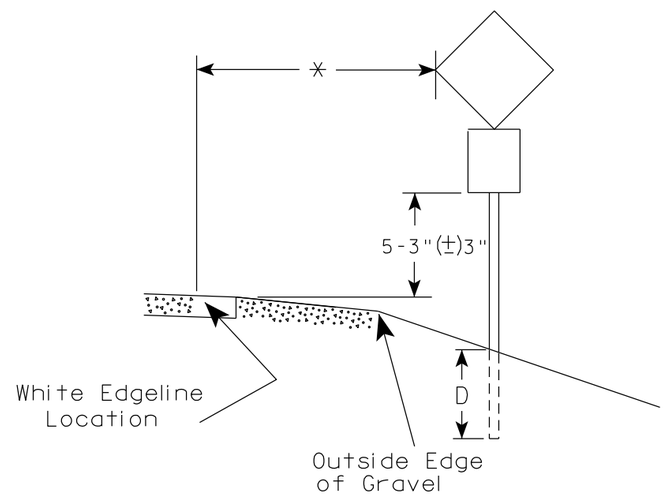

** The existence of curb and gutter does not in itself mandate the vertical clearance illustrated. That height is typically measured where there is sidewalk adjacent to the roadway or parking is permitted. In the absence of sidewalk vertical clearance is measured from the top of the curb. Offset of signs is measured from the flow line.

* 6 feet from edge of a paved shoulder or 12 feet from the edge of pavement (edge line location) or 2 feet from outside edge of gravel, whichever is greater unless directed by project engineer.

GENERAL NOTES

1. Signs wider than 4 feet or 20 sq.ft or larger, shall be mounted on multiple posts. Refer to plate A4-4.
2. If signs are mounted on or behind barrier wall, see A4-10 sign plate.
   The Double Arrow sign (W12-1D) shall be mounted at a height of 2'-3" (±) 3". The Chevron sign (W1-8), Roundabout Chevron panel (R6-4B), Enhanced Reference Markers, Clearance Markers (W5-52), Mile Markers (D10 series), In Road Object Markers (W5-54) & End of Road Markers (W5-56) shall be mounted at a height of 4'-3" (±) 3".
3. For expressways and freeways, mounting height is 7'- 3" (±) 3" or 6'-3" (±) 3" depending upon existence of a sub-sign.
4. Minimum mounting height for signs mounted on traffic signal poles is 5'- 3" (±) 3".
5. Offset distance shall be consistent with existing signs or consistent throughout length of project.
6. Folding signs shall be mounted at a height of 5'-3" (±) 3" or as directd by the Engineer.

POST EMBEDMENT DEPTH

Area of Sign Installation (Sq. Ft.)	D (Min)
20 or Less	4'
Greater than 20	5'

TYPICAL INSTALLATION OF PERMANENT TYPE II SIGNS ON SINGLE POSTS

WISCONSIN DEPT OF TRANSPORTATION

APPROVED Matthew R Rauch
for State Traffic Engineer

DATE 12/6/23 PLATE NO. A4-3.23

7 7

PROJECT NO:	HWY:	COUNTY:		SHEET NO: 170	E

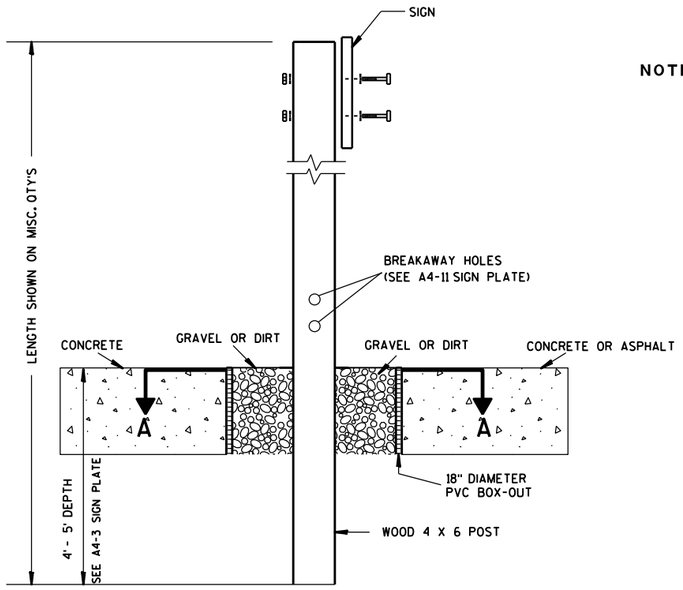

ELEVATION VIEW

DETAIL OF WOOD 4 X 6 SIGN POST IN BOX-OUT

NOTES:
1. ALL MATERIAL TO BE APPROVED BY ENGINEER PRIOR TO INSTALLATION
2. SEE SIGN PLATE A4-8 FOR SIGN HARDWARE REQUIREMENTS
3. 18 INCH X 18 INCH SQUARE BOX-OUTS MAY BE USED FOR INSTALLATIONS IN EXISTING CONCRETE OR ASPHALT LOCATIONS.

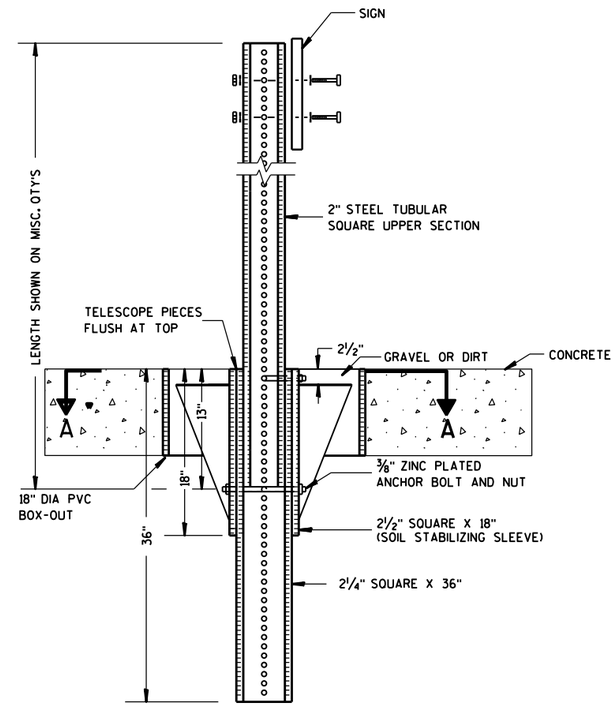

ELEVATION VIEW

DETAIL OF STEEL 2 X 2 SIGN POST IN BOX-OUT

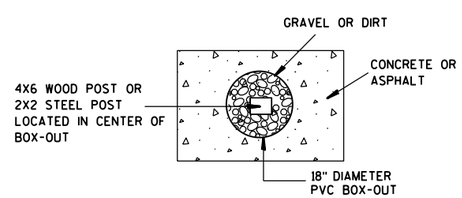

PLAN VIEW

FOR NEW CONCRETE/ASPHALT INSTALLATIONS

SIGN POST
BOX-OUTS
A4-3B

WISCONSIN DEPT OF TRANSPORTATION

APPROVED Matthew R Rauch
for State Traffic Engineer

DATE 1/27/14 PLATE NO. A4-3B.1

PROJECT NO:	HWY:	COUNTY:		SHEET NO:	E

URBAN AREA

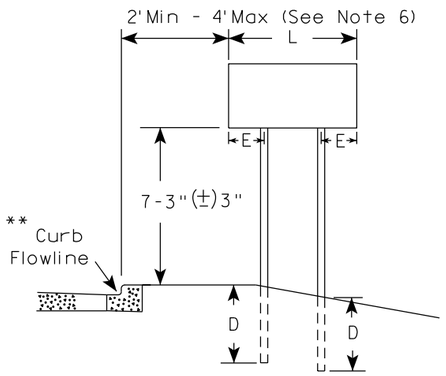

RURAL AREA (See Note 3)

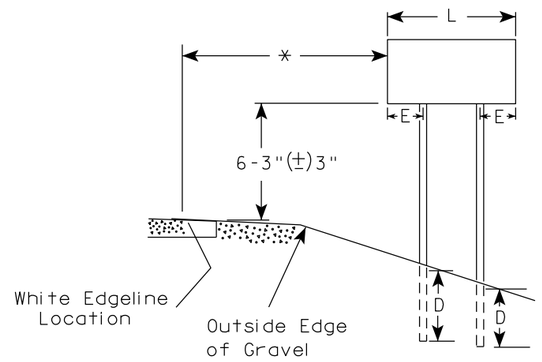

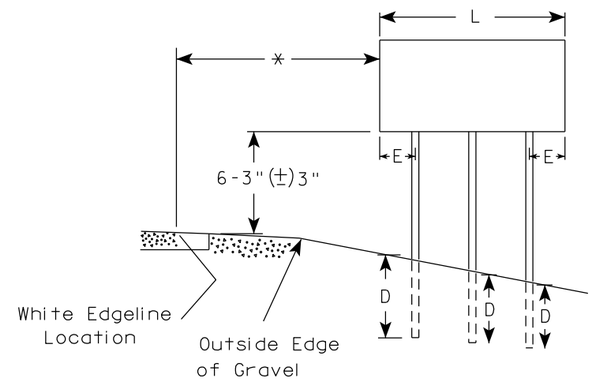

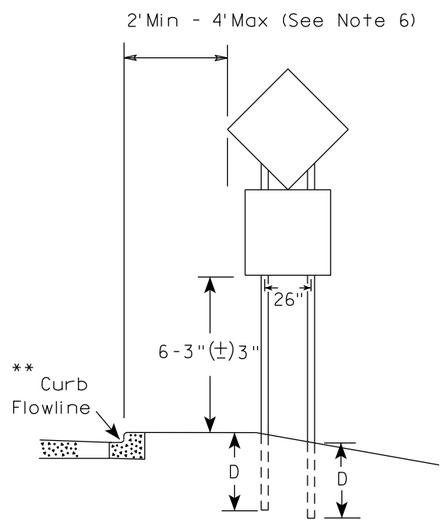

48" DIAMOND WARNING SIGN

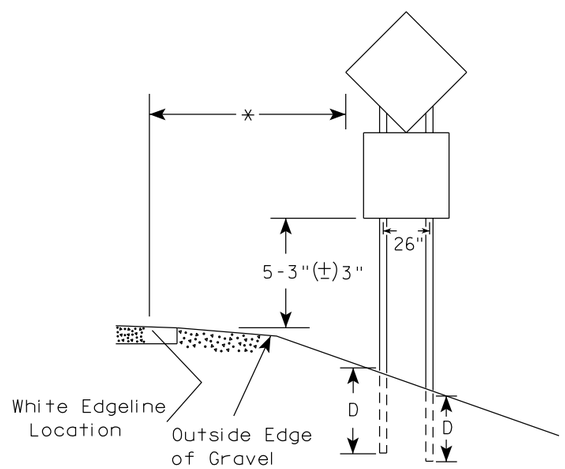

48" DIAMOND WARNING SIGN

GENERAL NOTES

1. For 3 or 4 post installations, individual post spacing shall be greater than 3'-6".
2. See tables below for required number of posts.
3. For expressways and freeways, mounting height is 7'-3" (±) 3" or 6'-3" (±) 3" depending upon existence of sub-sign.
4. The (±) tolerance for mounting height is 3 inches.
5. J-Assemblies are considered to be one sign for mounting height.
6. Offset distance shall be consistent with existing signs or consistent throughout length of project.
7. Folding signs shall be mounted at a height of 5'-3" (±) 3" or as directed by the engineer.
8. The Double Arrow sign (W12-1) shall be mounted at a height of 2'-3" (±) 3". The Chevron sign (W1-8), Roundabout Chevron panel (R6-4B), Clearance Markers (W5-52), Mile Markers (D10 series), In Road Object Markers (W5-54) & End of Road Markers (W5-56) shall be mounted at a height of 4"-3" (±) 3".

* 6 feet from edge of a paved shoulder or 12 feet from the edge of pavement (edge line location) or 2 feet from outside edge of gravel, whichever is greater unless directed by project engineer.

** The existence of curb and gutter does not in itself mandate the vertical clearance illustrated. That height is typically measured where there is sidewalk adjacent to the roadway or parking is permitted. In the absence of sidewalk vertical clearance is measured from the top of the curb. Offset of signs is measured from the flow line.

*** See A4-3 sign plate for signs 4' or less in width and less than 20 S.F. in area.

SIGN SHAPE OTHER THAN DIAMOND (TWO POSTS REQUIRED)	
L	E
*** Greater than 48" Less than 60"	12"
60" to 108"	L/5

SIGN SHAPE OTHER THAN DIAMOND (THREE POSTS REQUIRED)	
L	E
Greater than 108" to 144"	12"

POST EMBEDMENT DEPTH

Area of Sign Installation (Sq. Ft.)	D (Min)
20 or Less	4'
Greater than 20	5'

TYPICAL INSTALLATION OF TYPE II SIGNS ON MULTIPLE POSTS

WISCONSIN DEPT OF TRANSPORTATION

APPROVED Matthew R Rauch
for State Traffic Engineer

DATE 12/6/23 PLATE NO. A4-4.16

PROJECT NO:	HWY:	COUNTY:		SHEET NO: 172	E

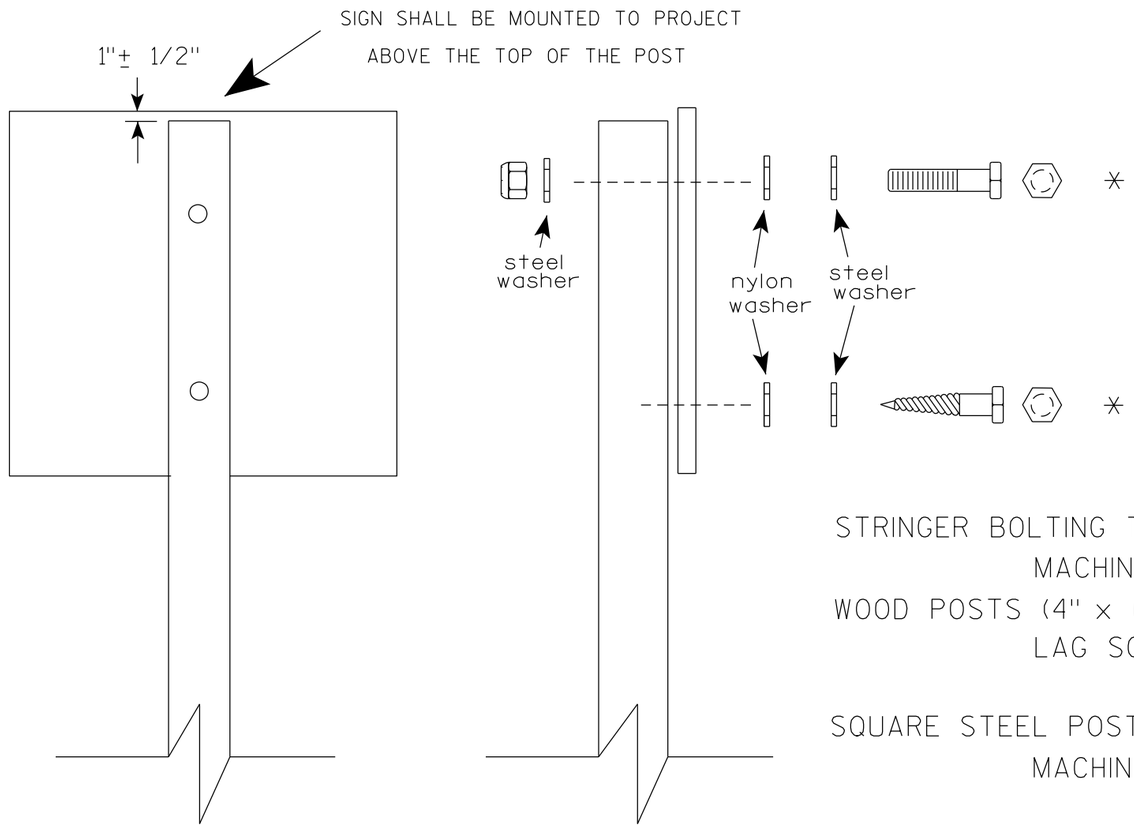

Nuts, bolts and lags used for mounting signs shall have hexagonal heads and shall be either :

a. Hot dip galvanized in accordance with ASTM Designation: A 153, Class D, or SC 3

b. Electro-galvanized in accordance with ASTM Designation : B 633, TYPE III, SC 3.

Threads on bolts and nuts shall be manufactured with sufficient allowance for the cadmium plate or galvanized coating to permit the nuts to run freely on the bolts.

STRINGER BOLTING TO ALUMINUM SIGNS (SEE SIGN PLATE A4-18)

MACHINE BOLTS - 5/16" X 1-3/4" Length w/ lock nuts

WOOD POSTS (4" x 6")

LAG SCREWS - 3/8" X 3" (NO STRINGERS ON BACK OF SIGN)
3/8" X 4" (STRINGERS ON BACK OF SIGN)

SQUARE STEEL POSTS (2" x 2")

MACHINE BOLTS - 3/8" X 3-1/4" Length w/ nuts (NO STRINGER ON BACK OF SIGN)
3/8" X 5" Length w/ nuts (STRINGERS ON BACK OF SIGN)

RIVETS - 9/32 " (6605-9-6) BULB-TITE, TRI-FOLD, ALUMINUM BODY/MANDREL
O.D. FLANGE .720-.765 INCH, GRIP RANGE .042-.375 INCH

WASHERS (ALL POSTS) -

1-1/4" O.D. X 3/8" I.D. X 1/16" STEEL
1-1/4" O.D. X 3/8" I.D. X .080 NYLON

* Two different fastening systems are shown for illustration purposes. On any individual sign, either one or the other system shall be used. Actual number of fasteners per sign varies with the sign area, but normally there are two. For a single post installation, all signs greater than 9 sq. ft. require the use of 3 fasteners.

ATTACHMENT OF SIGNS TO POSTS

WISCONSIN DEPT OF TRANSPORTATION

APPROVED Matthew R Rauch
for State Traffic Engineer

DATE 4/1/2020 PLATE NO. A4-8.9

TELESCOPIC TUBING ANCHORS
TWO PIECE SYSTEM

2 1/4 " SQUARE
12 GAUGE
PERFORATED
GALVANIZED FINISH

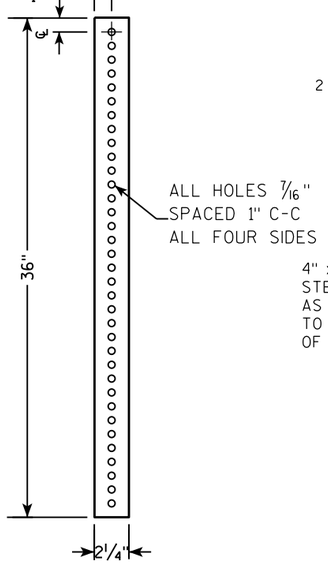

2 1/2 " SQUARE
12 GAUGE
OMNI-DIRECTIONAL
PERFORATED
SOIL STABILIZING SLEEVE
GALVANIZED FINISH

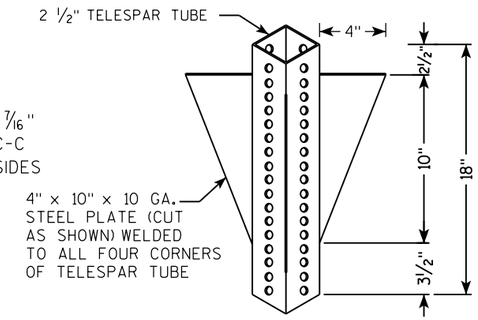

DETAIL OF TUBULAR STEEL SIGN POST
(IN POURED CONCRETE OR ASPHALT)

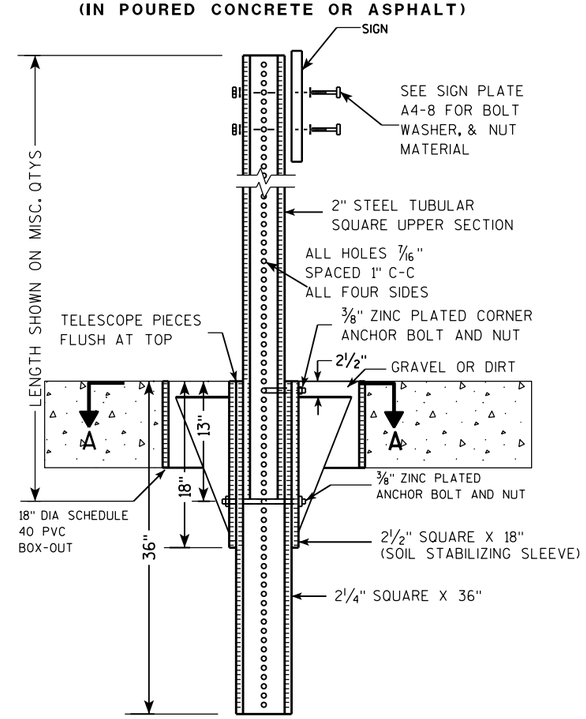

DETAIL OF TUBULAR STEEL SIGN POST
(IN LOCATIONS OTHER THAN POURED CONCRETE OR ASPHALT)

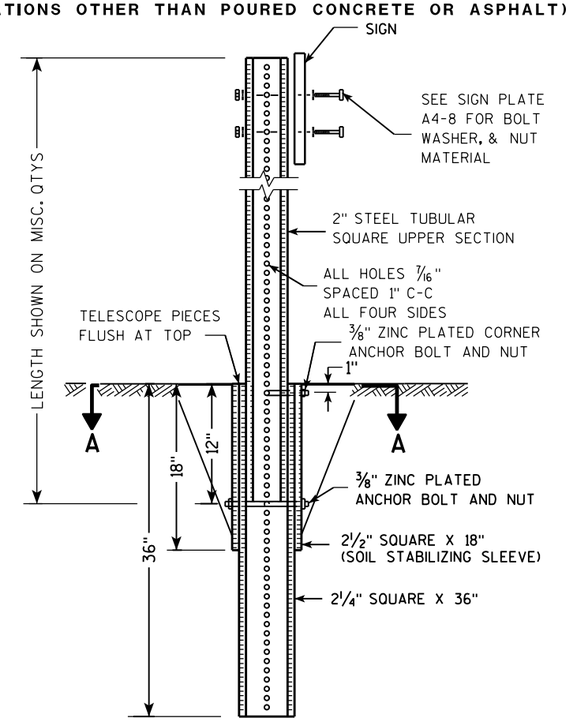

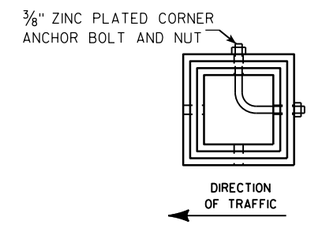

SECTION A-A

Area of Sign Installation (Sq. Ft.)	Number of Required Posts
9 or less	1
Greater than 9 less than or equal to 18	2
Greater than 18 less than or equal to 27	3

Signs wider than 3 feet or larger than 9 sq. ft shall be mounted on multiple posts (see above table).

TUBULAR STEEL
SIGN POST
A4-9

WISCONSIN DEPT OF TRANSPORTATION

APPROVED Matthew R Rauch
for State Traffic Engineer

DATE 2/05/15 PLATE A4-9.9

7 7

PROJECT NO:	HWY:	COUNTY:		SHEET NO:	E

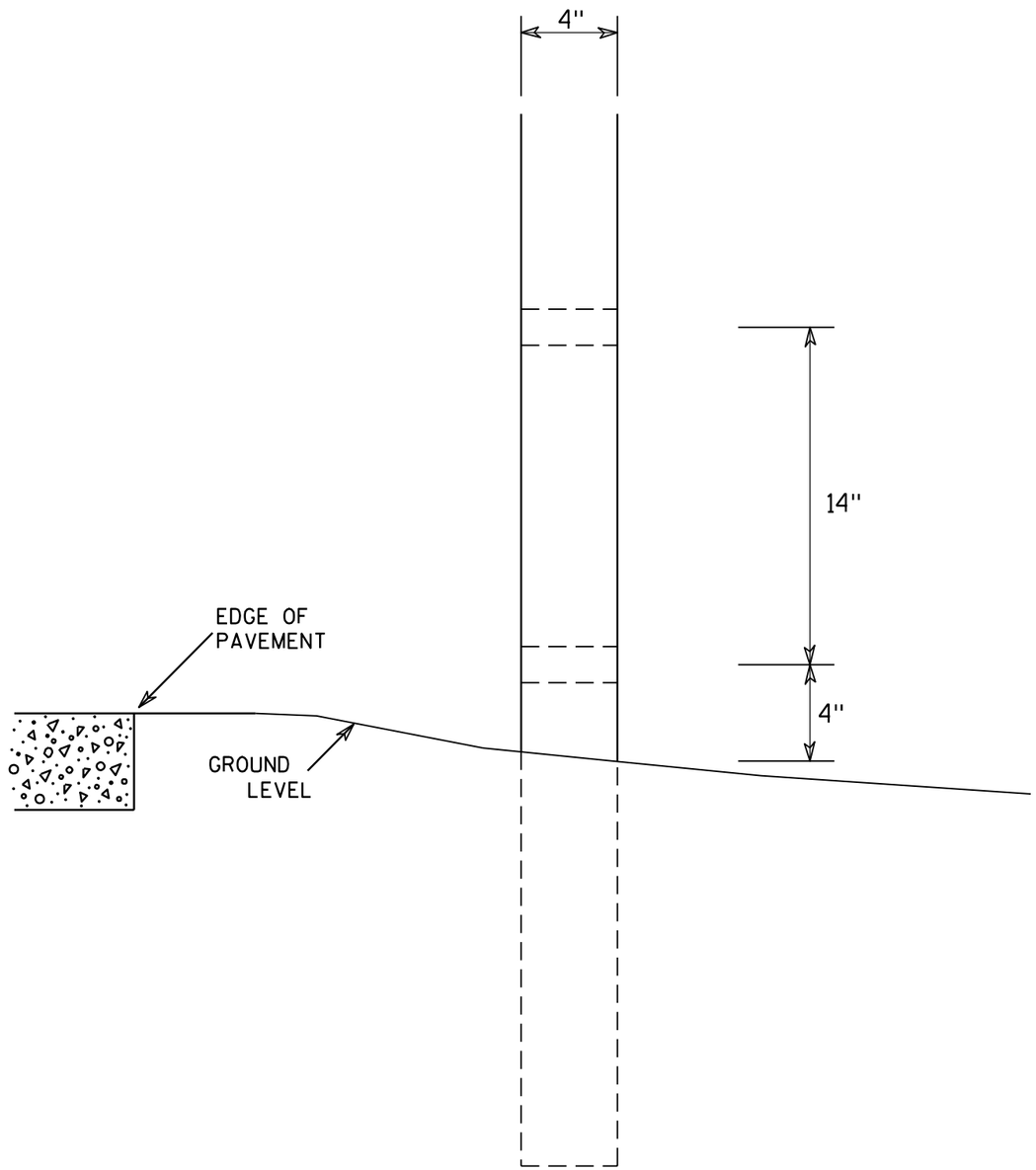

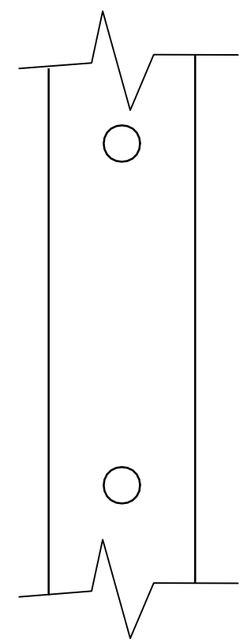

SIDE VIEW

GENERAL NOTES

1. All 4 x 6 Wood Posts shall be modified by having two 1½" diameter holes drilled perpendicular to the roadway centerline.

7

7

4 X 6 WOOD POST MODIFICATIONS

WISCONSIN DEPT OF TRANSPORTATION

APPROVED Chester J Spang for State Traffic Engineer

DATE 3/27/97 PLATE NO. A4-11.2

PROJECT NO:	HWY:	COUNTY:		SHEET NO: 175	E

BANDING

SINGLE SIGN

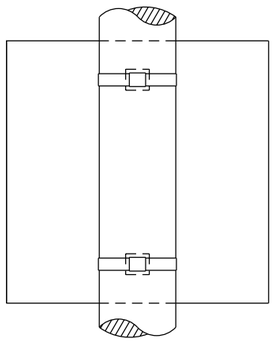

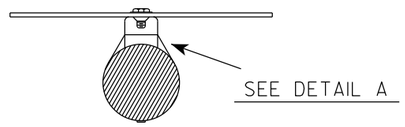

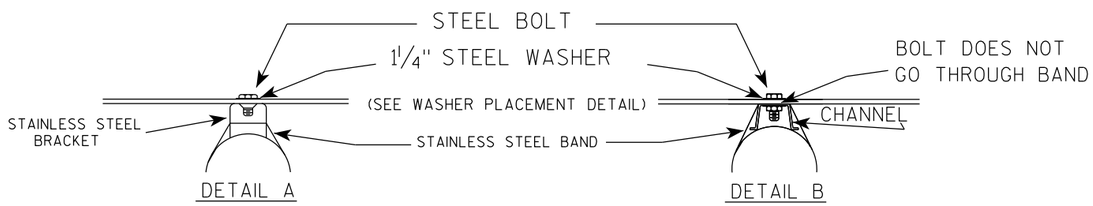

WASHER PLACEMENT

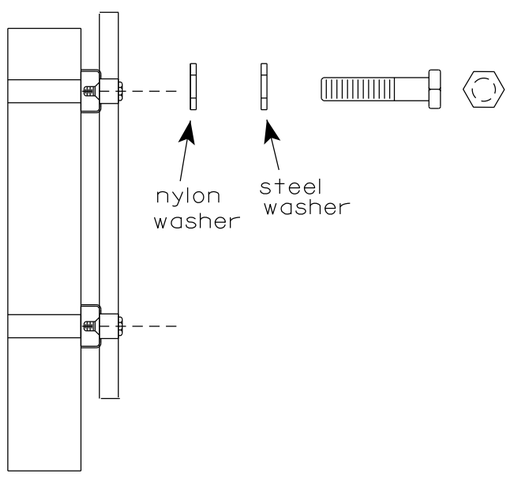

WASHERS (ALL POSTS) -
1-1/4" O.D. X 3/8" I.D. X 1/16" STEEL
1-1/4" O.D. X 3/8" I.D. X .080 NYLON
FOR ALL TYPE H SIGNS

GENERAL NOTES

1. Any sign over 3 feet in width shall use the V-Block banding method. See A5-10 standard plate.
2. Signs 3 feet or greater in height shall have three bracket bands installed. Signs less than 3 feet in height shall have two bracket bands installed.
3. Banding and assembly bracket shall be stainless steel. All bands shall be 3/4" in width and 0.025" thickness.
4. ALL SIGN MOUNTING BOLTS AND WASHERS SHALL BE EITHER:
   a. Hot dip or mechanically galvanized in accordance with ASTM Designation: A 153, Class D
   b. Electro-galvanized in accordance with ASTM designation: B 633, Type III, SC 3

"J" ASSEMBLY

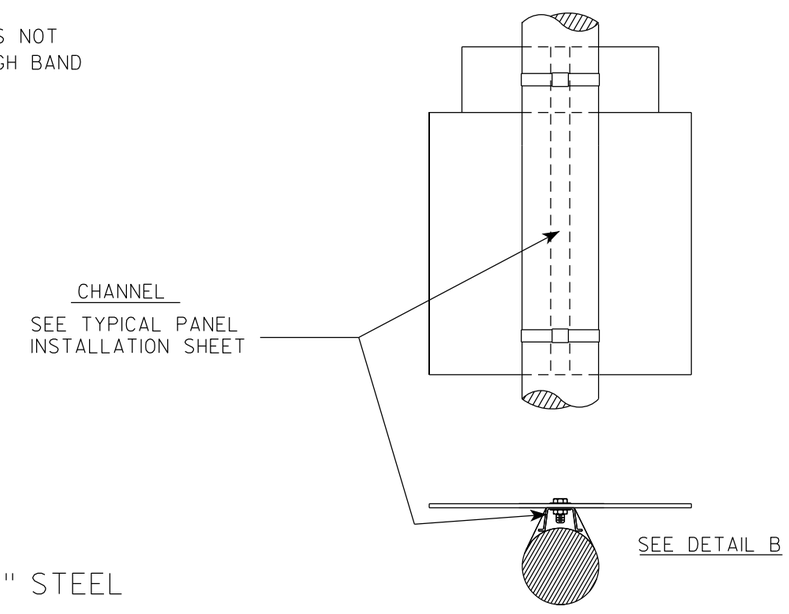

STANDARD SIGN
SIGN BANDING DETAILS

WISCONSIN DEPT OF TRANSPORTATION

APPROVED Matthew R Rauch for State Traffic Engineer

DATE 6/10/19 PLATE NO. A5-9.4

PROJECT NO:	HWY:	COUNTY:		SHEET NO: 176	E

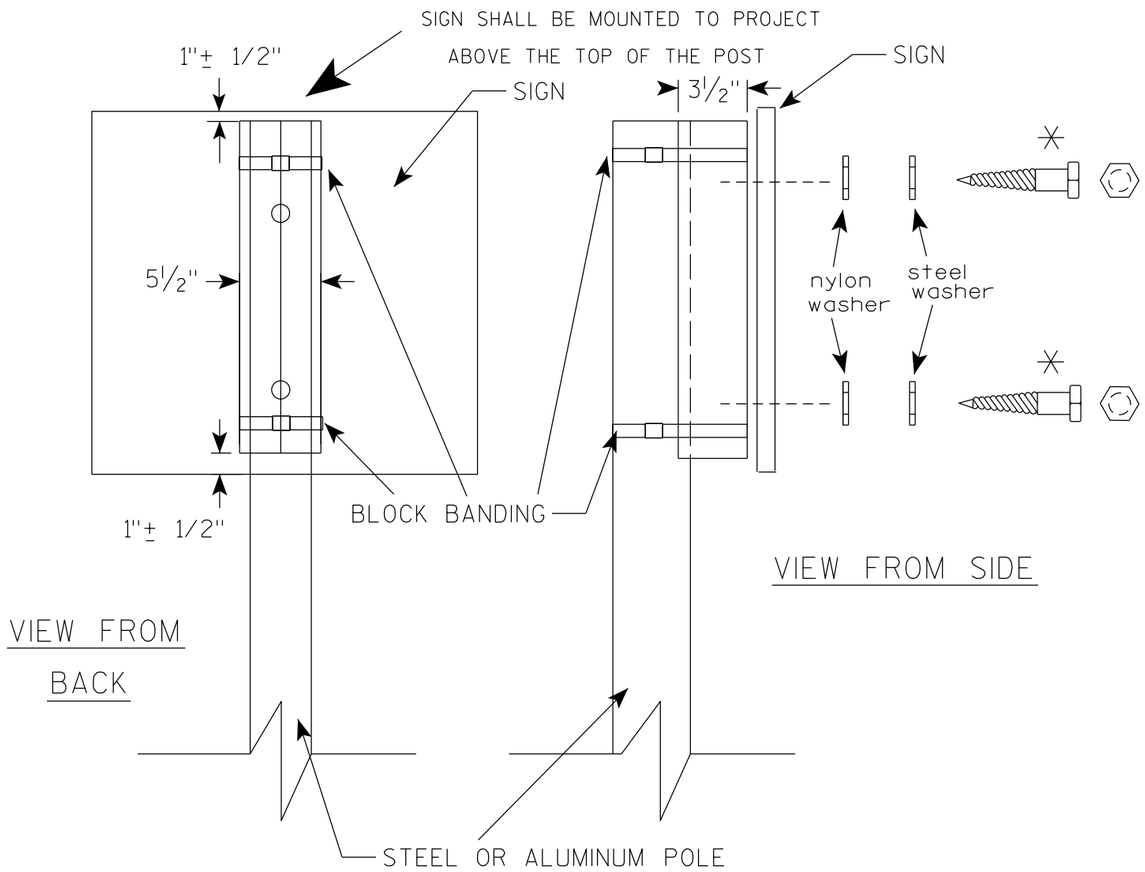

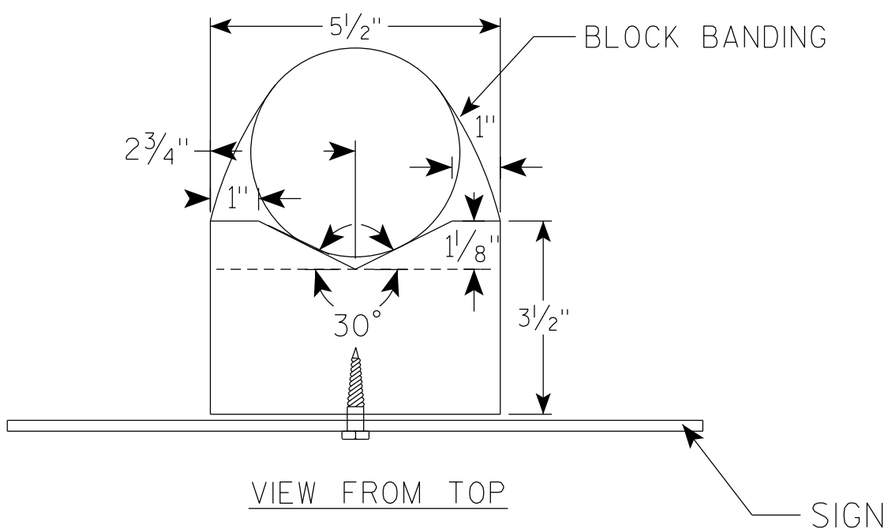

GENERAL NOTES

1. WOOD 4"X6" POST MATERIAL SHALL CONFORM TO 507.2.2 OF THE WisDOT STANDARD SPECIFICATIONS
2. BLOCK BANDING AND CLIPS SHALL BE STAINLESS STEEL, 3/4" WIDTH AND 0.025" THICKNESS
3. SIGNS 3' OR GREATER IN HEIGHT SHALL UTILIZE 3 BLOCK BANDS. SIGNS UNDER 3' IN HEIGHT SHALL UTILIZE 2 BLOCK BANDS
4. ACTUAL NUMBER OF FASTENERS PER SIGN VARIES WITH THE SIGN AREA, BUT NORNALLY THERE ARE TWO. FOR SIGNS GREATER THAN 9 S.F. 3 FASTENERS SHALL BE USED.
5. ALL SIGN MOUNTING BOLTS AND WASHERS SHALL BE EITHER:
   a. Hot dip or mechanically galvanized in accordance with ASTM Designation: A 153, Class D
   b. Electro-galvanized in accordance with ASTM Designation : B 633, TYPE III, SC 3
6. ALL BOLTS SHALL HAVE HEXAGONAL HEADS.
7. STEEL WASHERS SHALL BE 1 1/4" O.D. X 3/8" I.D. X 1/16"
8. NYLON WASHERS SHALL BE 1 1/4" O.D. X 3/8" I.D. X .080 FOR TYPE H OR TYPE F FACE SIGN

✳ LAG BOLTS SHALL BE 3/8" X 2 1/2"

7

7

BLOCK BANDING DETAIL
(V-BLOCK OPTION)

WISCONSIN DEPT OF TRANSPORTATION

APPROVED Matthew R Rauch
for State Traffic Engineer

DATE 4/19/2022 PLATE NO. A5-10.3

PROJECT NO:				SHEET NO: 177	E

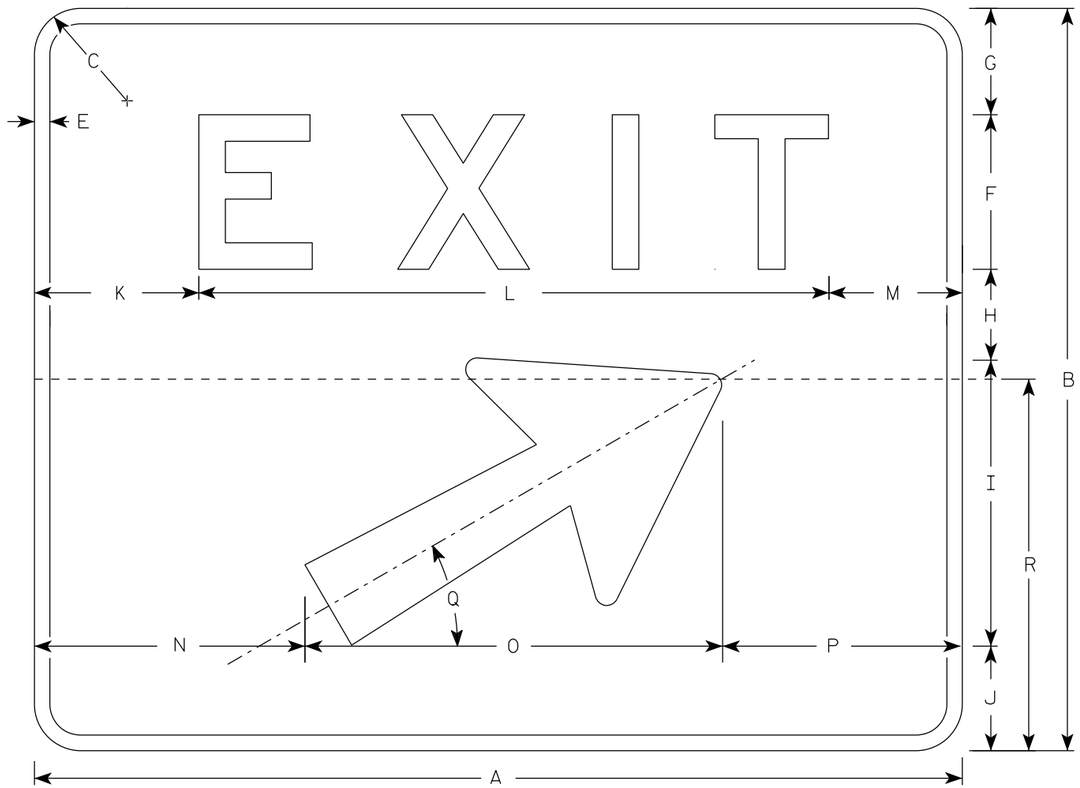

E5-1

NOTES

1. Sign is Type II - Type H reflective
2. Color:
   Background - Green
   Message - White
3. Message Series - E
4. Sign shall be split into two seperate pieces as shown on the detail by the dashed line (----------) for sizes 4 & 5.
5. Arrow is Type "A" from sign plate A1-1.
6. As per the Standard Spec's, this sign shall not have a vertical joint.
7. Size 3 E5-1 shall only be used in a Work Zone application with a Temporary Sign Support

SIZE	A	B	C	D	E	F	G	H	I	J	K	L	M	N	O	P	Q	R	S	T	U	V	W	X	Y	Z	Area sq. ft.
1																											
2S																											
2M																											
3	48	48	3		1	10	6 7/8	5 7/8	18 1/2	6 3/4	8 1/2	31 1/8	8 3/8	11 1/2	27	9 1/2	30°	30									16.0
4	60	48	3		1	10	6 7/8	5 7/8	18 1/2	6 3/4	10 5/8	40 3/4	8 5/8	17 1/2	27	15 1/2	30°	30									20.0
5	72	60	3		1	12	9 3/4	10	18 1/2	9 3/4	13 1/4	48 1/2	10 1/4	23 1/2	27	21 1/2	30°	30									30.0

STANDARD SIGN

E5-1

WISCONSIN DEPT OF TRANSPORTATION

APPROVED Matthew R Rauch
for State Traffic Engineer

DATE 1/26/2023 PLATE NO. E5-1.12

PROJECT NO: | HWY: | COUNTY: | SHEET NO: 178 | E

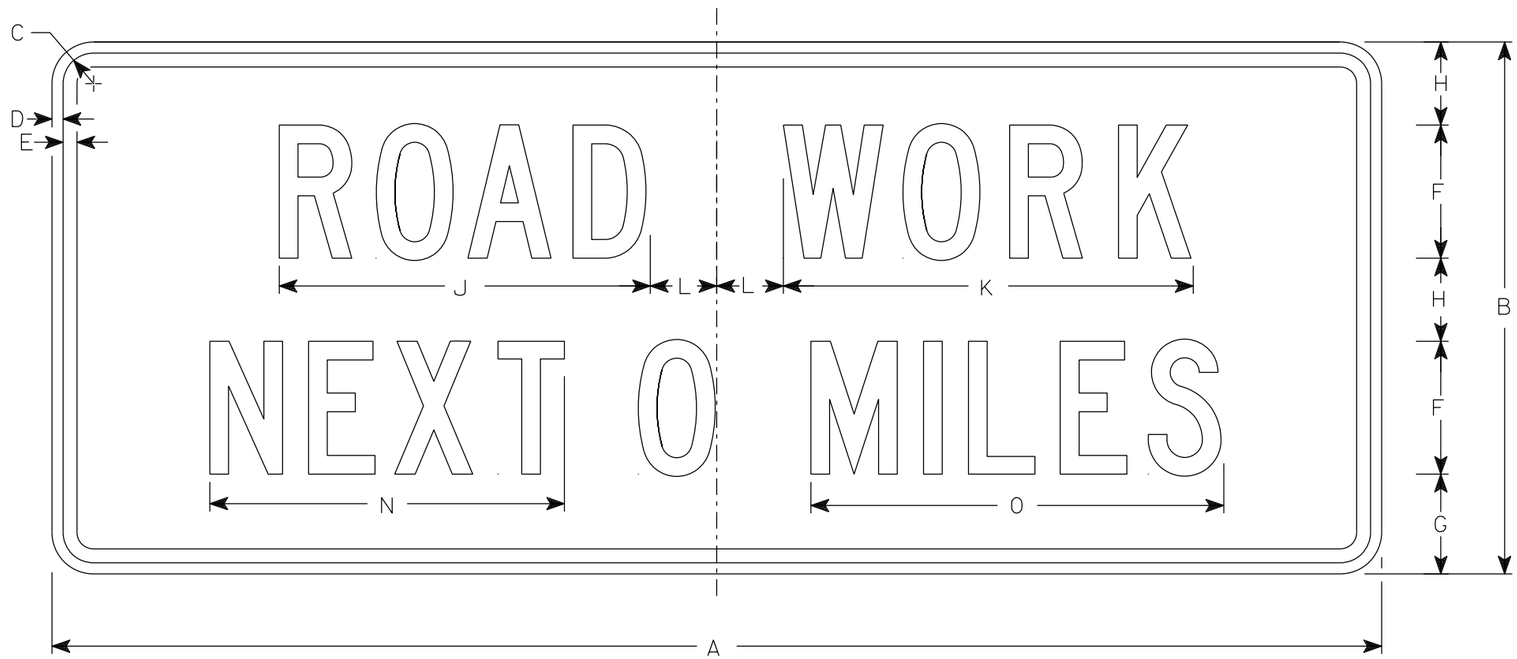

G20-1

NOTES

1. Sign is Type II - Type F Reflective
2. Color:
   Background - Orange
   Message - Black
3. Message Series - C
4. Corners may be square or rounded when base material is plywood but borders shall be rounded as shown. When base material is metal, the corners and borders shall be rounded.
5. Round distance to nearest whole Mile and substitute appropriate numerals and optically adjust spacing to achieve proper balance

SIZE	A	B	C	D	E	F	G	H	I	J	K	L	M	N	O	P	Q	R	S	T	U	V	W	X	Y	Z	Area sq. ft.
1																											
2S	60	24	1 7/8	1/2	5/8	6	4 1/2	3 3/4		16 3/4	18 1/2	3		16	18 5/8												10.0
2M	60	24	1 7/8	1/2	5/8	6	4 1/2	3 3/4		16 3/4	18 1/2	3		16	18 5/8												10.0
3	60	24	1 7/8	1/2	5/8	6	4 1/2	3 3/4		16 3/4	18 1/2	3		16	18 5/8												10.0
4	60	24	1 7/8	1/2	5/8	6	4 1/2	3 3/4		16 3/4	18 1/2	3		16	18 5/8												10.0
5	60	24	1 7/8	1/2	5/8	6	4 1/2	3 3/4		16 3/4	18 1/2	3		16	18 5/8												10.0

STANDARD SIGN
G20-1

WISCONSIN DEPT OF TRANSPORTATION

APPROVED Matthew R Rauch
for State Traffic Engineer
DATE 1/26/2023 PLATE NO. G20-1.9

PROJECT NO: | HWY: | COUNTY: | SHEET NO: 179 | E

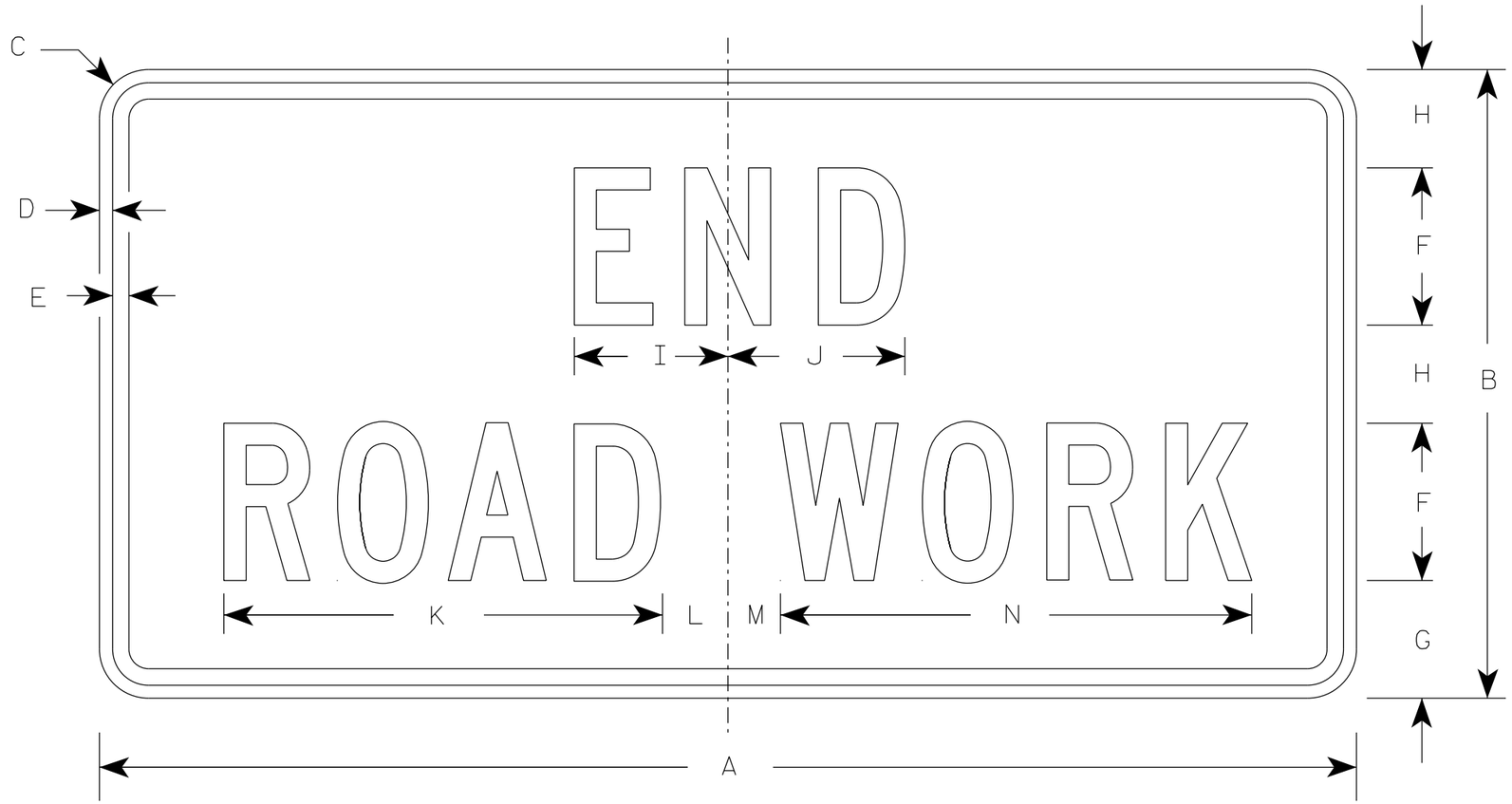

G20-2A

NOTES

1. Sign is Type II - Type F Reflective
2. Color:
   Background - Orange
   Message - Black
3. Message Series - C
4. Corners may be square or rounded when base material is plywood but borders shall be rounded as shown. When base material is metal, the corners and borders shall be rounded.

SIZE	A	B	C	D	E	F	G	H	I	J	K	L	M	N	O	P	Q	R	S	T	U	V	W	X	Y	Z	Area sq. ft.
1	36	18	1 1/2	3/8	1/2	4	3 3/4	2 1/2	4 1/8	4 1/8	11 1/8	2	1	12 1/8													4.5
2	48	24	1 7/8	1/2	5/8	6	4 1/2	3 3/4	5 7/8	6 3/4	16 3/4	2 1/2	1 3/4	18 1/2													8.0
2M	48	24	1 7/8	1/2	5/8	6	4 1/2	3 3/4	5 7/8	6 3/4	16 3/4	2 1/2	1 3/4	18 1/2													8.0
3	48	24	1 7/8	1/2	5/8	6	4 1/2	3 3/4	5 7/8	6 3/4	16 3/4	2 1/2	1 3/4	18 1/2													8.0
4	48	24	1 7/8	1/2	5/8	6	4 1/2	3 3/4	5 7/8	6 3/4	16 3/4	2 1/2	1 3/4	18 1/2													8.0
5	48	24	1 7/8	1/2	5/8	6	4 1/2	3 3/4	5 7/8	6 3/4	16 3/4	2 1/2	1 3/4	18 1/2													8.0

STANDARD SIGN

G20-2A

WISCONSIN DEPT OF TRANSPORTATION

APPROVED Matthew R Rauch
for State Traffic Engineer

DATE 1/26/2023 PLATE NO. G20-2A.10

PROJECT NO: | HWY: | COUNTY: | SHEET NO: 180 | E

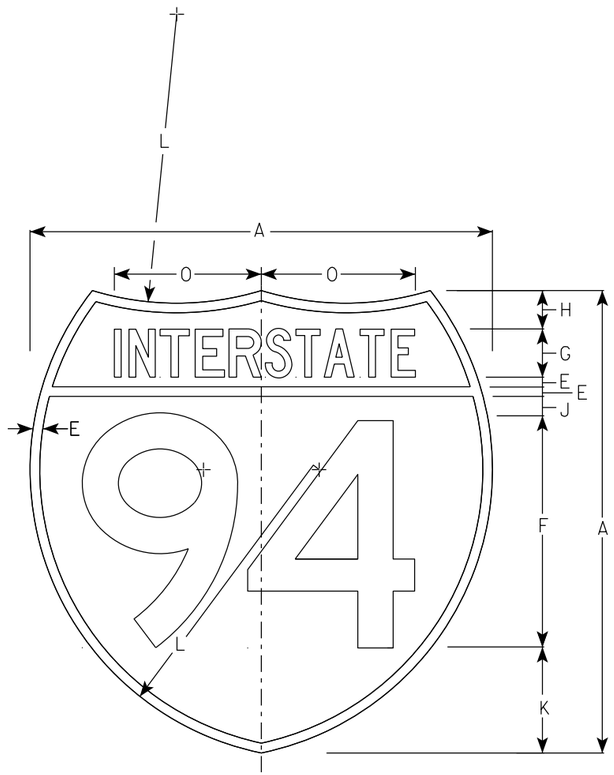

M1-1

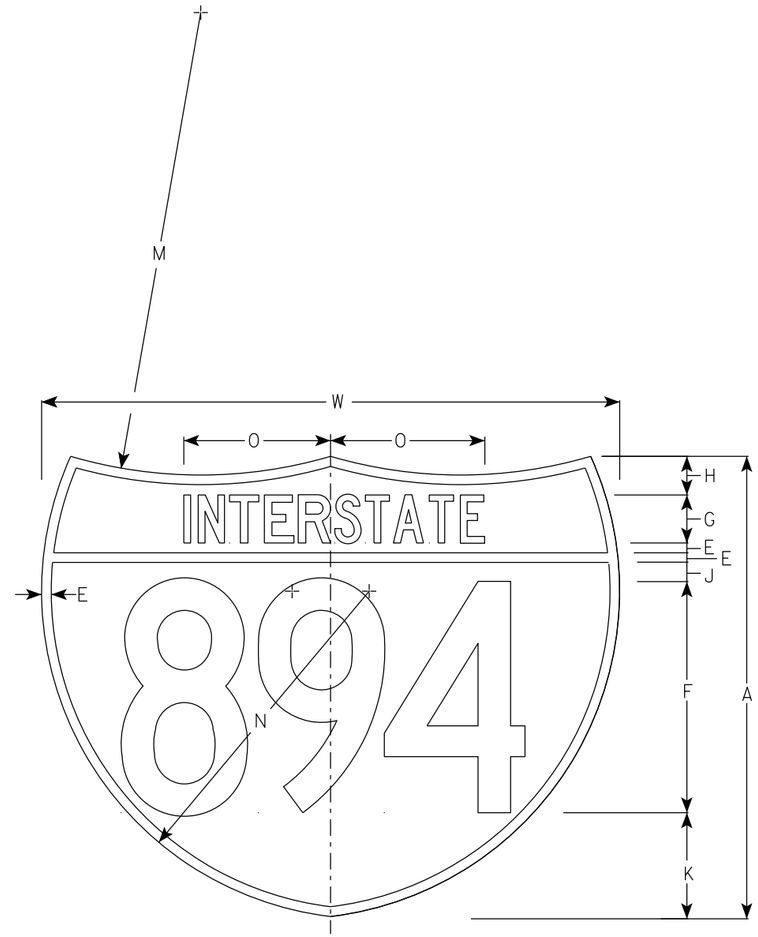

M1-1A

NOTES

1. Sign is Type II - Type H Reflective
2. Color:
   Background - Top Red - Bottom Blue
   Message - White
3. Message Series - See note 5
4. Substitute appropriate numerals & ajust spacing as per plate A10-1.
5. M1-1 - Numerals - D
   Interstate - C
   M1-1A - All copy - C

SIZE	A	B	C	D	E	F	G	H	I	J	K	L	M	N	O	P	Q	R	S	T	U	V	W	X	Y	M1-1 Area sq. ft.	M1-1A Area sq. ft.
1																											
2	24				½	12	2 ½	2		1	5 ½	15	24	17	7 ⅞								30			3.13	3.91
2M	24				½	12	2 ½	2		1	5 ½	15	24	17	7 ⅞								30			3.13	3.91
3	36				¾	18	3 ¾	3		1 ½	8 ¼	22 ½	36	25 ½	11 ¾								45			7.03	8.79
4	36				¾	18	3 ¾	3		1 ½	8 ¼	22 ½	36	25 ½	11 ¾								45			7.03	8.79
5	36				¾	18	3 ¾	3		1 ½	8 ¼	22 ½	36	25 ½	11 ¾								45			7.03	8.79

INTERSTATE ROUTE MARKER
M1-1 FOR ASSEMBLIES

WISCONSIN DEPT OF TRANSPORTATION

APPROVED Matthew R Rauch
for State Traffic Engineer

DATE 11/7/2022 PLATE NO. M1-1.9

PROJECT NO: | HWY: | COUNTY: | SHEET NO: 181 | E

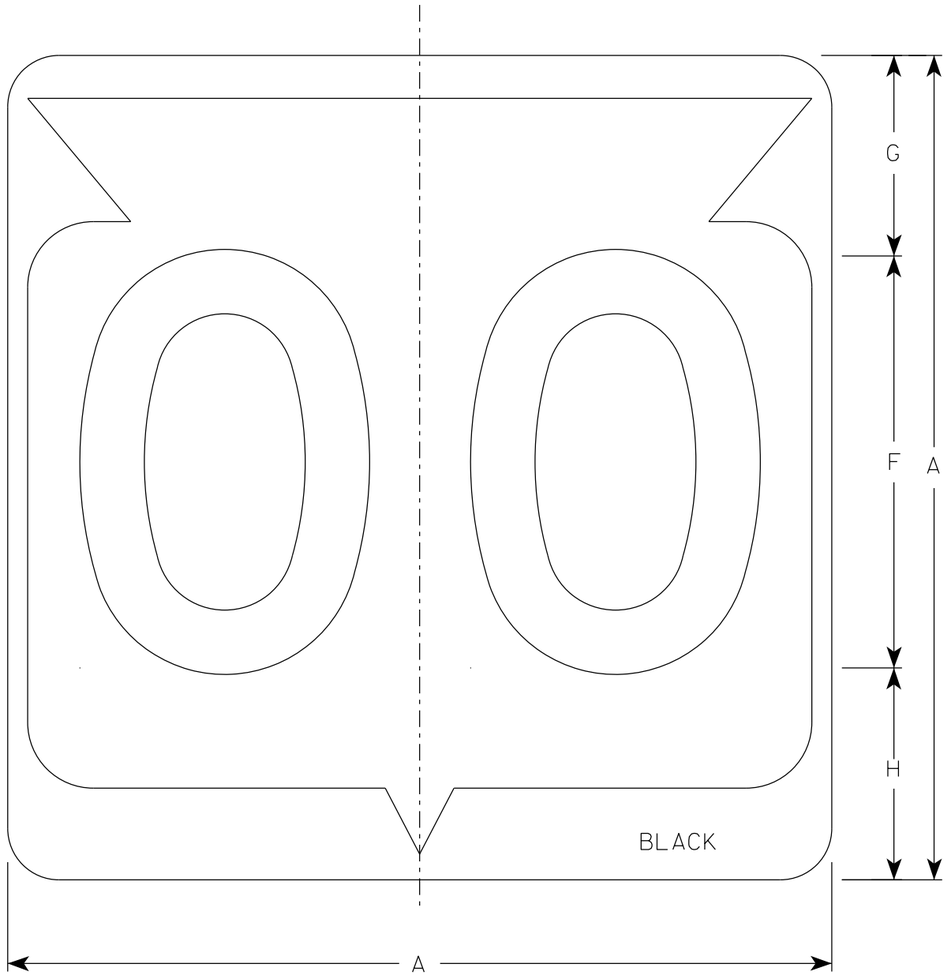

M1-6

NOTES

1. Sign is Type II - Type H Reflective
2. Color:
   Background - White
   Message - Black
3. Message Series - D except 3 number signs Series C

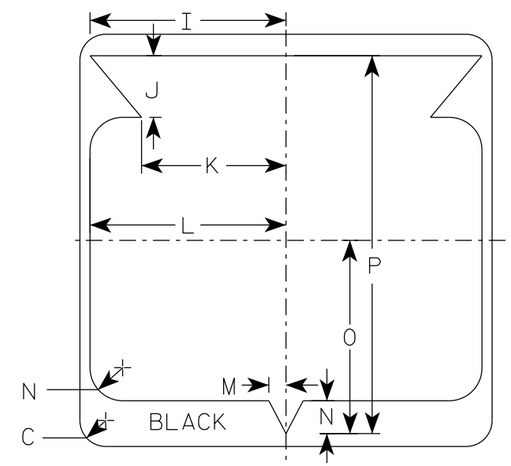

SIZE	A	B	C	D	E	F	G	H	I	J	K	L	M	N	O	P	Q	R	S	T	U	V	W	X	Y	Z	Area sq. ft.
1																											
2	24		1 1/2			12	5 1/2	6 1/2	10 1/4	2 1/2	8 7/8	11 1/2	1	1 7/8	11 1/4	21 7/8											4.0
2M	24		1 1/2			12	5 1/2	6 1/2	10 1/4	2 1/2	8 7/8	11 1/2	1	1 7/8	11 1/4	21 7/8											4.0
3	36		2 1/4			18	8 3/4	9 1/4	15 3/8	5 3/8	12 5/8	17 1/8	1 1/2	2 7/8	16 7/8	33											9.0
4	36		2 1/4			18	8 3/4	9 1/4	15 3/8	5 3/8	12 5/8	17 1/8	1 1/2	2 7/8	16 7/8	33											9.0
5	36		2 1/4			18	8 3/4	9 1/4	15 3/8	5 3/8	12 5/8	17 1/8	1 1/2	2 7/8	16 7/8	33											9.0

STATE ROUTE MARKER
M1-6 FOR ASSEMBLIES

WISCONSIN DEPT OF TRANSPORTATION

APPROVED Matthew R Rauch
for State Traffic Engineer

DATE 11/8/2022 PLATE NO. M1-6.11

PROJECT NO:	HWY:	COUNTY:		SHEET NO: 182	E

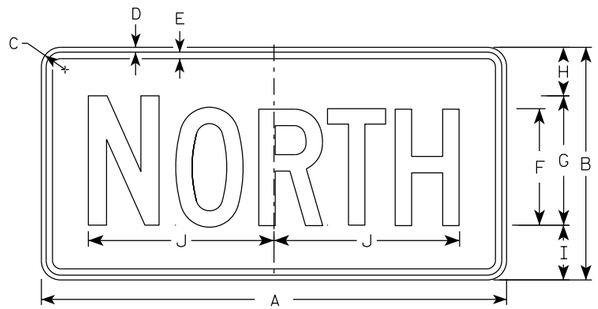

M3-1
MM3-1
MP3-1

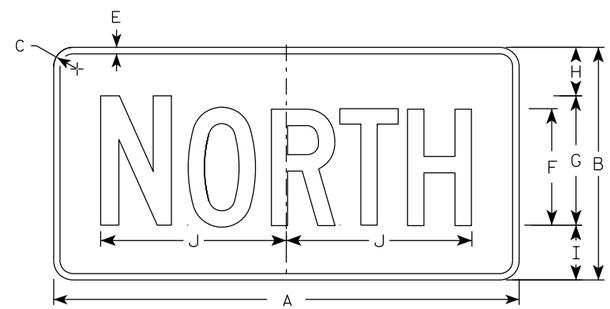

MB3-1
MK3-1
MN3-1

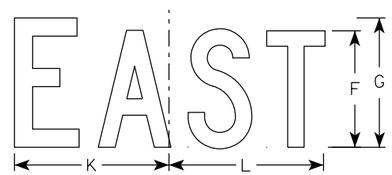

M3-2
MM3-2
MP3-2

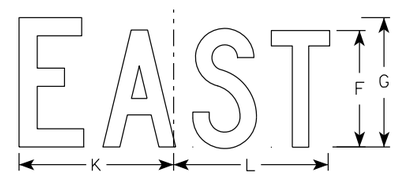

MB3-2
MK3-2
MN3-2

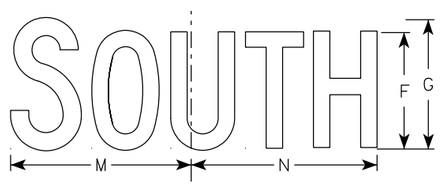

M3-3
MM3-3
MP3-3

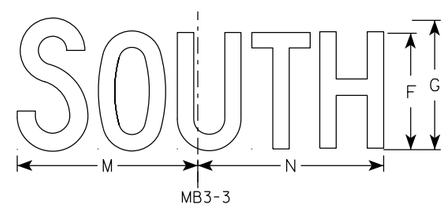

MB3-3
MK3-3
MN3-3

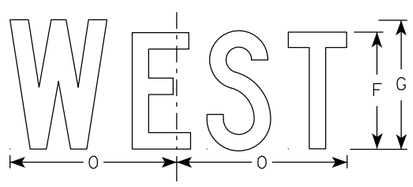

M3-4
MM3-4
MP3-4

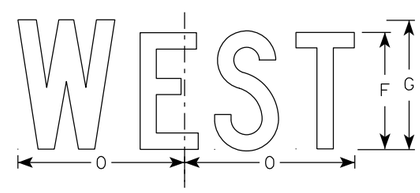

MB3-4
MK3-4
MN3-4

NOTES

1. All Signs Type II - Type H Reflective
2. Color:
   Background - See note 5
   Message - See note 5
3. Message Series - C
4. Corners may be square or rounded when base material is plywood but borders shall be rounded as shown. When base material is metal, the corners and borders shall be rounded.
5. M3-1 thru M3-4 Background - White
   Message - Black
   MB3-1 thru MB3-4 Background - Blue
   Message - White
   MK3-1 thru MK3-4 Background - Green
   Message - White
   MM3-1 thru MM3-4 Background - White
   Message - Green
   MN3-1 thru MN3-4 Background - Brown
   Message - White
   MP3-1 thru MP3-4 Background - White
   Message - Blue
6. Note the first letter of each direction is larger than the remainder of the message.

SIZE	A	B	C	D	E	F	G	H	I	J	K	L	M	N	O	P	Q	R	S	T	U	V	W	X	Y	Z	Area sq. ft.
1																											
2S	24	12	1 1/2	3/8	3/8	6	7	2 1/4	2 3/4	10 1/4	7 7/8	8 3/8	10 1/4	9 3/4	8 3/4												2.00
2M	24	12	1 1/2	3/8	3/8	6	7	2 1/4	2 3/4	10 1/4	7 7/8	8 3/8	10 1/4	9 3/4	8 3/4												2.00
3	36	18	1 1/2	3/8	1/2	9	10	3 3/4	4 1/4	14 3/8	12	12 1/8	14	14 1/8	13												4.5
4	36	18	1 1/2	3/8	1/2	9	10	3 3/4	4 1/4	14 3/8	12	12 1/8	14	14 1/8	13												4.5
5	36	18	1 1/2	3/8	1/2	9	10	3 3/4	4 1/4	14 3/8	12	12 1/8	14	14 1/8	13												4.5

STANDARD SIGNS
M3-1 THRU M3-4
SERIES

WISCONSIN DEPT OF TRANSPORTATION

APPROVED Matthew R Rauch
For State Traffic Engineer

DATE 2/8/2023 PLATE NO. M3-1.15

PROJECT NO: | HWY: | COUNTY: | SHEET NO: 183 | E

NOTES

1. Sign is Type II - Type F Reflective
2. Color:
   Background - Orange
   Message - Black
3. Message Series - B
4. Corners may be square or rounded when base material is plywood but borders shall be rounded as shown. When base material is metal, the corners and borders shall be rounded.

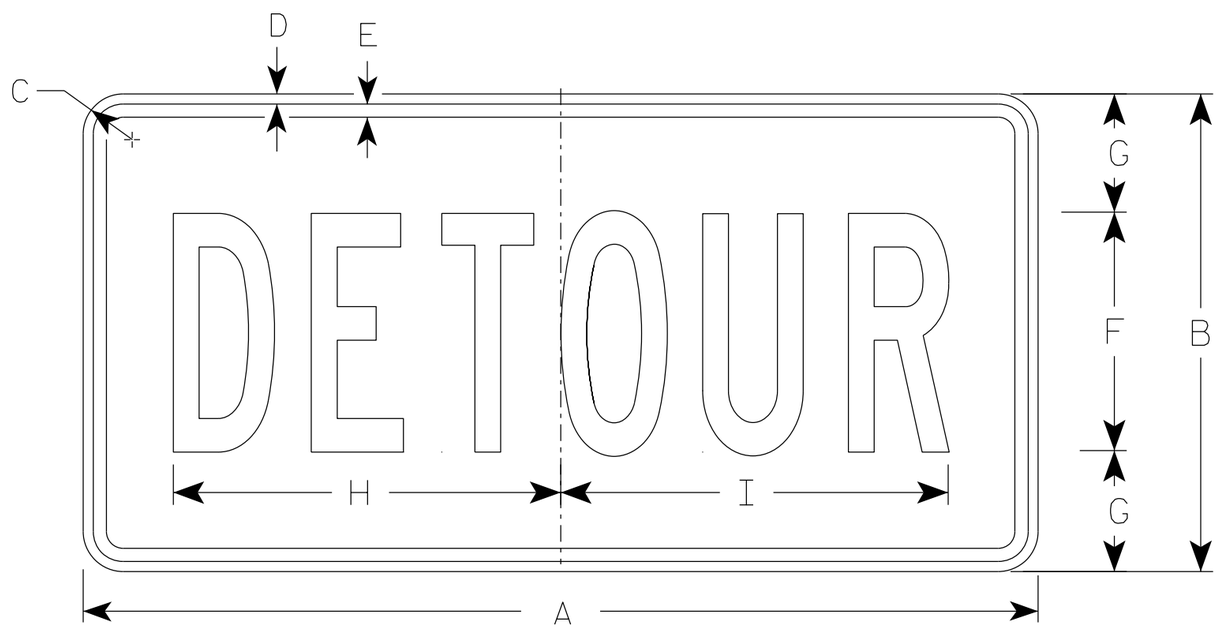

M4-8

SIZE	A	B	C	D	E	F	G	H	I	J	K	L	M	N	O	P	Q	R	S	T	U	V	W	X	Y	Z	Area sq. ft.
1																											
2	24	12	1 1/2	3/8	3/8	6	3	10	10 1/4																		2.0
2M	24	12	1 1/2	3/8	3/8	6	3	10	10 1/4																		2.0
3	36	18	1 1/2	3/8	1/2	9	4 1/2	14 5/8	14 1/2																		4.5
4	36	18	1 1/2	3/8	1/2	9	4 1/2	14 5/8	14 1/2																		4.5
5	36	18	1 1/2	3/8	1/2	9	4 1/2	14 5/8	14 1/2																		4.5

STANDARD SIGN
M4-8

WISCONSIN DEPT OF TRANSPORTATION

APPROVED Matthew R Rauch
for State Traffic Engineer

DATE 2/9/2023 PLATE NO. M4-8.4

PROJECT NO:	HWY:	COUNTY:		SHEET NO:	E

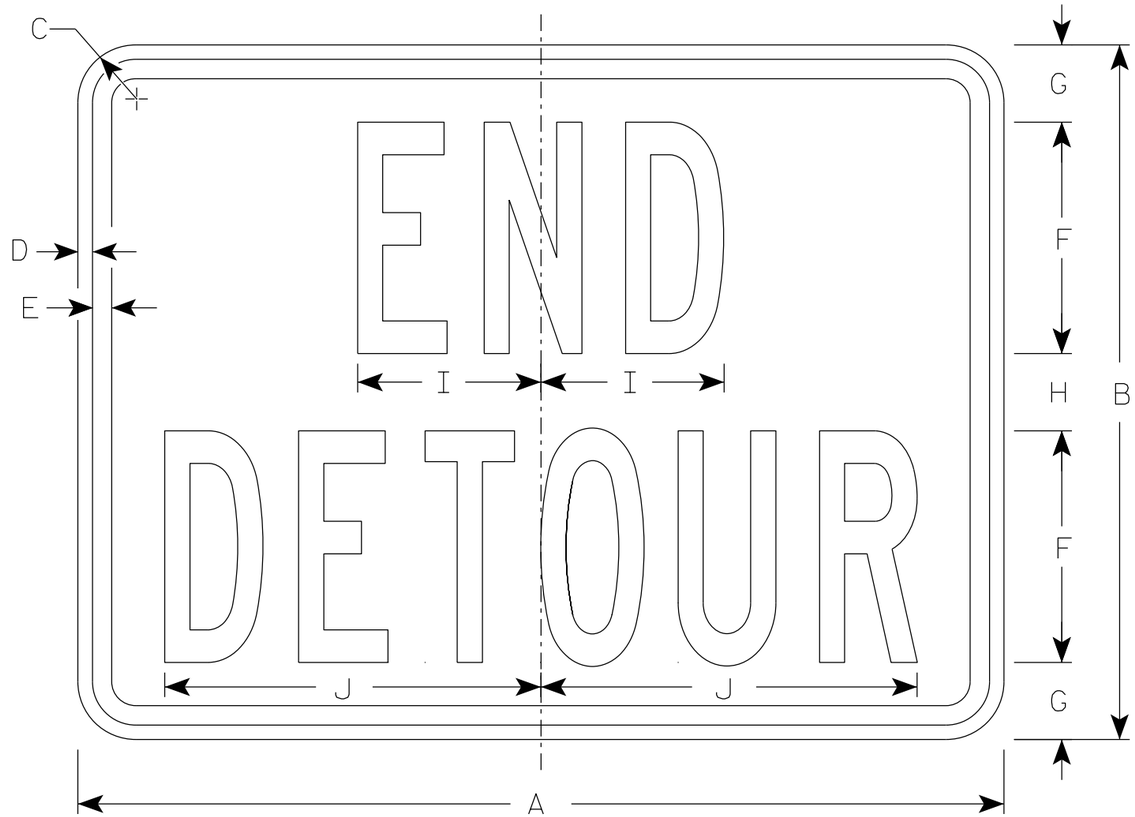

M4-8A

NOTES

1. Sign is Type II - Type F Reflective
2. Color:
   Background - Orange
   Message - Black
3. Message Series - B
4. Corners may be square or rounded when base material is plywood but borders shall be rounded as shown. When base material is metal, the corners and borders shall be rounded.

SIZE	A	B	C	D	E	F	G	H	I	J	K	L	M	N	O	P	Q	R	S	T	U	V	W	X	Y	Z	Area sq. ft.
1																											
2	24	18	1 1/2	3/8	1/2	6	2	2	4 3/4	9 3/4																	3.0
2M	24	18	1 1/2	3/8	1/2	6	2	2	4 3/4	9 3/4																	3.0
3	30	24	1 1/2	3/8	1/2	8	2 1/2	3	6 3/4	13																	5.0
4	30	24	1 1/2	3/8	1/2	8	2 1/2	3	6 3/4	13																	5.0
5	30	24	1 1/2	3/8	1/2	8	2 1/2	3	6 3/4	13																	5.0

STANDARD SIGN
M4-8A

WISCONSIN DEPT OF TRANSPORTATION

APPROVED Matthew R Rauch
for State Traffic Engineer

DATE 2/9/2023 PLATE NO. M4-8A.4

PROJECT NO: | HWY: | COUNTY: | SHEET NO: 185 | E

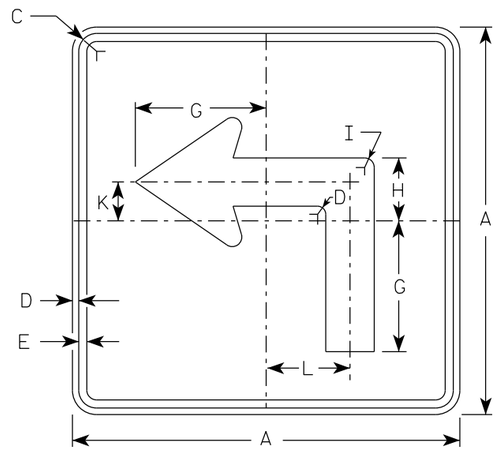

M5-1L
MM5-1L
MO5-1L
MP5-1L

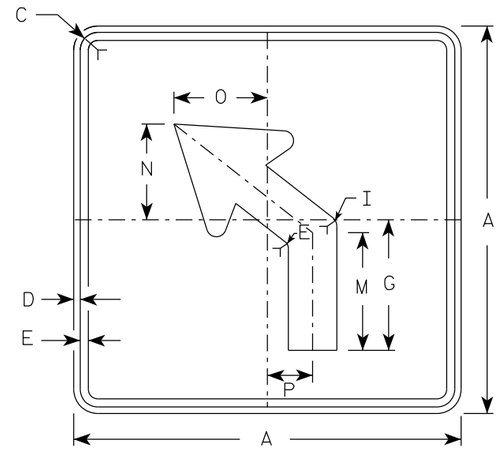

M5-2L
MM5-2L
MO5-2L
MP5-2L

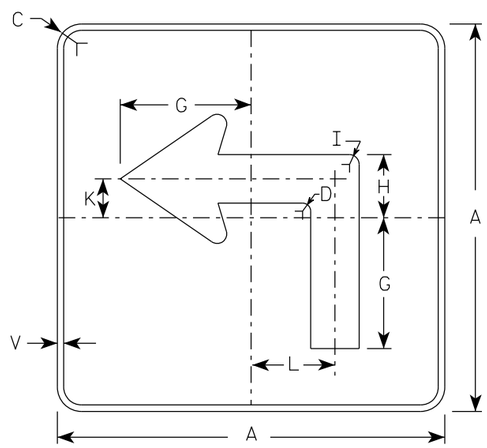

MB5-1L
MK5-1L
MN5-1L
MR5-1L

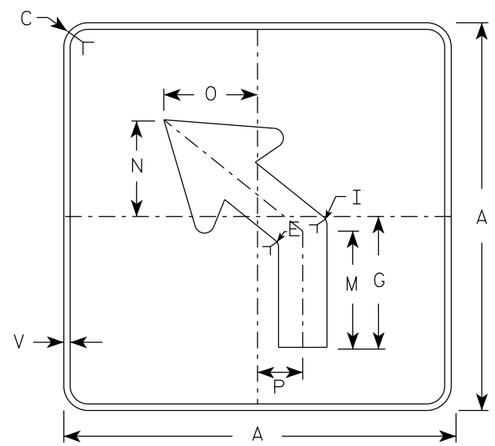

MB5-2L
MK5-2L
MN5-2L
MR5-2L

NOTES

1. Signs are Type II - Type H reflective except as shown
2. Color:
   Background - See note 4
   Message - See note 4
3. Corners may be square or rounded when base material is plywood but borders shall be rounded as shown. When base material is metal, the corners and borders shall be rounded.
4. M5-1 and M5-2 Background - White
   Message - Black
   MB5-1 and MB5-2 Background - Blue
   Message - White
   MK5-1 and MK5-2 Background - Green
   Message - White
   MM5-1 and MM5-2 Background - White
   Message - Green
   MN5-1 and MN5-2 Background - Brown
   Message - White
   MO5-1 and MO5-2 Background - Orange - Type F Reflective
   Message - Black
   MP5-1 and MP5-2 Background - White
   Message - Blue
   MR5-1 and MR5-2 Background - Brown
   Message - Yellow
5. M5-1R same as M5-1L except arrow points right.
6. M5-2R same as M5-2L except arrow tilts right.

ARROW DETAIL

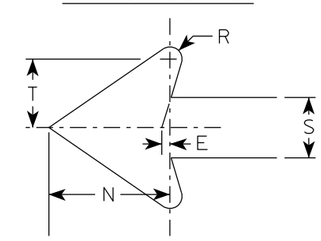

SIZE	A	B	C	D	E	F	G	H	I	J	K	L	M	N	O	P	Q	R	S	T	U	V	W	X	Y	Z	Area sq. ft.
1																											
2S	21		1 1/2	3/8	3/8		7	3 3/8	5/8		2 1/8	4 1/2	6 3/8	5 1/4	5	2 1/2		1/2	2 5/8	3		1/2					3.06
2M	21		1 1/2	3/8	3/8		7	3 3/8	5/8		2 1/8	4 1/2	6 3/8	5 1/4	5	2 1/2		1/2	2 5/8	3		1/2					3.06
3	30		1 7/8	1/2	5/8		10 1/8	4 7/8	7/8		3	6 1/2	9 1/8	7 1/2	7 1/4	3 1/2		3/4	3 3/4	4 1/4		1/2					6.25
4	30		1 7/8	1/2	5/8		10 1/8	4 7/8	7/8		3	6 1/2	9 1/8	7 1/2	7 1/4	3 1/2		3/4	3 3/4	4 1/4		1/2					6.25
5	30		1 7/8	1/2	5/8		10 1/8	4 7/8	7/8		3	6 1/2	9 1/8	7 1/2	7 1/4	3 1/2		3/4	3 3/4	4 1/4		1/2					6.25

STANDARD SIGN
M5-1 & M5-2

WISCONSIN DEPT OF TRANSPORTATION

APPROVED Matthew R Rauch
for State Traffic Engineer

DATE 2/13/2023 PLATE NO. M5-1.15

PROJECT NO: | HWY: | COUNTY: | SHEET NO: 186 | E

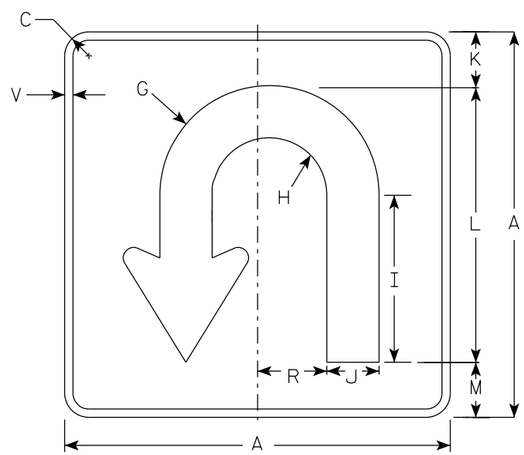

M5-52

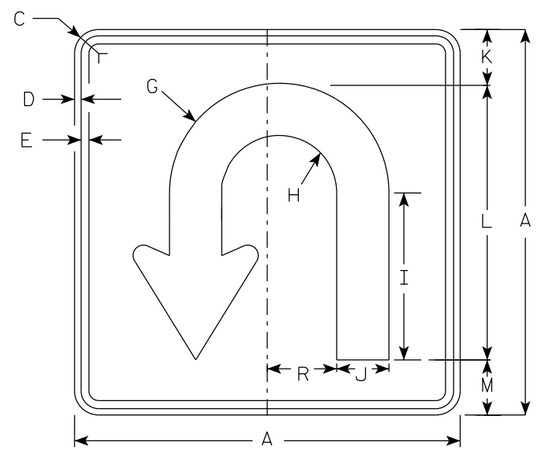

M5-52

NOTES

1. Signs are Type II - Type H Reflective except as Shown
2. Color:
   Background - See Note 4
   Message - See note 4
3. M5-52 Background - White
   Message - Black

   MB5-52 Background - Blue
   Message - White

   MK5-52 Background - Green
   Message - White

   MM5-52 Background - White
   Message - Green

   MN5-52 Background - Brown
   Message - White

   MO5-52 Background - Orange - Type F Reflective
   Message - Black

   MP5-52 Background - White
   Message - Blue

   MR5-52 Background - Brown
   Message - Yellow

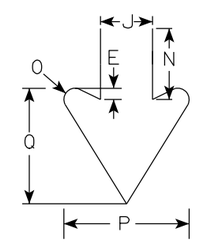

ARROW DETAIL

SIZE	A	B	C	D	E	F	G	H	I	J	K	L	M	N	O	P	Q	R	S	T	U	V	W	X	Y	Z	Area sq. ft.
1																											
2S	21		1 1/2	3/8	3/8		6	3 1/8	9 1/8	2 7/8	3	15	3	3 7/8	5/8	6 7/8	6 3/4	3 3/4				1/2					3.06
2M	21		1 1/2	3/8	3/8		6	3 1/8	9 1/8	2 7/8	3	15	3	3 7/8	5/8	6 7/8	6 3/4	3 3/4				1/2					3.06
3	30		1 7/8	1/2	5/8		8 1/2	4 1/2	13	4 1/8	4 3/8	21 3/8	4 1/4	5 1/2	7/8	9 3/4	8 1/8	5 1/4				5/8					6.25
4	30		1 7/8	1/2	5/8		8 1/2	4 1/2	13	4 1/8	4 3/8	21 3/8	4 1/4	5 1/2	7/8	9 3/4	8 1/8	5 1/4				5/8					6.25
5	30		1 7/8	1/2	5/8		8 1/2	4 1/2	13	4 1/8	4 3/8	21 3/8	4 1/4	5 1/2	7/8	9 3/4	8 1/8	5 1/4				5/8					6.25

STANDARD SIGN
M5-52
SERIES

WISCONSIN DEPT OF TRANSPORTATION

APPROVED Matthew R Rauch
for State Traffic Engineer

DATE 2/13/2023 PLATE NO. M5-52.2

PROJECT NO: | HWY: | COUNTY: | SHEET NO: E

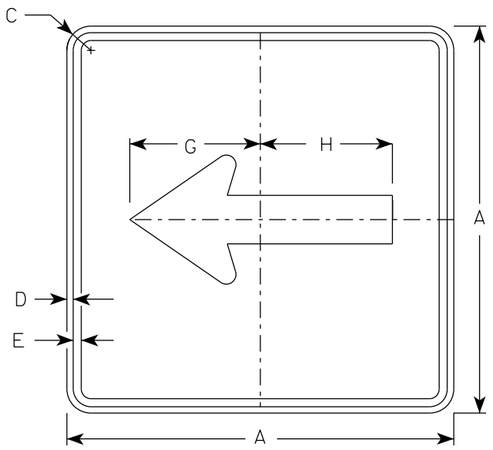

M6-1
MM6-1
MO6-1
MP6-1

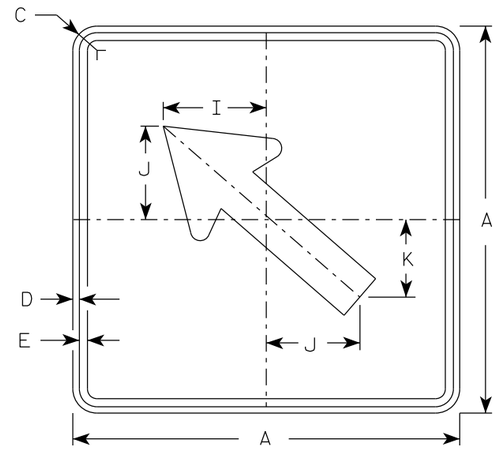

M6-2
MM6-2
MO6-2
MP6-2

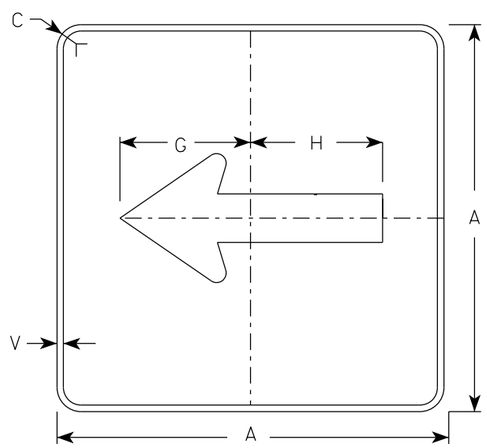

MB6-1
MK6-1
MN6-1
MR6-1

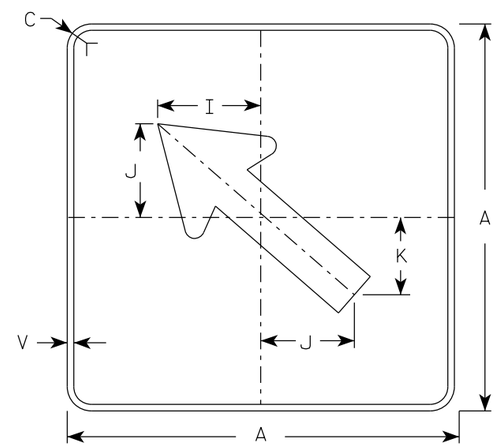

MB6-2
MK6-2
MN6-2
MR6-2

NOTES

1. Signs are Type II - Type H Reflective except as Shown
2. Color:
   Background - See note 4
   Message - See note 4
3. Corners may be square or rounded when base material is plywood but borders shall be rounded as shown. When base material is metal, the corners and borders shall be rounded.
4. M6-1 and M6-2 Background - White
   Message - Black
   MB6-1 and MB6-2 Background - Blue
   Message - White
   MK6-1 and MK6-2 Background - Green
   Message - White
   MM6-1 and MM6-2 Background - White
   Message - Green
   MN6-1 and MN6-2 Background - Brown
   Message - White
   MO6-1 and MO6-2 Background - Orange - Type F Reflective
   Message - Black
   MP6-1 and MP6-2 Background - White
   Message - Blue
   MR6-1 and MR6-2 Background - Brown
   Message - Yellow

ARROW DETAIL

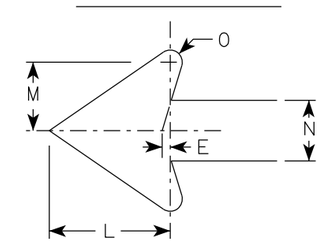

SIZE	A	B	C	D	E	F	G	H	I	J	K	L	M	N	O	P	Q	R	S	T	U	V	W	X	Y	Z	Area sq. ft.
1																											
2S	21		1 1/2	3/8	3/8		7 1/2	7 1/8	5 5/8	5	4 1/4	5 1/4	3	2 5/8	1/2							1/2					3.06
2M	21		1 1/2	3/8	3/8		7 1/2	7 1/8	5 5/8	5	4 1/4	5 1/4	3	2 5/8	1/2							1/2					3.06
3	30		1 7/8	1/2	5/8		10 3/4	10 1/4	8	7 1/4	6	7 1/2	4 1/4	3 3/4	3/4							1/2					6.25
4	30		1 7/8	1/2	5/8		10 3/4	10 1/4	8	7 1/4	6	7 1/2	4 1/4	3 3/4	3/4							1/2					6.25
5	30		1 7/8	1/2	5/8		10 3/4	10 1/4	8	7 1/4	6	7 1/2	4 1/4	3 3/4	3/4							1/2					6.25

STANDARD SIGN
M6-1 & M6-2
SERIES

WISCONSIN DEPT OF TRANSPORTATION

APPROVED Matthew R Rauch
for State Traffic Engineer

DATE 2/13/2023 PLATE NO. M6-1.16

PROJECT NO: | HWY: | COUNTY: | SHEET NO: 188 | E

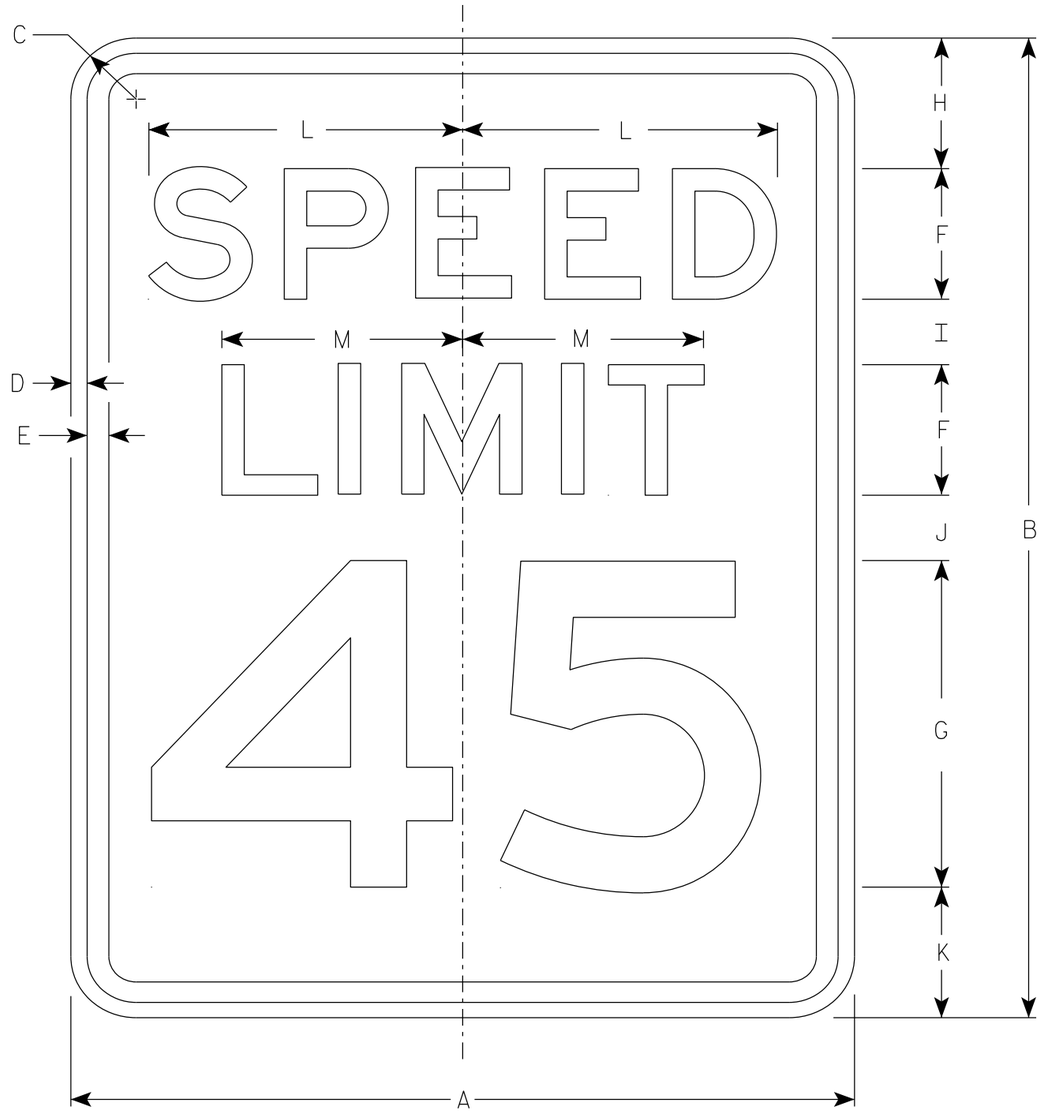

R2-1

NOTES

1. Sign is Type II - Type H Reflective
2. Color:
   Background - White
   Message - Black
3. Message Series - E
4. Substitute appropriate numerals and optically adjust spacing to achieve proper balance.

SIZE	A	B	C	D	E	F	G	H	I	J	K	L	M	N	O	P	Q	R	S	T	U	V	W	X	Y	Z	Area sq. ft.
1	18	24	1 1/2	3/8	1/2	3	8	3	2	2	3	7 1/4	5 1/2														3.0
2S	24	30	1 1/2	3/8	1/2	4	10	3	2 1/4	3 3/8	3 3/8	9 5/8	7 3/8														5.0
2M	30	36	1 7/8	1/2	5/8	5	12	5	2 1/2	2 1/2	4	12	9 1/4														7.5
3	36	48	1 7/8	1/2	5/8	6	14	6	5	5	6	14 3/8	11														12.0
4	36	48	1 7/8	1/2	5/8	6	14	6	5	5	6	14 3/8	11														12.0
5	48	60	3	3/4	1	8	20	6	4 1/2	6 3/4	6 3/4	19 1/4	14 5/8														20.0

STANDARD SIGN
R2-1

WISCONSIN DEPT OF TRANSPORTATION

APPROVED Matthew R Rauch
for State Traffic Engineer

DATE 2/1/23 PLATE NO. R2-1.14

PROJECT NO: | HWY: | COUNTY: | SHEET NO: 189 | E

NOTES

1. Sign is Type II - Type H Reflective
2. Color:
   Background - White
   Message - Black
3. Message Series - D

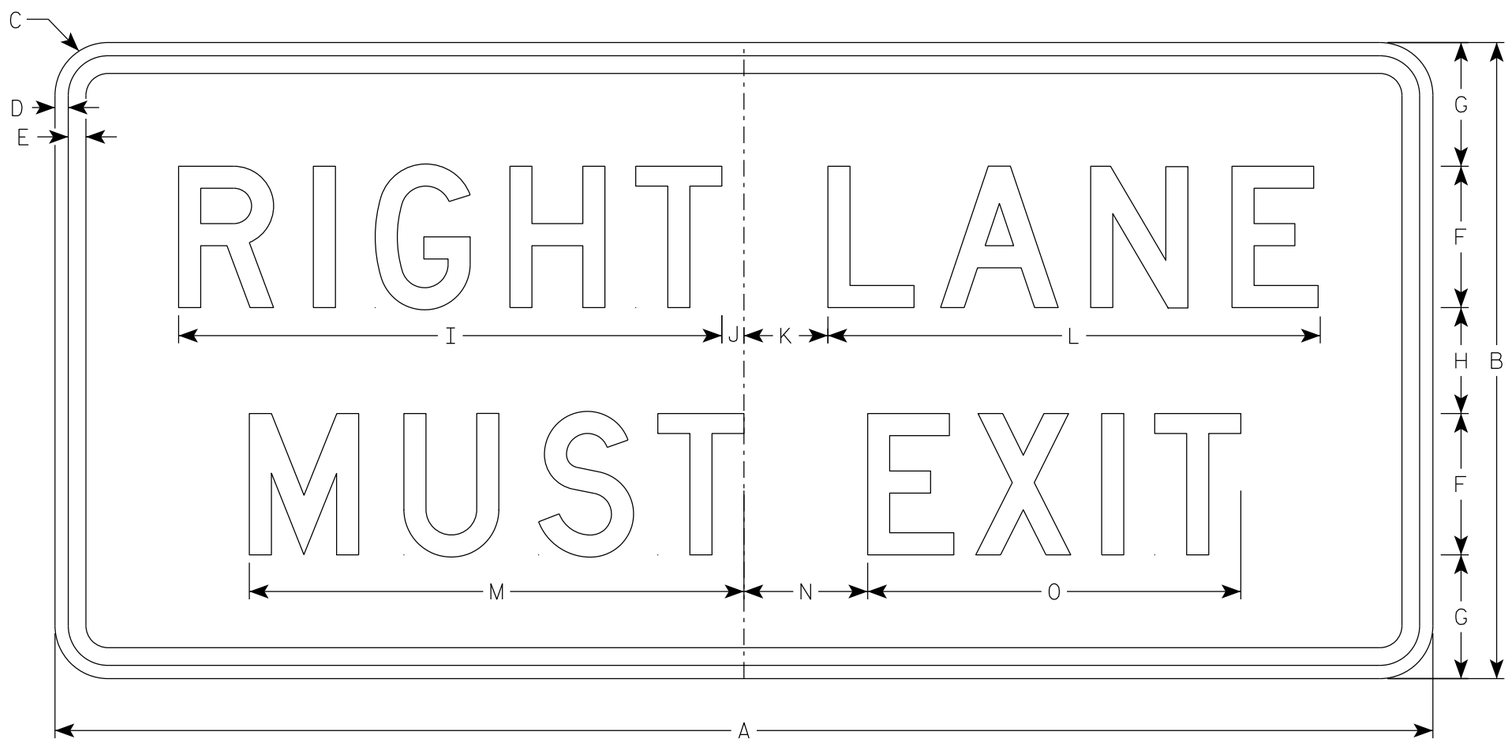

R3-33R

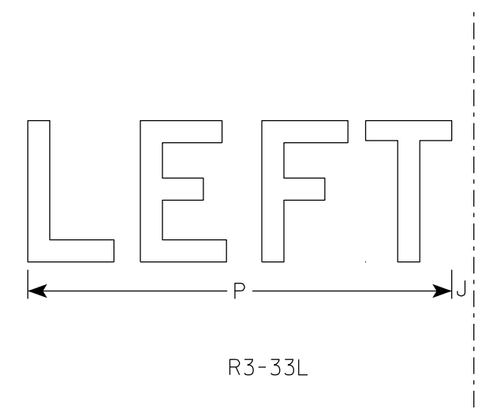

R3-33L

SIZE	A	B	C	D	E	F	G	H	I	J	K	L	M	N	O	P	Q	R	S	T	U	V	W	X	Y	Z	Area sq. ft.
1																											
2S																											
2M																											
3																											
4	78	36	3	¾	1	8	7	6	30 ¾	1 ¼	4 ¾	27 ⅞	28	7	21 ⅛	24											19.5
5	78	36	3	¾	1	8	7	6	30 ¾	1 ¼	4 ¾	27 ⅞	28	7	21 ⅛	24											19.5

STANDARD SIGN
R3-33

WISCONSIN DEPT OF TRANSPORTATION

APPROVED Matthew R Rauch
for State Traffic Engineer

DATE 3/27/24 PLATE NO. R3-33.2

PROJECT NO: | HWY: | COUNTY: | SHEET NO: 190 | E

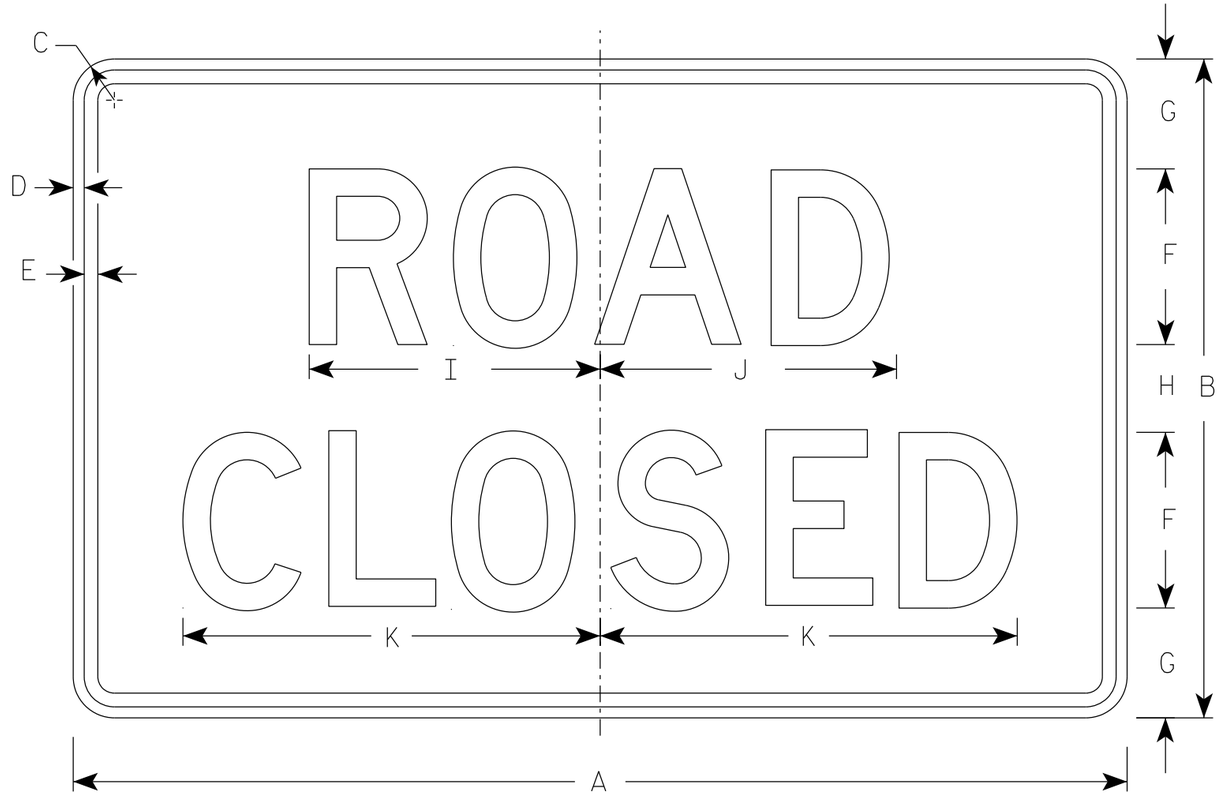

R11-2

NOTES

1. Sign is Type II - Type H Reflective
2. Color:
   Background - White
   Message - Black
3. Message Series - D
4. Corners may be square or rounded when base material is plywood but borders shall be rounded as shown. When base material is metal, the corners and borders shall be rounded.
5. Modify the message as required.

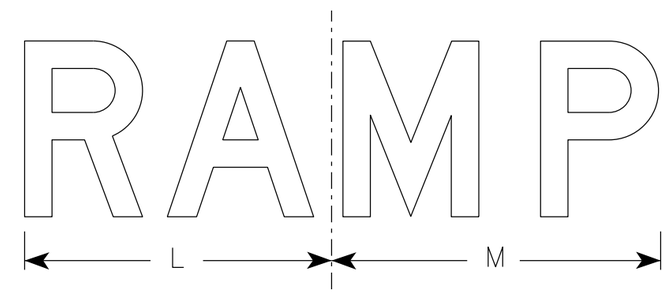

R11-2R

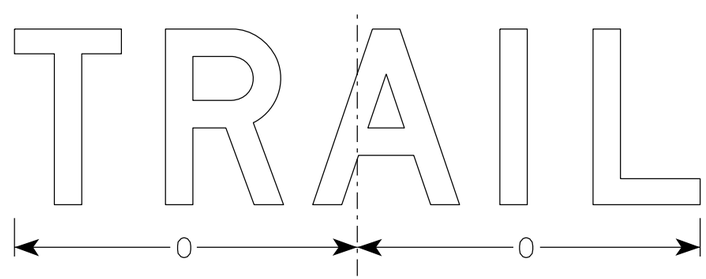

R11-2T

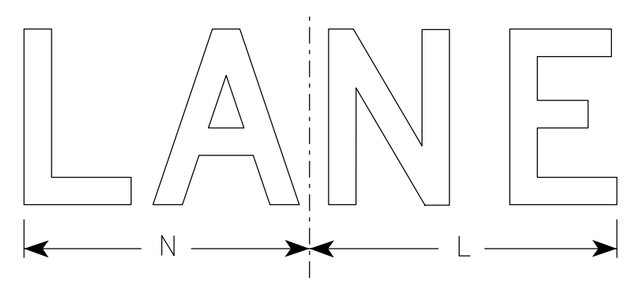

R11-2L

SIZE	A	B	C	D	E	F	G	H	I	J	K	L	M	N	O	P	Q	R	S	T	U	V	W	X	Y	Z	Area sq. ft.
1																											
2S	48	30	1 7/8	1/2	5/8	8	5	4	13 1/4	13 1/2	19	14	15	13	15 5/8												10.0
2M	48	30	1 7/8	1/2	5/8	8	5	4	13 1/4	13 1/2	19	14	15	13	15 5/8												10.0
3	48	30	1 7/8	1/2	5/8	8	5	4	13 1/4	13 1/2	19	14	15	13	15 5/8												10.0
4	48	30	1 7/8	1/2	5/8	8	5	4	13 1/4	13 1/2	19	14	15	13	15 5/8												10.0
5	48	30	1 7/8	1/2	5/8	8	5	4	13 1/4	13 1/2	19	14	15	13	15 5/8												10.0

STANDARD SIGN
R11-2

WISCONSIN DEPT OF TRANSPORTATION

APPROVED Matthew R Rauch
for State Traffic Engineer

DATE 2/5/24 PLATE NO. R11-2.12

PROJECT NO: | HWY: | COUNTY: | SHEET NO: E

NOTES

1. Sign is Type II - Type H Reflective
2. Color:
   Background - White
   Message - Black
3. Message Series - E except as noted
4. Corners may be square or rounded when base material is plywood but borders shall be rounded as shown. When base material is metal, the corners and borders shall be rounded.

** Substitute appropriate message, optically center message

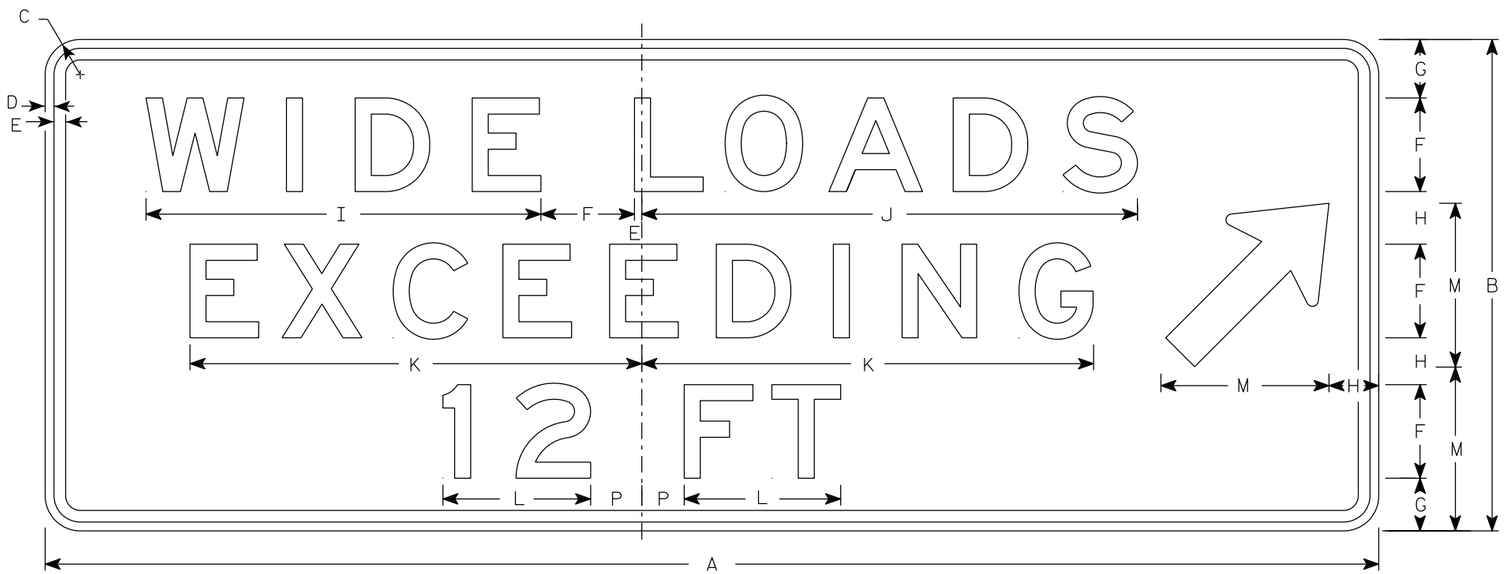

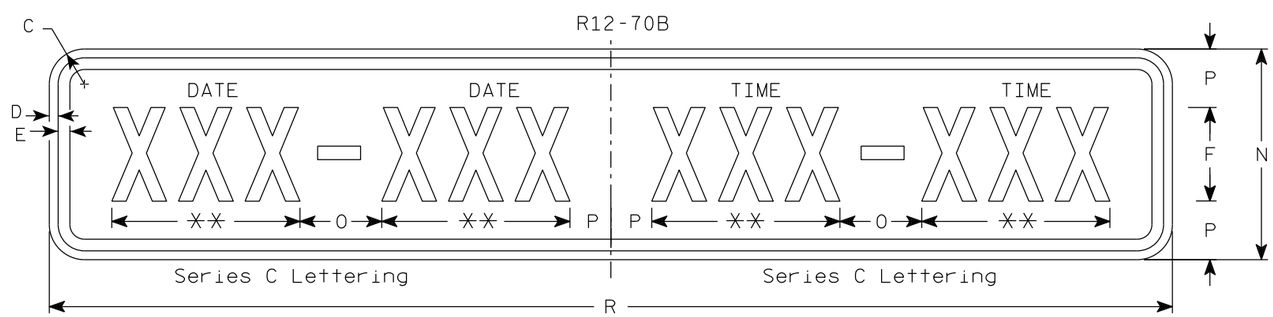

R12-70C

SIZE	A	B	C	D	E	F	G	H	I	J	K	L	M	N	O	P	Q	R	S	T	U	V	W	X	Y	Z	R12-70 Area sq. ft.	R12-70C Area sq. ft.
1																												
2S	90	36	3	1/2	5/8	6	4	5	20 7/8	28 3/8	24 5/8	8 1/8	12	12	6	3		66									22.5	5.5
2M	90	36	3	1/2	5/8	6	4	5	20 7/8	28 3/8	24 5/8	8 1/8	12	12	6	3		66									22.5	5.5
3	90	36	3	1/2	5/8	6	4	5	20 7/8	28 3/8	24 5/8	8 1/8	12	12	6	3		66									22.5	5.5
4	114	42	3	3/4	1	8	5	4	34	42	39	13	14	18	7	3 1/2		96									36.75	12.0
5	114	42	3	3/4	1	8	5	4	34	42	39	13	14	18	7	3 1/2		96									36.75	12.0

TYPICAL SIGN
R12-70B

WISCONSIN DEPT OF TRANSPORTATION

APPROVED Matthew R Rauch
for State Traffic Engineer

DATE 2/9/24 PLATE NO. R12-70B.4

PROJECT NO: | HWY: | COUNTY: | SHEET NO: 192 | E

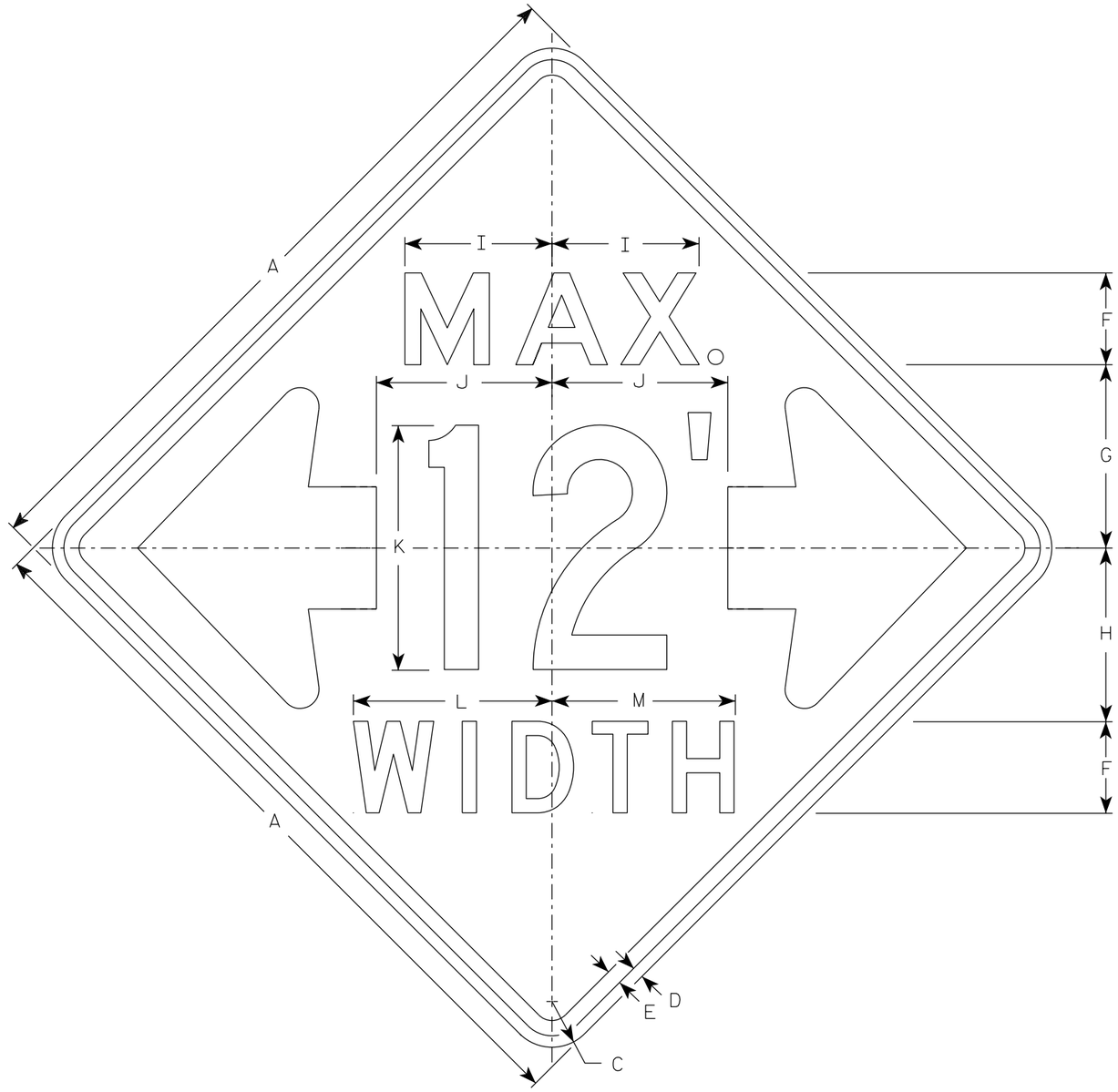

W12-52

NOTES

1. Sign is Type II - Type F Reflective
2. Color:
   Background - Orange
   Message - Black
3. Message Series - See note 5
4. The top line is series E, the numerals are series C, and the bottom line is series D.
5. Substitute appropriate numerals and adjust spacing as required.

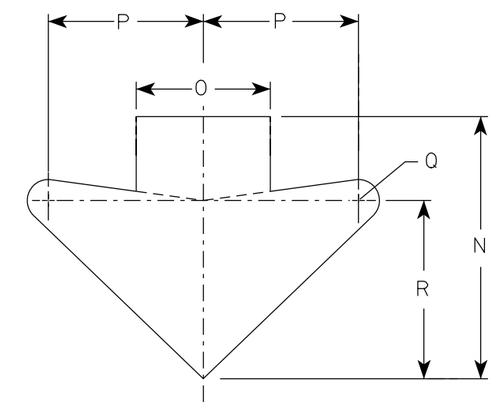

ARROW DETAIL

SIZE	A	B	C	D	E	F	G	H	I	J	K	L	M	N	O	P	Q	R	S	T	U	V	W	X	Y	Z	Area sq. ft.
1																											
2S	48		3	¾	1	6	12	11 ⅜	9 ⅝	11 ½	16	13	12	15 ⅝	8	9 ¼	1 ¼	10 ⅝									16.0
2M	48		3	¾	1	6	12	11 ⅜	9 ⅝	11 ½	16	13	12	15 ⅝	8	9 ¼	1 ¼	10 ⅝									16.0
3																											
4																											
5																											

STANDARD SIGN
W12-52

WISCONSIN DEPT OF TRANSPORTATION

APPROVED Matthew R Rauch
for State Traffic Engineer

DATE 3/10/2024 PLATE NO. W12-52.8

PROJECT NO: | HWY: | COUNTY: | SHEET NO: 193 | E

NOTES

1. Sign is Type II - Type F Reflective
2. Color:
   Background - Orange
   Message - Black
3. Message Series - C
4. Corners may be square or rounded when base material is plywood but borders shall be rounded as shown. When base material is metal, the corners and borders shall be rounded.

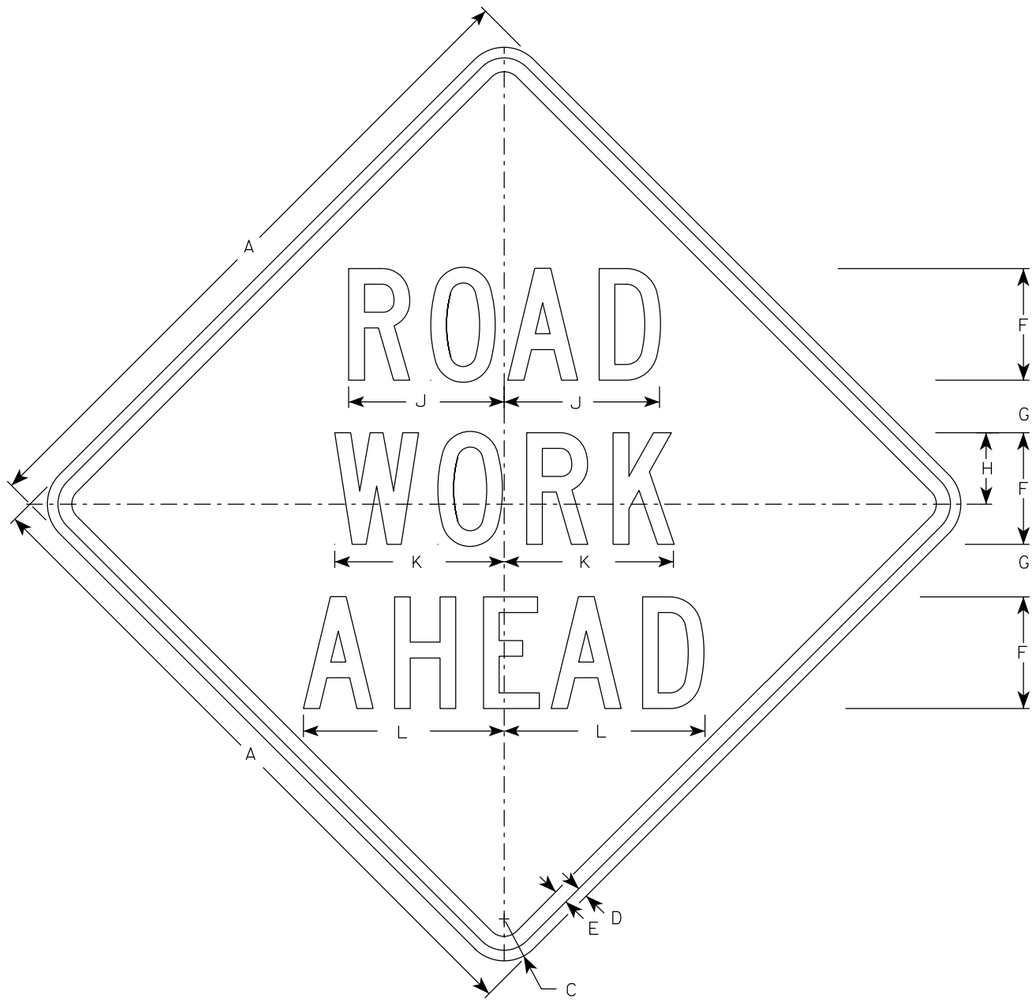

W20-1A

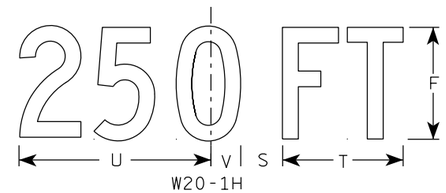

W20-1H

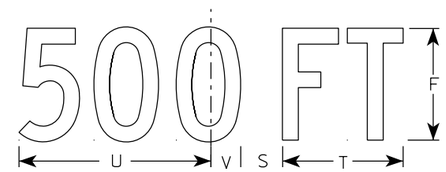

W20-1D

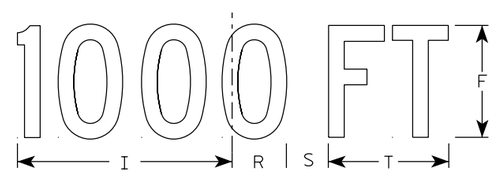

W20-1C

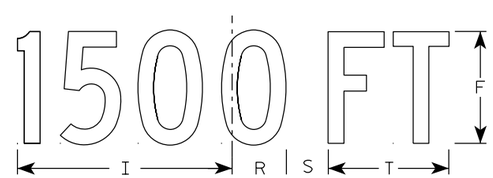

W20-1B

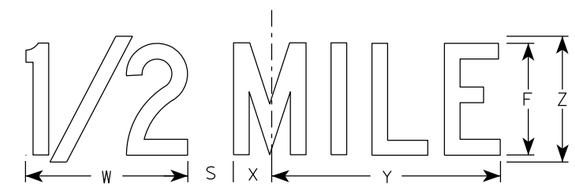

W20-1G

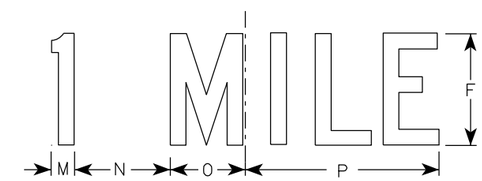

W20-1F

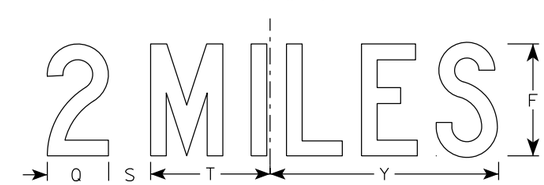

W20-1E

SIZE	A	B	C	D	E	F	G	H	I	J	K	L	M	N	O	P	Q	R	S	T	U	V	W	X	Y	Z	Area sq. ft.
1	36		2 1/4	5/8	3/4	5	2 5/8	3 1/4	10 1/8	7	7 5/8	8 7/8	1 1/8	4 1/2	3 1/2	9	3 1/4	2 1/2	2 1/4	5 5/8	9	1 3/8	8	1 3/4	10 3/4	6	9.0
2S	48		3	3/4	1	8	3 3/4	5 1/8	15 3/8	11 1/8	12 1/8	14 3/8	1 5/8	6 7/8	5 3/8	13 7/8	4 3/8	3 7/8	3	8 5/8	13 3/4	2 1/8	11 7/8	2 3/4	16 3/8	9	16.0
2M	48		3	3/4	1	8	3 3/4	5 1/8	15 3/8	11 1/8	12 1/8	14 3/8	1 5/8	6 7/8	5 3/8	13 7/8	4 3/8	3 7/8	3	8 5/8	13 3/4	2 1/8	11 7/8	2 3/4	16 3/8	9	16.0
3	48		3	3/4	1	8	3 3/4	5 1/8	15 3/8	11 1/8	12 1/8	14 3/8	1 5/8	6 7/8	5 3/8	13 7/8	4 3/8	3 7/8	3	8 5/8	13 3/4	2 1/8	11 7/8	2 3/4	16 3/8	9	16.0
4	48		3	3/4	1	8	3 3/4	5 1/8	15 3/8	11 1/8	12 1/8	14 3/8	1 5/8	6 7/8	5 3/8	13 7/8	4 3/8	3 7/8	3	8 5/8	13 3/4	2 1/8	11 7/8	2 3/4	16 3/8	9	16.0
5	48		3	3/4	1	8	3 3/4	5 1/8	15 3/8	11 1/8	12 1/8	14 3/8	1 5/8	6 7/8	5 3/8	13 7/8	4 3/8	3 7/8	3	8 5/8	13 3/4	2 1/8	11 7/8	2 3/4	16 3/8	9	16.0

STANDARD SIGN
W20-1A, B, C, D, E, F, G & H

WISCONSIN DEPT OF TRANSPORTATION

APPROVED Matthew R Rauch
For State Traffic Engineer

DATE 1/10/2024 PLATE NO. W20-1.12

PROJECT NO:

SHEET NO: E

FILE NAME : C:\CAEfiles\Projects\tr_stdplate\W201.DGN PLOT DATE : 10-JAN 2024 11:16 PLOT BY : dotc4c

WISDOT/CADDS SHEET 42

7

7

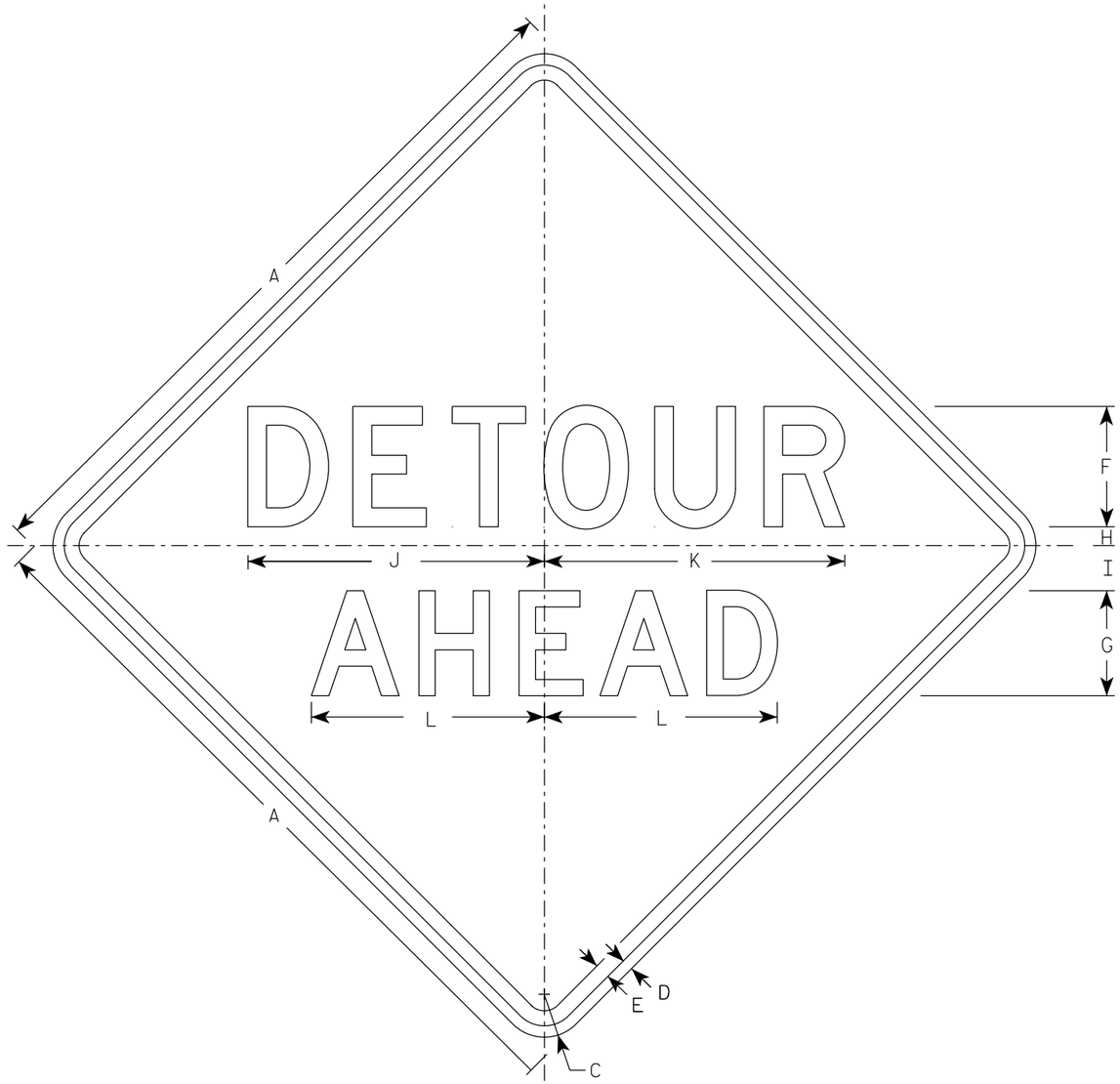

W20-2A

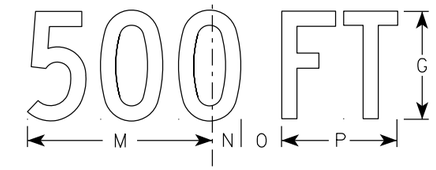

W20-2D

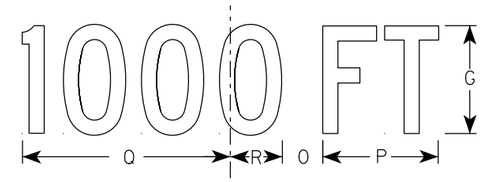

W20-2C

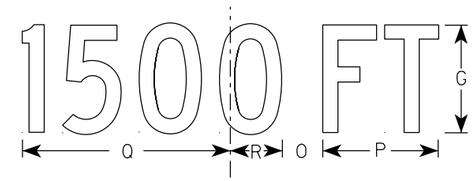

W20-2B

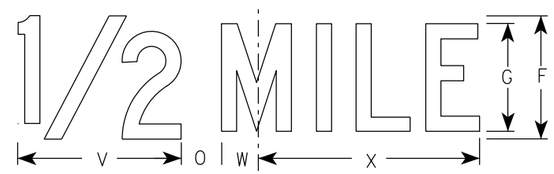

W20-2G

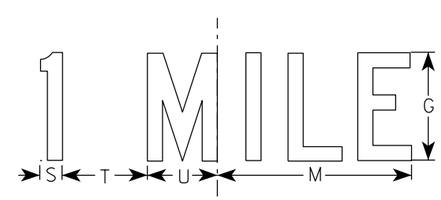

W20-2F

NOTES

1. Sign is Type II - Type F Reflective
2. Color:
   Background - Orange
   Message - Black
3. Message Series - See note 5
4. Corners may be square or rounded when base material is plywood but borders shall be rounded as shown. When base material is metal, the corners and borders shall be rounded.
5. Line 1 is Series D.
   Line 2 is Series D for AHEAD and Series C for all other distances.

SIZE	A	B	C	D	E	F	G	H	I	J	K	L	M	N	O	P	Q	R	S	T	U	V	W	X	Y	Z	Area sq. ft.
1	36		2 1/4	5/8	3/4	6	5	1	2 1/4	14 3/4	15	11 5/8	9	1 3/8	1 7/8	5 5/8	10 1/8	2 1/2	1 1/8	4 1/2	3 1/2	8	1 3/4	10 3/4			9.0
2S	48		3	3/4	1	8	7	1 1/4	3	19 3/4	20	15 1/2	12	1 7/8	2 5/8	7 1/2	13 1/2	3 3/8	1 1/2	6	4 5/8	10 5/8	2 3/8	14 3/8			16.0
2M	48		3	3/4	1	8	7	1 1/4	3	19 3/4	20	15 1/2	12	1 7/8	2 5/8	7 1/2	13 1/2	3 3/8	1 1/2	6	4 5/8	10 5/8	2 3/8	14 3/8			16.0
3	48		3	3/4	1	8	7	1 1/4	3	19 3/4	20	15 1/2	12	1 7/8	2 5/8	7 1/2	13 1/2	3 3/8	1 1/2	6	4 5/8	10 5/8	2 3/8	14 3/8			16.0
4	48		3	3/4	1	8	7	1 1/4	3	19 3/4	20	15 1/2	12	1 7/8	2 5/8	7 1/2	13 1/2	3 3/8	1 1/2	6	4 5/8	10 5/8	2 3/8	14 3/8			16.0
5	48		3	3/4	1	8	7	1 1/4	3	19 3/4	20	15 1/2	12	1 7/8	2 5/8	7 1/2	13 1/2	3 3/8	1 1/2	6	4 5/8	10 5/8	2 3/8	14 3/8			16.0

STANDARD SIGN
W20-2A,B,C,D,F & G

WISCONSIN DEPT OF TRANSPORTATION

APPROVED Matthew R Rauch
For State Traffic Engineer

DATE 1/10/2024 PLATE NO. W20-2.7

PROJECT NO: | HWY: | COUNTY: | SHEET NO: E

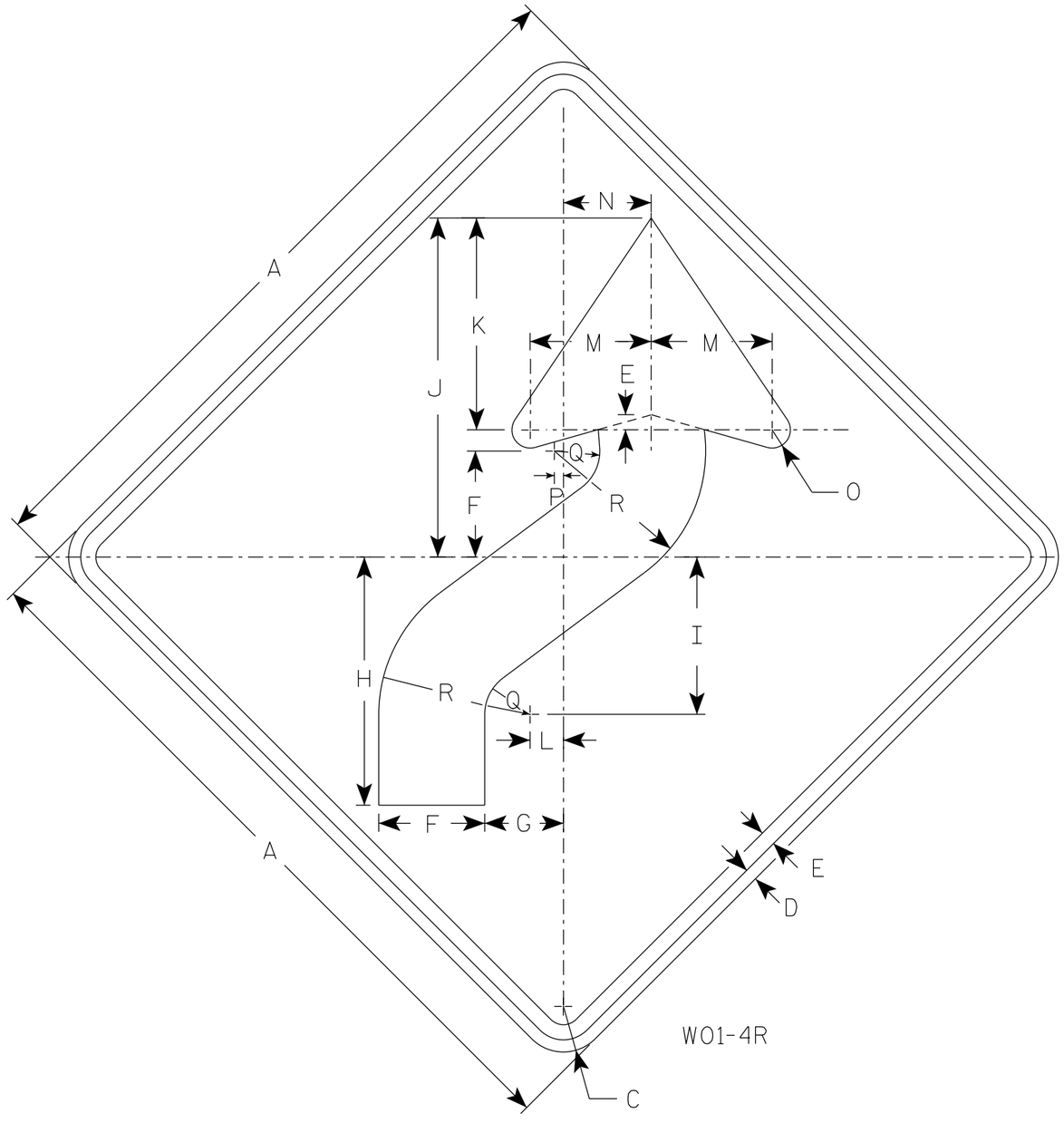

NOTES

1. Sign is Type II - Type F Reflective
2. Color:
   Background - Orange
   Message - Black
3. Corners may be square or rounded when base material is plywood but borders shall be rounded as shown. When base material is metal, the corners and borders shall be rounded.
4. W01-4L is the same as W01-4R except the arrow is reversed along the vertical centerline.

SIZE	A	B	C	D	E	F	G	H	I	J	K	L	M	N	O	P	Q	R	S	T	U	V	W	X	Y	Z	Area sq. ft.
1	36		2 1/4	5/8	3/4	5 1/4	4	12 3/8	7 7/8	16 7/8	10 1/2	1 5/8	6	4 1/2	1	1/2	2 1/4	7 1/2									9.0
2S	48		3	3/4	1	7	5 1/4	16 1/2	10 1/2	22 1/2	14	2 1/4	8	6	1 1/4	5/8	3	10									16.0
2M	48		3	3/4	1	7	5 1/4	16 1/2	10 1/2	22 1/2	14	2 1/4	8	6	1 1/4	5/8	3	10									16.0
3	48		3	3/4	1	7	5 1/4	16 1/2	10 1/2	22 1/2	14	2 1/4	8	6	1 1/4	5/8	3	10									16.0
4	48		3	3/4	1	7	5 1/4	16 1/2	10 1/2	22 1/2	14	2 1/4	8	6	1 1/4	5/8	3	10									16.0
5	48		3	3/4	1	7	5 1/4	16 1/2	10 1/2	22 1/2	14	2 1/4	8	6	1 1/4	5/8	3	10									16.0

STANDARD SIGN
W01-4

WISCONSIN DEPT OF TRANSPORTATION

APPROVED Matthew R Rauch
For State Traffic Engineer

DATE 1/24/2024 PLATE NO. W01-4.2

PROJECT NO: | HWY: | COUNTY: | SHEET NO: 196 | E

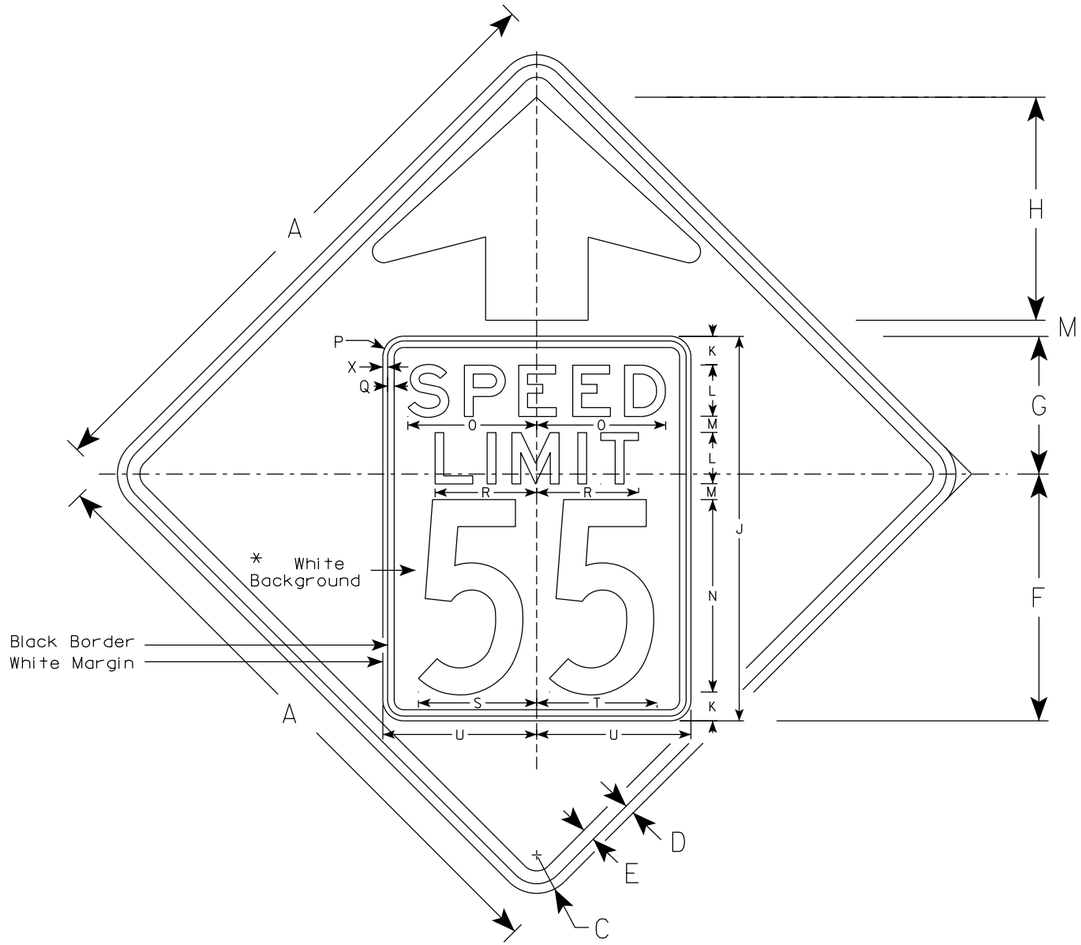

W03-5

NOTES

1. Sign is Type II - Type F Reflective
2. Color: *
   Background - ORANGE*
   Message - BLACK
3. Message Series - C for numbers Series E for wording
4. Substitute appropriate numerals and optically adjust spacing to achieve proper balance

*Speed Limit Sign shall have a White Background

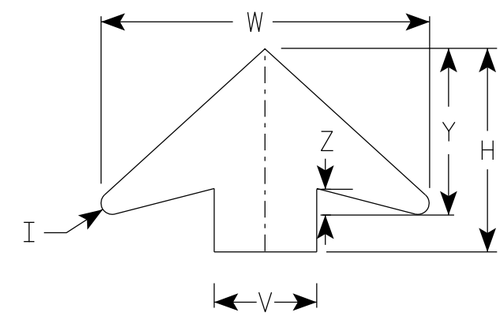

ARROW DETAIL

SIZE	A	B	C	D	E	F	G	H	I	J	K	L	M	N	O	P	Q	R	S	T	U	V	W	X	Y	Z	Area sq. ft.
1	36		2 1/4	5/8	3/4	14 1/2	9 1/2	11 1/2	5/8	24	2	3	1	12	7 1/8	1 1/2	3/8	5 3/4	7 1/4	7 1/8	9	6	19 1/4	3/8	9 3/4	1 5/8	9.0
2S	48		3	3/4	1	19 1/4	10 3/4	17 3/8	7/8	30	2 1/4	4	1 1/4	15	10	1 5/8	1/2	8	9 1/4	9 3/8	12	8	25 5/8	3/8	13	2	16.0
2M	48		3	3/4	1	19 1/4	10 3/4	17 3/8	7/8	30	2 1/4	4	1 1/4	15	10	1 5/8	1/2	8	9 1/4	9 3/8	12	8	25 5/8	3/8	13	2	16.0
3	48		3	3/4	1	19 1/4	10 3/4	17 3/8	7/8	30	2 1/4	4	1 1/4	15	10	1 5/8	1/2	8	9 1/4	9 3/8	12	8	25 5/8	3/8	13	2	16.0
4	48		3	3/4	1	19 1/4	10 3/4	17 3/8	7/8	30	2 1/4	4	1 1/4	15	10	1 5/8	1/2	8	9 1/4	9 3/8	12	8	25 5/8	3/8	13	2	16.0
5	48		3	3/4	1	19 1/4	10 3/4	17 3/8	7/8	30	2 1/4	4	1 1/4	15	10	1 5/8	1/2	8	9 1/4	9 3/8	12	8	25 5/8	3/8	13	2	16.0

STANDARD SIGN
W03-5

WISCONSIN DEPT OF TRANSPORTATION

APPROVED Matthew R Rauch
for State Traffic Engineer

DATE 1/24/2024 PLATE NO. W03-5.2

PROJECT NO:

SHEET NO: E

FILE NAME : C:\CAEFiles\Projects\tr_stdplate\W035.DGN PLOT DATE : 24-JAN 2024 2:20 PLOT BY : dotc4c

WISDOT/CADDS SHEET 42

7

7

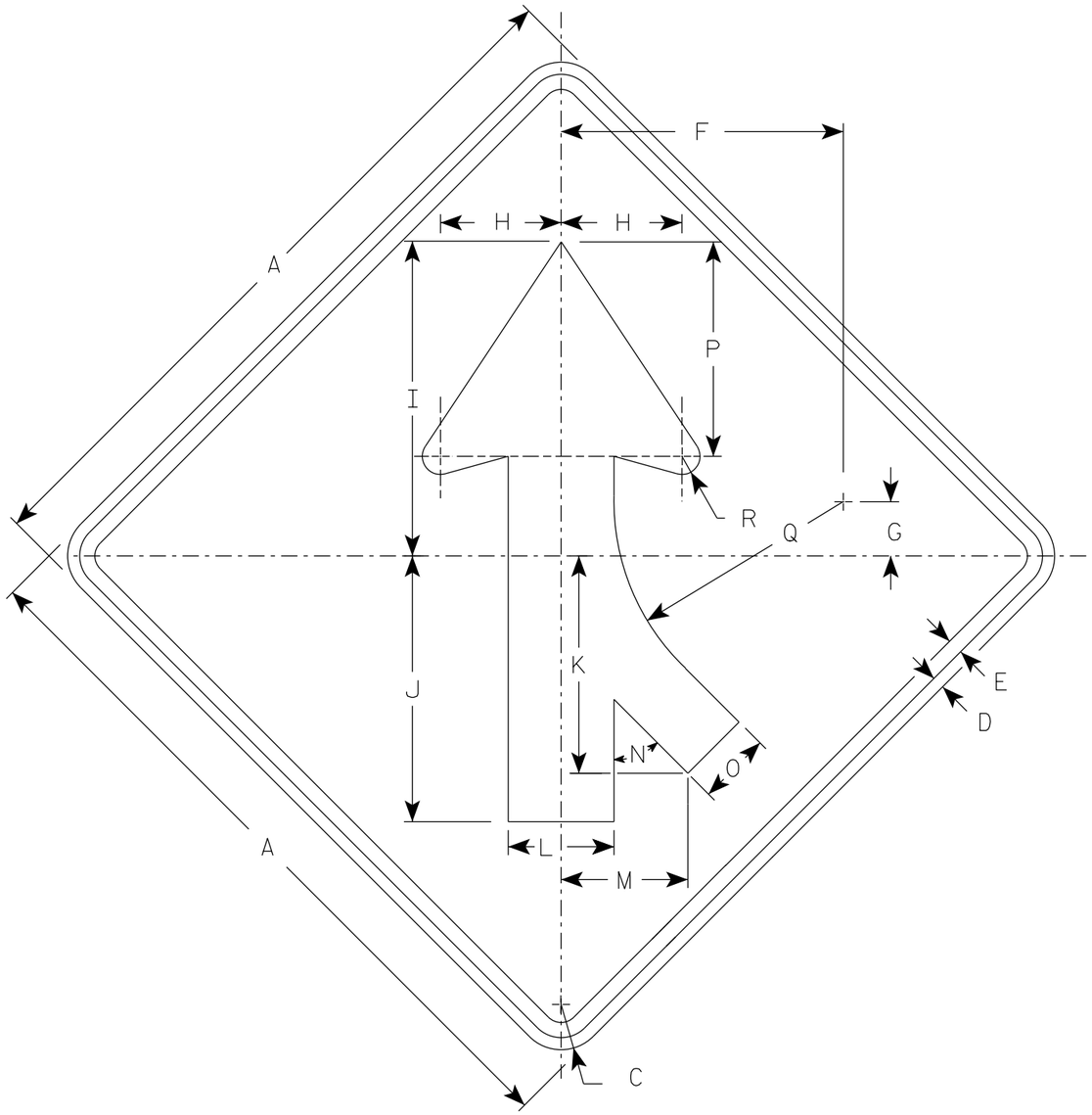

W04-1R

NOTES

1. Sign is Type II - Type F Reflective
2. Color:
   Background - Orange
   Message - Black
3. Corners may be square or rounded when base material is plywood but borders shall be rounded as shown. When base material is metal, the corners and borders shall be rounded.
4. W04-1L is the same as W04-1R except the arrow is reversed along the vertical centerline.

SIZE	A	B	C	D	E	F	G	H	I	J	K	L	M	N	O	P	Q	R	S	T	U	V	W	X	Y	Z	Area sq. ft.
1	36		2 1/4	5/8	3/4	14	2 3/4	6	15 3/4	13 1/4	10 1/4	5 1/4	6 3/8	45°	3 5/8	10 5/8	11 3/8	7/8									9.0
2S	48		3	3/4	1	18 3/4	3 5/8	8	20 1/2	17 1/2	14 3/8	7	8 3/8	45°	4 3/4	14 1/4	15 1/4	1 1/4									16.0
2M	48		3	3/4	1	18 3/4	3 5/8	8	20 1/2	17 1/2	14 3/8	7	8 3/8	45°	4 3/4	14 1/4	15 1/4	1 1/4									16.0
3	48		3	3/4	1	18 3/4	3 5/8	8	20 1/2	17 1/2	14 3/8	7	8 3/8	45°	4 3/4	14 1/4	15 1/4	1 1/4									16.0
4	48		3	3/4	1	18 3/4	3 5/8	8	20 1/2	17 1/2	14 3/8	7	8 3/8	45°	4 3/4	14 1/4	15 1/4	1 1/4									16.0
5	48		3	3/4	1	18 3/4	3 5/8	8	20 1/2	17 1/2	14 3/8	7	8 3/8	45°	4 3/4	14 1/4	15 1/4	1 1/4									16.0

STANDARD SIGN
W04-1

WISCONSIN DEPT OF TRANSPORTATION

APPROVED Matthew R Rauch
for State Traffic Engineer

DATE 1/25/2024 PLATE NO. W04-1.3

PROJECT NO: | HWY: | COUNTY: | SHEET NO: 198 | E

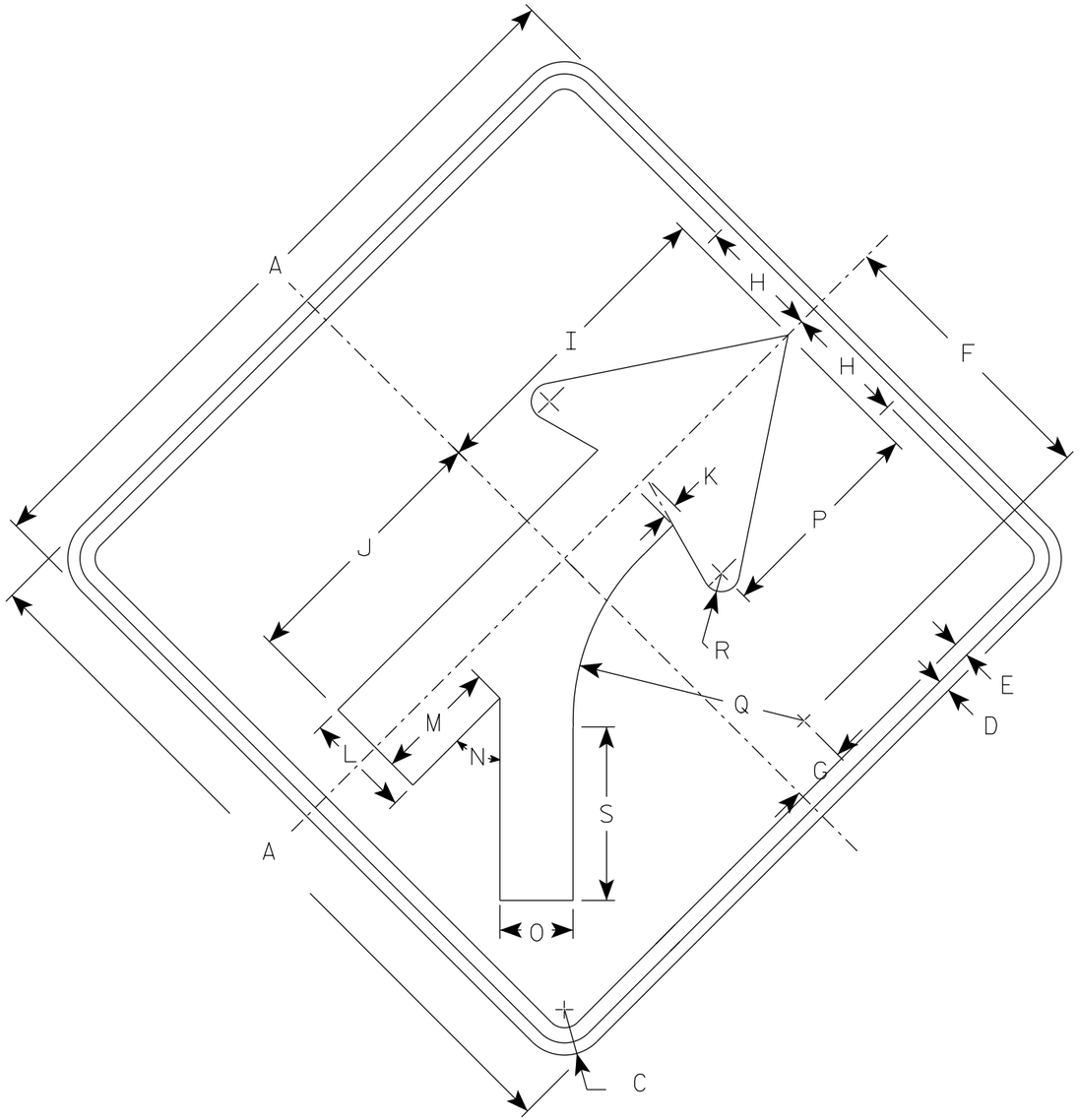

W04-5R

NOTES

1. Sign is Type II - Type F Reflective
2. Color:
   Background - Orange
   Message - Black
3. Corners may be square or rounded when base material is plywood but borders shall be rounded as shown. When base material is metal, the corners and borders shall be rounded.
4. W04-5L is the same as W04-5R except the arrow is reversed along the vertical centerline.

SIZE	A	B	C	D	E	F	G	H	I	J	K	L	M	N	O	P	Q	R	S	T	U	V	W	X	Y	Z	Area sq. ft.
1	36		2 1/4	5/8	3/4	14	2 3/4	6	15 3/4	13 1/4	3/4	5 1/4	6 1/8	45°	3 5/8	10 5/8	11 3/8	7/8	8 1/2								9.0
2S	48		3	3/4	1	18 3/4	3 5/8	8	20 1/2	17 1/2	1	7	8 1/8	45°	4 3/4	14 1/4	15 1/4	1 1/4	11 3/8								16.0
2M	48		3	3/4	1	18 3/4	3 5/8	8	20 1/2	17 1/2	1	7	8 1/8	45°	4 3/4	14 1/4	15 1/4	1 1/4	11 3/8								16.0
3	48		3	3/4	1	18 3/4	3 5/8	8	20 1/2	17 1/2	1	7	8 1/8	45°	4 3/4	14 1/4	15 1/4	1 1/4	11 3/8								16.0
4	48		3	3/4	1	18 3/4	3 5/8	8	20 1/2	17 1/2	1	7	8 1/8	45°	4 3/4	14 1/4	15 1/4	1 1/4	11 3/8								16.0
5	48		3	3/4	1	18 3/4	3 5/8	8	20 1/2	17 1/2	1	7	8 1/8	45°	4 3/4	14 1/4	15 1/4	1 1/4	11 3/8								16.0

STANDARD SIGN
W04-5

WISCONSIN DEPT OF TRANSPORTATION

APPROVED Matthew R Rauch
for State Traffic Engineer

DATE 1/25/2024 PLATE NO. W04-5.3

PROJECT NO: | HWY: | COUNTY: | SHEET NO: 199 | E

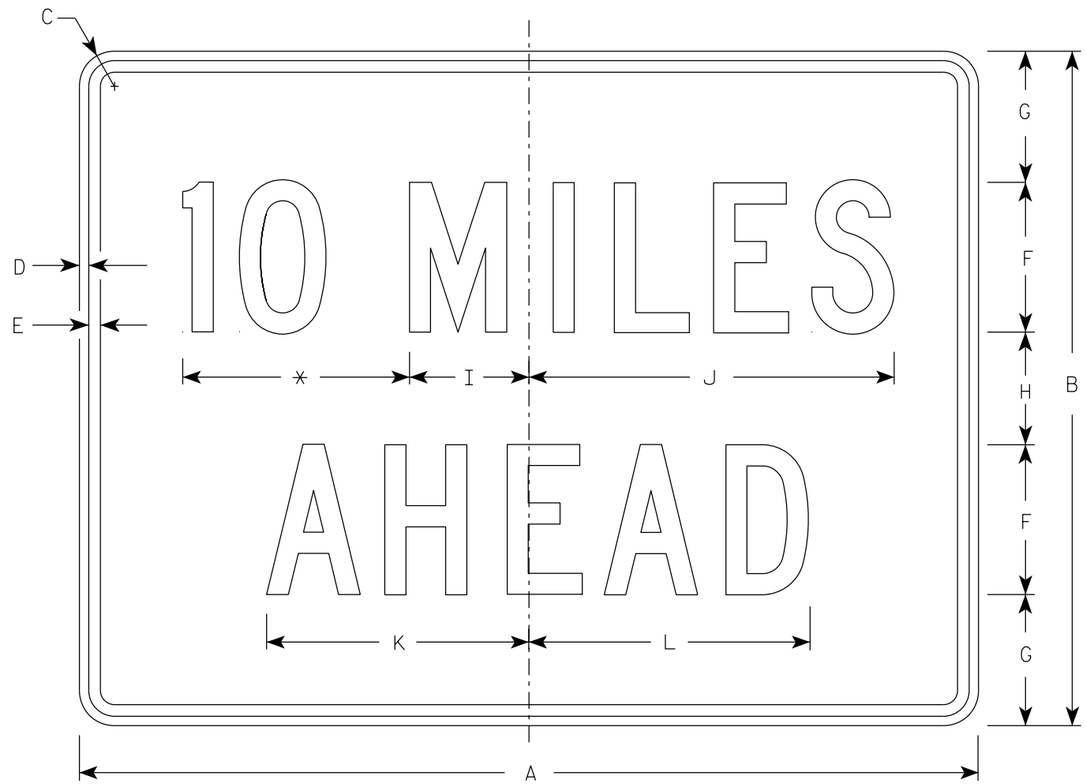

W057-52

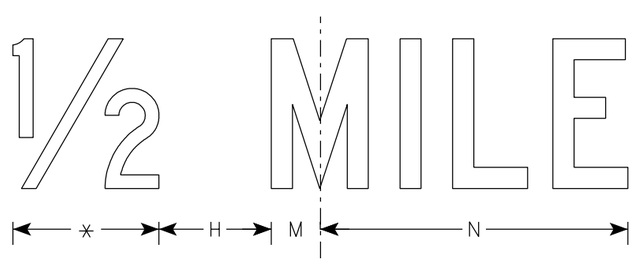

* See note 5

NOTES

1. Sign is Type II - Type F Reflective
2. Color:
   Background - Orange
   Message - Black
3. Message Series - C
4. Corners may be square or rounded when base material is plywood but borders shall be rounded as shown. When base material is metal, the corners and borders shall be rounded.
5. Substitute appropriate numerals to the nearest quarter mile and optically adjust spacing to achieve proper balance.

SIZE	A	B	C	D	E	F	G	H	I	J	K	L	M	N	O	P	Q	R	S	T	U	V	W	X	Y	Z	Area sq. ft.
1	36	24	1 1/2	3/8	1/2	6	4 1/2	3	4 3/4	14 5/8	10 5/8	11 3/8	2	12													6.0
2S	48	36	2 1/4	1/2	5/8	8	7	6	6 3/8	19 1/2	14	15	2 3/4	16 3/8													12.0
2M	48	36	2 1/4	1/2	5/8	8	7	6	6 3/8	19 1/2	14	15	2 3/4	16 3/8													12.0
3	48	36	2 1/4	1/2	5/8	8	7	6	6 3/8	19 1/2	14	15	2 3/4	16 3/8													12.0
4	48	36	2 1/4	1/2	5/8	8	7	6	6 3/8	19 1/2	14	15	2 3/4	16 3/8													12.0
5	48	36	2 1/4	1/2	5/8	8	7	6	6 3/8	19 1/2	14	15	2 3/4	16 3/8													12.0

STANDARD SIGN
W057-52

WISCONSIN DEPT OF TRANSPORTATION

APPROVED Matthew R Rauch
for State Traffic Engineer

DATE 2/1/2024 PLATE NO. W057-52.3

PROJECT NO:	HWY:	COUNTY:		SHEET NO: 200	E

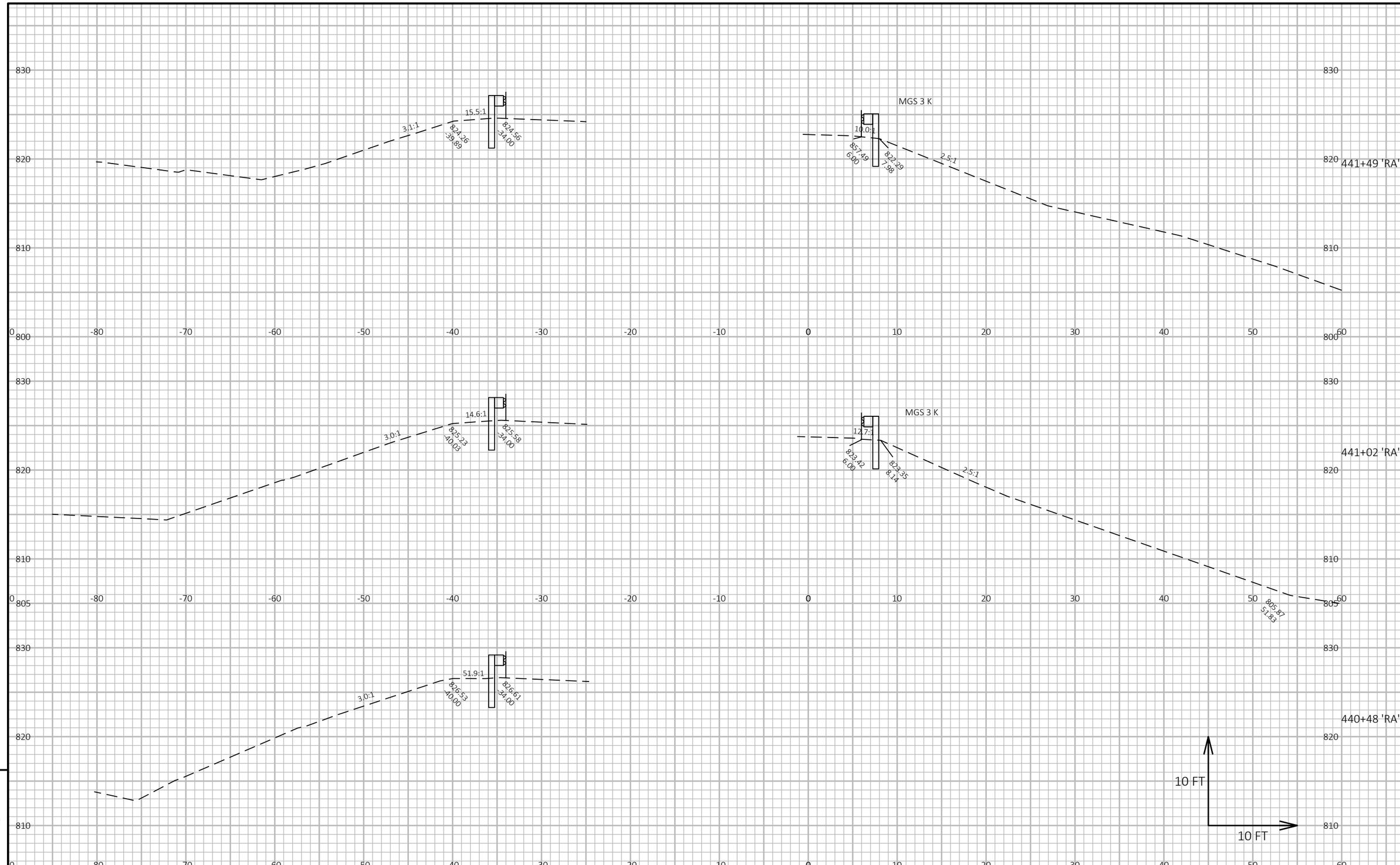

PROJECT NO: 1161-00-78	HWY: IH 39	COUNTY: COLUMBIA	CROSS SECTIONS: GUARDRAIL	SHEET 201	E

FILE NAME : C:\USERS\JAMES.GOLDEN\ONEDRIVE - DAAR CORPORATION\DOCUMENTS - SW DESIGN\1161-00-08 IH39, SB LANES, COLUMBIA CTY\C3D\11610008\SHEETSPLAN\090201-XS.DWG
LAYOUT NAME - 1.1
PLOT DATE : 10/23/2025 2:51 PM
PLOT BY : JAMES GOLDEN
PLOT NAME :
PLOT SCALE : 1 IN:10 FT HORZ. / 1 IN:10 FT VERT.

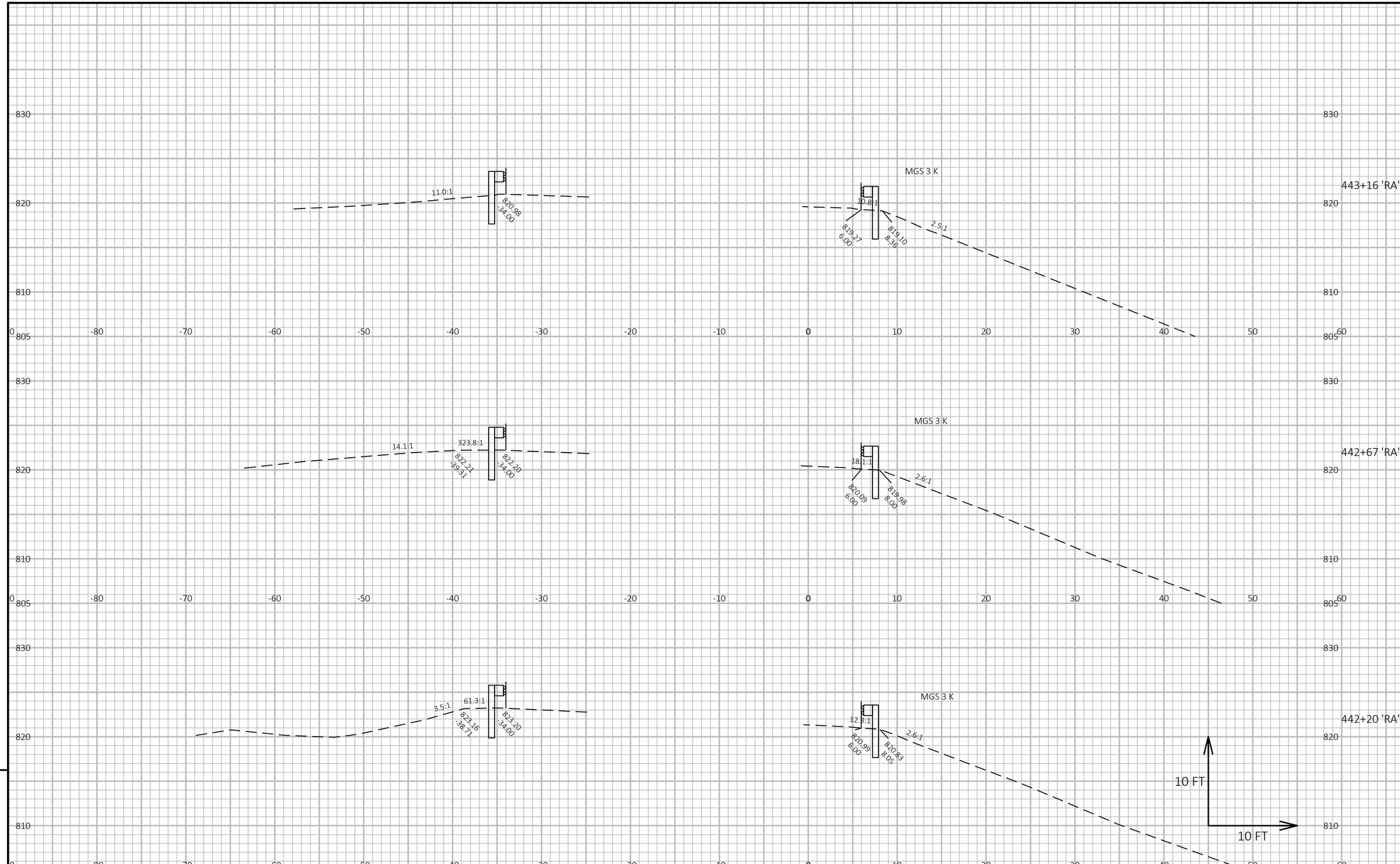

9

9

PROJECT NO: 1161-00-78	HWY: IH 39	COUNTY: COLUMBIA	CROSS SECTIONS: GUARDRAIL	SHEET 202	E

FILE NAME : C:\USERS\JAMES.GOLDEN\ONEDRIVE - DAAR CORPORATION\DOCUMENTS - SW DESIGN\1161-00-08 IH39, SB LANES, COLUMBIA CTY\C3D\11610008\SHEETSPLAN\090201-XS.DWG
LAYOUT NAME - 1.2
PLOT DATE : 10/23/2025 2:51 PM
PLOT BY : JAMES GOLDEN
PLOT NAME :
PLOT SCALE : 1 IN:10 FT HORZ. / 1 IN:10 FT VERT.
WISDOT/CADDS SHEET 49

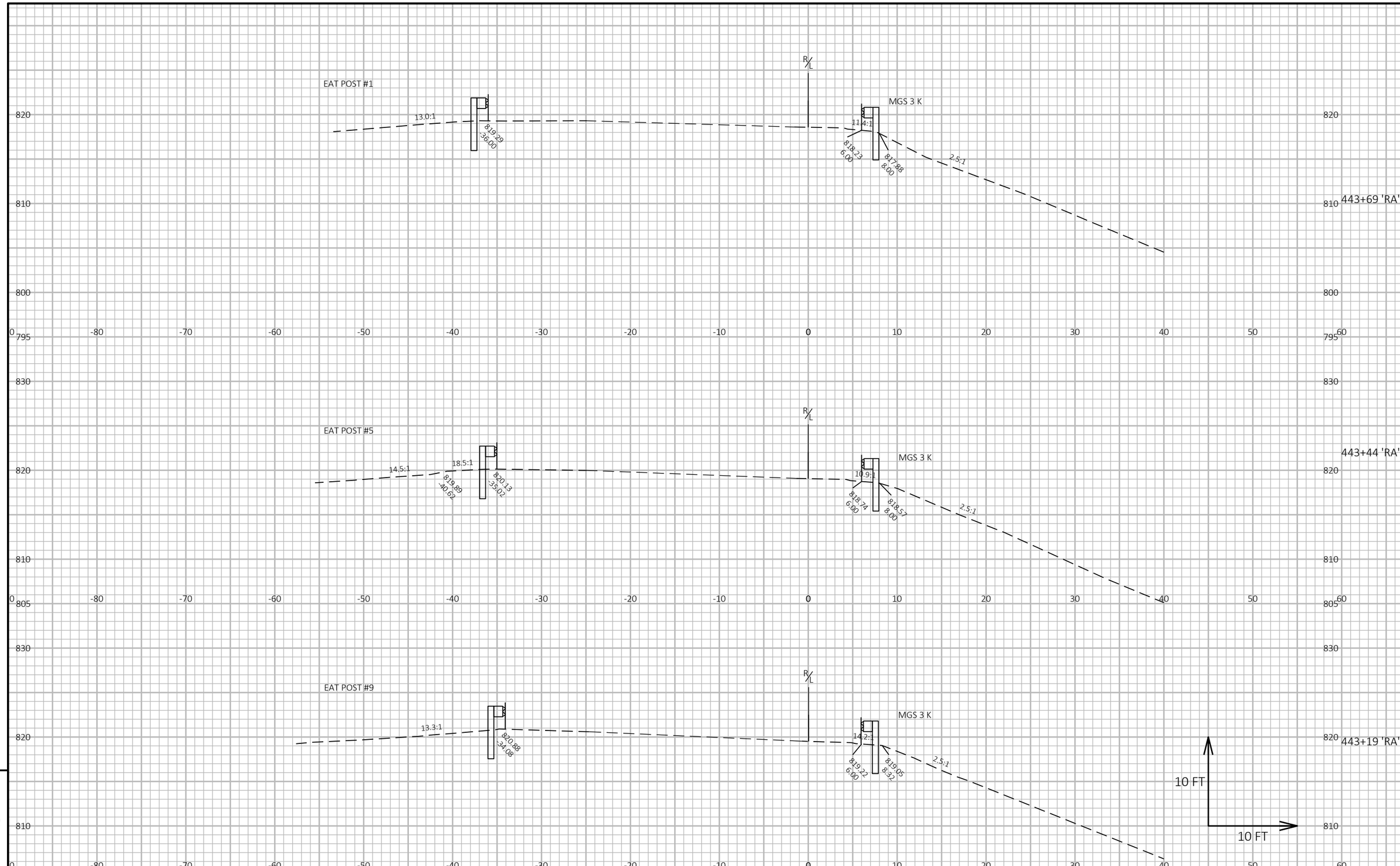

9

9

PROJECT NO: 1161-00-78	HWY: IH 39	COUNTY: COLUMBIA	CROSS SECTIONS: GUARDRAIL	SHEET 203	E

FILE NAME : C:\USERS\JAMES.GOLDEN\ONEDRIVE - DAAR CORPORATION\DOCUMENTS - SW DESIGN\1161-00-08 IH39, SB LANES, COLUMBIA CTY\C3D\11610008\SHEETSPLAN\090201-XS.DWG
LAYOUT NAME - 1.3
PLOT DATE : 10/23/2025 2:51 PM
PLOT BY : JAMES GOLDEN
PLOT NAME :
PLOT SCALE : 1 IN:10 FT HORZ. / 1 IN:10 FT VERT.
WISDOT/CADDS SHEET 49

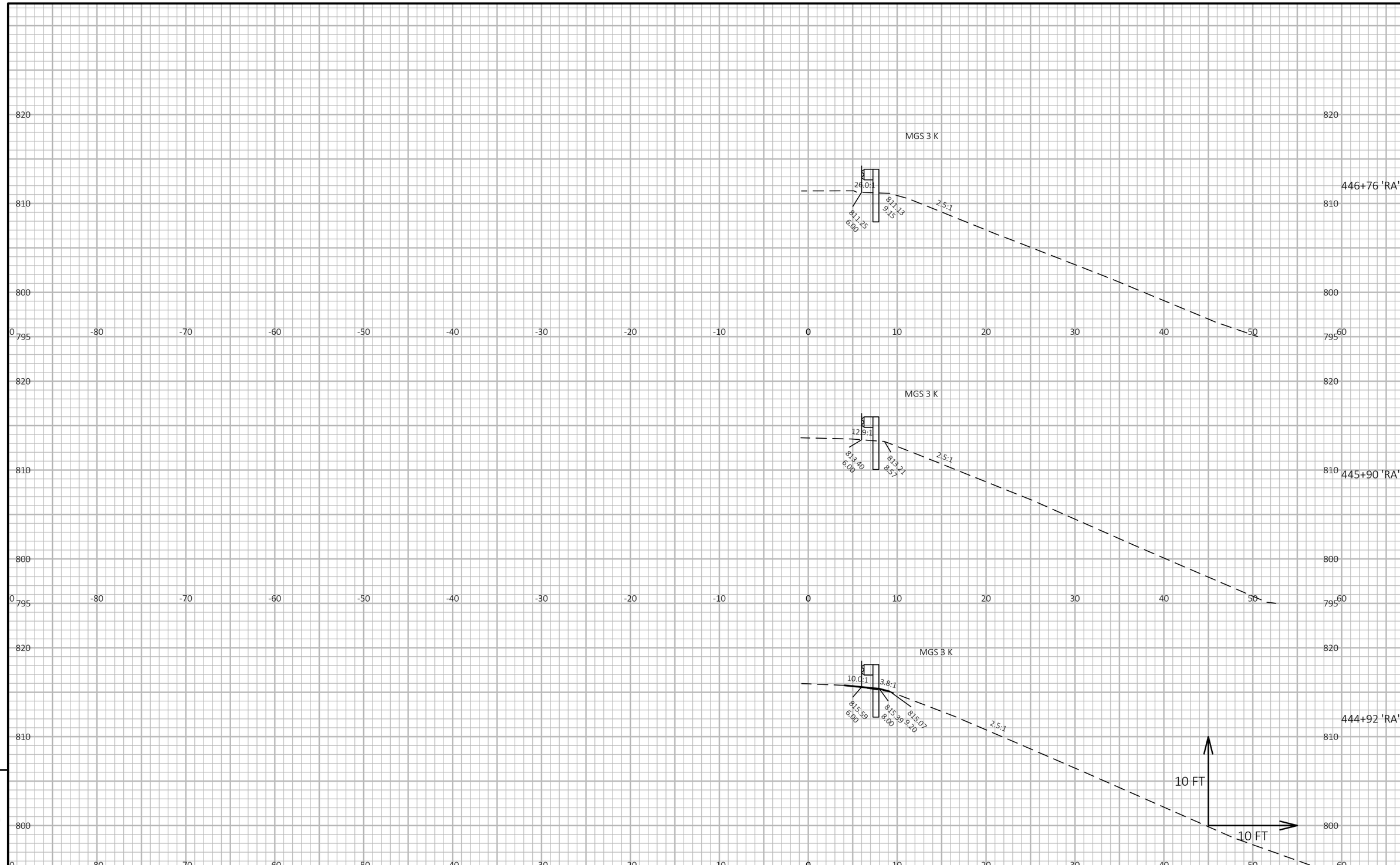

9

9

PROJECT NO: 1161-00-78	HWY: IH 39	COUNTY: COLUMBIA	CROSS SECTIONS: GUARDRAIL	SHEET 204	E

FILE NAME : C:\USERS\JAMES.GOLDEN\ONEDRIVE - DAAR CORPORATION\DOCUMENTS - SW DESIGN\1161-00-08 IH39, SB LANES, COLUMBIA CTY\C3D\11610008\SHEETSPLAN\090201-XS.DWG
LAYOUT NAME - 1.4
PLOT DATE : 10/23/2025 2:51 PM
PLOT BY : JAMES GOLDEN
PLOT NAME :
PLOT SCALE : 1 IN:10 FT HORZ. / 1 IN:10 FT VERT.
WISDOT/CADDS SHEET 49

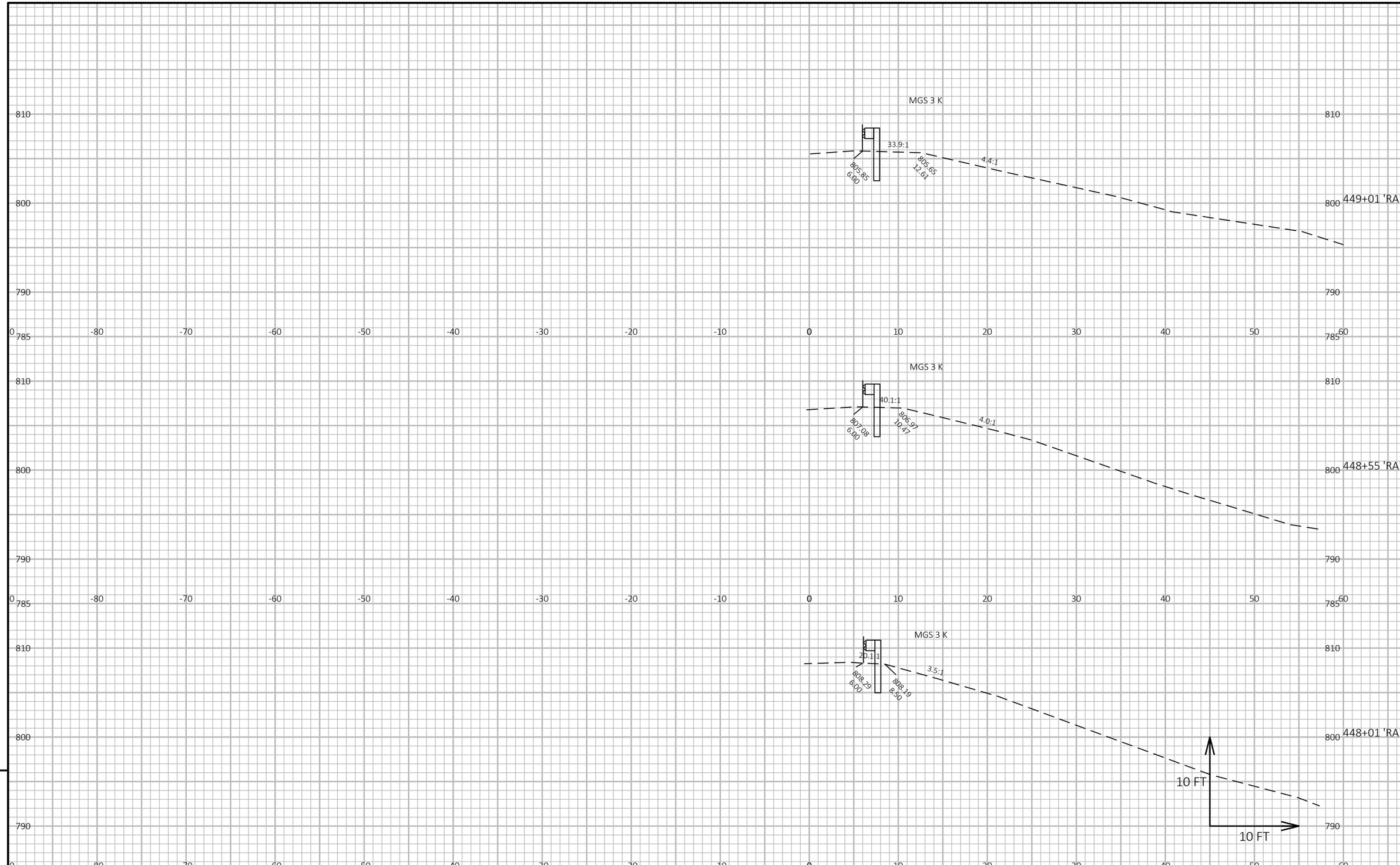

9

9

PROJECT NO: 1161-00-78	HWY: IH 39	COUNTY: COLUMBIA	CROSS SECTIONS: GUARDRAIL	SHEET 205	E

FILE NAME : C:\USERS\JAMES.GOLDEN\ONEDRIVE - DAAR CORPORATION\DOCUMENTS - SW DESIGN\1161-00-08 IH39, SB LANES, COLUMBIA CTY\C3D\11610008\SHEETSPLAN\090201-XS.DWG
LAYOUT NAME - 1.5
PLOT DATE : 10/23/2025 2:51 PM
PLOT BY : JAMES GOLDEN
PLOT NAME :
PLOT SCALE : 1 IN:10 FT HORZ. / 1 IN:10 FT VERT.
WISDOT/CADDS SHEET 49

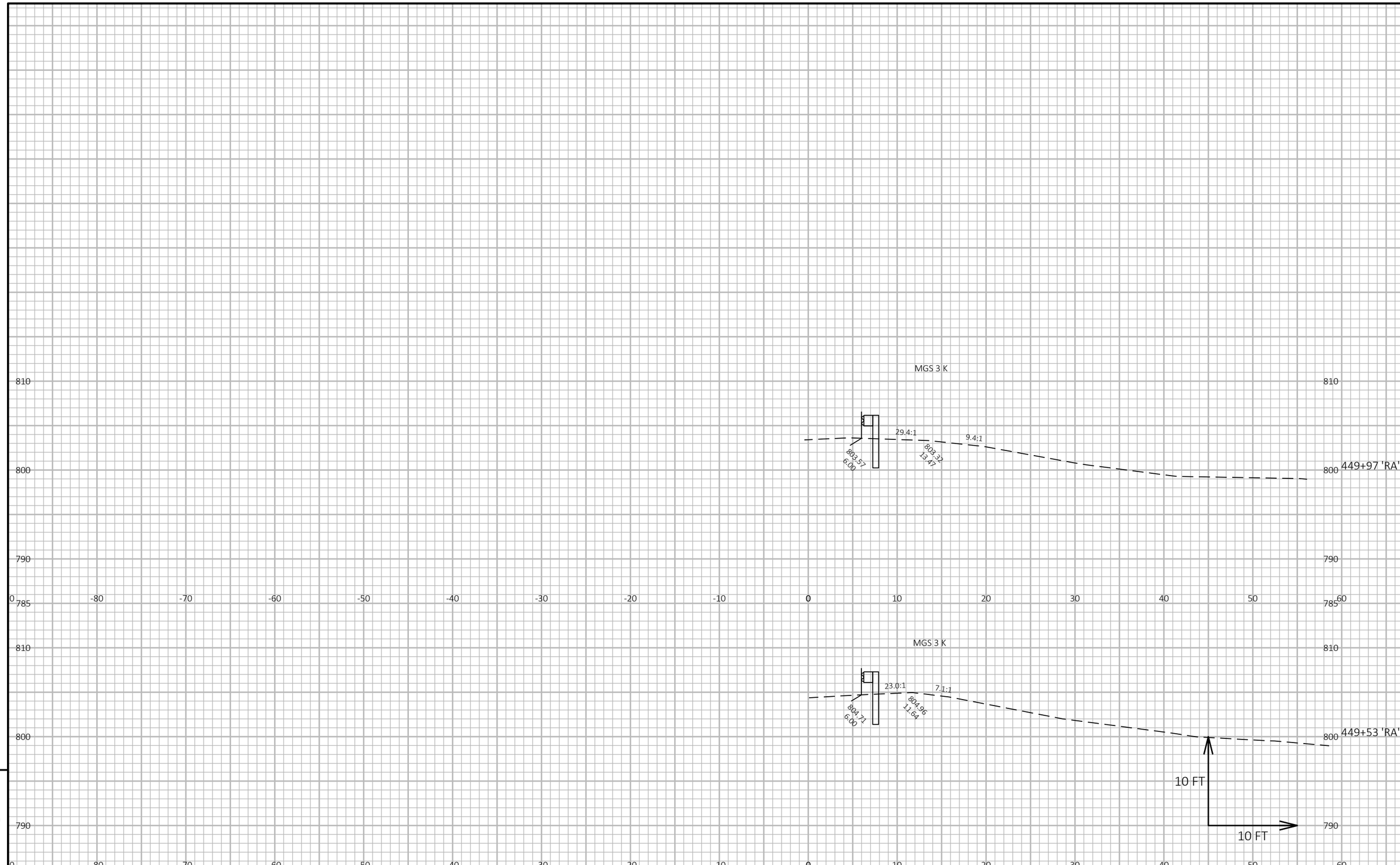

9

9

PROJECT NO: 1161-00-78	HWY: IH 39	COUNTY: COLUMBIA	CROSS SECTIONS: GUARDRAIL	SHEET 206	E

FILE NAME : C:\USERS\JAMES.GOLDEN\ONEDRIVE - DAAR CORPORATION\DOCUMENTS - SW DESIGN\1161-00-08 IH39, SB LANES, COLUMBIA CTY\C3D\11610008\SHEETSPLAN\090201-XS.DWG
LAYOUT NAME - 1.6
PLOT DATE : 10/23/2025 2:51 PM
PLOT BY : JAMES GOLDEN
PLOT NAME :
PLOT SCALE : 1 IN:10 FT HORZ. / 1 IN:10 FT VERT.
WISDOT/CADDS SHEET 49

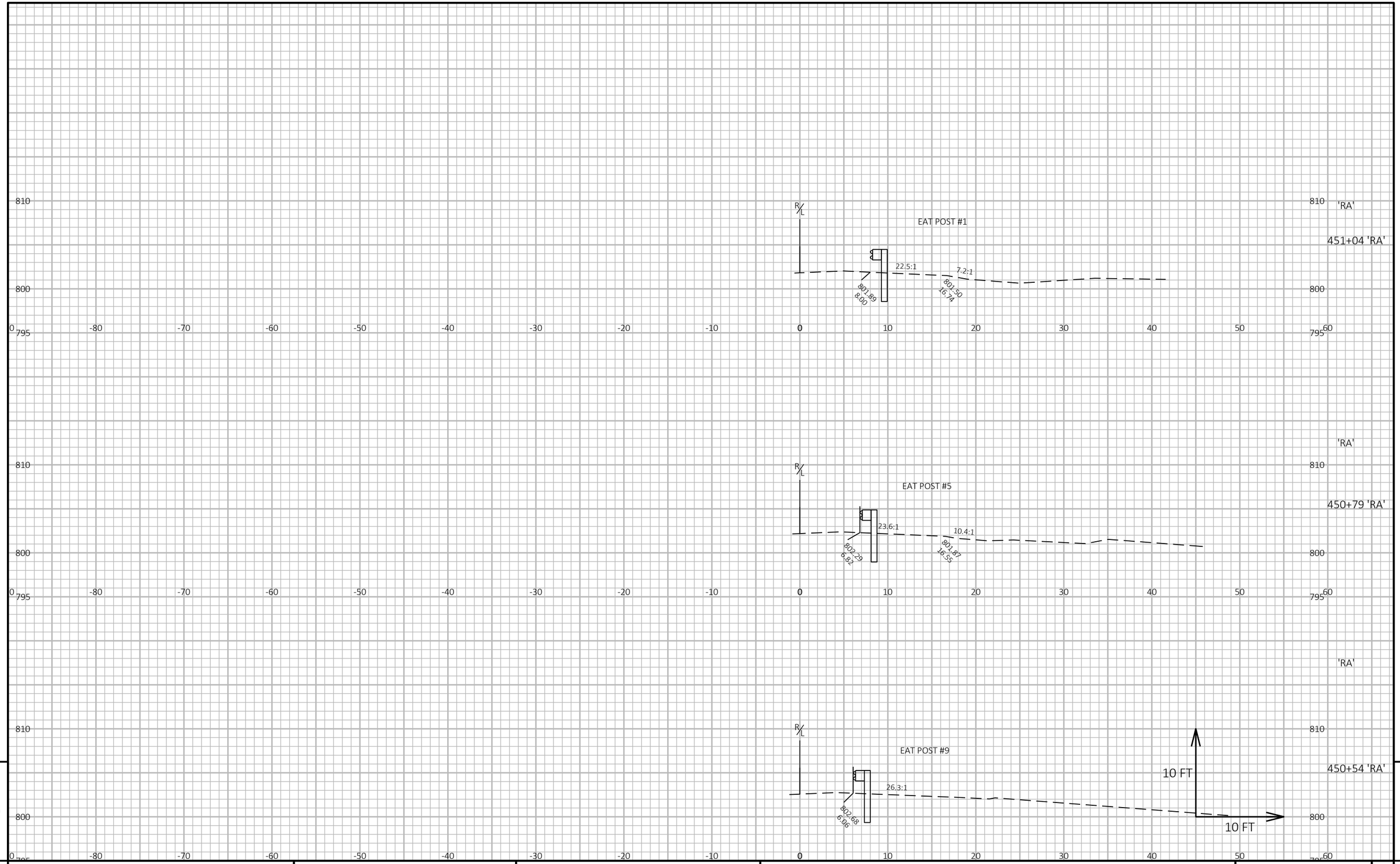

9

9

PROJECT NO: 1161-00-78	HWY: IH 39	COUNTY: COLUMBIA	CROSS SECTIONS: GUARDRAIL	SHEET 207	E

FILE NAME : C:\USERS\JAMES.GOLDEN\ONEDRIVE - DAAR CORPORATION\DOCUMENTS - SW DESIGN\1161-00-08 IH39, SB LANES, COLUMBIA CTY\C3D\11610008\SHEETSPLAN\090201-XS.DWG
LAYOUT NAME - 1.7
PLOT DATE : 10/23/2025 2:51 PM
PLOT BY : JAMES GOLDEN
PLOT NAME :
PLOT SCALE : 1 IN:10 FT HORZ. / 1 IN:10 FT VERT.
WISDOT/CADDS SHEET 49

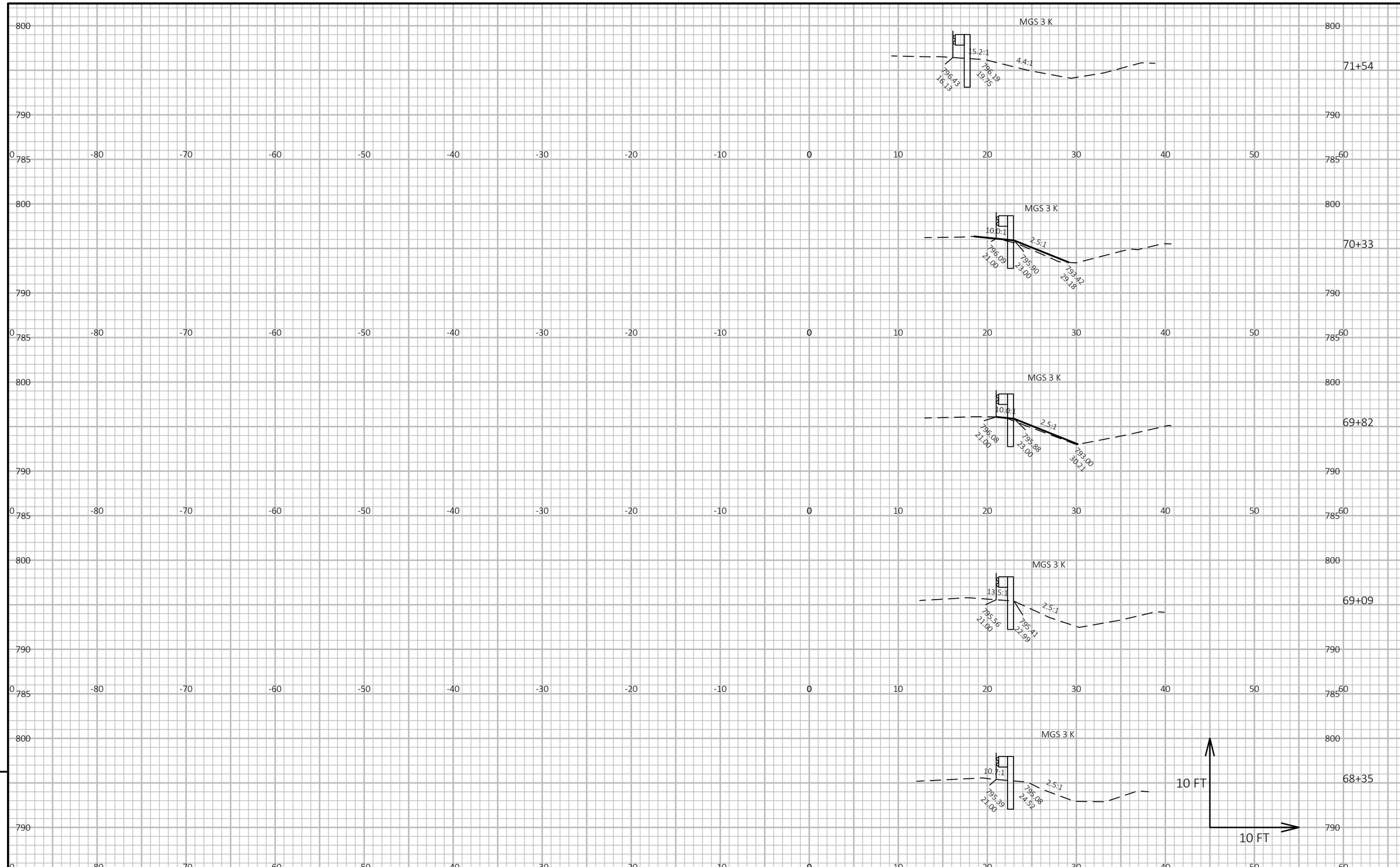

9

9

PROJECT NO: 1161-00-78	HWY: IH 39	COUNTY: COLUMBIA	CROSS SECTIONS: GUARDRAIL	SHEET 208	E

FILE NAME : C:\USERS\JAMES.GOLDEN\ONEDRIVE - DAAR CORPORATION\DOCUMENTS - SW DESIGN\1161-00-08 IH39, SB LANES, COLUMBIA CTY\C3D\11610008\SHEETSPLAN\090201-XS.DWG
LAYOUT NAME - 2.1
PLOT DATE : 10/23/2025 2:52 PM
PLOT BY : JAMES GOLDEN
PLOT NAME :
PLOT SCALE : 1 IN:10 FT HORZ. / 1 IN:10 FT VERT.
WISDOT/CADDS SHEET 49

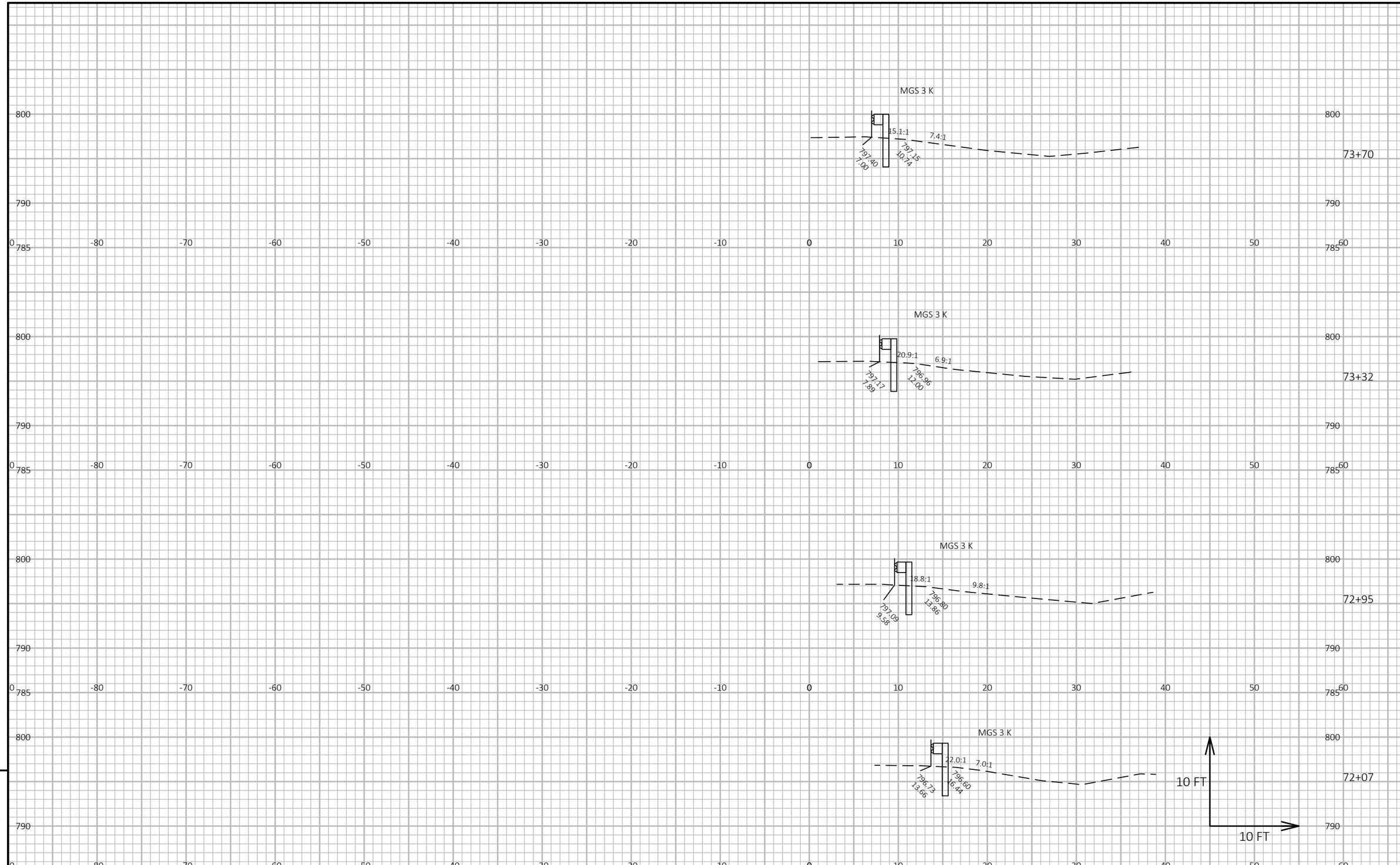

9

9

PROJECT NO: 1161-00-78	HWY: IH 39	COUNTY: COLUMBIA	CROSS SECTIONS: GUARDRAIL	SHEET 209	E

FILE NAME : C:\USERS\JAMES.GOLDEN\ONEDRIVE - DAAR CORPORATION\DOCUMENTS - SW DESIGN\1161-00-08 IH39, SB LANES, COLUMBIA CTY\C3D\11610008\SHEETSPLAN\090201-XS.DWG
LAYOUT NAME - 2.2
PLOT DATE : 10/23/2025 2:52 PM
PLOT BY : JAMES GOLDEN
PLOT NAME :
PLOT SCALE : 1 IN:10 FT HORZ. / 1 IN:10 FT VERT.
WISDOT/CADDS SHEET 49

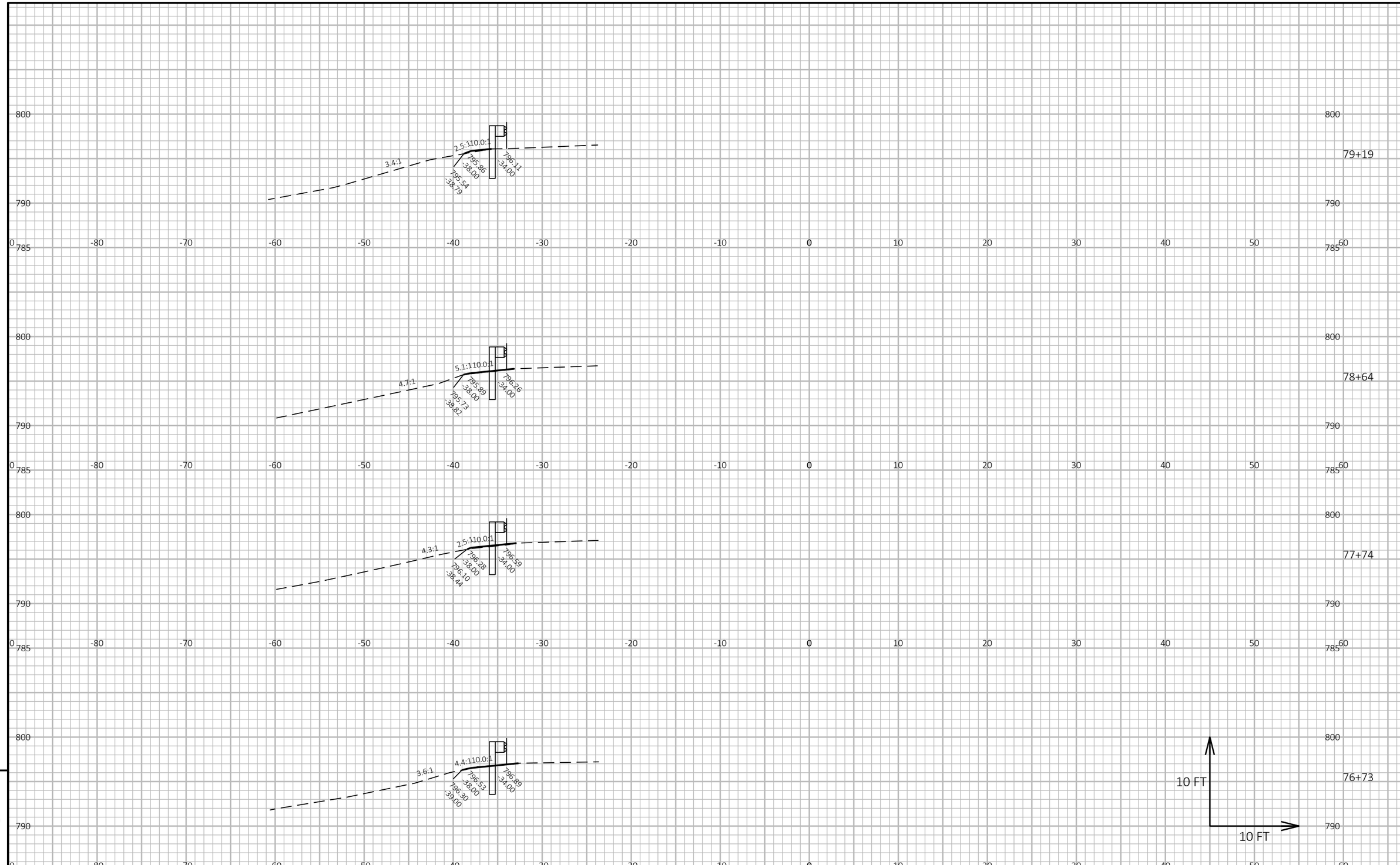

PROJECT NO: 1161-00-78	HWY: IH 39	COUNTY: COLUMBIA	CROSS SECTIONS: GUARDRAIL	SHEET 210	E

FILE NAME : C:\USERS\JAMES.GOLDEN\ONEDRIVE - DAAR CORPORATION\DOCUMENTS - SW DESIGN\1161-00-08 IH39, SB LANES, COLUMBIA CTY\C3D\11610008\SHEETSPLAN\090201-XS.DWG
LAYOUT NAME - 2.3
PLOT DATE : 10/23/2025 2:52 PM
PLOT BY : JAMES GOLDEN
PLOT NAME :
PLOT SCALE : 1 IN:10 FT HORZ. / 1 IN:10 FT VERT.
WISDOT/CADDS SHEET 49

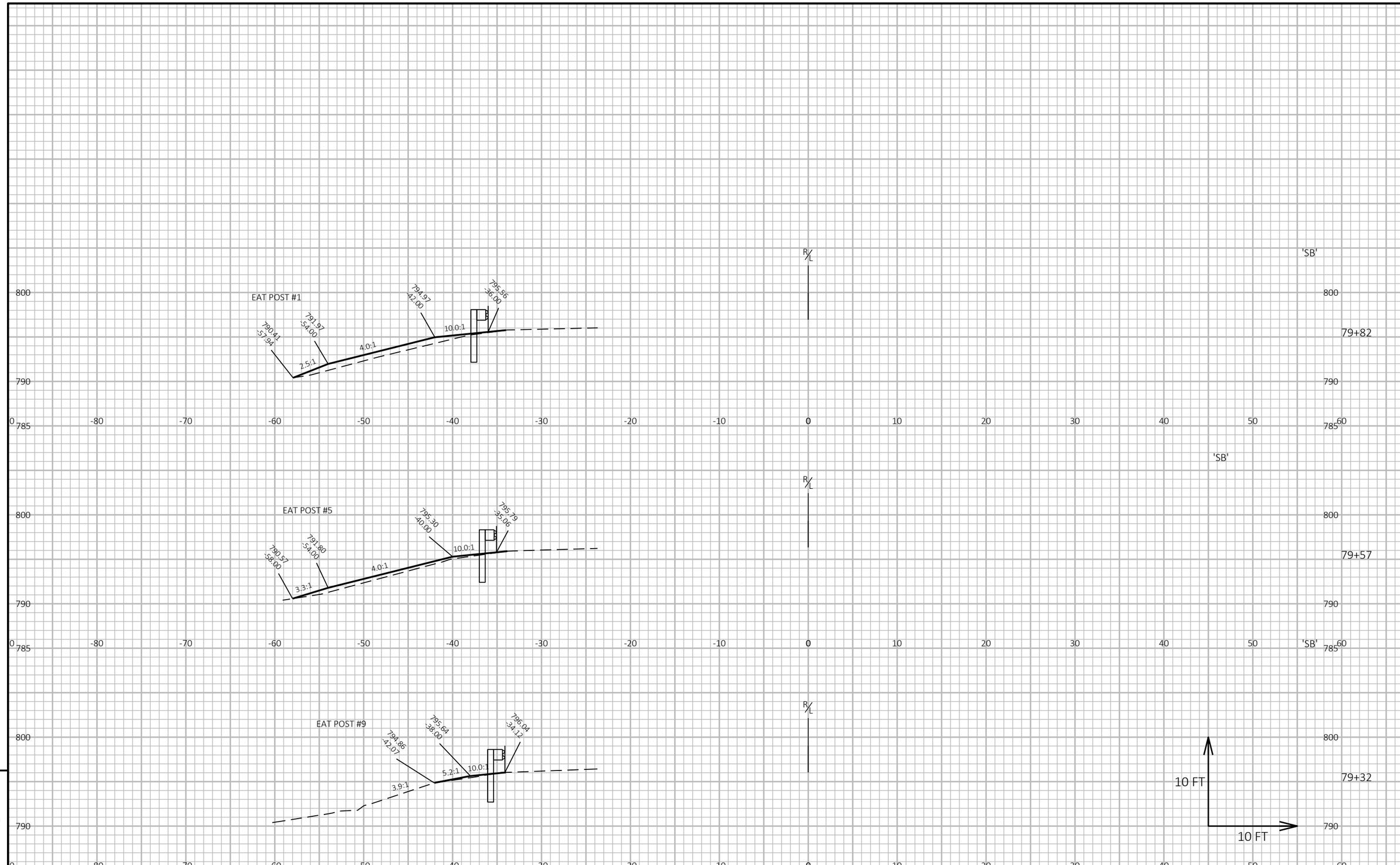

9

9

PROJECT NO: 1161-00-78	HWY: IH 39	COUNTY: COLUMBIA	CROSS SECTIONS: GUARDRAIL	SHEET 211	E

FILE NAME : C:\USERS\JAMES.GOLDEN\ONEDRIVE - DAAR CORPORATION\DOCUMENTS - SW DESIGN\1161-00-08 IH39, SB LANES, COLUMBIA CTY\C3D\11610008\SHEETSPLAN\090201-XS.DWG
LAYOUT NAME - 2.4
PLOT DATE : 10/23/2025 2:52 PM
PLOT BY : JAMES GOLDEN
PLOT NAME :
PLOT SCALE : 1 IN:10 FT HORZ. / 1 IN:10 FT VERT.
WISDOT/CADDS SHEET 49

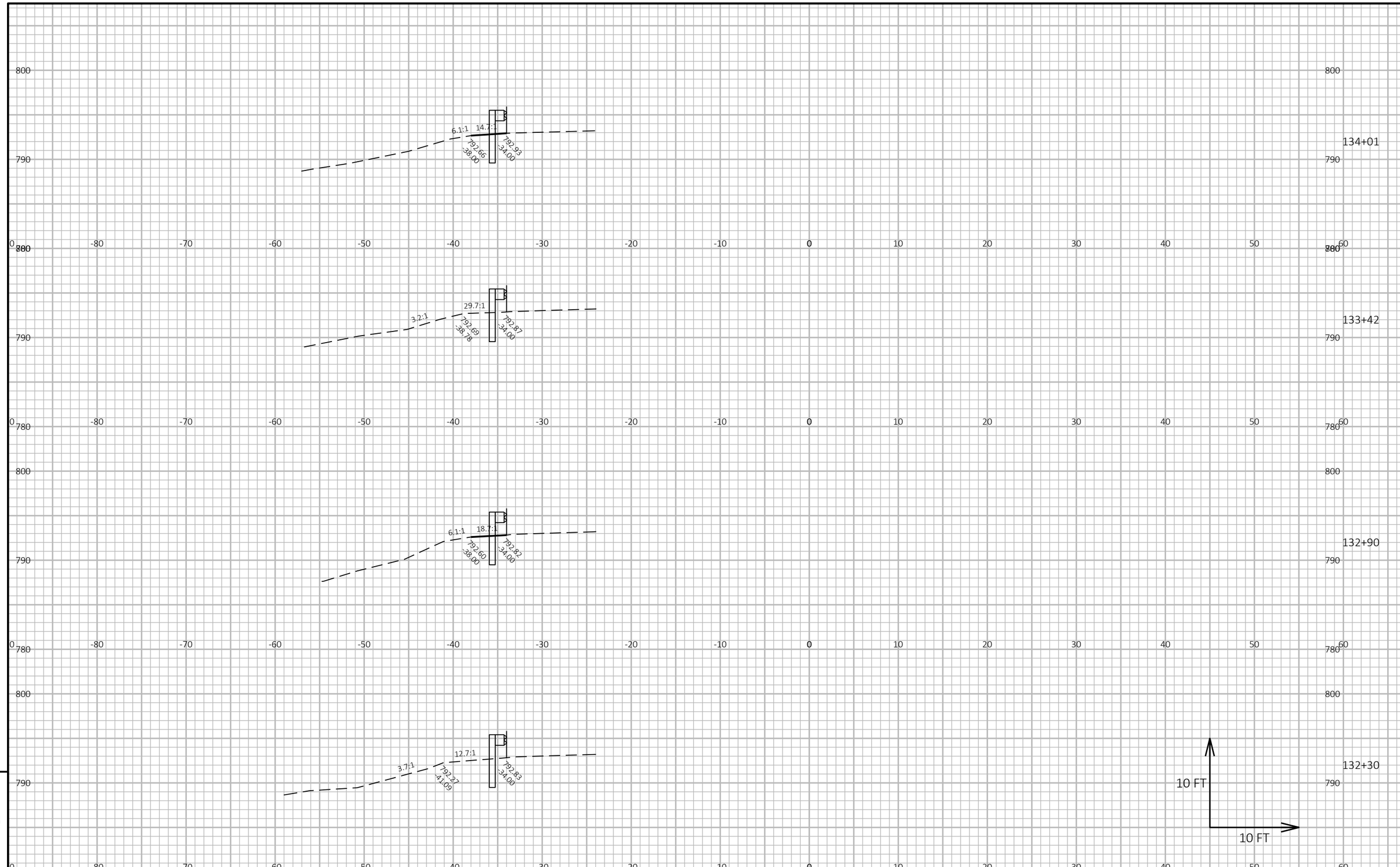

9

9

PROJECT NO: 1161-00-78	HWY: IH 39	COUNTY: COLUMBIA	CROSS SECTIONS: GUARDRAIL	SHEET 212	E

FILE NAME : C:\USERS\JAMES.GOLDEN\ONEDRIVE - DAAR CORPORATION\DOCUMENTS - SW DESIGN\1161-00-08 IH39, SB LANES, COLUMBIA CTY\C3D\11610008\SHEETSPLAN\090201-XS.DWG
LAYOUT NAME - 3.1
PLOT DATE : 10/23/2025 2:52 PM
PLOT BY : JAMES GOLDEN
PLOT NAME :
PLOT SCALE : 1 IN:10 FT HORZ. / 1 IN:10 FT VERT.
WISDOT/CADDS SHEET 49

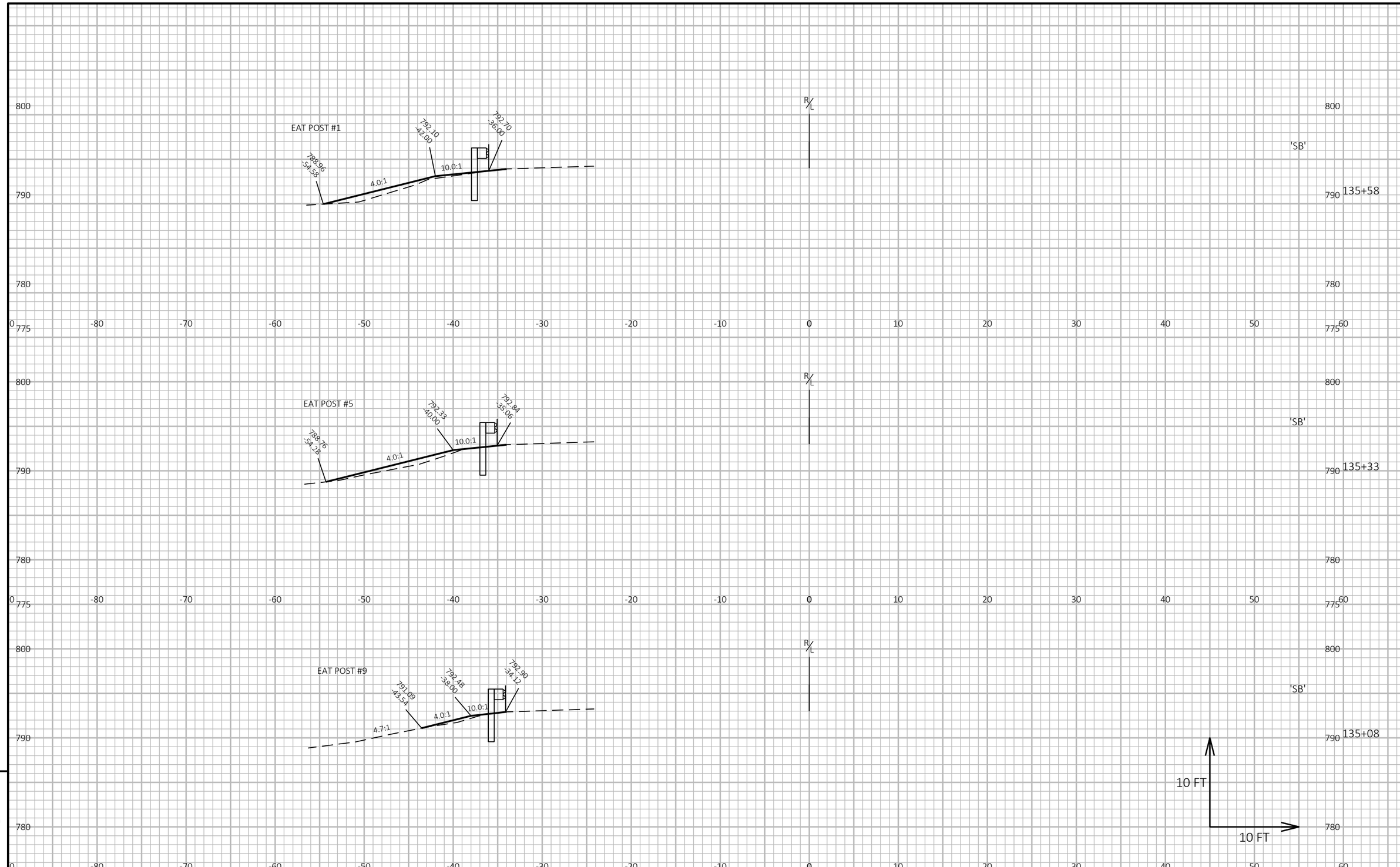

9

9

PROJECT NO: 1161-00-78	HWY: IH 39	COUNTY: COLUMBIA	CROSS SECTIONS: GUARDRAIL	SHEET 213	E

FILE NAME : C:\USERS\JAMES.GOLDEN\ONEDRIVE - DAAR CORPORATION\DOCUMENTS - SW DESIGN\1161-00-08 IH39, SB LANES, COLUMBIA CTY\C3D\11610008\SHEETSPLAN\090201-XS.DWG
LAYOUT NAME - 3.2
PLOT DATE : 10/23/2025 2:52 PM
PLOT BY : JAMES GOLDEN
PLOT NAME :
PLOT SCALE : 1 IN:10 FT HORZ. / 1 IN:10 FT VERT.
WISDOT/CADDS SHEET 49

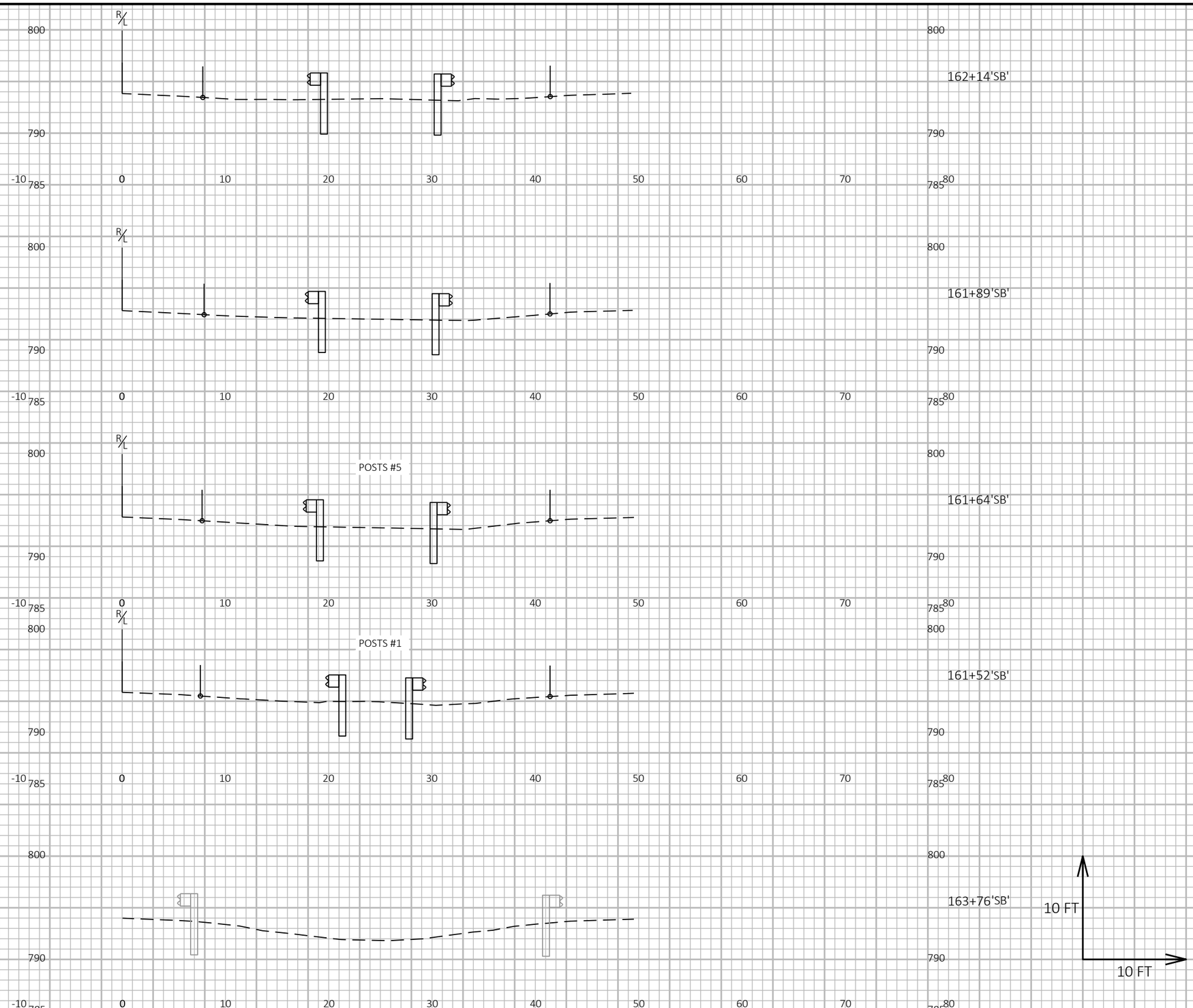

PROJECT NO: 1161-00-78	HWY: IH 39	COUNTY: COLUMBIA	CROSS SECTIONS: GUARDRAIL	SHEET 214	E

FILE NAME : C:\USERS\JAMES.GOLDEN\ONEDRIVE - DAAR CORPORATION\DOCUMENTS - SW DESIGN\1161-00-08 IH39, SB LANES, COLUMBIA CTY\C3D\11610008\SHEETSPLAN\090201-XS.DWG
LAYOUT NAME - 4.1
PLOT DATE : 10/23/2025 2:52 PM PLOT BY : JAMES GOLDEN PLOT NAME : PLOT SCALE : 1 IN:10 FT HORZ. / 1 IN:10 FT VERT.

WISDOT/CADDS SHEET 49

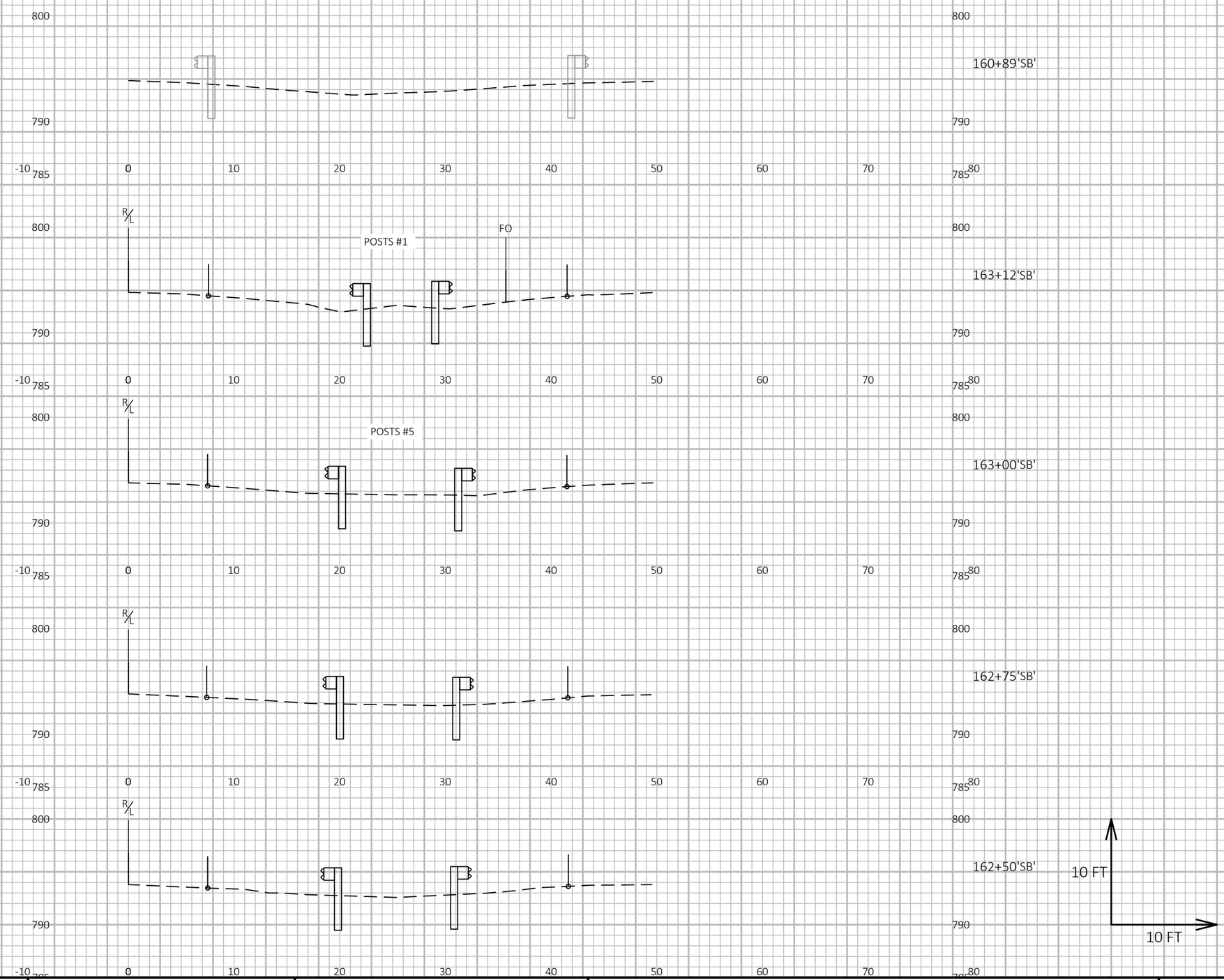

PROJECT NO: 1161-00-78	HWY: IH 39	COUNTY: COLUMBIA	CROSS SECTIONS: GUARDRAIL	SHEET 215	E

FILE NAME : C:\USERS\JAMES.GOLDEN\ONEDRIVE - DAAR CORPORATION\DOCUMENTS - SW DESIGN\1161-00-08 IH39, SB LANES, COLUMBIA CTY\C3D\11610008\SHEETSPLAN\090201-XS.DWG
LAYOUT NAME - 4.2
PLOT DATE : 10/23/2025 2:52 PM
PLOT BY : JAMES GOLDEN
PLOT NAME :
PLOT SCALE : 1 IN:10 FT HORZ. / 1 IN:10 FT VERT.
WISDOT/CADDS SHEET 49

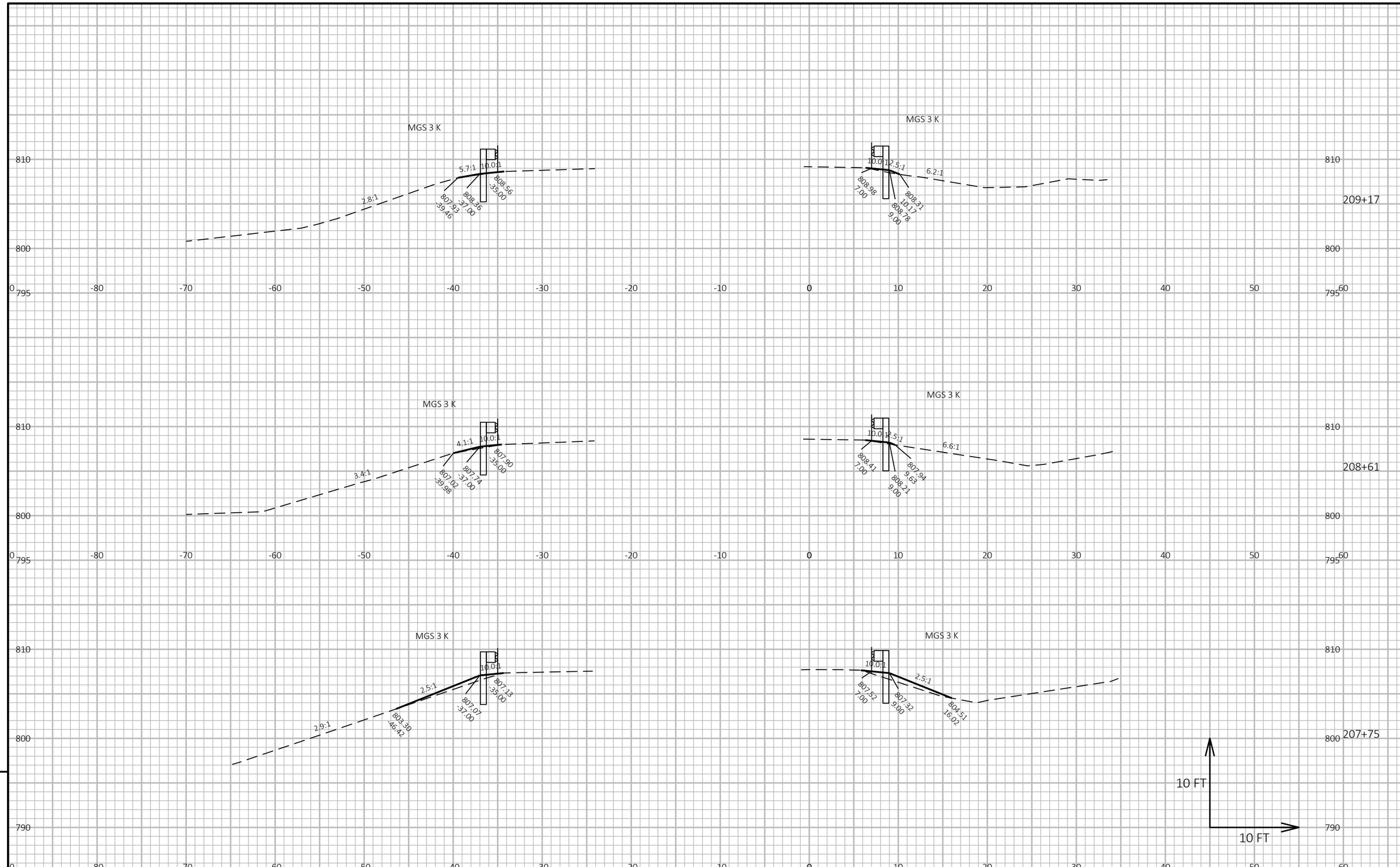

9

9

PROJECT NO: 1161-00-78	HWY: IH 39	COUNTY: COLUMBIA	CROSS SECTIONS: GUARDRAIL	SHEET 216	E

FILE NAME : C:\USERS\JAMES.GOLDEN\ONEDRIVE - DAAR CORPORATION\DOCUMENTS - SW DESIGN\1161-00-08 IH39, SB LANES, COLUMBIA CTY\C3D\11610008\SHEETSPLAN\090201-XS.DWG
LAYOUT NAME - 5.1
PLOT DATE : 10/23/2025 2:52 PM
PLOT BY : JAMES GOLDEN
PLOT NAME :
PLOT SCALE : 1 IN:10 FT HORZ. / 1 IN:10 FT VERT.
WISDOT/CADDS SHEET 49

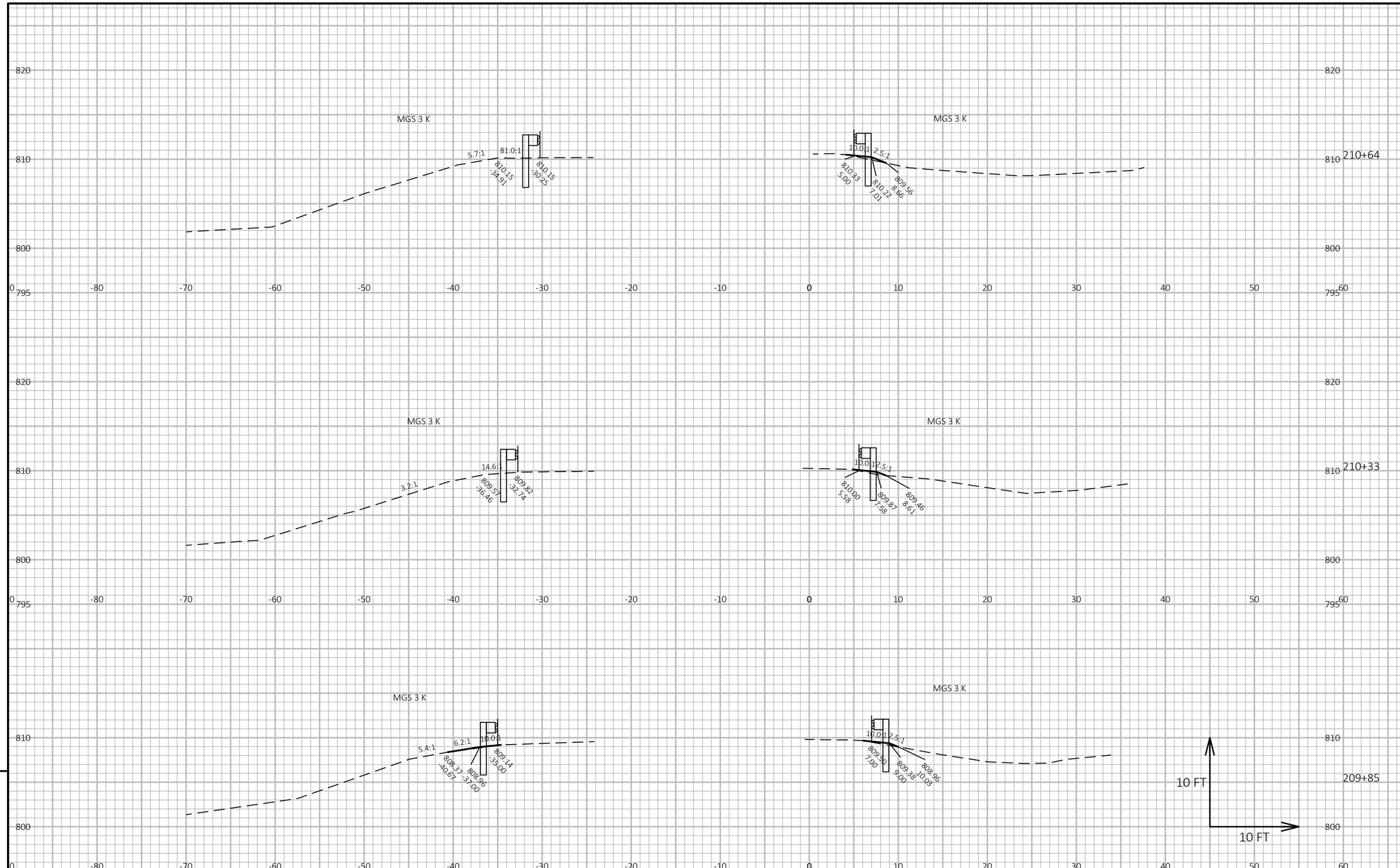

9

9

PROJECT NO: 1161-00-78	HWY: IH 39	COUNTY: COLUMBIA	CROSS SECTIONS: GUARDRAIL	SHEET 217	E

FILE NAME : C:\USERS\JAMES.GOLDEN\ONEDRIVE - DAAR CORPORATION\DOCUMENTS - SW DESIGN\1161-00-08 IH39, SB LANES, COLUMBIA CTY\C3D\11610008\SHEETSPLAN\090201-XS.DWG
LAYOUT NAME - 5.2
PLOT DATE : 10/23/2025 2:52 PM
PLOT BY : JAMES GOLDEN
PLOT NAME :
PLOT SCALE : 1 IN:10 FT HORZ. / 1 IN:10 FT VERT.

WISDOT/CADDS SHEET 49

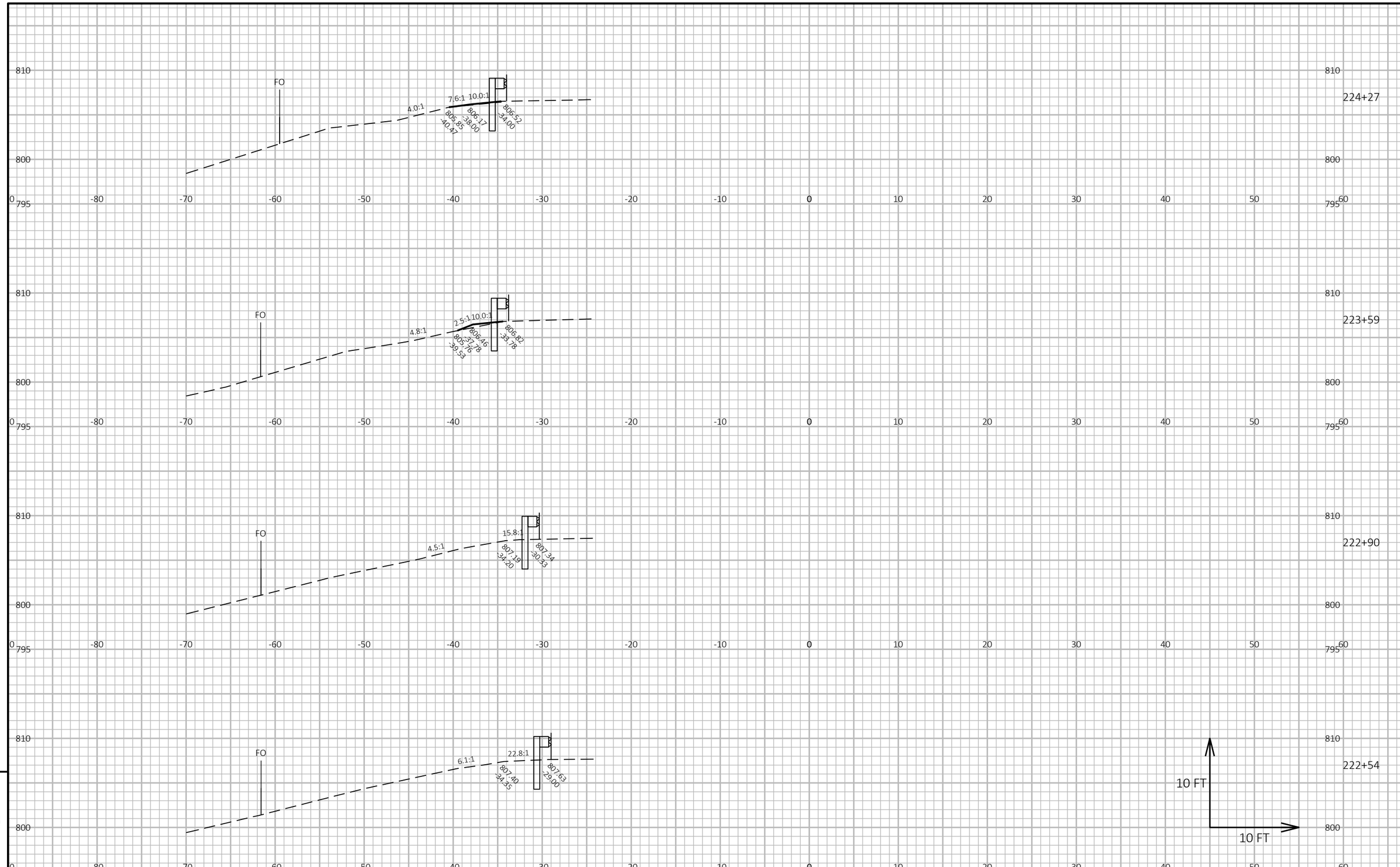

9

9

PROJECT NO: 1161-00-78	HWY: IH 39	COUNTY: COLUMBIA	CROSS SECTIONS: GUARDRAIL	SHEET 218	E

FILE NAME : C:\USERS\JAMES.GOLDEN\ONEDRIVE - DAAR CORPORATION\DOCUMENTS - SW DESIGN\1161-00-08 IH39, SB LANES, COLUMBIA CTY\C3D\11610008\SHEETSPLAN\090201-XS.DWG
LAYOUT NAME - 6.1
PLOT DATE : 10/23/2025 2:52 PM
PLOT BY : JAMES GOLDEN
PLOT NAME :
PLOT SCALE : 1 IN:10 FT HORZ. / 1 IN:10 FT VERT.

WISDOT/CADDS SHEET 49

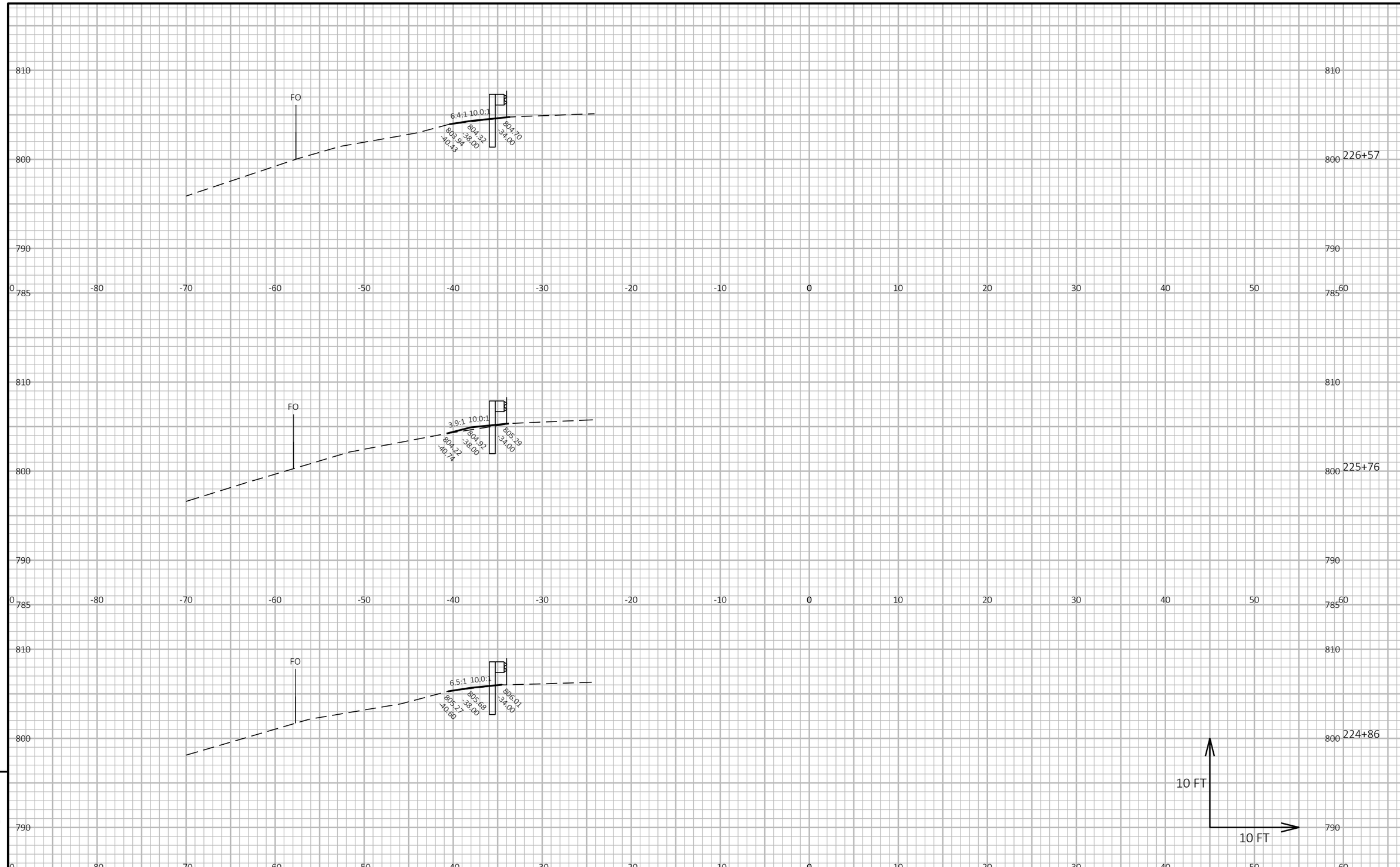

9

9

PROJECT NO: 1161-00-78	HWY: IH 39	COUNTY: COLUMBIA	CROSS SECTIONS: GUARDRAIL	SHEET 219	E

FILE NAME : C:\USERS\JAMES.GOLDEN\ONEDRIVE - DAAR CORPORATION\DOCUMENTS - SW DESIGN\1161-00-08 IH39, SB LANES, COLUMBIA CTY\C3D\11610008\SHEETSPLAN\090201-XS.DWG
LAYOUT NAME - 6.2
PLOT DATE : 10/23/2025 2:52 PM
PLOT BY : JAMES GOLDEN
PLOT NAME :
PLOT SCALE : 1 IN:10 FT HORZ. / 1 IN:10 FT VERT.
WISDOT/CADDS SHEET 49

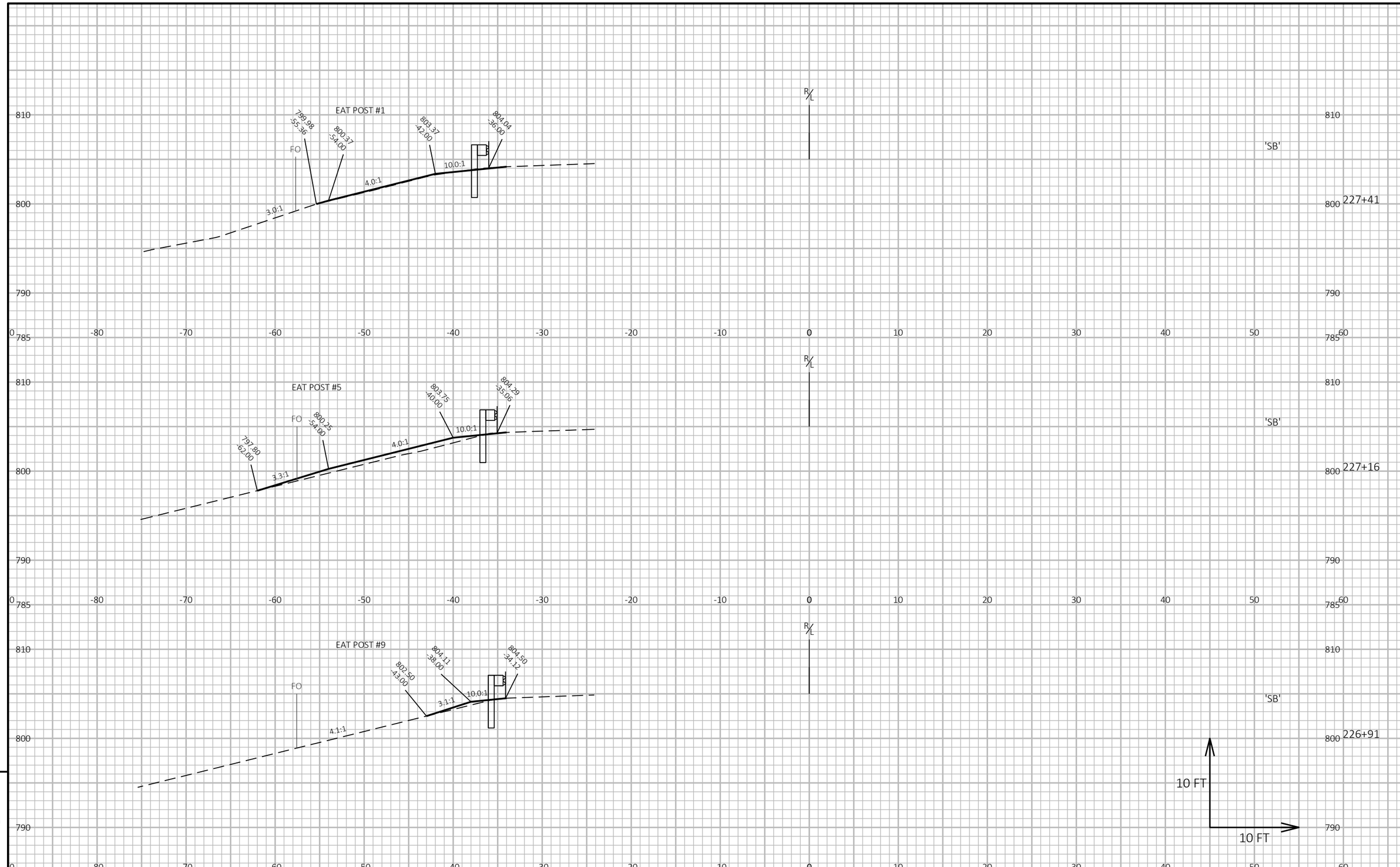

PROJECT NO: 1161-00-78	HWY: IH 39	COUNTY: COLUMBIA	CROSS SECTIONS: GUARDRAIL	SHEET 220	E

FILE NAME : C:\USERS\JAMES.GOLDEN\ONEDRIVE - DAAR CORPORATION\DOCUMENTS - SW DESIGN\1161-00-08 IH39, SB LANES, COLUMBIA CTY\C3D\11610008\SHEETSPLAN\090201-XS.DWG
LAYOUT NAME - 6.3
PLOT DATE : 10/23/2025 2:52 PM
PLOT BY : JAMES GOLDEN
PLOT NAME :
PLOT SCALE : 1 IN:10 FT HORZ. / 1 IN:10 FT VERT.
WISDOT/CADDS SHEET 49

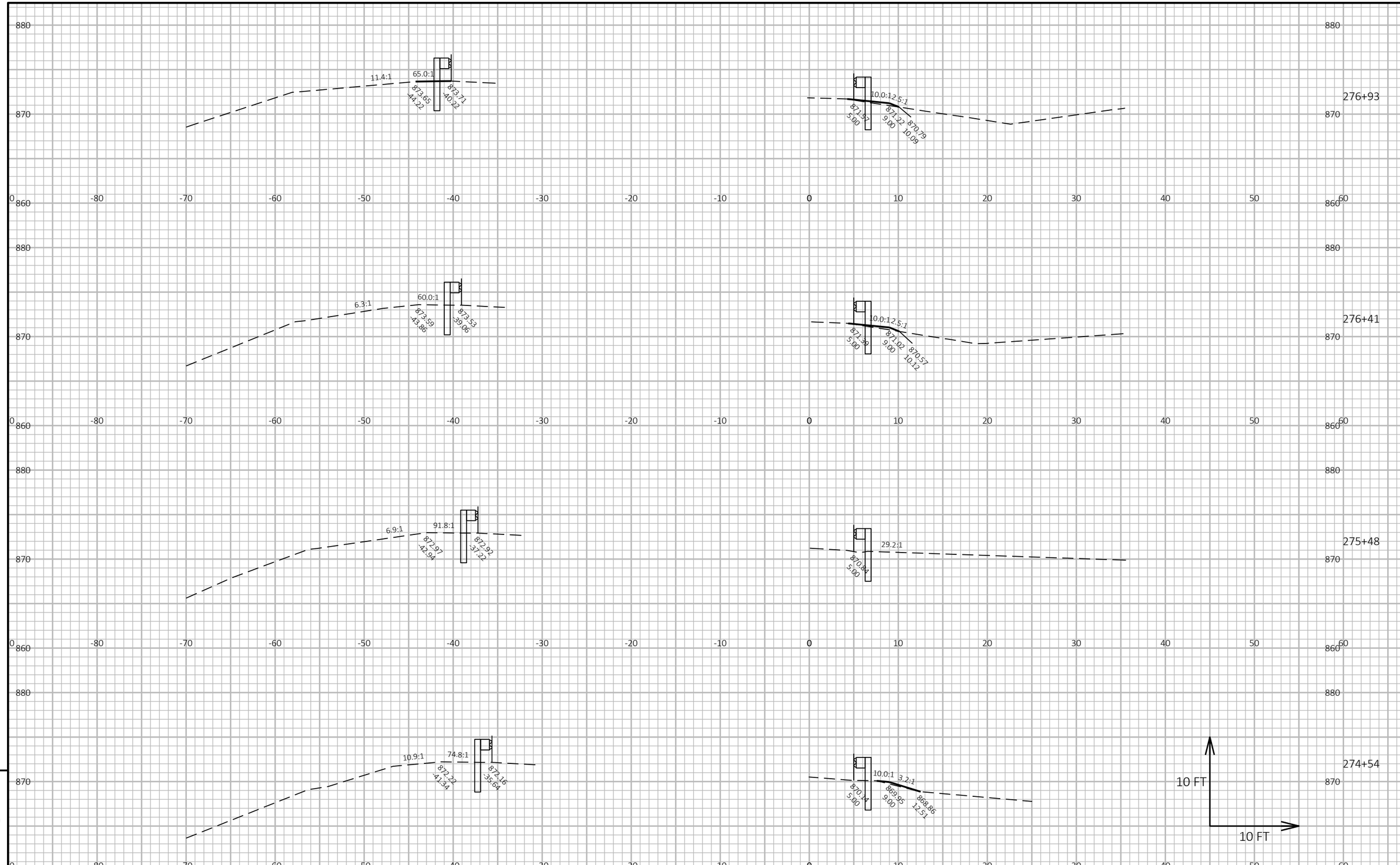

PROJECT NO: 1161-00-78	HWY: IH 39	COUNTY: COLUMBIA	CROSS SECTIONS: GUARDRAIL	SHEET 221	E

FILE NAME : C:\USERS\JAMES.GOLDEN\ONEDRIVE - DAAR CORPORATION\DOCUMENTS - SW DESIGN\1161-00-08 IH39, SB LANES, COLUMBIA CTY\C3D\11610008\SHEETSPLAN\090201-XS.DWG
LAYOUT NAME - 7.1
PLOT DATE : 10/23/2025 2:52 PM
PLOT BY : JAMES GOLDEN
PLOT NAME :
PLOT SCALE : 1 IN:10 FT HORZ. / 1 IN:10 FT VERT.
WISDOT/CADDS SHEET 49

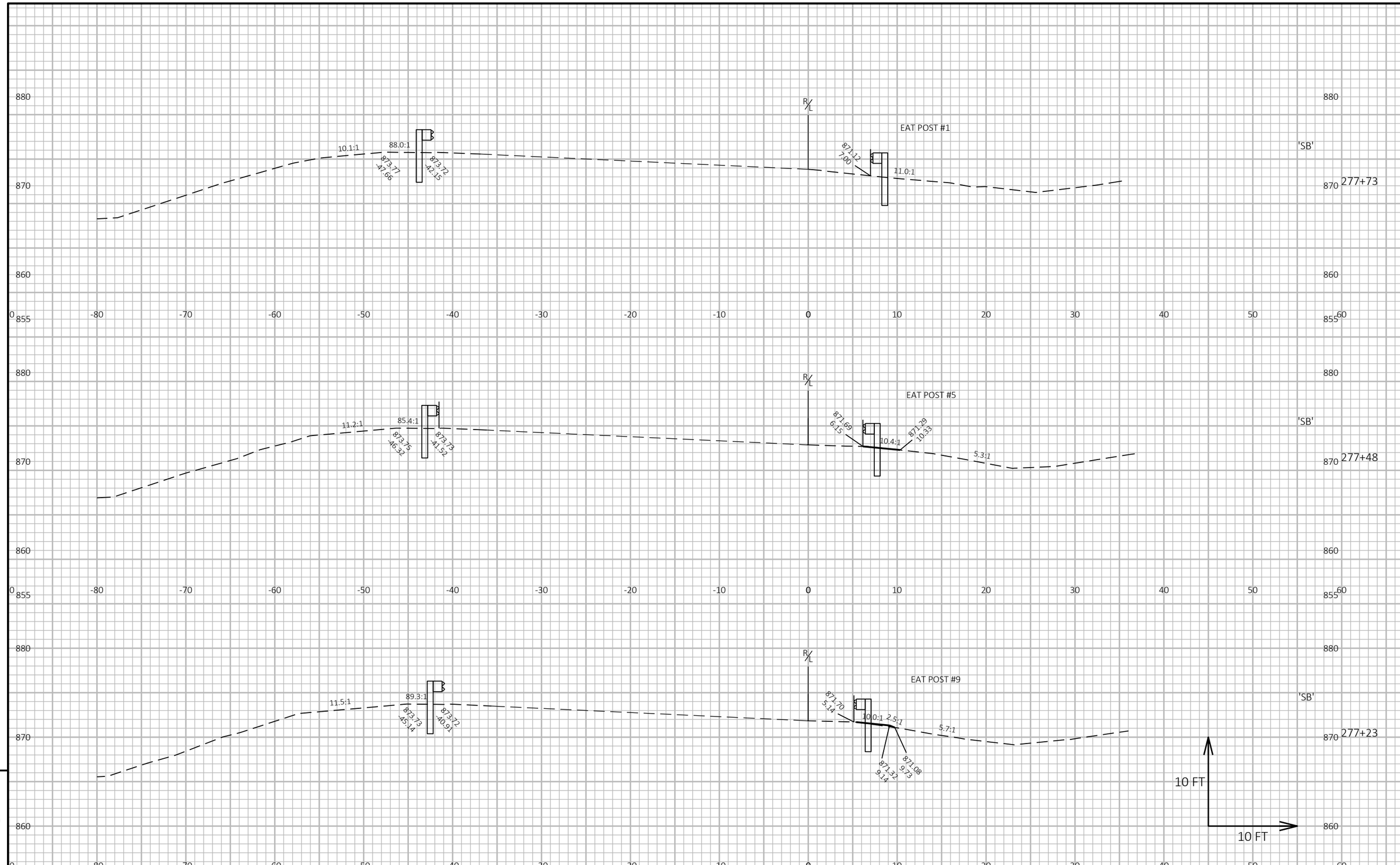

PROJECT NO: 1161-00-78	HWY: IH 39	COUNTY: COLUMBIA	CROSS SECTIONS: GUARDRAIL	SHEET 222	E

FILE NAME : C:\USERS\JAMES.GOLDEN\ONEDRIVE - DAAR CORPORATION\DOCUMENTS - SW DESIGN\1161-00-08 IH39, SB LANES, COLUMBIA CTY\C3D\11610008\SHEETSPLAN\090201-XS.DWG PLOT DATE : 10/23/2025 2:52 PM PLOT BY : JAMES GOLDEN PLOT NAME : PLOT SCALE : 1 IN:10 FT HORZ. / 1 IN:10 FT VERT.
LAYOUT NAME - 7.2

WISDOT/CADDS SHEET 49

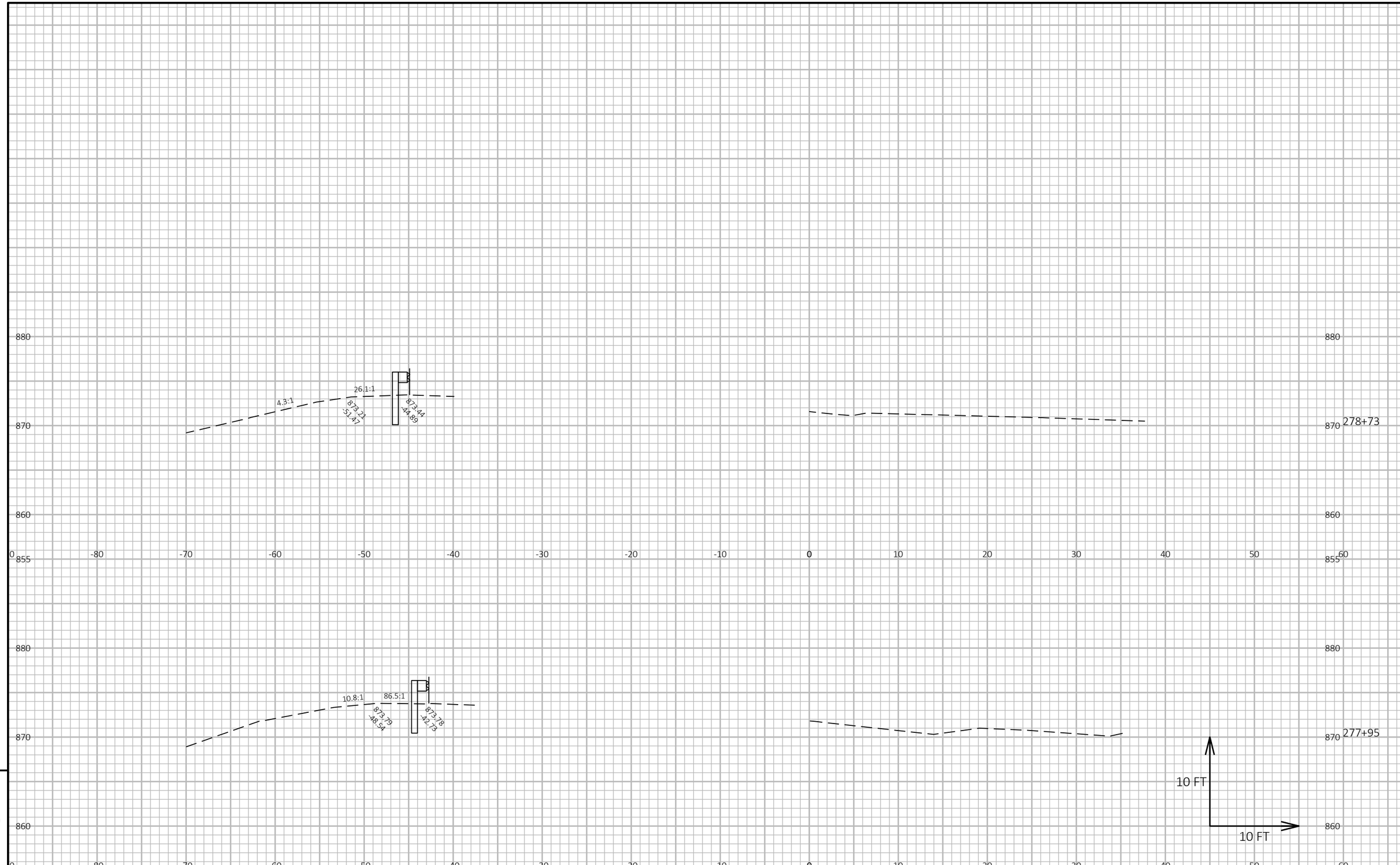

PROJECT NO: 1161-00-78	HWY: IH 39	COUNTY: COLUMBIA	CROSS SECTIONS: GUARDRAIL	SHEET 223	E

FILE NAME : C:\USERS\JAMES.GOLDEN\ONEDRIVE - DAAR CORPORATION\DOCUMENTS - SW DESIGN\1161-00-08 IH39, SB LANES, COLUMBIA CTY\C3D\11610008\SHEETSPLAN\090201-XS.DWG
LAYOUT NAME - 7.3
PLOT DATE : 10/23/2025 2:52 PM
PLOT BY : JAMES GOLDEN
PLOT NAME :
PLOT SCALE : 1 IN:10 FT HORZ. / 1 IN:10 FT VERT.
WISDOT/CADDS SHEET 49

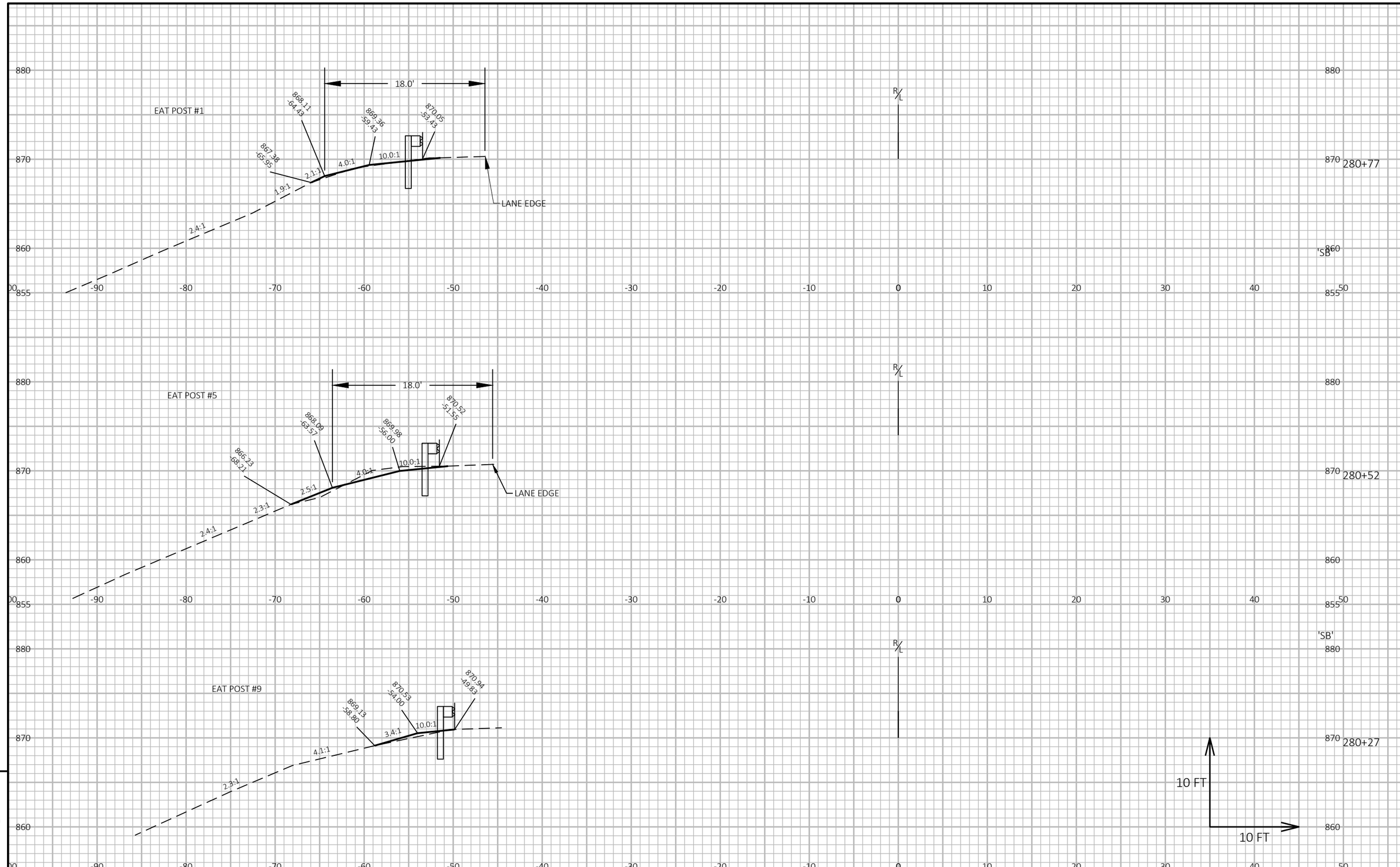

9

9

PROJECT NO: 1161-00-78	HWY: IH 39	COUNTY: COLUMBIA	CROSS SECTIONS: GUARDRAIL	SHEET 224	E

FILE NAME : C:\USERS\JAMES.GOLDEN\ONEDRIVE - DAAR CORPORATION\DOCUMENTS - SW DESIGN\1161-00-08 IH39, SB LANES, COLUMBIA CTY\C3D\11610008\SHEETSPLAN\090201-XS.DWG
LAYOUT NAME - 7.4
PLOT DATE : 10/23/2025 2:52 PM
PLOT BY : JAMES GOLDEN
PLOT NAME :
PLOT SCALE : 1 IN:10 FT HORZ. / 1 IN:10 FT VERT.

WISDOT/CADDS SHEET 49

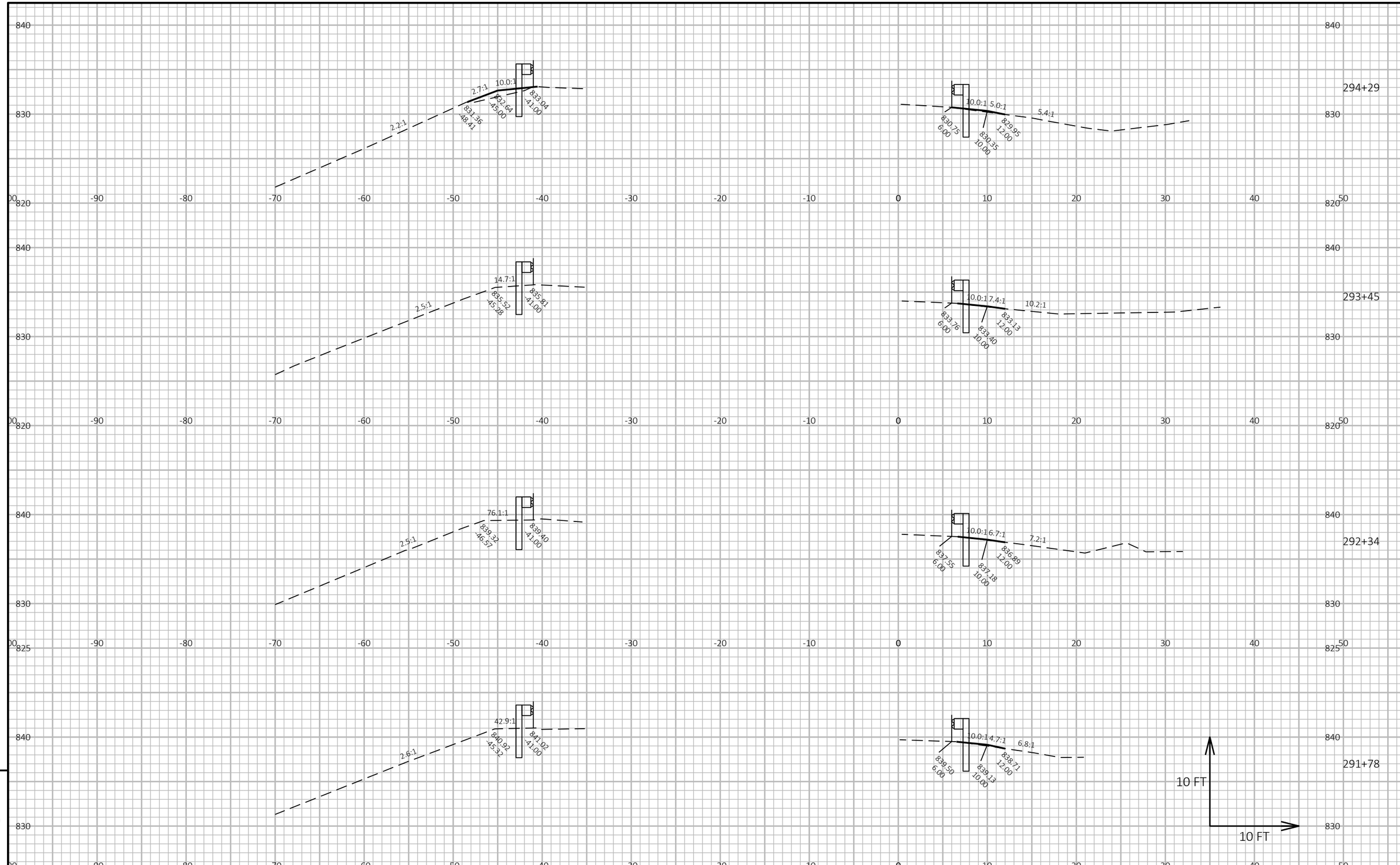

PROJECT NO: 1161-00-78	HWY: IH 39	COUNTY: COLUMBIA	CROSS SECTIONS: GUARDRAIL	SHEET 225	E

FILE NAME : C:\USERS\JAMES.GOLDEN\ONEDRIVE - DAAR CORPORATION\DOCUMENTS - SW DESIGN\1161-00-08 IH39, SB LANES, COLUMBIA CTY\C3D\11610008\SHEETSPLAN\090201-XS.DWG
LAYOUT NAME - 8.1
PLOT DATE : 10/23/2025 2:52 PM
PLOT BY : JAMES GOLDEN
PLOT NAME :
PLOT SCALE : 1 IN:10 FT HORZ. / 1 IN:10 FT VERT.
WISDOT/CADDS SHEET 49

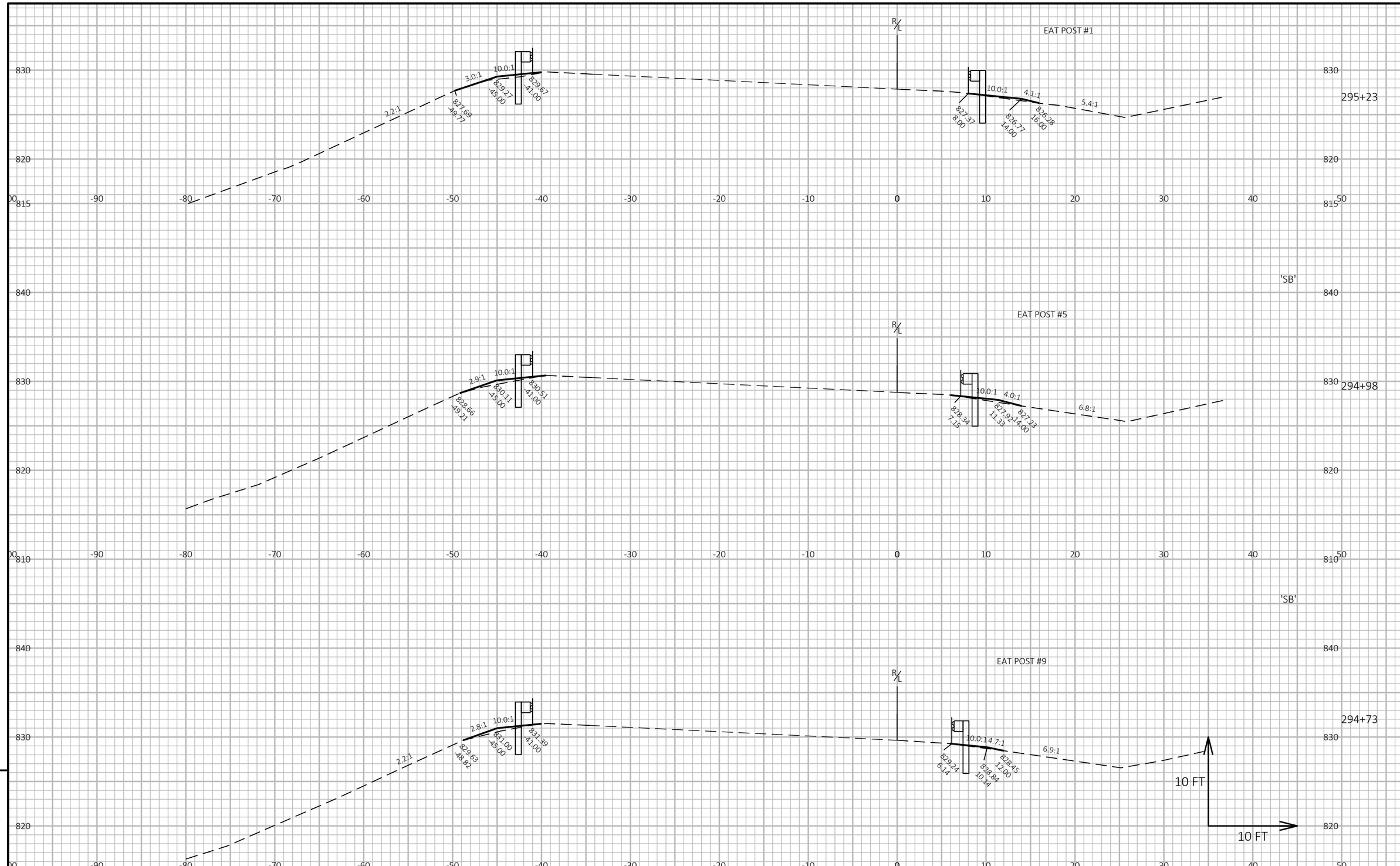

9

9

PROJECT NO: 1161-00-78	HWY: IH 39	COUNTY: COLUMBIA	CROSS SECTIONS: GUARDRAIL	SHEET 226	E

FILE NAME : C:\USERS\JAMES.GOLDEN\ONEDRIVE - DAAR CORPORATION\DOCUMENTS - SW DESIGN\1161-00-08 IH39, SB LANES, COLUMBIA CTY\C3D\11610008\SHEETSPLAN\090201-XS.DWG
LAYOUT NAME - 8.2
PLOT DATE : 10/23/2025 2:52 PM
PLOT BY : JAMES GOLDEN
PLOT NAME :
PLOT SCALE : 1 IN:10 FT HORZ. / 1 IN:10 FT VERT.
WISDOT/CADDS SHEET 49

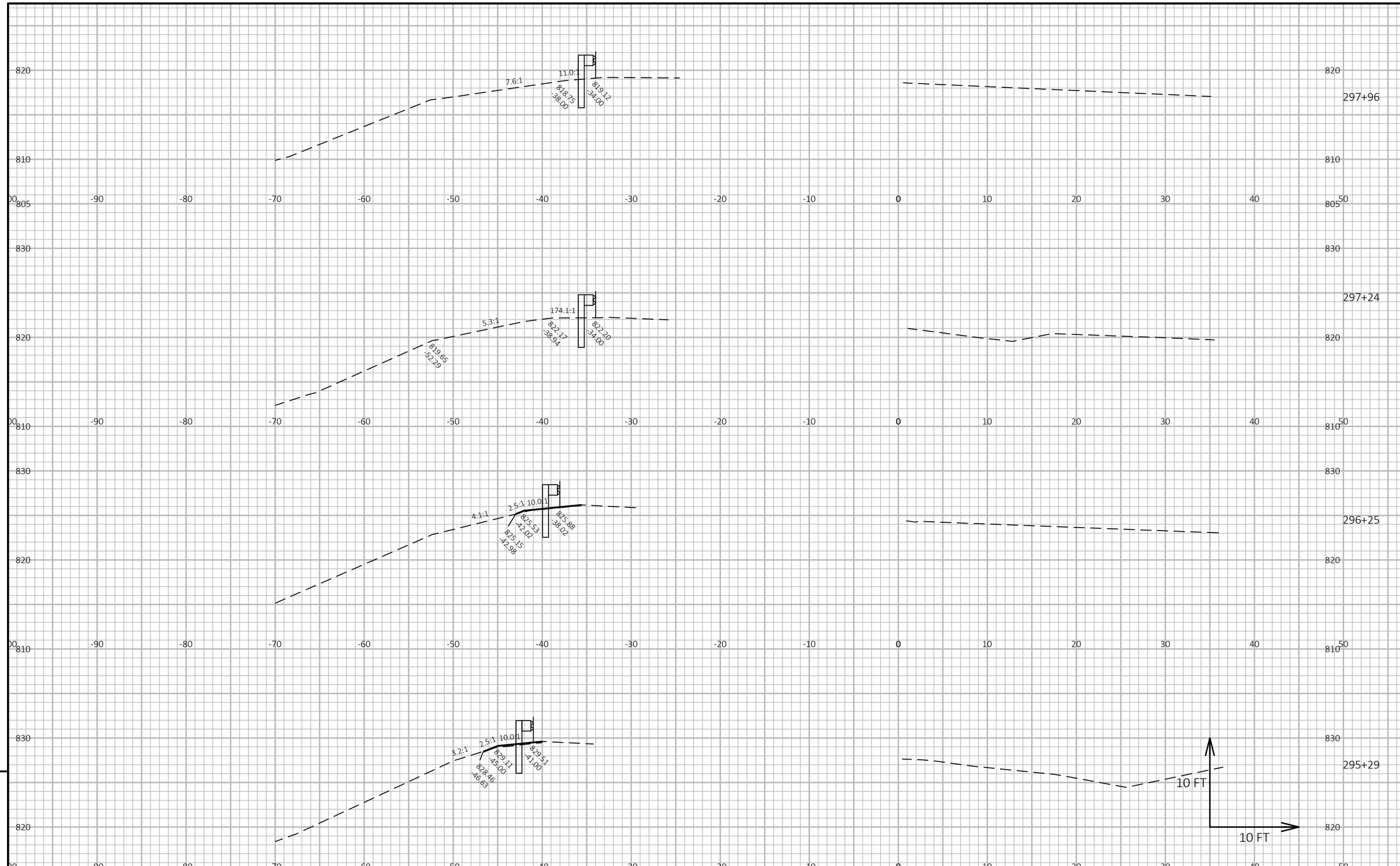

PROJECT NO: 1161-00-78	HWY: IH 39	COUNTY: COLUMBIA	CROSS SECTIONS: GUARDRAIL	SHEET 227	E

FILE NAME : C:\USERS\JAMES.GOLDEN\ONEDRIVE - DAAR CORPORATION\DOCUMENTS - SW DESIGN\1161-00-08 IH39, SB LANES, COLUMBIA CTY\C3D\11610008\SHEETSPLAN\090201-XS.DWG
LAYOUT NAME - 8.3
PLOT DATE : 10/23/2025 2:53 PM
PLOT BY : JAMES GOLDEN
PLOT NAME :
PLOT SCALE : 1 IN:10 FT HORZ. / 1 IN:10 FT VERT.
WISDOT/CADDS SHEET 49

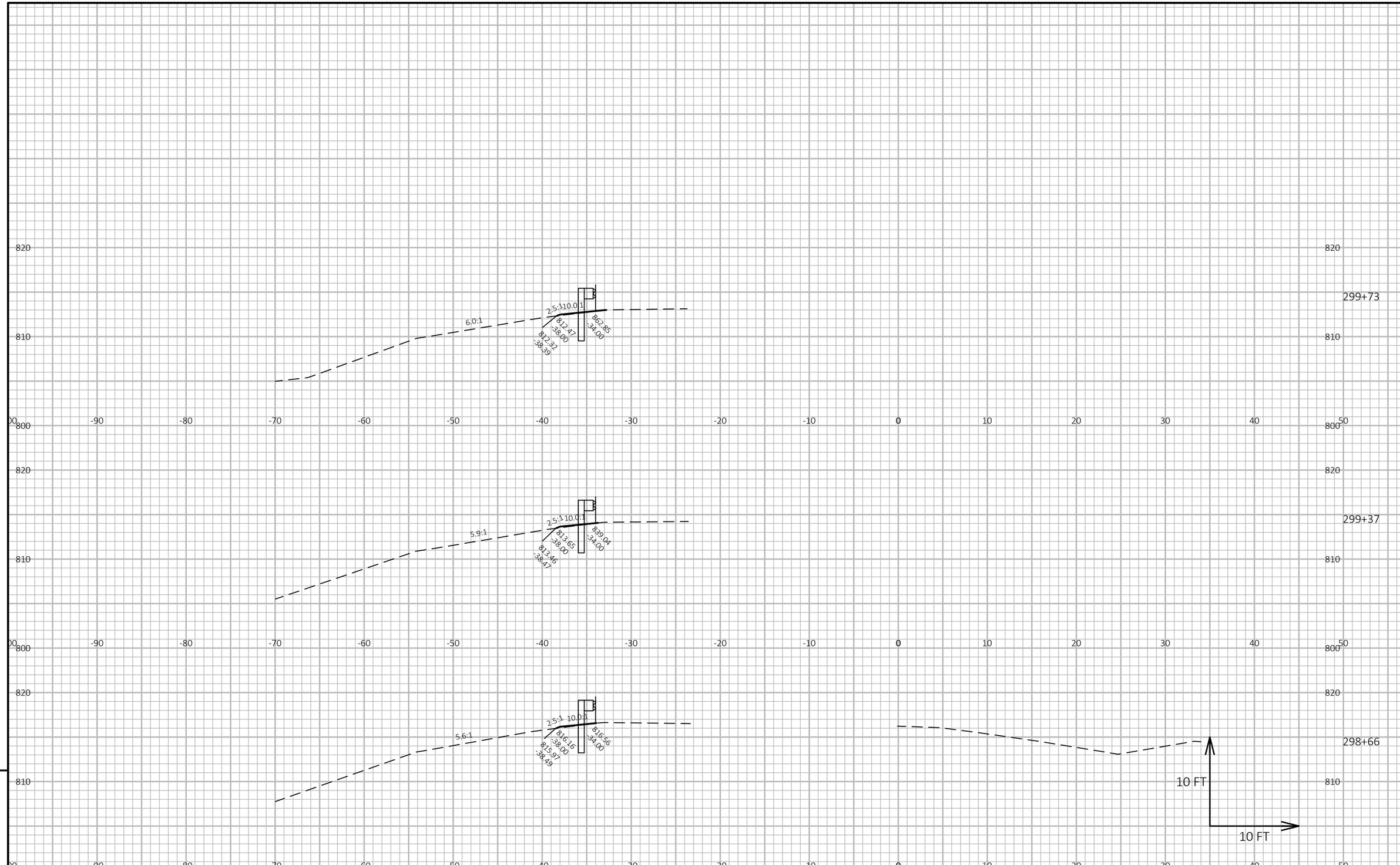

9

9

PROJECT NO: 1161-00-78	HWY: IH 39	COUNTY: COLUMBIA	CROSS SECTIONS: GUARDRAIL	SHEET 228	E

FILE NAME : C:\USERS\JAMES.GOLDEN\ONEDRIVE - DAAR CORPORATION\DOCUMENTS - SW DESIGN\1161-00-08 IH39, SB LANES, COLUMBIA CTY\C3D\11610008\SHEETSPLAN\090201-XS.DWG
LAYOUT NAME - 8.4
PLOT DATE : 10/23/2025 2:53 PM
PLOT BY : JAMES GOLDEN
PLOT NAME :
PLOT SCALE : 1 IN:10 FT HORZ. / 1 IN:10 FT VERT.
WISDOT/CADDS SHEET 49

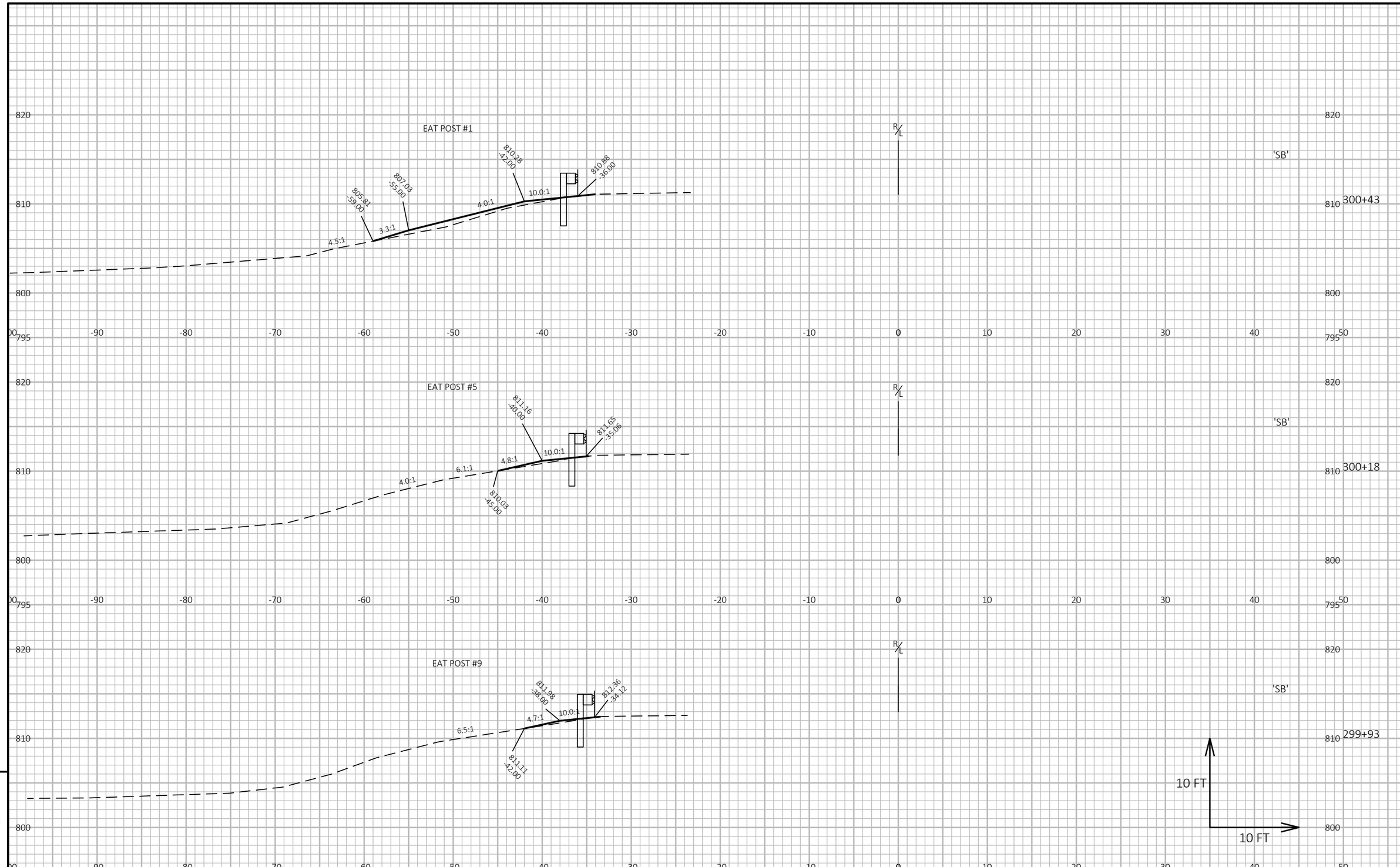

9

9

PROJECT NO: 1161-00-78	HWY: IH 39	COUNTY: COLUMBIA	CROSS SECTIONS: GUARDRAIL	SHEET 229	E

FILE NAME : C:\USERS\JAMES.GOLDEN\ONEDRIVE - DAAR CORPORATION\DOCUMENTS - SW DESIGN\1161-00-08 IH39, SB LANES, COLUMBIA CTY\C3D\11610008\SHEETSPLAN\090201-XS.DWG
LAYOUT NAME - 8.5
PLOT DATE : 10/23/2025 2:53 PM
PLOT BY : JAMES GOLDEN
PLOT NAME :
PLOT SCALE : 1 IN:10 FT HORZ. / 1 IN:10 FT VERT.
WISDOT/CADDS SHEET 49

Wisconsin Department of Transportation

Dedicated people creating transportation solutions through innovation and exceptional service.

http://www.dot.wisconsin.gov