WIS APRIL 2026

PROJECT ID: 6530-01-70

WITH: N/A

COUNTY: WAUSHARA

ORDER OF SHEETS

Section No.	1	Title
Section No.	2	Typical Sections and Details
Section No.	3	Estimate of Quantities
Section No.	3	Miscellaneous Quantities
Section No.	4	Right of Way Plat
Section No.	5	Plan and Profile
Section No.	6	Standard Detail Drawings
Section No.	7	Sign Plates
~~Section No.~~	~~8~~	~~Structure Plans~~
Section No.	9	Computer Earthwork Data
Section No.	9	Cross Sections

TOTAL SHEETS = 184

STATE PROJECT	FEDERAL PROJECT	
	PROJECT	CONTRACT
6530-01-70	—	—

STATE OF WISCONSIN
DEPARTMENT OF TRANSPORTATION

PLAN OF PROPOSED IMPROVEMENT

PRINCETON - PLAINFIELD

WHITE RIVER BRIDGE TO STH 21

STH 73

WAUSHARA COUNTY

STATE PROJECT NUMBER
6530-01-70

N

DESIGN DESIGNATION 6530-01-00

A.A.D.T.	2027	=	2260
A.A.D.T.	2047	=	2260
D.H.V.		=	
D.D.		=	50/50
T.		=	18.7%
DESIGN SPEED		=	55 MPH
ESALS		=	730,000

END PROJECT
STA 486+26.82

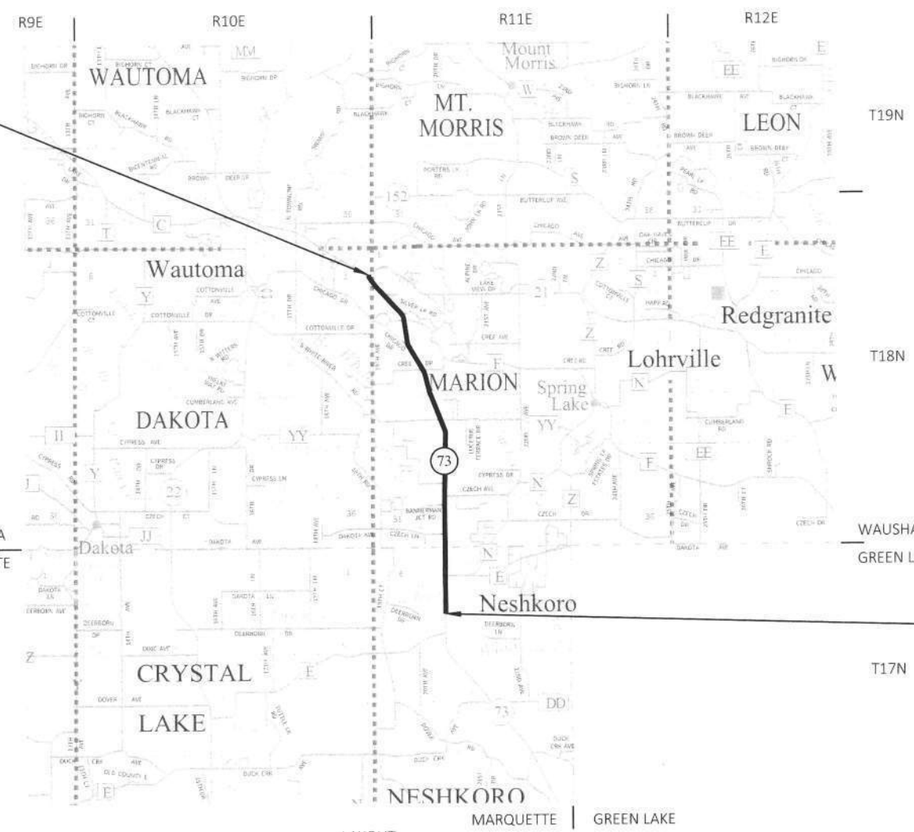

BEGIN PROJECT
STA 111+34.23
Y = 93,065.549
X = 400,060.619

CONVENTIONAL SYMBOLS

PLAN

- CORPORATE LIMITS
- PROPERTY LINE
- LOT LINE
- LIMITED HIGHWAY EASEMENT
- EXISTING RIGHT OF WAY
- PROPOSED OR NEW R/W LINE
- SLOPE INTERCEPT
- REFERENCE LINE (300'R')
- EXISTING CULVERT
- PROPOSED CULVERT (Box or Pipe)
- COMBUSTIBLE FLUIDS (CAUTION)
- MARSH AREA
- WOODED OR SHRUB AREA

PROFILE

- GRADE LINE (WAUSHARA, MARQUETTE)
- ORIGINAL GROUND
- MARSH OR ROCK PROFILE (To be noted as such) (ROCK)
- SPECIAL DITCH (LABEL)
- GRADE ELEVATION (95.36)
- CULVERT (Profile View)

UTILITIES

- ELECTRIC (E)
- FIBER OPTIC (FO)
- GAS (G)
- SANITARY SEWER (SAN)
- STORM SEWER (SS)
- TELEPHONE (T)
- WATER (W)
- UTILITY PEDESTAL
- POWER POLE
- TELEPHONE POLE

LAYOUT
SCALE 0 — 3 MI

TOTAL NET LENGTH OF CENTERLINE = 7.101 MI

HORIZONTAL POSITIONS SHOWN ON THIS PLAN ARE WISCONSIN COORDINATE REFERENCE SYSTEM (WISCRS), WAUSHARA COUNTY, NAD83 (2011), IN U.S. SURVEY FEET. POSITIONS SHOWN ARE GRID COORDINATES, GRID BEARINGS, AND GRID DISTANCES. GRID DISTANCES ARE THE SAME AS GROUND DISTANCES.

ELEVATIONS ARE REFERENCED TO NAVD 88 (2012). GPS DERIVED ELEVATIONS ARE BASED ON GEOID 18.

ORIGINAL PLANS PREPARED BY

SRF

WISCONSIN
BRIAN M. GENSKOW
E-45795-6
MIDDLETON, WI
PROFESSIONAL ENGINEER

10/17/25

STATE OF WISCONSIN
DEPARTMENT OF TRANSPORTATION

PREPARED BY

Surveyor	JT ENGINEERING
Designer	SRF CONSULTING GROUP, INC.
Project Manager	MATT BRONSON
Regional Examiner	FRED SCHUNKE
Regional Supervisor	KEVIN KUJAWA

APPROVED FOR THE DEPARTMENT

DATE: 10/17/2025 (Signature)

E

2

UTILITIES CONTACTS

ALLIANT ENERGY
ELECTRIC
CORY CLINCH
880 NORTH WISCONSIN STREET
BERLIN WI, 54923
PHONE: (920) 361-5668
EMAIL: coreyclinch@alliantenergy.com

ANR PIPELINE CO
GAS/PETROLEUM
DANIEL FLAHERTY
W 3925 PIPELINE LANE
EDEN, WI 53019
PHONE: (920) 477-2006
EMAIL: Daniel_flaherty@tcenergy.com

ATC MANAGEMENT, INC
ELECTRIC-TRANSMISSION
DOUG VOSBERG
2489 RINDEN ROAD
COTTAGE GROVE, WI 53527
PHONE: (608) 877-7650
EMAIL: dvosberg@atcllc.com

BRIGHTSPEED OF CENTRAL WISCONSIN, LLC
COMMUNICATIONS
SCOTT HEINZELMAN
144 NORTH PEARL STREET
BERLIN, WI 54923
PHONE: (608) 716-5964
EMAIL: scott.heinzelman@brightspeed.com

BRIGHTSPEED OF WESTERN WISCONSIN, LLC
COMMUNICATIONS
SCOTT HEINZELMAN
144 NORTH PEARL STREET
BERLIN, WI 54923
PHONE: (608) 716-5964
EMAIL: scott.heinzelman@brightspeed.com

BUG TUSSEL WIRELESS, LLC
COMMUNICATIONS
DUSTIN TEAFF
1262 CAMBER COURT
DE PERE, WI 54115
PHONE: (920) 254-3539
EMAIL: dustin.teaff@btussel.com

NESHKORO WASTEWATER TREATMENT FACILITY
SEWER
BOB VANDERGRINTEN
322 SOUTH MAIN STREET
NESHKORO, WI 54960
PHONE: (920) 765-1927
EMAIL: bobneshkoro@gmail.com

SILVER LAKE SANITARY DISTRICT
SEWER
BRANDON HALE
N1702 19TH AVENUE
WAUTOMA, WI 54982
PHONE: (920) 787-7622
EMAIL: sldistrict@outlook.com

SPECTRUM
COMMUNICATIONS
JASON O'KEEFE
5024 HEFFRON STREET
STEVENS POINT, WI 54481
PHONE: (715) 382-3559
EMAIL: jason.okeefe@charter.com

WE ENERGIES
GAS/PETROLEUM
LARRY KOCH
1921 8TH STREET SOUTH
WISCONSIN RAPIDS, WI 54494
PHONE: (715) 421-7249
EMAIL: larry.koch@we-energies.com

WISCONSIN DNR LIAISON

MARTY DILLENBURG
OSHKOSH SERVICE CENTER
625 E COUNTY ROAD Y, SUITE 70
OSHKOSH, WI 54901-9731
PHONE: (920) 410-7428
EMAIL: marty.dillenburg@wisconsin.gov

WISCONSIN HEIGHT MODERNIZATION

JACOB ROCKWEILER, P.E.
PROGRAM MANAGER
PHONE: (608) 516-6362
EMAIL: jacob.rockweiler@dot.wi.gov

GENERAL NOTES

THE LOCATIONS OF EXISTING AND PROPOSED UTILITY INSTALLATIONS AS SHOWN ON THE PLANS ARE APPROXIMATE. THERE MAY BE OTHER UTILITY INSTALLATIONS WITHIN THE PROJECT AREA THAT ARE NOT SHOWN.

THE ALIGNMENT IN THIS PLAN IS BASED ON THE EXISTING AS BUILTS. THE ACTUAL ROADWAY CENTERLINE MAY DEVIATE FROM THE PLAN. NEW HMA PAVEMENT SHALL FOLLOW EXISTING ROADWAY CENTERLINE. ANY ADJUSTMENTS SHALL BE INCIDENTAL TO OTHER ITEMS IN THE CONTRACT.

THE EXISTING CURVE SUPER ELEVATION WILL BE RESTORED IN KIND.

HMA PAVEMENT WEIGHT CALCULATIONS ARE BASED ON 112 LBS/SY/IN.

RIGHT OF WAY INFORMATION SHOWN ON THE PLANS IS APPROXIMATE.

RADIUS DIMENSIONS FOR THE CURB AND GUTTER ARE TO THE FLANGE LINE UNLESS OTHERWISE NOTED.

CURB AND GUTTER PLAN GRADES ARE AT THE FLANGE LINE UNLESS OTHERWISE NOTED.

ENSURE THAT DH8228 GPS IS NOT DISTURBED, BUMPED, OR MOVED DURING THE DURATION OF THE PROJECT. NOTIFY JACOB ROCKWEILER IMMEDIATELY IF DH8228 GPS IS DISTURBED, BUMPED, OR MOVED DURING CONSTRUCTION OPERATIONS.

2

RUNOFF COEFFICIENT TABLE

	HYDROLOGIC SOIL GROUP											
	A			B			C			D		
	SLOPE RANGE (PERCENT)			SLOPE RANGE (PERCENT)			SLOPE RANGE (PERCENT)			SLOPE RANGE (PERCENT)		
LAND USE:	0-2	2-6	6 & OVER	0-2	2-6	6 & OVER	0-2	2-6	6 & OVER	0-2	2-6	6 & OVER
ROW CROPS:	.08	.16	.22	.12	.20	.27	.15	.24	.33	.19	.28	.38
	.22	.30	.38	.26	.34	.44	.30	.37	.50	.34	.41	.56
MEDIAN STRIPTURF:	.19	.20	.24	.19	.22	.26	.20	.23	.30	.20	.25	.30
	.24	.26	.30	.25	.28	.33	.26	.30	.37	.27	.32	.40
SIDE SLOPETURF:			.25			.27			.28			.30
			.32			.34			.36			.38
PAVEMENT:												
ASPHALT:	.70 - .95											
CONCRETE:	.80 - .95											
BRICK:	.70 - .80											
DRIVES, WALKS:	.75 - .85											
ROOFS:	.75 - .95											
GRAVEL ROADS, SHOULDERS:	.40 - .60											

TOTAL PROJECT AREA = 32.55 ACRES
TOTAL AREA EXPECTED TO BE DISTURBED BY CONSTRUCTION ACTIVITIES = 1.19 ACRES

DIGGERS HOTLINE
Dial 811 or (800)242-8511
www.DiggersHotline.com

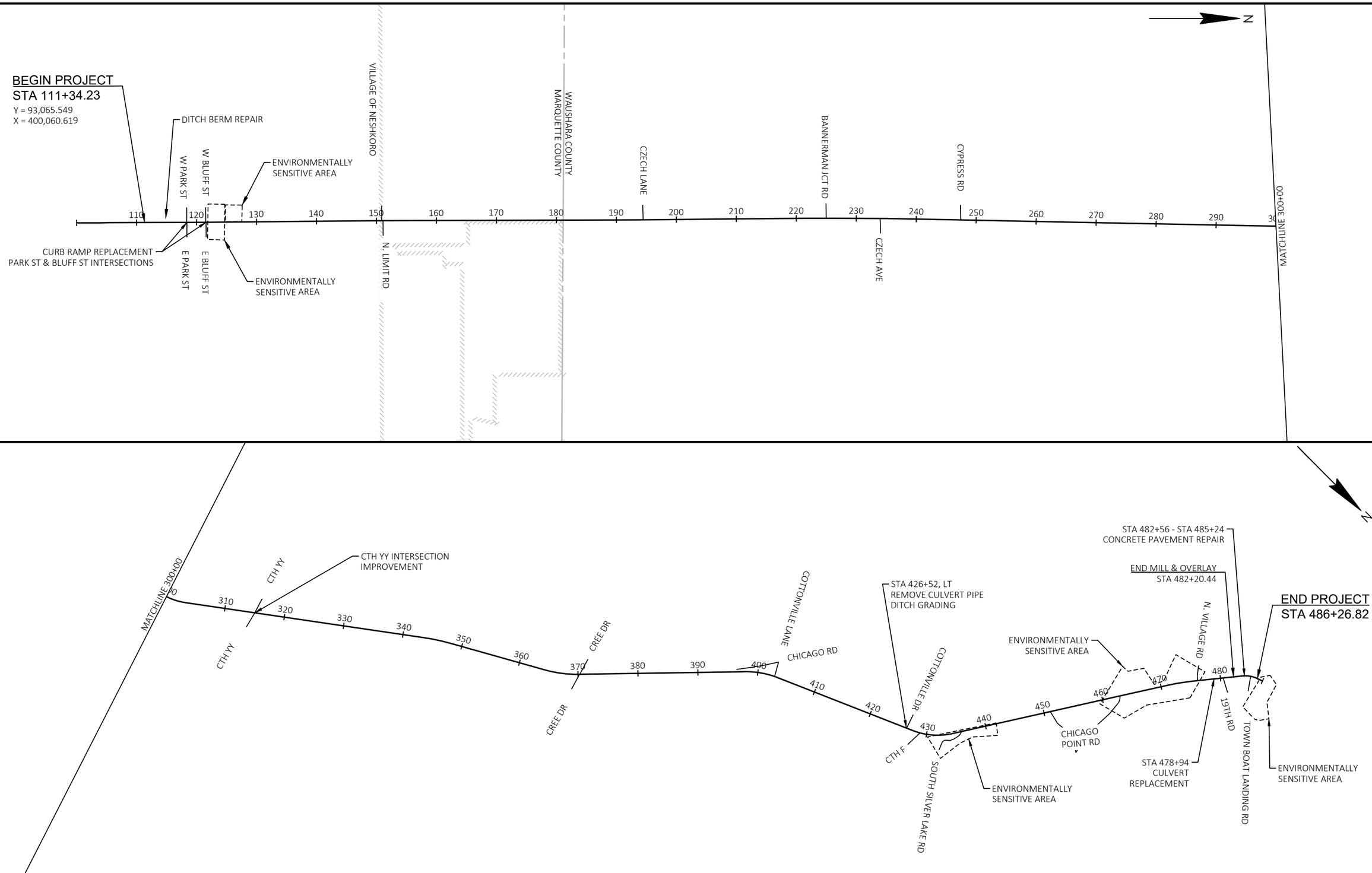
N
BEGIN PROJECT
STA 111+34.23
Y = 93,065.549
X = 400,060.619
DITCH BERM REPAIR
W PARK ST
W BLUFF ST
ENVIRONMENTALLY SENSITIVE AREA
VILLAGE OF NESHKORO
WAUSHARA COUNTY
MARQUETTE COUNTY
CZECH LANE
BANNERMAN JCT RD
CYPRESS RD
110
120
130
140
150
160
170
180
190
200
210
220
230
240
250
260
270
280
290
300
MATCHLINE 300+00
CURB RAMP REPLACEMENT
PARK ST & BLUFF ST INTERSECTIONS
E PARK ST
E BLUFF ST
ENVIRONMENTALLY SENSITIVE AREA
N. LIMIT RD
CZECH AVE
MATCHLINE 300+00
CTH YY
CTH YY INTERSECTION IMPROVEMENT
310
320
330
340
350
360
370
380
390
400
410
420
430
440
450
460
470
480
CREE DR
CREE DR
COTTONVILLE LANE
CHICAGO RD
COTTONVILLE DR
STA 426+52, LT
REMOVE CULVERT PIPE
DITCH GRADING
CTH F
SOUTH SILVER LAKE RD
ENVIRONMENTALLY SENSITIVE AREA
CHICAGO POINT RD
ENVIRONMENTALLY SENSITIVE AREA
STA 482+56 - STA 485+24
CONCRETE PAVEMENT REPAIR
END MILL & OVERLAY
STA 482+20.44
N. VILLAGE RD
19TH RD
STA 478+94
CULVERT
REPLACEMENT
TOWN BOAT LANDING RD
END PROJECT
STA 486+26.82
ENVIRONMENTALLY SENSITIVE AREA

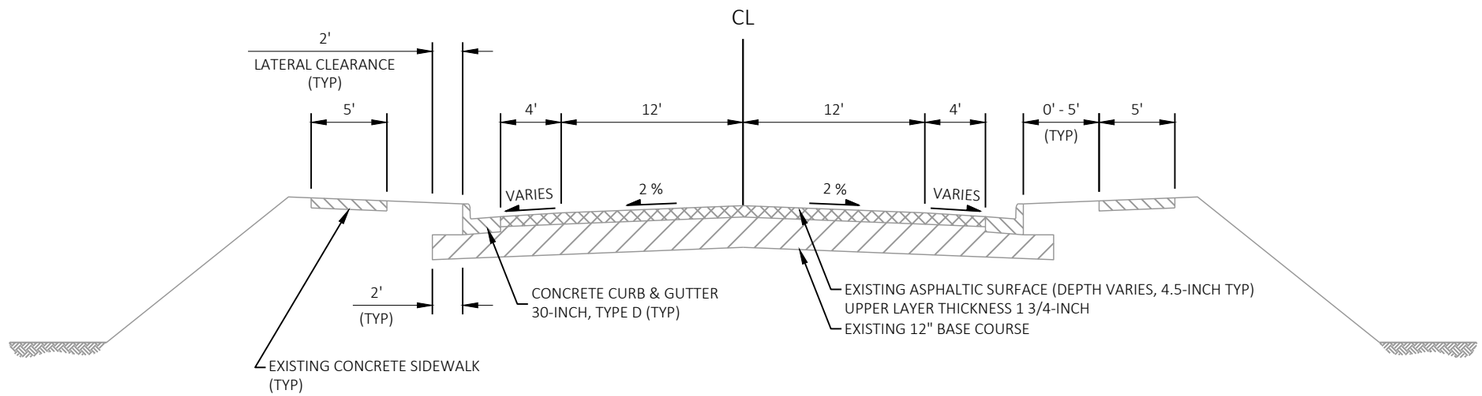

EXISTING TYPICAL SECTION

STA 111+34 - STA 118+38

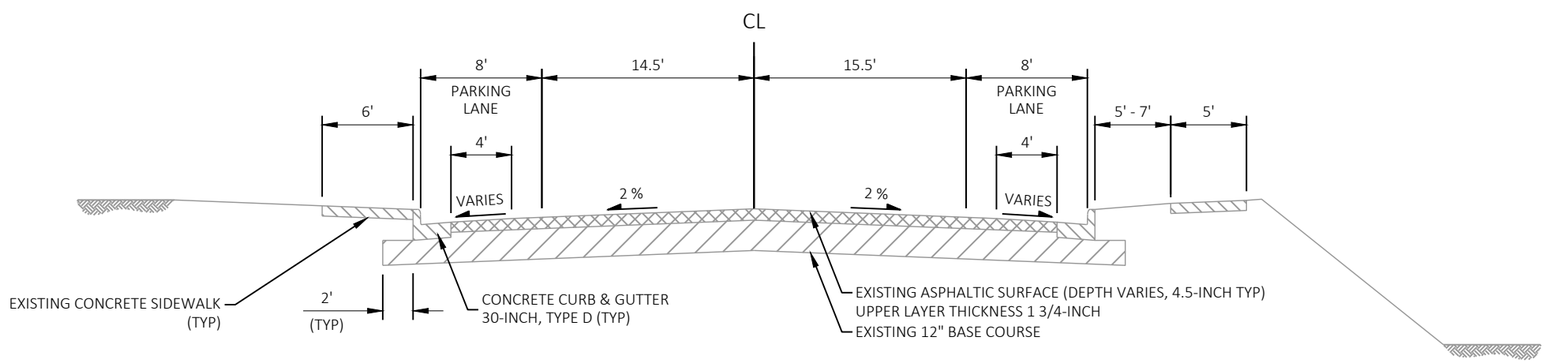

EXISTING TYPICAL SECTION

STA 118+38 - STA 121+95

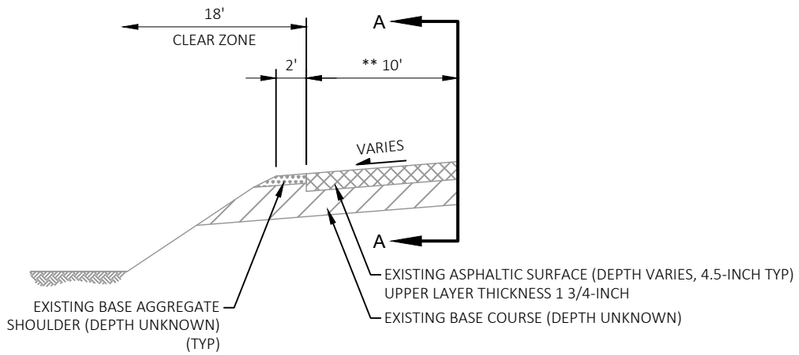

BYPASS LANE DETAIL A

STA 426+90 - STA 430+06
** TAPER FROM 4' TO 10': STA 426+20 - STA 426+93
** TAPER FROM 10' TO 6': STA 430+06 - STA 431+04

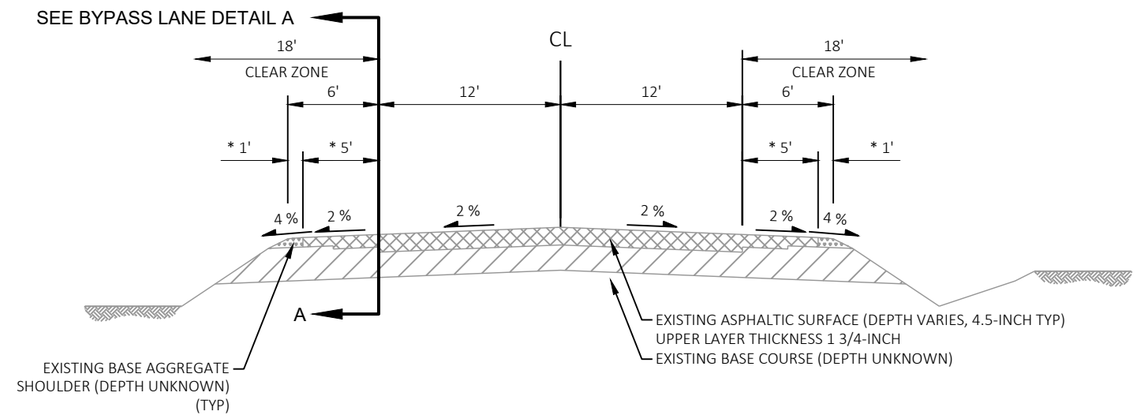

EXISTING TYPICAL SECTION

STA 121+95 - 482+20

* STA 174+71 - STA 429+25
6' SHOULDER (4' PAVED)

* STA 429+25 - 482+20
6' SHOULDER (6' PAVED)

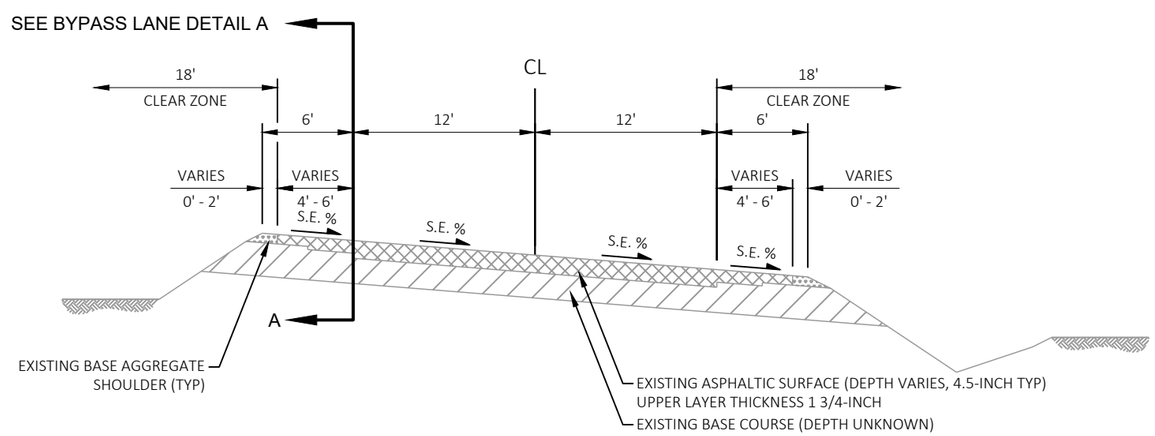

EXISTING TYPICAL SUPERELEVATED SECTION

SEE PLAN SHEETS FOR LOCATIONS AND SUPERELEVATIONS

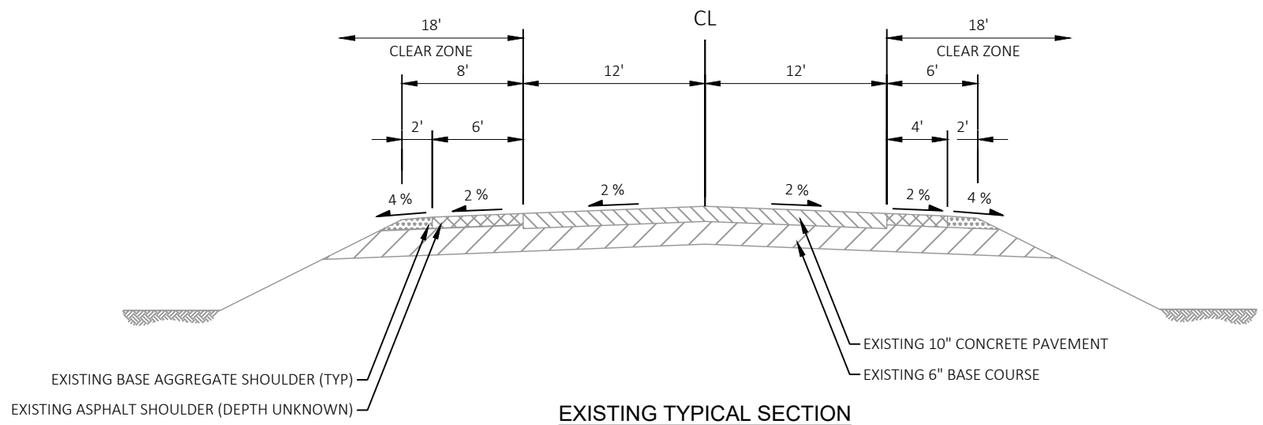

EXISTING TYPICAL SECTION

STA 482+20 - STA 486+27

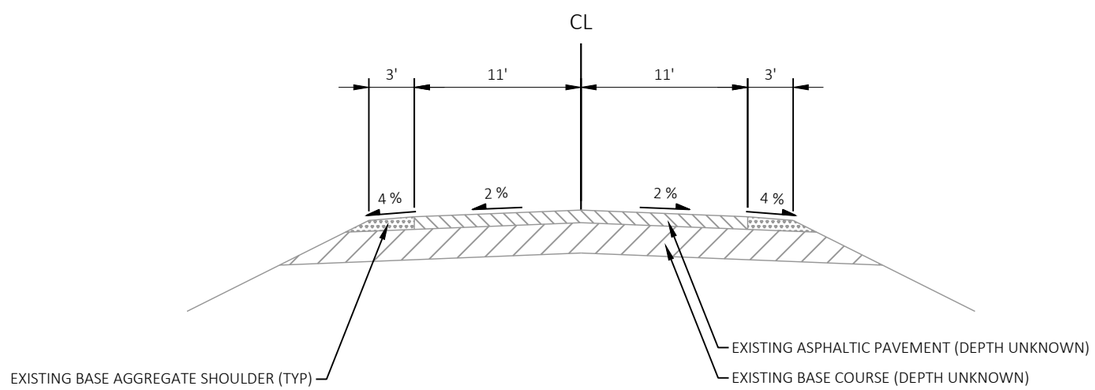

CTH YY EXISTING TYPICAL SECTION

STA 12+42 - STA 14+04 - WEST LEG
STA 20+23 - STA 23+75 - EAST LEG

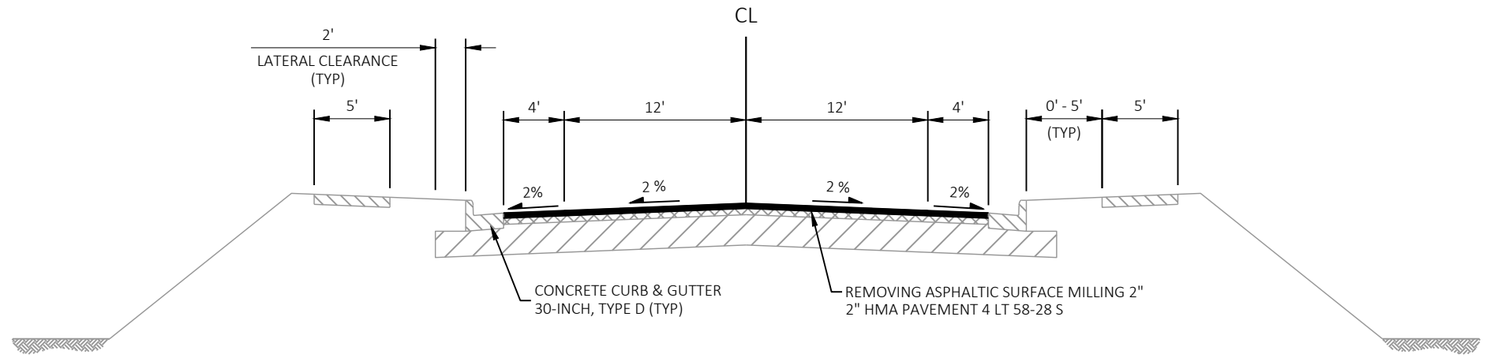

FINISHED TYPICAL SECTION

STA 111+34.23 - STA 118+37.77

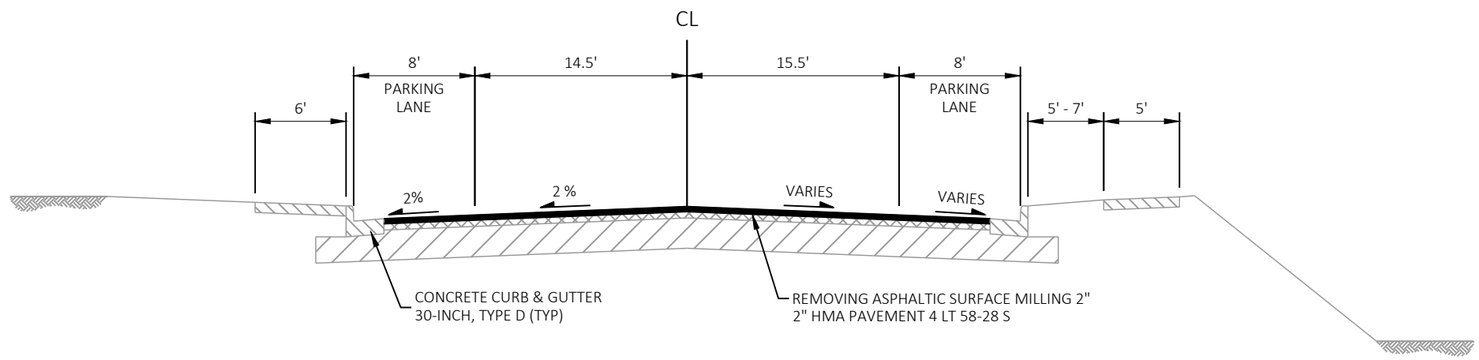

FINISHED TYPICAL SECTION

STA 118+37.77 - STA 121+94.93

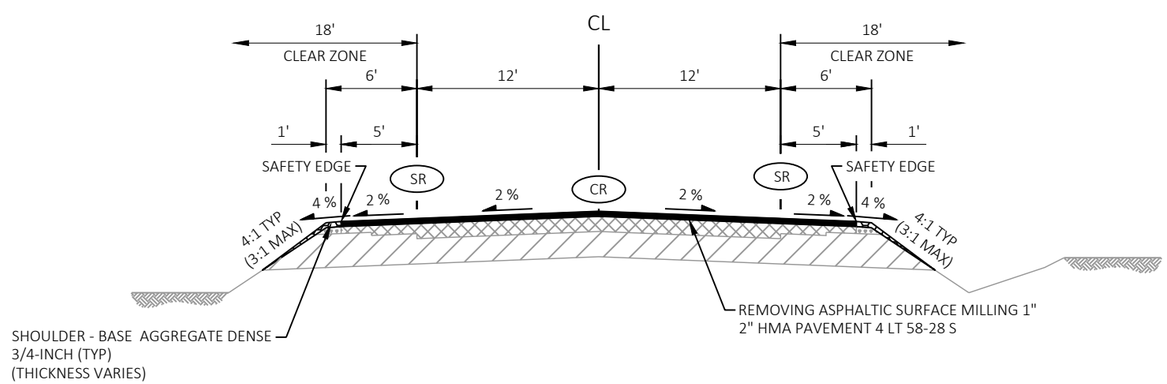

FINISHED TYPICAL SECTION

STA 121+94.93 - 174+70.64

NO SHOULDER AND CENTERLINE RUMBLE STRIPS
STA 121+94.93 - STA 157+07.00

CR — ASPHALTIC RUMBLE STRIPS, CENTERLINE. SEE SDD FOR "2-LANE RURAL CENTER LINE RUMBLE STRIP, MILLING" FOR ADDITIONAL INFORMATION

SR — ASPHALTIC RUMBLE STRIPS, SHOULDER. SEE SDD FOR "2-LANE RURAL SHOULDER RUMBLE STRIP, MILLING" FOR ADDITIONAL INFORMATION

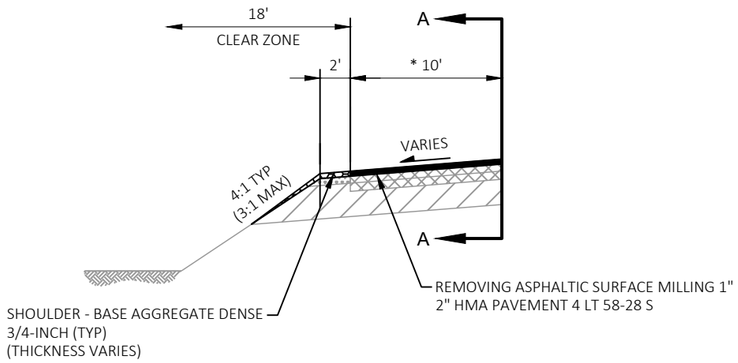

BYPASS LANE DETAIL A

STA 426+93.07 - STA 429+24.83

* TAPER FROM 4' TO 10': STA 426+20.10 - STA 426+93.07

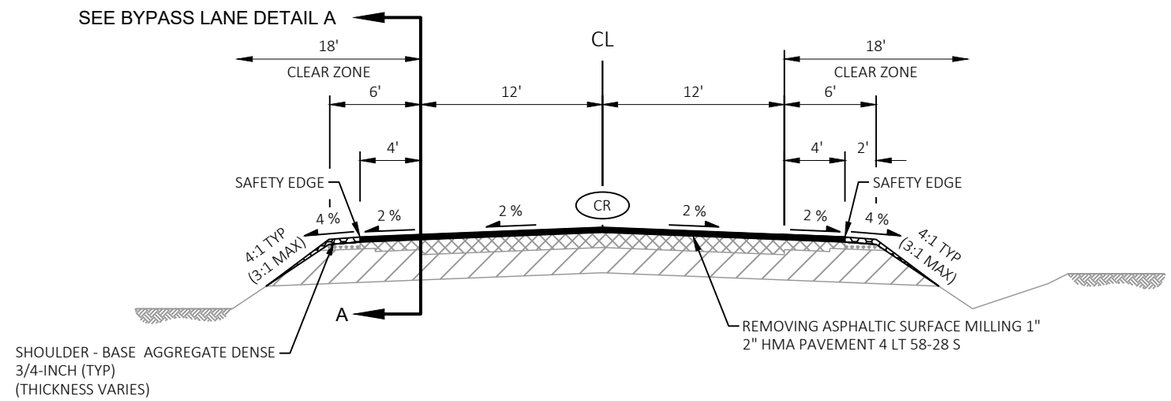

FINISHED TYPICAL SECTION

STA 174+70.64 - 429+24.83

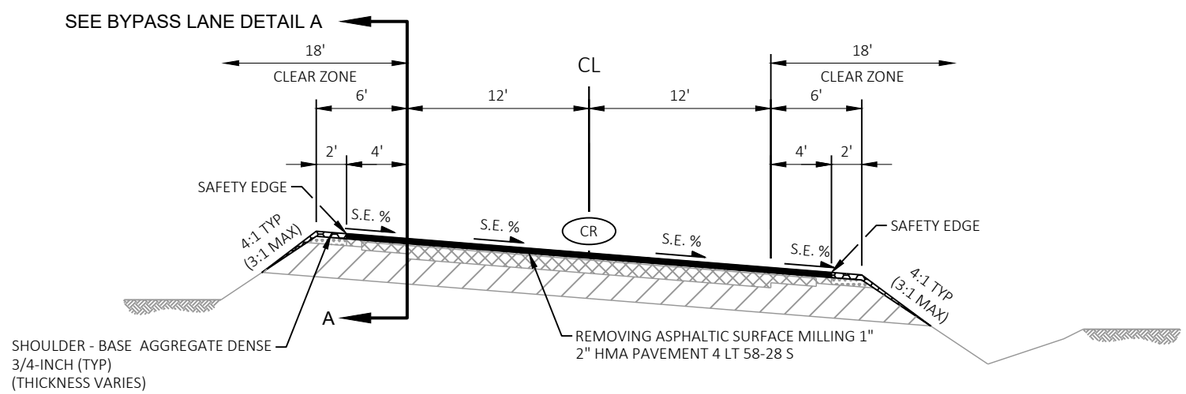

FINISHED TYPICAL SUPERELEVATED SECTION

STA 299+29.42 - STA 303+24.85
STA 343+49.04 - STA 348+11.35
STA 364+46.09 - STA 370+02.00
STA 397+74.73 - STA 403+45.22
STA 427+62.46 - STA 429+24.83

NOTES:
THE PROPOSED SHOULDER WIDTH IS A MINIMUM WIDTH, PERPETUATE EXISTING SHOULDERS THAT ARE WIDER THAN WHAT IS SHOWN IN THE TYPICAL SECTIONS.

CR — ASPHALTIC RUMBLE STRIPS, CENTERLINE. SEE SDD FOR "2-LANE RURAL CENTER LINE RUMBLE STRIP, MILLING" FOR ADDITIONAL INFORMATION

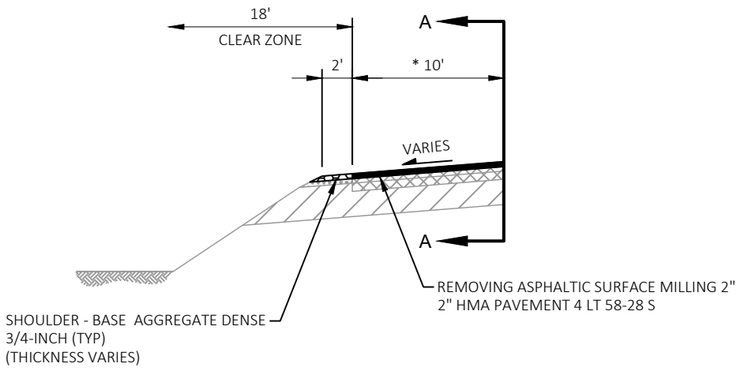

BYPASS LANE DETAIL A

STA 429+24.83 - STA 430+06.34

* TAPER FROM 10' TO 6': STA 430+06.34 - STA 431+03.63

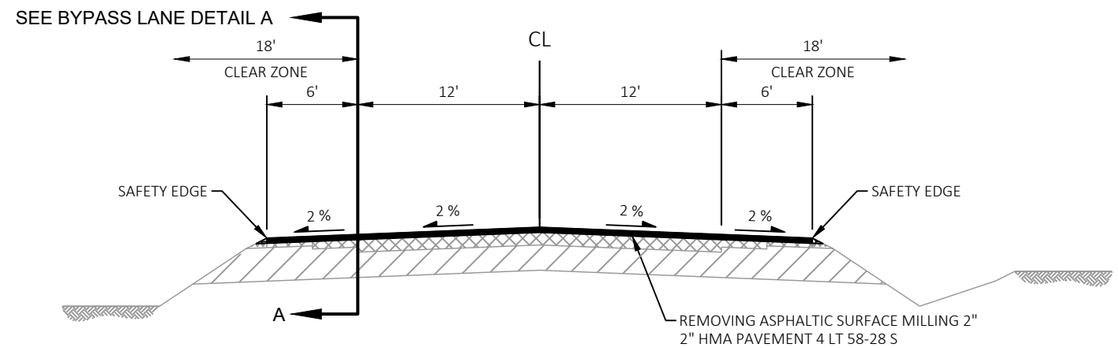

FINISHED TYPICAL SECTION

STA 429+24.83 - STA 482+20.44

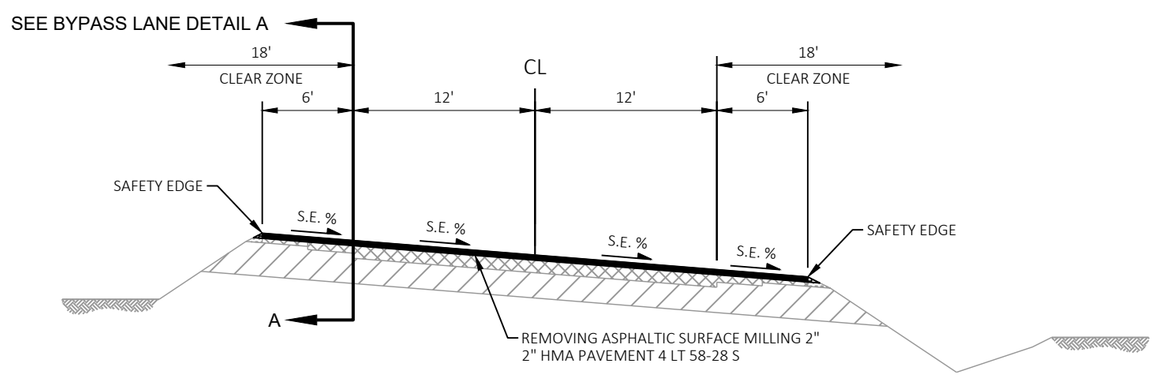

FINISHED TYPICAL SUPERELEVATED SECTION

STA 429+24.83 - STA 430+48.00

STA 430+48.00 - STA 434+34.84

STA 471+05.73 - STA 475+43.08

NOTES:

THE PROPOSED SHOULDER WIDTH IS A MINIMUM WIDTH, PERPETUATE EXISTING SHOULDERS THAT ARE WIDER THAN WHAT IS SHOWN IN THE TYPICAL SECTIONS.

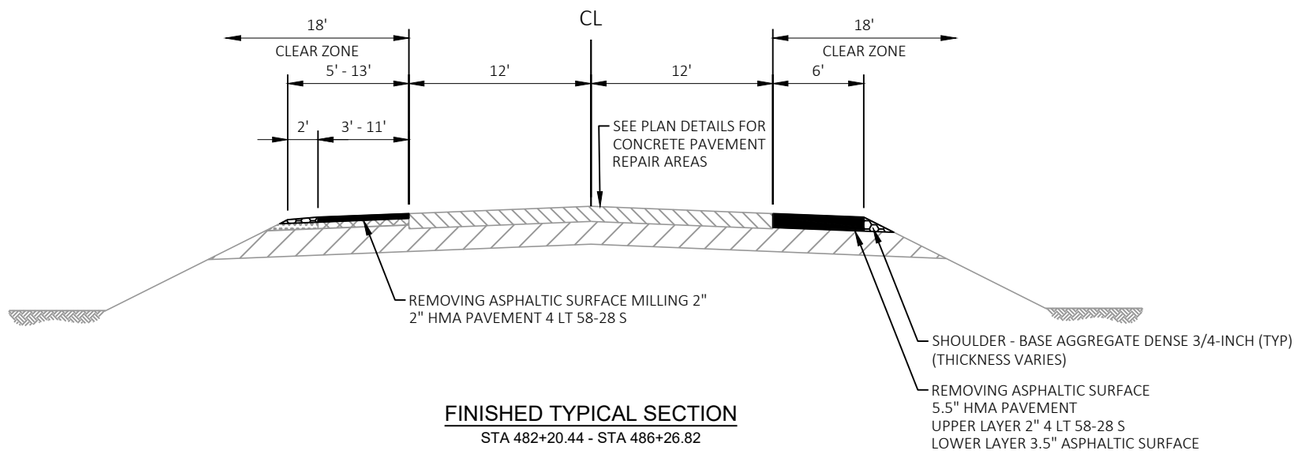

FINISHED TYPICAL SECTION

STA 482+20.44 - STA 486+26.82

STA 482+56.00 - 485+24.00
CONCRETE PAVEMENT REPAIR

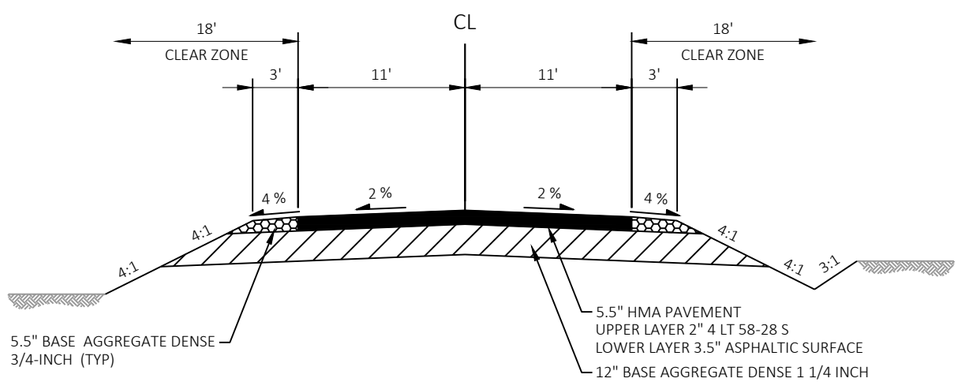

CTH YY FINISHED TYPICAL SECTION

STA 12+42.28 - STA 14+04.47 - WEST LEG
STA 20+22.81 - STA 23+75.00 - EAST LEG

2

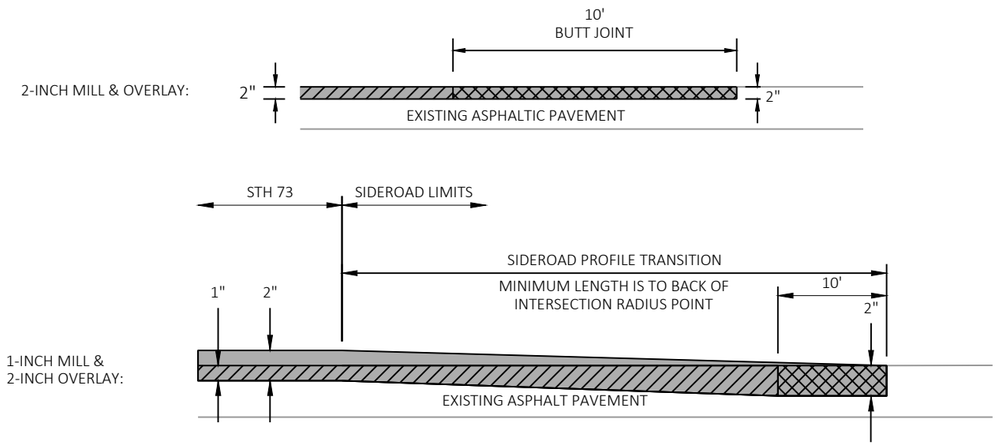

REMOVING ASPHALTIC SURFACE

REMOVING ASPHALTIC SURFACE BUTT JOINTS

HMA PAVEMENT

BUTT JOINT

- SIDE ROADS FROM STA 122+95 TO STA 429+25
- SEE STH 73 PROFILE TRANSITION DETAIL FOR TRANSITION ON MAINLINE

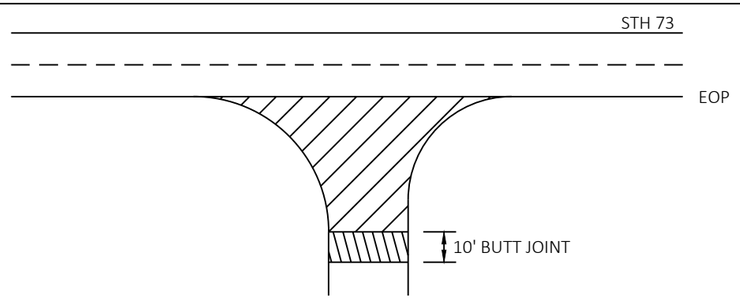

REMOVING ASPHALTIC SURFACE MILLING AND OVERLAY LIMITS

REMOVING ASPHALTIC SURFACE BUTT JOINTS SEE BUTT JOINT DETAIL

NOTE: WHEN MATCHING TO AN UNPAVED SURFACE BUTT JOINT IS NOT REQUIRED

SIDE ROAD MILLING LIMITS

WITHOUT CURB AND GUTTER

CTH N/CTH E	CREE DR
CZECH LANE	COTTONVILLE LN
BANNERMAN JUNCTION RD	COTTONVILLE DR
CZECH AVE	CTH F
CYPRESS RD	CHICAGO POINT RD

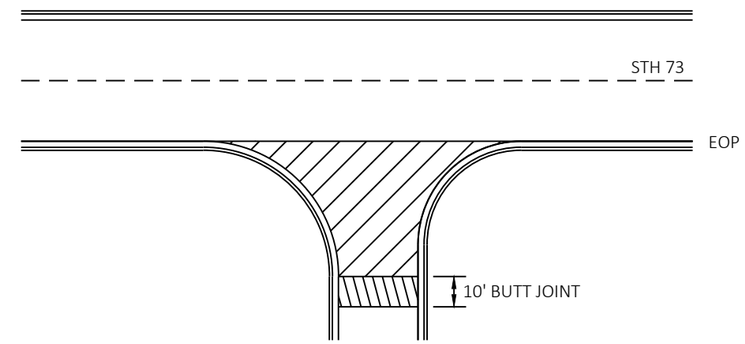

REMOVING ASPHALTIC SURFACE MILLING AND OVERLAY LIMITS

REMOVING ASPHALTIC SURFACE BUTT JOINTS SEE BUTT JOINT DETAIL

NOTE: WHEN MATCHING TO AN UNPAVED SURFACE BUTT JOINT IS NOT REQUIRED

URBAN SIDE ROAD MILLING LIMITS

WITH CURB AND GUTTER

PARK ST
BLUFF ST

2

2

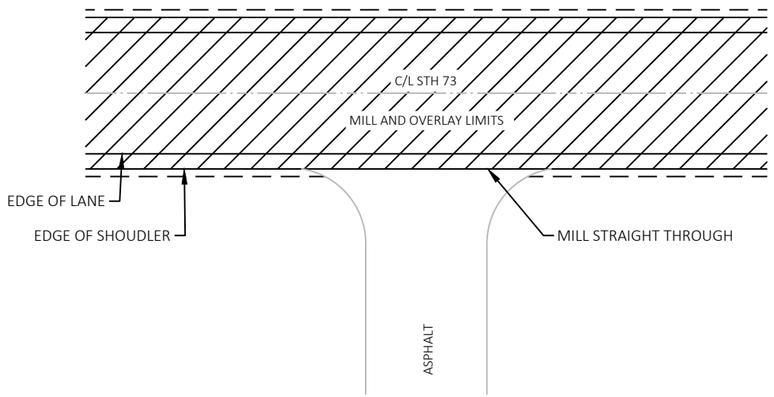

DETAIL FOR MISCELLANEOUS MILLING LIMITS

APPLY DETAIL AT:
- PAVED DRIVEWAYS WITHIN 2" MILL & OVERLAY LIMITS (STA 429+25 - STA 482+20)
- MEADOWOOD SHORES DRIVE
- SOUTH SILVER LAKE ROAD
- NORTH VILLAGE ROAD
- 19TH ROAD

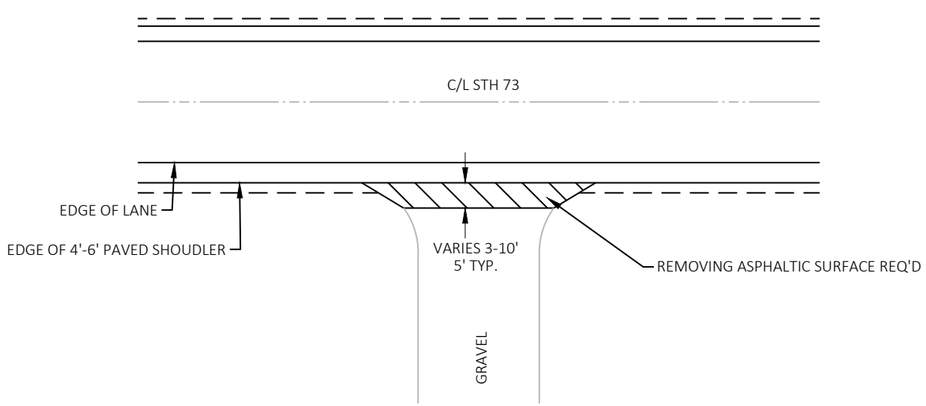

ASPHALT APRON REMOVAL AT GRAVEL DRIVEWAY DETAIL

REMOVE ALL ASPHALTIC APRON PAVEMENT. RESTORE WITH GRAVEL. SEE PLAN SHEETS FOR DRIVEWAY LOCATIONS.

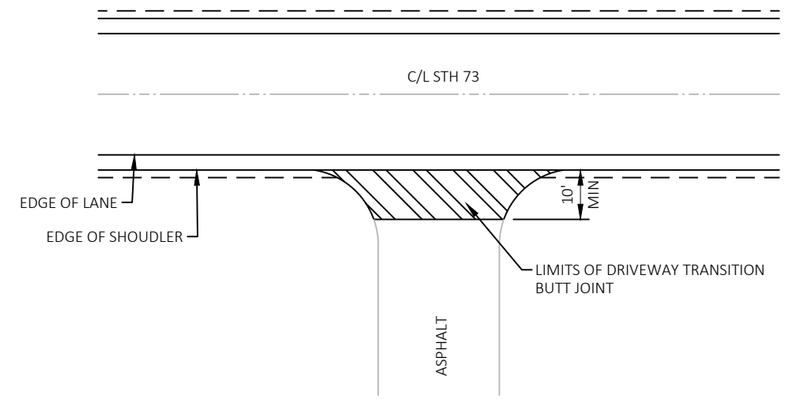

DRIVEWAY MILLING LIMITS PLAN VIEW

APPLY DETAIL AT:
- PAVED DRIVEWAYS WITHIN 1" MILL & 2" OVERLAY LIMITS (STA 121+95 - STA 429+25)

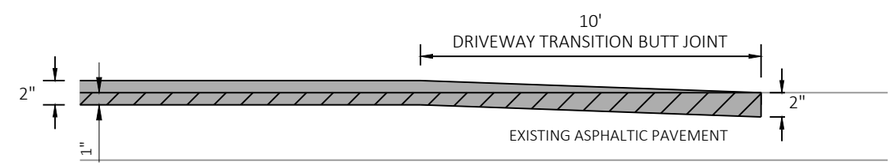

DRIVEWAY MILLING LIMITS PROFILE VIEW

HMA PAVEMENT

REMOVING ASPHALTIC SURFACE MILLING

DETAIL FOR DRIVEWAY MILLING LIMITS WITH IN ROAD PROFILE RAISE

2

PROJECT NO: 6530-01-70	HWY: STH 73	COUNTY: WAUSHARA	CONSTRUCTION DETAILS	SHEET 12	E

LEGEND

REMOVING ASPHALTIC SURFACE MILLING

HMA PAVEMENT

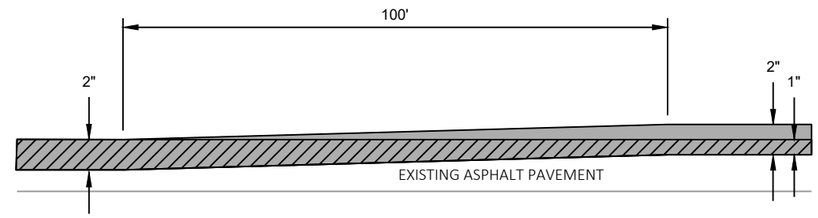

STH 73 PROFILE TRANSITION

STA. 121+95 - STA. 122+95

LEGEND

REMOVING ASPHALTIC SURFACE MILLING

HMA PAVEMENT

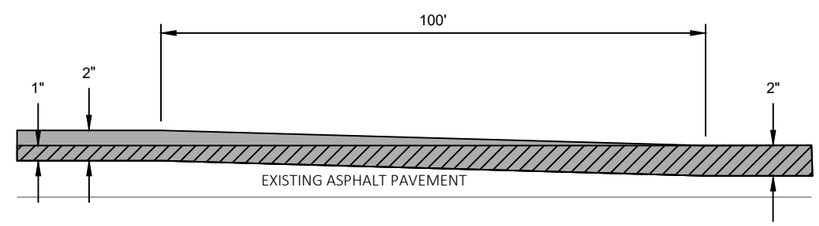

STH 73 PROFILE TRANSITION

STA. 429+25 - STA. 430+25

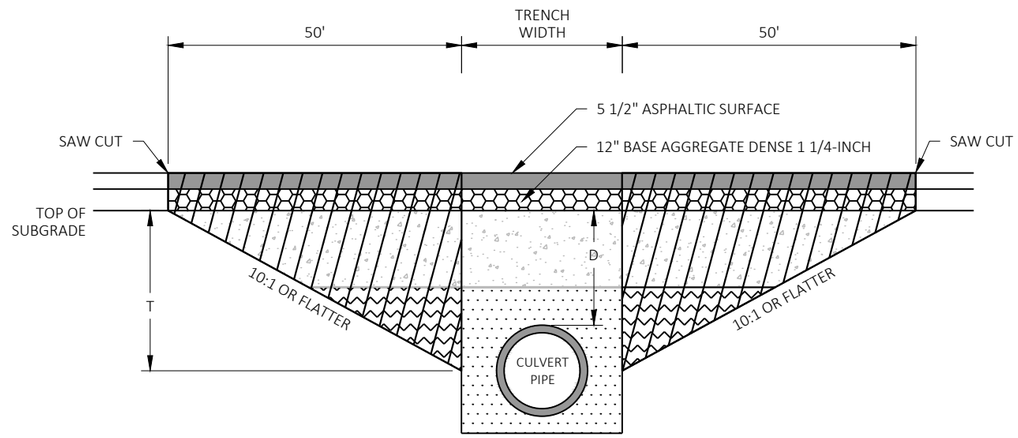

DEPTH D < 6 FT

TRANSITION CUT DEPTH (T) = THE LESSER OF DEPTH TO CENTER OF PIPE OR 5 FT.
DO NOT EXTEND TRANSITION CUT BELOW HORIZONTAL CENTER OF PIPE.

KEY

- PROPOSED SURFACE
- PROPOSED BASE
- TRENCH BACKFILL
- TRENCH OR FOUNDATION BACKFILL
- FOUNDATION BACKFILL
- TRANSITION CUT

NOTES

TRANSITION CUT IS PAID AS EXCAVATION COMMON.
TRANSITION CUT WIDTH IS FROM SUBGRADE SHOULDER POINT TO SUBGRADE SHOULDER POINT.
BACKFILL THE TRANSITION CUT AREAS WITH FOUNDATION AND TRENCH BACKFILL AS SPECIFIED IN STANDARD SPEC 520.
PERFORM CULVERT PIPE INSTALLATION BEFORE MILLING AND PAVING.

CULVERT PIPE TRANSITION

ROUTE	STA (CL)	DEPTH D (FT)	PIPE DIA (IN)	REMARKS
STH 73	478+94	1.8	24	69073007071

NOTES:

PERFORM REMOVING ASPHALTIC SURFACE MILLING PRIOR TO REMOVING DISTRESSED ASPHALTIC SURFACE MILLING

1. MILLED VERTICAL EDGES ARE ACCEPTABLE, SAW CUTS ARE NOT REQUIRED.
2. THE SMALLEST DIMENSION OF REMOVING DISTRESSED ASPHALTIC SURFACE MILLING IS 4 FEET IN ANY DIRECTION.
3. WHEN THE DISTANCE FROM THE EDGE OF PAVEMENT TO EDGE OF REMOVING DISTRESSED ASPHALTIC SURFACE MILLING IS LESS THAN 1-FOOT, EXTEND THE REMOVING DISTRESSED ASPHALTIC SURFACE MILLING TO THE EDGE OF PAVEMENT.

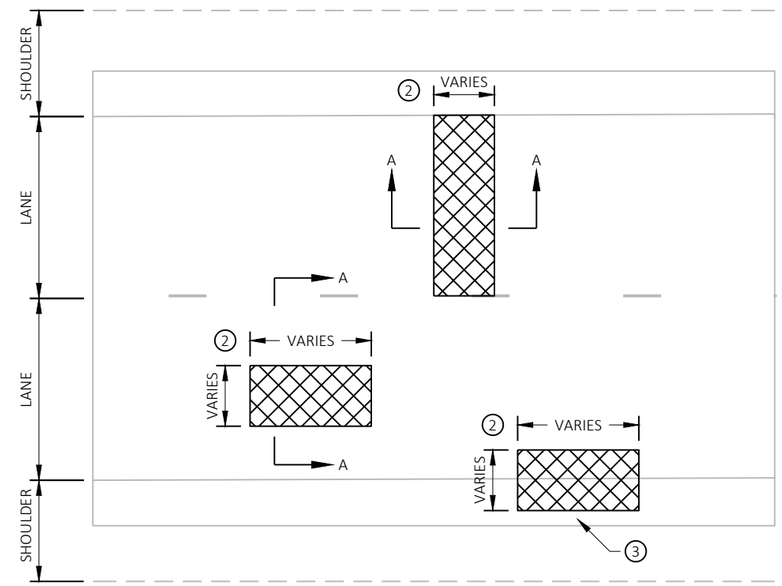

PLAN VIEW

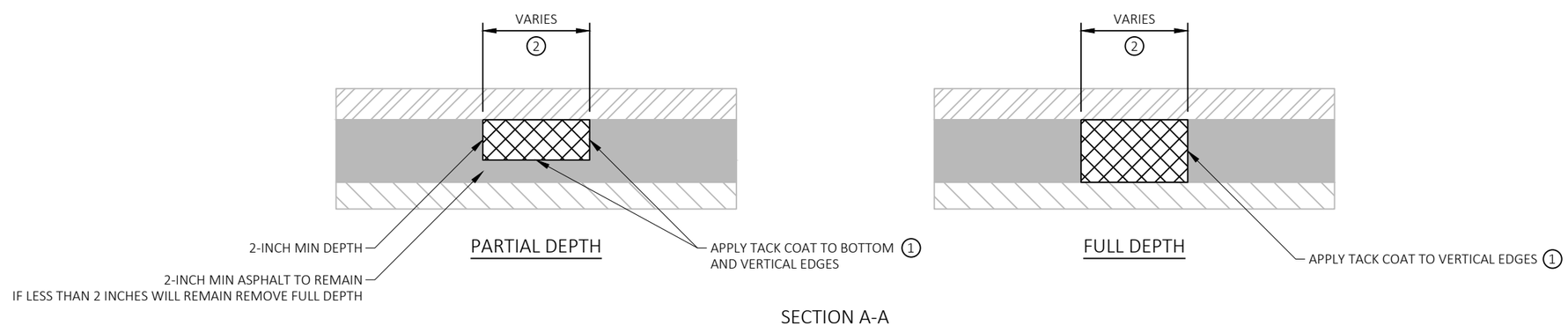

SECTION A-A

- REMOVING ASPHALTIC SURFACE MILLING
- REMOVING DISTRESSED ASPHALTIC SURFACE MILLING
  ASPHALTIC SURFACE PATCHING
- EXISTING ASPHALT
- EXISTING BASE COURSE

REMOVING DISTRESSED ASPHALTIC SURFACE MILLING

LOCATIONS AND LIMITS DETERMINED BY THE ENGINEER IN THE FIELD

ROADWAY SOIL BORING SUMMARY TABLE					
BORING #	STATION	OFFSET	Y COORDINATE	X COORDINATE	BITUMINOUS (INCHES)
B1	126+00	10.2 LT	94599.33	400041.45	6.00
B2	141+11	0.0 LT	96116.68	400037.40	5.75
B3	155+85	8.7 LT	97546.46	400019.61	7.38
B4	170+96	0.2 RT	99048.28	400023.88	5.88
B5	185+29	7.5 LT	100460.43	400012.45	6.38
B6	200+38	2.1 RT	101969.31	400012.44	8.50
B7	214+95	9.3 LT	103425.68	399986.22	6.25
B8	229+85	6.3 RT	104915.76	399997.80	8.25
B9	244+34	8.3 LT	106364.67	400002.70	6.88
B10	258+97	3.8 RT	107827.19	400044.38	6.63
B11	273+55	11.5 LT	109285.32	400058.31	6.50
B12	288+27	3.8 RT	110756.69	400102.51	7.13
B13	302+71	10.8 LT	112191.98	400058.58	8.50
B14	318+03	4.0 RT	113621.40	399508.85	7.00
B15	332+23	7.9 LT	114936.33	398974.17	6.00
B16	347+39	1.8 RT	116356.38	398443.83	5.50
B17	361+91	13.9 LT	117759.18	398070.05	6.75
B18	376+64	9.1 RT	119094.12	397476.94	5.13
B19	390+90	9.2 LT	120309.45	396728.94	5.88
B20	405+76	3.8 RT	121663.21	396161.09	6.25
B21	420+34	9.5 LT	123102.67	395930.69	6.13
B22	435+25	8.5 RT	124493.62	395488.33	16.00
B23	449+52	10.2 LT	125530.68	394507.59	7.63
B24	464+46	5.8 RT	126640.13	393506.53	9.75
B25	479+39	5.36 LT	127776.95	392542.56	7.50

NOTES:
DATE BORINGS TAKEN: 3/21/2022 - 3/24/2022
FOR REFERENCE PURPOSES ONLY
ALL DEPTHS ARE IN INCHES
ALL OFFSETS ARE FROM EXISTING CENTERLINE

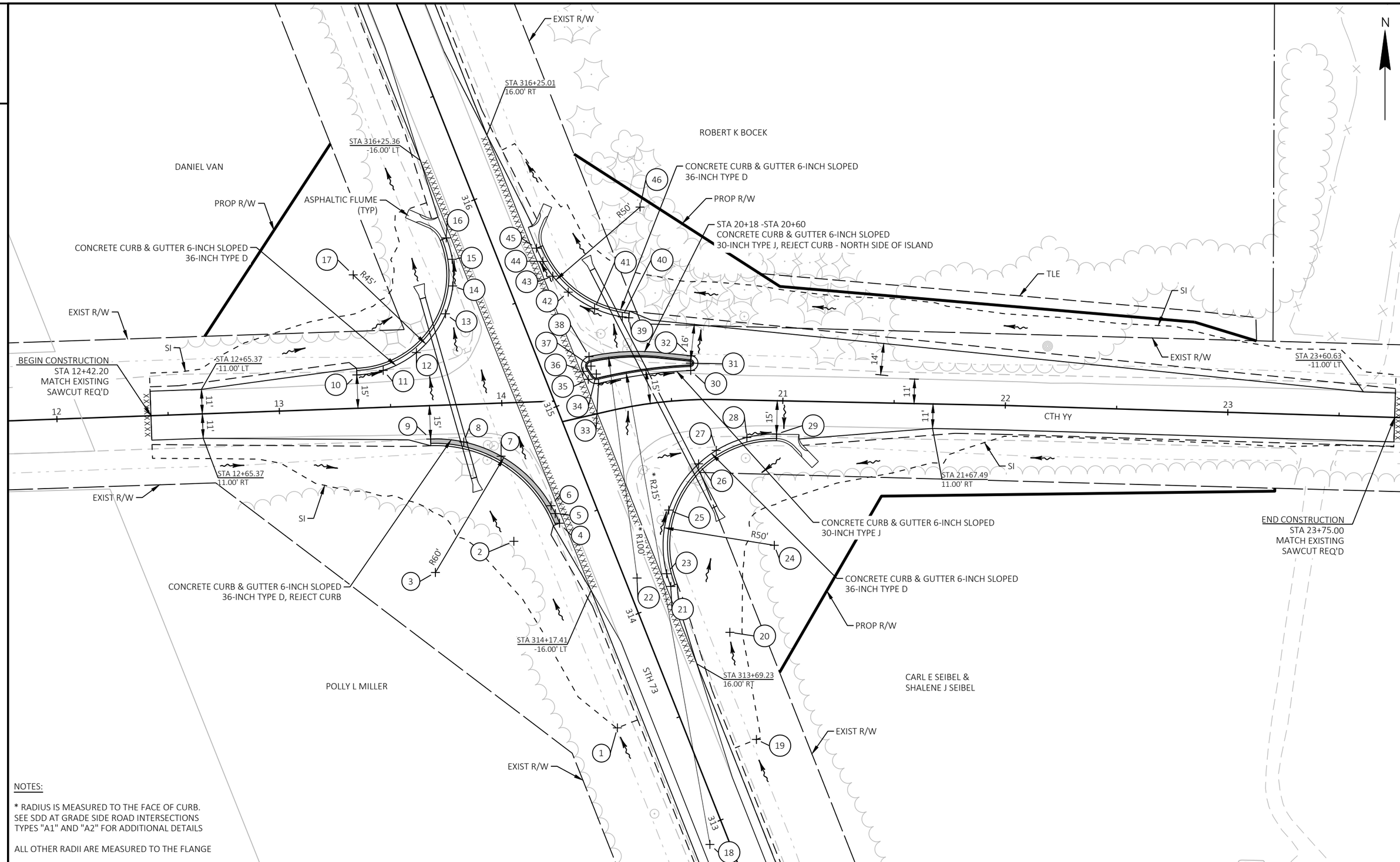

PROJECT NO: 6530-01-70	HWY: STH 73	COUNTY: WAUSHARA	INTERSECTION DETAILS	SHEET 17	E

W CTH YY

STATION & OFFSET TABLE								
POINT	STATION	OFFSET	STATION	OFFSET	Y COORDS	X COORDS	RADIUS	ELEVATION
1	313+55.63	27.8 LT			113193.603	399644.373		924.29
2	314+50.00	39.9 LT	14+03.61	62.9 RT	113277.458	399597.839		918.84
3	314+50.74	78.0 LT	13+67.47	75.0 RT	113263.478	399562.611	60.0	
4	314+50.74	18.0 LT			113285.610	399618.380		922.89
5	314+55.48	18.2 LT	14+22.23	50.5 RT	113289.944	399616.458		922.72
6	314+59.45	18.6 LT	14+20.48	46.9 RT	113293.472	399614.576		922.55
7	314+88.42	31.3 LT	13+98.83	23.8 RT	113315.726	399592.109		921.50
8	315+00.54	44.5 LT	13+82.31	16.9 RT	113322.109	399575.352		921.13
9	315+07.27	57.9 LT	13+67.47	15.0 RT	113323.439	399560.450		921.33
10	315+46.29	78.1 LT	13+35.37	15.0 LT	113352.263	399527.289		921.41
11	315+43.81	66.3 LT	13+47.29	16.6 LT	113354.299	399539.144		921.05
12	315+45.76	49.5 LT	13+62.45	24.1 LT	113362.297	399554.030		920.20
13	315+57.11	30.9 LT	13+76.16	41.0 LT	113379.710	399567.116		918.62
14	315+67.56	23.3 LT	13+79.88	53.4 LT	113392.245	399570.390		918.16
15	315+78.77	19.1 LT	13+80.05	65.4 LT	113404.206	399570.124		917.65
16	315+88.69	18.0 LT	13+77.76	75.1 LT	113413.833	399567.495		917.27
17	315+88.69	63.0 LT	13+35.37	60.0 LT	113397.234	399525.668	45.0	

E CTH YY

STATION & OFFSET TABLE								
POINT	STATION	OFFSET	STATION	OFFSET	Y COORDS	X COORDS	RADIUS	ELEVATION
18	312+91.61	8.5 LT	20+22.26	200.0 RT	113141.219	399685.934	*215.0	
19	313+27.75	28.4 RT	20+91.29	152.4 RT	113188.405	399706.854		924.79
20	313+76.93	35.0 RT	20+78.36	104.5 RT	113236.566	399694.909		921.40
21	314+05.90	18.0 RT	20+37.19	82.7 RT	113257.208	399668.382		924.62
22	314+14.98	5.3 RT	20+17.05	76.0 RT	113260.960	399653.206	*100.0	
23	314+11.88	18.4 RT	20+35.57	76.8 RT	113262.905	399666.508		924.38
24	314+05.90	68.0 RT	20+97.49	65.0 RT	113275.652	399714.856	50.0	
25	314+38.11	29.8 RT	20+42.72	48.6 RT	113291.485	399667.429		922.90
26	314+52.50	49.9 RT	20+61.26	28.9 RT	113312.284	399680.826		921.28
27	314+55.17	59.5 RT	20+70.44	22.9 RT	113318.315	399688.782		921.06
28	314+55.48	74.4 RT	20+84.20	16.8 RT	113324.115	399702.555		920.98
29	314+51.98	87.4 RT	20+97.49	15.0 RT	113325.641	399715.886		920.91
30	314+92.77	62.1 RT	20+59.13	13.2 LT	113354.211	399677.302		920.67
31	314+95.91	63.2 RT	20+59.13	16.5 LT	113357.541	399677.167	* 1.5	
32	314+98.87	64.7 RT	20+59.55	19.8 LT	113360.858	399677.502		920.43
33	315+02.68	21.4 RT	20+19.66	13.2 LT	113348.434	399635.880		920.93
34	315+06.96	22.1 RT	20+19.65	17.5 LT	113352.656	399634.901	* 2.5	
35	315+06.07	17.8 RT	20+15.60	16.0 LT	113350.257	399631.291		920.76
36	315+10.28	17.0 RT	20+14.08	20.0 LT	113353.842	399628.910		920.58
37	315+11.17	21.2 RT	20+18.13	21.5 LT	113356.240	399632.519	* 2.5	
38	315+15.45	21.9 RT	20+18.18	25.9 LT	113360.475	399631.599		920.46
39	315+25.07	45.0 RT	20+36.69	39.5 LT	113377.925	399649.502		919.78
40	315+26.53	42.4 RT	20+34.29	40.3 LT	113378.316	399646.528		919.77
41	315+34.56	32.2 RT	20+24.83	46.3 LT	113382.031	399634.108		919.64
42	315+45.82	23.9 RT	20+15.56	56.2 LT	113389.451	399622.290		919.03
43	315+55.04	20.1 RT	20+10.38	64.7 LT	113396.618	399615.340		918.61
44	315+62.85	18.4 RT	20+07.53	72.2 LT	113403.257	399610.893		918.34
45	315+69.45	18.0 RT	20+06.09	78.6 LT	113409.228	399608.053		918.06
46	315+69.45	68.0 RT	20+45.39	88.2 LT	113427.672	399654.527	50.0	

NOTES:

* RADIUS IS MEASURED TO THE FACE OF CURB. SEE SDD AT GRADE SIDE ROAD INTERSECTIONS TYPES "A1" AND "A2" FOR ADDITIONAL DETAILS

ALL OTHER RADII ARE MEASURED TO THE FLANGE

CTH YY-W SUPERELEVATION TABLE					
TRANSITION EVENT POINTS		RATE (FT/FT)			
LOCATION	STATION	LEFT OF CROWNLINE		RIGHT OF CROWNLINE	
		LEFT SHOULDER	LEFT LANE	RIGHT LANE	RIGHT SHOULDER
CURVE 1					
Normal Crown	12+00.00	-0.040	-0.020	-0.020	-0.040
End Normal Crown	13+15.00	-0.040	-0.020	-0.020	-0.040
Begn Full Super LT	13+35.37	-0.040	-0.040	-0.020	-0.040
Level Crown	13+57.36	-0.040	-0.040	0.000	0.000
Reverse Crown	13+79.35	-0.040	-0.040	0.020	0.020
Begn Full Super RT	13+99.14	-0.040	-0.040	0.040	0.040
End Alignment	14+23.58	-0.040	-0.040	0.040	0.040

CTH YY-E SUPERELEVATION TABLE					
TRANSITION EVENT POINTS		RATE (FT/FT)			
LOCATION	STATION	LEFT OF CROWNLINE		RIGHT OF CROWNLINE	
		LEFT SHOULDER	LEFT LANE	RIGHT LANE	RIGHT SHOULDER
CURVE 1					
Begin Alignment	20+00.00	-0.040	-0.038	0.038	0.038
End Full Super RT	20+20.00	-0.040	-0.038	0.038	0.038
Transition Point	20+43.00	-0.040	-0.038	0.021	0.021
End Full Super LT	20+59.13	-0.040	-0.038	0.009	0.009
Level Crown RT	20+70.45	-0.040	-0.028	0.000	-0.005
Begin Normal Crown LT	20+80.00	-0.040	-0.020	-0.007	-0.017
Transition Point	20+90.00	-0.040	-0.020	-0.015	-0.029
Begin Normal Crown RT	20+97.00	-0.040	-0.020	-0.020	-0.040
Normal Crown	25+00.00	-0.040	-0.020	-0.020	-0.040

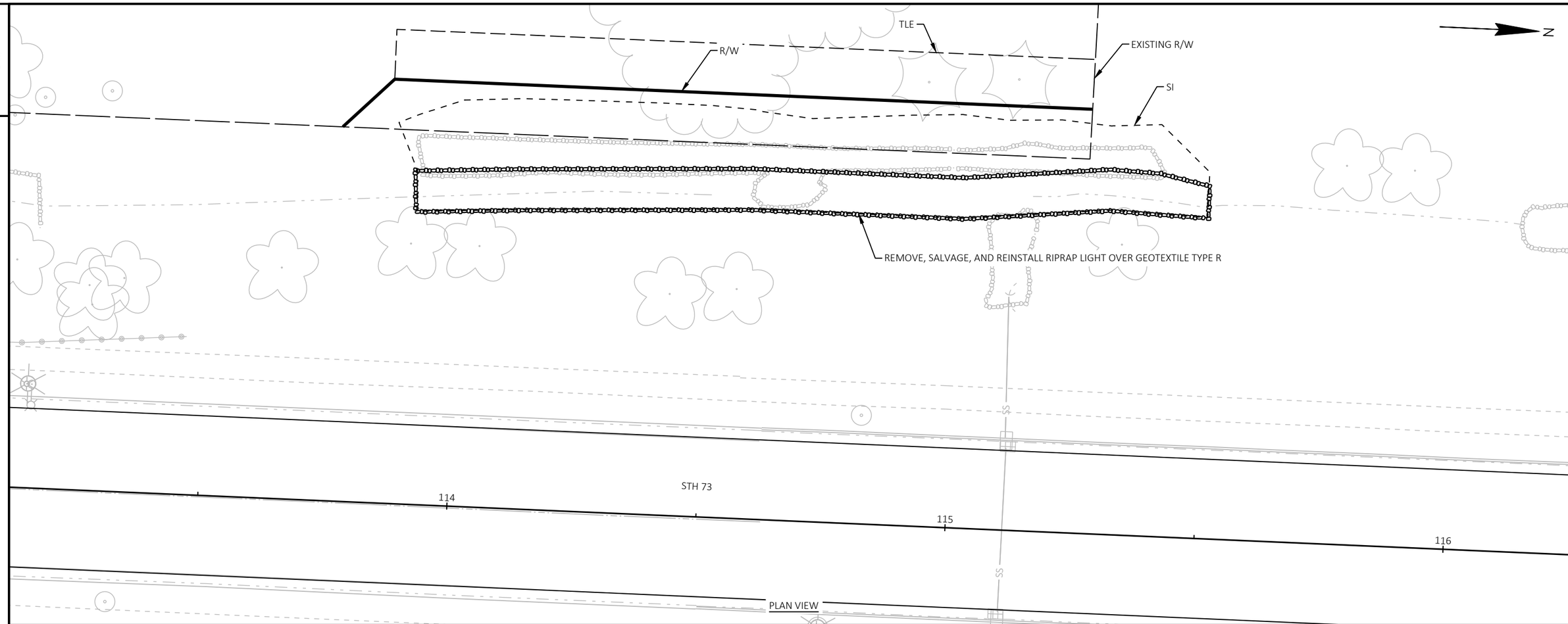

PLAN VIEW

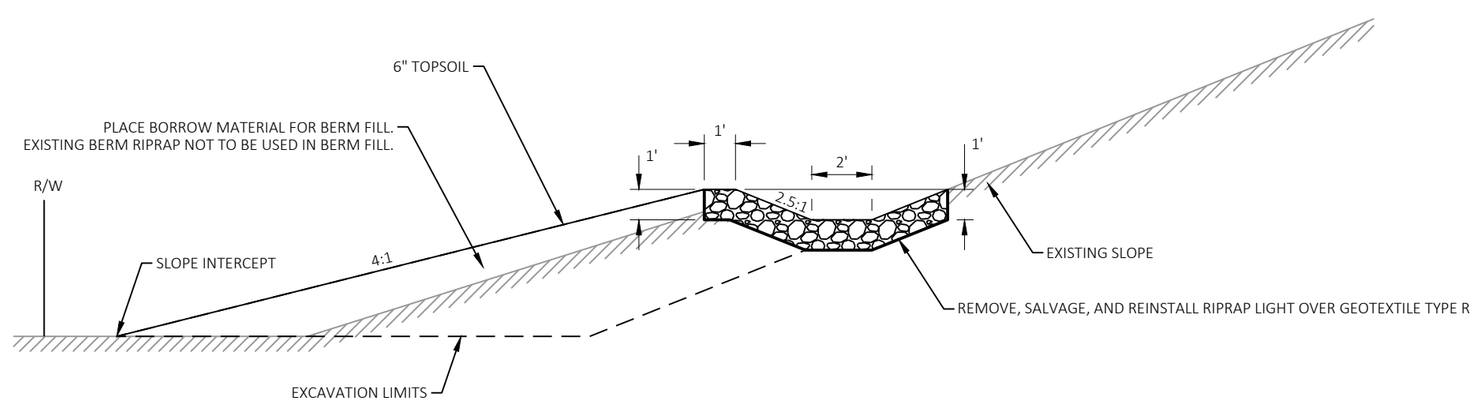

DITCH BERM REPAIR DETAIL
STA 113+91 - STA 115+41

PROJECT NO: 6530-01-70	HWY: STH 73	COUNTY: WAUSHARA	PLAN DETAILS	SHEET 19	E

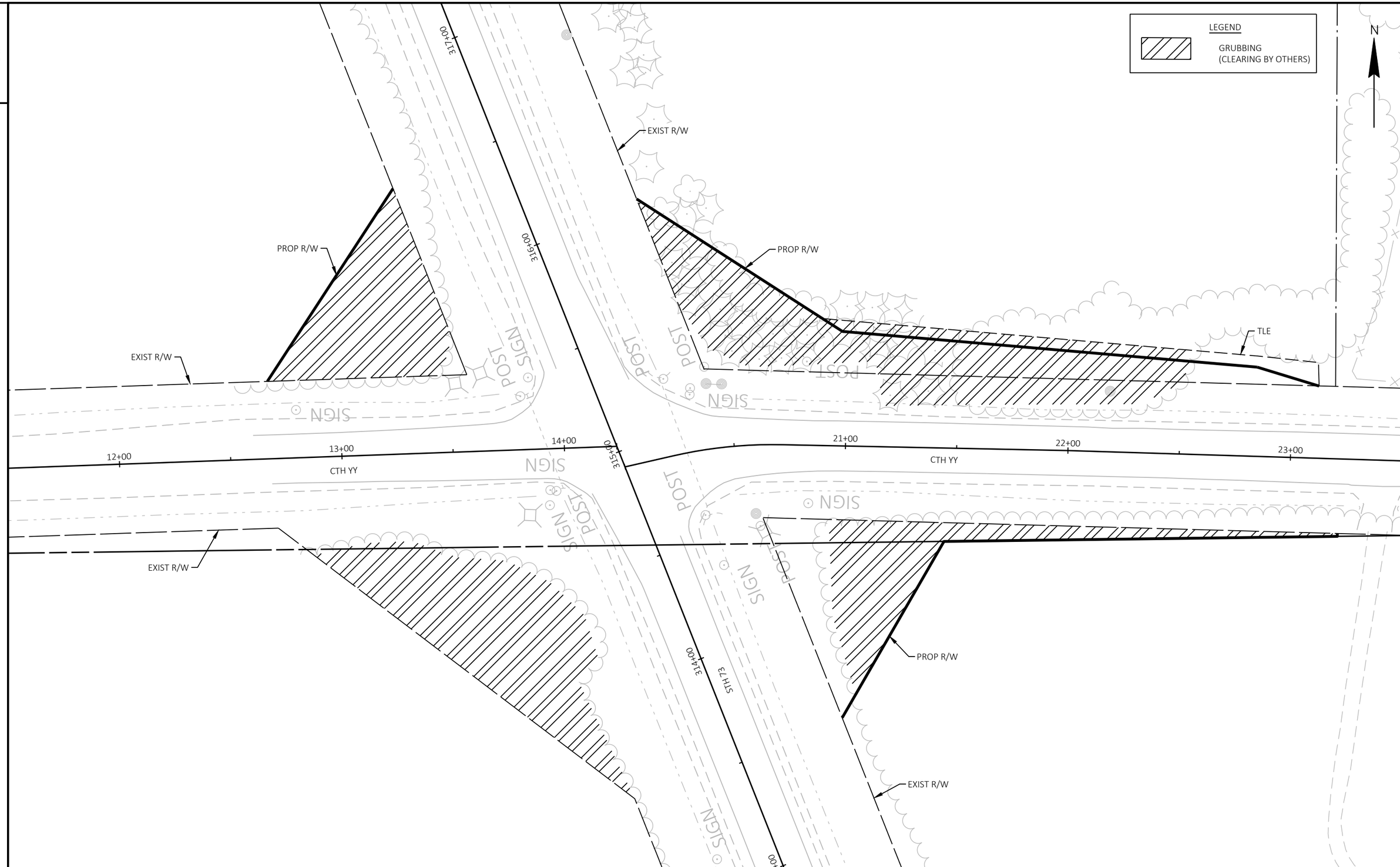

PROJECT NO: 6530-01-70	HWY: STH 73	COUNTY: WAUSHARA	PLAN DETAILS - GRUBBING DETAIL	SHEET 20	E

PROJECT NO: 6530-01-70	HWY: STH 73	COUNTY: WAUSHARA	PLAN DETAILS - CONCRETE REPAIRS	SHEET 21	E

FILE NAME : H:\PROJECTS\16000\16221\TECHDATA\65300100\SHEETS\021002-CD.DWG
LAYOUT NAME - 01
PLOT DATE : 10/20/2025 4:26 PM
PLOT BY : BRIAN GENSKOW
PLOT NAME :
PLOT SCALE : 1 IN:40 FT
WISDOT/CADDS SHEET 42

2

STATION & OFFSET TABLE					
POINT	STATION	OFFSET	Y COORDS	X COORDS	ELEVATION
1	425+12.84	27.47 LT	123573.585	395840.702	883.84
2	425+30.00	27.26 LT	123590.582	395838.312	883.95
3	425+74.18	26.72 LT	123634.340	395832.160	884.29
4	426+32.23	28.11 LT	123691.503	395822.006	884.70

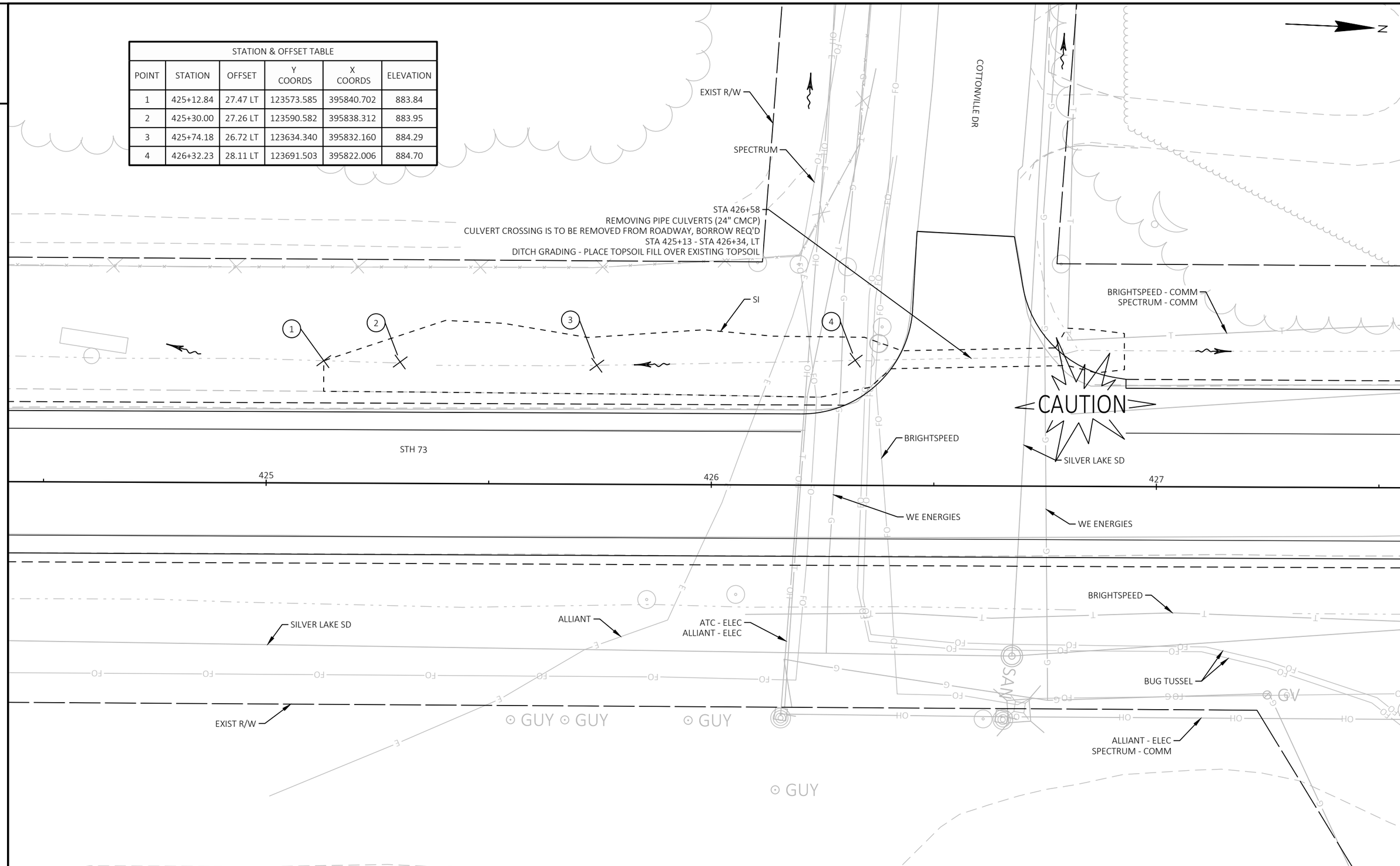

2

PROJECT NO: 6530-01-70	HWY: STH 73	COUNTY: WAUSHARA	PLAN DETAILS - CULVERT REMOVAL & DITCH GRADING	SHEET 22	E

FILE NAME : H:\PROJECTS\16000\16221\TECHDATA\65300100\SHEETS\021201-PD.DWG
LAYOUT NAME - PD-02
PLOT DATE : 10/20/2025 4:26 PM
PLOT BY : BRIAN GENSKOW
PLOT NAME :
PLOT SCALE : 1 IN:20 FT
WISDOT/CADDS SHEET 42

PARK STREET SW CURB RAMP					
POINT NUMBER	STATION	OFFSET	ELEVATION	NORTHING	EASTING
01	117+90.10	23.7' LT	837.55	93721.41	400035.00
02	117+90.10	28.7' LT	837.67	93721.41	400030.00
03	117+95.10	23.7' LT	837.59	93726.41	400035.00
04	117+95.10	28.7' LT	837.67	93726.40	400030.00
05	118+00.17	28.7' LT	837.63	93731.47	400030.01
06	118+00.16	23.7' LT	837.55	93731.47	400035.01
07	118+03.72	22.0' LT	837.75	93735.03	400036.71
08	118+06.16	23.7' LT	837.29	93737.47	400035.01
09	118+06.17	28.7' LT	837.38	93737.47	400030.01
10	118+10.89	28.7' LT	837.33	93742.20	400030.02
11	118+12.70	31.7' LT	837.82	93744.00	400027.02
12	118+14.93	30.5' LT	837.40	93746.23	400028.15
13	118+13.04	27.4' LT	837.41	93744.34	400031.31
14	118+10.72	24.5' LT	837.41	93742.03	400034.19
15	118+10.06	23.8' LT	837.41	93741.36	400034.88
16	118+08.03	22.0' LT	837.38	93739.34	400036.72
17	118+05.01	19.8' LT	837.33	93736.32	400038.85

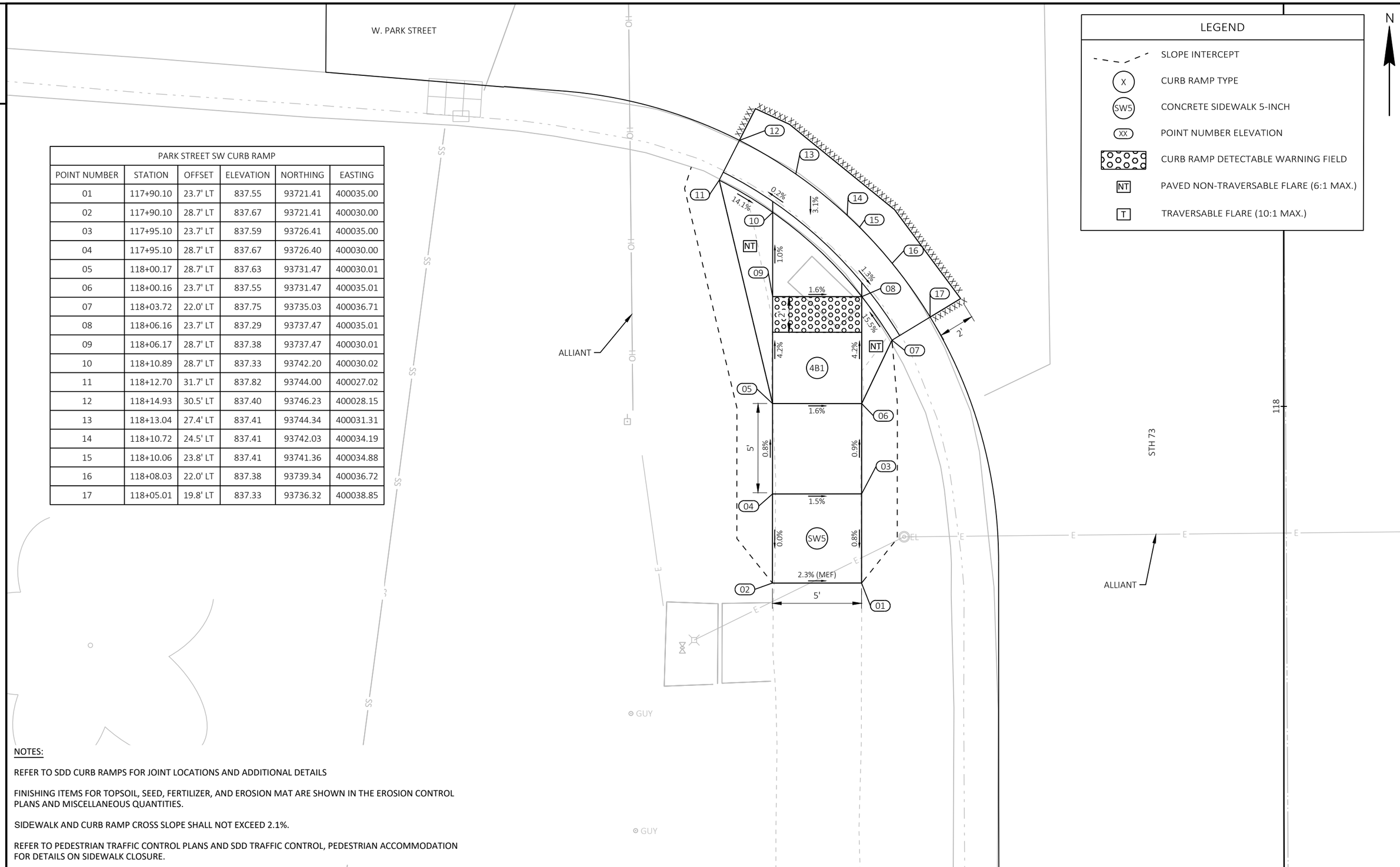

NOTES:

REFER TO SDD CURB RAMPS FOR JOINT LOCATIONS AND ADDITIONAL DETAILS

FINISHING ITEMS FOR TOPSOIL, SEED, FERTILIZER, AND EROSION MAT ARE SHOWN IN THE EROSION CONTROL PLANS AND MISCELLANEOUS QUANTITIES.

SIDEWALK AND CURB RAMP CROSS SLOPE SHALL NOT EXCEED 2.1%.

REFER TO PEDESTRIAN TRAFFIC CONTROL PLANS AND SDD TRAFFIC CONTROL, PEDESTRIAN ACCOMMODATION FOR DETAILS ON SIDEWALK CLOSURE.

2

LEGEND

- SLOPE INTERCEPT
- X — CURB RAMP TYPE
- SW5 — CONCRETE SIDEWALK 5-INCH
- XX — POINT NUMBER ELEVATION
- CURB RAMP DETECTABLE WARNING FIELD
- NT — PAVED NON-TRAVERSABLE FLARE (6:1 MAX.)
- T — TRAVERSABLE FLARE (10:1 MAX.)

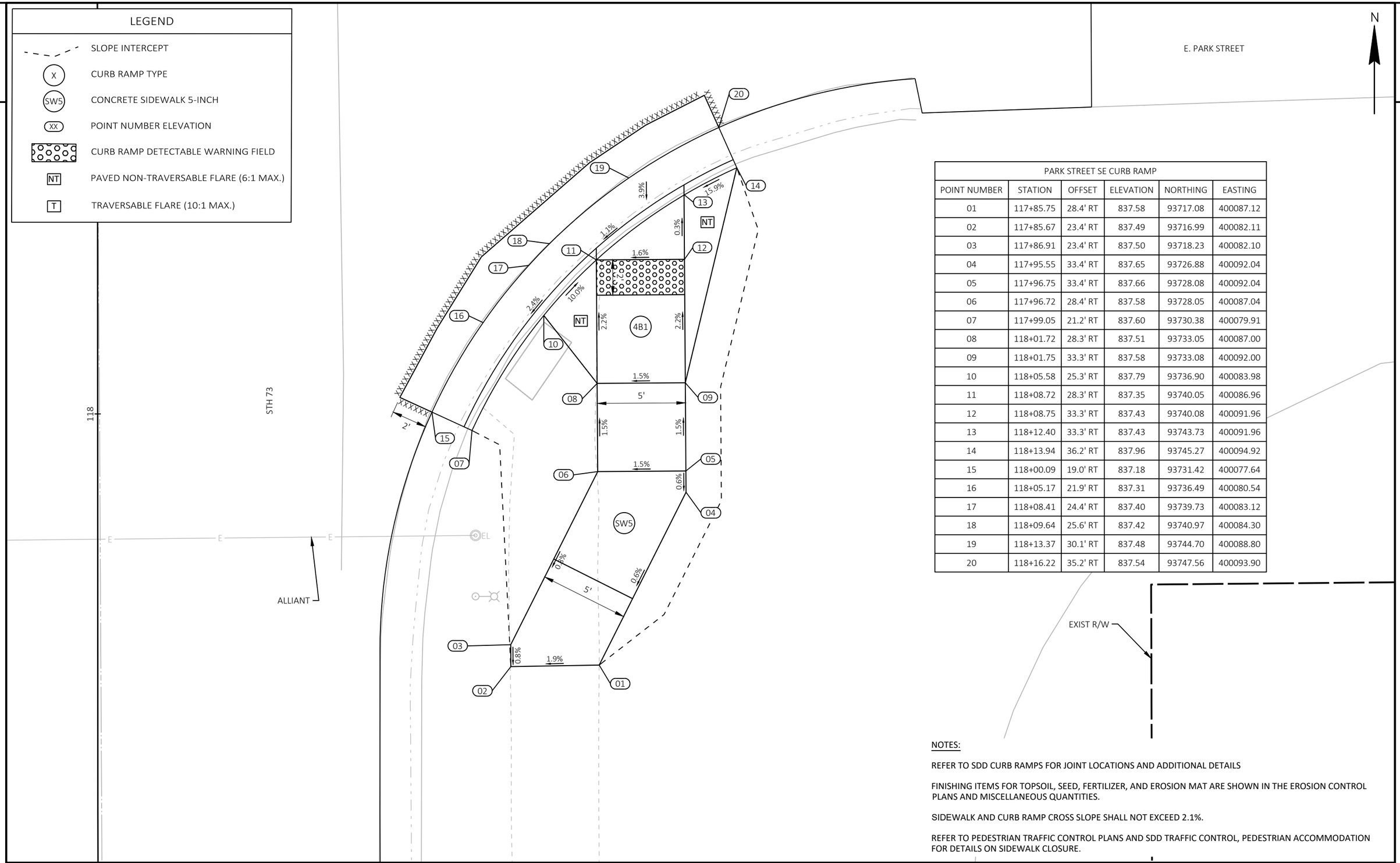

PARK STREET SE CURB RAMP					
POINT NUMBER	STATION	OFFSET	ELEVATION	NORTHING	EASTING
01	117+85.75	28.4' RT	837.58	93717.08	400087.12
02	117+85.67	23.4' RT	837.49	93716.99	400082.11
03	117+86.91	23.4' RT	837.50	93718.23	400082.10
04	117+95.55	33.4' RT	837.65	93726.88	400092.04
05	117+96.75	33.4' RT	837.66	93728.08	400092.04
06	117+96.72	28.4' RT	837.58	93728.05	400087.04
07	117+99.05	21.2' RT	837.60	93730.38	400079.91
08	118+01.72	28.3' RT	837.51	93733.05	400087.00
09	118+01.75	33.3' RT	837.58	93733.08	400092.00
10	118+05.58	25.3' RT	837.79	93736.90	400083.98
11	118+08.72	28.3' RT	837.35	93740.05	400086.96
12	118+08.75	33.3' RT	837.43	93740.08	400091.96
13	118+12.40	33.3' RT	837.43	93743.73	400091.96
14	118+13.94	36.2' RT	837.96	93745.27	400094.92
15	118+00.09	19.0' RT	837.18	93731.42	400077.64
16	118+05.17	21.9' RT	837.31	93736.49	400080.54
17	118+08.41	24.4' RT	837.40	93739.73	400083.12
18	118+09.64	25.6' RT	837.42	93740.97	400084.30
19	118+13.37	30.1' RT	837.48	93744.70	400088.80
20	118+16.22	35.2' RT	837.54	93747.56	400093.90

EXIST R/W

NOTES:

REFER TO SDD CURB RAMPS FOR JOINT LOCATIONS AND ADDITIONAL DETAILS

FINISHING ITEMS FOR TOPSOIL, SEED, FERTILIZER, AND EROSION MAT ARE SHOWN IN THE EROSION CONTROL PLANS AND MISCELLANEOUS QUANTITIES.

SIDEWALK AND CURB RAMP CROSS SLOPE SHALL NOT EXCEED 2.1%.

REFER TO PEDESTRIAN TRAFFIC CONTROL PLANS AND SDD TRAFFIC CONTROL, PEDESTRIAN ACCOMMODATION FOR DETAILS ON SIDEWALK CLOSURE.

2

PARK STREET NW CURB RAMP					
POINT NUMBER	STATION	OFFSET	ELEVATION	NORTHING	EASTING
01	118+62.89	28.7' LT	838.05	93794.20	400029.94
02	118+64.81	30.3' LT	838.47	93796.11	400028.33
03	118+72.02	40.3' LT	838.23	93803.32	400018.35
04	118+72.07	45.3' LT	837.98	93803.36	400013.35
05	118+75.83	45.3' LT	838.07	93807.13	400013.32
06	118+77.03	40.3' LT	838.30	93808.32	400018.32
07	118+77.59	35.7' LT	838.61	93808.89	400022.96
08	118+77.02	39.2' LT	838.38	93808.32	400019.49
09	118+72.02	39.2' LT	838.28	93803.32	400019.45
10	118+73.15	33.3' LT	838.58	93804.45	400025.33
11	118+70.03	29.0' LT	838.33	93801.33	400029.64
12	118+68.86	27.4' LT	838.21	93800.16	400031.26
13	118+68.49	26.9' LT	838.20	93799.80	400031.76
14	118+66.51	25.3' LT	838.25	93797.81	400033.40
15	118+66.92	24.9' LT	838.27	93798.22	400033.71
16	118+70.78	22.7' LT	838.34	93802.09	400035.99
17	118+71.46	22.4' LT	838.35	93802.77	400036.30
18	118+72.91	24.5' LT	838.29	93804.21	400034.19
19	118+74.08	26.1' LT	838.41	93805.39	400032.57
20	118+76.05	28.8' LT	838.61	93807.35	400029.85
21	118+75.52	21.0' LT	838.45	93806.83	400037.60
22	118+80.38	31.6' LT	838.69	93811.68	400027.09
23	118+85.83	29.1' LT	839.11	93816.86	400029.50
24	118+82.39	24.8' LT	838.98	93813.69	400033.88
25	118+80.72	23.0' LT	839.00	93812.02	400035.65
26	118+80.72	20.5' LT	838.58	93812.03	400038.15
27	118+81.18	23.1' LT	838.93	93812.49	400035.54
28	118+85.83	23.1' LT	839.06	93816.92	400035.50

LEGEND

- SLOPE INTERCEPT
- (X) CURB RAMP TYPE
- (SW5) CONCRETE SIDEWALK 5-INCH
- (XX) POINT NUMBER ELEVATION
- CURB RAMP DETECTABLE WARNING FIELD
- [NT] PAVED NON-TRAVERSABLE FLARE (6:1 MAX.)
- [T] TRAVERSABLE FLARE (10:1 MAX.)

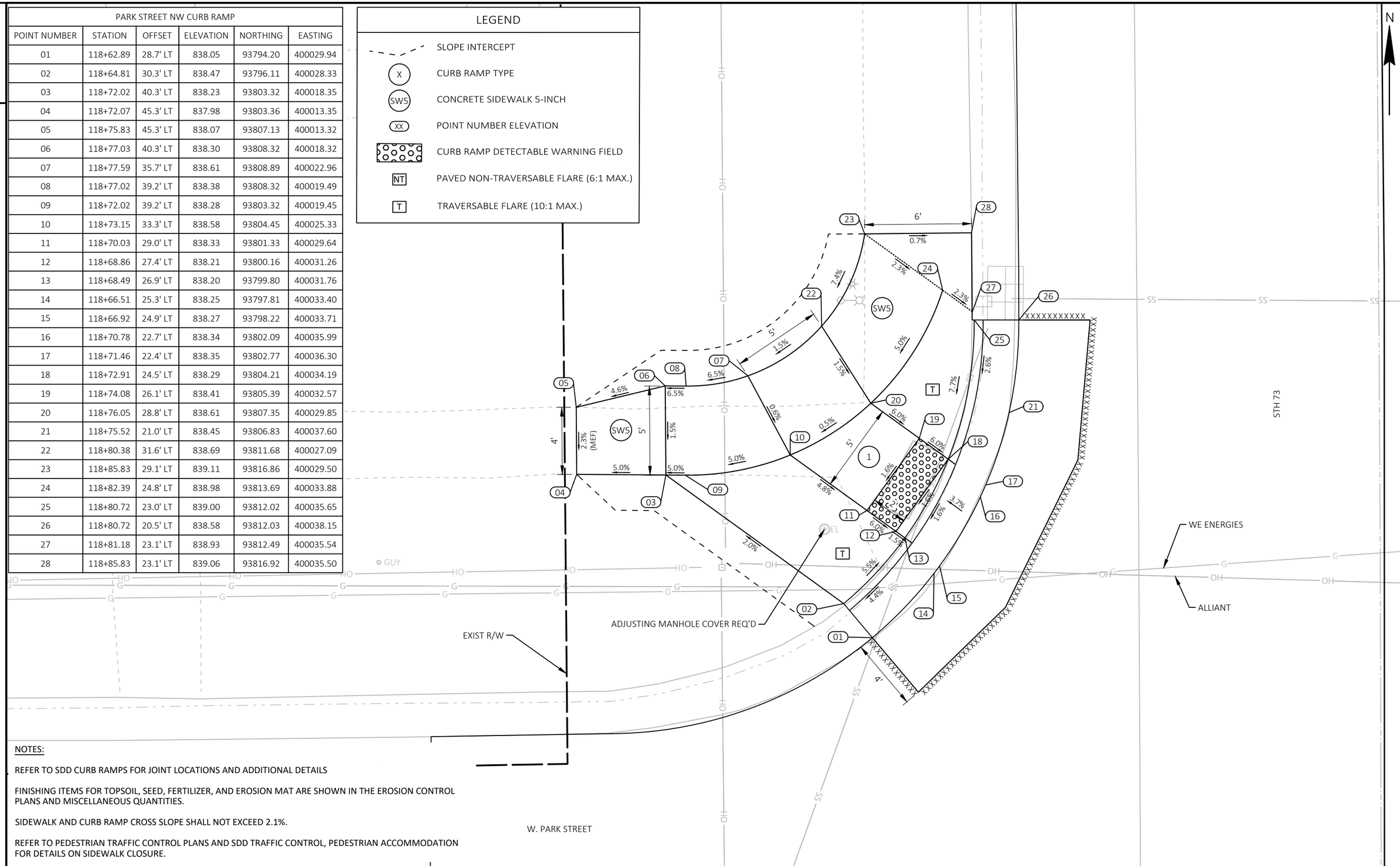

NOTES:

REFER TO SDD CURB RAMPS FOR JOINT LOCATIONS AND ADDITIONAL DETAILS

FINISHING ITEMS FOR TOPSOIL, SEED, FERTILIZER, AND EROSION MAT ARE SHOWN IN THE EROSION CONTROL PLANS AND MISCELLANEOUS QUANTITIES.

SIDEWALK AND CURB RAMP CROSS SLOPE SHALL NOT EXCEED 2.1%.

REFER TO PEDESTRIAN TRAFFIC CONTROL PLANS AND SDD TRAFFIC CONTROL, PEDESTRIAN ACCOMMODATION FOR DETAILS ON SIDEWALK CLOSURE.

LEGEND

- SLOPE INTERCEPT
- X — CURB RAMP TYPE
- SW5 — CONCRETE SIDEWALK 5-INCH
- XX — POINT NUMBER ELEVATION
- CURB RAMP DETECTABLE WARNING FIELD
- NT — PAVED NON-TRAVERSABLE FLARE (6:1 MAX.)
- T — TRAVERSABLE FLARE (10:1 MAX.)

NOTES:

REFER TO SDD CURB RAMPS FOR JOINT LOCATIONS AND ADDITIONAL DETAILS

FINISHING ITEMS FOR TOPSOIL, SEED, FERTILIZER, AND EROSION MAT ARE SHOWN IN THE EROSION CONTROL PLANS AND MISCELLANEOUS QUANTITIES.

SIDEWALK AND CURB RAMP CROSS SLOPE SHALL NOT EXCEED 2.1%.

REFER TO PEDESTRIAN TRAFFIC CONTROL PLANS AND SDD TRAFFIC CONTROL, PEDESTRIAN ACCOMMODATION FOR DETAILS ON SIDEWALK CLOSURE.

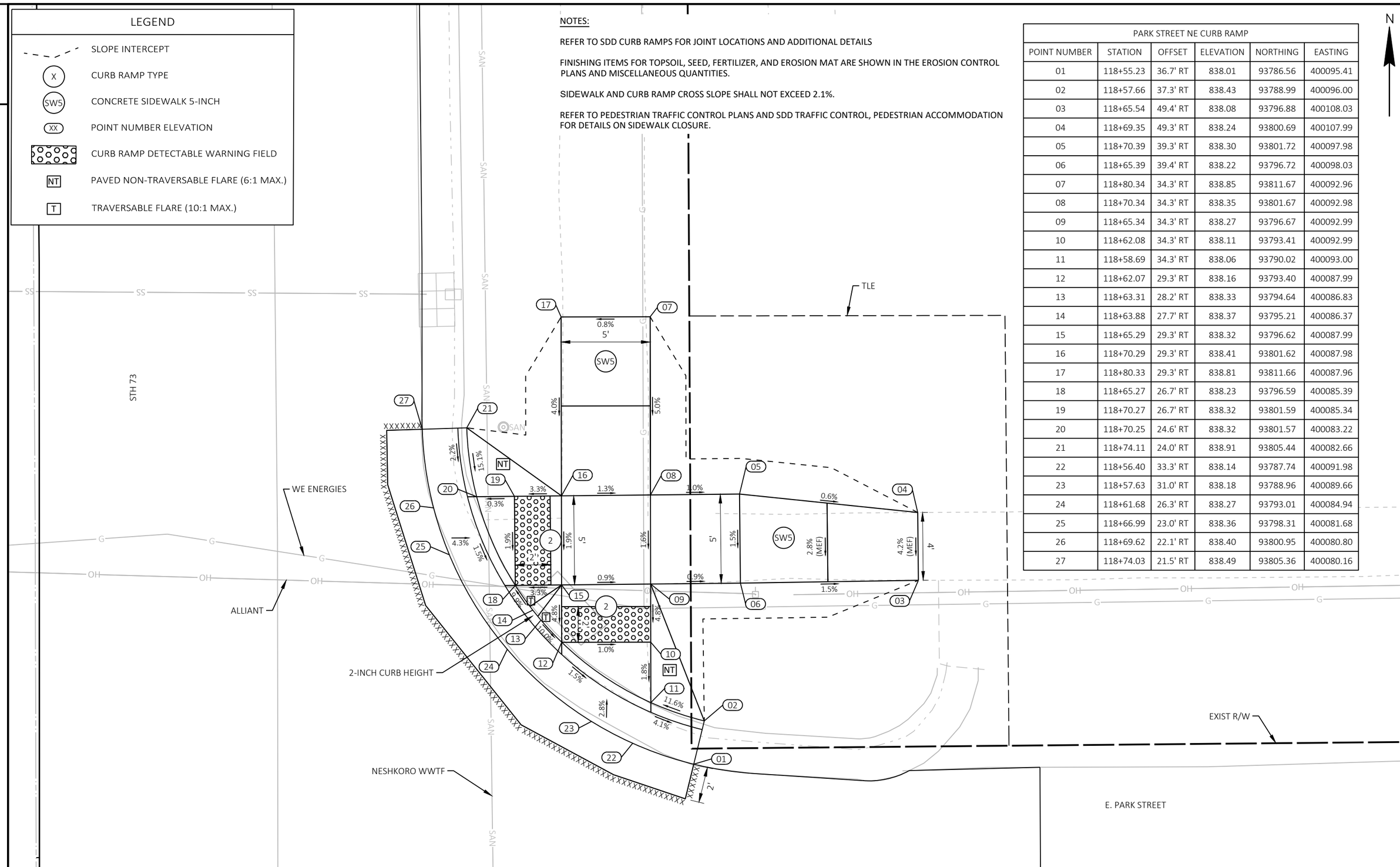

PARK STREET NE CURB RAMP					
POINT NUMBER	STATION	OFFSET	ELEVATION	NORTHING	EASTING
01	118+55.23	36.7' RT	838.01	93786.56	400095.41
02	118+57.66	37.3' RT	838.43	93788.99	400096.00
03	118+65.54	49.4' RT	838.08	93796.88	400108.03
04	118+69.35	49.3' RT	838.24	93800.69	400107.99
05	118+70.39	39.3' RT	838.30	93801.72	400097.98
06	118+65.39	39.4' RT	838.22	93796.72	400098.03
07	118+80.34	34.3' RT	838.85	93811.67	400092.96
08	118+70.34	34.3' RT	838.35	93801.67	400092.98
09	118+65.34	34.3' RT	838.27	93796.67	400092.99
10	118+62.08	34.3' RT	838.11	93793.41	400092.99
11	118+58.69	34.3' RT	838.06	93790.02	400093.00
12	118+62.07	29.3' RT	838.16	93793.40	400087.99
13	118+63.31	28.2' RT	838.33	93794.64	400086.83
14	118+63.88	27.7' RT	838.37	93795.21	400086.37
15	118+65.29	29.3' RT	838.32	93796.62	400087.99
16	118+70.29	29.3' RT	838.41	93801.62	400087.98
17	118+80.33	29.3' RT	838.81	93811.66	400087.96
18	118+65.27	26.7' RT	838.23	93796.59	400085.39
19	118+70.27	26.7' RT	838.32	93801.59	400085.34
20	118+70.25	24.6' RT	838.32	93801.57	400083.22
21	118+74.11	24.0' RT	838.91	93805.44	400082.66
22	118+56.40	33.3' RT	838.14	93787.74	400091.98
23	118+57.63	31.0' RT	838.18	93788.96	400089.66
24	118+61.68	26.3' RT	838.27	93793.01	400084.94
25	118+66.99	23.0' RT	838.36	93798.31	400081.68
26	118+69.62	22.1' RT	838.40	93800.95	400080.80
27	118+74.03	21.5' RT	838.49	93805.36	400080.16

PROJECT NO: 6530-01-70	HWY: STH 73	COUNTY: WAUSHARA	CURB RAMP DETAILS - PARK STREET	SHEET 26	E

BLUFF STREET SW CURB RAMP					
POINT NUMBER	STATION	OFFSET	ELEVATION	NORTHING	EASTING
01	121+09.80	20.5' LT	841.65	94040.94	400036.00
02	121+09.80	23.0' LT	842.07	94040.92	400033.50
03	121+09.80	29.0' LT	842.10	94040.87	400027.50
04	121+11.93	23.0' LT	842.08	94043.05	400033.47
05	121+17.37	30.1' LT	841.66	94048.43	400026.34
06	121+19.38	24.5' LT	841.57	94050.49	400031.97
07	121+23.92	26.6' LT	841.52	94055.01	400029.78
08	121+21.85	32.4' LT	841.61	94052.89	400023.99
09	121+27.12	38.0' LT	842.02	94058.12	400018.40
10	121+30.78	32.7' LT	841.93	94061.82	400023.61
11	121+32.43	35.1' LT	841.90	94063.44	400021.18
12	121+34.63	34.0' LT	841.48	94065.66	400022.34
13	121+29.49	27.7' LT	841.55	94060.57	400028.69
14	121+23.98	23.8' LT	841.61	94055.09	400032.63
15	121+17.69	21.3' LT	841.67	94048.82	400035.11
16	121+15.68	20.9' LT	841.69	94046.82	400035.55
17	121+10.99	20.5' LT	841.65	94042.13	400035.99

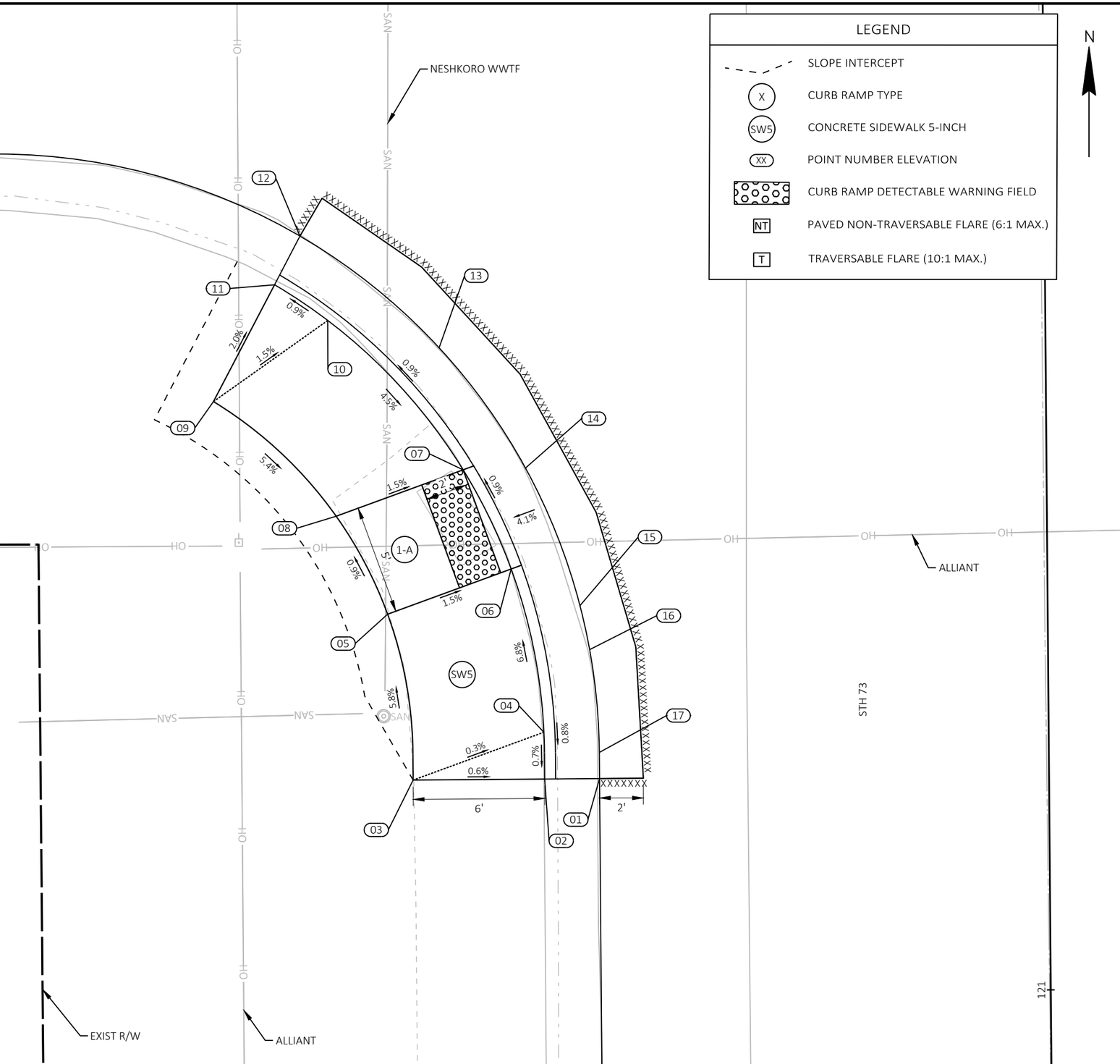

NOTES:

REFER TO SDD CURB RAMPS FOR JOINT LOCATIONS AND ADDITIONAL DETAILS

FINISHING ITEMS FOR TOPSOIL, SEED, FERTILIZER, AND EROSION CONTROL PLANS AND MISCELLANEOUS QUANTITIES.

SIDEWALK AND CURB RAMP CROSS SLOPE SHALL NOT EXCEED 2.1%.

REFER TO PEDESTRIAN TRAFFIC CONTROL PLANS AND SDD TRAFFIC CONTROL, PEDESTRIAN ACCOMMODATION FOR DETAILS ON SIDEWALK CLOSURE.

2

LEGEND

- SLOPE INTERCEPT
- X — CURB RAMP TYPE
- SW5 — CONCRETE SIDEWALK 5-INCH
- XX — POINT NUMBER ELEVATION
- CURB RAMP DETECTABLE WARNING FIELD
- NT — PAVED NON-TRAVERSABLE FLARE (6:1 MAX.)
- T — TRAVERSABLE FLARE (10:1 MAX.)

NOTES:

REFER TO SDD CURB RAMPS FOR JOINT LOCATIONS AND ADDITIONAL DETAILS

FINISHING ITEMS FOR TOPSOIL, SEED, FERTILIZER, AND EROSION MAT ARE SHOWN IN THE EROSION CONTROL PLANS AND MISCELLANEOUS QUANTITIES.

SIDEWALK AND CURB RAMP CROSS SLOPE SHALL NOT EXCEED 2.1%.

REFER TO PEDESTRIAN TRAFFIC CONTROL PLANS AND SDD TRAFFIC CONTROL, PEDESTRIAN ACCOMMODATION FOR DETAILS ON SIDEWALK CLOSURE.

N

2

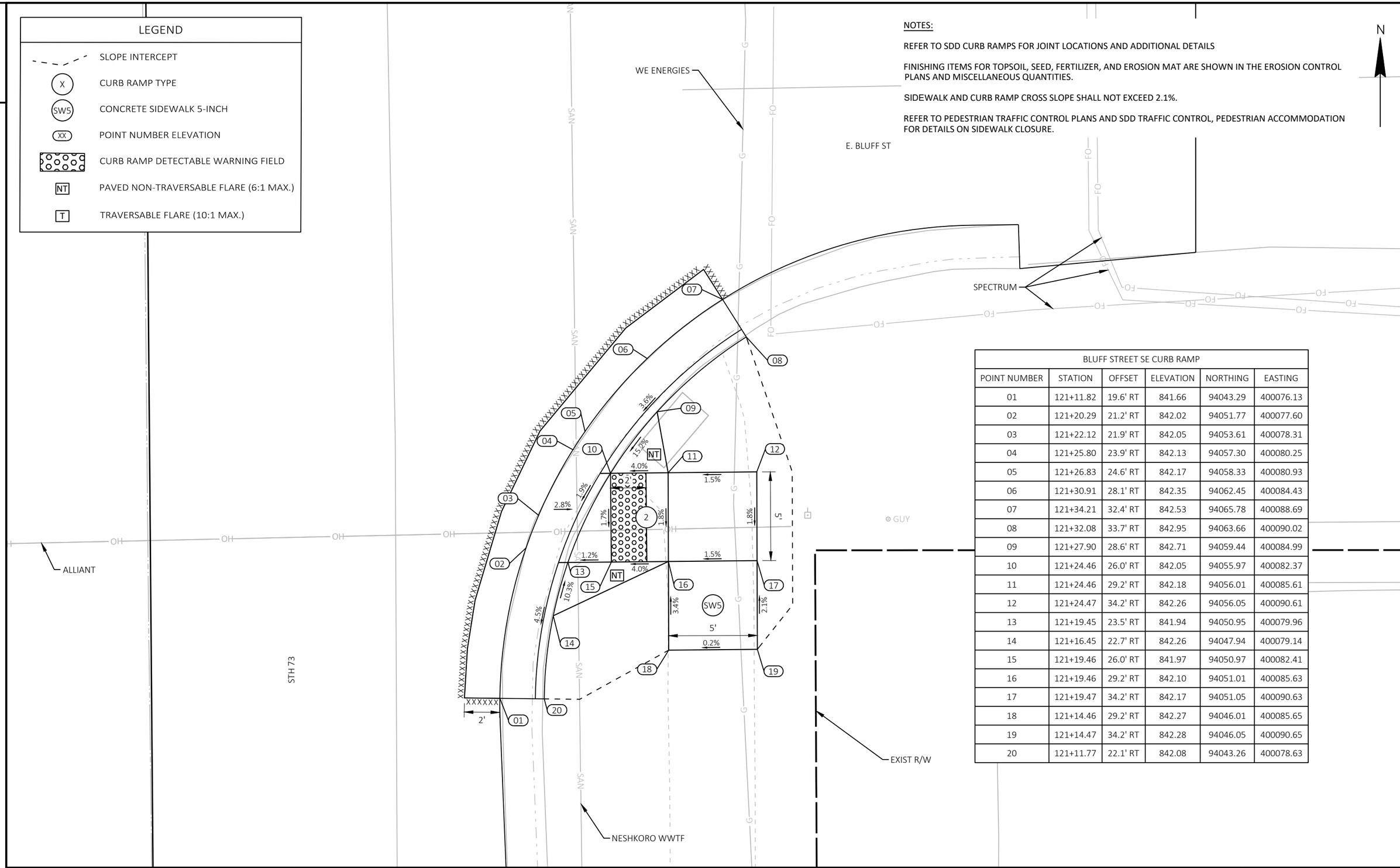

BLUFF STREET SE CURB RAMP					
POINT NUMBER	STATION	OFFSET	ELEVATION	NORTHING	EASTING
01	121+11.82	19.6' RT	841.66	94043.29	400076.13
02	121+20.29	21.2' RT	842.02	94051.77	400077.60
03	121+22.12	21.9' RT	842.05	94053.61	400078.31
04	121+25.80	23.9' RT	842.13	94057.30	400080.25
05	121+26.83	24.6' RT	842.17	94058.33	400080.93
06	121+30.91	28.1' RT	842.35	94062.45	400084.43
07	121+34.21	32.4' RT	842.53	94065.78	400088.69
08	121+32.08	33.7' RT	842.95	94063.66	400090.02
09	121+27.90	28.6' RT	842.71	94059.44	400084.99
10	121+24.46	26.0' RT	842.05	94055.97	400082.37
11	121+24.46	29.2' RT	842.18	94056.01	400085.61
12	121+24.47	34.2' RT	842.26	94056.05	400090.61
13	121+19.45	23.5' RT	841.94	94050.95	400079.96
14	121+16.45	22.7' RT	842.26	94047.94	400079.14
15	121+19.46	26.0' RT	841.97	94050.97	400082.41
16	121+19.46	29.2' RT	842.10	94051.01	400085.63
17	121+19.47	34.2' RT	842.17	94051.05	400090.63
18	121+14.46	29.2' RT	842.27	94046.01	400085.65
19	121+14.47	34.2' RT	842.28	94046.05	400090.65
20	121+11.77	22.1' RT	842.08	94043.26	400078.63

PROJECT NO: 6530-01-70	HWY: STH 73	COUNTY: WAUSHARA	CURB RAMP DETAILS - BLUFF STREET	SHEET 28	E

2

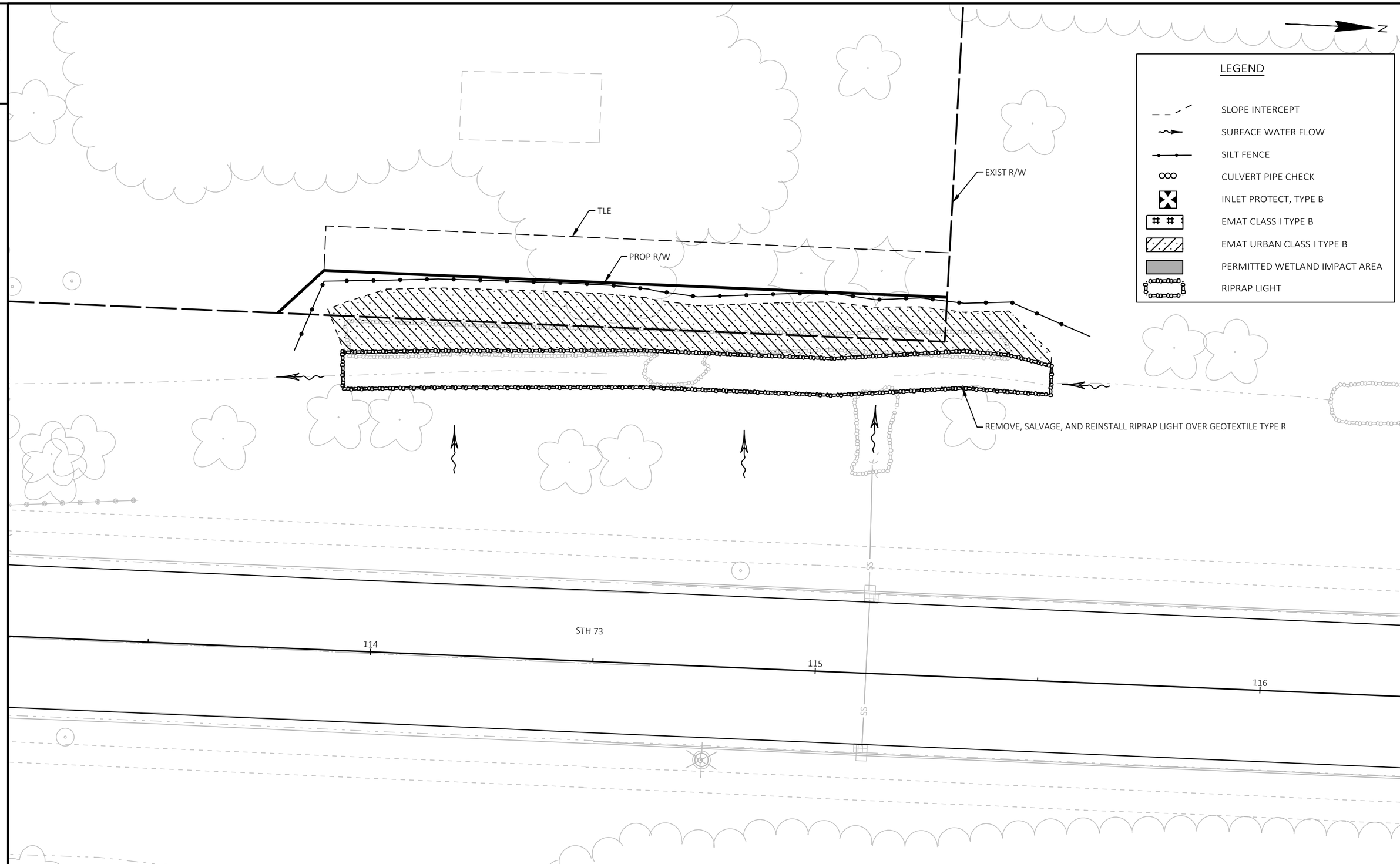

2

PROJECT NO: 6530-01-70	HWY: STH 73	COUNTY: WAUSHARA	EROSION CONTROL	SHEET 29	E

FILE NAME : H:\PROJECTS\16000\16221\TECHDATA\65300100\SHEETS\022001-EC.DWG
LAYOUT NAME - EC-01
PLOT DATE : 10/20/2025 4:28 PM
PLOT BY : BRIAN GENSKOW
PLOT NAME :
PLOT SCALE : 1 IN:20 FT
WISDOT/CADDS SHEET 42

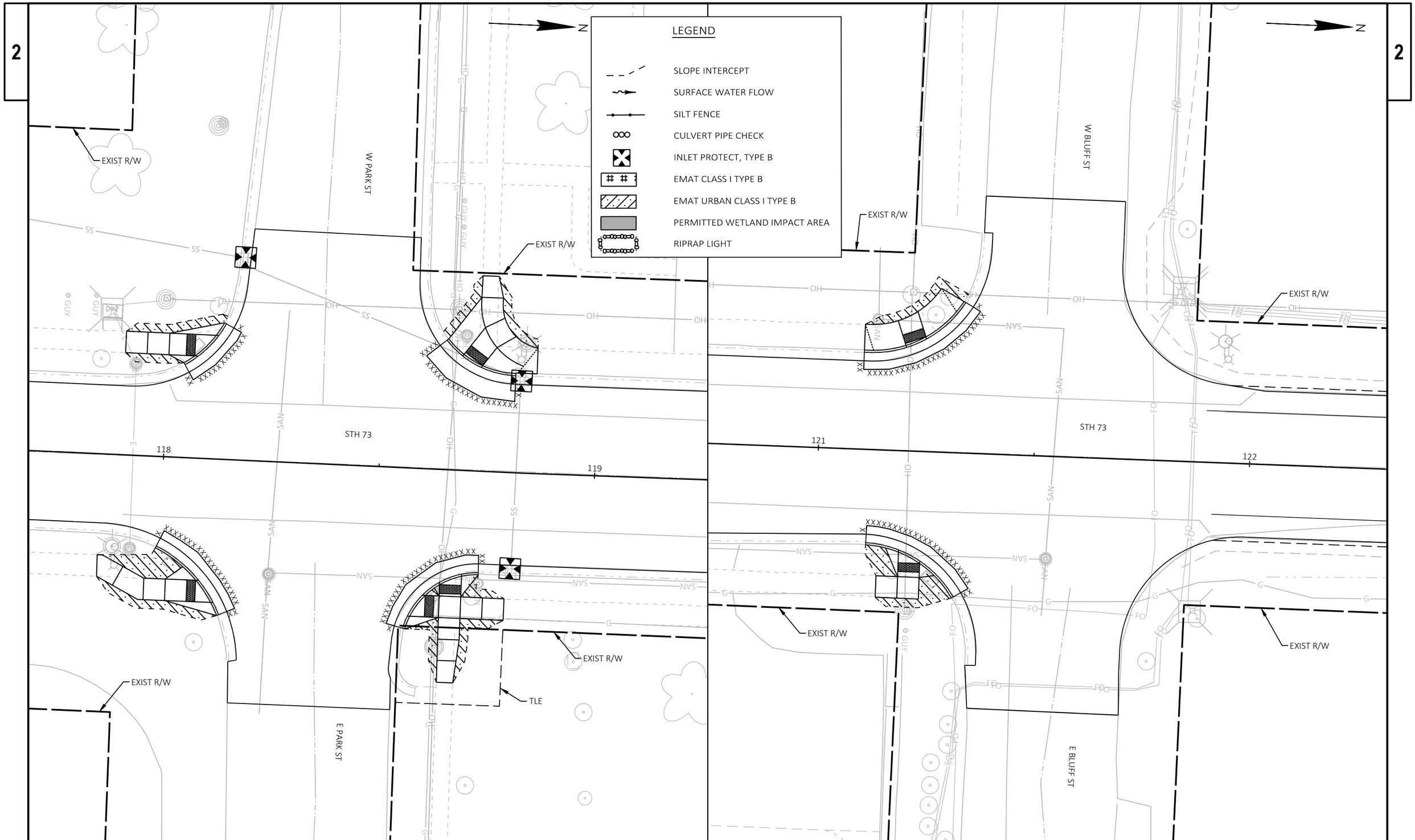

PROJECT NO: 6530-01-70	HWY: STH 73	COUNTY: WAUSHARA	EROSION CONTROL	SHEET 30	E

FILE NAME : H:\PROJECTS\16000\16221\TECHDATA\65300100\SHEETS\022001-EC.DWG
LAYOUT NAME - EC-02
PLOT DATE : 10/20/2025 4:28 PM
PLOT BY : BRIAN GENSKOW
PLOT NAME :
PLOT SCALE : 1 IN:20 FT
WISDOT/CADDS SHEET 42

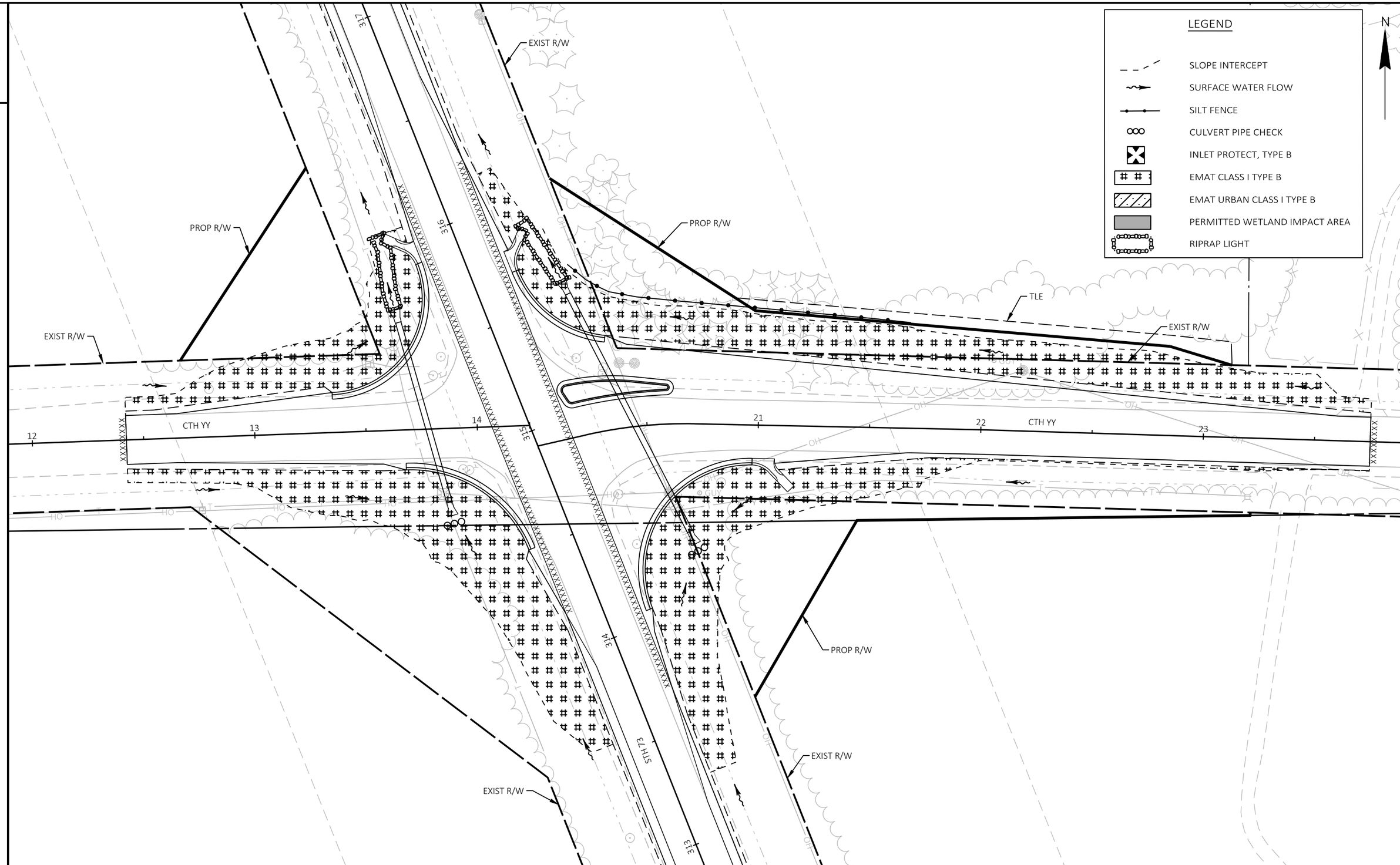

PROJECT NO: 6530-01-70	HWY: STH 73	COUNTY: WAUSHARA	EROSION CONTROL	SHEET 31	E

FILE NAME : H:\PROJECTS\16000\16221\TECHDATA\65300100\SHEETS\022001-EC.DWG
LAYOUT NAME - EC-03
PLOT DATE : 10/20/2025 4:28 PM
PLOT BY : BRIAN GENSKOW
PLOT NAME :
PLOT SCALE : 1 IN:40 FT
WISDOT/CADDS SHEET 42

PROJECT NO: 6530-01-70	HWY: STH 73	COUNTY: WAUSHARA	EROSION CONTROL	SHEET 32	E

FILE NAME : H:\PROJECTS\16000\16221\TECHDATA\65300100\SHEETS\022001-EC.DWG
LAYOUT NAME - EC-04
PLOT DATE : 10/20/2025 4:28 PM
PLOT BY : BRIAN GENSKOW
PLOT NAME :
PLOT SCALE : 1 IN:40 FT
WISDOT/CADDS SHEET 42

2

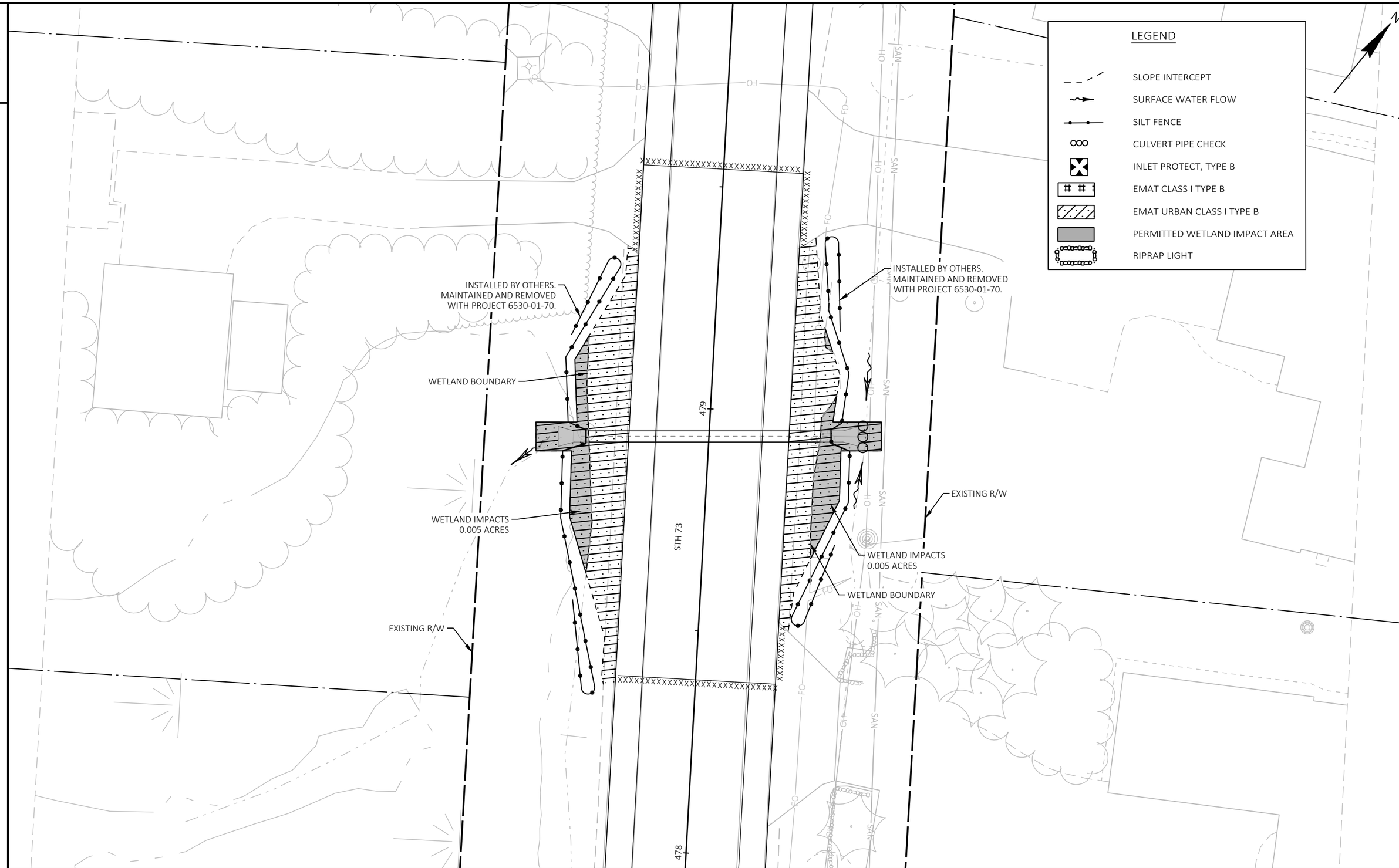

2

PROJECT NO: 6530-01-70	HWY: STH 73	COUNTY: WAUSHARA	EROSION CONTROL	SHEET 33	E

FILE NAME : H:\PROJECTS\16000\16221\TECHDATA\65300100\SHEETS\022001-EC.DWG
LAYOUT NAME - EC-05
PLOT DATE : 10/20/2025 4:28 PM
PLOT BY : BRIAN GENSKOW
PLOT NAME :
PLOT SCALE : 1 IN:20 FT
WISDOT/CADDS SHEET 42

2

LEGEND

1. MARKING CROSSWALK EPOXY TRANSVERSE LINE 6-INCH
2. MARKING PARKING STALL EPOXY
3. MARKING LINE GROOVED WET REF EPOXY 6-INCH (WHITE)
4. MARKING LINE GROOVED WET REF EPOXY 6-INCH (DOUBLE YELLOW)

NOTES:

SEE SDD LONGITUDINAL MARKING (MAINLINE), STOP LINE AND CROSSWALK PAVEMENT MARKING, AND PARKING STALL MARKING FOR ADDITIONAL DETAILS.

FOR ROADWAY SEGMENTS NOT SHOWN, SEE SDD LONGITUDINAL MARKING (MAINLINE) AND PAVEMENT MARKING (INTERSECTIONS) FOR MARKING DETAILS.

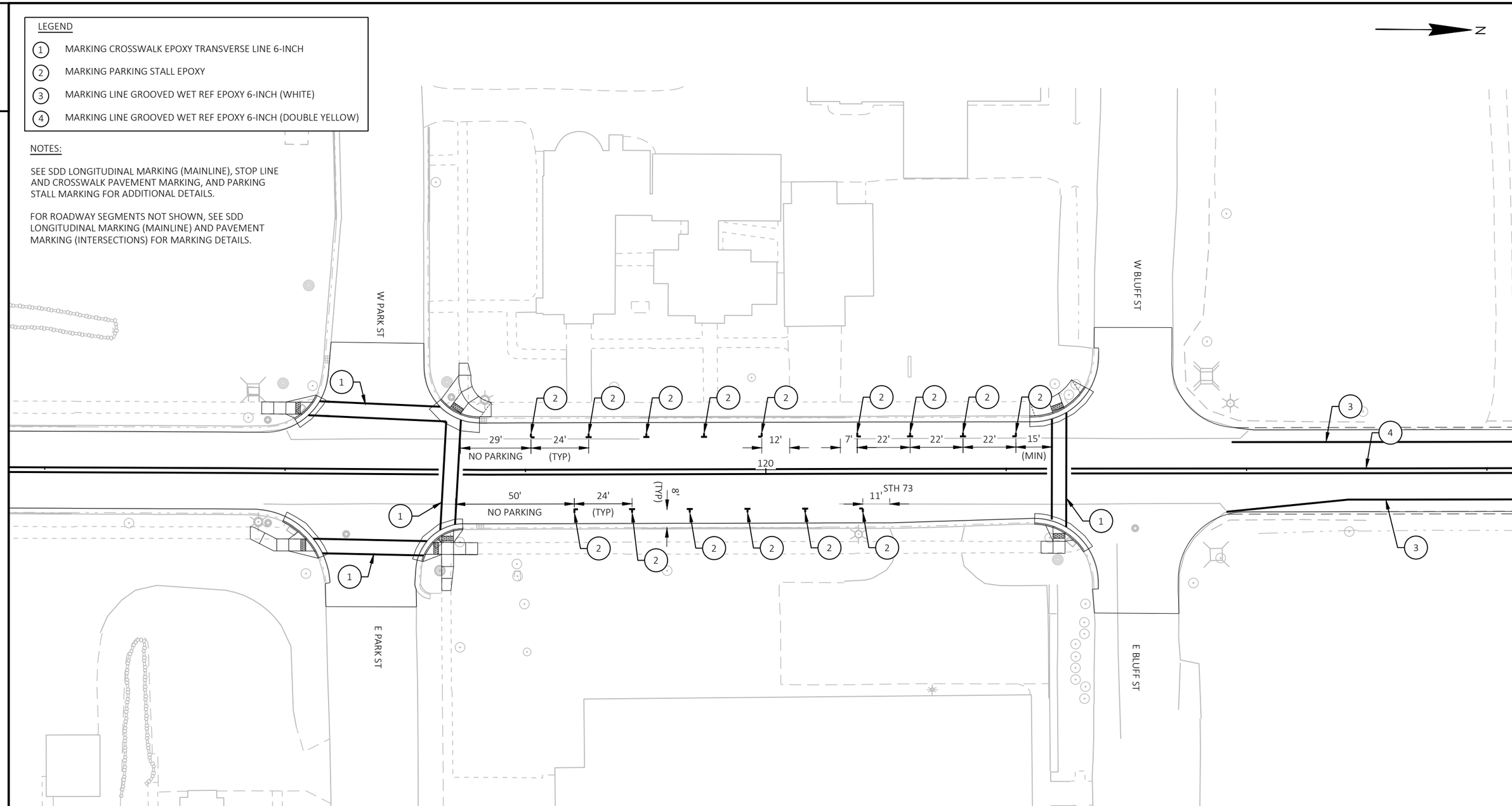

PROJECT NO: 6530-01-70	HWY: STH 73	COUNTY: WAUSHARA	PAVEMENT MARKING & SIGNING	SHEET 34	E

FILE NAME : H:\PROJECTS\16000\16221\TECHDATA\65300100\SHEETS\024501-PM.DWG
LAYOUT NAME - PM-1
PLOT DATE : 10/20/2025 4:28 PM
PLOT BY : BRIAN GENSKOW
PLOT NAME :
PLOT SCALE : 1 IN:40 FT
WISDOT/CADDS SHEET 42

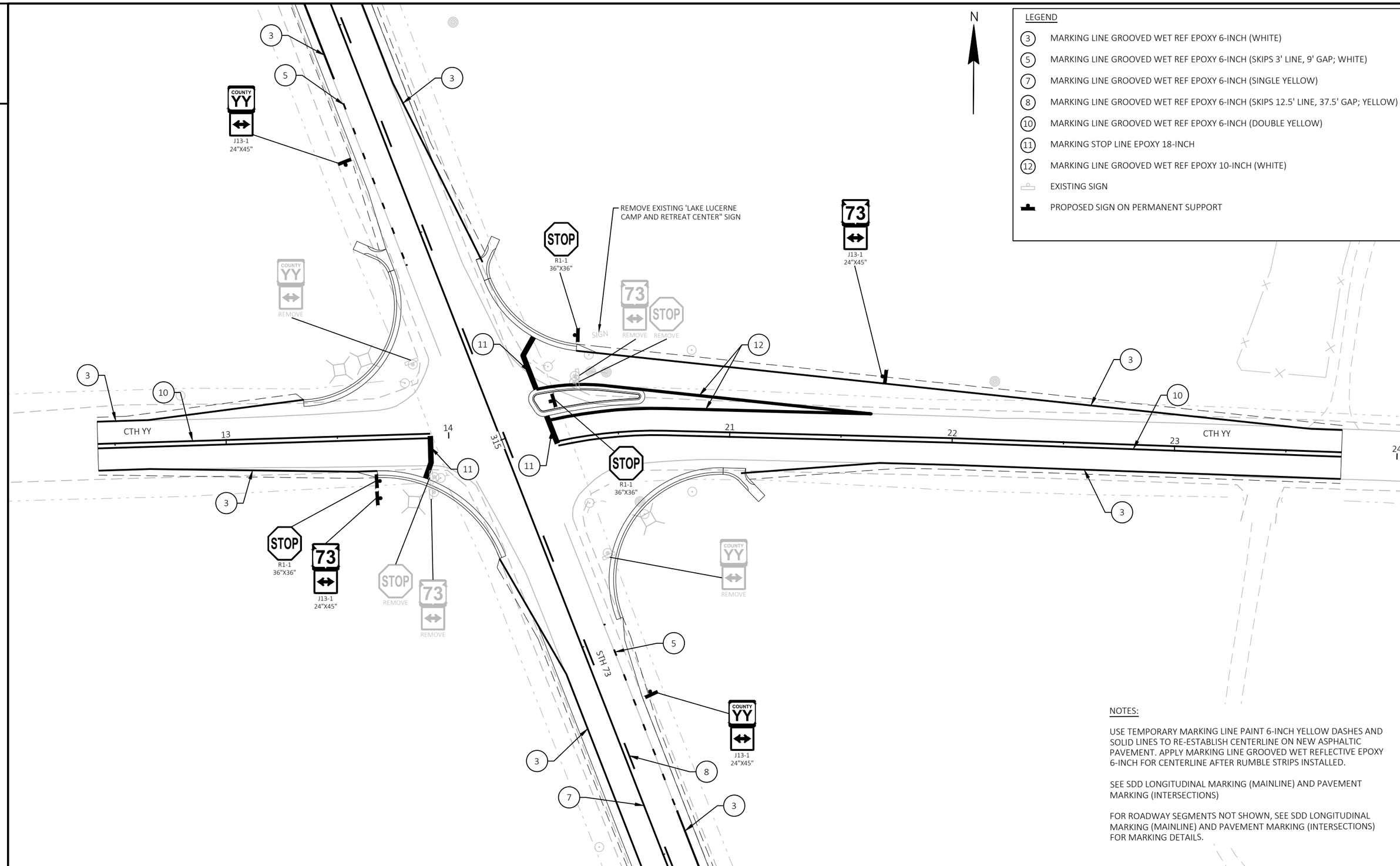

NOTES:

USE TEMPORARY MARKING LINE PAINT 6-INCH YELLOW DASHES AND SOLID LINES TO RE-ESTABLISH CENTERLINE ON NEW ASPHALTIC PAVEMENT. APPLY MARKING LINE GROOVED WET REFLECTIVE EPOXY 6-INCH FOR CENTERLINE AFTER RUMBLE STRIPS INSTALLED.

SEE SDD LONGITUDINAL MARKING (MAINLINE) AND PAVEMENT MARKING (INTERSECTIONS)

FOR ROADWAY SEGMENTS NOT SHOWN, SEE SDD LONGITUDINAL MARKING (MAINLINE) AND PAVEMENT MARKING (INTERSECTIONS) FOR MARKING DETAILS.

2

NOTES:
USE TEMPORARY MARKING LINE PAINT 6-INCH YELLOW DASHES AND SOLID LINES TO RE-ESTABLISH CENTERLINE ON NEW ASPHALTIC PAVEMENT. APPLY MARKING LINE GROOVED WET REFLECTIVE EPOXY 6-INCH FOR CENTERLINE AFTER RUMBLE STRIPS INSTALLED.

SEE SDD LONGITUDINAL MARKING (MAINLINE), PAVEMENT MARKING (INTERSECTIONS), AND PAVEMENT MARKING (CLIMBING AND PASSING LANE).

FOR ROADWAY SEGMENTS NOT SHOWN, SEE SDD LONGITUDINAL MARKING (MAINLINE) AND PAVEMENT MARKING (INTERSECTIONS) FOR MARKING DETAILS.

ESTABLISH NO PASSING ZONE BETWEEN CTH F AND STH 21 WITH DOUBLE YELLOW CENTERLINE.

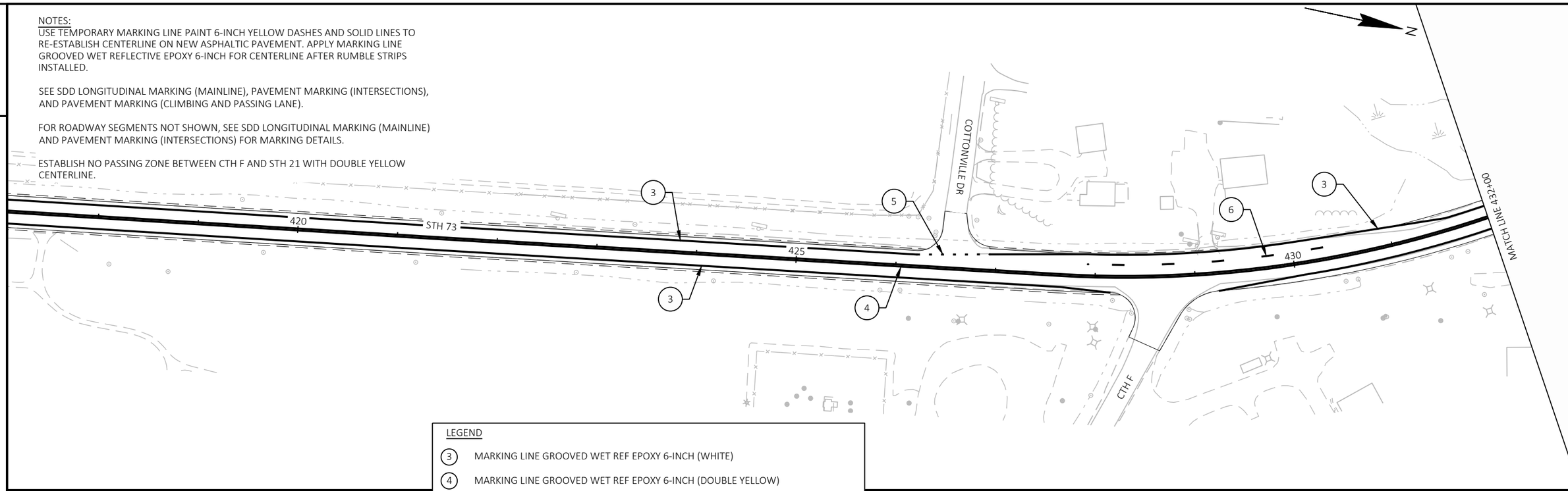

LEGEND

3 MARKING LINE GROOVED WET REF EPOXY 6-INCH (WHITE)

4 MARKING LINE GROOVED WET REF EPOXY 6-INCH (DOUBLE YELLOW)

5 MARKING LINE GROOVED WET REF EPOXY 6-INCH (SKIPS 3' LINE, 9' GAP; WHITE)

6 MARKING LINE GROOVED WET REF EPOXY 6-INCH (SKIPS 12.5' LINE, 37.5' GAP; WHITE)

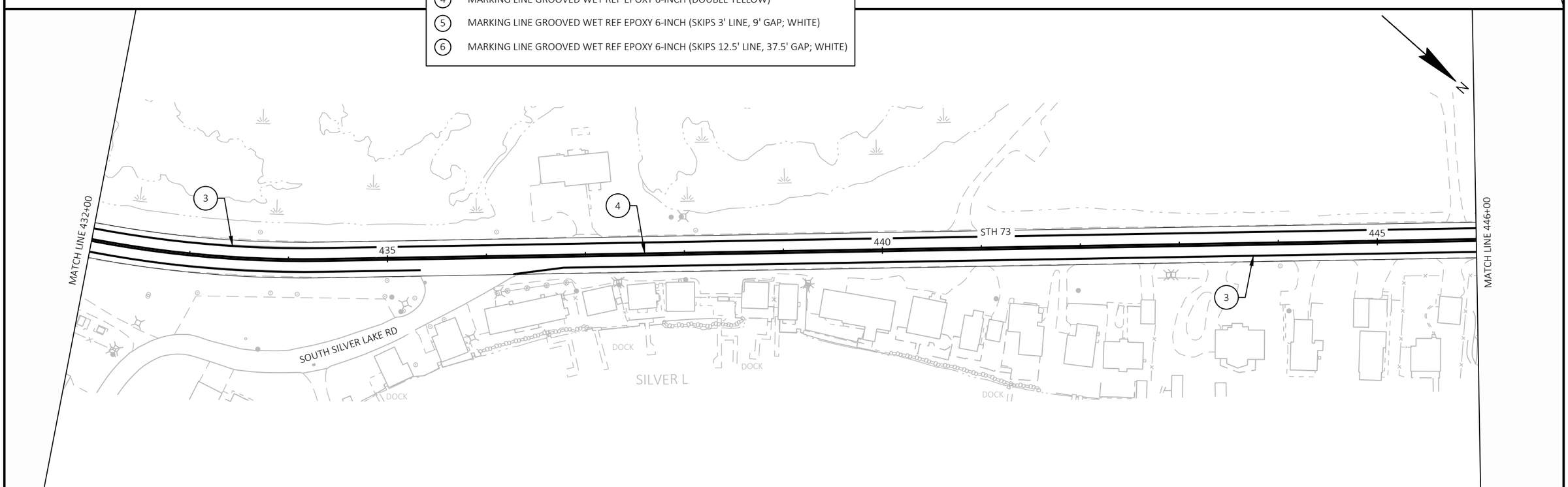

2

PROJECT NO: 6530-01-70	HWY: STH 73	COUNTY: WAUSHARA	PAVEMENT MARKING & SIGNING	SHEET 36	E

FILE NAME : H:\PROJECTS\16000\16221\TECHDATA\65300100\SHEETS\024501-PM.DWG
LAYOUT NAME - PM-3
PLOT DATE : 10/20/2025 4:28 PM PLOT BY : BRIAN GENSKOW PLOT NAME : PLOT SCALE : 1 IN:100 FT

WISDOT/CADDS SHEET 44

2

NOTES:
USE TEMPORARY MARKING LINE PAINT 6-INCH YELLOW DASHES AND SOLID LINES TO RE-ESTABLISH CENTERLINE ON NEW ASPHALTIC PAVEMENT. APPLY MARKING LINE GROOVED WET REFLECTIVE EPOXY 6-INCH FOR CENTERLINE AFTER RUMBLE STRIPS INSTALLED.

SEE SDD LONGITUDINAL MARKING (MAINLINE), PAVEMENT MARKING (INTERSECTIONS), AND PAVEMENT MARKING (CLIMBING AND PASSING LANE).

FOR ROADWAY SEGMENTS NOT SHOWN, SEE SDD LONGITUDINAL MARKING (MAINLINE) AND PAVEMENT MARKING (INTERSECTIONS) FOR MARKING DETAILS.

ESTABLISH NO PASSING ZONE BETWEEN CTH F AND STH 21 WITH DOUBLE YELLOW CENTERLINE.

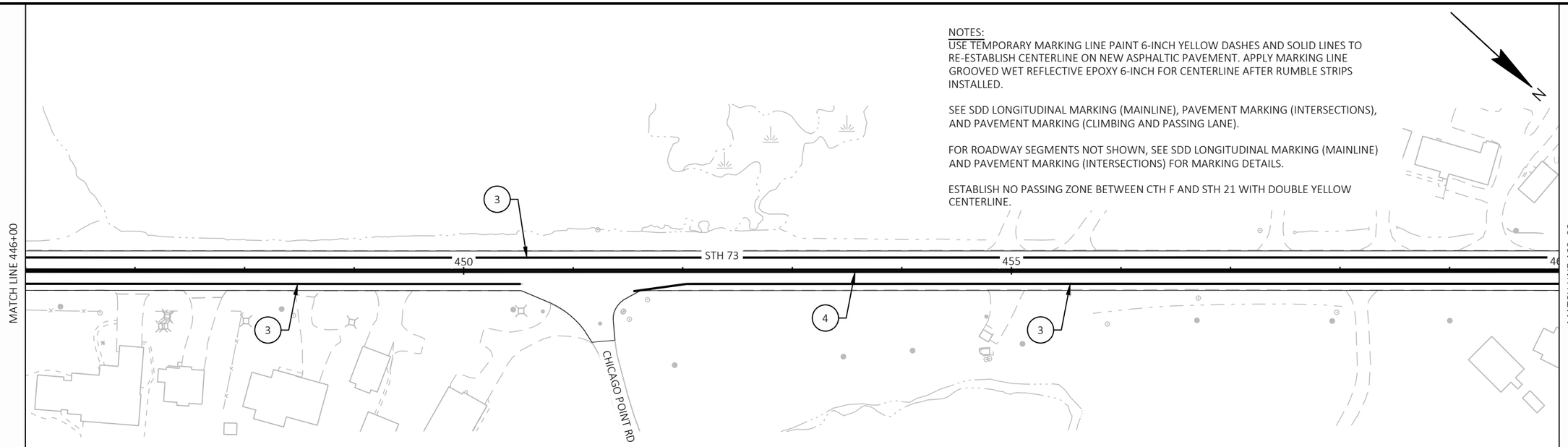

LEGEND

3 MARKING LINE GROOVED WET REF EPOXY 6-INCH (WHITE)

4 MARKING LINE GROOVED WET REF EPOXY 6-INCH (DOUBLE YELLOW)

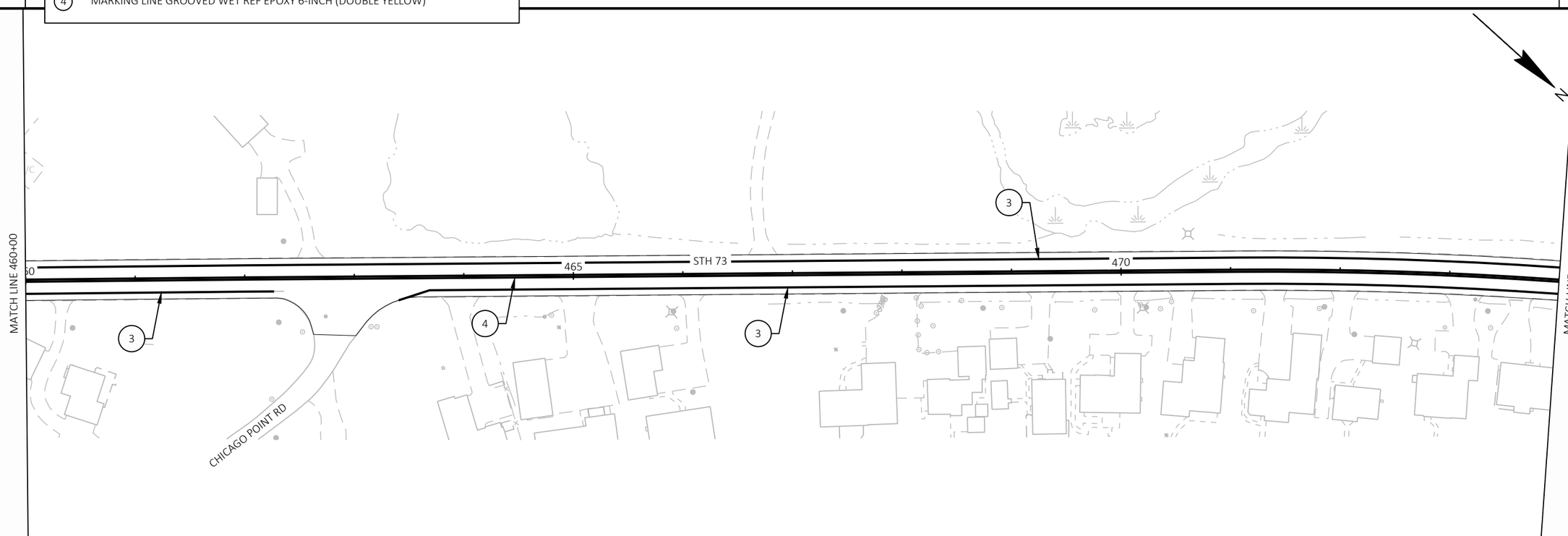

2

PROJECT NO: 6530-01-70	HWY: STH 73	COUNTY: WAUSHARA	PAVEMENT MARKING & SIGNING	SHEET 37	E

NOTES:
USE TEMPORARY MARKING LINE PAINT 6-INCH YELLOW DASHES AND SOLID LINES TO RE-ESTABLISH CENTERLINE ON NEW ASPHALTIC PAVEMENT. APPLY MARKING LINE GROOVED WET REFLECTIVE EPOXY 6-INCH FOR CENTERLINE AFTER RUMBLE STRIPS INSTALLED.

SEE SDD LONGITUDINAL MARKING (MAINLINE), PAVEMENT MARKING (INTERSECTIONS), AND PAVEMENT MARKING (CLIMBING AND PASSING LANE).

FOR ROADWAY SEGMENTS NOT SHOWN, SEE SDD LONGITUDINAL MARKING (MAINLINE) AND PAVEMENT MARKING (INTERSECTIONS) FOR MARKING DETAILS.

ESTABLISH NO PASSING ZONE BETWEEN CTH F AND STH 21 WITH DOUBLE YELLOW CENTERLINE.

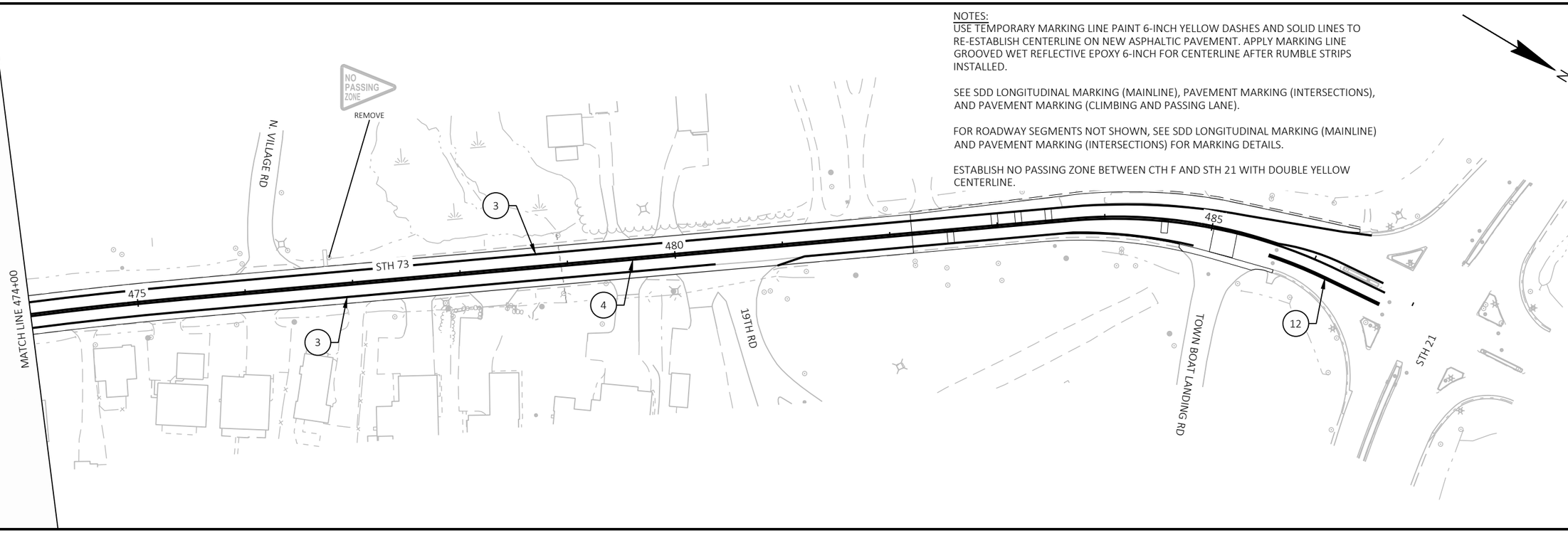

LEGEND

- (3) MARKING LINE GROOVED WET REF EPOXY 6-INCH (WHITE)
- (4) MARKING LINE GROOVED WET REF EPOXY 6-INCH (DOUBLE YELLOW)
- (12) MARKING LINE GROOVED WET REF EPOXY 10-INCH (WHITE)
- EXISTING SIGN

LEGEND

TRAFFIC CONTROL SIGNS ON PERMANENT SIGN SUPPORTS

NOTES:
ALL SIGNS ARE TO BE 48" X 48" UNLESS OTHERWISE NOTED.

MILLING AND PAVING WORK TO BE PERFORMED WITH LANE CLOSURES AND FLAGGING. SEE SDD TRAFFIC CONTROL LANE CLOSURE WITH FLAGGING OPERATION FOR ADDITIONAL DETAILS

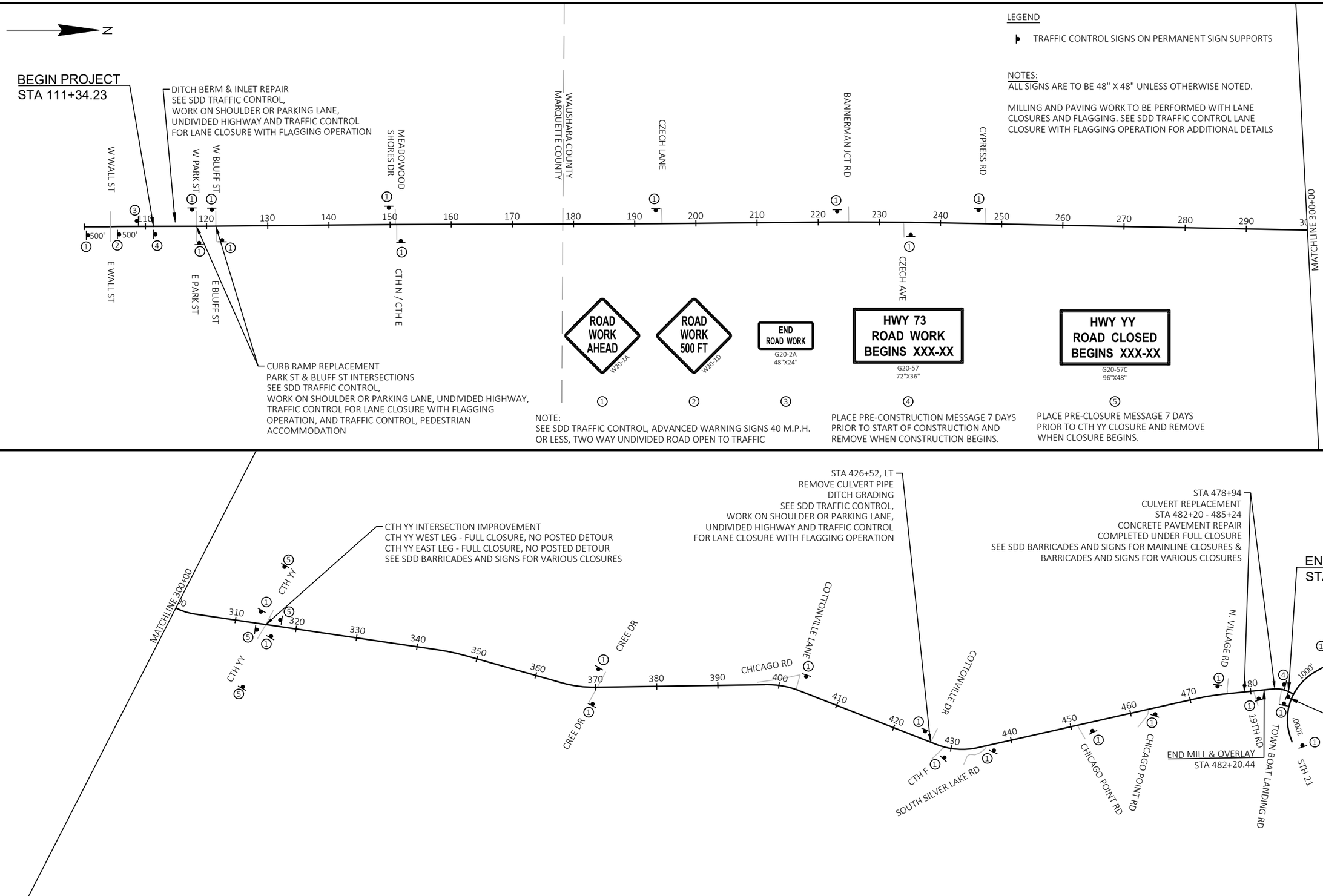

2

DETOUR NOTES

DETOUR ROUTE SHALL BE USED DURING THE IMPROVEMENT OF STH 73. STH 73 SHALL BE CLOSED TO THRU TRAFFIC FROM STH 21 TO N VILLAGE RD.

THE EXACT NUMBER, LOCATION, AND SPACING OF ALL SIGNS ARE APPROXIMATE AND SHALL BE ADJUSTED TO FIT FIELD CONDITIONS AS APPROVED BY THE ENGINEER.

COVER ALL SIGNS WHICH MAY CONFLICT WITH THE CONSTRUCTION TRAFFIC PATTERN.

LEGEND

WORK ZONE

DETOUR ROUTE

WAUSHARA CO
MARQUETTE CO

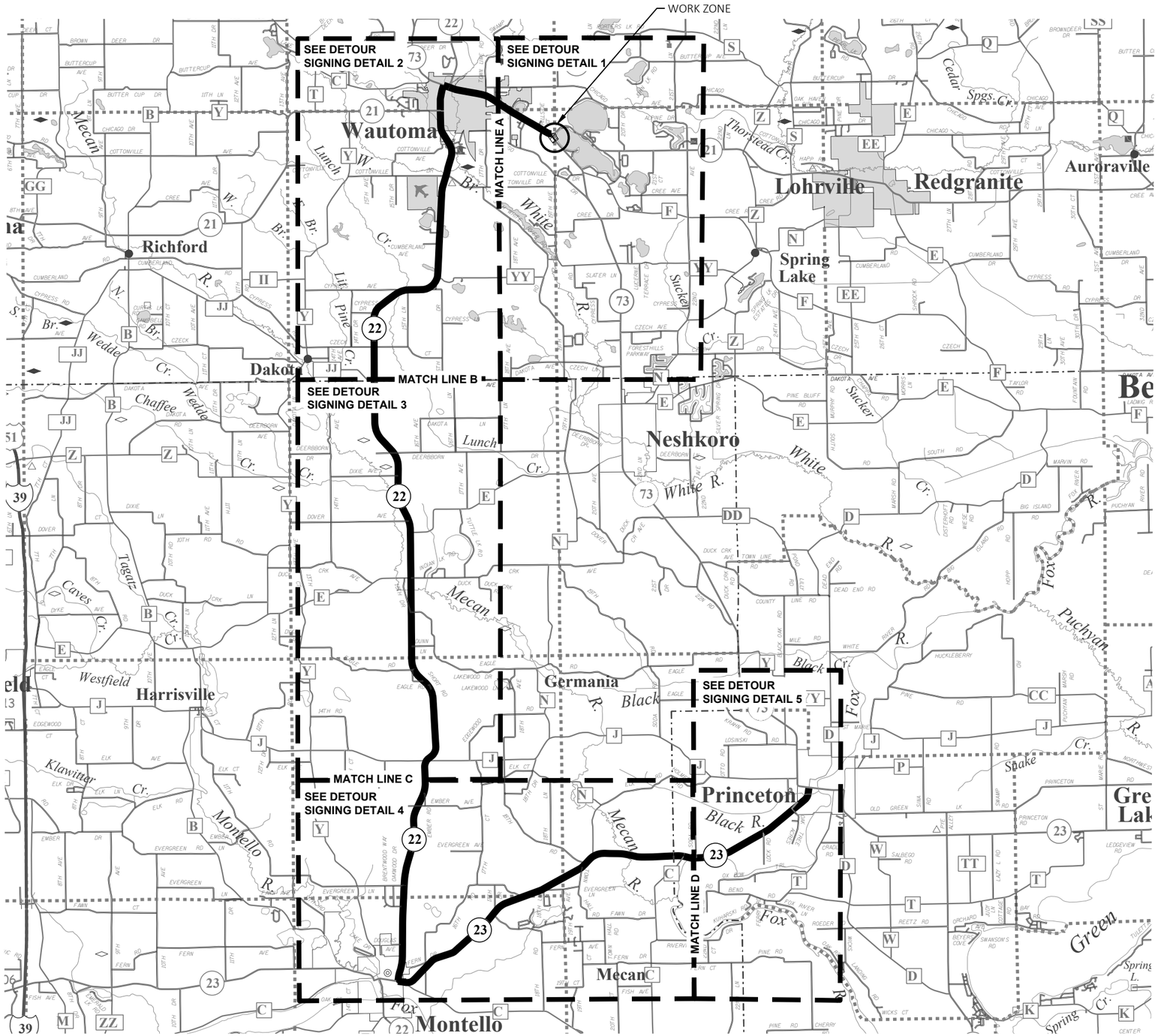

2

PROJECT NO: 6530-01-70	HWY: STH 73	COUNTY: WAUSHARA	DETOUR - OVERVIEW	SHEET 40	E

FILE NAME : H:\PROJECTS\16000\16221\TECHDATA\65300100\SHEETS\027001-DT.DWG
LAYOUT NAME - 01-dt
PLOT DATE : 10/20/2025 4:29 PM
PLOT BY : BRIAN GENSKOW
PLOT NAME :
PLOT SCALE : 1in=2.5mi
WISDOT/CADDS SHEET 42

2

NOTE

ALL SIGNS ARE TO BE 48"X48" UNLESS OTHERWISE NOTED.

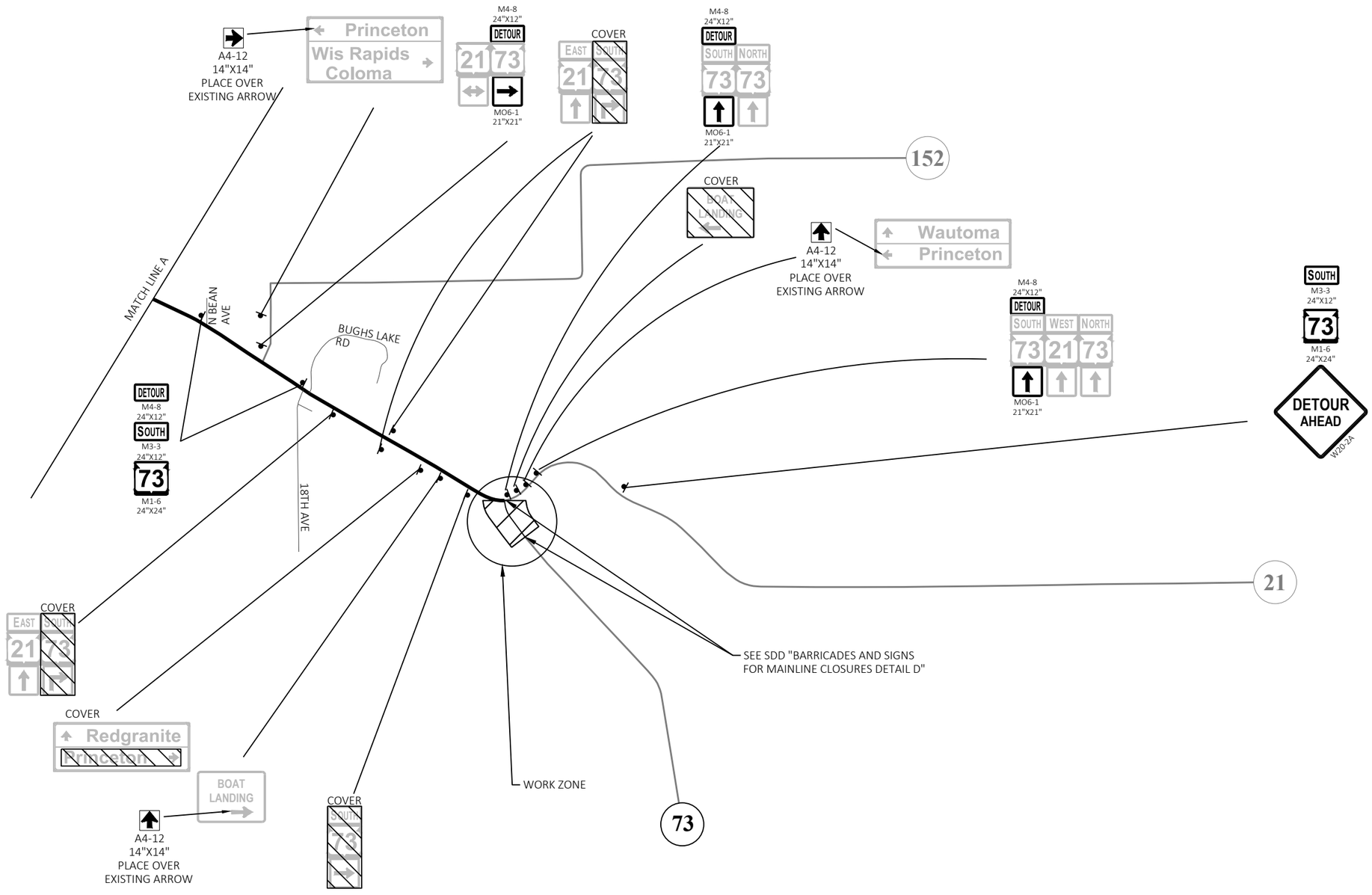

2

PROJECT NO: 6530-01-70	HWY: STH 73	COUNTY: WAUSHARA	DETOUR - SIGNING DETAIL 1	SHEET 41	E

FILE NAME : H:\PROJECTS\16000\16221\TECHDATA\65300100\SHEETS\027001-DT.DWG
LAYOUT NAME - 02-dt
PLOT DATE : 10/20/2025 4:29 PM PLOT BY : BRIAN GENSKOW PLOT NAME : PLOT SCALE : 1 IN:0.5 MI

WISDOT/CADDS SHEET 42

NOTE

ALL SIGNS ARE TO BE 48"X48" UNLESS OTHERWISE NOTED.

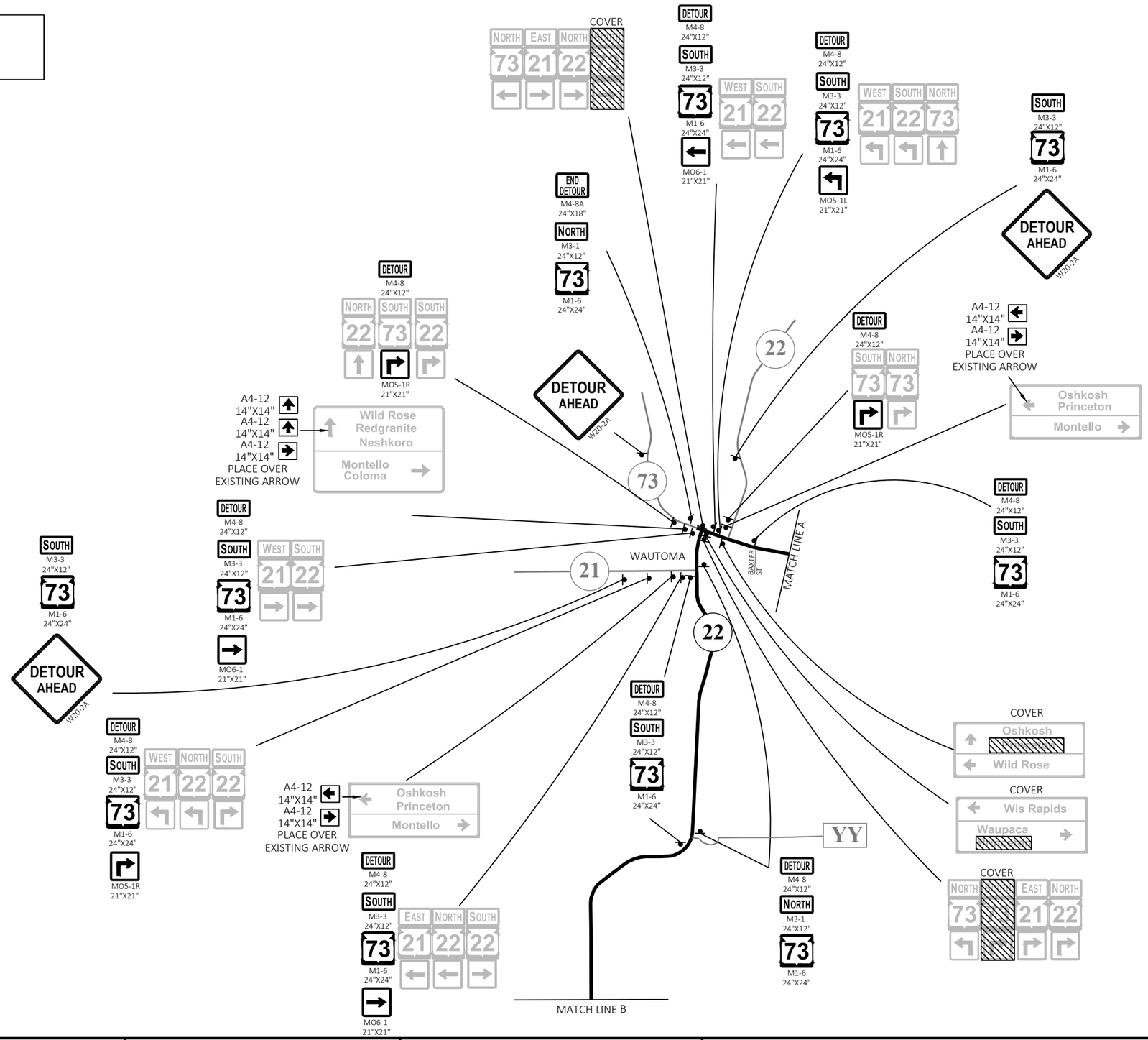

PROJECT NO: 6530-01-70	HWY: STH 73	COUNTY: WAUSHARA	DETOUR - SIGNING DETAIL 2	SHEET 42	E

FILE NAME : H:\PROJECTS\16000\16221\TECHDATA\65300100\SHEETS\027001-DT.DWG
LAYOUT NAME - 03-dt
PLOT DATE : 10/20/2025 4:29 PM
PLOT BY : BRIAN GENSKOW
PLOT NAME :
PLOT SCALE : 1 IN:1.5 MI

2

NOTE

ALL SIGNS ARE TO BE 48"X48" UNLESS OTHERWISE NOTED.

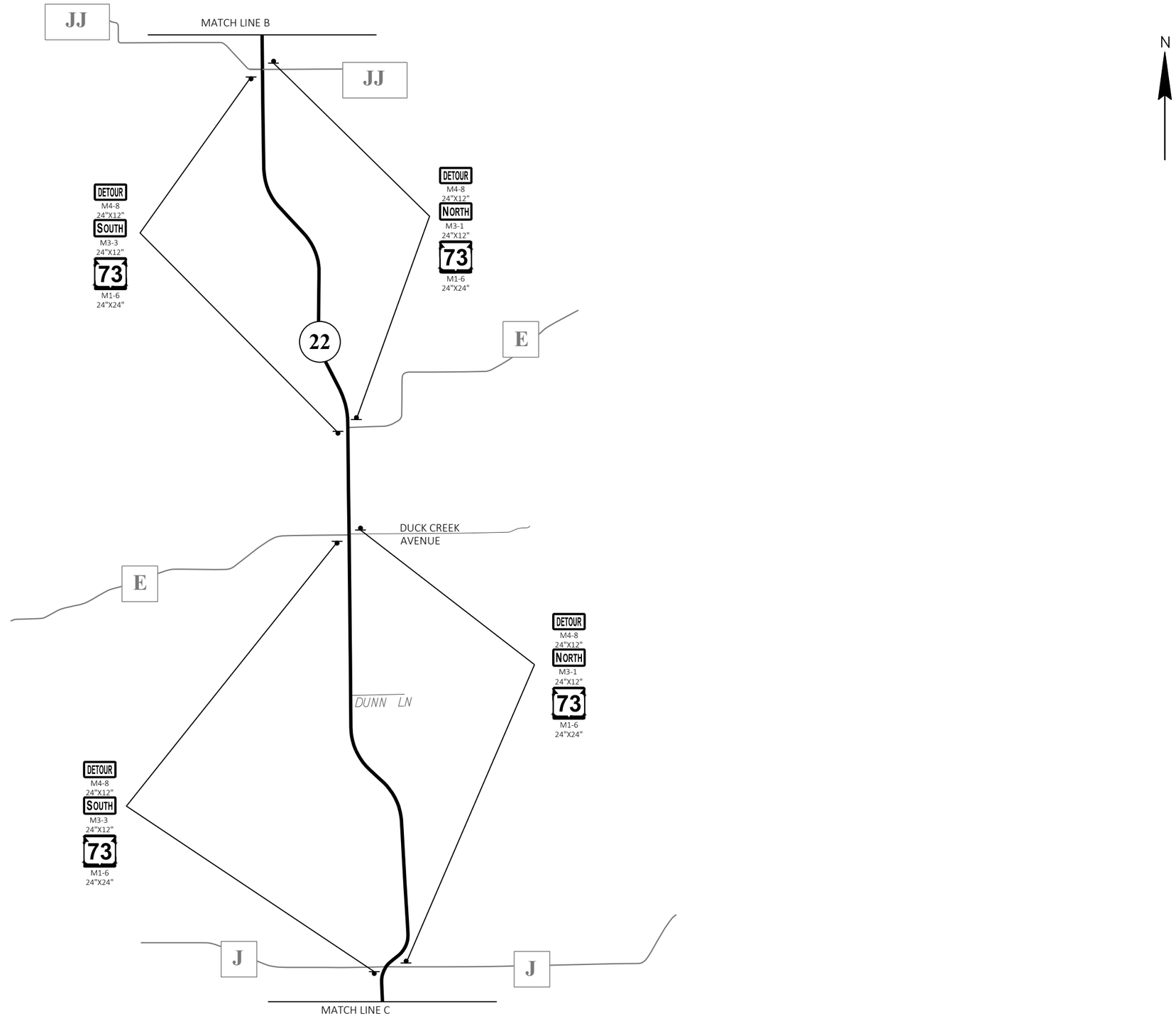

2

PROJECT NO: 6530-01-70	HWY: STH 73	COUNTY: WAUSHARA	DETOUR - SIGNING DETAIL 3	SHEET 43	E

2

NOTE

ALL SIGNS ARE TO BE 48"X48" UNLESS OTHERWISE NOTED.

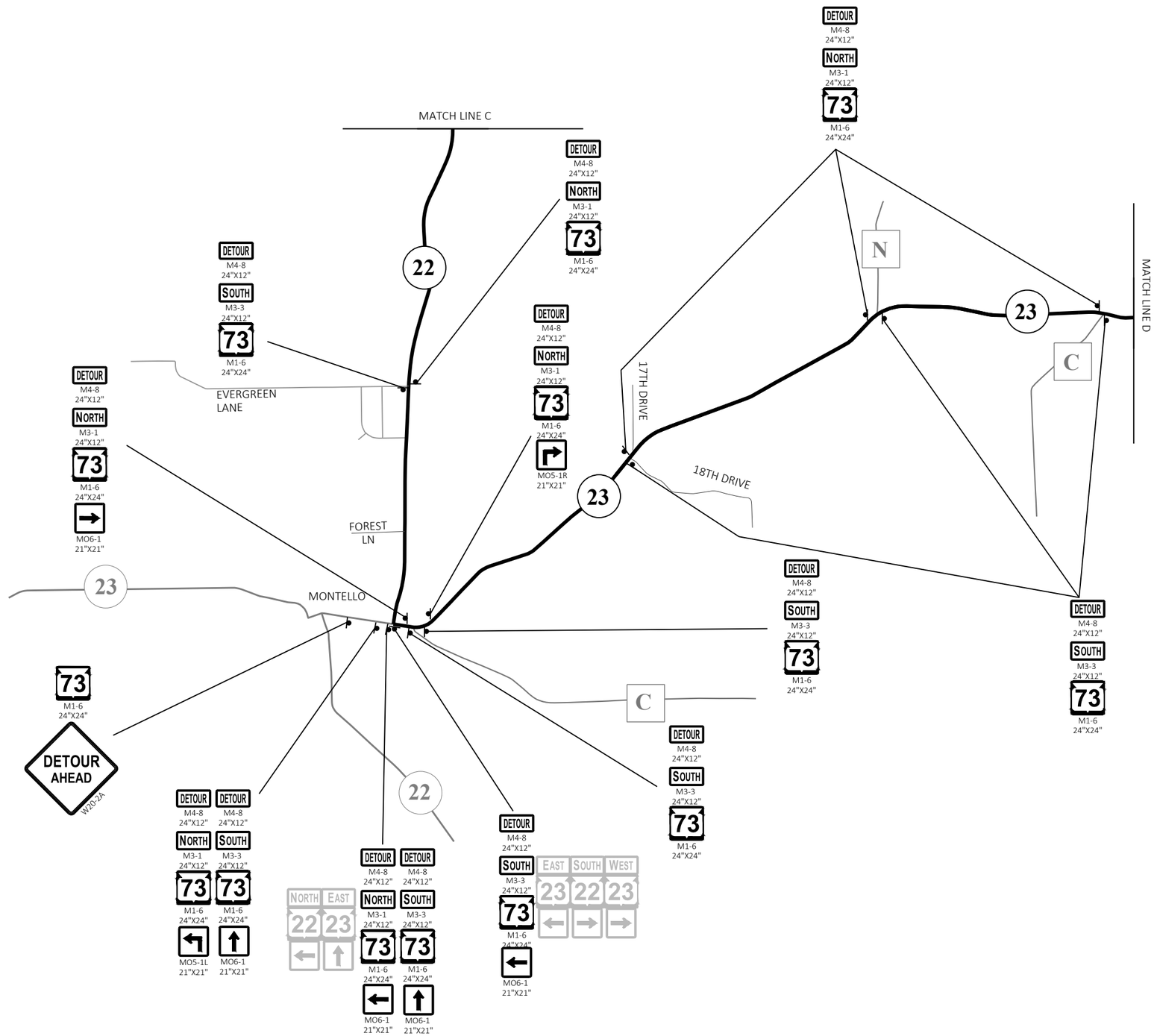

2

PROJECT NO: 6530-01-70	HWY: STH 73	COUNTY: WAUSHARA	DETOUR - SIGNING DETAIL 4	SHEET 44	E

2

NOTE

ALL SIGNS ARE TO BE 48"X48" UNLESS OTHERWISE NOTED.

N

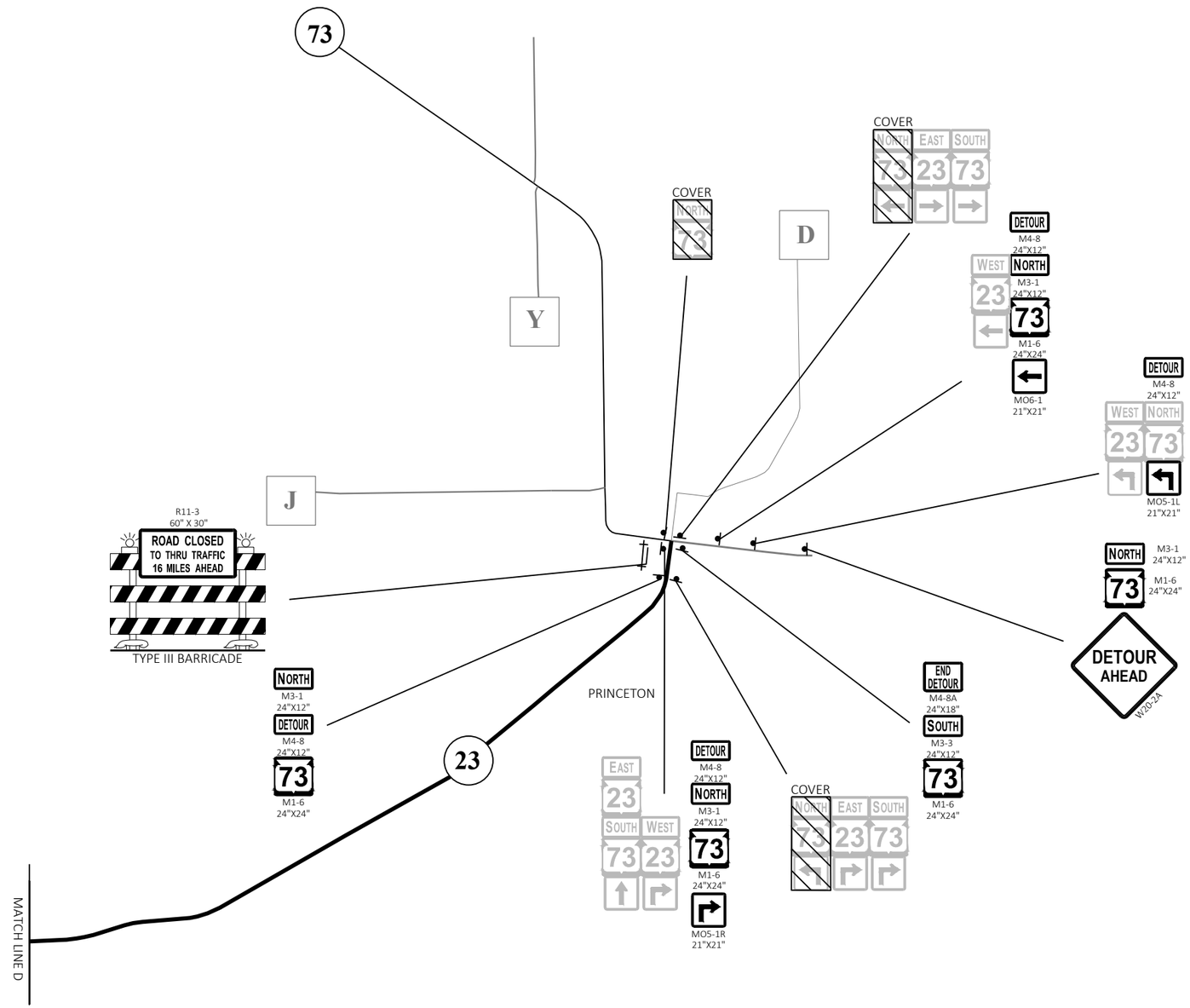

2

PROJECT NO: 6530-01-70	HWY: STH 73	COUNTY: WAUSHARA	DETOUR - SIGNING DETAIL 5	SHEET 45	E

FILE NAME : H:\PROJECTS\16000\16221\TECHDATA\65300100\SHEETS\027001-DT.DWG
LAYOUT NAME - 06-dt
PLOT DATE : 10/27/2025 8:39 PM PLOT BY : BRIAN GENSKOW PLOT NAME : PLOT SCALE : 1 IN:0.5 MI

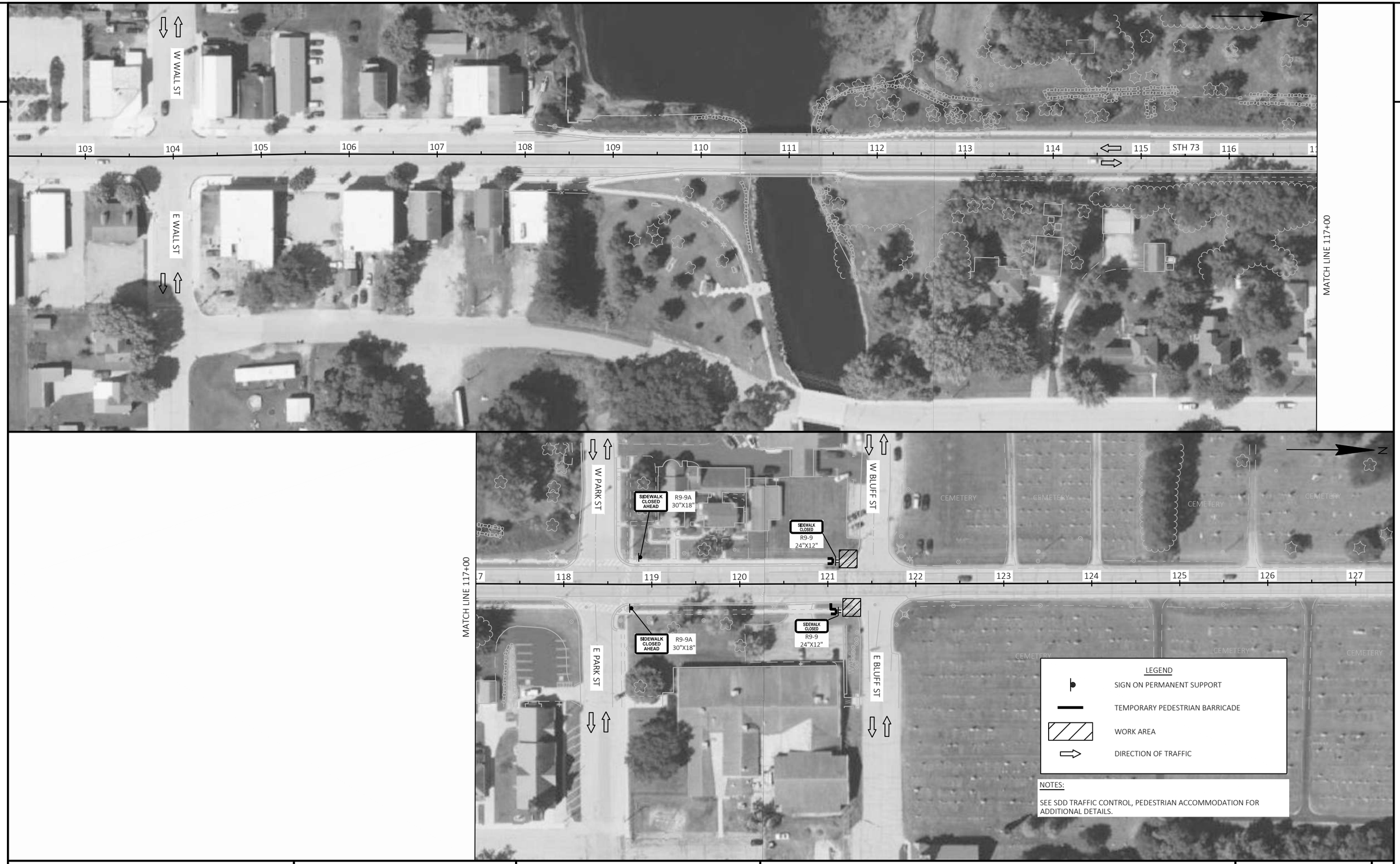

PROJECT NO: 6530-01-70	HWY: STH 73	COUNTY: WAUSHARA	TRAFFIC CONTROL - SIDEWALK CLOSURE STAGE 1	SHEET 46	E

FILE NAME : H:\PROJECTS\16000\16221\TECHDATA\65300100\SHEETS\025101 - TC.DWG
LAYOUT NAME - 025101 - TC - TC-02
PLOT DATE : 10/20/2025 4:30 PM
PLOT BY : BRIAN GENSKOW
PLOT NAME :
PLOT SCALE : 1 IN:100 FT

WISDOT/CADDS SHEET 44

PROJECT NO: 6530-01-70	HWY: STH 73	COUNTY: WAUSHARA	TRAFFIC CONTROL - SIDEWALK CLOSURE STAGE 2	SHEET 47	E

FILE NAME : H:\PROJECTS\16000\16221\TECHDATA\65300100\SHEETS\025102 - TC.DWG
LAYOUT NAME - 025102 - TC - TC-03
PLOT DATE : 10/20/2025 4:30 PM PLOT BY : BRIAN GENSKOW PLOT NAME : PLOT SCALE : 1 IN:100 FT

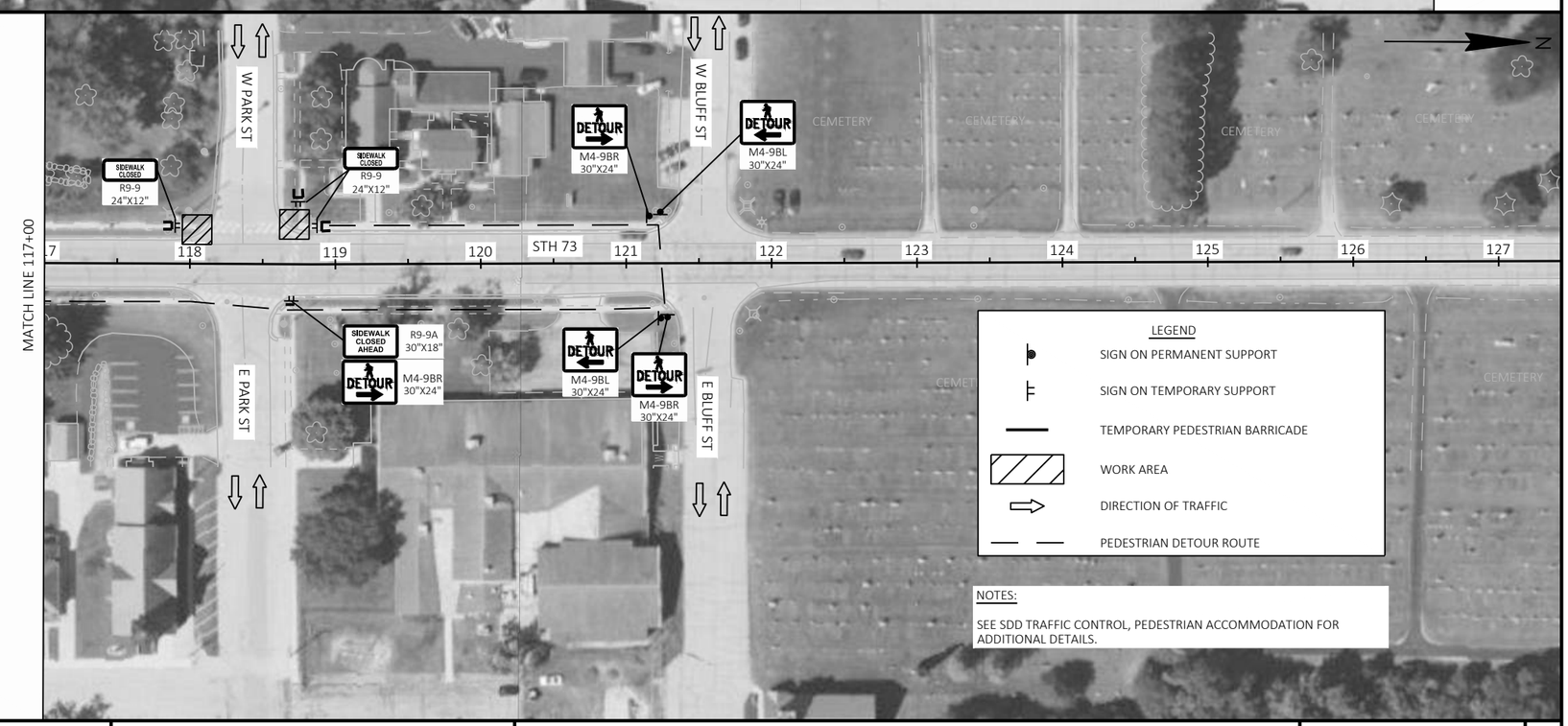

PROJECT NO: 6530-01-70	HWY: STH 73	COUNTY: WAUSHARA	TRAFFIC CONTROL - SIDEWALK CLOSURE STAGE 3	SHEET 48	E

FILE NAME : H:\PROJECTS\16000\16221\TECHDATA\65300100\SHEETS\025103 - TC.DWG
LAYOUT NAME - 025103 - TC - TC-04
PLOT DATE : 10/20/2025 4:30 PM PLOT BY : BRIAN GENSKOW PLOT NAME : PLOT SCALE : 1 IN:100 FT

Estimate Of Quantities

6530-01-70

Line	Item	Item Description	Unit	Total	Qty
0002	201.0210	Grubbing	SY	2,226.000	2,226.000
0004	203.0100	Removing Small Pipe Culverts	EACH	4.000	4.000
0006	204.0110	Removing Asphaltic Surface	SY	770.000	770.000
0008	204.0115	Removing Asphaltic Surface Butt Joints	SY	1,189.000	1,189.000
0010	204.0120	Removing Asphaltic Surface Milling	SY	139,067.000	139,067.000
0012	204.0150	Removing Curb & Gutter	LF	145.000	145.000
0014	204.0155	Removing Concrete Sidewalk	SY	78.000	78.000
0016	205.0100	Excavation Common	CY	2,294.000	2,294.000
0018	208.0100	Borrow	CY	148.000	148.000
0020	211.0101	Prepare Foundation for Asphaltic Paving (project) 01. 6530-01-70	EACH	1.000	1.000
0022	211.0400	Prepare Foundation for Asphaltic Shoulders	STA	3.000	3.000
0024	213.0100	Finishing Roadway (project) 01. 6530-01-70	EACH	1.000	1.000
0026	305.0110	Base Aggregate Dense 3/4-Inch	TON	4,949.000	4,949.000
0028	305.0120	Base Aggregate Dense 1 1/4-Inch	TON	2,517.000	2,517.000
0030	416.0610	Drilled Tie Bars	EACH	14.000	14.000
0032	416.0620	Drilled Dowel Bars	EACH	134.000	134.000
0034	416.1710	Concrete Pavement Repair	SY	48.000	48.000
0036	416.1720	Concrete Pavement Replacement	SY	55.000	55.000
0038	450.4000	HMA Cold Weather Paving	TON	3,025.000	3,025.000
0040	455.0605	Tack Coat	GAL	10,110.000	10,110.000
0042	460.0105.S	HMA Percent Within Limits (PWL) Test Strip Volumetrics	EACH	1.000	1.000
0044	460.0110.S	HMA Percent Within Limits (PWL) Test Strip Density	EACH	1.000	1.000
0046	460.2005	Incentive Density PWL HMA Pavement	DOL	11,110.000	11,110.000
0048	460.2007	Incentive Density HMA Pavement Longitudinal Joints	DOL	7,420.000	7,420.000
0050	460.2010	Incentive Air Voids HMA Pavement	DOL	15,910.000	15,910.000
0052	460.5224	HMA Pavement 4 LT 58-28 S	TON	15,907.000	15,907.000
0054	465.0105	Asphaltic Surface	TON	629.000	629.000
0056	465.0110	Asphaltic Surface Patching	TON	224.000	224.000
0058	465.0120	Asphaltic Surface Driveways and Field Entrances	TON	71.000	71.000
0060	465.0315	Asphaltic Flumes	SY	31.000	31.000
0062	465.0520	Asphaltic Rumble Strips, Shoulder	LF	2,895.000	2,895.000
0064	465.0560	Asphaltic Rumble Strips, Centerline	LF	23,940.000	23,940.000
0066	520.1024	Apron Endwalls for Culvert Pipe 24-Inch	EACH	2.000	2.000
0068	520.3624	Culvert Pipe Class III-B Non-metal 24-Inch	LF	55.000	55.000
0070	522.0424	Culvert Pipe Reinforced Concrete Class IV 24-Inch	LF	204.000	204.000
0072	522.1024	Apron Endwalls for Culvert Pipe Reinforced Concrete 24-Inch	EACH	4.000	4.000
0074	601.0411	Concrete Curb & Gutter 30-Inch Type D	LF	146.000	146.000
0076	601.0415	Concrete Curb & Gutter 6-Inch Sloped 30-Inch Type J	LF	105.000	105.000
0078	601.0557	Concrete Curb & Gutter 6-Inch Sloped 36-Inch Type D	LF	302.000	302.000
0080	602.0405	Concrete Sidewalk 4-Inch	SF	242.000	242.000
0082	602.0410	Concrete Sidewalk 5-Inch	SF	947.000	947.000
0084	602.0505	Curb Ramp Detectable Warning Field Yellow	SF	70.000	70.000
0086	606.0100	Riprap Light	CY	20.000	20.000
0088	611.8110	Adjusting Manhole Covers	EACH	1.000	1.000
0090	611.8115	Adjusting Inlet Covers	EACH	2.000	2.000
0092	618.0100	Maintenance and Repair of Haul Roads (project) 01. 6530-01-70	EACH	1.000	1.000
0094	619.1000	Mobilization	EACH	1.000	1.000
0096	624.0100	Water	MGAL	111.000	111.000
0098	625.0100	Topsoil	SY	3,153.000	3,153.000

Estimate Of Quantities

6530-01-70

Line	Item	Item Description	Unit	Total	Qty
0100	628.1504	Silt Fence	LF	391.000	391.000
0102	628.1520	Silt Fence Maintenance	LF	391.000	391.000
0104	628.1905	Mobilizations Erosion Control	EACH	5.000	5.000
0106	628.1910	Mobilizations Emergency Erosion Control	EACH	4.000	4.000
0108	628.2004	Erosion Mat Class I Type B	SY	2,663.000	2,663.000
0110	628.2008	Erosion Mat Urban Class I Type B	SY	538.000	538.000
0112	628.7010	Inlet Protection Type B	EACH	3.000	3.000
0114	628.7555	Culvert Pipe Checks	EACH	12.000	12.000
0116	629.0210	Fertilizer Type B	CWT	3.000	3.000
0118	630.0120	Seeding Mixture No. 20	LB	79.000	79.000
0120	630.0500	Seed Water	MGAL	66.000	66.000
0122	633.5200	Markers Culvert End	EACH	6.000	6.000
0124	634.0616	Posts Wood 4x6-Inch X 16-FT	EACH	7.000	7.000
0126	637.2210	Signs Type II Reflective H	SF	52.380	52.380
0128	638.2602	Removing Signs Type II	EACH	12.000	12.000
0130	638.3000	Removing Small Sign Supports	EACH	8.000	8.000
0132	642.5001	Field Office Type B	EACH	1.000	1.000
0134	643.0300	Traffic Control Drums	DAY	407.000	407.000
0136	643.0420	Traffic Control Barricades Type III	DAY	432.000	432.000
0138	643.0705	Traffic Control Warning Lights Type A	DAY	499.000	499.000
0140	643.0900	Traffic Control Signs	DAY	4,184.000	4,184.000
0142	643.0920	Traffic Control Covering Signs Type II	EACH	12.000	12.000
0144	643.1000	Traffic Control Signs Fixed Message	SF	108.000	108.000
0146	643.3165	Temporary Marking Line Paint 6-Inch	LF	49,588.000	49,588.000
0148	643.5000	Traffic Control	EACH	1.000	1.000
0150	644.1810	Temporary Pedestrian Barricade	LF	205.000	205.000
0152	645.0130	Geotextile Type R	SY	232.000	232.000
0154	646.2040	Marking Line Grooved Wet Ref Epoxy 6-Inch	LF	122,078.000	122,078.000
0156	646.4040	Marking Line Grooved Wet Ref Epoxy 10-Inch	LF	412.000	412.000
0158	646.6120	Marking Stop Line Epoxy 18-Inch	LF	59.000	59.000
0160	646.6466	Cold Weather Marking Epoxy 6-Inch	LF	31,000.000	31,000.000
0162	646.7420	Marking Crosswalk Epoxy Transverse Line 6-Inch	LF	377.000	377.000
0164	646.8320	Marking Parking Stall Epoxy	LF	53.000	53.000
0166	650.5000	Construction Staking Base	LF	519.000	519.000
0168	650.6000	Construction Staking Pipe Culverts	EACH	3.000	3.000
0170	650.8000	Construction Staking Resurfacing Reference	LF	37,493.000	37,493.000
0172	650.9000	Construction Staking Curb Ramps	EACH	6.000	6.000
0174	650.9500	Construction Staking Sidewalk (project) 01. 6530-01-70	EACH	1.000	1.000
0176	650.9911	Construction Staking Supplemental Control (project) 01. 6530-01-70	EACH	1.000	1.000
0178	650.9920	Construction Staking Slope Stakes	LF	964.000	964.000
0180	680.0100	Public Land Reference Monument Verify and Reset	EACH	6.000	6.000
0182	690.0150	Sawing Asphalt	LF	913.000	913.000
0184	690.0250	Sawing Concrete	LF	87.000	87.000
0186	740.0440	Incentive IRI Ride	DOL	28,100.000	28,100.000
0188	999.2105.S	Maintaining Climbing Turtle Exclusion Fence	LF	293.000	293.000
0190	SPV.0035	Special 01. Remove, Salvage, and Reinstall Riprap Light	CY	50.000	50.000
0192	SPV.0060	Special 01. Mortar Pipe Joint	EACH	1.000	1.000
0194	SPV.0180	Special 01. Removing Distressed Asphaltic Surface Milling	SY	2,000.000	2,000.000

6530-01-70

3

GRUBBING

STATION STATION	LOCATION	01010 GRUBBING SY
CAT 0010		
W CTH YY		
1 13	LT	0
13 11	RT	1
E CTH YY		
0 ĀĀĀĀĀĀĀĀ	LT	1
0 10	RT	31
ITEM TOTALS		2226

REMOVING SMALL PIPE CULVERTS

STATION	CULVERT	LENGTH FT	030100 EACH	REMARS
CAT 0010				
STH 73				
426+58	COTTONVILLE DR	3	1	CMCP
7	073007071	55	1	CMCP
CTH YY				
133	W CTH YY	45	1	CMCP
0	E CTH YY	66	1	CMCP
CAT 0010 SUBTOTAL			4	
	ITEM TOTAL		4	

REMOVING ASPHALTIC SURFACE

STATION	LOCATION	00110 SY	REMARS
CAT 0010			
111ĀĀĀ	LT	2	INLET REPAIR
111ĀĀĀ	RT	2	INLET REPAIR
110	LT	3	CURB RAMP
110	RT	5	CURB RAMP
111	RT	6	CURB RAMP
11ĀĀĀĀ	LT	10	CURB RAMP
11	LT	7	CURB RAMP
11	RT	6	CURB RAMP
1307	LT	6	DRIVEWAY APRON
10	LT	8	DRIVEWAY APRON
1ĀĀĀĀĀ	RT	9	DRIVEWAY APRON
13ĀĀĀĀ	LT	9	DRIVEWAY APRON
13	LT	13	DRIVEWAY APRON
1703	LT	1Ā	DRIVEWAY APRON
101	RT	10	DRIVEWAY APRON
1ĀĀĀĀĀ	RT	1Ā	DRIVEWAY APRON
13	RT	1Ā	DRIVEWAY APRON
17	RT	9	DRIVEWAY APRON
101	LT	1Ā	DRIVEWAY APRON
110	RT	8	DRIVEWAY APRON
113	RT	8	DRIVEWAY APRON
1ĀĀĀĀĀ	RT	13	DRIVEWAY APRON
10	RT	11	DRIVEWAY APRON
10	RT	10	DRIVEWAY APRON
1771	RT	13	DRIVEWAY APRON
177ĀĀĀ	LT	1Ā	DRIVEWAY APRON
11	LT	11	DRIVEWAY APRON
133	RT	17	DRIVEWAY APRON
13	LT	11	DRIVEWAY APRON
130	RT	10	DRIVEWAY APRON
1ĀĀĀĀĀ	RT	9	DRIVEWAY APRON
03	LT	9	DRIVEWAY APRON
037	RT	8	DRIVEWAY APRON
077	RT	7	DRIVEWAY APRON
1071	RT	1Ā	DRIVEWAY APRON
11	RT	5	DRIVEWAY APRON
1	RT	5	DRIVEWAY APRON
30	LT	1Ā	DRIVEWAY APRON
3	RT	9	DRIVEWAY APRON
7	RT	5	DRIVEWAY APRON
01	RT	7	DRIVEWAY APRON
03	RT	6	DRIVEWAY APRON
317	LT	1Ā	DRIVEWAY APRON
7303	RT	9	DRIVEWAY APRON
7	RT	8	DRIVEWAY APRON

REMOVING ASPHALTIC SURFACE CONT'D

STATION	LOCATION	00110 SY	REMARS
CAT 0010			
30	LT	1Ā	DRIVEWAY APRON
0	RT	1	DRIVEWAY APRON
7	LT	1Ā	DRIVEWAY APRON
3	LT	1Ā	DRIVEWAY APRON
33	LT	1Ā	DRIVEWAY APRON
37	RT	9	DRIVEWAY APRON
3371	RT	17	DRIVEWAY APRON
37	RT	6	DRIVEWAY APRON
37	LT	1Ā	DRIVEWAY APRON
37	LT	13	DRIVEWAY APRON
30	LT	8	DRIVEWAY APRON
37ĀĀĀĀ	RT	13	DRIVEWAY APRON
303	LT	11	DRIVEWAY APRON
3ĀĀĀĀĀ	RT	9	DRIVEWAY APRON
33	RT	10	DRIVEWAY APRON
31	RT	1Ā	DRIVEWAY APRON
13	LT	1Ā	DRIVEWAY APRON
177	RT	9	DRIVEWAY APRON
0 7	RT	99	PAVED SHOULDER
	ITEM TOTAL	770	

3

REMOVING ASPHALTIC SURFACE BUTT JOINTS

STATION	LOCATION	204.0115 SY
CAT 0010		
111+34	BEGIN PROJECT	36
118+37	E PARK ST	..
113	W PAR ST	3
11	W BLUFF ST	3Ā
11	E BLUFF ST	3Ā
17	DRIVEWAY RT	1
1ĀĀĀĀĀ	DRIVEWAY LT	17
13	DRIVEWAY RT	1Ā
177	DRIVEWAY RT	1Ā
1301	DRIVEWAY LT	1
13ĀĀĀĀ	DRIVEWAY LT	1Ā
13ĀĀĀĀ	DRIVEWAY RT	..
13ĀĀĀĀ	DRIVEWAY LT	3
103	DRIVEWAY RT	31
11	DRIVEWAY RT	25
1ĀĀĀĀĀ	DRIVEWAY RT	25
17	DRIVEWAY RT	65
1110	CTH N CTH E	31
1ĀĀĀĀĀ	DRIVEWAY RT	30
1ĀĀĀĀĀ	CECH LN	24
03	DRIVEWAY LT	1Ā
1	DRIVEWAY LT	3Ā
224+99	BANNERMAN JUNCTION RD	24
30	CECH AVE	24
30	DRIVEWAY LT	22
30	DRIVEWAY LT	1Ā
70	CYPRESS RD	25
7	DRIVEWAY LT	3
269+99	DRIVEWAY LT	24
370ĀĀĀ	E CREE DR	24
370ĀĀĀ	W CREE DR	22
377	DRIVEWAY LT	29
3ĀĀĀĀĀ	DRIVEWAY LT	26
311	DRIVEWAY LT	25
30	DRIVEWAY RT	33
0	COTTONVILLE LN	3
031	DRIVEWAY RT	7
7	COTTONVILLE DR	25
428+45	CTH F	3Ā
1	CHICAGO POINT RD	26
462+84	CHICAGO POINT RD	49
0	END MILL OVERLAY	0
	ITEM TOTAL	11ĀĀ

3

REMOVING ASPHALTIC SURFACE MILLING

STATION - STATION	LOCATION	204.0120 SĀ	REMARKS
CAT 0010			
111+44 - 121+5	STH 3	403	
121+5 - 122+5	STH 3	3ĀĀ	VARIABLE MILL - 1 TO 2
122+5 - 42+25	STH 3	1102ĀĀ	
42+25 - 430+25	STH 3	444	VARIABLE MILL - 2 TO 1
430+25 - 42+40	STH 3	2063	
42+20 - 46+2	STH 3	44	RT & LT
PARK ST	RT & LT	20	
BLUFF ST	RT & LT	2ĀĀ	
N LIMIT RD/CTH E/CTH N	RT	405	
CECH LN	LT	102	
BANNERMAN UNCTION RD	LT	5	
CECH AVE	RT	15Ā	
CPRESS RD	LT	5	
CREE DR	RT & LT	324	
COTTONVILLE LN	LT	79	
COTTONVILLE DR	LT	100	
CTH F	RT	303	
CHICAGO POINT RD	RT	221	
CHICAGO POINT RD	RT	1ĀĀ	
	ITEM TOTAL	1306	

REMOVING CURB & GUTTER

STATION - STATION	LOCATION	204.0150 LF	REMARKS
CAT 0010			
111+55 - 111+62	RT	.	INLET
111+55 - 111+62	LT	.	INLET
11+ - 11+14	RT	22	CURB RAMP
11+03 - 11+13	LT	14	CURB RAMP
11+5 - 11+4	RT	23	CURB RAMP
11+64 - 11+1	LT	1Ā	CURB RAMP
121+10 - 121+33	LT	2Ā	CURB RAMP
121+12 - 121+33	RT	25	CURB RAMP
	ITEM TOTAL	145	

REMOVING CONCRETE SIDEWALK

STATION - STATION	LOCATION	204.0155 SĀ
CAT 0010		
11+04	RT	12
11+0	LT	11
11+60	RT	1Ā
11+1	LT	1Ā
121+22	LT	10
121+2Ā	RT	9
	ITEM TOTAL	78

3

EARTHWORK

DIVISION	FROM/TO STATION	LOCATION	205.0100 COMMON EXCAVATION (1) CUT (2)	SALVAGED/UNUSABLE PAVEMENT MATERIAL (3)	AVAILABLE MATERIAL (4)	UNEXPANDED FILL	EXPANDED FILL (5) FACTOR 1.25	MASS ORDINATE +/- (6)	WASTE	COMMENT
DIVISION 1										
CULVERT 6030001	4+4	STH 3	465	61	404	0	0	454	454	
DIVISION 1 SUBTOTAL			465	61	404	0	0	454	454	
DIVISION 2										
CTH WEST	12+42.2/14+23. 00	CTH ĀĀ	5ĀĀ	6Ā	51Ā	33	41	4ĀĀ	4ĀĀ	
CTH EAST	20+06.61/23+5. 00	CTH ĀĀ	1041	145	6	45	56	40	40	
STH 3 AT CTH ĀĀ	313+2. 5/316+16. 3	CTH ĀĀ	201	0	201	11	14	16	16	
DIVISION 2 SUBTOTAL			12	213	1616	89	111	1504	1504	
GRAND TOTAL			224	24	2020	89	111	15	15	
TOTAL COMMON EXC			224							

NOTESĀ
(1) COMMON EXCAVATION IS THE SUM OF THE CUT AND EBS EXCAVATION COLUMNS. ITEM NUMBER 205.0100
(2) SALVAGED/UNSUABLE PAVEMENT MATERIAL IS INCLUDED IN CUT.
(3) SALVAGED/UNUSABLE PAVEMENT MATERIAL
(4) AVAILABLE MATERIAL CUT - SALVAGED/UNUSUABLE PAVEMENT MATERIAL
(5) EXPANDED FILL FACTOR 1.25
(6) THE MASS ORDINATE + OR - T CALCULATED FOR THE DIVISION. PLUS UANTIT INDICATES AN EXCESS OF MATERIAL WITHIN THE DIVISION. MINUS INDICATES A SHORTAGE OF MATERIAL WITHIN THE DIVISION.
() FACTORS USED TO COMPUTE ANTICIPATED WASTE AND THE COMPUTED WASTE VOLUME IDENTIFIED ARE FOR GENERAL INFORMATION ONL.

3

BORROW

STATION - STATION	LOCATION	208.0100 CY	REMARKS
CAT 0010			
113+91 - 115+41	LT	140	DITCH BERM
426+37 - 426+80	LT	8	CULVERT REMOVAL
ITEM TOTALS		148	

PREPARE FOUNDATION

STATION - STATION	LOCATION	211.0101.01 PREPARE FOUNDATION FOR ASPHALTIC PAVING (6530-01-70) EACH	211.0400 PREPARE FOUNDATION FOR ASPHALTIC SHOULDERS STA
CAT 0010			
111+34 - 482+20	STH 73	1	--
482+20 - 484+72	RT	--	3
ITEM TOTALS		1	3

3

BASE AGGREGATE DENSE

STATION - STATION	LOCATION	305.0110 3/4-INCH TON	305.0120 1 1/4-INCH TON	REMARKS
CAT 0010				
STH 73				
111+58	LT & RT	--	3	INLET REPAIR
118+09	LT	--	9	W PARK ST SW CURB RAMP
118+11	RT	--	14	E PARK ST SE CURB RAMP
118+60	RT	--	16	E PARK ST NE CURB RAMP
118+71	LT	--	19	W PARK ST NW CURB RAMP
121+22	LT	--	15	W BLUFF ST CURB RAMP
121+22	RT	--	12	E BLUFF ST CURB RAMP
121+95 - 482+20	LT & RT	4166	--	SHOULDERS
121+95 - 430+25		663	--	DRIVEWAYS
426+57	LT	--	12	COTTONVILLE DR
478+94		--	372	CULVERT REPLACEMENT
482+20 - 486+27	LT	13	--	SHOULDER
CTH YY				
12+42 - 14+04	W CTH YY	29	589	
20+18 - 23+75	E CTH YY	78	1456	
CAT 0010 SUBTOTAL		4949	2517	
	ITEM TOTALS	4949	2517	

CONCRETE PAVEMENT ITEMS

STATION - STATION	LOCATION	416.0610 DRILLED TIE BARS EACH	416.0620 DRILLED DOWEL BARS EACH	416.1710 CONCRETE PAVEMENT REPAIR SY	416.1720 CONCRETE PAVEMENT REPLACMENT SY
CAT 0010					
482+56	RT	--	16	8	--
482+98	LT	--	16	8	--
483+20	LT	--	16	8	--
483+48	LT	--	16	8	--
484+56	RT	--	16	8	--
485+02 - 485+24	RT	14	54	--	55
UNDISTRUBUTED		--	--	8	--
	ITEM TOTAL	14	134	48	55

3

HMA PAVEMENT

STATION - STATION	LOCATION	455.0605 * TACK COAT GAL	460.5224 4 LT 58-28 S TON
CAT 0010			
STH 73			
111+34 - 482+20	STH 73	9527	15243
482+20 - 485+67	STH 73 RT	11	24
482+20 - 486+27	STH 73 LT	30	47
PARK ST	RT & LT	26	41
BLUFF ST	RT & LT	25	41
N LIMIT RD/ CTH E/ CTH N	RT	30	49
CZECH LN	LT	9	14
BANNERMAN JUNCTION RD	LT	8	13
CZECH AVE	RT	13	20
CYPRESS RD	LT	8	12
CREE DR	RT & LT	26	41
COTTONVILLE LN	LT	7	11
COTTONVILLE DR	LT	9	15
CTH F	RT	19	31
CHICAGO POINT RD	RT	17	28
CHICAGO POINT RD	RT	17	28
CTH YY			
12+42 - 14+04	W CTH YY	32	71
20+18 - 23+75	E CTH YY	80	178
CAT 0010 SUBTOTAL		9894	15907
	ITEM TOTALS	9894	15907

* ADDITIONAL QUANTITIES SHOWN ELSEWHERE

HMA COLD WEATHER PAVING

STATION - STATION	LOCATION	450.4000 TON
CAT 0010		
111+34 - 486+27	STH 73	3025
	ITEM TOTALS	3025

ASPHALTIC SURFACE ITEMS

STATION - STATION	LOCATION	455.0605 * TACK COAT GAL	465.0105 ASPHALTIC SURFACE TON	465.0120 ASPHALTIC SURFACE DRIVEWAYS AND FIELD ENTRANCES TON	REMARKS
CAT 0010					
STH 73					
111+58	LT	1	0.5	--	INLET REPAIR
111+59	RT	1	0.5	--	INLET REPAIR
118+00 - 118+18	RT	1	2	--	CURB RAMP
118+05 - 118+17	LT	1	1	--	CURB RAMP
118+53 - 118+73	RT	1	2	--	CURB RAMP
118+60 - 118+81	LT	1	3	--	CURB RAMP
121+10 - 121+36	LT	1	2	--	CURB RAMP
121+11 - 121+36	RT	1	2	--	CURB RAMP
124+75	RT	1	--	2	DRIVEWAY
125+82	LT	1	--	2	DRIVEWAY
126+43	RT	1	--	2	DRIVEWAY
127+78	RT	1	--	2	DRIVEWAY
130+41	LT	1	--	2	DRIVEWAY
132+62	LT	1	--	2	DRIVEWAY
135+96	RT	2	--	3	DRIVEWAY
138+42	LT	2	--	3	DRIVEWAY
140+36	RT	2	--	4	DRIVEWAY
141+54	RT	2	--	3	DRIVEWAY
144+44	RT	2	--	3	DRIVEWAY
148+48	RT	5	--	7	DRIVEWAY
152+86	RT	2	--	3	DRIVEWAY
206+93	LT	1	--	2	DRIVEWAY
215+96	LT	3	--	4	DRIVEWAY
234+20	LT	2	--	3	DRIVEWAY
234+90	LT	1	--	2	DRIVEWAY
268+57	LT	2	--	3	DRIVEWAY
269+99	LT	2	--	3	DRIVEWAY
378+78	LT	2	--	3	DRIVEWAY
386+42	LT	2	--	3	DRIVEWAY
391+19	LT	2	--	3	DRIVEWAY
395+04	RT	2	--	4	DRIVEWAY
403+12	RT	2	--	3	DRIVEWAY
426+57	LT	1	5	--	COTTONVILLE DR CULVERT REMOVAL
478+39 - 479+54		23	142	--	CULVERT REPLACEMENT
482+20 - 486+27	STH 73	--	32	--	SHOULDER
CTH YY					
12+42 - 14+04	W CTH YY	--	125	--	
20+18 - 23+75	E CTH YY	--	312	--	
CAT 0010 SUBTOTAL		76	629	71	
	ITEM TOTAL	76	629	71	

* ADDITIONAL QUANTITIES SHOWN ELSEWHERE

3

ASPHALTIC FLUMES

STATION	465.0315 ASPHALTIC FLUMES SY
CAT 0010	
STH 73	
315+74	10
315+93	10
E CTH YY	
21+02	11
ITEM TOTAL	31

ASPHALTIC RUMBLE STRIPS

STATION - STATION	465.0520 ASPALTIC RUMBLE STRIPS, SHOULDER LF	465.0560 ASPALTIC RUMBLE STRIPS, CENTERLINE LF
CAT 0010		
157+07 - 174+71	2895	1764
174+71- 424+57	--	22176
ITEM TOTAL	2895	23940

3

3

HMA PWL MIXTURE ACCEPTANCE TABLE

LOCATION	STATION	MIXTURE USE	UNDERLYING SURFACE	BID ITEM	TONS	THICKNESS	QUALITY MANAGEMENT PROGRAM TO BE USED FOR: MIXTURE ACCEPTANCE	DENSITY ACCEPTANCE
12 FOOT DRIVING LANE	111+34 TO 118+38 121+95 TO 482+20	UPPER LAYER	MILLED EXISTING HMA SURFACE	4 LT 58-28 S	10970	2"	PWL INCENTIVE AIR VOIDS HMA PAVEMENT 460.2010	INCENTIVE DENSITY PWL HMA PAVEMENT 460.2005
4 FOOT SHOULDER	111+34 TO 118+38 174+71 TO 429+25	UPPER LAYER	MILLED EXISTING HMA SURFACE	4 LT 58-28 S	2601	2"	PWL INCENTIVE AIR VOIDS HMA PAVEMENT 460.2010	ACCEPTANCE TESTING BY DEPARTMENT; NOT ELIGIBLE FOR INCENCTIVE
14.5 FOOT DRIVING LANE	118+38 TO 121+95	UPPER LAYER	MILLED EXISTING HMA SURFACE	4 LT 58-28 S	64	2"	PWL INCENTIVE AIR VOIDS HMA PAVEMENT 460.2010	INCENTIVE DENSITY PWL HMA PAVEMENT 460.2005
15.5 FOOT DRIVING LANE	118+38 TO 121+95	UPPER LAYER	MILLED EXISTING HMA SURFACE	4 LT 58-28 S	69	2"	PWL INCENTIVE AIR VOIDS HMA PAVEMENT 460.2010	INCENTIVE DENSITY PWL HMA PAVEMENT 460.2005
6 FOOT SHOULDER	118+38 TO 121+95 429+25 TO 482+20	UPPER LAYER	MILLED EXISTING HMA SURFACE	4 LT 58-28 S	825	2"	PWL INCENTIVE AIR VOIDS HMA PAVEMENT 460.2010	ACCEPTANCE TESTING BY DEPARTMENT; NOT ELIGIBLE FOR INCENCTIVE
5 FOOT SHOULDER	121+95 TO 174+71	UPPER LAYER	MILLED EXISTING HMA SURFACE	4 LT 58-28 S	659	2"	PWL INCENTIVE AIR VOIDS HMA PAVEMENT 460.2010	ACCEPTANCE TESTING BY DEPARTMENT; NOT ELIGIBLE FOR INCENCTIVE
10 FOOT BYPASS LANE	426+20 TO 431+04	UPPER LAYER	MILLED EXISTING HMA SURFACE	4 LT 58-28 S	55	2"	PWL INCENTIVE AIR VOIDS HMA PAVEMENT 460.2010	ACCEPTANCE TESTING BY DEPARTMENT; NOT ELIGIBLE FOR INCENCTIVE
6 FOOT RIGHT SHOULDER	482+20 TO 485+24	LOWER LAYER	BASE AGGREGATE	ASPHALTIC SURFACE	32	3.5"	PER STANDARD SPEC 465	ACCEPTANCE BY ORDINARY COMPACTION
6 FOOT RIGHT SHOULDER	482+20 TO 485+67	UPPER LAYER	ASPHALTIC SURFACE	4 LT 58-28 S	24	2"	PWL INCENTIVE AIR VOIDS HMA PAVEMENT 460.2010	ACCEPTANCE TESTING BY DEPARTMENT; NOT ELIGIBLE FOR INCENCTIVE
3 - 11 FOOT LEFT SHOULDER	482+20 TO 486+27	UPPER LAYER	ASPHALTIC SURFACE	4 LT 58-28 S	47	2"	PWL INCENTIVE AIR VOIDS HMA PAVEMENT 460.2010	ACCEPTANCE TESTING BY DEPARTMENT; NOT ELIGIBLE FOR INCENCTIVE
CTH YY 11 FOOT DRIVING LANE	12+42 TO 14+04 20+23 TO 23+75	LOWER LAYER	BASE AGGREGATE	ASPHALTIC SURFACE	350	3.5"	PER STANDARD SPEC 465	ACCEPTANCE BY ORDINARY COMPACTION
CTH YY 11 FOOT DRIVING LANE	12+42 TO 14+04 20+23 TO 23+75	UPPER LAYER	ASPHALTIC SURFACE	4 LT 58-28 S	199	2"	PWL INCENTIVE AIR VOIDS HMA PAVEMENT 460.2010	ACCEPTANCE TESTING BY DEPARTMENT; NOT ELIGIBLE FOR INCENCTIVE
CTH YY 15 FOOT TURN LANE	20+23 TO 23+61	LOWER LAYER	BASE AGGREGATE	ASPHALTIC SURFACE	87	3.5"	PER STANDARD SPEC 465	ACCEPTANCE BY ORDINARY COMPACTION
CTH YY 15 FOOT TURN LANE	20+23 TO 23+61	UPPER LAYER	ASPHALTIC SURFACE	4 LT 58-28 S	50	2"	PWL INCENTIVE AIR VOIDS HMA PAVEMENT 460.2010	ACCEPTANCE TESTING BY DEPARTMENT; NOT ELIGIBLE FOR INCENCTIVE
SIDE ROADS		UPPER LAYER	MILLED EXISTING HMA SURFACE	4 LT 58-28 S	344	2"	PWL INCENTIVE AIR VOIDS HMA PAVEMENT 460.2010	ACCEPTANCE TESTING BY DEPARTMENT; NOT ELIGIBLE FOR INCENCTIVE
VARIOUS	111+34 TO 121+36 426+57 TO 479+54	CULVERTS, CURB RAMPS AND INLET REPAIRS	BASE AGGREGATE	ASPHALTIC SURFACE	160	5.5"	PER STANDARD SPEC 465	ACCEPTANCE BY ORDINARY COMPACTION

3

CULVERT PIPES

STATION	LOCATION	010 APRON ENDWALLS OR CULVERT PIPE INCH EACH	03 CULVERT PIPE CLASS IIB NON METAL INCH LÃ	0 CULVERT PIPE REINORCED CONCRETE CLASS IV INCH LÃ	10 APRON ENDWALLS OR CULVERT PIPE REINORCED CONCRETE INCH EACH	3300 MARKERS CULVERT END EACH
CAT 0010						
STH 73						
7	STH 73	2	55	--	--	2
CTH YY						
137	W CTH YY	--	--	84	2	2
0	E CTH YY	--	--	10	2	2
CAT 0010 SUBTOTAL		2	55	0	4	6
	ITEM TOTALS	2	55	0	4	6

CONCRETE CURB & GUTTER

STATION STATION	LOCATION	01011 30INCH TYPE D LÃ	0101 INCH SLOPED 30INCH TYPE Ã LÃ	0107 INCH SLOPED 3INCH TYPE D LÃ	REMARKS
CAT 0010					
STH 73					
111 111	RT	7	--	--	INLET
111 111	LT	7	--	--	INLET
117 111	RT	22	--	--	CURB RAMP
1103 1113	LT	1Ã	--	--	CURB RAMP
117 117	RT	24	--	--	CURB RAMP
11 111	LT	1Ã	--	--	CURB RAMP
1110 1133	LT	28	--	--	CURB RAMP
1111 1133	RT	25	--	--	CURB RAMP
W CTH YY					
133 137	LT	--	--	82	
137 1	RT	--	--	7Ã	
E CTH YY					
00 037	LT	--	--	3	
01 01	LT	--	10Ã	--	ISLAND
03 07	RT	--	--	95	
CAT 0010 SUBTOTAL		1ÃÃ	10Ã	30Ã	
	ITEM TOTAL	1ÃÃ	10Ã	30Ã	

CONCRETE SIDEWALK ITEMS

STATION STATION	LOCATION	000 CONCRETE SIDEWALK INCH SÃ	0010 CONCRETE SIDEWALK INCH SÃ	000 CURB RAMP DETECTABLE WARNING IELD YELLOW SÃ
CAT 0010				
STH 73				
117 111	RT	--	1ÃÃ	10
1170 1113	LT	--	11Ã	10
11 110	RT	--	11	0
11 11	LT	--	3	10
1110 113	LT	--	1ÃÃ	10
111 117	RT	--	86	10
E CTH YY				
01 00	LT	242	--	--
CAT 0010 SUBTOTAL		242	7	70
	ITEM TOTAL	242	7	70

INLETS

STATION - STATION	LOCATION	611.8115 ADJUSTING INLET COVERS EACH	SPV.0060.01 MORTAR PIPE JOINT EACH	REMARKS
CAT 0010				
111+58	LT	1	..	REPLACE CONCRETE RINGS
111ÃÃÃ	RT	1	..	REPLACE CONCRETE RINGS
111	RT	--	1	
ITEM TOTALS		2	1	

MANHOLES

STATION STATION	LOCATION	11110 ADUSTING MANHOLE COVERS EACH	REMARKS
CAT 0010			
11ÃÃÃÃ	LT	1	IN CURB RAMP
ITEM TOTALS		1	

3

MONUMENTS

STATION	OFFSET	TYPE	TOWN RANGE	CORNER	00100 PUBLIC LAND REFERENCE MONUMENT ERIFY AND RESET EACH	REMARS
PROECT 3001	66					
CAT 0010						
173	10 RT	UARTER CORNER	T17N R11E	5-8	1	
110	1 RT	UARTER CORNER	T17N R11E	5	1	
1113	10 LT	UARTER CORNER	T17N R11E T1N R11E	3ĀĀĀ	1	
070	7 LT	UARTER CORNER	T1N R11E	3Ā	1	
30	13 LT	UARTER CORNER	T1N R11E	3ĀĀĀĀ	1	
0	11 LT	UARTER CORNER	T1N R11E	29	1	
			ITEM TOTALS		6	

WATER

STATION STATION	LOCATION	0100 MGAL
CAT 0010		
STH 73		
11 0	RTLT	7Ā
W CTH YY		
1 10	RTLT	9
E CTH YY		
01 37	RTLT	3
CAT 0010 SUBTOTAL		111
ITEM TOTALS		111

3

TOPSOIL, FERTILIZER, AND SEEDING

STATION STATION	LOCATION	0100 TOPSOIL SY	010 FERTILIZER TYPE B CWT	30010 SEEDING MITURE NO 0 LB	30000 SEED WATER MGAL	
CAT 0010						
STH 73						
1131 110	LT	11	0ĀĀ	70	6	OF TOPSOIL
117 111	RT	1Ā	01	0ĀĀ	1	
1170 1113	LT	7	01	0ĀĀ	1	
11 110	RT	10	01	03	1	
11 11	LT	7	01	0ĀĀ	1	
1110 113	LT	6	01	0ĀĀ	1	
111 117	RT	10	01	03	1	
11 3	LT	01	00	00	0	TOPSOIL USED FOR FILL IN DITCH GRADING ARIABLE DEPTH CY PLACE OER EISTING TOPSOIL
73 70	LT RT	17Ā	0ĀĀ	4.8	4	
W CTH YY						
1 10	LT RT	929	0ĀĀ	1	1	
E CTH YY						
01 37	LT RT	13	0ĀĀ	3ĀĀĀ	29	
UNDISTRIBUTED		7	0ĀĀ	6	--	
CAT 0010 SUBTOTAL		313	3	7Ā	66	
ITEM TOTALS		313	3	7Ā	66	

EROSION CONTROL MOBILIZATIONS

LOCATION	628.1905 MOBILIZATIONS EROSION CONTROL EACH	628.1910 MOBILIZATIONS EMERGENCY EROSION CONTROL EACH
CAT 0010		
STH 73	.	.
ITEM TOTALS	5	4

3

EROSION CONTROL ITEMS

STATION	LOCATION	10 SILT ENCE LĀ	10 SILT ENCE MAINTENANCE LĀ	00 EROSION MAT CLASS 1 TYPE Ā SY	00 EROSION MAT RAN CLASS 1 TYPE Ā SY	7010 INLET PROTECTION TYPE Ā EACH	7 CLVERT PIPE CHECS EACH	00100 RIPRAP LIGHT CY	0130 GEOTETILE ARIC TYPE R SY	10 S MAINTAINING CLIMING TRTLE ECLSION ENCE LĀ
CAT 0010										
STH 73										
1131 110	LT	1ĀĀ	1ĀĀ	--	7	--	--	5	1ĀĀ	--
117 111	RT	--	--	--	1Ā	--	--	--	--	--
1170 1113	LT	--	--	--	7	1	--	--	--	--
11 110	RT	--	--	--	10	1	--	--	--	--
11 11	LT	--	--	--	7	1	--	--	--	--
1110 113	LT	--	--	--	6	--	--	--	--	--
111 117	RT	--	--	--	10	--	--	--	--	--
11 3	LT	--	--	01	--	--	--	--	--	--
73 70	LT RT	--	--	--	17Ā	--	4	--	--	3
W CTH YY										
1 10	LT RT	--	--	31	--	--	4	8	24	--
E CTH YY										
01 37	LT RT	10	10	1ĀĀĀ	--	--	4	7	22	--
NISTRITE		3Ā	3Ā	242	49	--	--	--	--	--
CAT 0010 STOTAL		31	31	3	3	3	1Ā	0	3	3
	ITEM TOTALS	31	31	3	3	3	1Ā	0	3	3

3

PERMANENT SIGNING

STATION	OFFSET	LOCATION	SIGN CODE	SIGN SIZE (W x H) IN x IN	637.2210 SIGNS TYPE II REFLECTIVE H SF	634.0616 POSTS WOOD 4X6-INCH 16-FT EACH	REMARKS
CAT 0010							
313+70	20.2 RT	STH 73	J13-1	.....	7ĀĀ	1	CTH YY OLE ARROW
311	11 LT	STH 73	131	.....	7ĀĀ	1	CTH YY OLE ARROW
13ĀĀĀ	1 RT	W CTH YY	R11	33	7ĀĀĀ	1	STOP
13ĀĀĀ	73 RT	W CTH YY	131	24X45	7ĀĀ	1	STH 73 OLE ARROW
03	1 LT	E CTH YY	R11	33	7ĀĀĀ	1	STOP
037	LT	E CTH YY	R11	33	7ĀĀĀ	1	STOP
1	7 LT	E CTH YY	131	24X45	7ĀĀ	1	STH 73 OLE ARROW
			ITEM TOTAL		3	7	

REMOVING SIGNS

STATION	OSET	LOCATION	MESSAGE	30 REMOVING SIGNS TYPE II EA	33000 REMOVING SMALL SIGN SPPORTS EA
CAT 0010					
STH 73					
70	LT	STH 73	NO PASSING ONE	1	1
CTH YY					
13ĀĀĀ	33 LT	W CTH YY	CTH YY	1	1
13ĀĀĀ	33 LT	W CTH YY	OLE ARROW	1	-
133	3 RT	W CTH YY	STH 73	1	1
133	3 RT	W CTH YY	OLE ARROW	1	-
133	1 RT	W CTH YY	STOP	1	1
03	LT	E CTH YY	STOP	1	1
03	LT	E CTH YY	STH 73	1	1
03	LT	E CTH YY	OLE ARROW	1	-
037	RT	E CTH YY	CTH YY	1	1
037	RT	E CTH YY	OLE ARROW	1	-
0	0 LT	E CTH YY	CAMP SIGN	1	1
CAT 0010 STOTAL				1Ā	8
		ITEM TOTAL		1Ā	8

3

TRAFFIC CONTROL

LOCATION	30300 RMS AYS	300 ARRICAES TYPE III AYS	3070 WARNING LIGHTS TYPE A AYS	3000 SIGNS AYS	300 COVERING SIGNS TYPE II EACH	31000 FIE MESSAGE SF	110 TEMPORARY PEESTRIAN ARRICAE LF	REMARKS
CAT 0010								
PROECT 3001 70	--	--	--	7	--	3Ã	--	AVANCE WARNING AN TEMPORARY SIGNS
CONCRETE REPAIRS CLVERT 073007071	--	55	70	00	1Ã	--	--	ETOR 1 CYCLE
INLET REPAIRS ITCH ERM	73	--	--	29	--	--	--	
CR RAMP REPLACEMENT	13Ã	--	--	0	--	--	0	
COTTONVILLE R CLVERT REMOVAL	3Ã	10	1Ã	4	--	--	--	
CTH YY								
E CTH YY	--	31Ã	37	42	--	3Ã	--	
W CTH YY	1ÃÃ	52	0	8	--	3Ã	--	
CAT 0010 STOTAL	07	3	499	1	1Ã	10Ã	0	
ITEM TOTALS	07	3	499	1	1Ã	10Ã	0	

3

PAVEMENT MARKING

STATION STATION	LOCATION	643.3165 TEMPORARY MARKING LINE PAINT INCH SKIPS YELLOW LF	643.3165 NO PASSING YELLOW LF	646.2040 MARKING LINE GROOVED WET REF EPOY INCH SKIPS WHITE LF	646.2040 SOLIÃ WHITE LF	646.2040 SKIPS YELLOW LF	646.2040 NO PASSING YELLOW LF	646.4040 MARKING LINE GROOVED WET REF EPOY 10INCH SOLIÃ WHITE LF	646.6120 MARKING STOP LINE EPOY 1INCH SOLIÃ WHITE LF	..... COL WEATHER MARKING EPOY INCH LF
CAT 0010										
STH 73										
1113 0	CL	01	3	..	--	01	3	--	--	--
1113 7	RTLT	--	--	13Ã	7117	--	--	11Ã	--	--
W CTH YY										
1 10	CL	300	--	--	--	--	300	--	--	--
1 10	RTLT	--	--	--	1	--	--	--	0	--
E CTH YY										
01 37	CL	70Ã	--	--	--	--	70Ã	--	--	--
01 37	RTLT	--	--	--	1	--	--	7	3Ã	--
NISTRITE		--	--	--	--	--	--	--	--	31000
CAT 0010 STOTAL		0	3	13Ã	73	01	7	1	59	31000
	ITEM TOTALS	0	3	13Ã	73	01	7	1	59	31000
		TOTAL 49588		TOTAL 107						

TO E APPLIE AFTER RMLE STRIPS

PROECT NO 300170	HWYÃ STH 73	CONTY WASHARAÈ	MISCELLANEOS ANTITIES	SHEET 60	E

FILE NAME Ã HPROECTS100011TECHATA300100SHEETS03001MWG
LAYOT NAME Ã 0Ã
PLOT ATE Ã 100 10 PM
PLOT Y Ã RACHEL RNHAM
PLOT NAME
PLOT SCALE Ã 1 1
WISOTCAS SHEET

3

PAVEMENT MARKING

STATION STATION	LOCATION	70 MARKING CROSSWALK EPOY TRANSVERSE LINE INCH LĀ	30 MARKING PARKING STALL EPOY LĀ
CAT 0010			
STH 73			
111 11	LT	10Ā	--
111 11	RT	0	--
11ĀĀĀĀ	RTLT	89	--
110 110	RTLT	--	3
11	RTLT	0	--
	ITEM TOTALS	377	3

REMOVE, SALVAGE, AND REINSTALL RIPRAP LIGHT

STATION STATION	LOCATION	SPV003 01 CY	AVAILALE RIPRAP CY
CAT 0010			
1131 110	LT	0	85
ITEM TOTALS		0	

OR REERENCE ONLY ECESS RIPRAP IS TO E DISPOSED O O SITE

REMOVING DISTRESSED PAVEMENT

STATION - STATION	SPV.0180.01 REMOVING DISTRESSED ASPHALTIC SURFACE MILLING SY	455.0605 * TACK COAT GAL	465.0110 ASPHALTIC SURFACE PATCHING TON
CAT 0010			
UNDISTRIBUTED	2000	140	...
	000	10	...

ADDITIONAL UANTITIES SHOWN ELSEWHERE

3

CONSTRUCTION STAKING

STATION STATION	0000 ASE LĀ	0000 PIPE CULVERT EACH	0000 RESURACING REERENCE LĀ	0000 CURĀ RAMPS EACH	000 SIDEWALK 30 01Ā70Ā EACH	011 01 SUPPLEMENTAL CONTROL 30 01Ā70Ā EACH	00 SLOPE STAKES LĀ	REMARKS
CAT 0010								
PROECT 3001 70	--	--	--	--	1	1	--	
STH 73								
1113 7	--	--	373	--	--	--	--	
1131 111	--	--	--	--	--	--	10	
110	--	--	--	1	--	--	--	LT
1111	--	--	--	1	--	--	--	RT
113	--	--	--	1	--	--	--	RT
1170	--	--	--	1	--	--	--	LT
111	--	--	--	1	--	--	--	LT
11	--	--	--	1	--	--	--	RT
13 3	--	--	--	--	--	--	10	
73 7	--	1	--	--	--	--	11Ā	
W CTH YY								
1 10	1ĀĀ	--	--	--	--	--	1ĀĀ	
137	--	1	--	--	--	--	--	
E CTH YY								
01 37	37	--	--	--	--	--	37	
0	--	1	--	--	--	--	--	
CAT 0010 SUTOTAL	1	3	373	6	1	1	964	
ITEM TOTALS	1	3	373	6	1	1	964	

SAWING

STATION	LOCATION	0010 ASPHALT LĀ	000 CONCRETE LĀ	REMARKS
CAT 0010				
STH 73				
111 111	LT	1Ā	5	INLET
111 111	RT	1Ā	5	INLET
1103 1113	LT	0	10	CUR RAMP
117 111	RT	29	10	CUR RAMP
117 117	RT	33	1Ā	CUR RAMP
11 111	LT	3Ā	1Ā	CUR RAMP
1110 1133	LT	3Ā	17	CUR RAMP
1111 1133	RT	33	10	CUR RAMP
0 7	COTTONVILLE DR	70	--	CULVERT
7	073007071	13	--	CULVERT
W CTH YY				
1ĀĀĀĀ		22	--	
10		0	--	
E CTH YY				
017		256	--	
37		3	--	
CAT 0010 SUTOTAL		13	7	
	ITEM TOTAL	13	7	

TRANSPORTATION PROJECT PLAT NO: 6530-01-20 - 4.01

THAT PART OF CSM 166, RECORDED IN VOLUME 1 OF CERTIFIED SURVEY MAPS ON PAGE 214 AS DOCUMENT NO. 115973, LOCATED IN PART OF THE NORTHEAST 1/4 OF THE NORTHWEST 1/4, AND THAT PART OF LOT 1, CSM 3565, RECORDED IN VOLUME 22 OF CERTIFIED SURVEY MAPS ON PAGES 138-139 AS DOCUMENT NO. 304219, LOCATED IN PART OF THE NORTHWEST 1/4 OF THE NORTHEAST 1/4, ALL IN SECTION 8, TOWNSHIP 17 NORTH, RANGE 11 EAST, VILLAGE OF NESHKORO, MARQUETTE COUNTY, WISCONSIN.

RELOCATION ORDER STH 73 PRINCETON - PLAINFIELD WHITE RIVER BRIDGE TO STH 21 WAUSHARA COUNTY AND MARQUETTE COUNTY

TO PROPERLY ESTABLISH, LAY OUT, WIDEN, ENLARGE, EXTEND, CONSTRUCT, RECONSTRUCT, IMPROVE, OR MAINTAIN A PORTION OF THE HIGHWAY DESIGNATED ABOVE, THE STATE OF WISCONSIN DEPARTMENT OF TRANSPORTATION DEEMS IT NECESSARY TO RELOCATE OR CHANGE SAID HIGHWAY AND ACQUIRE CERTAIN LANDS AND INTERESTS OR RIGHTS IN LANDS FOR THE ABOVE PROJECT.

TO EFFECT THIS CHANGE, PURSUANT TO AUTHORITY GRANTED UNDER SUBSECTIONS 84.02 (3), 84.09, AND 84.30, WISCONSIN STATUTES, THE DEPARTMENT OF TRANSPORTATION HEREBY ORDERS THAT:

1. THAT PORTION OF SAID HIGHWAY AS SHOWN ON THIS PLAT IS LAID OUT AND ESTABLISHED TO THE LINES AND WIDTHS AS SO SHOWN FOR THE ABOVE PROJECT.
2. THE LANDS OR INTERESTS OR RIGHTS IN LANDS AS SHOWN ON THIS PLAT ARE REQUIRED BY THE DEPARTMENT FOR THE ABOVE PROJECT AND SHALL BE ACQUIRED IN THE NAME OF THE STATE OF WISCONSIN, PURSUANT TO THE PROVISIONS OF SUBSECTION 84.09 (1) OR (2), WISCONSIN STATUTES.

POSITIONS SHOWN ON THIS PLAT ARE WISCONSIN COUNTY REFERENCE SYSTEM (WISCRS), WAUSHARA COUNTY, NAD83 (2011) IN US SURVEY FEET. VALUES SHOWN ARE GRID COORDINATES, GRID BEARINGS, AND GRID DISTANCES. GRID DISTANCES MAY BE USED AS GROUND DISTANCES.

ALL NEW RIGHT-OF-WAY MONUMENTS WILL BE TYPE 2 (TYPICALLY ¾" X 24" IRON REBARS), UNLESS OTHERWISE NOTED, AND WILL BE PLACED PRIOR TO THE COMPLETION OF THE PROJECT.

FOUND MONUMENT INFORMATION SHOWN REPRESENTS TYPE AND LOCATION OF EXISTING MONUMENTS WITHOUT OPINION AS TO THEIR VALIDITY AND USE AS A PROPERTY CORNER.

EXISTING RIGHT OF WAY FOR STH 73 ESTABLISHED FROM PREVIOUS PROJECTS 6530-03-21, 6530-00-30, DJ4722, MAP OF NESHKORO, CSM 166, AND CSM 3565.

EXISTING RIGHT OF WAY FOR E PARK ST ESTABLISHED FROM CSM 3565.

EXISTING RIGHT OF WAY FOR W PARK ST ESTABLISHED FROM CSM 497.

FOR THE CURRENT ACCESS/DRIVEWAY INFORMATION, CONTACT THE PLANNING UNIT OF THE WISCONSIN DEPARTMENT OF TRANSPORTATION OFFICE IN WISCONSIN RAPIDS.

336431
MARQUETTE COUNTY
NICOLE ZIEBELL
REGISTER OF DEEDS OFFICE
RECORDED 08/16/2024 11:40 AM
E-RECORDED

62

6530-01-20 - 4.01

RESERVED FOR REGISTER OF DEEDS
PROJECT NUMBER 6530-01-20 - 4.01
SHEET 1 OF 2

FOR ADDITIONAL INFORMATION REFER TO THE TITLE SHEET, RECORDED AS SHEET 2 OF 2.

COURSE TABLE		
COURSE	BEARING	DISTANCE
100-101	N89° 41' 59"E	6.52'
101-102	N89° 41' 59"E	37.03'
102-103	S00° 18' 01"E	24.28'
103-104	N89° 27' 56"E	17.83'
104-105	S04° 35' 54"E	66.17'
105-106	S00° 11' 02"E	508.55'
106-107	S20° 11' 01"E	116.95'
107-108	N78° 28' 30"W	60.00'
108-109	N75° 22' 04"W	42.67'
109-110	N75° 22' 04"W	12.28'
110-111	N75° 22' 04"W	30.39'
111-112	SEE CURVE TABLE	
112-113	N14° 07' 38"E	101.14'
113-114	N00° 11' 02"W	66.80'
114-115	N45° 11' 02"W	14.14'
115-116	N00° 11' 02"W	140.12'
116-117	N89° 30' 38"W	98.08'
117-118	N00° 18' 01"E	198.29'
118-119	S89° 30' 41"E	106.52'
119-120	N00° 11' 02"W	65.31'
120-121	N23° 48' 45"E	72.74'
121-122	N00° 18' 01"W	24.17'
122-100	N89° 41' 59"E	38.95'

GN

SCALE, FEET
0 50 100

SCHEDULE OF LANDS & INTERESTS REQUIRED

OWNER'S NAMES ARE SHOWN FOR REFERENCE PURPOSES ONLY AND ARE SUBJECT TO CHANGE PRIOR TO THE TRANSFER OF LAND INTERESTS TO THE DEPARTMENT.

PARCEL NUMBER	OWNER (S)	INTEREST(S) REQUIRED	FEE R/W S.F. REQUIRED			TLE S.F.
			NEW	EXISTING	TOTAL	
1	JAMES A MEITNER TAMARA A SHPAKOVA	FEE, TLE	1451	---	1451	1402
2	NESHKORO AREA COMMUNITY CENTER INC	TLE	---	---	---	431

THE PURPOSE FOR ALL TLE'S IS GRADING UNLESS OTHERWISE NOTED

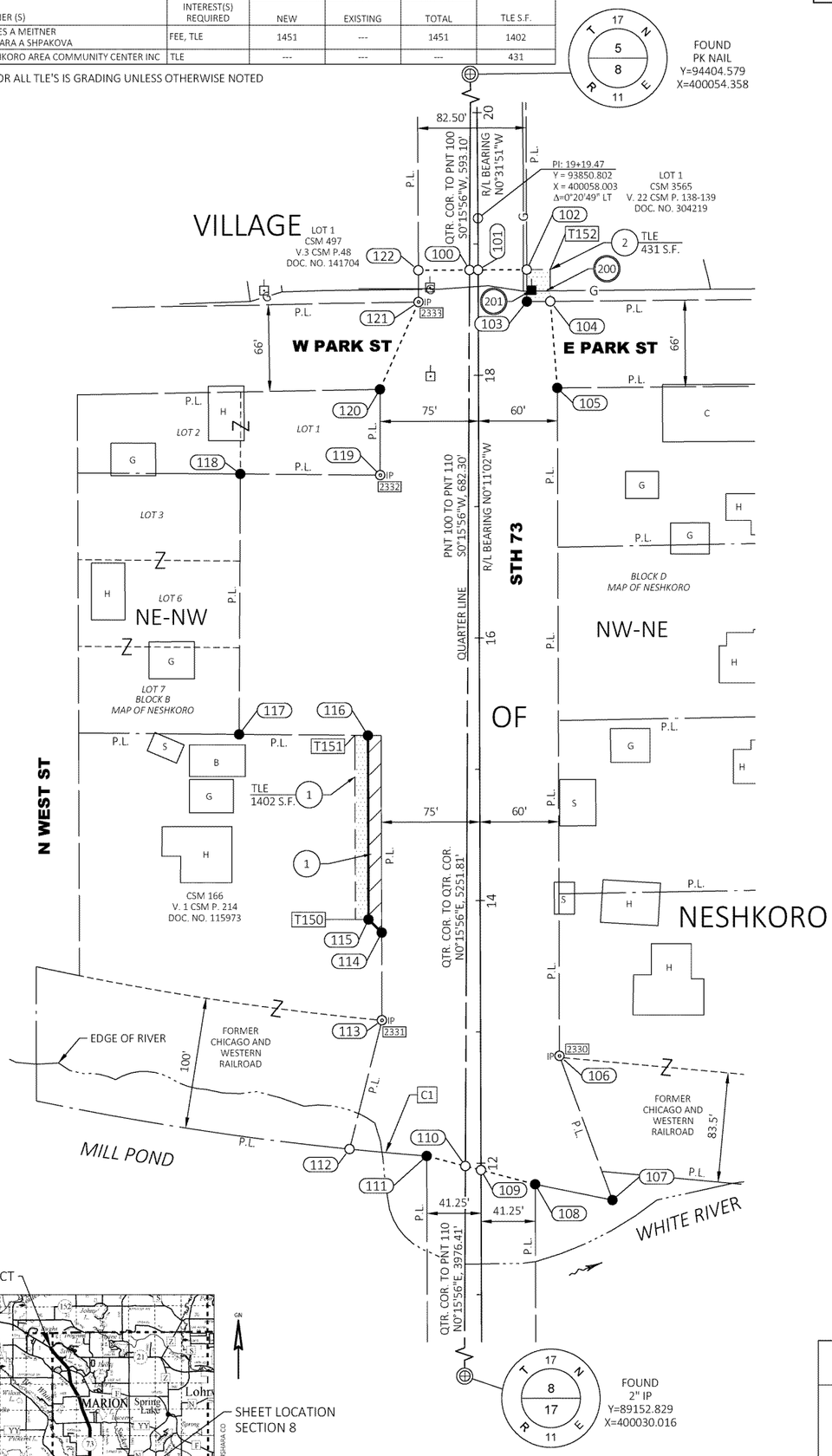

CURVE TABLE					
CURVE	COURSE	ARC LENGTH	RADIUS	CHORD BEARING	CHORD LENGTH
C1	111-112	59.00'	2341.83'	N84°55'50"W	59.00'

R/W STATION & OFFSET TABLE		
POINT	STATION	OFFSET
100	18+80.17	6.52' LT
101	18+80.19	0.00' RT
102	18+80.26	37.03' RT
103	18+55.98	37.08' RT
104	18+56.09	54.91' RT
105	17+90.12	60.00' RT
106	12+81.57	60.00' RT
107	11+71.67	100.00' RT
108	11+83.84	41.25' RT
109	11+94.76	0.00' RT
110	11+97.90	11.87' LT
111	12+05.67	41.25' LT
112	12+11.07	100.00' LT
113	13+09.07	75.00' LT
114	13+75.87	75.00' LT
115	13+85.87	85.00' LT
116	15+25.99	85.00' LT
117	15+27.14	183.07' LT
118	17+25.42	181.51' LT
119	17+24.17	75.00' LT
120	17+89.48	75.00' LT
121	18+55.93	45.42' LT
122	18+80.10	45.47' LT

TLE STATION & OFFSET TABLE		
POINT	STATION	OFFSET
T150	13+85.87	95.00' LT
T151	15+26.10	95.00' LT
T152	18+80.24	54.76' RT

FOUND MONUMENT TABLE			
POINT	Y COORDS	X COORDS	MONUMENT TYPE
IP 2330	93213.035	400120.203	1" IRON PIPE
IP 2331	93240.107	399985.038	1" IRON PIPE
IP 2332	93655.250	399983.766	1" IRON PIPE
IP 2333	93787.100	400012.827	MAG NAIL

UTILITY INTERESTS REQUIRED

UTILITY NUMBER	UTILITY OWNER(S)	INTERESTS REQUIRED
200	WE ENERGIES - GAS	RELEASE OF RIGHTS
201	ALLIANT ENERGY - ELECTRIC	RELEASE OF RIGHTS

200 WE ENERGIES - GAS
NO RECORDED EASEMENT - PARCEL 2

201 ALLIANT ENERGY - ELECTRIC
NO RECORDED EASEMENT - PARCEL 2

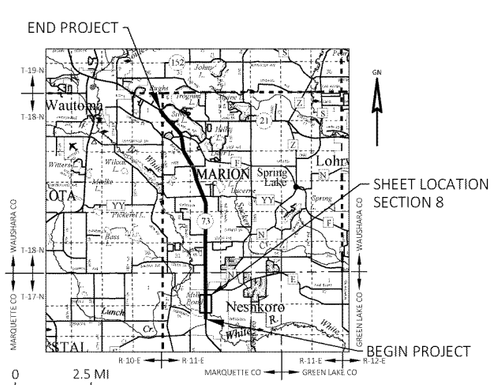

J ENGINEERING, INC
Consultant Services

I, RYAN T. KLARNER, PROFESSIONAL LAND SURVEYOR, HEREBY CERTIFY THAT IN FULL COMPLIANCE WITH THE PROVISIONS OF SECTION 84.095 OF THE WISCONSIN STATUTES AND UNDER THE DIRECTION OF THE DEPARTMENT OF TRANSPORTATION, I HAVE SURVEYED AND MAPPED THIS TRANSPORTATION PROJECT PLAT AND SUCH PLAT CORRECTLY REPRESENTS ALL EXTERIOR BOUNDARIES OF THE SURVEYED LAND.

SIGNATURE: Ryan Klarner DATE: 8/9/2024
PRINT NAME: RYAN T KLARNER
REGISTRATION NUMBER: S-3156

WISCONSIN RYAN T. KLARNER 3156-8 GREEN BAY WIS. LAND SURVEYOR

THIS PLAT AND RELOCATION ORDER ARE APPROVED FOR THE WISCONSIN DEPARTMENT OF TRANSPORTATION - NORTH CENTRAL REGION.

SIGNATURE: Brent L. Stella DATE: 8/15/2024
PRINT NAME: Brent L. Stella

PLOT SCALE : 1IN:100 FT
PLOT NAME :
PLOT BY : Ryan Maluegi
PLOT DATE : 8/9/2024 8:39 AM
FILE NAME : X:\PROJECTS\WAUSHARA\230051 STH 73 WHITE RIVER TO STH 21 6530-01-00\DESIGN\C3D\RW\DWG\040101-RP.DWG
APPRAISAL PLAT DATE : 8/9/2024

STATE OF WISCONSIN
DEPARTMENT OF TRANSPORTATION
TRANSPORTATION PROJECT PLAT TITLE SHEET
6530-01-20
PRINCETON - PLAINFIELD
WHITE RIVER BRIDGE TO STH 21
STH 73
WAUSHARA & MARQUETTE COUNTY

CONVENTIONAL SYMBOLS

SECTION LINE
QUARTER LINE
SIXTEENTH LINE
NEW REFERENCE LINE
NEW R/W LINE
EXISTING R/W OR HE LINE
PROPERTY LINE
LOT, TIE & OTHER MINOR LINES
SLOPE INTERCEPT
CORPORATE LIMITS
UNDERGROUND FACILITY (COMMUNICATIONS, ELECTRIC, ETC)
NEW R/W (FEE OR HE) (HATCHING VARIES BY OWNER)
TEMPORARY LIMITED EASEMENT AREA
EASEMENT AREA (PERMANENT LIMITED OR RESTRICTED DEVELOPMENT)
TRANSMISSION STRUCTURES
BUILDING
TO BE REMOVED
BRIDGE
CULVERT

SECTION CORNER SYMBOL
SECTION CORNER MONUMENT
GEODETIC SURVEY MONUMENT
SIXTEENTH CORNER MONUMENT
SIGN
OFF-PREMISE SIGN

R/W MONUMENT (TO BE SET)
NON-MONUMENTED R/W POINT
FOUND IRON PIN (1-INCH UNLESS NOTED)

	COMPENSABLE	NON-COMPENSABLE
ELECTRIC POLE		
TELEPHONE POLE		
PEDESTAL (LABEL TYPE) (TV, TEL, ELEC, ETC.)		

ACCESS RESTRICTED BY ACQUISITION
NO ACCESS (BY STATUTORY AUTHORITY)
ACCESS RESTRICTED (BY PREVIOUS PROJECT OR CONTROL)
NO ACCESS (NEW HIGHWAY)
PARCEL NUMBER 25
UTILITY NUMBER 40
PARALLEL OFFSETS

CONVENTIONAL ABBREVIATIONS

ACCESS RIGHTS	AR	POINT OF COMPOUND CURVE	PCC
ACRES	AC	POINT OF INTERSECTION	PI
AHEAD	AH	PROPERTY LINE	PL
ALUMINUM	ALUM	RECORDED AS	(100')
AND OTHERS	ET AL	REEL / IMAGE	R/I
BACK	BK	REFERENCE LINE	R/L
BLOCK	BLK	REMAINING	REM
CENTERLINE	C/L	RESTRICTIVE DEVELOPMENT EASEMENT	RDE
CERTIFIED SURVEY MAP	CSM	RIGHT	RT
CONCRETE	CONC	RIGHT OF WAY	R/W
COUNTY	CO	SECTION	SEC
COUNTY TRUNK HIGHWAY	CTH	SEPTIC VENT	SEPV
DISTANCE	DIST	SQUARE FEET	SF
CORNER	COR	STATE TRUNK HIGHWAY	STH
DOCUMENT NUMBER	DOC	STATION	STA
EASEMENT	EASE	TELEPHONE PEDESTAL	TP
EXISTING	EX	TEMPORARY LIMITED EASEMENT	TLE
GAS VALVE	GV	TRANSPORTATION PROJECT PLAT	TPP
GRID NORTH	GN	UNITED STATES HIGHWAY	USH
HIGHWAY EASEMENT	HE	VOLUME	V
IDENTIFICATION	ID		
LAND CONTRACT	LC		
LEFT	LT		
MONUMENT	MON		
NATIONAL GEODETIC SURVEY	NGS		
NUMBER	NO		
OUTLOT	OL		
PAGE	P		
POINT OF TANGENCY	PT		
PERMANENT LIMITED EASEMENT	PLE		
POINT OF BEGINNING	POB		
POINT OF CURVATURE	PC		

CURVE DATA ABBREVIATIONS

LONG CHORD	LCH
LONG CHORD BEARING	LCB
RADIUS	R
DEGREE OF CURVE	D
CENTRAL ANGLE	Δ/DELTA
LENGTH OF CURVE	L
TANGENT	T
DIRECTION AHEAD	DA
DIRECTION BACK	DB

CONVENTIONAL UTILITY SYMBOLS

WATER — W —
GAS — G —
TELEPHONE — T —
OVERHEAD TRANSMISSION LINES — OH —
ELECTRIC — E —
CABLE TELEVISION — TV —
FIBER OPTIC — FO —
SANITARY SEWER — SAN —
STORM SEWER — SS —
ELECTRIC TOWER

END PROJECT

LAYOUT
SCALE 0 1 MI.

THE NOTES,CONVENTIONAL SIGNS, AND ABBREVIATIONS ARE ASSOCIATED WITH EACH TRANSPORTATION PROJECT PLAT FOR PROJECT 6530-01-20.

NOTES:

POSITIONS SHOWN ON THIS PLAT ARE WISCONSIN COUNTY REFERENCE SYSTEM (WISCRS), WAUSHARA COUNTY, NAD83(2011), IN U.S. SURVEY FEET. VALUES ARE GRID COORDINATES, GRID BEARINGS, AND GRID DISTANCES. GRID DISTANCES MAY BE USED AS GROUND DISTANCES.

ALL NEW RIGHT-OF-WAY MONUMENTS WILL BE TYPE 2 (TYPICALLY ¾" X 24" IRON REBARS), UNLESS OTHERWISE NOTED, AND WILL BE PLACED PRIOR TO THE COMPLETION OF THE PROJECT.

ALL RIGHT-OF-WAY LINES DEPICTED IN THE NON-ACQUISITION AREAS ARE INTENDED TO RE-ESTABLISH EXISTING RIGHT-OF-WAY LINES AS DETERMINED FROM PREVIOUS PROJECTS, OTHER RECORDED DOCUMENTS, CENTERLINE OF EXISTING PAVEMENTS AND/OR EXISTING OCCUPATIONAL LINES.

RIGHT-OF-WAY BOUNDARIES ARE DEFINED WITH COURSES OF THE PERIMETER OF THE HIGHWAY LANDS REFERENCED TO THE U.S. PUBLIC LAND SURVEY SYSTEM OR OTHER "SURVEYS" OF PUBLIC RECORD.

DIMENSIONING FOR THE NEW RIGHT-OF-WAY IS MEASURED ALONG AND PERPENDICULAR TO THE NEW REFERENCE LINES.

A TEMPORARY LIMITED EASEMENT (TLE) IS A RIGHT FOR CONSTRUCTION PURPOSES, AS DEFINED HEREIN, INCLUDING THE RIGHT TO OPERATE NECESSARY EQUIPMENT THEREON, THE RIGHT OF INGRESS AND EGRESS, AS LONG AS REQUIRED FOR SUCH PUBLIC PURPOSE, INCLUDING THE RIGHT TO PRESERVE, PROTECT, REMOVE, OR PLANT THEREON ANY VEGETATION THAT THE HIGHWAY AUTHORITIES MAY DEEM DESIRABLE. ALL (TLEs) ON THIS PLAT EXPIRE AT THE COMPLETION OF THE CONSTRUCTION PROJECT FOR WHICH THIS INSTRUMENT IS GIVEN.

PROPERTY LINES SHOWN ON THIS PLAT FOR PROPERTIES BEING IMPACTED ARE DRAWN FROM DATA DERIVED FROM FILED/RECORDED MAPS AND DOCUMENTS OF PUBLIC RECORD. THIS PLAT MAY NOT BE A TRUE REPRESENTATION OF EXISTING PROPERTY LINES, EXCLUDING RIGHT-OF-WAY, AND SHOULD NOT BE USED AS A SUBSTITUTE FOR AN ACCURATE FIELD SURVEY.

FOR THE CURRENT ACCESS/DRIVEWAY INFORMATION, CONTACT THE PLANNING UNIT OF THE WISCONSIN DEPARTMENT OF TRANSPORTATION OFFICE IN WISCONSIN RAPIDS.

PARCEL AND UTILITY IDENTIFICATION NUMBERS MAY NOT POINT TO ALL AREAS OF ACQUISITION, AS NOTED ON THE TPP DETAIL PAGES.

INFORMATION FOR THE BASIS OF EXISTING HIGHWAY RIGHT-OF-WAY POINTS OF REFERENCE AND ACCESS CONTROL ARE LISTED ON THE TPP DETAIL PAGES.

PROJECT NUMBER 6530-01-20 - 4. 01
SHEET 2 OF 2
AMENDMENT NO:

FILE NAME : X:\PROJECTS\WAUSHARA\230051 STH 73 WHITE RIVER TO STH 21 6530-01-00\DESIGN\C3D\RW\DWG\040100-TI.DWG
LAYOUT NAME: 040101-ti
PLOT DATE : 8/9/2024 8:42 AM PLOT BY : RYAN MALUEG PLOT NAME : _____

TRANSPORTATION PROJECT PLAT NO: 6530-01-20 - 4.02

THAT PART OF LOT 4, CSM 3863, RECORDED IN VOLUME 17 OF CERTIFIED SURVEY MAPS ON PAGES 267-268 AS DOCUMENT NO. 353477, AND PART OF LOT 4 , CSM 4155, RECORDED IN VOLUME 20 OF CERTIFIED SURVEY MAPS ON PAGES 31-33 AS DOCUMENT NO. 366458, ALL LOCATED IN AND INCLUDING PART OF THE SOUTHEAST 1/4 OF THE NORTHWEST 1/4, AND THAT PART OF THE NORTHEAST 1/4 OF THE SOUTHWEST 1/4, ALL IN SECTION 20, TOWNSHIP 18 NORTH, RANGE 11 EAST, TOWN OF MARION, WAUSHARA COUNTY, WISCONSIN.

RELOCATION ORDER STH 73 PRINCETON - PLAINFIELD WHITE RIVER BRIDGE TO STH 21 MARQUETTE AND WAUSHARA COUNTIES

TO PROPERLY ESTABLISH, LAY OUT, WIDEN, ENLARGE, EXTEND, CONSTRUCT, RECONSTRUCT, IMPROVE, OR MAINTAIN A PORTION OF THE HIGHWAY DESIGNATED ABOVE, THE STATE OF WISCONSIN DEPARTMENT OF TRANSPORTATION DEEMS IT NECESSARY TO RELOCATE OR CHANGE SAID HIGHWAY AND ACQUIRE CERTAIN LANDS AND INTERESTS OR RIGHTS IN LANDS FOR THE ABOVE PROJECT.

TO EFFECT THIS CHANGE, PURSUANT TO AUTHORITY GRANTED UNDER SUBSECTIONS 84.02 (3), 84.09, AND 84.30, WISCONSIN STATUTES, THE DEPARTMENT OF TRANSPORTATION HEREBY ORDERS THAT:

1. THAT PORTION OF SAID HIGHWAY AS SHOWN ON THIS PLAT IS LAID OUT AND ESTABLISHED TO THE LINES AND WIDTHS AS SO SHOWN FOR THE ABOVE PROJECT.
2. THE LANDS OR INTERESTS OR RIGHTS IN LANDS AS SHOWN ON THIS PLAT ARE REQUIRED BY THE DEPARTMENT FOR THE ABOVE PROJECT AND SHALL BE ACQUIRED IN THE NAME OF THE STATE OF WISCONSIN, PURSUANT TO THE PROVISIONS OF SUBSECTION 84.09 (1) OR (2), WISCONSIN STATUTES.

POSITIONS SHOWN ON THIS PLAT ARE WISCONSIN COUNTY REFERENCE SYSTEM (WISCRS), WAUSHARA COUNTY, NAD83 (2011) IN US SURVEY FEET. VALUES SHOWN ARE GRID COORDINATES, GRID BEARINGS, AND GRID DISTANCES. GRID DISTANCES MAY BE USED AS GROUND DISTANCES.

ALL NEW RIGHT-OF-WAY MONUMENTS WILL BE TYPE 2 (TYPICALLY ¾" X 24" IRON REBARS), UNLESS OTHERWISE NOTED, AND WILL BE PLACED PRIOR TO THE COMPLETION OF THE PROJECT.

FOUND MONUMENT INFORMATION SHOWN REPRESENTS TYPE AND LOCATION OF EXISTING MONUMENTS WITHOUT OPINION AS TO THEIR VALIDITY AND USE AS A PROPERTY CORNER.

EXISTING ACCESS CONTROL FOR STH 73 ESTABLISHED FROM CSM 4155.

EXISTING RIGHT OF WAY FOR STH 73 ESTABLISHED FROM PREVIOUS PROJECTS DIVISION JOB NUMBER 4704, 6530-00-30, CSM 3863, CSM 3145, CSM 4155, CSM 2793, POS 24201811

EXISTING RIGHT OF WAY FOR CTH YY ESTABLISHED FROM PREVIOUS PROJECTS DIVISION JOB NUMBER 4704, 6530-00-30, CSM 3863, CSM 3145, CSM 4155, CSM 2793.

FOR THE CURRENT ACCESS/DRIVEWAY INFORMATION, CONTACT THE PLANNING UNIT OF THE WISCONSIN DEPARTMENT OF TRANSPORTATION OFFICE IN WISCONSIN RAPIDS.

4

SCHEDULE OF LANDS & INTERESTS REQUIRED

OWNER'S NAMES ARE SHOWN FOR REFERENCE PURPOSES ONLY AND ARE SUBJECT TO CHANGE PRIOR TO THE TRANSFER OF LAND INTERESTS TO THE DEPARTMENT.

PARCEL NUMBER	OWNER (S)	INTEREST(S) REQUIRED	FEE R/W S.F. REQUIRED			TLE S.F.
			NEW	EXISTING	TOTAL	
3	CARL E SEIBEL SHARLENE J SEIBEL	FEE	3006	4661	7667	---
4	DANIEL VAN	FEE	3790	16335	20125	---
5	ROBERT K BOCEK	FEE, TLE	7410	26310	33720	1172

THE PURPOSE FOR ALL TLE'S IS GRADING UNLESS OTHERWISE NOTED.

Document Number: 549664
Waushara County, Wisconsin
Heather Schwersenska,
Register of Deeds
Recorded On:
08/16/2024 11:49:41 AM
Number of Pages: 2

RESERVED FOR REGISTER OF DEEDS
PROJECT NUMBER: 6530-01-20 - 4.02
SHEET 1 OF 2

FOR ADDITIONAL INFORMATION REFER TO THE TITLE SHEET, RECORDED AS SHEET 2 OF 2.

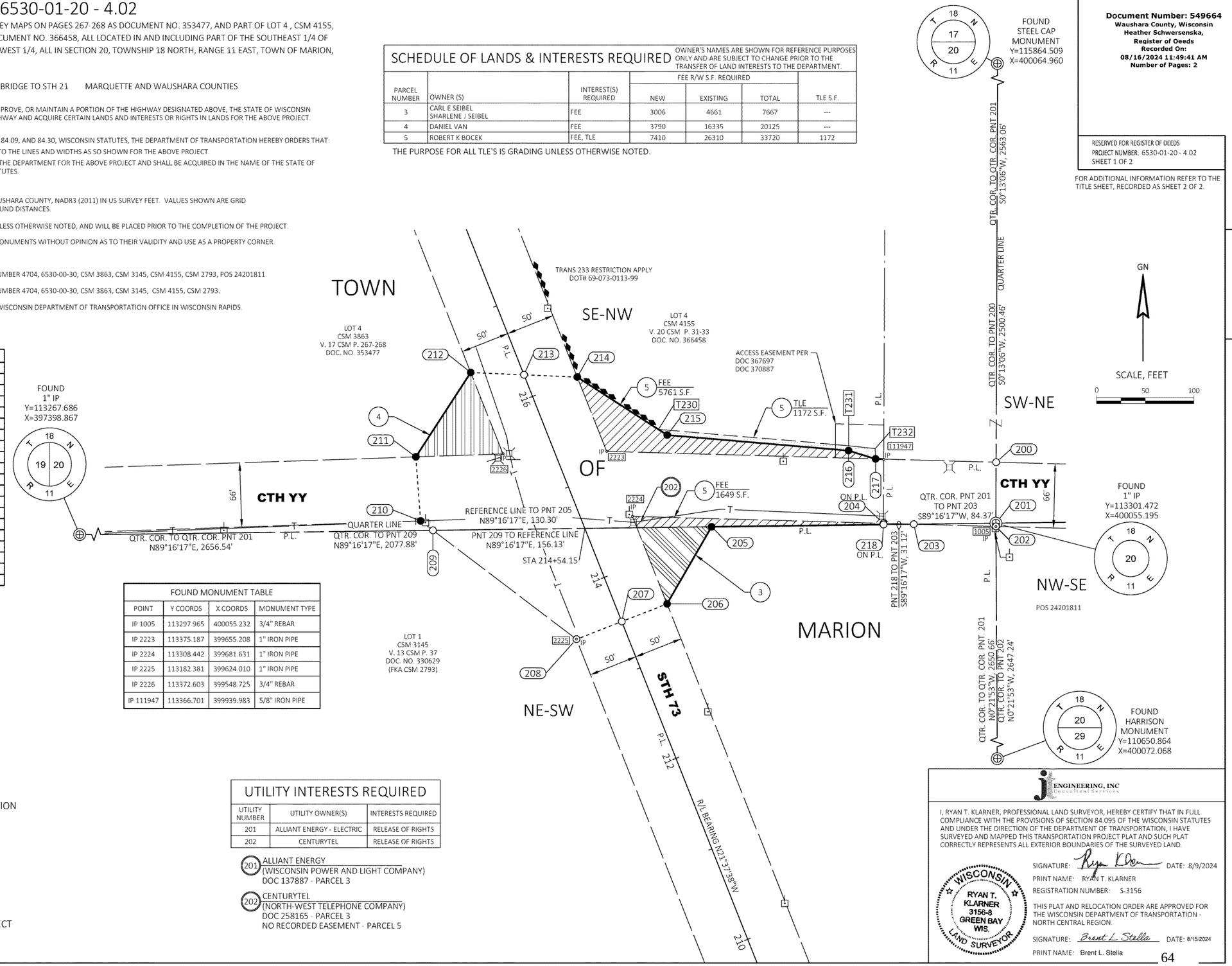

R/W STATION & OFFSET TABLE

POINT	STATION	OFFSET
200	213+61.53	418.03' RT
201	213+03.43	394.74' RT
202	213+00.24	393.50' RT
203	213+33.52	315.91' RT
204	213+45.79	287.31' RT
205	214+07.67	121.73' RT
206	213+50.90	50.00' RT
207	213+51.19	0.00' RT
208	213+51.48	50.00' LT
209	215+09.84	145.86' LT
210	215+23.44	154.09' LT
211	215+86.50	134.42' LT
212	216+46.19	50.00' LT
213	216+23.86	0.00' RT
214	216+01.52	50.00' RT
215	215+12.11	114.08' RT
216	214+28.53	281.38' RT
217	214+10.40	304.13' RT
218	213+44.62	286.84' RT

COURSE TABLE

COURSE	BEARING	DISTANCE
200-201(SEC)	S00° 13' 06"W	62.60'
201(SEC)-202	S00° 21' 53"E	3.42'
202-203	N88° 24' 25"W	84.42'
203-204	N88° 24' 25"W	31.13'
204-218	S00° 13' 03"W	1.26'
218-205	S89° 16' 17"W	176.74'
205-206	S30° 00' 44"W	91.48'
206-207	S68° 42' 22"W	50.00'
207-208	S68° 42' 22"W	50.00'
208-209	N52° 48' 49"W	185.12'
209-210	N52° 48' 49"W	15.90'
210-211	N04° 18' 28"W	66.06'
211-212	N33° 06' 42"E	103.39'
212-213	S87° 33' 20"E	54.76'
213-214	S87° 33' 20"E	54.76'
214-215	S57° 15' 27"E	110.00'
215-216	S85° 04' 57"E	187.01'
216-217	S73° 03' 24"E	29.09'
217-200	S88° 24' 25"E	123.94'

TLE STATION & OFFSET TABLE

POINT	STATION	OFFSET
T230	215+20.82	107.84' RT
T231	214+33.13	283.37' RT
T232	214+20.32	307.73' RT

FOUND MONUMENT TABLE

POINT	Y COORDS	X COORDS	MONUMENT TYPE
IP 1005	113297.965	400055.232	3/4" REBAR
IP 2223	113375.187	399655.208	1" IRON PIPE
IP 2224	113308.442	399681.631	1" IRON PIPE
IP 2225	113182.381	399624.010	1" IRON PIPE
IP 2226	113372.603	399548.725	3/4" REBAR
IP 111947	113366.701	399939.983	5/8" IRON PIPE

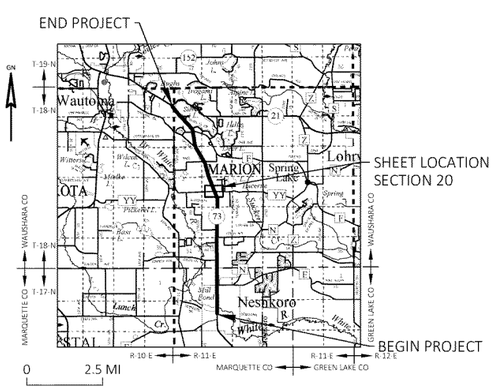

UTILITY INTERESTS REQUIRED

UTILITY NUMBER	UTILITY OWNER(S)	INTERESTS REQUIRED
201	ALLIANT ENERGY - ELECTRIC	RELEASE OF RIGHTS
202	CENTURYTEL	RELEASE OF RIGHTS

(201) ALLIANT ENERGY
(WISCONSIN POWER AND LIGHT COMPANY)
DOC 137887 - PARCEL 3

(202) CENTURYTEL
(NORTH-WEST TELEPHONE COMPANY)
DOC 258165 - PARCEL 3
NO RECORDED EASEMENT - PARCEL 5

J ENGINEERING, INC
Consultant Services

I, RYAN T. KLARNER, PROFESSIONAL LAND SURVEYOR, HEREBY CERTIFY THAT IN FULL COMPLIANCE WITH THE PROVISIONS OF SECTION 84.095 OF THE WISCONSIN STATUTES AND UNDER THE DIRECTION OF THE DEPARTMENT OF TRANSPORTATION, I HAVE SURVEYED AND MAPPED THIS TRANSPORTATION PROJECT PLAT AND SUCH PLAT CORRECTLY REPRESENTS ALL EXTERIOR BOUNDARIES OF THE SURVEYED LAND.

WISCONSIN RYAN T. KLARNER 3156-6 GREEN BAY WIS. LAND SURVEYOR

SIGNATURE: Ryan K Klarner DATE: 8/9/2024
PRINT NAME: RYAN T. KLARNER
REGISTRATION NUMBER: S-3156

THIS PLAT AND RELOCATION ORDER ARE APPROVED FOR THE WISCONSIN DEPARTMENT OF TRANSPORTATION - NORTH CENTRAL REGION.

SIGNATURE: Brent L Stella DATE: 8/15/2024
PRINT NAME: Brent L. Stella

STATE OF WISCONSIN
DEPARTMENT OF TRANSPORTATION
TRANSPORTATION PROJECT PLAT TITLE SHEET
6530-01-20
PRINCETON - PLAINFIELD
WHITE RIVER BRIDGE TO STH 21
STH 73
WAUSHARA & MARQUETTE COUNTY

CONVENTIONAL SYMBOLS

SECTION LINE
QUARTER LINE
SIXTEENTH LINE
NEW REFERENCE LINE
NEW R/W LINE
EXISTING R/W OR HE LINE
PROPERTY LINE
LOT, TIE & OTHER MINOR LINES
SLOPE INTERCEPT
CORPORATE LIMITS
UNDERGROUND FACILITY (COMMUNICATIONS, ELECTRIC, ETC)
NEW R/W (FEE OR HE) (HATCHING VARIES BY OWNER)
TEMPORARY LIMITED EASEMENT AREA
EASEMENT AREA (PERMANENT LIMITED OR RESTRICTED DEVELOPMENT)
TRANSMISSION STRUCTURES
BUILDING
TO BE REMOVED
BRIDGE
CULVERT

SECTION CORNER SYMBOL
SECTION CORNER MONUMENT
GEODETIC SURVEY MONUMENT
SIXTEENTH CORNER MONUMENT
SIGN
OFF-PREMISE SIGN
R/W MONUMENT (TO BE SET)
NON-MONUMENTED R/W POINT
FOUND IRON PIN (1-INCH UNLESS NOTED)

	COMPENSABLE	NON-COMPENSABLE
ELECTRIC POLE		
TELEPHONE POLE		
PEDESTAL (LABEL TYPE) (TV, TEL, ELEC, ETC.)		

ACCESS RESTRICTED BY ACQUISITION
NO ACCESS (BY STATUTORY AUTHORITY)
ACCESS RESTRICTED (BY PREVIOUS PROJECT OR CONTROL)
NO ACCESS (NEW HIGHWAY)
PARCEL NUMBER 25
UTILITY NUMBER 40
PARALLEL OFFSETS

CONVENTIONAL ABBREVIATIONS

ACCESS RIGHTS	AR	POINT OF COMPOUND CURVE	PCC
ACRES	AC	POINT OF INTERSECTION	PI
AHEAD	AH	PROPERTY LINE	PL
ALUMINUM	ALUM	RECORDED AS	(100')
AND OTHERS	ET AL	REEL / IMAGE	R/I
BACK	BK	REFERENCE LINE	R/L
BLOCK	BLK	REMAINING	REM
CENTERLINE	C/L	RESTRICTIVE DEVELOPMENT EASEMENT	RDE
CERTIFIED SURVEY MAP	CSM	RIGHT	RT
CONCRETE	CONC	RIGHT OF WAY	R/W
COUNTY	CO	SECTION	SEC
COUNTY TRUNK HIGHWAY	CTH	SEPTIC VENT	SEPV
DISTANCE	DIST	SQUARE FEET	SF
CORNER	COR	STATE TRUNK HIGHWAY	STH
DOCUMENT NUMBER	DOC	STATION	STA
EASEMENT	EASE	TELEPHONE PEDESTAL	TP
EXISTING	EX	TEMPORARY LIMITED EASEMENT	TLE
GAS VALVE	GV	TRANSPORTATION PROJECT PLAT	TPP
GRID NORTH	GN	UNITED STATES HIGHWAY	USH
HIGHWAY EASEMENT	HE	VOLUME	V
IDENTIFICATION	ID		
LAND CONTRACT	LC		
LEFT	LT		
MONUMENT	MON		
NATIONAL GEODETIC SURVEY	NGS		
NUMBER	NO		
OUTLOT	OL		
PAGE	P		
POINT OF TANGENCY	PT		
PERMANENT LIMITED EASEMENT	PLE		
POINT OF BEGINNING	POB		
POINT OF CURVATURE	PC		

CURVE DATA ABBREVIATIONS

LONG CHORD	LCH
LONG CHORD BEARING	LCB
RADIUS	R
DEGREE OF CURVE	D
CENTRAL ANGLE	Δ/DELTA
LENGTH OF CURVE	L
TANGENT	T
DIRECTION AHEAD	DA
DIRECTION BACK	DB

CONVENTIONAL UTILITY SYMBOLS

WATER — W —
GAS — G —
TELEPHONE — T —
OVERHEAD TRANSMISSION LINES — OH —
ELECTRIC — E —
CABLE TELEVISION — TV —
FIBER OPTIC — FO —
SANITARY SEWER — SAN —
STORM SEWER — SS —
ELECTRIC TOWER

END PROJECT

BEGIN PROJECT

THE NOTES,CONVENTIONAL SIGNS, AND ABBREVIATIONS ARE ASSOCIATED WITH EACH TRANSPORTATION PROJECT PLAT FOR PROJECT 6530-01-20.

NOTES:

POSITIONS SHOWN ON THIS PLAT ARE WISCONSIN COUNTY REFERENCE SYSTEM (WISCRS), WAUSHARA COUNTY, NAD83(2011), IN U.S. SURVEY FEET. VALUES ARE GRID COORDINATES, GRID BEARINGS, AND GRID DISTANCES. GRID DISTANCES MAY BE USED AS GROUND DISTANCES.

ALL NEW RIGHT-OF-WAY MONUMENTS WILL BE TYPE 2 (TYPICALLY ¾" X 24" IRON REBARS), UNLESS OTHERWISE NOTED, AND WILL BE PLACED PRIOR TO THE COMPLETION OF THE PROJECT.

ALL RIGHT-OF-WAY LINES DEPICTED IN THE NON-ACQUISITION AREAS ARE INTENDED TO RE-ESTABLISH EXISTING RIGHT-OF-WAY LINES AS DETERMINED FROM PREVIOUS PROJECTS, OTHER RECORDED DOCUMENTS, CENTERLINE OF EXISTING PAVEMENTS AND/OR EXISTING OCCUPATIONAL LINES.

RIGHT-OF-WAY BOUNDARIES ARE DEFINED WITH COURSES OF THE PERIMETER OF THE HIGHWAY LANDS REFERENCED TO THE U.S. PUBLIC LAND SURVEY SYSTEM OR OTHER "SURVEYS" OF PUBLIC RECORD.

DIMENSIONING FOR THE NEW RIGHT-OF-WAY IS MEASURED ALONG AND PERPENDICULAR TO THE NEW REFERENCE LINES.

A TEMPORARY LIMITED EASEMENT (TLE) IS A RIGHT FOR CONSTRUCTION PURPOSES, AS DEFINED HEREIN, INCLUDING THE RIGHT TO OPERATE NECESSARY EQUIPMENT THEREON, THE RIGHT OF INGRESS AND EGRESS, AS LONG AS REQUIRED FOR SUCH PUBLIC PURPOSE, INCLUDING THE RIGHT TO PRESERVE, PROTECT, REMOVE, OR PLANT THEREON ANY VEGETATION THAT THE HIGHWAY AUTHORITIES MAY DEEM DESIRABLE. ALL (TLEs) ON THIS PLAT EXPIRE AT THE COMPLETION OF THE CONSTRUCTION PROJECT FOR WHICH THIS INSTRUMENT IS GIVEN.

PROPERTY LINES SHOWN ON THIS PLAT FOR PROPERTIES BEING IMPACTED ARE DRAWN FROM DATA DERIVED FROM FILED/RECORDED MAPS AND DOCUMENTS OF PUBLIC RECORD. THIS PLAT MAY NOT BE A TRUE REPRESENTATION OF EXISTING PROPERTY LINES, EXCLUDING RIGHT-OF-WAY, AND SHOULD NOT BE USED AS A SUBSTITUTE FOR AN ACCURATE FIELD SURVEY.

FOR THE CURRENT ACCESS/DRIVEWAY INFORMATION, CONTACT THE PLANNING UNIT OF THE WISCONSIN DEPARTMENT OF TRANSPORTATION OFFICE IN WISCONSIN RAPIDS.

PARCEL AND UTILITY IDENTIFICATION NUMBERS MAY NOT POINT TO ALL AREAS OF ACQUISITION, AS NOTED ON THE TPP DETAIL PAGES.

INFORMATION FOR THE BASIS OF EXISTING HIGHWAY RIGHT-OF-WAY POINTS OF REFERENCE AND ACCESS CONTROL ARE LISTED ON THE TPP DETAIL PAGES.

PROJECT NUMBER 6530-01-20 - 4. 02
SHEET 2 OF 2
AMENDMENT NO:

FILE NAME : X:\PROJECTS\WAUSHARA\230051 STH 73 WHITE RIVER TO STH 21 6530-01-00\DESIGN\C3D\RW\DWG\040100-TI.DWG
LAYOUT NAME: 040102-ti
PLOT DATE : 8/9/2024 8:43 AM PLOT BY : RYAN MALUEG PLOT NAME : _____

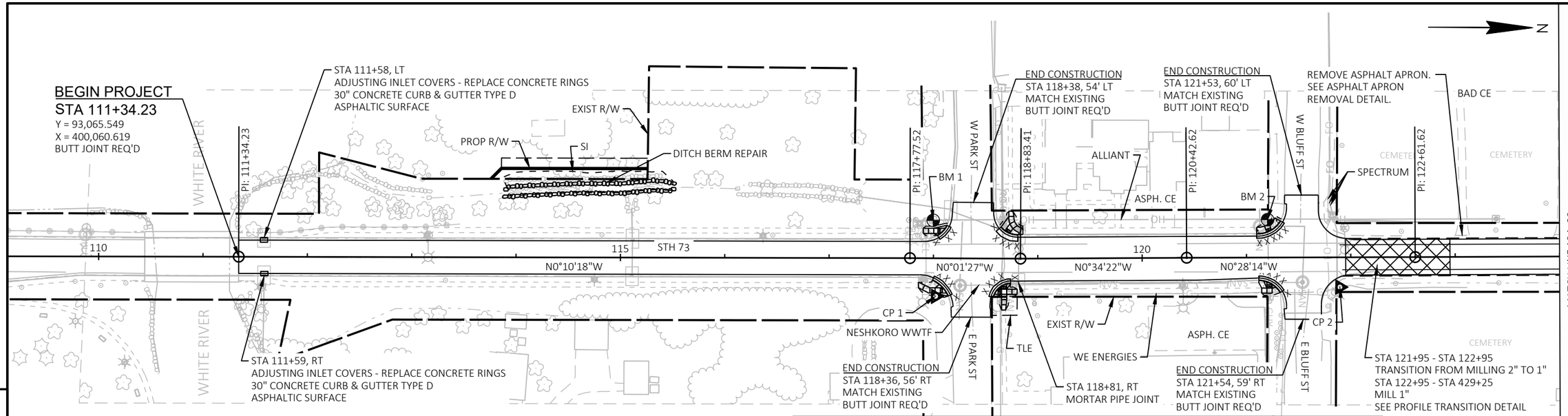

5

BENCHMARK & CONTROL POINT TABLE					
POINT NUMBER	STA	X-COORD	Y-COORD	DESCRIPTION	ELEV
BM 1	118+00, 36.2' LT	400022.434	93730.886	BM RR SPIKE	839.48
CP 1	118+02, 36.5' RT	400095.152	93733.486	CP NL	837.66
BM 2	121+20, 36.3' LT	400020.149	94051.233	BM RR SPIKE	843.55
CP 2	121+89, 28.5' RT	400084.357	94120.923	CP NL	842.72

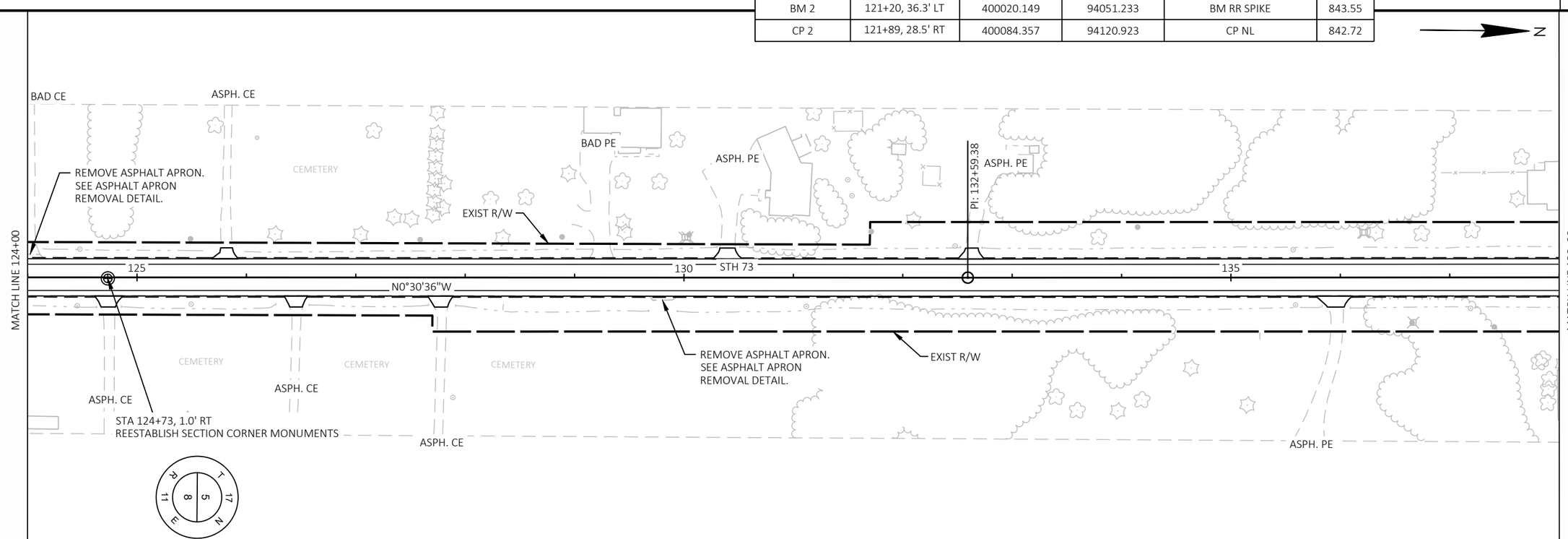

5

PROJECT NO: 6530-01-70	HWY: STH 73	COUNTY: WAUSHARA	PLAN SHEETS - STH 73	SHEET 66	E

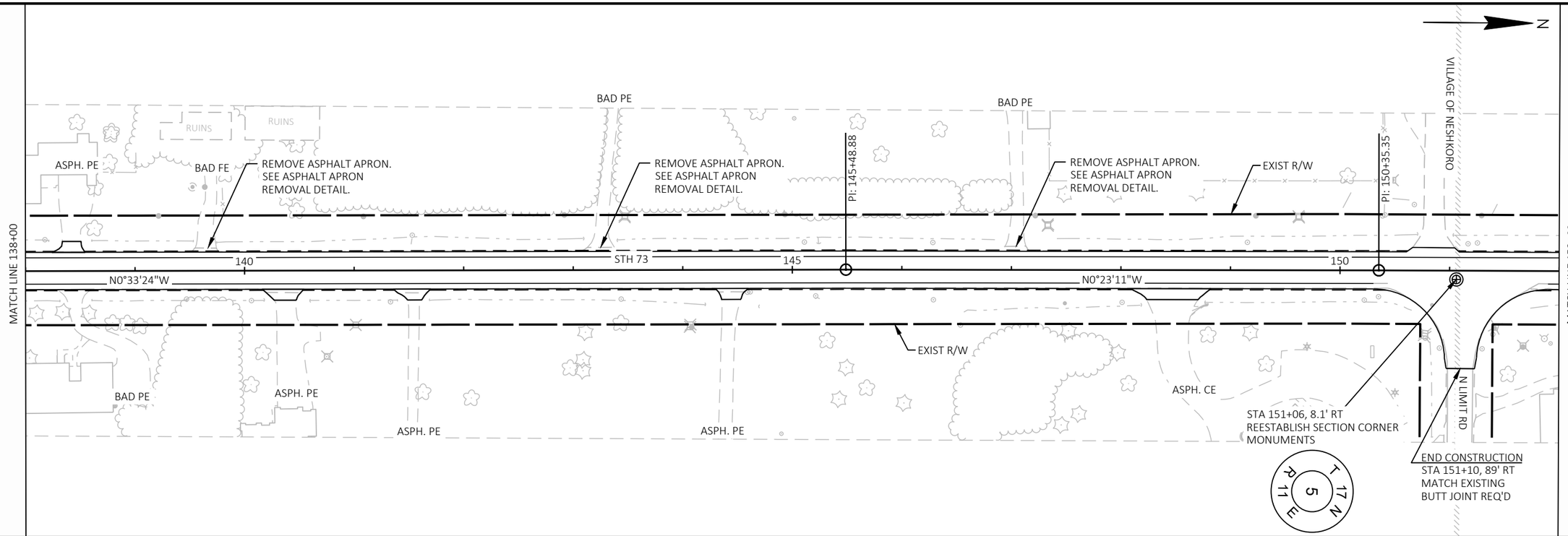

5

5

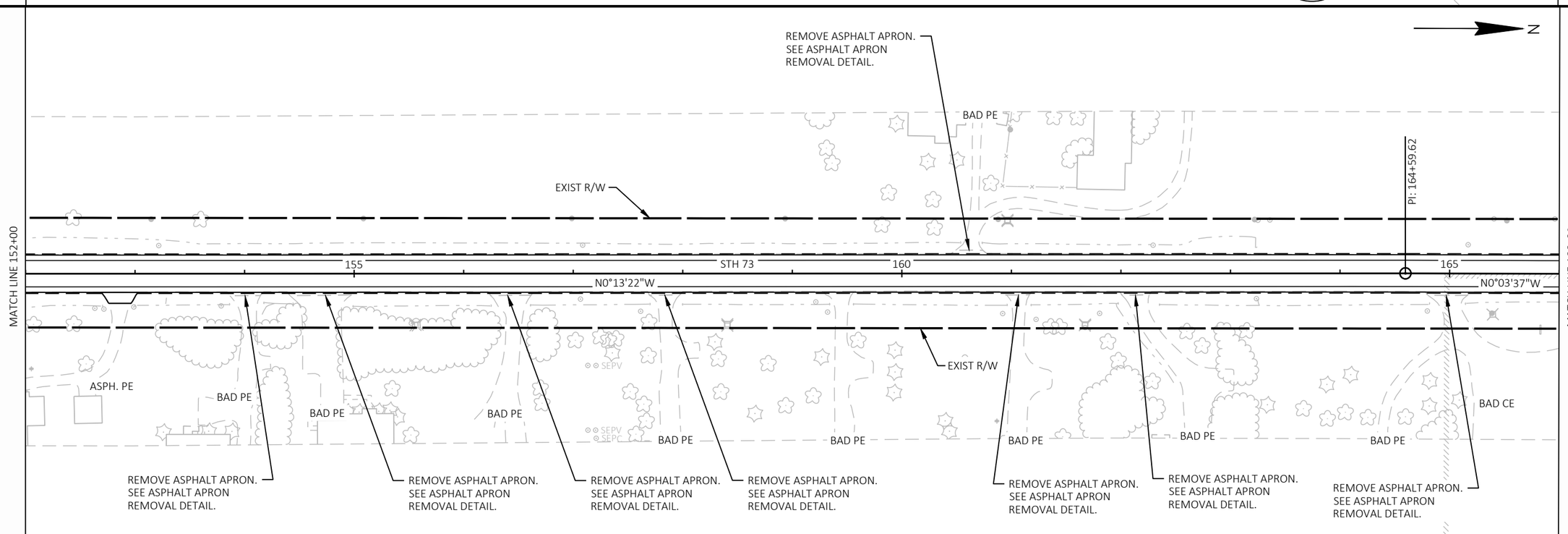

PROJECT NO: 6530-01-70	HWY: STH 73	COUNTY: WAUSHARA	PLAN SHEETS - STH 73	SHEET 67	E

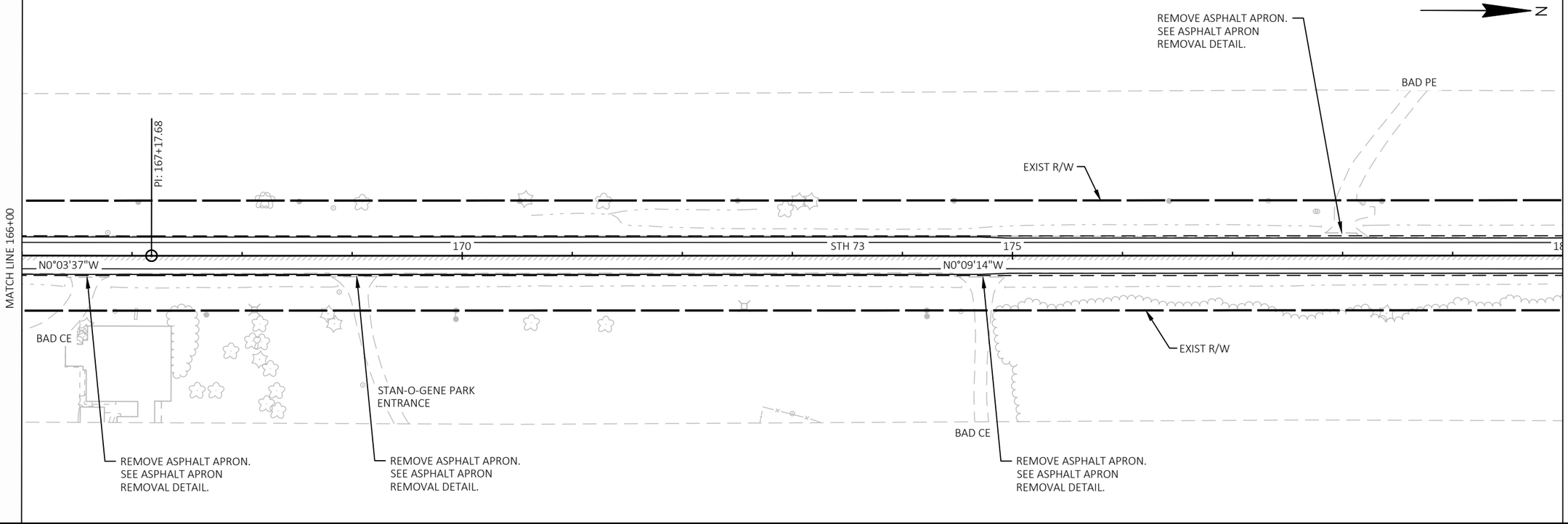

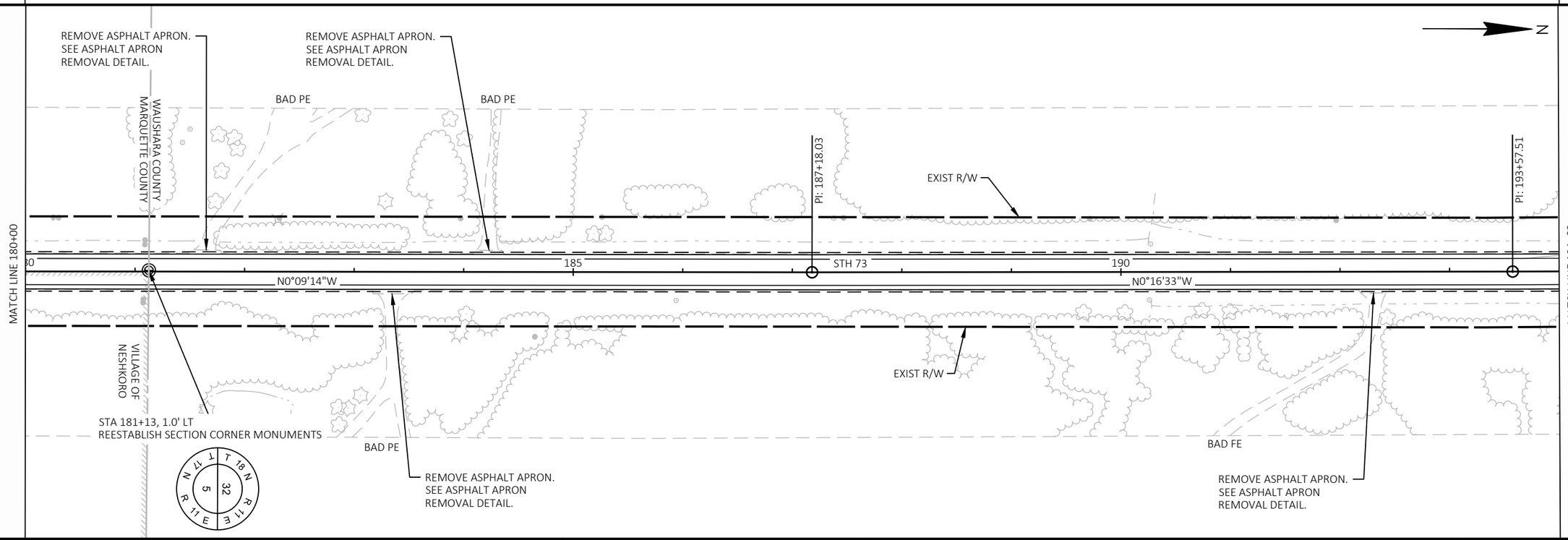

PROJECT NO: 6530-01-70	HWY: STH 73	COUNTY: WAUSHARA	PLAN SHEETS - STH 73	SHEET 68	E

FILE NAME : H:\PROJECTS\16000\16221\TECHDATA\65300100\SHEETS\050201-PN.DWG
LAYOUT NAME - 03
PLOT DATE : 10/20/2025 4:32 PM
PLOT BY : BRIAN GENSKOW
PLOT NAME :
PLOT SCALE : 1 IN:100 FT
WISDOT/CADDS SHEET 44

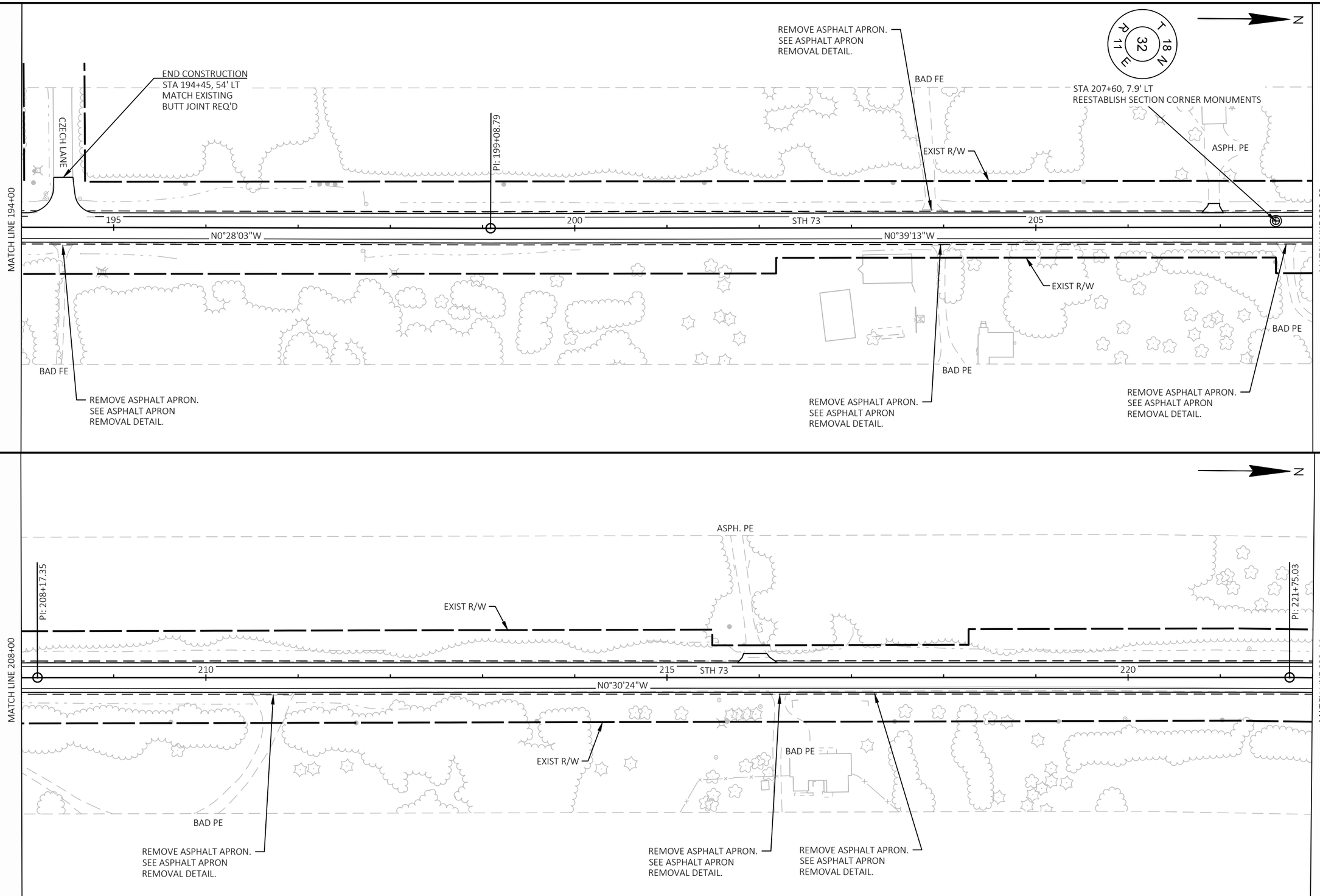

PROJECT NO: 6530-01-70	HWY: STH 73	COUNTY: WAUSHARA	PLAN SHEETS - STH 73	SHEET 69	E

FILE NAME : H:\PROJECTS\16000\16221\TECHDATA\65300100\SHEETS\050201-PN.DWG
LAYOUT NAME - 04
PLOT DATE : 10/20/2025 4:32 PM PLOT BY : BRIAN GENSKOW PLOT NAME : PLOT SCALE : 1 IN:100 FT

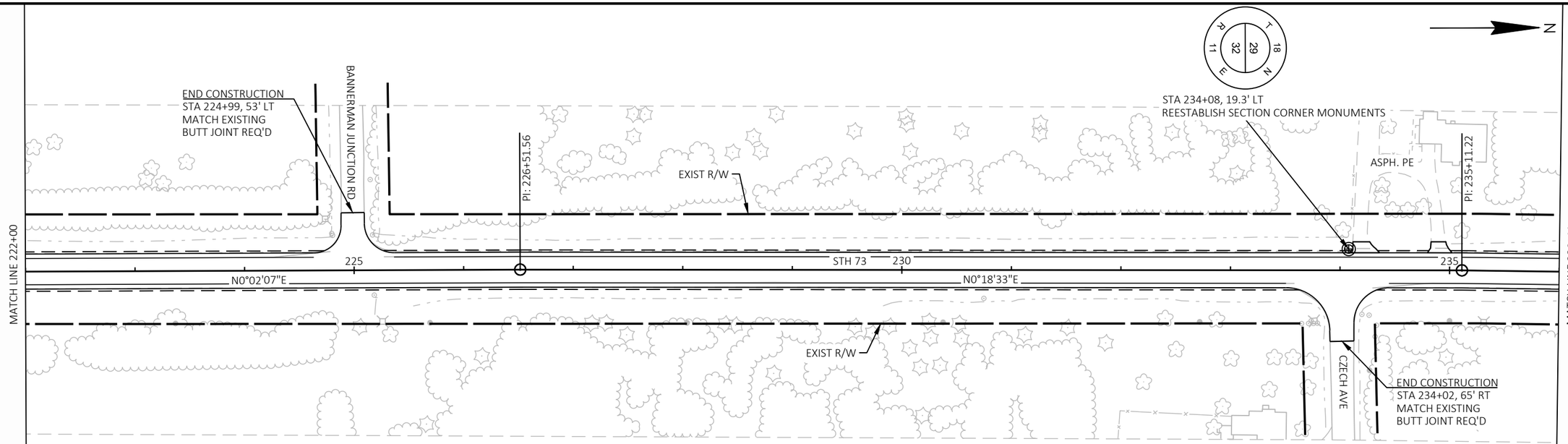

5

5

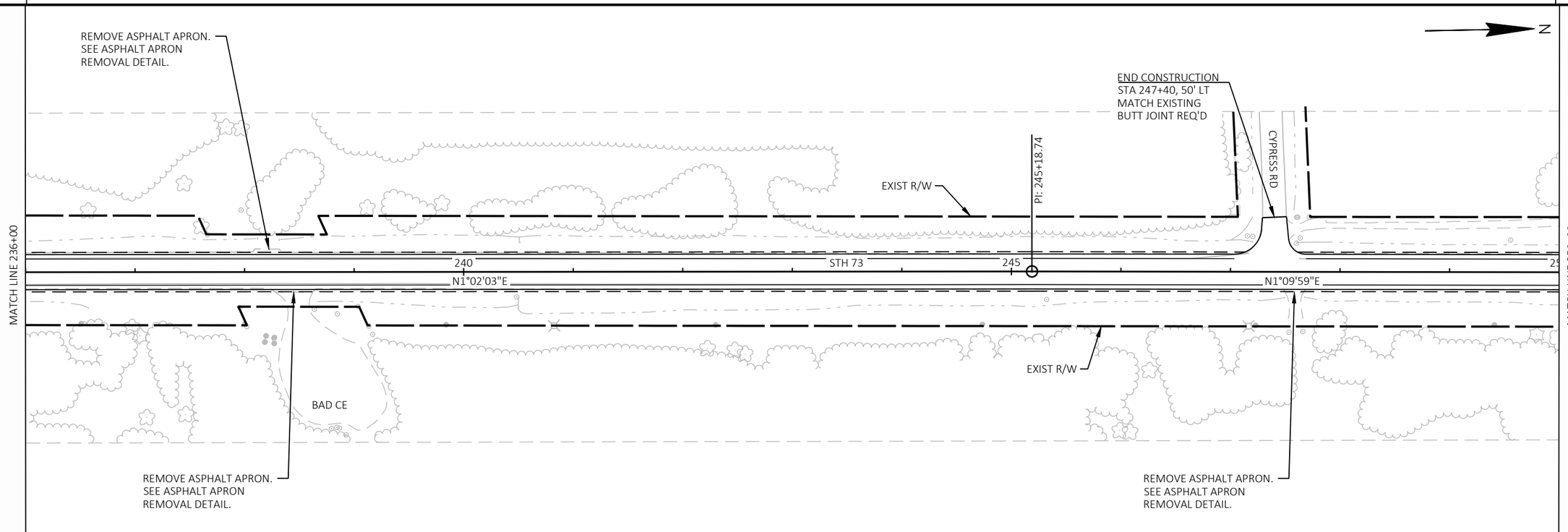

PROJECT NO: 6530-01-70	HWY: STH 73	COUNTY: WAUSHARA	PLAN SHEETS - STH 73	SHEET 70	E

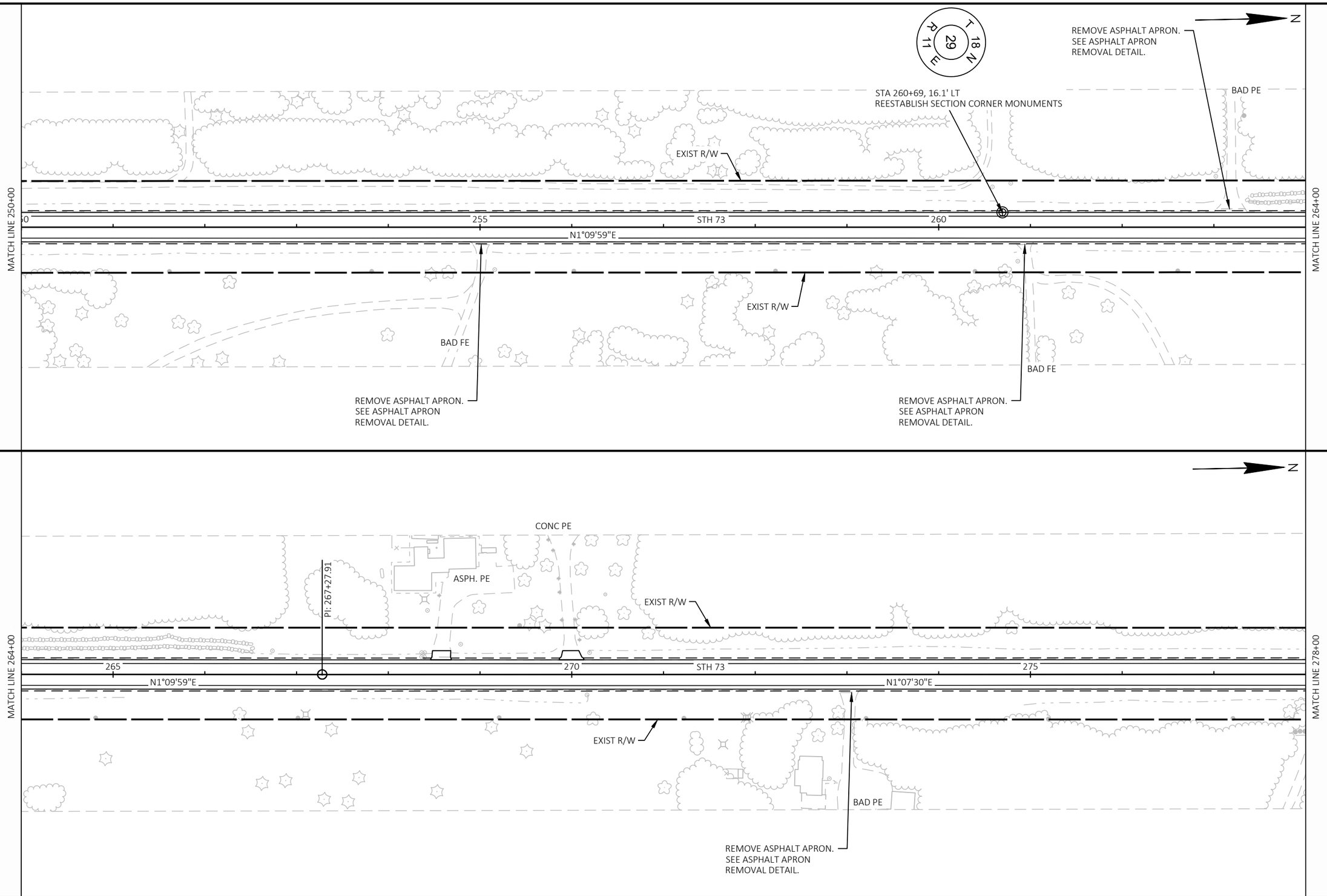

PROJECT NO: 6530-01-70	HWY: STH 73	COUNTY: WAUSHARA	PLAN SHEETS - STH 73	SHEET 71	E

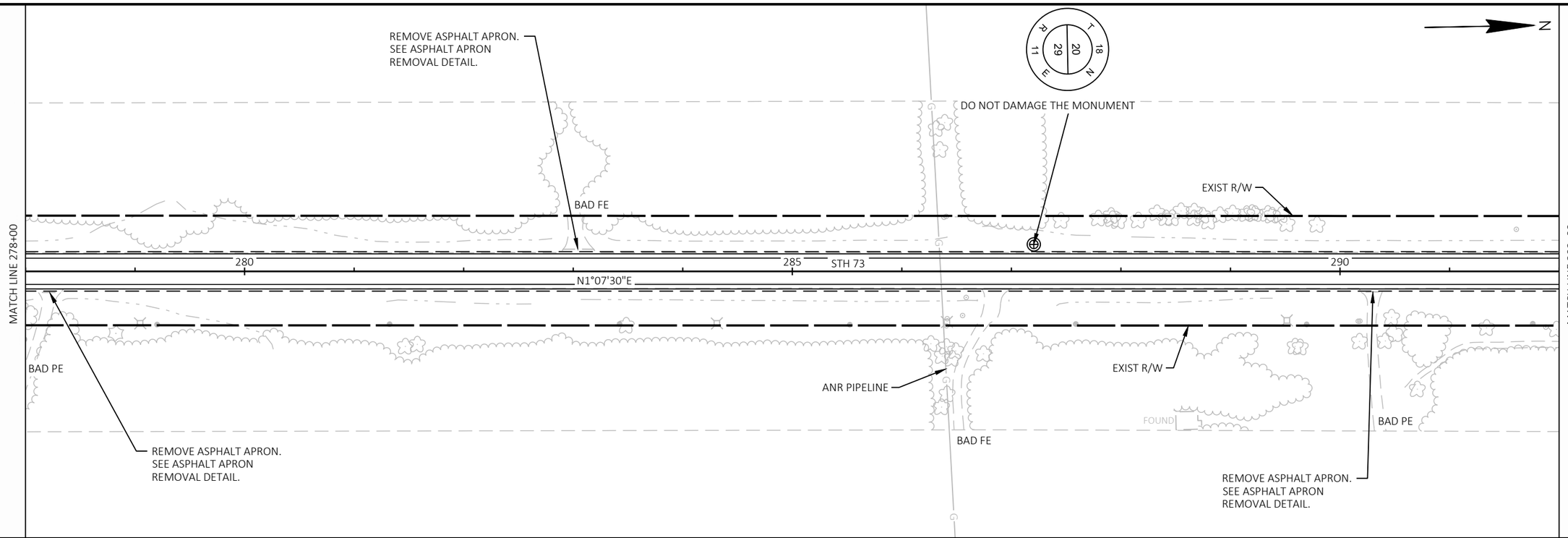

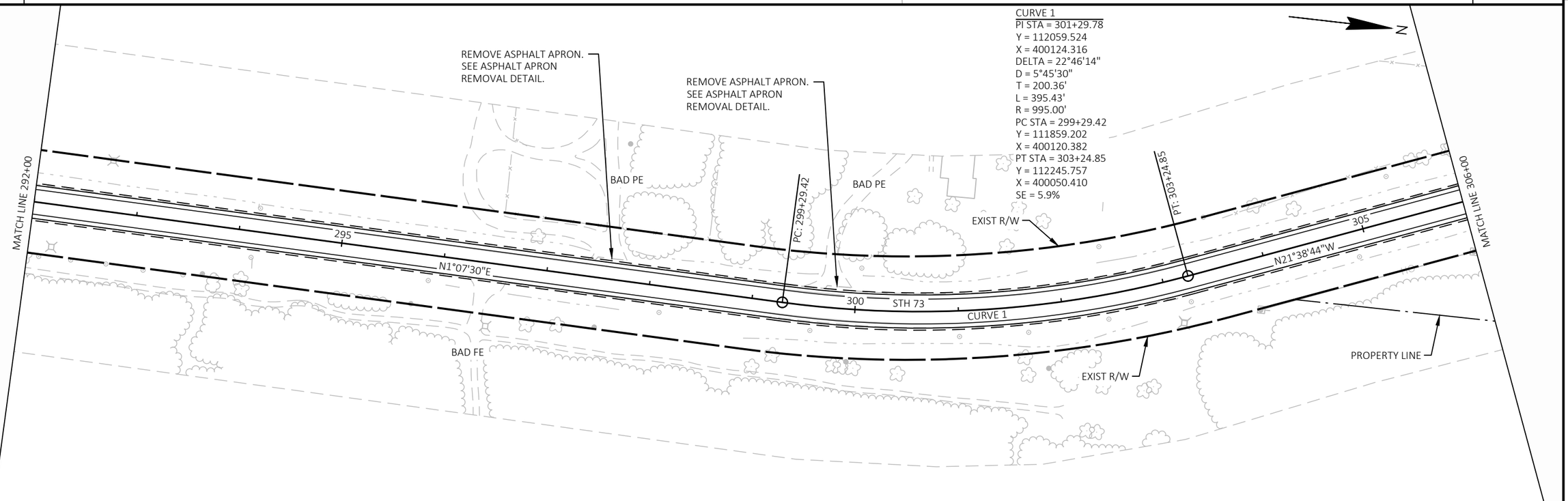

PROJECT NO: 6530-01-70	HWY: STH 73	COUNTY: WAUSHARA	PLAN SHEETS - STH 73	SHEET 72	E

FILE NAME : H:\PROJECTS\16000\16221\TECHDATA\65300100\SHEETS\050201-PN.DWG
LAYOUT NAME - 07
PLOT DATE : 10/20/2025 4:32 PM
PLOT BY : BRIAN GENSKOW
PLOT NAME :
PLOT SCALE : 1 IN:100 FT
WISDOT/CADDS SHEET 44

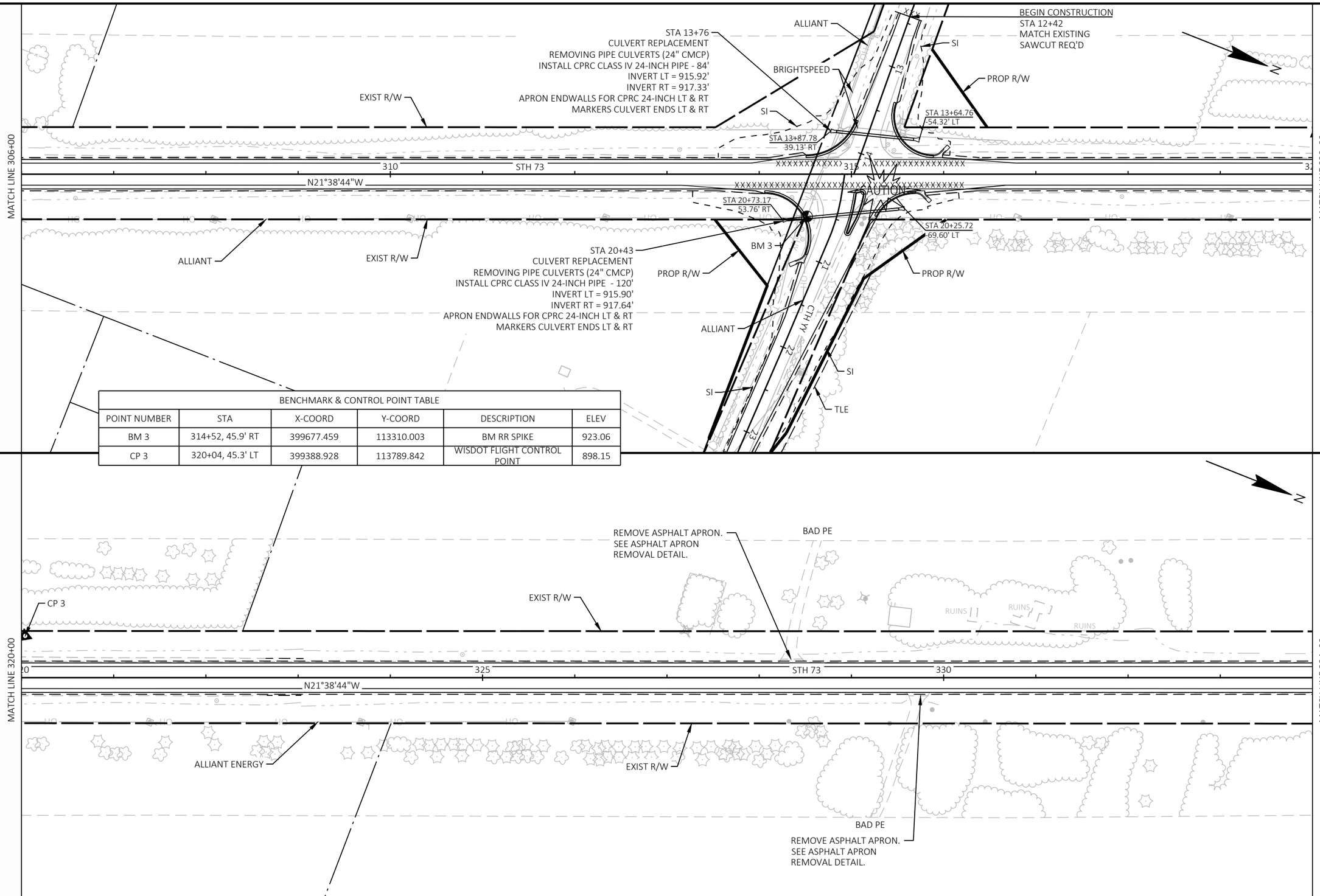

BENCHMARK & CONTROL POINT TABLE					
POINT NUMBER	STA	X-COORD	Y-COORD	DESCRIPTION	ELEV
BM 3	314+52, 45.9' RT	399677.459	113310.003	BM RR SPIKE	923.06
CP 3	320+04, 45.3' LT	399388.928	113789.842	WISDOT FLIGHT CONTROL POINT	898.15

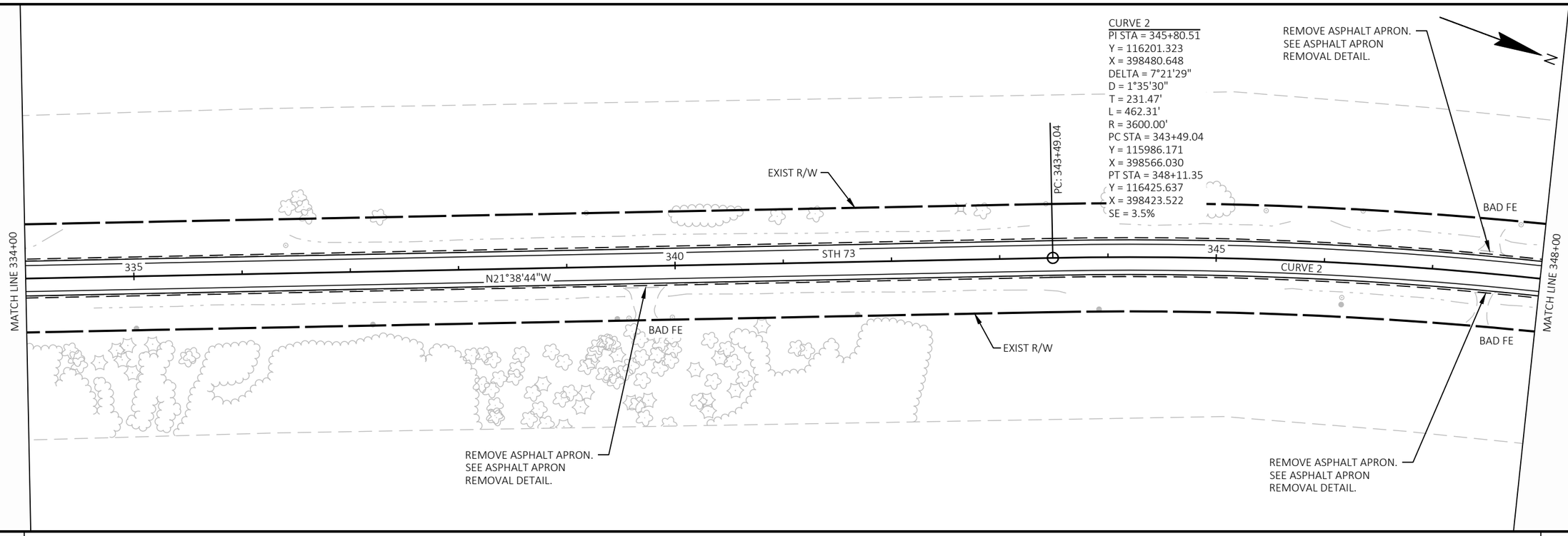

5

5

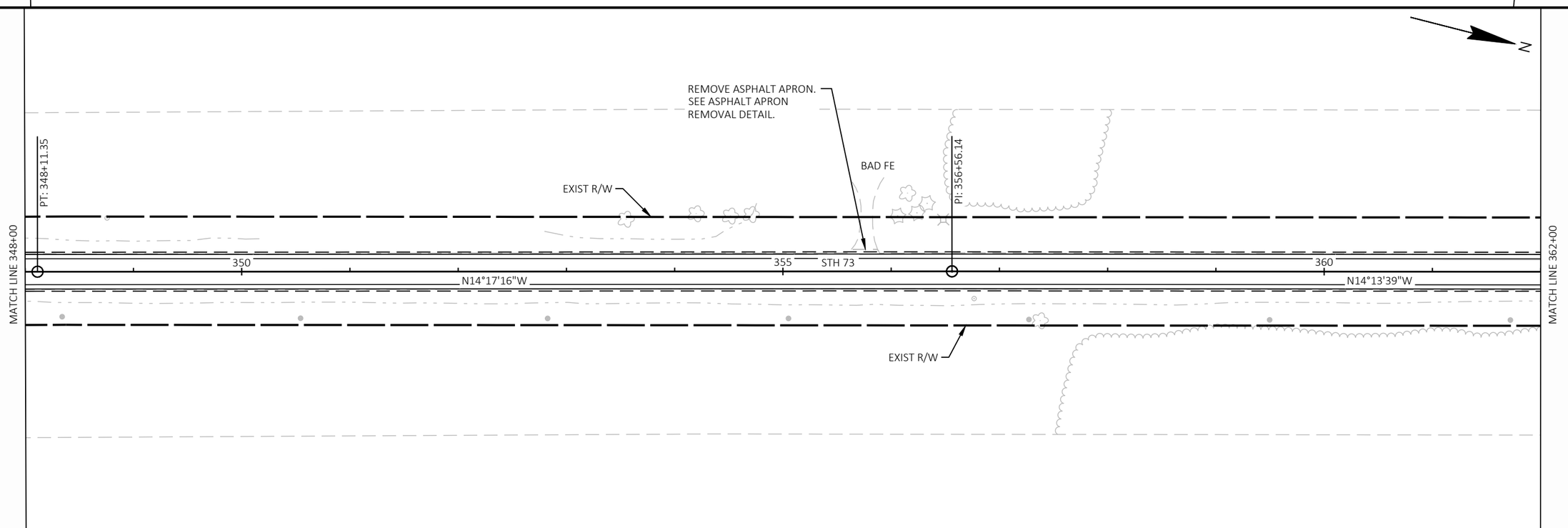

PROJECT NO: 6530-01-70	HWY: STH 73	COUNTY: WAUSHARA	PLAN SHEETS - STH 73	SHEET 74	E

FILE NAME : H:\PROJECTS\16000\16221\TECHDATA\65300100\SHEETS\050201-PN.DWG
LAYOUT NAME - 09
PLOT DATE : 10/20/2025 4:33 PM
PLOT BY : BRIAN GENSKOW
PLOT NAME :
PLOT SCALE : 1 IN:100 FT

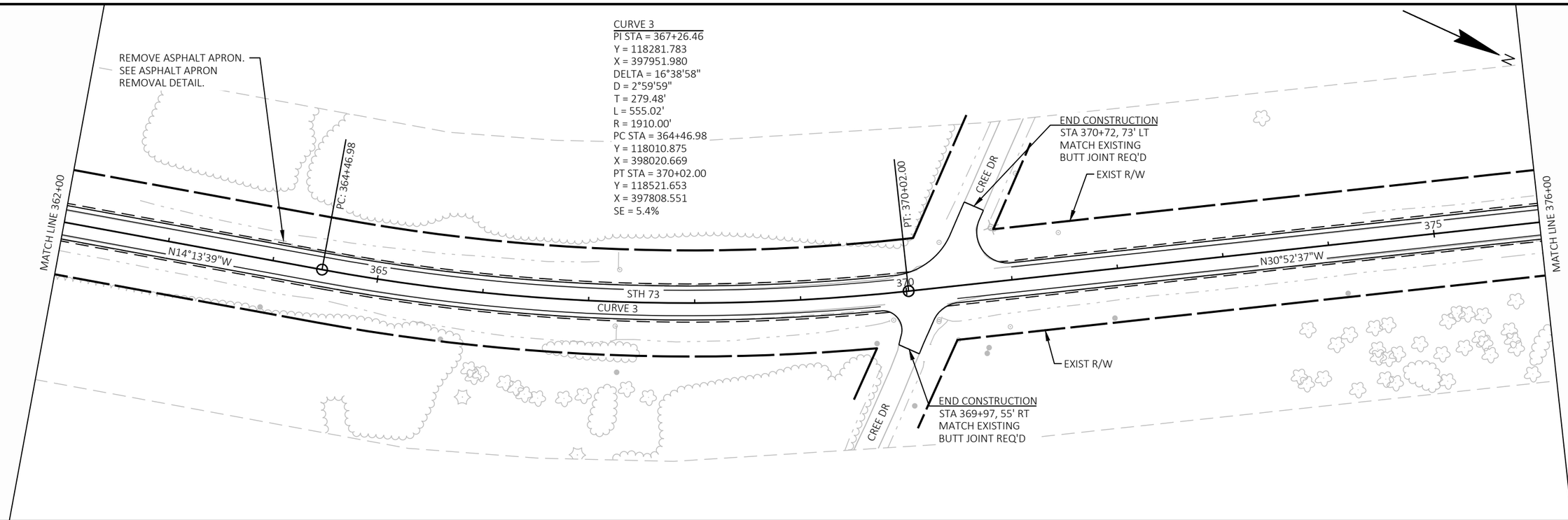

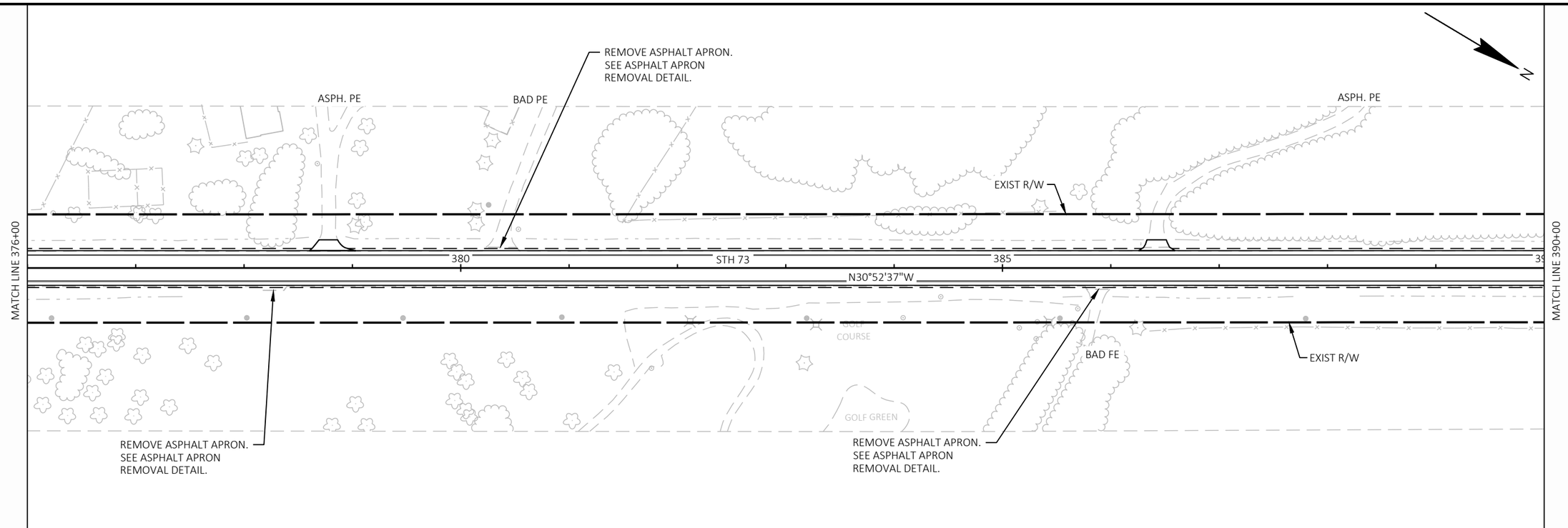

PROJECT NO: 6530-01-70	HWY: STH 73	COUNTY: WAUSHARA	PLAN SHEETS - STH 73	SHEET 75	E

FILE NAME : H:\PROJECTS\16000\16221\TECHDATA\65300100\SHEETS\050201-PN.DWG
LAYOUT NAME - 10
PLOT DATE : 10/20/2025 4:33 PM
PLOT BY : BRIAN GENSKOW
PLOT NAME :
PLOT SCALE : 1 IN:100 FT
WISDOT/CADDS SHEET 44

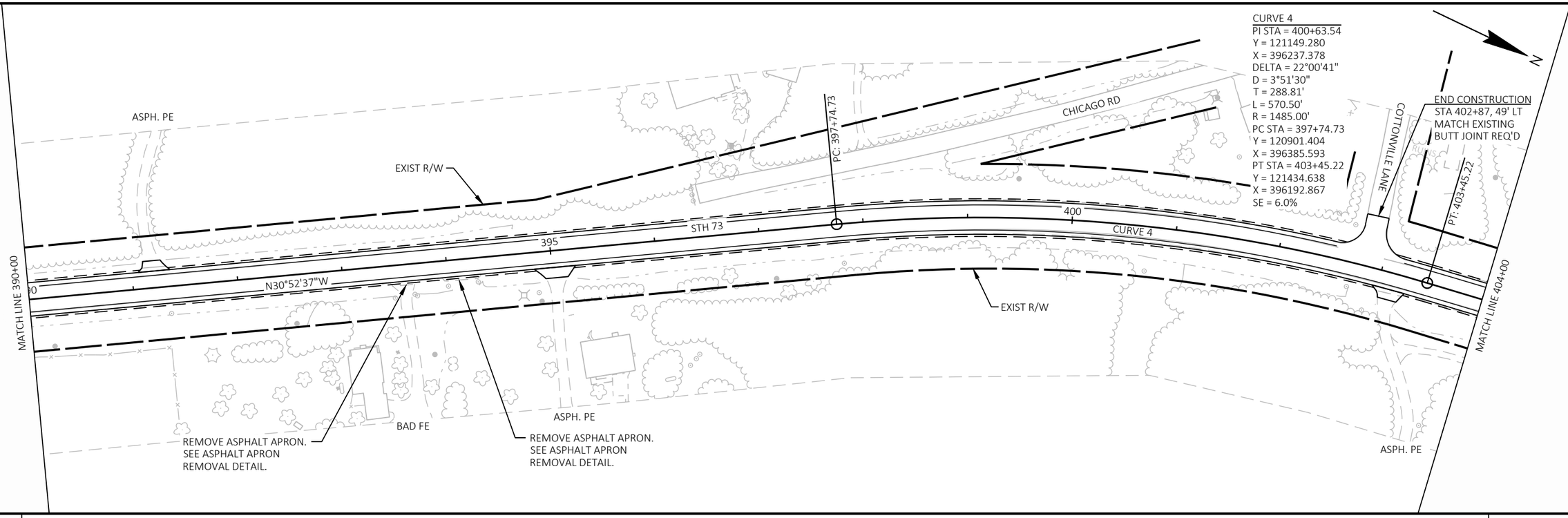

5

5

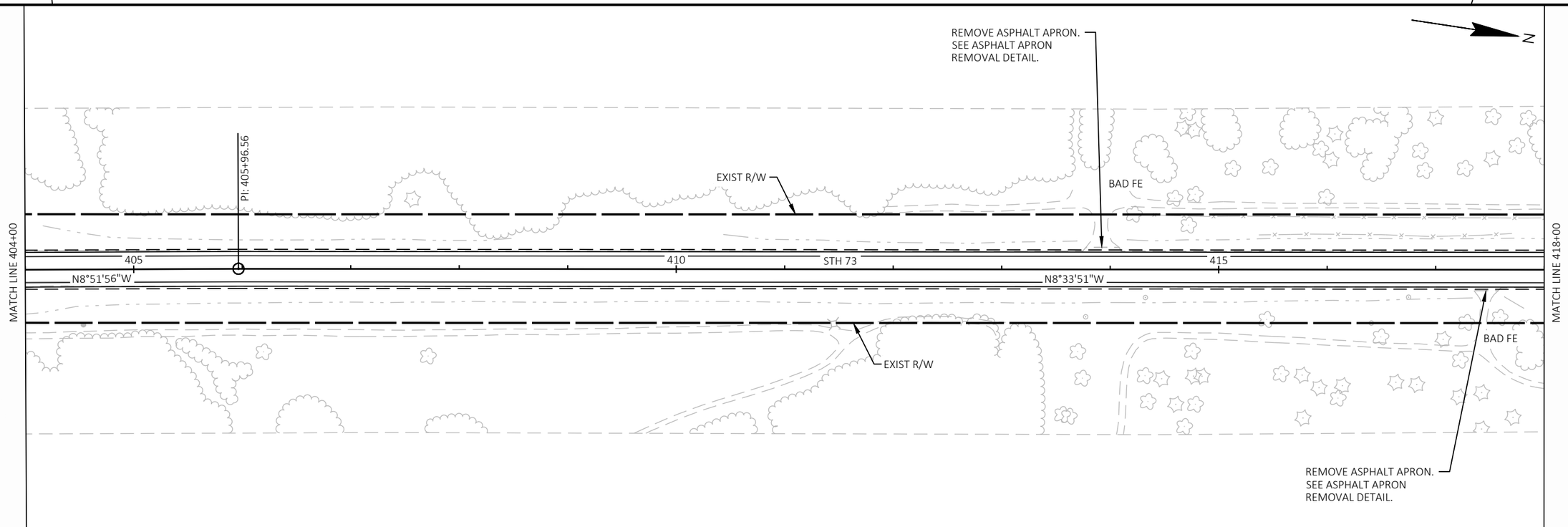

PROJECT NO: 6530-01-70	HWY: STH 73	COUNTY: WAUSHARA	PLAN SHEETS - STH 73	SHEET 76	E

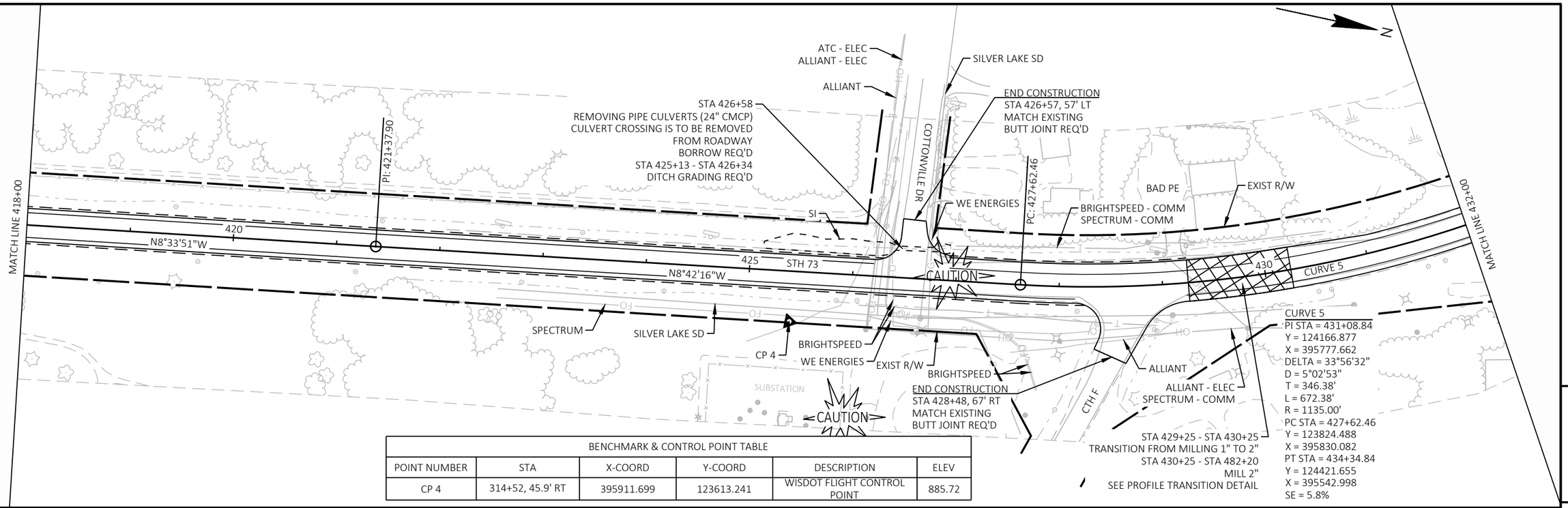

BENCHMARK & CONTROL POINT TABLE					
POINT NUMBER	STA	X-COORD	Y-COORD	DESCRIPTION	ELEV
CP 4	314+52, 45.9' RT	395911.699	123613.241	WISDOT FLIGHT CONTROL POINT	885.72

5

5

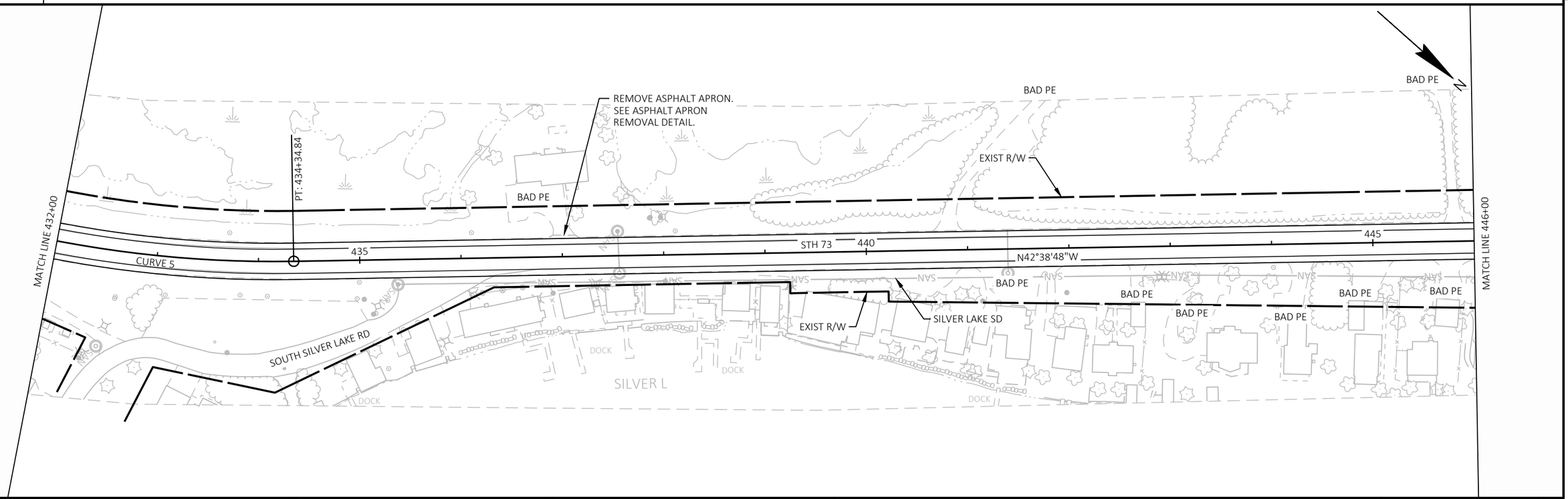

PROJECT NO: 6530-01-70	HWY: STH 73	COUNTY: WAUSHARA	PLAN SHEETS - STH 73	SHEET 77	E

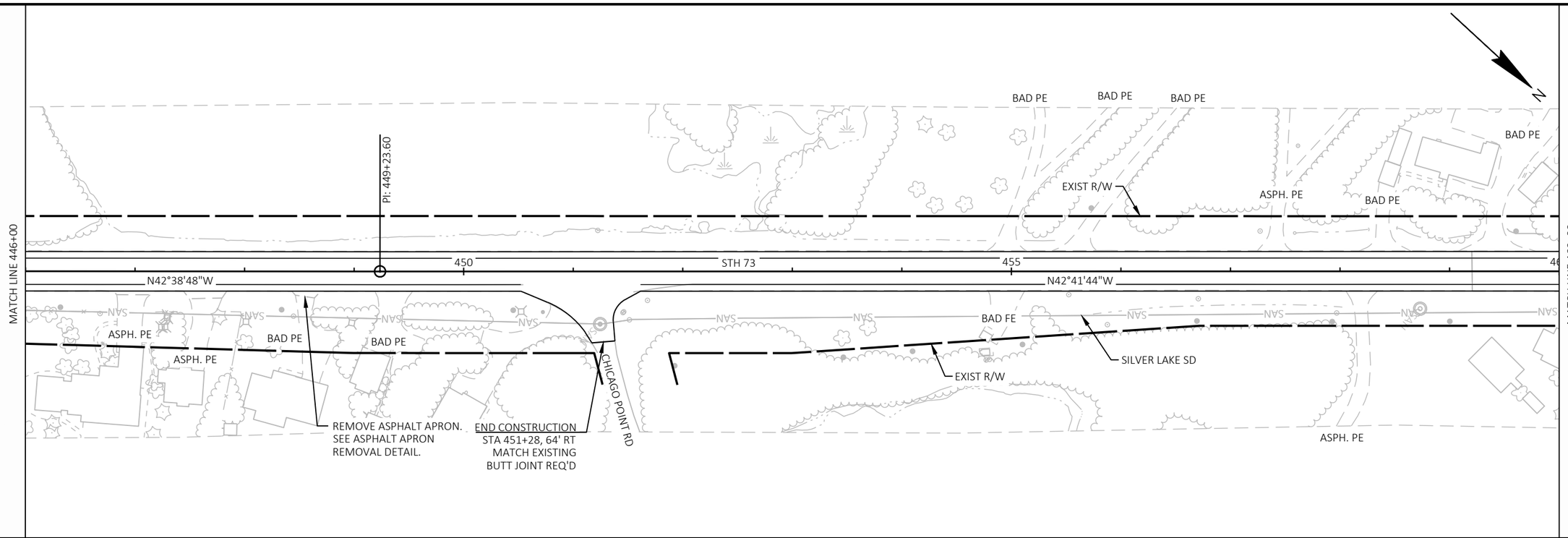

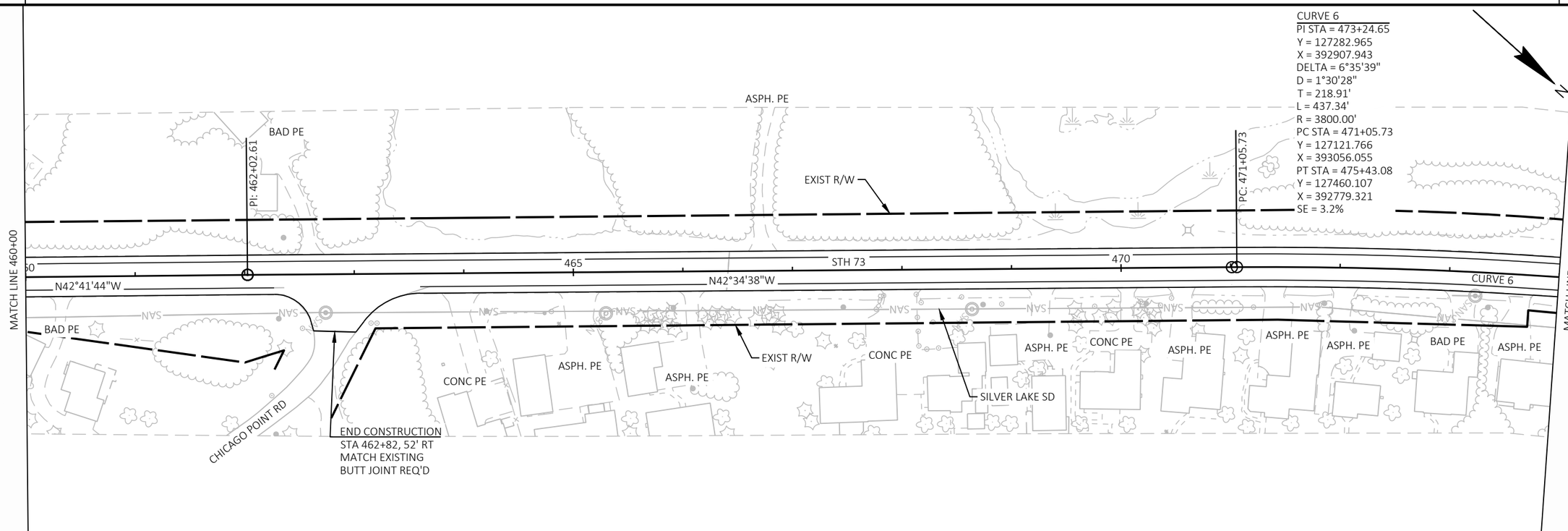

PROJECT NO: 6530-01-70	HWY: STH 73	COUNTY: WAUSHARA	PLAN SHEETS - STH 73	SHEET 78	E

FILE NAME : H:\PROJECTS\16000\16221\TECHDATA\65300100\SHEETS\050201-PN.DWG
LAYOUT NAME - 13
PLOT DATE : 10/20/2025 4:34 PM
PLOT BY : BRIAN GENSKOW
PLOT NAME :
PLOT SCALE : 1 IN:100 FT
WISDOT/CADDS SHEET 44

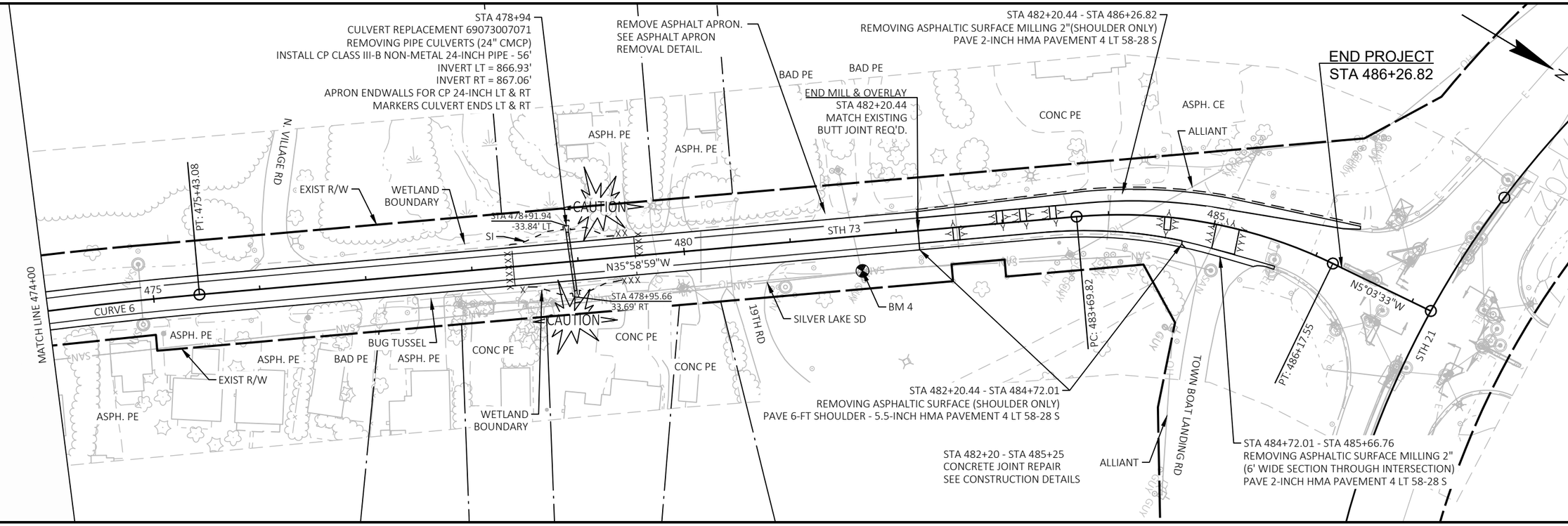

5

5

BENCHMARK & CONTROL POINT TABLE					
POINT NUMBER	STA	X-COORD	Y-COORD	DESCRIPTION	ELEV
BM 4	481+65, 33.0' RT	392440.488	127982.857	BM RR SPIKE	871.71

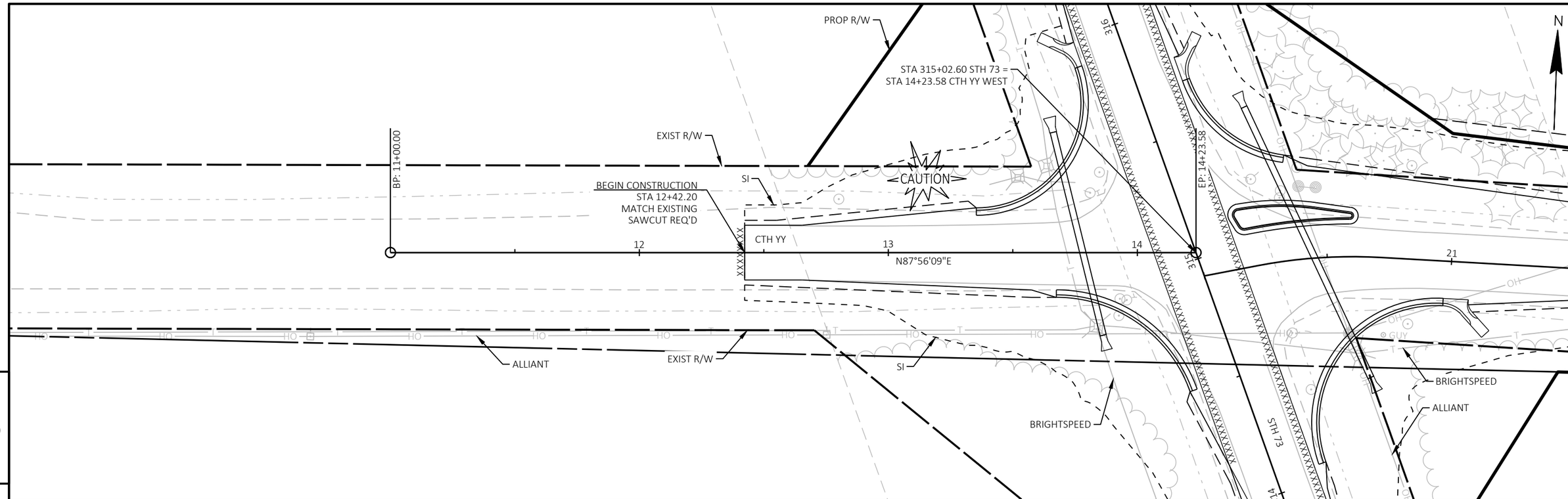

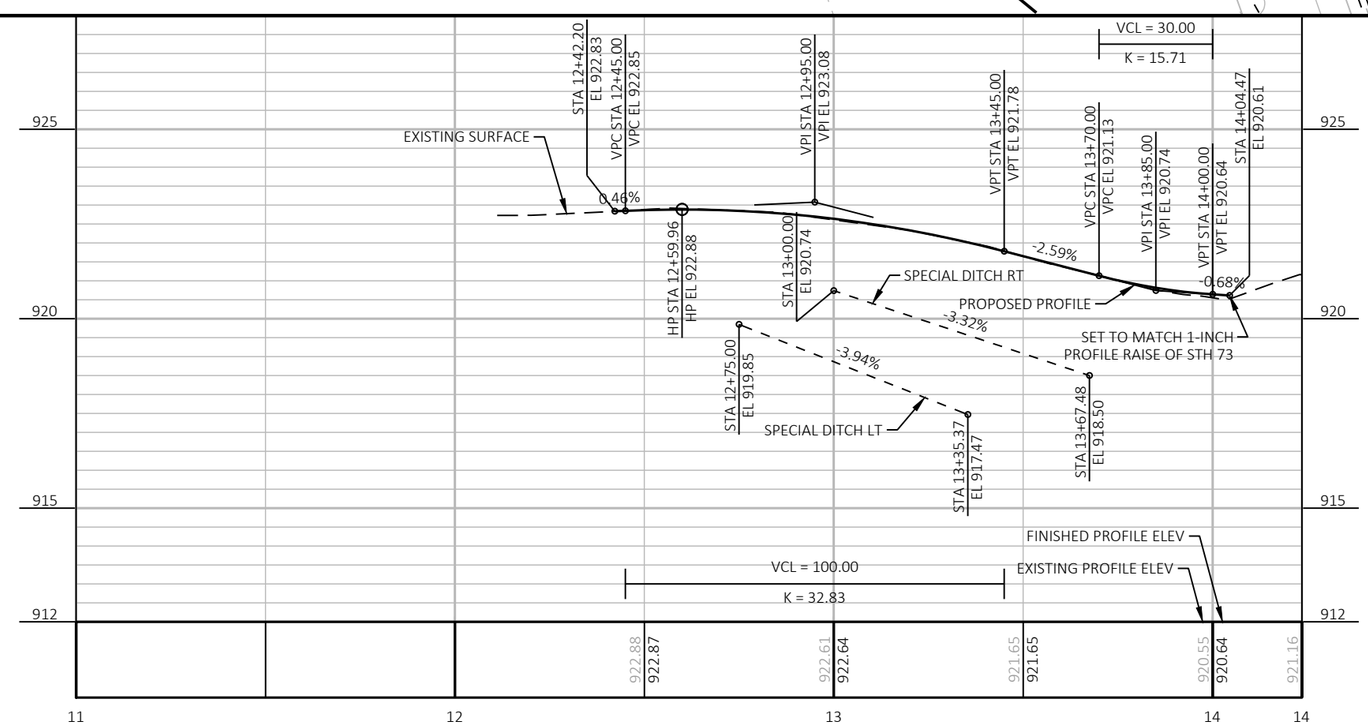

PROJECT NO: 6530-01-70	HWY: STH 73	COUNTY: WAUSHARA	PLAN AND PROFILE: CTH YY - WEST	SHEET 80	E

FILE NAME : H:\PROJECTS\16000\16221\TECHDATA\65300100\SHEETS\050102-PP.DWG
LAYOUT NAME - 01
PLOT DATE : 10/20/2025 4:34 PM
PLOT BY : BRIAN GENSKOW
PLOT NAME :
PLOT SCALE : 1 IN:40 FT

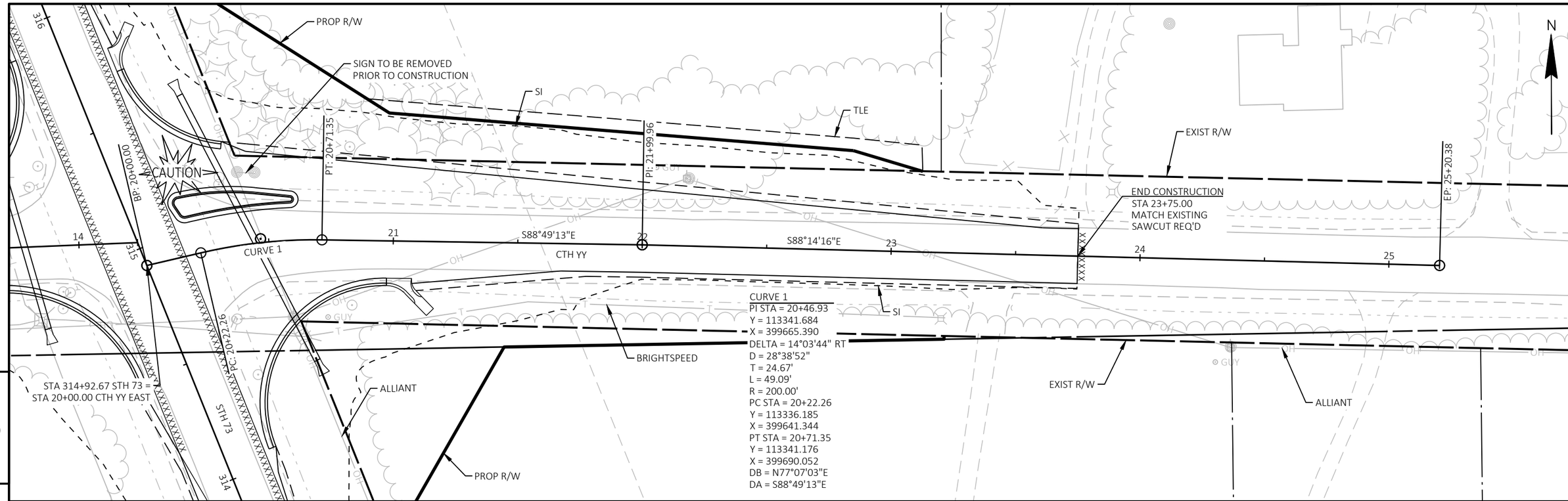

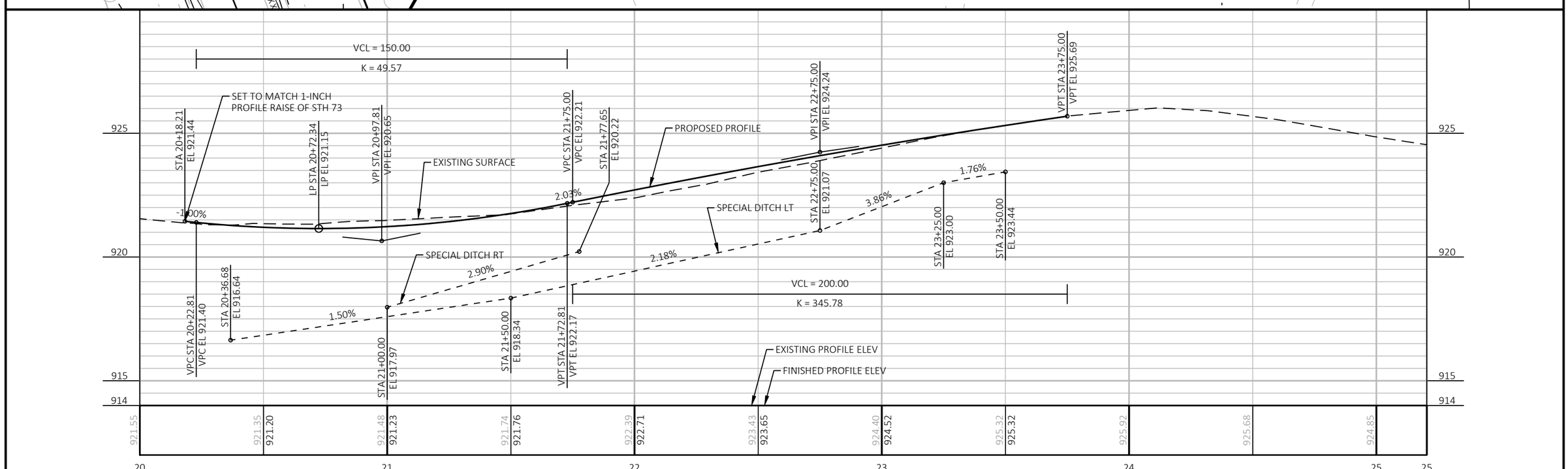

PROJECT NO: 6530-01-70	HWY: STH 73	COUNTY: WAUSHARA	PLAN AND PROFILE: CTH YY - EAST	SHEET 81	E

Standard Detail Drawing List

08D01-24A	CONCRETE CURB & GUTTER
08D01-24B	CONCRETE CURB, TIES AND CURB AND GUTTER APPLICATIONS
08D04-07	CONCRETE SURFACE DRAINS & ASPHALTIC FLUMES
08D05-22A	CURB RAMPS TYPES 1 AND 1-A
08D05-22B	CURB RAMPS TYPES 2 AND 3
08D05-22C	CURB RAMPS TYPES 4A AND 4A1
08D05-22D	CURB RAMPS TYPES 4B AND 4B1
08D05-22E	CURB RAMPS TYPES 5, 6, 7A, 7B & 8
08D05-22F	CURB RAMPS RADIAL DETECTABLE WARNING FIELD APPLICATIONS
08D05-22G	CURB RAMPS RECTANGULAR AND RADIAL DETECTABLE WARNING PLATES
08D22-01	DRIVEWAYS WITHOUT CURB & GUTTER RESURFACING PROJECTS RURAL
08E09-06	SILT FENCE
08E10-02	INLET PROTECTION TYPE A, B, C AND D
08E15-01	CULVERT PIPE CHECK
08F01-11	APRON ENDWALLS FOR CULVERT PIPE
08F04-08	JOINT TIES FOR CONCRETE PIPE AND CONCRETE COLLAR DETAIL
09A01-14B	AT-GRADE SIDE ROAD INTERSECTION, TYPE "A1" & "A2"
13A10-03A	SHOULDER RUMBLE STRIPS - ASPHALT
13A10-03G	SHOULDER AND EDGE LINE RUMBLE STRIPS - CROSSINGS, INTERSECTIONS, BRIDGES, DRIVEWAYS
13A10-03H	SHOULDER AND EDGE LINE RUMBLE STRIPS - RAILROAD, PASSING, CLIMBING AND BYPASS LANES
13A11-04A	CENTERLINE RUMBLE STRIPS - ASPHALT
13A11-04D	CENTERLINE RUMBLE STRIPS - INTERSECTIONS, DRIVEWAYS, BRIDGES, RAILROADS
13C09-17A	CONCRETE PAVEMENT REPAIR AND REPLACEMENT
13C09-17B	CONCRETE PAVEMENT REPAIR AND REPLACEMENT
13C09-17C	CONCRETE PAVEMENT REPAIR AND REPLACEMENT
13C19-03	HMA LONGITUDINAL JOINTS
14B29-01	SAFETY EDGE
15A03-02A	FLEXIBLE MARKER POST FOR CULVERT END
15A03-02B	FLEXIBLE MARKER POST FOR CULVERT END
15C02-09A	BARRICADES AND SIGNS FOR MAINLINE CLOSURES
15C02-09B	BARRICADES AND SIGNS FOR VARIOUS CLOSURES
15C02-09C	DETOUR SIGNING FOR MAINLINE CLOSURES
15C02-09H	MODIFIED ROUTE ASSEMBLY FOR DETOUR SIGNING
15C05-05	TRAFFIC CONTROL, ADVANCE WARNING SIGNS 40 M.P.H. OR LESS TWO-WAY UNDIVIDED ROAD OPEN TO TRAFFIC
15C08-24A	PERMANENT LONGITUDINAL PAVEMENT MARKINGS
15C08-24B	TEMPORARY LONGITUDINAL PAVEMENT MARKING
15C11-10B	CHANNELIZING DEVICES DRUMS, CONES, BARRICADES AND VERTICAL PANELS
15C12-09A	TRAFFIC CONTROL FOR LANE CLOSURE WITH FLAGGING OPERATION
15C12-09B	TRAFFIC CONTROL, LANE CLOSURE WITH AUTOMATED FLAGGER ASSISTANCE DEVICE
15C18-09B	PAVEMENT MARKINGS, MEDIAN ISLAND NOSE
15C18-09C	MEDIAN PAVEMENT MARKINGS DOUBLE ARROW WARNING SIGN PLACEMENT
15C19-10A	MOVING PAVEMENT MARKING OPERATION TWO-LANE TWO-WAY ROADWAY
15C33-05	STOP LINE AND CROSSWALK PAVEMENT MARKING
15C35-06A	PAVEMENT MARKING (INTERSECTIONS)
15C36-01	PARKING STALL MARKING
15D28-04	TRAFFIC CONTROL, WORK ON SHOULDER OR PARKING LANE, UNDIVIDED ROADWAY
15D30-11A	TRAFFIC CONTROL, PEDESTRIAN ACCOMMODATION
15D30-11B	TRAFFIC CONTROL, PEDESTRIAN ACCOMMODATION
15D30-11C	TRAFFIC CONTROL, PEDESTRIAN ACCOMMODATION
15D30-11D	TRAFFIC CONTROL, PEDESTRIAN ACCOMMODATION
15D30-11E	TRAFFIC CONTROL, PEDESTRIAN ACCOMMODATION
15D30-11F	TRAFFIC CONTROL, PEDESTRIAN ACCOMMODATION
15D30-11G	TRAFFIC CONTROL, PEDESTRIAN ACCOMMODATION
15D30-11H	TRAFFIC CONTROL, PEDESTRIAN ACCOMMODATION
15D30-11I	TRAFFIC CONTROL, PEDESTRIAN ACCOMMODATION
15D30-11J	TRAFFIC CONTROL, PEDESTRIAN ACCOMMODATION
15D30-11K	TRAFFIC CONTROL, PEDESTRIAN ACCOMMODATION
15D30-11L	TRAFFIC CONTROL, PEDESTRIAN ACCOMMODATION
15D39-03	TRAFFIC CONTROL, DROP-OFF SIGNING
15D44-02	TRAFFIC CONTROL, SIGNING ON ROADWAYS WITH MILLED SURFACES
15D51-01	TRAFFIC CONTROL, MOBILE OPERATIONS ON AN UNDIVIDED ROADWAY
16A02-01	GEODETIC SURVEY MONUMENT

6

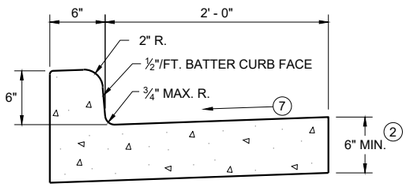

TYPES A (1) & D

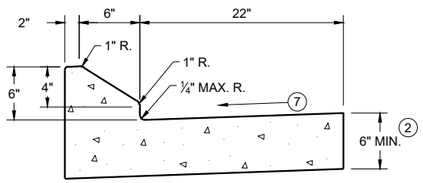

6" SLOPED CURB TYPES G (1) & J

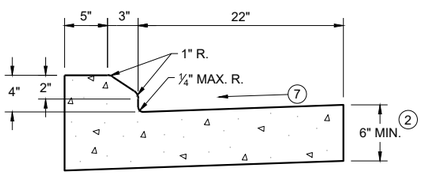

4" SLOPED CURB TYPES G (1) & J

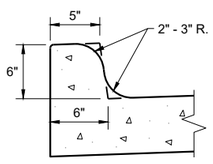

TYPES K (1) & L
(OPTIONAL CURB SHAPE)

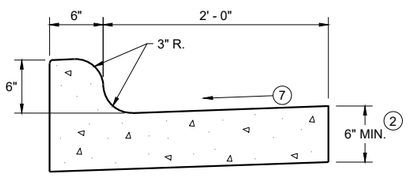

TYPES K (1) & L

CONCRETE CURB AND GUTTER 30"

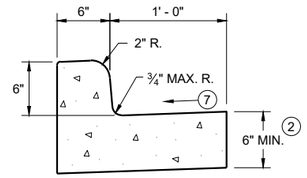

TYPES A (1) & D

CONCRETE CURB AND GUTTER 18"

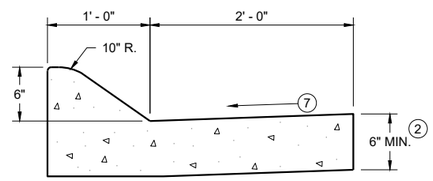

6" SLOPED CURB TYPES A (1) & D

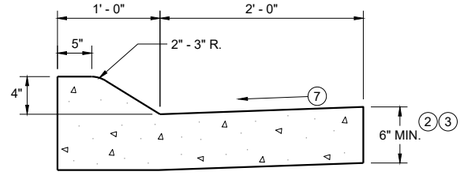

4" SLOPED CURB TYPES A (1) & D

CONCRETE CURB AND GUTTER 36"

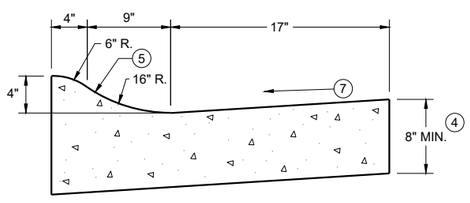

4" SLOPED CURB TYPES R (1) & T
CONCRETE CURB AND GUTTER 30"

TBT & TBTT	X
30"	22"
36"	28"

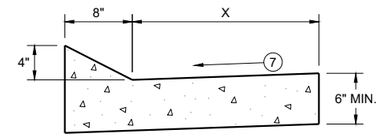

TYPES TBT & TBTT (1)

CONCRETE CURB AND GUTTER

PAVEMENT THICKNESS AND MAXIMUM CONCRETE PANEL WIDTH TABLE

PAVEMENT THICKNESS	MAXIMUM PANEL WIDTH
LESS THAN 10"	12'
10" & ABOVE	15'

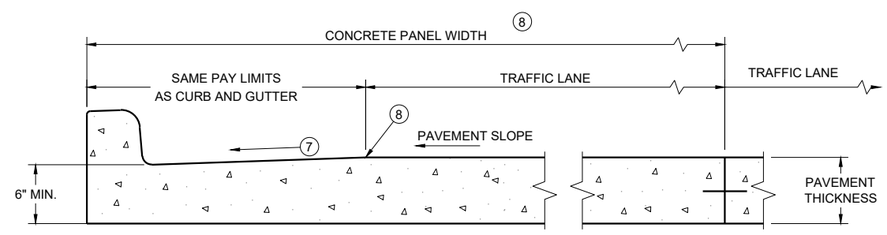

PARTIAL SECTION OF PAVEMENT WITH INTEGRAL CURB AND GUTTER *

* BIKE LANE IS NOT SHOWN

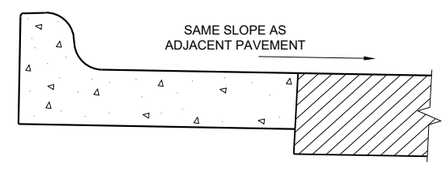

REVERSE SLOPE GUTTER (6)
(TYPICAL FOR ALL CURB & GUTTER TYPES)

GENERAL NOTES

DETAILS OF CONSTRUCTION AND WORKMANSHIP NOT SHOWN ON THIS DRAWING SHALL CONFORM TO THE PERTINENT REQUIREMENTS OF THE CONTRACT.

PAVEMENT TIES AND TIE BARS SHALL BE EPOXY COATED IN CONFORMANCE WITH SUBSECTION 505.2.6.2 OF THE STANDARD SPECIFICATIONS.

INTEGRAL CURB AND GUTTER SHALL CONFORM TO THE DETAILS SHOWN FOR CONCRETE CURB AND GUTTER INCLUDING THE TRANSVERSE GUTTER SLOPE.

UNLESS OTHERWISE SHOWN ON THE TYPICAL CROSS SECTIONS, THE BASE AGGREGATE AND COMMON EXCAVATION LIMITS ARE 2' - 0" BEHIND THE BACK OF CURBS.

(1) TIE BARS ARE REQUIRED FOR CURB AND GUTTERS TYPES A, G, K, R, AND TBTT.

(2) THE BOTTOM OF CURB AND GUTTER MAY BE CONSTRUCTED EITHER LEVEL OR PARALLEL TO THE SLOPE OF THE SUBGRADE OR BASE AGGREGATE PROVIDED A 6" MINIMUM GUTTER THICKNESS IS MAINTAINED.

(3) USE 8" MINIMUM GUTTER THICKNESS WHEN USED WITH AN ADJACENT CONCRETE TRUCK APRON PLACED BEHIND BACK OF CURB.

(4) THE BOTTOM OF CURB AND GUTTER MAY BE CONSTRUCTED EITHER LEVEL OR PARALLEL TO THE SLOPE OF THE SUBGRADE OR BASE AGGREGATE PROVIDED A 8" MINIMUM GUTTER THICKNESS IS MAINTAINED.

(5) UNLESS OTHERWISE NOTED, FOR STAKING PURPOSES THE FACE OF CURB IS 6" FROM THE BACK OF CURB.

(6) WHEN REVERSE SLOPE GUTTER IS REQUIRED, THE LOCATION(S) WILL BE SHOWN ELSEWHERE IN THE PLAN.

(7) USE 4% GUTTER CROSS SLOPE UNLESS OTHERWISE NOTED IN THE PLANS.

(8) INCLUDE LONGITUDINAL JOINT AND TIE BARS ALONG LANE EDGE WHEN CONCRETE PANEL WIDTH EXCEEDS THE MAXIMUM WIDTH PER TABLE BELOW. LONGITUDINAL JOINT(S) ARE NOT ALLOWED WITHIN TRAFFIC LANES AND BIKE LANES. LONGITUDINAL JOINT MAY BE SAWED.

(9) SLOPE TO BE REVERSE SLOPE MATCHING THE SLOPE OF THE PAVEMENT AND THE CIRCULATORY ROADWAY

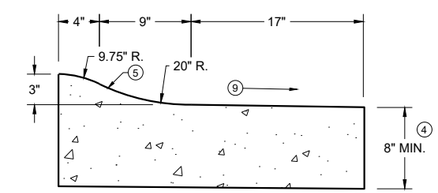

3" SLOPED CURB TYPES R (1) & T

CONCRETE CURB AND GUTTER

STATE OF WISCONSIN
DEPARTMENT OF TRANSPORTATION

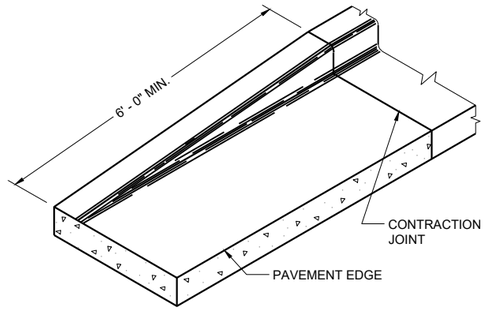

END SECTION CURB AND GUTTER

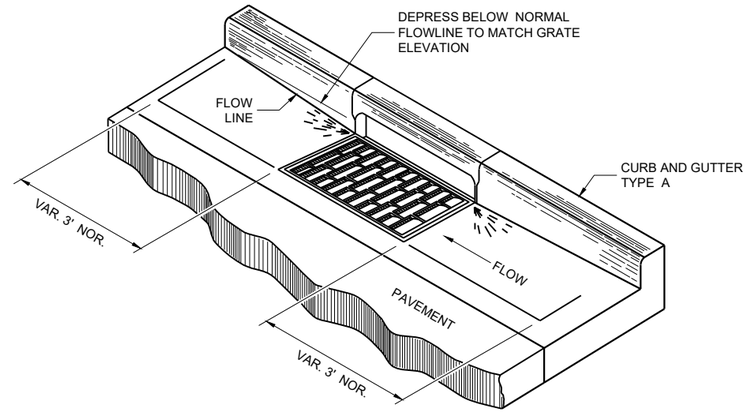

DETAIL OF CURB AND GUTTER AT INLETS

(TYPICAL H INLET COVER SHOWN)

GENERAL NOTES

DETAILS OF CONSTRUCTION AND WORKMANSHIP NOT SHOWN ON THIS DRAWING SHALL CONFORM TO THE PERTINENT REQUIREMENTS OF THE CONTRACT.

PAVEMENT TIES AND TIE BARS SHALL BE EPOXY COATED IN CONFORMANCE WITH SUBSECTION 505.2.6.2 OF THE STANDARD SPECIFICATIONS.

UNLESS OTHERWISE SHOWN ON THE TYPICAL CROSS SECTIONS, THE BASE AGGREGATE AND COMMON EXCAVATION LIMITS ARE 2' - 0" BEHIND THE BACK OF CURBS.

(1) TIE BARS ARE REQUIRED FOR CURB AND GUTTERS TYPES A, G, K, R, AND TBTT.

(2) THE BOTTOM OF CURB AND GUTTER MAY BE CONSTRUCTED EITHER LEVEL OR PARALLEL TO THE SLOPE OF THE SUBGRADE OR BASE AGGREGATE PROVIDED A 6" MINIMUM GUTTER THICKNESS IS MAINTAINED.

(10) REFER TO SDD 08D18 AND 08D19 FOR ADDITIONAL DRIVEWAY ENTRANCE CURB DETAILS.

(11) PLACE 1" THICK EXPANSION JOINT MATERIAL BETWEEN VERTICAL FACE CURB TYPES EXTENDING FROM THE TOP OF CURB TO 1 INCH BELOW THE ADJOINING CONCRETE SURFACE. RIGID CONCRETE STRUCTURES INCLUDE RAISED CONCRETE MEDIANS, CONCRETE SAFETY ISLANDS, SPLITTER ISLANDS, OR LOCATIONS IDENTIFIED ON THE PLANS.

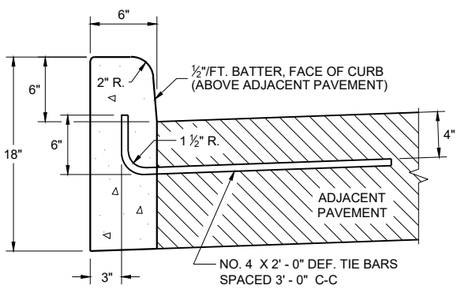

TYPES A (1) & D

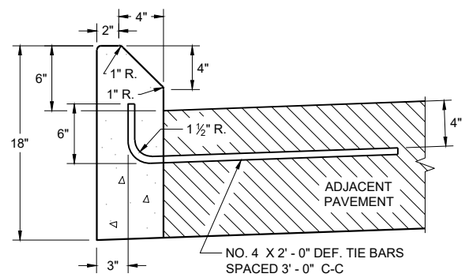

TYPES G (1) & J

CONCRETE CURB

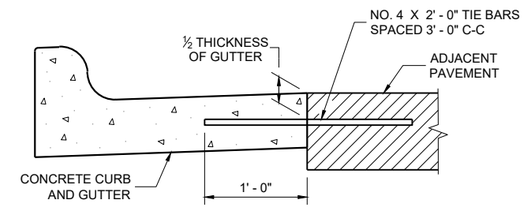

TYPICAL TIE BAR LOCATION (1)

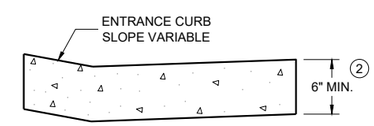

DRIVEWAY ENTRANCE CURB (10)

(WHEN DIRECTED BY THE ENGINEER)

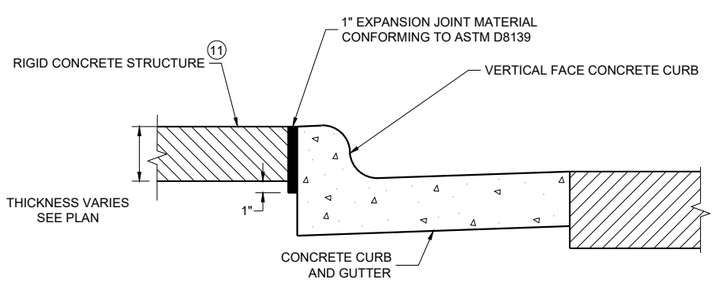

EXPANSION JOINT DETAIL FOR VERTICAL CURB ABUTTING A RIGID STRUCTURE (11)

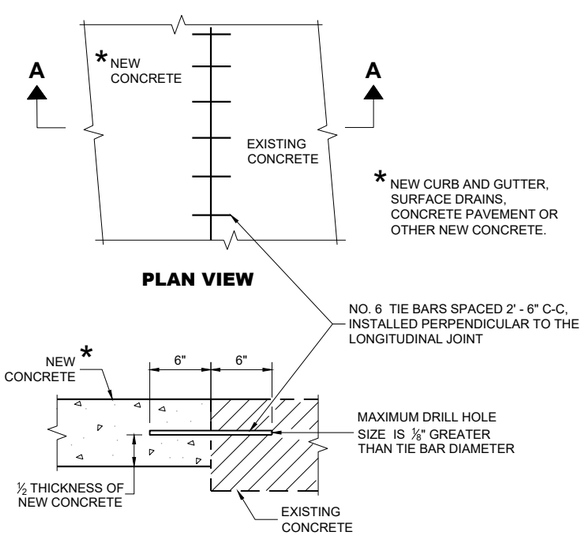

PLAN VIEW

SECTION A - A

TIE BARS DRILLED INTO EXISTING PAVEMENT

CONCRETE CURB, TIES AND CURB AND GUTTER APPLICATIONS

STATE OF WISCONSIN
DEPARTMENT OF TRANSPORTATION

APPROVED
February 2025 — DATE
/S/ Rodnery Taylor — ROADWAY STANDARDS DEVELOPMENT UNIT SUPERVISOR

FHWA

NOTE: TAPER CURB ENDS TO GUTTER IN 1' - 0"

ASPHALTIC FLUME

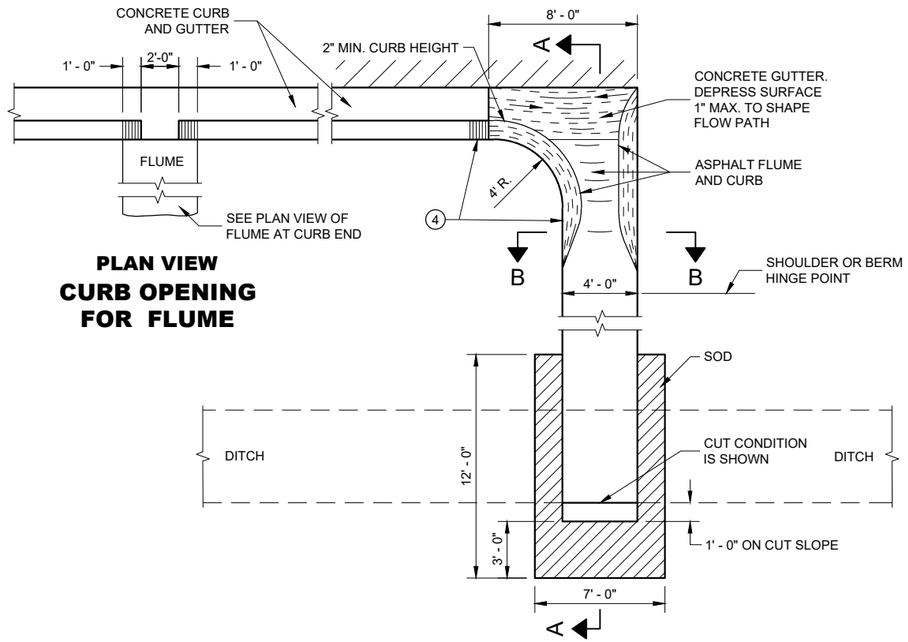

PLAN VIEW
CURB OPENING FOR FLUME

PLAN VIEW
FLUME AT CURB END

GENERAL NOTES

DETAILS OF CONSTRUCTION, MATERIALS AND WORKMANSHIP NOT SHOWN ON THIS DRAWING SHALL CONFORM TO PERTINENT REQUIREMENTS OF THE STANDARD SPECIFICATIONS AND APPLICABLE SPECIAL PROVISIONS.

4" X 4" - W3.0 X W3.0 CONCRETE REINFORCEMENT SHALL BE IN ACCORDANCE WITH AASHTO SPECIFICATION M55.

1. JOINTS SHALL BE ⅛" TO ¼" WIDE BY 1½" DEEP AND SPACED AT UNIFORM INTERVALS OF APPROXIMATELY 4 FEET.
2. GEOTEXTILE TYPE "R" SHALL UNDERLAY THE FULL LENGTH AND WIDTH OF THE CONCRETE SURFACE DRAIN AND RIPRAP.
3. CONCRETE SURFACE DRAIN WITHOUT CURB AND GUTTER MAY BE USED ON BACKSLOPES WHEN SPECIFIED.
4. ANGLE OF FLUME IN RELATION TO BACK OF CURB TO BE CONSTRUCTED PER THE PLAN DETAILS OR AS DIRECTED BY THE ENGINEER. ANGLE OF FLUME MAY BE OTHER THAN 90 DEGREES AS SHOWN.

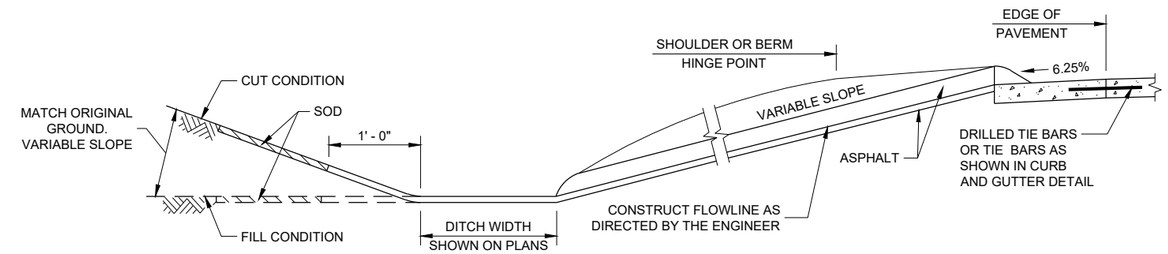

SECTION A - A

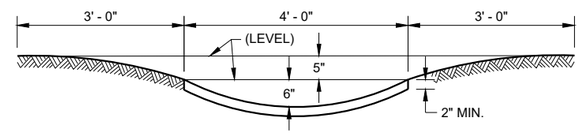

SECTION B - B

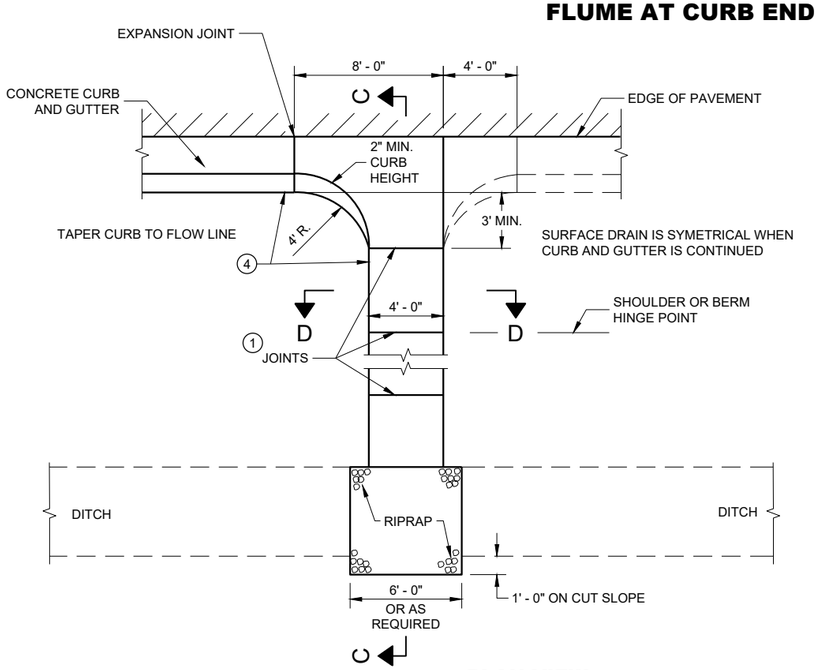

PLAN VIEW
CONCRETE SURFACE DRAIN

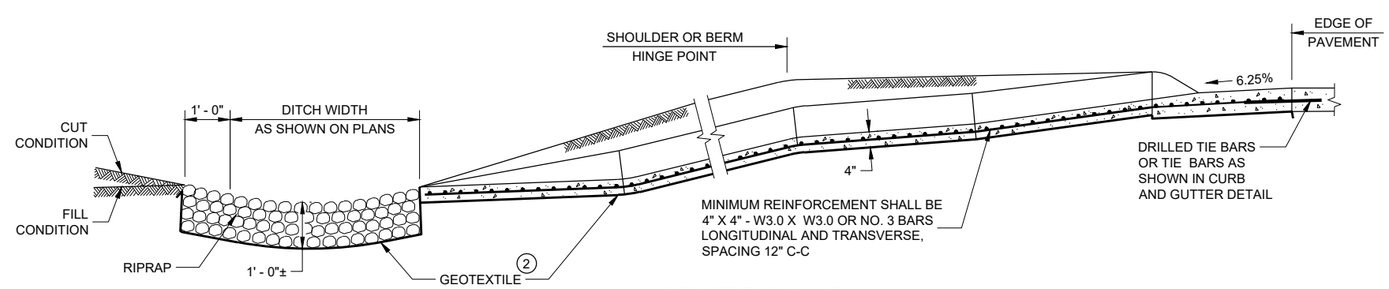

SECTION C - C

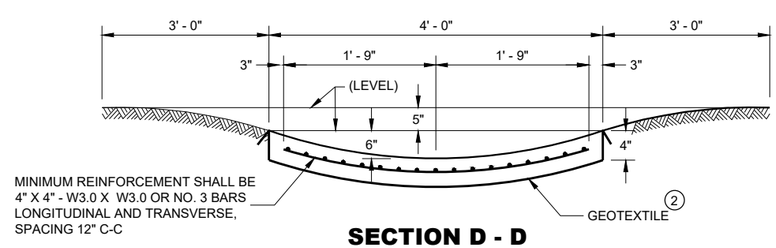

SECTION D - D

CONCRETE SURFACE DRAINS AND ASPHALTIC FLUMES

STATE OF WISCONSIN
DEPARTMENT OF TRANSPORTATION

APPROVED
May 2023 — DATE
/S/ Rodney Taylor — ROADWAY STANDARDS DEVE ENGINEER
FHWA

6

SDD 08D04 - 07

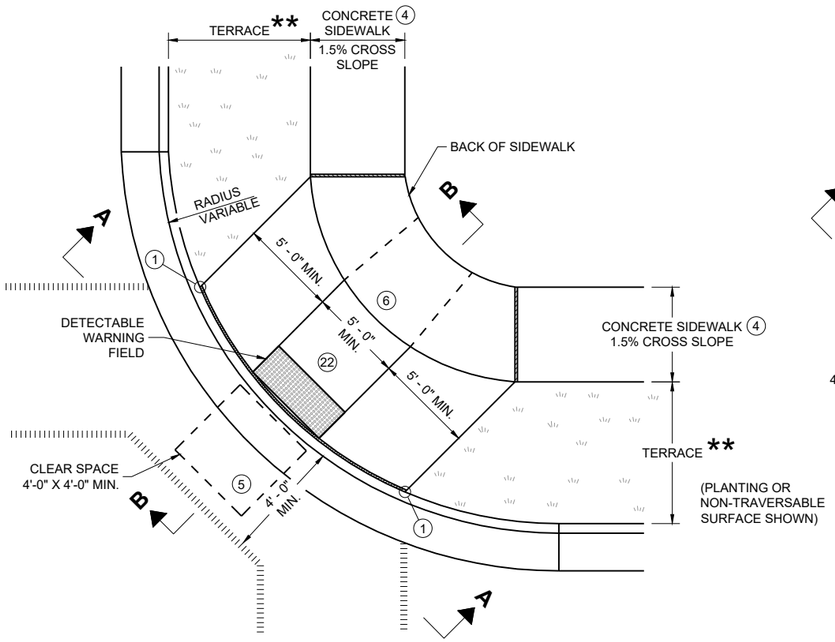

PLAN VIEW

CURB RAMP TYPE 1

(CENTER OF CORNER RADIUS)

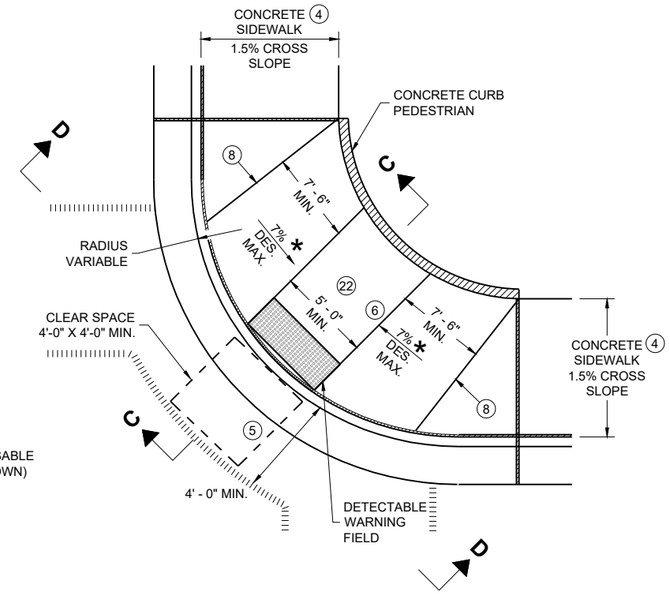

PLAN VIEW

CURB RAMP TYPE 1 - A

(NO TERRACE)

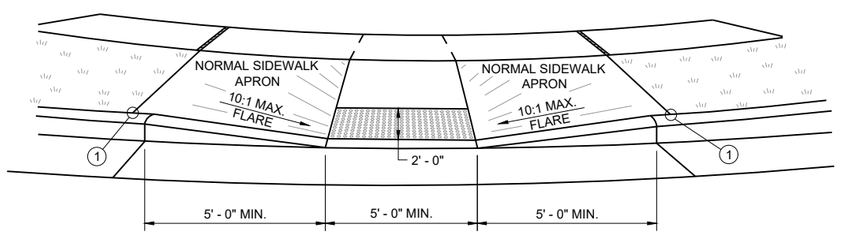

VIEW A - A FOR TYPE 1

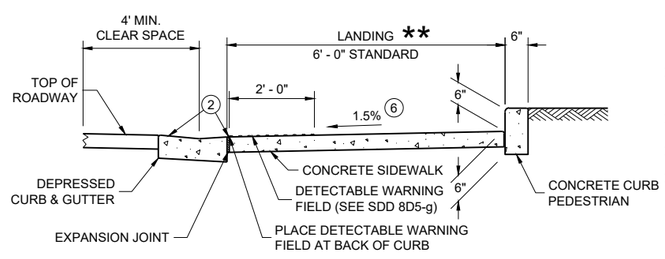

SECTION C - C FOR TYPE 1 - A

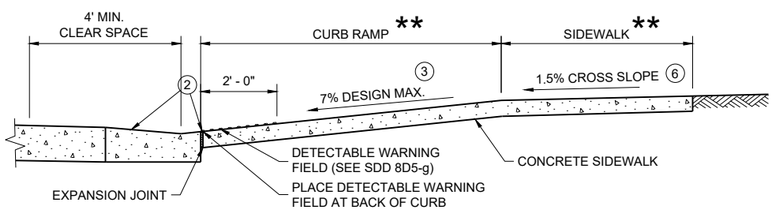

SECTION B - B FOR TYPE 1

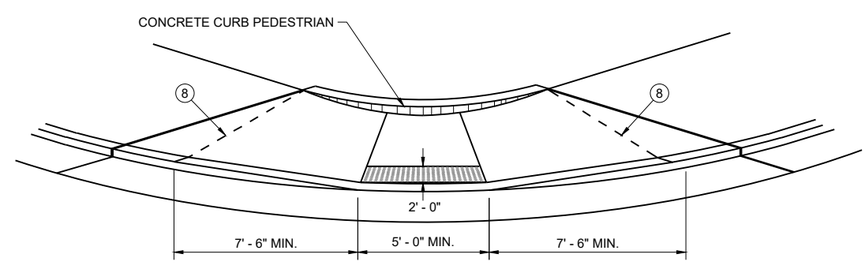

VIEW D - D FOR TYPE 1 - A

GENERAL NOTES

AVOID PLACING DRAINAGE STRUCTURES, JUNCTION BOXES OR OTHER OBSTRUCTIONS IN FRONT OF CURB RAMP ACCESS AREAS.

DETAILS OF CONSTRUCTION, MATERIALS AND WORKMANSHIP NOT SHOWN ON THIS DRAWING SHALL CONFORM TO THE PERTINENT REQUIREMENTS OF THE STANDARD SPECIFICATIONS AND THE APPLICABLE SPECIAL PROVISIONS.

WHEN NECESSARY, THE SIDEWALK ELEVATION MAY BE LOWERED TO MEET THE HIGH POINT ON THE CURB RAMP.

TYPE 1 CURB RAMPS SHALL HAVE A NORMAL SIDEWALK APRON AND CURB ON BOTH SIDES OF CURB RAMP.

DETECTABLE WARNING FILED SHALL BE MEASURED AND PAID BY THE SQUARE FOOT AS "CURB RAMP DETECTABLE WARNING FIELD". THE CONCRETE PEDESTRIAN CURB, IF NEEDED, SHALL BE MEASURED AND PAID BY THE LINEAR FOOT AS "CONCRETE CURB PEDESTRIAN". CONCRETE SIDEWALK IN THE CURB RAMP AREA SHALL BE MEASURED AND PAID BY THE SQUARE FOOT AS CONCRETE SIDEWALK, INCLUDING THE AREA UNDER THE DETECTABLE WARNING FIELD.

SELECT CURB RAMP DETECTABLE WARNING FIELD MATERIALS AND DEVICES FROM THE DEPARTMENT'S APPROVED MATERIALS LIST. THE COLOR OF THE DETECTABLE WARNING FIELD IS SPECIFIED ELSEWHERE AND IS INCIDENTAL TO THE BID ITEM OF "CURB RAMP DETECTABLE WARNING FIELD"

DETECTABLE WARNING FIELDS THAT ARE INSTALLED AS A GROUP OR SIDE BY SIDE, SHALL BE FROM THE SAME MANUFACTURER.

SURFACE TEXTURE OF THE RAMP SHALL BE OBTAINED BY COARSE BROOMING TRANSVERSE TO THE SLOPE OF THE CURB RAMP.

(1) THIS POINT IS AN EXTENSION OF OUTSIDE EDGE OF APPROACHING SIDEWALK WHERE IT MEETS THE BACK OF CONCRETE CURB. POINT LOCATION MAY BE ADJUSTED TO ALIGN WITH BEGINNING OF FULL-HEIGHT CURB IF THIS DISTANCE IS SHORT.

(2) GRADE CHANGE BETWEEN GUTTER COUNTER SLOPE AND THE CURB RAMP SLOPE IS DESIRABLY 11% OR LESS AND SHALL NOT EXCEED 13.3%. TYPICAL GUTTER COUNTER SLOPE IS 4% BUT MAY BE MODIFIED TO FIT FIELD CONDITIONS. PROVIDE LONGITUDINAL DRAINAGE AROUND CURB AND AWAY FROM CURB RAMP. NO VERTICAL LIPS OR DISCONTINUITIES ARE ALLOWED. SLOPE OF CURB HEAD OPENING SHALL MATCH THE RAMP SLOPE, MINIMALLY 1.5%, DESIRABLY 7% OR LESS, AND SHALL NOT EXCEED A MAXIMUM OF 8.3%. WHEN ADJACENT TO 1.5% LANDING, CONSTRUCT CURB HEAD OPENING AT 1.5% IN THE DIRECTION OF PEDESTRIAN TRAVEL.

(3) MAXIMUM 8.3% CURB RAMP SLOPE IS ALLOWABLE WITH GUTTER COUNTER SLOPE OF 5% MAXIMUM AND A 13.3% MAXIMUM GRADE CHANGE.

(4) ±0.5% CONSTRUCTION TOLERANCE IN SIDEWALK CROSS SLOPE. THE SIDEWALK CROSS SLOPE SHALL NOT EXCEED 2.1% WITHOUT PRIOR APPROVAL FROM THE ENGINEER.

(5) PROVIDE A CLEAR SPACE IN THE STREET AND GUTTER AREA. WHEN THE GUTTER CROSS SLOPE EXCEEDS 2.1%, CONSTRUCT THE CLEAR SPACE IN THE STREET AREA AND THE 4 FOOT WIDTH IS MEASURED FROM THE FLANGE LINE. FOR RECONSTRUCTION AND MODERNIZATION PROJECTS THE CLEAR SPACE SLOPE PARALLEL TO THE CURBLINE SHOULD BE 2.1% MAX FOR CROSSINGS THAT ARE STOP AND YIELD CONTROLLED, AND 5% MAX FOR THOSE THAT ARE SIGNAL CONTROLLED. FOR PERPETUATION AND REHABILITATION PROJECTS THE SLOPE OF THE CLEAR SPACE PARALLEL TO THE CURBLINE WILL MATCH THE ROADWAY LONGITUDINAL SLOPE. THE SLOPE OF THE CLEAR SPACE PERPENDICULAR TO THE CURBLINE WILL MATCH THE ROADWAY CROSS SLOPE BUT SHOULD NOT EXCEED 5% UNLESS THE ROADWAY IS SUPERELEVATED (WHEN SUPERELEVATED THE ROADWAY CROSS SLOPE SHOULD MATCH THE SUPERELEVATION).

(6) PROVIDE A 5 FOOT BY 5 FOOT LANDING. SLOPE PERPENDICULAR TO CURB SHALL BE 2.1% MAXIMUM. SLOPE PARALLEL TO CURB SHALL MATCH THE CURB AND GUTTER LONGITUDINAL SLOPE.

(8) PROVIDE GRADE BREAK PERPENDICULAR TO DIRECTION OF WHEELCHAIR TRAVEL.

(17) A MAXIMUM 2-INCH CONCRETE BORDER IS PERMITTED ALONG ALL SIDES OF THE DETECTABLE WARNING FIELD SURFACE.

(22) THE ENTIRE RAMP SHALL BE A PLANAR SURFACE. DO NOT WARP THE RUNNING SLOPE OR CROSS SLOPE OF THE RAMP. WARPING OF THE SIDEWALK CROSS SLOPE SHALL TAKE PLACE BETWEEN THE LANDING AND MATCH POINT.

LEGEND

- ½" EXPANSION JOINT SIDEWALK
- CONTRACTION JOINT FIELD LOCATED
- PAVEMENT MARKING CROSSWALK (WHITE)
- * MAXIMUM 8.3%
- ** WIDTH SHOWN ELSEWHERE IN THE PLANS

CURB RAMPS TYPE 1 AND 1-A

STATE OF WISCONSIN
DEPARTMENT OF TRANSPORTATION

6

SDD 08D05-22a

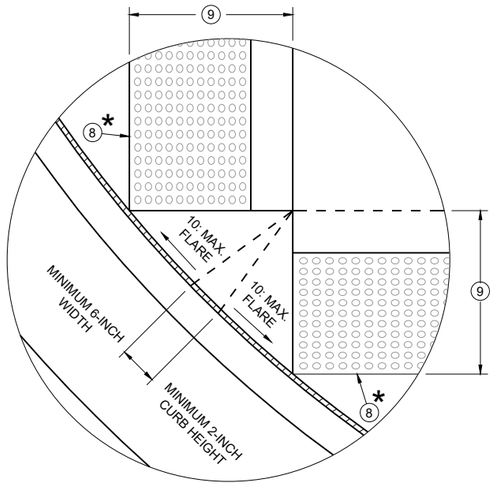

DETAIL A

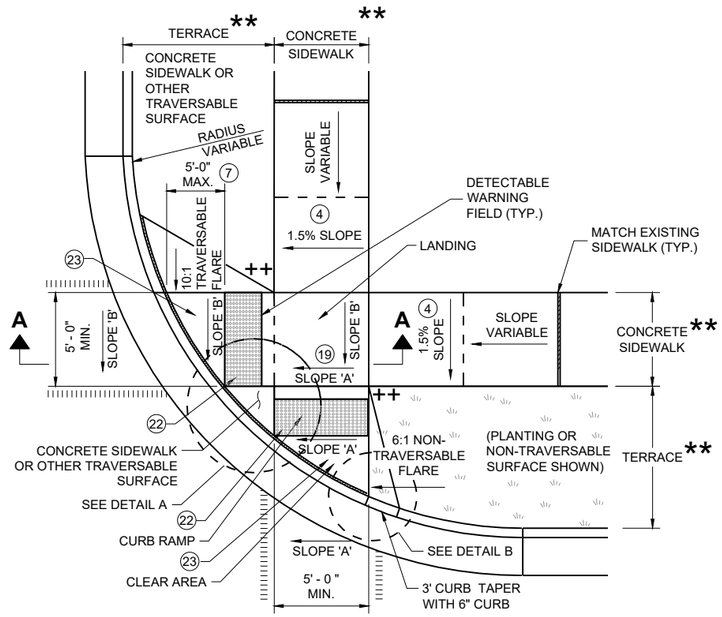

PLAN VIEW

CURB RAMP TYPE 2

(CENTER OF CORNER RADIUS)

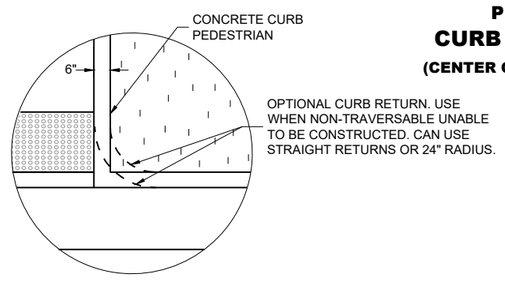

DETAIL B

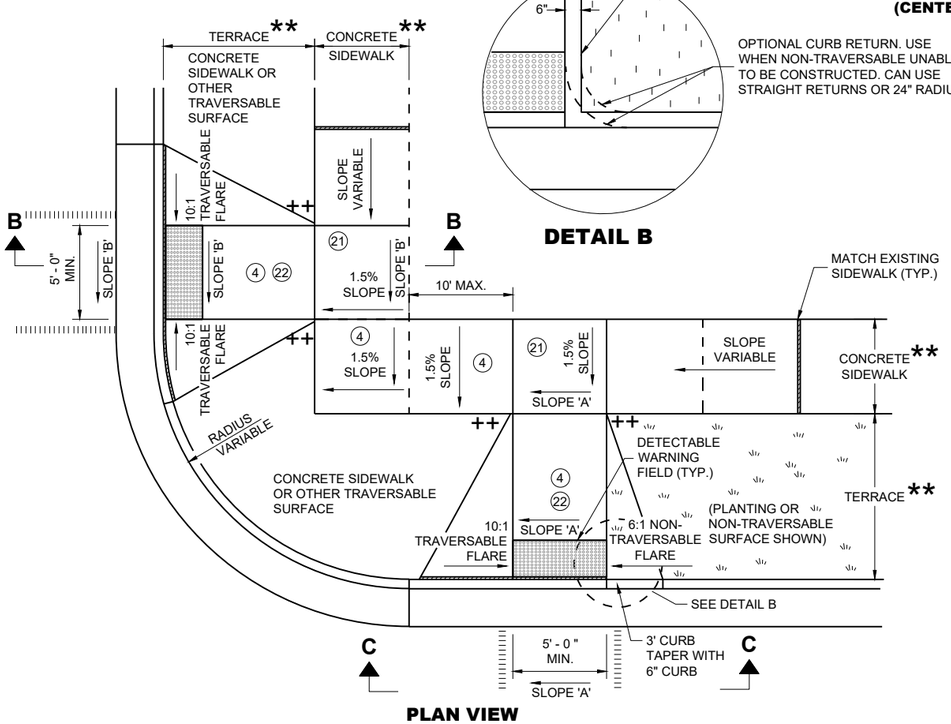

PLAN VIEW

CURB RAMP TYPE 3

(OUTSIDE OF CROSSWALK AREA)

GENERAL NOTES

AVOID PLACING DRAINAGE STRUCTURES, JUNCTION BOXES OR OTHER OBSTRUCTIONS IN FRONT OF CURB RAMP ACCESS AREAS.

DETAILS OF CONSTRUCTION, MATERIALS AND WORKMANSHIP NOT SHOWN ON THIS DRAWING SHALL CONFORM TO THE PERTINENT REQUIREMENTS OF THE STANDARD SPECIFICATIONS AND THE APPLICABLE SPECIAL PROVISIONS.

DETECTABLE WARNING FIELDS THAT ARE INSTALLED AS A GROUP OR SIDE BY SIDE SHALL BE FROM THE SAME MANUFACTURER.

(2) GRADE CHANGE BETWEEN GUTTER COUNTER SLOPE AND THE CURB RAMP SLOPE IS DESIRABLY 11% OR LESS AND SHALL NOT EXCEED 13.3%. TYPICAL GUTTER COUNTER SLOPE IS 4% BUT MAY BE MODIFIED TO FIT FIELD CONDITIONS. PROVIDE LONGITUDINAL DRAINAGE AROUND CURB AND AWAY FROM CURB RAMP. NO VERTICAL LIPS OR DISCONTINUITIES ARE ALLOWED. SLOPE OF CURB HEAD OPENING SHALL MATCH THE RAMP SLOPE, MINIMALLY 1.5%, DESIRABLY 7% OR LESS, AND SHALL NOT EXCEED A MAXIMUM OF 8.3%. WHEN ADJACENT TO 1.5% LANDING, CONSTRUCT CURB HEAD OPENING AT 1.5% IN THE DIRECTION OF PEDESTRIAN TRAVEL.

(3) MAXIMUM 8.3% CURB RAMP SLOPE IS ALLOWABLE WITH GUTTER COUNTER SLOPE OF 5% MAXIMUM AND A 13.3% MAXIMUM GRADE CHANGE.

(4) ±0.5% CONSTRUCTION TOLERANCE IN SIDEWALK CROSS SLOPE. THE SIDEWALK CROSS SLOPE SHALL NOT EXCEED 2.1% WITHOUT PRIOR APPROVAL FROM THE ENGINEER.

(7) WHEN GRADE BREAK DISTANCE EXCEEDS 5 FEET, USE RADIAL DETECTABLE WARNING FIELD PER SDD 8D5-f.

(8) PROVIDE GRADE BREAK PERPENDICULAR TO DIRECTION OF WHEELCHAIR TRAVEL.

(9) WHEN DISTANCE IS LESS THAN 6' - 0", IT MAY BE DIFFICULT TO ACHIEVE A 7% DESIGN MAXIMUM SLOPE OR FLATTER ALONG THE RAMP. REDUCE CURB HEIGHT IN TRIANGLE AREA TO ACHIEVE 7% DESIGN MAXIMUM SLOPE OR FLATTER ON RAMP. CONSTRUCT 2-INCH MINIMUM CURB HEIGHT BETWEEN 10:1 FLARES.

(17) A MAXIMUM 2-INCH CONCRETE BORDER IS PERMITTED ALONG ALL SIDES OF THE DETECTABLE WARNING FIELD SURFACE.

(19) WHERE A LANDING SERVES TWO CURB RAMPS, THE LANDING SLOPE SHALL NOT EXCEED THE CROSS SLOPE AT THE BOTTOM OF THE RAMP OR WITHIN THE CROSSWALK PARALLEL TO THE DIRECTION OF TRAVEL.

(21) PROVIDE A LANDING WITH A SLOPE PARALLEL TO ROADWAY THAT MATCHES SLOPE AT THE BOTTOM OF THE ADJACENT RAMP. SLOPE PERPENDICULAR TO ROADWAY SHALL BE 2.1% MAXIMUM. STANDARD LANDING SIZE IS 5 FEET BY 5 FEET.

(22) THE ENTIRE RAMP SHALL BE A PLANAR SURFACE. DO NOT WARP THE RUNNING SLOPE OR CROSS SLOPE OF THE RAMP. WARPING OF THE SIDEWALK CROSS SLOPE SHALL TAKE PLACE BETWEEN THE LANDING AND MATCH POINT.

(23) THE CLEAR AREA BETWEEN THE BOTTOM OF RAMP AND BACK OF CURB SHALL BE SLOPED SO THAT WATER DRAINS OUT OF ONE SIDE OR BOTH SIDES OF THE CURB OPENING.

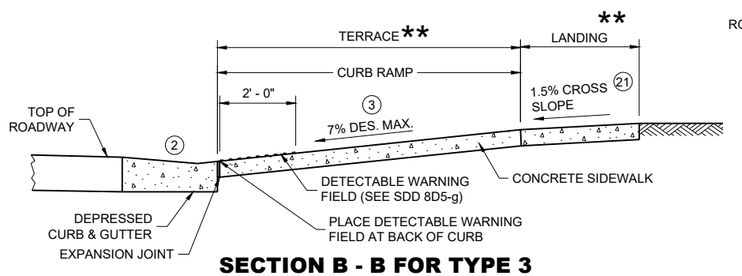

SECTION B - B FOR TYPE 3

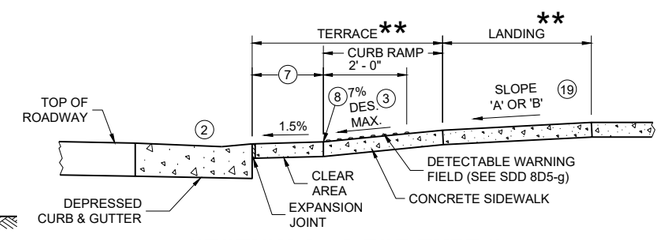

SECTION A - A FOR TYPE 2

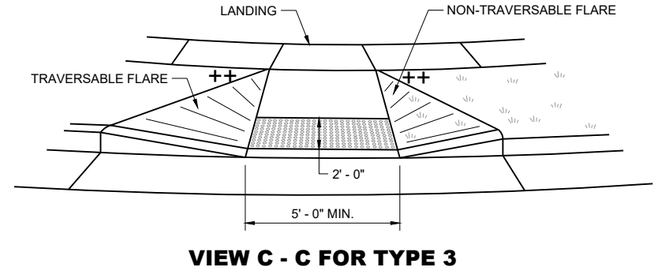

VIEW C - C FOR TYPE 3

LEGEND

═══	½" EXPANSION JOINT SIDEWALK
– – – –	CONTRACTION JOINT SIDEWALK
|||||||||||	PAVEMENT MARKING CROSSWALK (WHITE)
*	MAXIMUM 2.1% SLOPE IN ALL DIRECTIONS IN FRONT OF GRADE BREAK
**	WIDTH SHOWN ELSEWHERE IN THE PLANS
++	CONSTRUCT 6" WEDGE TO AVOID CONCRETE BREAKAGE

CURB RAMPS TYPE 2 AND 3

STATE OF WISCONSIN
DEPARTMENT OF TRANSPORTATION

6

SDD 08D05-22b

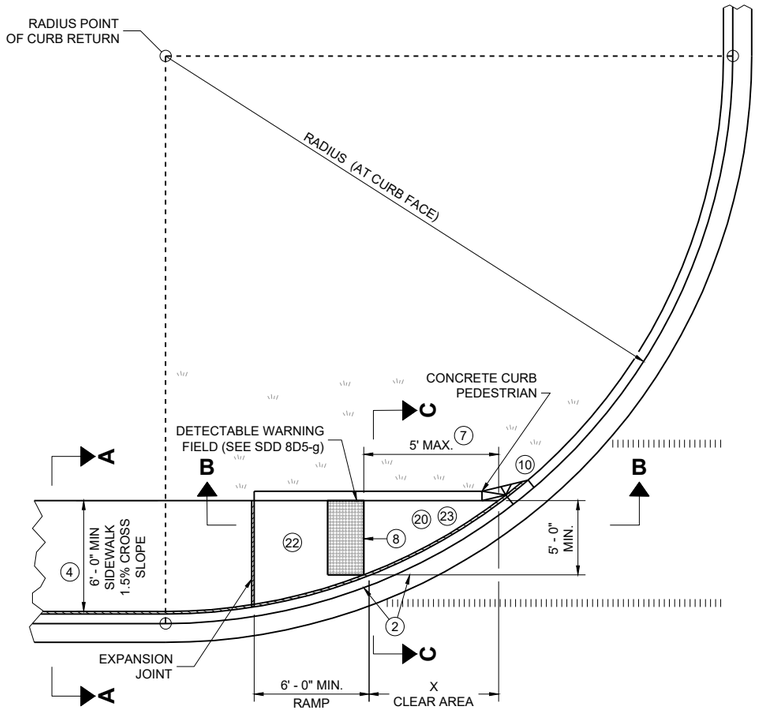

PLAN VIEW

CURB RAMP TYPE 4A

LEGEND

- ½" EXPANSION JOINT SIDEWALK
- CONTRACTION JOINT SIDEWALK
- PAVEMENT MARKING CROSSWALK (WHITE)
- ++ CONSTRUCT 6" WEDGE TO AVOID CONCRETE BREAKAGE

RADIUS (AT CURB FACE)	X
10 FEET	4' - 7"

INTERMEDIATE RADII CAN BE INTERPOLATED

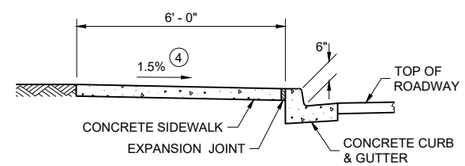

SECTION A - A FOR TYPE 4A

GENERAL NOTES

AVOID PLACING DRAINAGE STRUCTURES, JUNCTION BOXES OR OTHER OBSTRUCTIONS IN FRONT OF CURB RAMP ACCESS AREAS.

DETAILS OF CONSTRUCTION, MATERIALS AND WORKMANSHIP NOT SHOWN ON THIS DRAWING SHALL CONFORM TO THE PERTINENT REQUIREMENTS OF THE STANDARD SPECIFICATIONS AND THE APPLICABLE SPECIAL PROVISIONS.

DETECTABLE WARNING FIELDS THAT ARE INSTALLED AS A GROUP OR SIDE BY SIDE, SHALL BE FROM THE SAME MANUFACTURER.

(2) GRADE CHANGE BETWEEN GUTTER COUNTER SLOPE AND THE CURB RAMP SLOPE IS DESIRABLY 11% OR LESS AND SHALL NOT EXCEED 13.3%. TYPICAL GUTTER COUNTER SLOPE IS 4% BUT MAY BE MODIFIED TO FIT FIELD CONDITIONS. PROVIDE LONGITUDINAL DRAINAGE AROUND CURB AND AWAY FROM CURB RAMP. NO VERTICAL LIPS OR DISCONTINUITIES ARE ALLOWED. SLOPE OF CURB HEAD OPENING SHALL MATCH THE RAMP SLOPE, MINIMALLY 1.5%, DESIRABLY 7% OR LESS, AND SHALL NOT EXCEED A MAXIMUM OF 8.3%. WHEN ADJACENT TO 1.5% LANDING, CONSTRUCT CURB HEAD OPENING AT 1.5% IN THE DIRECTION OF PEDESTRIAN TRAVEL.

(3) MAXIMUM 8.3% CURB RAMP SLOPE IS ALLOWABLE WITH GUTTER COUNTER SLOPE OF 5% MAXIMUM AND A 13.3% MAXIMUM GRADE CHANGE.

(4) ±0.5% CONSTRUCTION TOLERANCE IN SIDEWALK CROSS SLOPE. THE SIDEWALK CROSS SLOPE SHALL NOT EXCEED 2.1% WITHOUT PRIOR APPROVAL FROM THE ENGINEER.

(7) WHEN THIS GRADE BREAK DISTANCE EXCEEDS 5 FEET, USE RADIAL DETECTABLE WARNING FIELD PER SDD 8D5-f.

(8) PROVIDE GRADE BREAK PERPENDICULAR TO DIRECTION OF WHEELCHAIR TRAVEL.

(10) INSTALL TRANSITION NOSE (INCIDENTAL TO OTHER PAY ITEMS). DO NOT MARK TRANSITION NOSE.

(17) A MAXIMUM 2-INCH CONCRETE BORDER IS PERMITTED ALONG ALL SIDES OF THE DETECTABLE WARNING FIELD SURFACE.

(20) MAXIMUM 1.5% DESIGN MAXIMUM AND 2.1% PROWAG MAXIMUM RUNNING SLOPE ON CLEAR AREA. CROSS SLOPE OF CLEAR AREA SHALL MATCH THE CROSS SLOPE OF THE ADJACENT CROSSWALK.

(22) THE ENTIRE RAMP SHALL BE A PLANAR SURFACE. DO NOT WARP THE RUNNING SLOPE OR CROSS SLOPE OF THE RAMP. WARPING OF THE SIDEWALK CROSS SLOPE SHALL TAKE PLACE BETWEEN THE LANDING AND MATCH POINT.

(23) THE CLEAR AREA BETWEEN THE BOTTOM OF RAMP AND BACK OF CURB SHALL BE SLOPED SO THAT WATER DRAINS OUT OF ONE SIDE OR BOTH SIDES OF THE CURB OPENING.

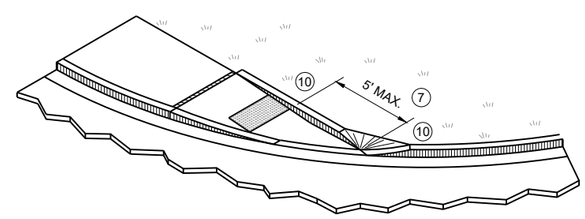

ISOMETRIC VIEW FOR TYPE 4A

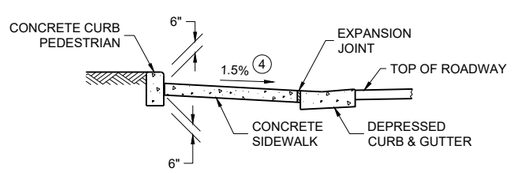

SECTION C - C FOR TYPE 4A

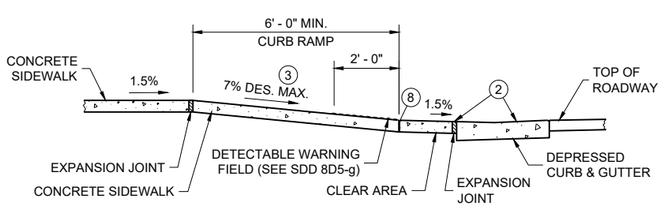

SECTION B - B FOR TYPE 4A AND TYPE 4A1

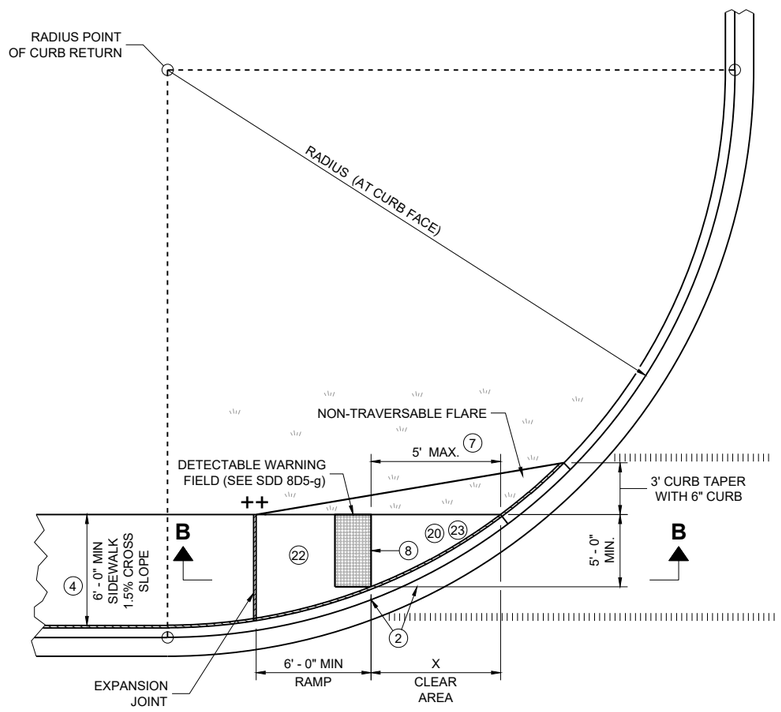

PLAN VIEW

CURB RAMP TYPE 4A1

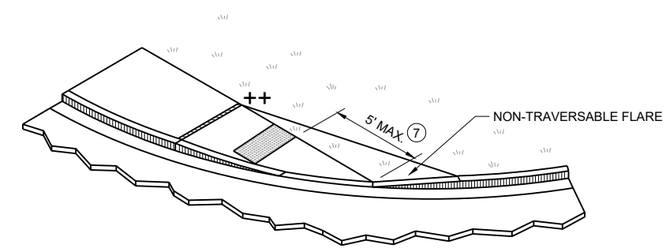

ISOMETRIC VIEW FOR TYPE 4A1

CURB RAMPS
TYPE 4A AND 4A1

STATE OF WISCONSIN
DEPARTMENT OF TRANSPORTATION

6

SDD 08D05-22c

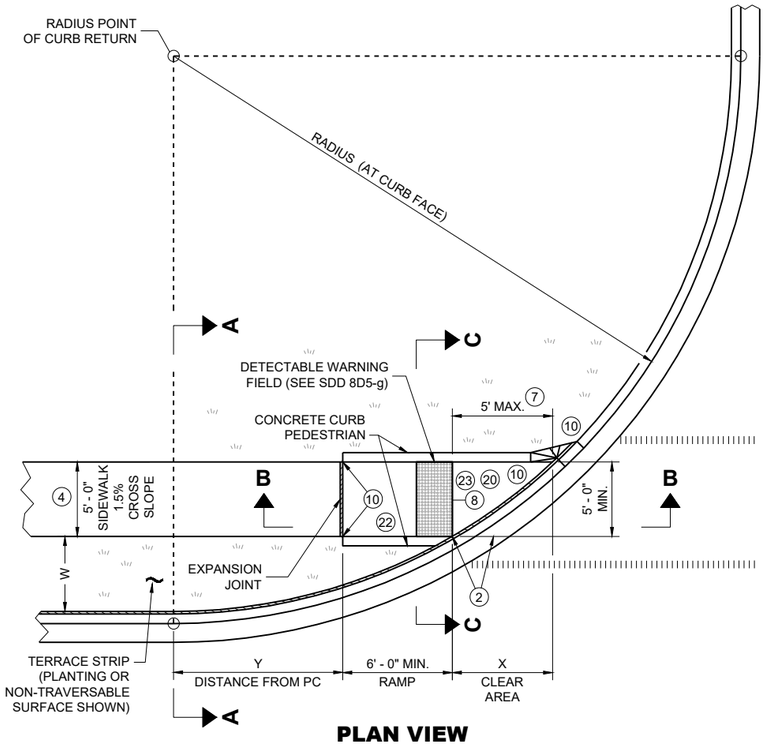

PLAN VIEW
CURB RAMP TYPE 4B

RADIUS (AT CURB FACE)	W = 3' - 0"		W = 4' - 0"		W = 5' - 0"		W = 6' - 0"		W = 7' - 0"		W = 8' - 0"		W = 9' - 0"		W = 10' - 0"	
	X	Y	X	Y	X	Y	X	Y	X	Y	X	Y	X	Y	X	Y
10 FEET	2' - 10 ¼"	0' - 5"	2' - 1"	1' - 4 ½"	1' - 5"	2' - 1"	0' - 10"	2' - 7 ½"	0' - 3 ¼"	3' - 0 ¼"						
15 FEET	4' - 6 ¾"	2' - 1 ¾"	3' - 9"	3' - 5 ¾"	3' - 1 ¼"	4' - 6"	2' - 6 ¾"	5' - 4 ½"	2' - 1"	6' - 1"	1' - 8"	6' - 8 ½"	1' - 3 ¼"	7' - 2 ½"	0' - 10 ¾"	7' - 7 ¼"
20 FEET			4' - 11 ½"	5' - 1 ¾"	4' - 3 ¼"	6' - 5 ½"	3' - 8 ¾"	7' - 7"	3' - 3"	8' - 6 ½"	2' - 10"	9' - 4 ½"	2' - 5 ½"	10' - 1 ¼"	2' - 1 ¼"	10' - 9"
30 FEET									4' - 10 ¾"	12' - 5 ¾"	4' - 5 ½"	13' - 7 ¾"	4' - 0 ¾"	14' - 8 ½"	3' - 8 ½"	15' - 8 ¼"
40 FEET															4' - 10 ¾"	19' - 8 ¼"

INTERMEDIATE RADII CAN BE INTERPOLATED
DIMENSION "Y" IS CALCULATED BASED ON 6'-0" RAMP LENGTH
DIMENSION "X" IS CALCULATED BASED ON 5'-0" SIDEWALK WIDTH

LEGEND

- ½" EXPANSION JOINT SIDEWALK
- CONTRACTION JOINT SIDEWALK
- PAVEMENT MARKING CROSSWALK (WHITE)
- * MAXIMUM 2.1% SLOPE IN ALL DIRECTIONS IF FRONT OF GRADE BREAK
- ++ CONSTRUCT 6" WEDGE TO AVOID CONCRETE BREAKAGE

GENERAL NOTES

AVOID PLACING DRAINAGE STRUCTURES, JUNCTION BOXES OR OTHER OBSTRUCTIONS IN FRONT OF CURB RAMP ACCESS AREAS.

DETAILS OF CONSTRUCTION, MATERIALS AND WORKMANSHIP NOT SHOWN ON THIS DRAWING SHALL CONFORM TO THE PERTINENT REQUIREMENTS OF THE STANDARD SPECIFICATIONS AND THE APPLICABLE SPECIAL PROVISIONS.

DETECTABLE WARNING FIELDS THAT ARE INSTALLED AS A GROUP OR SIDE BY SIDE, SHALL BE FROM THE SAME MANUFACTURER.

(2) GRADE CHANGE BETWEEN GUTTER COUNTER SLOPE AND THE CURB RAMP SLOPE IS DESIRABLY 11% OR LESS AND SHALL NOT EXCEED 13.3%. TYPICAL GUTTER COUNTER SLOPE IS 4% BUT MAY BE MODIFIED TO FIT FIELD CONDITIONS. PROVIDE LONGITUDINAL DRAINAGE AROUND CURB AND AWAY FROM CURB RAMP. NO VERTICAL LIPS OR DISCONTINUITIES ARE ALLOWED. SLOPE OF CURB HEAD OPENING SHALL MATCH THE RAMP SLOPE, MINIMALLY 1.5%, DESIRABLY 7% OR LESS, AND SHALL NOT EXCEED A MAXIMUM OF 8.3%. WHEN ADJACENT TO 1.5% LANDING, CONSTRUCT CURB HEAD OPENING AT 1.5% IN THE DIRECTION OF PEDESTRIAN TRAVEL.

(3) MAXIMUM 8.3% CURB RAMP SLOPE IS ALLOWABLE WITH GUTTER COUNTER SLOPE OF 5% MAXIMUM AND A 13.3% MAXIMUM GRADE CHANGE.

(4) ±0.5% CONSTRUCTION TOLERANCE IN SIDEWALK CROSS SLOPE. THE SIDEWALK CROSS SLOPE SHALL NOT EXCEED 2.1% WITHOUT PRIOR APPROVAL FROM THE ENGINEER.

(7) WHEN THIS GRADE BREAK DISTANCE EXCEEDS 5 FEET, USE RADIAL DETECTABLE WARNING FIELD PER SDD 8D5-f.

(8) PROVIDE GRADE BREAK PERPENDICULAR TO DIRECTION OF WHEELCHAIR TRAVEL.

(10) INSTALL TRANSITION NOSE (INCIDENTAL TO OTHER PAY ITEMS). DO NOT MARK TRANSITION NOSE.

(17) A MAXIMUM 2-INCH CONCRETE BORDER IS PERMITTED ALONG ALL SIDES OF THE DETECTABLE WARNING FIELD SURFACE.

(20) MAXIMUM 1.5% DESIGN MAXIMUM AND 2.1% PROWAG MAXIMUM RUNNING SLOPE ON CLEAR AREA. CROSS SLOPE OF CLEAR AREA SHALL MATCH THE CROSS SLOPE OF THE ADJACENT CROSSWALK.

(22) THE ENTIRE RAMP SHALL BE A PLANAR SURFACE. DO NOT WARP THE RUNNING SLOPE OR CROSS SLOPE OF THE RAMP. WARPING OF THE SIDEWALK CROSS SLOPE SHALL TAKE PLACE BETWEEN THE LANDING AND MATCH POINT.

(23) THE CLEAR AREA BETWEEN THE BOTTOM OF RAMP AND BACK OF CURB SHALL BE SLOPED SO THAT WATER DRAINS OUT OF ONE SIDE OR BOTH SIDES OF THE CURB OPENING.

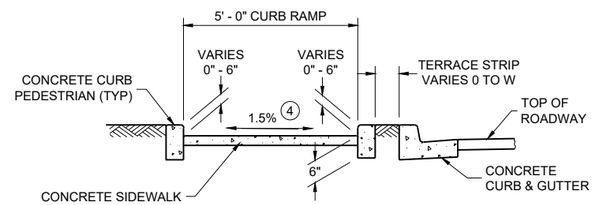

SECTION C - C FOR TYPE 4B

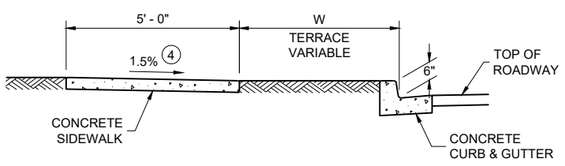

SECTION A - A FOR TYPE 4B

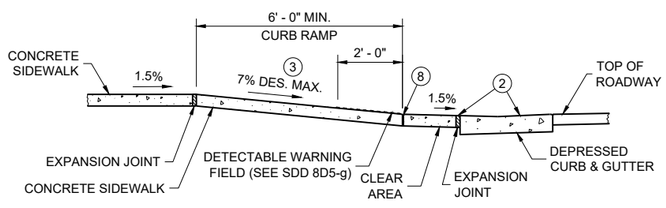

SECTION B - B FOR TYPE 4B AND TYPE 4B1

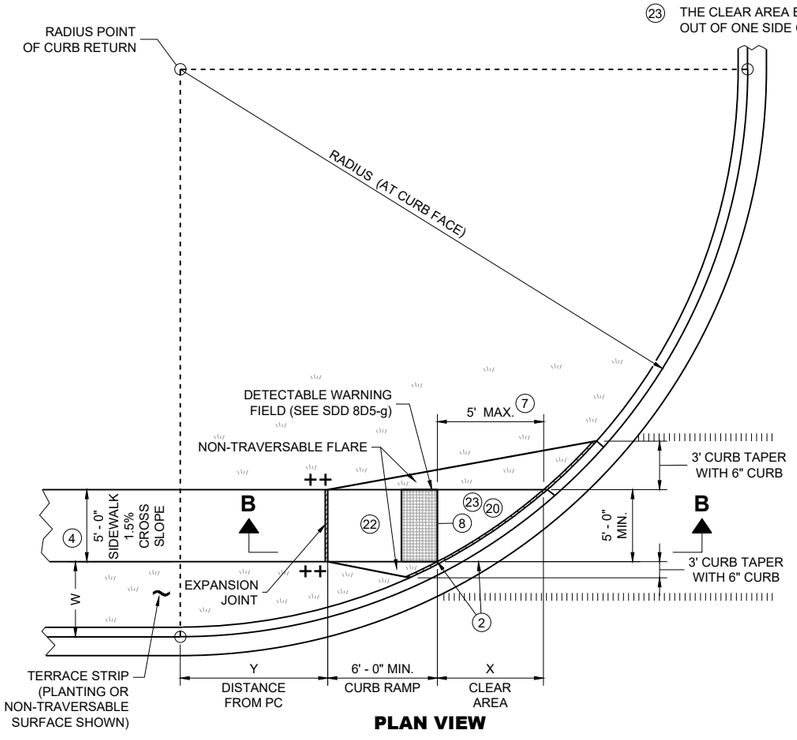

PLAN VIEW
CURB RAMP TYPE 4B1

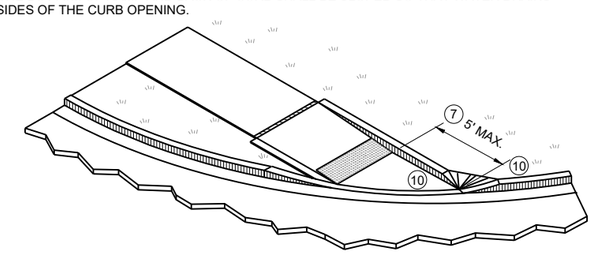

ISOMETRIC VIEW FOR TYPE 4B

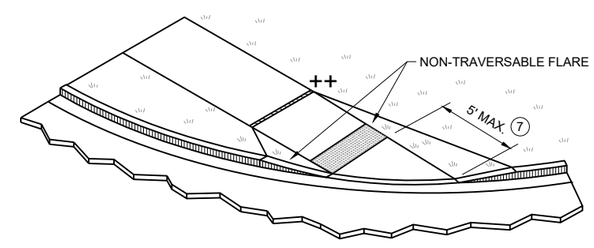

ISOMETRIC VIEW FOR TYPE 4B1

CURB RAMPS TYPE 4B AND 4B1

STATE OF WISCONSIN
DEPARTMENT OF TRANSPORTATION

6

SDD 08D05-22d

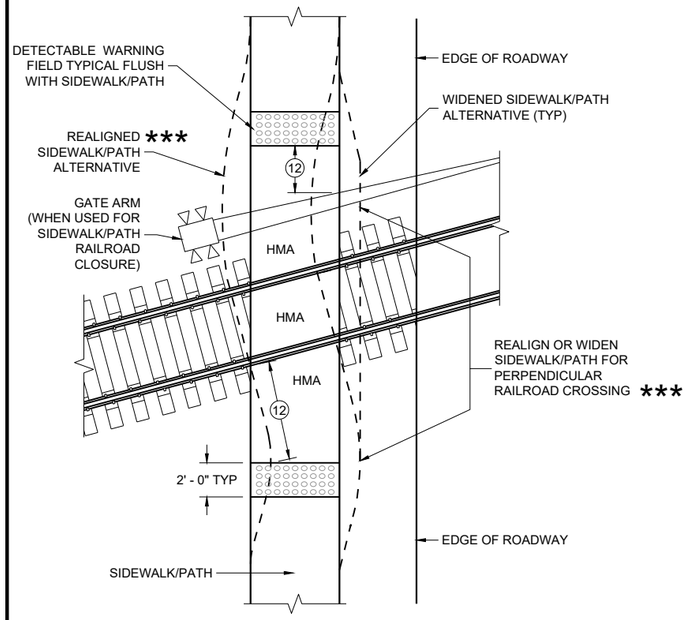

CURB RAMP TYPE 8

DETECTABLE WARNINGS FOR SIDEWALKS OR SHARED USE PATHS AT RAILROAD CROSSINGS

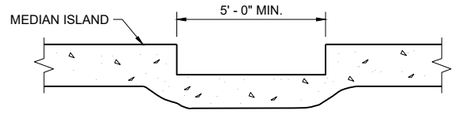

SECTION A - A FOR TYPE 5

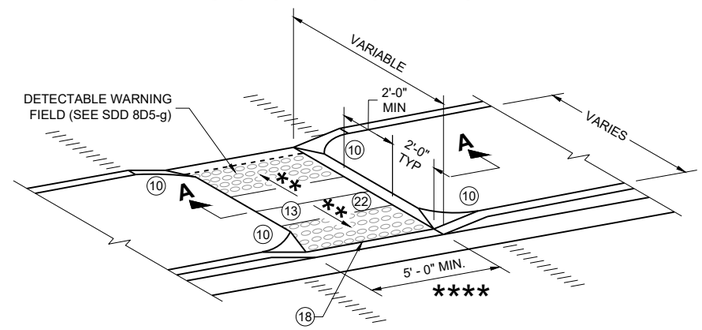

CURB RAMP TYPE 5

MEDIAN ISLAND NON-ELEVATED PEDESTRIAN CROSSING

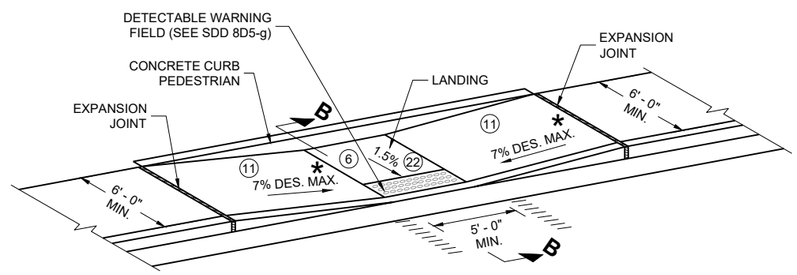

CURB RAMP TYPE 7A

FOR INTERSECTIONS AND MID BLOCK CROSSINGS

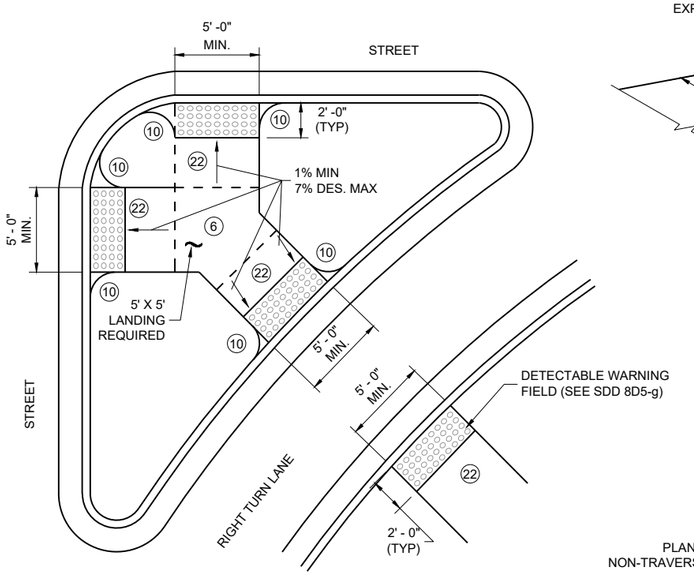

CURB RAMP TYPE 6

DETECTABLE WARNING AT ISLANDS

REFER TO GENERAL NOTES (2) AND (3) FOR ALL ISLAND CURB RAMPS

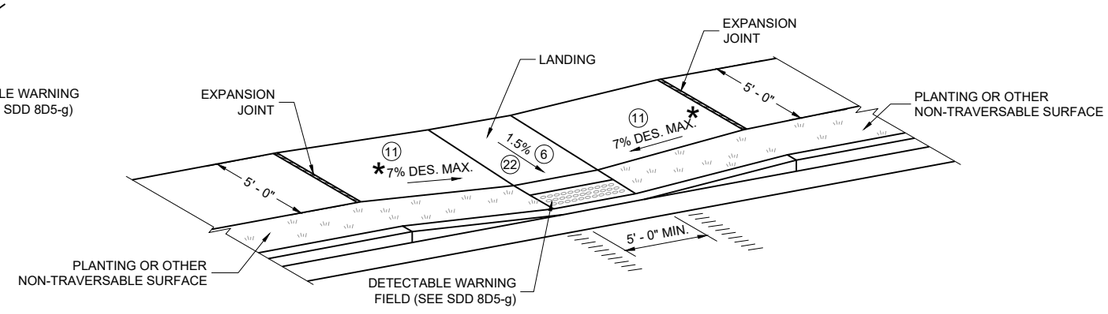

CURB RAMP TYPE 7B

FOR INTERSECTIONS AND MID BLOCK CROSSINGS

GENERAL NOTES

AVOID PLACING DRAINAGE STRUCTURES, JUNCTION BOXES OR OTHER OBSTRUCTIONS IN FRONT OF CURB RAMP ACCESS AREAS.

DETAILS OF CONSTRUCTION, MATERIALS AND WORKMANSHIP NOT SHOWN ON THIS DRAWING SHALL CONFORM TO THE PERTINENT REQUIREMENTS OF THE STANDARD SPECIFICATIONS AND THE APPLICABLE SPECIAL PROVISIONS.

SIDEWALK CROSS SLOPE SHALL NOT EXCEED 2.1%.

DETECTABLE WARNING FIELDS THAT ARE INSTALLED AS A GROUP OR SIDE BY SIDE, SHALL BE FROM THE SAME MANUFACTURER.

(2) GRADE CHANGE BETWEEN GUTTER COUNTER SLOPE AND THE CURB RAMP SLOPE IS DESIRABLY 11% OR LESS AND SHALL NOT EXCEED 13.3%. TYPICAL GUTTER COUNTER SLOPE IS 4% BUT MAY BE MODIFIED TO FIT FIELD CONDITIONS. PROVIDE LONGITUDINAL DRAINAGE AROUND CURB AND AWAY FROM CURB RAMP. NO VERTICAL LIPS OR DISCONTINUITIES ARE ALLOWED. SLOPE OF CURB HEAD OPENING SHALL MATCH THE RAMP SLOPE, MINIMALLY 1.5%, DESIRABLY 7% OR LESS, AND SHALL NOT EXCEED A MAXIMUM OF 8.3%. WHEN ADJACENT TO 1.5% LANDING, CONSTRUCT CURB HEAD OPENING AT 1.5% IN THE DIRECTION OF PEDESTRIAN TRAVEL.

(3) MAXIMUM 8.3% CURB RAMP SLOPE IS ALLOWABLE WITH GUTTER COUNTER SLOPE OF 5% MAXIMUM AND A 13.3% MAXIMUM GRADE CHANGE.

(4) ±0.5% CONSTRUCTION TOLERANCE IN SIDEWALK CROSS SLOPE. THE SIDEWALK CROSS SLOPE SHALL NOT EXCEED 2.1% WITHOUT PRIOR APPROVAL FROM THE ENGINEER.

(6) PROVIDE A 5 FOOT BY 5 FOOT LANDING. SLOPE PERPENDICULAR TO CURB SHALL BE 2.1% MAXIMUM. SLOPE PARALLEL TO CURB SHALL MATCH THE CURB AND GUTTER LONGITUDINAL SLOPE.

(10) INSTALL TRANSITION NOSE (INCIDENTAL TO OTHER PAY ITEMS). DO NOT MARK TRANSITION NOSE.

(11) SLOPE SIDEWALK TOWARD LANDING AS SHOWN WHERE THERE IS NO TERRACE OR WHERE THE TERRACE WIDTH IS LESS THAN 6 FEET WIDE.

(12) THE EDGE OF THE DETECTABLE WARNING FIELD NEAREST TO A RAILROAD CROSSING SHALL BE 1.5 FEET ±0.1' FROM THE FACE OF THE GATE ARM IF THE GATE ARM EXTENDS ACROSS THE SIDEWALK/PATH. WHERE THERE IS NO PEDESTRIAN GATE, THE EDGE OF THE DETECTABLE WARNING FIELD NEAREST TO THE RAILROAD TRACK IS 15 FEET MAXIMUM AND 12 FEET MINIMUM, 15 FEET TYPICAL FROM THE NEAREST RAIL.

(13) DO NOT INSTALL DETECTABLE WARNING FIELDS AT THE EDGES OF STEET-LEVEL PEDESTRIAN REFUGE ISLANDS IF A MINIMUM 2 FOOT CONCRETE SURFACE WITHOUT DETECTABLE WARNINGS (MEASURED IN THE DIRECTION OF PEDESTRIAN TRAVEL) CANNOT BE ACHIEVED.

(17) A MAXIMUM 2-INCH CONCRETE BORDER IS PERMITTED ALONG ALL SIDES OF THE DETECTABLE WARNING FIELD SURFACE.

(18) WHEN THE DISTANCE BETWEEN THE BACK OF CURBS IS LESS THAN 6 FEET BUT THE FACE OF CURB TO FACE OF CURB DISTANCE IS 6 FEET OR GREATER THEN THE DETECTABLE WARNING FIELDS MAY BE MOVED SO THAT THE EDGE OF THE WARNING FIELD IS PLACED AT THE GUTTER FLOWLINE. MAINTAIN A MINIMUM OF TWO FEET BETWEEN DETECTABLE WARNING FIELD PANELS.

(22) THE ENTIRE RAMP SHALL BE A PLANAR SURFACE. DO NOT WARP THE RUNNING SLOPE OR CROSS SLOPE OF THE RAMP. WARPING OF THE SIDEWALK CROSS SLOPE SHALL TAKE PLACE BETWEEN THE LANDING AND MATCH POINT.

LEGEND

- ½" EXPANSION JOINT SIDEWALK
- CONTRACTION JOINT FIELD LOCATED
- PAVEMENT MARKING CROSSWALK (WHITE)
- * MAXIMUM 8.3%
- ** 1% MINIMUM (PROVIDE DRAINAGE)
- *** DETAILS TO BE DETERMINED BY ENGINEER
- **** FOR SHARED USE PATHS, WIDTH MUST BE AS WIDE AS THE CROSSWALK

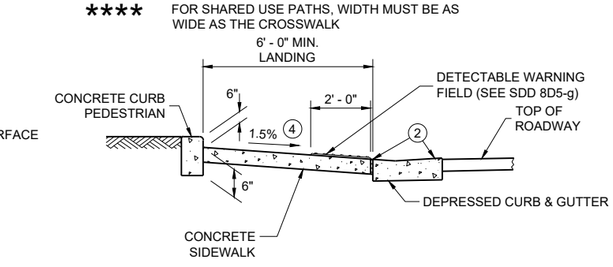

SECTION B - B FOR TYPE 7A

CURB RAMPS TYPE 5, 6, 7A, 7B & 8

STATE OF WISCONSIN
DEPARTMENT OF TRANSPORTATION

6

6

SDD 08D05-22e

SDD 08D05-22e

RADIAL DETECTABLE WARNING FIELD PLACEMENT WHEN 5 FOOT GRADE BREAK DISTANCE PER SDD 8D5-c IS EXCEEDED

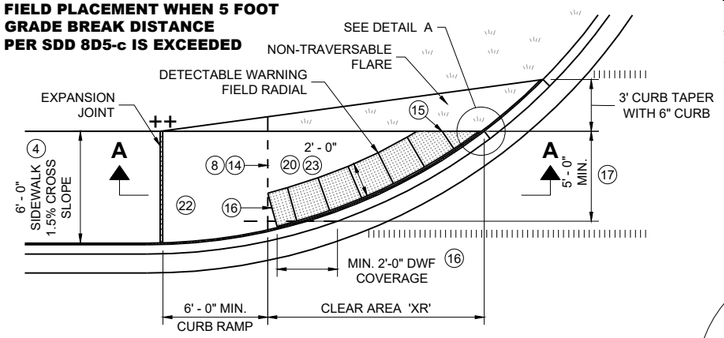

PLAN VIEW

CURB RAMP TYPE 4A1

(GRADE BREAK DISTANCE GREATER THAN 5 FEET)

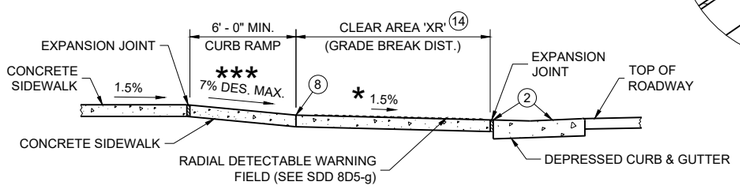

SECTION A - A FOR TYPE 4A1

LEGEND

- ½" EXPANSION JOINT SIDEWALK
- CONTRACTION JOINT SIDEWALK
- PAVEMENT MARKING CROSSWALK (WHITE)
- ** WIDTH SHOWN ELSEWHERE IN THE PLANS
- *** MAXIMUM 8.3%
- ++ CONSTRUCT 6" WEDGE TO AVOID CONCRETE BREAKAGE

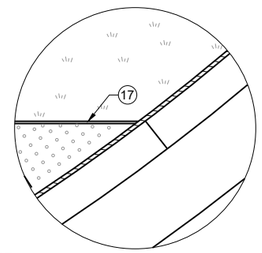

DETAIL A

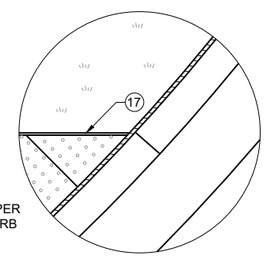

DETAIL B

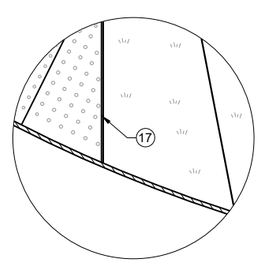

DETAIL C

GENERAL NOTES

AVOID PLACING DRAINAGE STRUCTURES, JUNCTION BOXES OR OTHER OBSTRUCTIONS IN FRONT OF CURB RAMP ACCESS AREAS.

DETAILS OF CONSTRUCTION, MATERIALS AND WORKMANSHIP NOT SHOWN ON THIS DRAWING SHALL CONFORM TO THE PERTINENT REQUIREMENTS OF THE STANDARD SPECIFICATIONS AND THE APPLICABLE SPECIAL PROVISIONS.

DETECTABLE WARNING FIELDS THAT ARE INSTALLED AS A GROUP OR SIDE BY SIDE, SHALL BE FROM THE SAME MANUFACTURER.

APPLY RADIAL DETECTABLE WARNING PLACEMENT SIMILARLY FOR TYPE 4A AND 4A1 CURB RAMPS AND SIMILARLY FOR TYPE 4B AND 4B1 CURB RAMPS. TYPE 4A AND 4B CURB RAMPS ARE NOT SHOWN.

REFER TO SDD 8D5-g FOR ADDITIONAL RADIAL PLATE REQUIREMENTS.

FIELD CUTS AT INTERMEDIATE JOINTS WITHIN THE RADIAL DETECTABLE WARNING FILED ARE PROHIBITED.

DETERMINE FINAL RADIAL WARNING FIELD CONFIGURATION AD ITS INDIVIDUAL PLATE LOCATIONS. PERFORM PRE-LAYOUT PRIOR TO PLACEMENT IN PLASTIC CONCRETE. FOLLOW MANUFACTURER'S PRODUCT LIST AND INSTALLATION RECOMMENDATIONS.

(2) GRADE CHANGE BETWEEN GUTTER COUNTER SLOPE AND THE CURB RAMP SLOPE IS DESIRABLY 11% OR LESS AND SHALL NOT EXCEED 13.3%. TYPICAL GUTTER COUNTER SLOPE IS 4% BUT MAY BE MODIFIED TO FIT FIELD CONDITIONS. PROVIDE LONGITUDINAL DRAINAGE AROUND CURB AND AWAY FROM CURB RAMP. NO VERTICAL LIPS OR DISCONTINUITIES ARE ALLOWED. SLOPE OF CURB HEAD OPENING SHALL MATCH THE RAMP SLOPE, MINIMALLY 1.5%, DESIRABLY 7% OR LESS, AND SHALL NOT EXCEED A MAXIMUM OF 8.3%. WHEN ADJACENT TO 1.5% LANDING, CONSTRUCT CURB HEAD OPENING AT 1.5% IN THE DIRECTION OF PEDESTRIAN TRAVEL.

(3) MAXIMUM 8.3% CURB RAMP SLOPE IS ALLOWABLE WITH GUTTER COUNTER SLOPE OF 5% MAXIMUM AND A 13.3% MAXIMUM GRADE CHANGE.

(4) ±0.5% CONSTRUCTION TOLERANCE IN SIDEWALK CROSS SLOPE. THE SIDEWALK CROSS SLOPE SHALL NOT EXCEED 2.1% WITHOUT PRIOR APPROVAL FROM THE ENGINEER.

(6) PROVIDE A 5 FOOT BY 5 FOOT LANDING. SLOPE PERPENDICULAR TO CURB SHALL BE 2.1% MAXIMUM. SLOPE PARALLEL TO CURB SHALL MATCH THE CURB AND GUTTER LONGITUDINAL SLOPE.

(8) PROVIDE GRADE BREAK PERPENDICULAR TO DIRECTION OF WHEELCHAIR TRAVEL.

(14) CONSULT ENGINEER IF GRADE BREAK LOCATION (END OF LANDING DIMENSION "XR") REQUIRES FIELD ADJUSTMENT WHEN ESTABLISHING FINAL RADIAL DETECTABLE WARNING FIELD LOCATION.

(15) FIELD SAW CUTS ALONG RADIAL DETECTABLE WARNING PLATES WILL BE NECESSARY TO MATCH EACH CURB RAMP EDGE. AVOID CUTTING THROUGH DOMES WHENEVER POSSIBLE. MAKE FIELD CUTS TRUE TO LINE AND WITHIN ⅛" DEVIATION. SMOOTH EDGES OF FIELD CUT PLATES.

(16) USE 1' X 2" RECTANGULAR END PLATE AT END OF TYPE 4A1 RAMP AND PROVIDE MINIMUM 2' - 0" DETECTABLE WARNING FIELD COVERAGE (IN DIRECTION OF PEDESTRIAN TRAVEL) ALONG THE ENTIRE CURB RAMP WIDTH.

(17) A MAXIMUM 2-INCH CONCRETE BORDER IS PERMITTED ALONG ALL SIDES OF THE DETECTABLE WARNING FIELD SURFACE.

(19) WHERE A LANDING SERVES TWO CURB RAMPS, THE LANDING SLOPE SHALL NOT EXCEED THE CROSS SLOPE AT THE BOTTOM OF THE RAMP OR WITHIN THE CROSSWALK PARALLEL TO THE DIRECTION OF TRAVEL.

(20) MAXIMUM 1.5% DESIGN MAXIMUM AND 2.1% PROWAG MAXIMUM RUNNING SLOPE ON CLEAR AREA. CROSS SLOPE OF CLEAR AREA SHALL MATCH THE CROSS SLOPE OF THE ADJACENT CROSSWALK.

(22) THE ENTIRE RAMP SHALL BE A PLANAR SURFACE. DO NOT WARP THE RUNNING SLOPE OR CROSS SLOPE OF THE RAMP. WARPING OF THE SIDEWALK CROSS SLOPE SHALL TAKE PLACE BETWEEN THE LANDING AND MATCH POINT.

(23) THE CLEAR AREA BETWEEN THE BOTTOM OF RAMP AND BACK OF CURB SHALL BE SLOPED SO THAT WATER DRAINS OUT OF ONE SIDE OR BOTH SIDES OF THE CURB OPENING.

RADIAL DETECTABLE WARNING FIELD PLACEMENT WHEN 5 FOOT GRADE BREAK DISTANCE PER SDD 8D5-d IS EXCEEDED

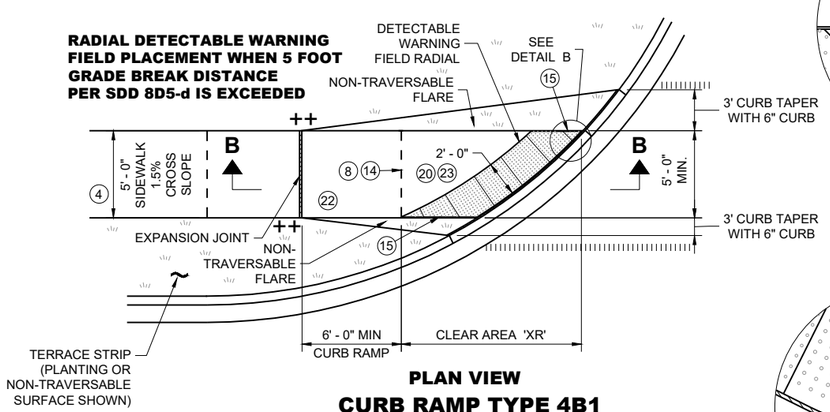

PLAN VIEW

CURB RAMP TYPE 4B1

(GRADE BREAK DISTANCE GREATER THAN 5 FEET)

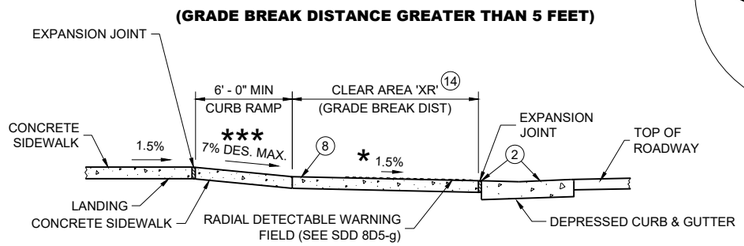

SECTION B - B FOR TYPE 4B1

RADIAL DETECTABLE WARNING FIELD PLACEMENT WHEN 5 FOOT GRADE BREAK DISTANCE PER SDD 8D5-b IS EXCEEDED

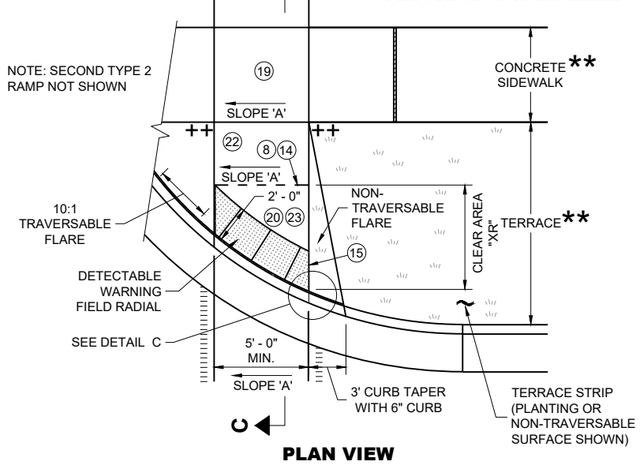

PLAN VIEW

CURB RAMP TYPE 2

(GRADE BREAK DISTANCE GREATER THAN 5 FEET)

(ON LINE WITH SIDEWALK)

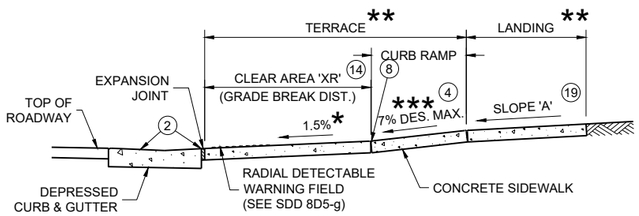

SECTION C - C FOR TYPE 2

CURB RAMPS
RADIAL DETECTABLE WARNING

STATE OF WISCONSIN
DEPARTMENT OF TRANSPORTATION

6

6

SDD 08D05-22f

SDD 08D05-22f

	MIN.	MAX.
A	1.6"	2.4"
B	0.65"	1.5"
C	*	*
D	0.9"	1.4"

* THE C DIMENSION IS 50% TO 65% OF THE D DIMENSION.

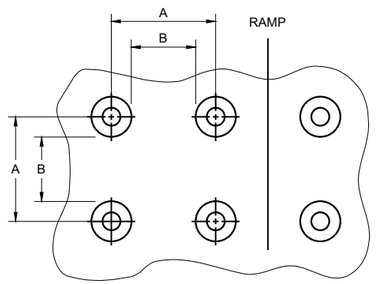

PLAN VIEW

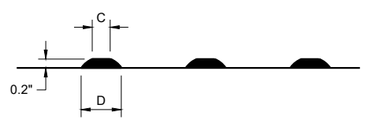

ELEVATION VIEW

TRUNCATED DOMES
DETECTABLE WARNING PATTERN DETAIL

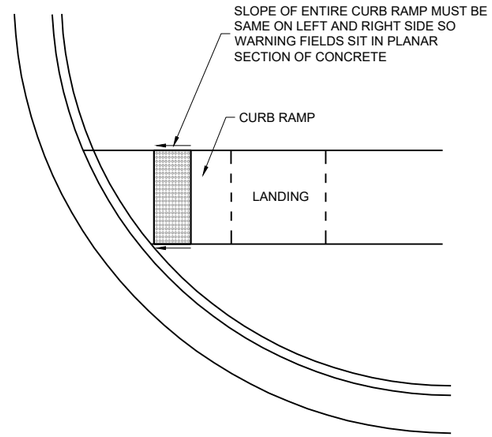

DETECTABLE WARNING FIELD
PLANAR INSTALLATION

GENERAL NOTES

DETECTABLE WARNING FIELDS THAT ARE INSTALLED AT A CURB RAMP SHALL BE FROM THE SAME MANUFACTURER.

PLACE ALL DETECTABLE WARNING FIELD SYSTEMS IN ACCORDANCE TO THE MANUFACTURER'S RECOMMENDATION.

FIELD CUTS AT INTERMEDIATE JOINTS WITHIN THE RADIAL DETECTABLE WARNING FILED ARE PROHIBITED.

DETERMINE FINAL RADIAL WARNING FIELD CONFIGURATION AND ITS INDIVIDUAL PLATE LOCATIONS. PERFORM PRE-LAYOUT PRIOR TO PLACEMENT IN PLASTIC CONCRETE. FOLLOW MANUFACTURER'S PRODUCT LIST AND INSTALLATION RECOMMENDATIONS.

FOR RADIAL DETECTABLE WARNING FIELD APPLICATIONS WHERE STANDARD RADIAL PLATES ARE NOT AVAILABLE AT AN INTERSECTION CURB RADIUS, A COMBINATION OF SQUARE OR RECTANGULAR PLATES AND RADIAL PLATES MAY BE USED TO FORM RADIAL CONFIGURATION. RADIAL WEDGE PLATES IN COMBINATION WITH SQUARE PLATES ARE ALSO ACCEPTABLE. FOLLOW MANUFACTURER'S RECOMMENDATIONS.

REFER TO CONTRACT AND STANDARD SPECIFICATIONS FOR FIELD CUTTING REQUIREMENTS.

DO NOT EMBED IN CONCRETE ANY FIELD-CUT PLATES WITH CUT EDGES SHORTER THAN 6 INCHES. CONSULT WITH MANUFACTURER FOR RE-DRILLING AND ANCHORING REQUIREMENTS OF FIELD-CUT PLATES.

(15) FIELD SAW CUTS ALONG RADIAL DETECTABLE WARNING PLATES WILL BE NECESSARY TO MATCH EACH CURB RAMP EDGE. AVOID CUTTING THROUGH DOMES WHENEVER POSSIBLE. MAKE FIELD CUTS TRUE TO LINE AND WITHIN ⅛" DEVIATION. SMOOTH EDGES OF FIELD CUT PLATES.

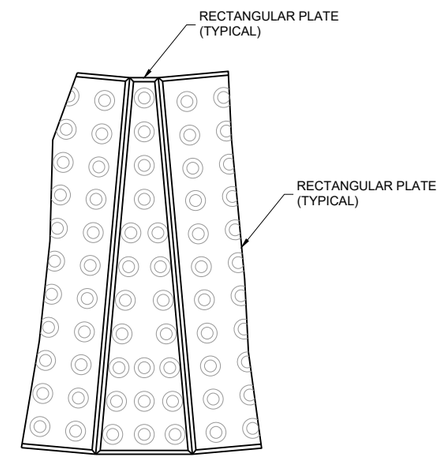

PLAN VIEW
RADIAL WEDGE PLATE CONNECTION DETAIL

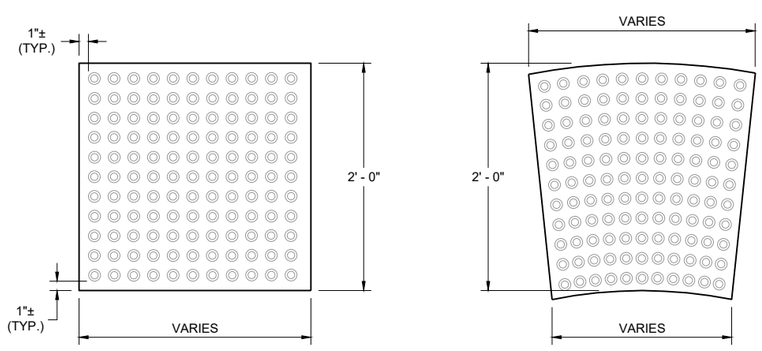

RECTANGULAR PLATES **RADIAL PLATES**

PLAN VIEW
DETECTABLE WARNING FIELDS (TYPICAL)

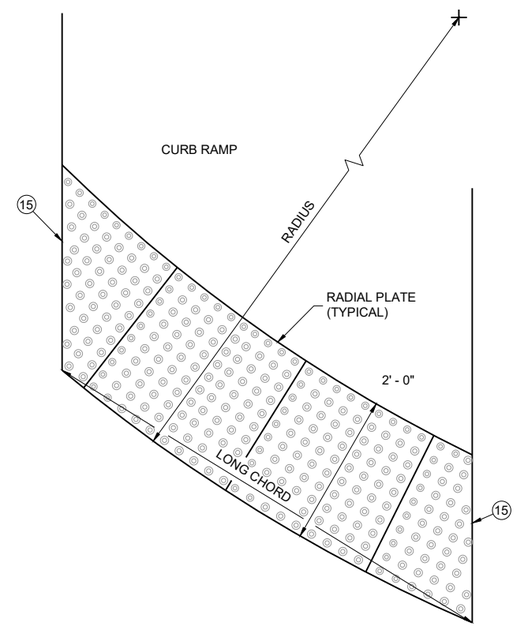

PLAN VIEW
RADIAL DETECTABLE WARNING FIELD ATTRIBUTES

6

6

SDD 08D05-22g

SDD 08D05-22g

CURB RAMPS RECTANGULAR AND RADIAL DETECTABLE WARNING PLATES

STATE OF WISCONSIN
DEPARTMENT OF TRANSPORTATION

APPROVED
February 2025 — DATE
/S/ Rodney Taylor — <position>
FHWA

GENERAL NOTES

1. DESIGN WILL DETERMINE FINAL DRIVEWAY ASPHALTIC THICKNESS BASED ON TYPE OF USAGE AND LOADINGS.

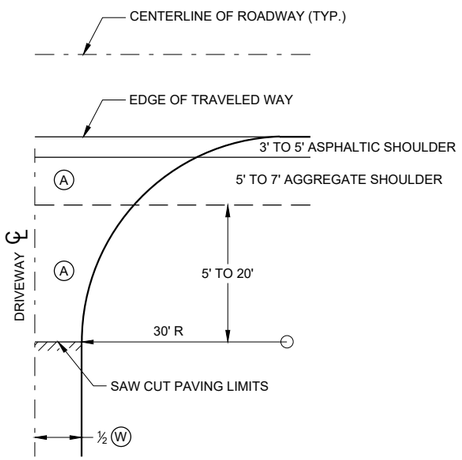

PLAN VIEW

A : PAID FOR AS ASPHALTIC SURFACE DRIVEWAYS AND FIELD ENTRANCES. (TON)

B : PAID FOR AS BASE AGGREGATE DENSE 1 ¼" (TON)

W : DRIVEWAY WIDTH 16' MIN. - 24' MAX.

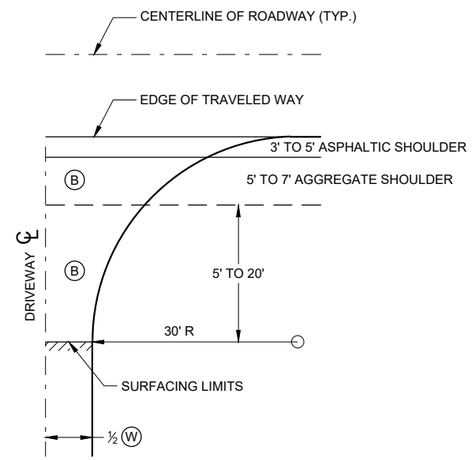

PLAN VIEW

HALF SECTION

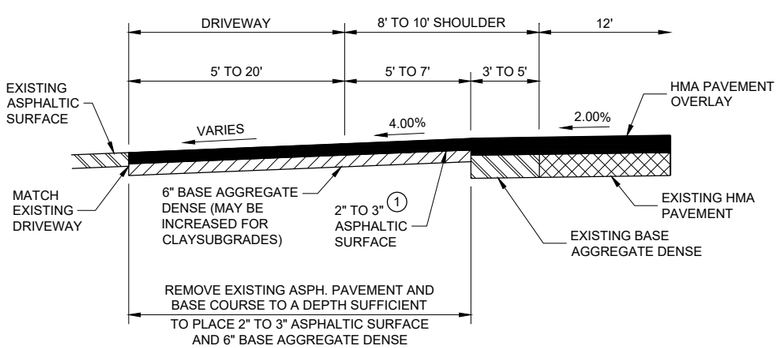

PROFILE VIEW

RURAL ENTRANCE WITH ASPHALTIC SURFACE

RESURFACING PROJECTS

PLAN VIEW

HALF SECTION

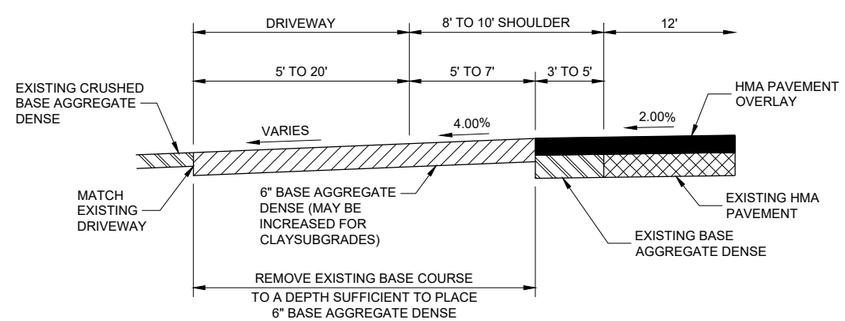

PROFILE VIEW

RURAL ENTRANCE WITH AGGREGATE SURFACE

6" BASE AGGREGATE DENSE RESURFACING PROJECTS

DRIVEWAYS WITHOUT CURB AND GUTTER RESURFACING PROJECTS RURAL

STATE OF WISCONSIN
DEPARTMENT OF TRANSPORTATION

APPROVED
December 2016 — DATE
/S/ Rodney Taylor — ROADWAY STANDARDS DEVE ENGINEER
FHWA

6

SDD 08D22 - 01

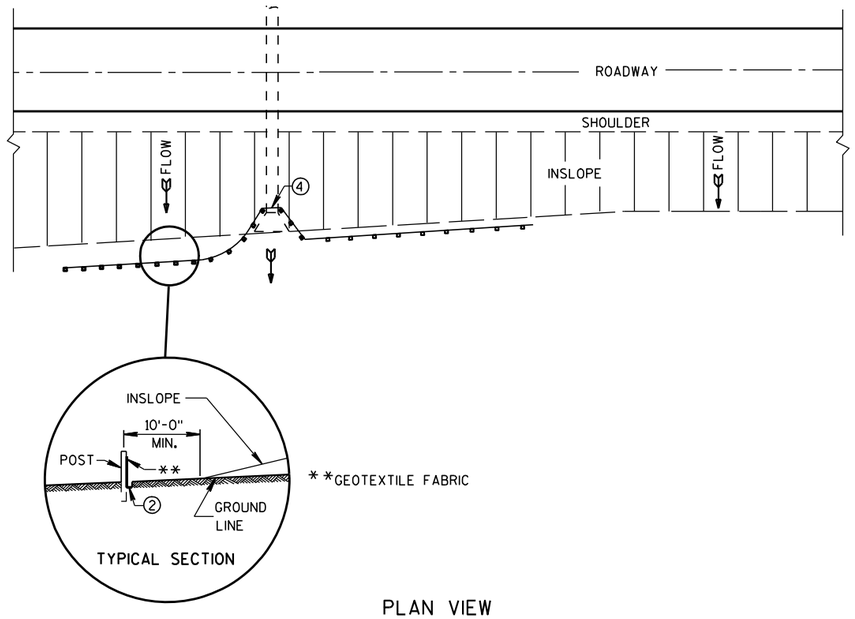

PLAN VIEW

TYPICAL APPLICATION OF SILT FENCE

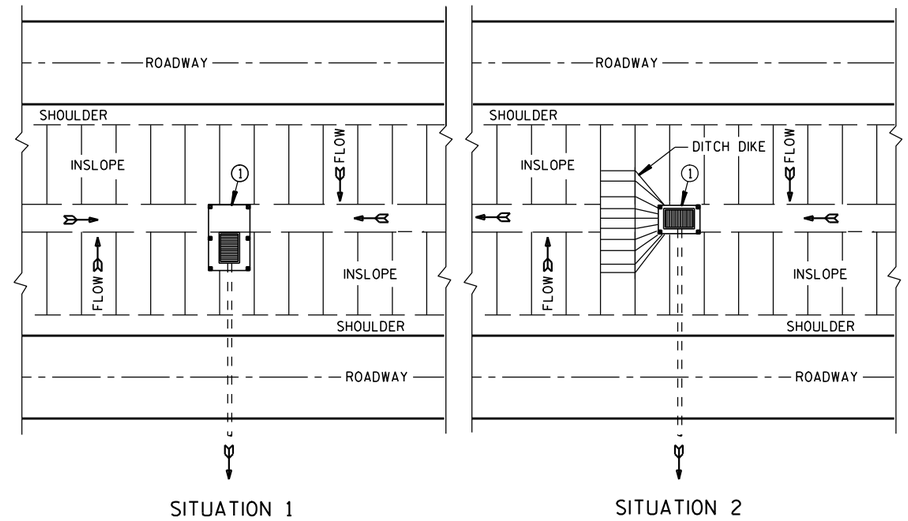

PLAN VIEW

SILT FENCE AT MEDIAN SURFACE DRAINS

GENERAL NOTES

DETAILS OF CONSTRUCTION NOT SHOWN ON THIS DRAWING SHALL CONFORM TO THE PERTINENT REQUIREMENTS OF THE STANDARD SPECIFICATIONS AND APPLICABLE SPECIAL PROVISIONS.

① HORIZONTAL BRACE REQUIRED WITH 2" X 4" WOODEN FRAME OR EQUIVALENT AT TOP OF POSTS.

② FOR MANUAL INSTALLATIONS THE TRENCH SHALL BE A MINIMUM OF 4" WIDE & 6" DEEP TO BURY AND ANCHOR THE GEOTEXTILE FABRIC. FOLD MATERIAL TO FIT TRENCH AND BACKFILL & COMPACT TRENCH WITH EXCAVATED SOIL.

③ WOOD POSTS SHALL BE A MINIMUM SIZE OF 1⅛" X 1⅛" OF OAK OR HICKORY.

④ SILT FENCE TO EXTEND ACROSS THE TOP OF THE PIPE.

⑤ CONSTRUCT SILT FENCE FROM A CONTINUOUS ROLL IF POSSIBLE BY CUTTING LENGTHS TO AVOID JOINTS. IF A JOINT IS NECESSARY USE ONE OF THE FOLLOWING TWO METHODS; A) OVERLAP THE END POSTS AND TWIST, OR ROTATE, AT LEAST 180 DEGREES. B) HOOK THE END OF EACH SILT FENCE LENGTH.

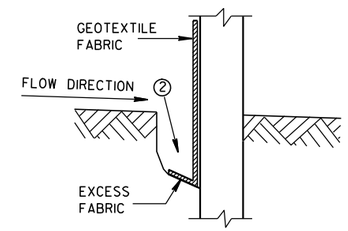

TRENCH DETAIL

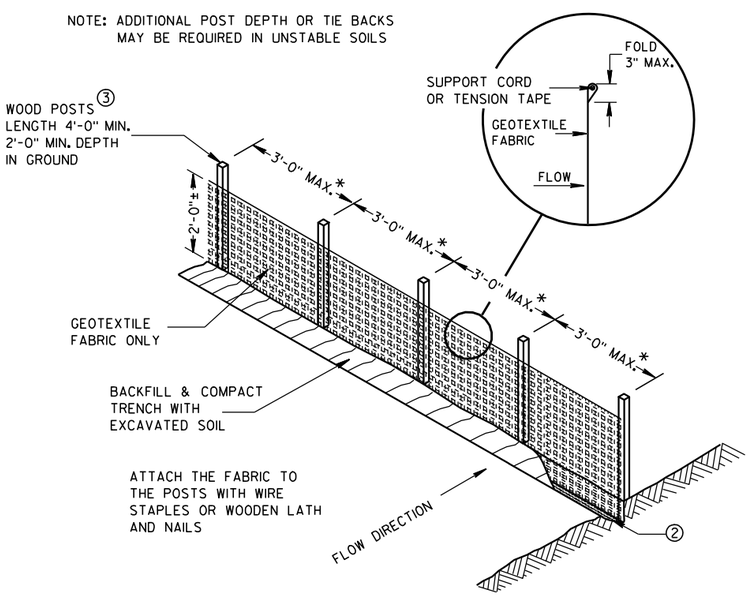

*NOTE: 8'-0" POST SPACING ALLOWED IF A WOVEN GEOTEXTILE FABRIC IS USED.

SILT FENCE

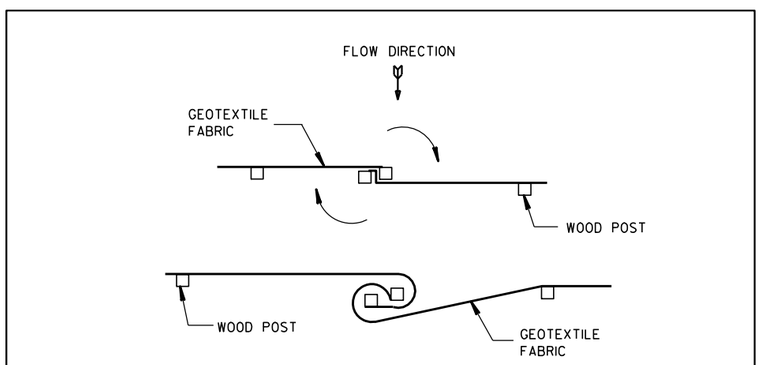

TWIST METHOD

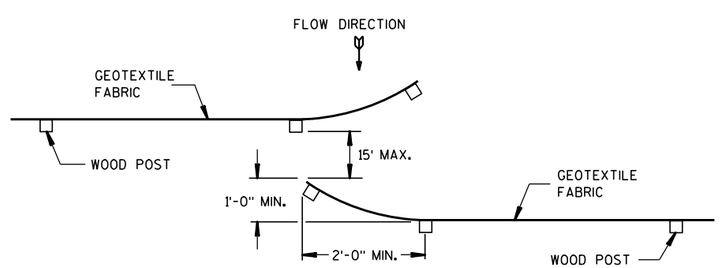

HOOK METHOD

JOINING TWO LENGTHS OF SILT FENCE ⑤

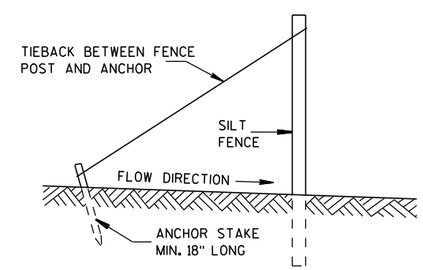

SILT FENCE TIE BACK

(WHEN REQUIRED BY THE ENGINEER)

SILT FENCE
STATE OF WISCONSIN DEPARTMENT OF TRANSPORTATION
APPROVED 4-29-05 DATE — /S/ Beth Cann[illegible] CHIEF ROADWAY DEVELOP[illegible]INEER FHWA

6

6

S.D.D. 8 E 9-6

S.D.D. 8 E 9-6

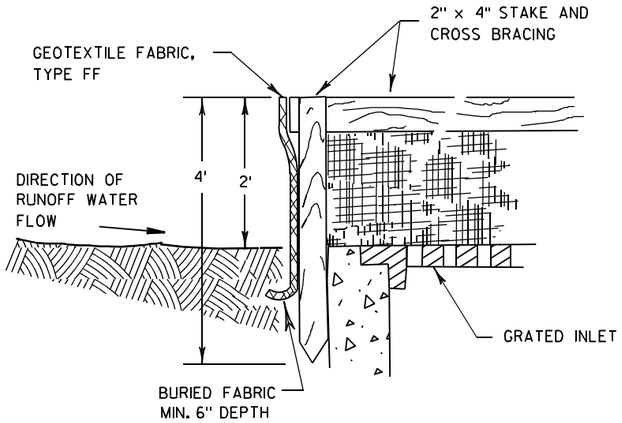

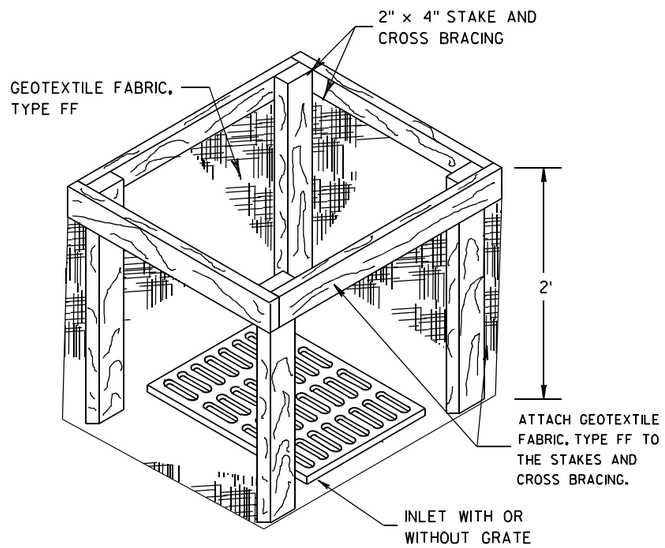

INLET PROTECTION, TYPE A

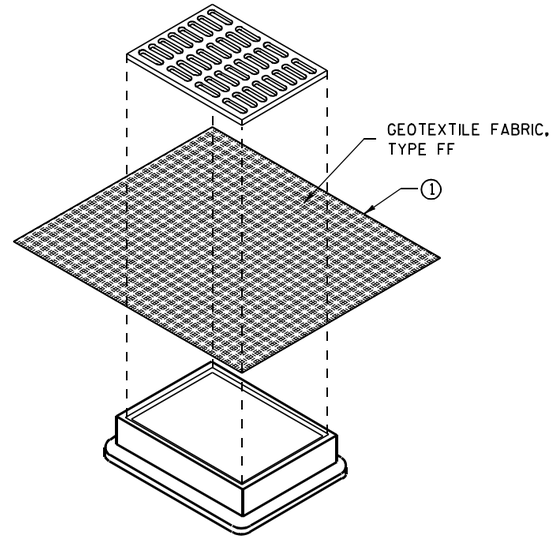

INLET PROTECTION, TYPE B (WITHOUT CURB BOX)

(CAN BE INSTALLED IN ANY INLET WITHOUT A CURB BOX)

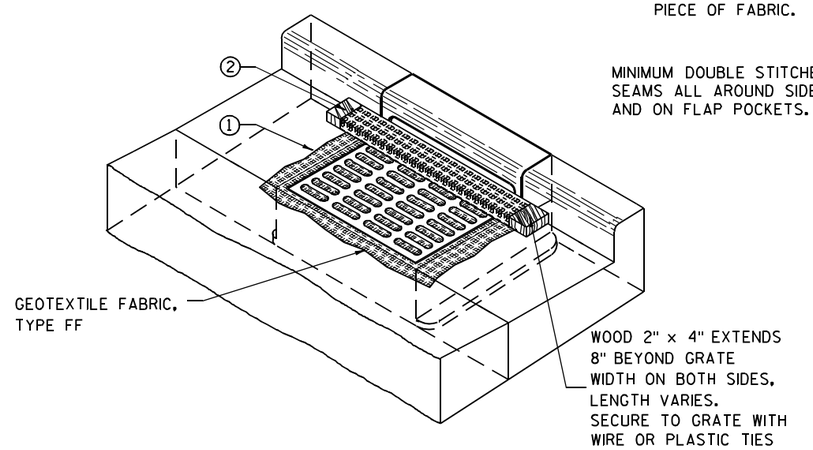

INLET PROTECTION, TYPE C (WITH CURB BOX)

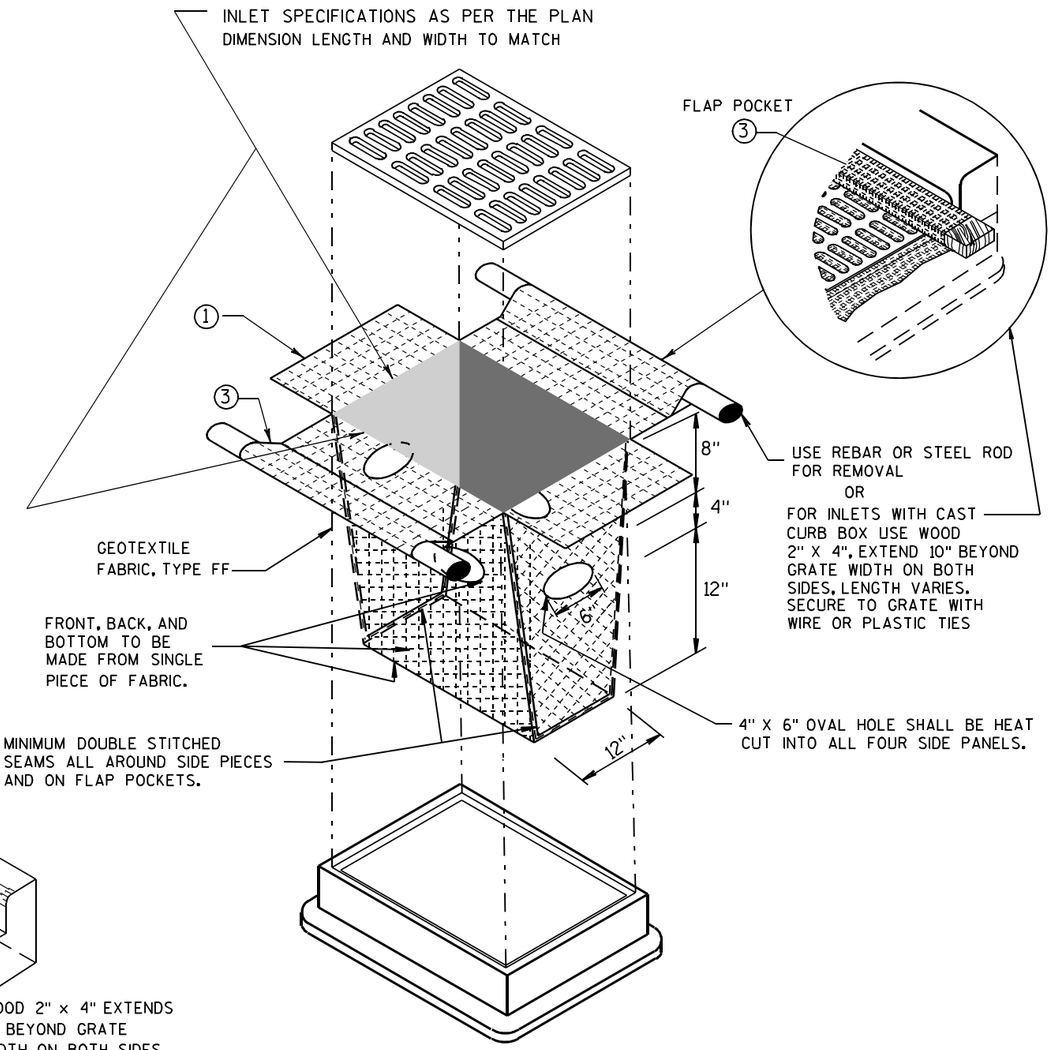

INLET PROTECTION, TYPE D

(CAN BE INSTALLED IN ANY INLET TYPE WITH OR WITHOUT A CURB BOX AS PER NOTE 2)

GENERAL NOTES

INLET PROTECTION DEVICES SHALL BE MAINTAINED OR REPLACED AT THE DIRECTION OF THE ENGINEER.

MANUFACTURED ALTERNATIVES APPROVED AND LISTED ON THE DEPARTMENT'S EROSION CONTROL PRODUCT ACCEPTABILITY LIST MAY BE SUBSTITUTED.

WHEN REMOVING OR MAINTAINING INLET PROTECTION, CARE SHALL BE TAKEN SO THAT THE SEDIMENT TRAPPED ON THE GEOTEXTILE FABRIC DOES NOT FALL INTO THE INLET. ANY MATERIAL FALLING INTO THE INLET SHALL BE REMOVED IMMEDIATELY.

1 FINISHED SIZE, INCLUDING FLAP POCKETS WHERE REQUIRED, SHALL EXTEND A MINIMUM OF 10" AROUND THE PERIMETER TO FACILITATE MAINTENANCE OR REMOVAL.

2 FOR INLET PROTECTION, TYPE C (WITH CURB BOX), AN ADDITIONAL 18" OF FABRIC IS WRAPPED AROUND THE WOOD AND SECURED WITH STAPLES. THE WOOD SHALL NOT BLOCK THE ENTIRE HEIGHT OF THE CURB BOX OPENING.

3 FLAP POCKETS SHALL BE LARGE ENOUGH TO ACCEPT WOOD 2X4.

INSTALLATION NOTES

TYPE B & C

TRIM EXCESS FABRIC IN THE FLOW LINE TO WITHIN 3" OF THE GRATE.

THE CONTRACTOR SHALL DEMONSTRATE A METHOD OF MAINTENANCE, USING A SEWN FLAP, HAND HOLDS OR OTHER METHOD TO PREVENT ACCUMULATED SEDIMENT FROM ENTERING THE INLET.

TYPE D

DO NOT INSTALL INLET PROTECTION TYPE D IN INLETS SHALLOWER THAN 30", MEASURED FROM THE BOTTOM OF THE INLET TO THE TOP OF THE GRATE.

TRIM EXCESS FABRIC IN THE FLOW LINE TO WITHIN 3" OF THE GRATE.

THE INSTALLED BAG SHALL HAVE A MINIMUM SIDE CLEARANCE, BETWEEN THE INLET WALLS AND THE BAG, MEASURED AT THE BOTTOM OF THE OVERFLOW HOLES, OF 3". WHERE NECESSARY THE CONTRACTOR SHALL CINCH THE BAG, USING PLASTIC ZIP TIES, TO ACHIEVE THE 3" CLEARANCE. THE TIES SHALL BE PLACED AT A MAXIMUM OF 4" FROM THE BOTTOM OF THE BAG.

INLET PROTECTION TYPE A, B, C, AND D

STATE OF WISCONSIN
DEPARTMENT OF TRANSPORTATION

APPROVED
10/16/02 — DATE
/S/ Beth Cannestra — CHIEF ROADWAY DEVELOPMENT ENGINEER
FHWA

6
S.D.D. 8 E 10-2

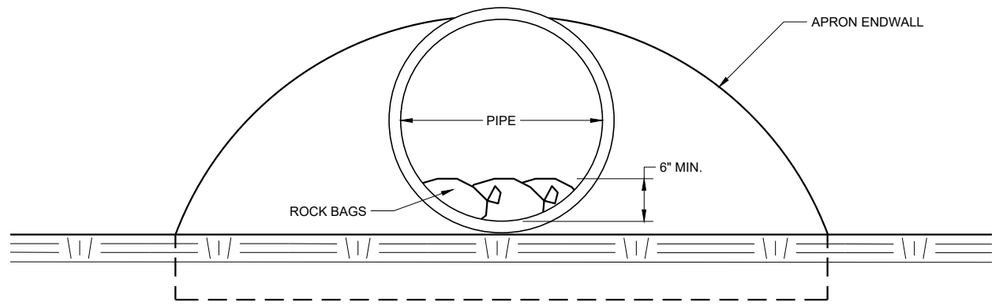

END VIEW

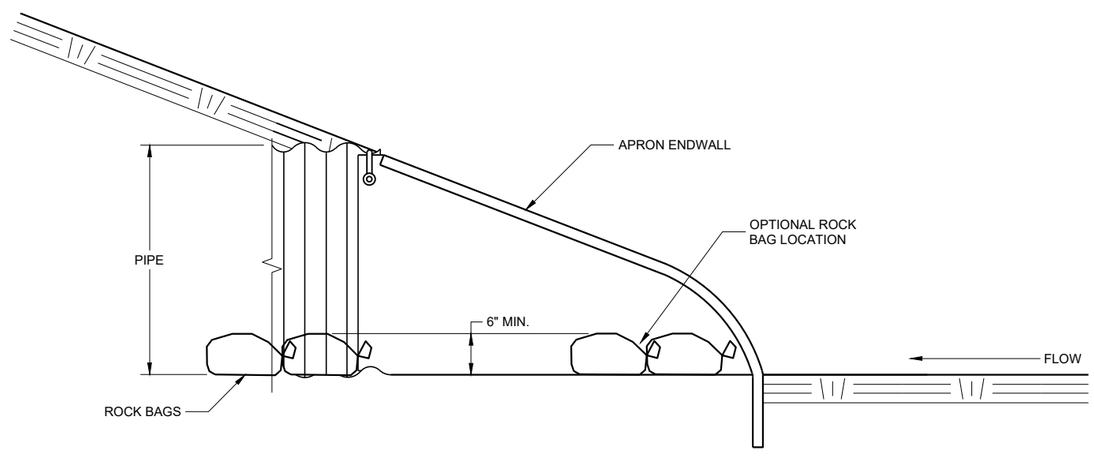

SIDE VIEW

CULVERT PIPE CHECK

(INSTALL ON INLET END ONLY)

CULVERT PIPE CHECK

STATE OF WISCONSIN
DEPARTMENT OF TRANSPORTATION

APPROVED
May 2019 — DATE
/S/ Daniel Schave — EROSION CONTROL ENGI
FHWA

6

6

SDD 08E15 - 01

SDD 08E15 - 01

METAL APRON ENDWALLS

PIPE DIA. (IN.)	MIN. THICK. (Inches) STEEL	MIN. THICK. (Inches) ALUM.	DIMENSIONS (Inches) A (±1")	B (MAX.)	H (±1")	L (±1 1/2")	L1 ①	L2 ①	W (±2")	APPROX. SLOPE	BODY
12	.064	.060	6	6	6	21	12	17 1/2	24	2 1/2 to 1	1 Pc.
15	.064	.060	7	8	6	26	14	21 3/4	30	2 1/2 to 1	1 Pc.
18	.064	.060	8	10	6	31	15	28 1/4	36	2 1/2 to 1	1 Pc.
21	.064	.060	9	12	6	36	18	29 5/8	42	2 1/2 to 1	1 Pc.
24	.064	.075	10	13	6	41	18	37 1/4	48	2 1/2 to 1	1 Pc.
30	.079	.075	12	16	8	51	18	52 1/4	60	2 1/2 to 1	1 Pc.
36	.079	.105	14	19	9	60	24	59 3/4	72	2 1/2 to 1	2 Pc.
42	.109	.105	16	22	11	69	24	75 5/8	84	2 1/2 to 1	2 Pc.
48	.109	.105	18	27	12	78	24	81	90	2 1/4 to 1	3 Pc.
54	.109	.105	18	30	12	84	30	85 1/2	102	2 1/4 to 1	3 Pc.
60	.109×	.105×	18	33	12	87	—	—	114	2 to 1	3 Pc.
66	.109×	.105×	18	36	12	87	—	—	120	2 to 1	3 Pc.
72	.109×	.105×	18	39	12	87	—	—	126	2 to 1	3 Pc.
78	.109×	.105×	18	42	12	87	—	—	132	1 1/2 to 1	3 Pc.
84	.109×	.105×	18	45	12	87	—	—	138	1 1/2 to 1	3 Pc.
90	.109×	.105×	18	37	12	87	—	—	144	1 1/2 to 1	3 Pc.
96	.109×	.105×	18	35	12	87	—	—	150	1 1/2 to 1	3 Pc.

× EXCEPT CENTER PANEL
SEE GENERAL NOTES

REINFORCED CONCRETE APRON ENDWALLS

PIPE DIA. (IN.)	DIMENSIONS (Inches) T	A	B	C	D	E	G	APPROX. SLOPE
12	2	4	24	48 7/8	72 7/8	24	2	3 to 1
15	2 1/4	6	27	46	73	30	2 1/4	3 to 1
18	2 1/2	9	27	46	73	36	2 1/2	3 to 1
21	2 3/4	9	36	37 1/2	73 1/2	42	2 3/4	3 to 1
24	3	9 1/2	43 1/2	30	73 1/2	48	3	3 to 1
27	3 1/4	10 1/2	49 1/2	24	73 1/2	54	3 1/4	3 to 1
30	3 1/2	12	54	19 3/4	73 1/2	60	3 1/2	3 to 1
36	4	15	63	34 3/4	97 3/4	72	4	3 to 1
42	4 1/2	21	63	35	98	78	4 1/2	3 to 1
48	5	24	72	26	98	84	5	3 to 1
54	5 1/2	27	65	*33 1/4-**35	*98 1/4-**100	90	5 1/2	2 2/5 to 1
60	6	*30-**35	60	39	99	96	5	2 to 1
66	6 1/2	*24-**30	*72-**78	*21-**27	99	102	5 1/2	2 to 1
72	7	*24-**36	78	21	99	108	6	2 to 1
78	7 1/2	*24-**36	78	21	99	114	6 1/2	2 to 1
84	8	36	90 1/2	21	111 1/2	120	6 1/2	1 1/2 to 1
90	8 1/2	41	87 1/2	24	111 1/2	132	6 1/2	1 1/2 to 1

*MINIMUM
**MAXIMUM

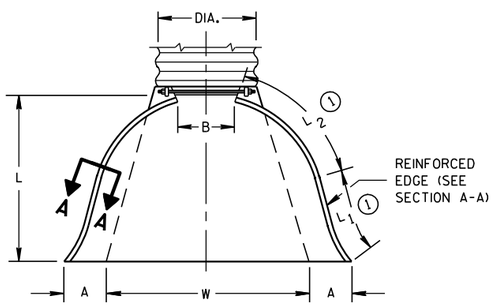

PLAN VIEW

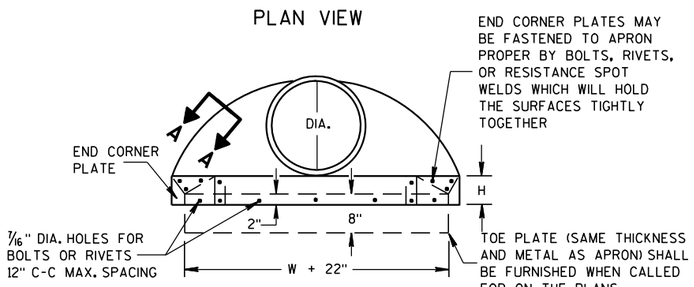

END VIEW

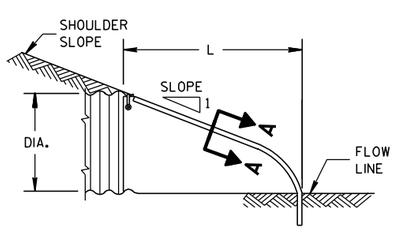

SIDE ELEVATION

METAL ENDWALLS

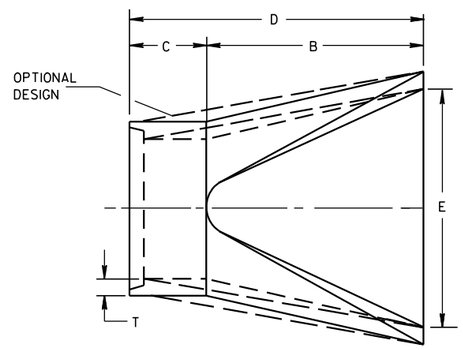

PLAN

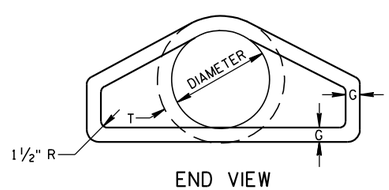

END VIEW

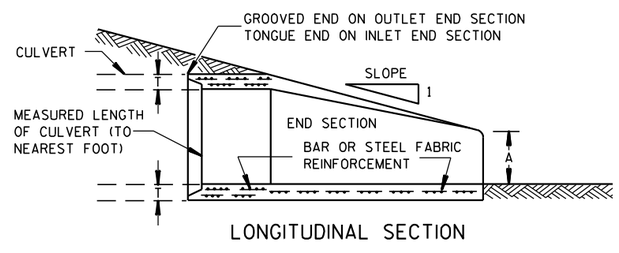

LONGITUDINAL SECTION

CONCRETE ENDWALLS

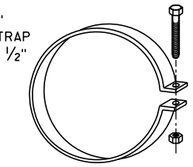

ALTERNATE FOR TYPE 1 CONNECTION

END SECTION CONNECTOR STRAP

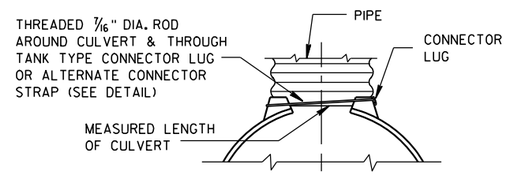

TYPE 1
FOR 12" THRU 24" CORR. PIPE

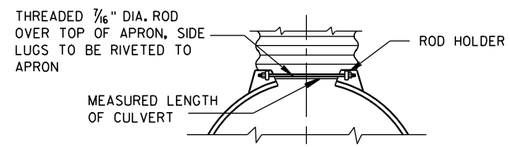

TYPE 2
FOR 30" THRU 96" CORR. PIPE

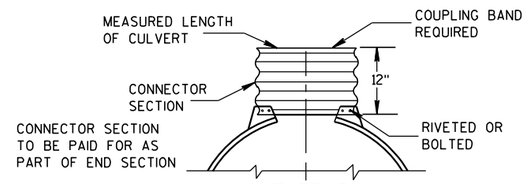

TYPE 3
FOR 42" THRU 96" CORR. PIPE

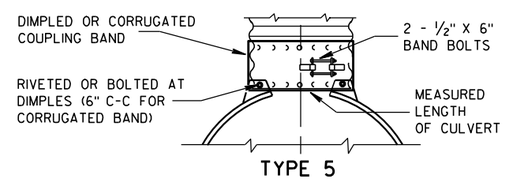

TYPE 5
ALTERNATE FOR:
ALL SIZES CORRUGATED CIRCULAR PIPE

NOTE: DIMPLED BAND FITS OVER OUTSIDE OF ENDWALL, AND CORRUGATED BAND FITS INSIDE ENDWALL. DIMPLED BAND MAY BE USED WITH HELICALLY CORRUGATED PIPE.

FOR CIRCUMFERENTIALLY CORRUGATED PIPE USE ENDWALL CONNECTION DETAILS 1, 2, 3 OR 5 AS APPLICABLE.

FOR HELICALLY CORRUGATED PIPE USE ENDWALL CONNECTION DETAILS 1, 2 OR 5.

FOR HELICALLY CORRUGATED PIPES WITH TWO CIRCUMFERENTIAL CORRUGATIONS AT EACH END USE ENDWALL CONNECTION DETAILS 1, 2 OR 3.

CONNECTION DETAILS

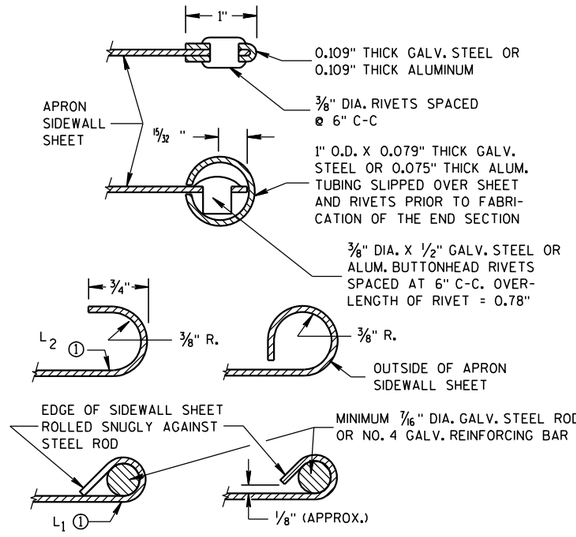

SECTION A-A

GENERAL NOTES

DETAILS OF CONSTRUCTION, MATERIALS AND WORKMANSHIP NOT SHOWN ON THIS DRAWING SHALL CONFORM TO THE PERTINENT REQUIREMENTS OF THE STANDARD SPECIFICATIONS AND THE APPLICABLE SPECIAL PROVISIONS.

CONCRETE CULVERT ENDWALLS MAY NOT BE USED WITH GALVANIZED STEEL OR ALUMINUM CULVERT PIPE OR VISE VERSA. GALVANIZED STEEL OR ALUMINUM ENDWALLS SHALL NORMALLY BE INSTALLED ON CULVERT PIPE OF THE SAME METAL.

ALL THREE PIECE STEEL APRON ENDWALLS FOR 60" DIAMETER PIPE AND LARGER SHALL HAVE 0.109" SIDES AND 0.138" CENTER PANELS. ALL THREE PIECE ALUMINUM APRON ENDWALLS FOR 60" DIAMETER PIPE AND LARGER SHALL HAVE 0.105" SIDES AND 0.134" CENTER PANELS. THE WIDTH OF CENTER PANELS SHALL BE GREATER THAN 20 PERCENT OF THE PIPE PERIMETER.

LAP SEAMS SHALL BE TIGHTLY JOINED BY GALVANIZED RIVETS OR BOLTS FOR STEEL UNITS AND ALUMINUM RIVETS AND BOLTS FOR ALUMINUM UNITS. FOR THE 60" THROUGH 96" DIAMETER APRON ENDWALL SIZES, THE REINFORCED EDGES AND CENTER PANEL SEAMS SHALL BE FURTHER REINFORCED WITH GALVANIZED STEEL OR ALUMINUM STIFFENER ANGLES. THE ANGLES SHALL BE ATTACHED BY GALVANIZED NUTS AND BOLTS FOR STEEL UNITS AND ALUMINUM NUTS AND BOLTS FOR ALUMINUM UNITS.

WHERE TWO OR MORE PIPES WITH APRON ENDWALLS ARE LAID ADJACENT TO EACH OTHER, THEY SHALL BE SEPARATED BY A DISTANCE SUFFICIENT TO PROVIDE A MINIMUM CLEARANCE OF 6 INCHES BETWEEN APRON ENDWALLS.

① FOR PIPE SIZES UP TO 60" DIAMETER, A 180° ROLLED EDGE MAY BE USED INSTEAD OF STEEL ROD REINFORCEMENT. SEE SECTION A-A.

APRON ENDWALLS FOR CULVERT PIPE

STATE OF WISCONSIN
DEPARTMENT OF TRANSPORTATION

APPROVED
11/30/94 — DATE
/S/ Rory L. Rhinesmith — CHIEF ROADWAY DEVELOPMENT ENGINEER
FHWA

6
S.D.D. 8 F 1-11

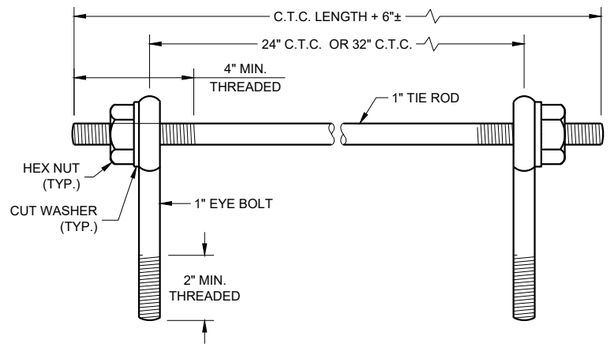

EYE BOLTS AND TIE ROD

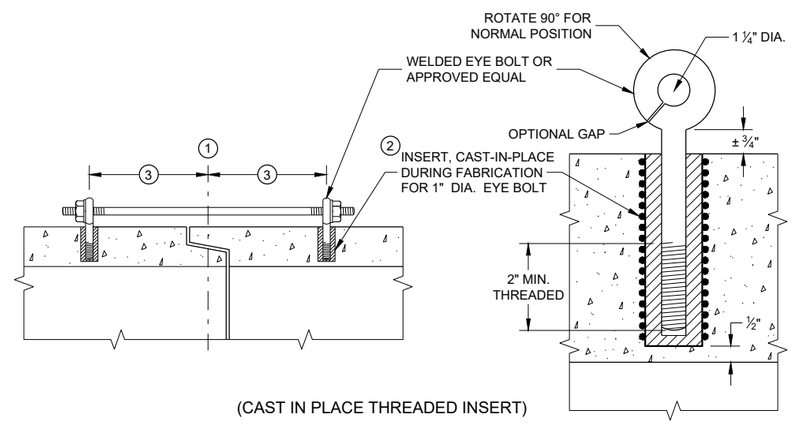

(CAST IN PLACE THREADED INSERT)

LONGITUDINAL SECTIONS

EYE BOLT AND TIE ROD ASSEMBLY (ALTERNATE NO. 1)

GENERAL NOTES

DETAILS OF CONSTRUCTION, MATERIALS, AND WORKMANSHIP NOT SHOWN ON THIS DRAWING SHALL CONFORM TO THE PERTINENT REQUIREMENTS OF THE STANDARD SPECIFICATIONS AND APPLICABLE SPECIAL PROVISIONS.

CONCRETE CULVERT AND STORM SEWER PIPE SHALL BE TIED TOGETHER IN THE MANNER ILLUSTRATED BY THIS DETAIL AT LOCATIONS DESIGNATED IN THE STANDARD SPECIFICATIONS AND THE PLAN. THE CONTRACTOR MAY USE EITHER ALTERNATE 1, 2 OR 3 FOR DRAINAGE STRUCTURES. ONLY ALTERNATE 1 AND 3 MAY BE USED FOR CATTLE PASSES, UNLESS OTHERWISE STATED IN THE CONTRACT. THE MATERIALS, FABRICATION AND WORK NECESSARY TO TIE THE PIPE BY THIS DETAIL WILL BE CONSIDERED INCIDENTAL TO THE PIPE AND APRON ENDWALLS IF REQUIRED.

DETAILED DRAWINGS FOR PROPOSED ALTERNATE DESIGNS FOR JOINT TIES SHALL BE SUBMITTED TO THE ENGINEER FOR APPROVAL.

JOINT TIES TO BE HOT-DIP GALVANIZED PER ASTM A 153.

1. CENTER LINE OF TONGUE AND GROOVE OR BELL AND SPIGOT JOINTS.
2. THE INSIDE OF THE THREADED INSERTS SHALL BE CLEAN TO ALLOW THE INSERTION OF THREADED EYE BOLTS.
3. HOLES SHALL BE CAST-IN-PLACE OR DRILLED PER THE APPLICABLE DETAIL, AND EQUAL DISTANCE FROM THE CENTERLINE OF THE JOINT.
4. BOLT PROJECTION INSIDE OF PIPE SHALL NOT EXCEED 2 INCHES.
5. OPENING TO BE ROD DIAMETER PLUS 1 INCH.
6. LENGTH ADEQUATE TO EXTEND TO WITHIN ½ INCH OF THE INNER SURFACE OF THE PIPE.
7. EYE BOLT LENGTH DETERMINED BY WALL THICKNESS, BELL THICKNESS AND BOLT PROJECTION INSIDE PIPE.

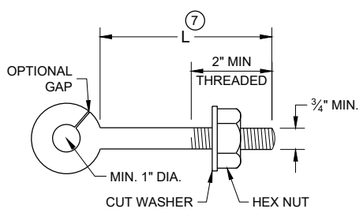

EYE BOLT 7

NOTE: TWO EYE BOLTS MAY BE USED WITH A 30" OR 38" LONG THREADED ROD IN LIEU OF THE 90° BENT TIE ROD.

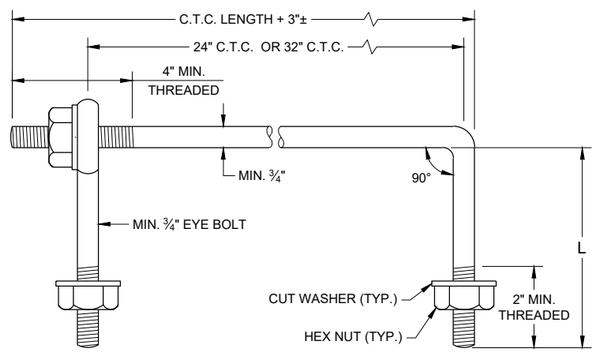

EYE BOLT AND TIE ROD

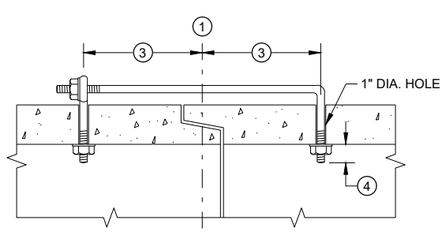

(TONGUE AND GROOVE PIPE)

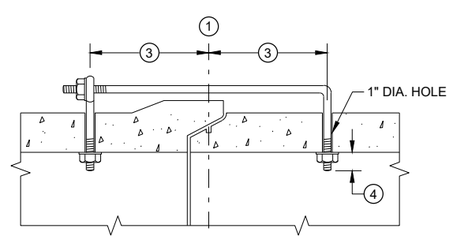

(MODIFIED BELL PIPE)

LONGITUDINAL SECTION

(JOINT TIES FOR 18" TO 66" DIA. CONCRETE PIPE)

EYE BOLT AND TIE ROD ASSEMBLY (ALTERNATE NO. 2)

ADJUSTABLE TIE ROD TABLE

PIPE DIAMETER	TIE ROD DIAMETER	D	L_1	N
12 - 60	⅝	⅝	5	½
66 - 84	¾	¾	5	½
90 - 144	1	1	7	1 7/16

DIMENSIONS SHOWN ARE IN INCHES

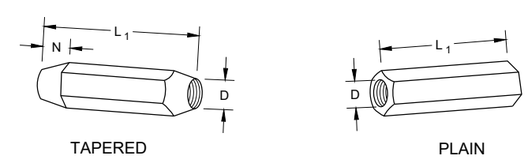

TAPERED PLAIN

RIGHT AND LEFT THREADS

SLEEVE NUTS

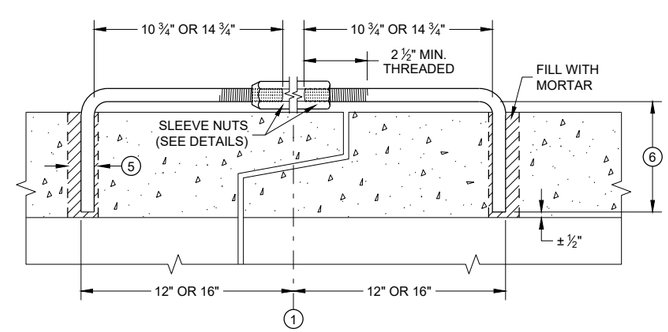

LONGITUDINAL SECTION

ADJUSTABLE TIE ROD (ALTERNATE NO. 3)

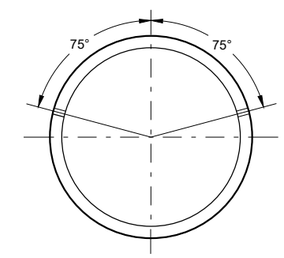

PLACEMENT OF (2) CAST-IN-PLACE INSERTS OR HOLES DURING FABRICATION FOR PIPE SECTIONS REQUIRING TIE RODS

TRANSVERSE SECTION

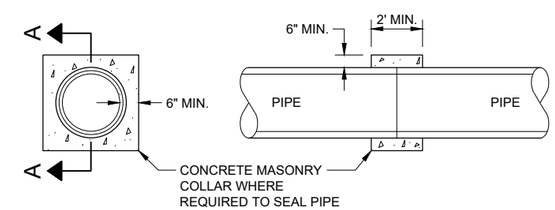

SECTION A - A

CONCRETE COLLAR DETAIL

JOINT TIES FOR CONCRETE PIPE AND CONCRETE COLLAR DETAIL

STATE OF WISCONSIN
DEPARTMENT OF TRANSPORTATION

APPROVED
November 2021 — DATE
/S/ Rodney Taylor — ROADWAY STANDARDS DEVE ENGINEER
FHWA

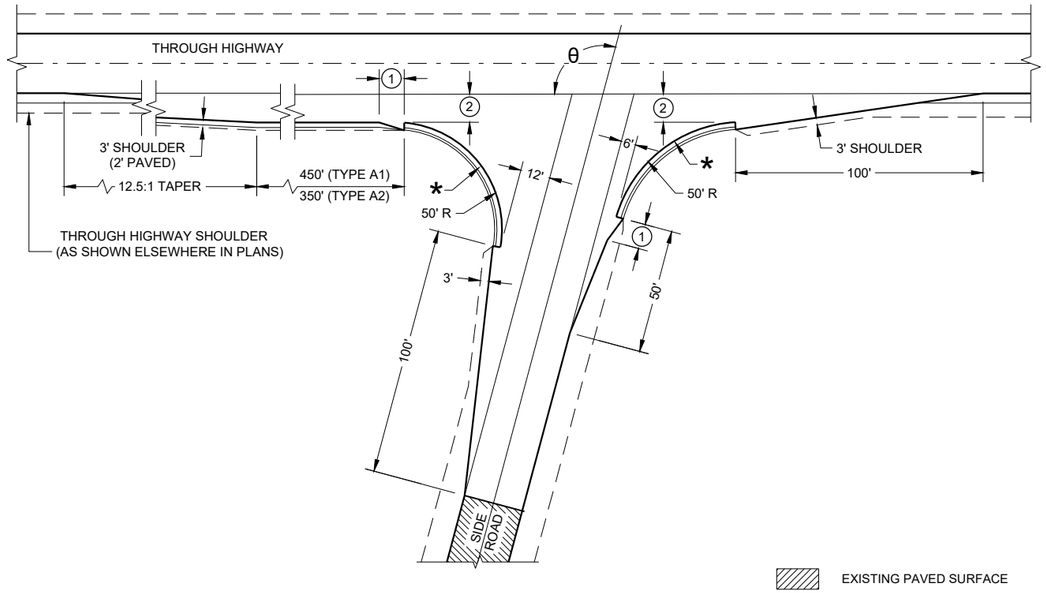

θ = MORE THAN 80°

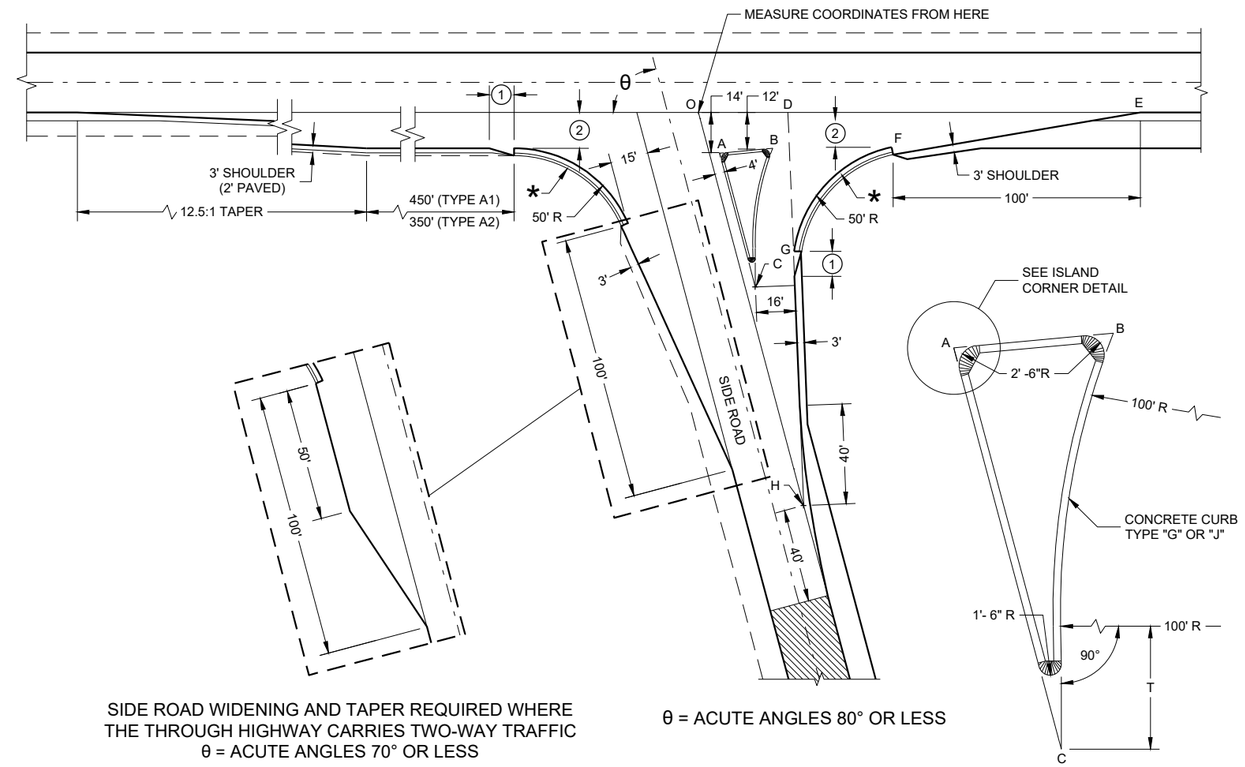

SIDE ROAD WIDENING AND TAPER REQUIRED WHERE
THE THROUGH HIGHWAY CARRIES TWO-WAY TRAFFIC
θ = ACUTE ANGLES 70° OR LESS

θ = ACUTE ANGLES 80° OR LESS

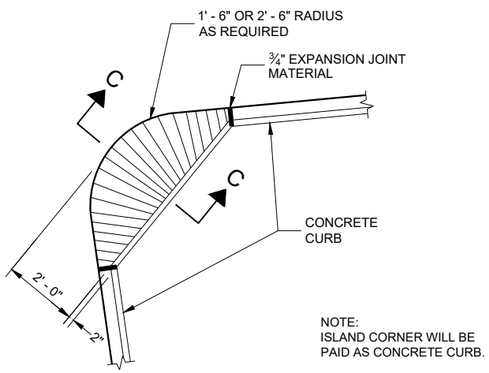

PLAN VIEW

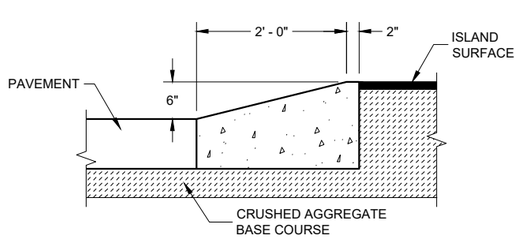

SECTION C - C

ISLAND CORNER DETAIL

(TO BE CONSTUCTED AT ALL ISLAND CORNERS)

TABLE OF DIMENSIONS FOR VARIABLE SIDE ROAD INTERSECTION ANGLES

(INTERPOLATE VALUES FOR ANGLES NOT SHOWN)

ANGLE θ DEGREES	COORDINATES IN FEET (MEASURED FROM POINT 'O') X / Y								LENGTH IN FEET				
	A	B	C	D	E	F	G	H	AB	AC	T	OJ	OH
60	12.7 / -14.0	44.9 / -12.0	46.4 / -72.4	41.9 / 0.0	205.0 / 0.0	104.6 / -12.0	64.0 / -75.5	85.0 / -147.1	32.3	67.4	4.9	85.9	169.9
65	10.9 / -14.0	39.0 / -12.0	37.8 / -71.6	39.4 / 0.0	196.1 / 0.0	95.7 / -12.0	54.1 / -71.5	70.5 / -151.3	28.2	63.6	8.5	80.9	166.9
70	9.4 / -14.0	33.9 / -12.0	29.8 / -70.1	37.4 / 0.0	188.3 / 0.0	87.8 / -12.0	45.6 / -67.5	56.1 / -154.2	24.6	59.7	11.5	76.1	164.1
75	7.9 / -14.0	29.3 / -12.0	22.3 / -67.9	35.7 / 0.0	181.2 / 0.0	80.7 / -12.0	38.2 / -63.4	41.8 / -155.9	21.5	55.8	13.8	71.4	161.4
80	6.5 / -14.0	25.4 / -12.0	15.6 / -65.2	34.4 / 0.0	174.8 / 0.0	74.4 / -12.0	31.8 / -59.3	27.6 / -156.5	18.9	52.0	15.6	66.9	158.9

TYPE 'A1" AND "A2" SIDE ROAD INTERSECTION DETAILS

AT GRADE SIDE ROAD INTERSECTIONS TYPES "A1" AND "A2"

STATE OF WISCONSIN
DEPARTMENT OF TRANSPORTATION

APPROVED
November 2022 — DATE
/S/ John Jenkins — ROADWAY STANDARDS DEVE ENGINEER
FHWA

6

SDD 09A01 - 14b

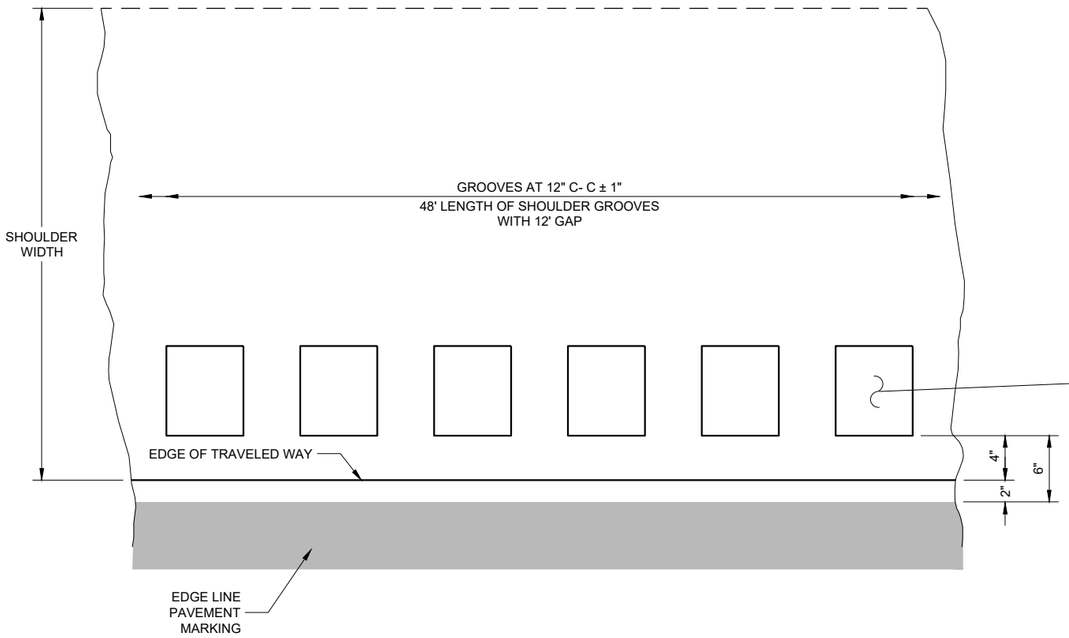

PLAN DETAIL VIEW
SHOULDER WITH GROOVES

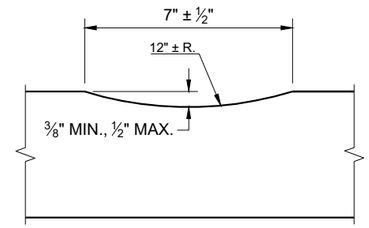

SECTION A - A

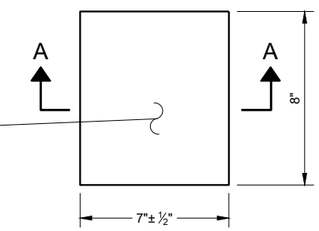

PLAN VIEW
(SINGLE GROOVE)

GENERAL NOTES

DO NOT MILL SHOULDER GROOVES THROUGH INTERSECTIONS, MARKED CROSSWALKS, NON-MOTORIZED PATH CROSSINGS, ETC. REFER TO SDD 13A10 SHEETS "g" AND "h".

SHOULDER GROOVES MAY BE OMITTED IN AREAS WITH HIGH CONCENTRATIONS OF DRIVEWAYS WHEN DIRECTED BY THE ENGINEER.

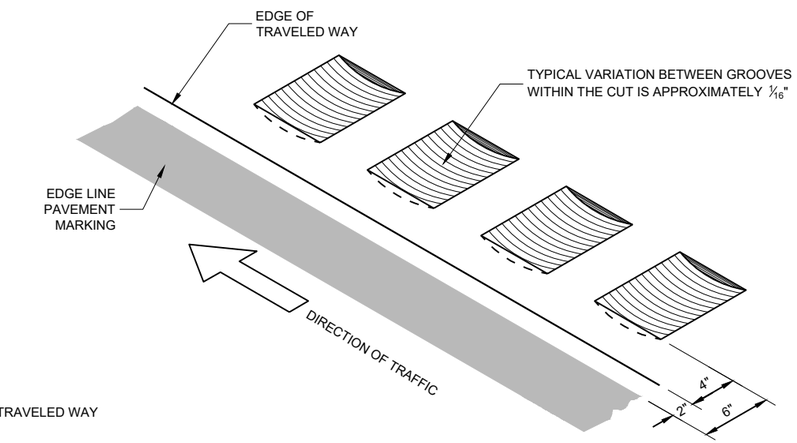

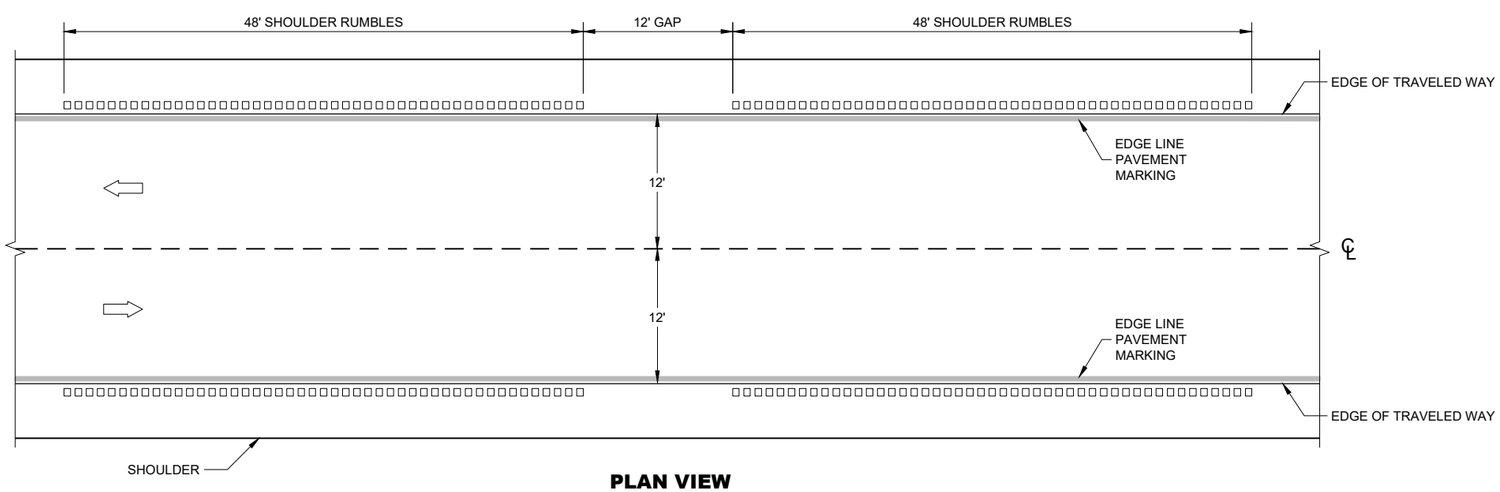

PLAN VIEW

SHOULDER RUMBLE STRIPS - ASPHALT

SHOULDER RUMBLE STRIPS ASPHALT

STATE OF WISCONSIN
DEPARTMENT OF TRANSPORTAT

6

SDD 13A10 - 03a

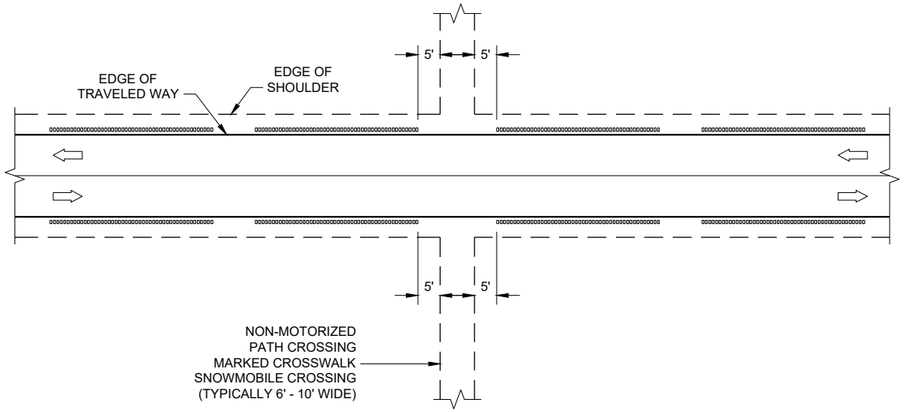

GROOVES AT MISCELLANEOUS CROSSINGS

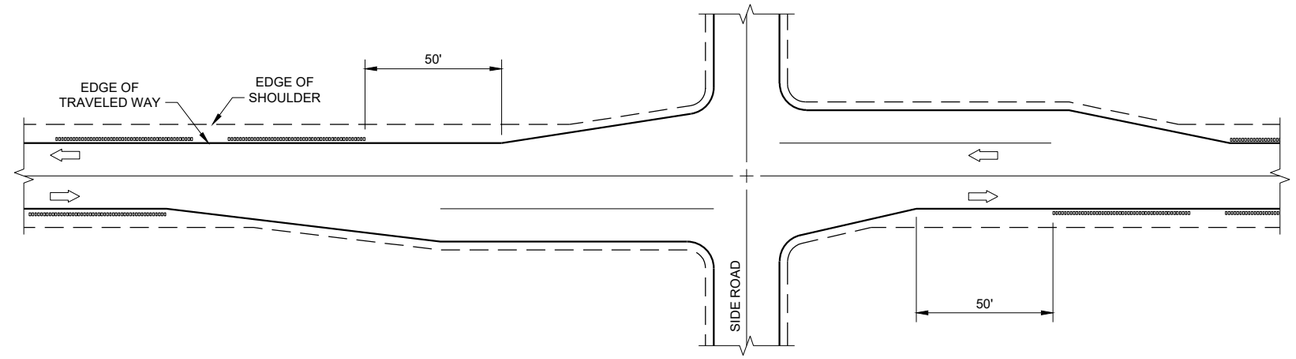

GROOVES AT RIGHT TURN LANE

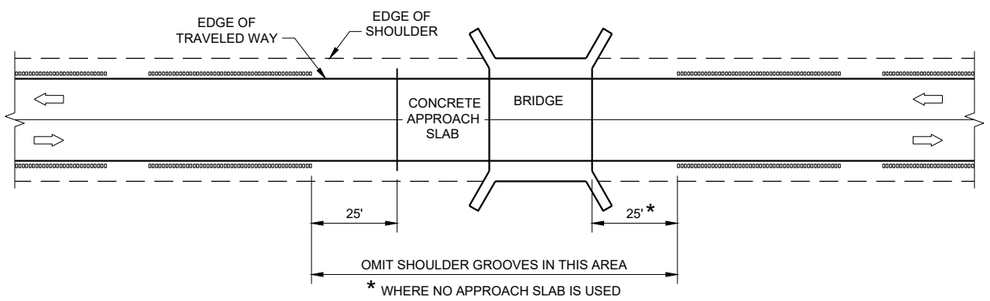

GROOVES AT BRIDGES

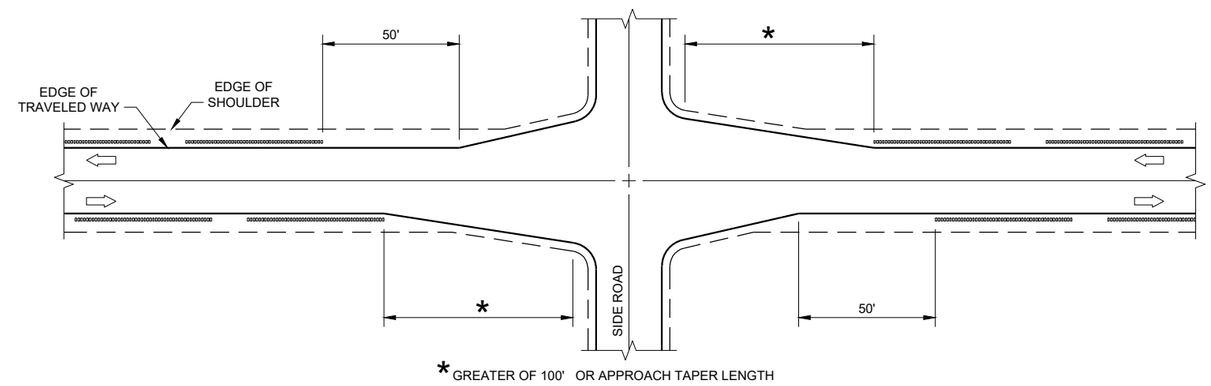

GROOVES AT INTERSECTIONS WITH APPROACH TAPER

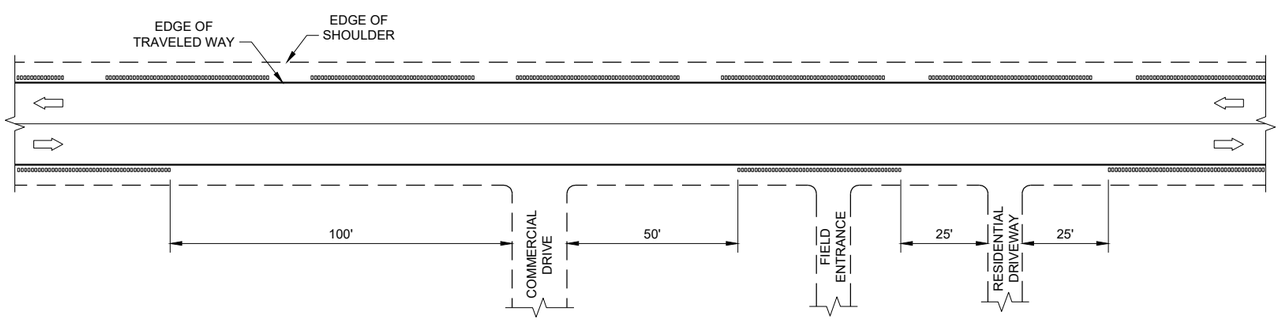

GROOVES AT DRIVEWAYS (1)

GENERAL NOTES

(1) SHOULDER GROOVES MAY BE OMITTED IN AREAS WITH HIGH CONCENTRATIONS OF DRIVEWAYS. WHEN DIRECTED BY THE ENGINEER.

SHOULDER AND EDGE LINE RUMBLE STRIPS CROSSINGS, INTERSECTIONS, BRIDGES, DRIVEWAYS

STATE OF WISCONSIN
DEPARTMENT OF TRANSPORTA

6

SDD 13A10 - 03g

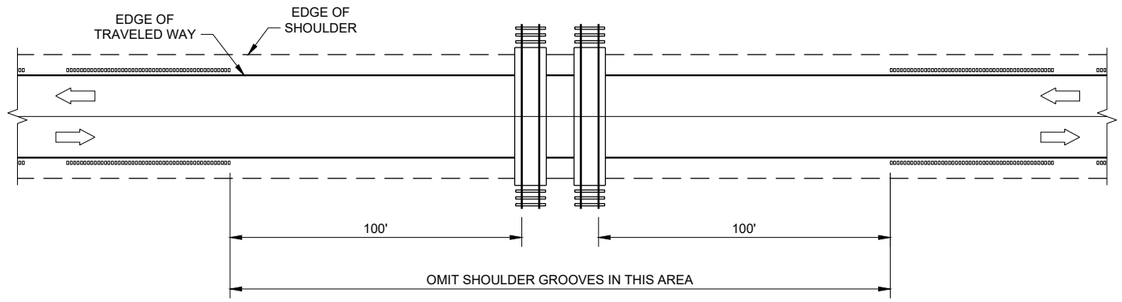

GROOVES AT RAILROADS

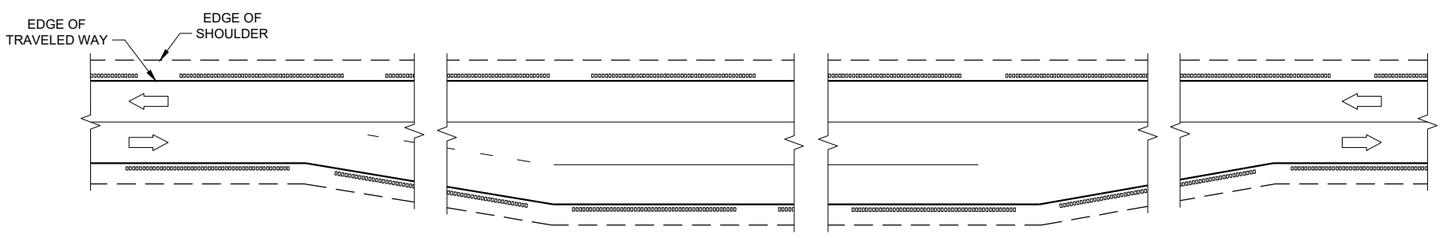

GROOVES AT PASSING AND CLIMBING LANES

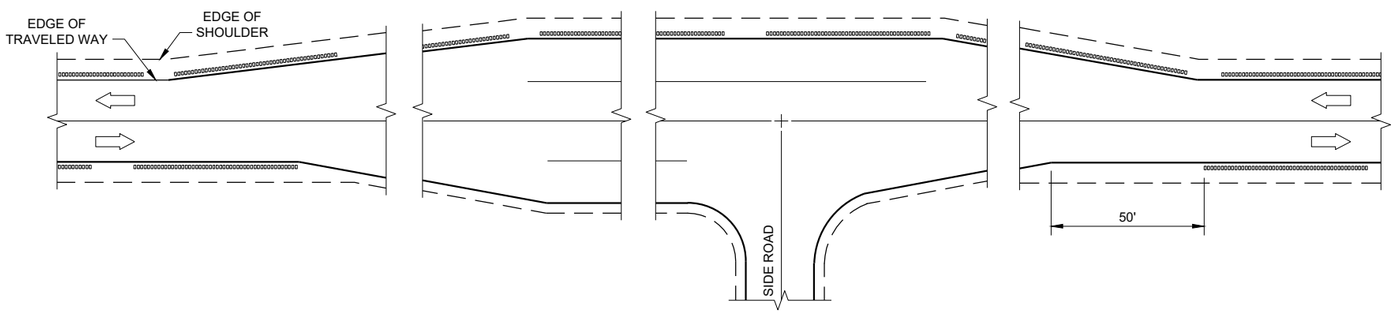

GROOVES AT BYPASS LANES

6

6

SHOULDER AND EDGE LINE RUMBLE STRIPS - RAILROAD, PASSING, CLIMBING AND BYPASS LANES

STATE OF WISCONSIN
DEPARTMENT OF TRANSPORTATION

APPROVED
May 2023 — DATE
/S/ John Jenkins — ROADWAY STANDARDS DEVE ENGINEER
FHWA

SDD 13A10 - 03h

SDD 13A10 - 03h

GENERAL NOTES

DO NOT MILL SHOULDER GROOVES THROUGH INTERSECTIONS, MARKED CROSSWALKS, NON-MOTORIZED PATH CROSSINGS, ETC. REFER TO SDD 13A11 SHEETS "d" AND "e".

CENTERLINE GROOVES MAY BE OMITTED IN AREAS WITH HIGH CONCENTRATIONS OF DRIVEWAYS WHEN DIRECTED BY THE ENGINEER.

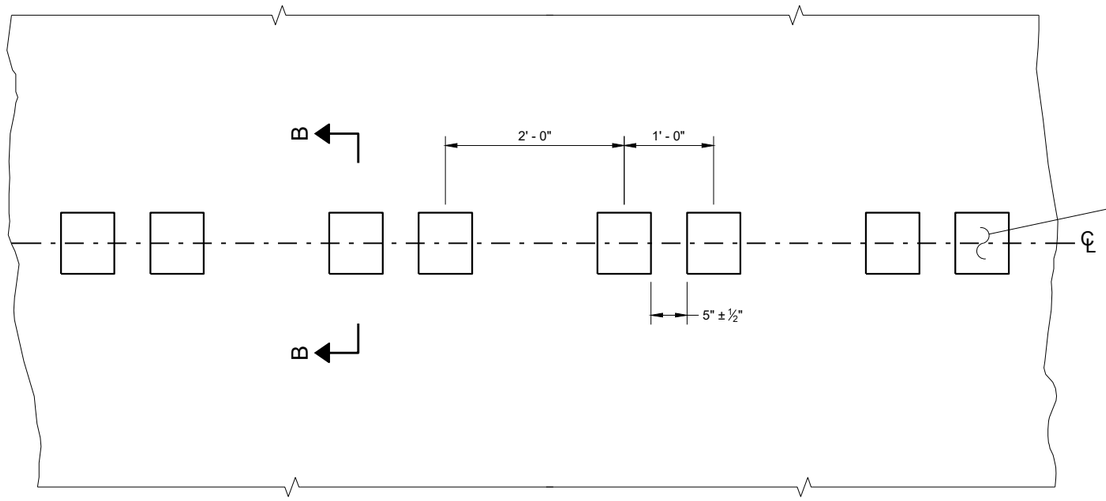

PLAN DETAIL VIEW

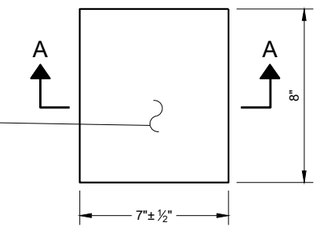

PLAN VIEW
(SINGLE GROOVE)

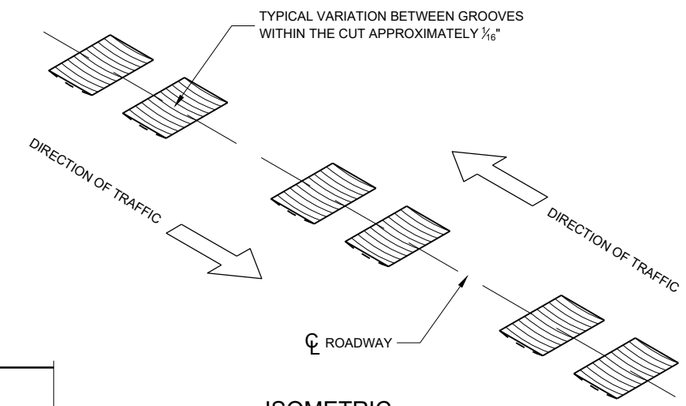

ISOMETRIC

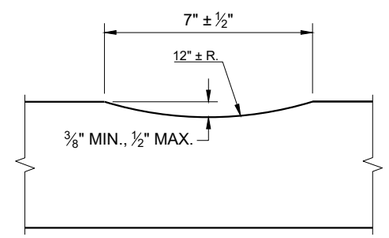

SECTION A - A

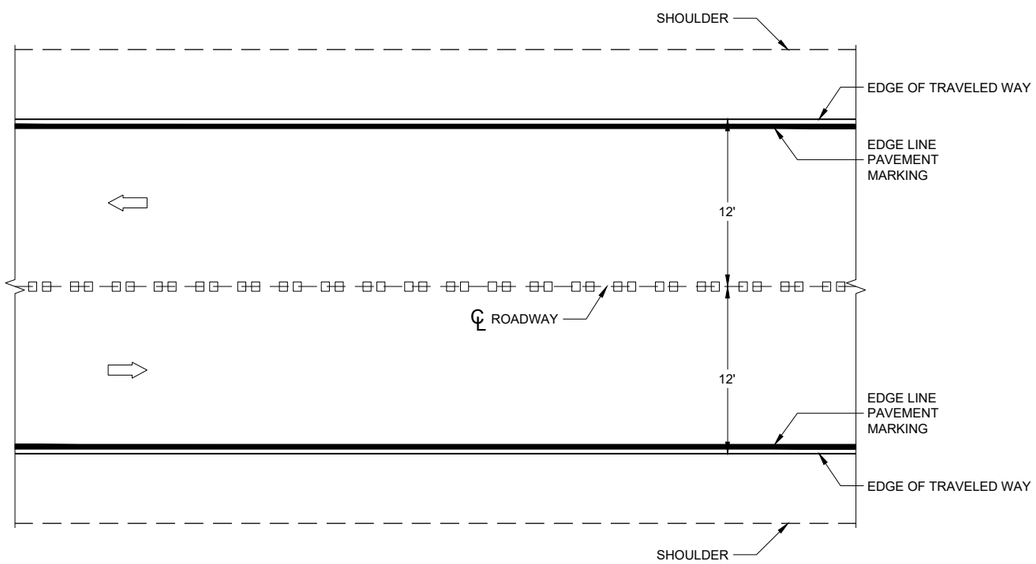

PLAN VIEW

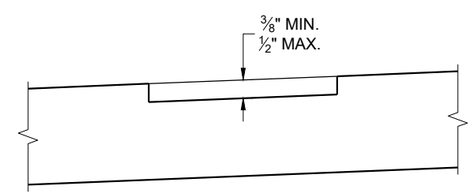

SECTION B - B
SUPERELEVATED ROADWAY

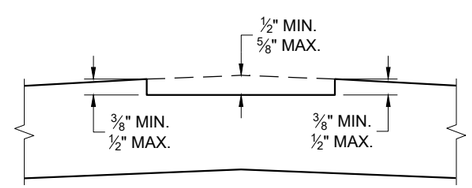

SECTION B - B
CROWNED ROADWAY

CENTERLINE RUMBLE STRIPS - ASPHALT

6

SDD 13A11 - 04a

CENTERLINE RUMBLE STRIPS - ASPHALT

STATE OF WISCONSIN
DEPARTMENT OF TRANSPORTAT

6

SDD 13A11 - 04a

GENERAL NOTES

1. CENTERLINE GROOVES MAY BE OMITTED IN AREAS WITH HIGH CONCENTRATIONS OF DRIVEWAYS WHEN DIRECTED BY THE ENGINEER.

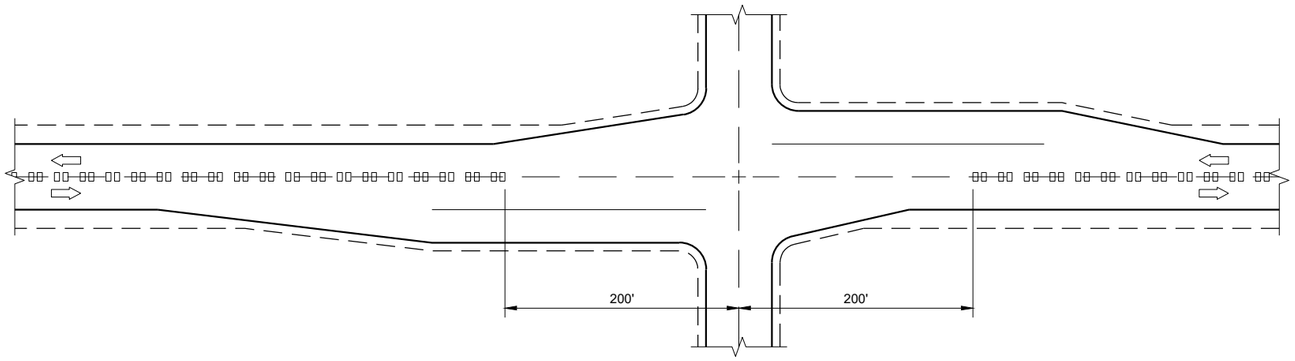

CENTERLINE GROOVES AT INTERSECTIONS

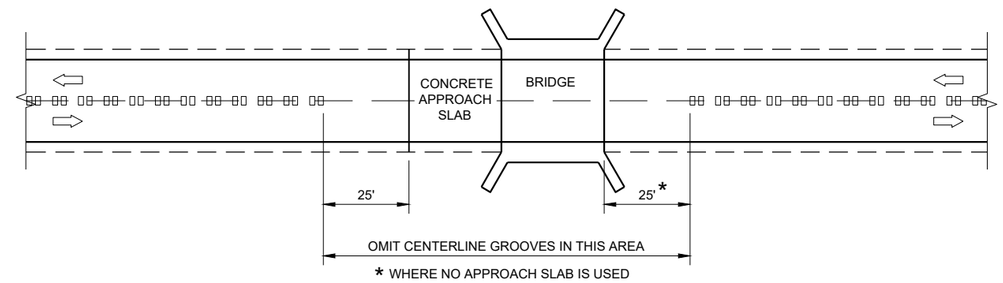

CENTERLINE GROOVES AT BRIDGES

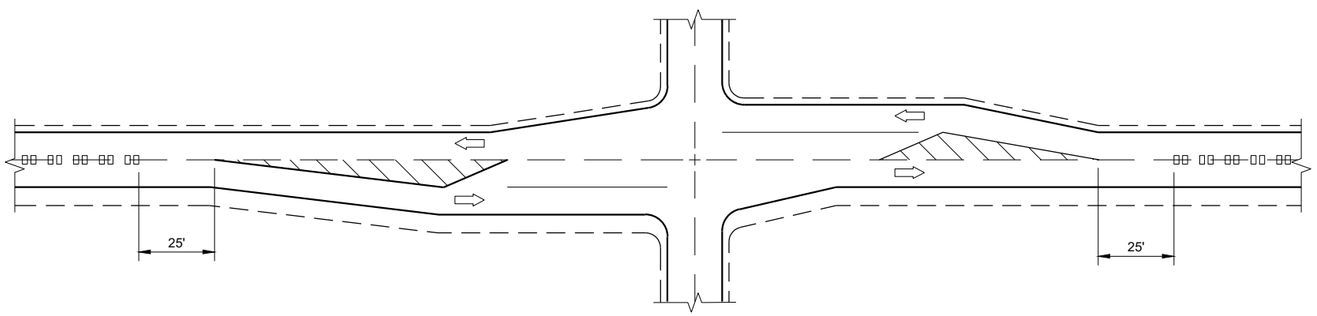

CENTERLINE GROOVES AT INTERSECTIONS (WITH LEFT TURN LANES)

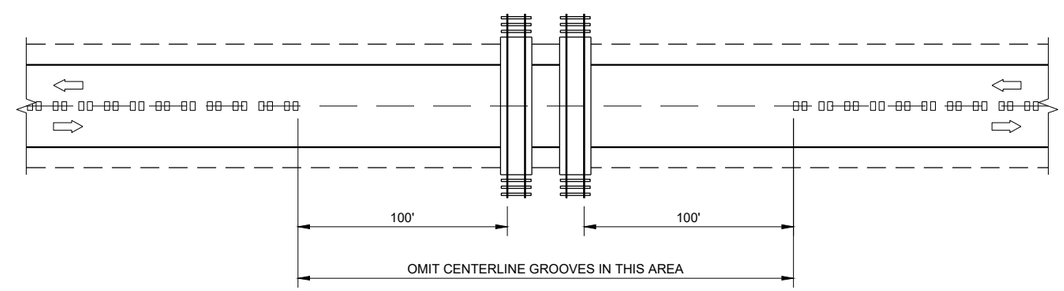

CENTERLINE GROOVES AT RAILROADS

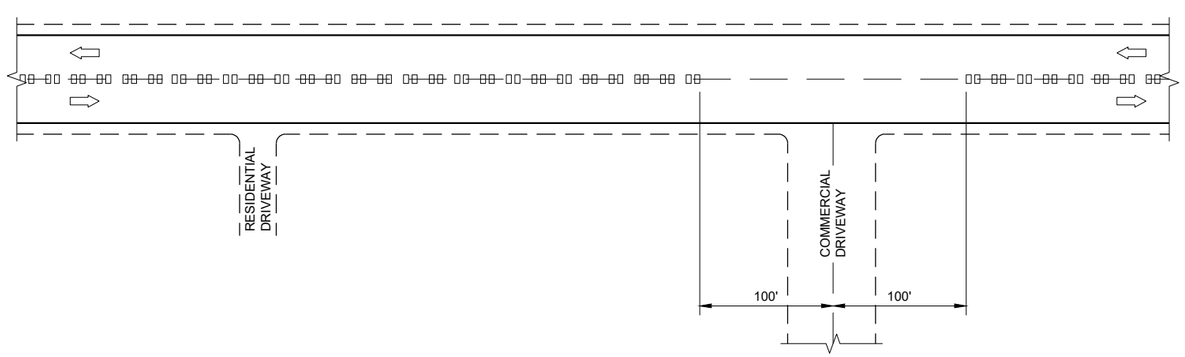

CENTERLINE GROOVES AT DRIVEWAYS (1)

CENTER LINE RUMBLE STRIPS - INTERSECTIONS, DRIVEWAYS, BRIDGES, RAIL ROADS	
STATE OF WISCONSIN DEPARTMENT OF TRANSPORTATION	
APPROVED May 2023 DATE	/S/ John Jenkins ROADWAY STANDARDS DEVE ENGINEER

FHWA

6

SDD 13A11 - 04d

GENERAL NOTES

SAW CUT, DRILL, AND LIFT OUT EXISTING CONCRETE PAVEMENT WITHIN THE BOUNDARIES OF CONCRETE REPAIR AREAS. THE CONTRACTOR MAY MAKE ADDITIONAL SAW CUTS INSIDE THE REPAIR LIMITS TO REDUCE WEIGHT AND SIZE OF CONCRETE PIECES.

PROVIDE A 6 FOOT MINIMUM DISTANCE FROM BOUNDARIES OF CONCRETE REPAIR AREA TO ADJACENT TRANSVERSE JOINT OR CRACK.

THE LENGTH OF THE REPAIRS MAY VARY FROM THE DIMENSIONS SHOWN IF THE EXISTING CONCRETE PAVEMENT IS NON-DOWELED AND THE PAVEMENT IS TO BE OVERLAID AFTER REPAIRING.

(1) DOWEL BARS MAY NOT BE PRESENT.

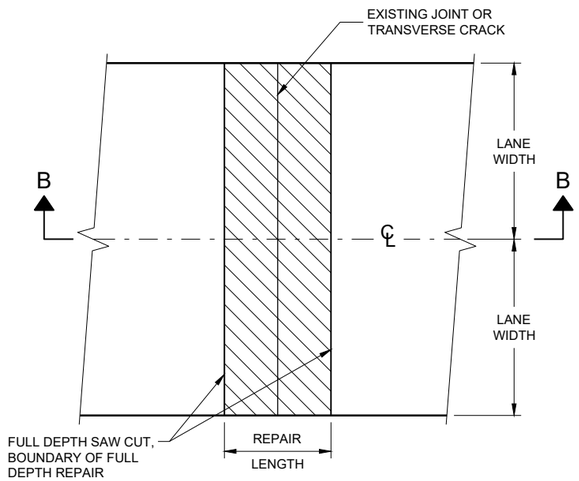

PLAN VIEW (DOUBLE LANE REPAIR)

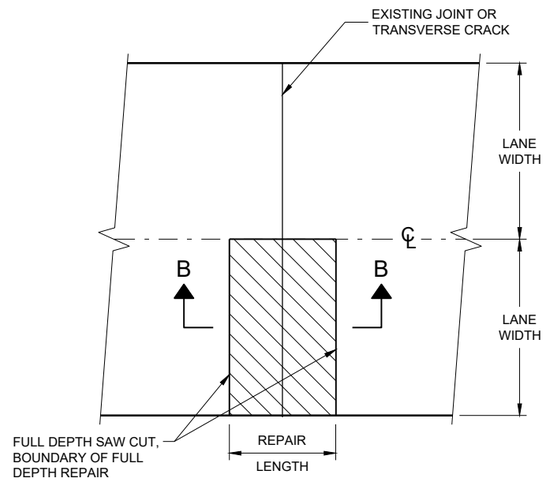

PLAN VIEW (SINGLE LANE REPAIR)

FULL DEPTH CONCRETE PAVEMENT REMOVAL

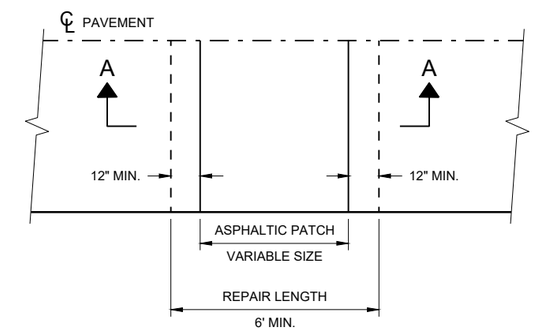

PLAN VIEW

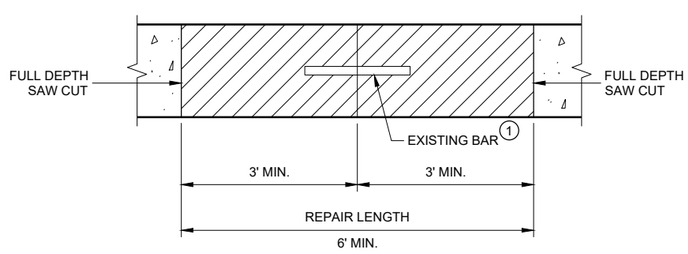

SECTION B - B

CONCRETE REMOVAL

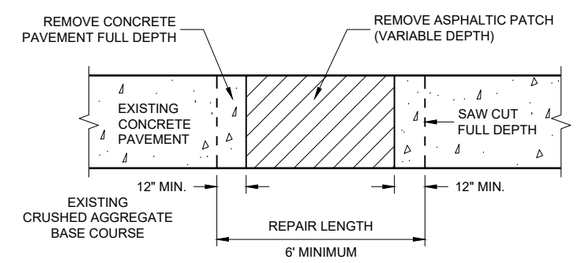

SECTION A - A

HMA PATCH REMOVAL

CONCRETE PAVEMENT REPAIR AND REPLACEMENT

STATE OF WISCONSIN
DEPARTMENT OF TRANSPORTAT

6

SDD 13C09 - 17a

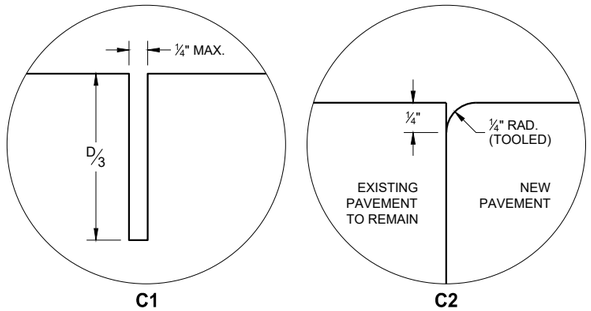

TRANSVERSE JOINTS

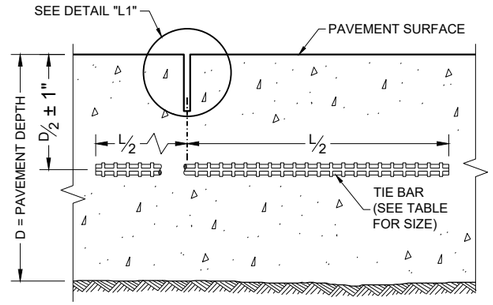

SECTION C - C

SAWED LONGITUDINAL JOINT

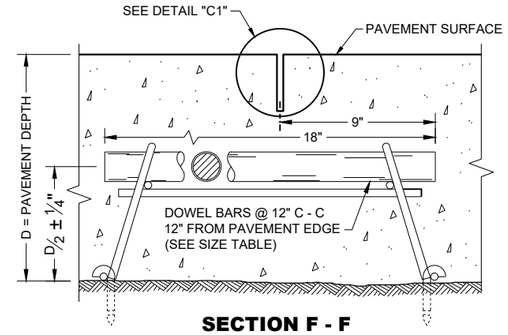

SECTION F - F

DOWELED CONTRACTION JOINT

GENERAL NOTES

INSTALL DOWEL BARS PARALLEL TO THE PAVEMENT CENTERLINE AND PAVEMENT SURFACE.

CONCRETE PAVEMENT REPAIRS OF EXISTING NON-DOWELED CONCRETE PAVEMENTS DO NOT NEED TO BE DOWELED.

ANCHOR DOWEL BARS AND TIE BARS INTO DRILLED HOLES WITH AN EPOXY.

FOR MULTI-LANE CONCRETE PAVEMENT REPLACEMENTS, PROVIDE A MINIMUM DISTANCE OF 15 INCHES FROM ALL TRANSVERSE JOINTS OR EDGES OF REPLACEMENT TO THE CENTER OF THE TIE BAR NEAREST THAT JOINT OR EDGE.

(1) APPLY A THIN UNIFORM COATING OF SURFACE TREATMENT TO THE FREE END OF DOWEL BARS TO PREVENT BONDING.

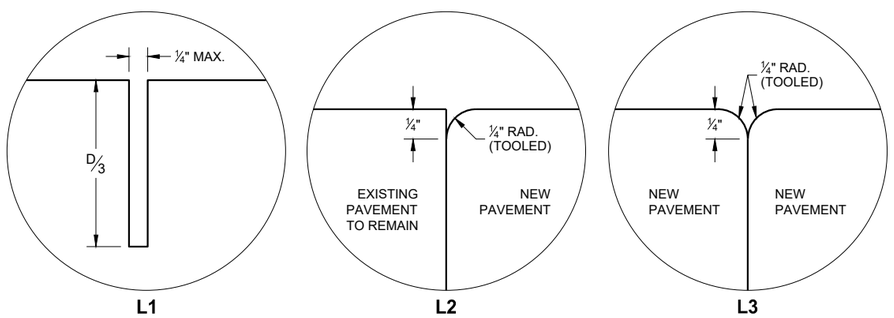

LONGITUDINAL JOINTS

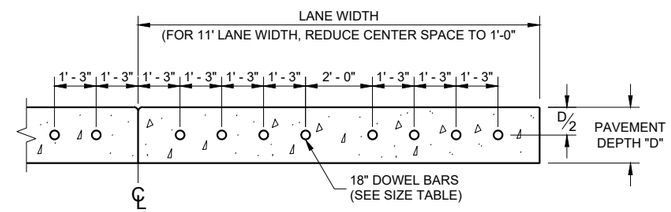

SECTION E - E

DRILLED DOWEL BAR CONSTRUCTION JOINT

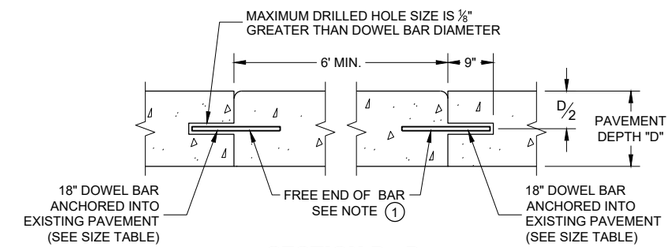

SECTION D - D

TIE BAR TABLE

PAVEMENT DEPTH (D)	TIE BAR SIZE	TIE BAR LENGTH (L)	MAX. TIE BAR SPACING
< 10½"	NO. 4	30"	36"
≥ 10½"	NO. 5	36"	36"
	NO. 4 *	30"	24" **

* SUBSTITUTE BENT BARS AT LONGITUDINAL JOINTS WHEN EQUIPMENT LIMITATIONS DURING CONSTRUCTION WARRANT (e.g. AUXILIARY LANES OR TURN LANES)

** CONFORM TO 15" MINIMUM SPACING FROM TRANSVERSE JOINTS; SPACING BETWEEN TIE BARS WILL BE 30" AT TRANSVERSE JOINTS.

PAVEMENT DEPTH, DOWEL BAR SIZE AND JOINT SPACING TABLE

PAVEMENT DEPTH (D)	DOWEL BAR DIAMETER	DRILLED DOWEL BAR DIAMETER	CONTRACTION JOINT SPACING
6", 6½"	NONE	NONE	12'
7", 7½"	1"	1"	14'
8" & ABOVE	1¼"	1¼"	15'

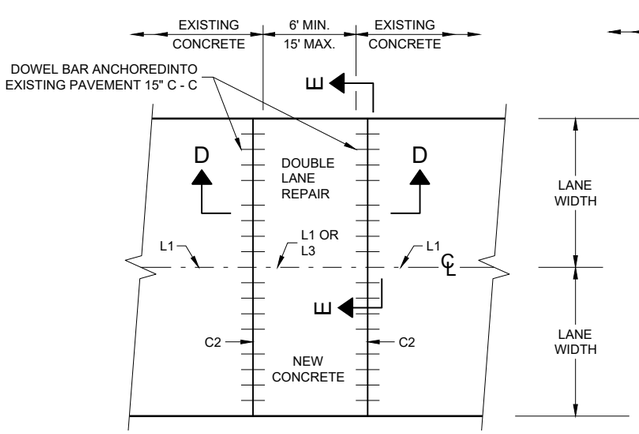

PLAN VIEW

MULTILANE CONCRETE PAVEMENT REPAIR

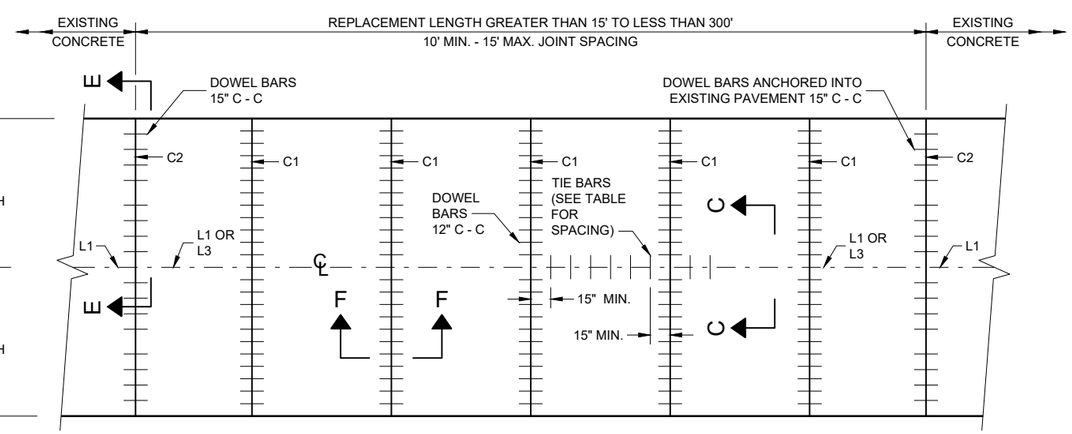

PLAN VIEW

MULTILANE CONCRETE PAVEMENT REPLACEMENT

CONCRETE PAVEMENT REPAIR AND REPLACEMENT

STATE OF WISCONSIN
DEPARTMENT OF TRANSPORTATION

6

SDD 13C09 - 17b

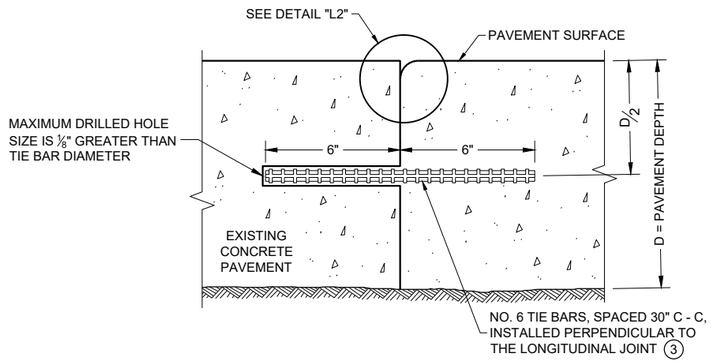

SECTION G - G

TIE BARS ANCHORED INTO EXISTING PAVEMENT

GENERAL NOTES

1. WITH THE APPROVAL OF THE ENGINEER, FOR SINGLE LANE PAVEMENT REPLACEMENTS LESS THAN 30 FEET IN LENGTH, THE CONTRACTOR MAY INSTALL DRILLED TIE BARS ON 6:1 SKEW HORIZONTALLY, DIRECTION OF SKEW ALTERNATING WITH EACH SUCCESSIVE BAR. DRIVE SKEWED TIE BARS TO A DEPTH OF 6 INCHES IN A HOLE OF SUCH A DIAMETER AS TO PROVIDE A TIGHT DRIVEN FIT.
2. USE AN ENGINEER APPROVED BOND BREAKER (E.G. RELEASE AGENT, CURING COMPOUND) FOR SINGLE LANE REPAIRS UP TO 15 FEET IN LENGTH.
3. ANCHOR TIE BARS INTO DRILLED HOLES WITH AN EPOXY.

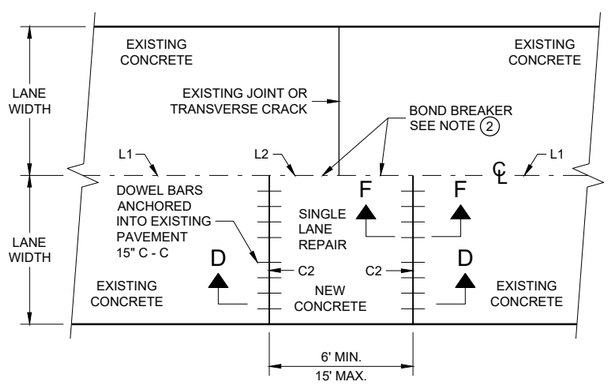

PLAN VIEW

SINGLE LANE CONCRETE PAVEMENT REPAIR

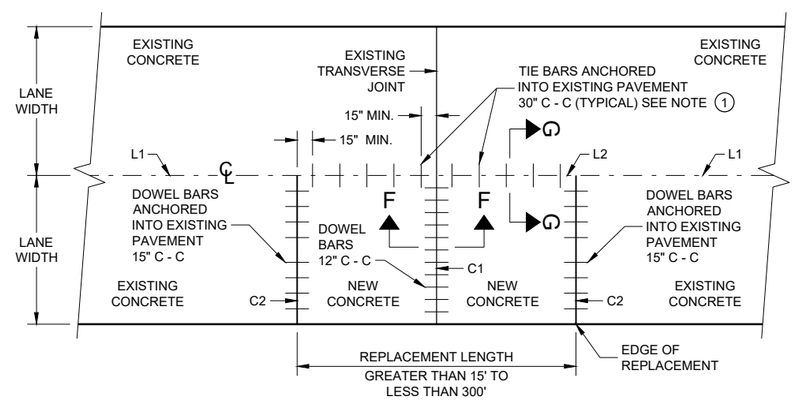

PLAN VIEW

SINGLE LANE CONCRETE PAVEMENT REPLACEMENT

CONCRETE REPAIR AND REPLACEMENT

STATE OF WISCONSIN
DEPARTMENT OF TRANSPORTATION

APPROVED
November 2022 /S/ Peter Kemp P.E.
DATE PAVEMENT SUPERVISOR
FHWA

6

SDD 13C09 - 17c

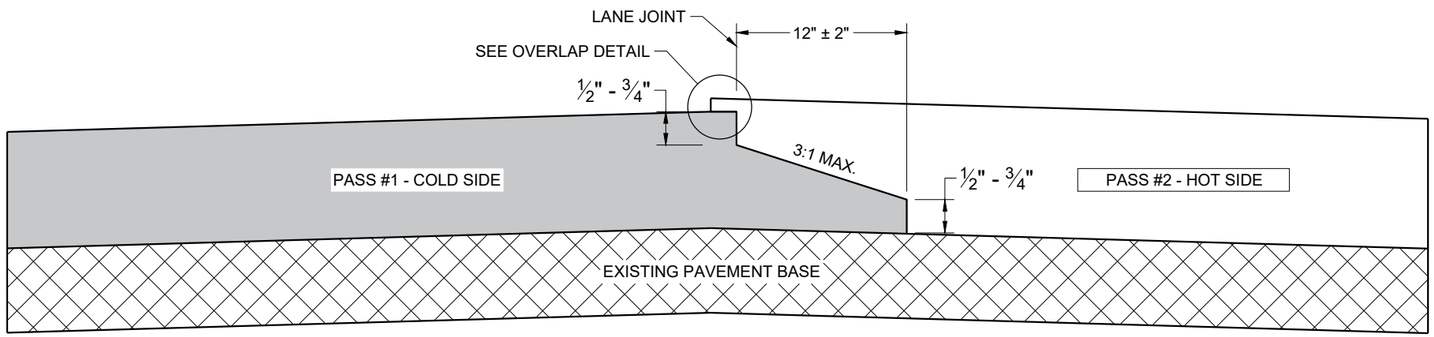

TYPICAL PAVEMENT CROSS SECTION
NOTCHED WEDGE JOINT

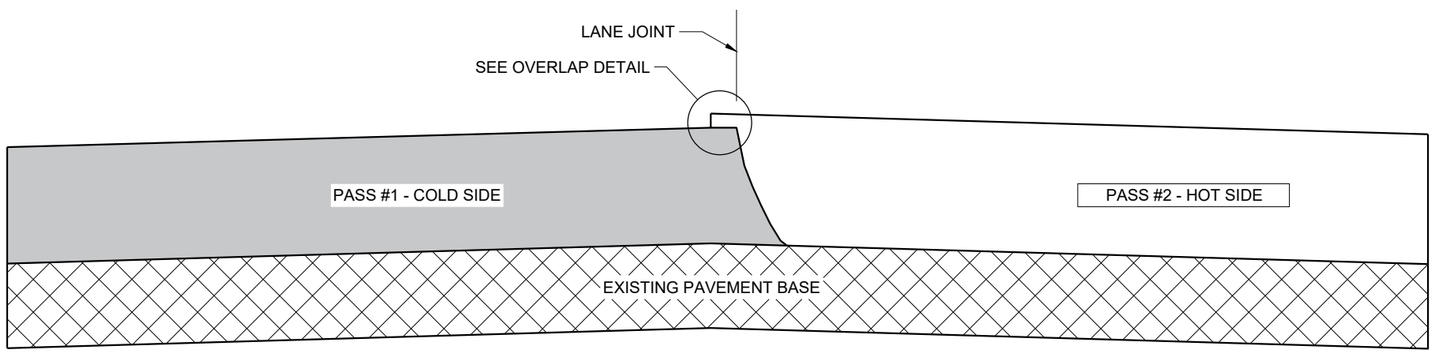

TYPICAL PAVEMENT CROSS SECTION
VERTICAL JOINT

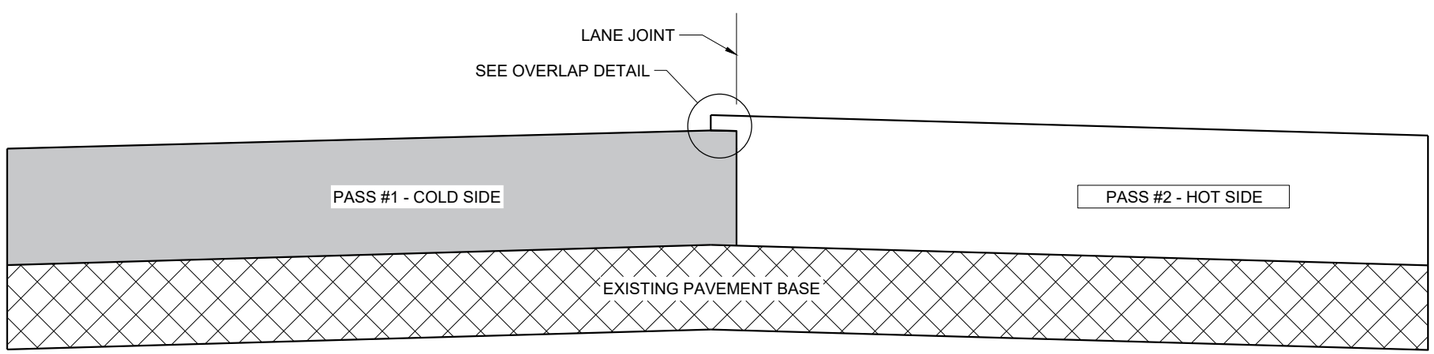

TYPICAL PAVEMENT CROSS SECTION
VERTICAL JOINT (MILLED)

GENERAL NOTES

IN ADDITION TO THE DETAILS PROVIDED IN THIS DRAWING, CONFORM TO STANDARD SPECIFICATION 450.3.2.8 FOR WHEN A NOTCHED WEDGE JOINT IS REQUIRED AND FOR GENERAL JOINT CONSTRUCTION REQUIREMENTS.

FOR ALL LONGITUDINAL JOINTS, ENSURE THE PAVER SCREED OVERLAPS THE PREVIOUSLY PLACED PAVEMENT BY 1" ± 0.5" AND THE HOT SIDE OF THE JOINT REMAINS HIGHER THAN THE COLD SIDE BY APPROXIMATELY 0.1" AFTER FINAL COMPACTION. (IT WILL BE FLUSH WHEN PAVING IN ECHELON.)

ONLY REMOVE THE LONGITUDINAL NOTCHED WEDGE JOINT FOR SMA PAVEMENT OR AS DIRECTED BY THE ENGINEER TO ADDRESS SPECIFIC LENGTHS OF JOINT DAMAGED BY TRAFFIC.

WHEN MILLING BACK OR REMOVING ANY LONGITUDINAL JOINT, LIMIT THE MATERIAL REMOVED TO 2" FROM THE TOP NOTCH OR FROM THE VERTICAL JOINT EDGE ON THE COLD SIDE OF THE JOINT.

USE LONGITUDINAL MILLED JOINT AS PLANS SHOW OR THE AS THE ENGINEER DIRECTS.

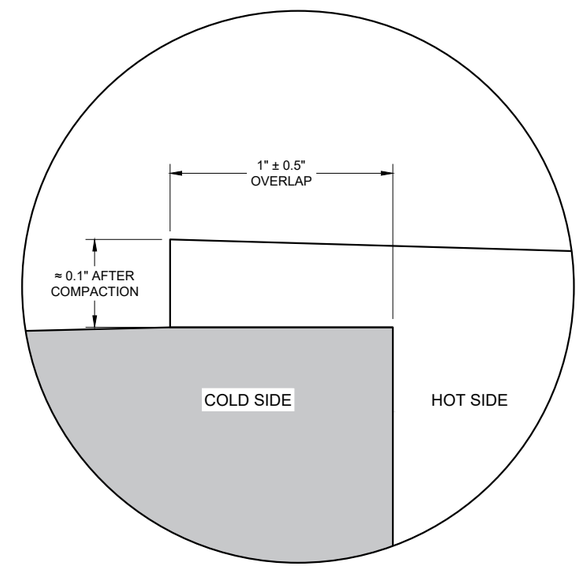

OVERLAP DETAIL (TYPICAL)

6

6

SDD 13C19 - 03

SDD 13C19 - 03

HMA LONGITUDINAL JOINTS

STATE OF WISCONSIN
DEPARTMENT OF TRANSPORTATION

APPROVED
November 2020 /S/ Steven Hefel
DATE HMA PAVEMENT ENGIN

FHWA

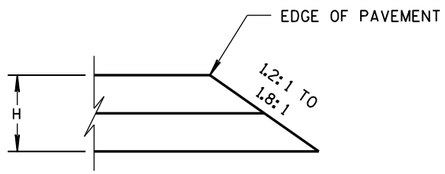

CONSTRUCTED WITH FINAL TWO LAYERS

FOR H 5" OR LESS

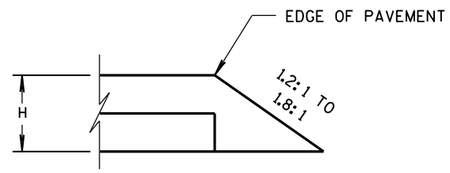

CONSTRUCTED WITH FINAL LAYER

FOR H 5" OR LESS

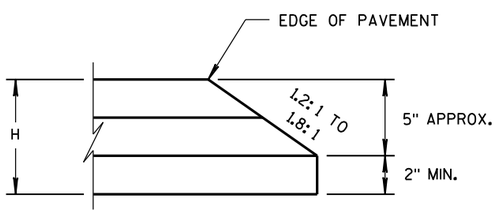

CONSTRUCTED WITH FINAL TWO LAYERS

FOR H GREATER THAN 5"

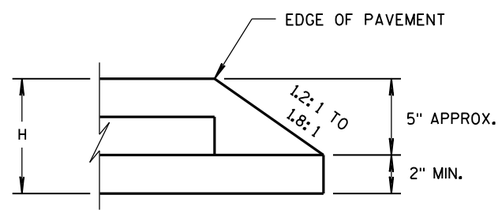

CONSTRUCTED WITH FINAL LAYER

FOR H GREATER THAN 5"

HMA PAVEMENT AND HMA OVERLAYS

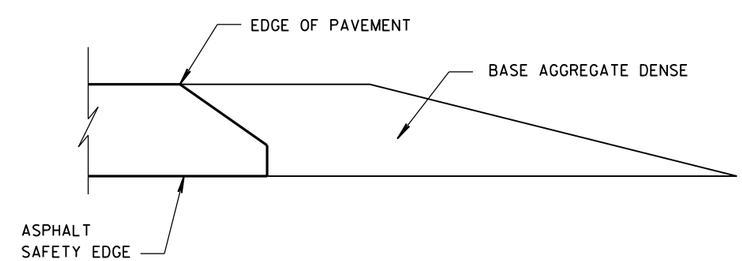

FINISHED SHOULDER AGGREGATE PLACEMENT

6

6

S.D.D. 14 B 29-1

S.D.D. 14 B 29-1

SAFETY EDGE SM

STATE OF WISCONSIN
DEPARTMENT OF TRANSPORTATION

APPROVED

11/30/2012
DATE

/S/ Jerry H. Zogg
ROADWAY STANDARDS DEVELOPMENT ENGINEER

FHWA

GENERAL NOTES

DETAILS OF CONSTRUCTION, MATERIALS AND WORKMANSHIP NOT SHOWN ON THIS DRAWING SHALL CONFORM TO THE PERTINENT REQUIREMENTS OF THE STANDARD SPECIFICATIONS AND THE APPLICABLE SPECIAL PROVISIONS.

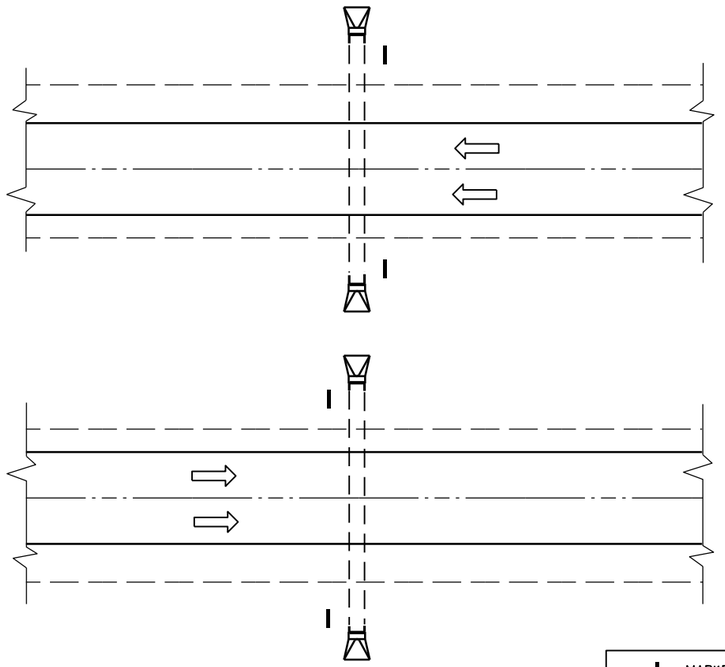

PLAN VIEW

DIVIDED HIGHWAY

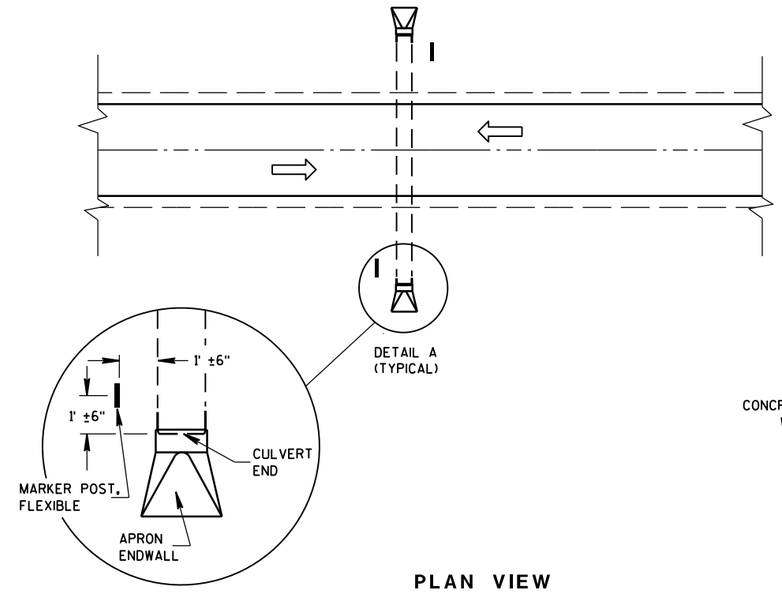

DETAIL A
(TYPICAL)

PLAN VIEW

UNDIVIDED HIGHWAY

MARKER POST, FLEXIBLE

DIRECTION OF TRAFFIC FLOW

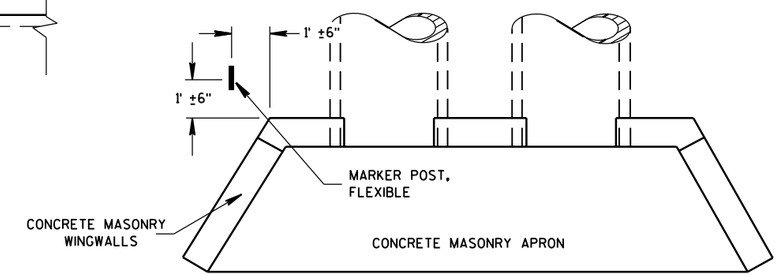

PLAN VIEW

CONCRETE MASONRY ENDWALLS FOR CULVERT PIPE AND PIPE ARCH

FLEXIBLE MARKER POST LOCATION

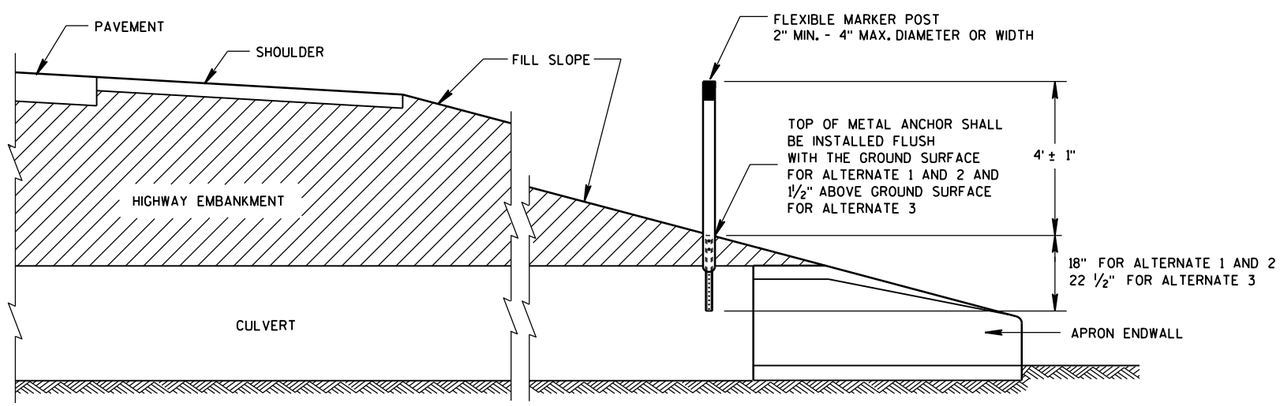

CROSS SECTION

FLEXIBLE MARKER POST

FLEXIBLE MARKER POST FOR CULVERT END

STATE OF WISCONSIN
DEPARTMENT OF TRANSPOR

6

S.D.D. 15 A 3-2a

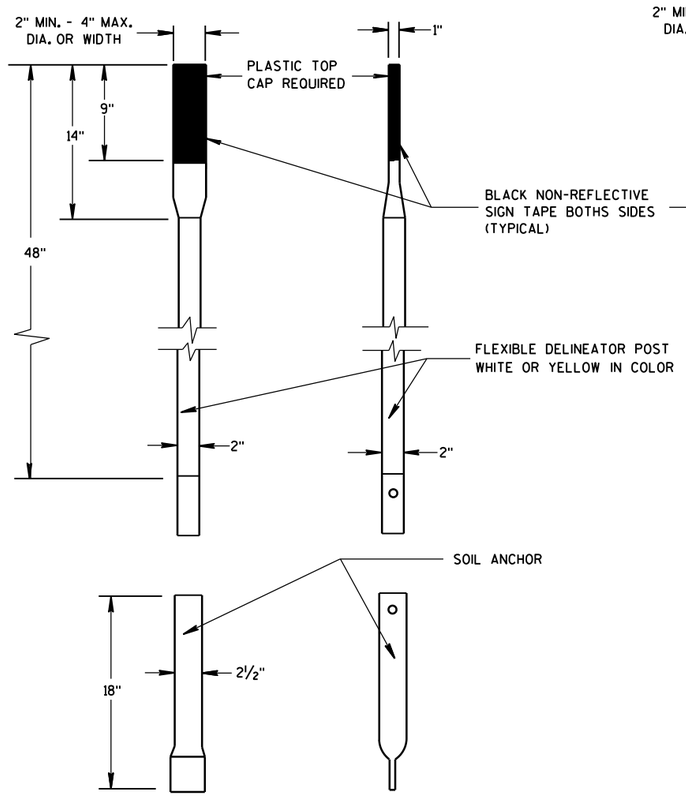

ALTERNATE 1

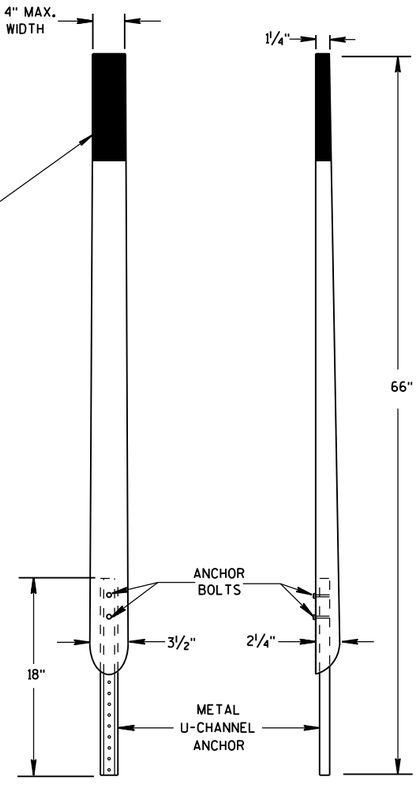

ALTERNATE 2

FLEXIBLE MARKER POSTS

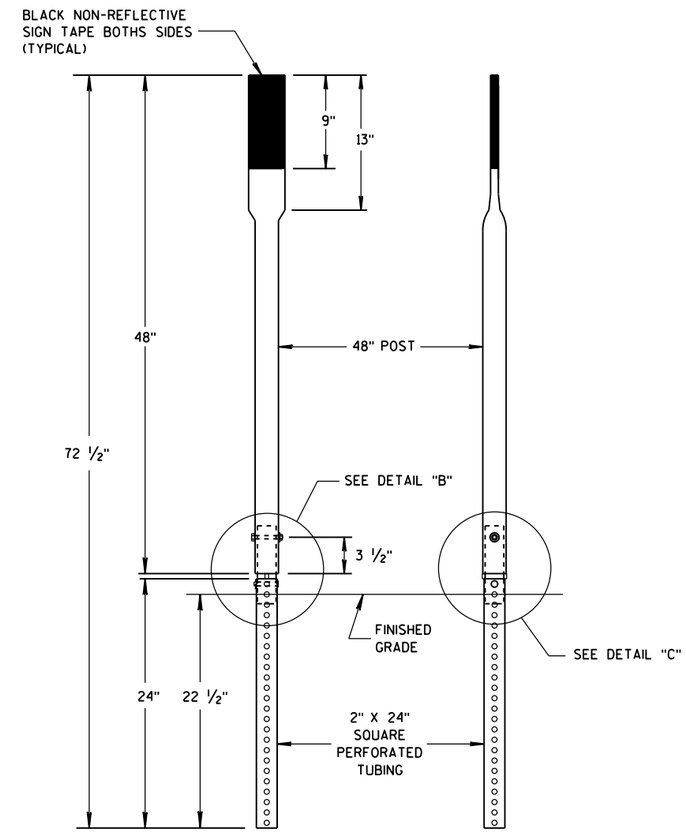

ALTERNATE 3

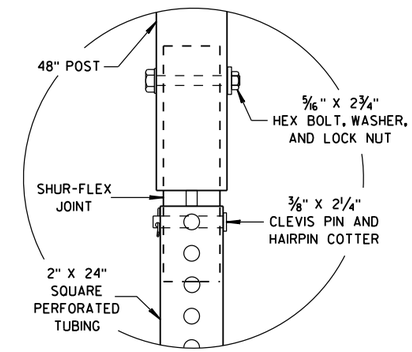

DETAIL B

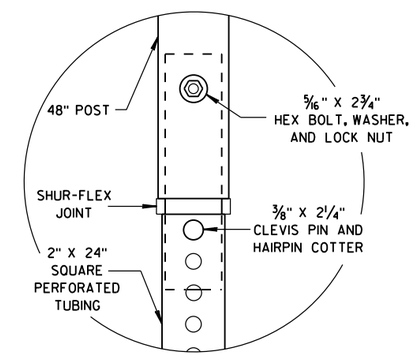

DETAIL C

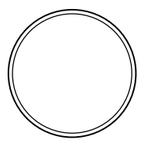

SECTION A-A

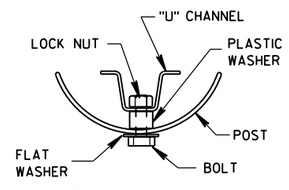

SECTION B-B

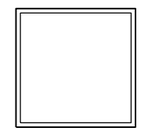

SECTION C-C

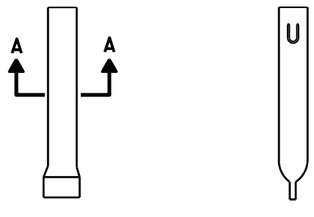

ALTERNATE 1

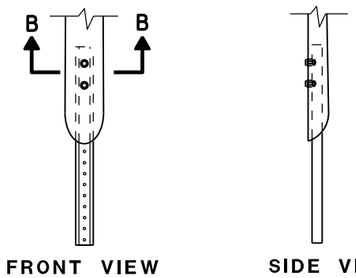

ALTERNATE 2

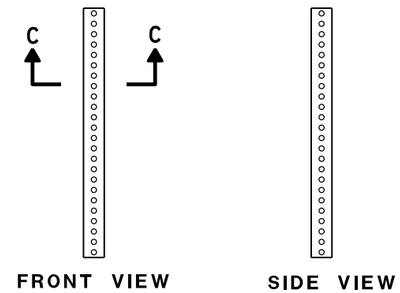

ALTERNATE 3

FLEXIBLE MARKER POST ANCHORS

FLEXIBLE MARKER POST
FOR CULVERT END

STATE OF WISCONSIN
DEPARTMENT OF TRANSPORTATION

APPROVED
10/1/2012 — DATE
/S/ Travis Feltes — STATE TRAFFIC ENGINEER
FHWA

6

S.D.D. 15 A 3-2b

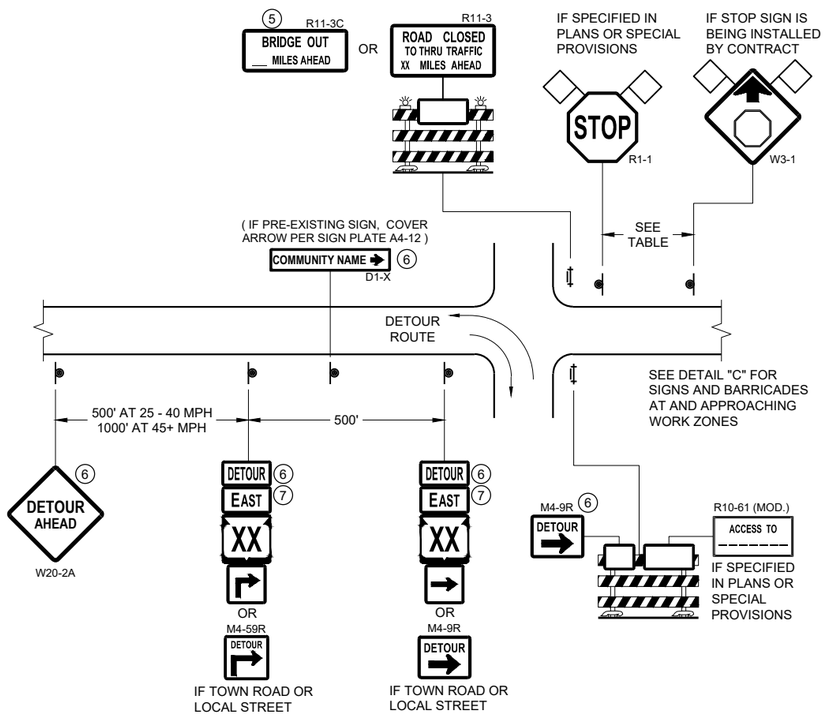

DETAIL A
MAINLINE CLOSURE WITH POSTED DETOUR
WORK ZONE GREATER THAN OR EQUAL TO ½ MILE FROM DETOUR ROUTE (1000 FEET IF URBAN)

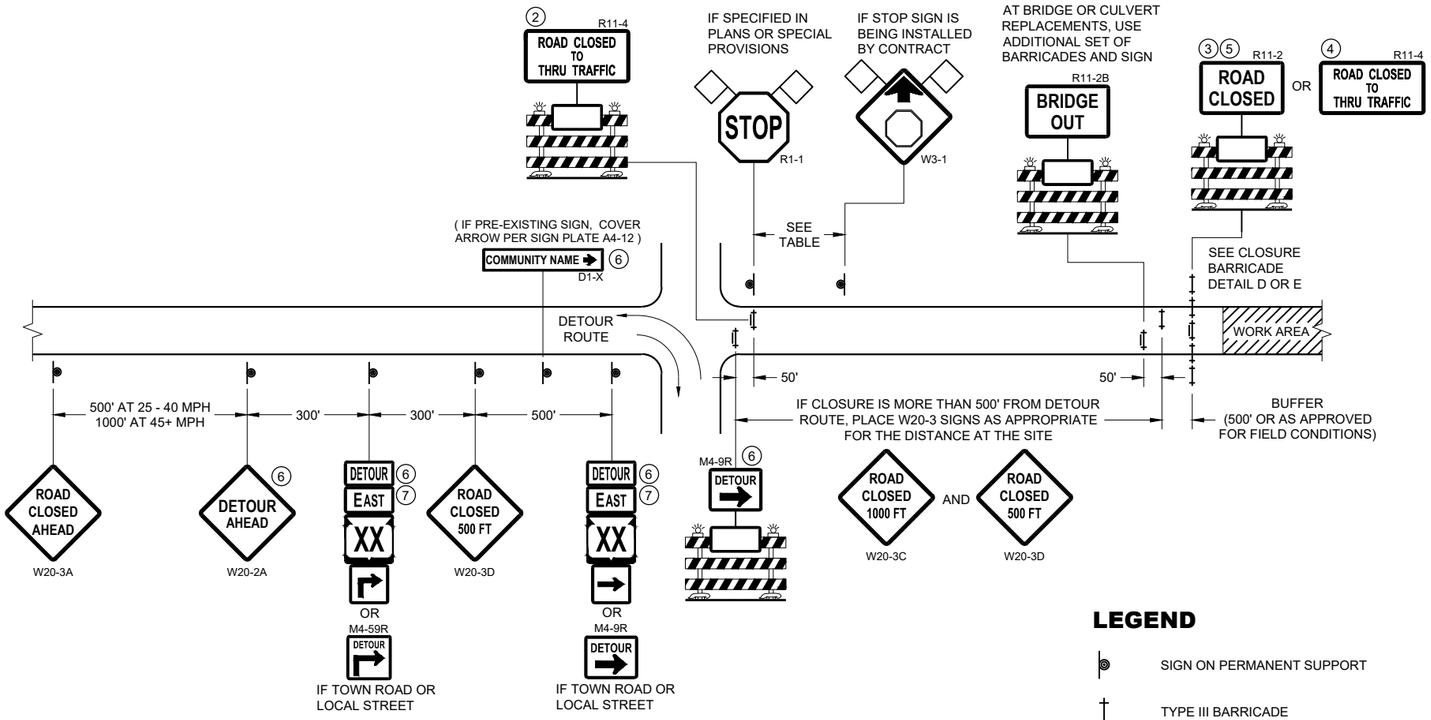

DETAIL B
MAINLINE CLOSURE WITH POSTED DETOUR
WORK ZONE LESS THAN ½ MILE FROM DETOUR ROUTE (1000 FEET IF URBAN)

LEGEND

- SIGN ON PERMANENT SUPPORT
- TYPE III BARRICADE
- TYPE III BARRICADE WITH ATTACHED SIGN
- TYPE "A" WARNING LIGHT (FLASHING)
- WORK AREA
- FLAGS, 16" X 16" MIN. (ORANGE)
- DETOUR — M4 - 8
- EAST — M3 - X
- XX (M1 - 4) OR XX (M1 - 6) OR COUNTY X (M1 - 5A)
- M05 - 1 OR M06 - 1

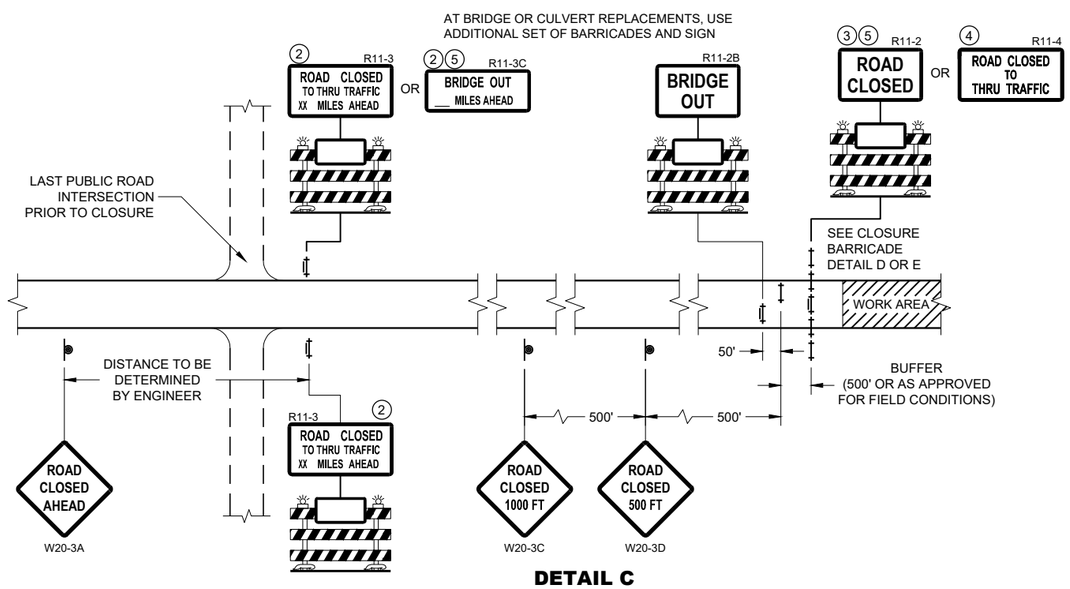

DETAIL C
MAINLINE CLOSURE, NO POSTED DETOUR

SPEED LIMIT (MPH)	"STOP AHEAD" ADVANCE WARNING DISTANCE (FT)
25	200
30	200
35	350
40	350
45	500
50	550
55	750

SEE SDD 15C2-SHEET "b" FOR GENERAL NOTES AND FOOTNOTES 1 THROUGH 7

BARRICADES AND SIGNS FOR MAINLINE CLOSURES

STATE OF WISCONSIN
DEPARTMENT OF TRANSPORTATION

APPROVED
May 2023 — DATE
/S/ Andrew Heidtke — WORK ZONE ENGINEER
FHWA

6

SDD 15C02 - 09a

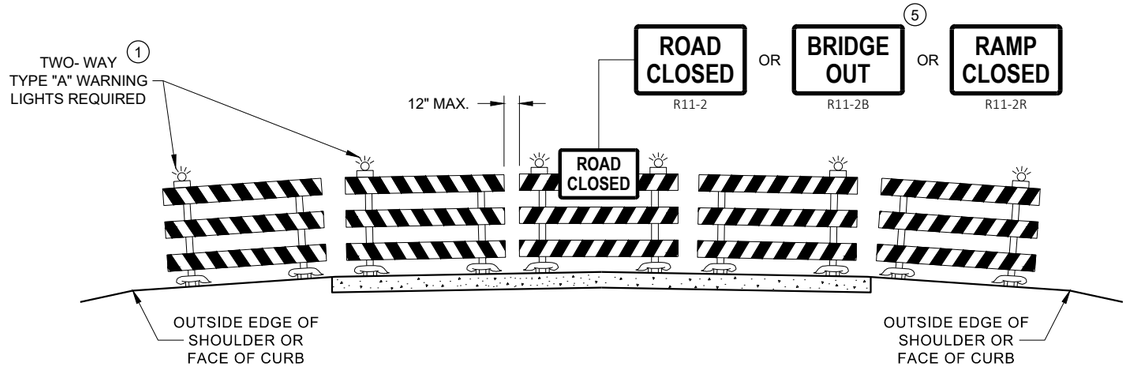

DETAIL D
ROAD CLOSURE BARRICADE DETAIL
APPROACH VIEW

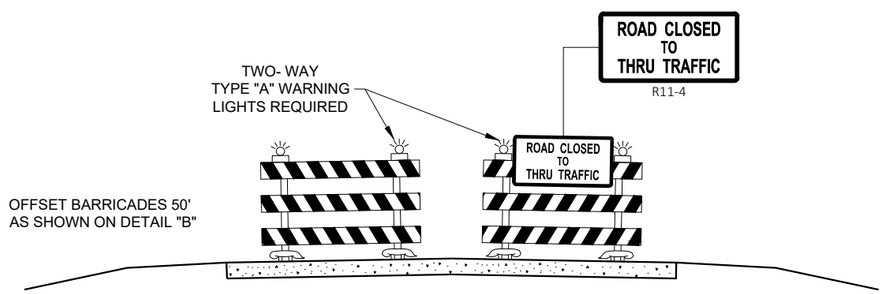

DETAIL E
LANE CLOSURE BARRICADE DETAIL
APPROACH VIEW

SEE SDD 15C2 - SHEET "a" FOR LEGEND

GENERAL NOTES

THE EXACT NUMBER, LOCATION, AND SPACING OF ALL SIGNS AND BARRICADES SHALL BE ADJUSTED TO FIT FIELD CONDITIONS AS APPROVED BY THE ENGINEER.

ANY SIGNS TEMPORARY OR EXISTING, WHICH CONFLICT WITH TRAFFIC CONTROL "IN USE", SHALL BE REMOVED OR COVERED AS NEEDED AND AS APPROVED BY THE ENGINEER.

THE SPACING BETWEEN TRAFFIC CONTROL SIGNS SHOULD BE ADJUSTED TO NOT CONFLICT WITH AND SHOULD PROVIDE A DESIRABLE MINIMUM OF 200 FEET CLEARANCE TO EXISTING SIGNS THAT WILL REMAIN IN PLACE.

BARRICADES THAT MUST BE MOVED FOR A WORK OPERATION SHALL BE IMMEDIATELY RE-ESTABLISHED UPON COMPLETION OF THE OPERATION, OR FOR CONTINUING OPERATIONS, AT THE END OF EACH WORKING DAY.

SIGNS THAT WILL BE IN PLACE LESS THAN 7 CONTINUOUS DAYS AND NIGHTS MAY BE MOUNTED ON PORTABLE SUPPORTS.

ALL TYPE III BARRICADES SHALL HAVE RAILS REFLECTORIZED ON BOTH FACES. STRIPES SHALL BE PROPERLY SLOPED DOWN TOWARD THE TRAFFIC SIDE OR AS SHOWN IN THE ROAD CLOSURE BARRICADE DETAIL "D" FOR FULL ROAD CLOSURES.

TYPE "A" LOW - INTENSITY FLASHING WARNING LIGHTS SHALL BE VISIBLE ON BOTH SIDES OF THE BARRICADE.

THE R11 - 2, R11 - 3, M4 - 9, R11 - 4, AND R10 - 61 SIGNS PLACED ON THE BARRICADES SHALL COVER NO MORE THAN THE TOP RAIL. THE SIGNS SHALL NOT COVER ANY PORTION OF THE MIDDLE RAIL OR BOTTOM RAILS.

"WO" AND "MO" SIGNS ARE THE SAME AS "W" AND "M" SIGNS EXCEPT THE BACKGROUND IS ORANGE.

ALL SIGNS SHALL BE 48" X 48" UNLESS OTHERWISE NOTED BELOW:
- R11 - 2 SHALL BE 48" X 30"
- R11 - 3 SHALL, R11 - 4 AND R10 - 61 SHALL BE 60 " X 30"
- M4 - 9 SHALL BE 30" X 24"
- M3 - X SHALL BE 24" X 12" (36" X 18" IF NEEDED TO MATCH EXISTING SIGNS)
- M4 - 8 SHALL BE 24" X 12" (36" X 18" IF NEEDED TO MATCH EXISTING SIGNS)
- M1 - 4, M1 - 5A AND M1 - 6 SHALL BE 24" X 24" (36" X 36" IF NEEDED TO MATCH EXISTING SIGNS)
- MO5 - 1 AND MO6 - 1 SHALL BE 21" X 21" (30" X 30" IF NEEDED TO MATCH EXISTING SIGNS)
- D1 - X SHALL BE AS SHOWN ON SPECIFIC PROJECT SIGNING DETAIL SHEETS.
- R1 - 1 SHALL BE 36" X 36"

1. TWO WARNING LIGHTS SHALL BE PROVIDED ON THE CENTER BARRICADE AND A MINIMUM OF ONE WARNING LIGHT SHALL BE PROVIDED ON EACH OF THE OTHER BARRICADES WITHIN THE ROADWAY LIMITS. SPACING OF THE WARNING LIGHTS SHALL BE UNIFORM TO THE EDGE OF ROADWAY AS SHOWN (APPROX. 8 FOOT LIGHT SPACING.
2. THESE SIGNS AND BARRICADES ARE NOT REQUIRED IF ROAD CLOSURE BEGINS AT AN INTERSECTION.
3. FOR ROAD CLOSURE WITHOUT LOCAL ACCESS TO PROJECT, SEE ROAD CLOSURE BARRICADE DETAIL "D".
4. FOR ROAD CLOSURE WITH LOCAL ACCESS TO PROJECT, SEE ROAD CLOSURE BARRICADE DETAIL "E".
5. FOR BRIDGE OR CULVERT REPLACEMENTS, SUBSTITUTE "BRIDGE OUT" INSTEAD OF "ROAD CLOSED" ON R11 - 2 AND R11 - 3 SIGNS.
6. INSTALL DETOUR AND COMMUNITY GUIDE SIGNS AND ARROWS ONLY IF SPECIFIED IN THE CONTRACT. IF THERE ARE EXISTING ROUTE MARKER ASSEMBLIES THAT WILL REMAIN IN PLACE, ADJUST THE LOCATION OF THE DETOUR ROUTE SIGNS TO CORRESPOND WITH THE EXISTING ASSEMBLIES. MODIFY EXISTING SIGNS WHERE POSSIBLE. SEE SPECIFIC PROJECT DETOUR SIGNING DETAIL SHEETS. IF DETOUR SIGNS ARE BEING INSTALLED BY OTHERS, PLACE THE CONTRACTED TRAFFIC CONTROL SIGNS TO ALLOW FOR PLACEMENT OF ALL WARNING, DETOUR AND GUIDE SIGNS AS SHOWN.
7. "EAST" CARDINAL DIRECTION MARKERS AND RIGHT TURN ARROWS ARE SHOWN. USE OTHER CARDINAL DIRECTIONS AND ARROWS AS APPROPRIATE.

BARRICADES AND SIGNS FOR VARIOUS CLOSURES

STATE OF WISCONSIN
DEPARTMENT OF TRANSPORTATION

APPROVED
May 2023 — DATE
/S/ Andrew Heidtke — WORK ZONE ENGINEE
FHWA

THIS DRAWING PROVIDES GENERAL GUIDANCE ON TYPICAL DETOUR SIGN LAYOUT AND SPACING. SEE PROJECT DETOUR SIGNING SHEETS FOR SPECIFIC DETAILS FOR EACH PROJECT.

LEGEND

- SIGN ON PERMANENT SUPPORT
- WORK AREA
- DETOUR M4 - 8
- EAST M3 - X
- XX M1 - 4 OR XX M1 - 6 OR COUNTY X M1 - 5A
- M05 - 1 OR M06 - 1 OR M06 - 1

GENERAL NOTES

THE EXACT NUMBER, LOCATION AND SPACING OF ALL SIGNS SHALL BE ADJUSTED TO FIT FIELD CONDITIONS AS APPROVED BY THE ENGINEER.

IF THERE ARE EXISTING ROUTE MARKER ASSEMBLIES THAT WILL REMAIN IN PLACE, ADJUST THE LOCATION OF THE DETOUR ROUTE SIGNS TO CORRESPOND WITH THE EXISTING ASSEMBLIES. SEE SPECIFIC PROJECT DETOUR SIGNING DETAIL SHEETS. MODIFY EXISTING SIGNS WHERE POSSIBLE.

THE SPACING BETWEEN TRAFFIC CONTROL AND DETOUR SIGNS SHOULD BE ADJUSTED TO NOT CONFLICT WITH AND TO PROVIDE A DESIRABLE MINIMUM OF 200 FEET CLEARANCE TO EXISTING SIGNS THAT WILL REMAIN IN PLACE.

ANY SIGNS TEMPORARY OR EXISTING, WHICH CONFLICT WITH TRAFFIC CONTROL "IN USE" SHALL BE REMOVED OR COVERED AS NEEDED AND AS APPROVED BY THE ENGINEER.

SIGNS THAT WILL BE IN PLACE LESS THAN 7 CONTINUOUS DAYS AND NIGHTS MAY BE MOUNTED ON PORTABLE SUPPORTS.

"MO" SIGNS ARE THE SAME AS "M" SIGNS EXCEPT THE BACKGROUND IS ORANGE.

SIGN SIZES SHALL BE AS FOLLOWS:

- M3-X SHALL BE 24" X 12" (36" X 18" IF NEEDED TO MATCH EXISTING SIGNS)
- M4-8 SHALL BE 24" X 12" (36" X 18" IF NEEDED TO MATCH EXISTING SIGNS)
- M1-4, M1-5A AND M1-6 SHALL BE 24" X 24" (36" X 36" IF NEEDED TO MATCH EXISTING SIGNS)
- M05-1 AND M06-1 SHALL BE 21" X 21" (30" X 30" IF NEEDED TO MATCH EXISTING SIGNS)
- M4-9 AND M4-59 SHALL BE 30" X 24"
- M4-8a SHALL BE 24" X 18"
- G20-51 SHALL BE 60" X 24"
- W20-2A SHALL BE 48" X 48"
- D1-X SHALL BE AS SHOWN ON SPECIFIC PROJECT SIGNING DETAIL SHEETS.

* OPTIONAL SIGNS. SEE SPECIFIC PROJECT DETOUR SIGNING DETAIL SHEETS.

** FOR A TOWN ROAD OR LOCAL STREET DETOURED ONTO A STATE TRUNK HIGHWAY, PLACE A ROAD NAME PLAQUE ABOVE THE M4-9 SIGN AS SPECIFIED IN THE CONTRACT.

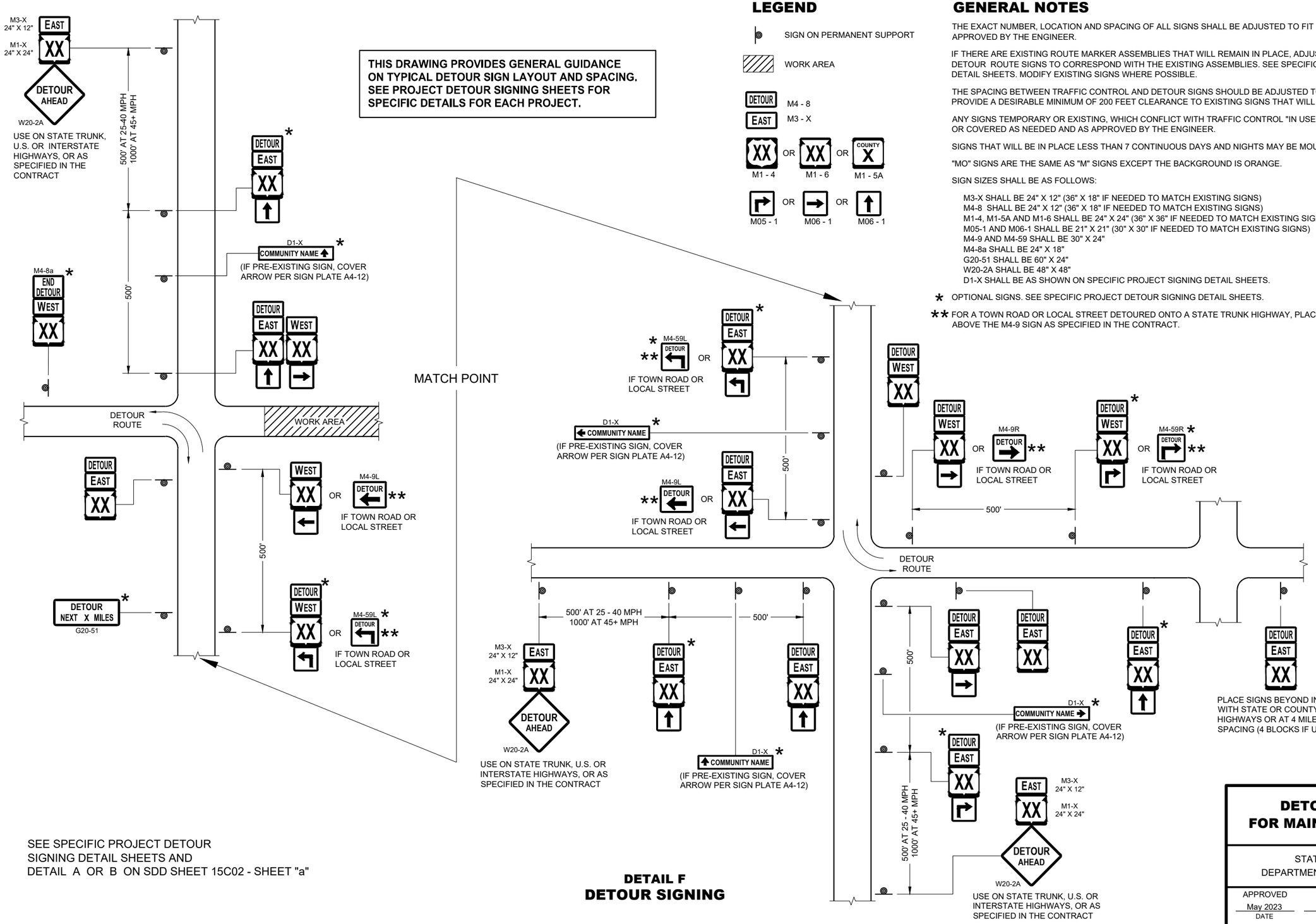

SEE SPECIFIC PROJECT DETOUR SIGNING DETAIL SHEETS AND DETAIL A OR B ON SDD SHEET 15C02 - SHEET "a"

DETAIL F
DETOUR SIGNING

DETOUR SIGNING FOR MAINLINE CLOSURES

STATE OF WISCONSIN
DEPARTMENT OF TRANSPORTATION

APPROVED
May 2023 — DATE
/S/ Andrew Heidtke — WORK ZONE ENGINEER
FHWA

6

SDD 15C02 - 09c

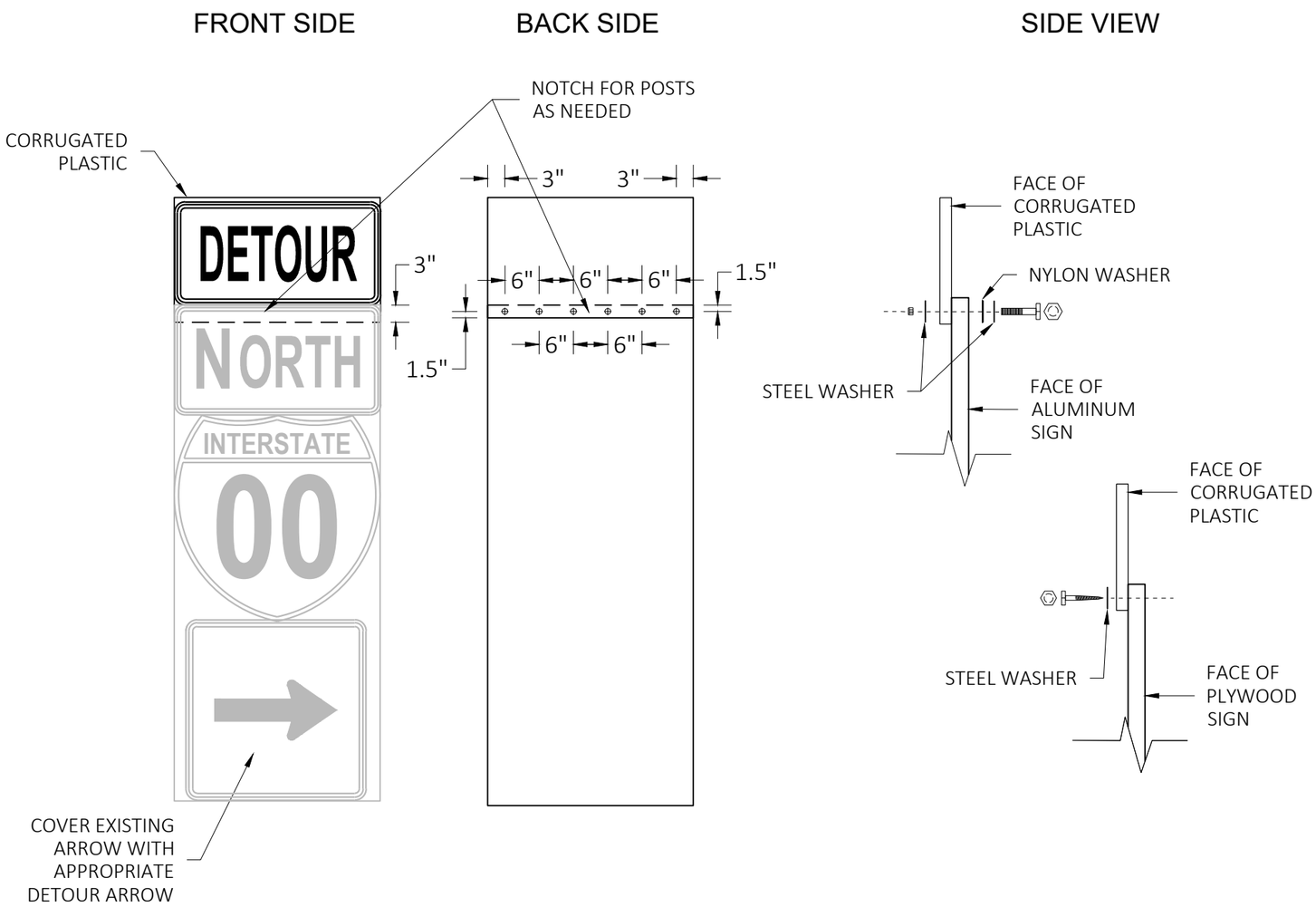

GENERAL NOTES

CELLS OF CORRUGATED PLASTIC SHALL BE VERTICALLY ORIENTED.

PROVIDE A 0.4-INCH THICK BASE CORRUGATED PLASTIC WITH A 0.035-INCH WALL THICKNESS AND 0.4-INCH CELL SIZE.

FOR 36" WIDE SIGNS: USE 6 FASTENERS AS SHOWN.

FOR 24" WIDE SIGNS: USE 4 FASTENERS WITH EDGE SPACING AS SHOWN AND 6" SPACING BETWEEN FASTENERS.

METAL WASHERS, NUTS, BOLTS AND LAGS SHALL HAVE HEXAGONAL HEADS AND SHALL BE EITHER:

A. HOT DIP GALVANIZED IN ACCORDANCE WITH ASTM DESIGNATION: A 153, CLASS D, OR SC 3.

B. ELECTRO-GALVANIZED IN ACCORDANCE WITH ASTM DESIGNATION: B 633, TYPE III, SC3

THREADS ON BOLTS AND NUTS SHALL BE MANUFACTURED WITH SUFFICIENT ALLOWANCE FOR THE CADMIUM PLATE OR GALVANIZED COATING TO PERMIT THE NUTS TO RUN FREELY ON THE BOLTS.

PLYWOOD SIGNS:
LAG SCREWS - 5/16" x 1"
ALUMINUM SIGNS:
MACHINE BOLTS - 5/16" x 1-1/4" LENGTH W/NUTS
WASHERS:
1-1/4" O.D. x 3/8" I.D. x 1/16" STEEL
1-1/4" O.D. x 3/8" I.D. x .080 NYLON

MODIFIED ROUTE ASSEMBLY FOR DETOUR SIGNING

MODIFIED ROUTE ASSEMBLY FOR DETOUR SIGNING

STATE OF WISCONSIN
DEPARTMENT OF TRANSPORTATION

APPROVED
May 2023 — DATE
/S/ Andrew Heidtke — ROADWAY STANDARDS DEVEL ENGINEER
FHWA

6
SDD 15C02-09h

GENERAL NOTES

THE EXACT NUMBER, LOCATION, AND SPACING OF ALL SIGNS AND DEVICES SHALL BE ADJUSTED TO FIT FIELD CONDITIONS.

THE SPACING BETWEEN TRAFFIC CONTROL SIGNS SHOULD BE ADJUSTED TO NOT CONFLICT WITH AND SHOULD PROVIDE A MINIMUM OF 200 FEET (500 FEET DESIRABLE) CLEARANCE TO EXISTING SIGNS THAT WILL REMAIN IN PLACE.

ALL SIGNS ARE 48" X 48" UNLESS OTHERWISE NOTED. IF NECESSARY DUE TO SPACE CONSTRAINTS, 36"X36" SIGNS MAY BE USED INSTEAD OF 48" X 48" SIGNS.

SIGNS THAT WILL BE IN PLACE LESS THAN SEVEN CONTINUOUS DAYS AND NIGHTS MAY BE MOUNTED ON PORTABLE SUPPORTS.

IF A "STOP" SIGN MUST BE REMOVED FOR A WORK OPERATION, A TEMPORARY "STOP" SIGN SHALL BE PLACED PRIOR TO THE SIGN REMOVAL, OR A FLAGGER SHALL BE PROVIDED UNTIL THE SIGN IS REESTABLISHED.

* THE THIRD W20-1 SIGN IS REQUIRED ONLY IF THERE IS AN INTERSECTION BETWEEN THE "ROAD WORK 500 FEET" SIGN AND THE WORK ZONE. ADJUST THE PLACEMENT OF THIS SIGN BASED ON INTERSECTION LOCATION AND OTHER FIELD CONDITIONS.

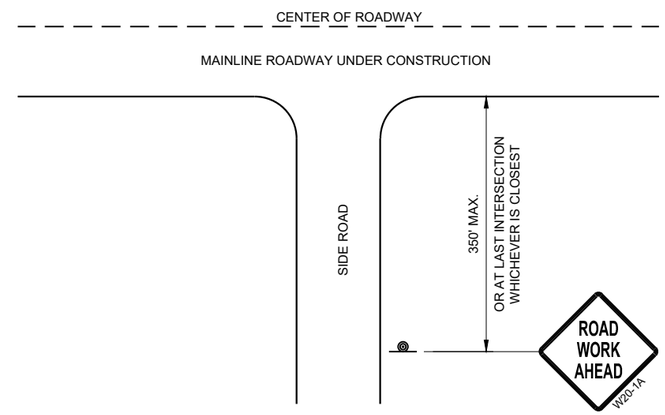

TYPICAL SIDE ROAD APPROACH WARNING SIGN DETAIL

LEGEND

- SIGN ON PERMANENT SUPPORT
- DIRECTION OF TRAFFIC
- WORK AREA

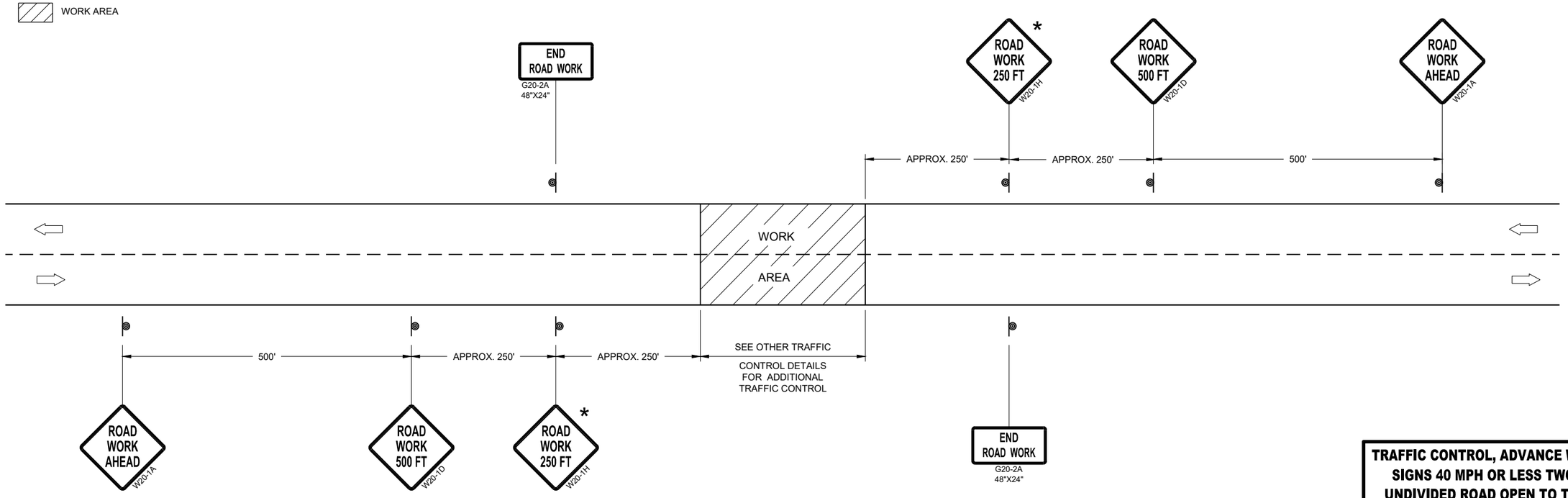

TRAFFIC CONTROL, ADVANCE WARNING SIGNS 40MPH OR LESS

TRAFFIC CONTROL, ADVANCE WARNING SIGNS 40 MPH OR LESS TWO-WAY UNDIVIDED ROAD OPEN TO TRAFFIC

STATE OF WISCONSIN
DEPARTMENT OF TRANSPORTATION

APPROVED
July 2018 — DATE
/S/ Andrew Heidtke — WORK ZONE ENGINEE
FHWA

6

SDD 15C05 - 05

*CONFIRM MARKING LINE WIDTH WITH THE MISCELLANEOUS QUANTITIES

GENERAL NOTES

DETAILS OF CONSTRUCTION NOT SHOWN ON THIS DRAWING SHALL CONFORM TO STANDARD SPECIFICATIONS AND SPECIAL PROVISIONS.

1. LOCATE THE NO PASSING ZONE W14-3 SIGN WITHIN 50 FEET OF THE "T" MARKING
2. MEASURE FROM EDGE OF MARKING TO JOINT LINE. THIS DOES NOT INCLUDE SPACE NEEDED FOR GROOVING OPERATIONS.

LEGEND

"T" MARKING

SIGN ON PERMANENT SUPPORT

DIRECTION OF TRAFFIC

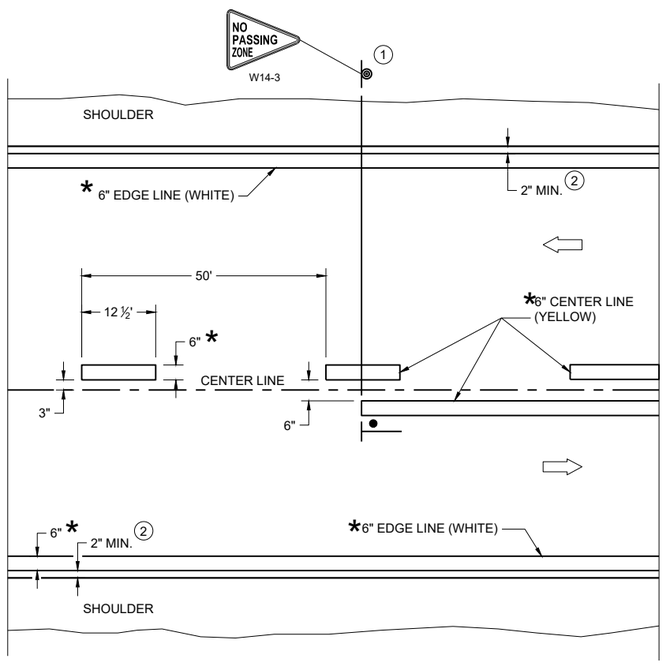

TWO WAY TRAFFIC

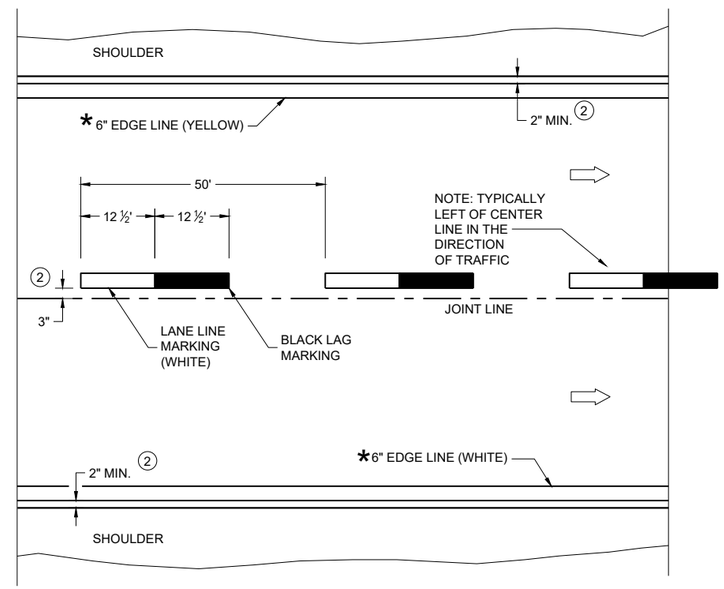

ONE WAY TRAFFIC

PERMANENT PAVEMENT MARKING

6

SDD 15C08-24a

PERMANENT LONGITUDINAL PAVEMENT MARKINGS

STATE OF WISCONSIN
DEPARTMENT OF TRANSPORTATION

APPROVED
December 2024 — DATE
/S/ Jeannie Silver — Statewide Pavement Marking Engineer
FHWA

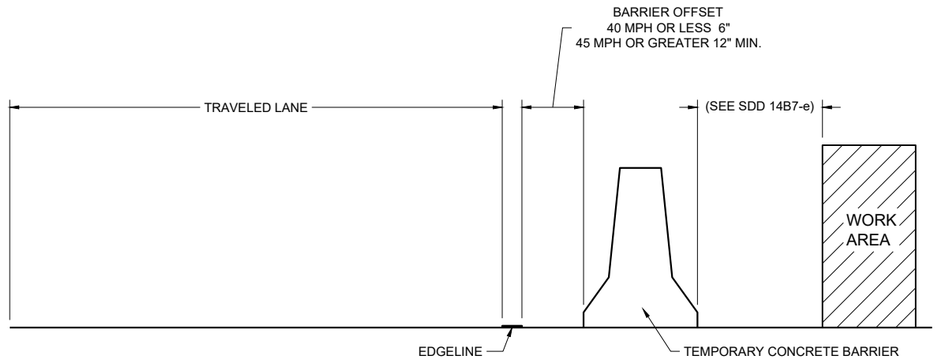

TEMPORARY BARRIER OFFSET FROM EDGELINE

GENERAL NOTES

DETAILS OF CONSTRUCTION NOT SHOWN ON THIS DRAWING SHALL CONFORM TO STANDARD SPECIFICATIONS AND SPECIAL PROVISIONS.

LEGEND

DIRECTION OF TRAFFIC

*CONFIRM MARKING LINE WIDTH WITH THE MISCELLANEOUS QUANTITIES

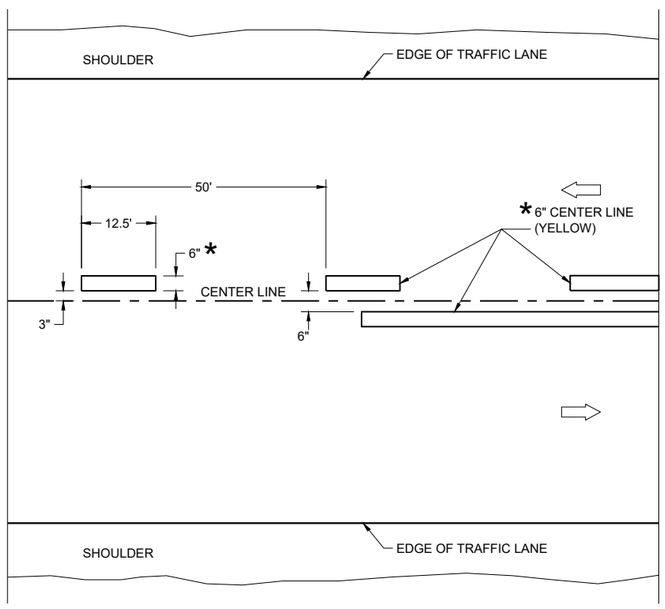

TWO WAY TRAFFIC

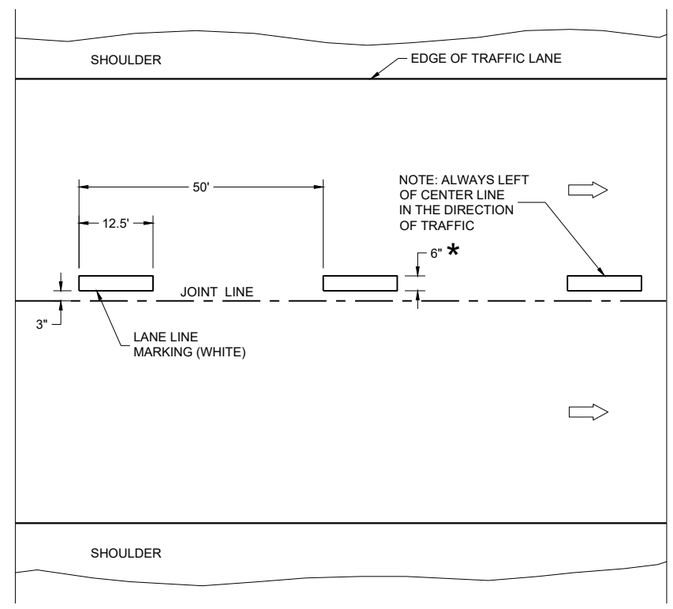

ONE WAY TRAFFIC

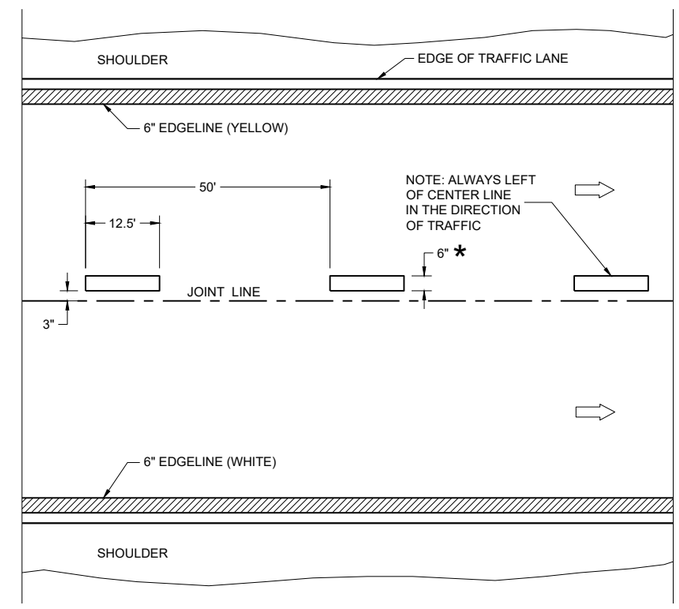

FREEWAYS AND EXPRESSWAYS

TEMPORARY PAVEMENT MARKING

TEMPORARY LONGITUDINAL PAVEMENT MARKING
STATE OF WISCONSIN DEPARTMENT OF TRANSPORTATION
APPROVED December 2024 — DATE /S/ Jeannie Silver — Statewide Pavement Marking Engineer FHWA

6

SDD 15C08-24b

6

SDD 15C08-24b

GENERAL NOTES

1. REFLECTIVE SHEETING SHALL FOLLOW THE REQUIREMENTS IN THE APPROVED PRODUCTS LISTING FOR SIGN SHEETING.
2. LOCATION OF WARNING LIGHTS WHEN SHOWN ON THE PLAN.

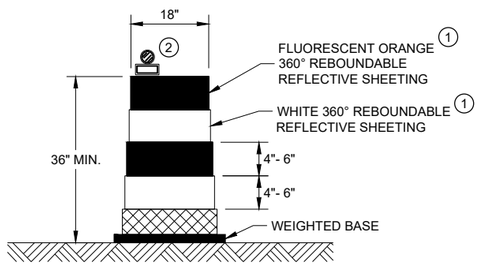

DRUM

BALLAST WIDTHS
RANGE FROM 24"-36"

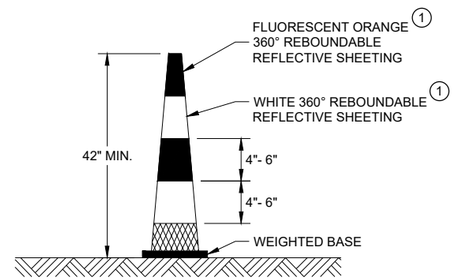

42" CONE

DO NOT USE IN TAPERS
½ SPACING OF DRUMS

BALLAST WIDTHS
RANGE FROM 14"-20"

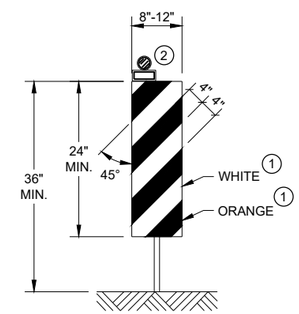

VERTICAL PANEL

THE STRIPES SHALL SLOPE DOWNWARD TO
THE TRAFFIC SIDE FOR CHANNELIZATION.

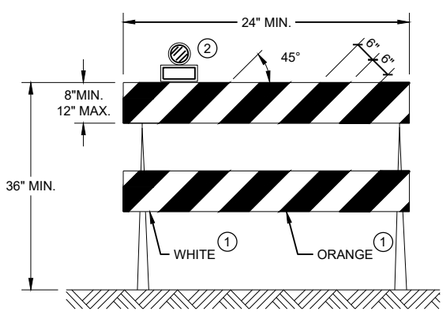

TYPE II BARRICADE

FOR RAILS LESS THAN 36" LONG, 4" WIDE STRIPES
MAY BE USED. ALL STRIPES SHALL SLOPE DOWNWARD
TO THE TRAFFIC SIDE FOR CHANNELIZATION.

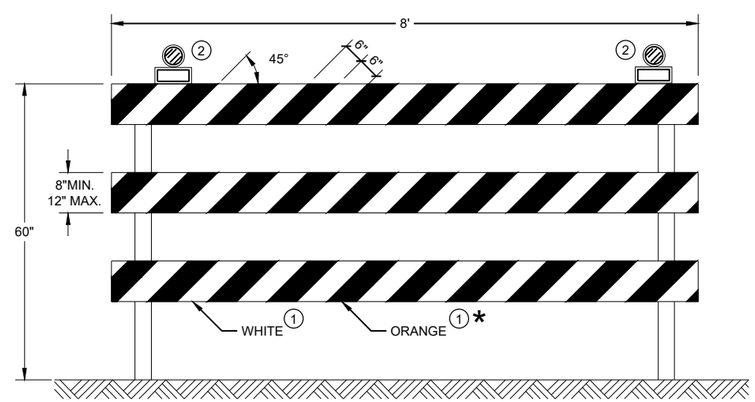

TYPE III BARRICADE

IF SIGN MOUNTED, DO NOT COVER MORE THAN 50% OF THE TOP
TWO RAILS OR 33% OF THE TOTAL AREA OF THE THREE RAILS.

* IF USED FOR A PERMANENT APPLICATION USE RED SHEETING.

CHANNELIZING DEVICES
DRUMS, CONES, BARRICADES
AND VERTICAL PANELS

STATE OF WISCONSIN
DEPARTMENT OF TRANSPORTATION

APPROVED
November 2022 /S/ Andrew Heidtke
DATE WORK ZONE ENGINEE
FHWA

6

6

SDD 15C11 - 10b

SDD 15C11 - 10b

LEGEND

SIGN ON PORTABLE OR PERMANENT SUPPORT

TEMPORARY PORTABLE RUMBLE STRIP ARRAY

DIRECTION OF TRAFFIC

WORK AREA

FLAGGER, EQUIPPED WITH STOP/SLOW PADDLE FASTENED ON SUPPORT STAFF

GENERAL NOTES

DETAILS OF TRAFFIC CONTROL DEVICES AND INSTALLATION NOT SHOWN ON THIS DRAWING SHALL CONFORM TO THE PERTINENT REQUIREMENTS OF THE STANDARD SPECIFICATIONS, THE SPECIAL PROVISIONS, AND THE MANUAL ON UNIFORM TRAFFIC CONTROL DEVICES.

ALL SIGNS ARE 48" X 48" UNLESS OTHERWISE NOTED.

"WO" SIGNS ARE THE SAME AS "W" SIGNS EXCEPT THE BACKGROUND IS ORANGE.

THE EXACT NUMBER, LOCATION AND SPACING OF ALL SIGNS, DEVICES, AND LOCATION OF ALL FLAGGERS SHALL BE ADJUSTED TO FIT FIELD CONDITIONS AS APPROVED BY THE ENGINEER.

THE FIRST ADVANCE WARNING SIGN SHOULD TYPICALLY BE LOCATED IN ADVANCE OF THE ANTICIPATED TRAFFIC BACKUP OR QUEUE.

WHEN A SIDE ROAD OR RAMP INTERSECTS THE FACILITY ON WHICH THE WORK IS BEING PERFORMED, ADDITIONAL TRAFFIC CONTROLS SHALL BE PROVIDED AS SPECIFIED IN THE PLANS AND/OR THE SPECIAL PROVISIONS OR AS APPROVED BY THE ENGINEER.

FLAGGING

FLAGGERS SHALL BE IN SIGHT OF EACH OTHER OR IN DIRECT COMMUNICATION AT ALL TIMES. THEY SHALL BE EQUIPPED WITH STOP/SLOW PADDLES FASTENED ON SUPPORT STAFFS. WHEN THE FLAGGING OPERATION IS NOT IN EFFECT REMOVE TEMPORARY PORTABLE RUMBLE STRIPS PRIOR TO COVERING OR REMOVING ALL ADVANCE SIGNING.

(1) FOR MOVING WORK OPERATIONS, POST ADDITIONAL W20-7A FLAGGER SIGNS AT APPROXIMATELY 3,500' INTERVALS IN THE MOVING WORK OPERATION OR AS APPROVED BY THE ENGINEER.

(2) SIGN NOT REQUIRED IF FLAGGING OPERATION OCCURS WITHIN A SIGNED ROAD WORK ZONE AREA.

WHEN THE DISTANCE BETWEEN FLAGGERS EXCEEDS 2 MILES, A PILOT CAR IS REQUIRED. WHEN CURVES REDUCE SIGHT DISTANCE BELOW 400', A PILOT CAR IS REQUIRED.

TEMPORARY PORTABLE RUMBLE STRIPS

UTILIZE TEMPORARY PORTABLE RUMBLE STRIPS ON ALL FLAGGING OPERATIONS.

(3) EACH TEMPORARY PORTABLE RUMBLE STRIP ARRAY CONSISTS OF THREE RUMBLE STRIPS PLACED TRANSVERSE ACROSS THE LANE AT THE LOCATIONS SHOWN. WITHIN EACH ARRAY, SPACING BETWEEN RUMBLE STRIPS SHALL BE 15 FEET ON CENTER

ONLY USE TEMPORARY PORTABLE RUMBLE STRIPS FROM THE APPROVED PRODUCTS LIST.

INSTALL TEMPORARY RUMBLE STRIPS PER MANUFACTURER'S RECOMMENDATIONS.

PLACE ADVANCE SIGNING PRIOR TO INSTALLING TEMPORARY RUMBLE STRIPS.

DO NOT INSTALL TEMPORARY PORTABLE RUMBLE STRIPS ON GRAVEL, MILLED SURFACES, OR ASPHALT THAT HAS BEEN PAVED LESS THAN 12 HOURS.

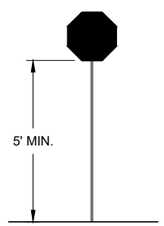

STOP/SLOW PADDLE ON SUPPORT STAFF

SIGN AND TEMPORARY RUMBLE STRIP ARRAY SPACING TABLE

SPEED LIMIT	SPACING "A"
25-30 MPH	200'
35-40 MPH	350'
45-55 MPH	500'

USE OF WO3-4 SIGN IS OPTIONAL. WHEN USED, THIS SIGN SHALL BE LOCATED BETWEEN THE W20-7A AND W20-4A SIGNS, USING SPACING "A".

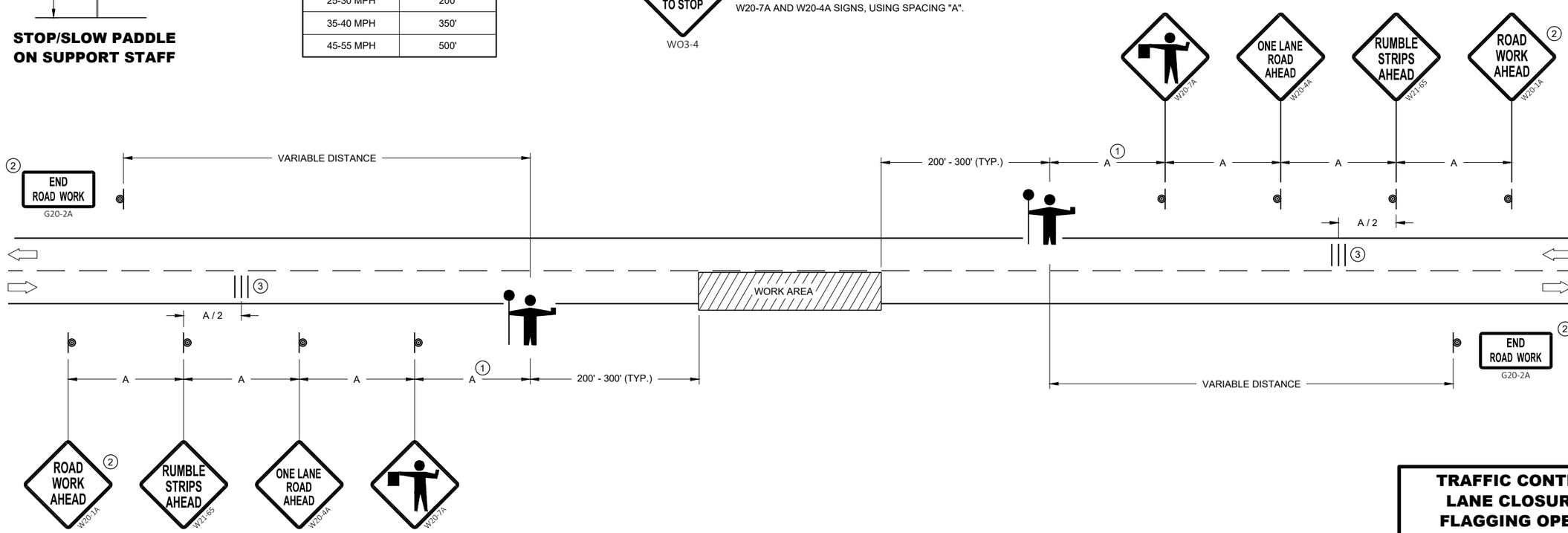

TRAFFIC CONTROL FOR LANE CLOSURE WITH FLAGGING OPERATION

STATE OF WISCONSIN
DEPARTMENT OF TRANSPORTATION

APPROVED
May 2022 — DATE
/S/ Andrew Heidtke — WORK ZONE ENGINEE
FHWA

6

SDD 15C12 - 09a

GENERAL NOTES

- SIGN ON PERMANENT SUPPORT
- TRAFFIC CONTROL CONE 42-INCH
- TRAFFIC CONTROL DRUM
- TEMPORARY PORTABLE RUMBLE STRIP ARRAY
- DIRECTION OF TRAFFIC
- WORK AREA
- AFAD — AUTOMATED FLAGGER ASSISTANCE DEVICE (AFAD)

GENERAL NOTES

DETAILS OF TRAFFIC CONTROL DEVICES AND INSTALLATION NOT SHOWN ON THIS DRAWING SHALL CONFORM TO THE PERTINENT REQUIREMENTS OF THE STANDARD SPECIFICATIONS, THE SPECIAL PROVISIONS, AND THE MANUAL ON UNIFORM TRAFFIC CONTROL DEVICES.

ALL SIGNS ARE 48" X 48" UNLESS OTHERWISE NOTED.

"WO" SIGNS ARE THE SAME AS "W" SIGNS EXCEPT THE BACKGROUND IS ORANGE.

THE EXACT NUMBER, LOCATION AND SPACING OF ALL SIGNS, DEVICES, AND LOCATION OF ALL FLAGGERS SHALL BE ADJUSTED TO FIT FIELD CONDITIONS AS APPROVED BY THE ENGINEER.

THE FIRST ADVANCE WARNING SIGN SHOULD TYPICALLY BE LOCATED IN ADVANCE OF THE ANTICIPATED TRAFFIC BACKUP OR QUEUE.

WHEN A SIDE ROAD OR RAMP INTERSECTS THE FACILITY ON WHICH THE WORK IS BEING PERFORMED, ADDITIONAL TRAFFIC CONTROLS SHALL BE PROVIDED AS SPECIFIED IN THE PLANS AND/OR THE SPECIAL PROVISIONS OR AS APPROVED BY THE ENGINEER.

FLAGGING

IF THE AUTOMATED FLAGGER ASSISTANCE DEVICE (AFAD) STOPS WORKING, FLAGGERS SHALL BE IN SIGHT OF EACH OTHER OR IN DIRECT COMMUNICATION AT ALL TIMES. THEY SHALL BE EQUIPPED WITH STOP/SLOW PADDLES FASTENED ON SUPPORT STAFFS. WHEN THE FLAGGING OPERATION IS NOT IN EFFECT REMOVE TEMPORARY PORTABLE RUMBLE STRIPS PRIOR TO COVERING OR REMOVING ALL ADVANCE SIGNING.

WHEN THE DISTANCE BETWEEN FLAGGERS EXCEEDS 2 MILES, A PILOT CAR IS REQUIRED. WHEN CURVES REDUCE SIGHT DISTANCE BELOW 400', A PILOT CAR IS REQUIRED.

(1) SIGN NOT REQUIRED IF FLAGGING OPERATION OCCURS WITHIN A SIGNED ROAD WORK ZONE AREA.

(2) IF FLAGGERS ARE PHYSICALLY NEEDED TO FLAG, REPLACE WO3-4 SIGNS WITH W20-7A SIGNS.

TEMPORARY PORTABLE RUMBLE STRIPS

UTILIZE TEMPORARY PORTABLE RUMBLE STRIPS ON ALL FLAGGING OPERATIONS.

ONLY USE TEMPORARY PORTABLE RUMBLE STRIPS FROM THE APPROVED PRODUCTS LIST.

PLACE ADVANCE SIGNING PRIOR TO INSTALLING TEMPORARY RUMBLE STRIPS.

DO NOT INSTALL TEMPORARY PORTABLE RUMBLE STRIPS ON GRAVEL, MILLED SURFACES, OR ASPHALT THAT HAS BEEN PAVED LESS THAN 12 HOURS.

(3) EACH TEMPORARY PORTABLE RUMBLE STRIP ARRAY CONSISTS OF THREE RUMBLE STRIPS PLACED TRANSVERSELY AT THE LOCATIONS SHOWN. WITHIN EACH ARRAY, SPACING BETWEEN RUMBLE STRIPS SHALL BE 15 FEET ON CENTER.

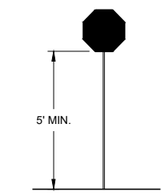

STOP/SLOW PADDLE ON SUPPORT STAFF

SIGN AND TEMPORARY RUMBLE STRIP ARRAY SPACING TABLE

SPEED LIMIT	SPACING "A"
25-30 MPH	200'
35-40 MPH	350'
45-55 MPH	500'

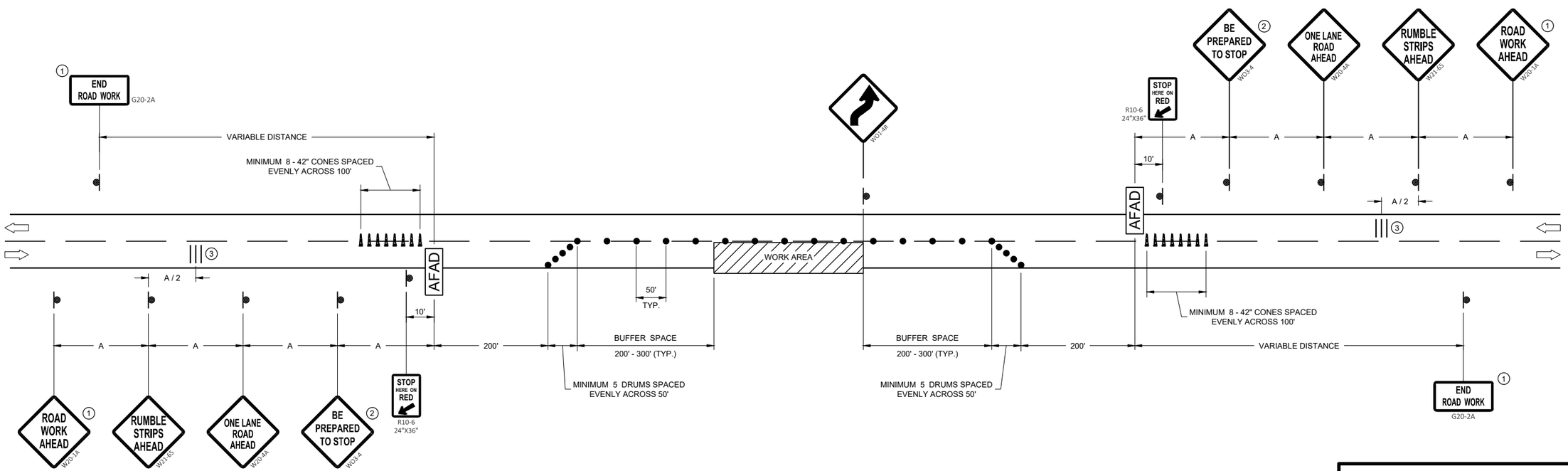

TRAFFIC CONTROL, LANE CLOSURE WITH AUTOMATED FLAGGER ASSISTANCE DEVICE

STATE OF WISCONSIN
DEPARTMENT OF TRANSPORTATION

APPROVED
May 2022 — DATE
/S/ Andrew Heidtke — WORK ZONE ENGINEER
FHWA

6

SDD 15C12 - 09b

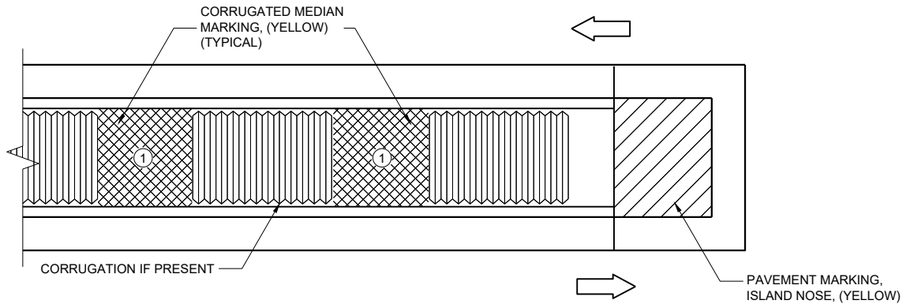

MEDIAN ISLAND WITH SQUARE BLUNT NOSE

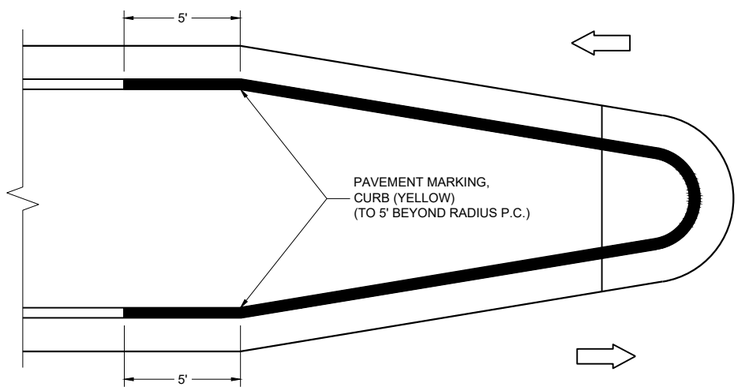

MEDIAN ISLAND WITH ROUND BLUNT NOSE

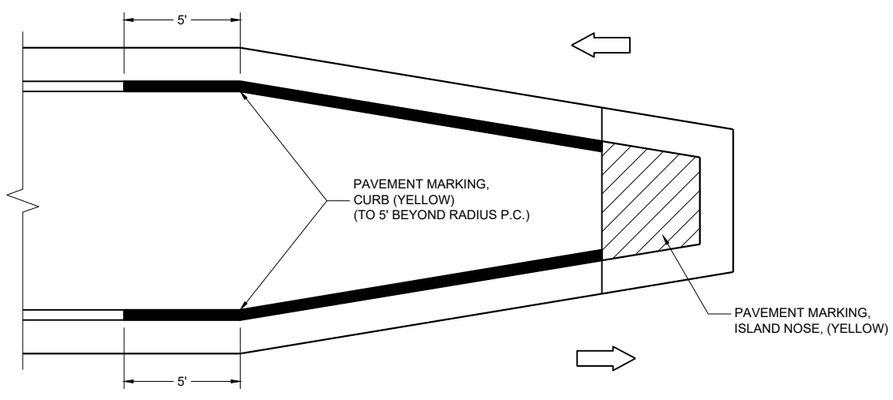

MEDIAN ISLAND WITH SLOPED NOSE

TYPICAL PLACEMENT OF
PAVEMENT MARKING ON MEDIAN ISLANDS

GENERAL NOTES

WHEN CONCRETE CORRUGATED MEDIAN IS CONSTRUCTED TO SEPARATE TRAFFIC OPERATING IN THE OPPOSING DIRECTION, YELLOW PAVEMENT MARKING SHALL BE APPLIED TO THE FLAT PORTION OF THE CONCRETE CORRUGATED MEDIAN. THE ITEM OF PAVEMENT MARKING, CONCRETE CORRUGATED MEDIAN, WILL BE MEASURED IN PLACE AND ACCEPTED IN ACCORDANCE WITH THE CONTRACT AND PAID FOR AT THE CONTRACT UNIT PRICE PER SQUARE FOOT.

(1) APPLY PAVEMENT MARKING TO THE FLAT PORTION OF CORRUGATED MEDIAN.

ISLAND NOSE MARKING

CURB MARKING

CORRUGATED MEDIAN MARKING

DIRECTION OF TRAVEL

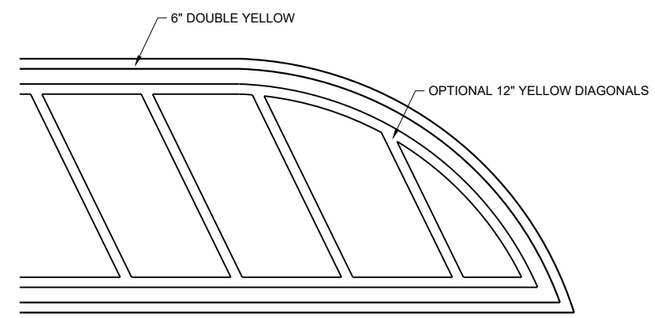

FLUSH MEDIAN ISLAND NOSE

PAVEMENT MARKINGS,
MEDIAN ISLAND NOSE

STATE OF WISCONSIN
DEPARTMENT OF TRANSPORTATION

APPROVED
August 2024 — /S/ Jeannie Silver
DATE — Statewide Pavement Marking Engineer
FHWA

6

SDD 15C18-09b

REQUIREMENTS FOR EDGE LINES		
POSTED SPEED	IS THERE CONTINUOUS LIGHTING?	
	YES	NO
≤ 30 MPH	NO	OPTIONAL
35 OR 40 MPH	OPTIONAL	RECOMMENDED
≥ 45 MPH	RECOMMENDED	REQUIRED

GENERAL NOTES

APPLIES TO ISLANDS AT LEFT TURNS AT ONE WAY ROADWAYS AS WELL.

SEE MISCELLANEOUS QUANTITIES FOR SIGN SIZE.

1. MARK CURB NOSES YELLOW.
2. MARK ACCORDING TO TABLE.
3. CHEVRON MAY BE OMITTED IF LESS THAN 4" WIDE

⇨ DIRECTION OF TRAVEL

*CONFIRM MARKING LINE WIDTH WITH THE MISCELLANEOUS QUANTITIES

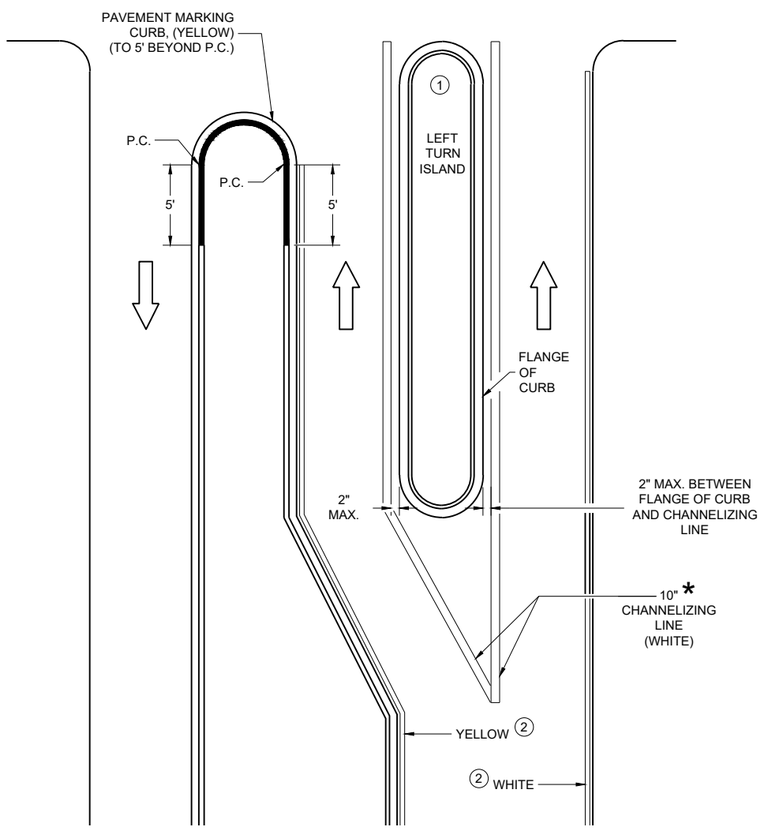

LEFT TURN & MEDIAN ISLAND

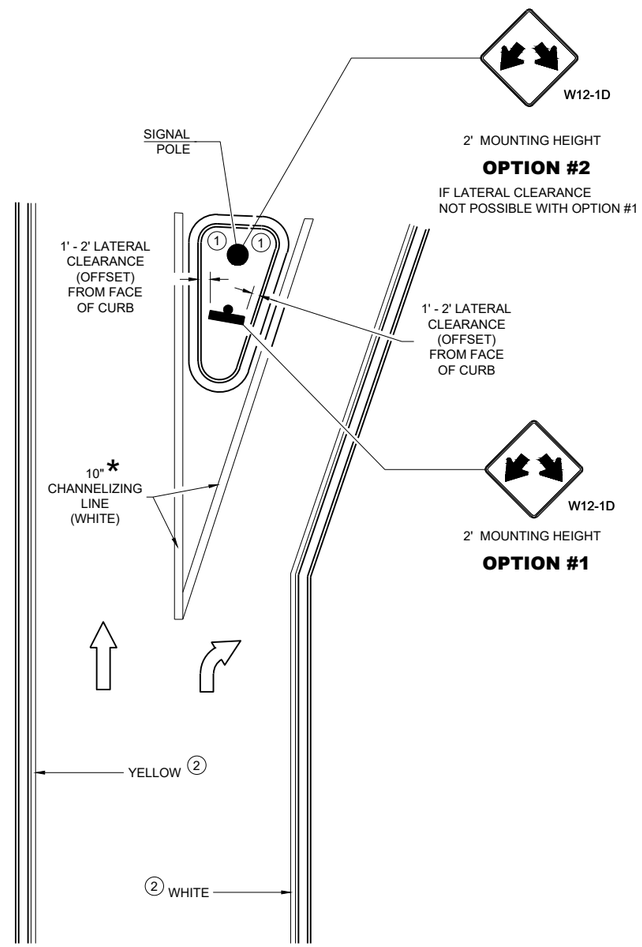

RIGHT TURN ISLAND

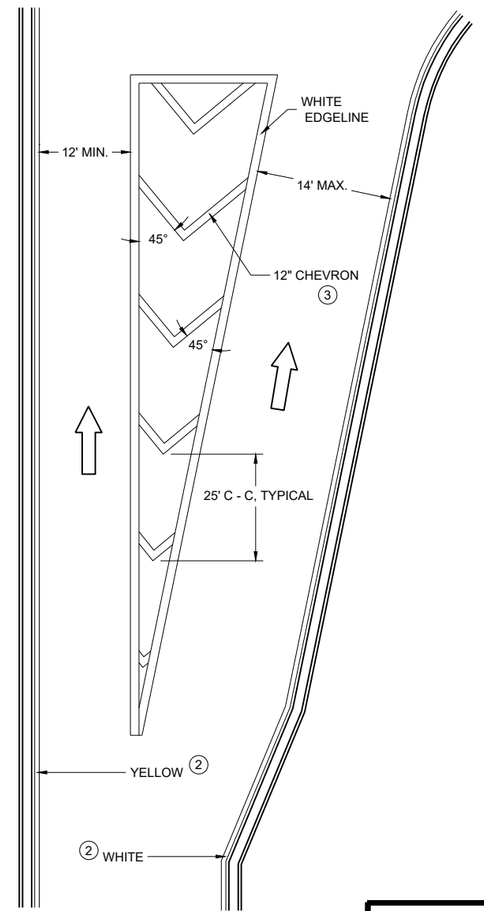

TURN LANE DETAIL

MEDIAN PAVEMENT MARKINGS, DOUBLE ARROW WARNING SIGN PLACEMENT

STATE OF WISCONSIN
DEPARTMENT OF TRANSPORTATION

APPROVED
August 2024 — DATE
/S/ Jeannie Silver — Statewide Pavement Marking Engineer
FHWA

6

SDD 15C18-09c

LEGEND

V1 LEAD VEHICLE

V2 MARKING VEHICLE

V3 SHADOW VEHICLE

TRUCK MOUNTED ATTENUATOR (TMA)

SIGN ON TEMPORARY SUPPORT

DIRECTION OF TRAFFIC

GENERAL NOTES

ALL VEHICLES SHALL BE EQUIPPED WITH TWO 360 DEGREE HIGH INTENSITY YELLOW FLASHING LIGHTS OR STROBE LIGHTS AND OPERATED WITH HEADLIGHTS TURNED ON.

ALL VEHICLES SHALL BE EQUIPPED WITH REAR FACING TYPE B OR C FLASHING ARROW PANEL OPERATING IN CAUTION MODE. SIGNS PLACED ON VEHICLES MUST NOT OBSCURE THE ARROW PANEL.

ALL SIGNS ARE 48" X 48" UNLESS OTHERWISE SPECIFIED.

DISTANCE BETWEEN VEHICLES MAY VARY ACCORDING TO TERRAIN, SIGHT DISTANCE, PAINT DRYING TIME, AND OTHER FACTORS. WHENEVER ADEQUATE STOPPING SIGHT DISTANCE EXISTS TO THE REAR, SHADOW VEHICLES SHOULD MAINTAIN THE MINIMUM DISTANCE FROM THE WORK VEHICLE AND PROCEED AT THE SAME SPEED AS THE WORK VEHICLE. SHADOW VEHICLES SHOULD SLOW DOWN IN ADVANCE OF VERTICAL AND HORIZONTAL CURVES THAT RESTRICT SIGHT DISTANCE.

THE WORK AND SHADOW VEHICLES SHOULD PULL OVER PERIODICALLY TO ALLOW TRAFFIC TO PASS.

WHEN NO WORK ACTIVITY IS TAKING PLACE, REMOVE OR LAY STATIONARY SIGNS AND SUPPORTS FLAT ON THE GRADE WITH UPRIGHTS ORIENTED PARALLEL TO AND DOWNSTREAM FROM TRAFFIC.

WORKERS SHALL NOT PERFORM WORK FROM ANY SHADOW OR PROTECTION VEHICLES.

CONES SHOULD BE USED BETWEEN THE MARKING AND SHADOW VEHICLE AT 100 FOOT SPACING. CONES MAY BE OMITTED ON PAINTED LINE IF APPROVED BY THE ENGINEER. CONSIDER PAVEMENT MARKING DRY OR CURE TIMES AND TRAFFIC VOLUME.

CONES SHALL BE A MINIMUM OF 28" FOR WET PAVEMENT MARKING .

1. SIGNS SHALL BE REPEATED APPROXIMATELY EVERY THREE MILES AND AFTER EVERY MAJOR INTERSECTION.
2. IF CONSTRUCTION WORK ZONE SIGNS ARE IN PLACE, W20-1A OR W21-63 ARE NOT REQUIRED.
3. V1 AND V2 CAN BE SWITCHED SO THAT THE MARKER IS THE LEAD VEHICLE.

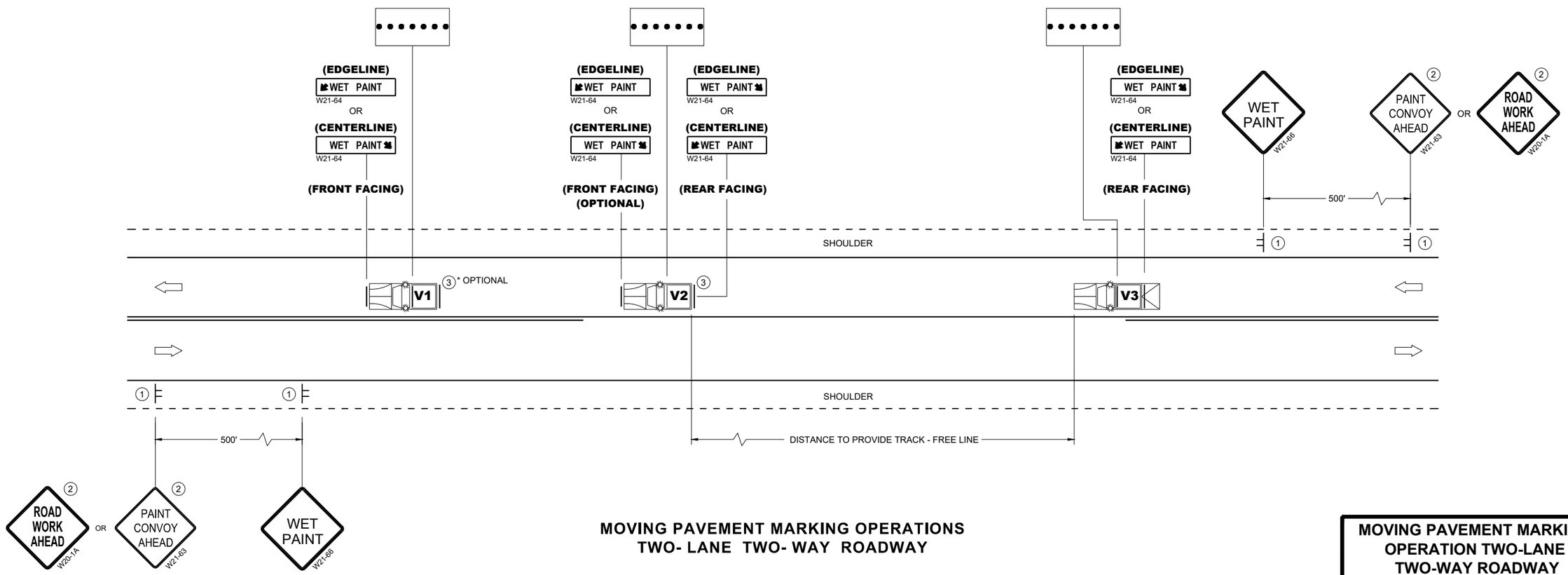

MOVING PAVEMENT MARKING OPERATIONS
TWO- LANE TWO- WAY ROADWAY

MOVING PAVEMENT MARKING OPERATION TWO-LANE TWO-WAY ROADWAY

STATE OF WISCONSIN
DEPARTMENT OF TRANSPORTATION

APPROVED
November 2025 — DATE
/S/ Andrew Heidtke — STATE ELECTRICAL ENGINEER

FHWA

6

SDD 15C19-11a

GENERAL NOTES

STOP SIGN SHALL BE PLACED A MINIMUM OF 6 FEET TO A MAXIMUM OF 50 FEET FROM THE EDGELINE LOCATION.

1. 18-INCH STOP LINES MAY BE DELETED OR ADDED BY THE REGION MARKING ENGINEER BASED ON VISIBILITY AND SIGHT LINES.
2. NO STOP LINE IS REQUIRED IF STOP SIGN IS LESS THAN OR EQUAL TO 40 FEET FROM THE EDGELINE.
3. NO STOP LINE IS REQUIRED IF STOP SIGN IS LESS THAN OR EQUAL TO 30 FEET FROM THE FLANGE LINE EXTENSION.
4. MOVE CLOSER TO THE EDGE OF TRAVEL LINE AS NEEDED FOR VISIBILITY AND SIGHT LINES (NO CLOSER THAN 4 FEET).
5. LADDER BAR CROSSWALKS SHOULD ONLY BE USED FOR MID BLOCK CROSSINGS. USE 2 - 6" TRANSVERSE LINES.
6. POSTED SPEED LIMITS OF 40 MPH OR GREATER USE A MINIMUM WIDTH OF 8' FOR MIDBLOCK CROSSWALKS

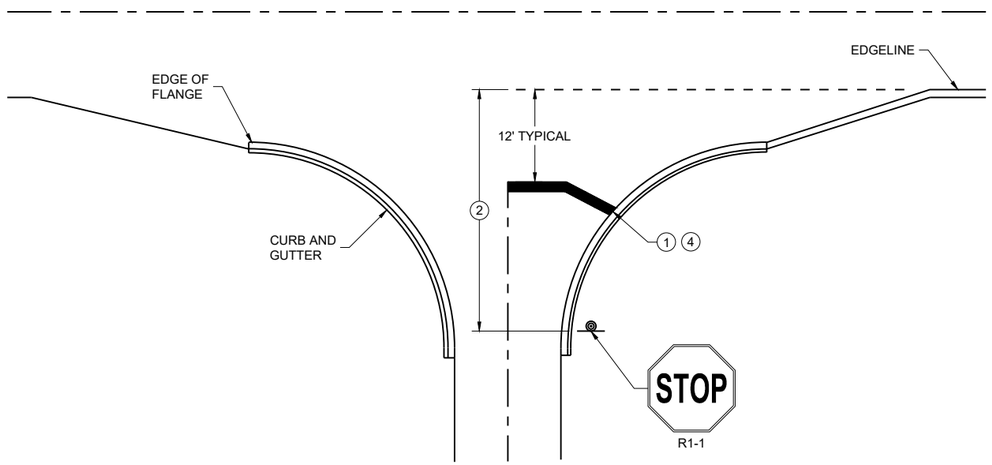

TYPICAL STOP LINE PAVEMENT MARKING WITH CURB AND GUTTER

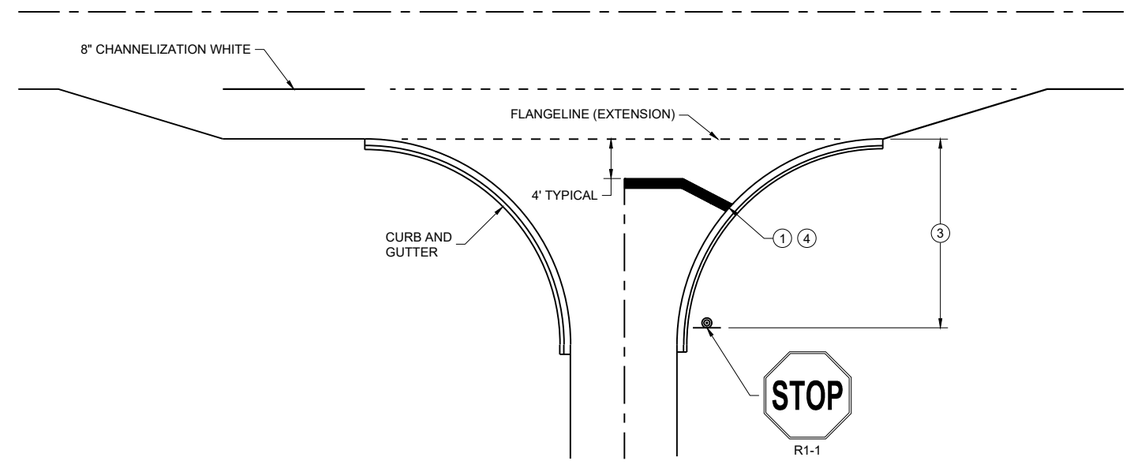

TYPICAL STOP LINE PAVEMENT MARKING FOR SIDE ROADS WITH RIGHT TURN LANE

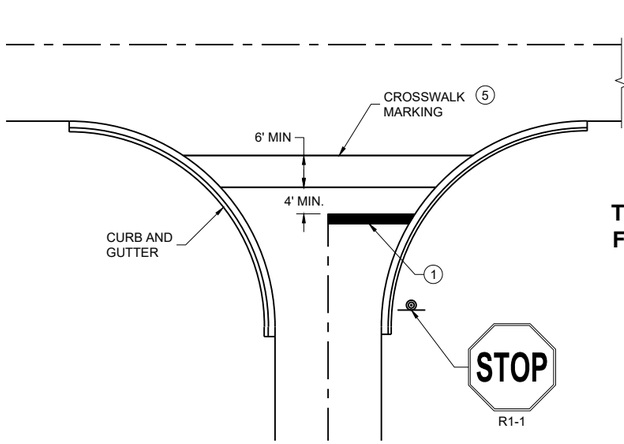

TYPICAL STOP LINE PAVEMENT MARKING FOR SIDE ROADS WITH CROSSWALK MARKING

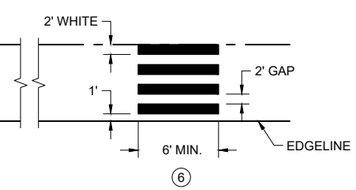

TYPICAL PAVEMENT MARKING FOR MID-BLOCK CROSSWALK 5

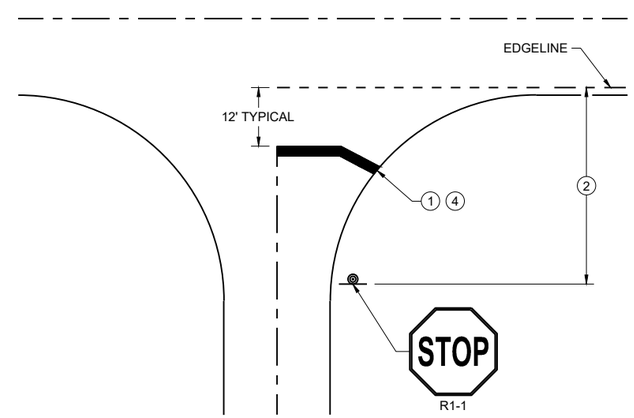

TYPICAL STOP LINE PAVEMENT MARKING WITHOUT CURB AND GUTTER

STOP LINE AND CROSSWALK PAVEMENT MARKING

STATE OF WISCONSIN
DEPARTMENT OF TRANSPORTATION

APPROVED
March 2024 — DATE
/S/ Matthew Rauch — STATE SIGNING AND MARKING ENGINEER

FHWA

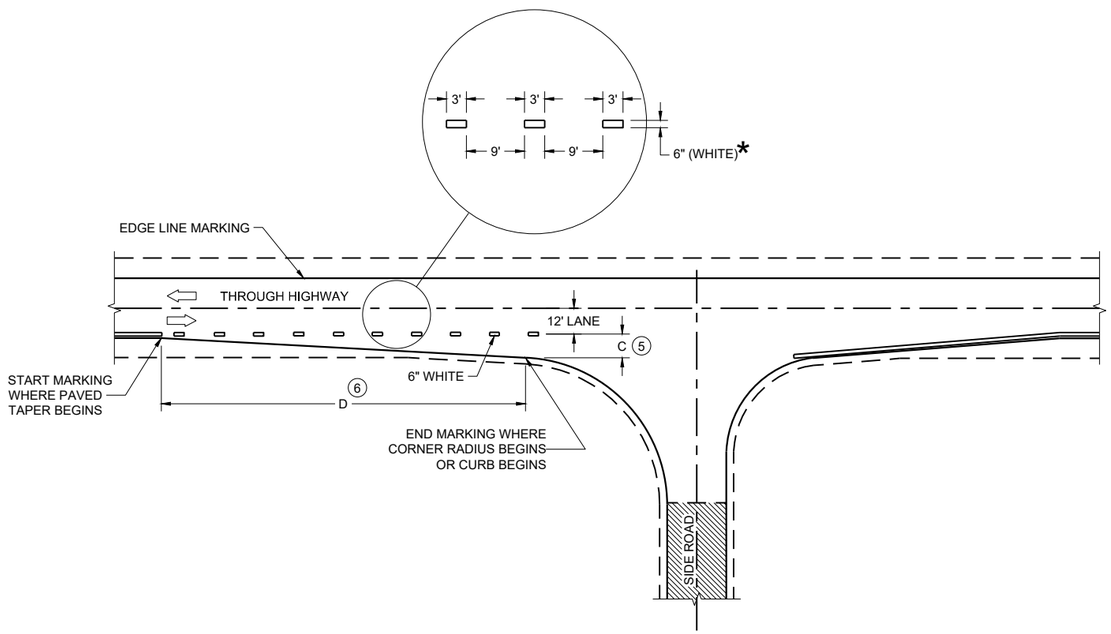

MINOR INTERSECTION

*CONFIRM MARKING LINE WIDTH WITH THE MISCELLANEOUS QUANTITIES

GENERAL NOTES

OMIT EDGE LINES THROUGH INTERSECTIONS. CONTINUE EDGE LINES THROUGH DRIVEWAYS.

1. WHEN DISTANCE "A" IS LESS THAN 250 FEET, OMIT LANE LINE.
2. WHEN DISTANCE "B" IS LESS THAN 100 FEET, OMIT CHANNELIZING LANE LINE.
3. BARRIER LINE ENDS AT SIDE ROAD PAVEMENT / SURFACE EDGE EXTENSION.
4. BARRIER LINE STARTS 500 FEET PRIOR TO THE BYPASS TAPER.
5. WHEN DISTANCE "C" IS LESS THAN 4 FEET, OMIT DOTTED EXTENSION.
6. WHEN DISTANCE "D" IS LESS THAN 50 FEET, OMIT DOTTED EXTENSION.

LEGEND

DIRECTION OF TRAVEL

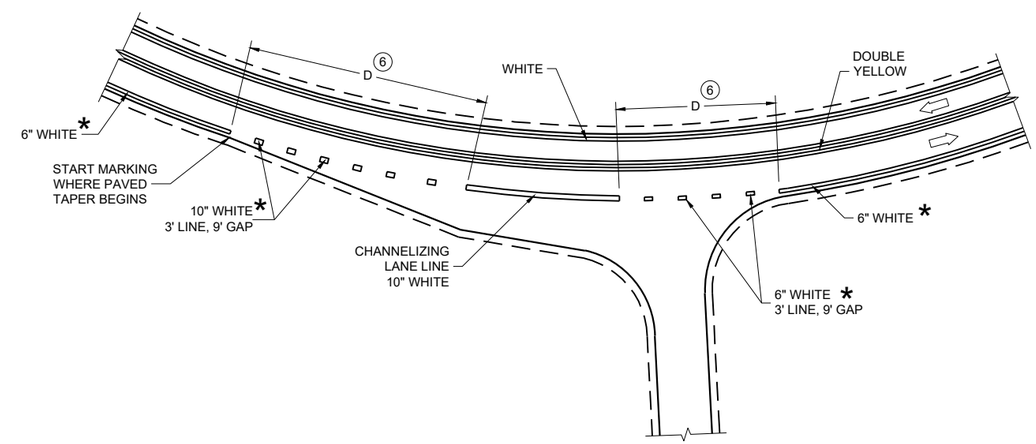

INTERSECTION ON OUTSIDE OF CURVE

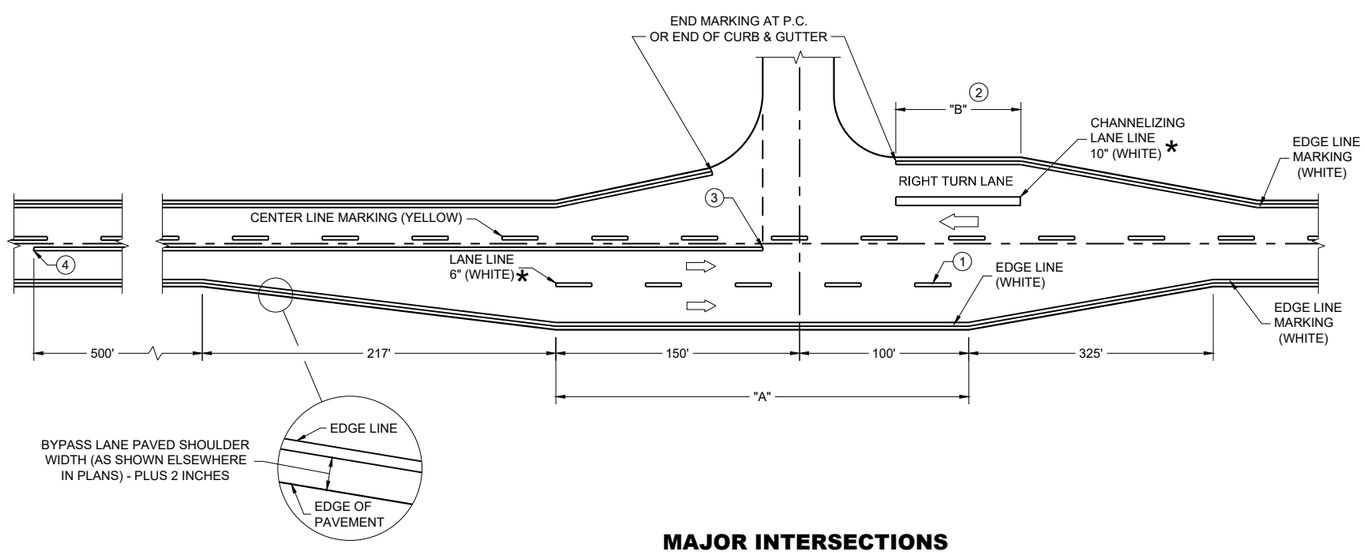

MAJOR INTERSECTIONS

(INTERSECTION WITH FULL RIGHT TURN LANE OR BYPASS LANE)

PAVEMENT MARKING (INTERSECTIONS)

STATE OF WISCONSIN
DEPARTMENT OF TRANSPORTATION

6
SDD 15C35-06a

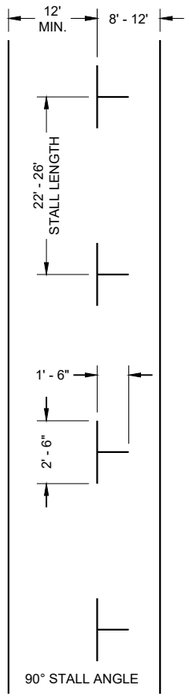

PARALLEL PARKING

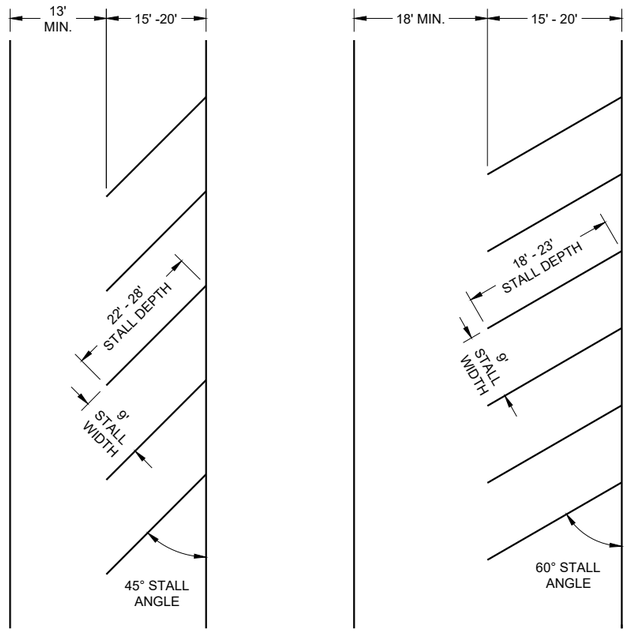

ANGLED PARKING

(ANGLED PARKING IS NOT ALLOWED ON STATE HIGHWAYS UNLESS A DESIGN JUSTIFICATION HAS BEEN COMPLETED.)

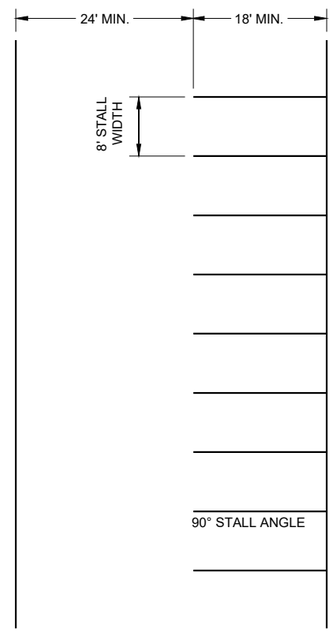

PARKING LOTS

GENERAL NOTES

ALL LINES 4" WHITE (UNLESS OTHERWISE NOTED)

LAST PARKING STALL IS A MINIMUM OF 15' FROM THE CROSSWALK.

LEGEND

SIGN ON PERMANENT SUPPORT

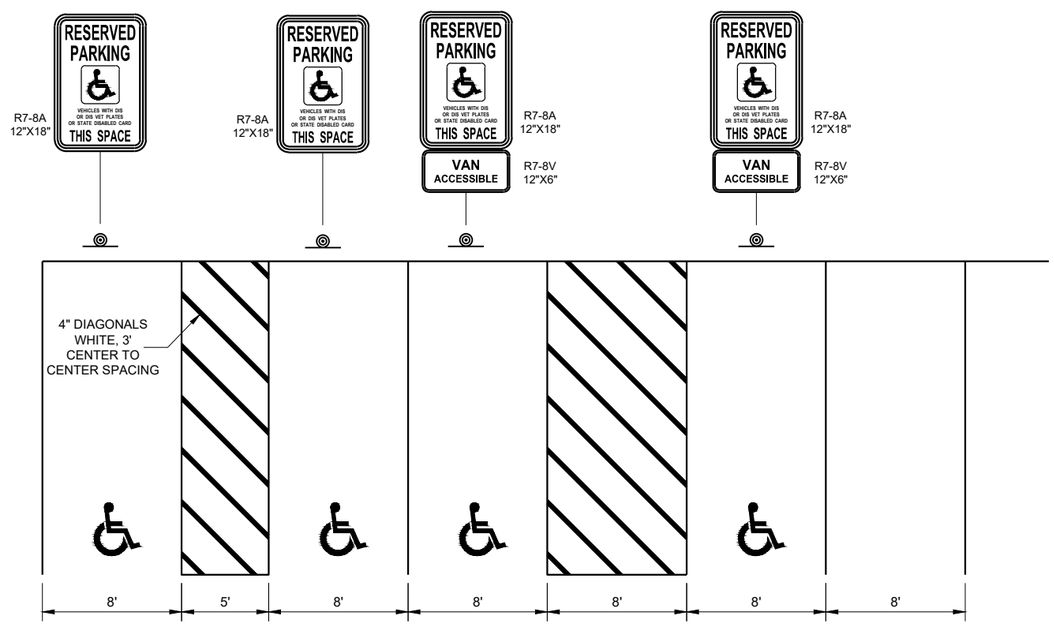

ACCESSIBLE **VAN ACCESSIBLE**

6

6

SDD 15C36 - 01

SDD 15C36 - 01

PARKING STALL MARKING

STATE OF WISCONSIN
DEPARTMENT OF TRANSPORTATION

APPROVED
August 2019 — DATE
/S/ Matthew Rauch — STATE SIGNING AND MAR ENGINEER
FHWA

LEGEND

SIGN ON PERMANENT SUPPORT

TRAFFIC CONTROL DRUM

DIRECTION OF TRAFFIC

WORK ZONE

GENERAL NOTES

ALL SIGNS ARE 48"X48" UNLESS OTHERWISE NOTED. IF NECESSARY DUE TO SPACE CONSTRAINTS IN URBAN AREAS, 36" X 36" SIGNS MAY BE USED IF APPROVED BY THE REGIONAL TRAFFIC UNIT.

"WO" SIGN IS THE SAME AS "W" SIGN EXCEPT THE BACKGROUND IS ORANGE.

ANY SIGNS TEMPORARY OR EXISTING, WHICH CONFLICT WITH THE TRAFFIC CONTROL "IN USE" SHALL BE REMOVED OR COVERED AS NEEDED AND AS APPROVED BY THE ENGINEER.

THE EXACT NUMBER, LOCATION, AND SPACING OF ALL SIGNS AND DEVICES SHALL BE ADJUSTED TO FIT FIELD CONDITIONS AS APPROVED BY THE ENGINEER.

CHANNELIZING DEVICES PLACED ADJACENT TO WORK AREA SHALL BE PULLED BACK FROM THE TRAVEL LANE WHEN WORK IS NOT IN PROGRESS.

SIGNS THAT WILL BE IN PLACE LESS THAN 7 CONTINUOUS DAYS AND NIGHTS MAY BE MOUNTED ON PORTABLE SUPPORTS.

W20-1A AND G20-2A SIGNS ARE NOT REQUIRED IF THE WORK AREA IS WITHIN A LARGER WORK ZONE WHERE THESE SIGNS ARE ALREADY PRESENT. G20-2A SIGNS MAY ALSO BE OMITTED IF DURATION OF WORK IS LESS THAN 7 CONTINUOUS DAYS AND NIGHTS.

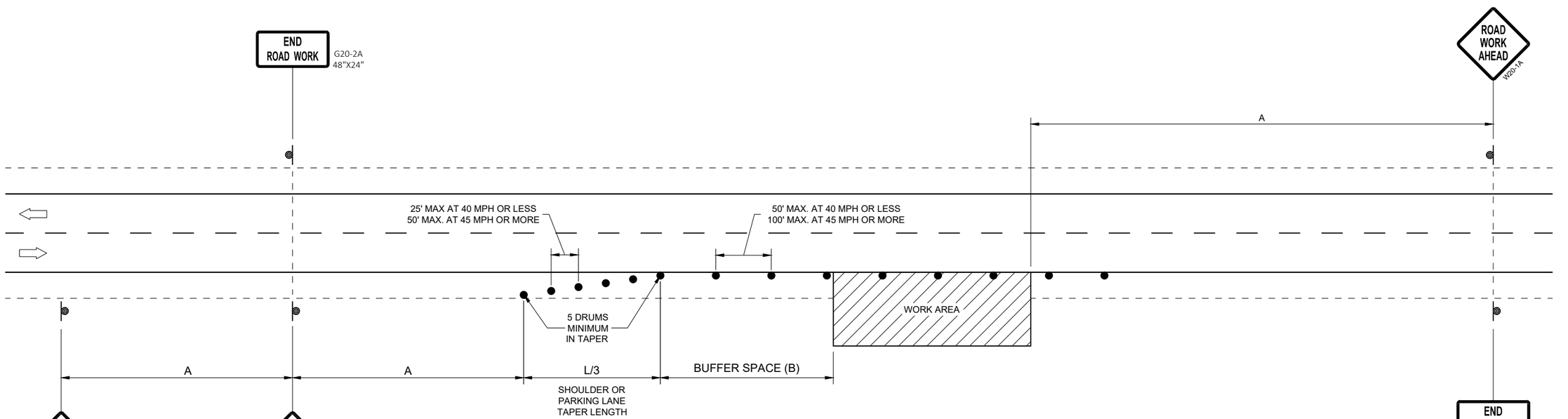

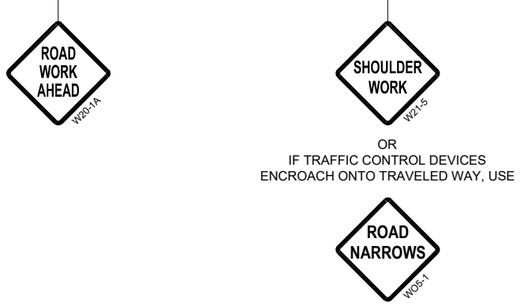

POSTED SPEED LIMIT PRIOR TO WORK STARTING (MPH)	ADVANCE WARNING SIGN SPACING (A) FEET	SHOULDER TAPER L / 3 W, LATERAL OFFSET (FT)						BUFFER SPACE (B) FEET
		3	4	5	6	7	8	
25	200'	10	14	17	21	24	28	55
30	200'	15	20	25	30	35	40	85
35	350'	20	27	34	40	47	54	120
40	350'	26	35	44	53	62	70	170
45	500'	45	59	74	89	104	119	220
50	500'	50	66	83	99	116	132	280
55	500'	54	73	91	109	127	145	335'

TRAFFIC CONTROL, WORK ON SHOULDER OR PARKING LANE, UNDIVIDED ROADWAY

STATE OF WISCONSIN
DEPARTMENT OF TRANSPORTATION

APPROVED
May 2020
DATE

/S/ Andrew Heidtke
STATEWIDE WORK ZONE T
SAFETY ENGINEER

FHWA

6

SDD 15D28 - 04

GENERAL NOTES

BARRICADE DEVICE SELECTED FROM APPROVED PRODUCT LIST

1. REFLECTIVE SHEETING SHALL FOLLOW THE REQUIREMENTS IN THE APPROVED PRODUCTS LISTING FOR SIGN SHEETING.
2. SHEETING REQUIRED ON MORE THAN 50% OF BARRICADE WIDTH.
3. PLACE SHEETING ON BOTH SIDES OF THE BARRICADE.

* USE THIS DETAIL FOR SHEETING PLACEMENT REFERENCE.

4. WHEN THE TEMPORARY PEDESTRIAN ACCESS ROUTE RUNS PARALLEL ON THE ROADWAY SURFACE, THE MAXIMUM CROSS SLOPE WILL MATCH THE EXISTING ROADWAY CROSS SLOPE.
5. WHERE SIGNS FOR TEMPORARY PEDESTRIAN ACCOMMODATIONS ARE SHOWN BEING PLACED BEHIND TEMPORARY PEDESTRIAN BARRICADE, THE SIGNS MAY BE MOUNTED ON THE TEMPORARY PEDESTRIAN BARRICADE INSTEAD. A CORRUGATED POLYPROPYLENE OR POLYETHYLENE PLASTIC SIGN BASE SHALL BE USED IF MOUNTED ON THE BARRICADE. THE TOP OF THE SIGN SHALL BE MOUNTED BELOW THE TOP OF THE BARRICADE TO ALLOW A CONTINUOUS HAND-TRAILING EDGE.

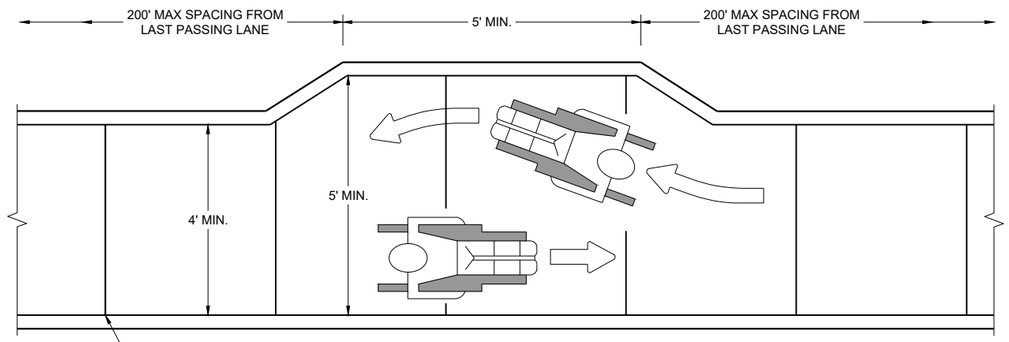

NARROW SIDEWALK PASSING DETAIL

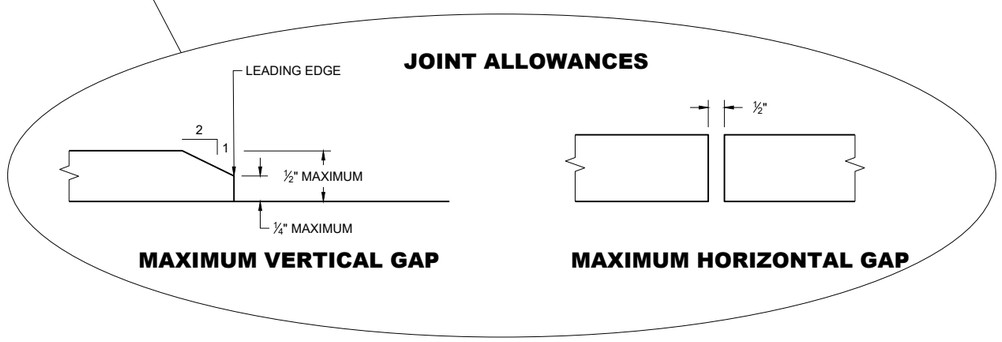

MAXIMUM VERTICAL GAP

MAXIMUM HORIZONTAL GAP

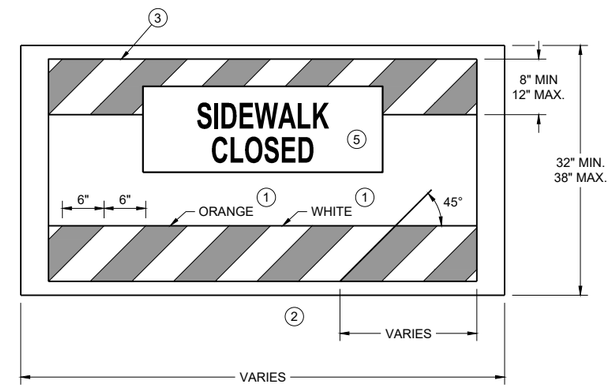

TEMPORARY PEDESTRIAN BARRICADE *

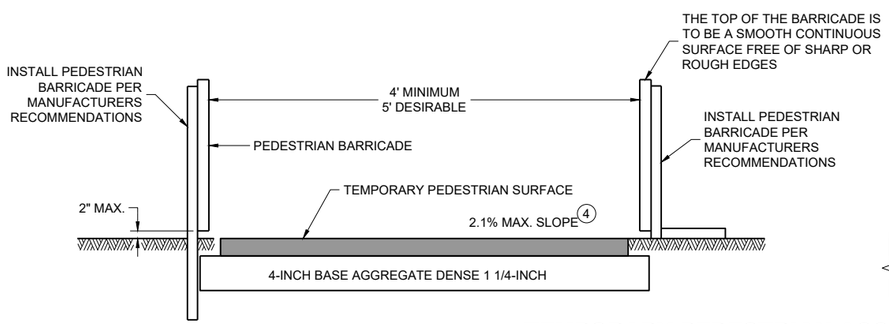

TEMPORARY PEDESTRIAN ACCESS

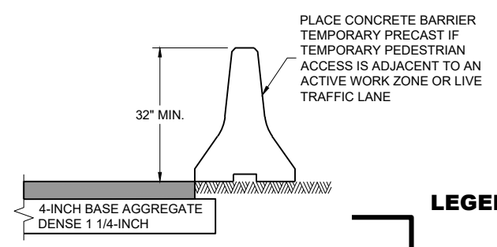

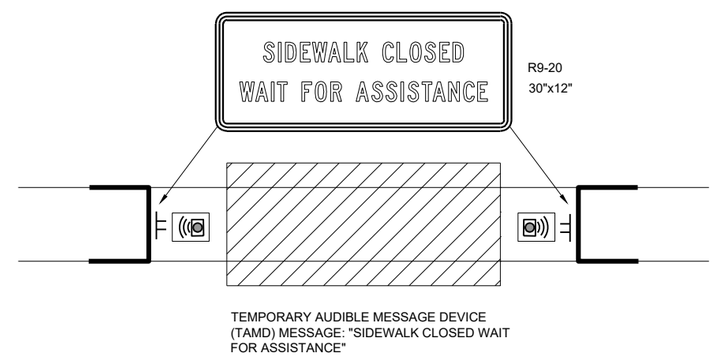

TEMPORARY PEDESTRIAN FLAGGING

LEGEND

- TEMPORARY PEDESTRIAN BARRICADE
- AUDIBLE MESSAGE DEVICE
- TEMPORARY SIGN SUPPORT
- WORK AREA

TRAFFIC CONTROL, PEDESTRIAN ACCOMMODATION

STATE OF WISCONSIN
DEPARTMENT OF TRANSPORTATION

6

SDD 15D30-12a

GENERAL NOTES

CURB RAMPS SHALL BE 48" MIN. WIDTH WITH A FIRM, STABLE AND SLIP RESISTANT SURFACE.

CURB RAMPS AND LANDINGS SHALL HAVE A 1:48 (2.1%) MAX. CROSS-SLOPE.

CLEAR SPACE OF 48" X 48" SHALL BE PROVIDED ABOVE AND BELOW THE CURB RAMP.
LATERAL JOINTS OR GAPS BETWEEN SURFACES SHALL BE LESS THAN ½" WIDTH.

CHANGES BETWEEN SURFACE HEIGHTS SHALL NOT EXCEED ½". LATERAL EDGES MAY BE VERTICAL UP TO ¼" HIGH AND SHALL BE BEVELED AT 1:2 BETWEEN ¼" AND ½".

1. INSTALL CONTRASTING TEMPORARY DETECTABLE WARNING FIELD AT PEDESTRIAN STREET CROSSINGS, AS SHOWN IN THE PLANS.
2. PROTECTIVE EDGING WITH A 2" MIN. HEIGHT SHALL BE INSTALLED WHEN A CURB RAMP OR LANDING PLATFORM HAS A VERTICAL DROP OF 6" OR GREATER OR HAS A SIDE APRON SLOPE STEEPER THAN 1:3 (33%). PROTECTIVE EDGING SHOULD BE CONSIDERED WHEN CURB RAMPS OR LANDING PLATFORMS HAVE A VERTICAL DROP OF 3" OR MORE.
3. DETECTABLE EDGING WITH 6" MIN. HEIGHT AND CONTRASTING COLOR SHALL BE INSTALLED ON ALL CURB RAMP LANDINGS WHERE THE WALKWAY CHANGES DIRECTION (TURNS).
4. DO NOT RESTRICT WATER FLOW IN THE GUTTER SYSTEM.
5. ENSURE CURB RAMP IS OUT OF THE GUTTER PAN.
6. IF ONLY PART OF THE END PANEL OF TEMPORARY PEDESTRIAN BARRICADE PANEL IS NEEDED, EXTEND EXCESS PORTION OF TEMPORARY PEDESTRIAN BARRICADE PANEL HERE.
7. LANDING TO BE SLOPED A MAXIMUM OF 2.1% IN ALL DIRECTIONS OF PEDESTRIAN TRAVEL.

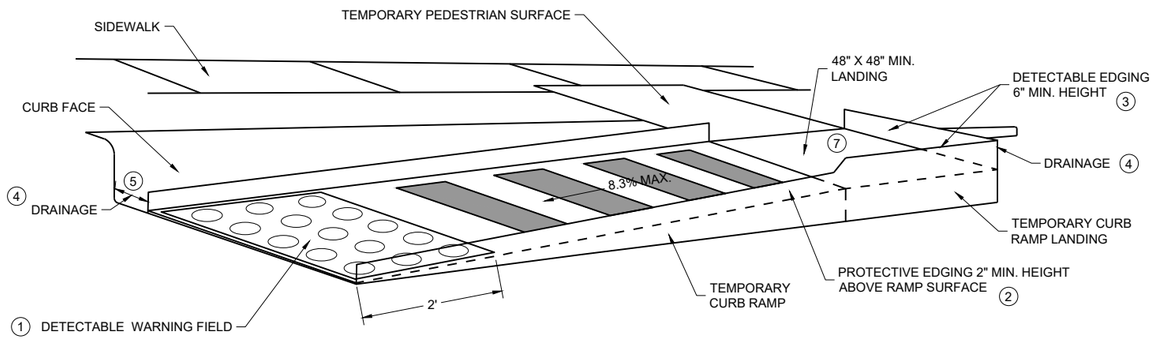

PERSPECTIVE VIEW

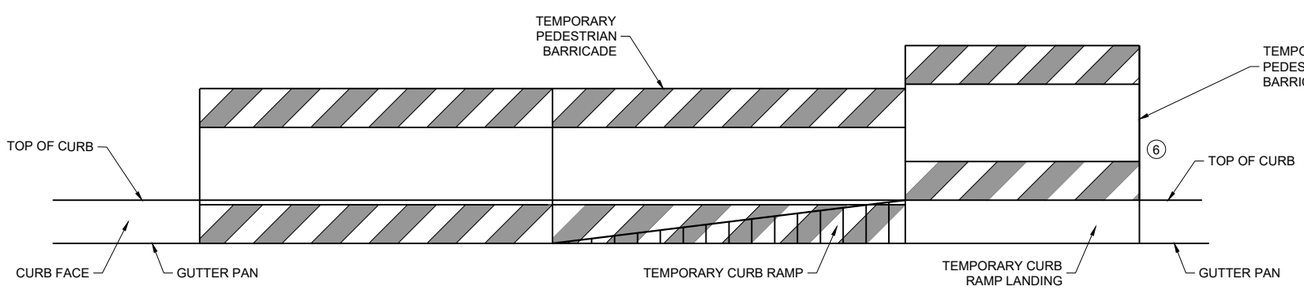

FRONT VIEW

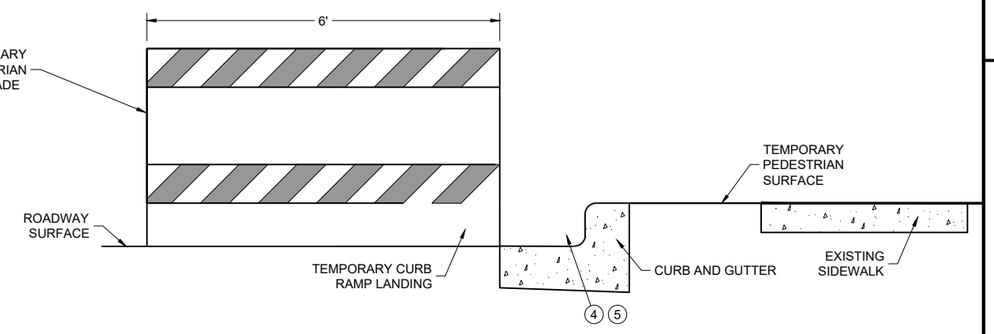

SIDE VIEW

TEMPORARY CURB RAMP PARALLEL TO CURB

6

SDD 15D30-12b

TRAFFIC CONTROL, PEDESTRIAN ACCOMMODATION

STATE OF WISCONSIN
DEPARTMENT OF TRANSPORTATION

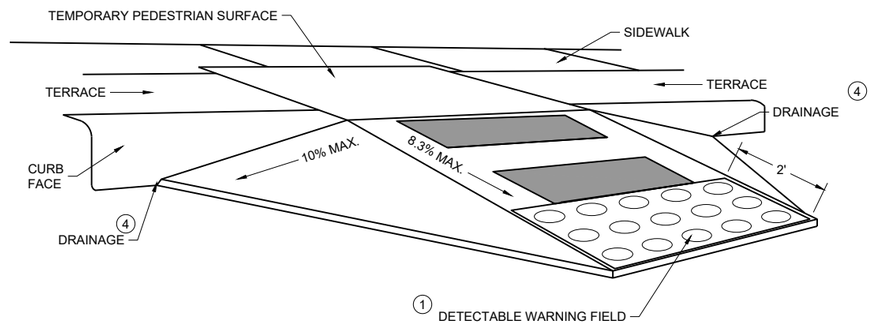

WITH SIDE APRON 5

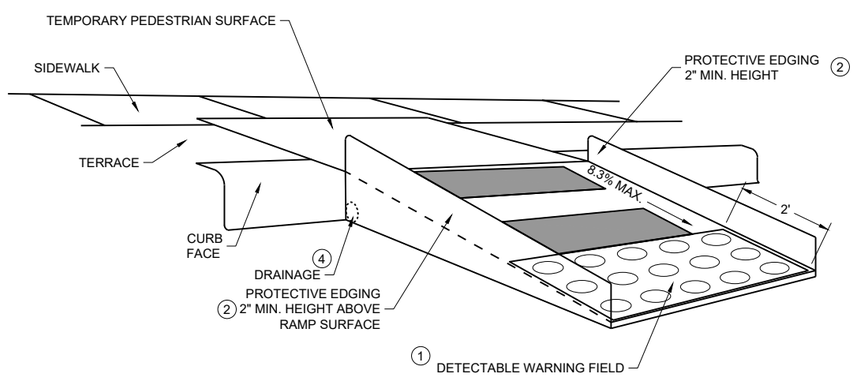

WITH PROTECTIVE EDGE

TEMPORARY CURB RAMP PERPENDICULAR TO CURB

GENERAL NOTES

CURB RAMPS SHALL BE 48" MINIMUM WIDTH WITH A FIRM, STABLE AND SLIP RESISTANT SURFACE.

ALTERNATE SIDEWALK WORK BETWEEN LEFT AND RIGHT SIDE OF ROADWAY TO MAINTAIN PEDESTRIAN ACCESS.

CURB RAMPS AND LANDINGS SHALL HAVE A 1:48 (2.1%) MAX. CROSS-SLOPE.

CLEAR SPACE OF 48" X 48" SHALL BE PROVIDED ABOVE AND BELOW THE CURB RAMP.

LATERAL JOINTS OR GAPS BETWEEN SURFACES SHALL BE LESS THAN ½" WIDTH.

CHANGES BETWEEN SURFACE HEIGHTS SHALL NOT EXCEED ½". LATERAL EDGES MAY BE VERTICAL UP TO ¼" HIGH AND SHALL BE BEVELED AT 1:2 BETWEEN ¼" AND ½".

1. INSTALL CONTRASTING TEMPORARY DETECTABLE WARNING FIELD AT PEDESTRIAN STREET CROSSINGS, AS SHOWN IN THE PLANS
2. PROTECTIVE EDGING WITH A 2" MIN. HEIGHT SHALL BE INSTALLED WHEN A CURB RAMP OR LANDING PLATFORM HAS A VERTICAL DROP OF 6" OR GREATER OR HAS A SIDE APRON SLOPE STEEPER THAN 1:3 (33%). PROTECTIVE EDGING SHOULD BE CONSIDERED WHEN CURB RAMPS OR LANDING PLATFORMS HAVE A VERTICAL DROP OF 3" OR MORE.
3. DETECTABLE EDGING WITH 6" MIN. HEIGHT AND CONTRASTING COLOR SHALL BE INSTALLED ON ALL CURB RAMP LANDINGS WHERE THE WALKWAY CHANGES DIRECTION (TURNS).
4. DO NOT RESTRICT WATER FLOW IN THE GUTTER SYSTEM.
5. CAN ONLY BE USED FOR RAMPS WITH 6" OR LESS OF VERTICAL CHANGE.

6

SDD 15D30-12c

TRAFFIC CONTROL, PEDESTRIAN ACCOMMODATION

STATE OF WISCONSIN
DEPARTMENT OF TRANSPORTATION

GENERAL NOTES

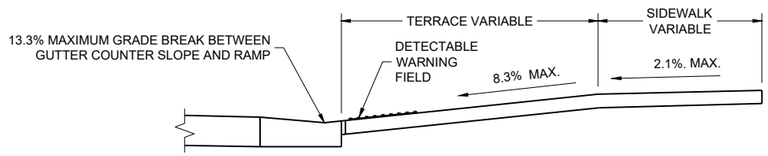

SECTION A - A

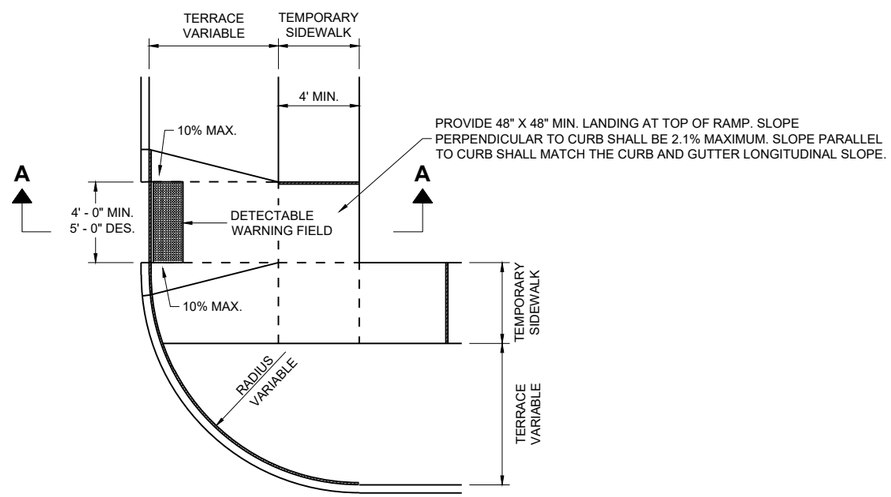

PLAN VIEW
TEMPORARY TYPE 3 RAMP
(OUTSIDE OF CROSSWALK AREA)

6

SDD 15D30-12d

TRAFFIC CONTROL,
PEDESTRIAN ACCOMMODATION

STATE OF WISCONSIN
DEPARTMENT OF TRANSPORTATION

6

SDD 15D30-12d

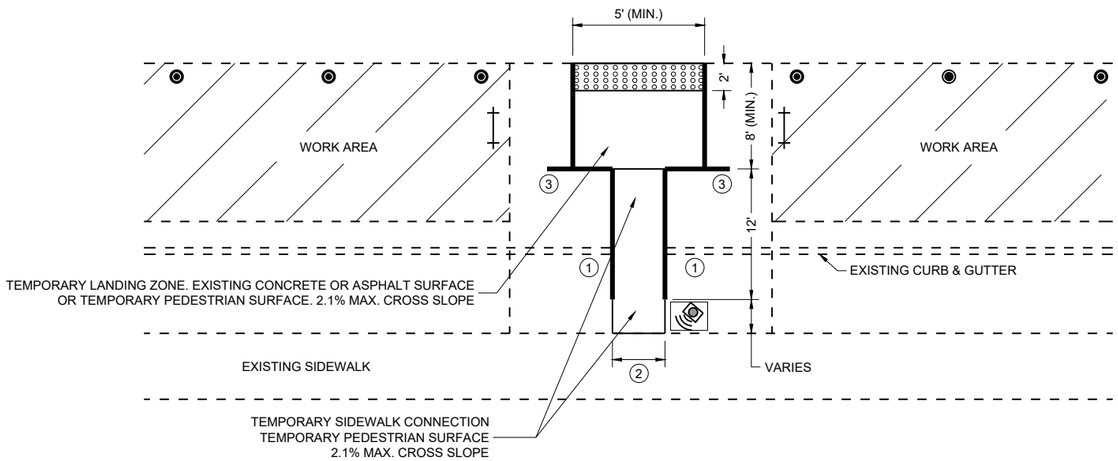

PLAN VIEW

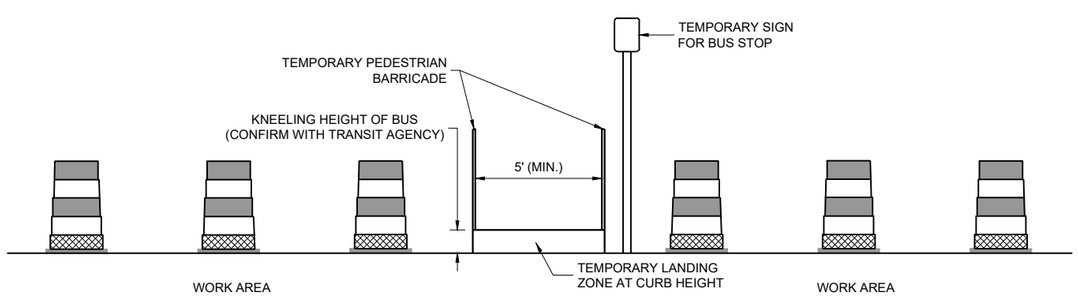

PROFILE VIEW
TEMPORARY BUS STOP PAD

GENERAL NOTES

TYPICAL TEMPORARY PEDESTRIAN BARRICADE PANEL IS 6 FEET LONG.

NOTIFY THE BUS COMPANY 7 DAYS IN ADVANCE OF THE BUS STOP RELOCATION.

PROTECTIVE EDGING WITH A 2" MIN. HEIGHT SHALL BE INSTALLED WHEN A CURB RAMP OR LANDING PLATFORM HAS A VERTICAL DROP OF 6" OR GREATER OR HAS A SIDE APRON SLOPE STEEPER THAN 1:3 (33%). PROTECTIVE EDGING SHOULD BE CONSIDERED WHEN CURB RAMPS OR LANDING PLATFORMS HAVE A VERTICAL DROP OF 3" OR MORE.

DETECTABLE EDGING WITH 6" MIN. HEIGHT AND CONTRASTING COLOR SHALL BE INSTALLED ON ALL CURB RAMP LANDINGS WHERE THE WALKWAY CHANGES DIRECTION (TURNS).

LATERAL JOINTS OR GAPS BETWEEN SURFACES SHALL BE LESS THAN ½" WIDTH.

CHANGES BETWEEN SURFACE HEIGHTS SHALL NOT EXCEED ½". LATERAL EDGES MAY BE VERTICAL UP TO ¼" HIGH AND SHALL BE BEVELED AT 1:2 BETWEEN ¼" AND ½".

CURB RAMPS AND LANDINGS SHALL HAVE A 1:48 (2.1%) MAX. CROSS-SLOPE.

1. DO NOT RESTRICT WATER FLOW IN THE GUTTER SYSTEM.
2. 5' WIDE MIN. WITH TEMPORARY PEDESTRIAN BARRICADE, 10' WIDE MIN. WITHOUT TEMPORARY PEDESTRIAN BARRICADE.
3. PLACE EXCESS PORTION OF TEMPORARY PEDESTRIAN BARRICADE INTO THIS SPACE.

LEGEND

- TRAFFIC CONTROL DRUM
- TYPE III BARRICADE
- TEMPORARY PEDESTRIAN BARRICADE
- TEMPORARY DETECTABLE WARNING FIELD
- WORK AREA
- TEMPORARY AUDIBLE MESSAGE DEVICE (EXACT PLACEMENT BASED UPON FIELD CONDITIONS)

TRAFFIC CONTROL, PEDESTRIAN ACCOMMODATION

STATE OF WISCONSIN
DEPARTMENT OF TRANSPORTATION

6

SDD 15D30-12e

LEGEND

- SIGN ON PERMANENT SUPPORT
- SIGN ON TEMPORARY SUPPORT
- UNDER PEDESTRIAN TRAFFIC
- WORK AREA
- TEMPORARY PEDESTRIAN BARRICADE
- DIRECTION OF TRAFFIC
- TEMPORARY AUDIBLE MESSAGE DEVICE (EXACT PLACEMENT BASED UPON FIELD CONDITIONS)

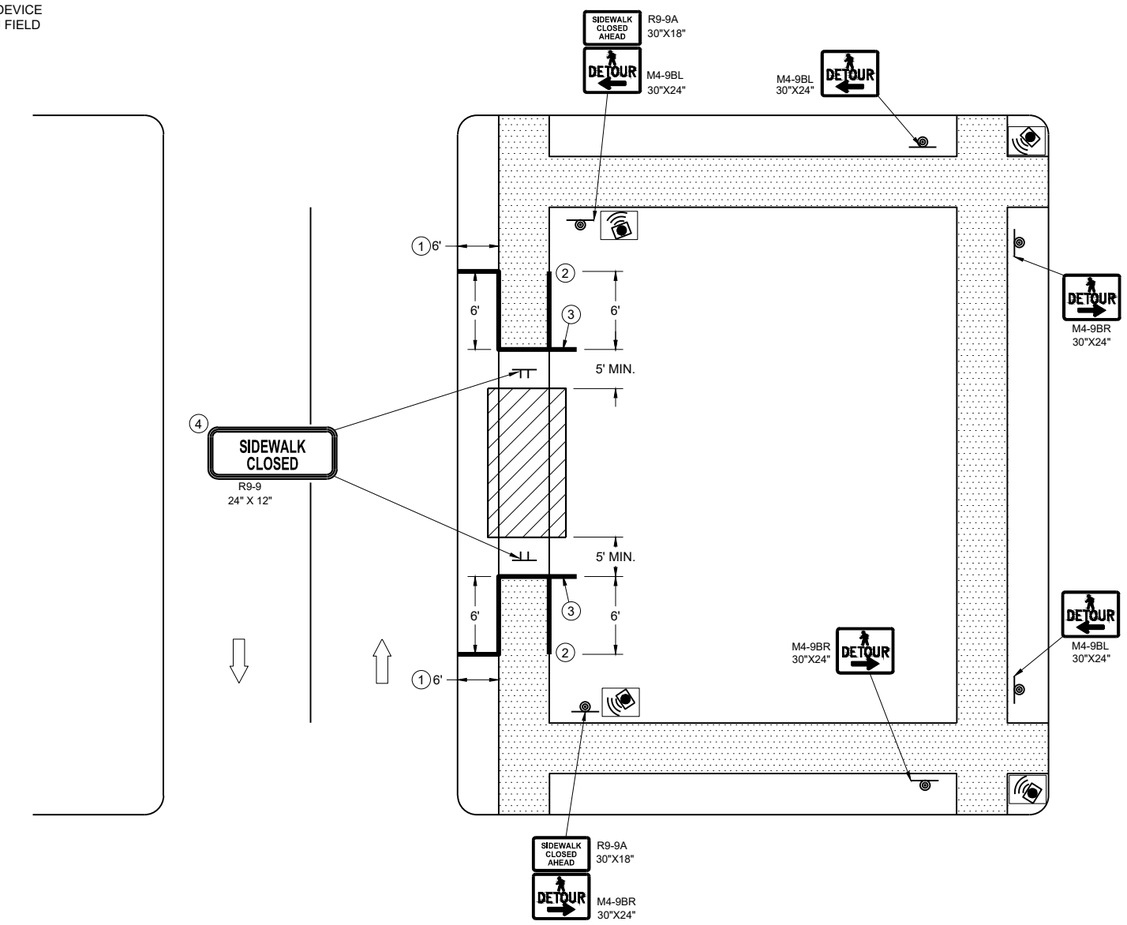

SIDEWALK DETOUR, SIDEWALK ONLY ON ONE SIDE

GENERAL NOTES

WHERE TEMPORARY BARRICADE RUNS PARALLEL ALONG SIDEWALK, PLACE THE FACE OF THE BARRICADE AT THE EDGE OF THE SIDEWALK.

SIGNS THAT REMAIN IN PLACE LESS THAN SEVEN CONTINUOUS DAYS AND NIGHTS MAY BE MOUNTED ON PORTABLE SUPPORTS.

PLACE TEMPORARY PEDESTRIAN BARRICADE TO FIT FIELD CONDITIONS, AVOIDING CONFLICTS WITH DRIVEWAYS AND OTHER EXISTING FEATURES.

1. IF TERRACE IS LESS THAN 6 FEET WIDE, OMIT TEMPORARY PEDESTRIAN BARRICADE FROM THE SIDEWALK TO THE CURB.
2. PLACE BARRICADE CLOSURE SO THAT THE TEMPORARY PEDESTRIAN BARRICADE END IS AT THE LAST OPEN SIDEWALK ACCESS TO RESIDENCES OR BUSINESSES BEFORE THE SIDEWALK CLOSURE.
3. IF TEMPORARY PEDESTRIAN BARRICADE PANEL IS WIDER THAN THE SIDEWALK WIDTH, THE PORTION OF EXCESS PANEL SHOULD EXTEND INTO THE TERRACE.
4. MOUNTING HEIGHT OF 5 FEET FROM THE SURFACE TO THE BOTTOM OF SIGN.

TRAFFIC CONTROL, PEDESTRIAN ACCOMMODATION

STATE OF WISCONSIN
DEPARTMENT OF TRANSPORTATION

6

SDD 15D30-12f

LEGEND

- SIGN ON TEMPORARY SUPPORT
- WORK AREA
- UNDER PEDESTRIAN TRAFFIC
- TEMPORARY PEDESTRIAN SURFACE
- TEMPORARY PEDESTRIAN BARRICADE
- OPTIONAL TEMPORARY PEDESTRIAN BARRICADE
- DIRECTION OF TRAFFIC

GENERAL NOTES

TYPICAL TEMPORARY PEDESTRIAN BARRICADE PANEL IS 6 FEET LONG.

WHERE TEMPORARY BARRICADE RUNS PARALLEL ALONG SIDEWALK, PLACE THE FACE OF THE BARRICADE AT THE EDGE OF THE SIDEWALK.

SIGNS THAT REMAIN IN PLACE LESS THAN SEVEN CONTINUOUS DAYS AND NIGHTS MAY BE MOUNTED ON PORTABLE SUPPORTS.

1. USE TEMPORARY PEDESTRIAN BARRICADE TO SEPARATE PEDESTRIANS FROM DROP OFFS OR FOR ADDITIONAL PEDESTRIAN CHANNELIZATION.
2. IF TEMPORARY PEDESTRIAN BARRICADE PANEL IS WIDER THAN THE SIDEWALK WIDTH, THE PORTION OF EXCESS PANEL SHOULD EXTEND INTO THE TERRACE.
3. MOUNTING HEIGHT OF 5 FEET FROM THE SURFACE TO THE BOTTOM OF SIGN.

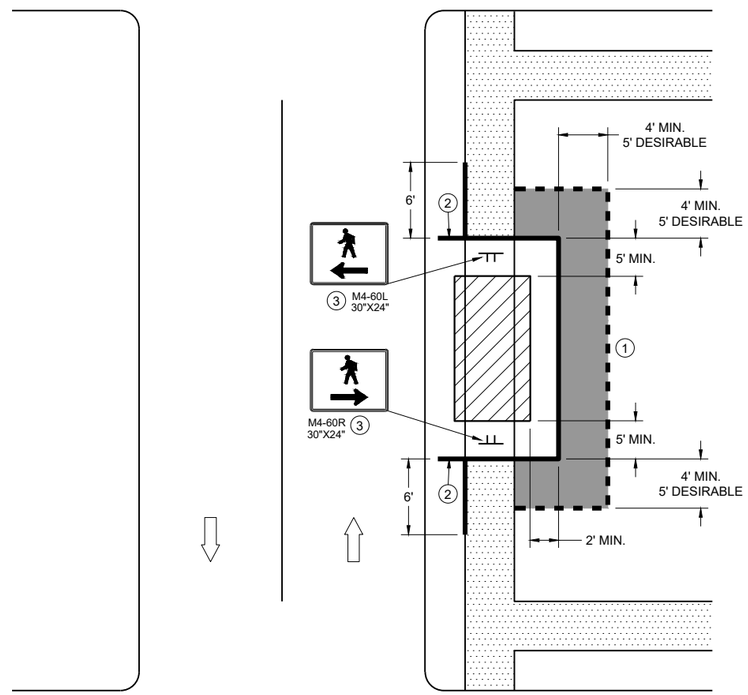

SIDEWALK BYPASS
SINGLE SIDE

TRAFFIC CONTROL, PEDESTRIAN ACCOMMODATION

STATE OF WISCONSIN
DEPARTMENT OF TRANSPORTATION

6
SDD 15D30-12g

LEGEND

- SIGN ON TEMPORARY SUPPORT
- TRAFFIC CONTROL DRUM
- WORK AREA
- UNDER PEDESTRIAN TRAFFIC
- TEMPORARY CURB RAMP
- TEMPORARY PEDESTRIAN SURFACE "A"
- TEMPORARY PEDESTRIAN SURFACE "B"
- TEMPORARY PEDESTRIAN BARRICADE
- DIRECTION OF TRAFFIC

GENERAL NOTES

TYPICAL TEMPORARY PEDESTRIAN BARRICADE PANEL IS 6 FEET LONG.

WHERE TEMPORARY BARRICADE RUNS PARALLEL ALONG SIDEWALK, PLACE THE FACE OF THE BARRICADE AT THE EDGE OF THE SIDEWALK.

1. SHOULDER OR LANE CLOSURE ADVANCE WARNING AND BUFFER SPACE REQUIRED.
2. PLACE EXCESS PORTION OF TEMPORARY PEDESTRIAN BARRICADE PANEL PAST THE SIDEWALK ON THE SIDE AWAY FROM THE ROAD.
3. MOUNTING HEIGHT OF 5 FEET FROM THE SURFACE TO THE BOTTOM OF SIGN.
4. USE EXISTING PAVEMENT SURFACE. IF EXISTING PAVEMENT SURFACE HAS BEEN REMOVED, USE A TEMPORARY PEDESTRIAN SURFACE. WHEN THE TEMPORARY PEDESTRIAN ACCESS ROUTE RUNS PARALLEL ON THE ROADWAY SURFACE, THE MAXIMUM CROSS SLOPE WILL MATCH THE EXISTING ROADWAY CROSS SLOPE.

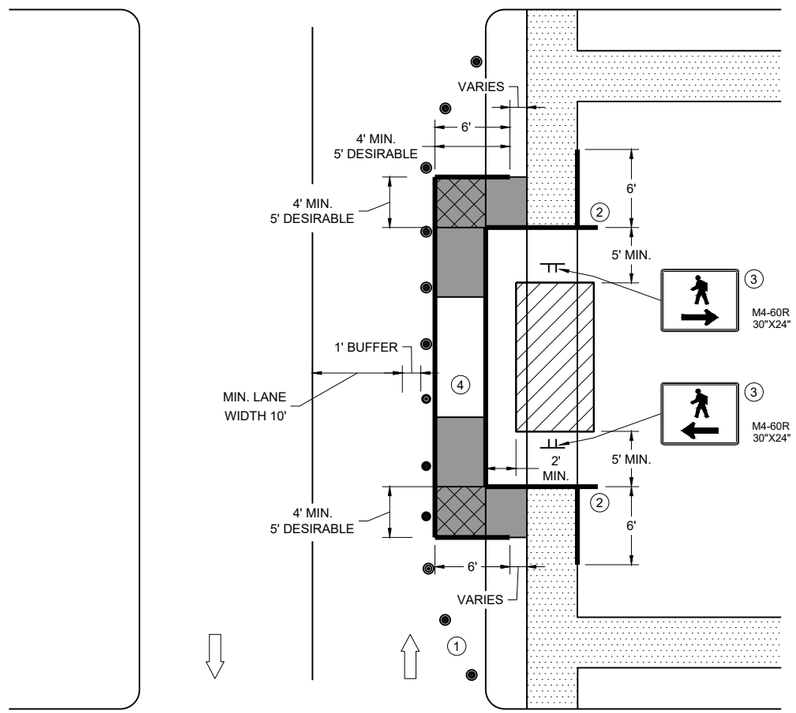

SIDEWALK BYPASS, SINGLE SIDE

TRAFFIC CONTROL, PEDESTRIAN ACCOMMODATION

STATE OF WISCONSIN
DEPARTMENT OF TRANSPORTATION

6
SDD 15D30-12h

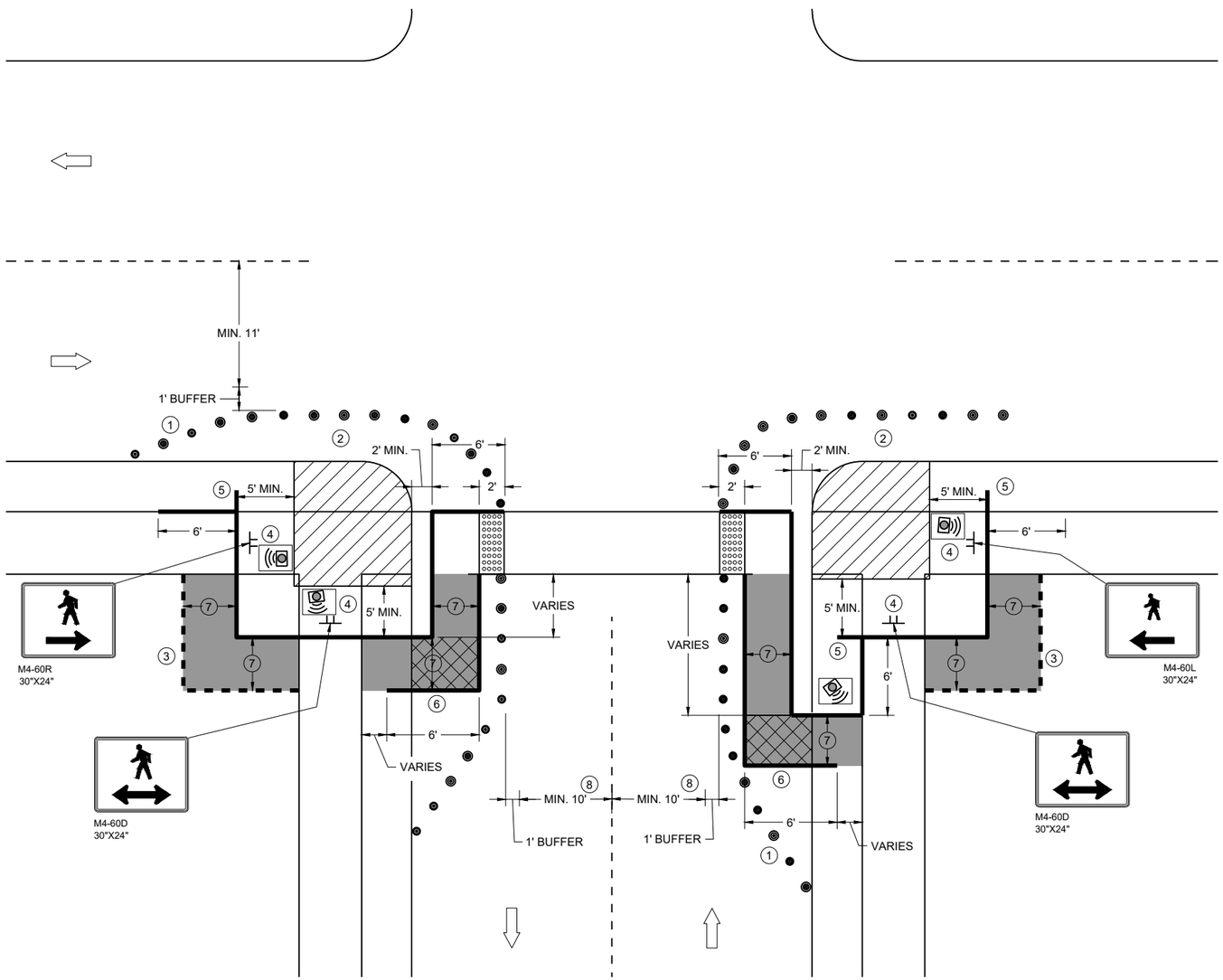

CURB RAMP PEDESTRIAN TRAFFIC CONTROL
SIDEWALK ON SINGLE SIDE

GENERAL NOTES

IF PEDESTRIAN PUSH BUTTONS ARE PRESENT ON THE EXISTING FACILITY, ENSURE THEY ARE MAINTAINED/ACCESSIBLE FOR PEDESTRIAN USE THROUGHOUT THE TEMPORARY PEDESTRIAN ACCOMMODATIONS.

TYPICAL TEMPORARY PEDESTRIAN BARRICADE PANEL IS 6 FEET LONG

WHEN TEMPORARY PEDESTRIAN BARRICADE RUNS PARALLEL ALONG THE SIDEWALK, PLACE THE FACE OF THE BARRICADE AT THE EDGE OF THE SIDEWALK.

WHEN THE TEMPORARY PEDESTRIAN ACCESS ROUTE RUNS PARALLEL ON THE ROADWAY SURFACE, THE MAXIMUM CROSS SLOPE WILL MATCH THE EXISTING ROADWAY CROSS SLOPE.

1. SHOULDER OR LANE CLOSURE ADVANCE WARNING AND PROPER BUFFER SPACE REQUIRED.
2. PROVIDE ADEQUATE SPACE FOR CONTRACTOR OPERATIONS
3. USE TEMPORARY PEDESTRIAN BARRICADE TO SEPARATE PEDESTRIANS FROM DROP OFFS OR FOR ADDITIONAL PEDESTRIAN CHANNELIZATION.
4. MOUNTING HEIGHT OF 5 FEET FROM SIDEWALK SURFACE TO BOTTOM OF SIGN.
5. PLACE EXCESS PORTION OF TEMPORARY PEDESTRIAN BARRICADE PANEL IN THE SIDEWALK TERRACE.
6. IF TEMPORARY PEDESTRIAN BARRICADE DOES NOT REACH THE FACE OF THE CURB, USE AN ADDITIONAL PANEL AND EXTEND INTO THE TERRACE.
7. 4 FEET MINIMUM, 5 FEET DESIRABLE
8. IF MINIMUM LANE WIDTHS CAN'T BE ATTAINED, CURB RAMPS MAY NEED TO BE CONSTRUCTED AT SEPARATE TIMES.

LEGEND

- SIGN ON TEMPORARY SUPPORT
- TRAFFIC CONTROL DRUM
- WORK AREA
- TEMPORARY CURB RAMP
- TEMPORARY PEDESTRIAN SURFACE "A"
- TEMPORARY PEDESTRIAN SURFACE "B"
- TEMPORARY DETECTABLE WARNING FIELD
- TEMPORARY PEDESTRIAN BARRICADE
- OPTIONAL TEMPORARY PEDESTRIAN BARRICADE
- DIRECTION OF TRAFFIC
- TEMPORARY AUDIBLE MESSAGE DEVICE (EXACT PLACEMENT BASED UPON FIELD CONDITIONS)

TRAFFIC CONTROL, PEDESTRIAN ACCOMMODATION

STATE OF WISCONSIN
DEPARTMENT OF TRANSPORTATION

6
SDD 15D30-12i

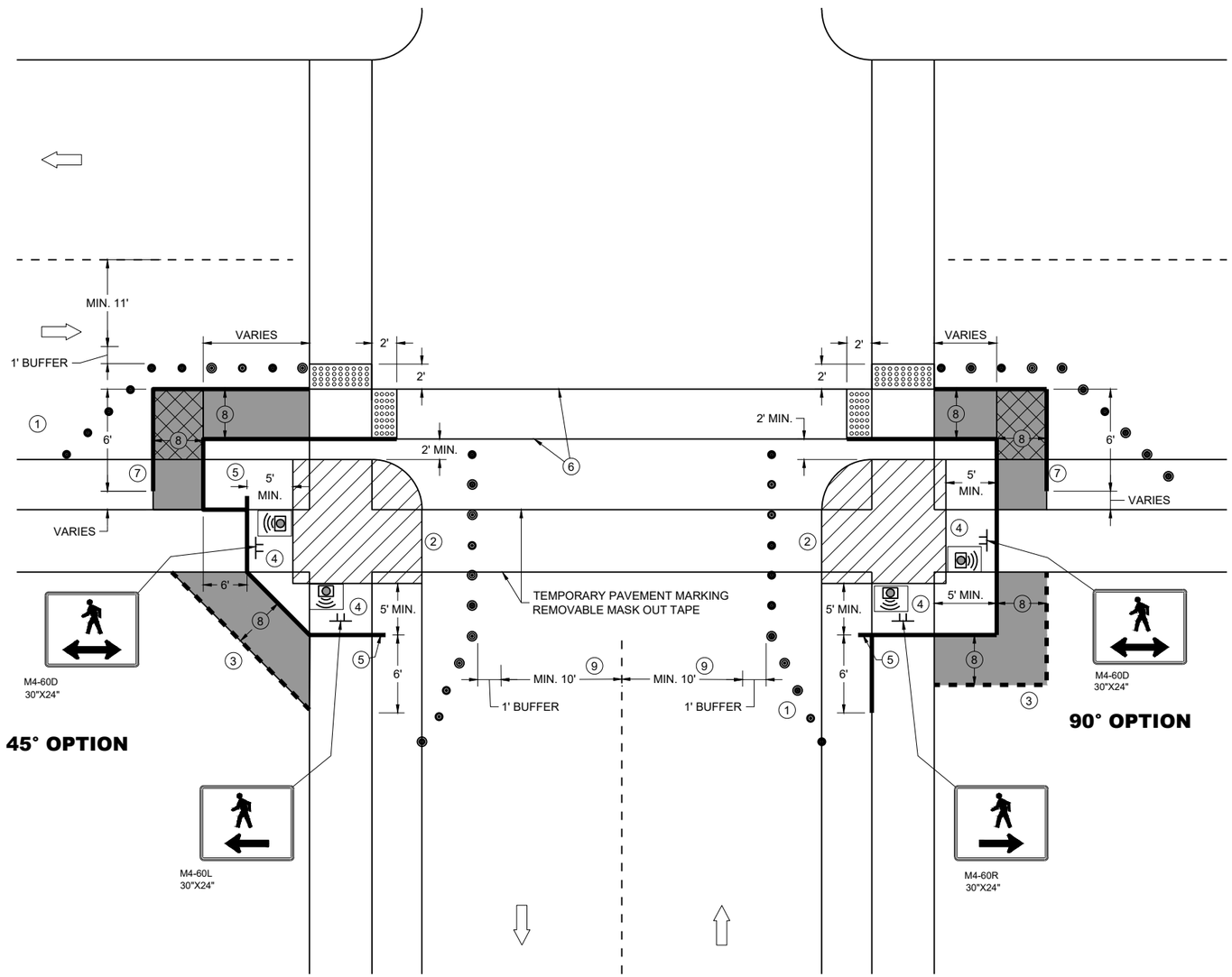

CURB RAMP PEDESTRIAN TRAFFIC CONTROL

GENERAL NOTES

IF PEDESTRIAN PUSH BUTTONS ARE PRESENT ON THE EXISTING FACILITY, ENSURE THEY ARE MAINTAINED/ACCESSIBLE FOR PEDESTRIAN USE THROUGHOUT THE TEMPORARY PEDESTRIAN ACCOMMODATIONS.

TYPICAL TEMPORARY PEDESTRIAN BARRICADE PANEL IS 6 FEET LONG

WHEN TEMPORARY PEDESTRIAN BARRICADE RUNS PARALLEL ALONG THE SIDEWALK, PLACE THE FACE OF THE BARRICADE AT THE EDGE OF THE SIDEWALK.

WHEN THE TEMPORARY PEDESTRIAN ACCESS ROUTE RUNS PARALLEL ON THE ROADWAY SURFACE, THE MAXIMUM CROSS SLOPE WILL MATCH THE EXISTING ROADWAY CROSS SLOPE.

1. SHOULDER OR LANE CLOSURE ADVANCE WARNING AND PROPER BUFFER SPACE REQUIRED.
2. PROVIDE ADEQUATE SPACE FOR CONTRACTOR OPERATIONS
3. USE TEMPORARY PEDESTRIAN BARRICADE TO SEPARATE PEDESTRIANS FROM DROP OFFS OR FOR ADDITIONAL PEDESTRIAN CHANNELIZATION.
4. MOUNTING HEIGHT OF 5 FEET FROM SIDEWALK SURFACE TO BOTTOM OF SIGN.
5. PLACE EXCESS PORTION OF TEMPORARY PEDESTRIAN BARRICADE PANEL IN THE SIDEWALK TERRACE.
6. WHITE 6" TEMPORARY PAVEMENT MARKING
7. IF TEMPORARY PEDESTRIAN BARRICADE DOES NOT REACH THE FACE OF THE CURB, USE AN ADDITIONAL PANEL AND EXTEND INTO THE TERRACE.
8. 4 FEET MINIMUM, 5 FEET DESIRABLE
9. IF MINIMUM LANE WIDTHS CAN'T BE ATTAINED, CURB RAMPS MAY NEED TO BE CONSTRUCTED AT SEPARATE TIMES.

LEGEND

- SIGN ON TEMPORARY SUPPORT
- TRAFFIC CONTROL DRUM
- WORK AREA
- TEMPORARY CURB RAMP
- TEMPORARY PEDESTRIAN SURFACE "A"
- TEMPORARY PEDESTRIAN SURFACE "B"
- TEMPORARY DETECTABLE WARNING FIELD
- TEMPORARY PEDESTRIAN BARRICADE
- OPTIONAL TEMPORARY PEDESTRIAN BARRICADE
- DIRECTION OF TRAFFIC
- TEMPORARY AUDIBLE MESSAGE DEVICE (EXACT PLACEMENT BASED UPON FIELD CONDITIONS)

TRAFFIC CONTROL, PEDESTRIAN ACCOMMODATION

STATE OF WISCONSIN
DEPARTMENT OF TRANSPORTATION

6
SDD 15D30-12j

LEGEND

- SIGN ON PERMANENT SUPPORT
- SIGN ON TEMPORARY SUPPORT
- UNDER PEDESTRIAN TRAFFIC
- WORK AREA
- TEMPORARY PEDESTRIAN BARRICADE
- DIRECTION OF TRAFFIC
- TEMPORARY AUDIBLE MESSAGE DEVICE (EXACT PLACEMENT BASED UPON FIELD CONDITIONS)

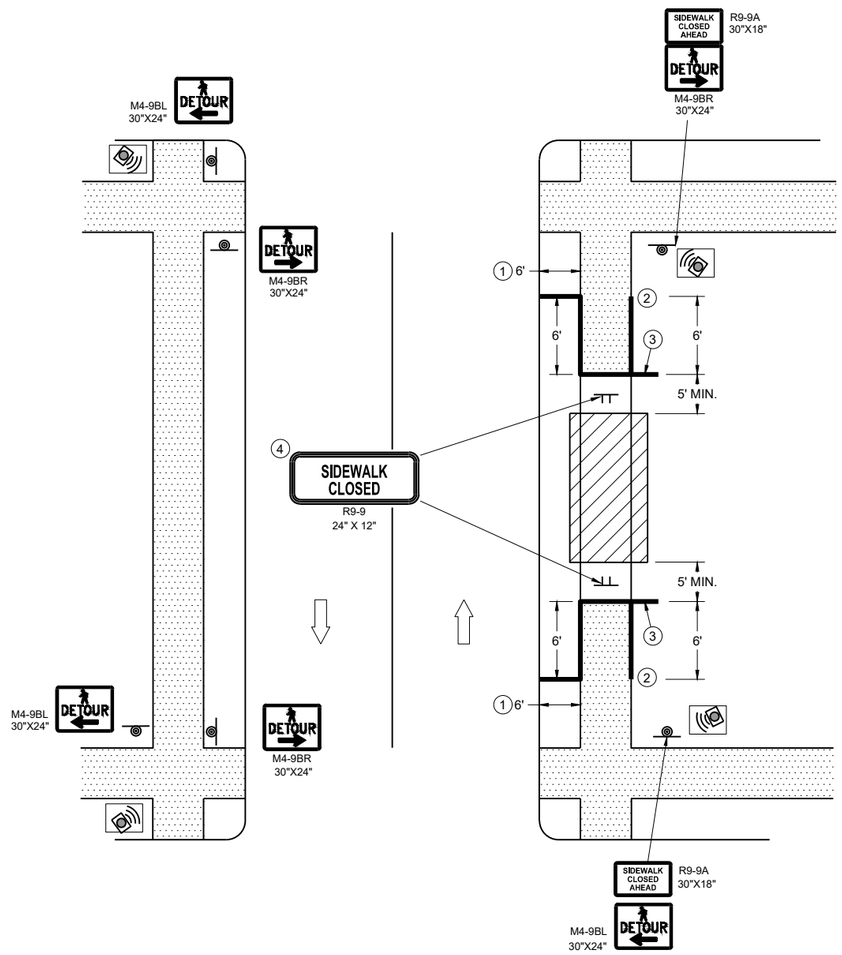

SIDEWALK DETOUR, SIDEWALK ON BOTH SIDES

GENERAL NOTES

WHERE TEMPORARY BARRICADE RUNS PARALLEL ALONG SIDEWALK, PLACE THE FACE OF THE BARRICADE AT THE EDGE OF THE SIDEWALK.

SIGNS THAT REMAIN IN PLACE LESS THAN SEVEN CONTINUOUS DAYS AND NIGHTS MAY BE MOUNTED ON PORTABLE SUPPORTS.

PLACE TEMPORARY PEDESTRIAN BARRICADE TO FIT FIELD CONDITIONS, AVOIDING CONFLICT WITH DRIVEWAYS AND OTHER EXISTING FEATURES.

1. IF TERRACE IS LESS THAN 6 FEET WIDE, OMIT TEMPORARY PEDESTRIAN BARRICADE FROM THE SIDEWALK TO THE CURB.
2. PLACE BARRICADE CLOSURE SO THAT THE TEMPORARY PEDESTRIAN BARRICADE END IS AT THE LAST OPEN SIDEWALK ACCESS TO RESIDENCES OR BUSINESSES BEFORE THE SIDEWALK CLOSURE.
3. IF TEMPORARY PEDESTRIAN BARRICADE PANEL IS WIDER THAN THE SIDEWALK WIDTH, THE PORTION OF EXCESS PANEL SHOULD EXTEND INTO THE TERRACE.
4. MOUNTING HEIGHT OF 5 FEET FROM THE SURFACE TO THE BOTTOM OF SIGN.

TRAFFIC CONTROL, PEDESTRIAN ACCOMMODATION

STATE OF WISCONSIN
DEPARTMENT OF TRANSPORTATION

6
SDD 15D30-12k

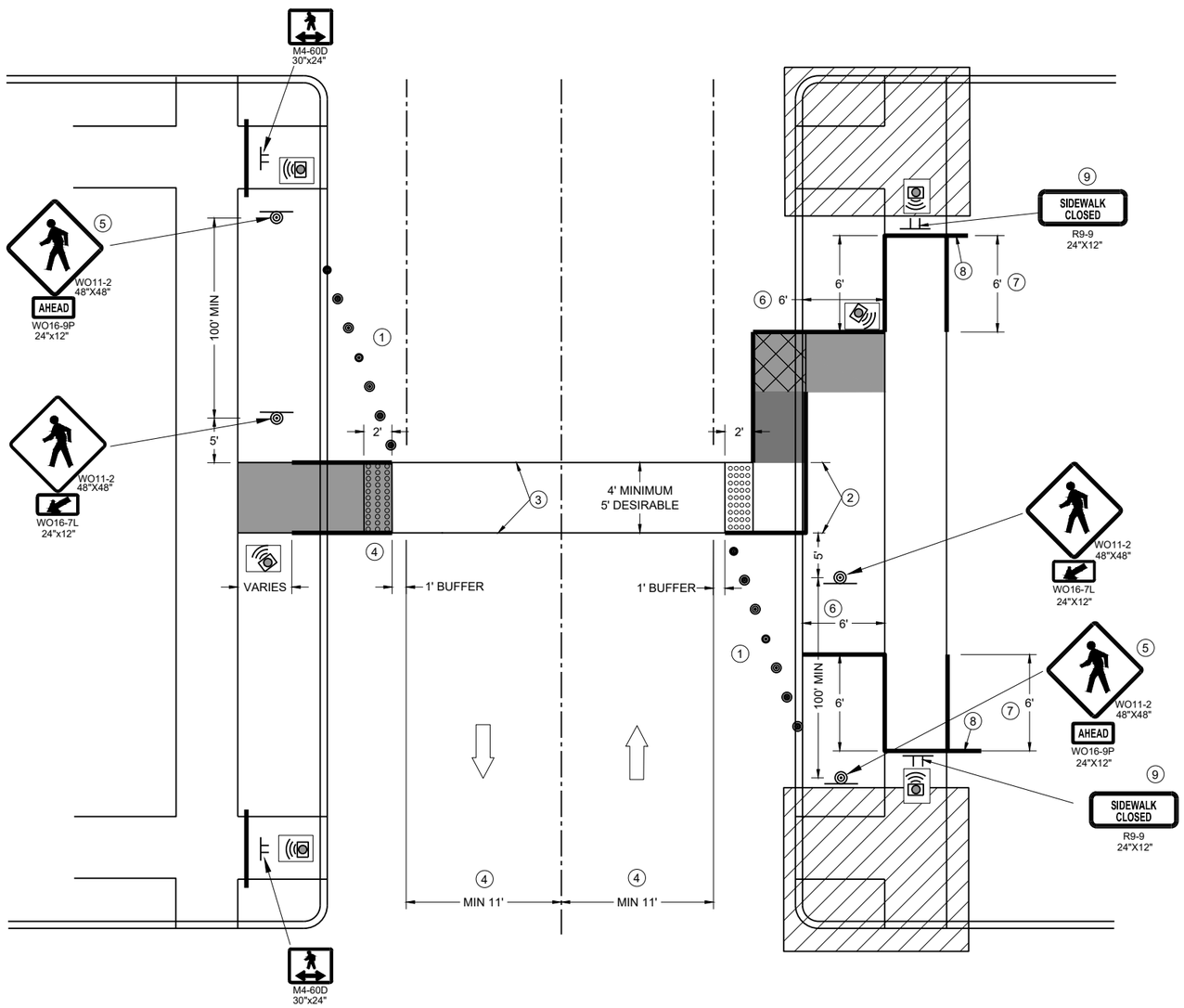

TEMPORARY PEDESTRIAN CROSSING

GENERAL NOTES

TYPICAL TEMPORARY PEDESTRIAN BARRICADE PANEL IS 6 FEET LONG.

SEE OTHER PEDESTRIAN ACCOMMODATION DETAILS FOR SIGNING AND DEVICES FOR DIFFERENT PEDESTRIAN FACILITIES CLOSURES.

WHEN THE TEMPORARY PEDESTRIAN ACCESS ROUTE RUNS PARALLEL ON THE ROADWAY SURFACE, THE MAXIMUM CROSS SLOPE WILL MATCH THE EXISTING ROADWAY CROSS SLOPE.

1. SHOULDER OR LANE CLOSURE ADVANCED WARNING AND PROPER BUFFER SPACE REQUIRED.
2. 4 FEET MINIMUM, 5 FEET DESIRABLE.
3. WHITE 6" TEMPORARY PAVEMENT MARKING.
4. IF MINIMUM LANE WIDTHS CAN'T BE ATTAINED, PERPENDICULAR CURB RAMPS MAY NEED TO BE UTILIZED.
5. IF MINIMUM 100' SPACING FROM THE MID-BLOCK CROSSING CANNOT BE ATTAINED BEFORE THE INTERSECTION, REMOVE THIS SIGN ASSEMBLY.
6. IF TERRACE IS LESS THAN 6 FEET WIDE, OMIT TEMPORARY PEDESTRIAN BARRICADE FROM THE SIDEWALK TO THE CURB.
7. PLACE BARRICADE CLOSURE SO THAT THE TEMPORARY PEDESTRIAN BARRICADE END IS AT THE LAST OPEN SIDEWALK ACCESS TO RESIDENCES OR BUSINESSES BEFORE THE SIDEWALK CLOSURE.
8. IF TEMPORARY PEDESTRIAN BARRICADE PANEL IS WIDER THAN THE SIDEWALK WIDTH, THE PORTION OF THE EXCESS PANEL SHOULD EXTEND INTO THE TERRACE.
9. MOUNTING HEIGHT OF 5 FEET FROM THE SURFACE TO THE BOTTOM OF THE SIGN.

LEGEND

- TRAFFIC CONTROL DRUM
- SIGN ON TEMPORARY SUPPORT
- TEMPORARY CURB RAMP
- TEMPORARY DETECTABLE WARNING FIELD
- TEMPORARY PEDESTRIAN SURFACE "A"
- TEMPORARY PEDESTRIAN SURFACE "B"
- WORK AREA
- TEMPORARY PEDESTRIAN BARRICADE
- DIRECTION OF TRAFFIC
- TEMPORARY AUDIBLE MESSAGE DEVICE (EXACT PLACEMENT BASED UPON FIELD CONDITIONS)

TRAFFIC CONTROL, PEDESTRIAN ACCOMMODATION

STATE OF WISCONSIN
DEPARTMENT OF TRANSPORTATION

APPROVED
November 2025 — DATE
/S/ Andrew Heidtke — WORK ZONE ENGINEER
FHWA

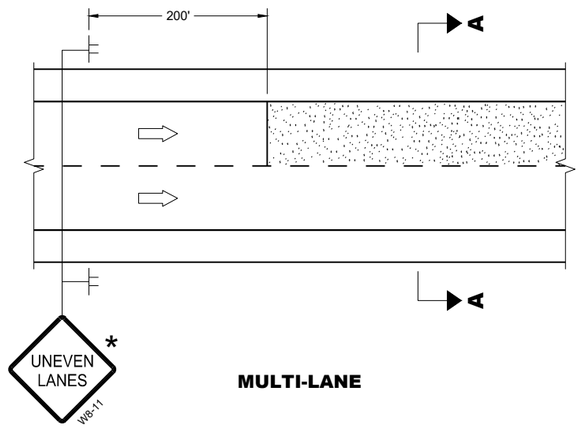

MULTI-LANE

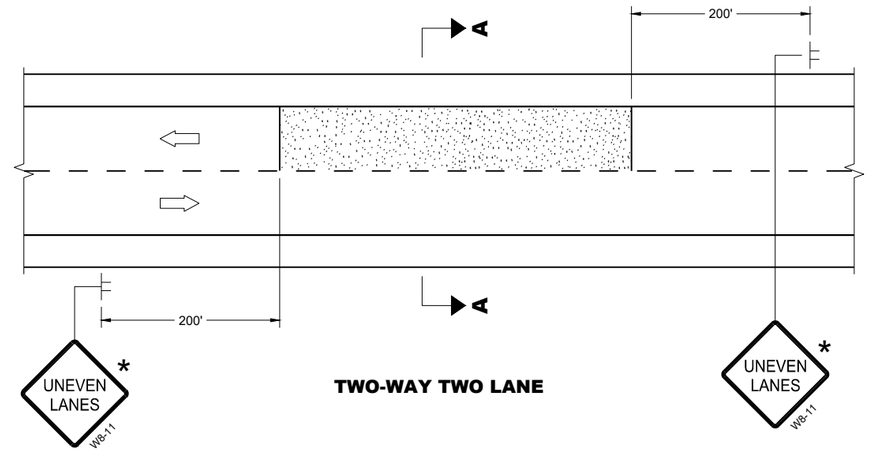

TWO-WAY TWO LANE

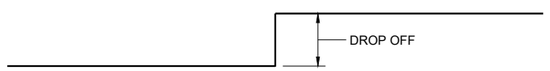

SECTION A - A

OR

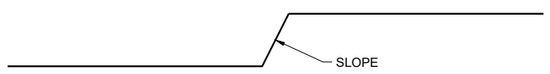

SECTION A - A

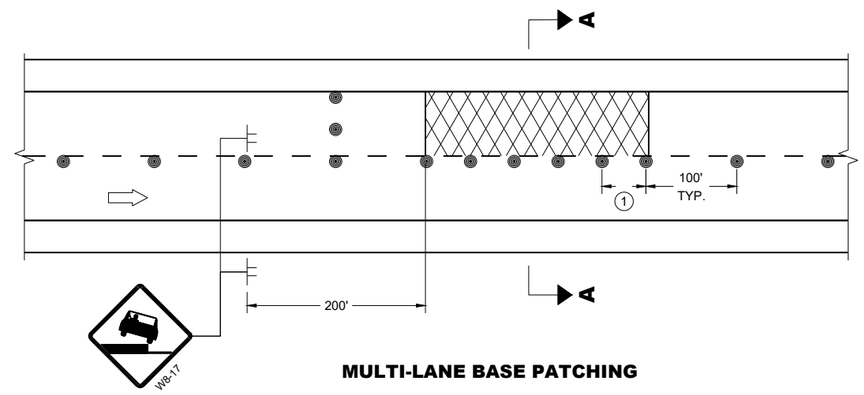

MULTI-LANE BASE PATCHING

ADJACENT LANE DROP-OFFS

GENERAL NOTES

FOR SPOT LOCATIONS USE ENGINEERING JUDGEMENT WHEN PLACING ADDITIONAL SIGNS.

ALL SIGNS ARE 48" X 48" UNLESS OTHERWISE NOTED.

"WO" SIGNS ARE THE SAME AS "W" SIGNS EXCEPT THE BACKGROUND IS ORANGE.

WARNING LIGHTS ARE NOT REQUIRED IF THE LANE CLOSURE IS A DAYTIME ONLY OPERATION.

* IF THE DROP-OFF IS CONTINUOUS ALONG THE PROJECT, PLACE ADDITIONAL SIGNS EVERY 1 MILE AND AFTER EVERY ENTRANCE RAMP.

(1) USE CLOSER SPACING WHEN DELINEATING DROP-OFF.

LEGEND

- SIGN ON TEMPORARY SUPPORT
- TRAFFIC CONTROL DRUM
- TYPE III BARRICADE WITH ATTACHED SIGN
- TYPE "A" WARNING LIGHT (FLASHING)
- DIRECTION OF TRAFFIC
- WORK AREA WITH DROP-OFF
- MILLED SURFACE

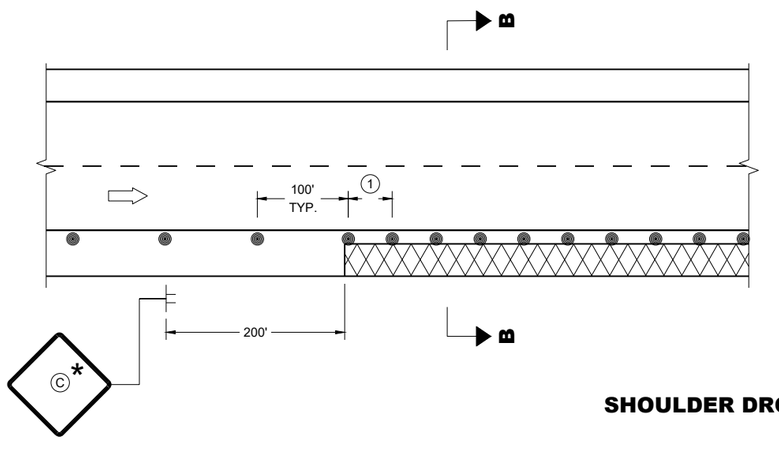

SHOULDER DROP-OFFS

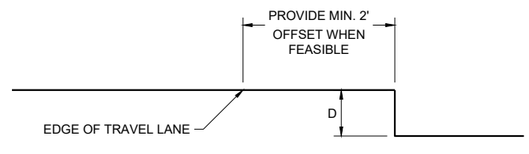

SECTION B - B

D	SIGN (C)
< 2" WITH A SLOPE STEEPER THAN 3:1	LOW SHOULDER WO8-9
2" < 6" WITH A SLOPE STEEPER THAN 3:1	SHOULDER DROP - OFF W8-9A **PROVIDE A 3:1 OR FLATTER SLOPE OF MATERIAL ADJACENT TO THE PAVEMENT**

TRAFFIC CONTROL, DROP-OFF SIGNING

STATE OF WISCONSIN
DEPARTMENT OF TRANSPORTATION

APPROVED
February 2025 — DATE
/S/ Andrew Heidtke — WORK ZONE ENGINEER
FHWA

6

SDD 15D39-03

GENERAL NOTES

DRAWING NOT TO SCALE. ALL SIGNS AND POSTS ON THIS SHEET SHALL BE PAID FOR WITH 'TRAFFIC CONTROL SIGNS' BID ITEM. ALL SIDE ROADS WHICH ARE UNDER CONSTRUCTION OF CURB AND GUTTER AND/OR GRADING SHALL BE ADEQUATELY SIGNED.

ALL SIGNS AND DEVICES SHALL BE IN CONFORMANCE WITH THE WISCONSIN MANUAL OF UNIFORM TRAFFIC CONTROL DEVICES (WMUTCD). SIGN LAYOUTS SHALL BE IN ACCORDANCE WITH THE WISDOT STANDARD SIGN PLATES.

"WO" SIGNS ARE THE SAME AS "W" SIGNS EXCEPT THAT THE BACKGROUND IS ORANGE.

ALL SIGNS ARE 48" X 48" UNLESS OTHERWISE NOTED.

THE EXACT NUMBER, LOCATION AND SPACING OF ALL SIGNS AND DEVICES SHALL BE ADJUSTED TO FIT FIELD CONDITIONS AS DIRECTED BY THE ENGINEER.

ALL SIGNS INAPPROPRIATE TO THE STATUS OF THE CONTROL ZONE, INCLUDING PRE-EXISTING SIGNS IN THE VICINITY, SHALL BE COVERED OR REMOVED AS DIRECTED BY THE ENGINEER.

SEE 15C34 FOR ADDITIONAL TRAFFIC CONTROL SIGNING WHEN CENTERLINE PAVEMENT MAKINGS ARE MISSING. 'DO NOT PASS' SIGNS MUST BE INSTALLED ON THE SAME DAY AS MILLING OPERATIONS.

(1) PLACE SIGNS 350' IN ADVANCE OF MILLED SURFACES AND AT 1 MILE INTERVALS, OR AS DIRECTED BY THE ENGINEER.

(2) PLACE SIGN 200' MIN. FROM INTERSECTION AND 200' MIN. AFTER ADVANCE WARNING SIGN SHOWN IN SDD 15C04.

LEGEND

SIGN ON TEMPORARY SUPPORT

DIRECTION OF TRAFFIC

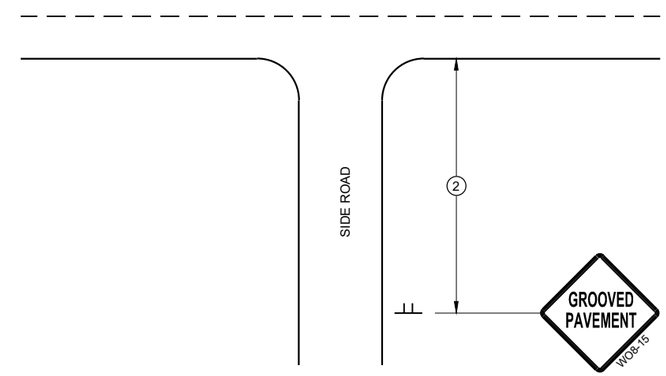

TYPICAL SIDE ROAD APPROACH SIGN DETAIL

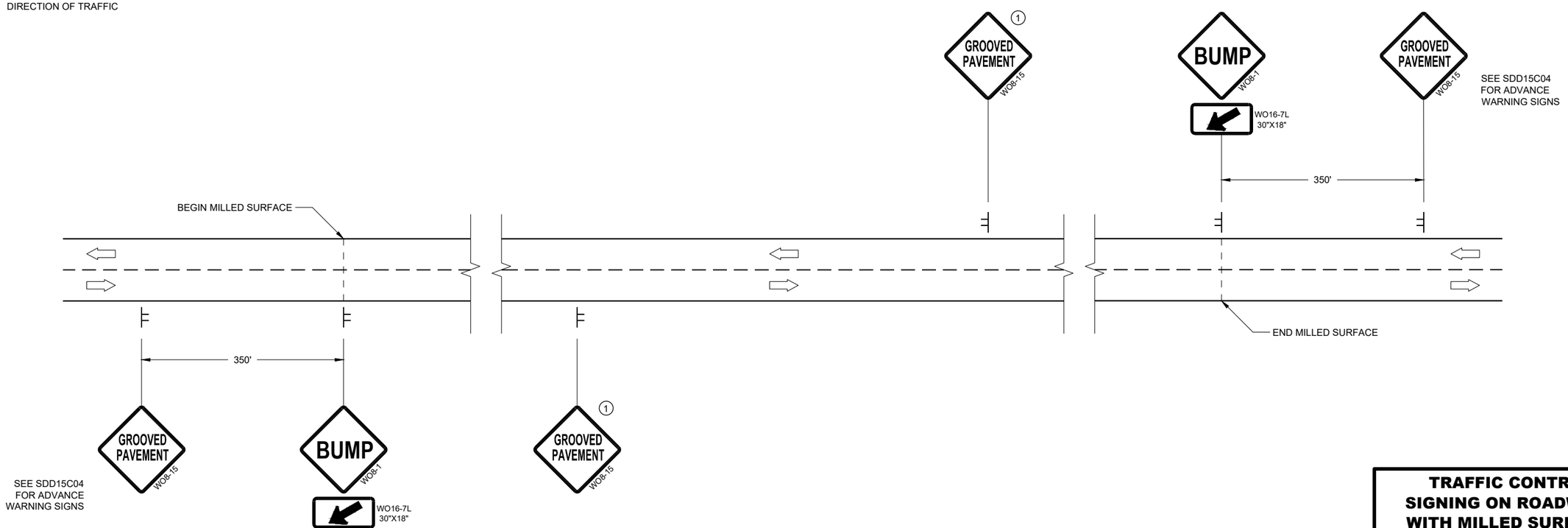

DETAIL FOR SIGNING ON MILLED SURFACES

TRAFFIC CONTROL, SIGNING ON ROADWAYS WITH MILLED SURFACES

STATE OF WISCONSIN
DEPARTMENT OF TRANSPORTATION

APPROVED
February 2020 /S/ Andrew Heidtke
DATE WORK ZONE ENGINEE
FHWA

6

SDD 15D44 - 02

6

SDD 15D44 - 02

LEGEND

V1 WORK VEHICLE

V2 SHADOW VEHICLE

TRUCK MOUNTED ATTENUATOR (TMA)

FLASHING ARROW PANEL (CAUTION)

WORK AREA

DIRECTION OF TRAFFIC

POSTED SPEED PRIOR TO WORK STARTING (MPH)	DECISION SIGHT DISTANCE (D)
0 - 25	550'
30	550'
35	700'
40	700'
45	900'
50	900'
55	1200'

GENERAL NOTES

ALL SIGNS ARE 48"X48" UNLESS OTHERWISE NOTED.

MOBILE IS WORK THAT MOVES CONTINUOUSLY OR MOVES AT LEAST THE DECISION SIGHT DISTANCE EVERY 15 MINUTES.

ALL VEHICLES SHALL BE EQUIPPED WITH TWO 360 DEGREE HIGH INTENSITY YELLOW FLASHING LIGHTS OR STROBE LIGHTS AND OPERATED WITH HEADLIGHTS TURNED ON.

ALL ARROW PANELS SHALL BE REAR FACING, TYPE "B" OR "C", AND DISPLAYING THE FLASHING CAUTION MODE. SIGNS PLACED ON VEHICLES MUST NOT OBSCURE THE ARROW PANEL.

USE AN ATTENUATOR ON THE REARMOST VEHICLE THAT BLOCKS ALL OR PART OF THE TRAFFIC LANE.

1 DISTANCE BETWEEN VEHICLES MAY INCREASE FROM THE ATTENUATOR'S ROLL AHEAD BASED ON TERRAIN, SIGHT DISTANCE, AND OTHER FACTORS. WHENEVER ADEQUATE STOPPING SIGHT DISTANCE EXISTS TO THE REAR, SHADOW VEHICLES SHOULD MAINTAIN THE MINIMUM DISTANCE FROM THE WORK VEHICLE AND PROCEED AT THE SAME SPEED AS THE WORK VEHICLE. SHADOW VEHICLES SHOULD SLOW DOWN IN ADVANCE OF VERTICAL OR HORIZONTAL CURVES THAT RESTRICT SIGHT DISTANCE.

2 ALIGN LEFT SIDE OF SHADOW VEHICLE WITH EDGE OF WORK AREA.

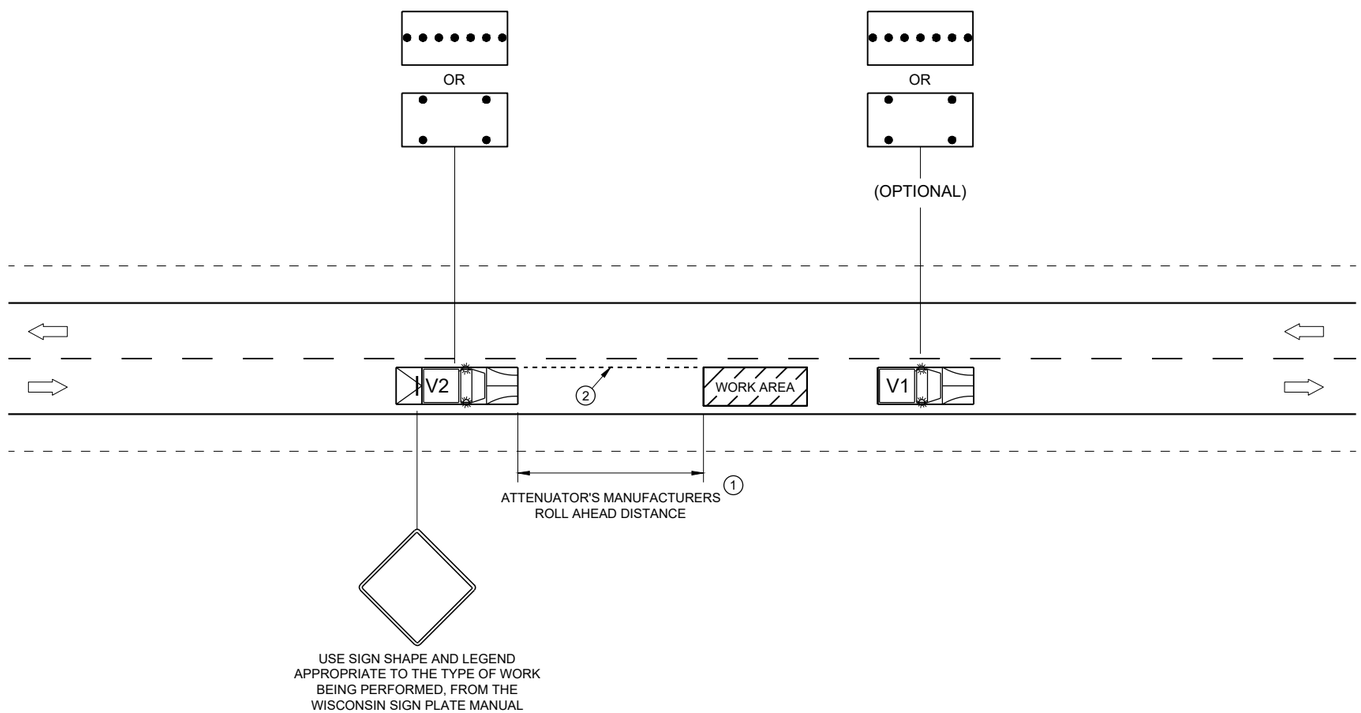

TRAFFIC CONTROL, MOBILE OPERATIONS ON AN UNDIVIDED ROADWAY

STATE OF WISCONSIN
DEPARTMENT OF TRANSPORTATION

APPROVED
February 2021 — DATE
/S/ Andrew Heidtke — STATEWIDE WORK ZONE T SAFETY ENGINEER
FHWA

GENERAL NOTES

DETAILS OF CONSTRUCTION, MATERIALS AND WORKMANSHIP NOT SHOWN ON THIS DRAWING SHALL CONFORM TO THE PERTINENT REQUIREMENTS OF THE STANDARD SPECIFICATIONS AND THE APPLICABLE SPECIAL PROVISIONS.

SURVEY MONUMENT SHALL BE EXCAVATED BY USE OF A CIRCULAR AUGER.

IF A SURVEY MONUMENT REQUIRES A DEEP FORM BECAUSE OF LOOSE DIRT OR FILL, THE FORM SHALL BE REMOVED BEFORE BACKFILLING AROUND THE BASE. BACKFILL SHALL BE TAMPED TIGHT AGAINST THE BARE CONCRETE BASE IN LAYERS OF 1 FOOT OR LESS.

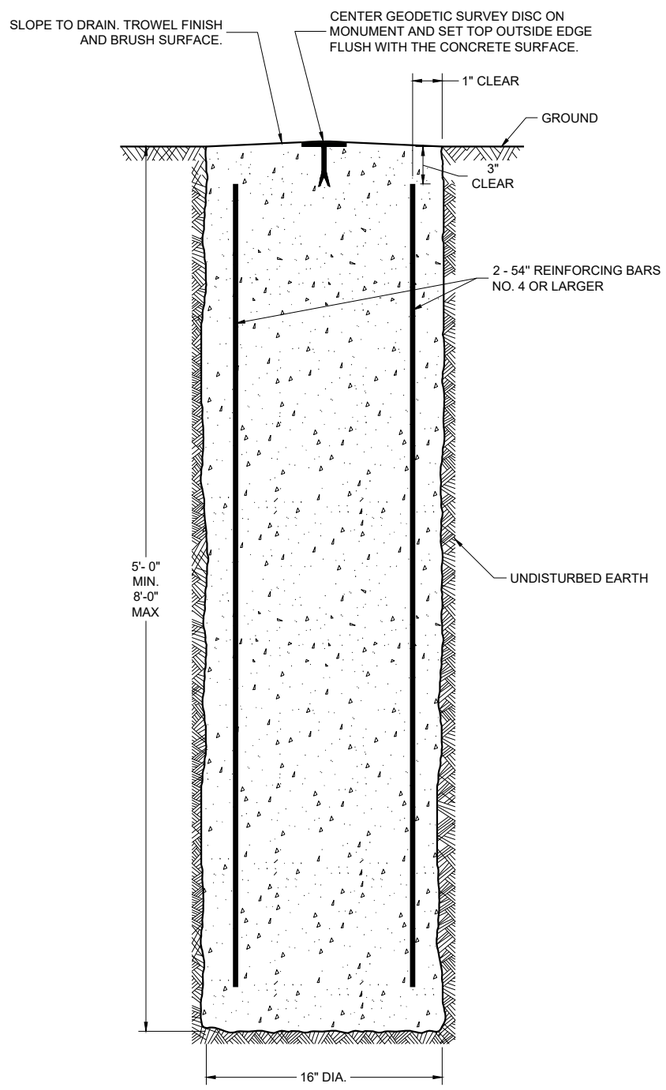

CAST-IN-PLACE CONCRETE MONUMENT

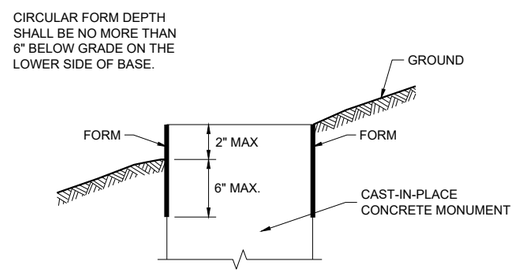

FORMING DETAIL

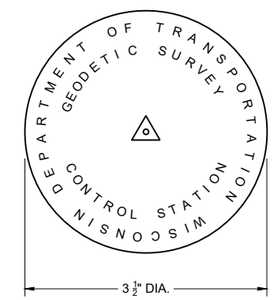

GEODETIC SURVEY DISC
FURNISHED BY WISDOT

6

SDD 16A02-01

GEODETIC SURVEY MONUMENT

STATE OF WISCONSIN
DEPARTMENT OF TRANSPORTATION

APPROVED
August 2025 — DATE
/S/ DAVID J. LAYTON — CHIEF SURVEY AND MAPPING ENGINEER

FHWA

6

SDD 16A02-01

TYPICAL ASSEMBLIES

J1-1

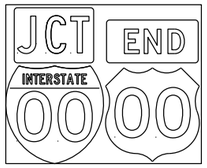

J1-2

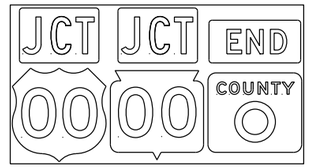

J1-3

JR1-1

J2-1

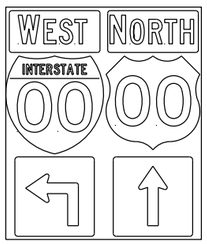

J2-2

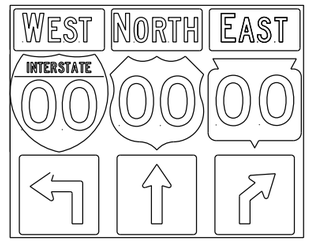

J2-3

JV
(Typical Vertical J-Assembly
See Note 10 and 11)

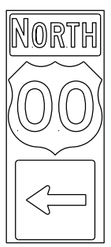

J3-1

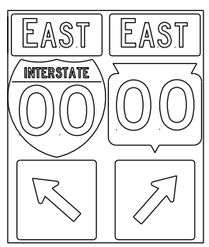

J3-2

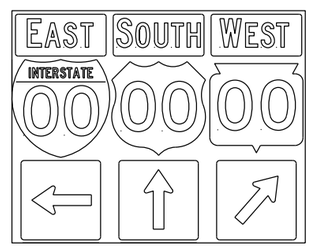

J3-3

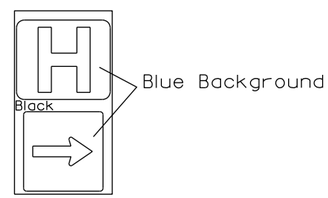

JH-1

J4-1

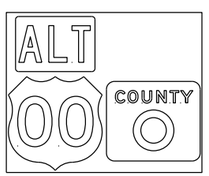

J4-2

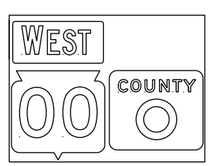

J4-2

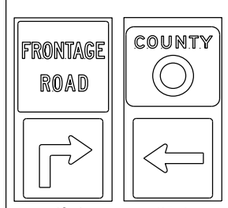

J12-1 J13-1

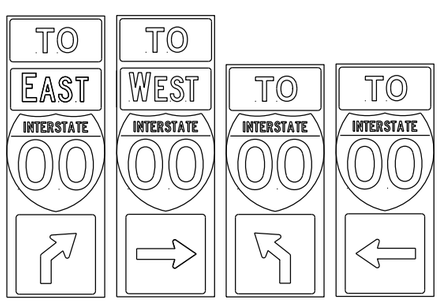

J32-1 J33-1 J22-1 J23-1 JR13-1 JR23-1 JR99-1

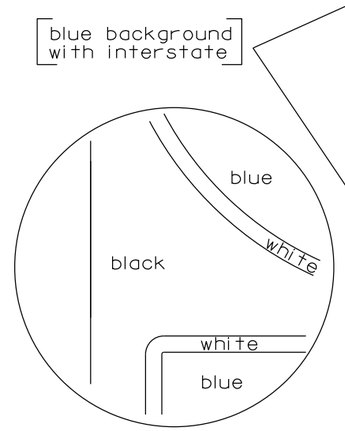

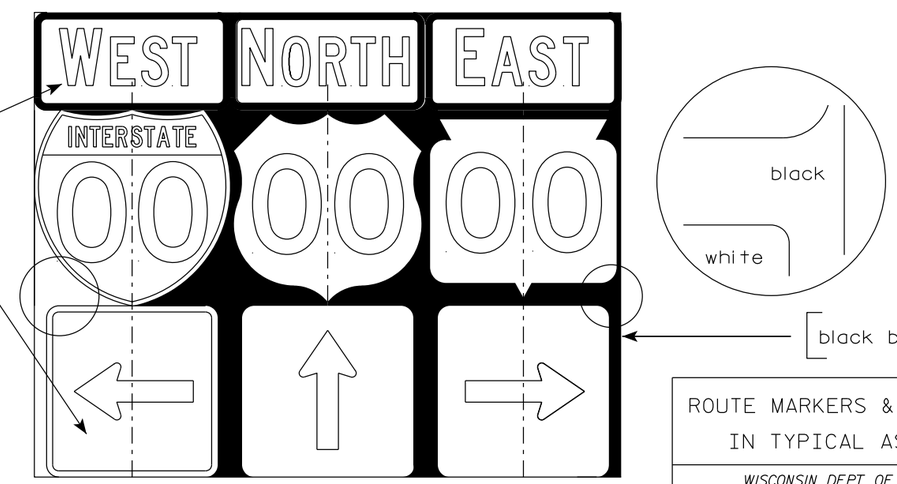

NOTES

1. Signs are Type II - Type H Reflective
2. Color:
   Background - Black Non-reflective
   Message - see Note 4
3. Message Series - See Note 4
4. The colors and message spacing on each marker shall be according to the applicable route marker panel specifications.
5. Certain marker heads require the component pieces to be the same color. As an example, all the components used with an M1-1 Interstate marker shall be blue.
6. Single panel j-assemblies shall only be used with route marker shields that are same size. If the route marker shields are different size use multiple piece component.
7. Route assemblies that have 24 inch route shields and have dimensions greater than 48 inches (both vertical and horizontal) shall have one horizontal splice between the arrows and route shields. Vertical splices shall not be used on route assemblies with a horizontal dimension of 144 inches or less. The contractor shall not use more than one vertical joint per sign and the joint shall be between route shields.
8. Route assemblies that have 36 inch shields and have dimensions greater than 48 inchs (both vertical and horizontal) shall have two horizontal splices. One horizontal splice shall be between the cardinal direction and route shields and the other horizontal splice shall be between the arrows and route shields. Vertical splices shall not be used on route assemblies with a horizontal dimension of 144 or less. The contractor shall not use more than one vertical joint per sign and the joint shall be between route shields.
9. All Vertical J Assemblies are given a Sign Code of JV
10. For JV Assemblies that have a mixture of Interstate and Non-Interstate shields, arrows and cardinals shall be white on blue.
11. For JV Assemblies that have a mixture of Non-Interstate and Auto-Tour shields, arrows and cardinals shall be black on white.

ROUTE MARKERS & COMPONENTS
IN TYPICAL ASSEMBLIES

WISCONSIN DEPT OF TRANSPORTATION

APPROVED Matthew R Rauch
for State Traffic Engineer

DATE 6/7/23 PLATE NO. A2-1S.10

PROJECT NO:

SHEET NO: 145 E

URBAN AREA

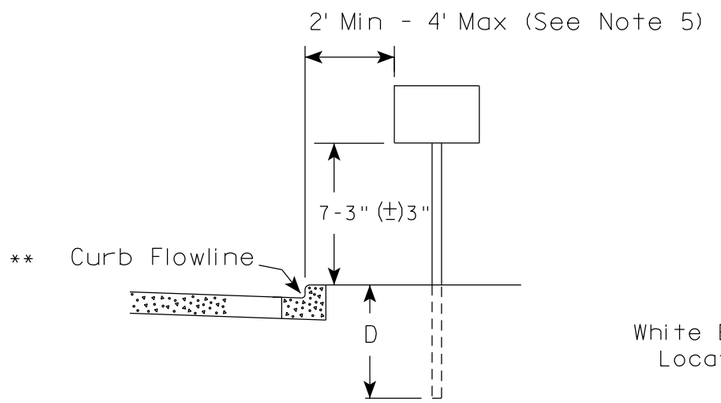

RURAL AREA (See Note 2)

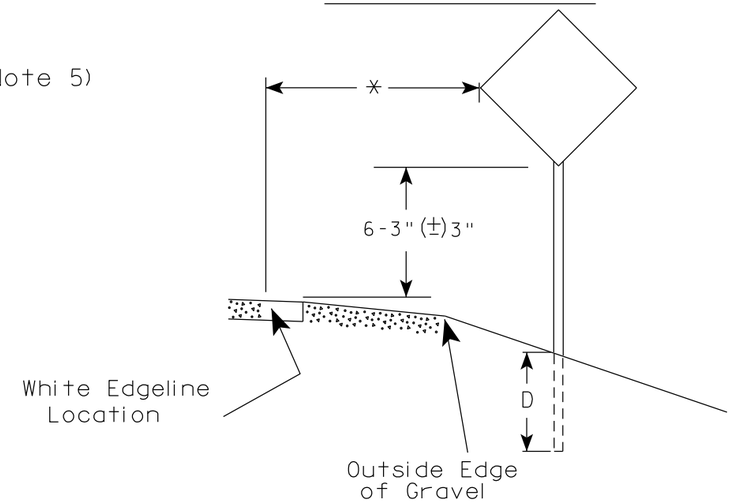

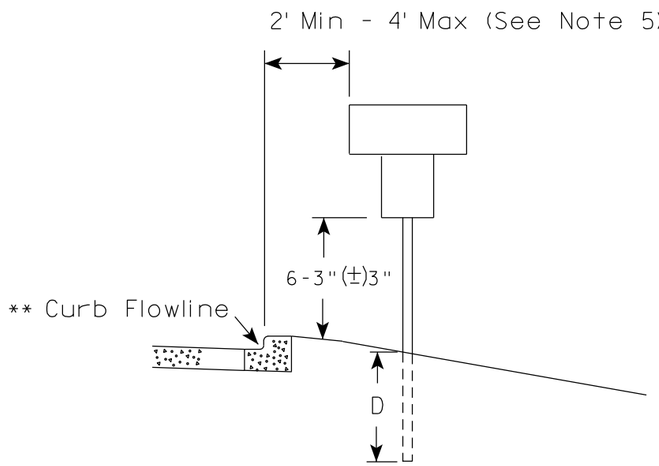

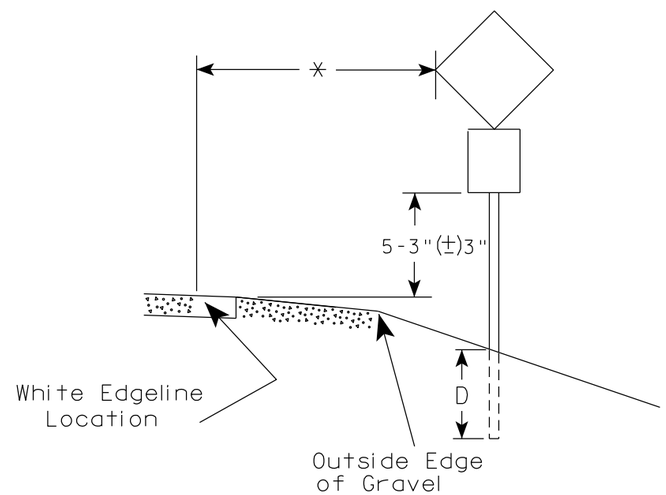

** The existence of curb and gutter does not in itself mandate the vertical clearance illustrated. That height is typically measured where there is sidewalk adjacent to the roadway or parking is permitted. In the absence of sidewalk vertical clearance is measured from the top of the curb. Offset of signs is measured from the flow line.

* 6 feet from edge of a paved shoulder or 12 feet from the edge of pavement (edge line location) or 2 feet from outside edge of gravel, whichever is greater unless directed by project engineer.

GENERAL NOTES

1. Signs wider than 4 feet or 20 sq.ft or larger, shall be mounted on multiple posts. Refer to plate A4-4.
2. If signs are mounted on or behind barrier wall, see A4-10 sign plate.
   The Double Arrow sign (W12-1D) shall be mounted at a height of 2'-3" (±) 3". The Chevron sign (W1-8), Roundabout Chevron panel (R6-4B), Enhanced Reference Markers, Clearance Markers (W5-52), Mile Markers (D10 series), In Road Object Markers (W5-54) & End of Road Markers (W5-56) shall be mounted at a height of 4'-3" (±) 3".
3. For expressways and freeways, mounting height is 7'- 3" (±) 3" or 6'-3" (±) 3" depending upon existence of a sub-sign.
4. Minimum mounting height for signs mounted on traffic signal poles is 5'- 3" (±) 3".
5. Offset distance shall be consistent with existing signs or consistent throughout length of project.
6. Folding signs shall be mounted at a height of 5'-3" (±) 3" or as directd by the Engineer.

POST EMBEDMENT DEPTH

Area of Sign Installation (Sq. Ft.)	D (Min)
20 or Less	4'
Greater than 20	5'

TYPICAL INSTALLATION OF PERMANENT TYPE II SIGNS ON SINGLE POSTS

WISCONSIN DEPT OF TRANSPORTATION

APPROVED Matthew R Rauch
for State Traffic Engineer

DATE 12/6/23 PLATE NO. A4-3.23

7 7

PROJECT NO:	HWY:	COUNTY:		SHEET NO: 146	E

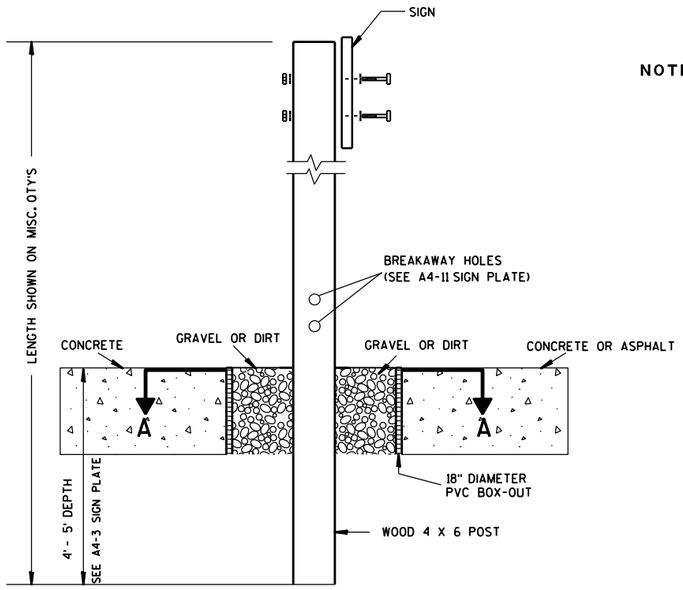

ELEVATION VIEW

DETAIL OF WOOD 4 X 6 SIGN POST IN BOX-OUT

NOTES:
1. ALL MATERIAL TO BE APPROVED BY ENGINEER PRIOR TO INSTALLATION
2. SEE SIGN PLATE A4-8 FOR SIGN HARDWARE REQUIREMENTS
3. 18 INCH X 18 INCH SQUARE BOX-OUTS MAY BE USED FOR INSTALLATIONS IN EXISTING CONCRETE OR ASPHALT LOCATIONS.

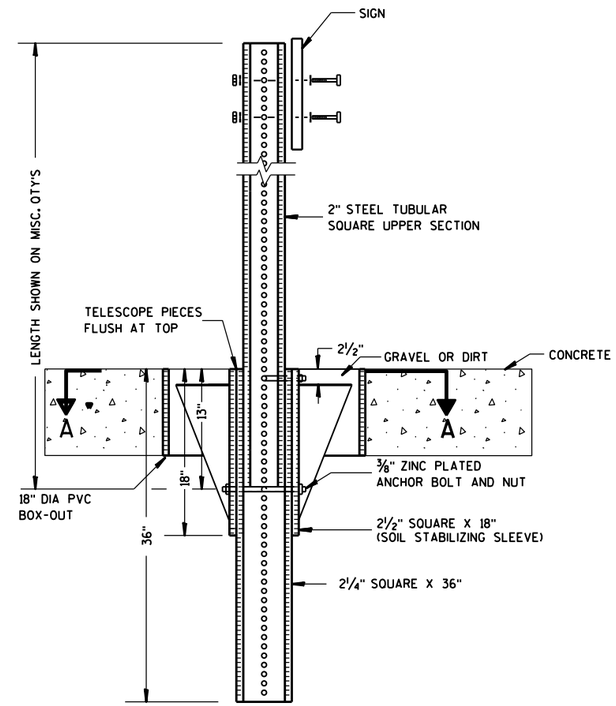

ELEVATION VIEW

DETAIL OF STEEL 2 X 2 SIGN POST IN BOX-OUT

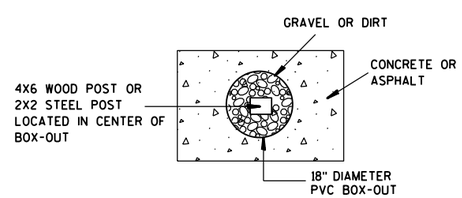

PLAN VIEW

FOR NEW CONCRETE/ASPHALT INSTALLATIONS

SIGN POST
BOX-OUTS
A4-3B

WISCONSIN DEPT OF TRANSPORTATION

APPROVED Matthew R Rauch
for State Traffic Engineer

DATE 1/27/14 PLATE NO. A4-3B.1

PROJECT NO:	HWY:	COUNTY:		SHEET NO:	E

URBAN AREA

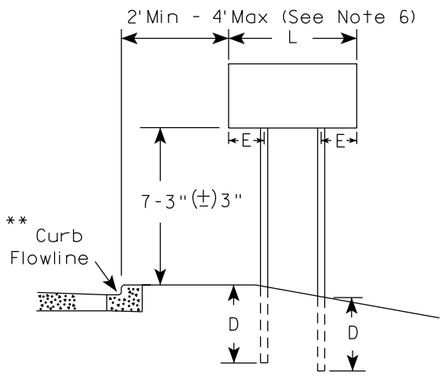

RURAL AREA (See Note 3)

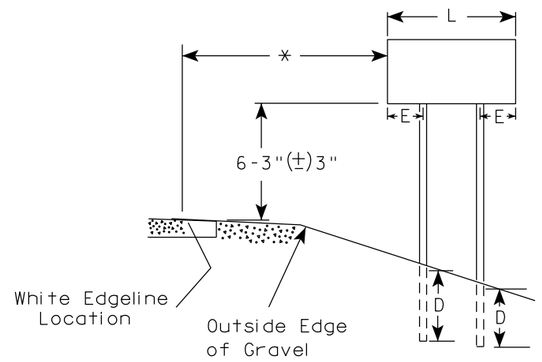

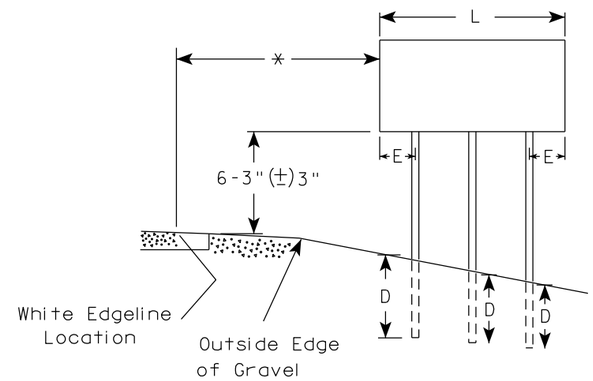

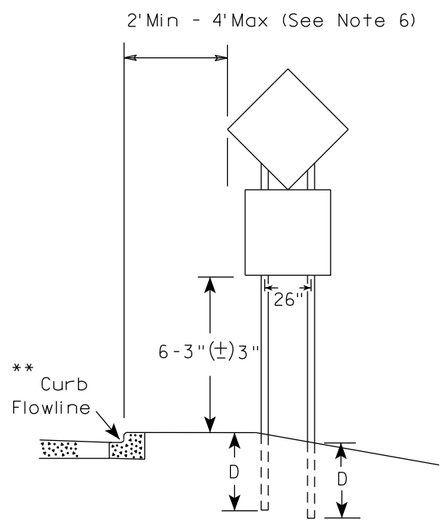

48" DIAMOND WARNING SIGN

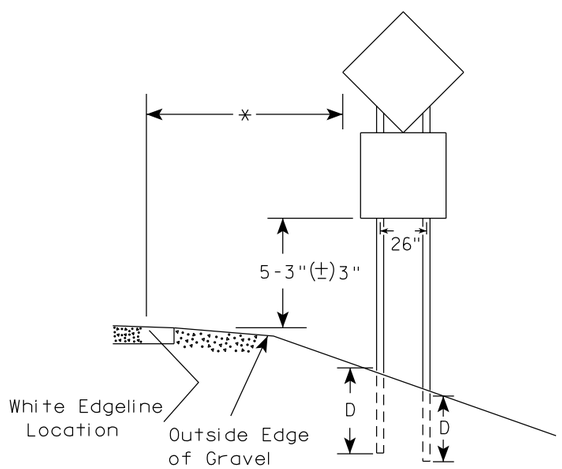

48" DIAMOND WARNING SIGN

GENERAL NOTES

1. For 3 or 4 post installations, individual post spacing shall be greater than 3'-6".
2. See tables below for required number of posts.
3. For expressways and freeways, mounting height is 7'-3" (±) 3" or 6'-3" (±) 3" depending upon existence of sub-sign.
4. The (±) tolerance for mounting height is 3 inches.
5. J-Assemblies are considered to be one sign for mounting height.
6. Offset distance shall be consistent with existing signs or consistent throughout length of project.
7. Folding signs shall be mounted at a height of 5'-3" (±) 3" or as directed by the engineer.
8. The Double Arrow sign (W12-1) shall be mounted at a height of 2'-3" (±) 3". The Chevron sign (W1-8), Roundabout Chevron panel (R6-4B), Clearance Markers (W5-52), Mile Markers (D10 series), In Road Object Markers (W5-54) & End of Road Markers (W5-56) shall be mounted at a height of 4"-3" (±) 3".

* 6 feet from edge of a paved shoulder or 12 feet from the edge of pavement (edge line location) or 2 feet from outside edge of gravel, whichever is greater unless directed by project engineer.

** The existence of curb and gutter does not in itself mandate the vertical clearance illustrated. That height is typically measured where there is sidewalk adjacent to the roadway or parking is permitted. In the absence of sidewalk vertical clearance is measured from the top of the curb. Offset of signs is measured from the flow line.

*** See A4-3 sign plate for signs 4' or less in width and less than 20 S.F. in area.

SIGN SHAPE OTHER THAN DIAMOND (TWO POSTS REQUIRED)	
L	E
*** Greater than 48" Less than 60"	12"
60" to 108"	L/5

SIGN SHAPE OTHER THAN DIAMOND (THREE POSTS REQUIRED)	
L	E
Greater than 108" to 144"	12"

POST EMBEDMENT DEPTH

Area of Sign Installation (Sq. Ft.)	D (Min)
20 or Less	4'
Greater than 20	5'

TYPICAL INSTALLATION OF TYPE II SIGNS ON MULTIPLE POSTS

WISCONSIN DEPT OF TRANSPORTATION

APPROVED Matthew R Rauch
for State Traffic Engineer

DATE 12/6/23 PLATE NO. A4-4.16

PROJECT NO:	HWY:	COUNTY:		SHEET NO: 148	E

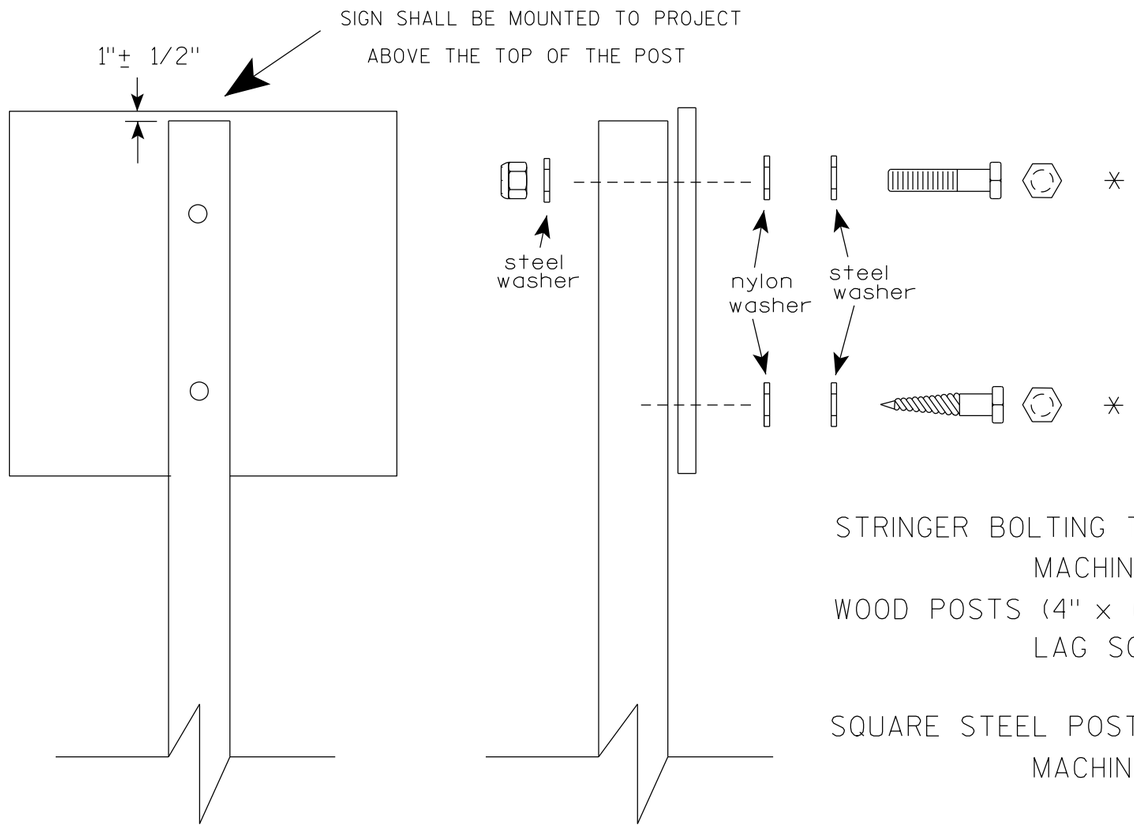

Nuts, bolts and lags used for mounting signs shall have hexagonal heads and shall be either :

a. Hot dip galvanized in accordance with ASTM Designation: A 153, Class D, or SC 3

b. Electro-galvanized in accordance with ASTM Designation : B 633, TYPE III, SC 3.

Threads on bolts and nuts shall be manufactured with sufficient allowance for the cadmium plate or galvanized coating to permit the nuts to run freely on the bolts.

STRINGER BOLTING TO ALUMINUM SIGNS (SEE SIGN PLATE A4-18)

MACHINE BOLTS - 5/16" X 1-3/4" Length w/ lock nuts

WOOD POSTS (4" x 6")

LAG SCREWS - 3/8" X 3" (NO STRINGERS ON BACK OF SIGN)
3/8" X 4" (STRINGERS ON BACK OF SIGN)

SQUARE STEEL POSTS (2" x 2")

MACHINE BOLTS - 3/8" X 3-1/4" Length w/ nuts (NO STRINGER ON BACK OF SIGN)
3/8" X 5" Length w/ nuts (STRINGERS ON BACK OF SIGN)

RIVETS - 9/32 " (6605-9-6) BULB-TITE, TRI-FOLD, ALUMINUM BODY/MANDREL
O.D. FLANGE .720-.765 INCH, GRIP RANGE .042-.375 INCH

WASHERS (ALL POSTS) -

1-1/4" O.D. X 3/8" I.D. X 1/16" STEEL
1-1/4" O.D. X 3/8" I.D. X .080 NYLON

* Two different fastening systems are shown for illustration purposes. On any individual sign, either one or the other system shall be used. Actual number of fasteners per sign varies with the sign area, but normally there are two. For a single post installation, all signs greater than 9 sq. ft. require the use of 3 fasteners.

ATTACHMENT OF SIGNS TO POSTS

WISCONSIN DEPT OF TRANSPORTATION

APPROVED Matthew R Rauch
for State Traffic Engineer

DATE 4/1/2020 PLATE NO. A4-8.9

TELESCOPIC TUBING ANCHORS
TWO PIECE SYSTEM

2 1/4" SQUARE
12 GAUGE
PERFORATED
GALVANIZED FINISH

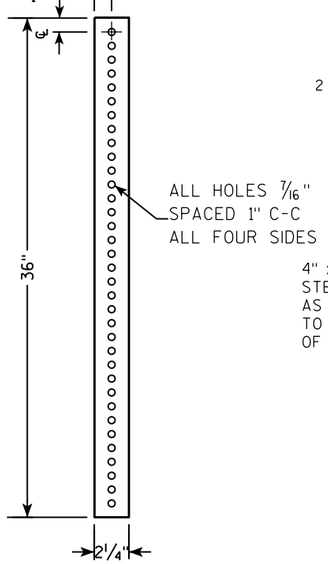

2 1/2" SQUARE
12 GAUGE
OMNI-DIRECTIONAL
PERFORATED
SOIL STABILIZING SLEEVE
GALVANIZED FINISH

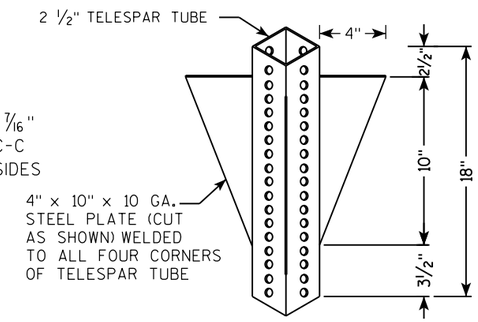

DETAIL OF TUBULAR STEEL SIGN POST
(IN POURED CONCRETE OR ASPHALT)

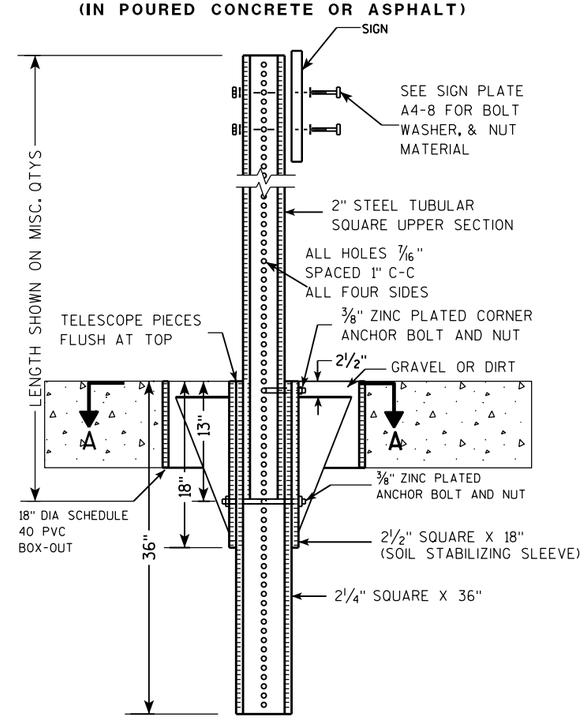

DETAIL OF TUBULAR STEEL SIGN POST
(IN LOCATIONS OTHER THAN POURED CONCRETE OR ASPHALT)

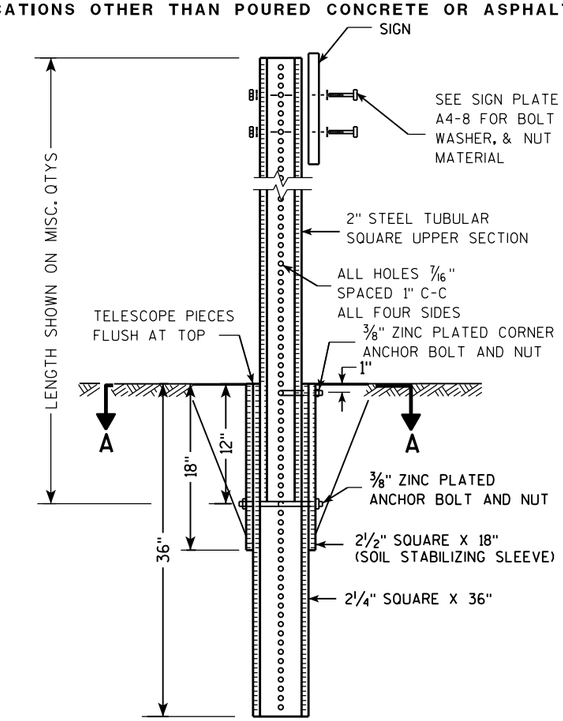

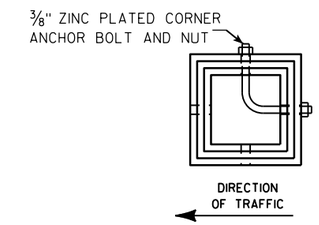

SECTION A-A

Area of Sign Installation (Sq. Ft.)	Number of Required Posts
9 or less	1
Greater than 9 less than or equal to 18	2
Greater than 18 less than or equal to 27	3

Signs wider than 3 feet or larger than 9 sq. ft shall be mounted on multiple posts (see above table).

TUBULAR STEEL
SIGN POST
A4-9

WISCONSIN DEPT OF TRANSPORTATION

APPROVED Matthew R Rauch
for State Traffic Engineer

DATE 2/05/15 PLATE A4-9.9

7 7

PROJECT NO:	HWY:	COUNTY:		SHEET NO:	E

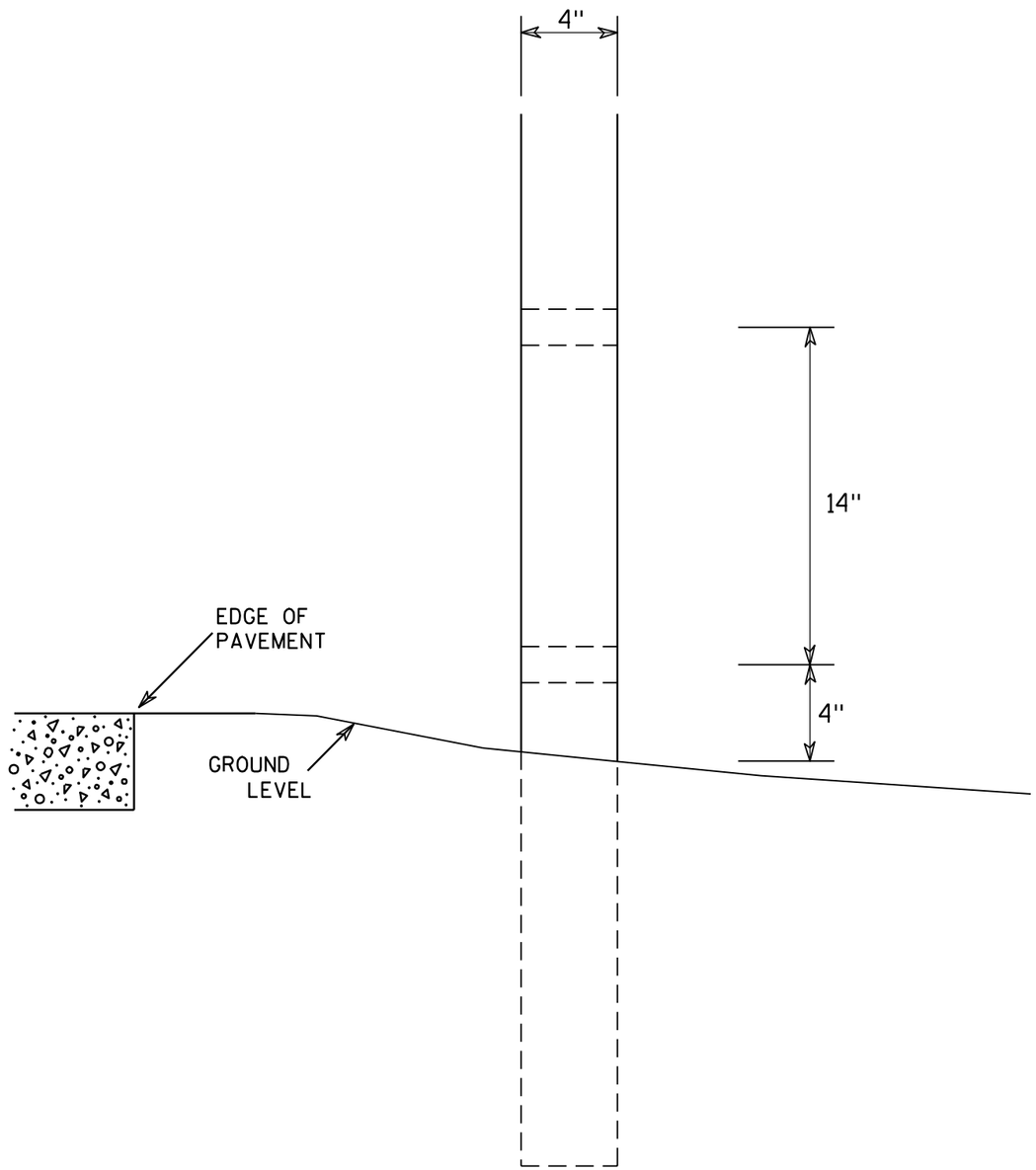

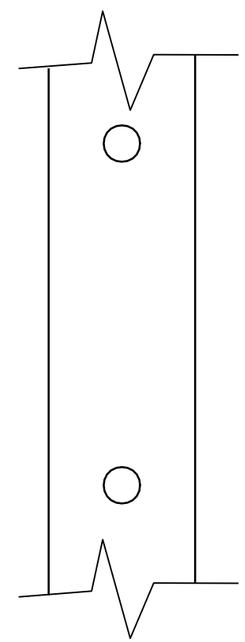

SIDE VIEW

GENERAL NOTES

1. All 4 x 6 Wood Posts shall be modified by having two 1½" diameter holes drilled perpendicular to the roadway centerline.

4 X 6 WOOD POST MODIFICATIONS

WISCONSIN DEPT OF TRANSPORTATION

APPROVED Chester J Spang for State Traffic Engineer

DATE 3/27/97 PLATE NO. A4-11.2

PROJECT NO:	HWY:	COUNTY:		SHEET NO: 151	E

SIGN LAYOUT WITH VARIOUS SIZED MESSAGES

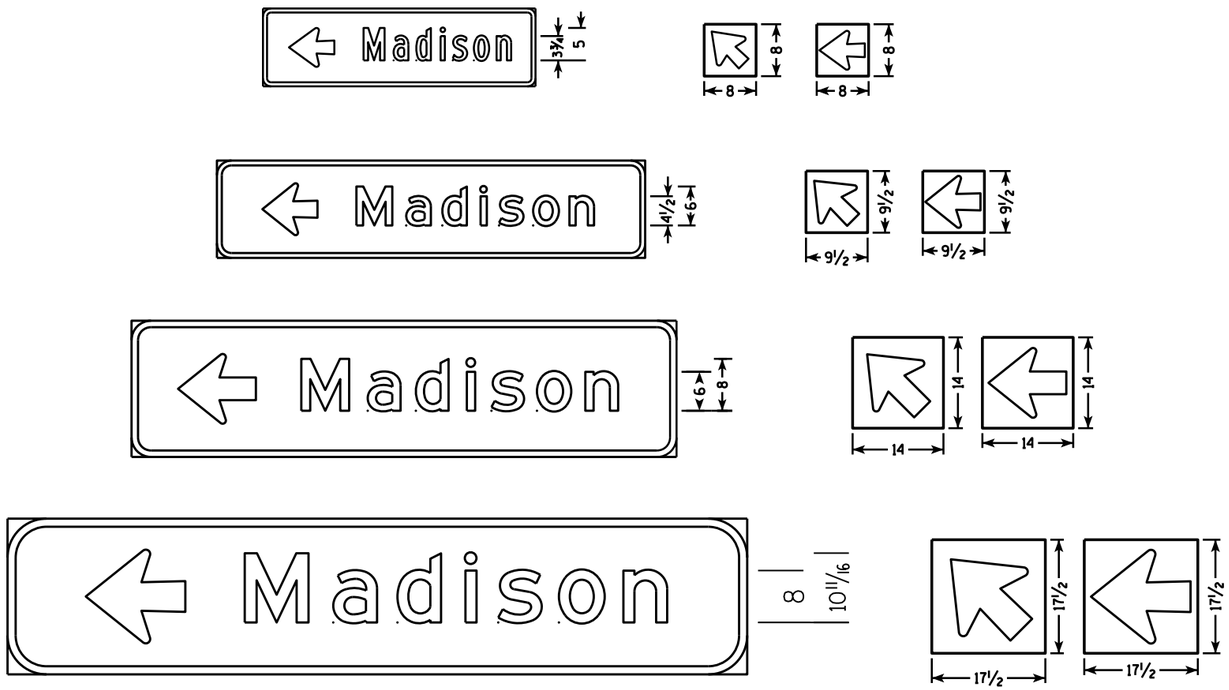

GENERAL NOTES

1. Materials shall conform to Standard Specification Section 637.
   Base - Sheet Aluminum 0.040" Thickness
   Sheeting - Orange Type F Reflective
   Arrow - Black Non-Reflective
2. Arrow signs shall be fastened to permanent sign by either aluminum rivets or aluminum self-tapping sheet metal screws. There shall be a minmum of 2 fasteners used per arrow sign.
3. There shall be a spacer consisting of a 0.08" nylon washer between the back of the arrow sign and the face of the permanent sign.
4. Arrows are per standard plate A1-2
5. Use separate arrow sign for each destination
6. Tilt arrow is always at 45 degrees
7. Arrow is centered on arrow sign

Lower Case Copy Size	Standard Width (Single Arrow)	2 Line Tilt Arrow Cover Width	3 Line Tilt Arrow Cover Width	Height
3¾" Series C	8	9 ½	14 ½	8
4½" Series D & E	9 ½	10	15	9 ½
6" Series D & E	14	16	20 ½	14
8" Series E	17 ½	20 ½	25	17 ½

BEFORE

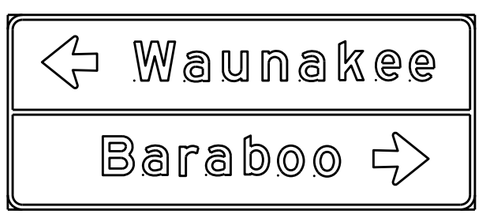

AFTER

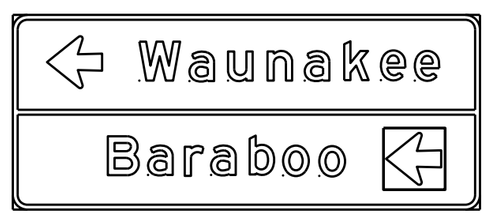

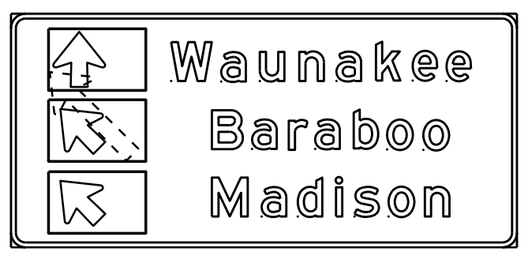

DESTINATION DIRECTIONAL ARROW FOR DETOUR SIGNS

WISCONSIN DEPT OF TRANSPORTATION

APPROVED Matthew R Rauch
for State Traffic Engineer

DATE 10/08/14 A4-12.2

PROJECT NO: | SHEET NO: E

BANDING

SINGLE SIGN

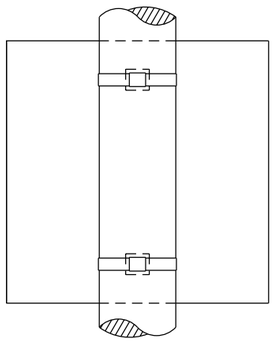

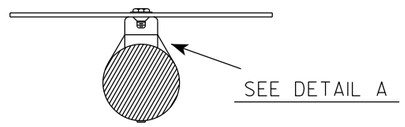

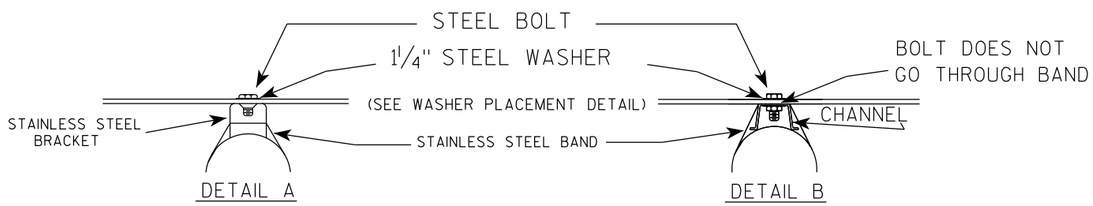

WASHER PLACEMENT

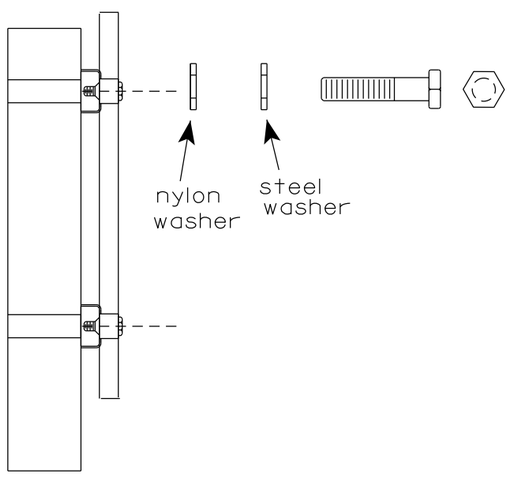

WASHERS (ALL POSTS) -
1-1/4" O.D. X 3/8" I.D. X 1/16" STEEL
1-1/4" O.D. X 3/8" I.D. X .080 NYLON
FOR ALL TYPE H SIGNS

GENERAL NOTES

1. Any sign over 3 feet in width shall use the V-Block banding method. See A5-10 standard plate.
2. Signs 3 feet or greater in height shall have three bracket bands installed. Signs less than 3 feet in height shall have two bracket bands installed.
3. Banding and assembly bracket shall be stainless steel. All bands shall be ¾" in width and 0.025" thickness.
4. ALL SIGN MOUNTING BOLTS AND WASHERS SHALL BE EITHER:
   a. Hot dip or mechanically galvanized in accordance with ASTM Designation: A 153, Class D
   b. Electro-galvanized in accordance with ASTM designation: B 633, Type III, SC 3

"J" ASSEMBLY

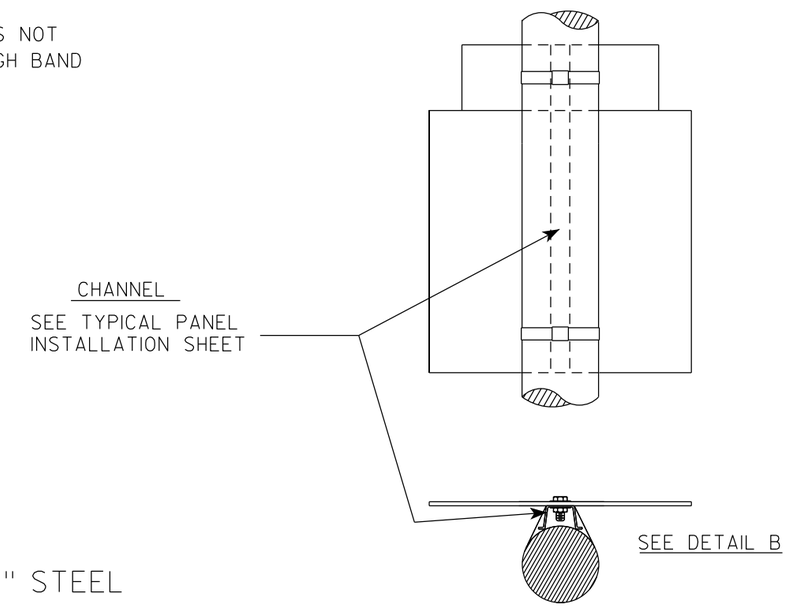

STANDARD SIGN
SIGN BANDING DETAILS

WISCONSIN DEPT OF TRANSPORTATION

APPROVED Matthew R Rauch for State Traffic Engineer

DATE 6/10/19 PLATE NO. A5-9.4

PROJECT NO:	HWY:	COUNTY:		SHEET NO: 153	E

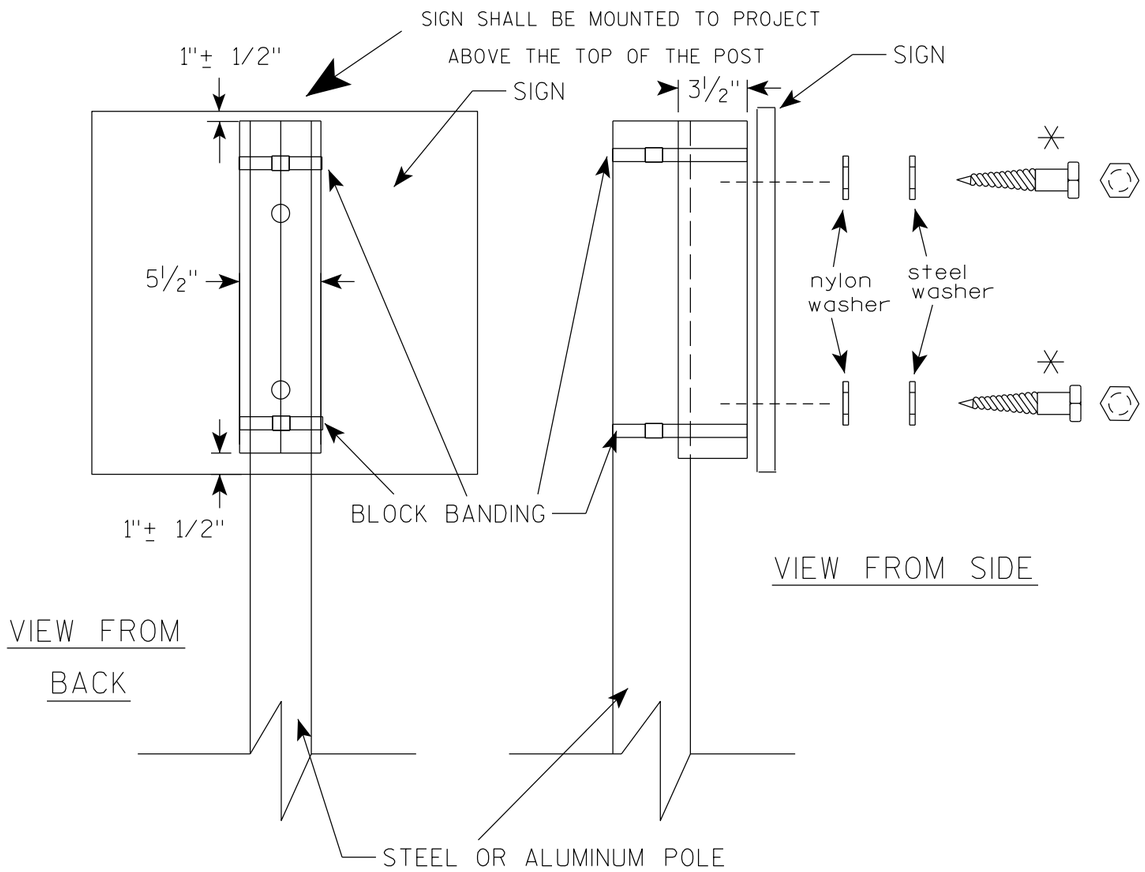

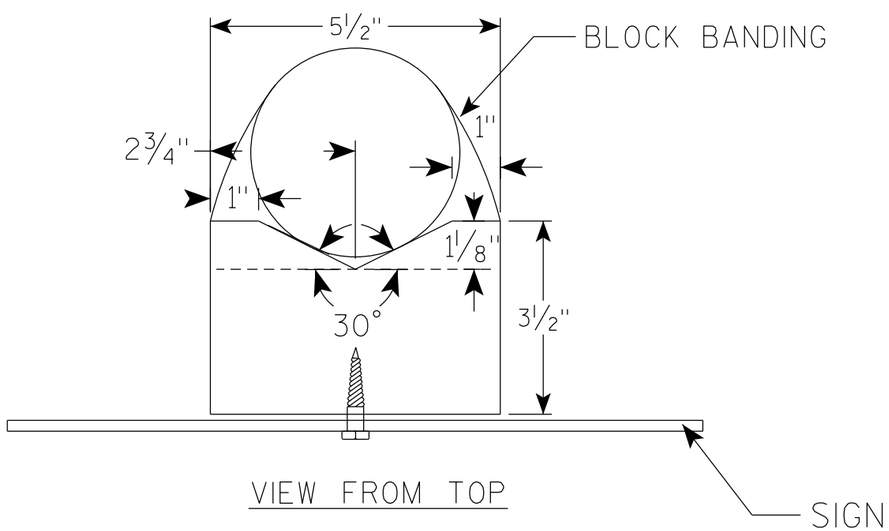

GENERAL NOTES

1. WOOD 4"X6" POST MATERIAL SHALL CONFORM TO 507.2.2 OF THE WisDOT STANDARD SPECIFICATIONS
2. BLOCK BANDING AND CLIPS SHALL BE STAINLESS STEEL, 3/4" WIDTH AND 0.025" THICKNESS
3. SIGNS 3' OR GREATER IN HEIGHT SHALL UTILIZE 3 BLOCK BANDS. SIGNS UNDER 3' IN HEIGHT SHALL UTILIZE 2 BLOCK BANDS
4. ACTUAL NUMBER OF FASTENERS PER SIGN VARIES WITH THE SIGN AREA, BUT NORNALLY THERE ARE TWO. FOR SIGNS GREATER THAN 9 S.F. 3 FASTENERS SHALL BE USED.
5. ALL SIGN MOUNTING BOLTS AND WASHERS SHALL BE EITHER:
   a. Hot dip or mechanically galvanized in accordance with ASTM Designation: A 153, Class D
   b. Electro-galvanized in accordance with ASTM Designation : B 633, TYPE III, SC 3
6. ALL BOLTS SHALL HAVE HEXAGONAL HEADS.
7. STEEL WASHERS SHALL BE 1 1/4" O.D. X 3/8" I.D. X 1/16"
8. NYLON WASHERS SHALL BE 1 1/4" O.D. X 3/8" I.D. X .080 FOR TYPE H OR TYPE F FACE SIGN

✳ LAG BOLTS SHALL BE 3/8" X 2 1/2"

7

7

BLOCK BANDING DETAIL
(V-BLOCK OPTION)

WISCONSIN DEPT OF TRANSPORTATION

APPROVED Matthew R Rauch
for State Traffic Engineer

DATE 4/19/2022 PLATE NO. A5-10.3

PROJECT NO:				SHEET NO: 154	E

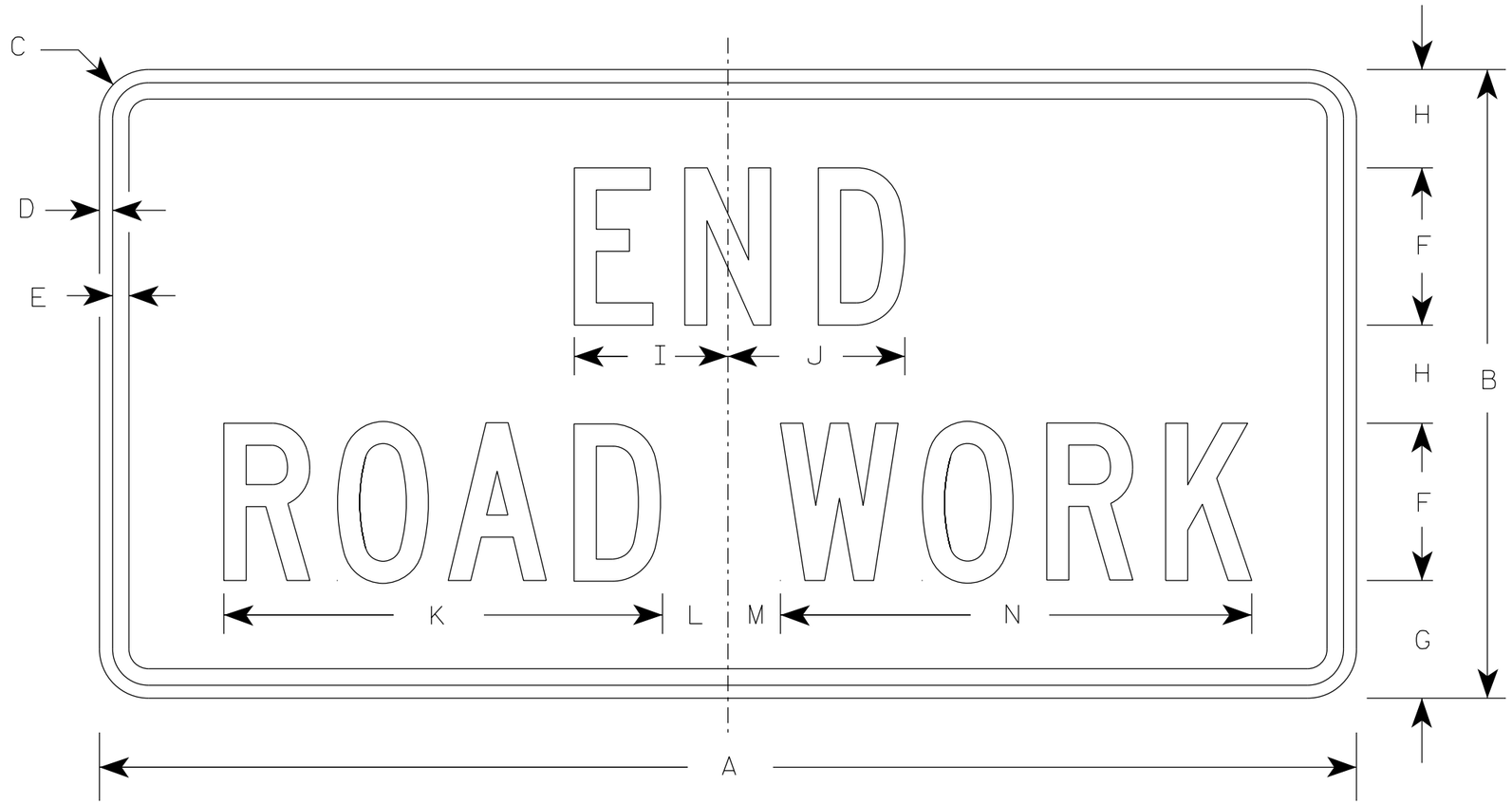

G20-2A

NOTES

1. Sign is Type II - Type F Reflective
2. Color:
   Background - Orange
   Message - Black
3. Message Series - C
4. Corners may be square or rounded when base material is plywood but borders shall be rounded as shown. When base material is metal, the corners and borders shall be rounded.

SIZE	A	B	C	D	E	F	G	H	I	J	K	L	M	N	O	P	Q	R	S	T	U	V	W	X	Y	Z	Area sq. ft.
1	36	18	1 1/2	3/8	1/2	4	3 3/4	2 1/2	4 1/8	4 1/8	11 1/8	2	1	12 1/8													4.5
2	48	24	1 7/8	1/2	5/8	6	4 1/2	3 3/4	5 7/8	6 3/4	16 3/4	2 1/2	1 3/4	18 1/2													8.0
2M	48	24	1 7/8	1/2	5/8	6	4 1/2	3 3/4	5 7/8	6 3/4	16 3/4	2 1/2	1 3/4	18 1/2													8.0
3	48	24	1 7/8	1/2	5/8	6	4 1/2	3 3/4	5 7/8	6 3/4	16 3/4	2 1/2	1 3/4	18 1/2													8.0
4	48	24	1 7/8	1/2	5/8	6	4 1/2	3 3/4	5 7/8	6 3/4	16 3/4	2 1/2	1 3/4	18 1/2													8.0
5	48	24	1 7/8	1/2	5/8	6	4 1/2	3 3/4	5 7/8	6 3/4	16 3/4	2 1/2	1 3/4	18 1/2													8.0

STANDARD SIGN

G20-2A

WISCONSIN DEPT OF TRANSPORTATION

APPROVED Matthew R Rauch
for State Traffic Engineer

DATE 1/26/2023 PLATE NO. G20-2A.10

PROJECT NO: | HWY: | COUNTY: | SHEET NO: 155 | E

NOTES

1. Sign is Type II - Type F Reflective
2. Color:
   Background - Orange
   Message - Black
3. Message Series - D
4. Substitute appropriate numeral and adjust spacing to achieve proper balance.

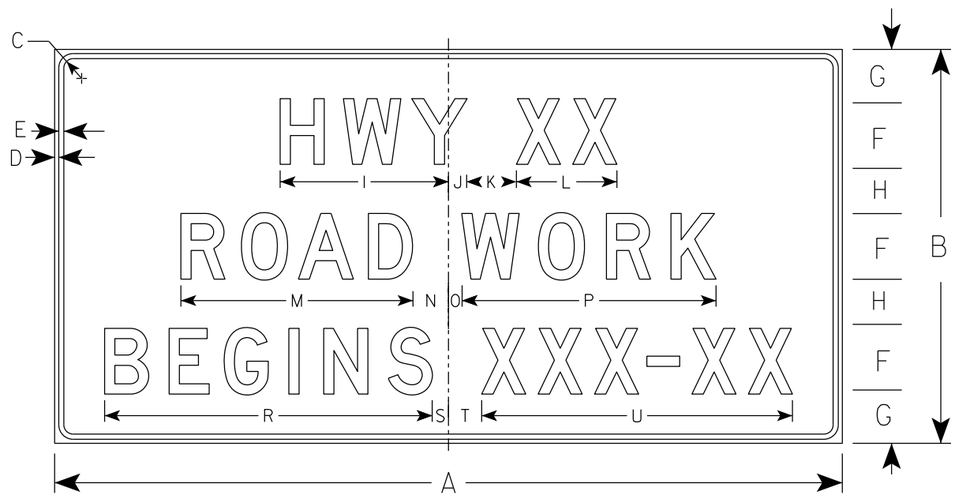

G20-57

SIZE	A	B	C	D	E	F	G	H	I	J	K	L	M	N	O	P	Q	R	S	T	U	V	W	X	Y	Z	Area sq. ft.
1																											
2																											
3	72	36	1 1/8	1/2	5/8	6	5	4	15 5/8	1 5/8	5	9 1/4	21 1/4	3 1/2	1 1/2	23 1/4		29 7/8	1 3/4	3 1/4	28 1/2						18.0
4	96	48	2 1/4	3/4	1	8	6 1/2	5 1/2	20 5/8	2 1/4	6	12 1/4	28 1/4	4 3/8	1 5/8	31		39 1/4	2	4	37 7/8						32.0
5																											

STANDARD SIGN
G20-57

WISCONSIN DEPT OF TRANSPORTATION

APPROVED Matthew R Rauch
For State Traffic Engineer

DATE 1/22/19 PLATE NO. G20-57.3

PROJECT NO: | HWY: | COUNTY: | SHEET NO: 156 | E

NOTES

1. Sign is Type II - Type F Reflective
2. Color:
   Background - Orange
   Message - Black
3. Message Series - D
4. Substitute appropriate numeral and adjust spacing to achieve proper balance.

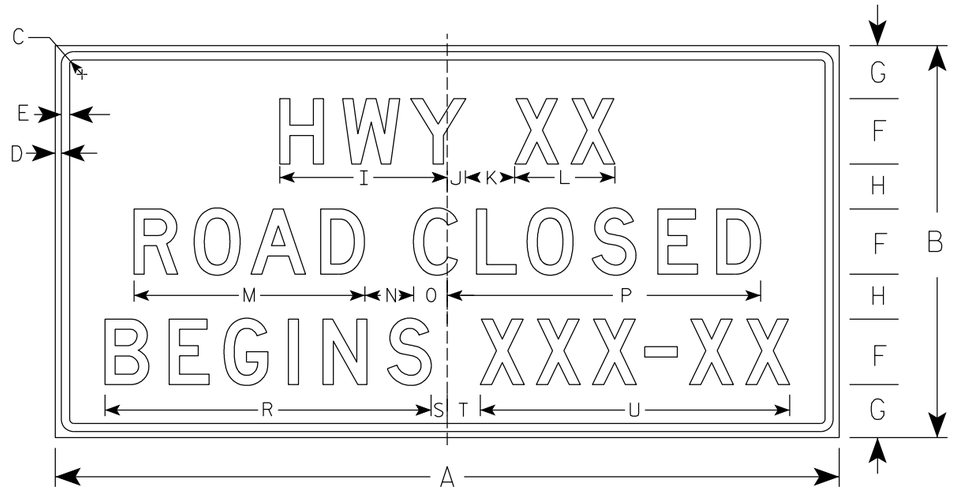

G20-57C

PLAQUE ON .040" ALUMINUM

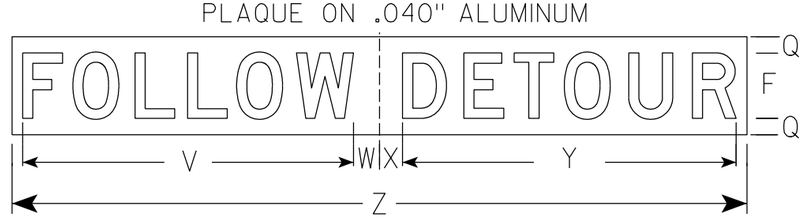

USE ONLY ONCE WHEN ROAD IS CLOSED

SIZE	A	B	C	D	E	F	G	H	I	J	K	L	M	N	O	P	Q	R	S	T	U	V	W	X	Y	Z	Area sq. ft.
1																											
2																											
3	72	36	1 1/8	1/2	5/8	6	5	4	15 5/8	1 5/8	5	9 1/4	21 1/8	5	2 7/8	29	2	30	1 3/4	3 1/4	28 3/8	40 1/2	2	2	29 3/4	66	18.0
4	96	48	2 1/4	3/4	1	8	6 1/2	5 1/2	20 5/8	2 1/4	6	12 1/4	28 1/4	6	4 1/8	38 3/8	2	39 7/8	2	4	37 7/8	29 3/4	3 1/8	2 7/8	40 7/8	90	32.0
5																											

STANDARD SIGN
G20-57C

WISCONSIN DEPT OF TRANSPORTATION

APPROVED Matthew R Rauch
for State Traffic Engineer

DATE 9/25/19 PLATE NO. G20-57C.1

PROJECT NO:	HWY:	COUNTY:		SHEET NO: 157	E

7

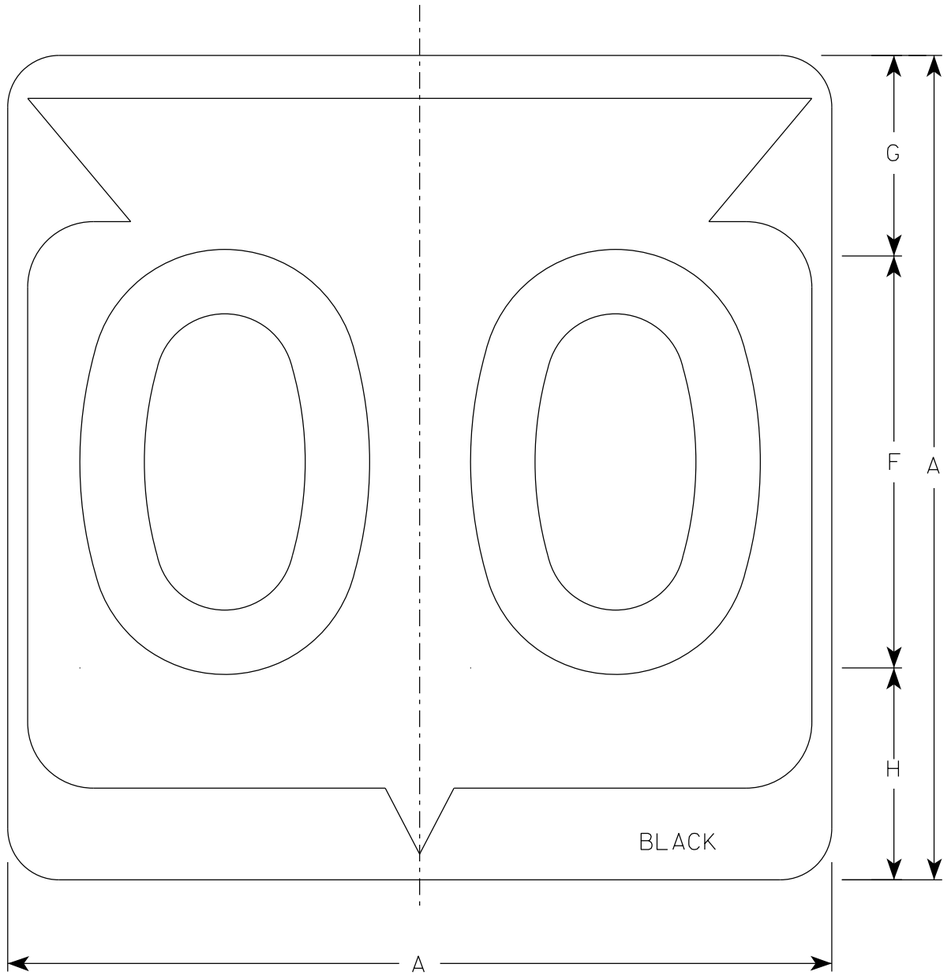

M1-6

NOTES

1. Sign is Type II - Type H Reflective
2. Color:
   Background - White
   Message - Black
3. Message Series - D except 3 number signs Series C

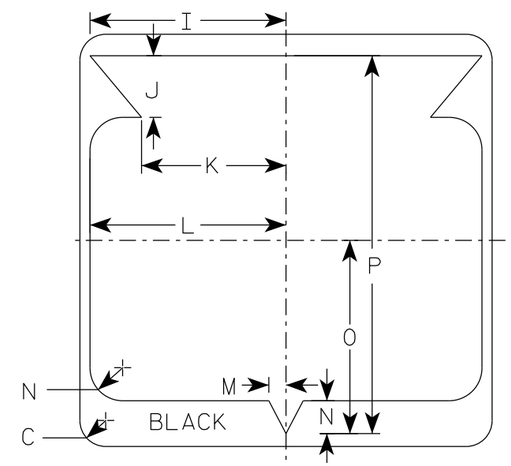

SIZE	A	B	C	D	E	F	G	H	I	J	K	L	M	N	O	P	Q	R	S	T	U	V	W	X	Y	Z	Area sq. ft.
1																											
2	24		1 1/2			12	5 1/2	6 1/2	10 1/4	2 1/2	8 7/8	11 1/2	1	1 7/8	11 1/4	21 7/8											4.0
2M	24		1 1/2			12	5 1/2	6 1/2	10 1/4	2 1/2	8 7/8	11 1/2	1	1 7/8	11 1/4	21 7/8											4.0
3	36		2 1/4			18	8 3/4	9 1/4	15 3/8	5 3/8	12 5/8	17 1/8	1 1/2	2 7/8	16 7/8	33											9.0
4	36		2 1/4			18	8 3/4	9 1/4	15 3/8	5 3/8	12 5/8	17 1/8	1 1/2	2 7/8	16 7/8	33											9.0
5	36		2 1/4			18	8 3/4	9 1/4	15 3/8	5 3/8	12 5/8	17 1/8	1 1/2	2 7/8	16 7/8	33											9.0

STATE ROUTE MARKER
M1-6 FOR ASSEMBLIES

WISCONSIN DEPT OF TRANSPORTATION

APPROVED Matthew R Rauch
for State Traffic Engineer

DATE 11/8/2022 PLATE NO. M1-6.11

PROJECT NO:	HWY:	COUNTY:		SHEET NO: 158	E

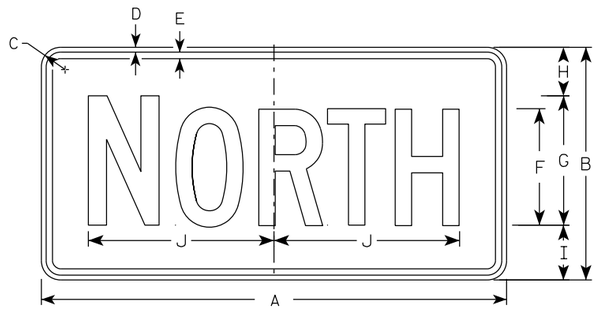

M3-1
MM3-1
MP3-1

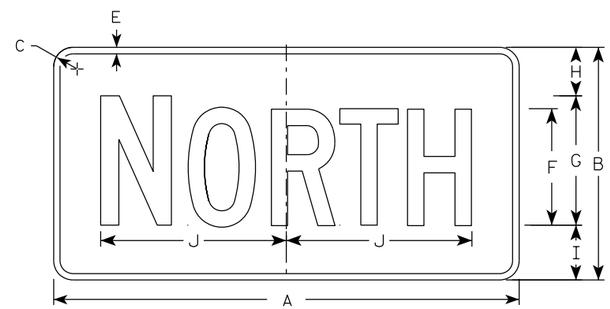

MB3-1
MK3-1
MN3-1

M3-2
MM3-2
MP3-2

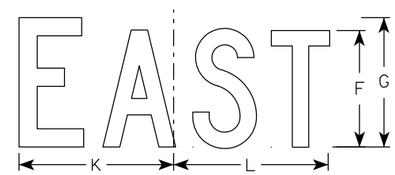

MB3-2
MK3-2
MN3-2

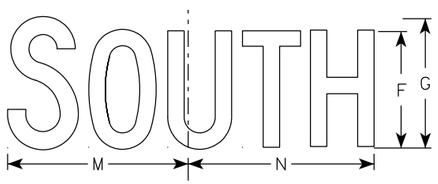

M3-3
MM3-3
MP3-3

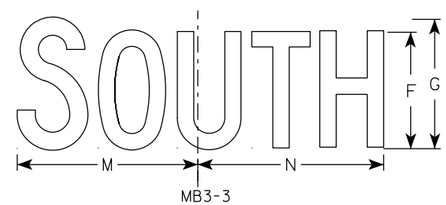

MB3-3
MK3-3
MN3-3

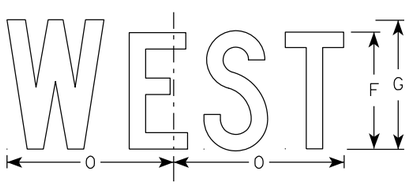

M3-4
MM3-4
MP3-4

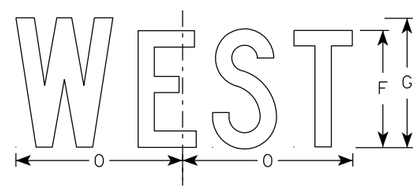

MB3-4
MK3-4
MN3-4

NOTES

1. All Signs Type II - Type H Reflective
2. Color:
   Background - See note 5
   Message - See note 5
3. Message Series - C
4. Corners may be square or rounded when base material is plywood but borders shall be rounded as shown. When base material is metal, the corners and borders shall be rounded.
5. M3-1 thru M3-4 Background - White
   Message - Black
   MB3-1 thru MB3-4 Background - Blue
   Message - White
   MK3-1 thru MK3-4 Background - Green
   Message - White
   MM3-1 thru MM3-4 Background - White
   Message - Green
   MN3-1 thru MN3-4 Background - Brown
   Message - White
   MP3-1 thru MP3-4 Background - White
   Message - Blue
6. Note the first letter of each direction is larger than the remainder of the message.

SIZE	A	B	C	D	E	F	G	H	I	J	K	L	M	N	O	P	Q	R	S	T	U	V	W	X	Y	Z	Area sq. ft.
1																											
2S	24	12	1 1/2	3/8	3/8	6	7	2 1/4	2 3/4	10 1/4	7 7/8	8 3/8	10 1/4	9 3/4	8 3/4												2.00
2M	24	12	1 1/2	3/8	3/8	6	7	2 1/4	2 3/4	10 1/4	7 7/8	8 3/8	10 1/4	9 3/4	8 3/4												2.00
3	36	18	1 1/2	3/8	1/2	9	10	3 3/4	4 1/4	14 3/8	12	12 1/8	14	14 1/8	13												4.5
4	36	18	1 1/2	3/8	1/2	9	10	3 3/4	4 1/4	14 3/8	12	12 1/8	14	14 1/8	13												4.5
5	36	18	1 1/2	3/8	1/2	9	10	3 3/4	4 1/4	14 3/8	12	12 1/8	14	14 1/8	13												4.5

STANDARD SIGNS
M3-1 THRU M3-4
SERIES

WISCONSIN DEPT OF TRANSPORTATION

APPROVED Matthew R Rauch
For State Traffic Engineer

DATE 2/8/2023 PLATE NO. M3-1.15

PROJECT NO: | HWY: | COUNTY: | SHEET NO: 159 | E

NOTES

1. Sign is Type II - Type F Reflective
2. Color:
   Background - Orange
   Message - Black
3. Message Series - B
4. Corners may be square or rounded when base material is plywood but borders shall be rounded as shown. When base material is metal, the corners and borders shall be rounded.

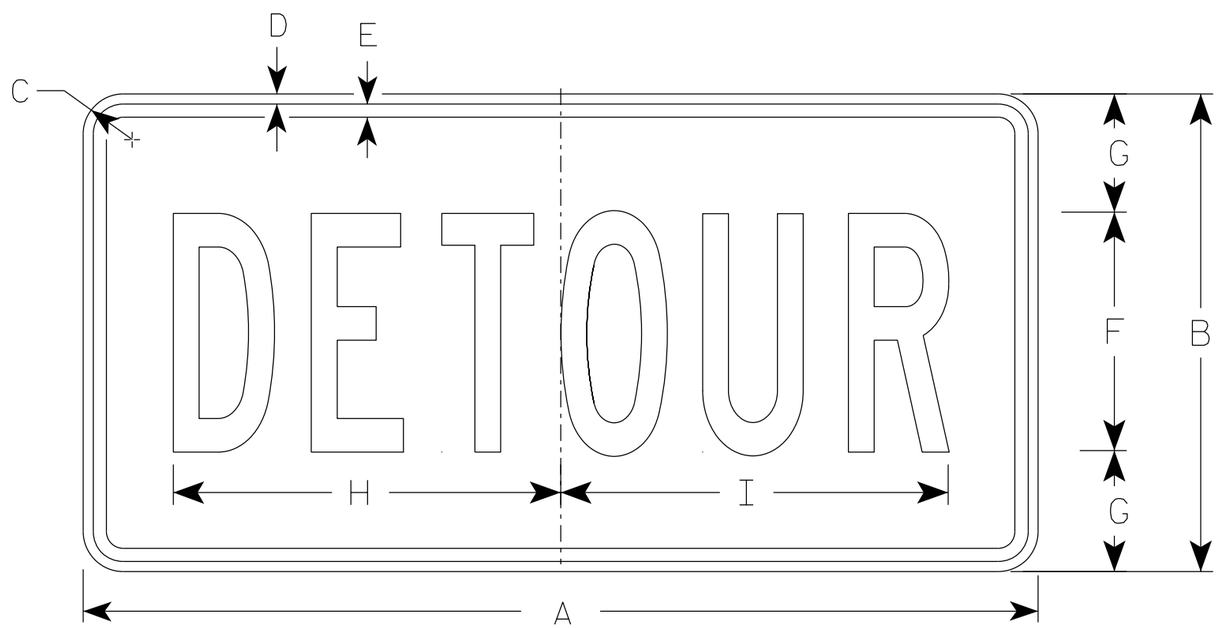

M4-8

SIZE	A	B	C	D	E	F	G	H	I	J	K	L	M	N	O	P	Q	R	S	T	U	V	W	X	Y	Z	Area sq. ft.
1																											
2	24	12	1 1/2	3/8	3/8	6	3	10	10 1/4																		2.0
2M	24	12	1 1/2	3/8	3/8	6	3	10	10 1/4																		2.0
3	36	18	1 1/2	3/8	1/2	9	4 1/2	14 5/8	14 1/2																		4.5
4	36	18	1 1/2	3/8	1/2	9	4 1/2	14 5/8	14 1/2																		4.5
5	36	18	1 1/2	3/8	1/2	9	4 1/2	14 5/8	14 1/2																		4.5

STANDARD SIGN
M4-8

WISCONSIN DEPT OF TRANSPORTATION

APPROVED Matthew R Rauch
for State Traffic Engineer

DATE 2/9/2023 PLATE NO. M4-8.4

PROJECT NO:	HWY:	COUNTY:		SHEET NO: 160	E

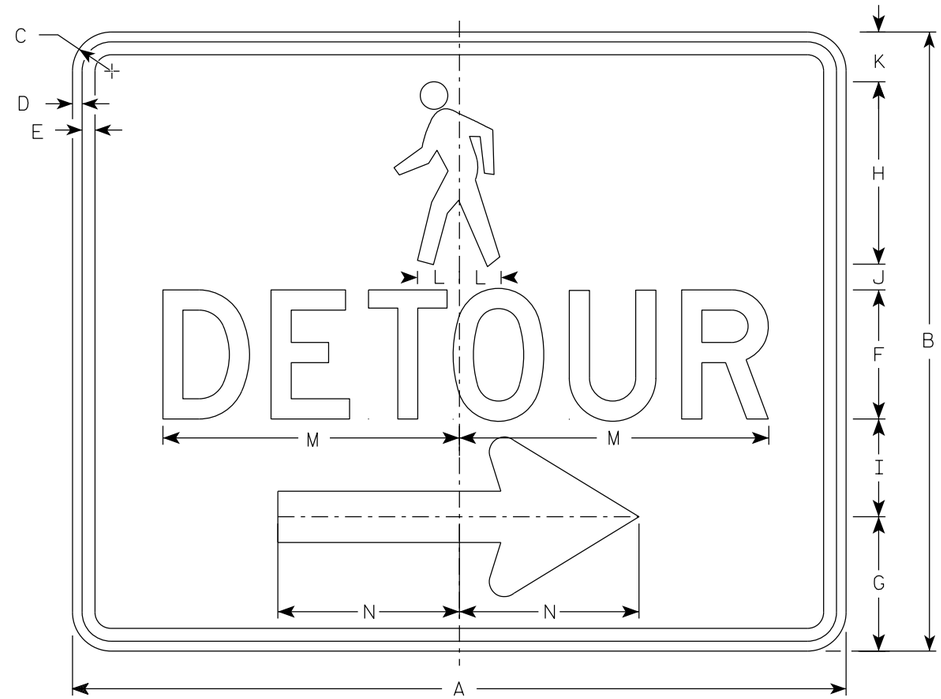

M4-9BR

NOTES

1. Sign is Type II-Type F Reflective
2. Color:
   Background - Orange
   Message - Black
3. Message Series - D
4. Corners may be square or rounded when base material is plywood but borders shall be rounded as shown. When base material is metal, the corners and borders shall be rounded.
5. M4-9BL is the same as M4-9BR except the arrow is reversed.

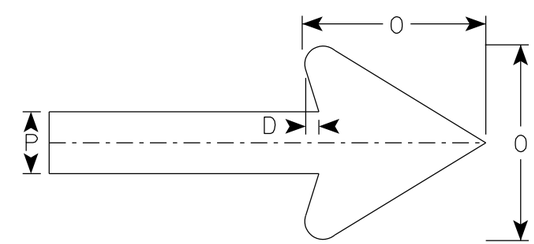

Arrow Detail

SIZE	A	B	C	D	E	F	G	H	I	J	K	L	M	N	O	P	Q	R	S	T	U	V	W	X	Y	Z	Area sq. ft.
1																											
2S	30	24	1 1/2	3/8	1/2	5	5 1/4	7 1/8	3 3/4	1	1 1/8	1 5/8	11 3/4	7	6	2											5.0
2M	30	24	1 1/2	3/8	1/2	5	5 1/4	7 1/8	3 3/4	1	1 1/8	1 5/8	11 3/4	7	6	2											5.0
3																											
4																											
5																											

STANDARD SIGN
M4-9B L&R

WISCONSIN DEPT OF TRANSPORTATION

APPROVED Matthew R Rauch
for State Traffic Engineer

DATE 2/9/2023 PLATE NO. M4-9B.4

PROJECT NO: | HWY: | COUNTY: | SHEET NO: 161 | E

NOTES

1. Sign is Type II- Type F Reflective
2. Color:
   Background - Orange
   Message - Black
3. Corners may be square or rounded when base material is plywood but borders shall be rounded as shown. When base material is metal, the corners and borders shall be rounded.

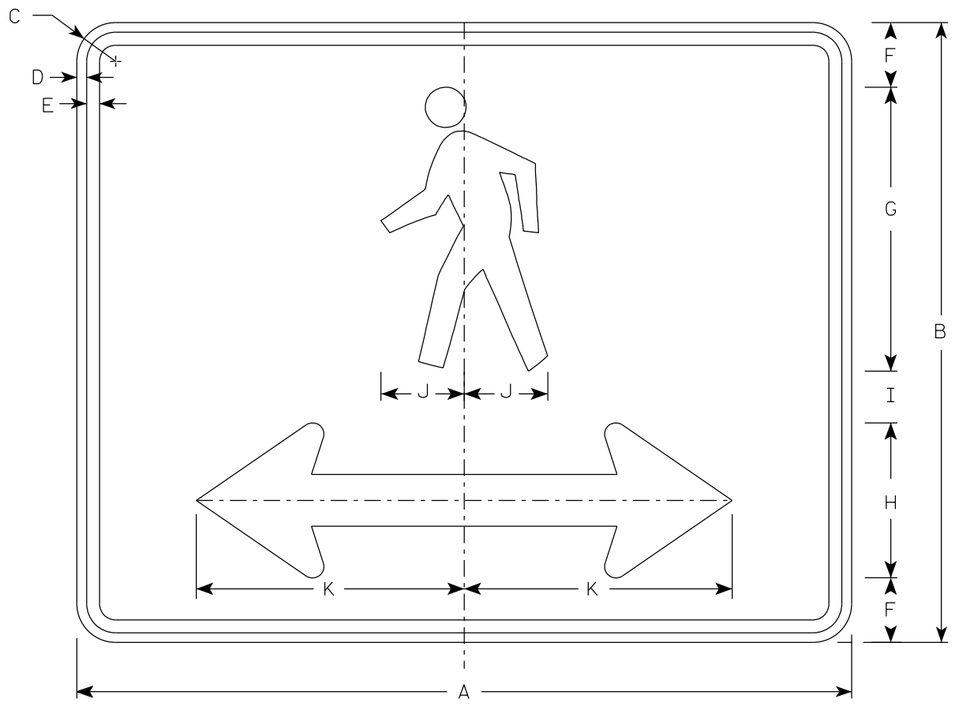

M4-60D

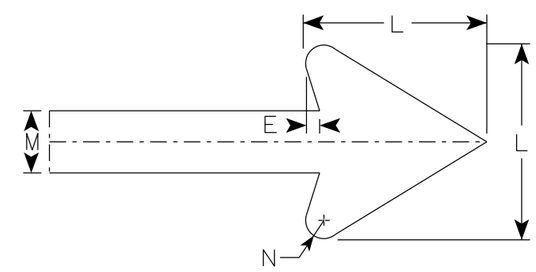

Arrow Detail

SIZE	A	B	C	D	E	F	G	H	I	J	K	L	M	N	O	P	Q	R	S	T	U	V	W	X	Y	Z	Area sq. ft.
1																											
2S	30	24	1 1/2	3/8	1/2	2 1/2	11	6	2	3 1/4	10 3/8	6	2	3/8													5.00
2M	30	24	1 1/2	3/8	1/2	2 1/2	11	6	2	3 1/4	10 3/8	6	2	3/8													5.00
3																											
4																											
5																											

STANDARD SIGN
M4-60D

WISCONSIN DEPT OF TRANSPORTATION

APPROVED Matthew R Rauch
for State Traffic Engineer

DATE 2/14/2023 PLATE NO. M4-60D.2

PROJECT NO: | HWY: | COUNTY: | SHEET NO: 162 | E

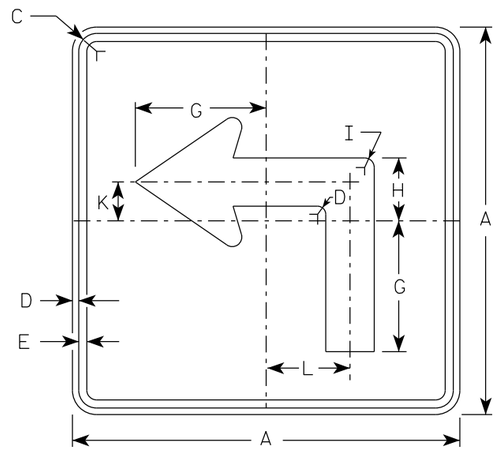

M5-1L
MM5-1L
MO5-1L
MP5-1L

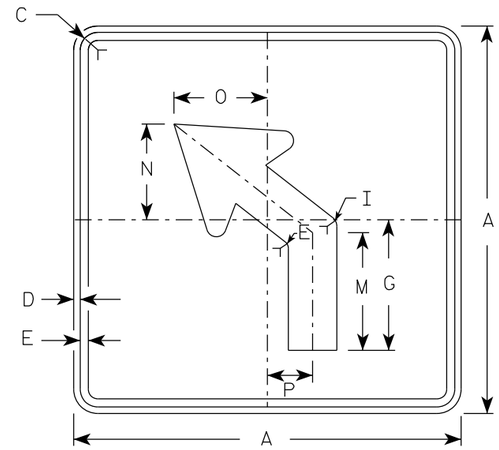

M5-2L
MM5-2L
MO5-2L
MP5-2L

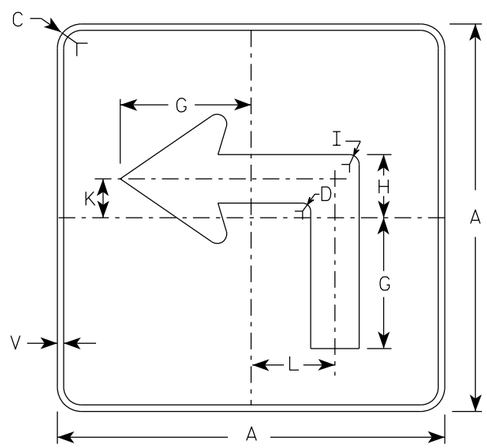

MB5-1L
MK5-1L
MN5-1L
MR5-1L

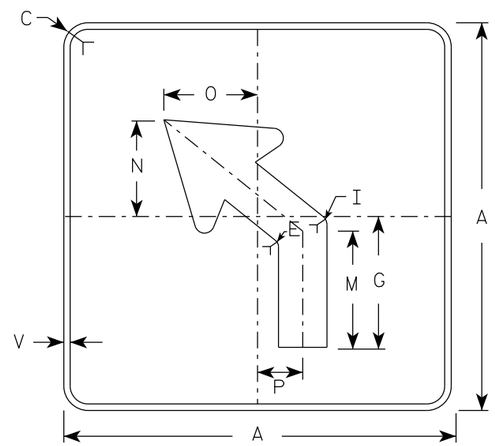

MB5-2L
MK5-2L
MN5-2L
MR5-2L

NOTES

1. Signs are Type II - Type H reflective except as shown
2. Color:
   Background - See note 4
   Message - See note 4
3. Corners may be square or rounded when base material is plywood but borders shall be rounded as shown. When base material is metal, the corners and borders shall be rounded.
4. M5-1 and M5-2 Background - White
   Message - Black
   MB5-1 and MB5-2 Background - Blue
   Message - White
   MK5-1 and MK5-2 Background - Green
   Message - White
   MM5-1 and MM5-2 Background - White
   Message - Green
   MN5-1 and MN5-2 Background - Brown
   Message - White
   MO5-1 and MO5-2 Background - Orange - Type F Reflective
   Message - Black
   MP5-1 and MP5-2 Background - White
   Message - Blue
   MR5-1 and MR5-2 Background - Brown
   Message - Yellow
5. M5-1R same as M5-1L except arrow points right.
6. M5-2R same as M5-2L except arrow tilts right.

ARROW DETAIL

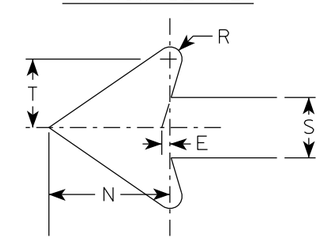

SIZE	A	B	C	D	E	F	G	H	I	J	K	L	M	N	O	P	Q	R	S	T	U	V	W	X	Y	Z	Area sq. ft.
1																											
2S	21		1 1/2	3/8	3/8		7	3 3/8	5/8		2 1/8	4 1/2	6 3/8	5 1/4	5	2 1/2		1/2	2 5/8	3		1/2					3.06
2M	21		1 1/2	3/8	3/8		7	3 3/8	5/8		2 1/8	4 1/2	6 3/8	5 1/4	5	2 1/2		1/2	2 5/8	3		1/2					3.06
3	30		1 7/8	1/2	5/8		10 1/8	4 7/8	7/8		3	6 1/2	9 1/8	7 1/2	7 1/4	3 1/2		3/4	3 3/4	4 1/4		1/2					6.25
4	30		1 7/8	1/2	5/8		10 1/8	4 7/8	7/8		3	6 1/2	9 1/8	7 1/2	7 1/4	3 1/2		3/4	3 3/4	4 1/4		1/2					6.25
5	30		1 7/8	1/2	5/8		10 1/8	4 7/8	7/8		3	6 1/2	9 1/8	7 1/2	7 1/4	3 1/2		3/4	3 3/4	4 1/4		1/2					6.25

STANDARD SIGN
M5-1 & M5-2

WISCONSIN DEPT OF TRANSPORTATION

APPROVED Matthew R Rauch
for State Traffic Engineer

DATE 2/13/2023 PLATE NO. M5-1.15

PROJECT NO: | HWY: | COUNTY: | SHEET NO: 163 | E

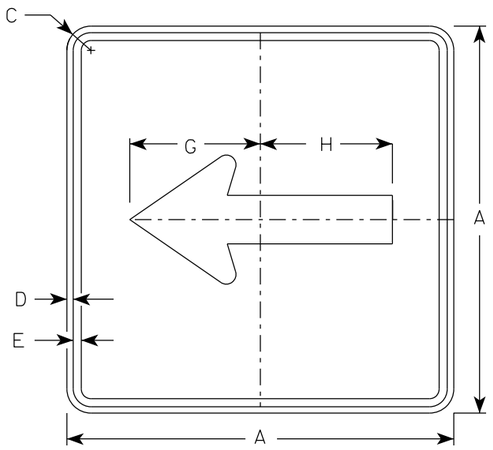

M6-1
MM6-1
MO6-1
MP6-1

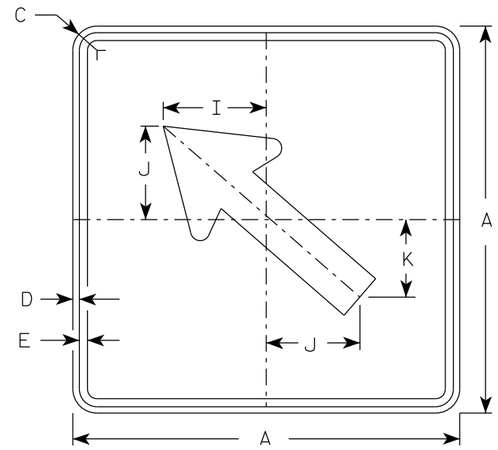

M6-2
MM6-2
MO6-2
MP6-2

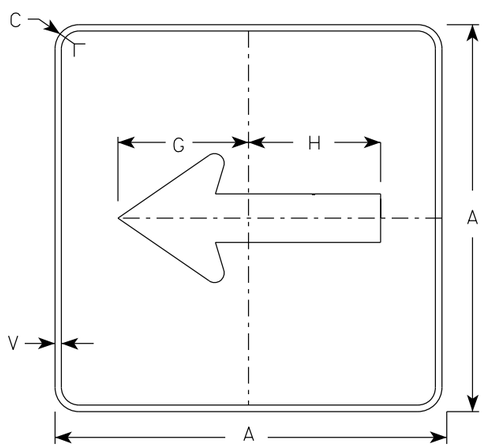

MB6-1
MK6-1
MN6-1
MR6-1

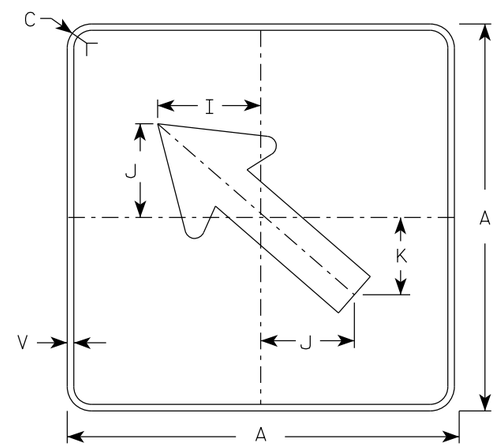

MB6-2
MK6-2
MN6-2
MR6-2

NOTES

1. Signs are Type II - Type H Reflective except as Shown
2. Color:
   Background - See note 4
   Message - See note 4
3. Corners may be square or rounded when base material is plywood but borders shall be rounded as shown. When base material is metal, the corners and borders shall be rounded.
4. M6-1 and M6-2 Background - White
   Message - Black
   MB6-1 and MB6-2 Background - Blue
   Message - White
   MK6-1 and MK6-2 Background - Green
   Message - White
   MM6-1 and MM6-2 Background - White
   Message - Green
   MN6-1 and MN6-2 Background - Brown
   Message - White
   MO6-1 and MO6-2 Background - Orange - Type F Reflective
   Message - Black
   MP6-1 and MP6-2 Background - White
   Message - Blue
   MR6-1 and MR6-2 Background - Brown
   Message - Yellow

ARROW DETAIL

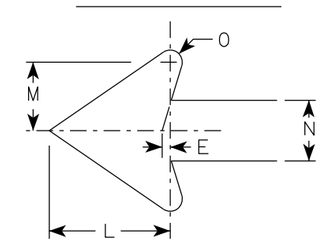

SIZE	A	B	C	D	E	F	G	H	I	J	K	L	M	N	O	P	Q	R	S	T	U	V	W	X	Y	Z	Area sq. ft.
1																											
2S	21		1 1/2	3/8	3/8		7 1/2	7 1/8	5 5/8	5	4 1/4	5 1/4	3	2 5/8	1/2							1/2					3.06
2M	21		1 1/2	3/8	3/8		7 1/2	7 1/8	5 5/8	5	4 1/4	5 1/4	3	2 5/8	1/2							1/2					3.06
3	30		1 7/8	1/2	5/8		10 3/4	10 1/4	8	7 1/4	6	7 1/2	4 1/4	3 3/4	3/4							1/2					6.25
4	30		1 7/8	1/2	5/8		10 3/4	10 1/4	8	7 1/4	6	7 1/2	4 1/4	3 3/4	3/4							1/2					6.25
5	30		1 7/8	1/2	5/8		10 3/4	10 1/4	8	7 1/4	6	7 1/2	4 1/4	3 3/4	3/4							1/2					6.25

STANDARD SIGN
M6-1 & M6-2
SERIES

WISCONSIN DEPT OF TRANSPORTATION

APPROVED Matthew R Rauch
for State Traffic Engineer

DATE 2/13/2023 PLATE NO. M6-1.16

PROJECT NO: | HWY: | COUNTY: | SHEET NO: 164 | E

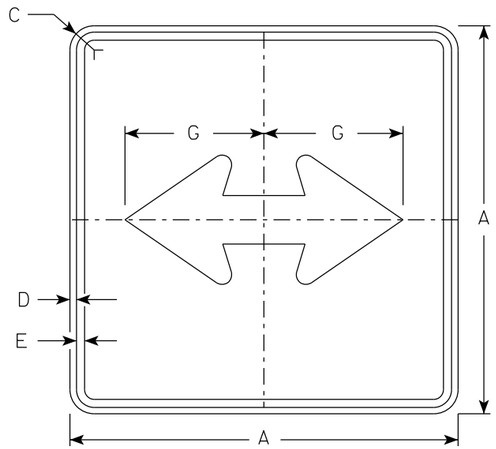

M6-4
MM6-4
MO6-4
MP6-4

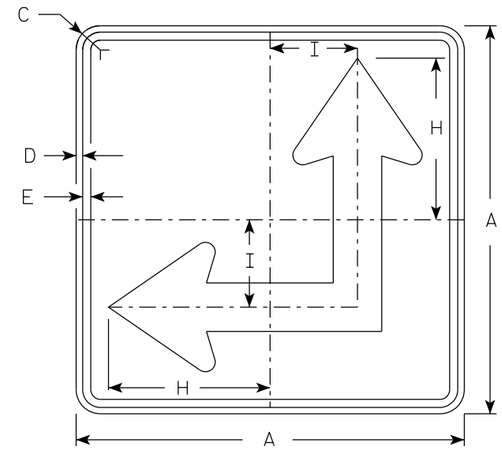

M6-6
MM6-6
MO6-6
MP6-6

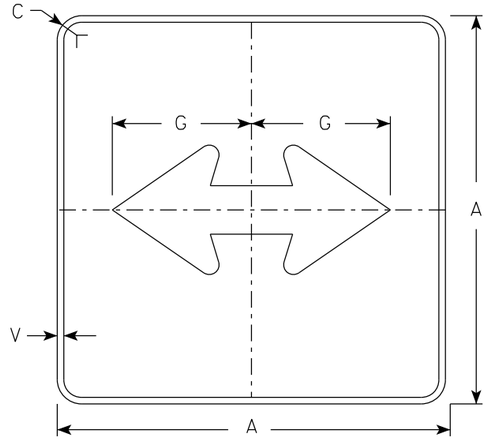

MB6-4
MK6-4
MN6-4
MR6-4

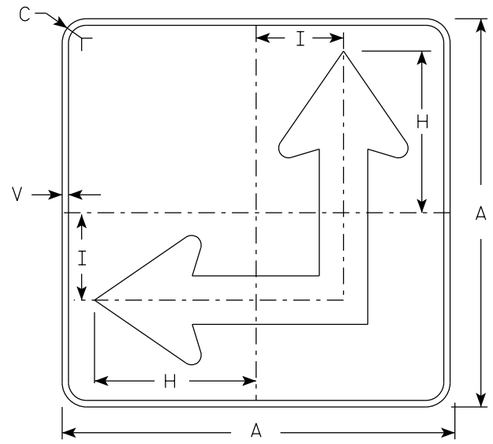

MB6-6
MK6-6
MN6-6
MR6-6

NOTES

1. Signs are Type II - Type H Reflective except as Shown
2. Color:
   Background - See Note 4
   Message - See Note 4
3. Corners may be square or rounded when base material is plywood but borders shall be rounded as shown. When base material is metal, the corners and borders shall be rounded.
4. M6-4 and M6-6 Background - White
   Message - Black
   MB6-4 and MB6-6 Background - Blue
   Message - White
   MK6-4 and MK6-6 Background - Green
   Message - White
   MM6-4 and MM6-6 Background - White
   Message - Green
   MN6-4 and MN6-6 Background - Brown
   Message - White
   MO6-4 and MO6-6 Background - Orange - Type F Reflective
   Message - Black
   MP6-4 and MP6-6 Background - White
   Message - Blue
   MR6-4 and MR6-6 Background - Brown
   Message - Yellow
5. M6-6R same as M6-6L except arrow points ahead and right.

ARROW DETAIL

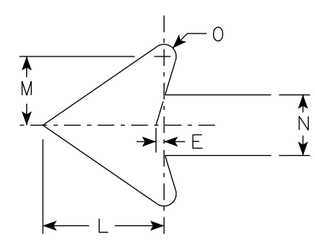

SIZE	A	B	C	D	E	F	G	H	I	J	K	L	M	N	O	P	Q	R	S	T	U	V	W	X	Y	Z	Area sq. ft.
1																											
2S	21		1 1/2	3/8	3/8		7 1/2	8 3/4	4 1/4			5 1/4	3	2 5/8	1/2							1/2					3.06
2M	21		1 1/2	3/8	3/8		7 1/2	8 3/4	4 1/4			5 1/4	3	2 5/8	1/2							1/2					3.06
3	30		1 7/8	1/2	5/8		10 3/4	12 1/2	6 3/4			7 1/2	4 1/4	3 3/4	3/4							1/2					6.25
4	30		1 7/8	1/2	5/8		10 3/4	12 1/2	6 3/4			7 1/2	4 1/4	3 3/4	3/4							1/2					6.25
5	30		1 7/8	1/2	5/8		10 3/4	12 1/2	6 3/4			7 1/2	4 1/4	3 3/4	3/4							1/2					6.25

STANDARD SIGN
M6-4 & M6-6
SERIES

WISCONSIN DEPT OF TRANSPORTATION

APPROVED Matthew R Rauch
for State Traffic Engineer

DATE 2/13/2023 PLATE NO. M6-4.11

PROJECT NO: | HWY: | COUNTY: | SHEET NO: 165 | E

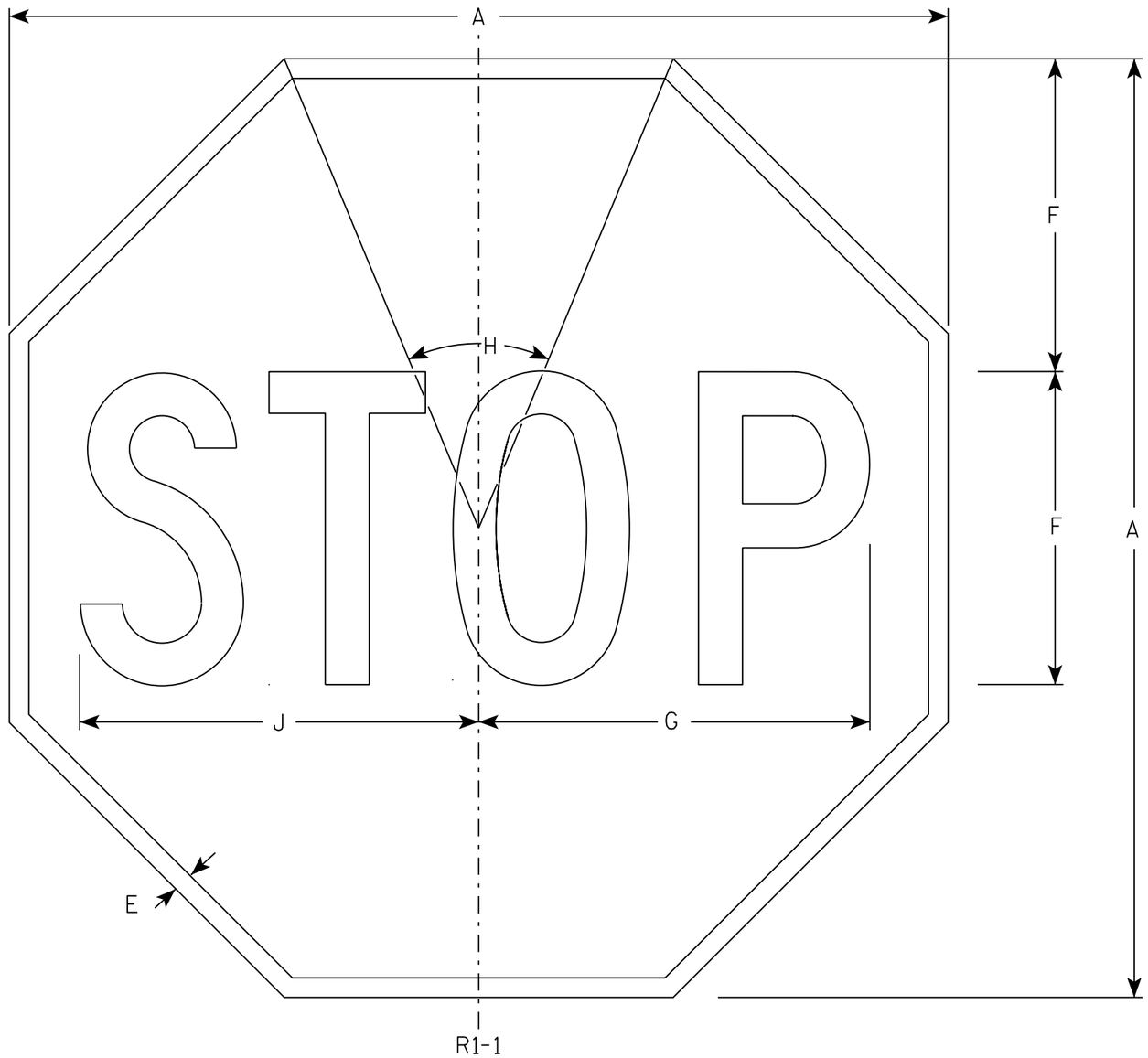

NOTES

1. Sign is Type II - Type H Reflective - reference WIS DOT Standard Specification for HIGHWAY and STRUCTURE CONSTRUCTION latest edition.
2. Color:
   Background - Red
   Message - White
3. Message Series - C

SIZE	A	B	C	D	E	F	G	H	I	J	K	L	M	N	O	P	Q	R	S	T	U	V	W	X	Y	Z	Area sq. ft.
1	30				5/8	10	12 1/2	45°		12 3/4																	5.18
2S	30				5/8	10	12 1/2	45°		12 3/4																	5.18
2M	36				3/4	12	15	45°		15 3/8																	7.46
3	36				3/4	12	15	45°		15 3/8																	7.46
4	48				1	16	20	45°		20 1/2																	13.25
5	48				1	16	20	45°		20 1/2																	13.25
6	18				3/8	6	7 3/4	45°		7 3/4																	1.86
7	12				1/4	4	5	45°		5 1/8																	0.78

STANDARD SIGN
R1-1

WISCONSIN DEPT OF TRANSPORTATION

APPROVED Matthew R Rauch
for State Traffic Engineer

DATE 11/12/15 PLATE NO. R1-1.13

PROJECT NO: | HWY: | COUNTY: | SHEET NO: 166 | E

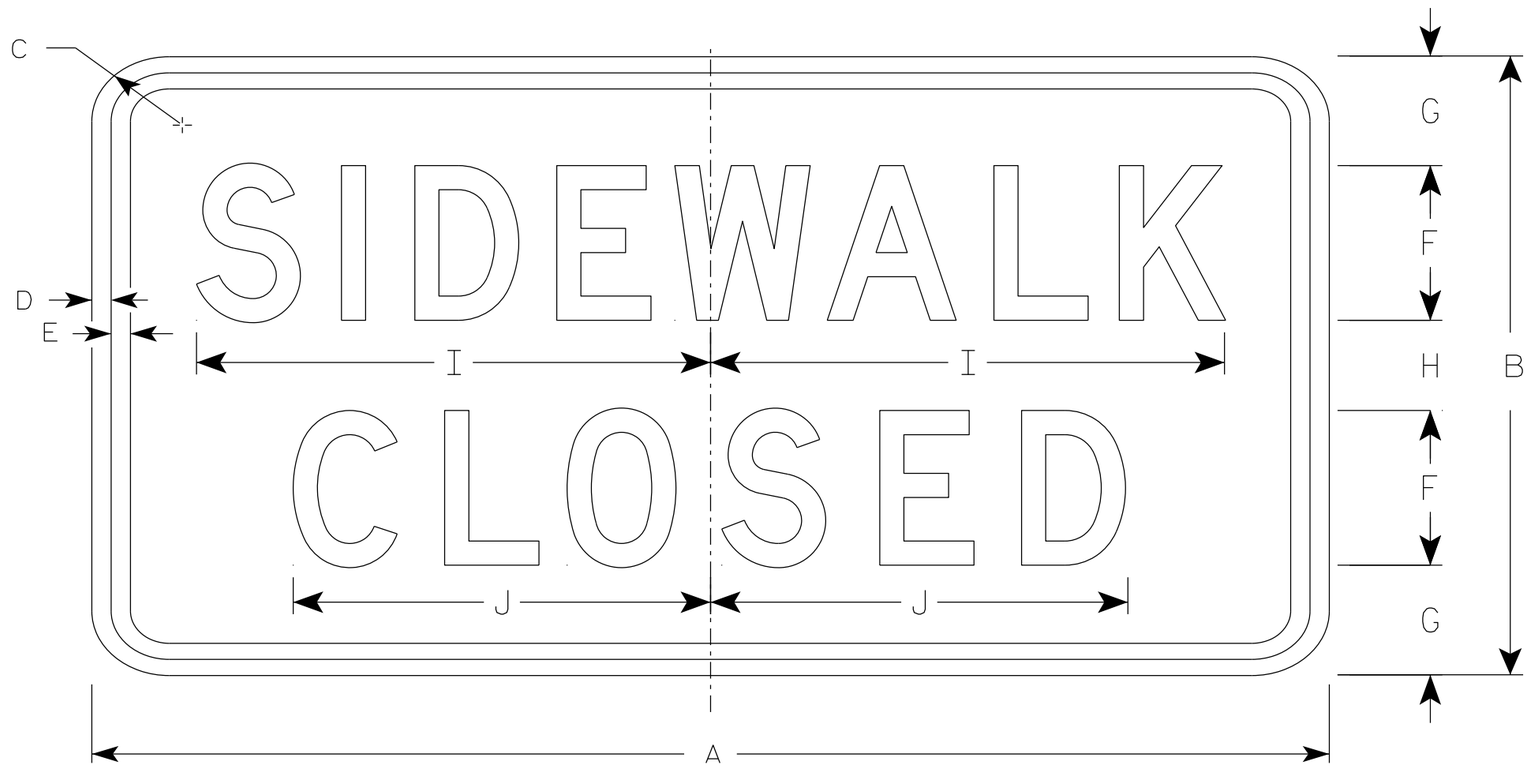

R9-9

NOTES

1. Sign is Type II - Type H Reflective
2. Color:
   Background - White
   Message - Black
3. Message Series - C
4. Use Size 2 for Sidewalks. Use Size 3 for Paths and Trails.

SIZE	A	B	C	D	E	F	G	H	I	J	K	L	M	N	O	P	Q	R	S	T	U	V	W	X	Y	Z	Area sq. ft.
1																											
2S	24	12	1 1/2	1/2	1/2	3	2 1/8	1 3/4	10	8 1/8																	2.0
2M	24	12	1 1/2	1/2	1/2	3	2 1/8	1 3/4	10	8 1/8																	2.0
3	30	18	1 1/2	1/2	1/2	4	3 1/2	3	12 1/2	10 1/4																	3.75
4																											
5																											

STANDARD SIGN
R9-9

WISCONSIN DEPT OF TRANSPORTATION

APPROVED Matthew R Rauch
for State Traffic Engineer

DATE 1/24/24 PLATE NO. R9-9.7

PROJECT NO: | HWY: | COUNTY: | SHEET NO: 167 | E

NOTES

1. Sign is Type II - Type H Reflective
2. Color:
   Background - White
   Message - Black
3. Message Series - D

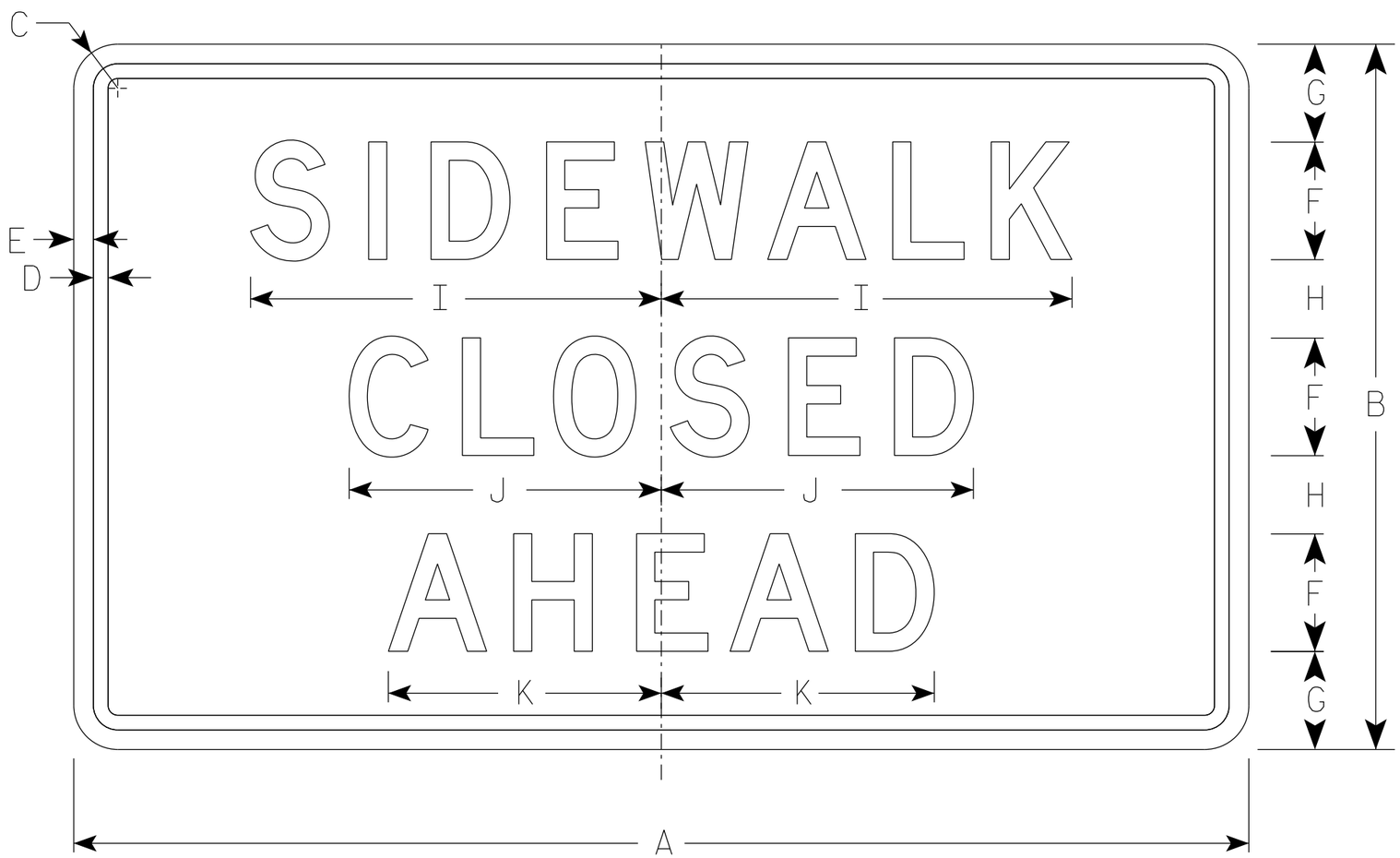

R9-9A

SIZE	A	B	C	D	E	F	G	H	I	J	K	L	M	N	O	P	Q	R	S	T	U	V	W	X	Y	Z	Area sq. ft.
1																											
2S	30	18	1 ½	⅜	½	3	2 ½	2	10 ½	8	7																3.75
2M	30	18	1 ½	⅜	½	3	2 ½	2	10 ½	8	7																3.75
3																											
4																											
5																											

STANDARD SIGN
R9-9A

WISCONSIN DEPT OF TRANSPORTATION

APPROVED Matthew R Rauch
for State Traffic Engineer

DATE 1/24/24 PLATE NO. R9-9A.2

PROJECT NO:	HWY:	COUNTY:		SHEET NO: 168	E

NOTES

1. Sign is Type II - Type H Reflective
2. Color:
   Background - White
   Message - Black
3. Message Series - C
4. Corners may be square or rounded when base material is plywood but borders shall be rounded as shown. When base material is metal, the corners and borders shall be rounded.
5. Substitute appropriate numerals to nearest quarter mile and optically adjust spacing to achieve proper balance.

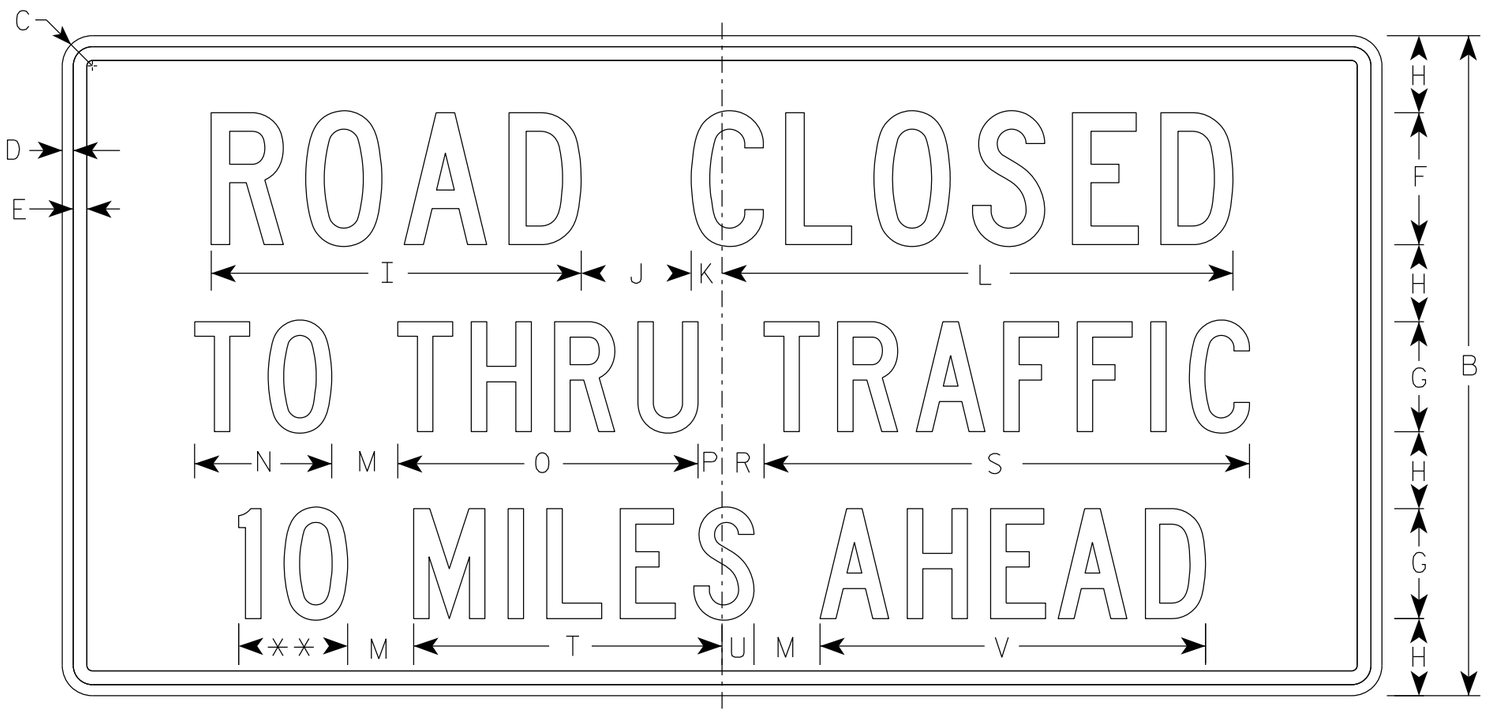

R11-3

** See Note 5

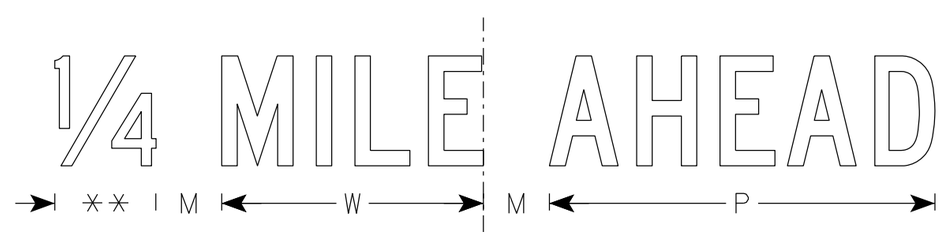

SIZE	A	B	C	D	E	F	G	H	I	J	K	L	M	N	O	P	Q	R	S	T	U	V	W	X	Y	Z	Area sq. ft.
1	36	18	1 1/2	3/8	3/8	4	3	2	11 1/4	3	1 1/8	15 3/8	2	3 3/4	8 1/4	5/8		1 3/8	13 1/4	8 3/8	7/8	10 1/2	7 1/8				4.5
2S	60	30	1 7/8	1/2	5/8	6	5	3 1/2	16 7/8	5	1 3/8	23 1/4	3	6 1/4	13 5/8	1 1/8		1 7/8	22 1/8	14	1 1/2	17 1/2	11 7/8				12.5
2M	60	30	1 7/8	1/2	5/8	6	5	3 1/2	16 7/8	5	1 3/8	23 1/4	3	6 1/4	13 5/8	1 1/8		1 7/8	22 1/8	14	1 1/2	17 1/2	11 7/8				12.5
3																											
4																											
5																											

STANDARD SIGN
R11-3

WISCONSIN DEPT OF TRANSPORTATION

APPROVED Matthew R Rauch
for State Traffic Engineer

DATE 2/5/24 PLATE NO. R11-3.10

PROJECT NO: | HWY: | COUNTY: | SHEET NO: 169 | E

NOTES

1. Sign is Type II - Type F Reflective
2. Color:
   Background - Orange
   Message - Black
3. Message Series - C
4. Corners may be square or rounded when base material is plywood but borders shall be rounded as shown. When base material is metal, the corners and borders shall be rounded.

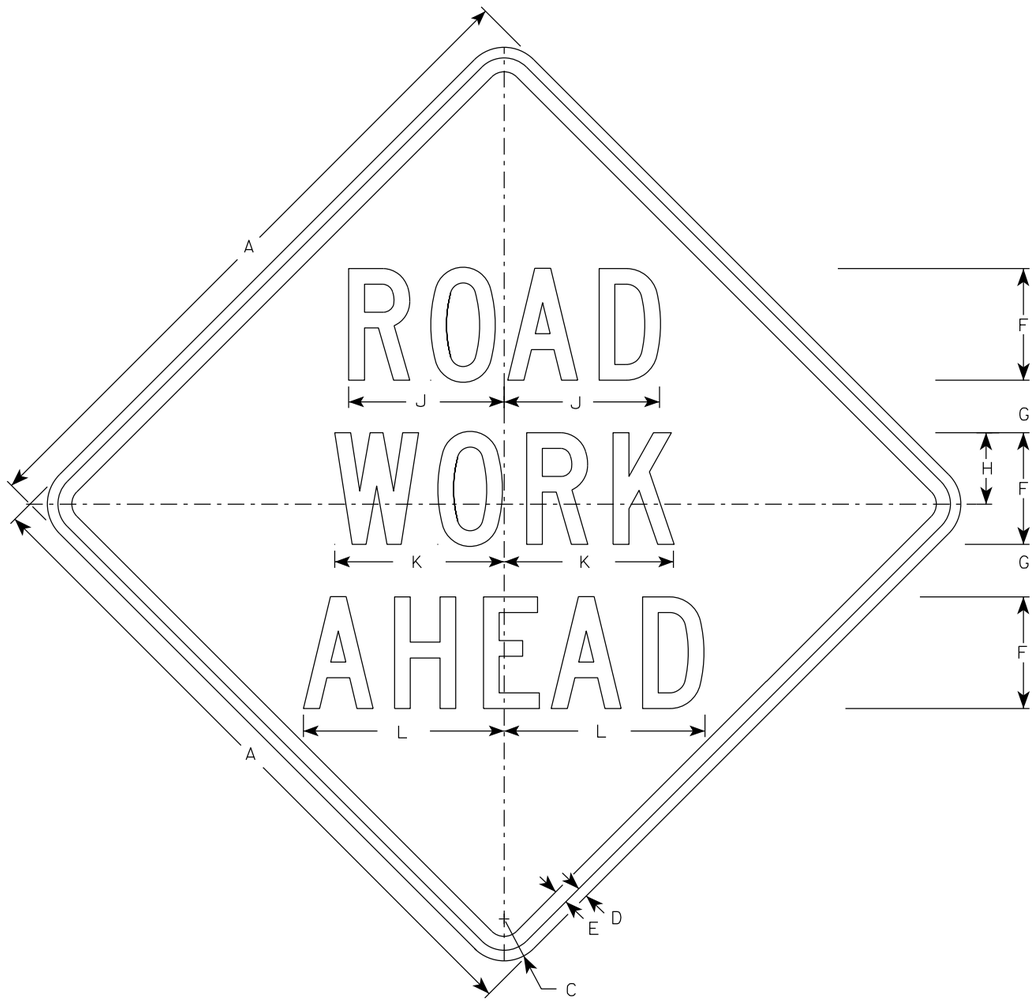

W20-1A

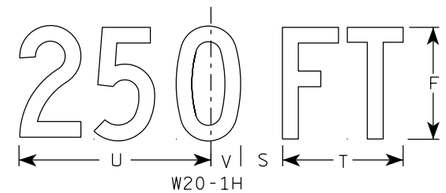

W20-1H

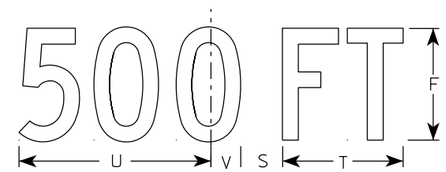

W20-1D

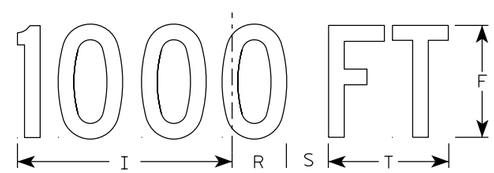

W20-1C

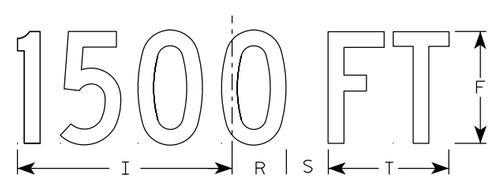

W20-1B

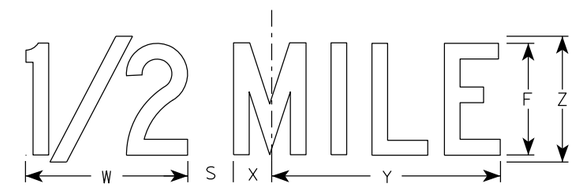

W20-1G

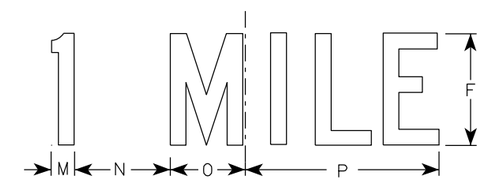

W20-1F

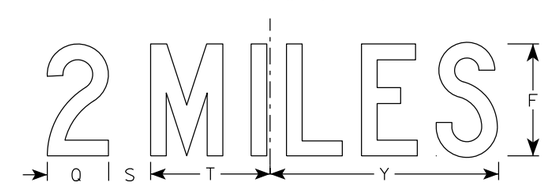

W20-1E

SIZE	A	B	C	D	E	F	G	H	I	J	K	L	M	N	O	P	Q	R	S	T	U	V	W	X	Y	Z	Area sq. ft.
1	36		2 1/4	5/8	3/4	5	2 5/8	3 1/4	10 1/8	7	7 5/8	8 7/8	1 1/8	4 1/2	3 1/2	9	3 1/4	2 1/2	2 1/4	5 5/8	9	1 3/8	8	1 3/4	10 3/4	6	9.0
2S	48		3	3/4	1	8	3 3/4	5 1/8	15 3/8	11 1/8	12 1/8	14 3/8	1 5/8	6 7/8	5 3/8	13 7/8	4 3/8	3 7/8	3	8 5/8	13 3/4	2 1/8	11 7/8	2 3/4	16 3/8	9	16.0
2M	48		3	3/4	1	8	3 3/4	5 1/8	15 3/8	11 1/8	12 1/8	14 3/8	1 5/8	6 7/8	5 3/8	13 7/8	4 3/8	3 7/8	3	8 5/8	13 3/4	2 1/8	11 7/8	2 3/4	16 3/8	9	16.0
3	48		3	3/4	1	8	3 3/4	5 1/8	15 3/8	11 1/8	12 1/8	14 3/8	1 5/8	6 7/8	5 3/8	13 7/8	4 3/8	3 7/8	3	8 5/8	13 3/4	2 1/8	11 7/8	2 3/4	16 3/8	9	16.0
4	48		3	3/4	1	8	3 3/4	5 1/8	15 3/8	11 1/8	12 1/8	14 3/8	1 5/8	6 7/8	5 3/8	13 7/8	4 3/8	3 7/8	3	8 5/8	13 3/4	2 1/8	11 7/8	2 3/4	16 3/8	9	16.0
5	48		3	3/4	1	8	3 3/4	5 1/8	15 3/8	11 1/8	12 1/8	14 3/8	1 5/8	6 7/8	5 3/8	13 7/8	4 3/8	3 7/8	3	8 5/8	13 3/4	2 1/8	11 7/8	2 3/4	16 3/8	9	16.0

STANDARD SIGN
W20-1A, B, C, D, E, F, G & H

WISCONSIN DEPT OF TRANSPORTATION

APPROVED Matthew R Rauch
for State Traffic Engineer

DATE 1/10/2024 PLATE NO. W20-1.12

PROJECT NO:

SHEET NO: 170 E

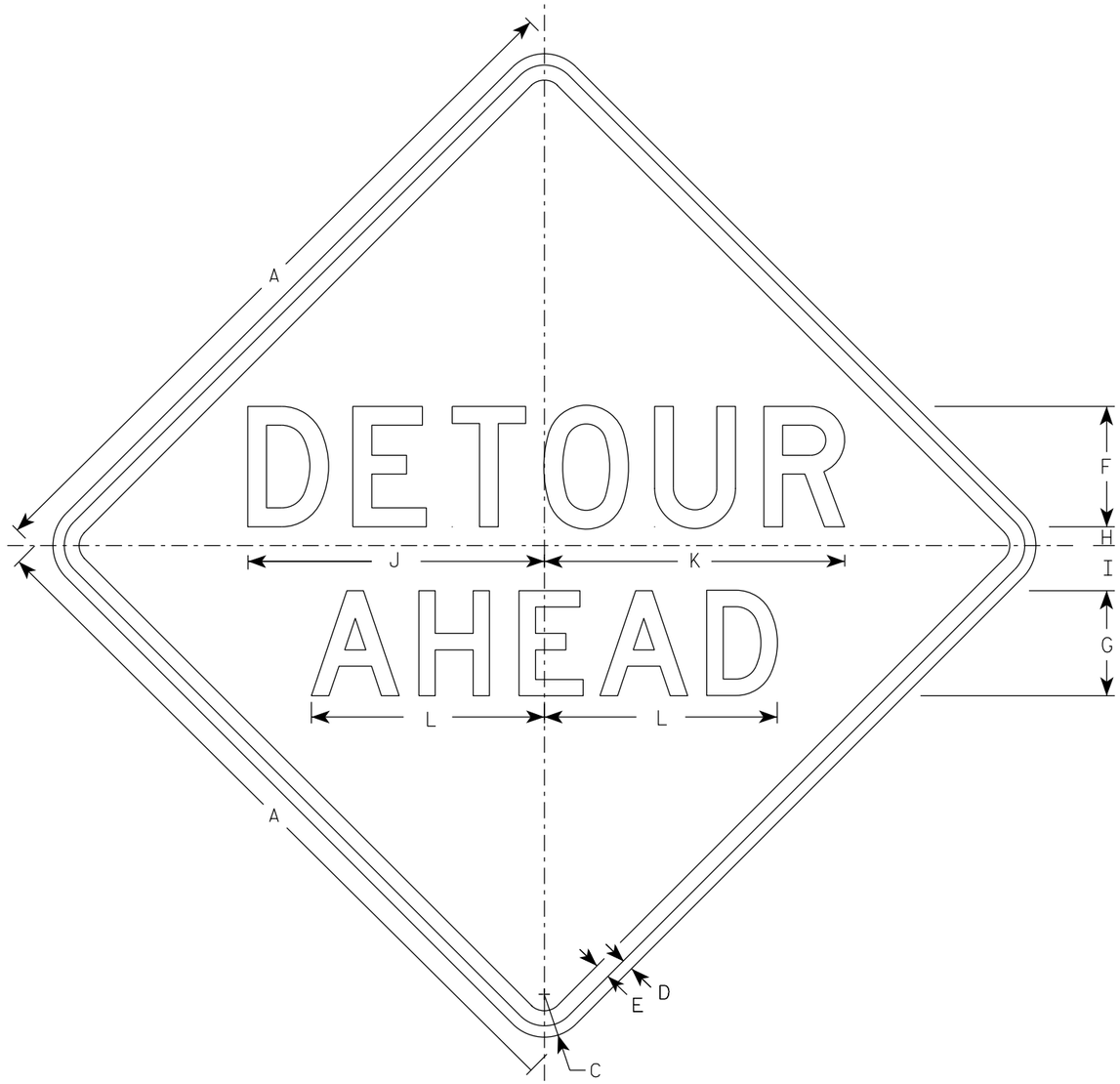

W20-2A

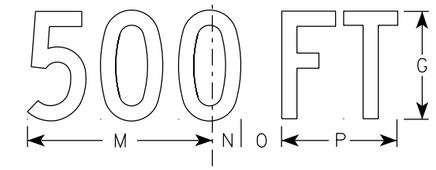

W20-2D

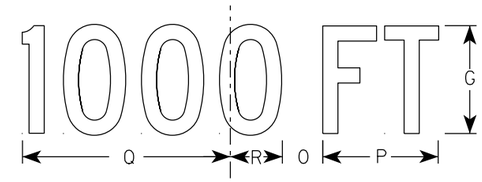

W20-2C

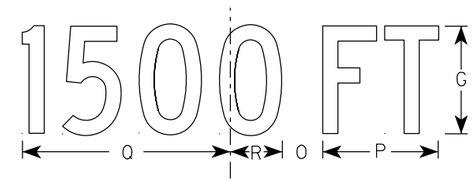

W20-2B

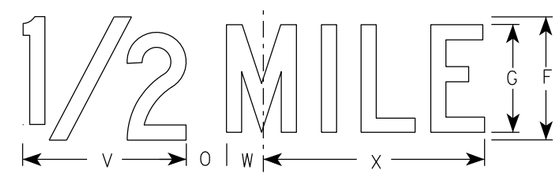

W20-2G

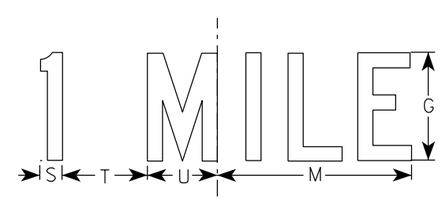

W20-2F

NOTES

1. Sign is Type II - Type F Reflective
2. Color:
   Background - Orange
   Message - Black
3. Message Series - See note 5
4. Corners may be square or rounded when base material is plywood but borders shall be rounded as shown. When base material is metal, the corners and borders shall be rounded.
5. Line 1 is Series D.
   Line 2 is Series D for AHEAD and Series C for all other distances.

SIZE	A	B	C	D	E	F	G	H	I	J	K	L	M	N	O	P	Q	R	S	T	U	V	W	X	Y	Z	Area sq. ft.
1	36		2 1/4	5/8	3/4	6	5	1	2 1/4	14 3/4	15	11 5/8	9	1 3/8	1 7/8	5 5/8	10 1/8	2 1/2	1 1/8	4 1/2	3 1/2	8	1 3/4	10 3/4			9.0
2S	48		3	3/4	1	8	7	1 1/4	3	19 3/4	20	15 1/2	12	1 7/8	2 5/8	7 1/2	13 1/2	3 3/8	1 1/2	6	4 5/8	10 5/8	2 3/8	14 3/8			16.0
2M	48		3	3/4	1	8	7	1 1/4	3	19 3/4	20	15 1/2	12	1 7/8	2 5/8	7 1/2	13 1/2	3 3/8	1 1/2	6	4 5/8	10 5/8	2 3/8	14 3/8			16.0
3	48		3	3/4	1	8	7	1 1/4	3	19 3/4	20	15 1/2	12	1 7/8	2 5/8	7 1/2	13 1/2	3 3/8	1 1/2	6	4 5/8	10 5/8	2 3/8	14 3/8			16.0
4	48		3	3/4	1	8	7	1 1/4	3	19 3/4	20	15 1/2	12	1 7/8	2 5/8	7 1/2	13 1/2	3 3/8	1 1/2	6	4 5/8	10 5/8	2 3/8	14 3/8			16.0
5	48		3	3/4	1	8	7	1 1/4	3	19 3/4	20	15 1/2	12	1 7/8	2 5/8	7 1/2	13 1/2	3 3/8	1 1/2	6	4 5/8	10 5/8	2 3/8	14 3/8			16.0

STANDARD SIGN
W20-2A,B,C,D,F & G

WISCONSIN DEPT OF TRANSPORTATION

APPROVED Matthew R Rauch
For State Traffic Engineer

DATE 1/10/2024 PLATE NO. W20-2.7

PROJECT NO: | HWY: | COUNTY: | SHEET NO: E

DIVISION 2 - CTHYY-WEST

STATION	REAL STATION	DISTANCE	AREA (SF)			INCREMENTAL VOL (CY) (UNADJUSTED)			CUMULATIVE VOL (CY)		
			CUT	SALVAGED/UNUSABLE PAVEMENT MATERIAL	FILL	CUT NOTE 1	SALVAGED/UNUSABLE PAVEMENT MATERIAL NOTE 2	FILL NOTE 3	CUT 1.00 NOTE 1	EXPANDED FILL 1.25	MASS ORDINATE
12+42.28	1242.28	0.00	40.56	5.00	0.00	0	0	0	0	0	0
12+50.00	1250.00	7.72	41.39	10.00	0.00	12	2	0	12	0	10
13+00.00	1300.00	50	56.89	10.00	2.64	91	19	2	103	3	80
13+50.00	1350.00	50	123.83	10.00	5.75	167	19	8	270	13	218
13+60.00	1360.00	10	168.85	10.00	1.60	54	4	1	324	14	266
13+70.00	1370.00	10	126.18	10.00	27.25	55	4	5	379	20	311
13+80.00	1380.00	10	196.20	10.00	1.74	60	4	5	439	26	361
13+90.00	1390.00	10	181.83	10.00	1.52	70	4	1	509	28	426
14+00.00	1400.00	10	87.03	10.00	13.59	50	4	3	559	31	468
14+10.00	1410.00	10	25.22	10.00	11.81	21	4	5	580	38	479
14+23.00	1423.00	13	3.52	5.00	0.00	7	4	3	587	41	478

DIVISION 2 - CTHYY-EAST

STATION	REAL STATION	DISTANCE	AREA (SF)			INCREMENTAL VOL (CY) (UNADJUSTED)			CUMULATIVE VOL (CY)		
			CUT	SALVAGED/UNUSABLE PAVEMENT MATERIAL	FILL	CUT NOTE 1	SALVAGED/UNUSABLE PAVEMENT MATERIAL NOTE 2	FILL NOTE 3	CUT 1.00 NOTE 1	EXPANDED FILL 1.25	MASS ORDINATE
20+06.61	2006.61	0.00	18.77	10.00	0.00	0	0	0	0	0	0
20+15.00	2015.00	8.39	3.52	10.00	18.96	3	3	3	3	4	-4
20+20.52	2020.52	5.52	87.66	10.00	32.47	9	2	5	12	10	-3
20+30.00	2030.00	9.48	137.72	10.00	6.68	40	4	7	52	19	24
20+40.00	2040.00	10	90.79	10.00	16.71	42	4	4	94	24	57
20+50.00	2050.00	10	99.03	10.00	33.02	35	4	9	129	35	77
20+60.00	2060.00	10	132.06	10.00	0.62	43	4	6	172	43	109
20+70.00	2070.00	10	200.07	10.00	0.71	62	4	0	234	43	167
20+80.00	2080.00	10	169.03	10.00	3.44	68	4	1	302	44	229
21+00.00	2100.00	20	117.00	10.00	2.62	106	7	2	408	46	326
21+50.00	2150.00	50	78.29	10.00	1.42	181	19	4	589	51	483
22+00.00	2200.00	50	51.46	10.00	1.29	120	19	3	709	55	580
22+50.00	2250.00	50	56.19	10.00	0.05	100	19	1	809	56	660
23+00.00	2300.00	50	48.71	10.00	0.00	97	19	0	906	56	738
23+50.00	2350.00	50	51.72	14.00	0.00	93	22	0	999	56	809
23+75.00	2375.00	25	38.60	10.00	0.00	42	11	0	1041	56	840

DIVISION 2 - STH73

STATION	REAL STATION	DISTANCE	AREA (SF)			INCREMENTAL VOL (CY) (UNADJUSTED)			CUMULATIVE VOL (CY)		
			CUT	SALVAGED/UNUSABLE PAVEMENT MATERIAL	FILL	CUT NOTE 1	SALVAGED/UNUSABLE PAVEMENT MATERIAL NOTE 2	FILL NOTE 3	CUT 1.00 NOTE 1	EXPANDED FILL 1.25	MASS ORDINATE
313+27.75	31327.75	0.00	0.34	0.00	2.32	0	0.00	0	0	0	0
313+50.00	31350.00	22.25	5.38	0.00	1.73	2	0.00	2	2	3	-1
313+55.63	31355.63	5.63	7.78	0.00	1.62	1	0.00	0	3	3	1
314+00.00	31400.00	44.37	57.63	0.00	3.73	54	0.00	4	57	8	50
314+05.90	31405.90	5.90	70.21	0.00	4.68	14	0.00	1	71	9	62
314+50.00	31450.00	44.10	61.21	0.00	0.00	107	0.00	4	178	14	164
314+50.74	31450.74	0.74	64.33	0.00	0.00	2	0.00	0	180	14	166
315+69.45	31569.45	0.00	11.11	0.00	1.40	0	0.00	0	180	14	166
315+88.69	31588.69	19.24	28.03	0.00	0.20	14	0.00	1	194	15	179
316+00.00	31600.00	11.31	2.40	0.00	0.00	6	0.00	0	200	15	185
316+16.73	31616.73	16.73	0.51	0.00	0.00	1	0.00	0	201	15	186

NOTES:	
1 - CUT	CUT INCLUDES SALVAGED/UNUSABLE PAVEMENT MATERIAL
2 - SALVAGED/UNUSABLE PAVEMENT MATERIAL	THIS DOES NOT SHOW UP IN CROSS SECTIONS
3 - FILL	DOES NOT INCLUDE UNUSABLE PAVEMENT EXC VOLUME

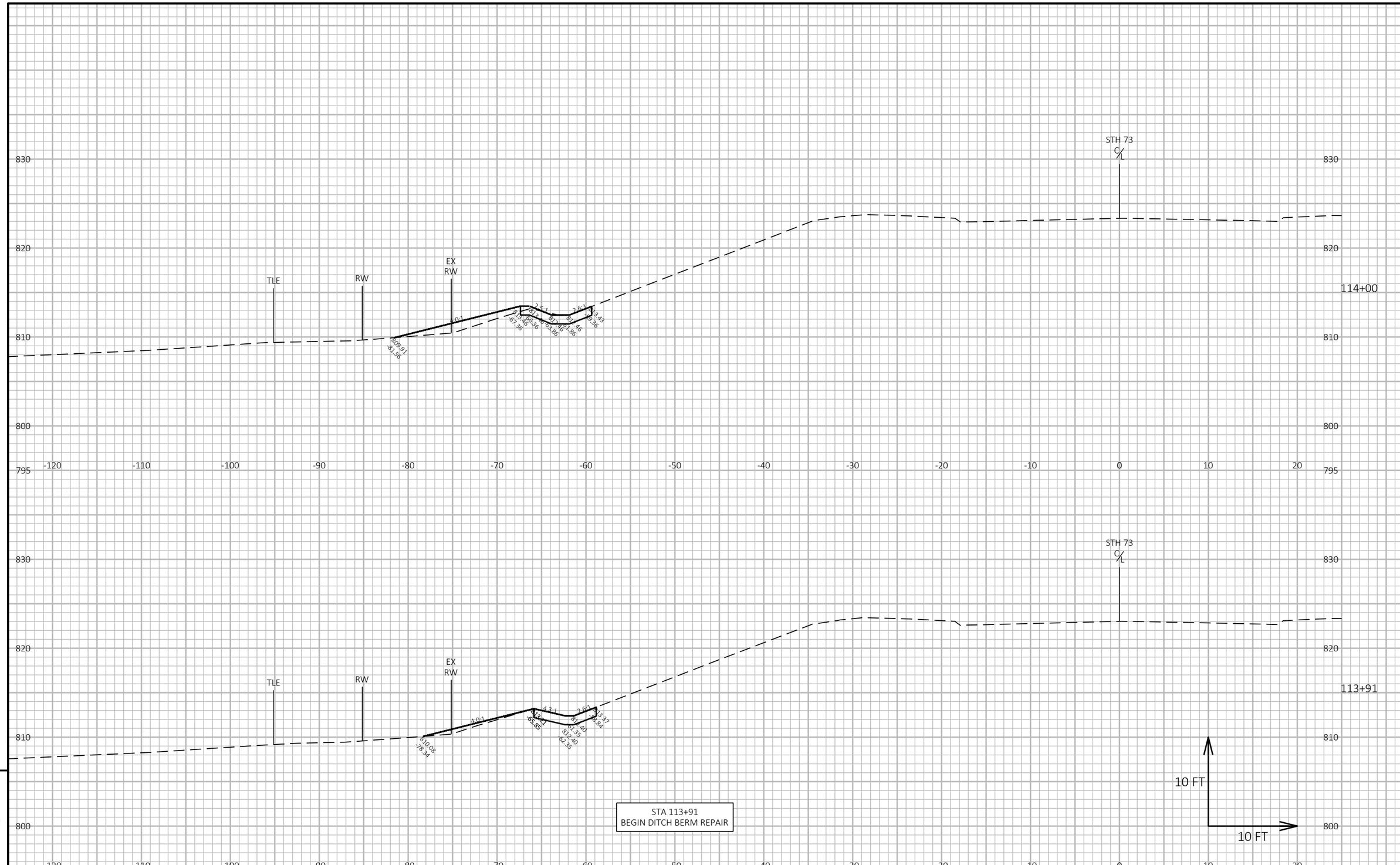

9

9

PROJECT NO: 6530-01-70	HWY: STH 73	COUNTY: WAUSHARA	CROSS SECTIONS: STH 73 - DITCH BERM REPAIR	SHEET 173	E

FILE NAME : H:\PROJECTS\16000\16221\TECHDATA\65300100\SHEETS\090203-XS-DITCH.DWG
LAYOUT NAME - 01
PLOT DATE : 10/20/2025 4:36 PM
PLOT BY : BRIAN GENSKOW
PLOT NAME :
PLOT SCALE : 1 IN:10 FT HORZ. / 1 IN:10 FT VERT.

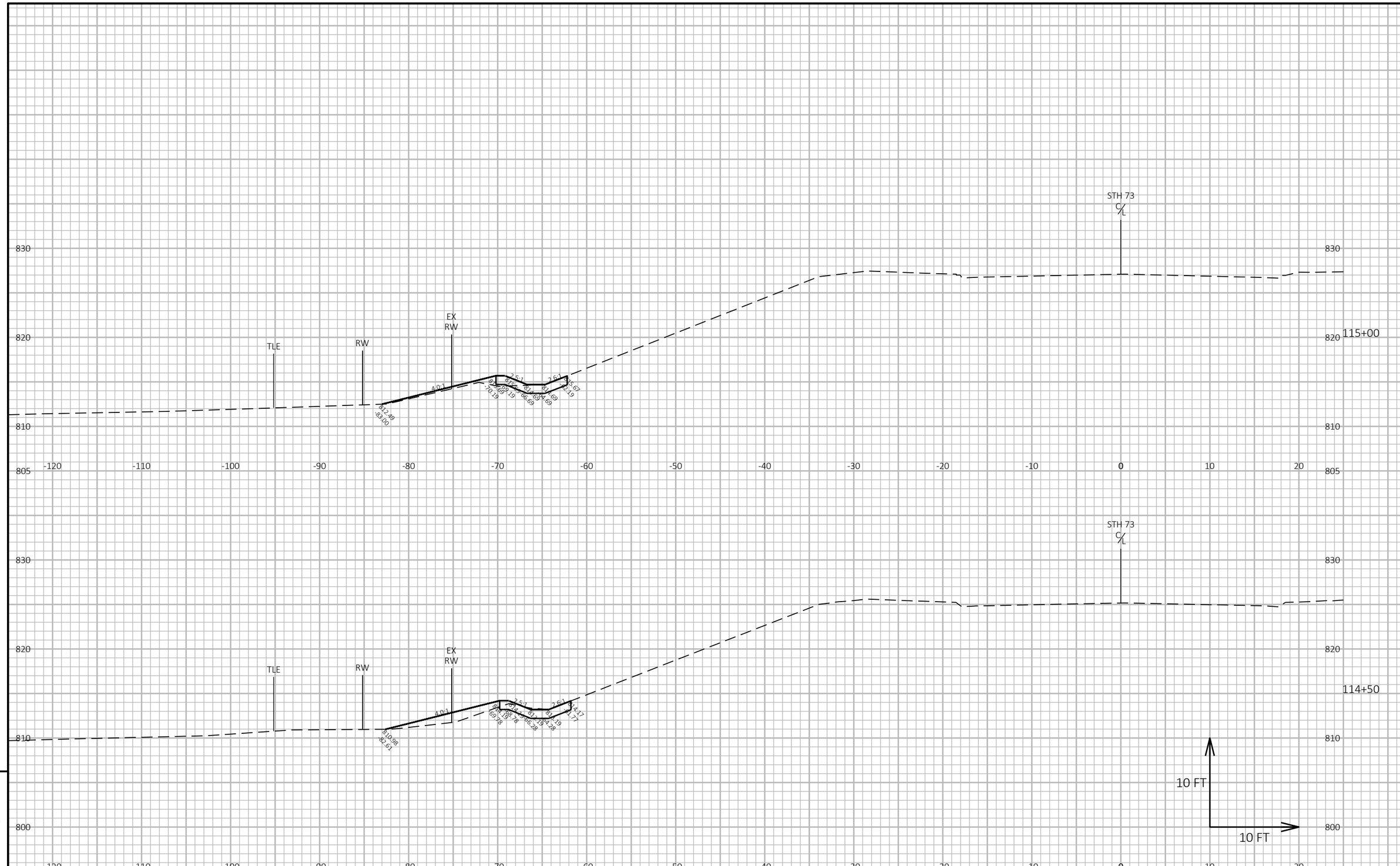

9

9

PROJECT NO: 6530-01-70	HWY: STH 73	COUNTY: WAUSHARA	CROSS SECTIONS: STH 73 - DITCH BERM REPAIR	SHEET 174	E

FILE NAME : H:\PROJECTS\16000\16221\TECHDATA\65300100\SHEETS\090203-XS-DITCH.DWG
LAYOUT NAME - 02
PLOT DATE : 10/20/2025 4:36 PM
PLOT BY : BRIAN GENSKOW
PLOT NAME :
PLOT SCALE : 1 IN:10 FT HORZ. / 1 IN:10 FT VERT.

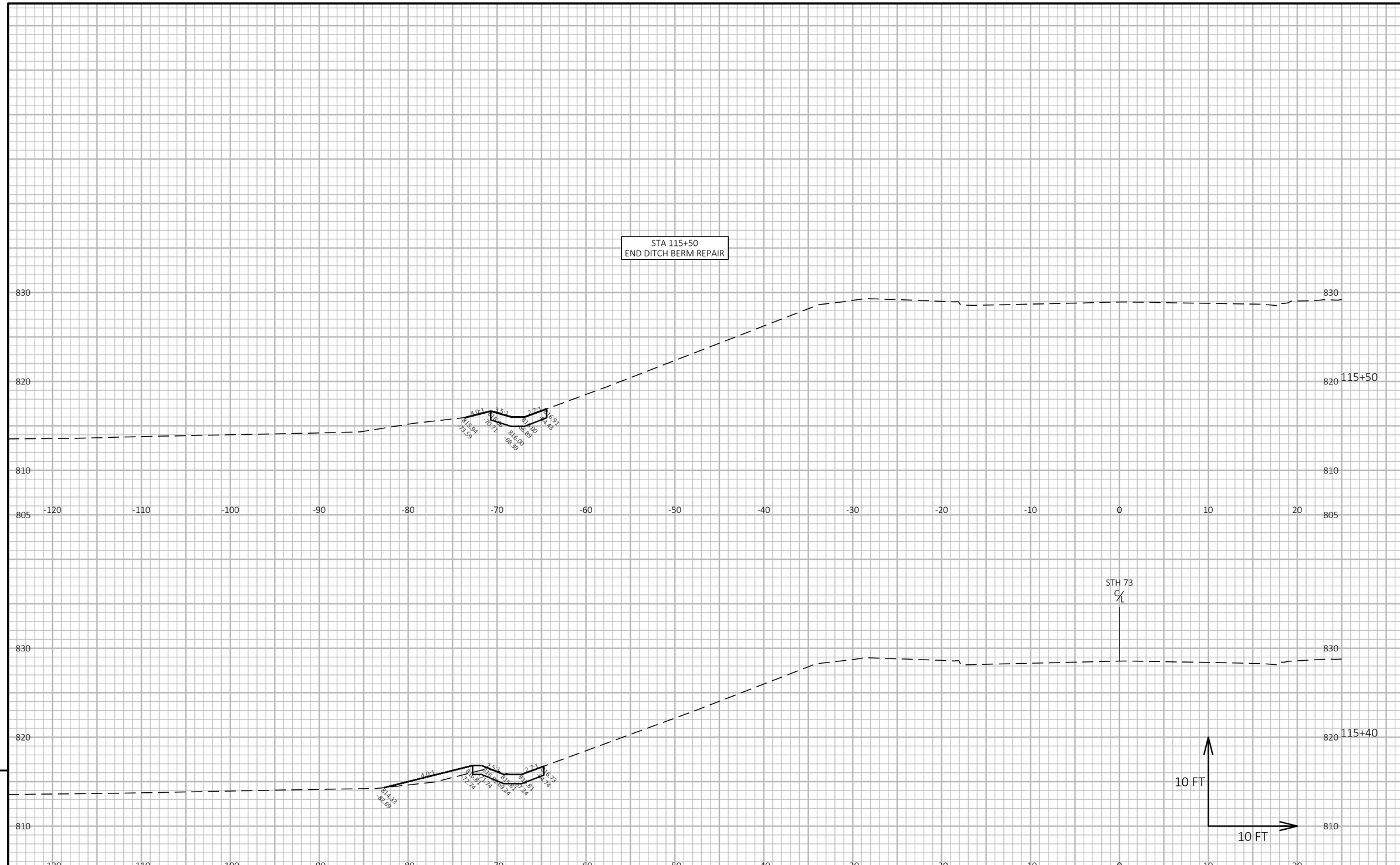

9

9

PROJECT NO: 6530-01-70	HWY: STH 73	COUNTY: WAUSHARA	CROSS SECTIONS: STH 73 - DITCH BERM REPAIR	SHEET 175	E

FILE NAME : H:\PROJECTS\16000\16221\TECHDATA\65300100\SHEETS\090203-XS-DITCH.DWG
LAYOUT NAME - 03
PLOT DATE : 10/20/2025 4:36 PM
PLOT BY : BRIAN GENSKOW
PLOT NAME :
PLOT SCALE : 1 IN:10 FT HORZ. / 1 IN:10 FT VERT.

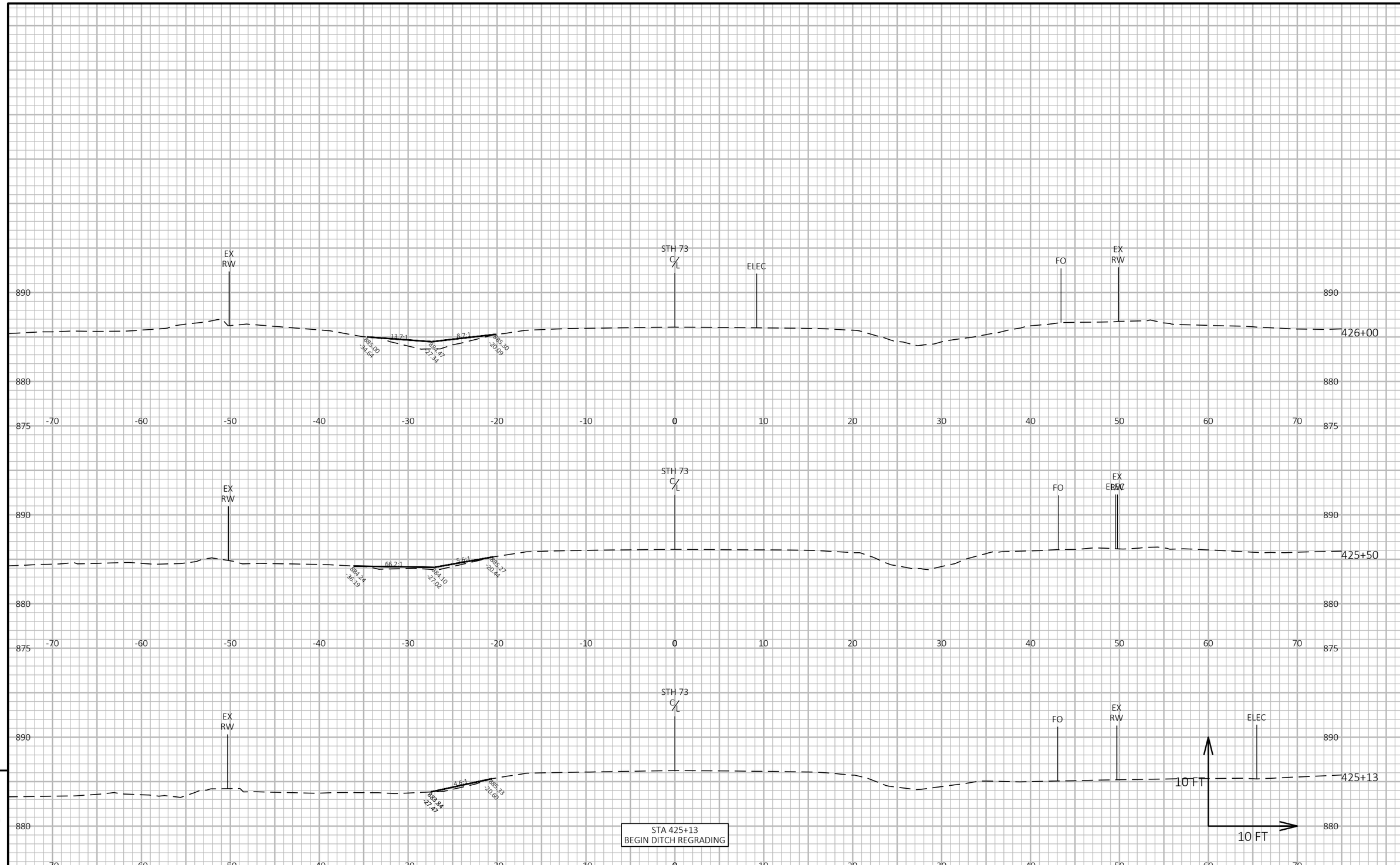

9

9

PROJECT NO: 6530-01-70	HWY: STH 73	COUNTY: WAUSHARA	CROSS SECTIONS: STH 73 - DITCH GRADING	SHEET 176	E

FILE NAME : H:\PROJECTS\16000\16221\TECHDATA\65300100\SHEETS\090204-XS-COTTONVILLEDITCH.DWG
LAYOUT NAME - 01
PLOT DATE : 10/20/2025 4:36 PM
PLOT BY : BRIAN GENSKOW
PLOT NAME :
PLOT SCALE : 1 IN:10 FT HORZ. / 1 IN:10 FT VERT.
WISDOT/CADDS SHEET 49

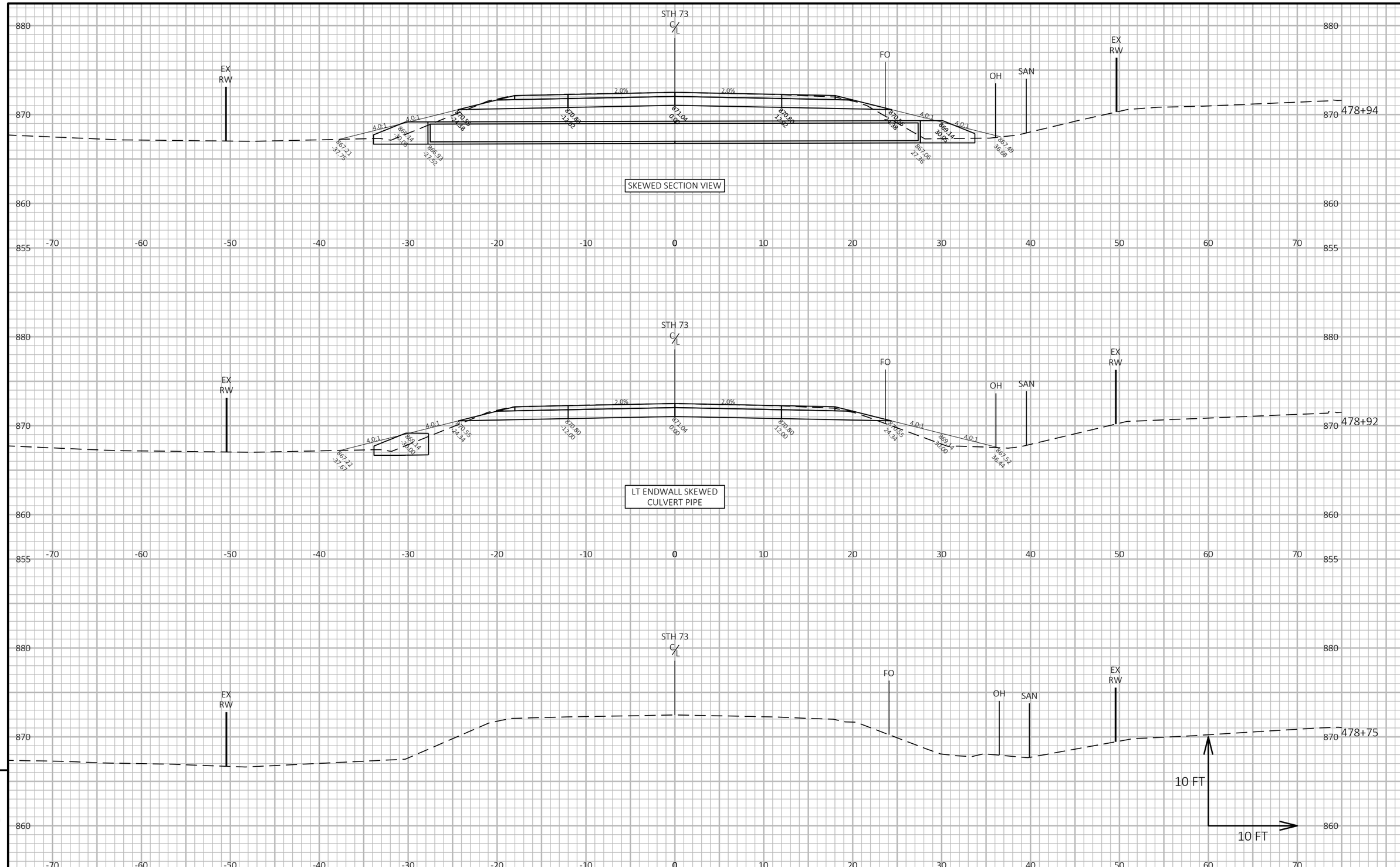

PROJECT NO: 6530-01-70	HWY: STH 73	COUNTY: WAUSHARA	CROSS SECTIONS: STH 73 - CULVERT	SHEET 177	E

FILE NAME : H:\PROJECTS\16000\16221\TECHDATA\65300100\SHEETS\090202-XS-CULVERT.DWG
LAYOUT NAME - 02
PLOT DATE : 10/20/2025 4:37 PM
PLOT BY : BRIAN GENSKOW
PLOT NAME :
PLOT SCALE : 1 IN:10 FT HORZ. / 1 IN:10 FT VERT.
WISDOT/CADDS SHEET 49

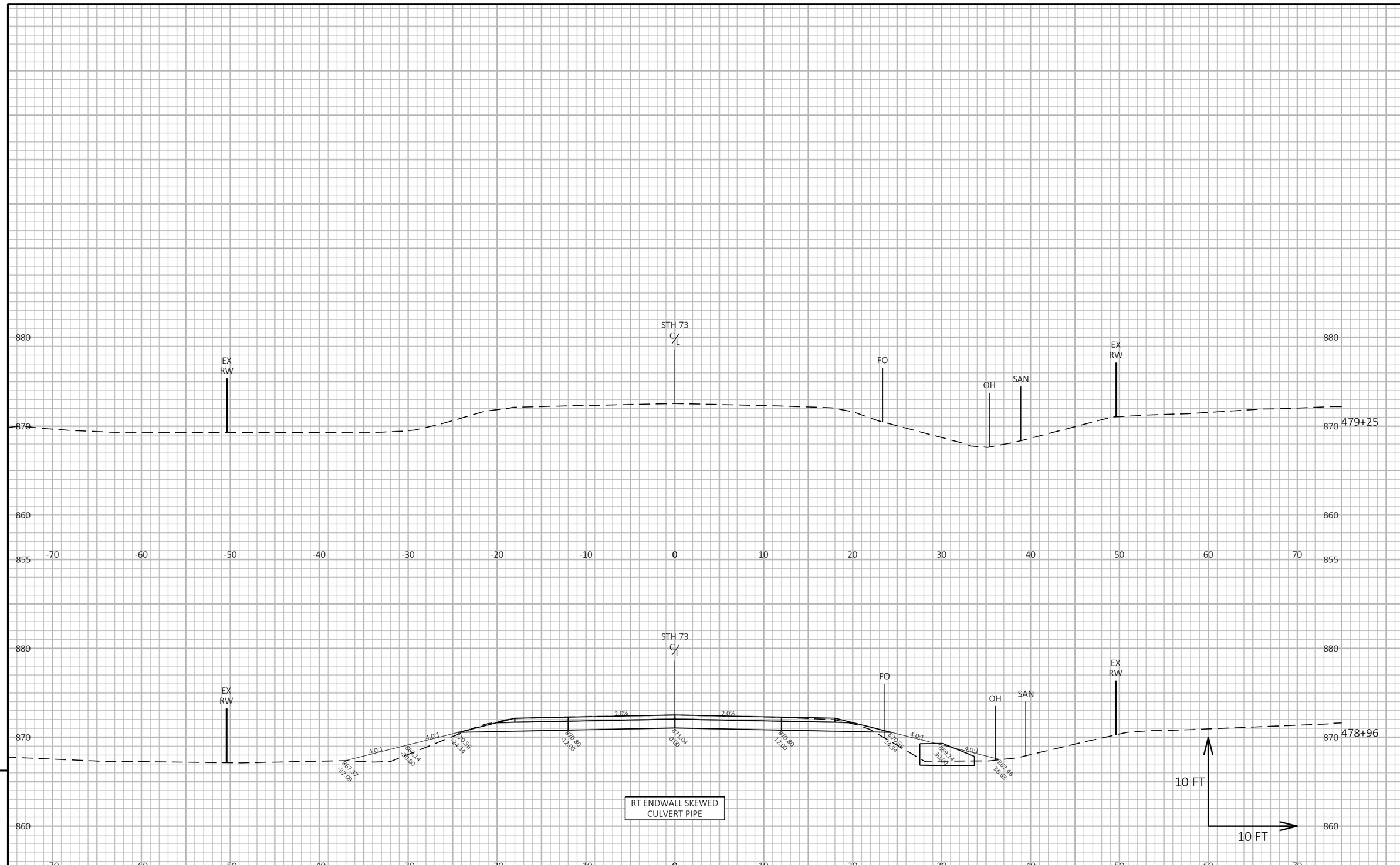

PROJECT NO: 6530-01-70	HWY: STH 73	COUNTY: WAUSHARA	CROSS SECTIONS: STH 73 - CULVERT	SHEET 178	E

FILE NAME : H:\PROJECTS\16000\16221\TECHDATA\65300100\SHEETS\090202-XS-CULVERT.DWG
LAYOUT NAME - 03
PLOT DATE : 10/20/2025 4:37 PM
PLOT BY : BRIAN GENSKOW
PLOT NAME :
PLOT SCALE : 1 IN:10 FT HORZ. / 1 IN:10 FT VERT.

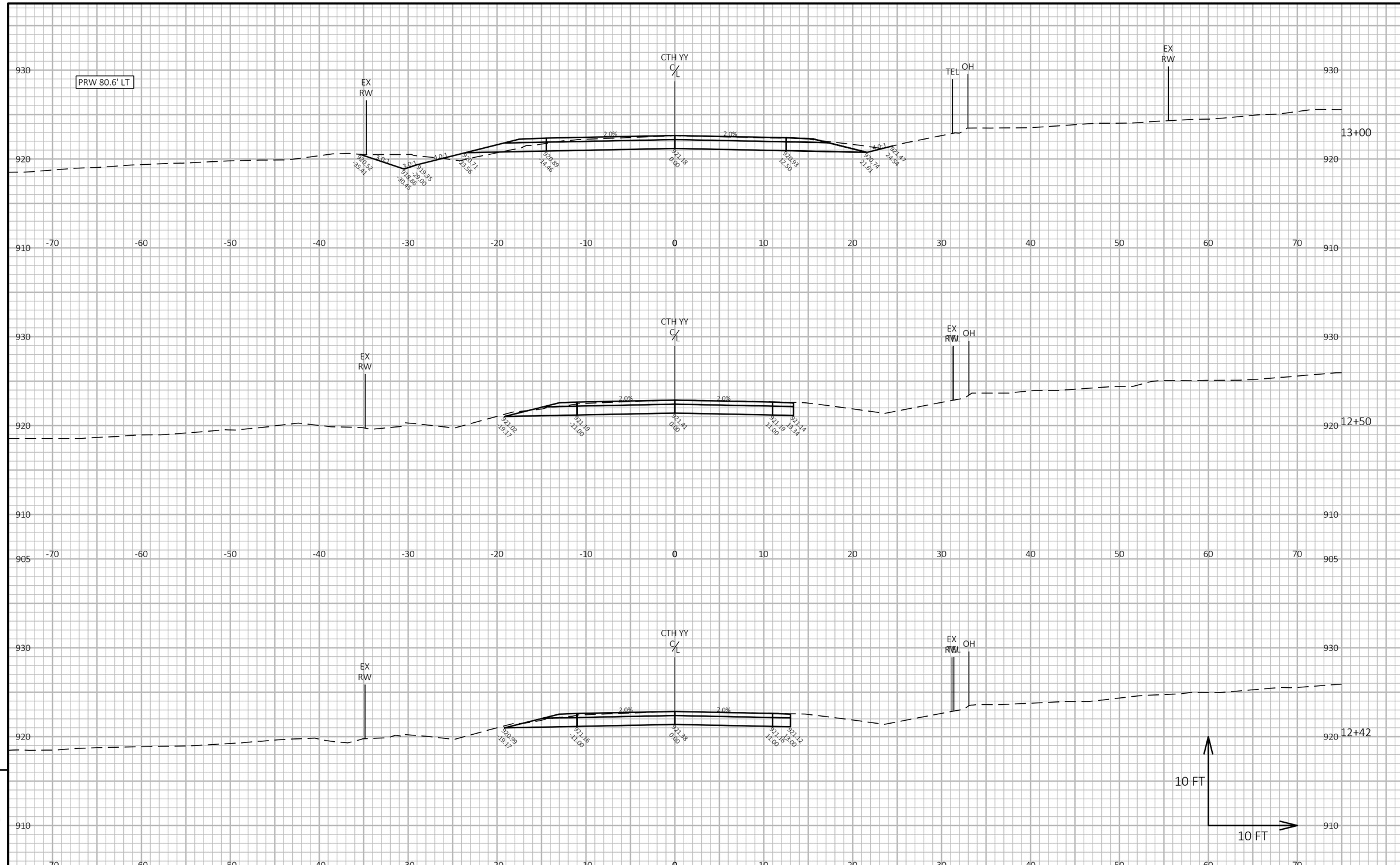

PROJECT NO: 6530-01-70	HWY: STH 73	COUNTY: WAUSHARA	CROSS SECTIONS: CTH YY-WEST	SHEET 179	E

FILE NAME : H:\PROJECTS\16000\16221\TECHDATA\65300100\SHEETS\090201-XS-CTH YY.DWG
LAYOUT NAME - 04
PLOT DATE : 10/20/2025 4:37 PM
PLOT BY : BRIAN GENSKOW
PLOT NAME :
PLOT SCALE : 1 IN:10 FT HORZ. / 1 IN:10 FT VERT.
WISDOT/CADDS SHEET 49

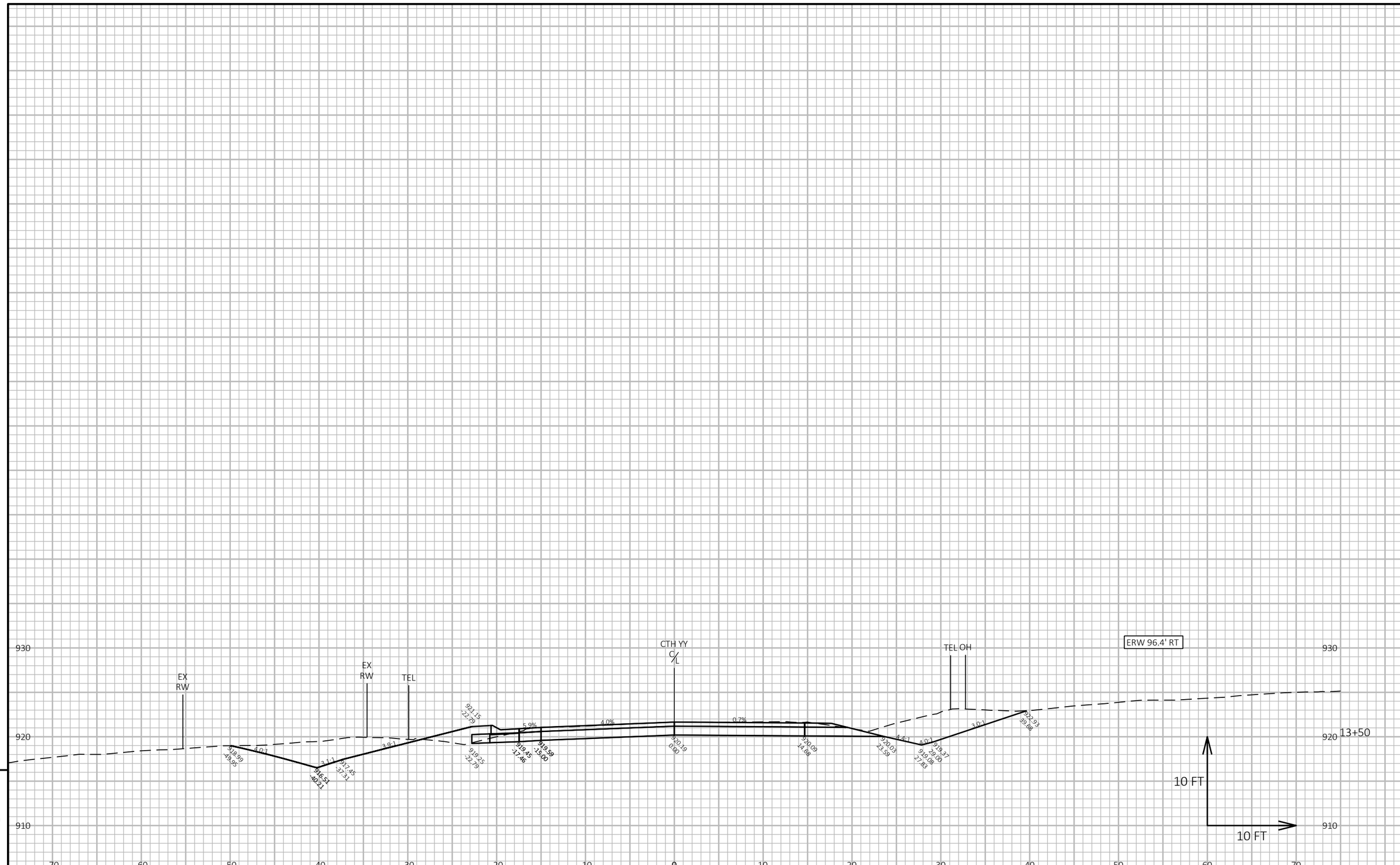

PROJECT NO: 6530-01-70	HWY: STH 73	COUNTY: WAUSHARA	CROSS SECTIONS: CTH YY-WEST	SHEET 180	E

FILE NAME : H:\PROJECTS\16000\16221\TECHDATA\65300100\SHEETS\090201-XS-CTH YY.DWG
LAYOUT NAME - 05
PLOT DATE : 10/20/2025 4:37 PM
PLOT BY : BRIAN GENSKOW
PLOT NAME :
PLOT SCALE : 1 IN:10 FT HORZ. / 1 IN:10 FT VERT.
WISDOT/CADDS SHEET 49

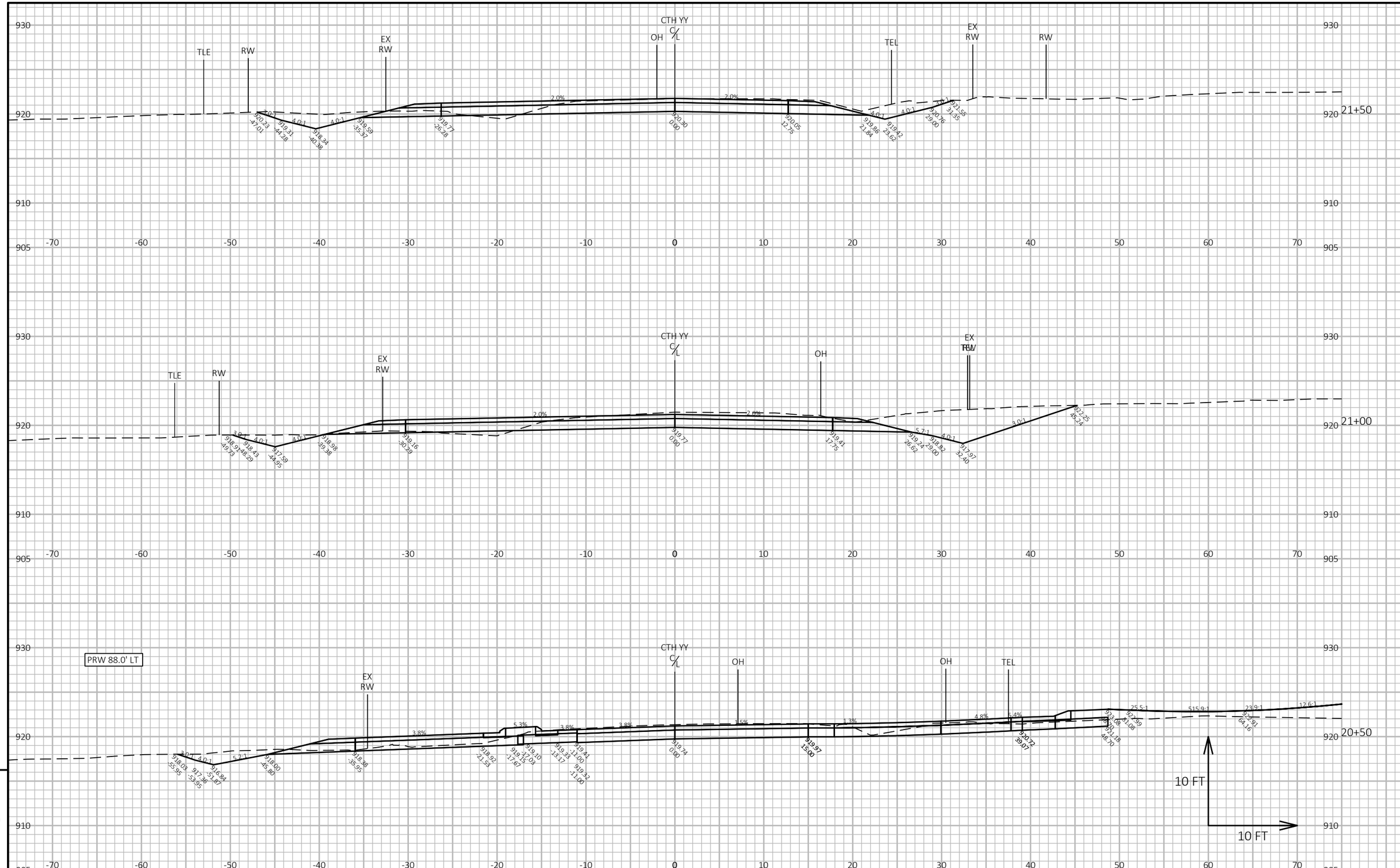

PROJECT NO: 6530-01-70	HWY: STH 73	COUNTY: WAUSHARA	CROSS SECTIONS: CTH YY-EAST	SHEET 181	E

FILE NAME : H:\PROJECTS\16000\16221\TECHDATA\65300100\SHEETS\090201-XS-CTH YY.DWG
LAYOUT NAME - 06
PLOT DATE : 10/20/2025 4:37 PM
PLOT BY : BRIAN GENSKOW
PLOT NAME :
PLOT SCALE : 1 IN:10 FT HORZ. / 1 IN:10 FT VERT.
WISDOT/CADDS SHEET 49

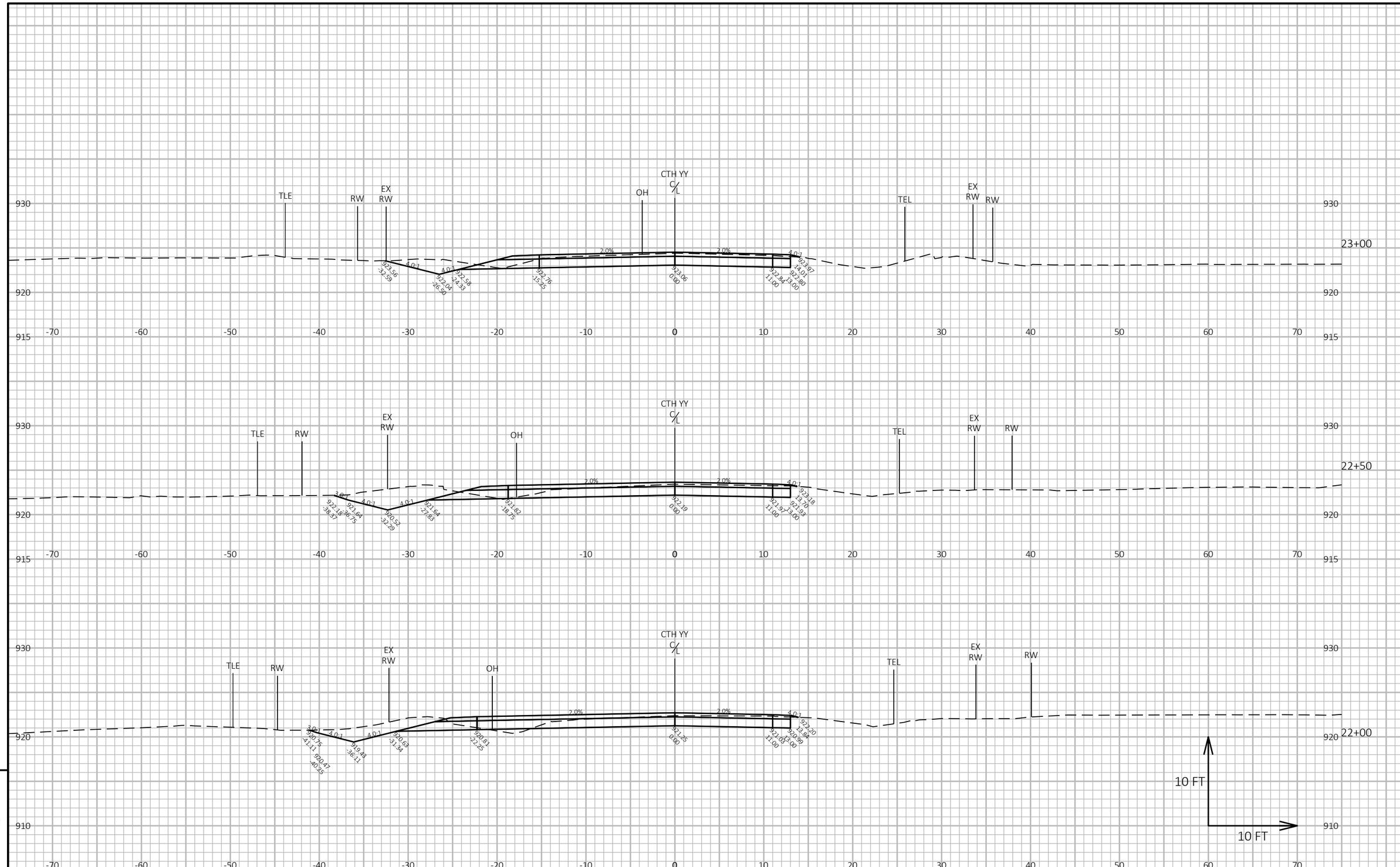

PROJECT NO: 6530-01-70	HWY: STH 73	COUNTY: WAUSHARA	CROSS SECTIONS: CTH YY-EAST	SHEET 182	E

FILE NAME : H:\PROJECTS\16000\16221\TECHDATA\65300100\SHEETS\090201-XS-CTH YY.DWG
LAYOUT NAME - 07
PLOT DATE : 10/20/2025 4:37 PM
PLOT BY : BRIAN GENSKOW
PLOT NAME :
PLOT SCALE : 1 IN:10 FT HORZ. / 1 IN:10 FT VERT.

WISDOT/CADDS SHEET 49

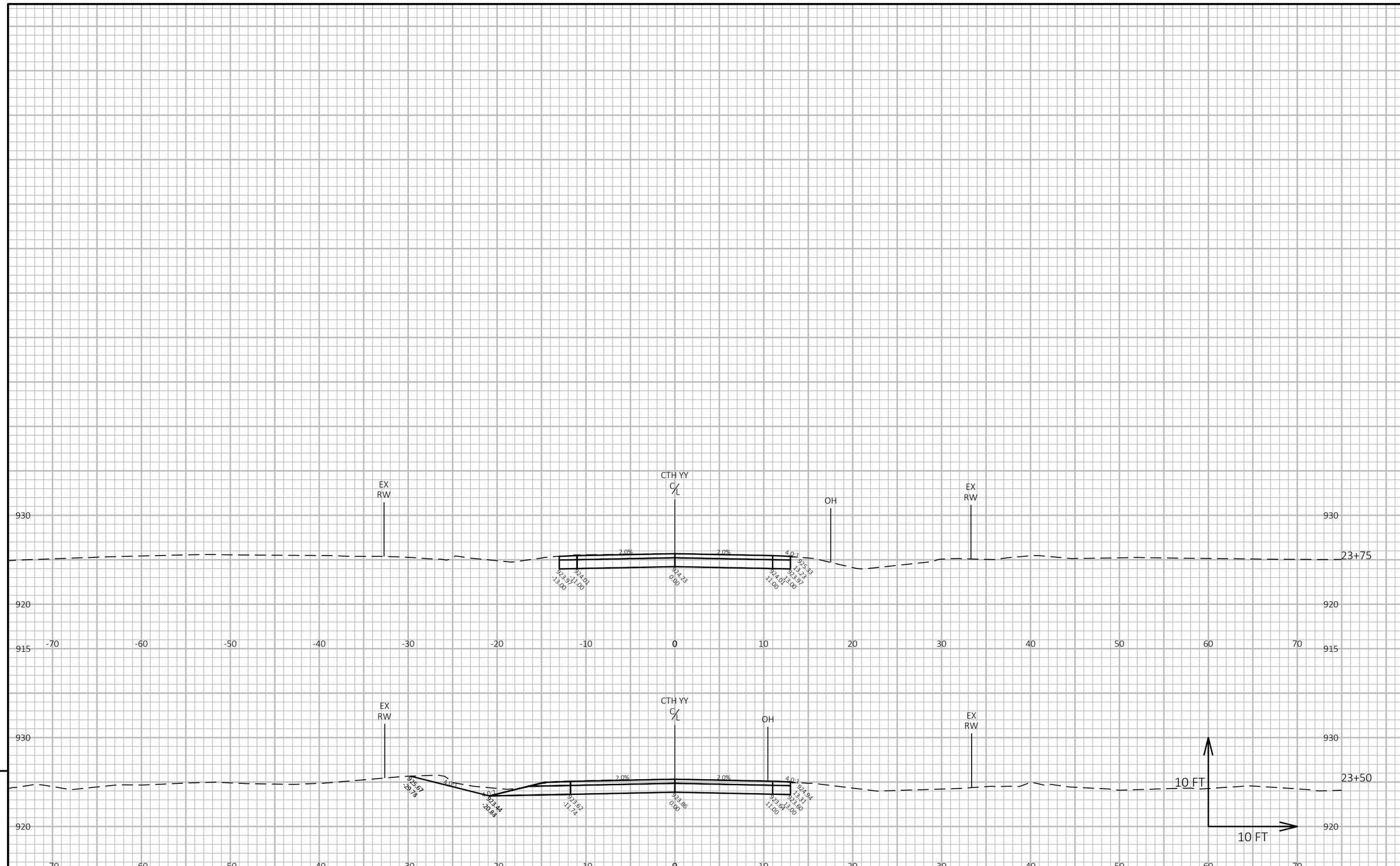

PROJECT NO: 6530-01-70	HWY: STH 73	COUNTY: WAUSHARA	CROSS SECTIONS: CTH YY-EAST	SHEET 183	E

FILE NAME : H:\PROJECTS\16000\16221\TECHDATA\65300100\SHEETS\090201-XS-CTH YY.DWG
LAYOUT NAME - 08
PLOT DATE : 10/20/2025 4:37 PM
PLOT BY : BRIAN GENSKOW
PLOT NAME :
PLOT SCALE : 1 IN:10 FT HORZ. / 1 IN:10 FT VERT.

Wisconsin Department of Transportation

Dedicated people creating transportation solutions through innovation and exceptional service.

http://www.dot.wisconsin.gov