WIS

PROJECT ID: 1510-02-60

WITH:

COUNTY: WAUPACA

AUGUST 2026

ORDER OF SHEETS

Section No.	1	Title
Section No.	2	Typical Sections and Details
Section No.	3	Estimate of Quantities
Section No.	3	Miscellaneous Quantities
~~Section No.~~	~~4~~	~~Right of Way Plat~~
Section No.	5	Plan and Profile
Section No.	6	Standard Detail Drawings
Section No.	7	Sign Plates
Section No.	8	Structure Plans
Section No.	9	Computer Earthwork Data
Section No.	9	Cross Sections

TOTAL SHEETS = 348

STATE PROJECT	FEDERAL PROJECT	
	PROJECT	CONTRACT
1510-02-60	WISC 2026435	1

STATE OF WISCONSIN
DEPARTMENT OF TRANSPORTATION

PLAN OF PROPOSED IMPROVEMENT

WAUPACA - APPLETON

APPLETREE LANE TO OLD STH 49, EB

USH 10

WAUPACA

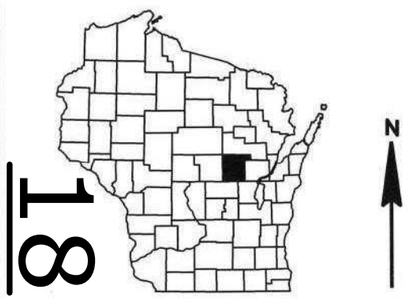

N

STATE PROJECT NUMBER

1510-02-60

BEGIN PROJECT 1510-02-60
STA 543+47.37
X: 546711.803
Y: 331667.272

STRUCTURE B-68-121

STRUCTURE B-68-104

END PROJECT 1510-02-60
STA 1016+92.15

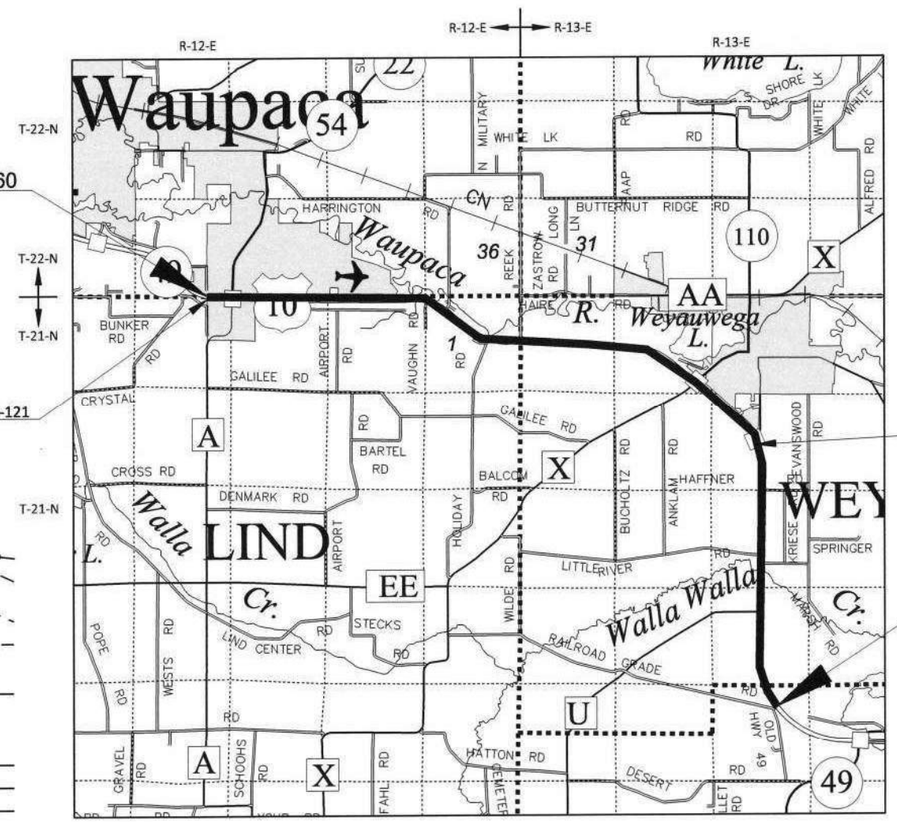

DESIGN DESIGNATION

A.A.D.T.	(2028)	=	10,810
A.A.D.T.	(2048)	=	12,600
D.H.V.		=	20.7%
D.D.		=	60/40
T.		=	24.7%
DESIGN SPEED		=	65 MPH
ESALS		=	12,080,000

CONVENTIONAL SYMBOLS

PLAN

CORPORATE LIMITS
PROPERTY LINE
LOT LINE
LIMITED HIGHWAY EASEMENT
EXISTING RIGHT OF WAY
PROPOSED OR NEW R/W LINE
SLOPE INTERCEPT
REFERENCE LINE (300'TR)
EXISTING CULVERT
PROPOSED CULVERT (Box or Pipe)
COMBUSTIBLE FLUIDS (CAUTION)
MARSH AREA
WOODED OR SHRUB AREA

PROFILE

GRADE LINE
ORIGINAL GROUND
MARSH OR ROCK PROFILE (To be noted as such) (ROCK)
SPECIAL DITCH (LABEL)
GRADE ELEVATION (95.36)
CULVERT (Profile View)

UTILITIES

ELECTRIC — E —
FIBER OPTIC — FO —
GAS — G —
SANITARY SEWER — SAN —
STORM SEWER — SS —
TELEPHONE — T —
WATER — W —
UTILITY PEDESTAL
POWER POLE
TELEPHONE POLE

LAYOUT

SCALE 0 — 1 MI

TOTAL NET LENGTH OF CENTERLINE = 8.967 MI

HORIZONTAL POSITIONS SHOWN ON THIS PLAN ARE WISCONSIN COORDINATE REFERENCE SYSTEM (WISCRS), WAUPACA COUNTY, NAD83 (2011), IN U.S. SURVEY FEET. POSITIONS SHOWN ARE GRID COORDINATES, GRID BEARINGS, AND GRID DISTANCES. GRID DISTANCES ARE THE SAME AS GROUND DISTANCES.

ELEVATIONS ARE REFERENCED TO NAVD 88 (2012). GPS DERIVED ELEVATIONS ARE BASED ON GEOID 18.

ORIGINAL PLANS PREPARED BY

benesch
247 W Freshwater Way, Suite 650
Milwaukee, WI 53204
414-308-[illegible] Job No. 20335.01

WISCONSIN PROFESSIONAL ENGINEER
BENJAMIN J. WEIGAND
E-39495
RACINE, WI

DATE: 7-23-25 (Professional Engineer Signature)

STATE OF WISCONSIN
DEPARTMENT OF TRANSPORTATION

PREPARED BY

Surveyor	SIGMA
Designer	BENESCH
Project Manager	KOREY BOEHM
Regional Examiner	FRED SCHUNKE
Regional Supervisor	KEVIN KUJAWA

APPROVED FOR THE DEPARTMENT

DATE: 7/24/25 Korey Boehm (Signature)

E

2

GENERAL NOTES

1. THE LOCATIONS OF EXISTING AND PROPOSED UTILITY INSTALLATIONS AS SHOWN ON THE PLANS ARE APPROXIMATE. THERE MAY BE OTHER UTILITY INSTALLATIONS WITHIN THE PROJECT AREA THAT ARE NOT SHOWN.
2. NO TREES OR SHRUBS ARE TO BE REMOVED WITHOUT THE APPROVAL OF THE ENGINEER.
3. THE COST OF GRADING, CONSTRUCTING, MAINTAINING, AND REMOVING TEMPORARY ACCESS IS INCIDENTAL TO THE CONTRACT.
4. EXISTING RIGHT OF WAY SHOWN IN PLANS IS AN APPROXIMATION BASED ON AVAILABLE GIS INFORMATION.

UTILITIES CONTACTS

ANR PIPELINE CO
GAS/PETROLEUM
DEVON SHUMAKER
N4956 OAKCREST DR
BONDUEL, WI 54107
PHONE: (269) 286-3502
EMAIL: DEVON_SHUMAKER@TCENERGY.COM

AT&T WISCONSIN
COMMUNICATION
CHARLES BARTLET
70 E DIVISION ST
FON DU LAC, WI 54935
PHONE: (920) 410-5104
EMAIL: CB1461@ATT.COM

BRIGHTSPEED OF WESTERN WISCONSIN
COMMUNICATION
SCOTT HEINZELMAN
144 N PEARL ST
BERLIN, WI 54923
PHONE: (608) 716-5964
EMAIL: SCOTT.HEINZELMAN@BRIGHTSPEED.COM

CITY OF WAUPACA
SEWER
JUSTIN BERRENS
500 HABERKORN CT
WAUPACA, WI 54981
PHONE: (715) 258-4420
EMAIL: JUSTIN.BERRENS@WAUPACAWI.GOV

CITY OF WAUPACA
WATER
JUSTIN BERRENS
500 HABERKORN CT
WAUPACA, WI 54981
PHONE: (715) 258-4420
EMAIL: JUSTIN.BERRENS@WAUPACAWI.GOV

NSIGHT TELSERVICES
COMMUNICATION
RICK VINCENT
470 SECURITY BLVD
GREEN BAY, WI 54313
PHONE: (920) 617-7316
EMAIL: RICK.VINCENT@NSIGHT.COM

SPECTRUM
COMMUNICATION
JASON O'KEEFE
5024 HEFFRON ST
STEVENS POINT, WI 54481
PHONE: (715) 382-3559
EMAIL: JASON.OKEEFE@CHARTER.COM

WISCONSIN PUBLIC SERVICE CORPORATION
ELECTRICITY
JARROD WURZ
1700 SHERMAN ST
WAUSAU, WI 54402
PHONE: (715-848-7303
EMAIL: JARROD.WURZ@WISCONSINPUBLICSERVICE.COM

WE ENERGIES
ELECTRICITY
ZACH DUGA
800 S LYNNDALE DR
APPLETON, WI 54912
PHONE: (920) 380-3458
EMAIL: WE-UTILITY-RELOCATIONS@WE-ENERGIES.COM

WE ENERGIES
GAS/PETROLEUM
CODY BECKMAN
800 S LYNNDALE DRIVE
APPLETON, WI 54914
PHONE: (920) 380-3422
EMAIL: WE-UTILITY-RELOCATIONS@WE-ENERGIES.COM

RUNOFF COEFFICIENT TABLE

	HYDROLOGIC SOIL GROUP											
	A			B			C			D		
	SLOPE RANCE (PERCENT)			SLOPE RANCE (PERCENT)			SLOPE RANCE (PERCENT)			SLOPE RANCE (PERCENT)		
LAND USE:	0-2	2-6	6 & OVER	0-2	2-6	6 & OVER	0-2	2-6	6 & OVER	0-2	2-6	6 & OVER
ROW CROPS	0.08 0.22	0.16 0.30	0.22 0.38	0.12 0.26	0.20 0.34	0.27 0.44	0.15 0.30	0.24 0.37	0.33 0.50	0.19 0.34	0.28 0.41	0.38 0.56
MEDIAN STRIP TURF	0.19 0.24	0.20 0.26	0.24 0.30	0.19 0.25	0.22 0.28	0.26 0.33	0.20 0.26	0.23 0.30	0.30 0.37	0.20 0.27	0.25 0.32	0.30 0.40
SIDE SLOPE TURF	0.25 0.34	0.27 0.36	0.25 0.32	0.30		0.27 0.34			0.28 0.36			0.30 0.38
PAVEMENT:												
ASPHALT	0.70 - 0.95											
CONCRETE	0.80 - 0.95											
BRICK	0.70 -0.80											
DRIVES, WALKS	0.75 - 0.85											
ROOFS	0.75 - 0.95											
GRAVEL ROADS, SHOULDERS	0.40 - 0.60											

TOTAL PROJECT AREA = 139.12 ACRES
TOTAL AREA EXPECTED TO BE DISTURBED BY CONSTRUCTION ACTIVITIES = 3.83 ACRES

OTHER AGENCIES

WISCONSIN DNR LIAISON

MARTY DILLENBURG
NC REGION
625 E COUNTY RD Y STE 700
OSHKOSH, WI 54901-9731
PHONE: 920-410-7428
EMAIL: MARTY.DILLENBURG@WISCONSIN.GOV

ORDER OF SECTION 2 DETAIL SHEETS

GENERAL NOTES
PROJECT OVERVIEW
TYPICAL SECTIONS
CONSTRUCTION DETAILS
DRAINAGE DETAILS
GUARDRAIL DETAILS
CROSSOVER DETAIL
WIDENING DETAIL
CURB RAMP DETAILS
PAVEMENT MARKING
TRAFFIC CONTROL
RAMP CLOSURE SIGNAGE
ALIGNMENT DETAIL

DIGGERS HOTLINE
Dial 811 or (800)242-8511
www.DiggersHotline.com

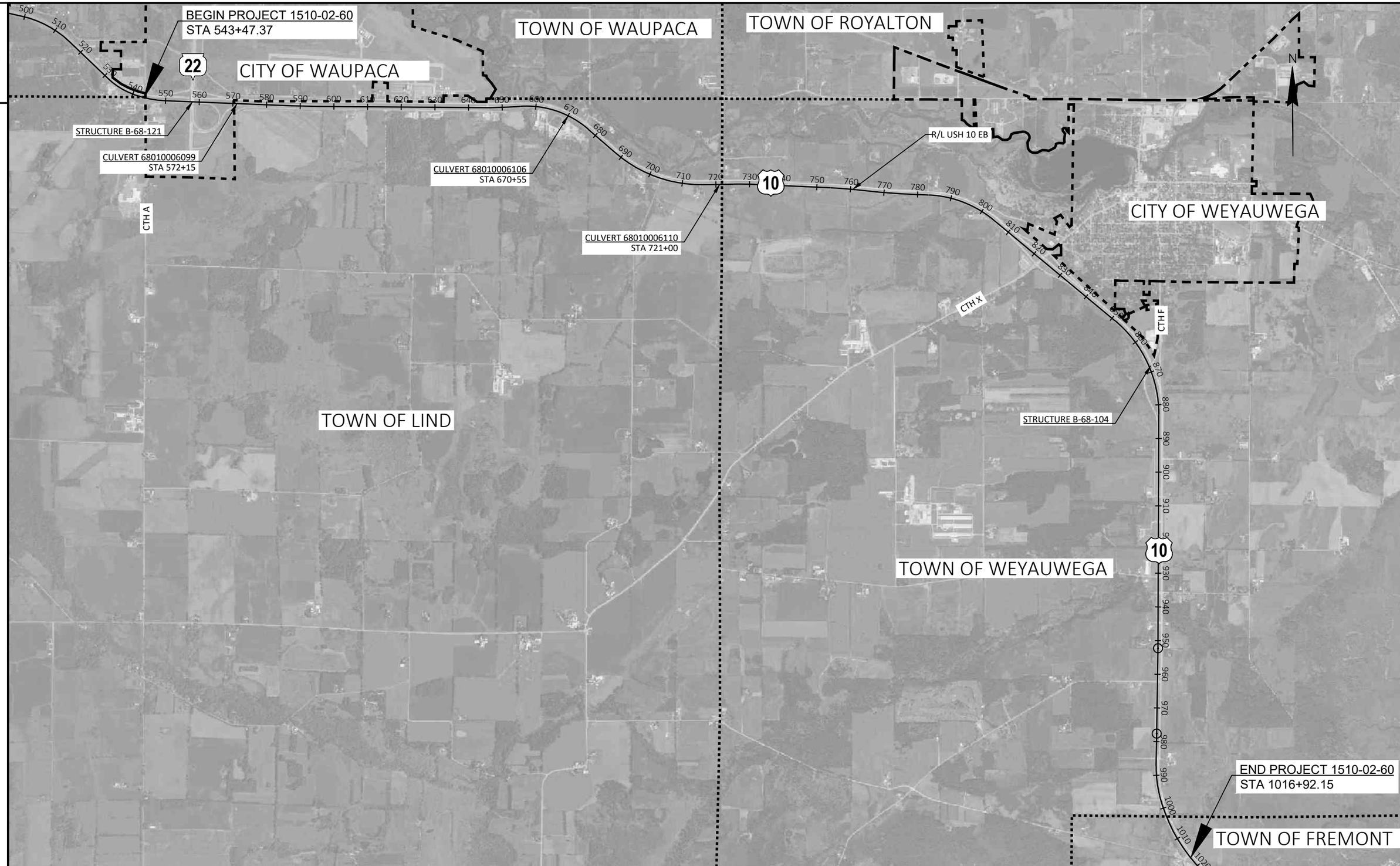

PROJECT NO: 1510-02-60	HWY: USH 10	COUNTY: WAUPACA	PROJECT OVERVIEW	SHEET 3	E

FILE NAME : Y:\MILWAUKEE\20300S\20335.01\ENG_DOCS\1510-02-60\15100260\SHEETS\020201-PO.DWG
LAYOUT NAME - 01
PLOT DATE : 7/28/2025 1:34 PM
PLOT BY : WEIGAND, BEN
PLOT NAME :
PLOT SCALE : 1 IN:0.5 MI
WISDOT/CADDS SHEET 42

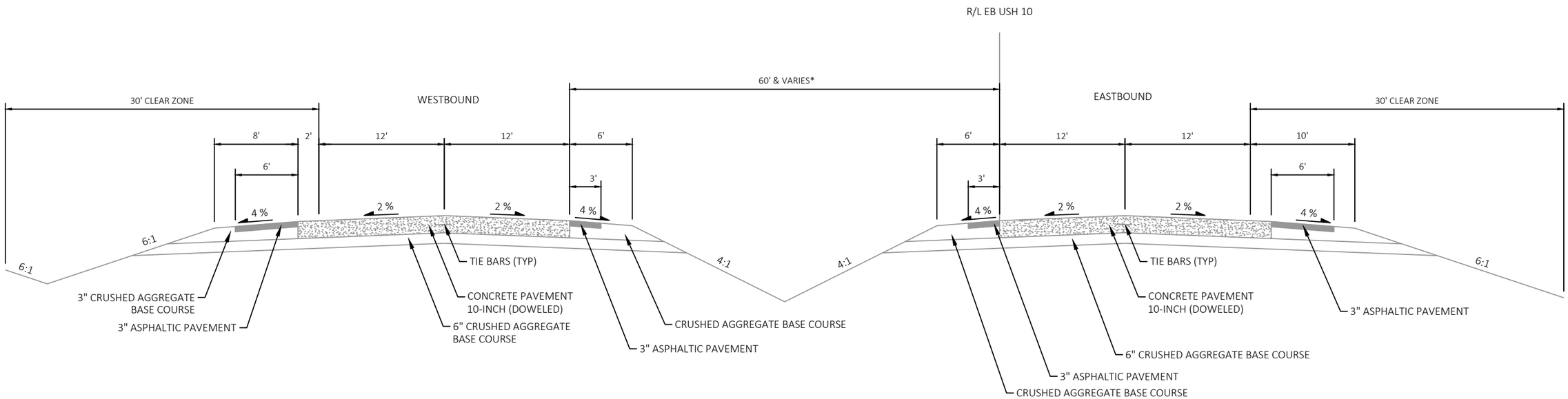

USH 10 EXISTING TYPICAL SECTION

STA 543+47 TO STA 1016+92

*30', 543+47 TO 558+00
60', 558+00 TO 823+00
VARIES 60' TO 88', 823+00 TO 1016+92

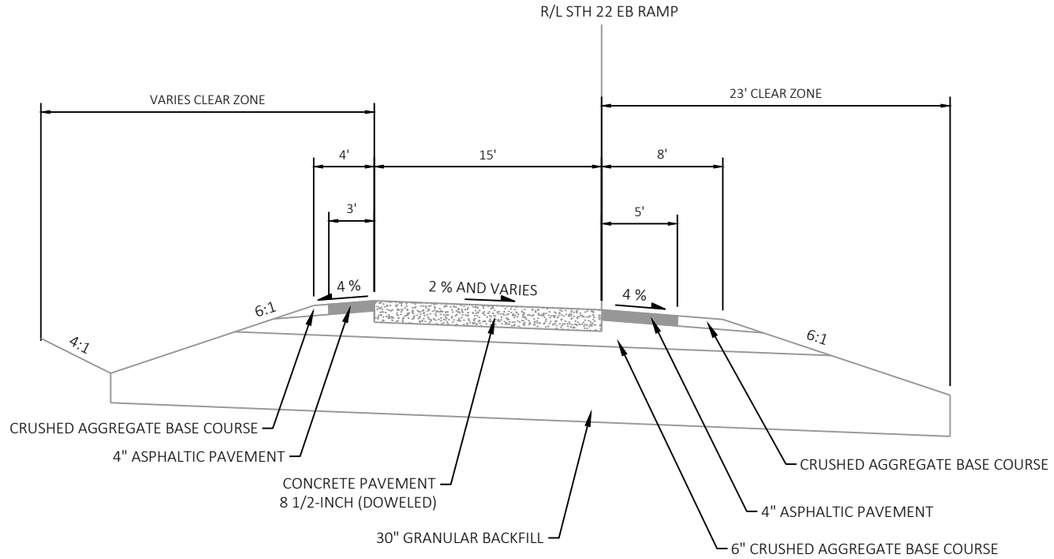

STH 22 - EXISTING ON & OFF RAMP TYPICAL SECTION

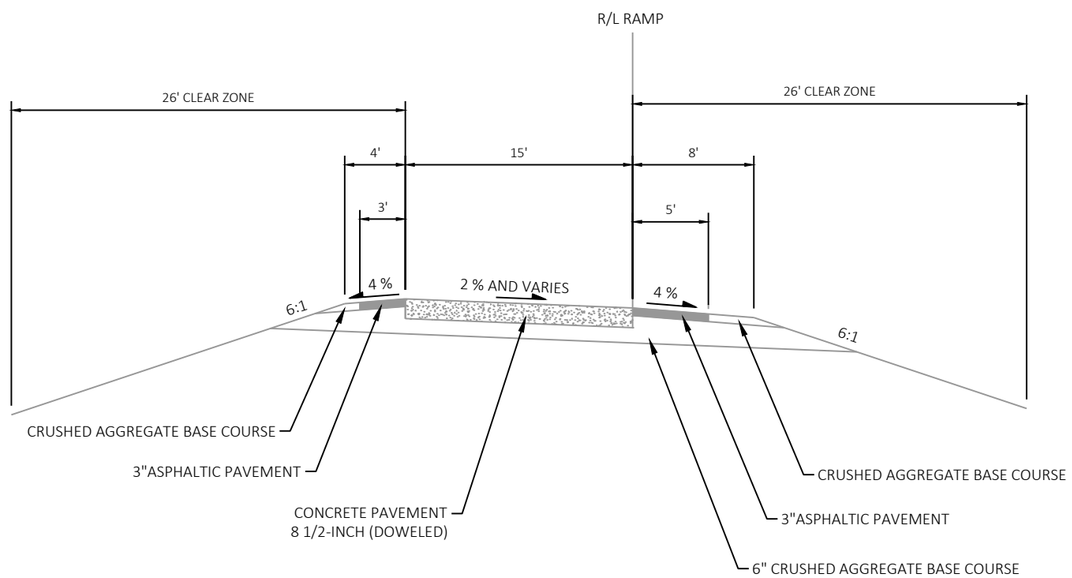

RAMP EXISTING TYPICAL SECTION

CTH X ON AND OFF RAMPS
CTH F EB RAMPS

2

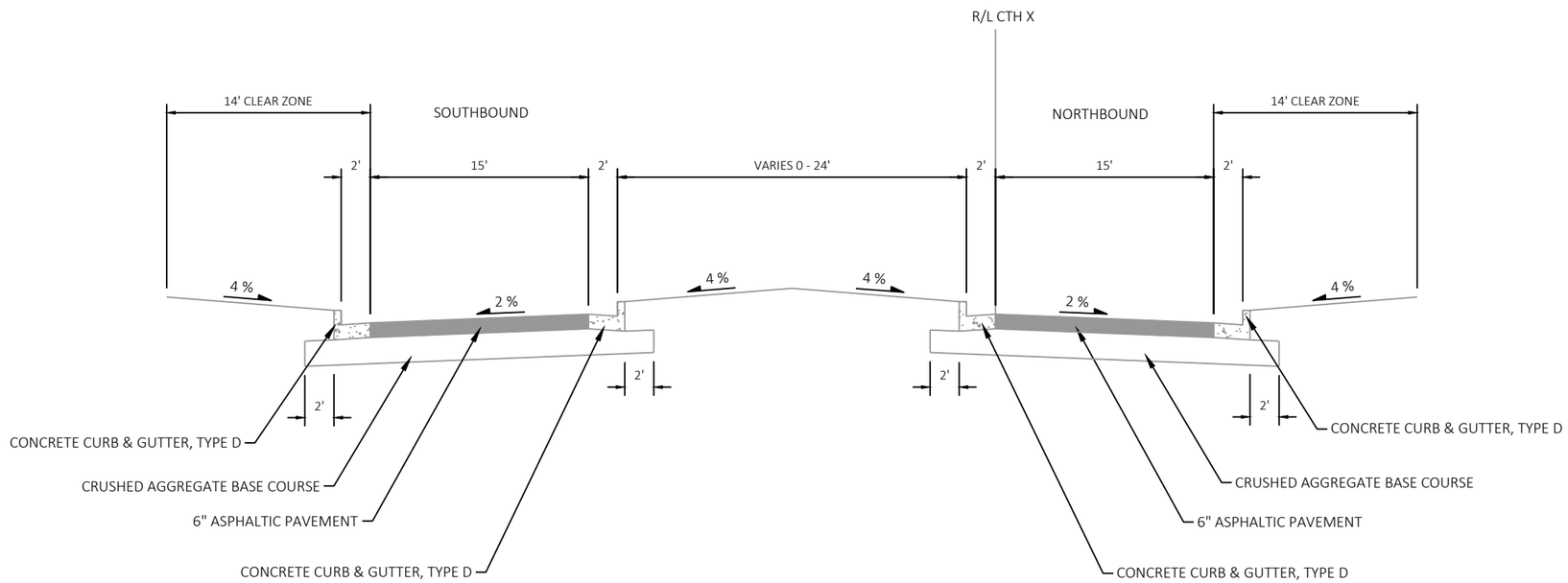

CTH X / MAIN ST. EXISTING TYPICAL SECTION

PROJECT NO: 1510-02-60	HWY: USH 10	COUNTY: WAUPACA	TYPICAL SECTIONS	SHEET 6	E

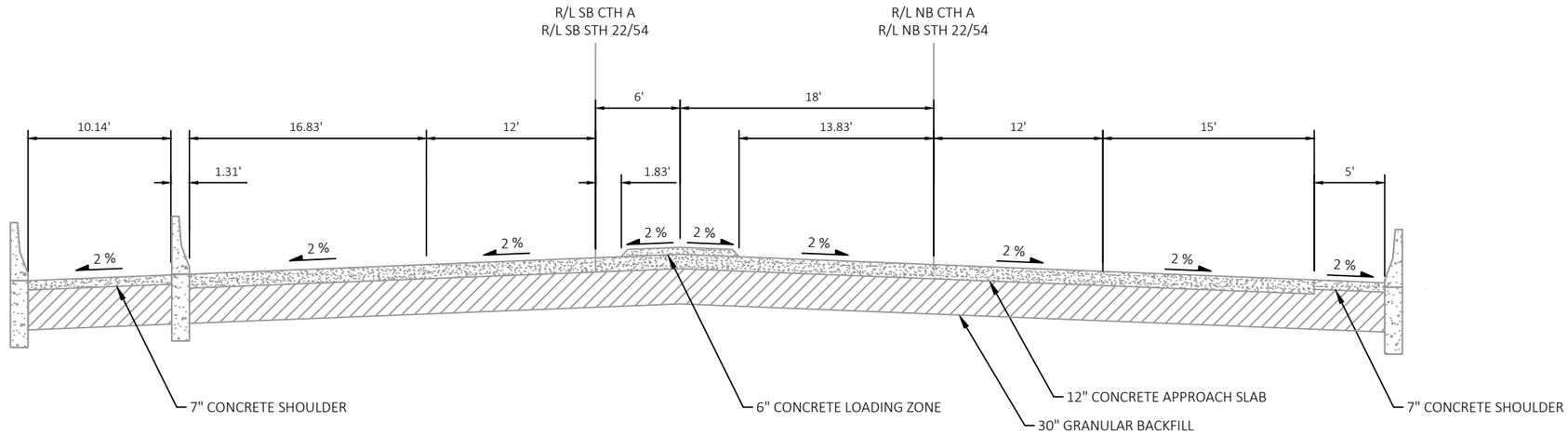

CTH A / STH 22/54 EXISTING TYPICAL SECTION

APPROACH SLABS
STA 48+98 TO 49+13
STA 51+60 TO 51+75

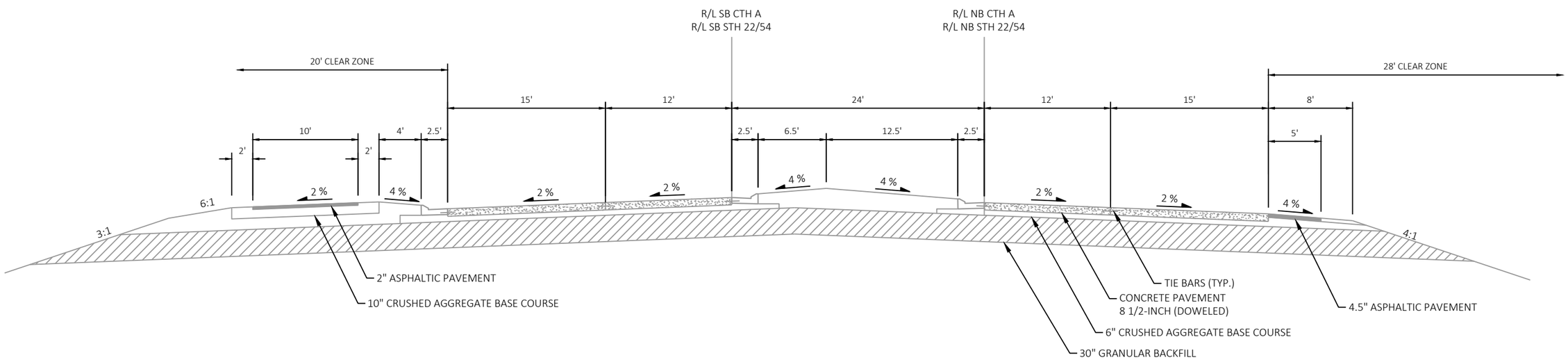

CTH A / STH 22/54 EXISTING TYPICAL SECTION

APPROACH SLABS
STA 44+50 TO 48+98
STA 51+75 TO 57+50

2

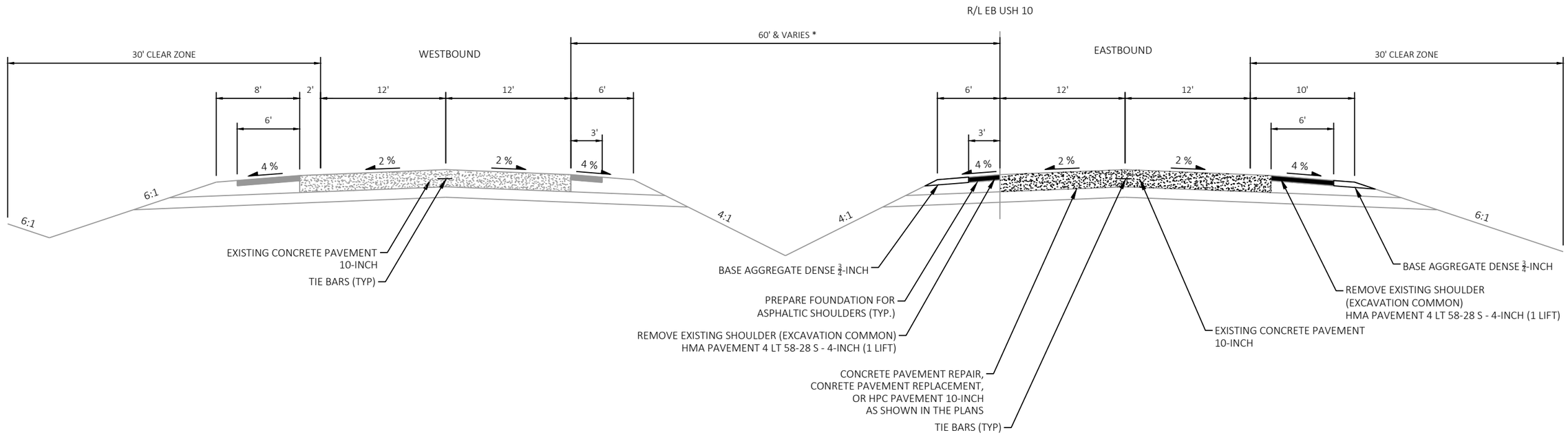

USH 10 FINISHED TYPICAL SECTION

STA 543+47 TO STA 1016+92

FOLLOW STANDARD DETAIL DRAWING
SHOULDER RUMBLE STRIPS, DIVIDED HIGHWAY
FOR RUMBLE STRIP TYPE AND LOCATION

*30', 543+47 TO 558+00
60', 558+00 TO 823+00
VARIES 60' TO 88', 823+00 TO 1016+92

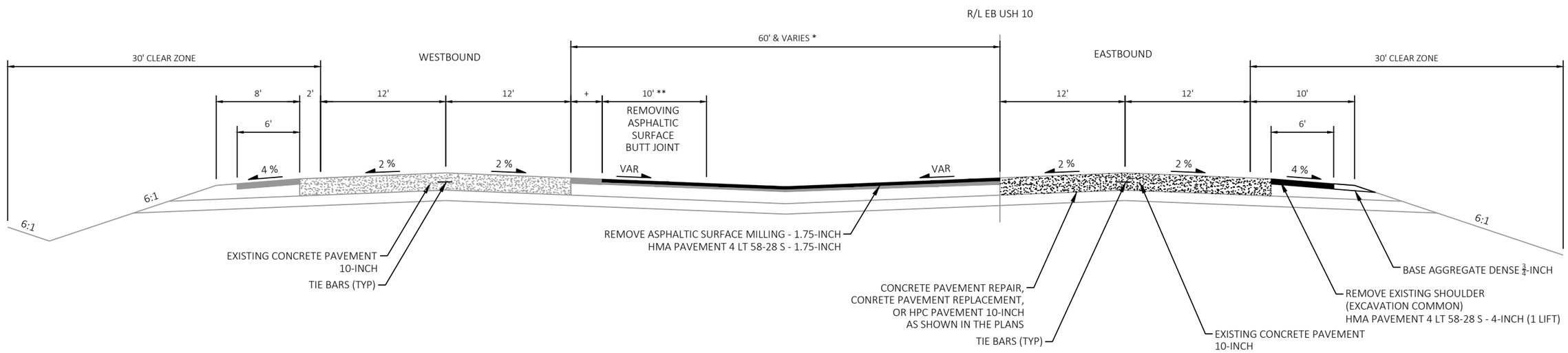

USH 10 FINISHED TYPICAL SECTION

MEDIAN CUT THROUGH
MAINTENANCE CROSSOVERS AND SIDE ROADS

FOLLOW STANDARD DETAIL DRAWING
SHOULDER RUMBLE STRIPS, DIVIDED HIGHWAY
FOR RUMBLE STRIP TYPE AND LOCATION

* 30', 543+47 TO 558+00
60', 558+00 TO 823+00
VARIES 60' TO 88', 823+00 TO 1016+92

\+ AT SIDE ROADS MILL TO EDGE OF TURN LANE
AT MAINTENANCE CROSSOVER MILL TO EDGE OF CONCRETE

** BUTT JOINT NOT REQUIRED ADJACENT TO
CONCRETE PAVEMENT

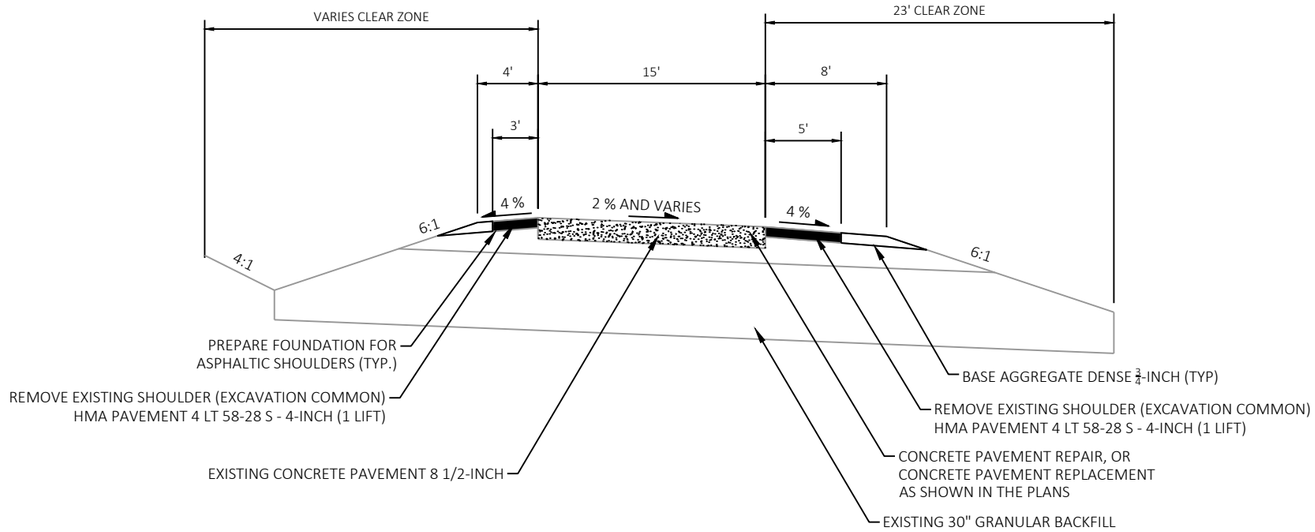

STH 22 - FINISHED ON & OFF RAMP TYPICAL SECTION

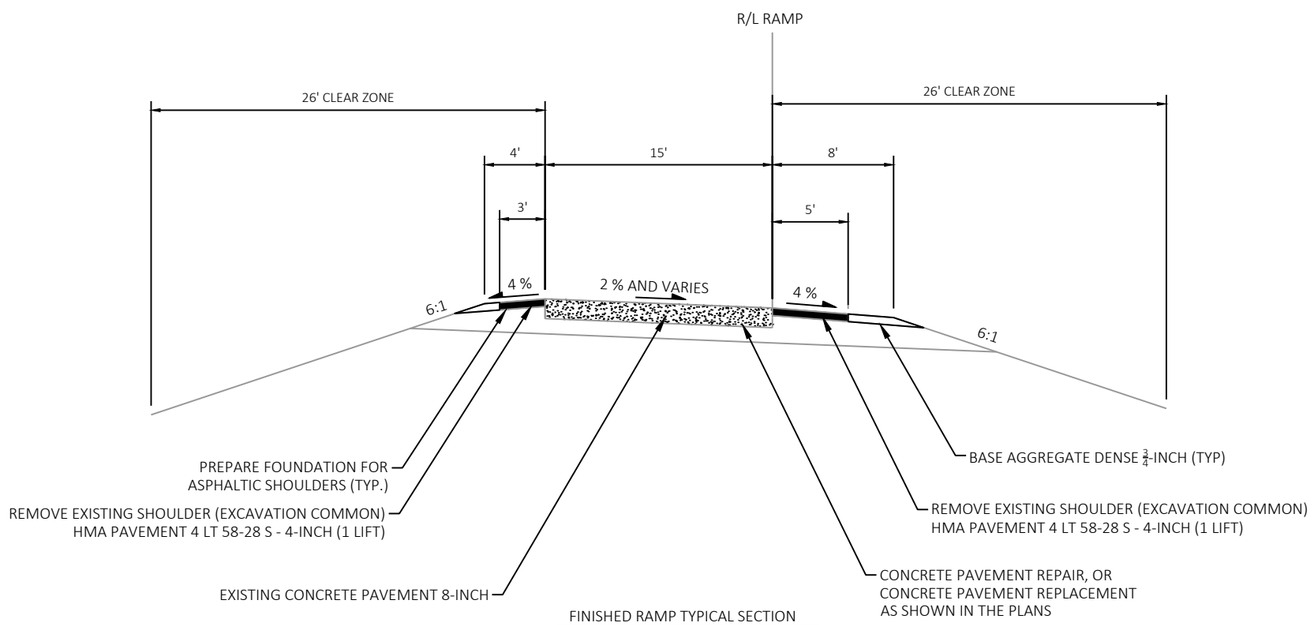

FINISHED RAMP TYPICAL SECTION

CTH X ON AND OFF RAMPS

2

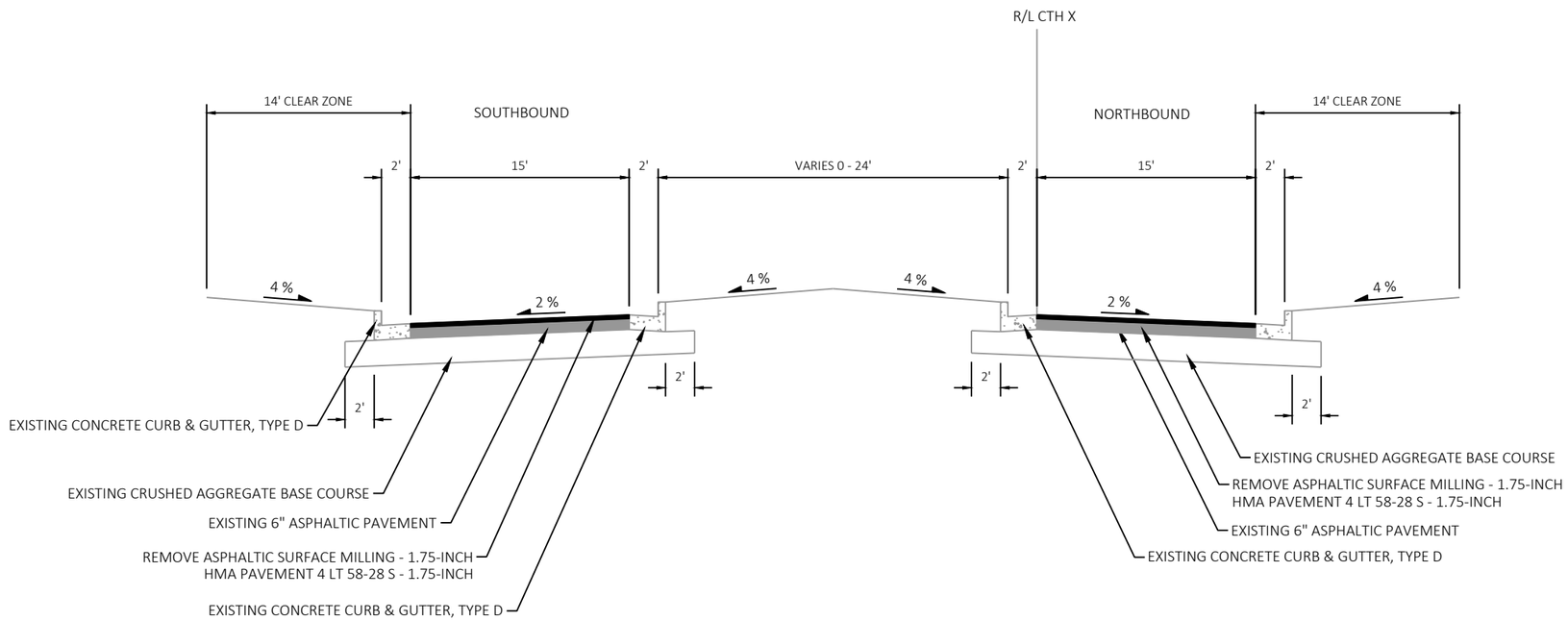

CTH X / MAIN ST. FINISHED TYPICAL SECTION

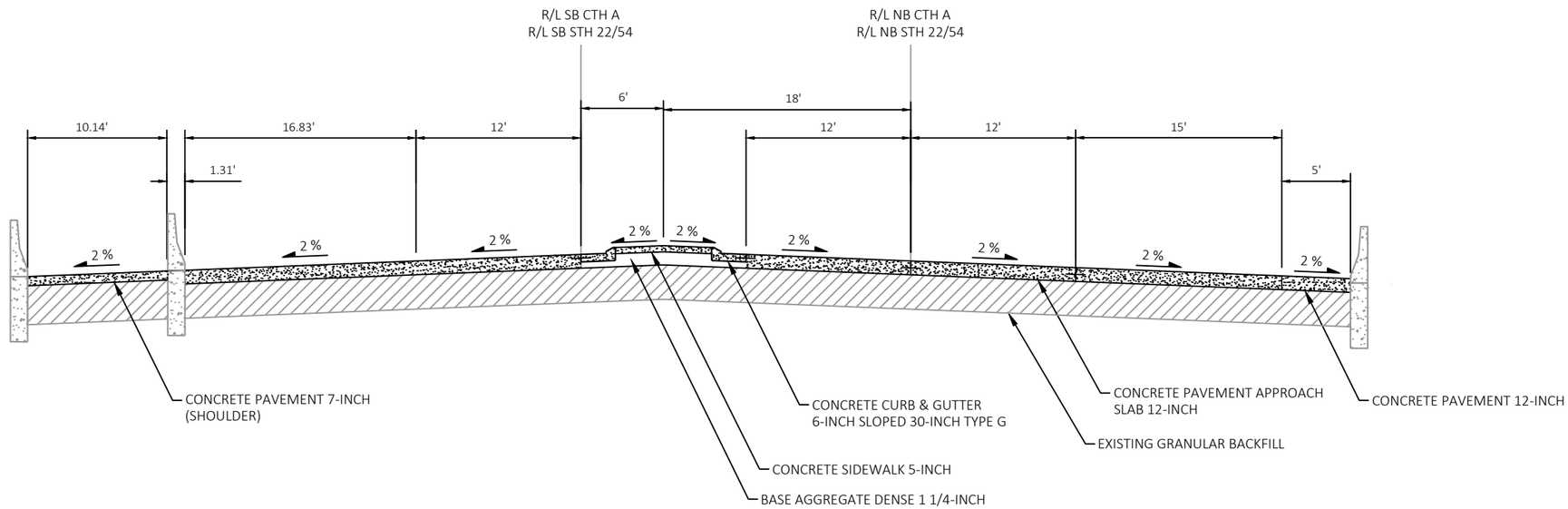

CTH A / STH 22/54 FINISHED TYPICAL SECTION

APPROACH SLABS
STA 48+98 TO 49+13
STA 51+60 TO 51+75

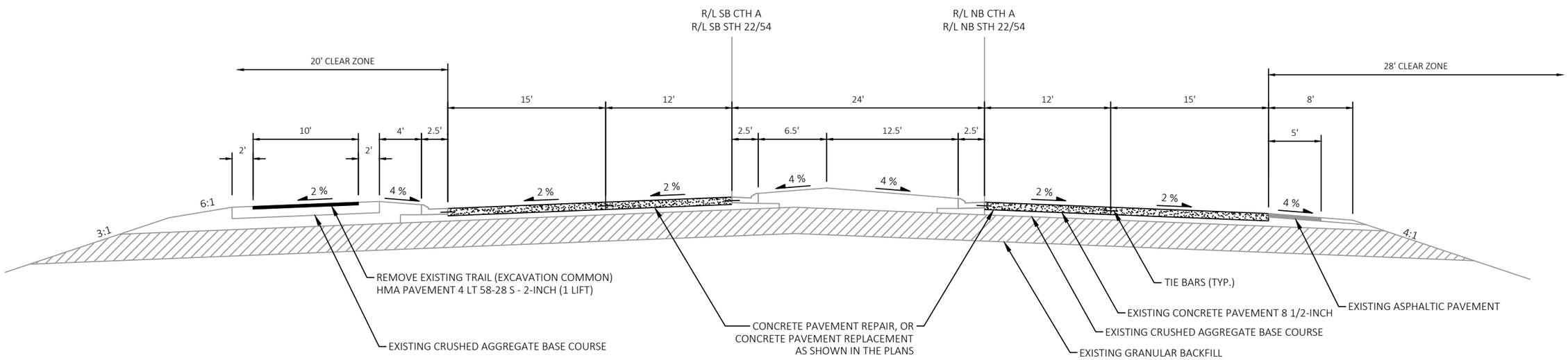

CTH A / STH 22/54 FINISHED TYPICAL SECTION

APPROACH SLABS
STA 44+50 TO 48+98
STA 51+75 TO 57+50

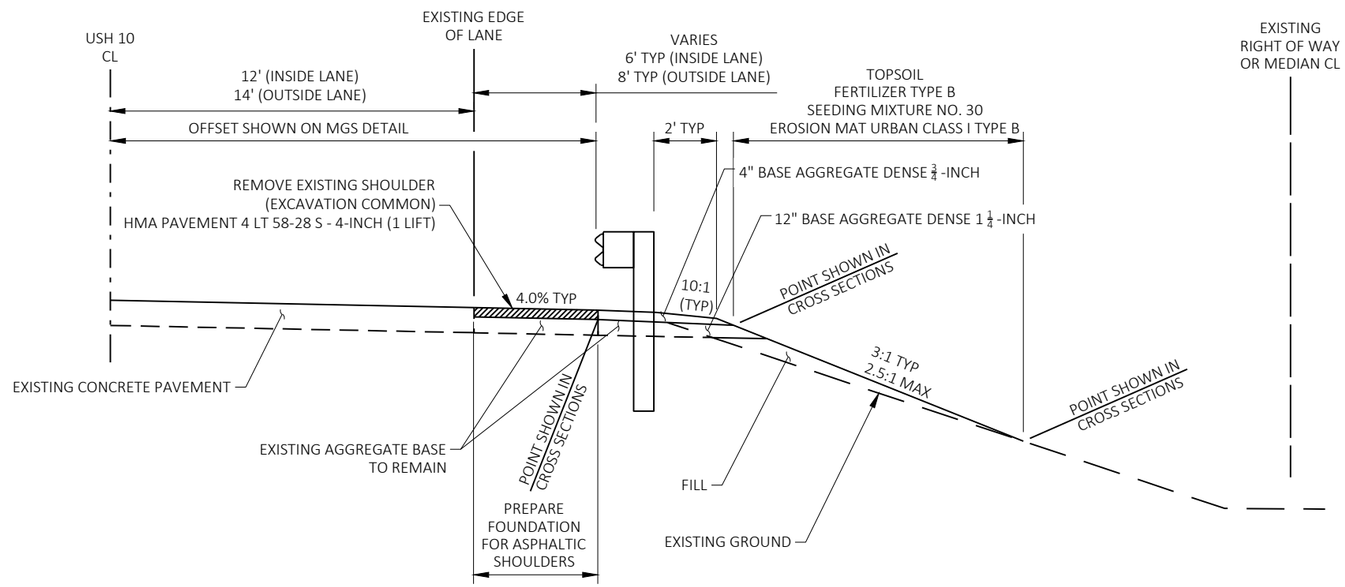

NOTES:

SEE STANDARD DETAIL DRAWINGS MIDWEST GUARDRAIL SYSTEM (MGS) GUARDRAIL FOR MORE INFORMATION.

MGS GUARDRAIL GRADING, SHAPING, AND FINISHING

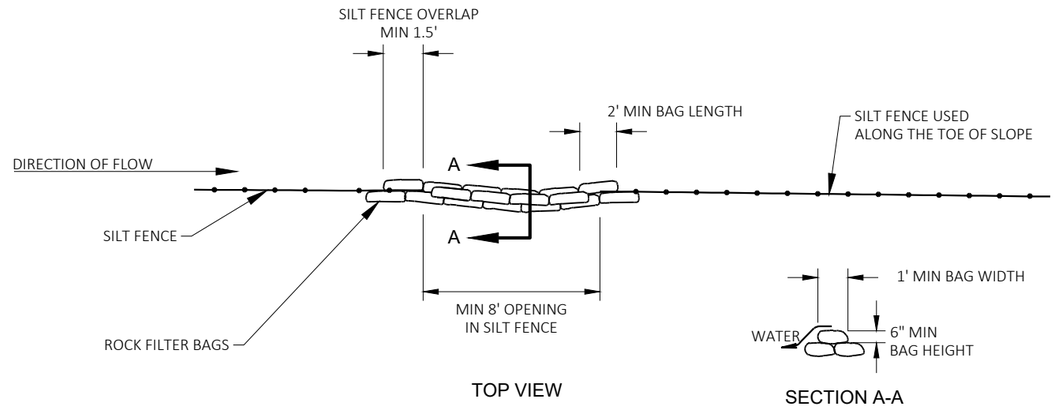

ROCK BAGS USED FOR SILT FENCE RELIEF

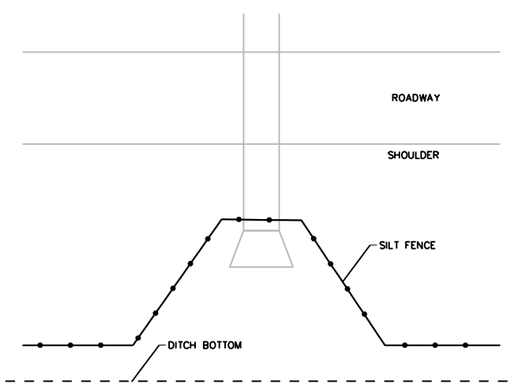

TYPICAL SILT FENCE DETAIL AT PIPE INLET

NOTE
SEE SILT FENCE SDD FOR ADDITIONAL INFORMATION.

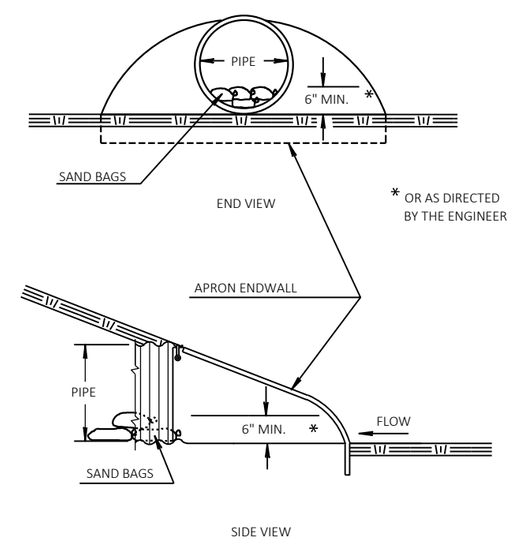

CULVERT PIPE DITCH CHECK

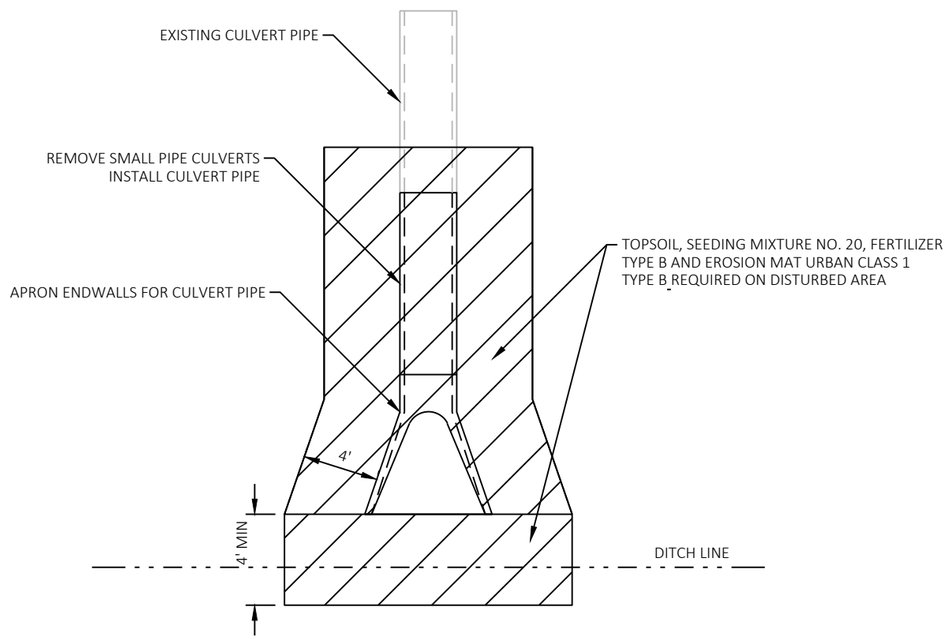

EROSION CONTROL FOR CROSS DRAIN RESTORATION

SEE MISCELLANEOUS QUANTITIES FOR LOCATIONS

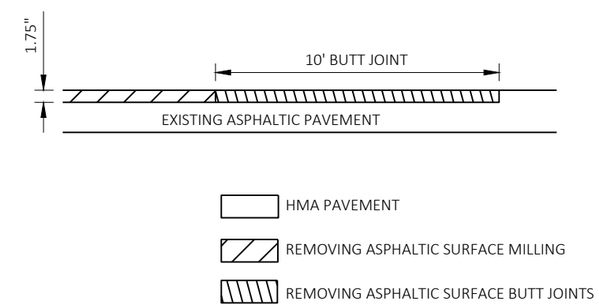

BUTT JOINT

INTERSECTIONS & MAINTENANCE
CROSSOVERS

2

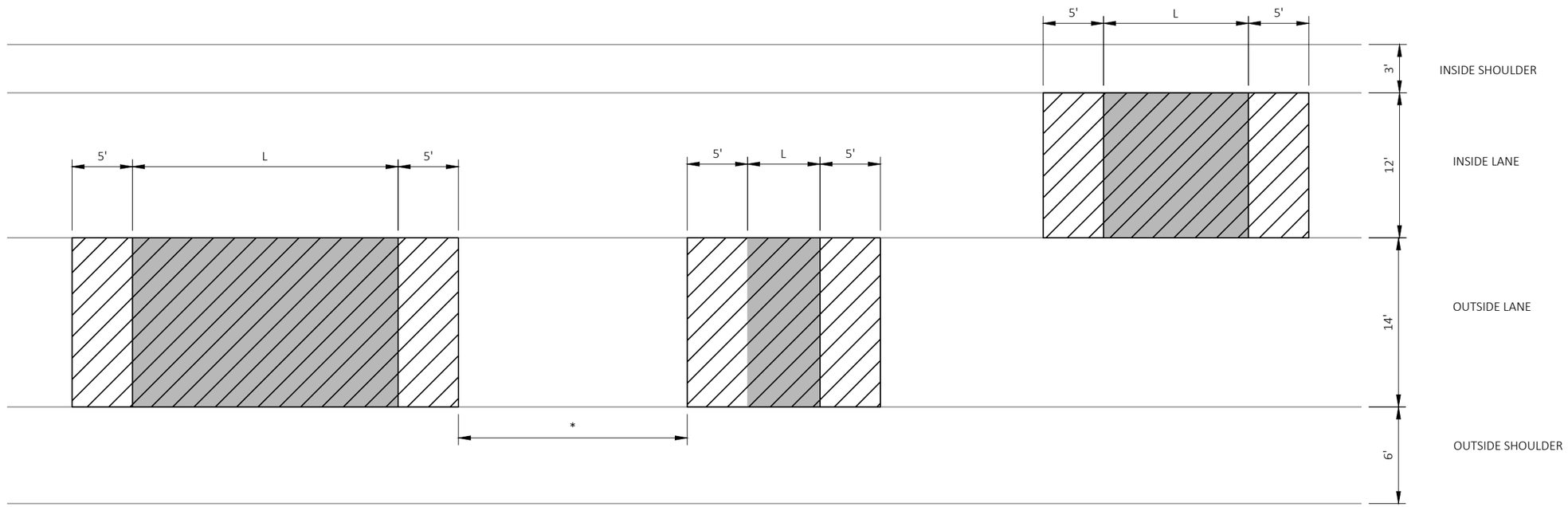

* NOTE: CONNECT DIAMOND GRINDING OPERATIONS AT LOCATIONS WHERE CONSECUTIVE JOINTS ARE BEING REPAIRED AND THE GAP DISTANCE IS LESS THAN OR EQUAL TO 10 FEET

CONCRETE PAVEMENT REPAIR OR REPLACEMENT AREA (MEASURED BY THE SQUARE YARD)

CONTINUOUS DIAMOND GRINDING CONCRETE PAVEMENT (MEASURED BY THE SQUARE YARD)

L= LENGTH OF REPAIR OR REPLACEMENT SHOWN ELSEWHERE IN PLANS

DETAIL FOR LIMITS OF DIAMOND GRINDING

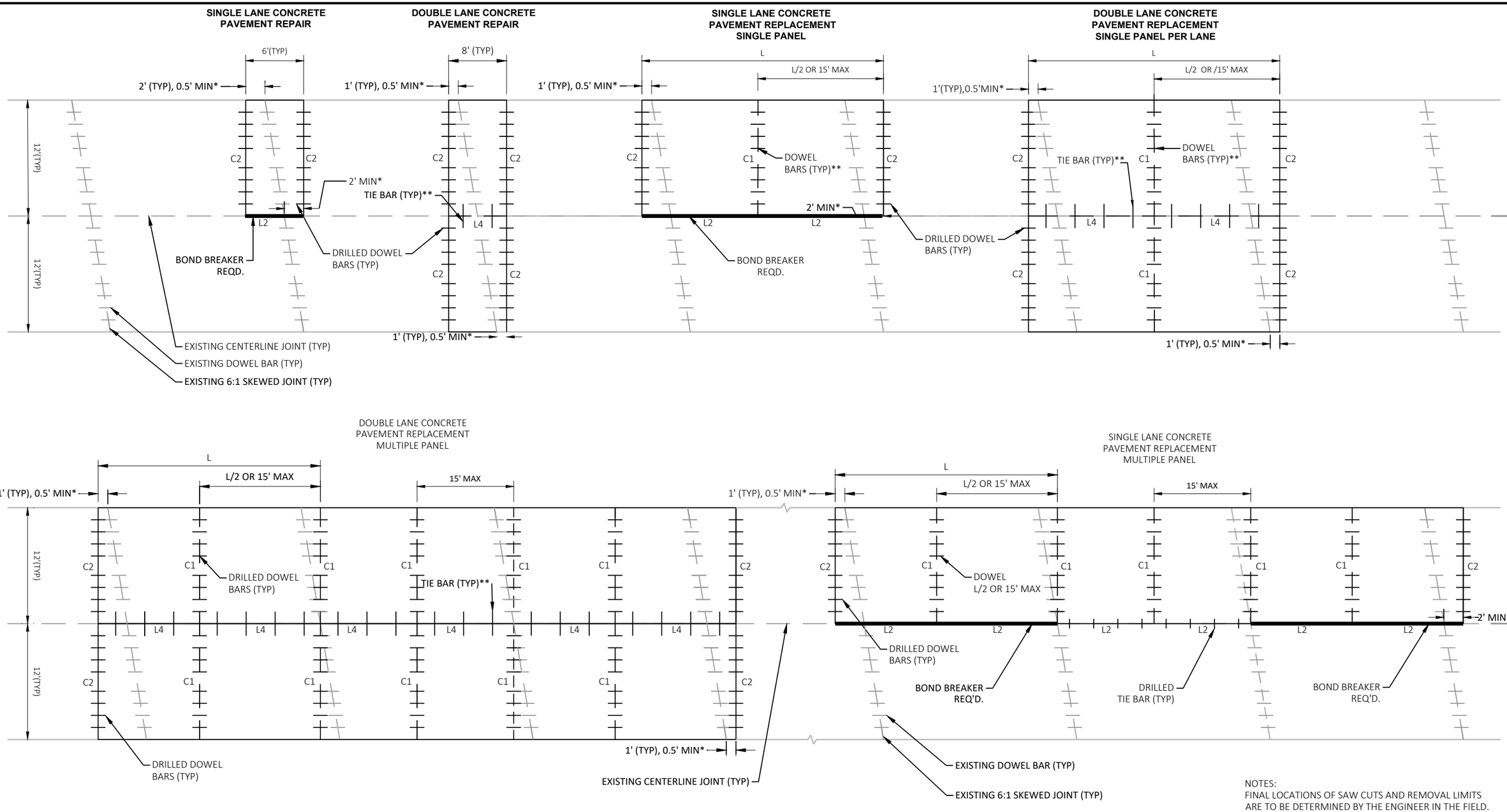

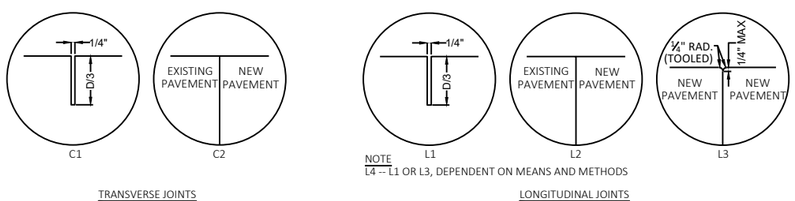

CONCRETE PAVEMENT REPAIR/REPLACEMENT DETAILS FOR SKEWED JOINTS

NOTES:
FINAL LOCATIONS OF SAW CUTS AND REMOVAL LIMITS ARE TO BE DETERMINED BY THE ENGINEER IN THE FIELD.

REFER TO SDD CONCRETE PAVEMENT REPAIR AND REPLACEMENT FOR ADDITIONAL DETAILS.

*ENSURE FULL REMOVAL OF EXISTING DOWEL BAR AT CONCRETE REPAIR/ REPLACEMENT LOCATIONS.

**INCIDENTAL WHEN NOT ABUTTING EXISTING PAVEMENT.

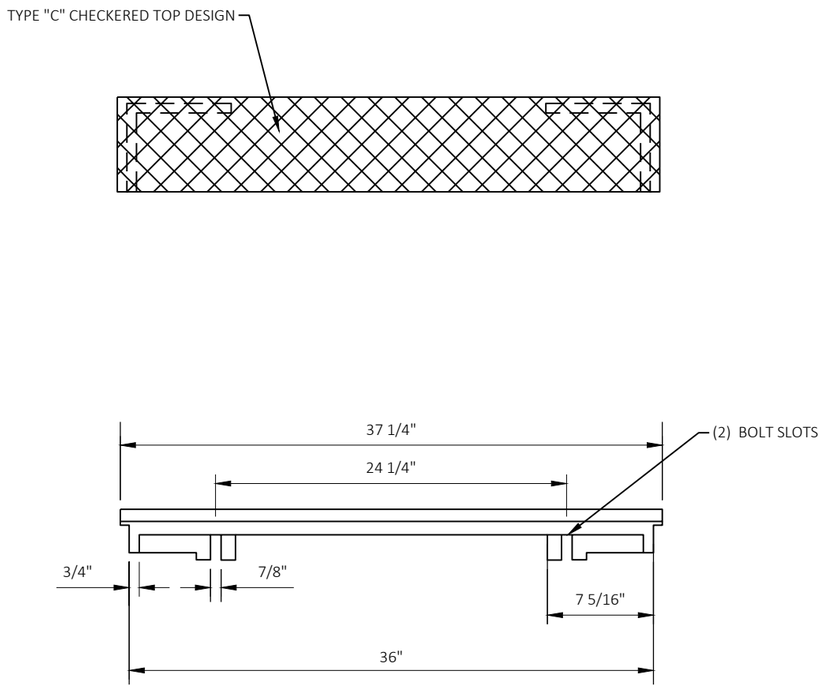

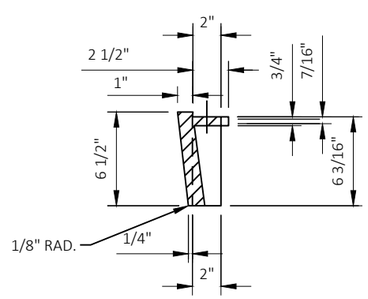

MOUNTABLE CURB PLATE

NOTES:

1. REMOVE UNSOUND AND DETERIORATED MATERIAL INCLUDING EXISTING ASPHALTIC PATCHING
2. EXISTING CONCRETE SHOULDER 5-FOOT OR LESS INCLUDED IN REPAIR AREA OF ADJACENT LANE

HMA OR MASTIC REPAIRS
EXISTING CONCRETE PAVEMENT
EXISTING BASE COURSE

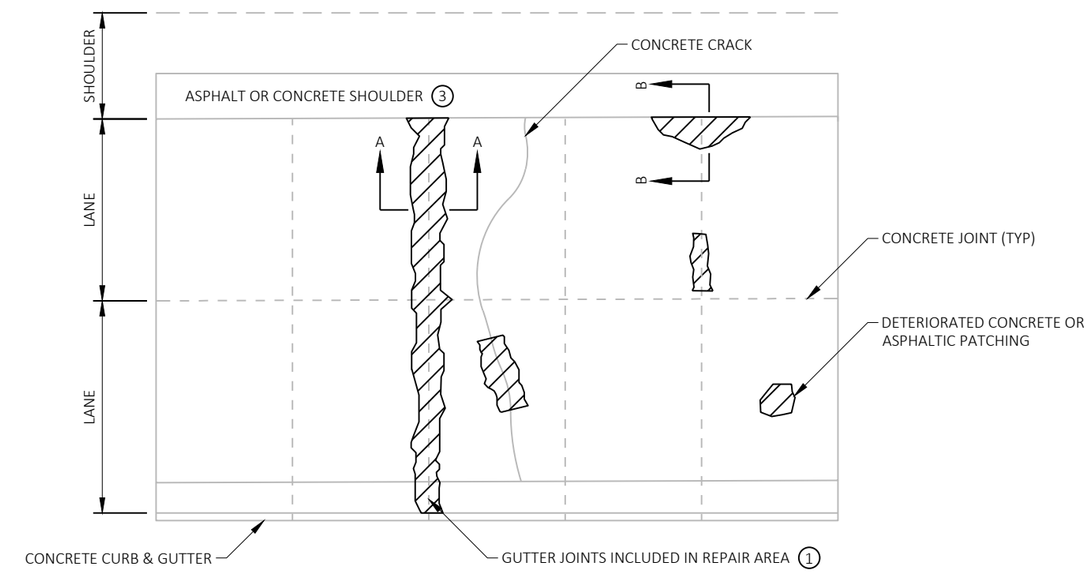

PLAN VIEW

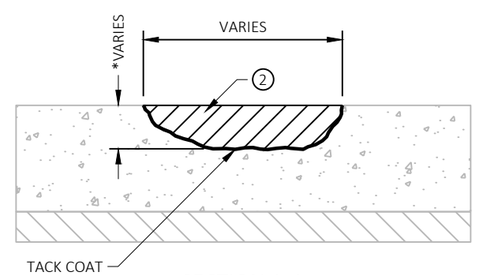

SECTION A-A

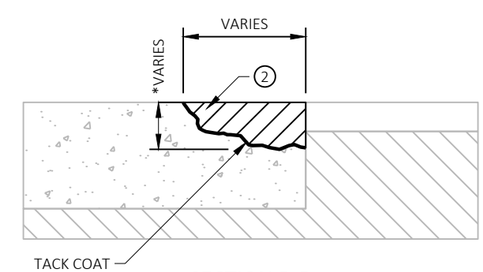

SECTION B-B

*ANY REPAIRS DEEPER THAN 3" SHOULD BE FILLED WITH HMA

CONCRETE JOINT AND CRACK CLEANING AND REPAIR

SEE MISCELLANEOUS QUANTITIES FOR LOCATION

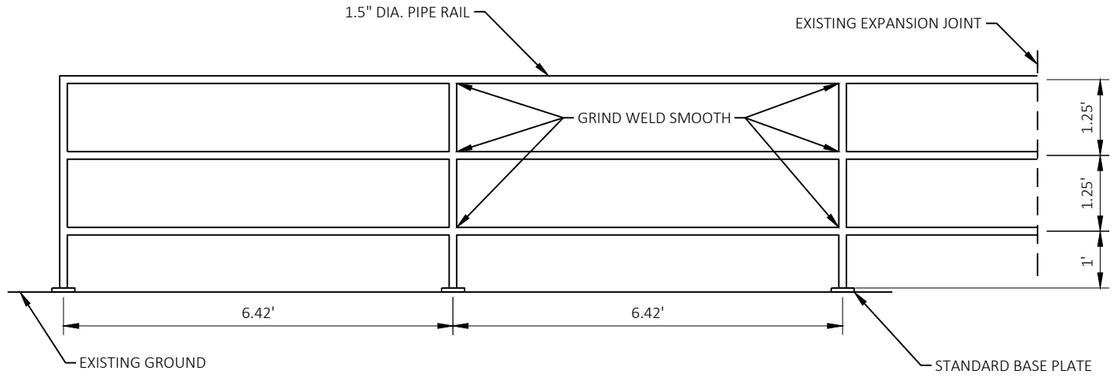

42-INCH HANDRAIL DETAIL
USED AT STH 22 STA. 55+25, LT

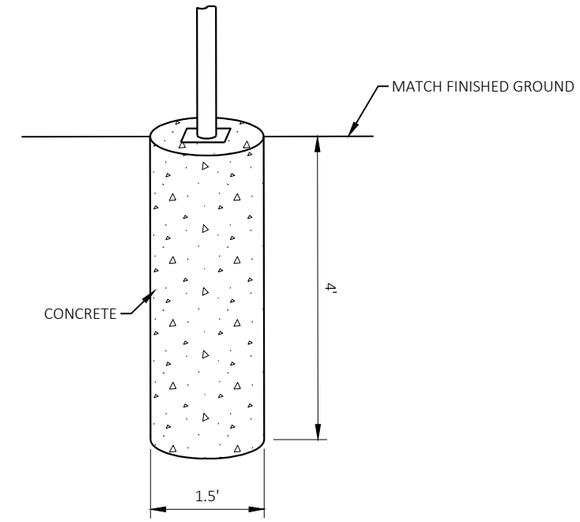

CONCRETE BASE DETAIL

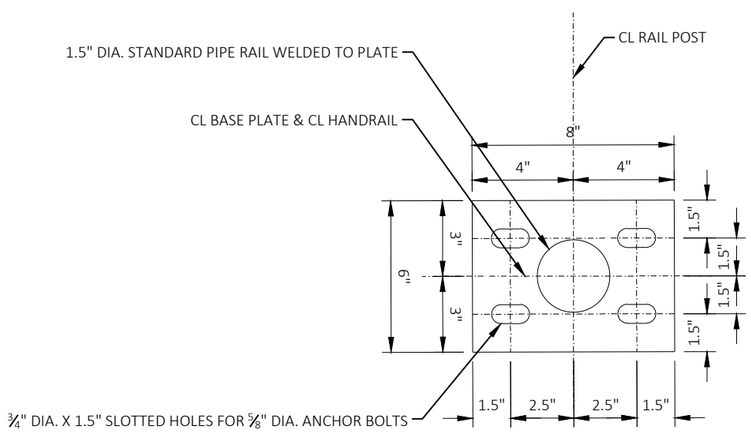

STANDARD BASE PLATE DETAIL

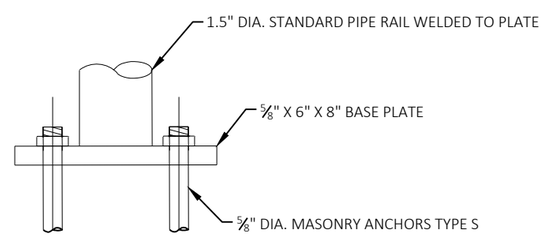

RAIL POST BASE PLATE

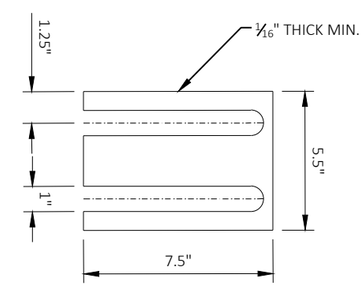

SHIM PLATE

STEEL SHIMS SHALL BE PROVIDED AND USED UNDER BASE PLATES WHERE REQUIRED FOR ALIGNMENT.

2

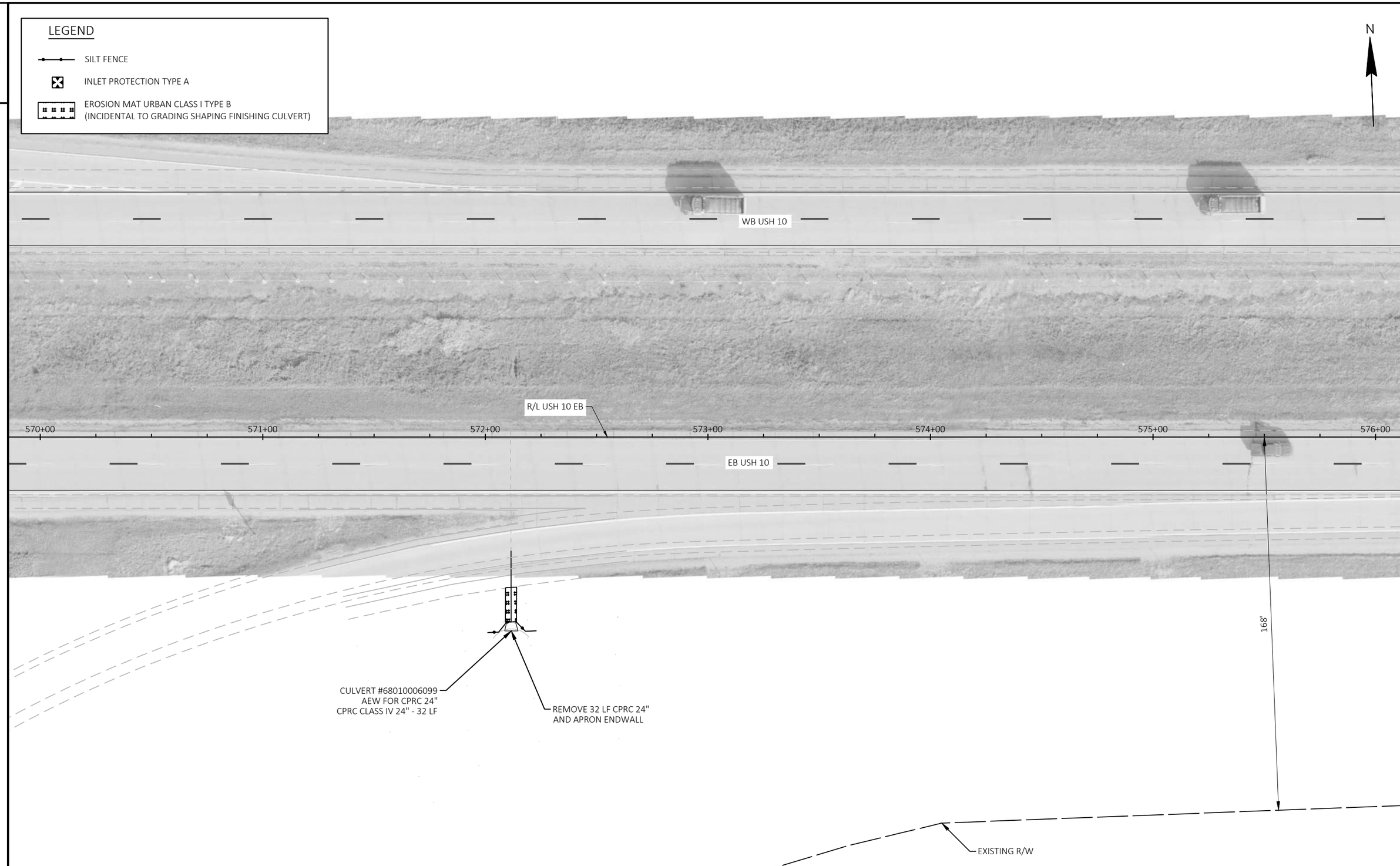

2

PROJECT NO: 1510-02-60	HWY: USH 10	COUNTY: WAUPACA	DRAINAGE DETAILS	SHEET 19	E

FILE NAME : Y:\MILWAUKEE\20300S\20335.01\ENG_DOCS\1510-02-60\15100260\SHEETS\021201-PD.DWG
LAYOUT NAME - 01
PLOT DATE : 6/23/2026 12:22 PM
PLOT BY : CLEGG, HEATHER
PLOT NAME :
PLOT SCALE : 1 IN:40 FT
WISDOT/CADDS SHEET 42

2

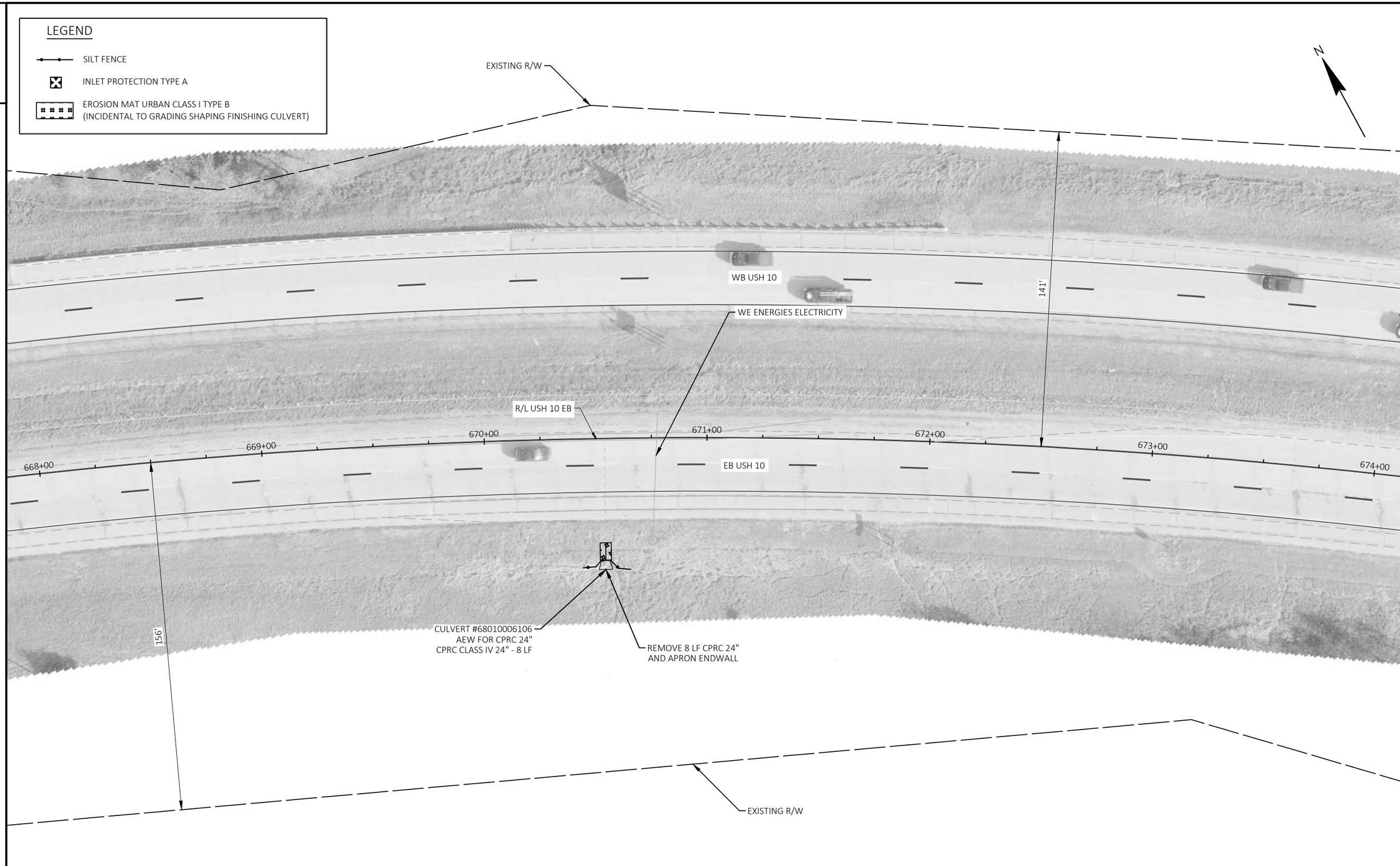

2

PROJECT NO: 1510-02-60	HWY: USH 10	COUNTY: WAUPACA	DRAINAGE DETAILS	SHEET 20	E

FILE NAME : Y:\MILWAUKEE\20300S\20335.01\ENG_DOCS\1510-02-60\15100260\SHEETS\021201-PD.DWG
LAYOUT NAME - 02
PLOT DATE : 6/23/2026 12:23 PM
PLOT BY : CLEGG, HEATHER
PLOT NAME :
PLOT SCALE : 1 IN:40 FT
WISDOT/CADDS SHEET 42

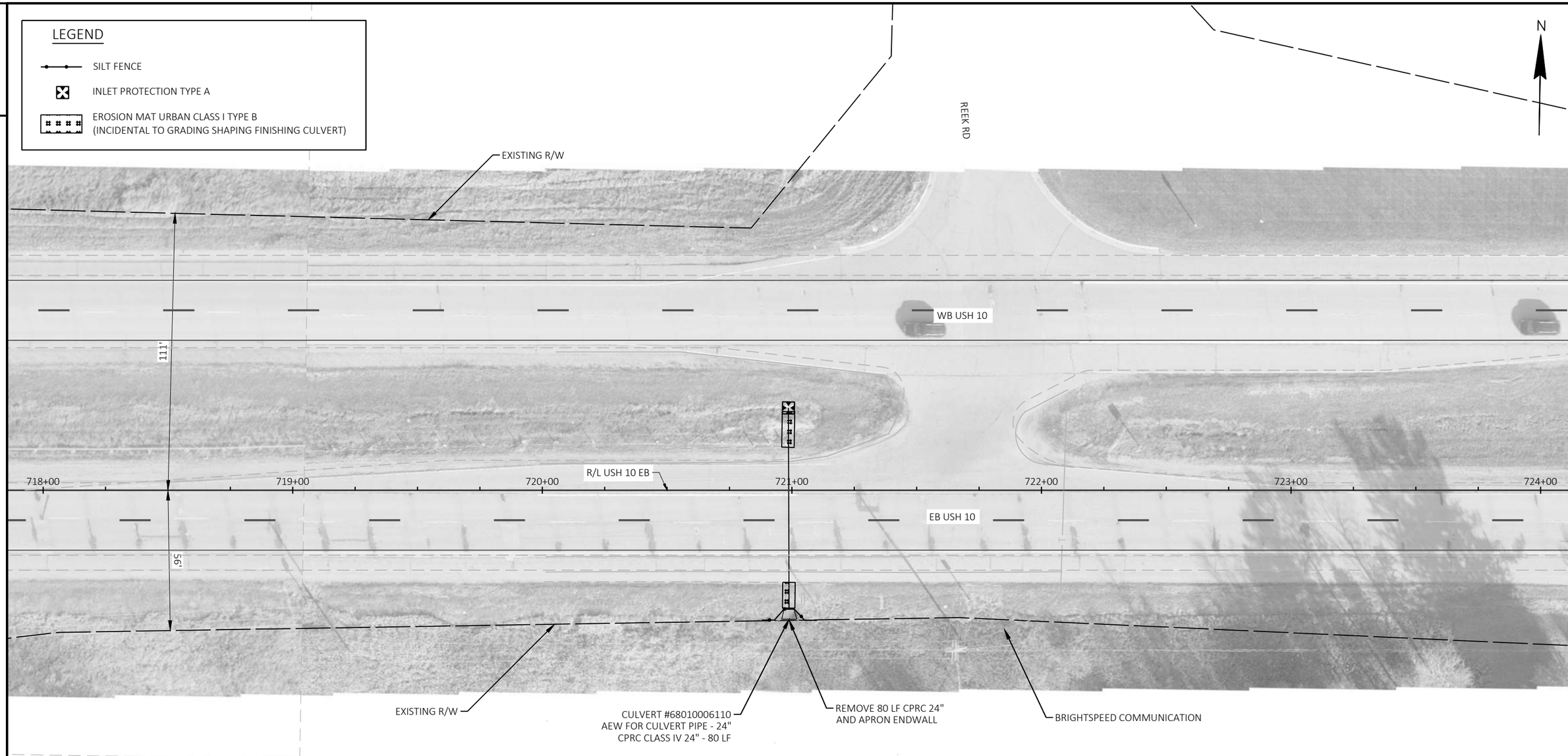

PROJECT NO: 1510-02-60	HWY: USH 10	COUNTY: WAUPACA	DRAINAGE DETAILS	SHEET 21	E

FILE NAME : Y:\MILWAUKEE\20300S\20335.01\ENG_DOCS\1510-02-60\15100260\SHEETS\021201-PD.DWG
LAYOUT NAME - 03
PLOT DATE : 6/23/2026 12:23 PM
PLOT BY : CLEGG, HEATHER
PLOT NAME :
PLOT SCALE : 1 IN:40 FT
WISDOT/CADDS SHEET 42

2

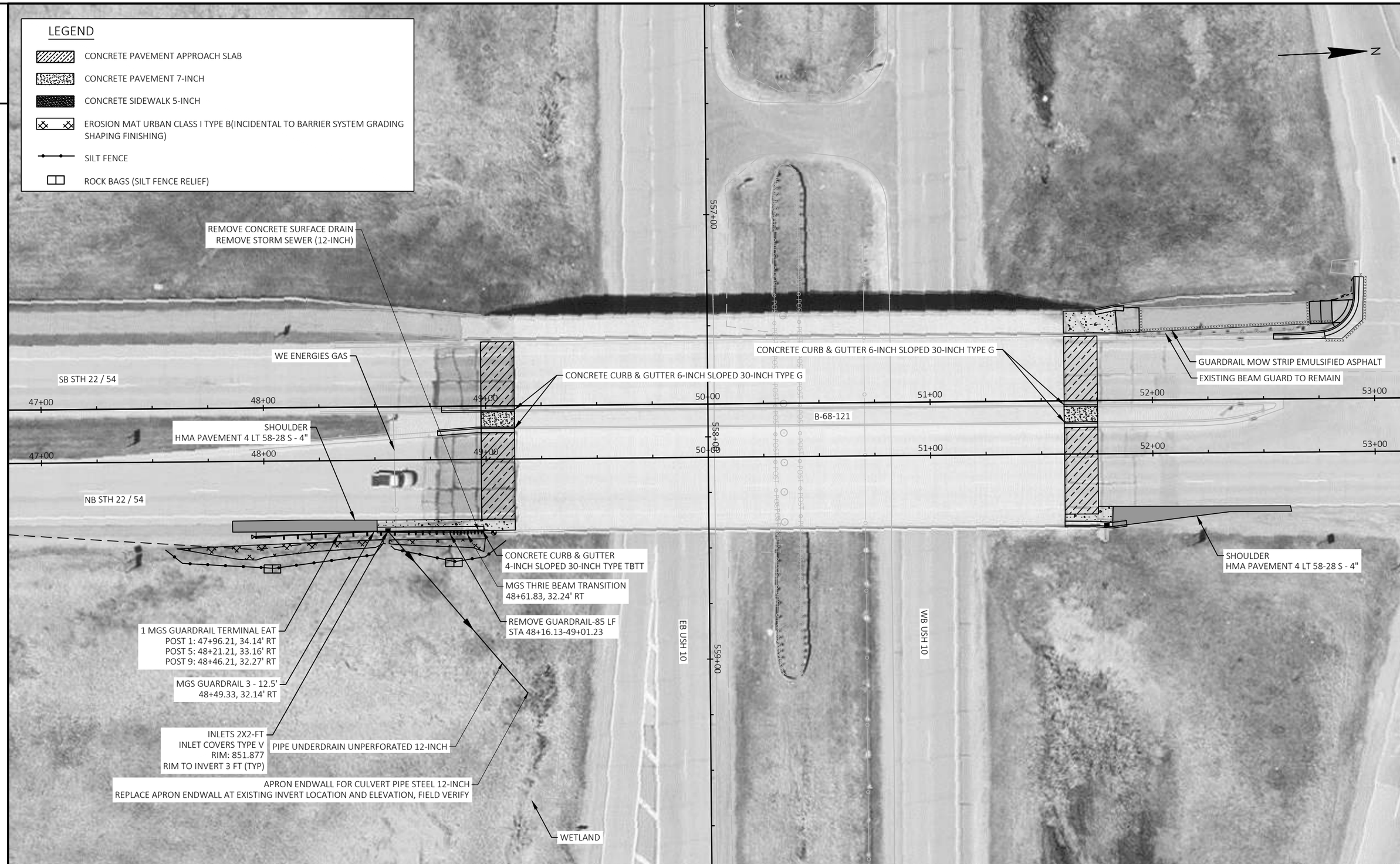

2

PROJECT NO: 1510-02-60	HWY: USH 10	COUNTY: WAUPACA	GUARDRAIL DETAILS	SHEET 22	E

2

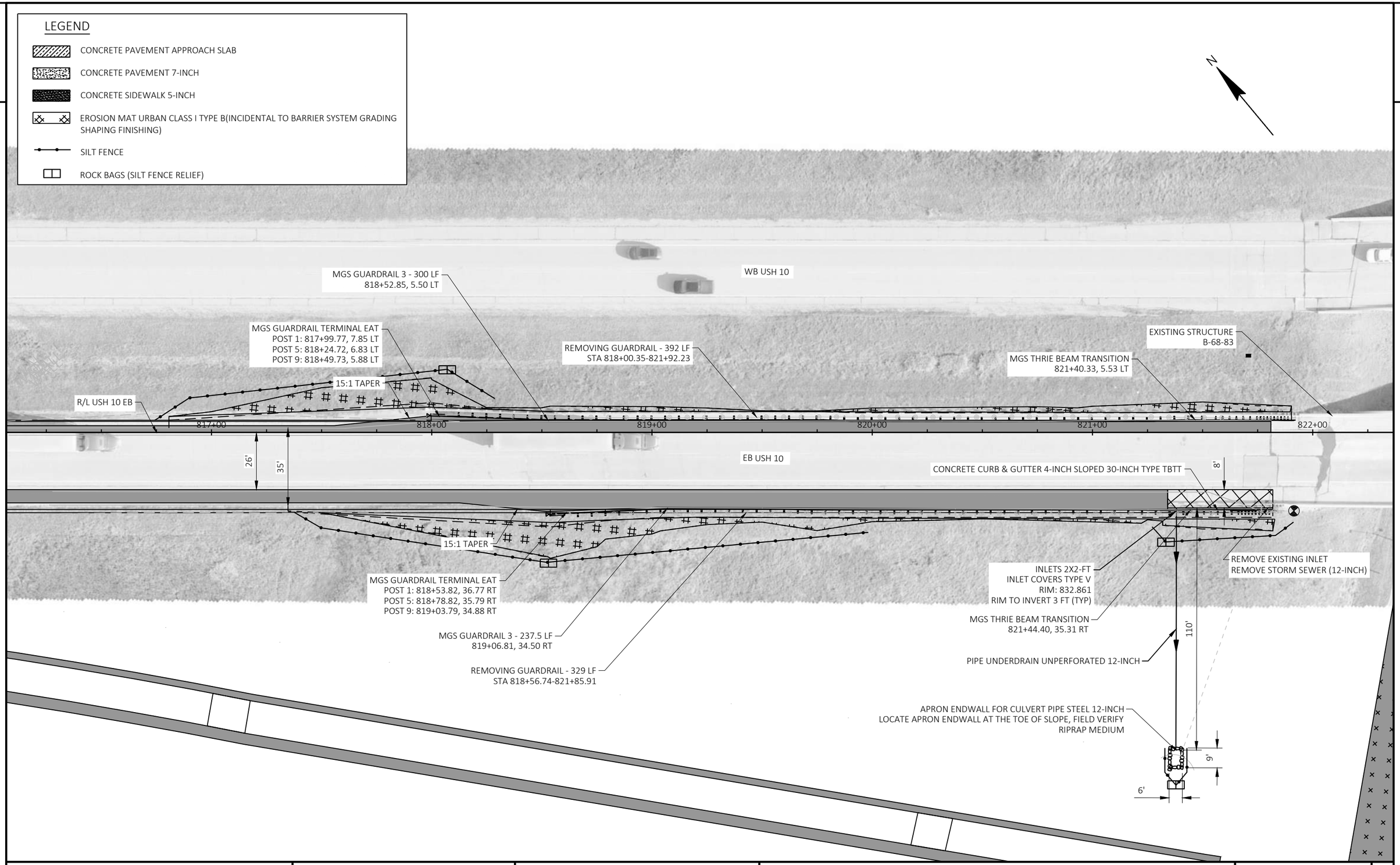

2

PROJECT NO: 1510-02-60	HWY: USH 10	COUNTY: WAUPACA	GUARDRAIL DETAILS	SHEET 23	E

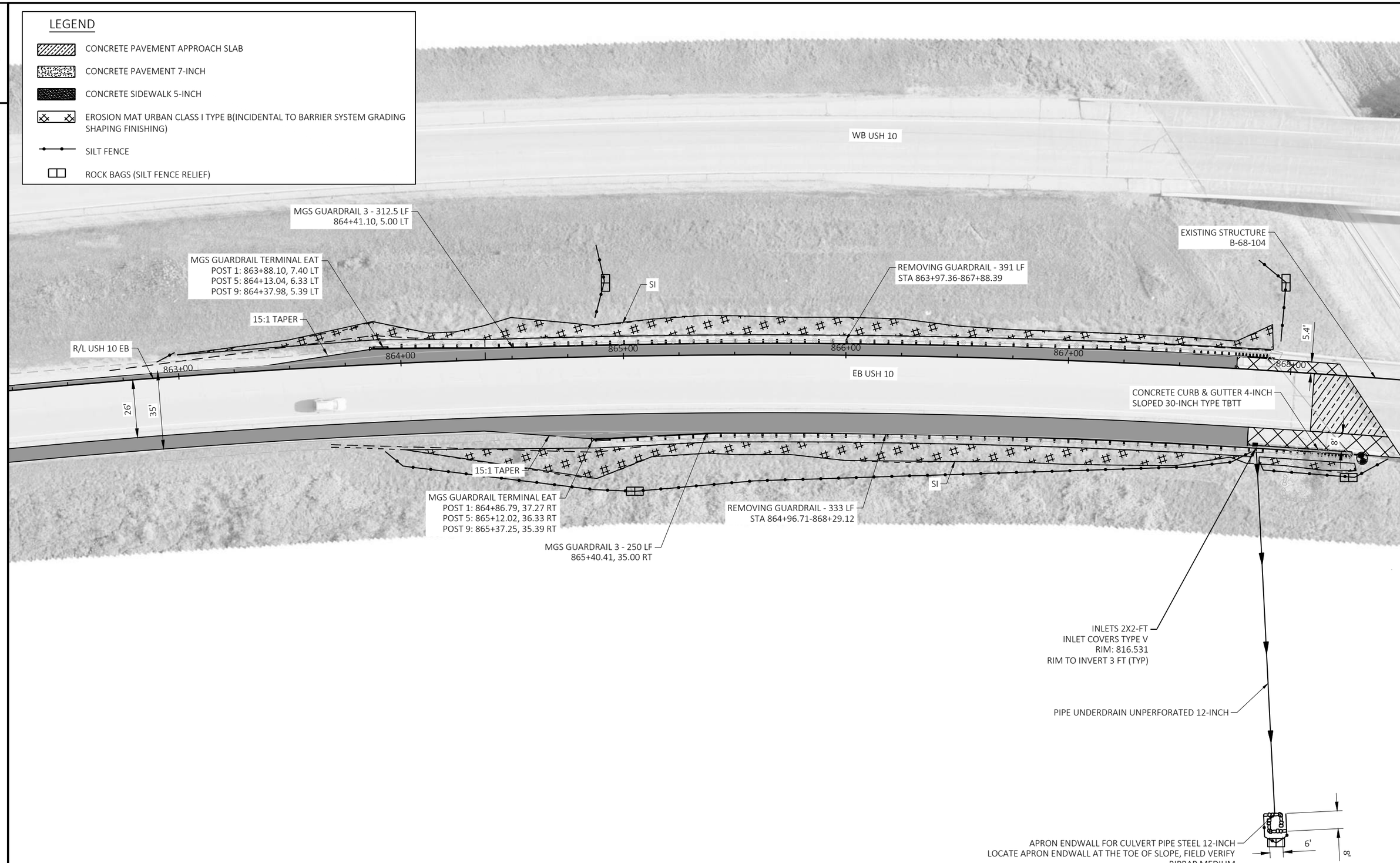
LEGEND
CONCRETE PAVEMENT APPROACH SLAB
CONCRETE PAVEMENT 7-INCH
CONCRETE SIDEWALK 5-INCH
EROSION MAT URBAN CLASS I TYPE B(INCIDENTAL TO BARRIER SYSTEM GRADING SHAPING FINISHING)
SILT FENCE
ROCK BAGS (SILT FENCE RELIEF)
WB USH 10
MGS GUARDRAIL 3 - 312.5 LF
864+41.10, 5.00 LT
MGS GUARDRAIL TERMINAL EAT
POST 1: 863+88.10, 7.40 LT
POST 5: 864+13.04, 6.33 LT
POST 9: 864+37.98, 5.39 LT
15:1 TAPER
R/L USH 10 EB
SI
REMOVING GUARDRAIL - 391 LF
STA 863+97.36-867+88.39
EXISTING STRUCTURE
B-68-104
5.4'
863+00
864+00
865+00
866+00
867+00
868+00
EB USH 10
CONCRETE CURB & GUTTER 4-INCH
SLOPED 30-INCH TYPE TBTT
26'
35'
8'
15:1 TAPER
MGS GUARDRAIL TERMINAL EAT
POST 1: 864+86.79, 37.27 RT
POST 5: 865+12.02, 36.33 RT
POST 9: 865+37.25, 35.39 RT
MGS GUARDRAIL 3 - 250 LF
865+40.41, 35.00 RT
SI
REMOVING GUARDRAIL - 333 LF
STA 864+96.71-868+29.12
INLETS 2X2-FT
INLET COVERS TYPE V
RIM: 816.531
RIM TO INVERT 3 FT (TYP)
PIPE UNDERDRAIN UNPERFORATED 12-INCH
APRON ENDWALL FOR CULVERT PIPE STEEL 12-INCH
LOCATE APRON ENDWALL AT THE TOE OF SLOPE, FIELD VERIFY
RIPRAP MEDIUM
6'
8'

2

NOTE:

SEE CROSSOVER TRAFFIC CONTROL FOR ADDITIONAL LANE ADJUSTMENT DETAILS

APPLY TOPSOIL, FERTILIZER TYPE B, SEEDING MIXTURE NO. 20, AND EROSION MAT URBAN CLASS I TYPE B TO ALL DISTURBED AREAS AFTER THE REMOVAL OF TEMPORARY CROSSOVER

LEGEND:

SEEDING MIXTURE NO. 30 & MULCHING

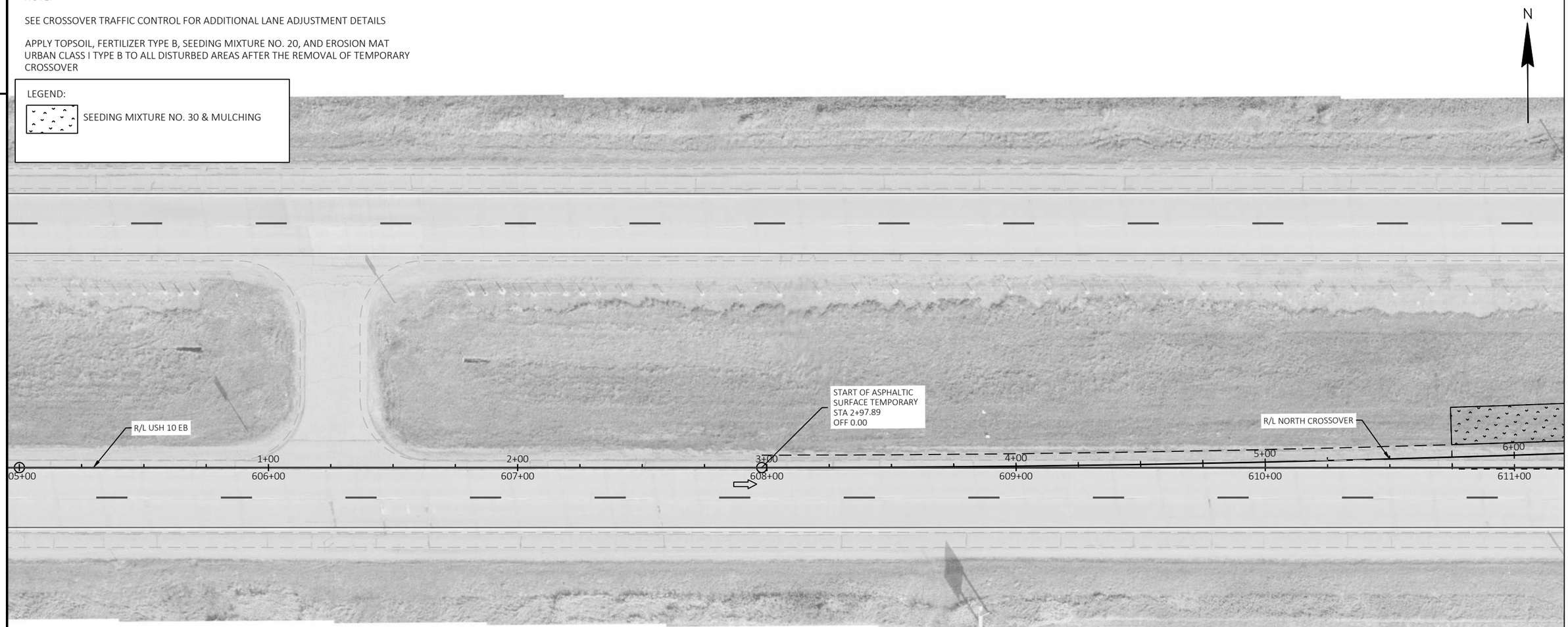

2

PROJECT NO: 1510-02-60	HWY: USH 10	COUNTY: WAUPACA	CROSSOVER DETAIL	SHEET 25	E

FILE NAME : Y:\MILWAUKEE\20300S\20335.01\ENG_DOCS\1510-02-60\15100260\SHEETS\021203-PD.DWG
LAYOUT NAME - 01
PLOT DATE : 6/23/2026 5:01 PM
PLOT BY : SCHWIERKING, EMMA
PLOT NAME :
PLOT SCALE : 1 IN:40 FT

WISDOT/CADDS SHEET 42

2

NOTE:

SEE CROSSOVER TRAFFIC CONTROL FOR ADDITIONAL LANE ADJUSTMENT DETAILS

APPLY TOPSOIL, FERTILIZER TYPE B, SEEDING MIXTURE NO. 20, AND EROSION MAT URBAN CLASS I TYPE B TO ALL DISTURBED AREAS AFTER THE REMOVAL OF TEMPORARY CROSSOVER

LEGEND:

SEEDING MIXTURE NO. 30 & MULCHING

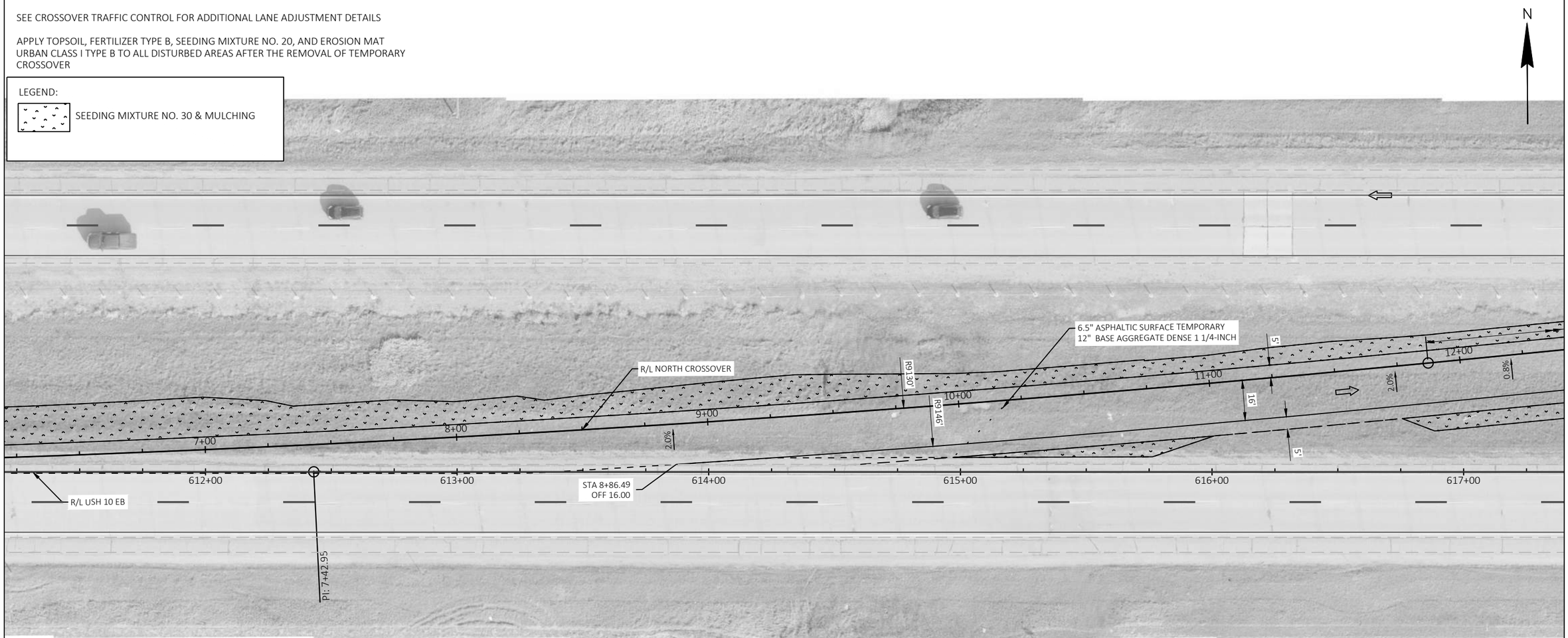

2

PROJECT NO: 1510-02-60	HWY: USH 10	COUNTY: WAUPACA	CROSSOVER DETAIL	SHEET 26	E

2

NOTE:

SEE CROSSOVER TRAFFIC CONTROL FOR ADDITIONAL LANE ADJUSTMENT DETAILS

APPLY TOPSOIL, FERTILIZER TYPE B, SEEDING MIXTURE NO. 20, AND EROSION MAT URBAN CLASS I TYPE B TO ALL DISTURBED AREAS AFTER THE REMOVAL OF TEMPORARY CROSSOVER

LEGEND:

SEEDING MIXTURE NO. 30 & MULCHING

2

PROJECT NO: 1510-02-60	HWY: USH 10	COUNTY: WAUPACA	CROSSOVER DETAIL	SHEET 27	E

2

NOTE:

SEE CROSSOVER TRAFFIC CONTROL FOR ADDITIONAL LANE ADJUSTMENT DETAILS

APPLY TOPSOIL, FERTILIZER TYPE B, SEEDING MIXTURE NO. 20, AND EROSION MAT URBAN CLASS I TYPE B TO ALL DISTURBED AREAS AFTER THE REMOVAL OF TEMPORARY CROSSOVER

LEGEND:

SEEDING MIXTURE NO. 30 & MULCHING

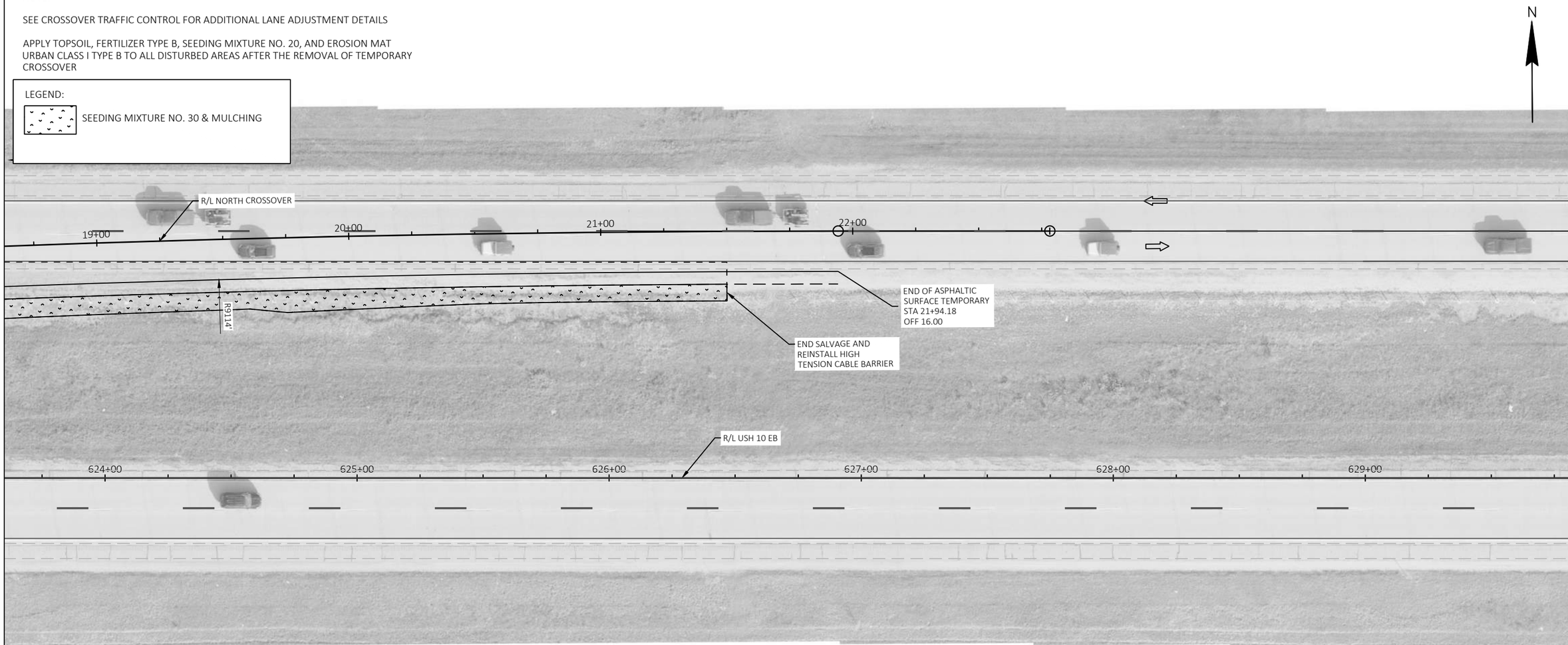

2

PROJECT NO: 1510-02-60	HWY: USH 10	COUNTY: WAUPACA	CROSSOVER DETAIL	SHEET 28	E

2

NOTE:

SEE CROSSOVER TRAFFIC CONTROL FOR ADDITIONAL LANE ADJUSTMENT DETAILS

APPLY TOPSOIL, FERTILIZER TYPE B, SEEDING MIXTURE NO. 20, AND EROSION MAT URBAN CLASS I TYPE B TO ALL DISTURBED AREAS AFTER THE REMOVAL OF TEMPORARY CROSSOVER

CROSS SLOPES ARE PERPENDICULAR TO TEMPORARY CROSSOVER LANE LINES.

LEGEND:

SEEDING MIXTURE NO. 30 & MULCHING

6.5" ASPHALTIC SURFACE TEMPORARY OVER 12" BASE AGGREGATE DENSE 1 1/4-INCH

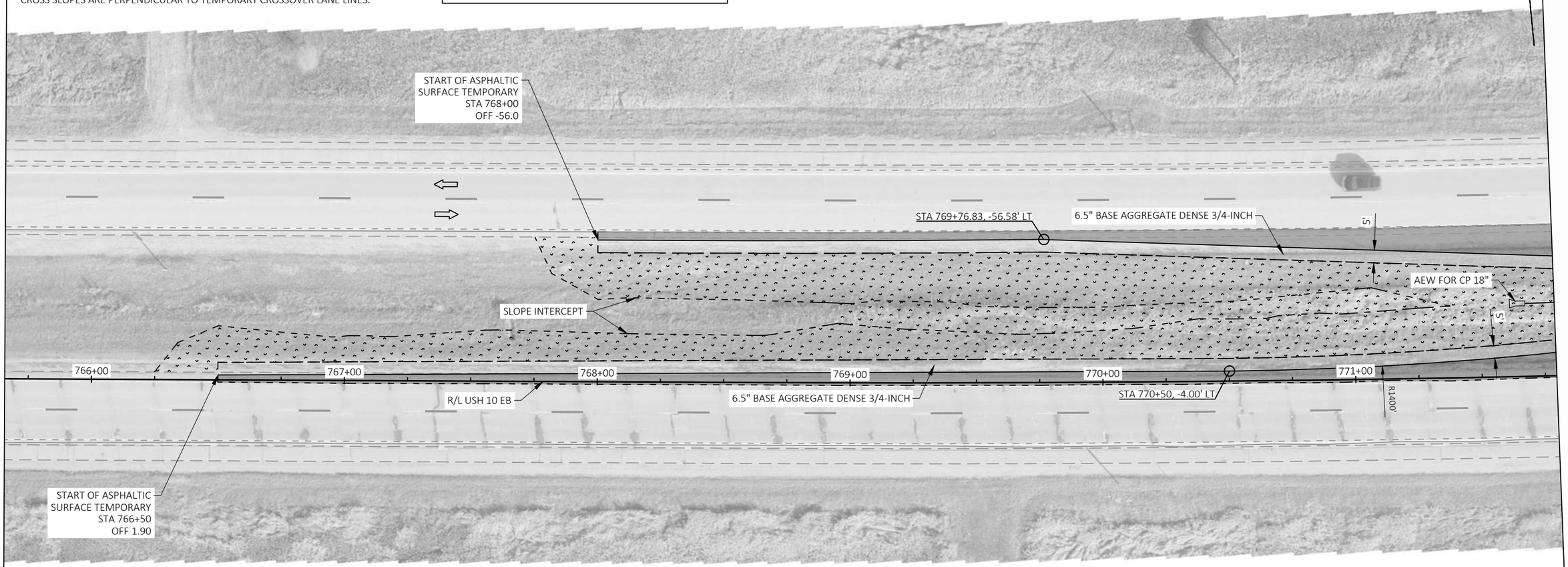

2

PROJECT NO: 1510-02-60	HWY: USH 10	COUNTY: WAUPACA	CROSSOVER DETAIL	SHEET 29	E

2

NOTE:

SEE CROSSOVER TRAFFIC CONTROL FOR ADDITIONAL LANE ADJUSTMENT DETAILS

APPLY TOPSOIL, FERTILIZER TYPE B, SEEDING MIXTURE NO. 20, AND EROSION MAT URBAN CLASS I TYPE B TO ALL DISTURBED AREAS AFTER THE REMOVAL OF TEMPORARY CROSSOVER

CROSS SLOPES ARE PERPENDICULAR TO TEMPORARY CROSSOVER LANE LINES.

LEGEND:

SEEDING MIXTURE NO. 30 & MULCHING

6.5" ASPHALTIC SURFACE TEMPORARY OVER 12" BASE AGGREGATE DENSE 1 1/4-INCH

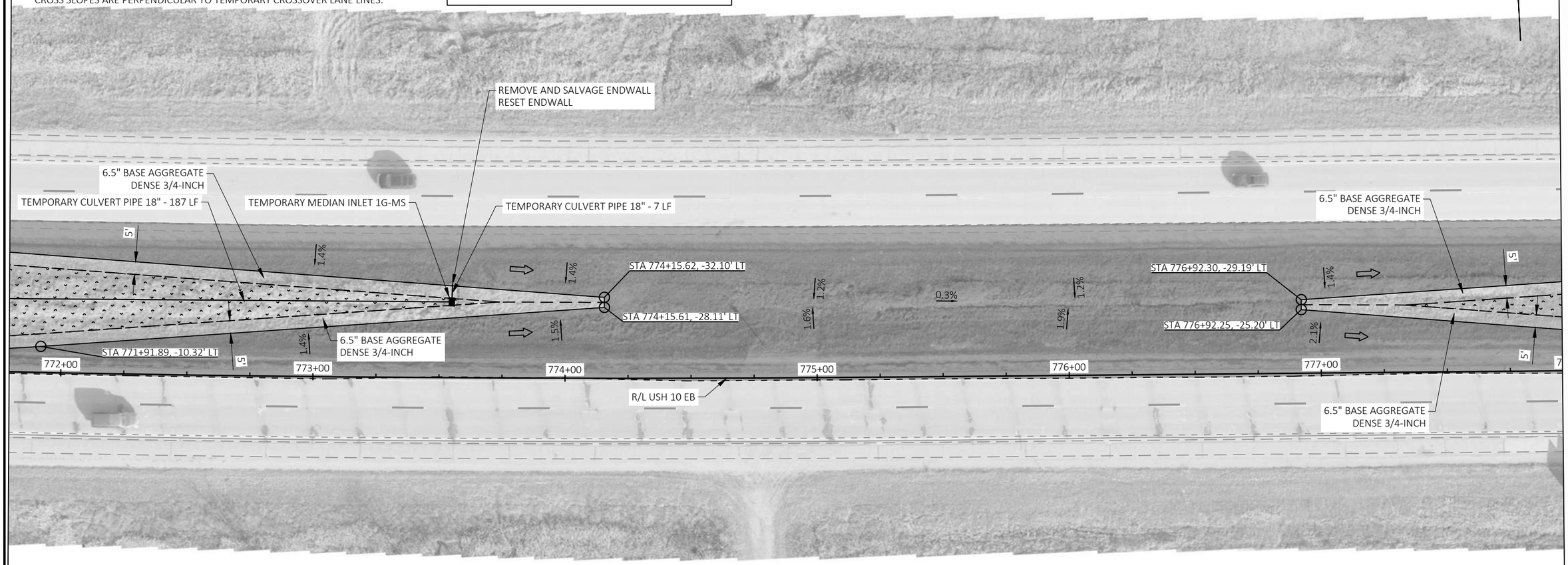

2

PROJECT NO: 1510-02-60	HWY: USH 10	COUNTY: WAUPACA	CROSSOVER DETAIL	SHEET 30	E

2

NOTE:

SEE CROSSOVER TRAFFIC CONTROL FOR ADDITIONAL LANE ADJUSTMENT DETAILS

APPLY TOPSOIL, FERTILIZER TYPE B, SEEDING MIXTURE NO. 20, AND EROSION MAT URBAN CLASS I TYPE B TO ALL DISTURBED AREAS AFTER THE REMOVAL OF TEMPORARY CROSSOVER

CROSS SLOPES ARE PERPENDICULAR TO TEMPORARY CROSSOVER LANE LINES.

LEGEND:

SEEDING MIXTURE NO. 30 & MULCHING

6.5" ASPHALTIC SURFACE TEMPORARY OVER 12" BASE AGGREGATE DENSE 1 1/4-INCH

N

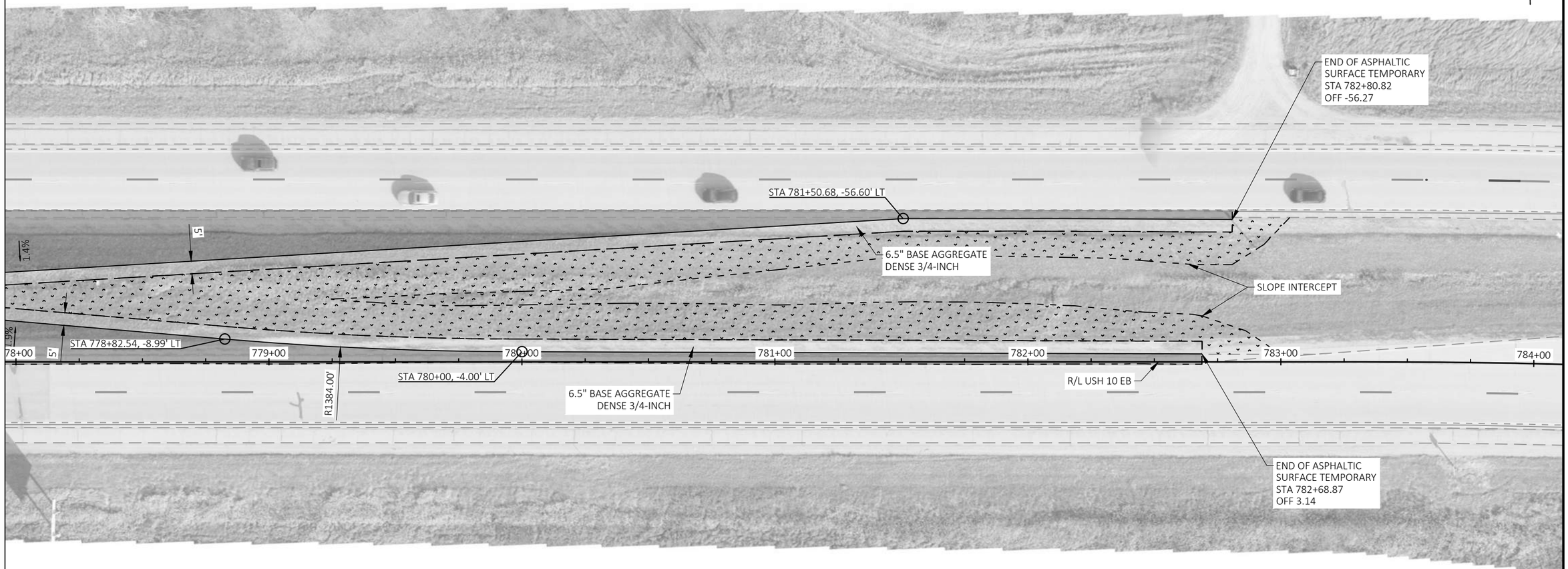

2

PROJECT NO: 1510-02-60	HWY: USH 10	COUNTY: WAUPACA	CROSSOVER DETAIL	SHEET 31	E

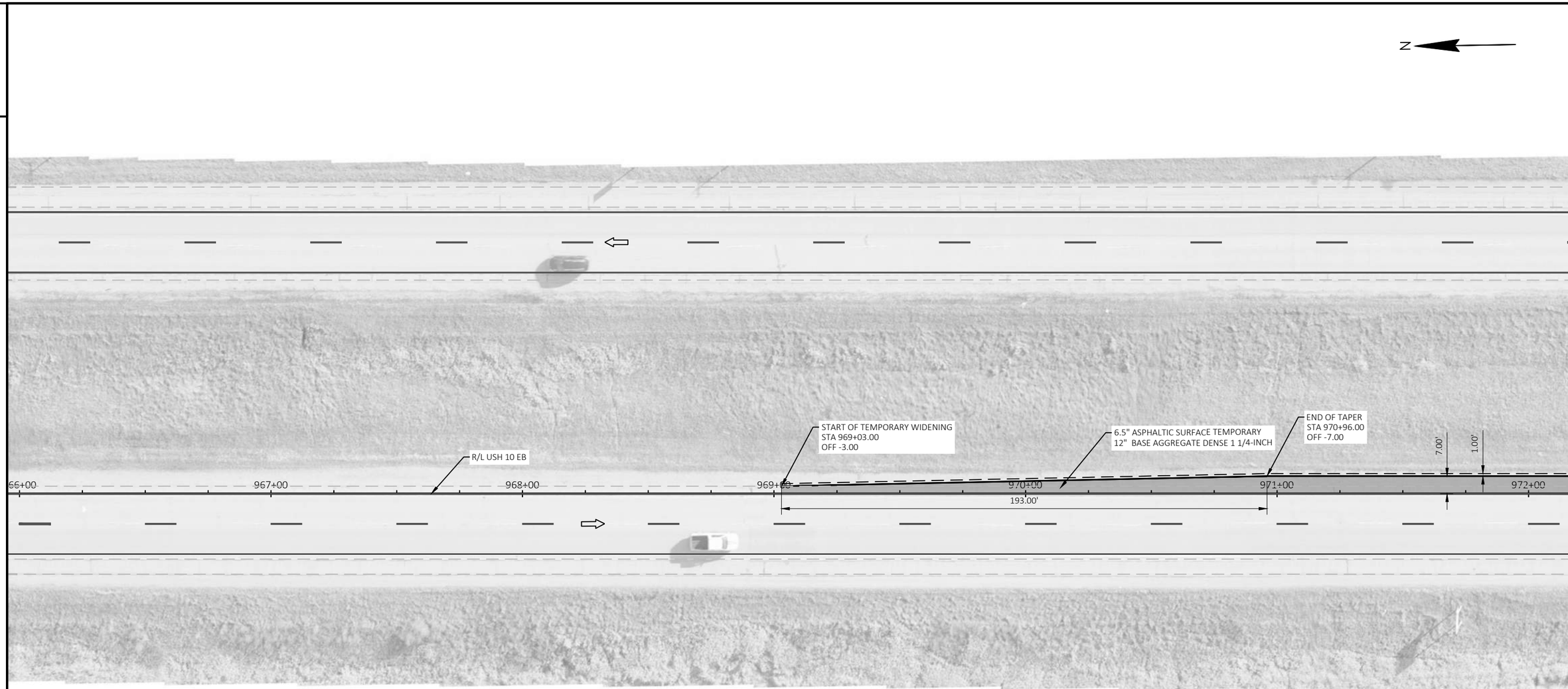

PROJECT NO: 1510-02-60	HWY: USH 10	COUNTY: WAUPACA	WIDENING DETAIL	SHEET 32	E

FILE NAME : Y:\MILWAUKEE\20300S\20335.01\ENG_DOCS\1510-02-60\15100260\SHEETS\021204-PD.DWG
LAYOUT NAME - 01
PLOT DATE : 6/18/2026 3:24 PM
PLOT BY : SCHWIERKING, EMMA
PLOT NAME :
PLOT SCALE : 1 IN:40 FT

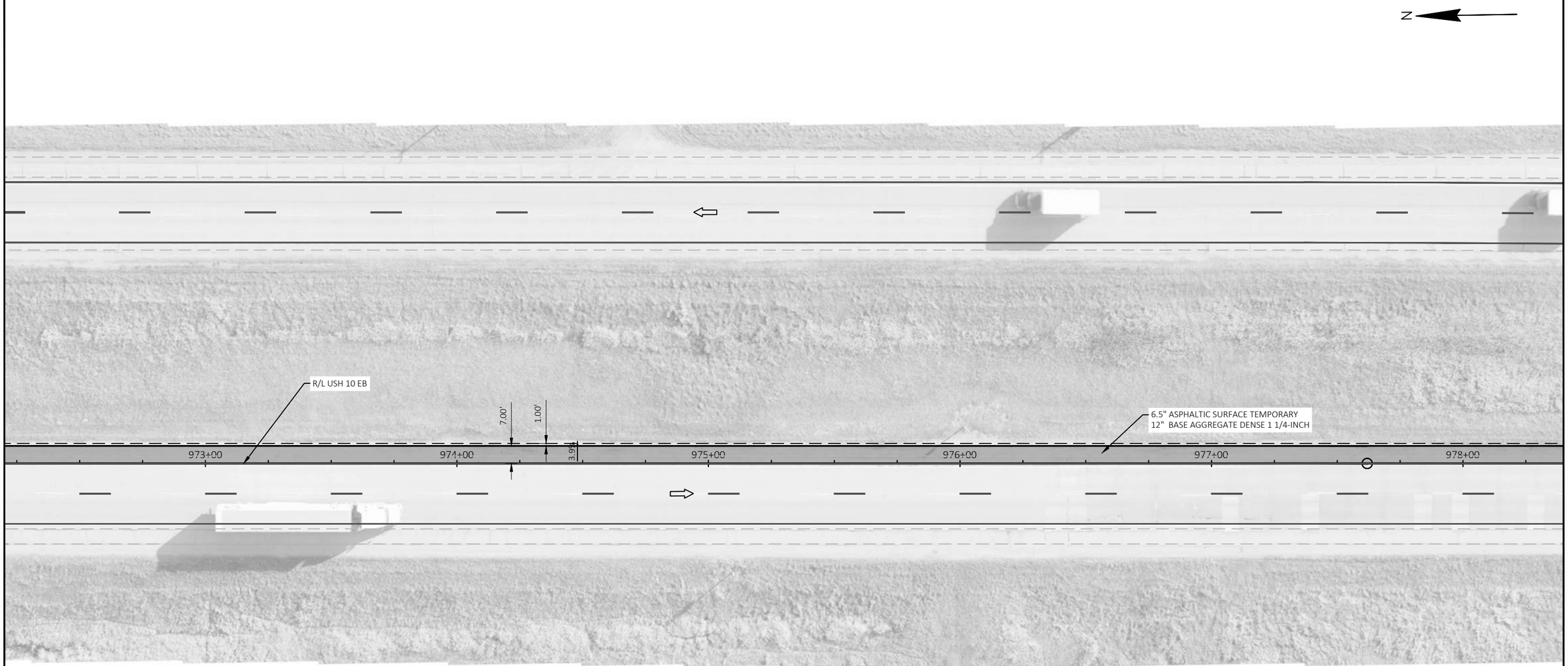

PROJECT NO: 1510-02-60	HWY: USH 10	COUNTY: WAUPACA	WIDENING DETAIL	SHEET 33	E

FILE NAME : Y:\MILWAUKEE\20300S\20335.01\ENG_DOCS\1510-02-60\15100260\SHEETS\021204-PD.DWG
LAYOUT NAME - 02
PLOT DATE : 6/18/2026 3:25 PM
PLOT BY : SCHWIERKING, EMMA
PLOT NAME :
PLOT SCALE : 1 IN:40 FT
WISDOT/CADDS SHEET 42

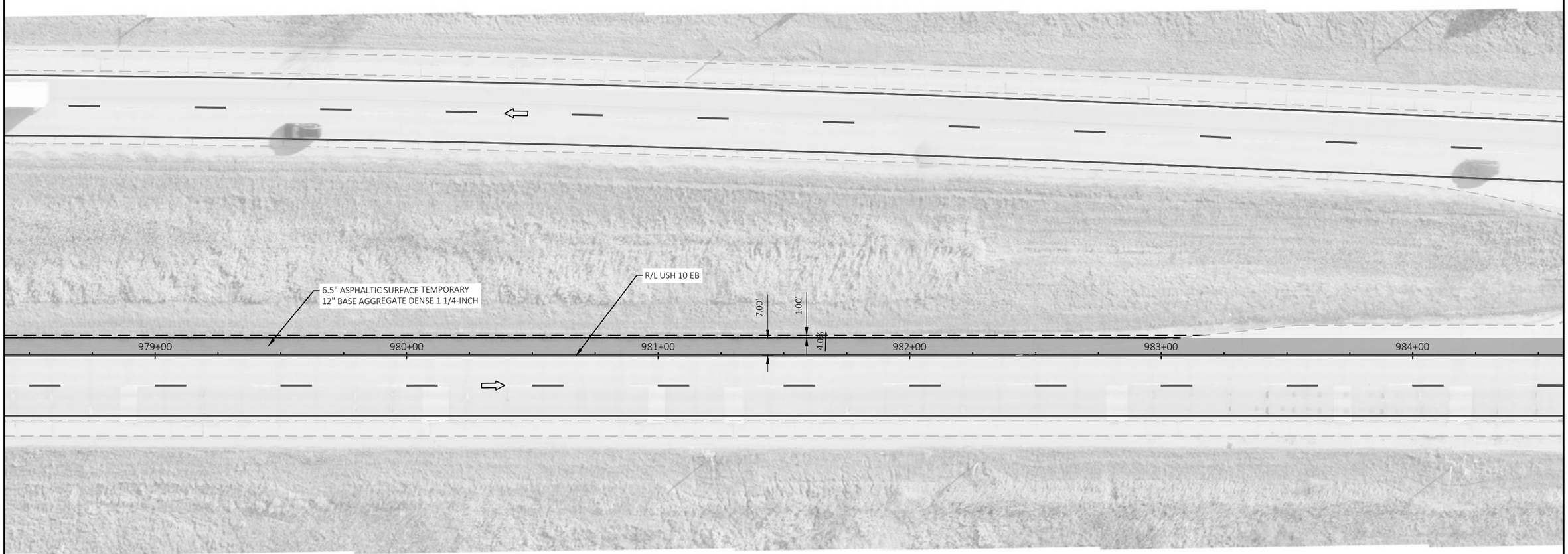
N
6.5" ASPHALTIC SURFACE TEMPORARY
12" BASE AGGREGATE DENSE 1 1/4-INCH
R/L USH 10 EB
7.00'
1.00'
4.0%
979+00
980+00
981+00
982+00
983+00
984+00

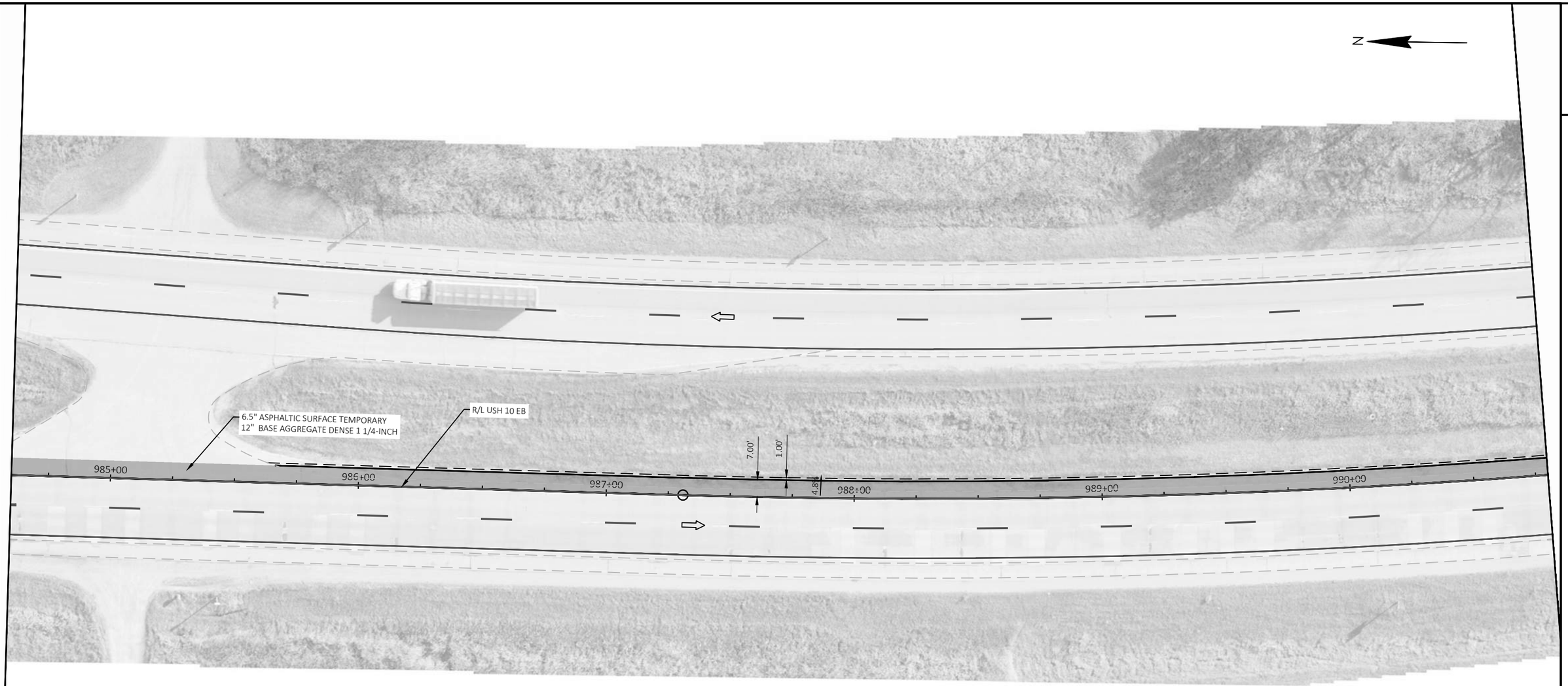

2

PROJECT NO: 1510-02-60	HWY: USH 10	COUNTY: WAUPACA	WIDENING DETAIL	SHEET 35	E

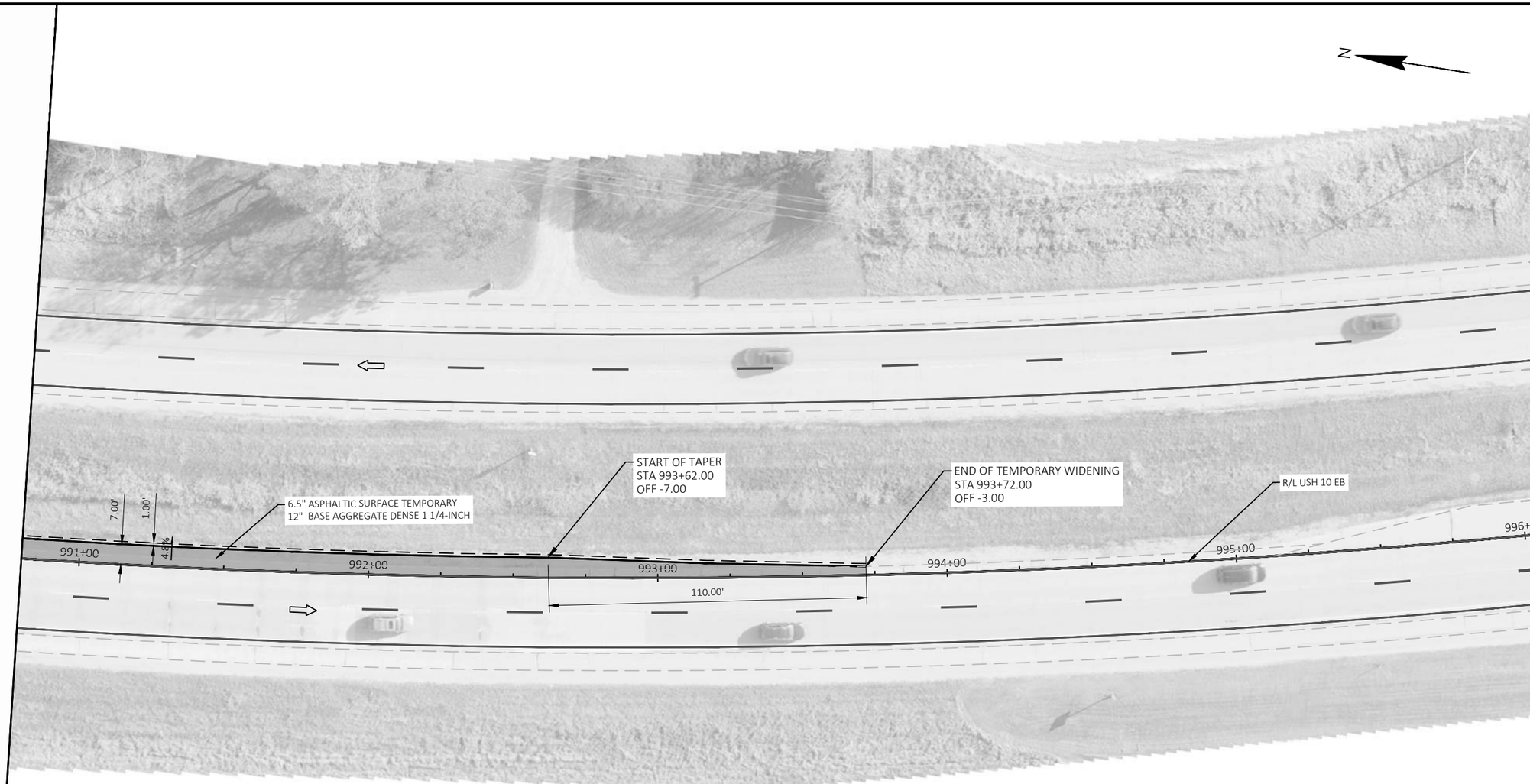
N
START OF TAPER
STA 993+62.00
OFF -7.00
END OF TEMPORARY WIDENING
STA 993+72.00
OFF -3.00
R/L USH 10 EB
6.5" ASPHALTIC SURFACE TEMPORARY
12" BASE AGGREGATE DENSE 1 1/4-INCH
7.00'
1.00'
4.8%
991+00
992+00
993+00
994+00
995+00
996+00
110.00'

2

LEGEND

- #### / ###.## — POINT NUMBER / POINT ELEVATION
- # — CURB RAMP TYPE
- LL — LEVEL LANDING
- DETECTABLE WARNING FIELD
- 2" HMA OVER 10" BAD
- GRADED NON-TRAVERSIBLE FLARE

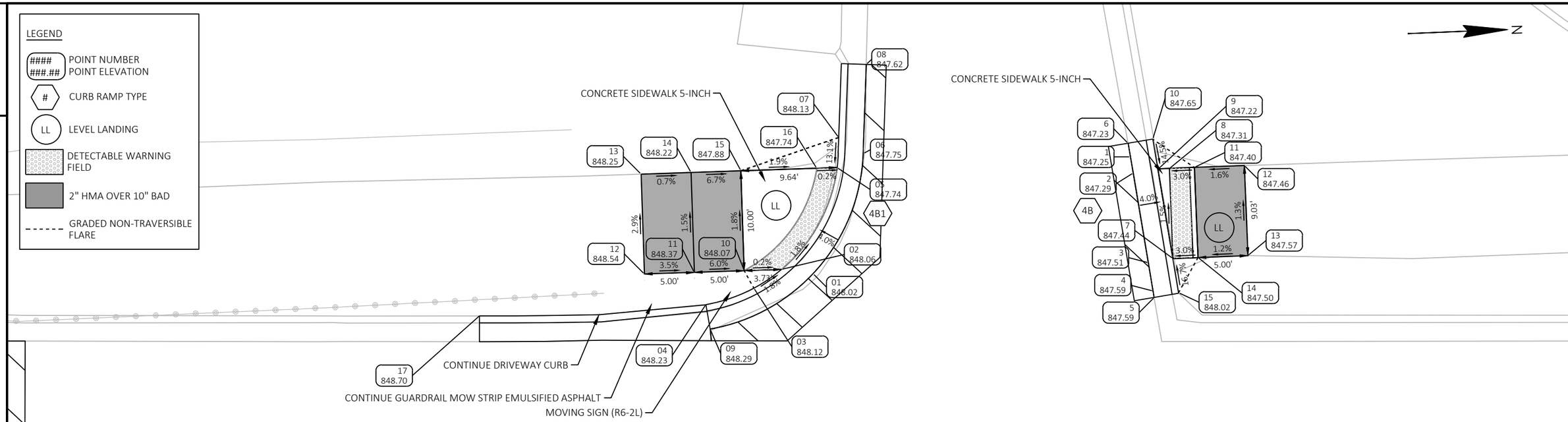

RADIAL TILE									
WARNING FIELD AREA (SF)	RADIUS AT BACK OF CURB (LF)	LONG CHORD				LANDING DISTANCE			
		POINT	-	POINT	-	POINT	-	POINT	-
24.67	16	5	-	2	11.74	5	-	15	9.74

R/L STH 22/54 SB

53+00

R/L STH 22/54 NB

53+00

South Ramp LT					
POINT NUMBER	STATION	OFFSET	ELEVATION	NORTHING	EASTING
01	52+88.19	33.71' LT	848.02	331840.99	548118.55
02	52+85.01	34.14' LT	848.06	331837.83	548117.99
03	52+82.25	32.27' LT	848.12	331835.00	548119.75
04	52+77.45	30.62' LT	848.23	331830.14	548121.21
05	52+90.58	44.33' LT	847.74	331843.80	548108.03
06	52+93.19	45.73' LT	847.75	331846.47	548106.73
07	52+90.76	47.34' LT	848.13	331844.10	548105.03
08	52+93.50	54.65' LT	847.62	331847.13	548097.83
09	52+77.88	28.15' LT	848.29	331830.47	548123.69
10	52+81.28	34.01' LT	848.07	331834.10	548117.97
11	52+76.29	33.84' LT	848.37	331829.10	548117.94
12	52+71.29	33.68' LT	848.54	331824.10	548117.91
13	52+70.96	43.67' LT	848.25	331824.17	548107.91
14	52+75.95	43.84' LT	848.22	331829.17	548107.94
15	52+80.95	44.01' LT	847.88	331834.16	548107.97
16	52+88.55	44.26' LT	847.74	331841.77	548108.02
17	52+54.76	29.48' LT	848.70	331807.42	548121.45

Ramp South RT					
POINT NUMBER	STATION	OFFSET	ELEVATION	NORTHING	EASTING
1	53+19.97	45.39' LT	847.25	331873.21	548108.13
2	53+20.25	43.78' LT	847.29	331873.42	548109.74
3	53+21.78	34.80' LT	847.51	331874.60	548118.78
4	53+22.26	31.98' LT	847.59	331874.97	548121.62
5	53+22.37	31.34' LT	847.59	331875.05	548122.26
6	53+19.74	46.76' LT	847.23	331873.03	548106.75
7	53+24.24	35.22' LT	847.44	331877.07	548118.46
8	53+23.88	44.24' LT	847.31	331877.07	548109.43
9	53+22.76	44.20' LT	847.22	331875.95	548109.43
10	53+22.21	47.16' LT	847.65	331875.51	548106.45
11	53+26.38	44.34' LT	847.40	331879.58	548109.43
12	53+31.38	44.54' LT	847.46	331884.58	548109.43
13	53+31.74	35.52' LT	847.57	331884.58	548118.46
14	53+26.74	35.32' LT	847.50	331879.58	548118.46
15	53+24.79	31.80' LT	848.02	331877.49	548121.90

NOTE:
STATION & OFFSET GIVEN FROM R/L STH 22 SB

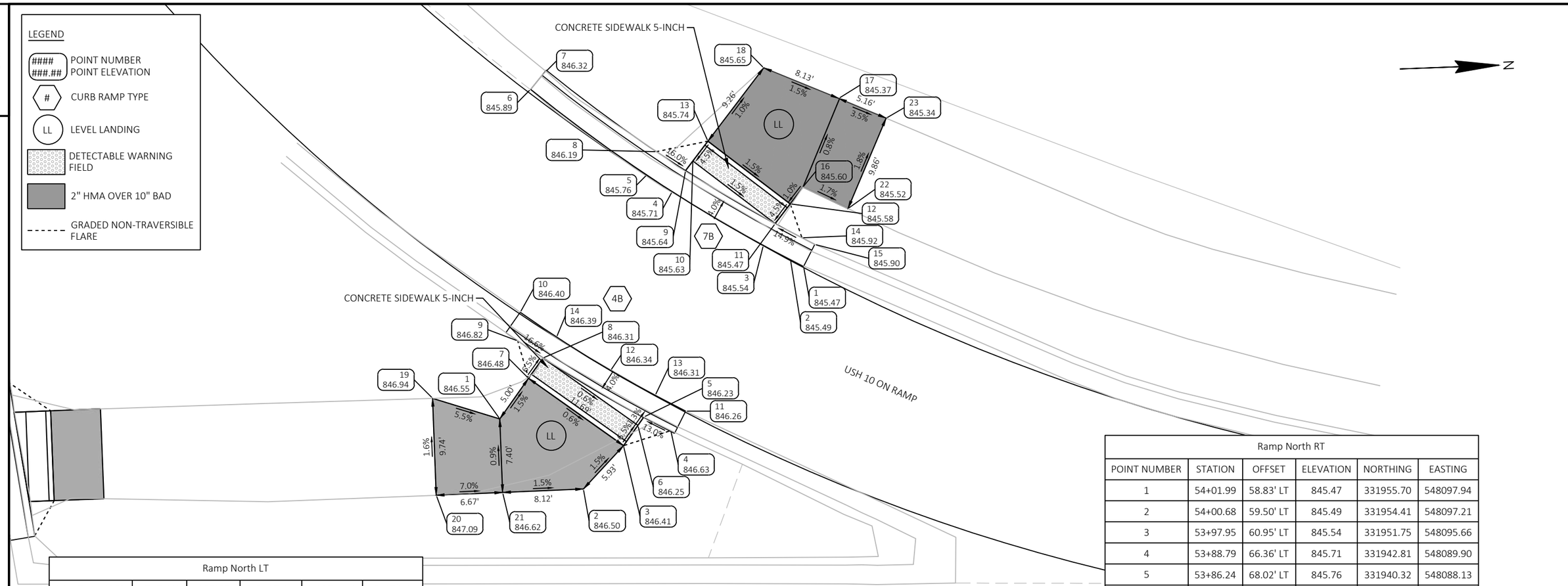

Ramp North LT					
POINT NUMBER	STATION	OFFSET	ELEVATION	NORTHING	EASTING
1	53+71.49	43.53' LT	846.55	331924.61	548112.02
2	53+79.89	36.49' LT	846.50	331932.73	548119.39
3	53+83.91	40.85' LT	846.41	331936.92	548115.19
4	53+88.67	42.37' LT	846.63	331941.73	548113.87
5	53+85.95	43.73' LT	846.23	331939.08	548112.40
6	53+85.36	42.89' LT	846.25	331938.45	548113.21
7	53+74.38	47.61' LT	846.48	331927.66	548108.06
8	53+75.82	49.65' LT	846.31	331929.19	548106.08
9	53+73.28	51.37' LT	846.82	331926.72	548104.26
10	53+73.54	54.24' LT	846.40	331927.08	548101.41
11	53+90.16	44.31' LT	846.26	331943.30	548111.98
12	53+82.62	48.39' LT	846.34	331935.93	548107.60
13	53+87.10	45.89' LT	846.31	331940.31	548110.28
14	53+77.19	51.74' LT	846.39	331930.63	548104.04
19	53+64.74	45.60' LT	846.94	331917.95	548109.69
20	53+65.11	35.86' LT	847.09	331917.94	548119.43
21	53+71.77	36.14' LT	846.62	331924.61	548119.42

Ramp North RT					
POINT NUMBER	STATION	OFFSET	ELEVATION	NORTHING	EASTING
1	54+01.99	58.83' LT	845.47	331955.70	548097.94
2	54+00.68	59.50' LT	845.49	331954.41	548097.21
3	53+97.95	60.95' LT	845.54	331951.75	548095.66
4	53+88.79	66.36' LT	845.71	331942.81	548089.90
5	53+86.24	68.02' LT	845.76	331940.32	548088.13
6	53+74.58	76.62' LT	845.89	331929.01	548079.08
7	53+76.12	78.44' LT	846.32	331930.63	548077.32
8	53+87.22	70.37' LT	846.19	331941.40	548085.82
9	53+90.14	68.46' LT	845.64	331944.23	548087.84
10	53+90.87	69.43' LT	845.63	331945.01	548086.91
11	53+99.15	63.15' LT	845.47	331953.03	548093.51
12	54+00.66	65.13' LT	845.58	331954.61	548091.59
13	53+92.39	71.42' LT	845.74	331946.60	548084.98
16	54+01.93	66.80' LT	845.60	331955.95	548089.97
17	54+05.52	75.72' LT	845.37	331959.89	548081.20
18	53+97.99	78.79' LT	845.65	331952.49	548077.84
22	54+06.45	64.65' LT	845.52	331960.38	548092.30
23	54+10.28	73.73' LT	845.34	331964.57	548083.38

NOTE:
STATION & OFFSET GIVEN FROM R/L STH 22 SB

2

NOTES:
1. SEE SDD PAVEMENT MARKING, ENTRANCE RAMP AND PARALLEL ENTRANCE RAMP AND PERMANENT LONGITUDINAL PAVEMENT MARKINGS FOR ADDITIONAL CROSSOVER DETAILS
2. SEE SDD PAVEMENT MARKING, MAINLINE AND TURN LANES FOR PAVEMENT MARKINGS NOT SHOWN

N

2

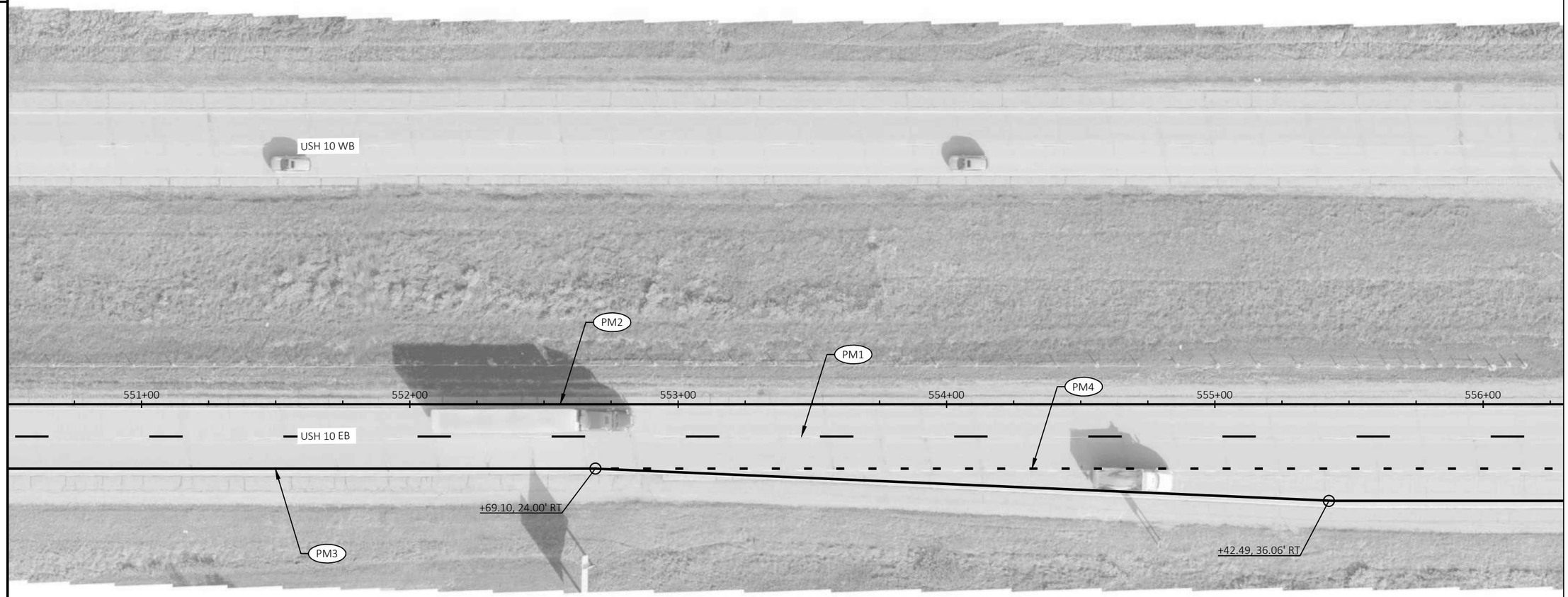

LEGEND

- PM1 MARKING LINE GROOVED PERMANENT 6" TAPE 6-INCH, MARKING LINE GROOVED BLACK EPOXY 6-INCH (12.5' WHITE, 12.5' BLACK, 25' GAP)
- PM2 MARKING LINE GROOVED WET REFLECTIVE EPOXY 6-INCH (YELLOW)
- PM3 MARKING LINE GROOVED WET REFLECTIVE EPOXY 6-INCH (WHITE)
- PM4 MARKING LINE GROOVED PERMANENT TAPE 10-INCH (3' LINE, 9' GAP, WHITE)
- PM5 MARKING LINE GROOVED PERMANENT TAPE 10-INCH (WHITE)
- PM6 MARKING CHEVRON EPOXY 24-INCH (WHITE) - 25' SPACING

2

NOTES:
1. SEE SDD PAVEMENT MARKING, ENTRANCE RAMP AND PARALLEL ENTRANCE RAMP AND PERMANENT LONGITUDINAL PAVEMENT MARKINGS FOR ADDITIONAL CROSSOVER DETAILS
2. SEE SDD PAVEMENT MARKING, MAINLINE AND TURN LANES FOR PAVEMENT MARKINGS NOT SHOWN

N

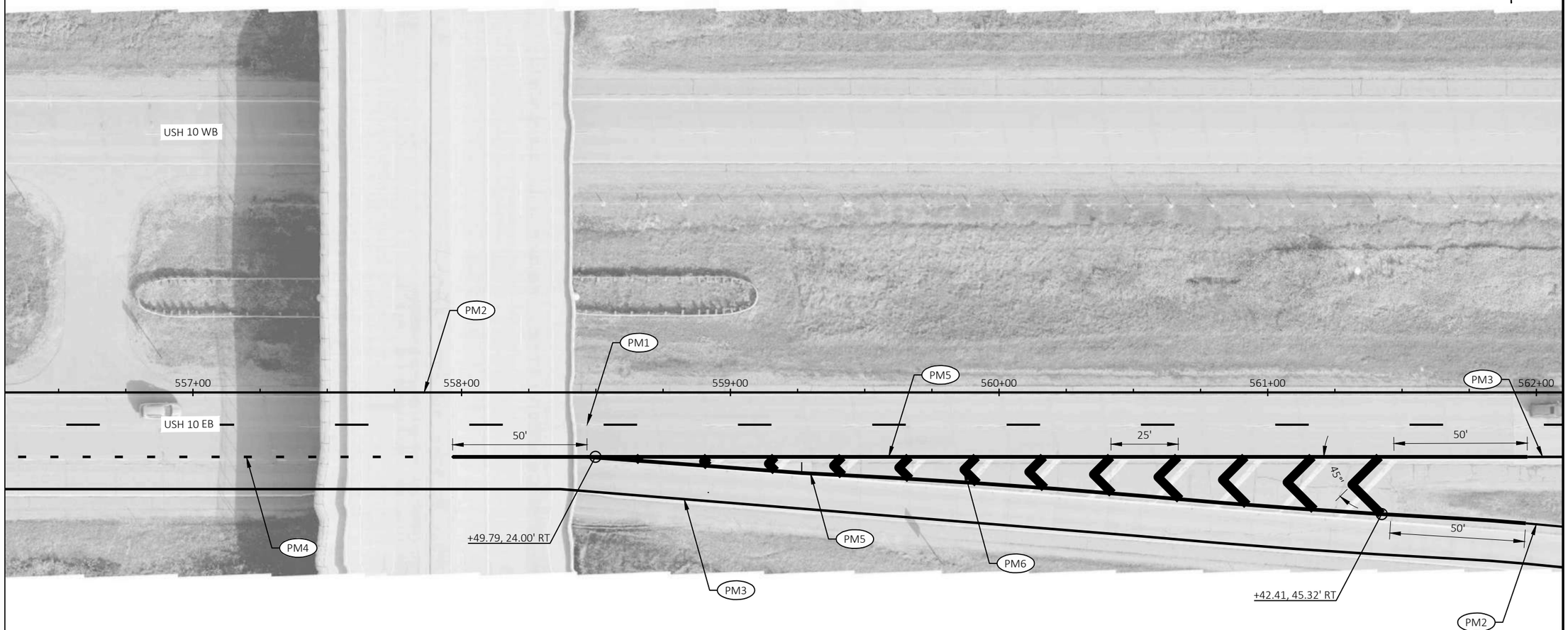

LEGEND

- PM1 MARKING LINE GROOVED PERMANENT 6" TAPE 6-INCH, MARKING LINE GROOVED BLACK EPOXY 6-INCH (12.5' WHITE, 12.5' BLACK, 25' GAP)
- PM2 MARKING LINE GROOVED WET REFLECTIVE EPOXY 6-INCH (YELLOW)
- PM3 MARKING LINE GROOVED WET REFLECTIVE EPOXY 6-INCH (WHITE)
- PM4 MARKING LINE GROOVED PERMANENT TAPE 10-INCH (3' LINE, 9' GAP, WHITE)
- PM5 MARKING LINE GROOVED PERMANENT TAPE 10-INCH (WHITE)
- PM6 MARKING CHEVRON EPOXY 24-INCH (WHITE) - 25' SPACING

2

NOTES:
1. SEE SDD PAVEMENT MARKING, ENTRANCE RAMP AND PARALLEL ENTRANCE RAMP AND PERMANENT LONGITUDINAL PAVEMENT MARKINGS FOR ADDITIONAL CROSSOVER DETAILS
2. SEE SDD PAVEMENT MARKING, MAINLINE AND TURN LANES FOR PAVEMENT MARKINGS NOT SHOWN

N

2

LEGEND

- PM1 MARKING LINE GROOVED PERMANENT 6" TAPE 6-INCH, MARKING LINE GROOVED BLACK EPOXY 6-INCH (12.5' WHITE, 12.5' BLACK, 25' GAP)
- PM2 MARKING LINE GROOVED WET REFLECTIVE EPOXY 6-INCH (YELLOW)
- PM3 MARKING LINE GROOVED WET REFLECTIVE EPOXY 6-INCH (WHITE)
- PM4 MARKING LINE GROOVED PERMANENT TAPE 10-INCH (3' LINE, 9' GAP, WHITE)
- PM5 MARKING LINE GROOVED PERMANENT TAPE 10-INCH (WHITE)
- PM6 MARKING CHEVRON EPOXY 24-INCH (WHITE) - 25' SPACING

2

NOTES:
1. SEE SDD PAVEMENT MARKING, ENTRANCE RAMP AND PARALLEL ENTRANCE RAMP AND PERMANENT LONGITUDINAL PAVEMENT MARKINGS FOR ADDITIONAL CROSSOVER DETAILS
2. SEE SDD PAVEMENT MARKING, MAINLINE AND TURN LANES FOR PAVEMENT MARKINGS NOT SHOWN

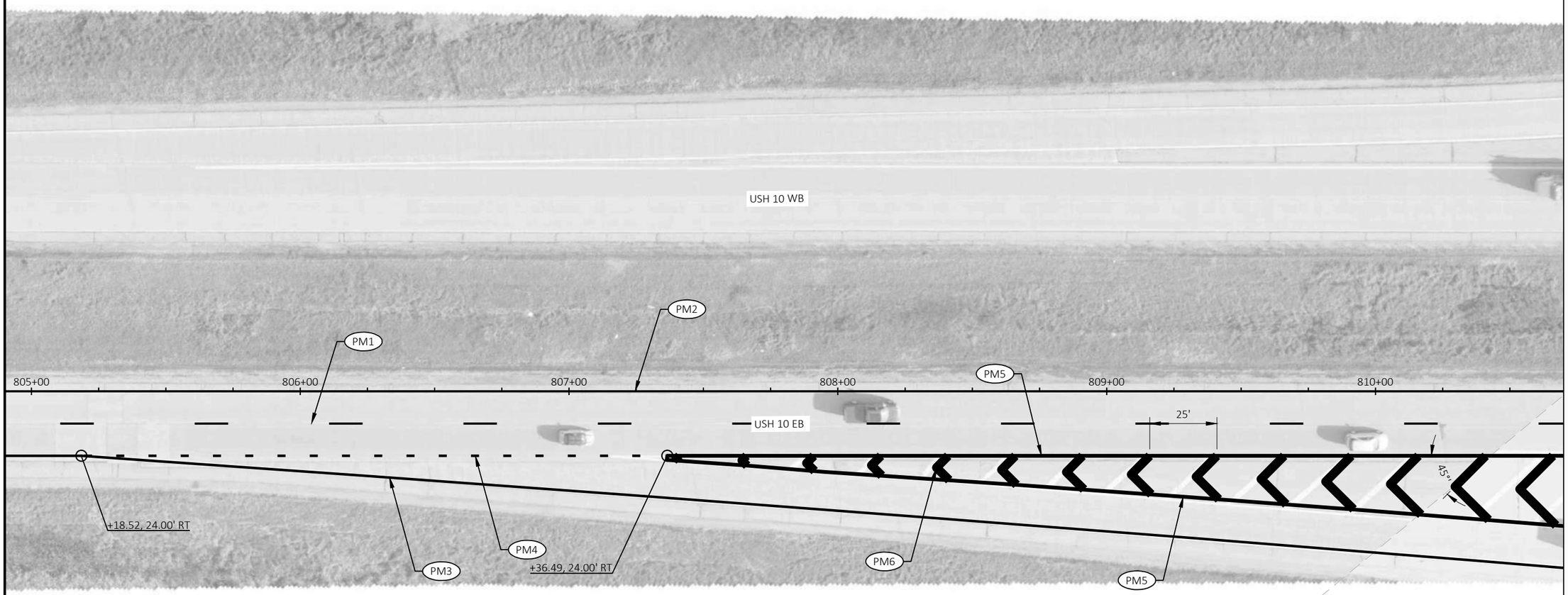

LEGEND

- PM1 MARKING LINE GROOVED PERMANENT 6" TAPE 6-INCH, MARKING LINE GROOVED BLACK EPOXY 6-INCH (12.5' WHITE, 12.5' BLACK, 25' GAP)
- PM2 MARKING LINE GROOVED WET REFLECTIVE EPOXY 6-INCH (YELLOW)
- PM3 MARKING LINE GROOVED WET REFLECTIVE EPOXY 6-INCH (WHITE)
- PM4 MARKING LINE GROOVED PERMANENT TAPE 10-INCH (3' LINE, 9' GAP, WHITE)
- PM5 MARKING LINE GROOVED PERMANENT TAPE 10-INCH (WHITE)
- PM6 MARKING CHEVRON EPOXY 24-INCH (WHITE) - 25' SPACING

2

NOTES:
1. SEE SDD PAVEMENT MARKING, ENTRANCE RAMP AND PARALLEL ENTRANCE RAMP AND PERMANENT LONGITUDINAL PAVEMENT MARKINGS FOR ADDITIONAL CROSSOVER DETAILS
2. SEE SDD PAVEMENT MARKING, MAINLINE AND TURN LANES FOR PAVEMENT MARKINGS NOT SHOWN

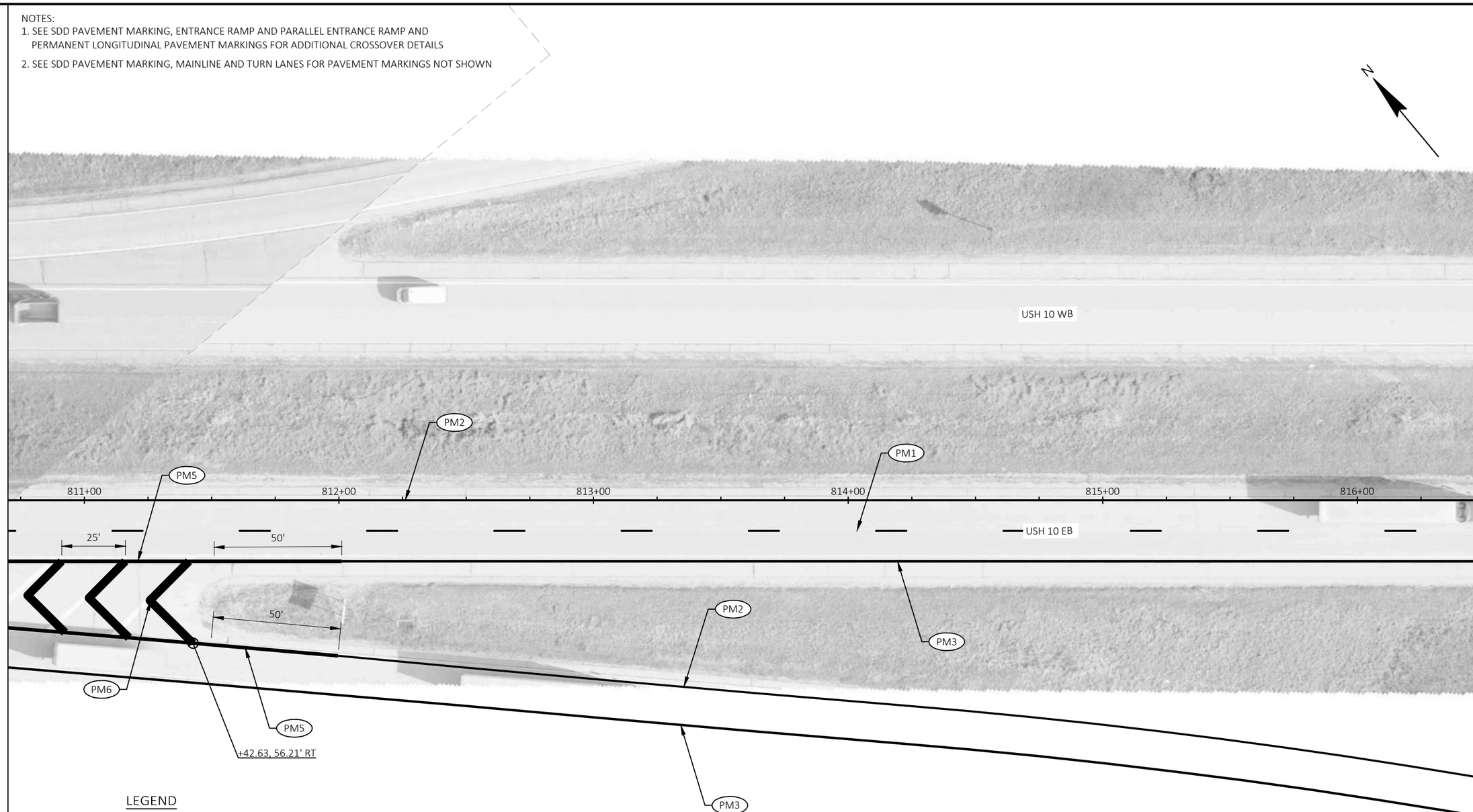

LEGEND

- PM1 MARKING LINE GROOVED PERMANENT 6" TAPE 6-INCH, MARKING LINE GROOVED BLACK EPOXY 6-INCH (12.5' WHITE, 12.5' BLACK, 25' GAP)
- PM2 MARKING LINE GROOVED WET REFLECTIVE EPOXY 6-INCH (YELLOW)
- PM3 MARKING LINE GROOVED WET REFLECTIVE EPOXY 6-INCH (WHITE)
- PM4 MARKING LINE GROOVED PERMANENT TAPE 10-INCH (3' LINE, 9' GAP, WHITE)
- PM5 MARKING LINE GROOVED PERMANENT TAPE 10-INCH (WHITE)
- PM6 MARKING CHEVRON EPOXY 24-INCH (WHITE) - 25' SPACING

2

NOTES:
1. SEE SDD PAVEMENT MARKING, ENTRANCE RAMP AND PARALLEL ENTRANCE RAMP AND PERMANENT LONGITUDINAL PAVEMENT MARKINGS FOR ADDITIONAL CROSSOVER DETAILS
2. SEE SDD PAVEMENT MARKING, MAINLINE AND TURN LANES FOR PAVEMENT MARKINGS NOT SHOWN

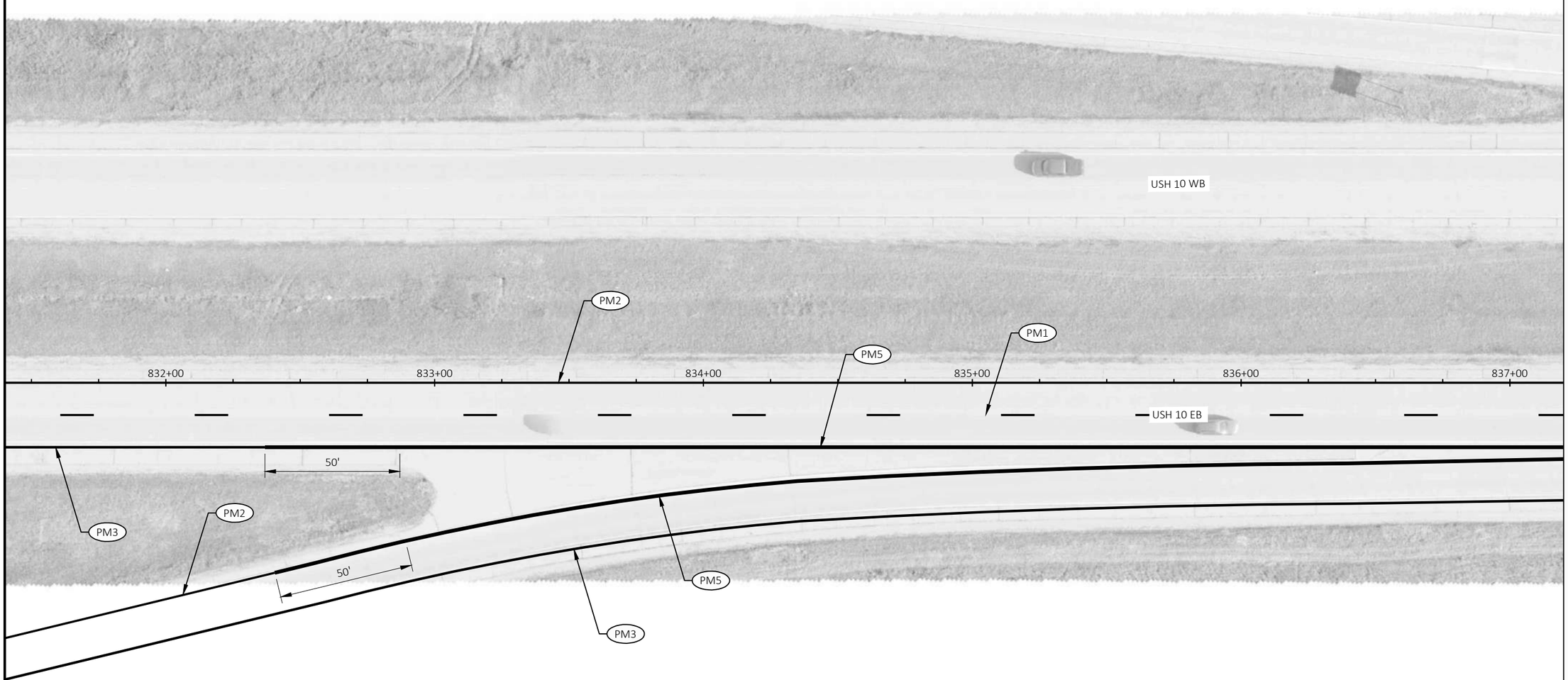

LEGEND

- PM1 MARKING LINE GROOVED PERMANENT 6" TAPE 6-INCH, MARKING LINE GROOVED BLACK EPOXY 6-INCH (12.5' WHITE, 12.5' BLACK, 25' GAP)
- PM2 MARKING LINE GROOVED WET REFLECTIVE EPOXY 6-INCH (YELLOW)
- PM3 MARKING LINE GROOVED WET REFLECTIVE EPOXY 6-INCH (WHITE)
- PM4 MARKING LINE GROOVED PERMANENT TAPE 10-INCH (3' LINE, 9' GAP, WHITE)
- PM5 MARKING LINE GROOVED PERMANENT TAPE 10-INCH (WHITE)
- PM6 MARKING CHEVRON EPOXY 24-INCH (WHITE) - 25' SPACING

2

NOTES:
1. SEE SDD PAVEMENT MARKING, ENTRANCE RAMP AND PARALLEL ENTRANCE RAMP AND PERMANENT LONGITUDINAL PAVEMENT MARKINGS FOR ADDITIONAL CROSSOVER DETAILS
2. SEE SDD PAVEMENT MARKING, MAINLINE AND TURN LANES FOR PAVEMENT MARKINGS NOT SHOWN

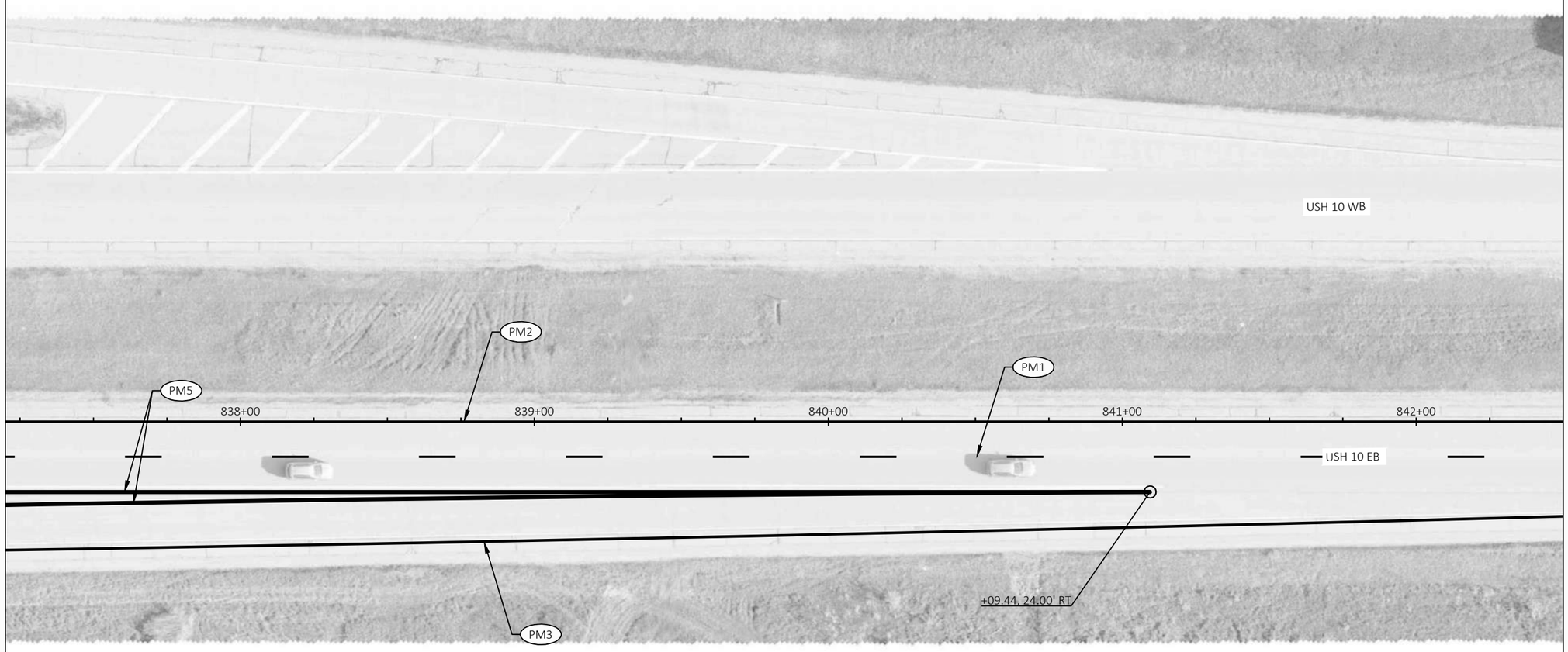

LEGEND

- PM1 MARKING LINE GROOVED PERMANENT 6" TAPE 6-INCH, MARKING LINE GROOVED BLACK EPOXY 6-INCH (12.5' WHITE, 12.5' BLACK, 25' GAP)
- PM2 MARKING LINE GROOVED WET REFLECTIVE EPOXY 6-INCH (YELLOW)
- PM3 MARKING LINE GROOVED WET REFLECTIVE EPOXY 6-INCH (WHITE)
- PM4 MARKING LINE GROOVED PERMANENT TAPE 10-INCH (3' LINE, 9' GAP, WHITE)
- PM5 MARKING LINE GROOVED PERMANENT TAPE 10-INCH (WHITE)
- PM6 MARKING CHEVRON EPOXY 24-INCH (WHITE) - 25' SPACING

2

NOTES:
1. SEE SDD PAVEMENT MARKING, ENTRANCE RAMP AND PARALLEL ENTRANCE RAMP AND PERMANENT LONGITUDINAL PAVEMENT MARKINGS FOR ADDITIONAL CROSSOVER DETAILS
2. SEE SDD PAVEMENT MARKING, MAINLINE AND TURN LANES FOR PAVEMENT MARKINGS NOT SHOWN

N

2

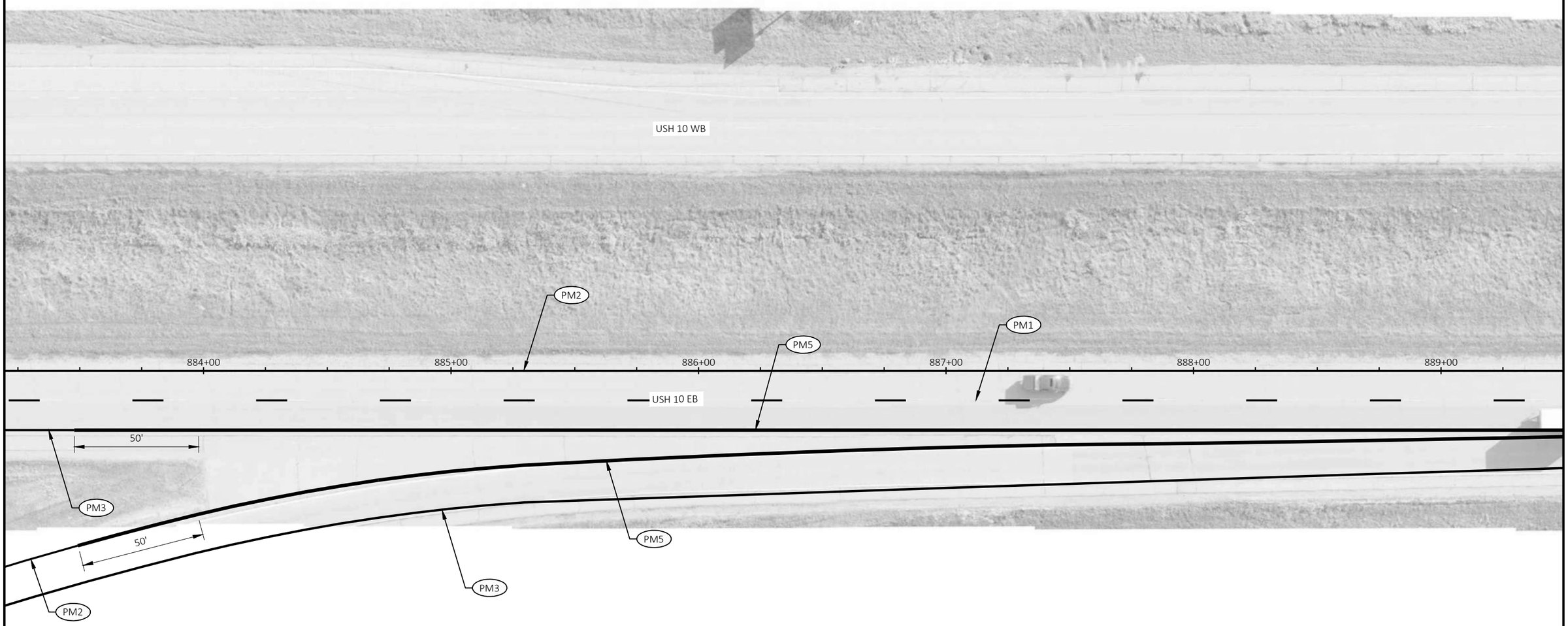

LEGEND

- PM1 MARKING LINE GROOVED PERMANENT 6" TAPE 6-INCH, MARKING LINE GROOVED BLACK EPOXY 6-INCH (12.5' WHITE, 12.5' BLACK, 25' GAP)
- PM2 MARKING LINE GROOVED WET REFLECTIVE EPOXY 6-INCH (YELLOW)
- PM3 MARKING LINE GROOVED WET REFLECTIVE EPOXY 6-INCH (WHITE)
- PM4 MARKING LINE GROOVED PERMANENT TAPE 10-INCH (3' LINE, 9' GAP, WHITE)
- PM5 MARKING LINE GROOVED PERMANENT TAPE 10-INCH (WHITE)
- PM6 MARKING CHEVRON EPOXY 24-INCH (WHITE) - 25' SPACING

PROJECT NO: 1510-02-60	HWY: USH 10	COUNTY: WAUPACA	PAVEMENT MARKING	SHEET 46	E

2

NOTES:
1. SEE SDD PAVEMENT MARKING, ENTRANCE RAMP AND PARALLEL ENTRANCE RAMP AND PERMANENT LONGITUDINAL PAVEMENT MARKINGS FOR ADDITIONAL CROSSOVER DETAILS
2. SEE SDD PAVEMENT MARKING, MAINLINE AND TURN LANES FOR PAVEMENT MARKINGS NOT SHOWN

N

2

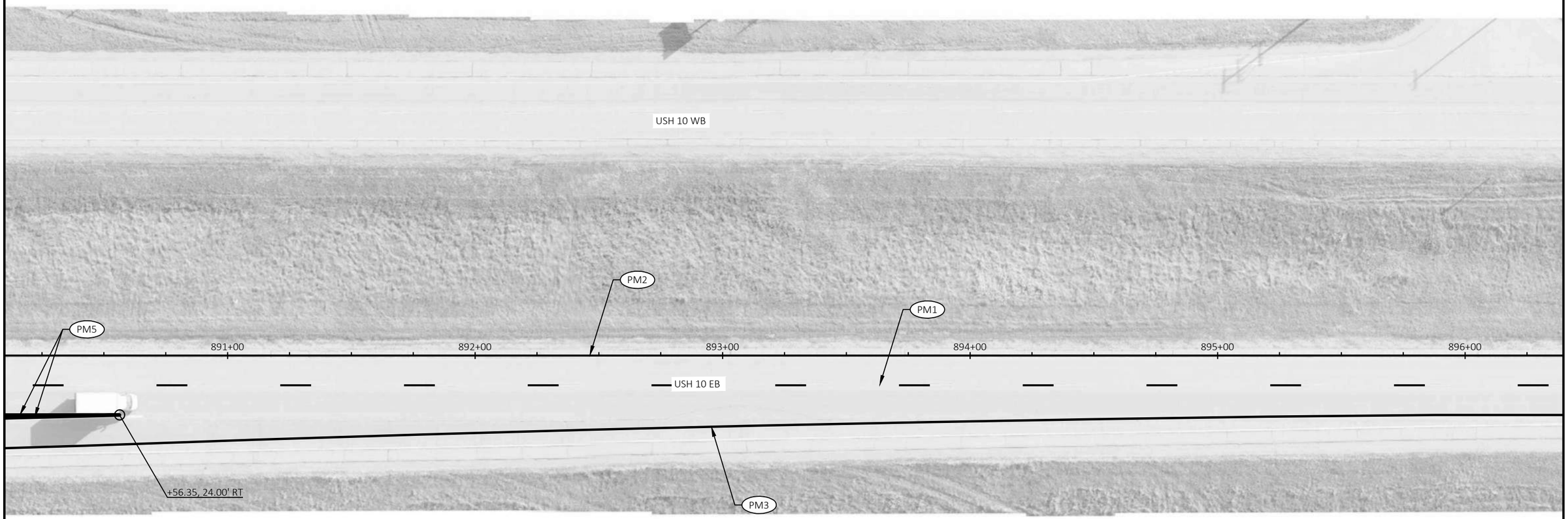

LEGEND

- PM1 MARKING LINE GROOVED PERMANENT 6" TAPE 6-INCH, MARKING LINE GROOVED BLACK EPOXY 6-INCH (12.5' WHITE, 12.5' BLACK, 25' GAP)
- PM2 MARKING LINE GROOVED WET REFLECTIVE EPOXY 6-INCH (YELLOW)
- PM3 MARKING LINE GROOVED WET REFLECTIVE EPOXY 6-INCH (WHITE)
- PM4 MARKING LINE GROOVED PERMANENT TAPE 10-INCH (3' LINE, 9' GAP, WHITE)
- PM5 MARKING LINE GROOVED PERMANENT TAPE 10-INCH (WHITE)
- PM6 MARKING CHEVRON EPOXY 24-INCH (WHITE) - 25' SPACING

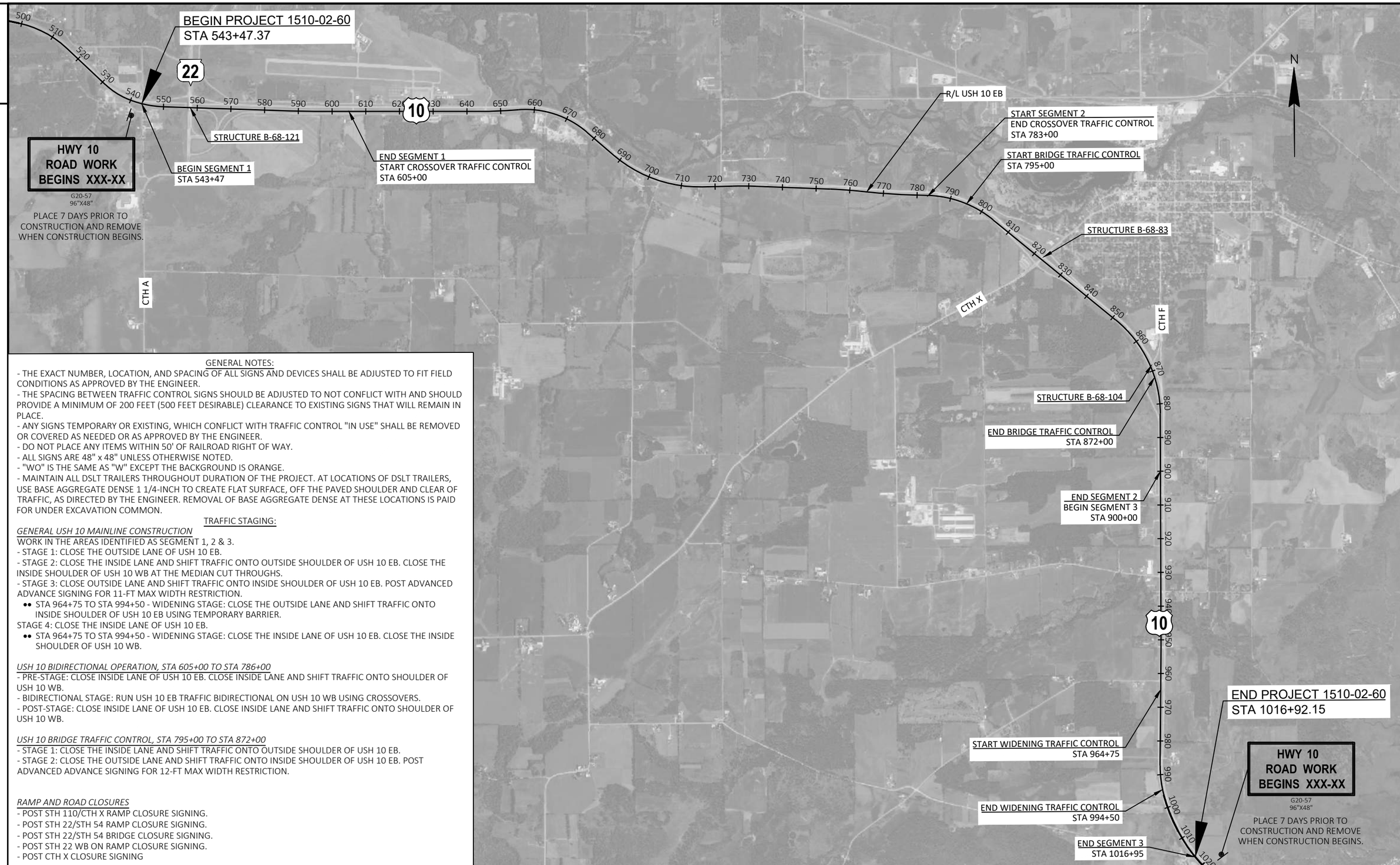

GENERAL NOTES:

- THE EXACT NUMBER, LOCATION, AND SPACING OF ALL SIGNS AND DEVICES SHALL BE ADJUSTED TO FIT FIELD CONDITIONS AS APPROVED BY THE ENGINEER.
- THE SPACING BETWEEN TRAFFIC CONTROL SIGNS SHOULD BE ADJUSTED TO NOT CONFLICT WITH AND SHOULD PROVIDE A MINIMUM OF 200 FEET (500 FEET DESIRABLE) CLEARANCE TO EXISTING SIGNS THAT WILL REMAIN IN PLACE.
- ANY SIGNS TEMPORARY OR EXISTING, WHICH CONFLICT WITH TRAFFIC CONTROL "IN USE" SHALL BE REMOVED OR COVERED AS NEEDED OR AS APPROVED BY THE ENGINEER.
- DO NOT PLACE ANY ITEMS WITHIN 50' OF RAILROAD RIGHT OF WAY.
- ALL SIGNS ARE 48" x 48" UNLESS OTHERWISE NOTED.
- "WO" IS THE SAME AS "W" EXCEPT THE BACKGROUND IS ORANGE.
- MAINTAIN ALL DSLT TRAILERS THROUGHOUT DURATION OF THE PROJECT. AT LOCATIONS OF DSLT TRAILERS, USE BASE AGGREGATE DENSE 1 1/4-INCH TO CREATE FLAT SURFACE, OFF THE PAVED SHOULDER AND CLEAR OF TRAFFIC, AS DIRECTED BY THE ENGINEER. REMOVAL OF BASE AGGREGATE DENSE AT THESE LOCATIONS IS PAID FOR UNDER EXCAVATION COMMON.

TRAFFIC STAGING:

GENERAL USH 10 MAINLINE CONSTRUCTION

WORK IN THE AREAS IDENTIFIED AS SEGMENT 1, 2 & 3.

- STAGE 1: CLOSE THE OUTSIDE LANE OF USH 10 EB.
- STAGE 2: CLOSE THE INSIDE LANE AND SHIFT TRAFFIC ONTO OUTSIDE SHOULDER OF USH 10 EB. CLOSE THE INSIDE SHOULDER OF USH 10 WB AT THE MEDIAN CUT THROUGHS.
- STAGE 3: CLOSE OUTSIDE LANE AND SHIFT TRAFFIC ONTO INSIDE SHOULDER OF USH 10 EB. POST ADVANCED ADVANCE SIGNING FOR 11-FT MAX WIDTH RESTRICTION.
  - •• STA 964+75 TO STA 994+50 - WIDENING STAGE: CLOSE THE OUTSIDE LANE AND SHIFT TRAFFIC ONTO INSIDE SHOULDER OF USH 10 EB USING TEMPORARY BARRIER.

STAGE 4: CLOSE THE INSIDE LANE OF USH 10 EB.

- •• STA 964+75 TO STA 994+50 - WIDENING STAGE: CLOSE THE INSIDE LANE OF USH 10 EB. CLOSE THE INSIDE SHOULDER OF USH 10 WB.

USH 10 BIDIRECTIONAL OPERATION, STA 605+00 TO STA 786+00

- PRE-STAGE: CLOSE INSIDE LANE OF USH 10 EB. CLOSE INSIDE LANE AND SHIFT TRAFFIC ONTO SHOULDER OF USH 10 WB.
- BIDIRECTIONAL STAGE: RUN USH 10 EB TRAFFIC BIDIRECTIONAL ON USH 10 WB USING CROSSOVERS.
- POST-STAGE: CLOSE INSIDE LANE OF USH 10 EB. CLOSE INSIDE LANE AND SHIFT TRAFFIC ONTO SHOULDER OF USH 10 WB.

USH 10 BRIDGE TRAFFIC CONTROL, STA 795+00 TO STA 872+00

- STAGE 1: CLOSE THE INSIDE LANE AND SHIFT TRAFFIC ONTO OUTSIDE SHOULDER OF USH 10 EB.
- STAGE 2: CLOSE THE OUTSIDE LANE AND SHIFT TRAFFIC ONTO INSIDE SHOULDER OF USH 10 EB. POST ADVANCED ADVANCE SIGNING FOR 12-FT MAX WIDTH RESTRICTION.

RAMP AND ROAD CLOSURES

- POST STH 110/CTH X RAMP CLOSURE SIGNING.
- POST STH 22/STH 54 RAMP CLOSURE SIGNING.
- POST STH 22/STH 54 BRIDGE CLOSURE SIGNING.
- POST STH 22 WB ON RAMP CLOSURE SIGNING.
- POST CTH X CLOSURE SIGNING

PROJECT NO: 1510-02-60	HWY: USH 10	COUNTY: WAUPACA	TRAFFIC CONTROL OVERVIEW	SHEET 48	E

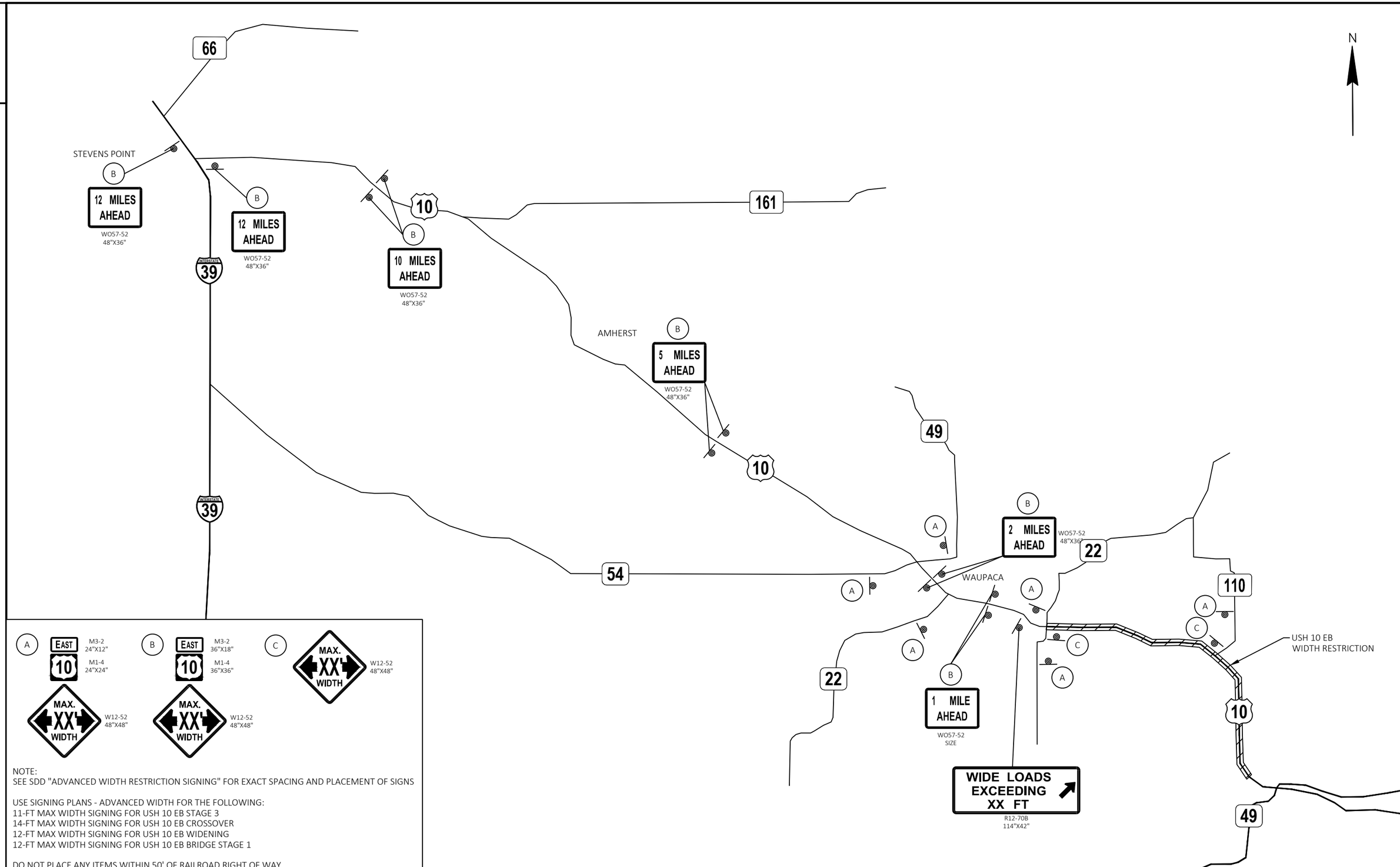

A — EAST 10: M3-2 24"X12"; M1-4 24"X24"

B — EAST 10: M3-2 36"X18"; M1-4 36"X36"

C — MAX. XX' WIDTH: W12-52 48"X48"

MAX. XX' WIDTH: W12-52 48"X48"

NOTE:
SEE SDD "ADVANCED WIDTH RESTRICTION SIGNING" FOR EXACT SPACING AND PLACEMENT OF SIGNS

USE SIGNING PLANS - ADVANCED WIDTH FOR THE FOLLOWING:
11-FT MAX WIDTH SIGNING FOR USH 10 EB STAGE 3
14-FT MAX WIDTH SIGNING FOR USH 10 EB CROSSOVER
12-FT MAX WIDTH SIGNING FOR USH 10 EB WIDENING
12-FT MAX WIDTH SIGNING FOR USH 10 EB BRIDGE STAGE 1

DO NOT PLACE ANY ITEMS WITHIN 50' OF RAILROAD RIGHT OF WAY

PROJECT NO: 1510-02-60	HWY: USH 10	COUNTY: WAUPACA	SIGNING PLANS - ADVANCED WIDTH	SHEET 49	E

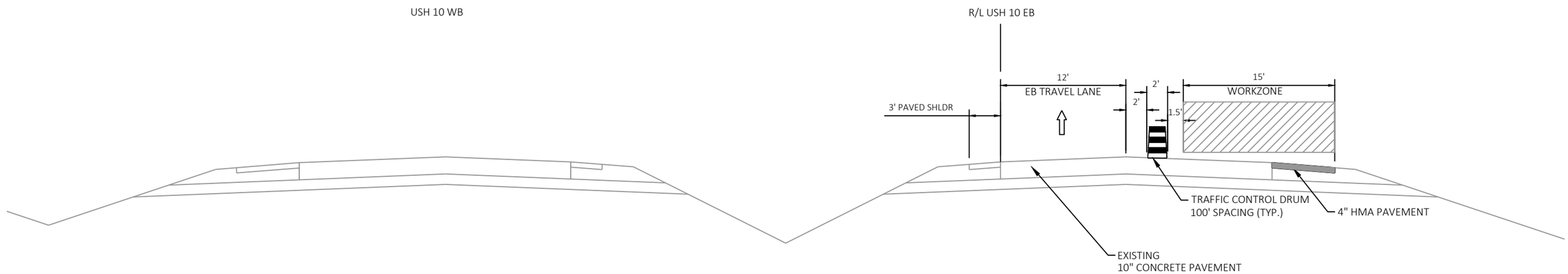

USH 10 EB STAGE 1

RECONSTRUCT OUTSIDE SHOULDERS

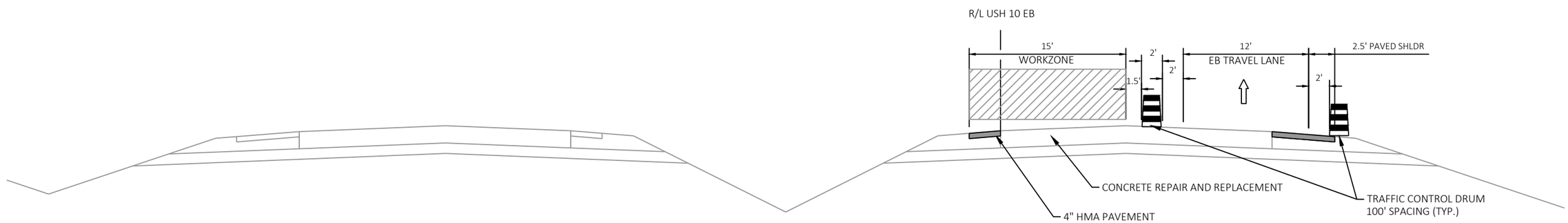

USH 10 EB STAGE 2

INSIDE LANE CONCRETE REPAIRS AND
RECONSTRUCT INSIDE SHOULDERS

NOTES:
SEE SDD TRAFFIC CONTROL, LANE CLOSURE
SDD TRAFFIC CONTROL, LANE, SHIFT, MULTILANE DIVIDED OR ONE WAY ROAD
AND SDD TRAFFIC CONTROL, SHOULDER CLOSURE ON DIVIDED ROADWAY, SPEEDS GREATER THAN 40 MPH
FOR TRAFFIC CONTROL DETAILS.

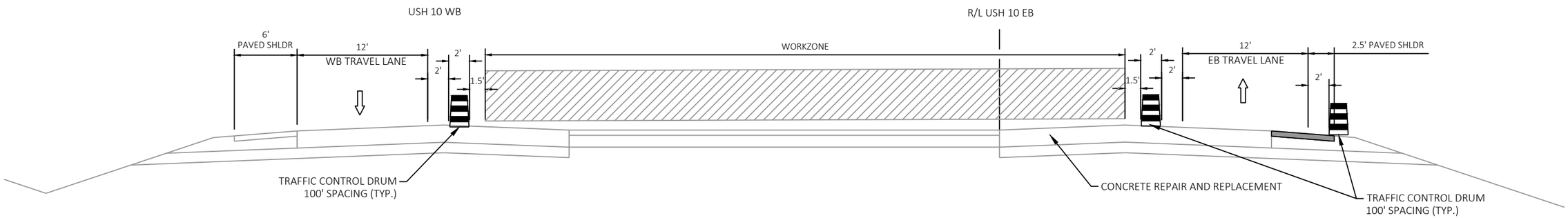

USH 10 EB & WB STAGE 2

AT MEDIAN CUT THROUGHS

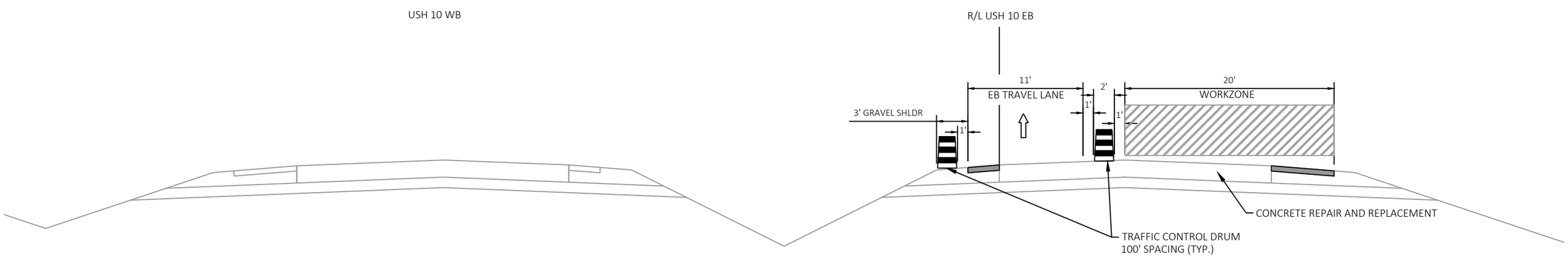

USH 10 EB STAGE 3

OUTSIDE LANE CONCRETE REPAIRS

NOTES:
SEE SDD TRAFFIC CONTROL, LANE CLOSURE
SDD TRAFFIC CONTROL, LANE, SHIFT, MULTILANE DIVIDED OR ONE WAY ROAD
AND SDD TRAFFIC CONTROL, SHOULDER CLOSURE ON DIVIDED ROADWAY, SPEEDS GREATER THAN 40 MPH
FOR TRAFFIC CONTROL DETAILS.

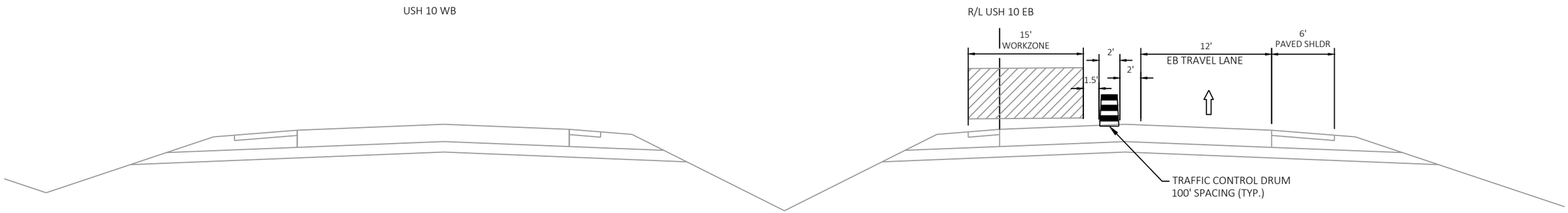

USH 10 EB STAGE 4

INSIDE SHOULDER PAVEMENT MARKING
AND RUMBLE STRIPS

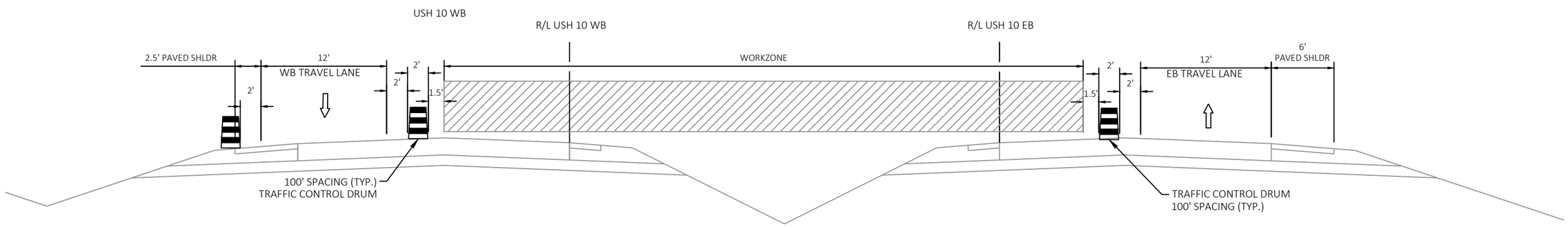

USH 10 PRE-STAGE & POST-STAGE CROSSOVER TRAFFIC

CROSSOVER CONSTRUCTION AND REMOVAL
TUBULAR MARKERS INSTALLATION AND REMOVAL

NOTES:
SEE SDD TRAFFIC CONTROL, LANE CLOSURE
SDD TRAFFIC CONTROL, LANE, SHIFT, MULTILANE DIVIDED OR ONE WAY ROAD
AND SDD TRAFFIC CONTROL, SHOULDER CLOSURE ON DIVIDED ROADWAY, SPEEDS GREATER THAN 40 MPH
FOR TRAFFIC CONTROL DETAILS.

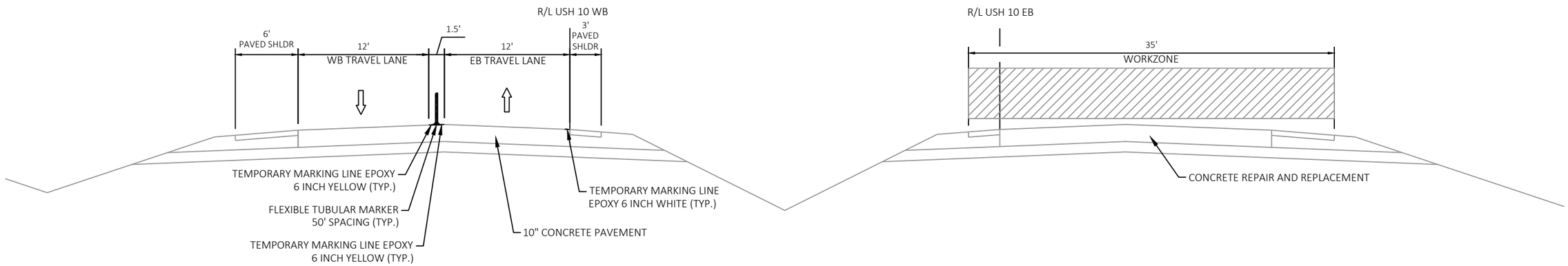

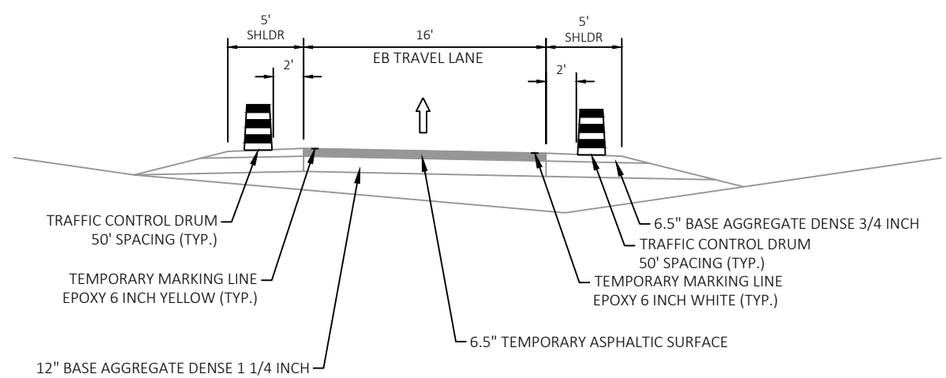

USH 10 CROSSOVER TRAFFIC

BIDIRECTIONAL TRAFFIC IN
CROSSOVER SECTION
STA 605+00 to STA 786+00

NOTES:
SEE SDD TRAFFIC CONTROL, LANE CLOSURE
SDD TRAFFIC CONTROL, LANE, SHIFT, MULTILANE DIVIDED OR ONE WAY ROAD
SDD TRAFFIC CONTROL, TWO LANE TWO WAY OPERATION
AND SDD TRAFFIC CONTROL, SHOULDER CLOSURE ON DIVIDED ROADWAY, SPEEDS GREATER THAN 40 MPH
FOR TRAFFIC CONTROL DETAILS.

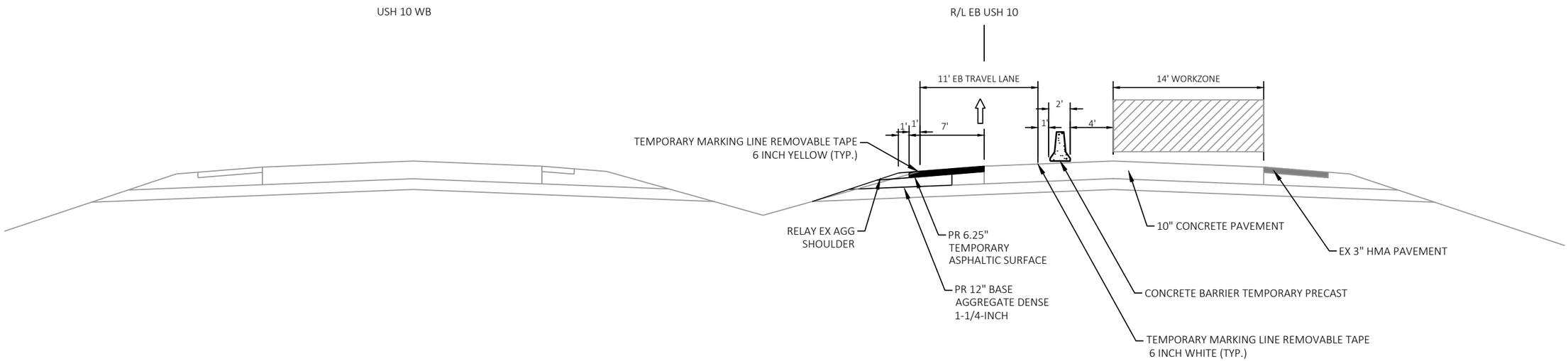

USH 10 WIDENING TRAFFIC CONTROL

STA 976+00 TO STA 994+00

NOTES:
SEE SDD TRAFFIC CONTROL, LANE CLOSURE
SDD TRAFFIC CONTROL, LANE, SHIFT, MULTILANE DIVIDED OR ONE WAY ROAD
AND SDD TRAFFIC CONTROL, SHOULDER CLOSURE ON DIVIDED ROADWAY, SPEEDS GREATER THAN 40 MPH
FOR TRAFFIC CONTROL DETAILS.

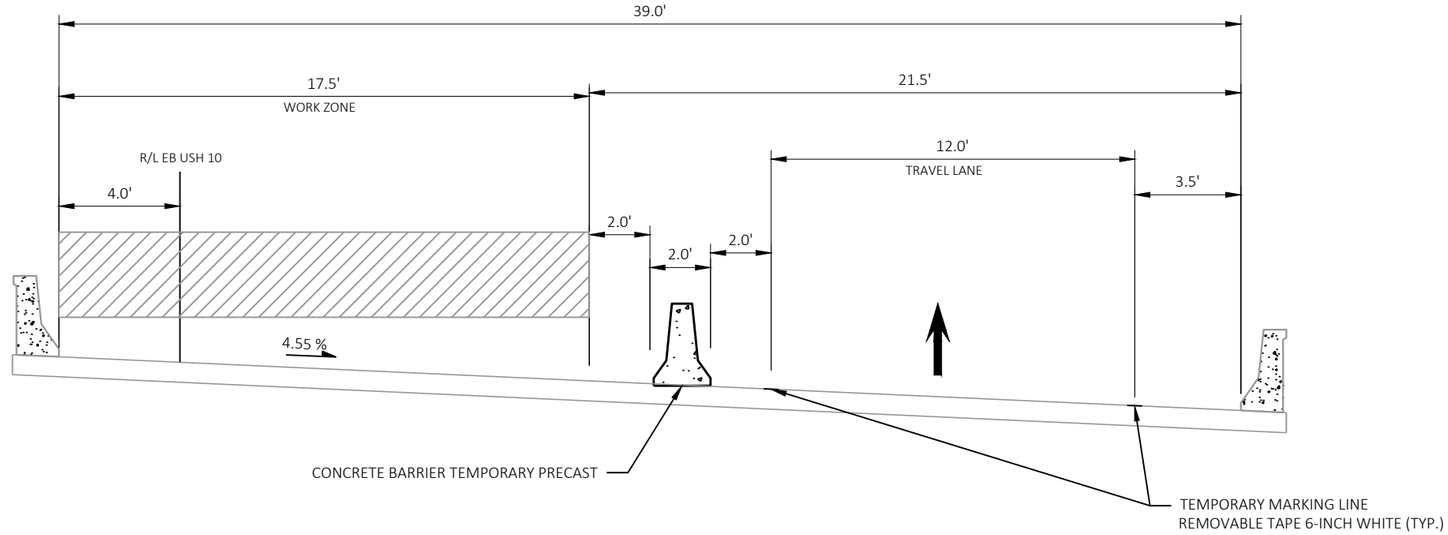

USH 10 BRIDGE TRAFFIC CONTROL - STAGE 1

WESTBOUND BRIDGE OVER CTH F
INSIDE LANE WORK
STA 868+00 TO STA 870+00

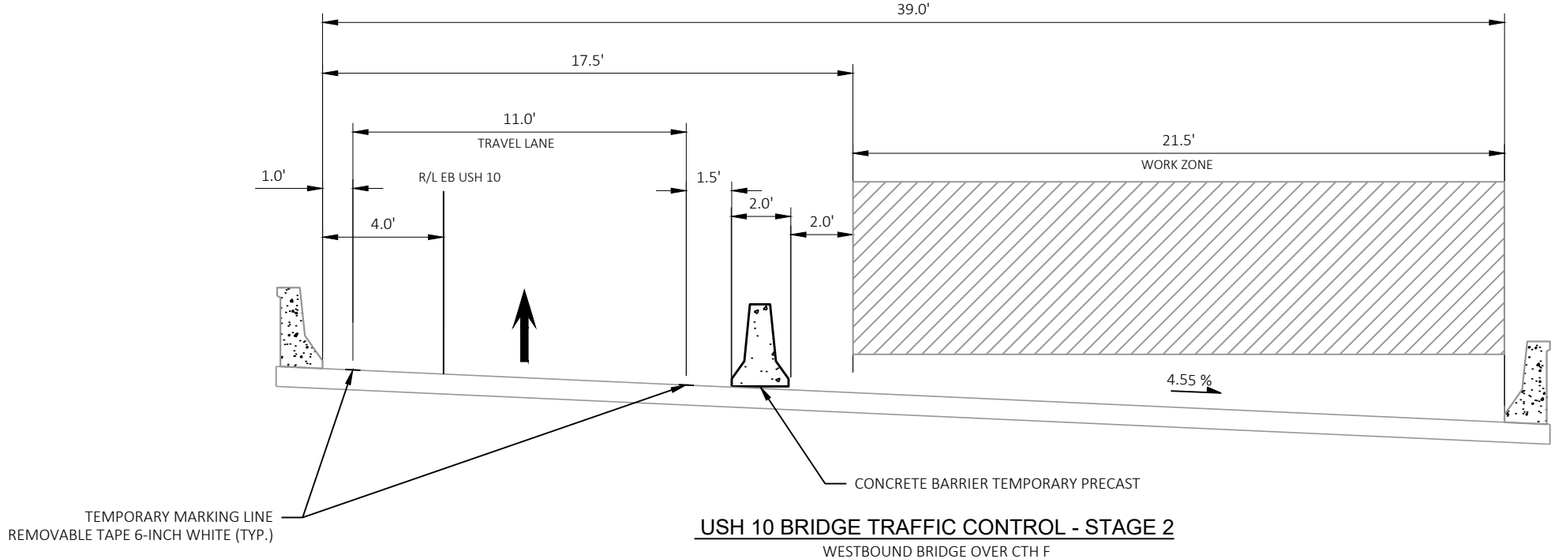

USH 10 BRIDGE TRAFFIC CONTROL - STAGE 2

WESTBOUND BRIDGE OVER CTH F
OUTSIDE LANE WORK
STA 868+00 TO STA 870+00

NOTES:
SEE SDD TRAFFIC CONTROL, LANE CLOSURE
SDD TRAFFIC CONTROL, PARTIAL LANE SHIFT MULTILANE DIVIDED 50 MPH AND GREATER
AND SDD TRAFFIC CONTROL, SHOULDER CLOSURE ON DIVIDED ROADWAY, SPEEDS GREATER THAN 40 MPH
FOR TRAFFIC CONTROL DETAILS.

2

NOTE: SEE SDD TRAFFIC CONTROL, LANE CLOSURE, BASIC TRAFFIC QUEUE WARNING SYSTEM FOR ADDITIONAL CROSSOVER DETAILS

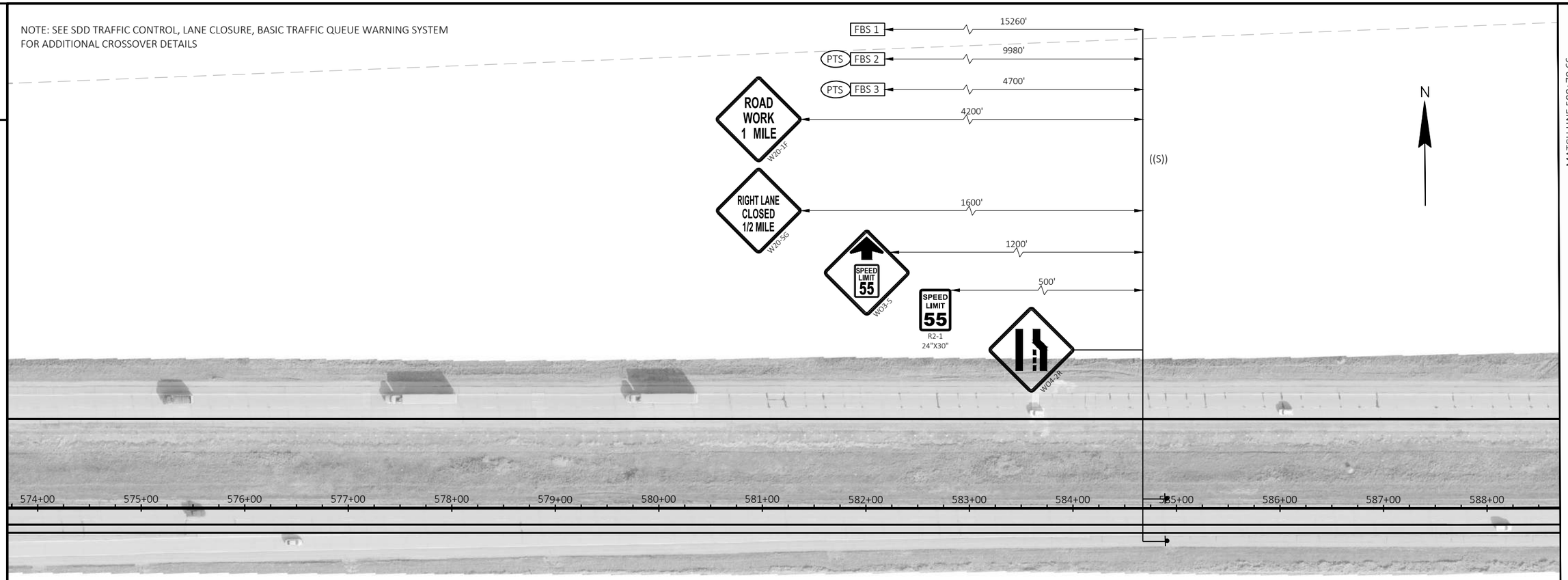

MATCH LINE 588+70.66

2

LEGEND

I/‡	TYPE II / III BARRICADE		WORK AREA
II/‡	TYPE II / III BARRICADE WTH ATTACHED SIGN	× × ×	PAVEMENT MARKING REMOVAL
●	TRAFFIC CONTROL DRUM	⇨	DIRECTION OF TRAFFIC
	TRAFFIC CONTROL DRUM WITH TYPE C STEADY BURN LIGHT	⊨	SIGN ON TEMPORARY SUPPORT
	CONNECTED ARROW BOARD	((S))	WORK ZONE START LOCATION MARKER
	SIGN ON PERMANENT SUPPORT	((E))	WORK ZONE END LOCATION MARKER
⊢	TEMPORARY DELINEATOR (STEEL POST W/SINGLE DELINEATOR)	FBS #	FLASHING BEACON SIGNS (FBS)
⊙	DELINEATOR FLEXIBLE/TUBULAR MARKER	PTS	PORTABLE TRAFFIC SENSORS (PTS)

PROJECT NO: 1510-02-60	HWY: USH 10	COUNTY: WAUPACA	CROSSOVER TRAFFIC CONTROL	SHEET 56	E

2

NOTE: SEE SDD TRAFFIC CONTROL, LANE CLOSURE, BASIC TRAFFIC QUEUE WARNING SYSTEM FOR ADDITIONAL CROSSOVER DETAILS

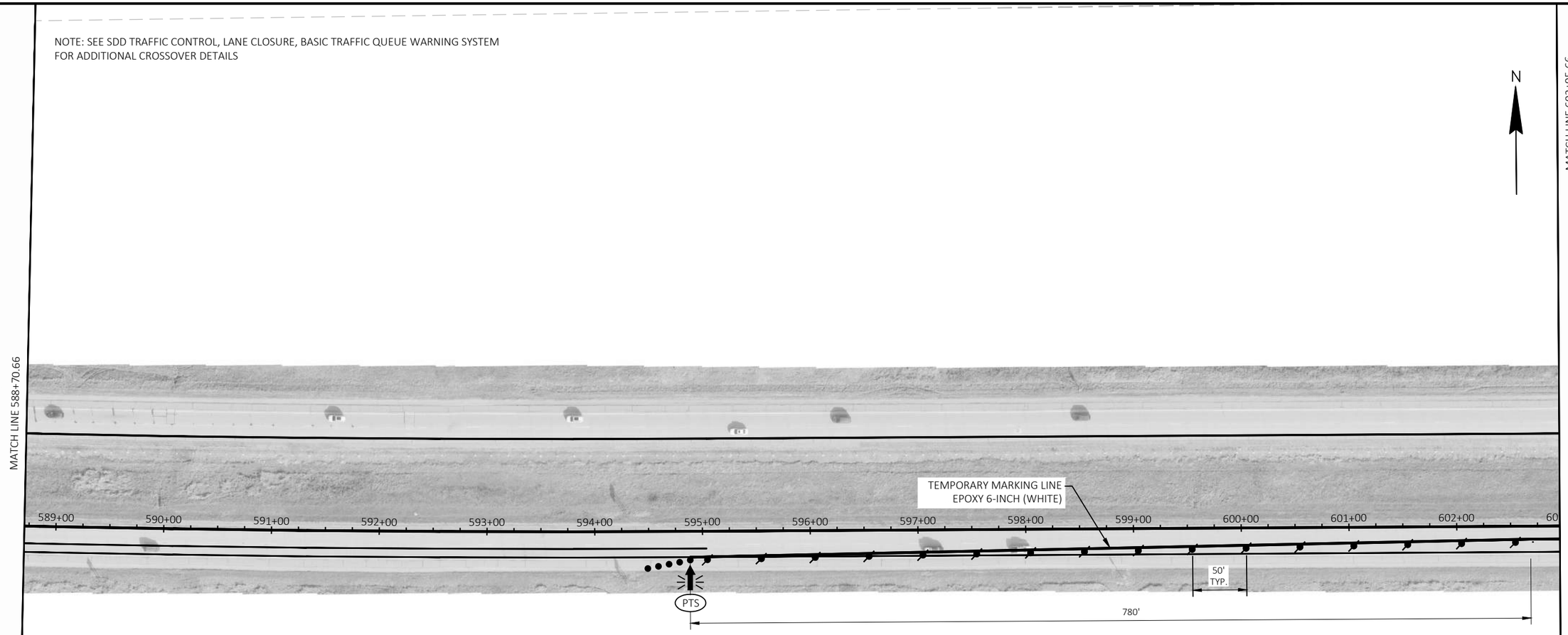

LEGEND

	TYPE II / III BARRICADE		WORK AREA
	TYPE II / III BARRICADE WTH ATTACHED SIGN	× × ×	PAVEMENT MARKING REMOVAL
	TRAFFIC CONTROL DRUM		DIRECTION OF TRAFFIC
	TRAFFIC CONTROL DRUM WITH TYPE C STEADY BURN LIGHT		SIGN ON TEMPORARY SUPPORT
	CONNECTED ARROW BOARD	((S))	WORK ZONE START LOCATION MARKER
	SIGN ON PERMANENT SUPPORT	((E))	WORK ZONE END LOCATION MARKER
	TEMPORARY DELINEATOR (STEEL POST W/SINGLE DELINEATOR)	FBS #	FLASHING BEACON SIGNS (FBS)
	DELINEATOR FLEXIBLE/TUBULAR MARKER	PTS	PORTABLE TRAFFIC SENSORS (PTS)

PROJECT NO: 1510-02-60	HWY: USH 10	COUNTY: WAUPACA	CROSSOVER TRAFFIC CONTROL	SHEET 57	E

2

NOTE: SEE SDD TRAFFIC CONTROL, SINGLE LANE CROSSOVER AND TRAFFIC CONTROL, SINGLE LANE CROSSOVER EXIT FOR ADDITIONAL CROSSOVER DETAILS

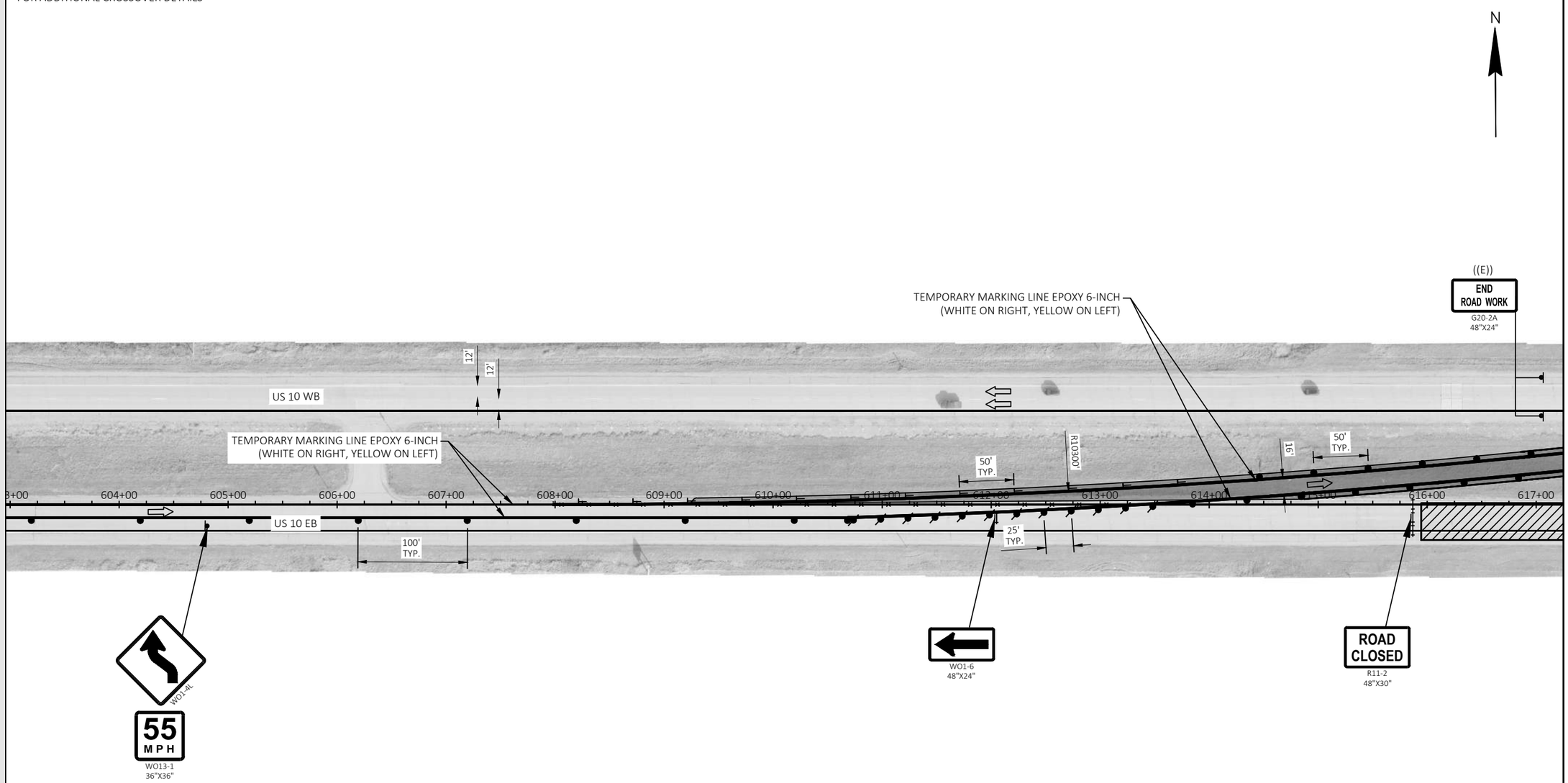

LEGEND

	TYPE II / III BARRICADE		WORK AREA
	TYPE II / III BARRICADE WTH ATTACHED SIGN	× × ×	PAVEMENT MARKING REMOVAL
	TRAFFIC CONTROL DRUM		DIRECTION OF TRAFFIC
	TRAFFIC CONTROL DRUM WITH TYPE C STEADY BURN LIGHT		SIGN ON TEMPORARY SUPPORT
	CONNECTED ARROW BOARD	((S))	WORK ZONE START LOCATION MARKER
	SIGN ON PERMANENT SUPPORT	((E))	WORK ZONE END LOCATION MARKER
	TEMPORARY DELINEATOR (STEEL POST W/SINGLE DELINEATOR)	FBS #	FLASHING BEACON SIGNS (FBS)
	DELINEATOR FLEXIBLE/TUBULAR MARKER	PTS	PORTABLE TRAFFIC SENSORS (PTS)

MATCH LINE 602+95.66

2

PROJECT NO: 1510-02-60	HWY: USH 10	COUNTY: WAUPACA	CROSSOVER TRAFFIC CONTROL	SHEET 58	E

2

NOTE: SEE SDD TRAFFIC CONTROL, SINGLE LANE CROSSOVER AND TRAFFIC CONTROL, SINGLE LANE CROSSOVER EXIT FOR ADDITIONAL CROSSOVER DETAILS

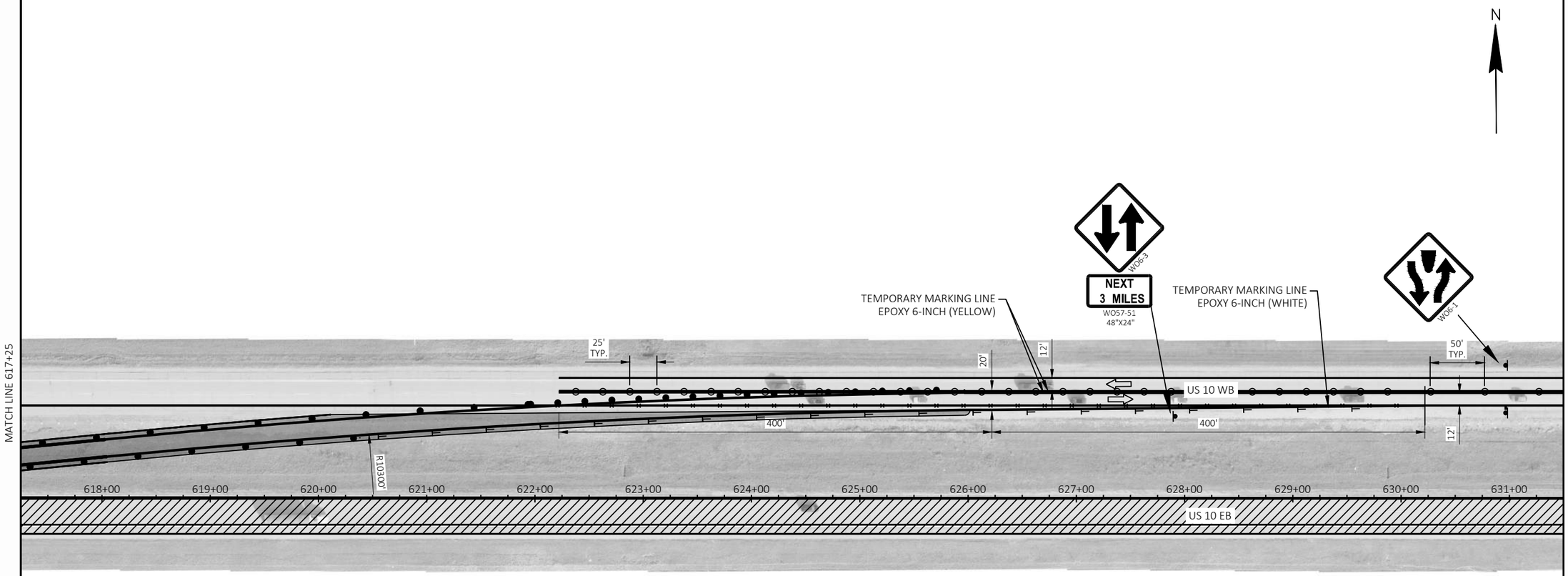

LEGEND

	TYPE II / III BARRICADE		WORK AREA
	TYPE II / III BARRICADE WTH ATTACHED SIGN	× × ×	PAVEMENT MARKING REMOVAL
	TRAFFIC CONTROL DRUM		DIRECTION OF TRAFFIC
	TRAFFIC CONTROL DRUM WITH TYPE C STEADY BURN LIGHT		SIGN ON TEMPORARY SUPPORT
	CONNECTED ARROW BOARD	((S))	WORK ZONE START LOCATION MARKER
	SIGN ON PERMANENT SUPPORT	((E))	WORK ZONE END LOCATION MARKER
	TEMPORARY DELINEATOR (STEEL POST W/SINGLE DELINEATOR)	FBS #	FLASHING BEACON SIGNS (FBS)
	DELINEATOR FLEXIBLE/TUBULAR MARKER	PTS	PORTABLE TRAFFIC SENSORS (PTS)

2

NOTE: SEE SDD TRAFFIC CONTROL, TWO LANE TWO WAY OPERATION FOR ADDITIONAL DETAILS
UTILIZE PAVING GAPS AT DEAD-END ROADS AND SIDE STREETS FOR LOCAL TRAFFIC ACCOMMODATION AS NEEDED.

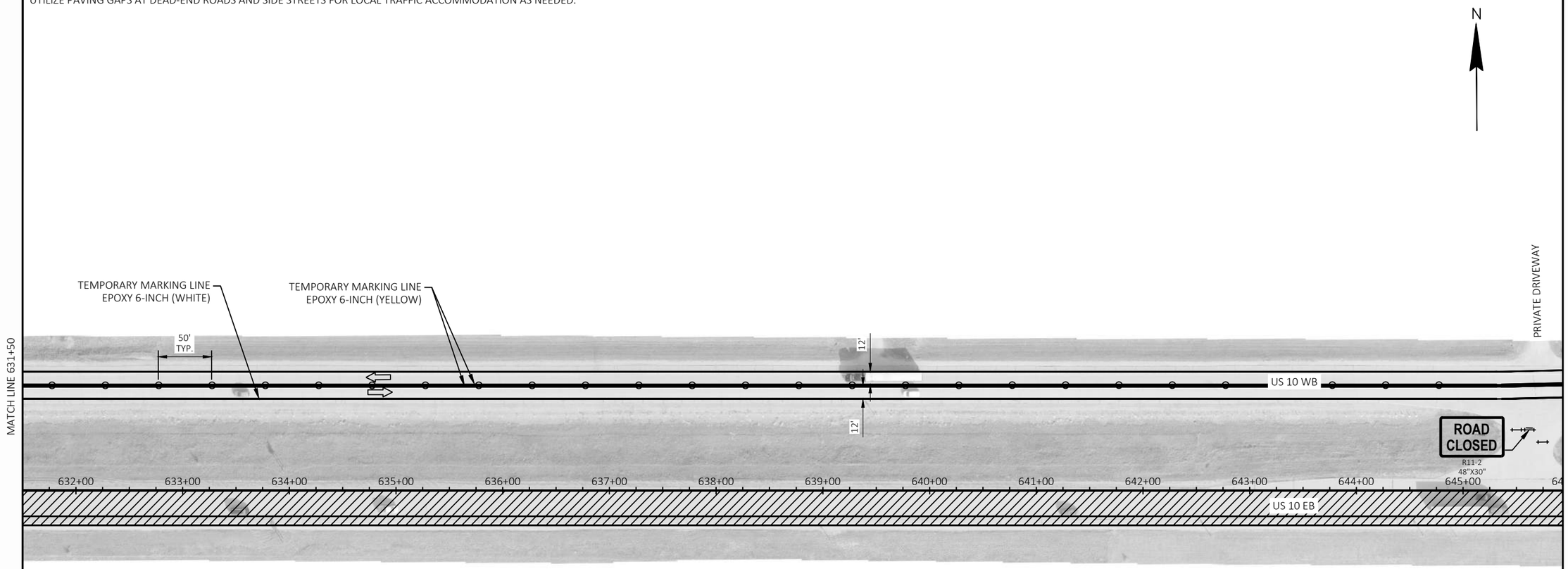

LEGEND

	TYPE II / III BARRICADE		WORK AREA
	TYPE II / III BARRICADE WTH ATTACHED SIGN	× × ×	PAVEMENT MARKING REMOVAL
	TRAFFIC CONTROL DRUM		DIRECTION OF TRAFFIC
	TRAFFIC CONTROL DRUM WITH TYPE C STEADY BURN LIGHT		SIGN ON TEMPORARY SUPPORT
	CONNECTED ARROW BOARD	((S))	WORK ZONE START LOCATION MARKER
	SIGN ON PERMANENT SUPPORT	((E))	WORK ZONE END LOCATION MARKER
	TEMPORARY DELINEATOR (STEEL POST W/SINGLE DELINEATOR)	FBS #	FLASHING BEACON SIGNS (FBS)
	DELINEATOR FLEXIBLE/TUBULAR MARKER	PTS	PORTABLE TRAFFIC SENSORS (PTS)

2

NOTE: SEE SDD TRAFFIC CONTROL, TWO LANE TWO WAY OPERATION FOR ADDITIONAL DETAILS
UTILIZE PAVING GAPS AT DEAD-END ROADS AND SIDE STREETS FOR LOCAL TRAFFIC ACCOMMODATION AS NEEDED.

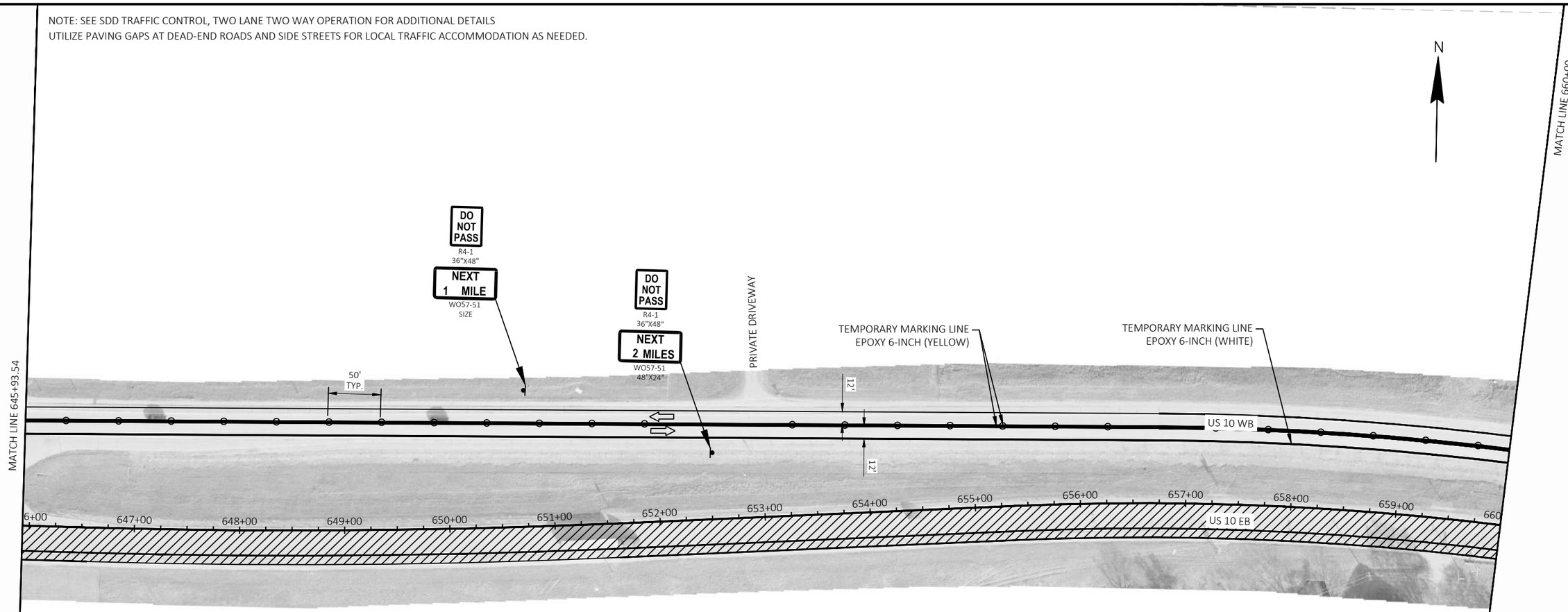

LEGEND

	TYPE II / III BARRICADE		WORK AREA
	TYPE II / III BARRICADE WTH ATTACHED SIGN	× × ×	PAVEMENT MARKING REMOVAL
	TRAFFIC CONTROL DRUM		DIRECTION OF TRAFFIC
	TRAFFIC CONTROL DRUM WITH TYPE C STEADY BURN LIGHT		SIGN ON TEMPORARY SUPPORT
	CONNECTED ARROW BOARD	((S))	WORK ZONE START LOCATION MARKER
	SIGN ON PERMANENT SUPPORT	((E))	WORK ZONE END LOCATION MARKER
	TEMPORARY DELINEATOR (STEEL POST W/SINGLE DELINEATOR)	FBS #	FLASHING BEACON SIGNS (FBS)
	DELINEATOR FLEXIBLE/TUBULAR MARKER	PTS	PORTABLE TRAFFIC SENSORS (PTS)

NOTE: SEE SDD TRAFFIC CONTROL, TWO LANE TWO WAY OPERATION FOR ADDITIONAL DETAILS
UTILIZE PAVING GAPS AT DEAD-END ROADS AND SIDE STREETS FOR LOCAL TRAFFIC ACCOMMODATION AS NEEDED.

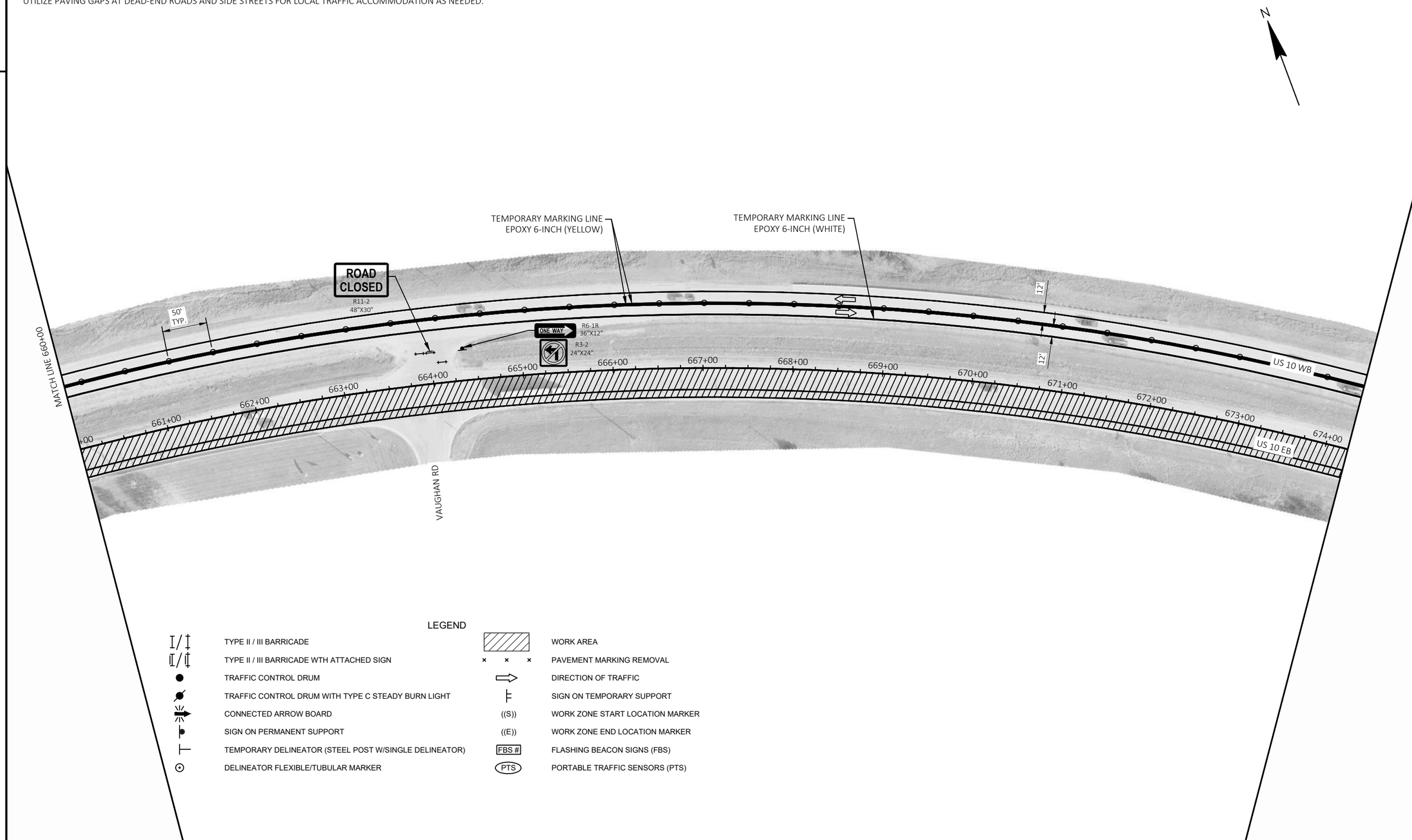

LEGEND

	TYPE II / III BARRICADE		WORK AREA
	TYPE II / III BARRICADE WTH ATTACHED SIGN	× × ×	PAVEMENT MARKING REMOVAL
	TRAFFIC CONTROL DRUM		DIRECTION OF TRAFFIC
	TRAFFIC CONTROL DRUM WITH TYPE C STEADY BURN LIGHT		SIGN ON TEMPORARY SUPPORT
	CONNECTED ARROW BOARD	((S))	WORK ZONE START LOCATION MARKER
	SIGN ON PERMANENT SUPPORT	((E))	WORK ZONE END LOCATION MARKER
	TEMPORARY DELINEATOR (STEEL POST W/SINGLE DELINEATOR)	FBS #	FLASHING BEACON SIGNS (FBS)
	DELINEATOR FLEXIBLE/TUBULAR MARKER	PTS	PORTABLE TRAFFIC SENSORS (PTS)

2

NOTE: SEE SDD TRAFFIC CONTROL, TWO LANE TWO WAY OPERATION FOR ADDITIONAL DETAILS
UTILIZE PAVING GAPS AT DEAD-END ROADS AND SIDE STREETS FOR LOCAL TRAFFIC ACCOMMODATION AS NEEDED.

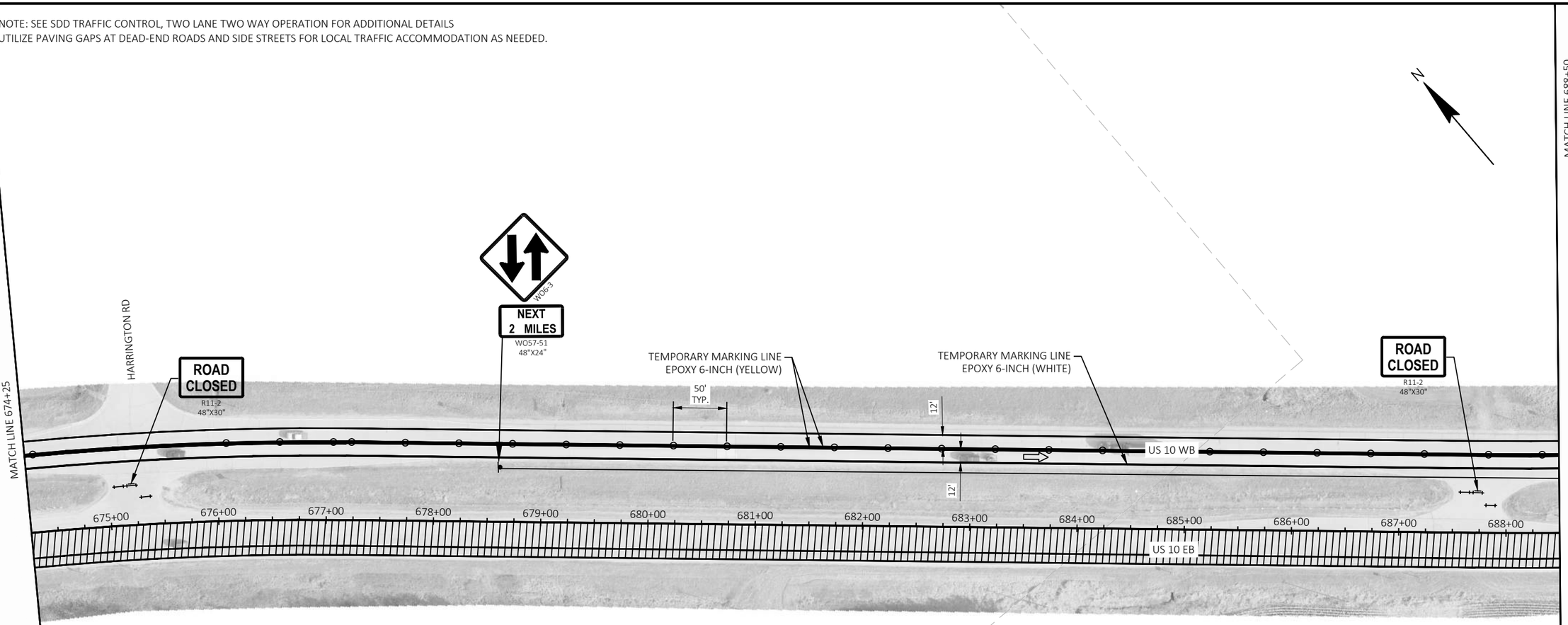

LEGEND

I/I	TYPE II / III BARRICADE		WORK AREA
I/I	TYPE II / III BARRICADE WTH ATTACHED SIGN	× × ×	PAVEMENT MARKING REMOVAL
●	TRAFFIC CONTROL DRUM	⇨	DIRECTION OF TRAFFIC
	TRAFFIC CONTROL DRUM WITH TYPE C STEADY BURN LIGHT	⊢	SIGN ON TEMPORARY SUPPORT
	CONNECTED ARROW BOARD	((S))	WORK ZONE START LOCATION MARKER
	SIGN ON PERMANENT SUPPORT	((E))	WORK ZONE END LOCATION MARKER
⊢	TEMPORARY DELINEATOR (STEEL POST W/SINGLE DELINEATOR)	FBS #	FLASHING BEACON SIGNS (FBS)
⊙	DELINEATOR FLEXIBLE/TUBULAR MARKER	PTS	PORTABLE TRAFFIC SENSORS (PTS)

2

NOTE: SEE SDD TRAFFIC CONTROL, TWO LANE TWO WAY OPERATION FOR ADDITIONAL DETAILS
UTILIZE PAVING GAPS AT DEAD-END ROADS AND SIDE STREETS FOR LOCAL TRAFFIC ACCOMMODATION AS NEEDED.

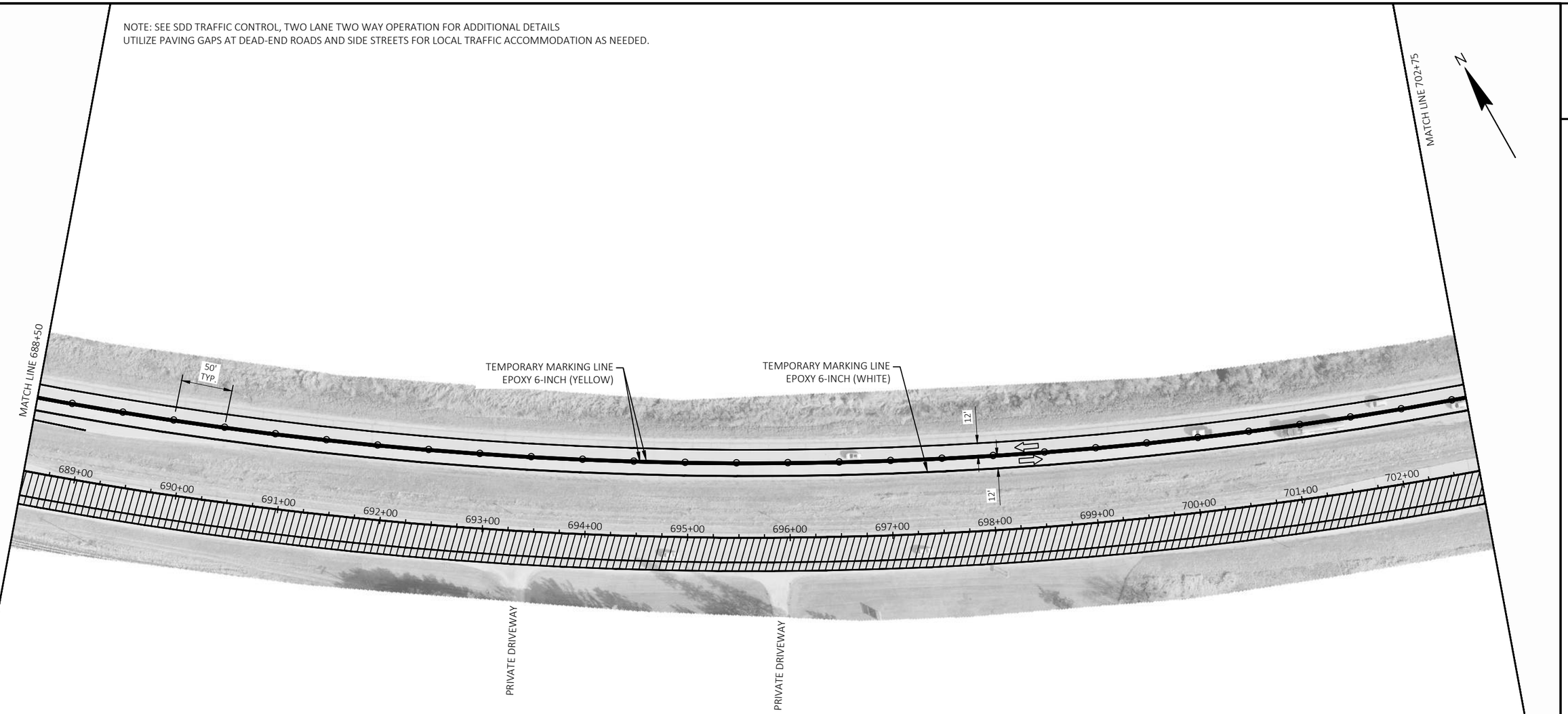

LEGEND

I/‡	TYPE II / III BARRICADE		WORK AREA
I/‡	TYPE II / III BARRICADE WTH ATTACHED SIGN	× × ×	PAVEMENT MARKING REMOVAL
●	TRAFFIC CONTROL DRUM	⇨	DIRECTION OF TRAFFIC
	TRAFFIC CONTROL DRUM WITH TYPE C STEADY BURN LIGHT	⊢	SIGN ON TEMPORARY SUPPORT
	CONNECTED ARROW BOARD	((S))	WORK ZONE START LOCATION MARKER
	SIGN ON PERMANENT SUPPORT	((E))	WORK ZONE END LOCATION MARKER
⊢	TEMPORARY DELINEATOR (STEEL POST W/SINGLE DELINEATOR)	FBS #	FLASHING BEACON SIGNS (FBS)
⊙	DELINEATOR FLEXIBLE/TUBULAR MARKER	PTS	PORTABLE TRAFFIC SENSORS (PTS)

2

NOTE: SEE SDD BARRICADES AND SIGNS FOR SIDEROAD CLOSURES FOR ADDITIONAL SIGN PLACEMENT DETAILS
UTILIZE PAVING GAPS AT DEAD-END ROADS AND SIDE STREETS FOR LOCAL TRAFFIC ACCOMMODATION AS NEEDED.

LEGEND

	TYPE II / III BARRICADE		WORK AREA
	TYPE II / III BARRICADE WTH ATTACHED SIGN	× × ×	PAVEMENT MARKING REMOVAL
	TRAFFIC CONTROL DRUM		DIRECTION OF TRAFFIC
	TRAFFIC CONTROL DRUM WITH TYPE C STEADY BURN LIGHT		SIGN ON TEMPORARY SUPPORT
	CONNECTED ARROW BOARD	((S))	WORK ZONE START LOCATION MARKER
	SIGN ON PERMANENT SUPPORT	((E))	WORK ZONE END LOCATION MARKER
	TEMPORARY DELINEATOR (STEEL POST W/SINGLE DELINEATOR)	FBS #	FLASHING BEACON SIGNS (FBS)
	DELINEATOR FLEXIBLE/TUBULAR MARKER	PTS	PORTABLE TRAFFIC SENSORS (PTS)

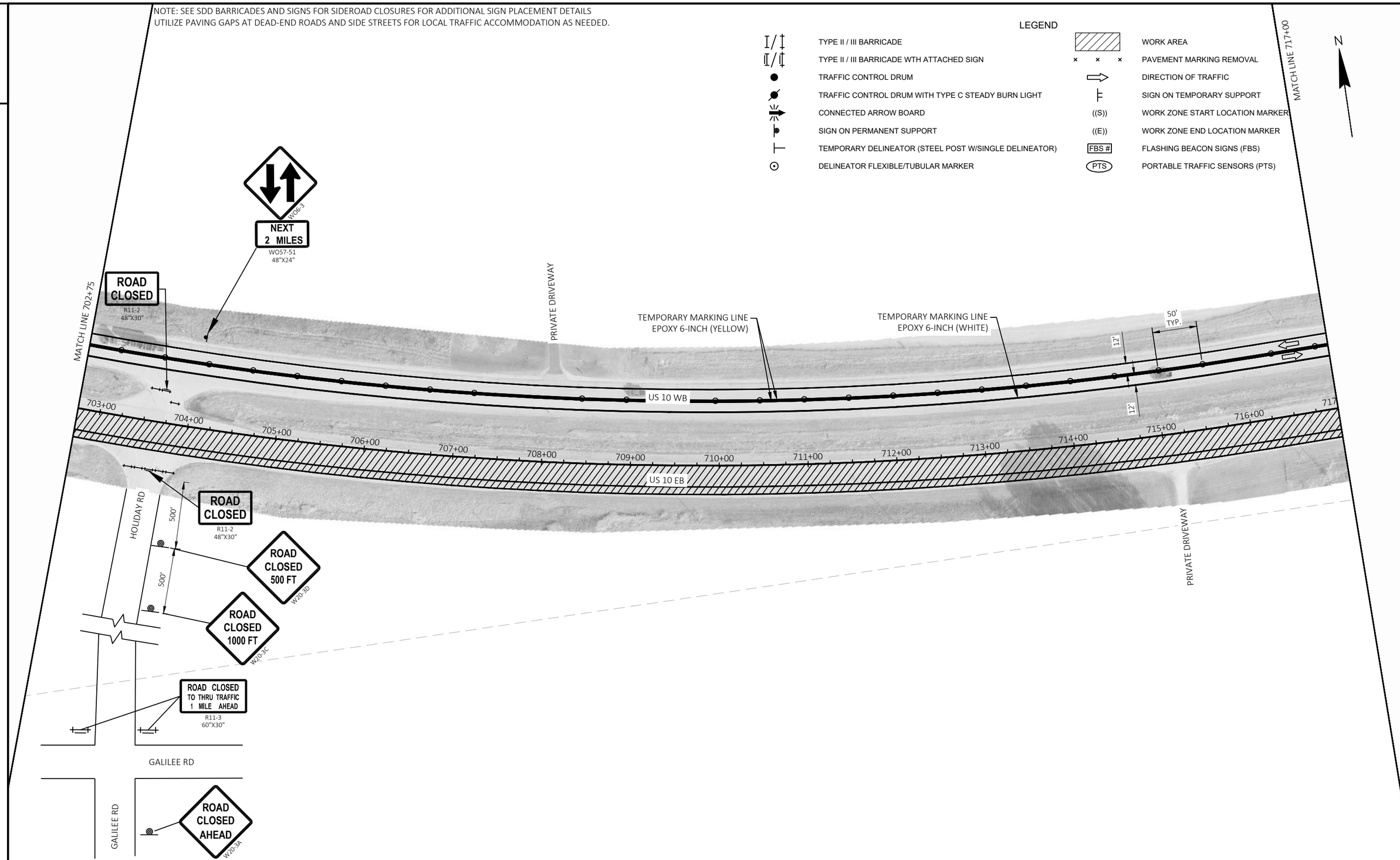

2

PROJECT NO: 1510-02-60	HWY: USH 10	COUNTY: WAUPACA	CROSSOVER TRAFFIC CONTROL	SHEET 65	E

FILE NAME : Y:\MILWAUKEE\20300S\20335.01\ENG_DOCS\1510-02-60\15100260\SHEETS\026103-TC-XS-S1.DWG
LAYOUT NAME - 10
PLOT DATE : 6/18/2026 3:01 PM PLOT BY : SCHWIERKING, EMMA PLOT NAME : PLOT SCALE : 1 IN:100 FT
WISDOT/CADDS SHEET 42

2

NOTE: SEE SDD TRAFFIC CONTROL, TWO LANE TWO WAY OPERATION FOR ADDITIONAL DETAILS
UTILIZE PAVING GAPS AT DEAD-END ROADS AND SIDE STREETS FOR LOCAL TRAFFIC ACCOMMODATION AS NEEDED.

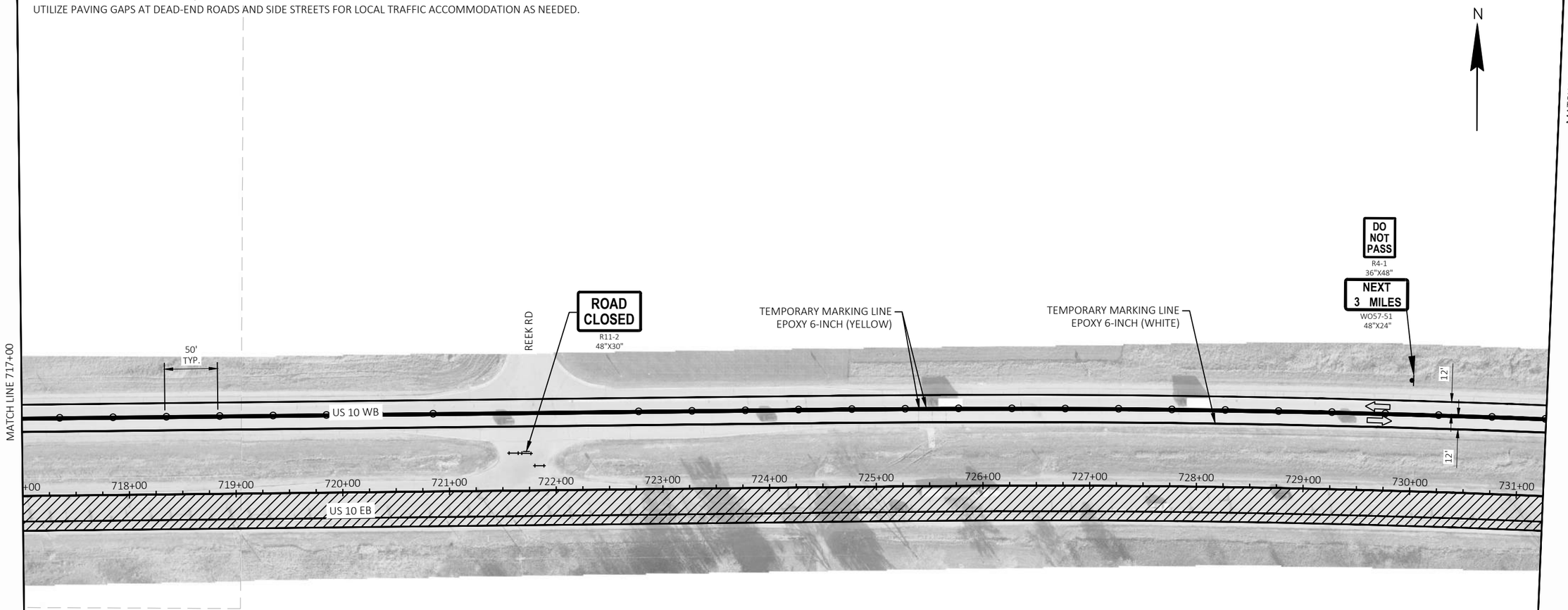

LEGEND

	TYPE II / III BARRICADE		WORK AREA
	TYPE II / III BARRICADE WTH ATTACHED SIGN	× × ×	PAVEMENT MARKING REMOVAL
	TRAFFIC CONTROL DRUM		DIRECTION OF TRAFFIC
	TRAFFIC CONTROL DRUM WITH TYPE C STEADY BURN LIGHT		SIGN ON TEMPORARY SUPPORT
	CONNECTED ARROW BOARD	((S))	WORK ZONE START LOCATION MARKER
	SIGN ON PERMANENT SUPPORT	((E))	WORK ZONE END LOCATION MARKER
	TEMPORARY DELINEATOR (STEEL POST W/SINGLE DELINEATOR)	FBS #	FLASHING BEACON SIGNS (FBS)
	DELINEATOR FLEXIBLE/TUBULAR MARKER	PTS	PORTABLE TRAFFIC SENSORS (PTS)

NOTE: SEE SDD TRAFFIC CONTROL, TWO LANE TWO WAY OPERATION FOR ADDITIONAL DETAILS
UTILIZE PAVING GAPS AT DEAD-END ROADS AND SIDE STREETS FOR LOCAL TRAFFIC ACCOMMODATION AS NEEDED.

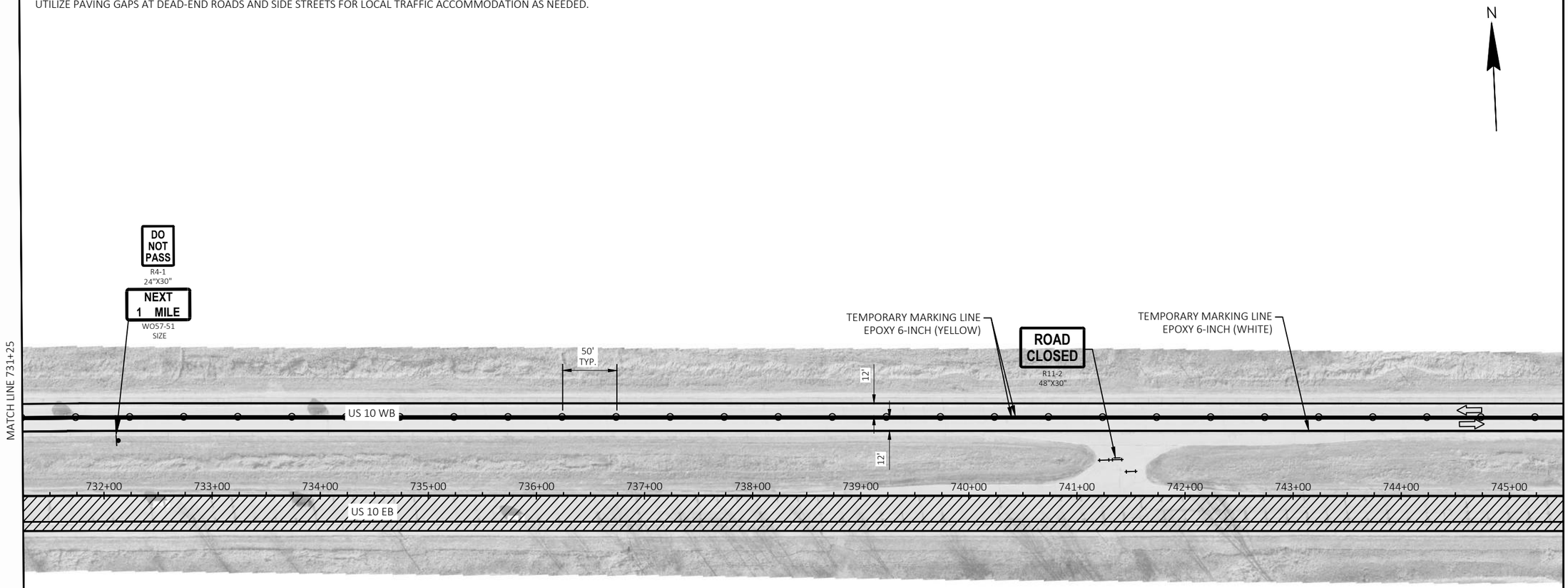

LEGEND

	TYPE II / III BARRICADE		WORK AREA
	TYPE II / III BARRICADE WTH ATTACHED SIGN	× × ×	PAVEMENT MARKING REMOVAL
	TRAFFIC CONTROL DRUM		DIRECTION OF TRAFFIC
	TRAFFIC CONTROL DRUM WITH TYPE C STEADY BURN LIGHT		SIGN ON TEMPORARY SUPPORT
	CONNECTED ARROW BOARD	((S))	WORK ZONE START LOCATION MARKER
	SIGN ON PERMANENT SUPPORT	((E))	WORK ZONE END LOCATION MARKER
	TEMPORARY DELINEATOR (STEEL POST W/SINGLE DELINEATOR)	FBS #	FLASHING BEACON SIGNS (FBS)
	DELINEATOR FLEXIBLE/TUBULAR MARKER	PTS	PORTABLE TRAFFIC SENSORS (PTS)

2

NOTE: SEE SDD TRAFFIC CONTROL, TWO LANE TWO WAY OPERATION FOR ADDITIONAL DETAILS
UTILIZE PAVING GAPS AT DEAD-END ROADS AND SIDE STREETS FOR LOCAL TRAFFIC ACCOMMODATION AS NEEDED.

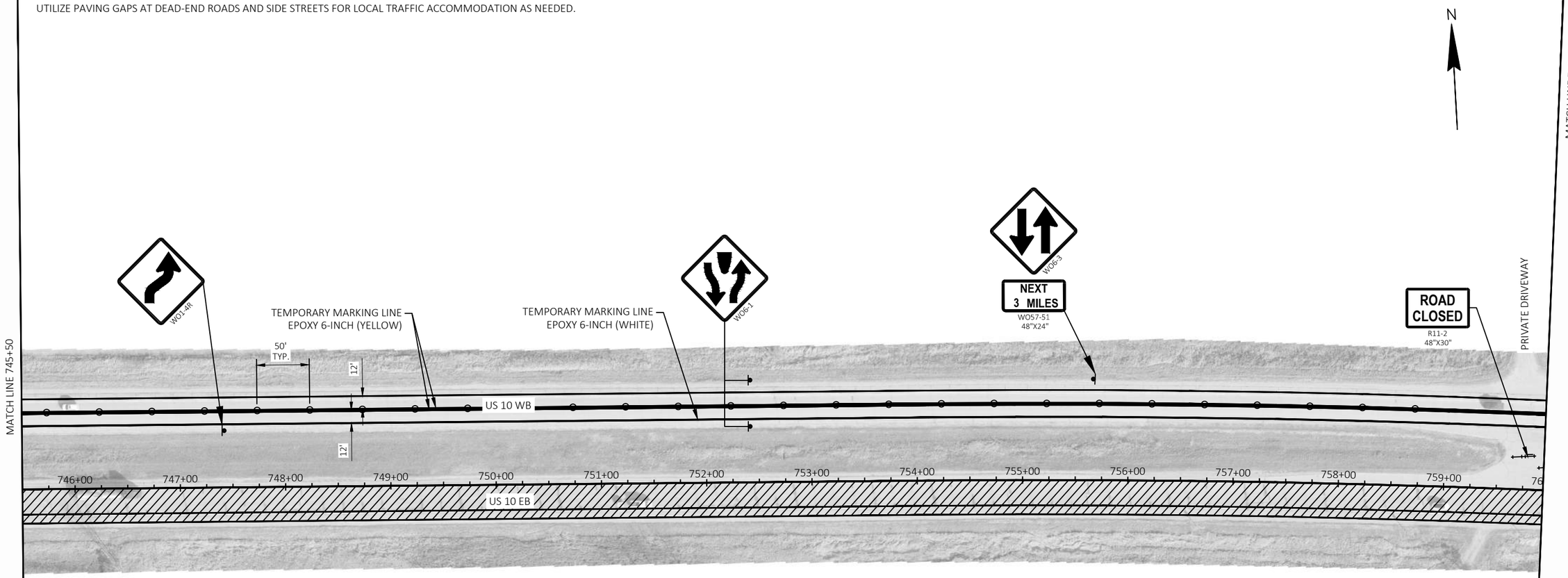

LEGEND

	TYPE II / III BARRICADE		WORK AREA
	TYPE II / III BARRICADE WTH ATTACHED SIGN	× × ×	PAVEMENT MARKING REMOVAL
	TRAFFIC CONTROL DRUM		DIRECTION OF TRAFFIC
	TRAFFIC CONTROL DRUM WITH TYPE C STEADY BURN LIGHT		SIGN ON TEMPORARY SUPPORT
	CONNECTED ARROW BOARD	((S))	WORK ZONE START LOCATION MARKER
	SIGN ON PERMANENT SUPPORT	((E))	WORK ZONE END LOCATION MARKER
	TEMPORARY DELINEATOR (STEEL POST W/SINGLE DELINEATOR)	FBS #	FLASHING BEACON SIGNS (FBS)
	DELINEATOR FLEXIBLE/TUBULAR MARKER	PTS	PORTABLE TRAFFIC SENSORS (PTS)

PROJECT NO: 1510-02-60	HWY: USH 10	COUNTY: WAUPACA	CROSSOVER TRAFFIC CONTROL	SHEET 68	E

2

NOTE: SEE SDD TRAFFIC CONTROL, SINGLE LANE CROSSOVER AND TRAFFIC CONTROL, SINGLE LANE CROSSOVER EXIT FOR ADDITIONAL CROSSOVER DETAILS.
UTILIZE PAVING GAPS AT DEAD-END ROADS AND SIDE STREETS FOR LOCAL TRAFFIC ACCOMMODATION AS NEEDED.

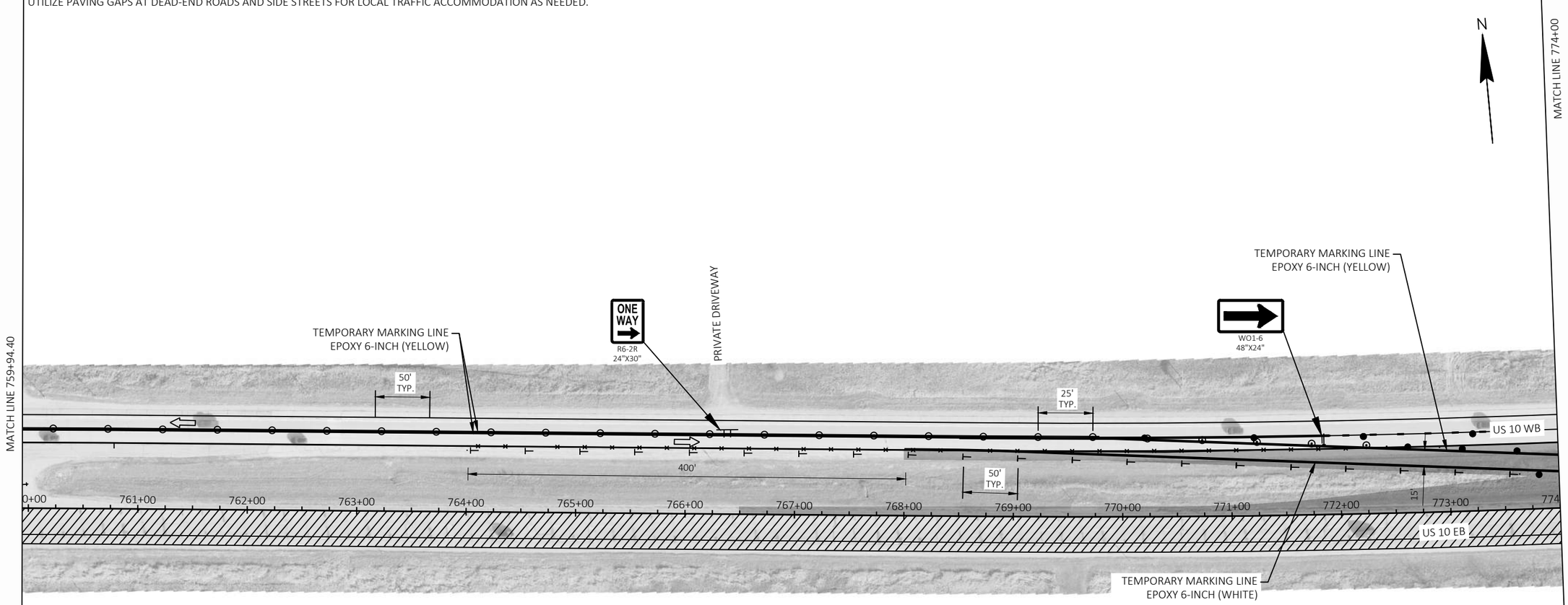

LEGEND

	TYPE II / III BARRICADE		WORK AREA
	TYPE II / III BARRICADE WTH ATTACHED SIGN	× × ×	PAVEMENT MARKING REMOVAL
	TRAFFIC CONTROL DRUM		DIRECTION OF TRAFFIC
	TRAFFIC CONTROL DRUM WITH TYPE C STEADY BURN LIGHT		SIGN ON TEMPORARY SUPPORT
	CONNECTED ARROW BOARD	((S))	WORK ZONE START LOCATION MARKER
	SIGN ON PERMANENT SUPPORT	((E))	WORK ZONE END LOCATION MARKER
	TEMPORARY DELINEATOR (STEEL POST W/SINGLE DELINEATOR)	FBS #	FLASHING BEACON SIGNS (FBS)
	DELINEATOR FLEXIBLE/TUBULAR MARKER	PTS	PORTABLE TRAFFIC SENSORS (PTS)

NOTE: SEE SDD TRAFFIC CONTROL, LANE CLOSURE AND TRAFFIC CONTROL, PARTIAL LANE SHIFT FOR MULTILANE DIVIDED 50 MPH OR GREATER FOR ADDITIONAL DETAILS
UTILIZE PAVING GAPS AT DEAD-END ROADS AND SIDE STREETS FOR LOCAL TRAFFIC ACCOMMODATION AS NEEDED.

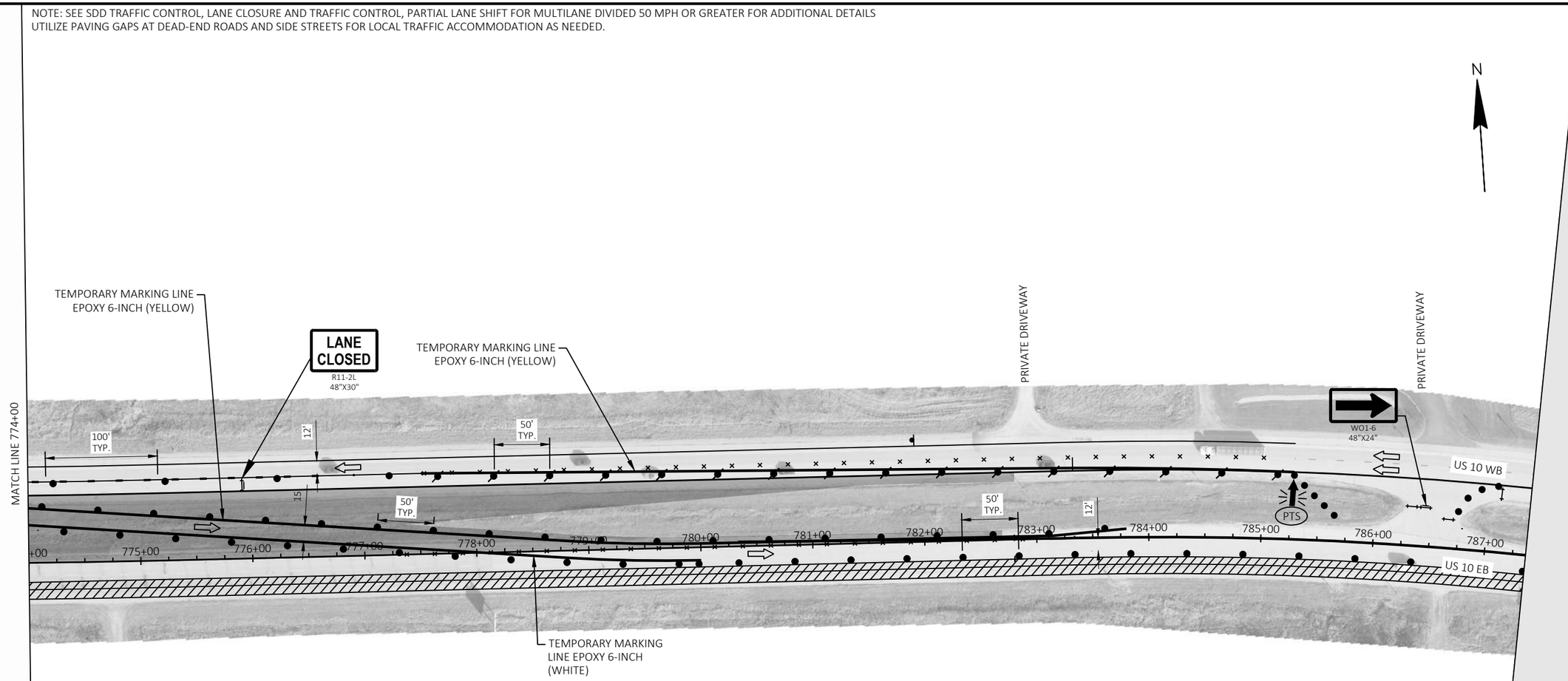

LEGEND

	TYPE II / III BARRICADE		WORK AREA
	TYPE II / III BARRICADE WTH ATTACHED SIGN	× × ×	PAVEMENT MARKING REMOVAL
●	TRAFFIC CONTROL DRUM		DIRECTION OF TRAFFIC
	TRAFFIC CONTROL DRUM WITH TYPE C STEADY BURN LIGHT		SIGN ON TEMPORARY SUPPORT
	CONNECTED ARROW BOARD	((S))	WORK ZONE START LOCATION MARKER
	SIGN ON PERMANENT SUPPORT	((E))	WORK ZONE END LOCATION MARKER
	TEMPORARY DELINEATOR (STEEL POST W/SINGLE DELINEATOR)	FBS #	FLASHING BEACON SIGNS (FBS)
	DELINEATOR FLEXIBLE/TUBULAR MARKER	PTS	PORTABLE TRAFFIC SENSORS (PTS)

PROJECT NO: 1510-02-60	HWY: USH 10	COUNTY: WAUPACA	CROSSOVER TRAFFIC CONTROL	SHEET 70	E

NOTE: SEE SDD TRAFFIC CONTROL, LANE CLOSURE, BASIC TRAFFIC QUEUE WARNING SYSTEM FOR ADDITIONAL DETAILS.
UTILIZE PAVING GAPS AT DEAD-END ROADS AND SIDE STREETS FOR LOCAL TRAFFIC ACCOMMODATION AS NEEDED.

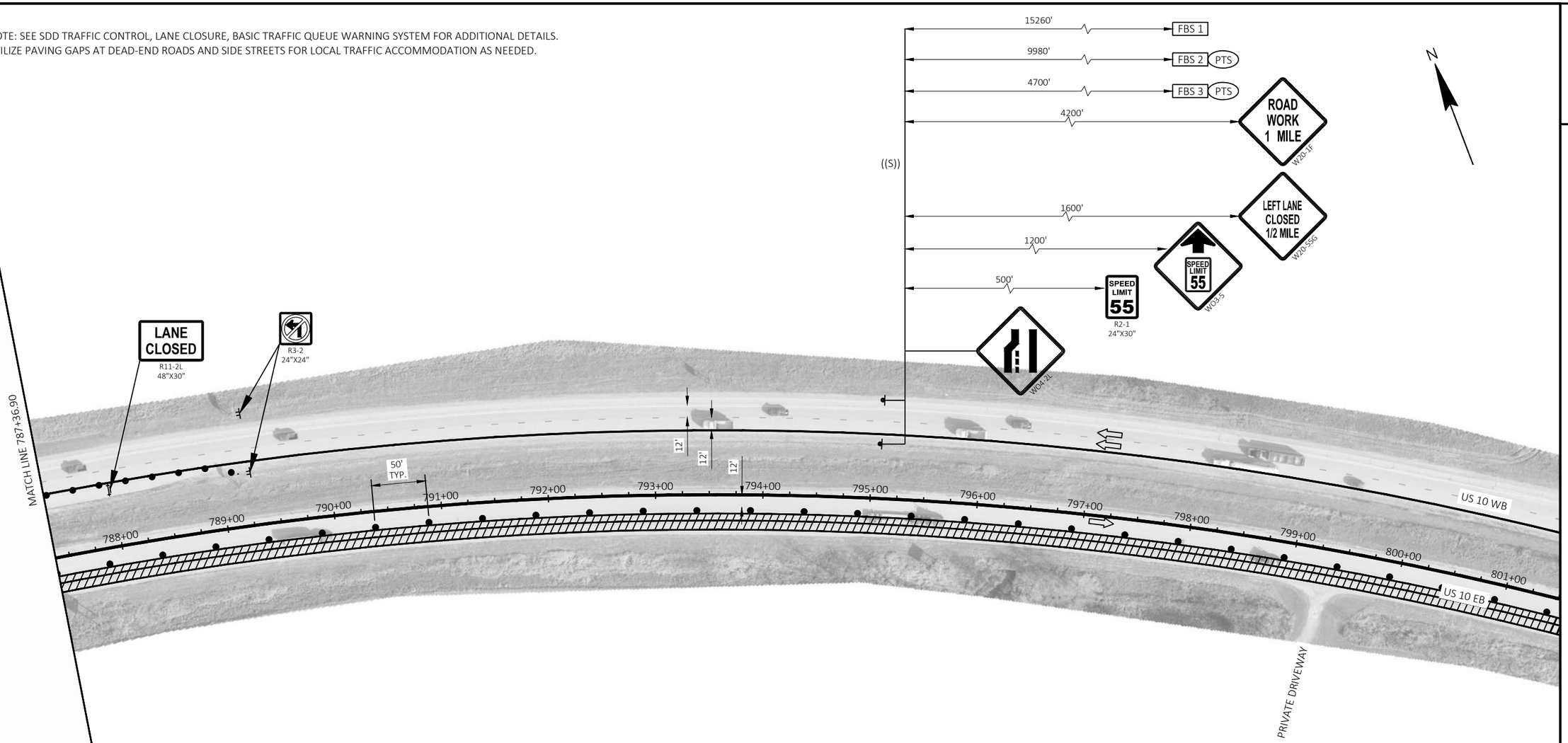

LEGEND

	TYPE II / III BARRICADE		WORK AREA
	TYPE II / III BARRICADE WTH ATTACHED SIGN	× × ×	PAVEMENT MARKING REMOVAL
	TRAFFIC CONTROL DRUM		DIRECTION OF TRAFFIC
	TRAFFIC CONTROL DRUM WITH TYPE C STEADY BURN LIGHT		SIGN ON TEMPORARY SUPPORT
	CONNECTED ARROW BOARD	((S))	WORK ZONE START LOCATION MARKER
	SIGN ON PERMANENT SUPPORT	((E))	WORK ZONE END LOCATION MARKER
	TEMPORARY DELINEATOR (STEEL POST W/SINGLE DELINEATOR)	FBS #	FLASHING BEACON SIGNS (FBS)
	DELINEATOR FLEXIBLE/TUBULAR MARKER	PTS	PORTABLE TRAFFIC SENSORS (PTS)

2

GENERAL NOTES

DRAWING SHOWS TRAFFIC CONTROL FOR A TYPICAL SITUATION. ADDITIONAL TRAFFIC CONTROL DEVICES MAY BE REQUIRED AND/OR LAYOUT DETAILS MODIFIED DEPENDING ON CONTRACTOR METHODS OR SEQUENCE OF OPERATION.

THE EXACT NUMBER, LOCATION, AND SPACING OF ALL SIGNS AND DEVICES SHALL BE ADJUSTED TO FIT FIELD CONDITIONS AS APPROVED BY THE ENGINEER.

THE SPACING BETWEEN SIGNS SHOULD BE ADJUSTED TO NOT CONFLICT WITH AND TO PROVIDE A MINIMUM OF 200 FEET (500 FEET DESIRABLE) DISTANCE TO EXISTING SIGNS.

ALL SIGNS ARE 48"x48" UNLESS OTHERWISE NOTED. "WO" IS THE SAME AS "W" EXCEPT THE BACKGROUND IS ORANGE.

ANY SIGNS, TEMPORARY OR EXISTING, WHICH CONFLICT WITH TRAFFIC CONTROL, "IN USE" SHALL BE REMOVED OR COVERED AS NEEDED AND APPROVED BY THE ENGINEER. NO WARNING LIGHTS SHALL BE WORKING ON "COVERED" OR "DOWNED" SIGNS.

CONTRACTOR SHALL MAINTAIN ACCESS TO ALL DRIVEWAYS AT ALL TIMES EXCEPT WHEN PAVING OR PIPE LAYING OPERATIONS REQUIRE THE DRIVEWAY TO BE CLOSED. ACCESS TO DRIVEWAYS SHALL BE RE-ESTABLISHED IMMEDIATELY AFTER OPERATIONS ARE COMPLETED. ACCESS SHALL BE PROVIDED DURING ALL NON-WORKING HOURS.

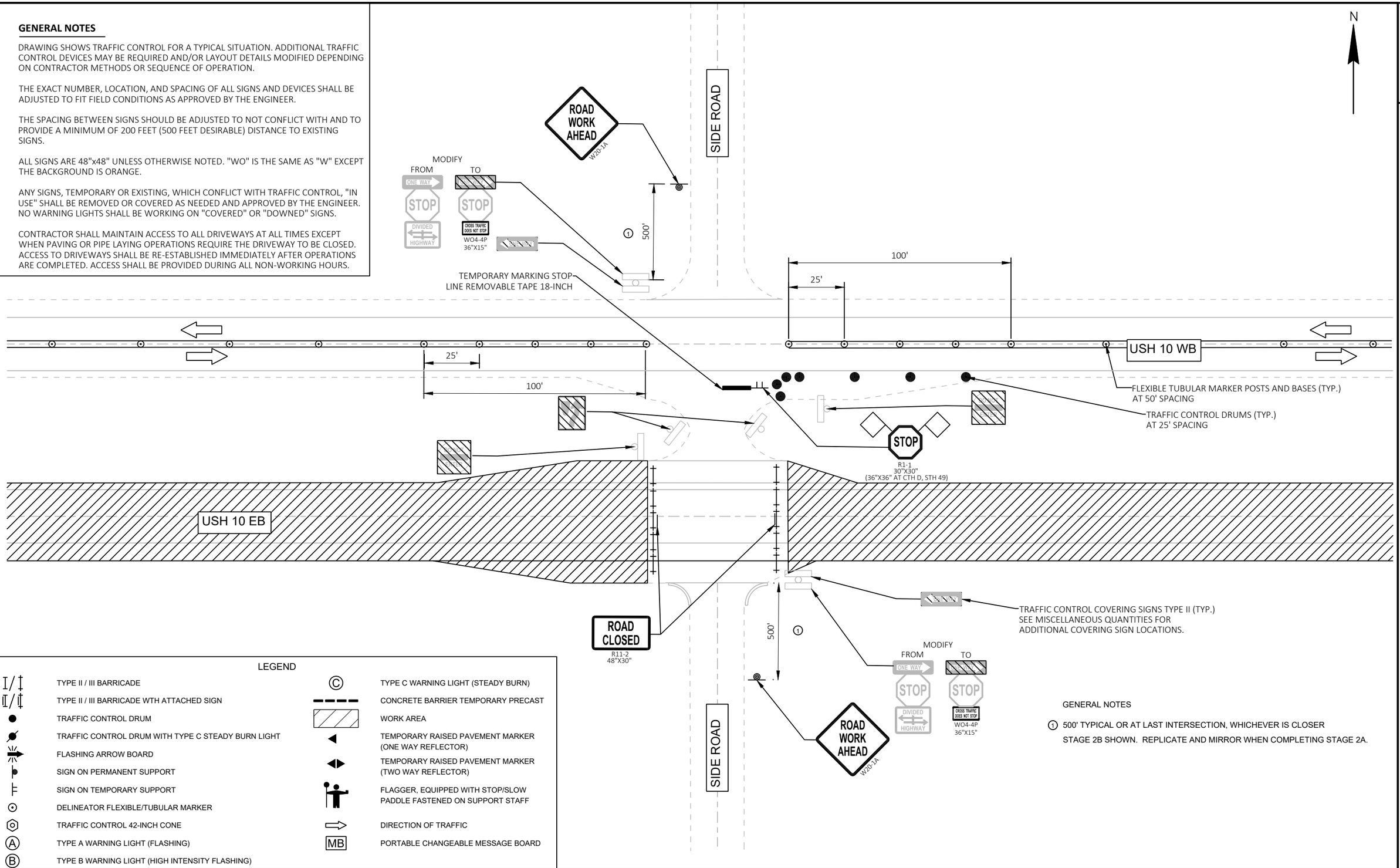

LEGEND

TYPE II / III BARRICADE	TYPE C WARNING LIGHT (STEADY BURN)
TYPE II / III BARRICADE WTH ATTACHED SIGN	CONCRETE BARRIER TEMPORARY PRECAST
TRAFFIC CONTROL DRUM	WORK AREA
TRAFFIC CONTROL DRUM WITH TYPE C STEADY BURN LIGHT	TEMPORARY RAISED PAVEMENT MARKER (ONE WAY REFLECTOR)
FLASHING ARROW BOARD	TEMPORARY RAISED PAVEMENT MARKER (TWO WAY REFLECTOR)
SIGN ON PERMANENT SUPPORT	FLAGGER, EQUIPPED WITH STOP/SLOW PADDLE FASTENED ON SUPPORT STAFF
SIGN ON TEMPORARY SUPPORT	DIRECTION OF TRAFFIC
DELINEATOR FLEXIBLE/TUBULAR MARKER	PORTABLE CHANGEABLE MESSAGE BOARD
TRAFFIC CONTROL 42-INCH CONE	
TYPE A WARNING LIGHT (FLASHING)	
TYPE B WARNING LIGHT (HIGH INTENSITY FLASHING)	

GENERAL NOTES

① 500' TYPICAL OR AT LAST INTERSECTION, WHICHEVER IS CLOSER

STAGE 2B SHOWN. REPLICATE AND MIRROR WHEN COMPLETING STAGE 2A.

PROJECT NO: 1510-02-60	HWY: USH 10	COUNTY: WAUPACA	TRAFFIC CONTROL - INTERSECTION WITHIN BIDIRECTIONAL TRAFFIC - DETAIL A	SHEET 72	E

2

GENERAL NOTES

DRAWING SHOWS TRAFFIC CONTROL FOR A TYPICAL SITUATION. ADDITIONAL TRAFFIC CONTROL DEVICES MAY BE REQUIRED AND/OR LAYOUT DETAILS MODIFIED DEPENDING ON CONTRACTOR METHODS OR SEQUENCE OF OPERATION.

THE EXACT NUMBER, LOCATION, AND SPACING OF ALL SIGNS AND DEVICES SHALL BE ADJUSTED TO FIT FIELD CONDITIONS AS APPROVED BY THE ENGINEER.

THE SPACING BETWEEN SIGNS SHOULD BE ADJUSTED TO NOT CONFLICT WITH AND TO PROVIDE A MINIMUM OF 200 FEET (500 FEET DESIRABLE) DISTANCE TO EXISTING SIGNS.

ALL SIGNS ARE 48"x48" UNLESS OTHERWISE NOTED. "WO" IS THE SAME AS "W" EXCEPT THE BACKGROUND IS ORANGE.

ANY SIGNS, TEMPORARY OR EXISTING, WHICH CONFLICT WITH TRAFFIC CONTROL, "IN USE" SHALL BE REMOVED OR COVERED AS NEEDED AND APPROVED BY THE ENGINEER. NO WARNING LIGHTS SHALL BE WORKING ON "COVERED" OR "DOWNED" SIGNS.

CONTRACTOR SHALL MAINTAIN ACCESS TO ALL DRIVEWAYS AT ALL TIMES EXCEPT WHEN PAVING OR PIPE LAYING OPERATIONS REQUIRE THE DRIVEWAY TO BE CLOSED. ACCESS TO DRIVEWAYS SHALL BE RE-ESTABLISHED IMMEDIATELY AFTER OPERATIONS ARE COMPLETED. ACCESS SHALL BE PROVIDED DURING ALL NON-WORKING HOURS.

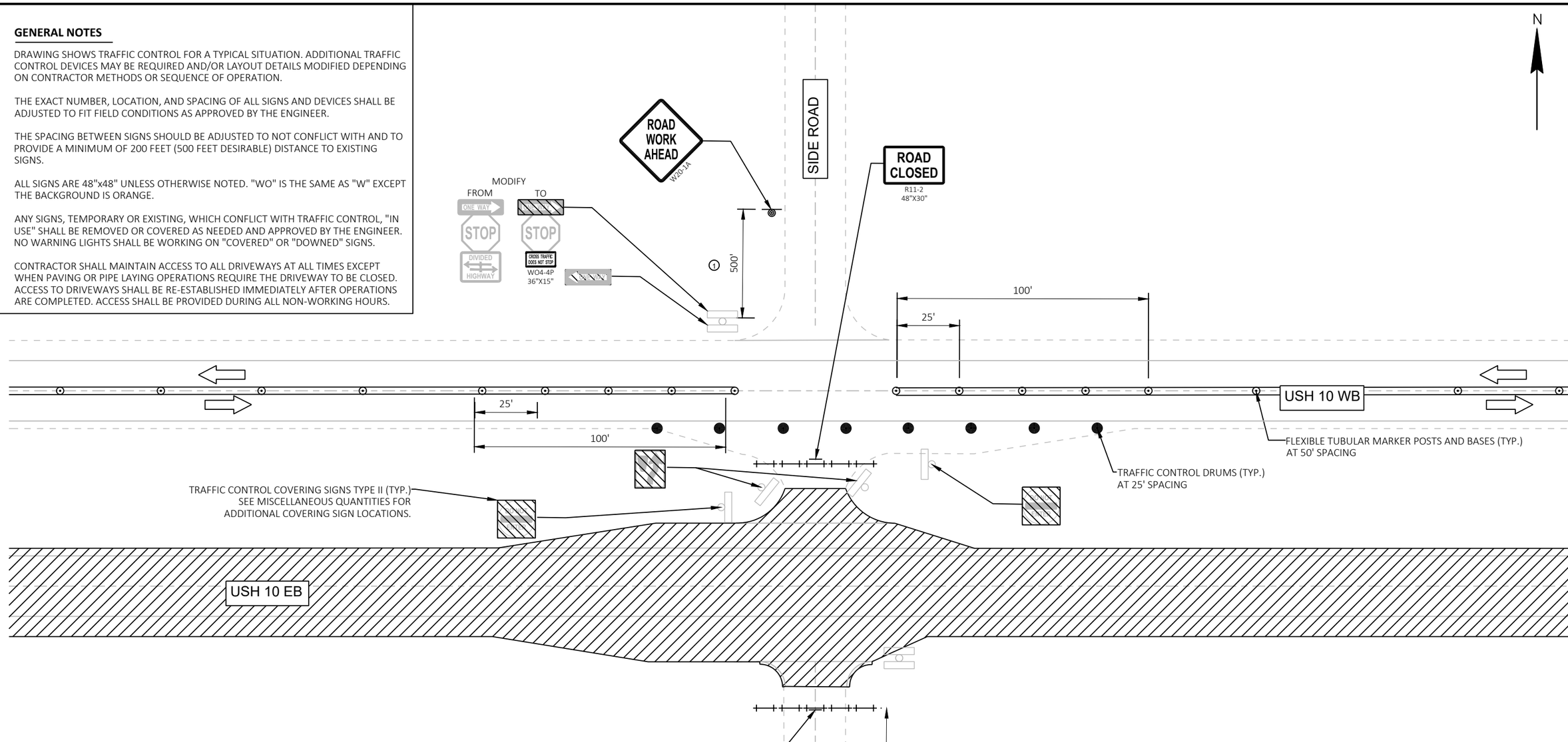

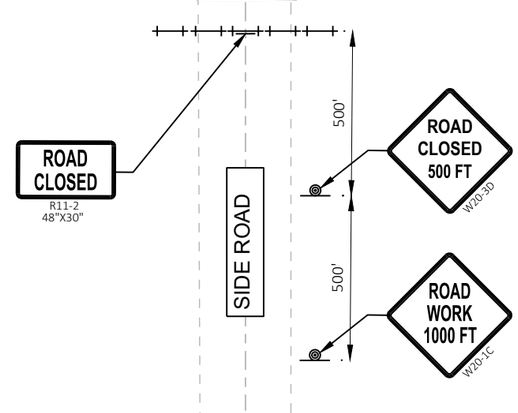

LEGEND

I/I	TYPE II / III BARRICADE	Ⓒ	TYPE C WARNING LIGHT (STEADY BURN)
I/I	TYPE II / III BARRICADE WTH ATTACHED SIGN	▬▬▬	CONCRETE BARRIER TEMPORARY PRECAST
●	TRAFFIC CONTROL DRUM	▨	WORK AREA
	TRAFFIC CONTROL DRUM WITH TYPE C STEADY BURN LIGHT	◀	TEMPORARY RAISED PAVEMENT MARKER (ONE WAY REFLECTOR)
	FLASHING ARROW BOARD	◀▶	TEMPORARY RAISED PAVEMENT MARKER (TWO WAY REFLECTOR)
	SIGN ON PERMANENT SUPPORT		FLAGGER, EQUIPPED WITH STOP/SLOW PADDLE FASTENED ON SUPPORT STAFF
	SIGN ON TEMPORARY SUPPORT	⇨	DIRECTION OF TRAFFIC
⊙	DELINEATOR FLEXIBLE/TUBULAR MARKER	MB	PORTABLE CHANGEABLE MESSAGE BOARD
⬡	TRAFFIC CONTROL 42-INCH CONE		
Ⓐ	TYPE A WARNING LIGHT (FLASHING)		
Ⓑ	TYPE B WARNING LIGHT (HIGH INTENSITY FLASHING)		

GENERAL NOTES

1 500' TYPICAL OR AT LAST INTERSECTION, WHICHEVER IS CLOSER

STAGE 2B SHOWN. REPLICATE AND MIRROR WHEN COMPLETING STAGE 2A.

PROJECT NO: 1510-02-60	HWY: USH 10	COUNTY: WAUPACA	TRAFFIC CONTROL - INTERSECTION WITHIN BIDIRECTIONAL TRAFFIC - DETAIL B	SHEET 73	E

NOTE: SEE SDD TRAFFIC CONTROL, PARTIAL LANE SHIFT MULTILANE DIVIDED 50 MPH OR GREATER AND TRAFFIC CONTROL, LANE CLOSURE FOR ADDITIONAL WIDENING DETAILS

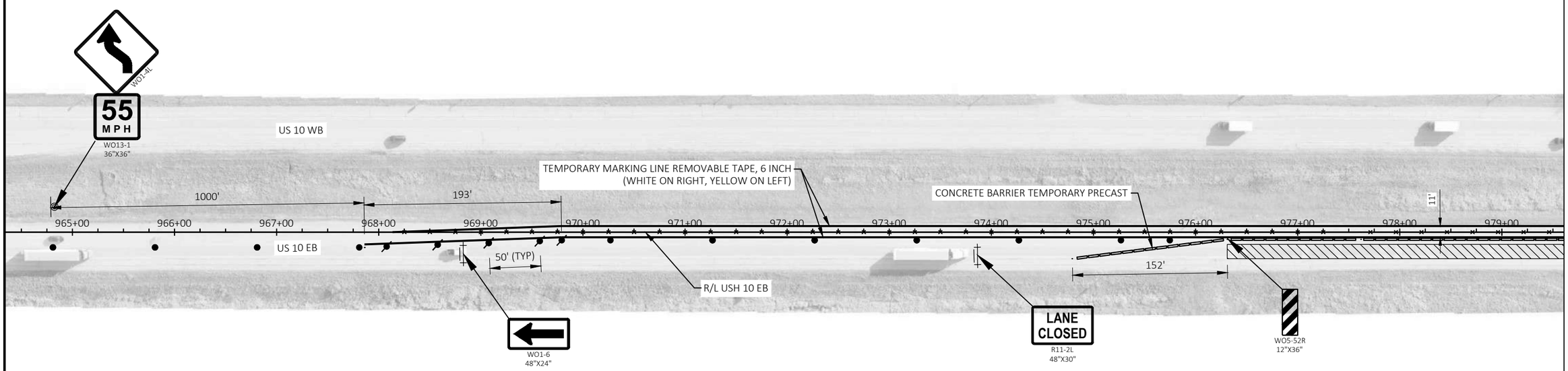

LEGEND

- TYPE II / III BARRICADE
- TYPE II / III BARRICADE WTH ATTACHED SIGN
- TRAFFIC CONTROL DRUM
- TRAFFIC CONTROL DRUM WITH TYPE C STEADY BURN LIGHT
- CONNECTED ARROW BOARD
- SIGN ON PERMANENT SUPPORT
- TEMPORARY DELINEATOR (STEEL POST W/SINGLE DELINEATOR)
- DELINEATOR FLEXIBLE/TUBULAR MARKER
- TRAFFIC CONTROL 42-INCH CONE
- WORK AREA
- PAVEMENT MARKING REMOVAL
- DIRECTION OF TRAFFIC

NOTE: SEE SDD TRAFFIC CONTROL, PARTIAL LANE SHIFT MULTILANE DIVIDED 50 MPH OR GREATER AND TRAFFIC CONTROL, LANE CLOSURE FOR ADDITIONAL WIDENING DETAILS

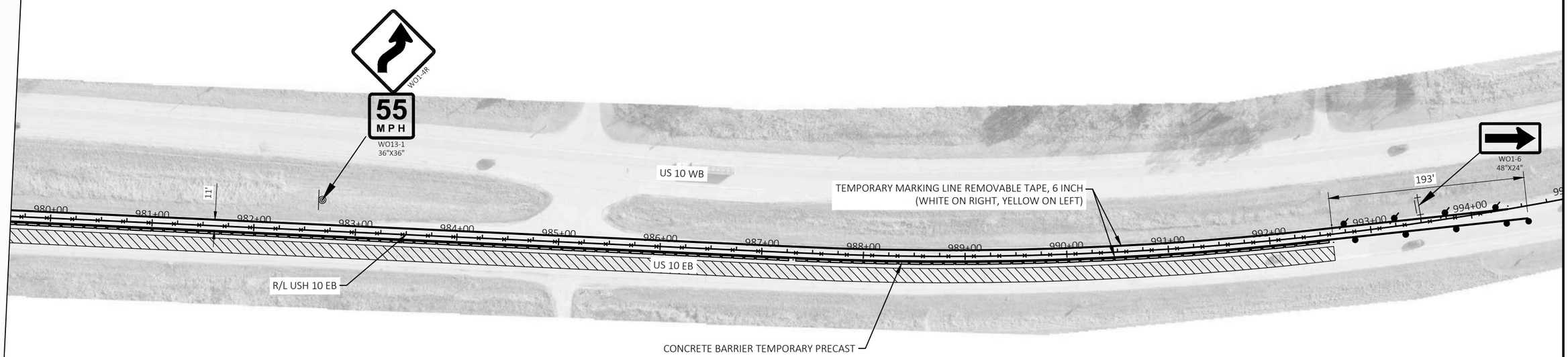

LEGEND

- TYPE II / III BARRICADE
- TYPE II / III BARRICADE WTH ATTACHED SIGN
- TRAFFIC CONTROL DRUM
- TRAFFIC CONTROL DRUM WITH TYPE C STEADY BURN LIGHT
- CONNECTED ARROW BOARD
- SIGN ON PERMANENT SUPPORT
- TEMPORARY DELINEATOR (STEEL POST W/SINGLE DELINEATOR)
- DELINEATOR FLEXIBLE/TUBULAR MARKER
- TRAFFIC CONTROL 42-INCH CONE
- WORK AREA
- PAVEMENT MARKING REMOVAL
- DIRECTION OF TRAFFIC

LEGEND

- TYPE II / III BARRICADE
- TYPE II / III BARRICADE WTH ATTACHED SIGN
- TRAFFIC CONTROL DRUM
- TRAFFIC CONTROL DRUM WITH TYPE C STEADY BURN LIGHT
- CONNECTED ARROW BOARD
- SIGN ON PERMANENT SUPPORT
- TEMPORARY DELINEATOR (STEEL POST W/SINGLE DELINEATOR)
- DELINEATOR FLEXIBLE/TUBULAR MARKER
- TRAFFIC CONTROL 42-INCH CONE
- WORK AREA
- × × × PAVEMENT MARKING REMOVAL
- DIRECTION OF TRAFFIC
- ((S)) WORK ZONE START LOCATION MARKER
- ((E)) WORK ZONE END LOCATION MARKER

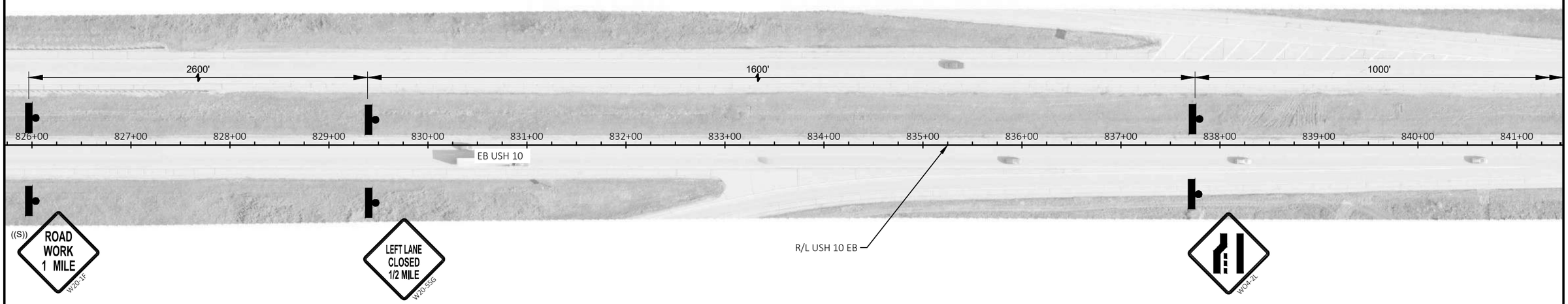

NOTE: DO NOT PIN CONCRETE BARRIER TEMPORARY PRECAST TO BRIDGE DECKS. DO NOT STORE EQUIPMENT OR MATERIALS WITHIN 6 FEET OF UNPINNED CONCRETE BARRIER TEMPORARY PRECAST.

PROJECT NO: 1510-02-60	HWY: USH 10	COUNTY: WAUPACA	BRIDGE TRAFFIC CONTROL - STAGE 1	SHEET 76	E

2

LEGEND

- TYPE II / III BARRICADE
- TYPE II / III BARRICADE WTH ATTACHED SIGN
- TRAFFIC CONTROL DRUM
- TRAFFIC CONTROL DRUM WITH TYPE C STEADY BURN LIGHT
- CONNECTED ARROW BOARD
- SIGN ON PERMANENT SUPPORT
- TEMPORARY DELINEATOR (STEEL POST W/SINGLE DELINEATOR)
- DELINEATOR FLEXIBLE/TUBULAR MARKER
- TRAFFIC CONTROL 42-INCH CONE
- WORK AREA
- PAVEMENT MARKING REMOVAL
- DIRECTION OF TRAFFIC
- ((S)) WORK ZONE START LOCATION MARKER
- ((E)) WORK ZONE END LOCATION MARKER

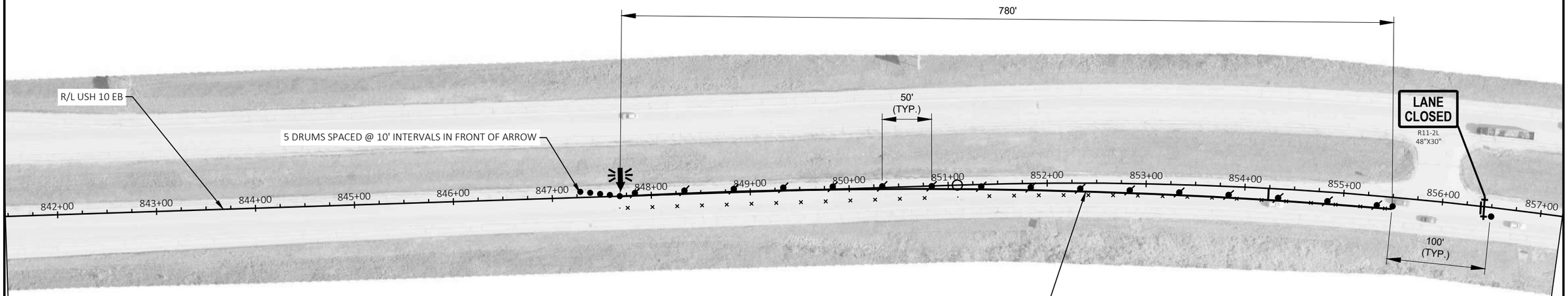

NOTE: DO NOT PIN CONCRETE BARRIER TEMPORARY PRECAST TO BRIDGE DECKS. DO NOT STORE EQUIPMENT OR MATERIALS WITHIN 6 FEET OF UNPINNED CONCRETE BARRIER TEMPORARY PRECAST.

PROJECT NO: 1510-02-60	HWY: USH 10	COUNTY: WAUPACA	BRIDGE TRAFFIC CONTROL - STAGE 1	SHEET 77	E

2

LEGEND

TYPE II / III BARRICADE	WORK AREA
TYPE II / III BARRICADE WTH ATTACHED SIGN	PAVEMENT MARKING REMOVAL
TRAFFIC CONTROL DRUM	DIRECTION OF TRAFFIC
TRAFFIC CONTROL DRUM WITH TYPE C STEADY BURN LIGHT	((S)) WORK ZONE START LOCATION MARKER
CONNECTED ARROW BOARD	((E)) WORK ZONE END LOCATION MARKER
SIGN ON PERMANENT SUPPORT	
TEMPORARY DELINEATOR (STEEL POST W/SINGLE DELINEATOR)	
DELINEATOR FLEXIBLE/TUBULAR MARKER	
TRAFFIC CONTROL 42-INCH CONE	

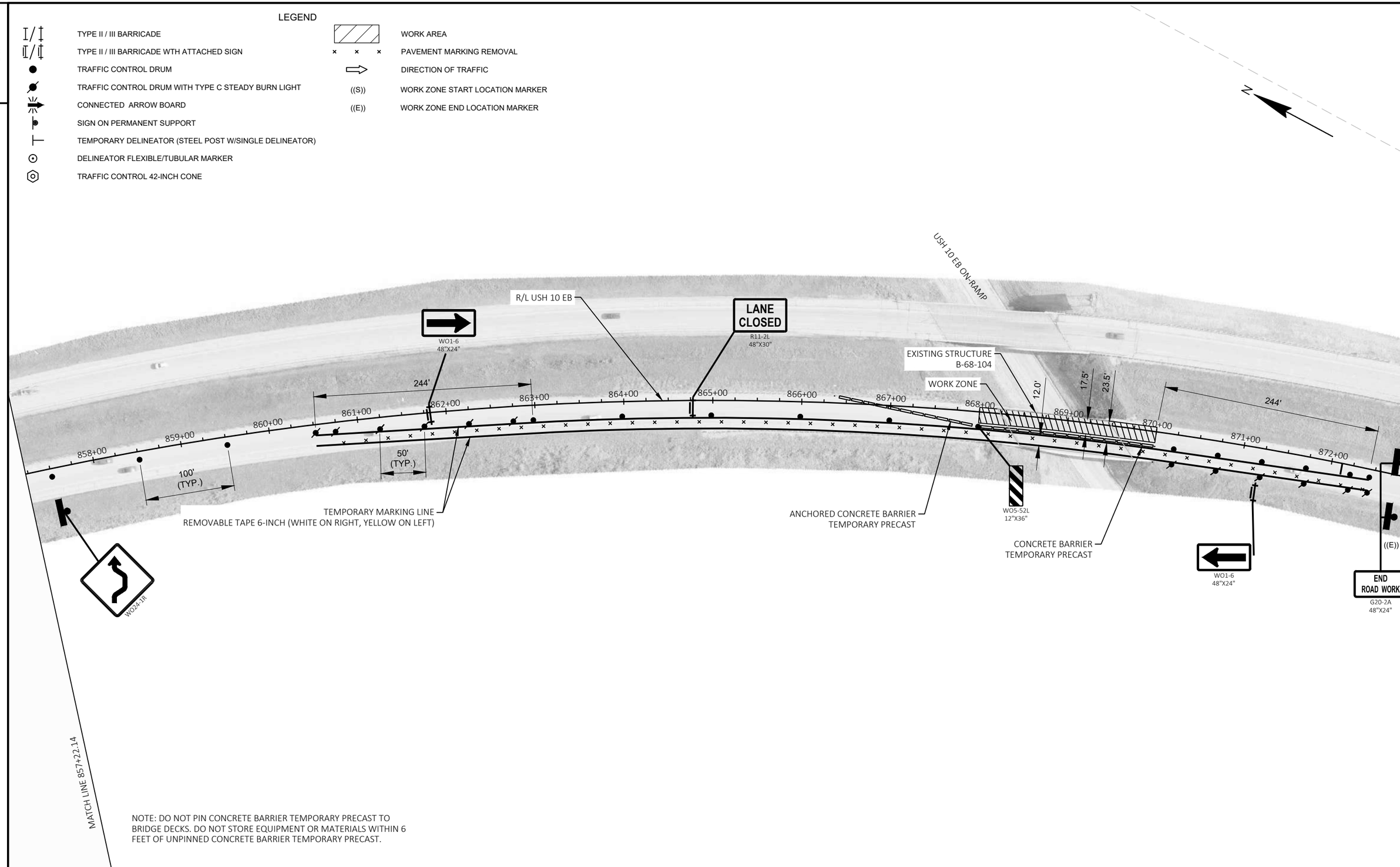

NOTE: DO NOT PIN CONCRETE BARRIER TEMPORARY PRECAST TO BRIDGE DECKS. DO NOT STORE EQUIPMENT OR MATERIALS WITHIN 6 FEET OF UNPINNED CONCRETE BARRIER TEMPORARY PRECAST.

PROJECT NO: 1510-02-60	HWY: USH 10	COUNTY: WAUPACA	BRIDGE TRAFFIC CONTROL - STAGE 1	SHEET 78	E

2

LEGEND

- TYPE II / III BARRICADE
- TYPE II / III BARRICADE WTH ATTACHED SIGN
- TRAFFIC CONTROL DRUM
- TRAFFIC CONTROL DRUM WITH TYPE C STEADY BURN LIGHT
- CONNECTED ARROW BOARD
- SIGN ON PERMANENT SUPPORT
- TEMPORARY DELINEATOR (STEEL POST W/SINGLE DELINEATOR)
- DELINEATOR FLEXIBLE/TUBULAR MARKER
- TRAFFIC CONTROL 42-INCH CONE
- WORK AREA
- × × × PAVEMENT MARKING REMOVAL
- DIRECTION OF TRAFFIC
- ((S)) WORK ZONE START LOCATION MARKER
- ((E)) WORK ZONE END LOCATION MARKER

N

MATCH LINE 841+62.20

2

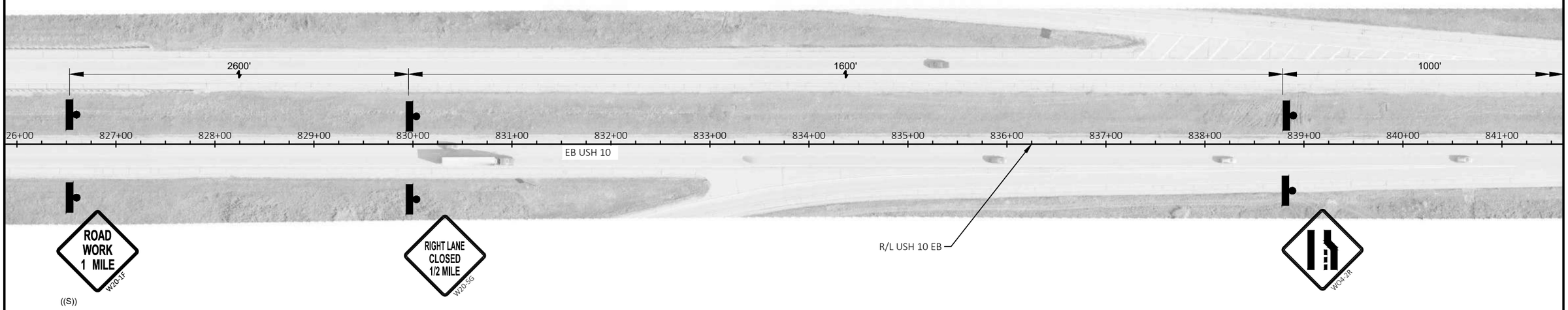

NOTE: DO NOT PIN CONCRETE BARRIER TEMPORARY PRECAST TO BRIDGE DECKS. DO NOT STORE EQUIPMENT OR MATERIALS WITHIN 6 FEET OF UNPINNED CONCRETE BARRIER TEMPORARY PRECAST.

PROJECT NO: 1510-02-60	HWY: USH 10	COUNTY: WAUPACA	BRIDGE TRAFFIC CONTROL - STAGE 2	SHEET 79	E

2

LEGEND

- TYPE II / III BARRICADE
- TYPE II / III BARRICADE WTH ATTACHED SIGN
- TRAFFIC CONTROL DRUM
- TRAFFIC CONTROL DRUM WITH TYPE C STEADY BURN LIGHT
- CONNECTED ARROW BOARD
- SIGN ON PERMANENT SUPPORT
- TEMPORARY DELINEATOR (STEEL POST W/SINGLE DELINEATOR)
- DELINEATOR FLEXIBLE/TUBULAR MARKER
- TRAFFIC CONTROL 42-INCH CONE
- WORK AREA
- PAVEMENT MARKING REMOVAL
- DIRECTION OF TRAFFIC

N

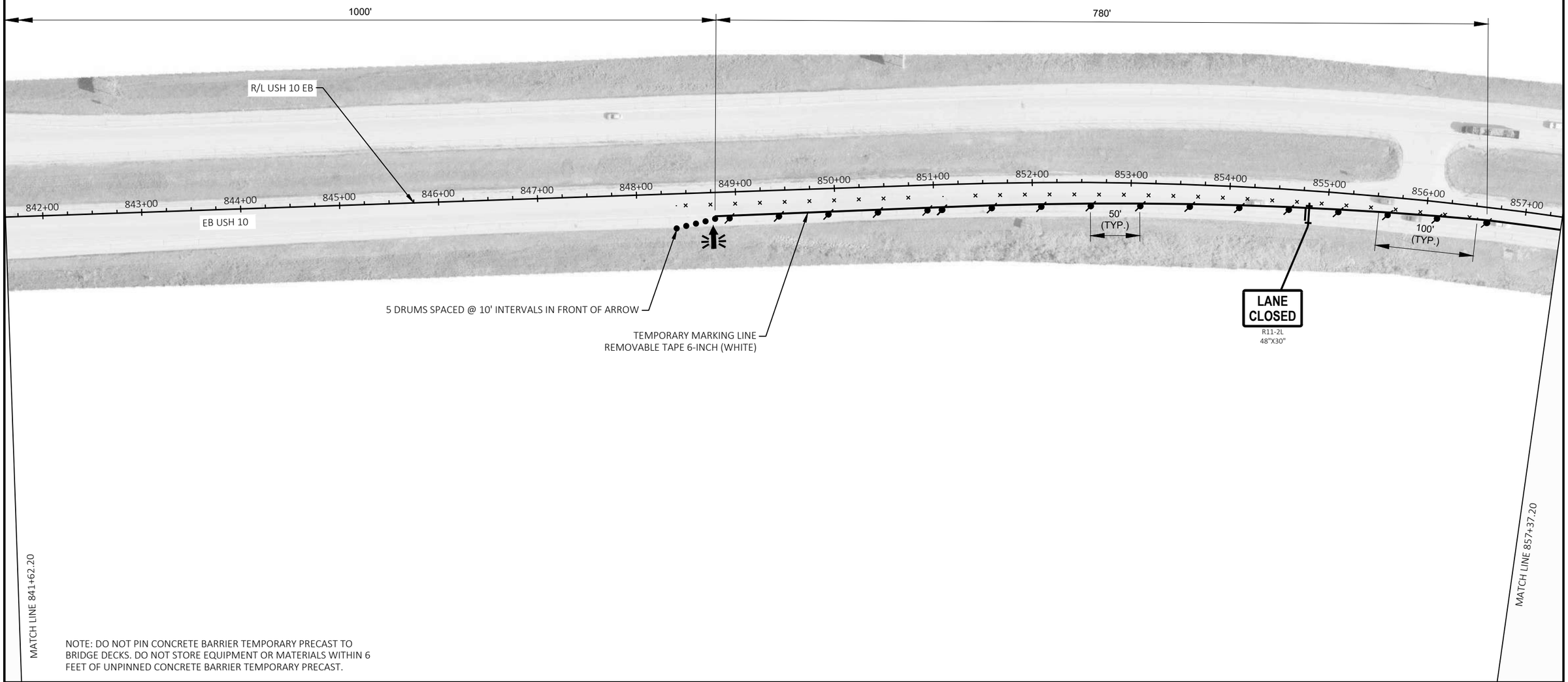

NOTE: DO NOT PIN CONCRETE BARRIER TEMPORARY PRECAST TO BRIDGE DECKS. DO NOT STORE EQUIPMENT OR MATERIALS WITHIN 6 FEET OF UNPINNED CONCRETE BARRIER TEMPORARY PRECAST.

PROJECT NO: 1510-02-60	HWY: USH 10	COUNTY: WAUPACA	BRIDGE TRAFFIC CONTROL - STAGE 2	SHEET 80	E

2

LEGEND

TYPE II / III BARRICADE	WORK AREA
TYPE II / III BARRICADE WTH ATTACHED SIGN	PAVEMENT MARKING REMOVAL
TRAFFIC CONTROL DRUM	DIRECTION OF TRAFFIC
TRAFFIC CONTROL DRUM WITH TYPE C STEADY BURN LIGHT	((S)) WORK ZONE START LOCATION MARKER
CONNECTED ARROW BOARD	((E)) WORK ZONE END LOCATION MARKER
SIGN ON PERMANENT SUPPORT	
TEMPORARY DELINEATOR (STEEL POST W/SINGLE DELINEATOR)	
DELINEATOR FLEXIBLE/TUBULAR MARKER	
TRAFFIC CONTROL 42-INCH CONE	

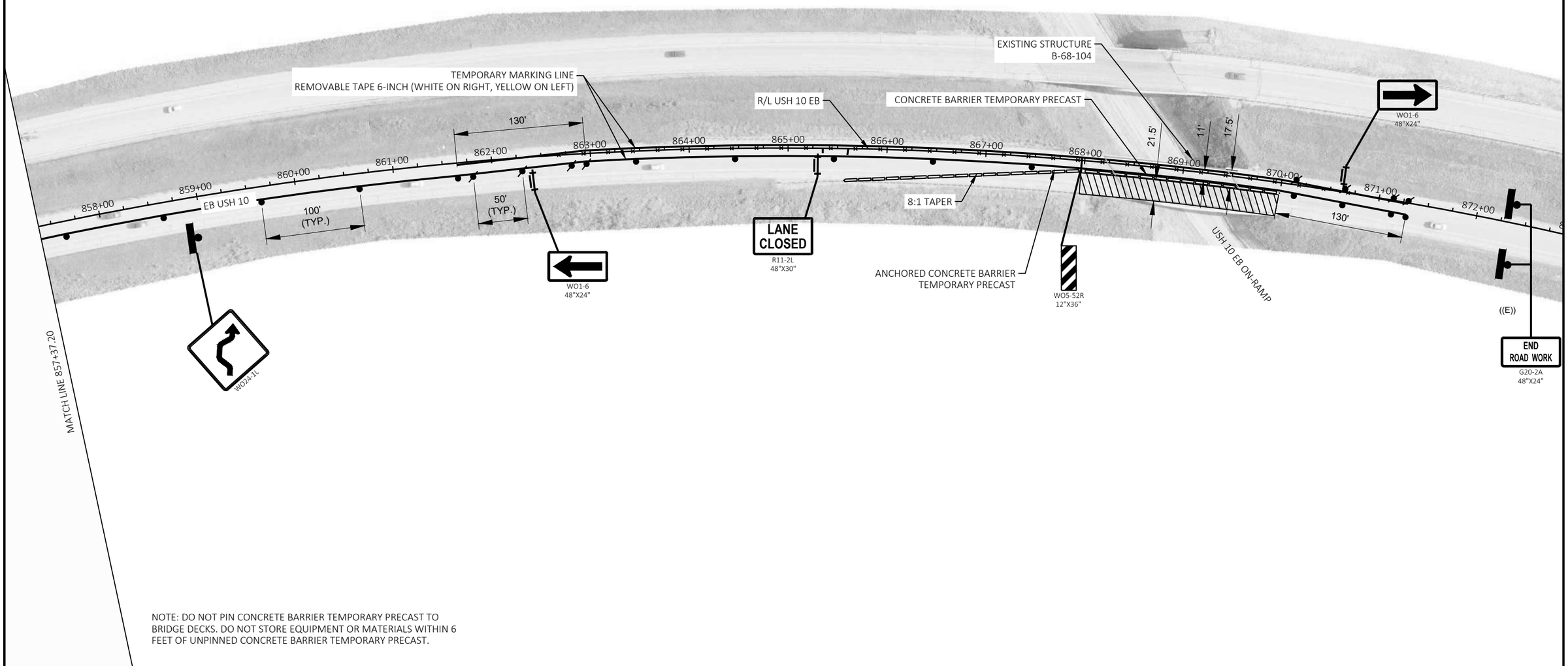

NOTE: DO NOT PIN CONCRETE BARRIER TEMPORARY PRECAST TO BRIDGE DECKS. DO NOT STORE EQUIPMENT OR MATERIALS WITHIN 6 FEET OF UNPINNED CONCRETE BARRIER TEMPORARY PRECAST.

2

PROJECT NO: 1510-02-60	HWY: USH 10	COUNTY: WAUPACA	BRIDGE TRAFFIC CONTROL - STAGE 2	SHEET 81	E

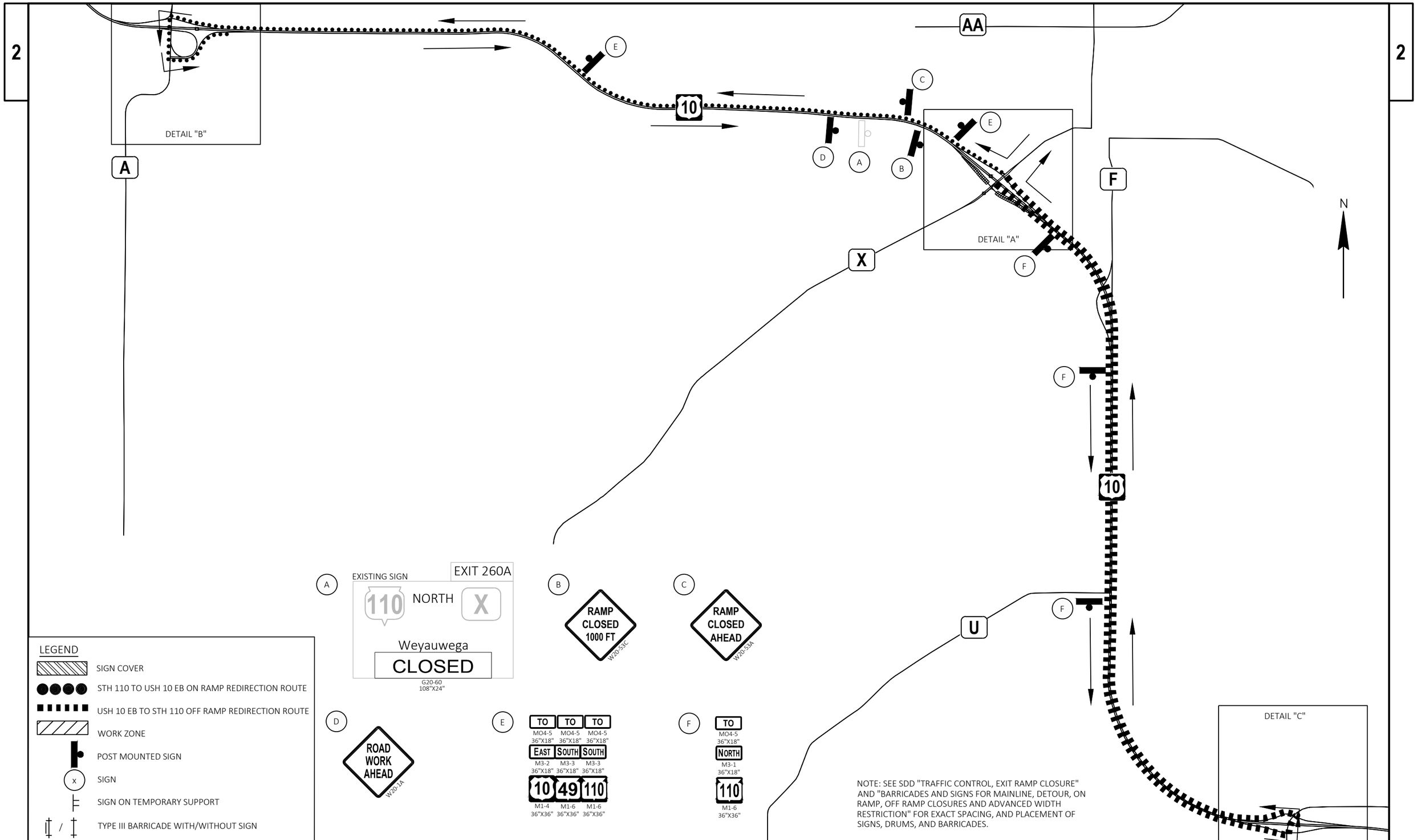

PROJECT NO: 1510-02-60	HWY: USH 10	COUNTY: WAUPACA	SIGNING PLANS - STH 110/CTH X RAMP CLOSURE SIGNING	SHEET 82	E

2

LEGEND

- SIGN COVER
- STH 110 TO USH 10 EB ON RAMP REDIRECTION ROUTE
- USH 10 EB TO STH 110 OFF RAMP REDIRECTION ROUTE
- WORK ZONE
- POST MOUNTED SIGN
- (x) SIGN
- SIGN ON TEMPORARY SUPPORT
- TYPE III BARRICADE WITH/WITHOUT SIGN

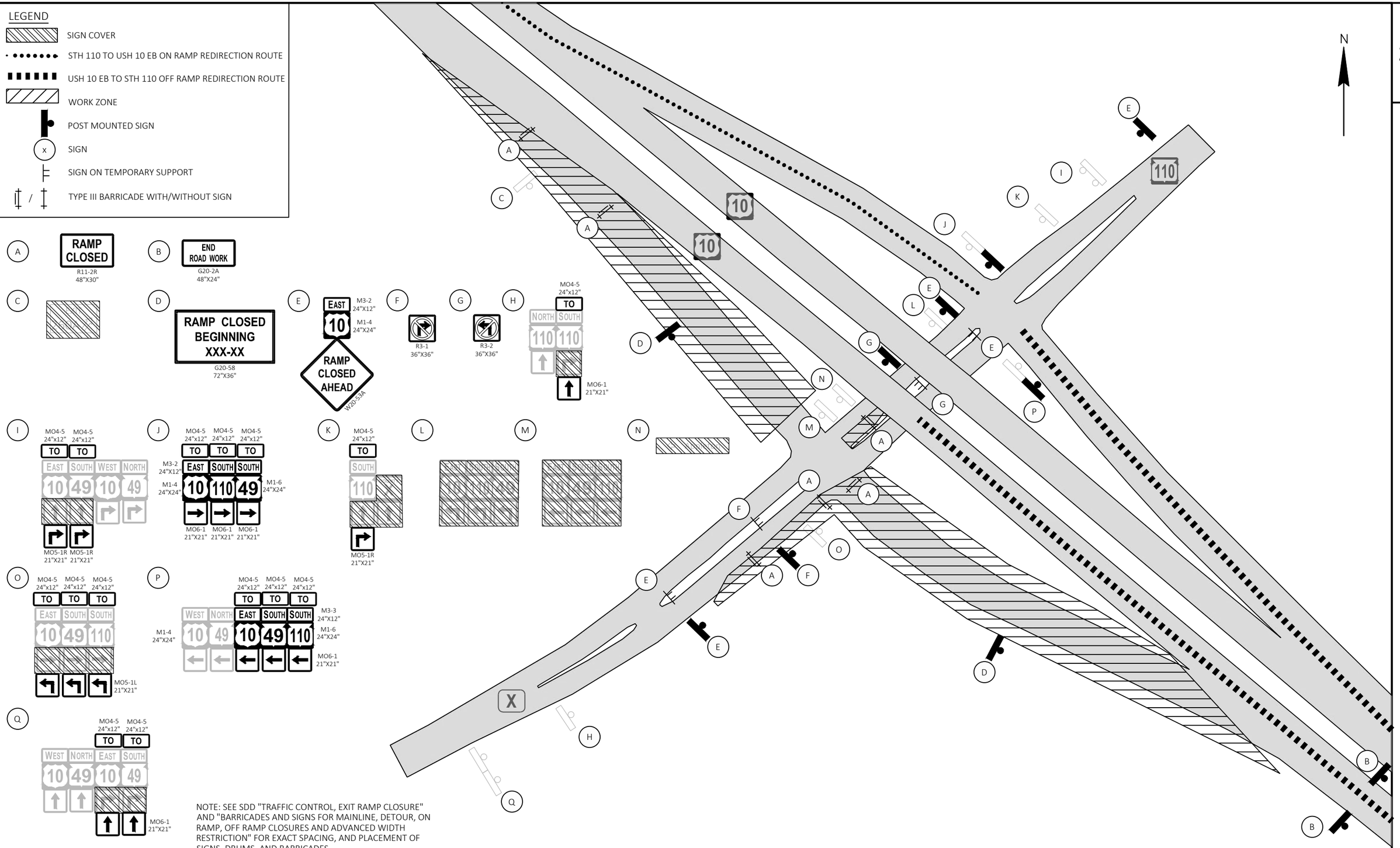

NOTE: SEE SDD "TRAFFIC CONTROL, EXIT RAMP CLOSURE" AND "BARRICADES AND SIGNS FOR MAINLINE, DETOUR, ON RAMP, OFF RAMP CLOSURES AND ADVANCED WIDTH RESTRICTION" FOR EXACT SPACING, AND PLACEMENT OF SIGNS, DRUMS, AND BARRICADES.

PROJECT NO: 1510-02-60	HWY: USH 10	COUNTY: WAUPACA	SIGNING PLANS - STH 110/CTH X RAMP CLOSURE SIGNING DETAIL A	SHEET 83	E

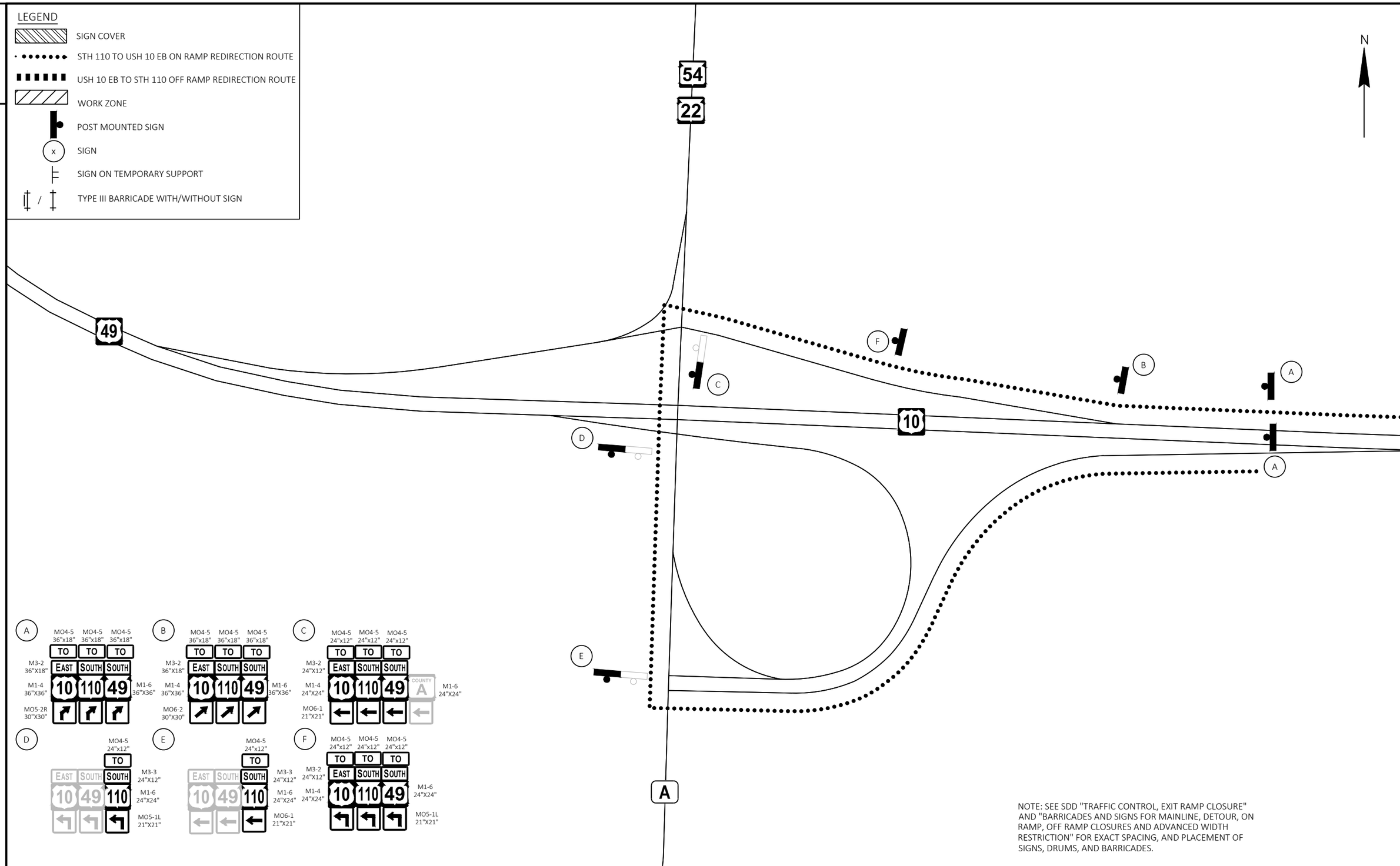

NOTE: SEE SDD "TRAFFIC CONTROL, EXIT RAMP CLOSURE" AND "BARRICADES AND SIGNS FOR MAINLINE, DETOUR, ON RAMP, OFF RAMP CLOSURES AND ADVANCED WIDTH RESTRICTION" FOR EXACT SPACING, AND PLACEMENT OF SIGNS, DRUMS, AND BARRICADES.

PROJECT NO: 1510-02-60	HWY: USH 10	COUNTY: WAUPACA	SIGNING PLANS - STH 110/CTH X RAMP CLOSURE SIGNING DETAIL B	SHEET 84	E

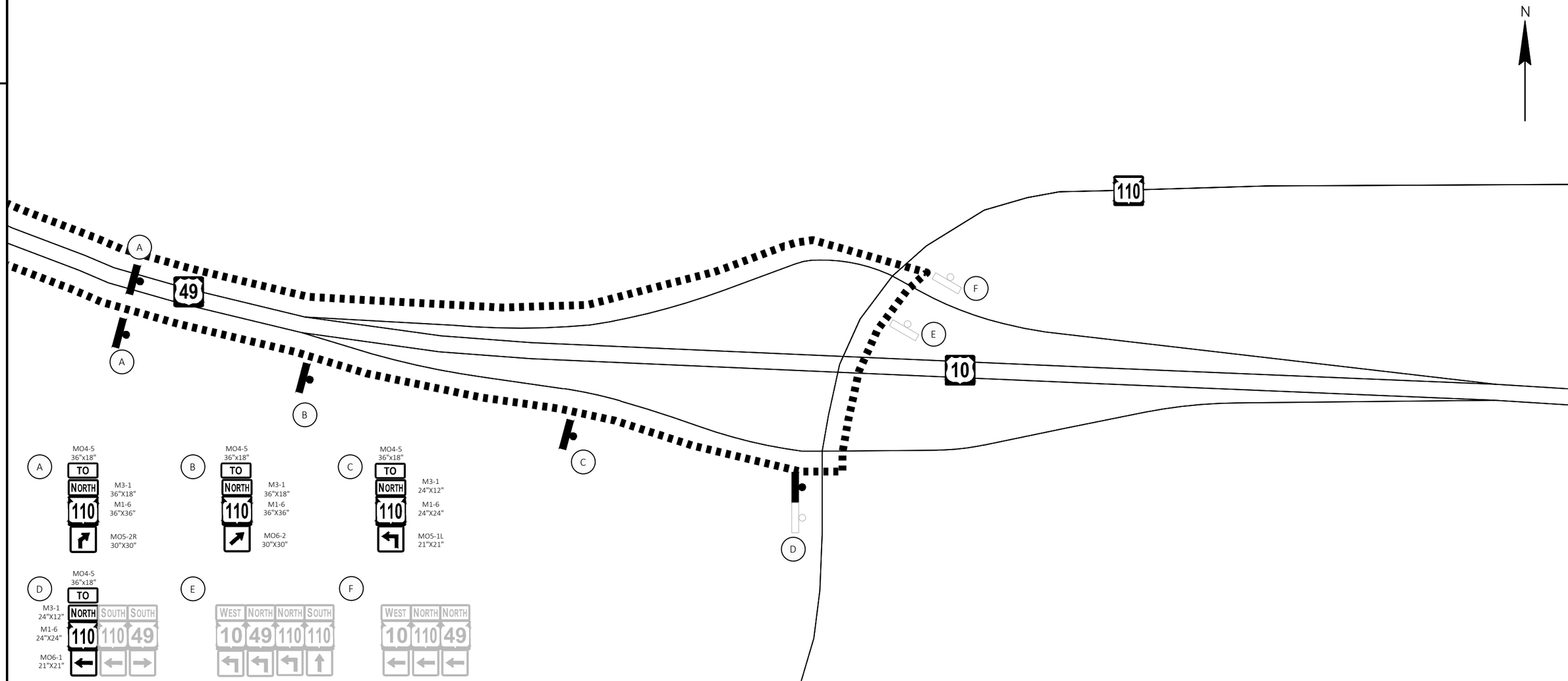

LEGEND

- SIGN COVER
- STH 110 TO USH 10 EB ON RAMP REDIRECTION ROUTE
- USH 10 EB TO STH 110 OFF RAMP REDIRECTION ROUTE
- WORK ZONE
- POST MOUNTED SIGN
- (x) SIGN
- SIGN ON TEMPORARY SUPPORT
- TYPE III BARRICADE WITH/WITHOUT SIGN

NOTE: SEE SDD "TRAFFIC CONTROL, EXIT RAMP CLOSURE" AND "BARRICADES AND SIGNS FOR MAINLINE, DETOUR, ON RAMP, OFF RAMP CLOSURES AND ADVANCED WIDTH RESTRICTION" FOR EXACT SPACING, AND PLACEMENT OF SIGNS, DRUMS, AND BARRICADES.

PROJECT NO: 1510-02-60	HWY: USH 10	COUNTY: WAUPACA	SIGNING PLANS - STH 110/CTH X RAMP CLOSURE SIGNING DETAIL C	SHEET 85	E

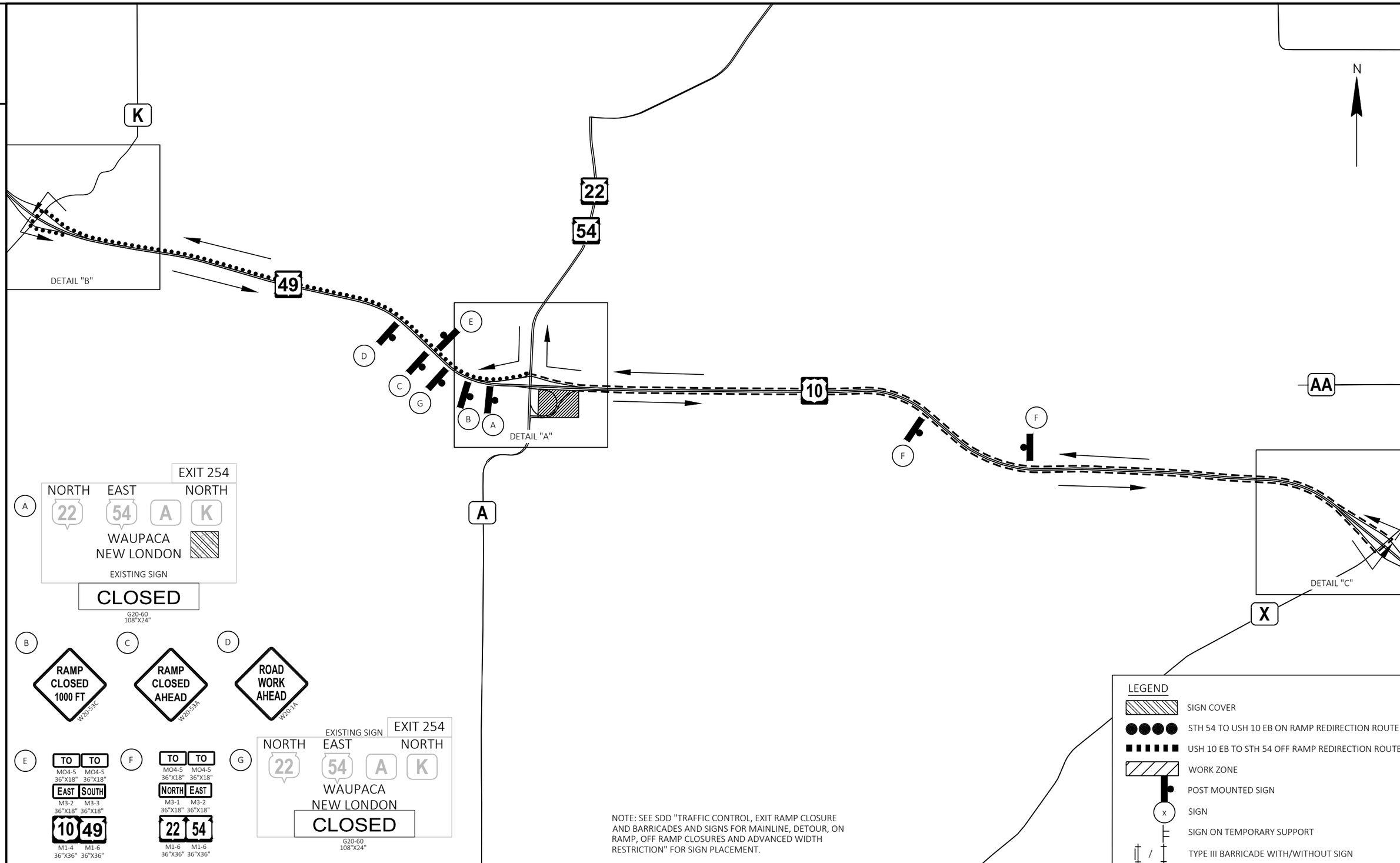

PROJECT NO: 1510-02-60	HWY: USH 10	COUNTY: WAUPACA	SIGNING PLANS - STH 22/STH 54 RAMP CLOSURE SIGNING	SHEET 86	E

FILE NAME : Y:\MILWAUKEE\20300S\20335.01\ENG_DOCS\1510-02-60\15100260\SHEETS\027001-DT-S3.DWG
LAYOUT NAME - 05
PLOT DATE : 8/1/2025 9:20 AM
PLOT BY : MINSKY, MICHAEL
PLOT NAME :
PLOT SCALE : 1 IN:0.5 MI
WISDOT/CADDS SHEET 42

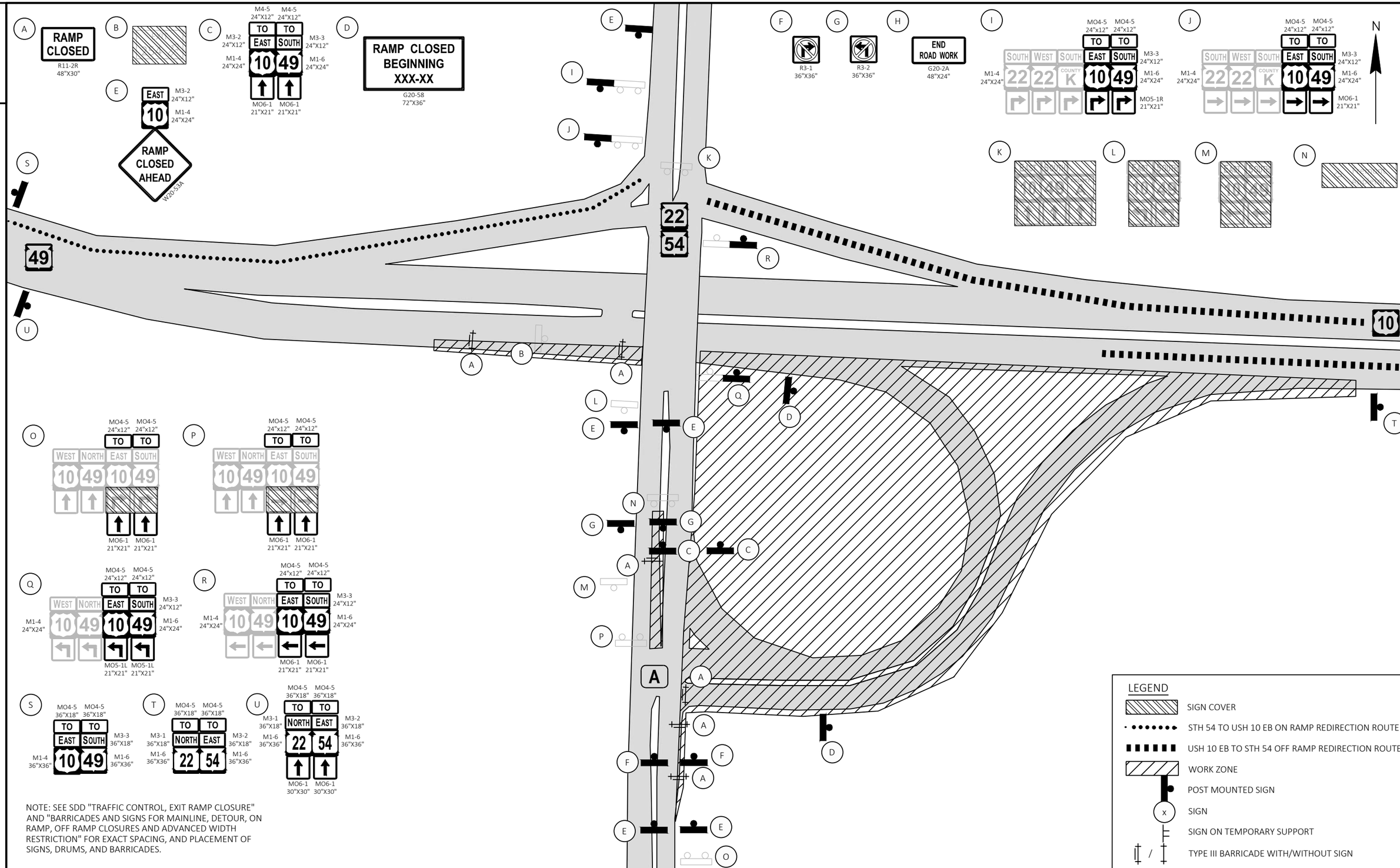

NOTE: SEE SDD "TRAFFIC CONTROL, EXIT RAMP CLOSURE" AND "BARRICADES AND SIGNS FOR MAINLINE, DETOUR, ON RAMP, OFF RAMP CLOSURES AND ADVANCED WIDTH RESTRICTION" FOR EXACT SPACING, AND PLACEMENT OF SIGNS, DRUMS, AND BARRICADES.

LEGEND

- SIGN COVER
- STH 54 TO USH 10 EB ON RAMP REDIRECTION ROUTE
- USH 10 EB TO STH 54 OFF RAMP REDIRECTION ROUTE
- WORK ZONE
- POST MOUNTED SIGN
- SIGN
- SIGN ON TEMPORARY SUPPORT
- TYPE III BARRICADE WITH/WITHOUT SIGN

PROJECT NO: 1510-02-60	HWY: USH 10	COUNTY: WAUPACA	SIGNING PLANS - STH 22/STH 54 RAMP CLOSURE SIGNING DETAIL A	SHEET 87	E

FILE NAME : Y:\MILWAUKEE\20300S\20335.01\ENG_DOCS\1510-02-60\15100260\SHEETS\027001-DT-S3.DWG
LAYOUT NAME - 06
PLOT DATE : 8/1/2025 9:20 AM
PLOT BY : MINSKY, MICHAEL
PLOT NAME :
PLOT SCALE : ############

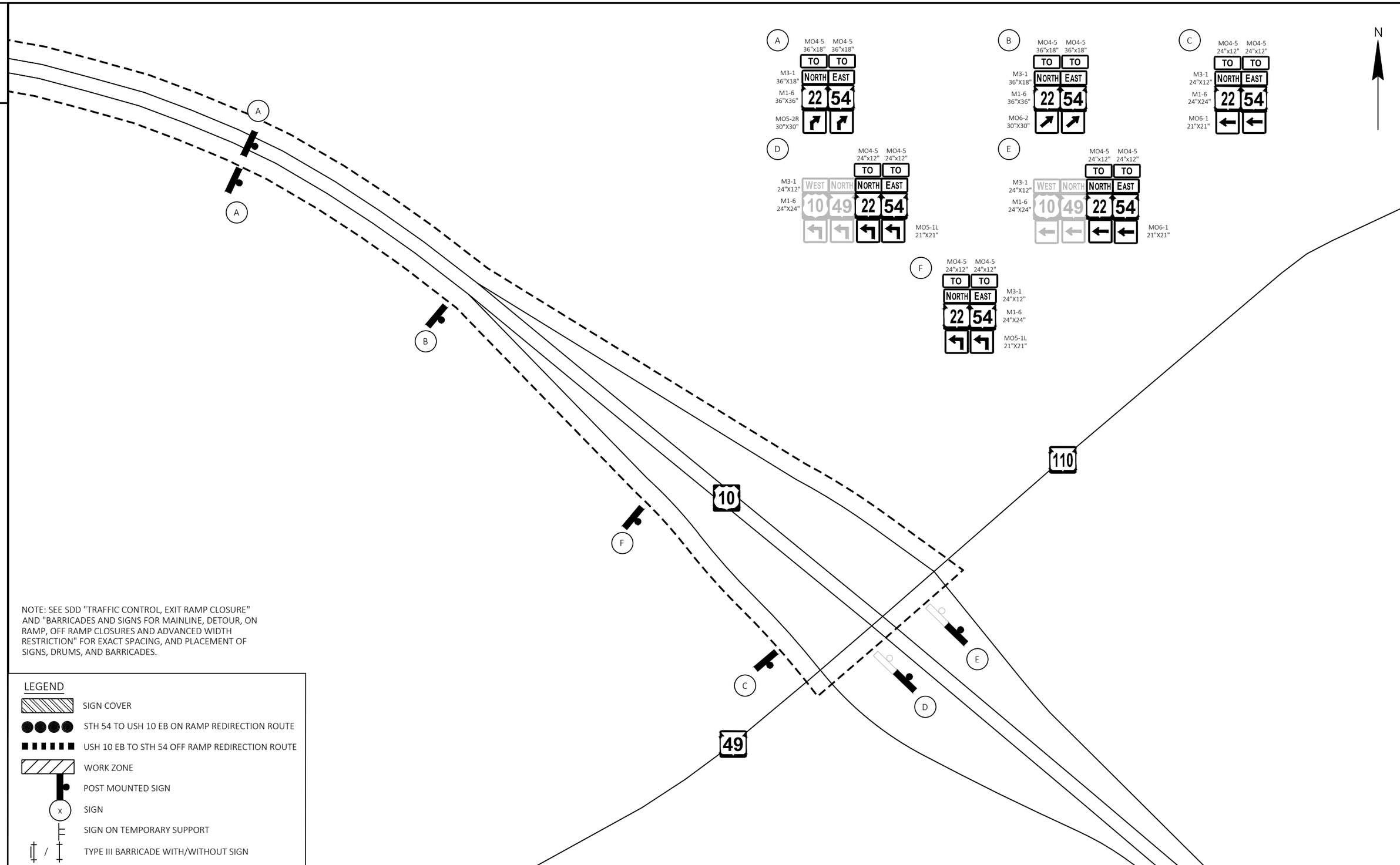

NOTE: SEE SDD "TRAFFIC CONTROL, EXIT RAMP CLOSURE" AND "BARRICADES AND SIGNS FOR MAINLINE, DETOUR, ON RAMP, OFF RAMP CLOSURES AND ADVANCED WIDTH RESTRICTION" FOR EXACT SPACING, AND PLACEMENT OF SIGNS, DRUMS, AND BARRICADES.

LEGEND

- SIGN COVER
- STH 54 TO USH 10 EB ON RAMP REDIRECTION ROUTE
- USH 10 EB TO STH 54 OFF RAMP REDIRECTION ROUTE
- WORK ZONE
- POST MOUNTED SIGN
- x SIGN
- SIGN ON TEMPORARY SUPPORT
- / TYPE III BARRICADE WITH/WITHOUT SIGN

PROJECT NO: 1510-02-60	HWY: USH 10	COUNTY: WAUPACA	SIGNING PLANS - STH 22/STH 54 RAMP CLOSURE SIGNING DETAIL C	SHEET 88	E

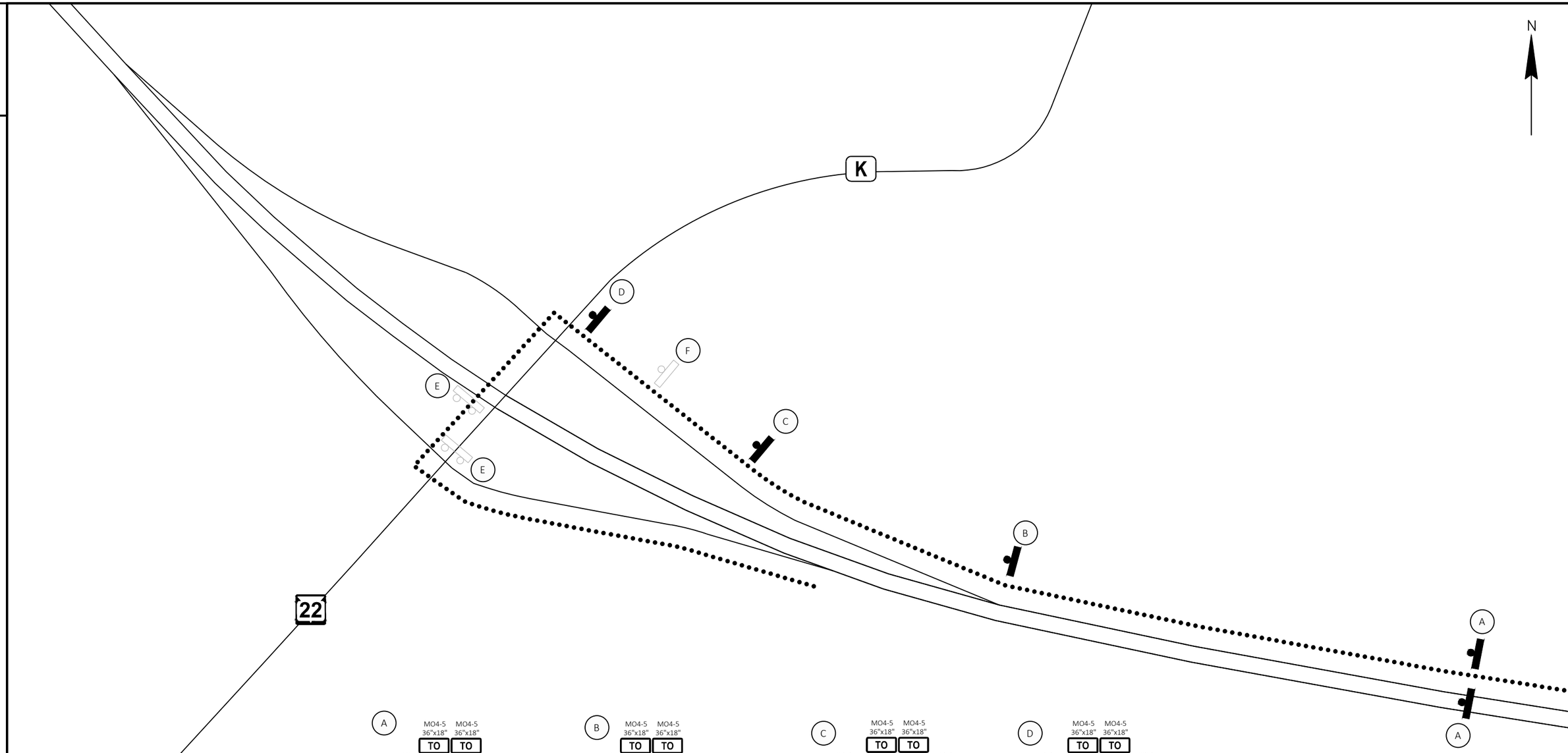

LEGEND

- SIGN COVER
- STH 54 TO USH 10 EB ON RAMP REDIRECTION ROUTE
- USH 10 EB TO STH 54 OFF RAMP REDIRECTION ROUTE
- WORK ZONE
- POST MOUNTED SIGN
- x SIGN
- SIGN ON TEMPORARY SUPPORT
- TYPE III BARRICADE WITH/WITHOUT SIGN

NOTE: SEE SDD "TRAFFIC CONTROL, EXIT RAMP CLOSURE" AND "BARRICADES AND SIGNS FOR MAINLINE, DETOUR, ON RAMP, OFF RAMP CLOSURES AND ADVANCED WIDTH RESTRICTION" FOR EXACT SPACING, AND PLACEMENT OF SIGNS, DRUMS, AND BARRICADES.

PROJECT NO: 1510-02-60	HWY: USH 10	COUNTY: WAUPACA	SIGNING PLANS - STH 22/STH 54 RAMP CLOSURE SIGNING DETAIL B	SHEET 89	E

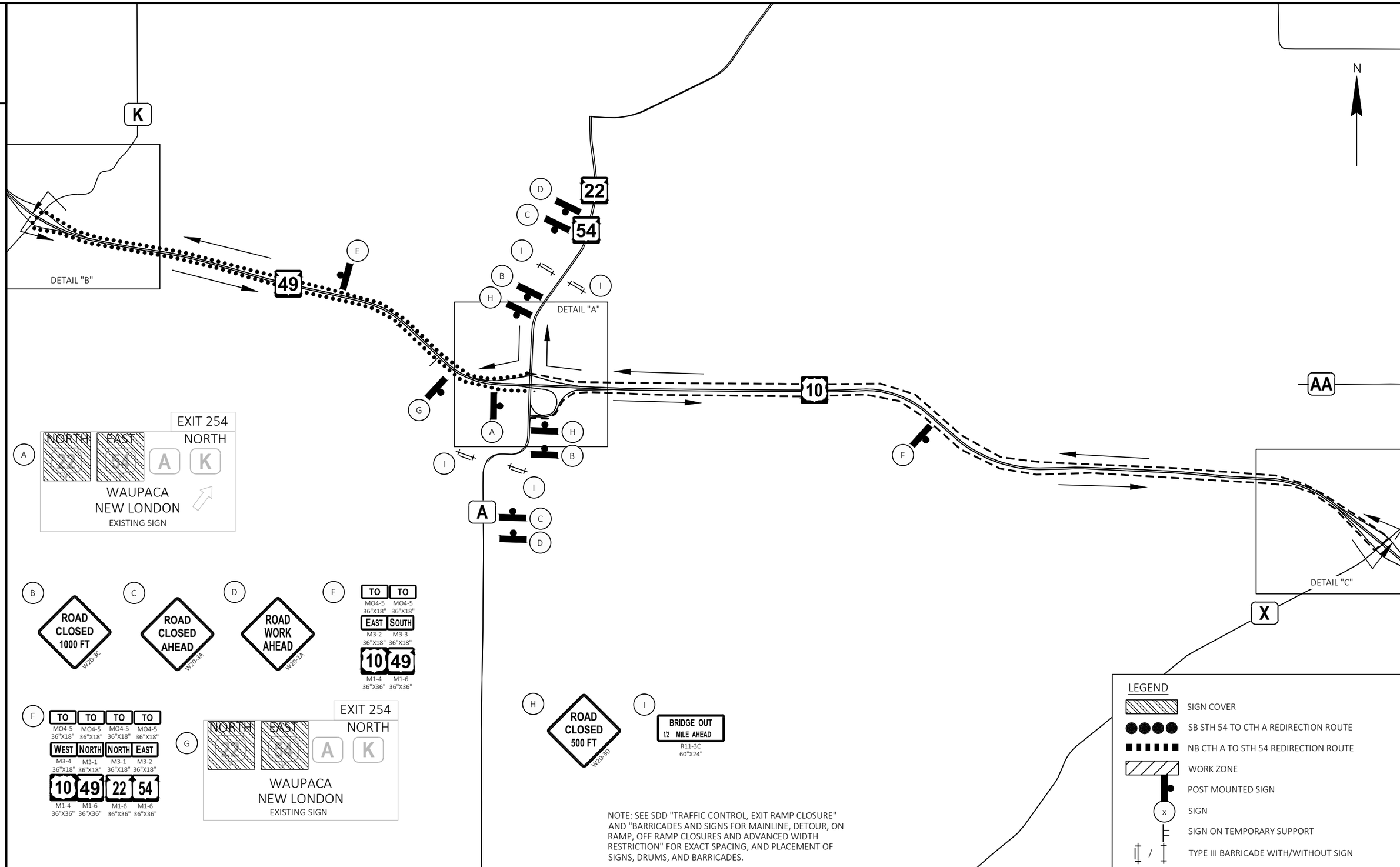

NOTE: SEE SDD "TRAFFIC CONTROL, EXIT RAMP CLOSURE" AND "BARRICADES AND SIGNS FOR MAINLINE, DETOUR, ON RAMP, OFF RAMP CLOSURES AND ADVANCED WIDTH RESTRICTION" FOR EXACT SPACING, AND PLACEMENT OF SIGNS, DRUMS, AND BARRICADES.

PROJECT NO: 1510-02-60	HWY: USH 10	COUNTY: WAUPACA	SIGNING PLANS - STH 22/STH 54 BRIDGE CLOSURE SIGNING	SHEET 90	E

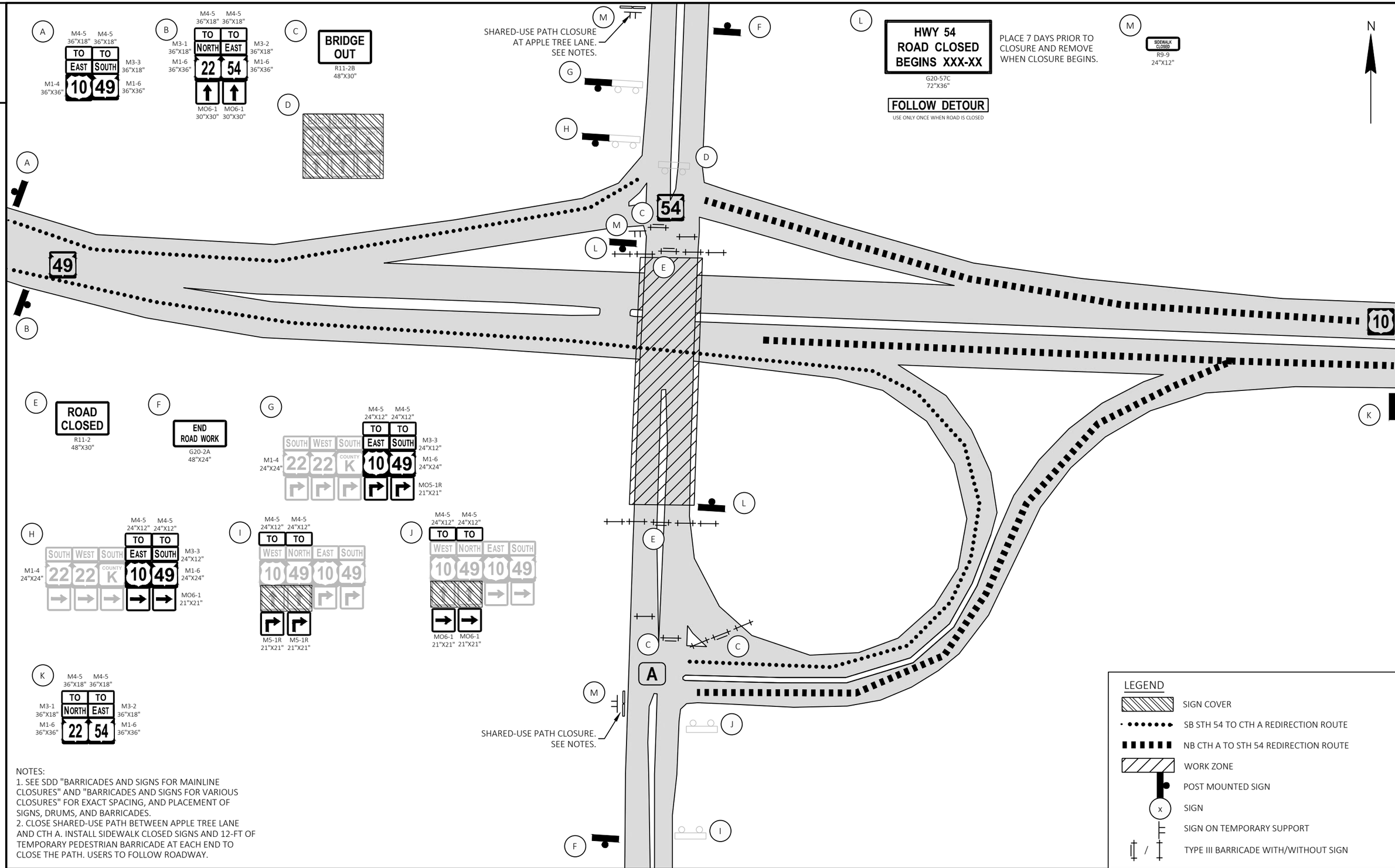

NOTES:
1. SEE SDD "BARRICADES AND SIGNS FOR MAINLINE CLOSURES" AND "BARRICADES AND SIGNS FOR VARIOUS CLOSURES" FOR EXACT SPACING, AND PLACEMENT OF SIGNS, DRUMS, AND BARRICADES.
2. CLOSE SHARED-USE PATH BETWEEN APPLE TREE LANE AND CTH A. INSTALL SIDEWALK CLOSED SIGNS AND 12-FT OF TEMPORARY PEDESTRIAN BARRICADE AT EACH END TO CLOSE THE PATH. USERS TO FOLLOW ROADWAY.

PROJECT NO: 1510-02-60	HWY: USH 10	COUNTY: WAUPACA	SIGNING PLANS - STH 22/STH 54 BRIDGE CLOSURE SIGNING DETAIL A	SHEET 91	E

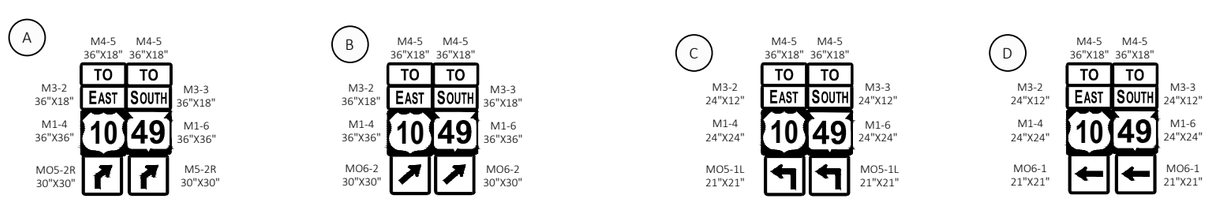

LEGEND

- SIGN COVER
- SB STH 54 TO CTH A REDIRECTION ROUTE
- NB CTH A TO STH 54 REDIRECTION ROUTE
- WORK ZONE
- POST MOUNTED SIGN
- (x) SIGN
- SIGN ON TEMPORARY SUPPORT
- TYPE III BARRICADE WITH/WITHOUT SIGN

PROJECT NO: 1510-02-60	HWY: USH 10	COUNTY: WAUPACA	SIGNING PLANS - STH 22/STH 54 BRIDGE CLOSURE SIGNING DETAIL B	SHEET 92	E

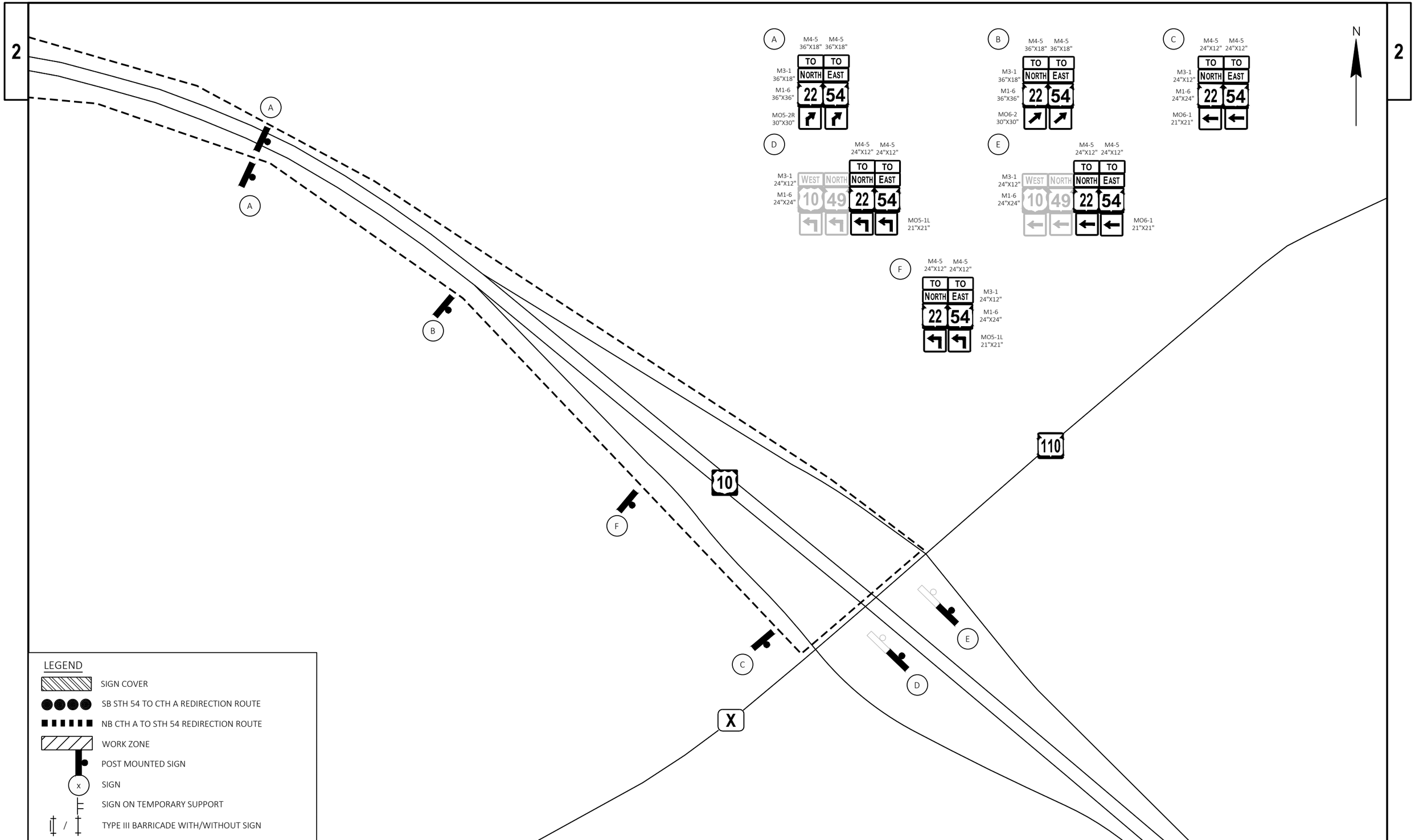

PROJECT NO: 1510-02-60	HWY: USH 10	COUNTY: WAUPACA	SIGNING PLANS - STH 22/STH 54 BRIDGE CLOSURE SIGNING DETAIL C	SHEET 93	E

FILE NAME : Y:\MILWAUKEE\20300S\20335.01\ENG_DOCS\1510-02-60\15100260\SHEETS\027001-DT-B1.DWG
LAYOUT NAME - 12
PLOT DATE : 8/1/2025 9:20 AM
PLOT BY : MINSKY, MICHAEL
PLOT NAME :
PLOT SCALE : 1 IN: 300 FT
WISDOT/CADDS SHEET 42

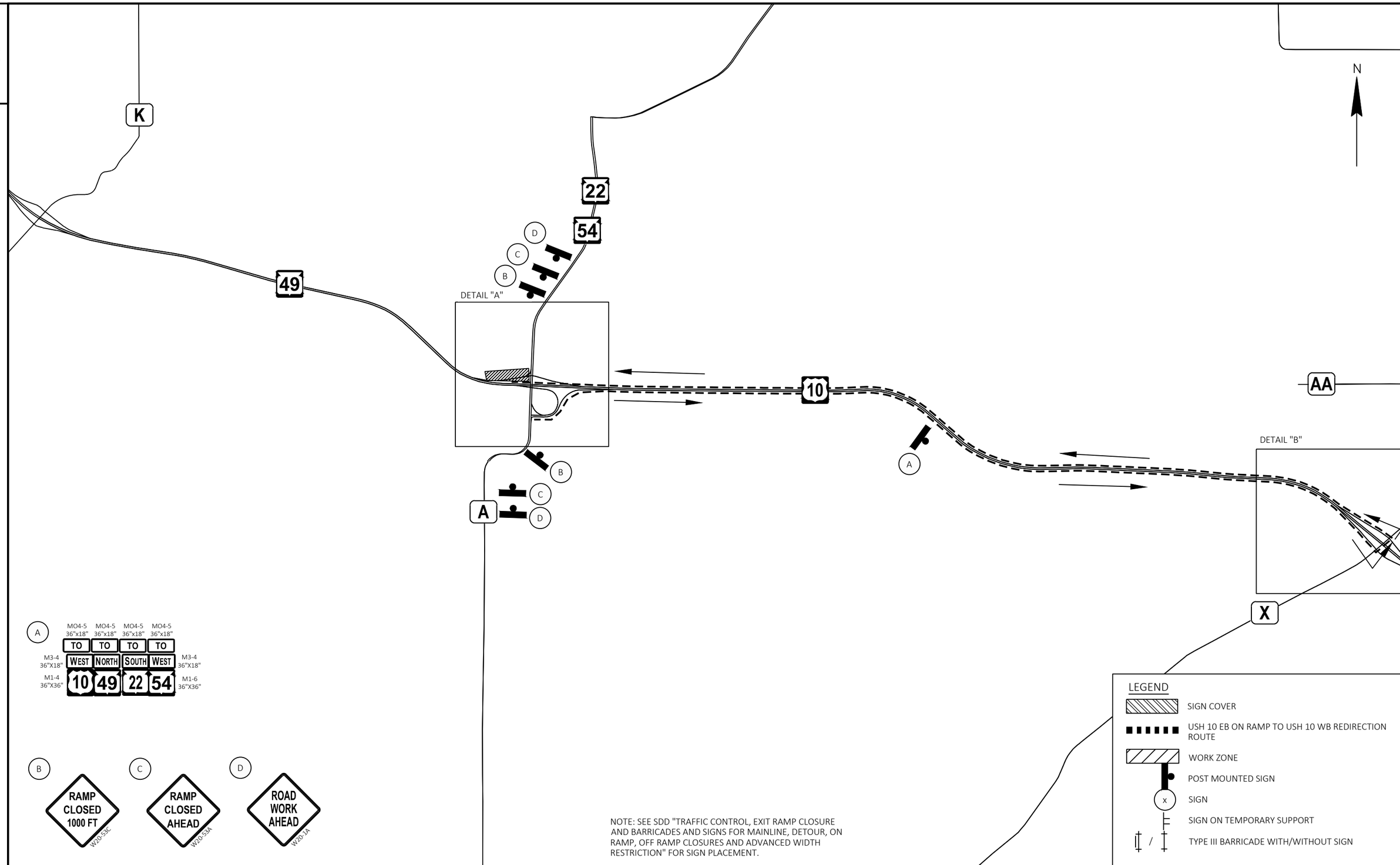
2
2
N
K
22
54
49
10
AA
X
A
B
C
D
DETAIL "A"
DETAIL "B">

PROJECT NO: 1510-02-60	HWY: USH 10	COUNTY: WAUPACA	SIGNING PLANS - STH 22 WB ON RAMP CLOSURE SIGNING	SHEET 94	E

FILE NAME : Y:\MILWAUKEE\20300S\20335.01\ENG_DOCS\1510-02-60\15100260\SHEETS\027001-DT-S4.DWG
LAYOUT NAME - 15
PLOT DATE : 8/1/2025 9:20 AM
PLOT BY : MINSKY, MICHAEL
PLOT NAME :
PLOT SCALE : 1 IN:0.5 MI
WISDOT/CADDS SHEET 42

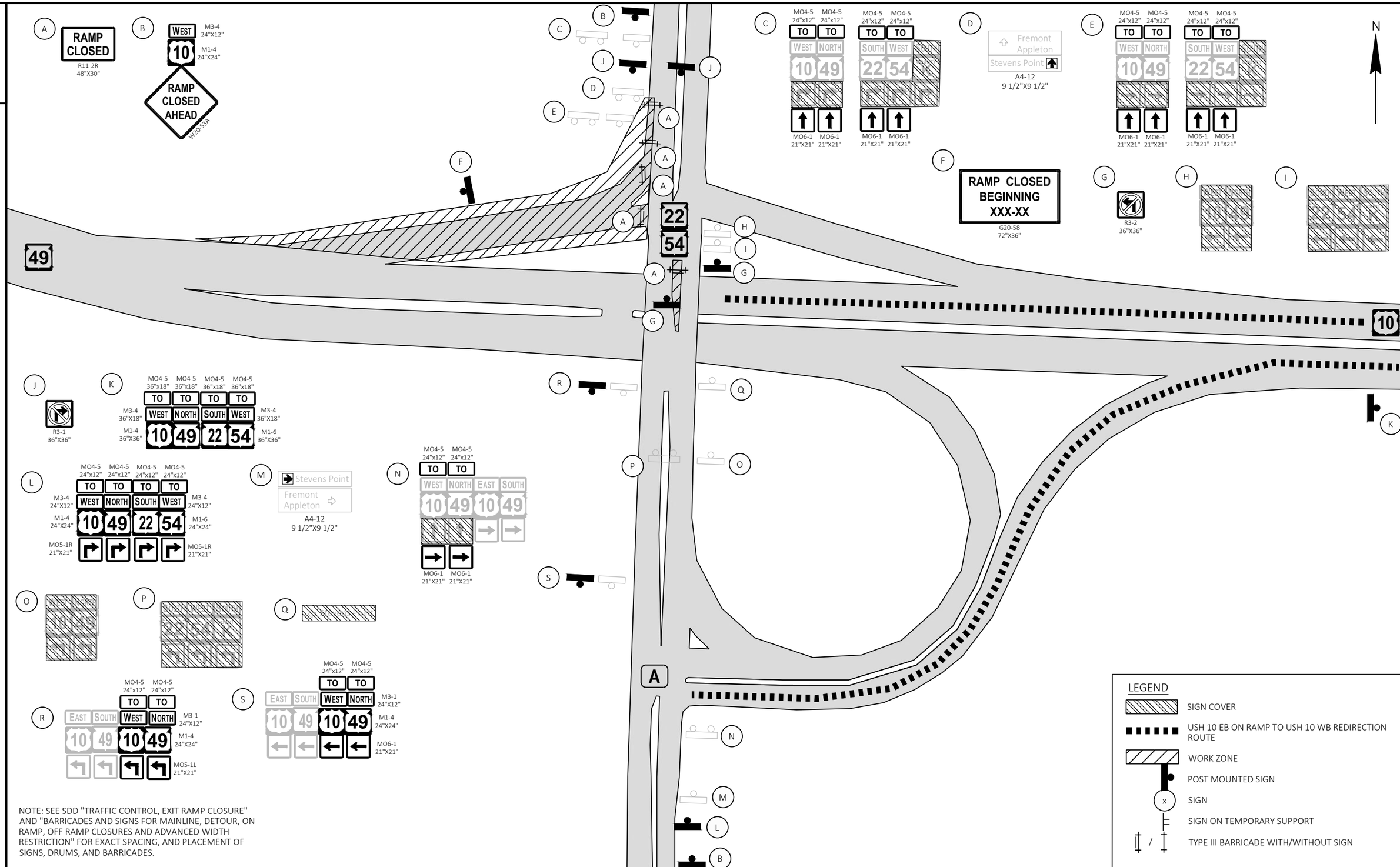

NOTE: SEE SDD "TRAFFIC CONTROL, EXIT RAMP CLOSURE" AND "BARRICADES AND SIGNS FOR MAINLINE, DETOUR, ON RAMP, OFF RAMP CLOSURES AND ADVANCED WIDTH RESTRICTION" FOR EXACT SPACING, AND PLACEMENT OF SIGNS, DRUMS, AND BARRICADES.

PROJECT NO: 1510-02-60	HWY: USH 10	COUNTY: WAUPACA	SIGNING PLANS - STH 22 WB ON RAMP CLOSURE SIGNING DETAIL A	SHEET 95	E

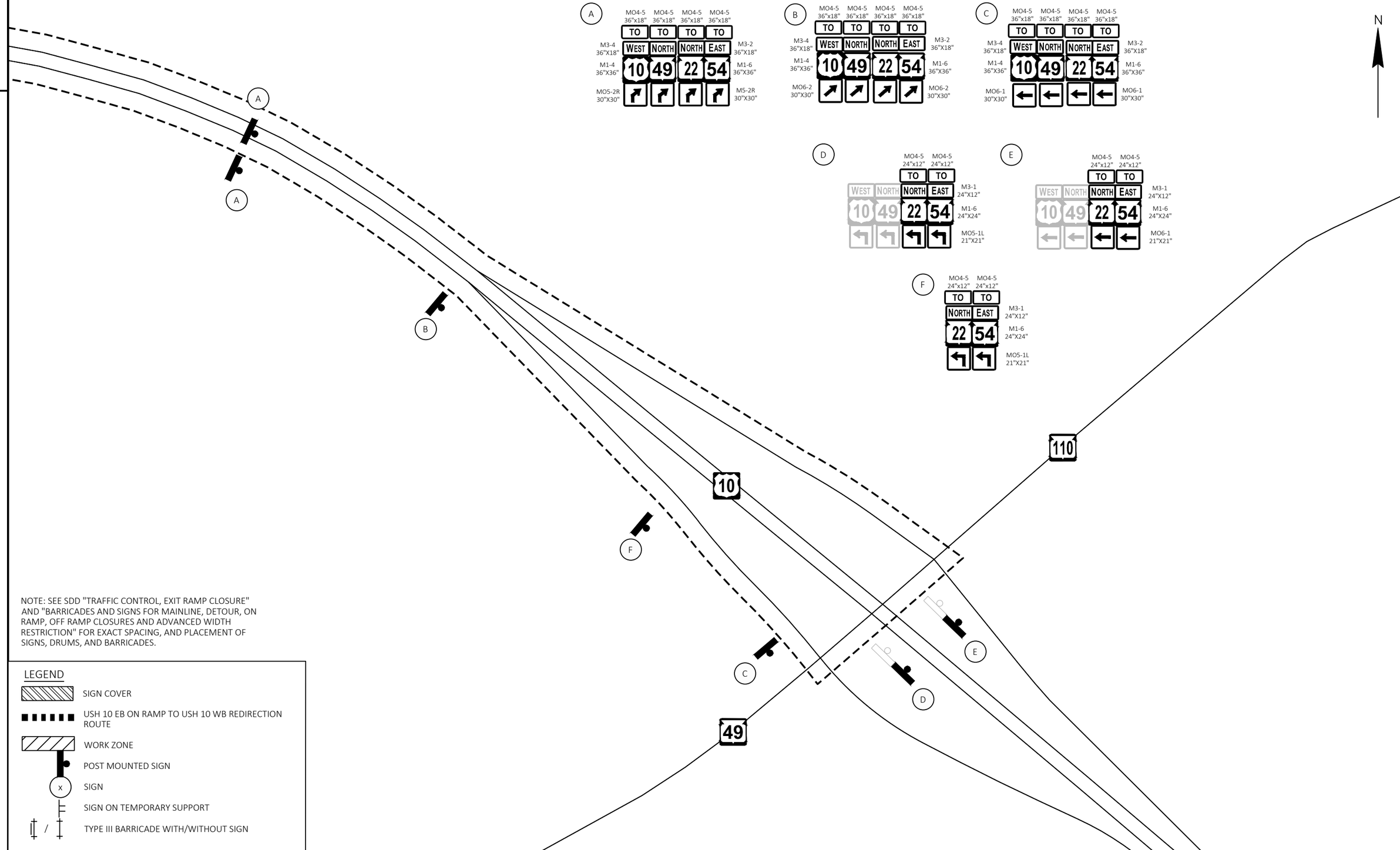

NOTE: SEE SDD "TRAFFIC CONTROL, EXIT RAMP CLOSURE" AND "BARRICADES AND SIGNS FOR MAINLINE, DETOUR, ON RAMP, OFF RAMP CLOSURES AND ADVANCED WIDTH RESTRICTION" FOR EXACT SPACING, AND PLACEMENT OF SIGNS, DRUMS, AND BARRICADES.

LEGEND

- SIGN COVER
- USH 10 EB ON RAMP TO USH 10 WB REDIRECTION ROUTE
- WORK ZONE
- POST MOUNTED SIGN
- (x) SIGN
- SIGN ON TEMPORARY SUPPORT
- TYPE III BARRICADE WITH/WITHOUT SIGN

PROJECT NO: 1510-02-60	HWY: USH 10	COUNTY: WAUPACA	SIGNING PLANS - STH 22 WB ON RAMP CLOSURE SIGNING DETAIL B	SHEET 96	E

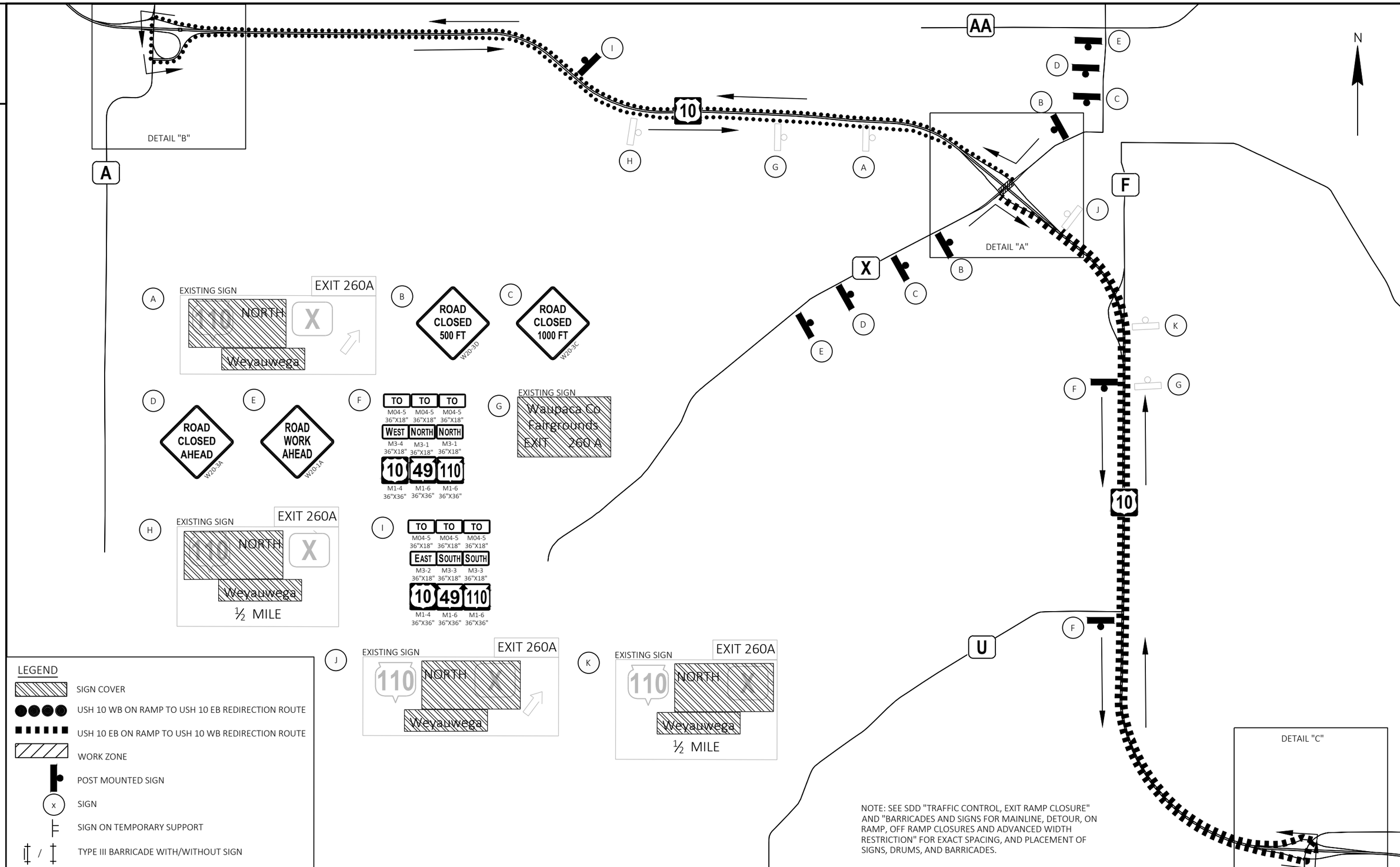

PROJECT NO: 1510-02-60	HWY: USH 10	COUNTY: WAUPACA	SIGNING PLANS - CTH X CLOSURE SIGNING	SHEET 97	E

FILE NAME : Y:\MILWAUKEE\20300S\20335.01\ENG_DOCS\1510-02-60\15100260\SHEETS\027001-DT-S5.DWG
LAYOUT NAME - 20
PLOT DATE : 8/1/2025 9:20 AM
PLOT BY : MINSKY, MICHAEL
PLOT NAME :
PLOT SCALE : 1 IN:0.5 MI
WISDOT/CADDS SHEET 42

2

LEGEND

- SIGN COVER
- USH 10 WB ON RAMP TO USH 10 EB REDIRECTION ROUTE
- USH 10 EB ON RAMP TO USH 10 WB REDIRECTION ROUTE
- WORK ZONE
- POST MOUNTED SIGN
- (x) SIGN
- SIGN ON TEMPORARY SUPPORT
- TYPE III BARRICADE WITH/WITHOUT SIGN

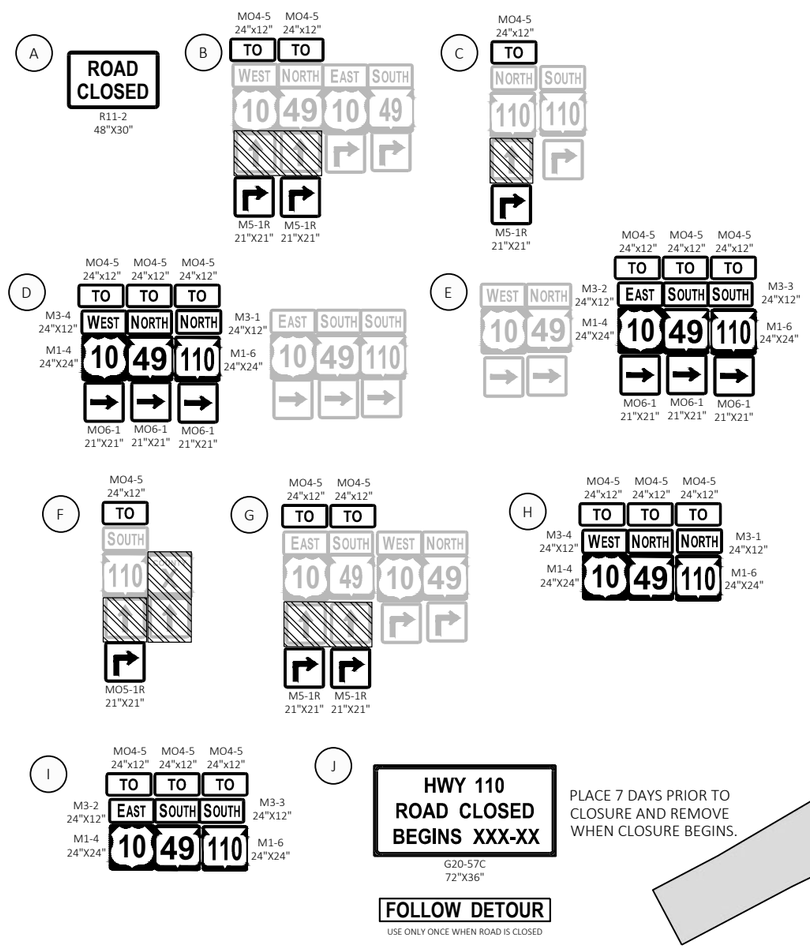

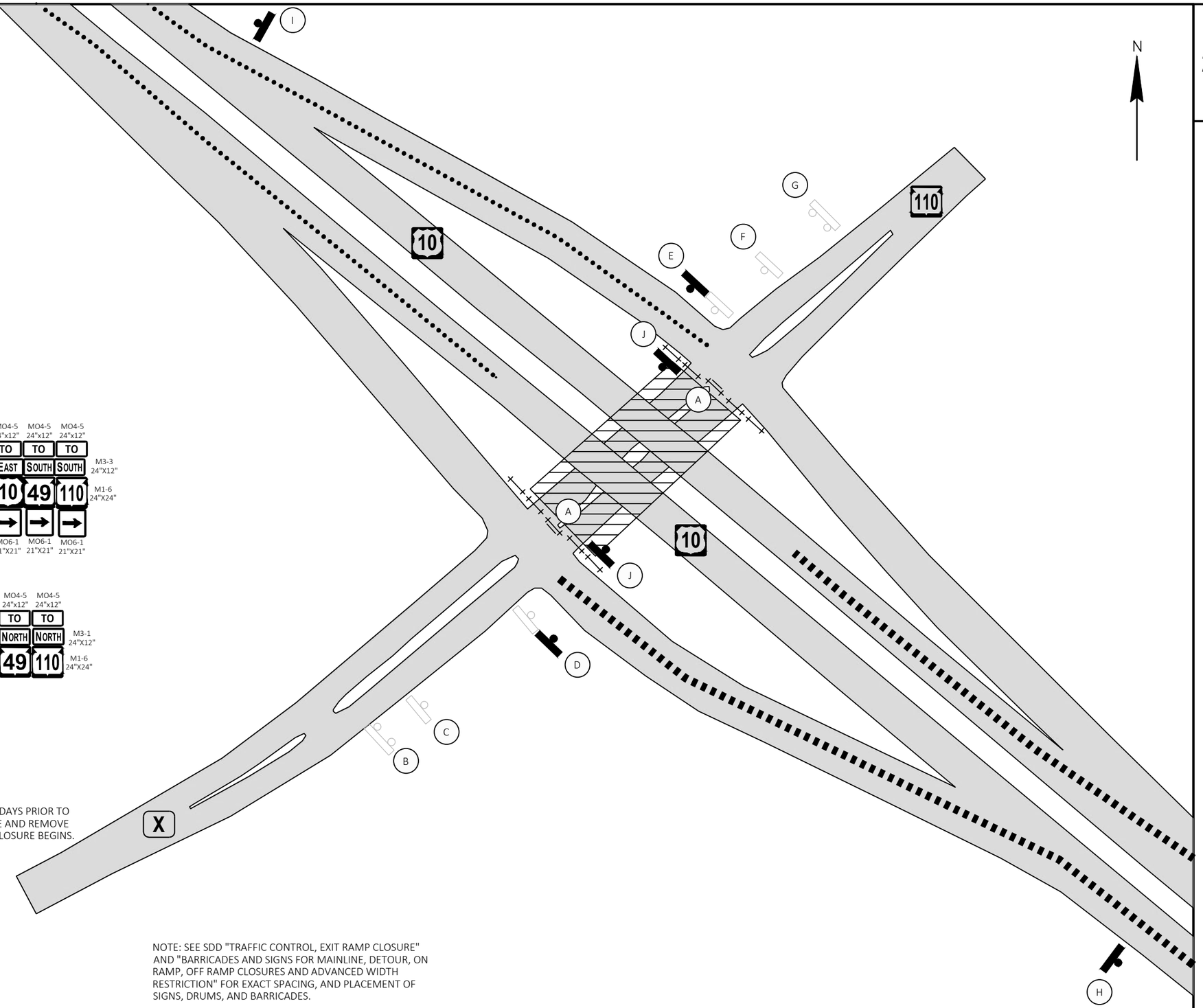

NOTE: SEE SDD "TRAFFIC CONTROL, EXIT RAMP CLOSURE" AND "BARRICADES AND SIGNS FOR MAINLINE, DETOUR, ON RAMP, OFF RAMP CLOSURES AND ADVANCED WIDTH RESTRICTION" FOR EXACT SPACING, AND PLACEMENT OF SIGNS, DRUMS, AND BARRICADES.

PROJECT NO: 1510-02-60	HWY: USH 10	COUNTY: WAUPACA	SIGNING PLANS- CTH X CLOSURE SIGNING DETAIL A	SHEET 98	E

2

LEGEND

- SIGN COVER
- USH 10 WB ON RAMP TO USH 10 EB REDIRECTION ROUTE
- USH 10 EB ON RAMP TO USH 10 WB REDIRECTION ROUTE
- WORK ZONE
- POST MOUNTED SIGN
- (x) SIGN
- SIGN ON TEMPORARY SUPPORT
- TYPE III BARRICADE WITH/WITHOUT SIGN

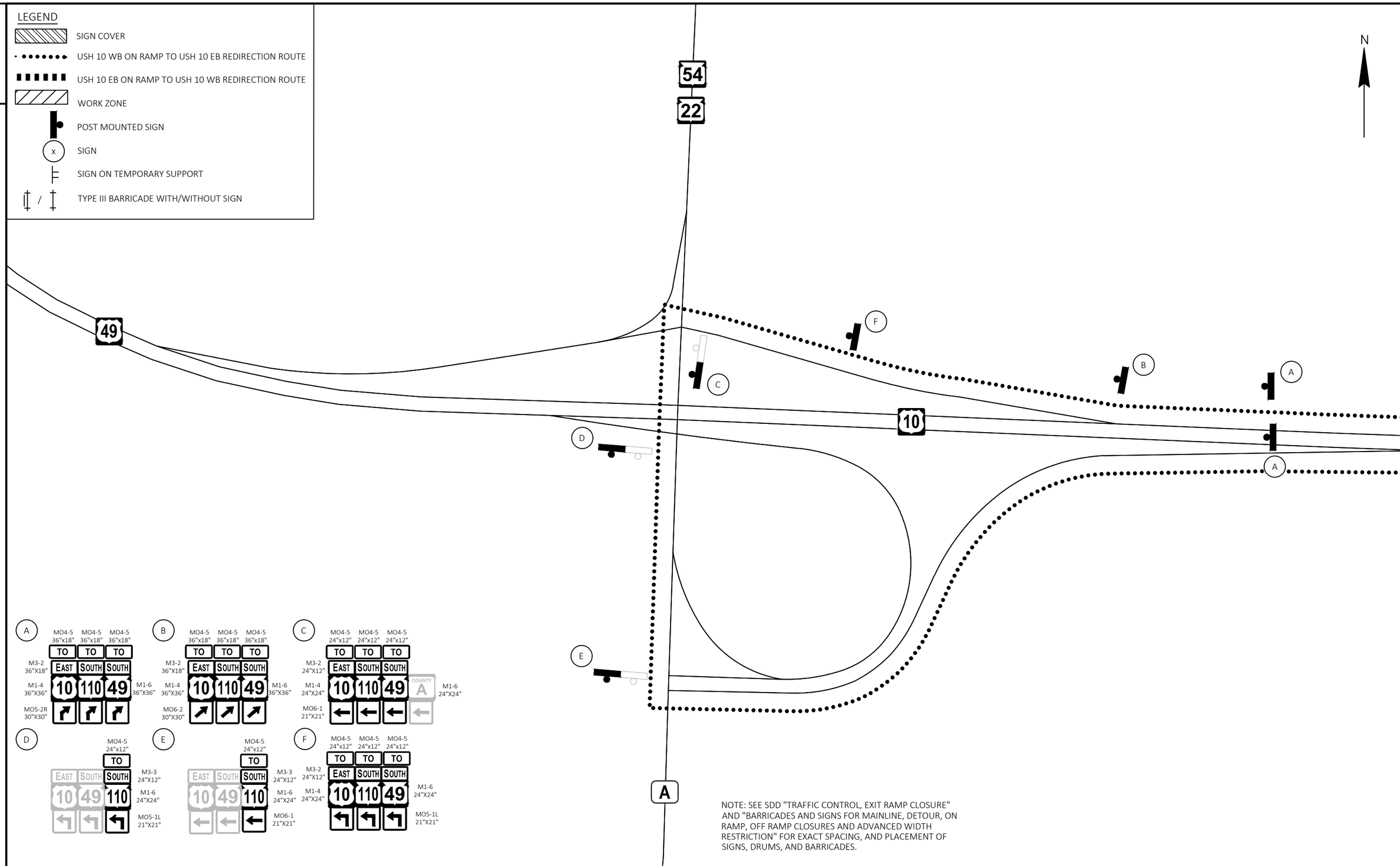

NOTE: SEE SDD "TRAFFIC CONTROL, EXIT RAMP CLOSURE" AND "BARRICADES AND SIGNS FOR MAINLINE, DETOUR, ON RAMP, OFF RAMP CLOSURES AND ADVANCED WIDTH RESTRICTION" FOR EXACT SPACING, AND PLACEMENT OF SIGNS, DRUMS, AND BARRICADES.

2

PROJECT NO: 1510-02-60	HWY: USH 10	COUNTY: WAUPACA	SIGNING PLANS - CTH X CLOSURE SIGNING DETAIL B	SHEET 99	E

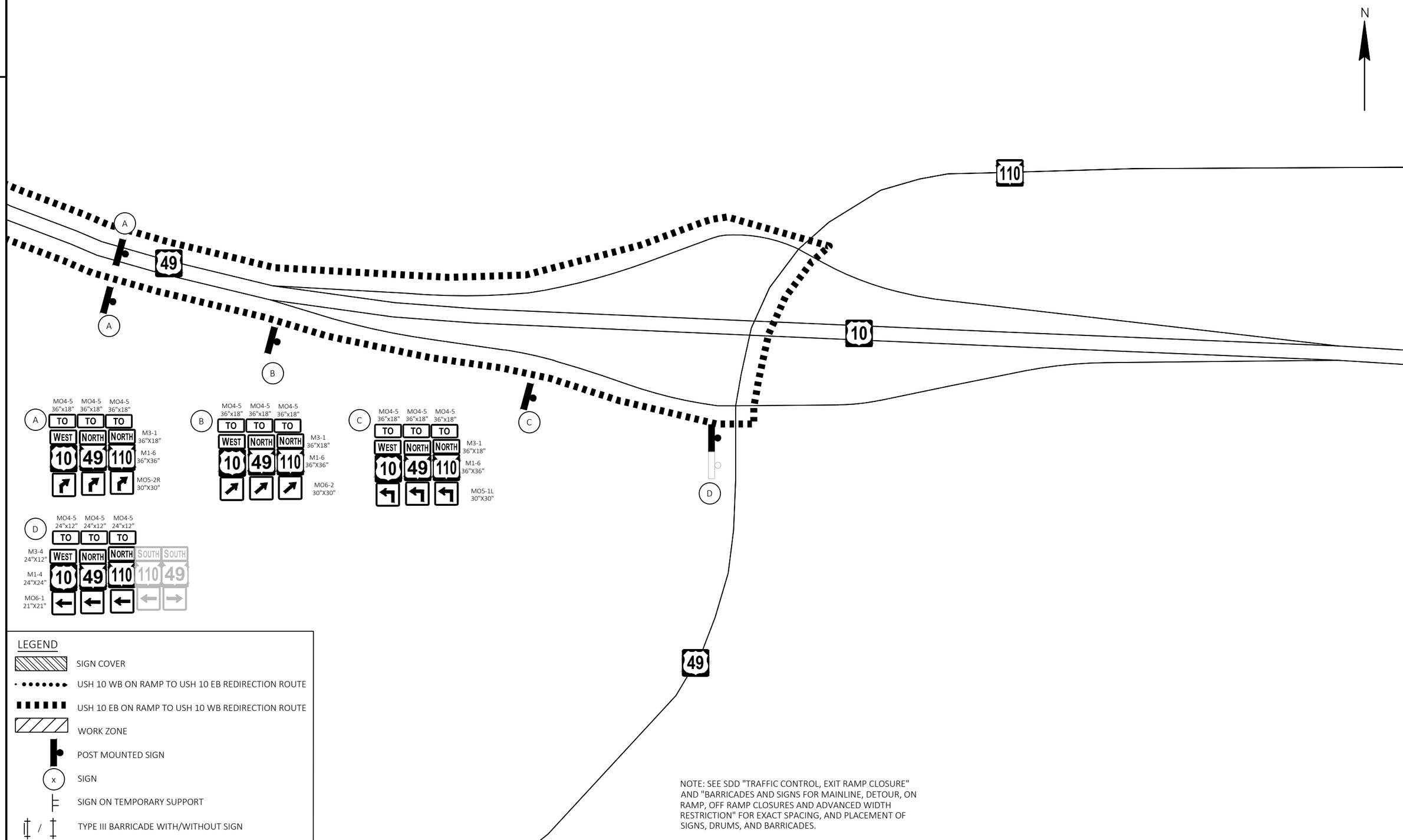

NOTE: SEE SDD "TRAFFIC CONTROL, EXIT RAMP CLOSURE" AND "BARRICADES AND SIGNS FOR MAINLINE, DETOUR, ON RAMP, OFF RAMP CLOSURES AND ADVANCED WIDTH RESTRICTION" FOR EXACT SPACING, AND PLACEMENT OF SIGNS, DRUMS, AND BARRICADES.

PROJECT NO: 1510-02-60	HWY: USH 10	COUNTY: WAUPACA	SIGNING PLANS - CTH X BRIDGE SIGNING DETAIL C	SHEET 100	E

CONTROL POINTS					
POINT	STATION	OFFSET	Y COORDS	X COORDS	DESCRIPTION
CP 50020	827+69.05	91.14 LT	326621.372	573797.231	PK NAIL
CP 50021	821+55.99	92.48 LT	327013.770	573326.212	PK NAIL
CP 50022	725+61.97	89.32 LT	329198.169	564255.607	PK NAIL
CP 50023	719+43.90	90.19 LT	329189.330	563637.311	PK NAIL
CP 50024	672+51.22	91.63 LT	331092.961	559574.924	PK NAIL
CP 50025	658+94.32	91.05 LT	331510.202	558251.582	PK NAIL
CP 50026	562+44.63	116.77 LT	331650.233	548604.536	PK NAIL
CP 50027	555+29.70	116.54 LT	331678.240	547890.154	PK NAIL

BENCH MARKS			
NO.	STATION	ELEV.	DESCRIPTION
10018	821+91.45	836.62	ALUM DISK IN PARAPET
5390	554+42.25	854.50	ALUM DISK IN PARAPET

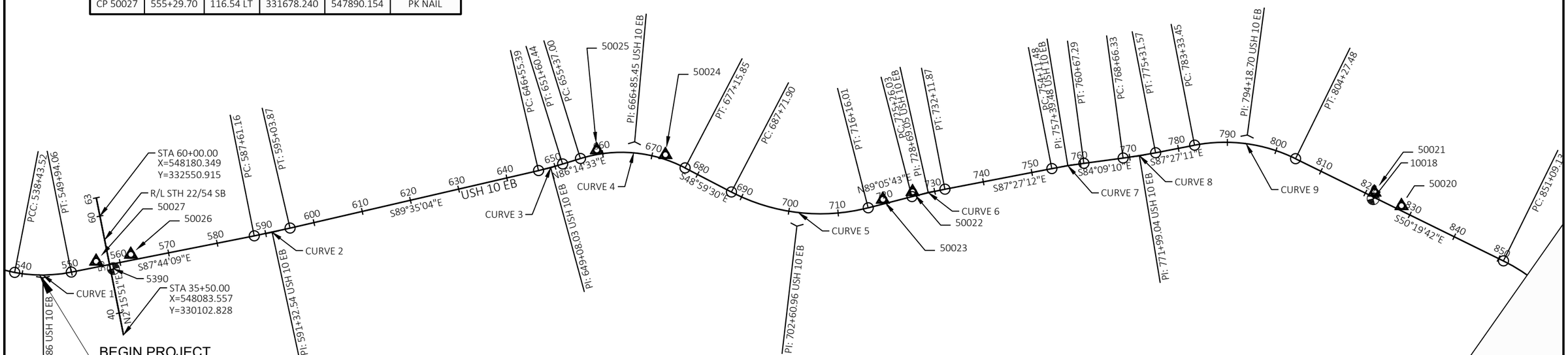

CURVE 1
PI STA = 544+25.86
Y = 331605.966
X = 546768.443
DELTA = 21°50'24" LT
D = 1°53'54"
T = 582.34'
L = 1150.55'
R = 3018.37'
PC STA = 538+43.52
Y = 331843.795
X = 546236.880
PT STA = 549+94.06
Y = 331582.958
X = 547350.329
DB = S65°53'44"E
DA = S87°44'09"E

CURVE 2
PI STA = 591+32.54
Y = 331419.450
X = 551485.581
DELTA = 1°50'55" LT
D = 0°14'56"
T = 371.39'
L = 742.71'
R = 23018.19'
PC STA = 587+61.16
Y = 331434.123
X = 551114.482
PT STA = 595+03.87
Y = 331416.756
X = 551856.960
DB = S87°44'09"E
DA = S89°35'04"E

CURVE 3
PI STA = 649+08.03
Y = 331377.559
X = 557260.975
DELTA = 4°10'23" LT
D = 0°49'35"
T = 252.64'
L = 505.06'
R = 6934.35'
PC STA = 646+55.39
Y = 331379.392
X = 557008.342
PT STA = 651+60.44
Y = 331394.115
X = 557513.071
DB = S89°35'04"E
DA = N86°14'33"E

CURVE 4
PI STA = 666+85.45
Y = 331494.055
X = 559034.800
DELTA = 44°45'57" RT
D = 2°03'16"
T = 1148.45'
L = 2178.84'
R = 2788.71'
PC STA = 655+37.00
Y = 331418.793
X = 557888.821
PT STA = 677+15.85
Y = 330740.481
X = 559901.436
DB = N86°14'33"E
DA = S48°59'30"E
S.E. MAX: 5.20%

CURVE 5
PI STA = 702+60.96
Y = 329070.464
X = 561822.015
DELTA = 41°54'47" LT
D = 1°28'25"
T = 1489.06'
L = 2844.11'
R = 3887.94'
PC STA = 687+71.90
Y = 330047.533
X = 560698.350
PT STA = 716+16.01
Y = 329093.978
X = 563310.884
DB = S48°59'30"E
DA = N89°05'43"E
S.E. MAX: 4.30%

CURVE 6
PI STA = 728+69.05
Y = 329113.765
X = 564563.775
DELTA = 3°27'06" RT
D = 0°30'12"
T = 343.02'
L = 685.84'
R = 11384.94'
PC STA = 725+26.03
Y = 329108.348
X = 564220.796
PT STA = 732+11.87
Y = 329098.523
X = 564906.458
DB = N89°05'43"E
DA = S87°27'12"E
S.E. MAX: 2.00%

CURVE 7
PI STA = 757+39.48
Y = 328986.210
X = 567431.570
DELTA = 3°18'01" RT
D = 0°30'12"
T = 327.99'
L = 655.80'
R = 11384.94'
PC STA = 754+11.48
Y = 329000.784
X = 567103.902
PT STA = 760+67.29
Y = 328952.796
X = 567757.855
DB = S87°27'12"E
DA = S84°09'10"E
S.E. MAX: 2.00%

CURVE 8
PI STA = 771+99.04
Y = 328837.499
X = 568883.722
DELTA = 3°18'01" LT
D = 0°29'46"
T = 332.71'
L = 665.24'
R = 11548.98'
PC STA = 768+66.33
Y = 328871.394
X = 568552.743
PT STA = 775+31.57
Y = 328822.715
X = 569216.103
DB = S84°09'10"E
DA = S87°27'11"E
S.E. MAX: 2.00%

CURVE 9
PI STA = 794+18.70
Y = 328738.859
X = 571101.375
DELTA = 37°07'30" RT
D = 1°46'22"
T = 1085.25'
L = 2094.02'
R = 3231.75'
PC STA = 783+33.45
Y = 328787.083
X = 570017.198
PT STA = 804+27.48
Y = 328046.049
X = 571936.706
DB = S87°27'11"E
DA = S50°19'42"E

BENCH MARKS			
NO.	STATION	ELEV.	DESCRIPTION
10019	868+34.77	817.67	ALUM DISK IN PARAPET

CONTROL POINTS					
POINT	STATION	OFFSET	Y COORDS	X COORDS	DESCRIPTION
CP 50015	1016+35.11	89.98 LT	309209.653	577828.537	PK NAIL
CP 50016	966+71.10	118.02 LT	313885.896	576917.511	PK NAIL
CP 50017	959+79.22	118.79 LT	314577.665	576929.608	PK NAIL
CP 50018	872+78.77	117.26 LT	323299.255	576820.303	PK NAIL
CP 50019	866+43.31	113.63 LT	323909.690	576582.977	PK NAIL

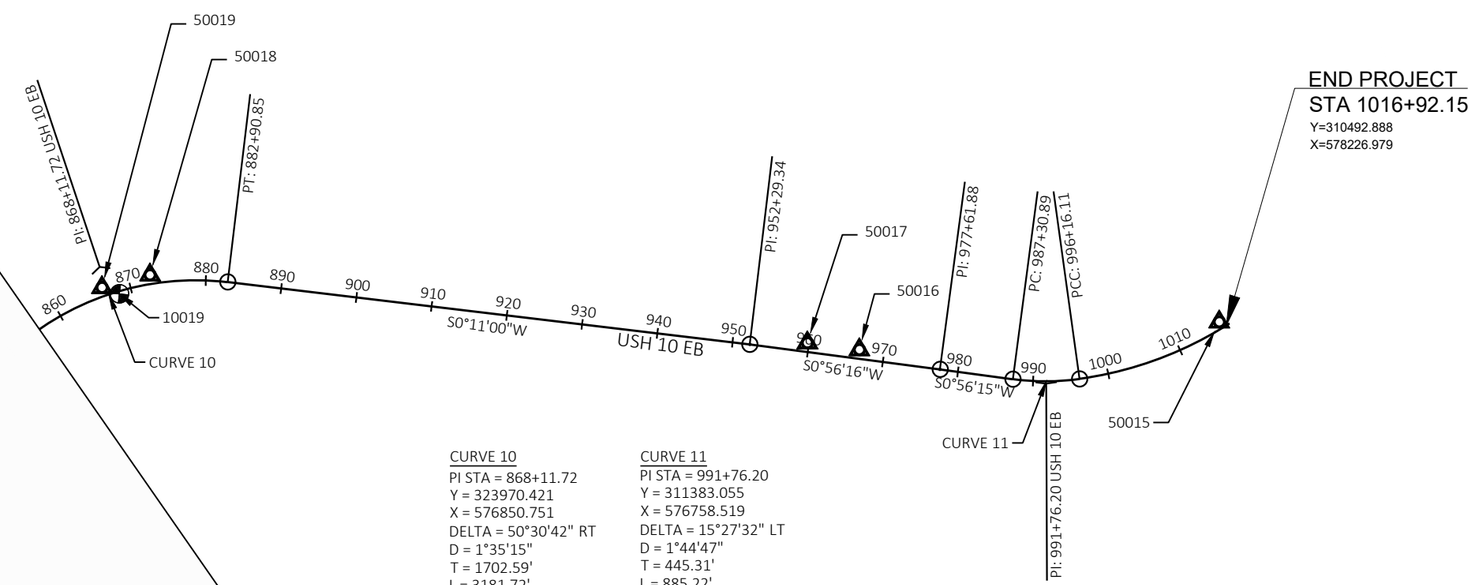

CURVE 10
PI STA = 868+11.72
Y = 323970.421
X = 576850.751
DELTA = 50°30'42" RT
D = 1°35'15"
T = 1702.59'
L = 3181.72'
R = 3609.06'
PC STA = 851+09.13
Y = 325057.333
X = 575540.244
PT STA = 882+90.85
Y = 322267.841
X = 576845.303
DB = S50°19'42"E
DA = S00°11'00"W

CURVE 11
PI STA = 991+76.20
Y = 311383.055
X = 576758.519
DELTA = 15°27'32" LT
D = 1°44'47"
T = 445.31'
L = 885.22'
R = 3280.95'
PC STA = 987+30.89
Y = 311828.310
X = 576765.805
PT STA = 996+16.11
Y = 310951.965
X = 576870.176
DB = S00°56'15"W
DA = S14°31'16"E

2

CURVE 1
PI STA = 7+42.95
Y = 331404.142
X = 553595.997
DELTA = 5°34'54" LT
D = 0°37'39"
T = 445.07'
L = 889.43'
R = 9130.00'
PC STA = 2+97.89
PT STA = 11+87.31
DB = S89°35'04"E
DA = N84°50'02"E

CURVE 2
PI STA = 17+49.81
Y = 331494.866
X = 554599.470
DELTA = 5°34'54" RT
D = 0°37'39"
T = 445.07'
L = 889.43'
R = 9130.00'
PC STA = 13+04.75
PT STA = 21+94.18
DB = N84°50'02"E
DA = S89°35'04"E

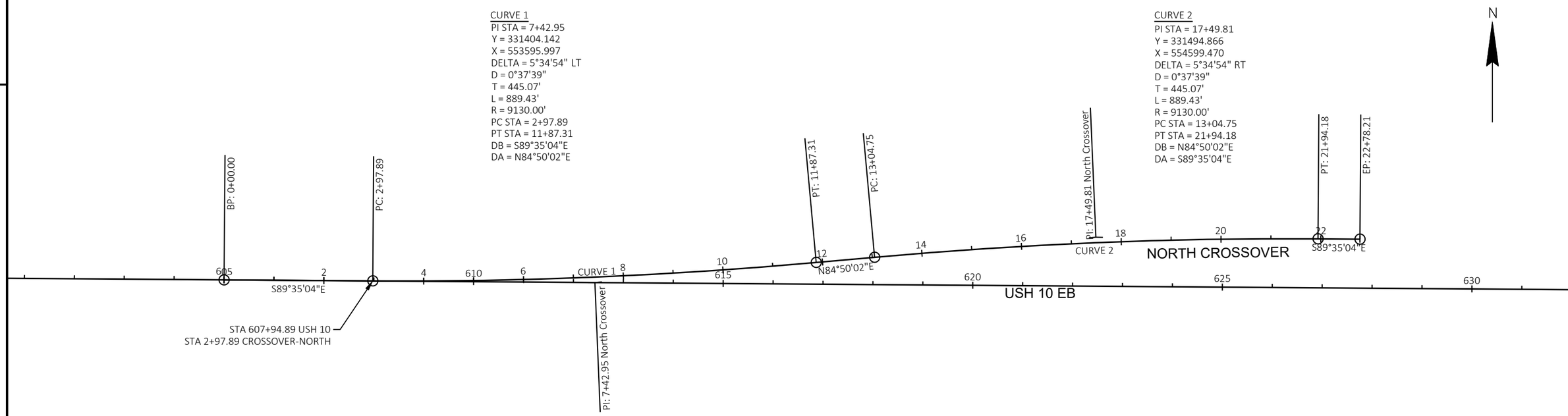

CURVE 3
PI STA = 4+09.95
Y = 328929.714
X = 568670.370
DELTA = 2°13'21" RT
D = 0°37'35"
T = 177.41'
L = 354.77'
R = 9146.00'
PC STA = 2+32.54
PT STA = 5+87.31
DB = S84°09'10"E
DA = S81°55'50"E

CURVE 4
PI STA = 12+68.61
Y = 328809.172
X = 569520.578
DELTA = 5°31'22" LT
D = 0°37'39"
T = 440.36'
L = 880.05'
R = 9130.00'
PC STA = 8+28.25
PT STA = 17+08.29
DB = S81°55'50"E
DA = S87°27'11"E

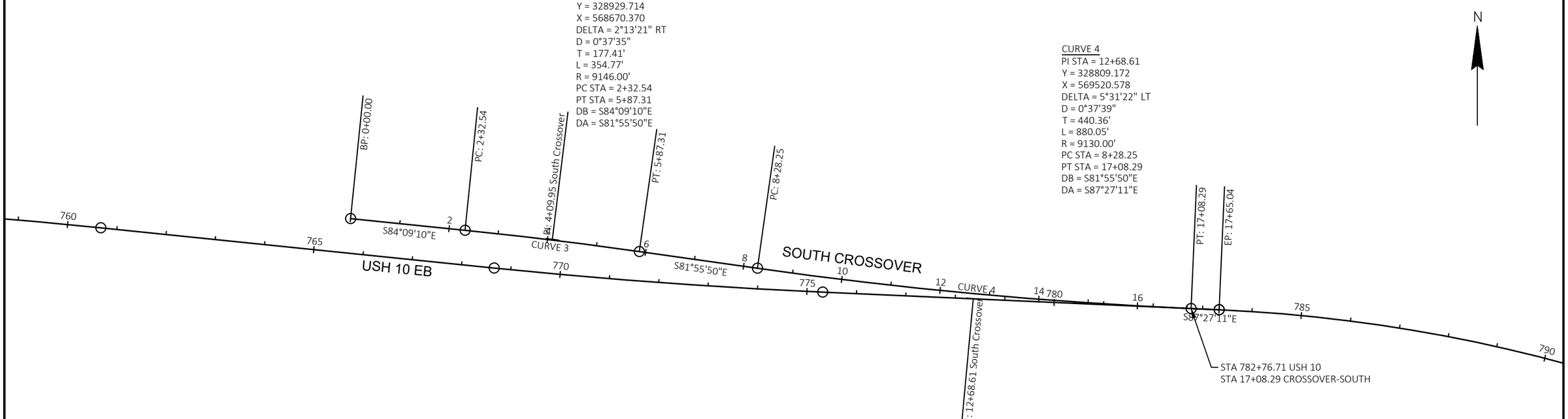

PROJECT NO: 1510-02-60	HWY: USH 10	COUNTY: WAUPACA	ALIGNMENT DETAIL	SHEET 103	E

Estimate Of Quantities

1510-02-60

Line	Item	Item Description	Unit	Total	Qty
0002	203.0100	Removing Small Pipe Culverts	EACH	2.000	2.000
0004	203.0220	Removing Structure (structure) 01. B-68-104	EACH	1.000	1.000
0006	204.0100	Removing Concrete Pavement	SY	25,375.000	25,375.000
0008	204.0110	Removing Asphaltic Surface	SY	16.000	16.000
0010	204.0115	Removing Asphaltic Surface Butt Joints	SY	2,850.000	2,850.000
0012	204.0120	Removing Asphaltic Surface Milling	SY	23,310.000	23,310.000
0014	204.0150	Removing Curb & Gutter	LF	114.000	114.000
0016	204.0165	Removing Guardrail	LF	1,530.000	1,530.000
0018	204.0180	Removing Delineators and Markers	EACH	35.000	35.000
0020	204.0190	Removing Surface Drains	EACH	1.000	1.000
0022	204.0220	Removing Inlets	EACH	1.000	1.000
0024	204.0245	Removing Storm Sewer (size) 01. 12-Inch	LF	179.000	179.000
0026	204.9090.S	Removing (item description) 01. Pipe Handrail	LF	16.000	16.000
0028	205.0100	Excavation Common	CY	12,290.000	12,290.000
0030	206.1001	Excavation for Structures Bridges (structure) 01. B-68-104	EACH	1.000	1.000
0032	208.0100	Borrow	CY	990.000	990.000
0034	210.1500	Backfill Structure Type A	TON	212.000	212.000
0036	211.0400	Prepare Foundation for Asphaltic Shoulders	STA	4,140.000	4,140.000
0038	213.0100	Finishing Roadway (project) 01. 1510-02-60	EACH	1.000	1.000
0040	305.0110	Base Aggregate Dense 3/4-Inch	TON	10,710.000	10,710.000
0042	305.0120	Base Aggregate Dense 1 1/4-Inch	TON	8,530.000	8,530.000
0044	415.0070	Concrete Pavement 7-Inch	SY	61.000	61.000
0046	415.0120	Concrete Pavement 12-Inch	SY	40.000	40.000
0048	415.0210	Concrete Pavement Gaps	EACH	5.000	5.000
0050	415.0410	Concrete Pavement Approach Slab	SY	514.000	514.000
0052	416.0610	Drilled Tie Bars	EACH	9,740.000	9,740.000
0054	416.0620	Drilled Dowel Bars	EACH	7,640.000	7,640.000
0056	416.1710	Concrete Pavement Repair	SY	2,700.000	2,700.000
0058	416.1720	Concrete Pavement Replacement	SY	7,042.000	7,042.000
0060	420.1000	Continuous Diamond Grinding Concrete Pavement	SY	14,830.000	14,830.000
0062	450.4000	HMA Cold Weather Paving	TON	3,650.000	3,650.000
0064	455.0605	Tack Coat	GAL	1,610.000	1,610.000
0066	460.2000	Incentive Density HMA Pavement	DOL	8,960.000	8,960.000
0068	460.5224	HMA Pavement 4 LT 58-28 S	TON	14,000.000	14,000.000
0070	465.0105	Asphaltic Surface	TON	8.000	8.000
0072	465.0125	Asphaltic Surface Temporary	TON	3,230.000	3,230.000
0074	465.0510	Asphaltic Rumble Strips, Shoulder Divided Roadway	LF	47,180.000	47,180.000
0076	502.0100	Concrete Masonry Bridges	CY	19.000	19.000
0078	502.3205	Pigmented Surface Sealer Reseal	SY	126.000	126.000
0080	502.3210	Pigmented Surface Sealer	SY	18.000	18.000
0082	502.4205	Adhesive Anchors No. 5 Bar	EACH	56.000	56.000
0084	502.4208	Adhesive Anchors No. 8 Bar	EACH	4.000	4.000
0086	505.0600	Bar Steel Reinforcement HS Coated Structures	LB	4,480.000	4,480.000
0088	509.0301	Preparation Decks Type 1	SY	6.000	6.000
0090	509.0302	Preparation Decks Type 2	SY	3.000	3.000
0092	509.0310.S	Sawing Pavement Deck Preparation Areas	LF	60.000	60.000
0094	509.1500	Concrete Surface Repair	SF	23.000	23.000
0096	509.2100.S	Concrete Masonry Deck Repair	CY	1.000	1.000
0098	509.5100.S	Polymer Overlay	SY	565.000	565.000

Estimate Of Quantities

1510-02-60

Line	Item	Item Description	Unit	Total	Qty
0100	509.9015.S	Removing Polymer Overlay (structure) 01. B-68-104	SY	565.000	565.000
0102	516.0500	Rubberized Membrane Waterproofing	SY	8.000	8.000
0104	520.2018	Culvert Pipe Temporary 18-Inch	LF	194.000	194.000
0106	520.8000	Concrete Collars for Pipe	EACH	1.000	1.000
0108	521.1012	Apron Endwalls for Culvert Pipe Steel 12-Inch	EACH	3.000	3.000
0110	522.0424	Culvert Pipe Reinforced Concrete Class IV 24-Inch	LF	120.000	120.000
0112	522.1024	Apron Endwalls for Culvert Pipe Reinforced Concrete 24-Inch	EACH	3.000	3.000
0114	530.0112	Culvert Pipe Corrugated Polyethylene 12-Inch	LF	371.000	371.000
0116	601.0150	Concrete Curb Integral Type D	LF	13.000	13.000
0118	601.0411	Concrete Curb & Gutter 30-Inch Type D	LF	30.000	30.000
0120	601.0413	Concrete Curb & Gutter 6-Inch Sloped 30-Inch Type G	LF	258.000	258.000
0122	601.0586	Concrete Curb & Gutter 4-Inch Sloped 30-Inch Type TBTT	LF	120.000	120.000
0124	602.0410	Concrete Sidewalk 5-Inch	SF	382.000	382.000
0126	602.0505	Curb Ramp Detectable Warning Field Yellow	SF	62.000	62.000
0128	602.0605	Curb Ramp Detectable Warning Field Radial Yellow	SF	25.000	25.000
0130	602.3210	Concrete Rumble Strips, Shoulder Divided Roadway	LF	47,180.000	47,180.000
0132	603.8000	Concrete Barrier Temporary Precast Delivered	LF	2,550.000	2,550.000
0134	603.8125	Concrete Barrier Temporary Precast Installed	LF	2,550.000	2,550.000
0136	603.8500	Anchoring Concrete Barrier Temporary Precast	LF	260.000	260.000
0138	606.0200	Riprap Medium	CY	6.000	6.000
0140	611.0630	Inlet Covers Type HM-GJ	EACH	1.000	1.000
0142	611.0654	Inlet Covers Type V	EACH	4.000	4.000
0144	611.3220	Inlets 2x2-FT	EACH	5.000	5.000
0146	611.8115	Adjusting Inlet Covers	EACH	6.000	6.000
0148	612.0212	Pipe Underdrain Unperforated 12-Inch	LF	371.000	371.000
0150	612.0406	Pipe Underdrain Wrapped 6-Inch	LF	100.000	100.000
0152	614.0010	Barrier System Grading Shaping Finishing	EACH	5.000	5.000
0154	614.0150	Anchor Assemblies for Steel Plate Beam Guard	EACH	2.000	2.000
0156	614.0397	Guardrail Mow Strip Emulsified Asphalt	SY	647.000	647.000
0158	614.2300	MGS Guardrail 3	LF	1,112.500	1,112.500
0160	614.2500	MGS Thrie Beam Transition	LF	197.000	197.000
0162	614.2610	MGS Guardrail Terminal EAT	EACH	5.000	5.000
0164	618.0100	Maintenance and Repair of Haul Roads (project) 01. 1510-02-60	EACH	1.000	1.000
0166	619.1000	Mobilization	EACH	1.000	1.000
0168	624.0100	Water	MGAL	175.000	175.000
0170	625.0100	Topsoil	SY	18,977.000	18,977.000
0172	627.0200	Mulching	SY	6,918.000	6,918.000
0174	628.1504	Silt Fence	LF	1,336.000	1,336.000
0176	628.1520	Silt Fence Maintenance	LF	1,336.000	1,336.000
0178	628.1905	Mobilizations Erosion Control	EACH	3.000	3.000
0180	628.1910	Mobilizations Emergency Erosion Control	EACH	2.000	2.000
0182	628.2008	Erosion Mat Urban Class I Type B	SY	12,059.000	12,059.000
0184	628.7005	Inlet Protection Type A	EACH	1.000	1.000
0186	628.7555	Culvert Pipe Checks	EACH	10.000	10.000
0188	628.7570	Rock Bags	EACH	242.000	242.000
0190	629.0210	Fertilizer Type B	CWT	7.610	7.610
0192	630.0120	Seeding Mixture No. 20	LB	474.000	474.000
0194	630.0130	Seeding Mixture No. 30	LB	259.000	259.000
0196	630.0200	Seeding Temporary	LB	189.000	189.000

1510-02-60

Line	Item	Item Description	Unit	Total	Qty
0198	630.0500	Seed Water	MGAL	426.600	426.600
0200	633.0100	Delineator Posts Steel	EACH	88.000	88.000
0202	633.0500	Delineator Reflectors	EACH	88.000	88.000
0204	633.1100	Delineators Temporary	EACH	67.000	67.000
0206	633.5200	Markers Culvert End	EACH	3.000	3.000
0208	634.0614	Posts Wood 4x6-Inch X 14-FT	EACH	1.000	1.000
0210	638.2102	Moving Signs Type II	EACH	1.000	1.000
0212	642.5201	Field Office Type C	EACH	1.000	1.000
0214	643.0300	Traffic Control Drums	DAY	67,018.000	67,018.000
0216	643.0370.S	Digital Speed Reduction System (DSRS)	DAY	317.000	317.000
0218	643.0420	Traffic Control Barricades Type III	DAY	4,922.000	4,922.000
0220	643.0500	Traffic Control Flexible Tubular Marker Posts	EACH	312.000	312.000
0222	643.0600	Traffic Control Flexible Tubular Marker Bases	EACH	312.000	312.000
0224	643.0705	Traffic Control Warning Lights Type A	DAY	8,382.000	8,382.000
0226	643.0715	Traffic Control Warning Lights Type C	DAY	12,134.000	12,134.000
0228	643.0810	Traffic Control Connected Arrow Boards	DAY	425.000	425.000
0230	643.0900	Traffic Control Signs	DAY	33,685.000	33,685.000
0232	643.0920	Traffic Control Covering Signs Type II	EACH	47.000	47.000
0234	643.1000	Traffic Control Signs Fixed Message	SF	226.000	226.000
0236	643.1205.S	Basic Traffic Queue Warning System	DAY	292.000	292.000
0238	643.1220	Traffic Control Connected Work Zone Start and End Location Markers	DAY	632.000	632.000
0240	643.3170	Temporary Marking Line Epoxy 6-Inch	LF	60,335.000	60,335.000
0242	643.3180	Temporary Marking Line Removable Tape 6-Inch	LF	10,875.000	10,875.000
0244	643.5000	Traffic Control	EACH	1.000	1.000
0246	644.1810	Temporary Pedestrian Barricade	LF	24.000	24.000
0248	645.0111	Geotextile Type DF Schedule A	SY	38.000	38.000
0250	645.0120	Geotextile Type HR	SY	12.000	12.000
0252	646.2025	Marking Line Grooved Black Epoxy 6-Inch	LF	16,308.000	16,308.000
0254	646.2040	Marking Line Grooved Wet Ref Epoxy 6-Inch	LF	148,130.000	148,130.000
0256	646.2050	Marking Line Grooved Permanent Tape 6-Inch	LF	16,308.000	16,308.000
0258	646.4050	Marking Line Grooved Permanent Tape 10-Inch	LF	9,588.000	9,588.000
0260	646.5020	Marking Arrow Epoxy	EACH	1.000	1.000
0262	646.5420	Marking Aerial Enforcement Bar Epoxy	EACH	2.000	2.000
0264	646.6466	Cold Weather Marking Epoxy 6-Inch	LF	81,000.000	81,000.000
0266	646.7220	Marking Chevron Epoxy 24-Inch	LF	588.000	588.000
0268	646.9000	Marking Removal Line 4-Inch	LF	7,650.000	7,650.000
0270	646.9055	Marking Removal Line Grooved Contrast Permanent Tape 4-Inch	LF	16,308.000	16,308.000
0272	650.4000	Construction Staking Storm Sewer	EACH	6.000	6.000
0274	650.4500	Construction Staking Subgrade	LF	8,247.000	8,247.000
0276	650.5000	Construction Staking Base	LF	8,247.000	8,247.000
0278	650.5500	Construction Staking Curb Gutter and Curb & Gutter	LF	408.000	408.000
0280	650.6000	Construction Staking Pipe Culverts	EACH	6.000	6.000
0282	650.6501	Construction Staking Structure Layout (structure) 01. B-68-104	EACH	1.000	1.000
0284	650.7000	Construction Staking Concrete Pavement	LF	8,906.000	8,906.000
0286	650.8000	Construction Staking Resurfacing Reference	LF	47,350.000	47,350.000
0288	650.9000	Construction Staking Curb Ramps	EACH	4.000	4.000
0290	650.9500	Construction Staking Sidewalk (project) 01. 1510-02-60	EACH	1.000	1.000
0292	650.9911	Construction Staking Supplemental Control (project) 01. 1510-02-60	EACH	1.000	1.000
0294	650.9920	Construction Staking Slope Stakes	LF	14,025.000	14,025.000

1510-02-60

Line	Item	Item Description	Unit	Total	Qty
0296	690.0150	Sawing Asphalt	LF	1,968.000	1,968.000
0298	690.0250	Sawing Concrete	LF	30,742.000	30,742.000
0300	715.0715	Incentive Flexural Strength Concrete Pavement	DOL	7,470.000	7,470.000
0302	740.0440	Incentive IRI Ride	DOL	3,200.000	3,200.000
0304	ASP.1T0A	On-the-Job Training Apprentice at $5.00/HR	HRS	2,400.000	2,400.000
0306	ASP.1T0G	On-the-Job Training Graduate at $5.00/HR	HRS	2,760.000	2,760.000
0308	SPV.0030	Special 01. Asphalt Mastic Joint Sealing	CWT	100.000	100.000
0310	SPV.0060	Special 01. Grading Shaping and Finishing Culvert Replacements	EACH	3.000	3.000
0312	SPV.0060	Special 02. Grading Shaping and Finishing Structure Wingwalls	EACH	2.000	2.000
0314	SPV.0060	Special 03. Temporary Apron Endwalls for Culver Pipe Sloped Steel 18-inch 10 to 1	EACH	1.000	1.000
0316	SPV.0060	Special 04. Temporary Inlets Median 1 Grate	EACH	1.000	1.000
0318	SPV.0060	Special 05. Temporary Inlet Covers Type MS	EACH	1.000	1.000
0320	SPV.0060	Special 06. Cleaning Storm Sewer Structures	EACH	3.000	3.000
0322	SPV.0060	Special 07. Concrete Base Handrail	EACH	3.000	3.000
0324	SPV.0060	Special 08. Mountable Curb Plate	EACH	1.000	1.000
0326	SPV.0060	Special 09. Removing Raised Pavement Markers and Filling Voids	EACH	70.000	70.000
0328	SPV.0090	Special 01. Salvage and Reinstall High Tension Cable Barrier	LF	775.000	775.000
0330	SPV.0090	Special 02. 42-Inch Handrail	LF	16.000	16.000
0332	SPV.0090	Special 03. Concrete Joint and Crack Cleaning	LF	1,600.000	1,600.000
0334	SPV.0180	Special 01. HPC Pavement 10-Inch	SY	24,800.000	24,800.000
0336	SPV.0195	Special 01. Concrete Joint and Crack Repair (HMA)	TON	20.000	20.000

3

REMOVALS

CATEGORY	LOCATION	203.0100 REMOVING SMALL PIPE CULVERTS EACH	204.0100 REMOVING CONCRETE PAVEMENT SY	204.0110 REMOVING ASPHALTIC SURFACE SY	204.0115 REMOVING ASPHALTIC SURFACE BUTT JOINTS SY	204.0120 REMOVING ASPHALTIC SURFACE MILLING SY	204.0150 REMOVING CURB & GUTTER LF	204.0165 REMOVING GUARDRAIL LF	204.0180 REMOVING DELINEATORS AND MARKERS EACH	204.0190 REMOVING SURFACE DRAINS EACH	204.0220 REMOVING INLETS EACH	204.0245 REMOVING STORM SEWER (12-INCH) LF	REMARKS
0010	CTH X/MAIN STREET BTW RAMPS	-	-	-	61	2,877	-	-	-	-	-	-	
0010	CROSSOVERS, MEDIAN TURNBAYS, SIDEROADS	-	-	-	2,789	20,425	-	-	-	-	-	-	
0010	CROSSOVER PAVEMENT SEGMENT 1	-	6657	-	-	-	-	-	-	-	-	-	NO SEPARATE PAYMENT FOR COMMON EXCAVATION INCLUDED FOR PAVEMENT REMOVAL
0010	CROSSOVER PAVEMENT SEGMENT 2	-	17903	-	-	-	-	-	-	-	-	-	NO SEPARATE PAYMENT FOR COMMON EXCAVATION INCLUDED FOR PAVEMENT REMOVAL
0010	STH 22	-	-	16	-	-	99	85	-	1	-	71	
0010	B-68-83 LT	-	-	-	-	-	-	392	-	-	1	108	
0010	B-68-83 RT	-	-	-	-	-	15	329	-	-	-	-	
0010	B-68-104 LT	-	-	-	-	-	-	391	-	-	-	-	
0010	B-68-104 RT	-	-	-	-	-	-	333	-	-	-	-	
0010	B-68-121 8.5" CONC	-	61	-	-	-	-	-	-	-	-	-	
0010	APPROACH SLABS	-	514	-	-	-	-	-	-	-	-	-	
0010	CTH X/MAIN STREET ON-RAMP	-	-	-	-	-	-	-	-	-	-	-	
0010	STH 22 ON-RAMP	-	-	-	-	-	-	-	-	-	-	-	
0010	PROJECTWIDE	2	240	-	-	-	-	-	35	-	-	-	
	TOTAL 0010	2	25,375	16	2,850	23,310	114	1,530	35	1	1	179	

LOCATION	205.0100 COMMON EXCAVATION (1) CUT (2)	205.0100 COMMON EXCAVATION (1) EBS EXCAVATION (3)	SALVAGED/UNUSABLE PAVEMENT MATERIAL (4)	AVAILABLE MATERIAL (5)	REDUCED EBS IN FILL (9) FACTOR 0.80	EXPANDED EBS BACKFILL (11) FACTOR 1.30	UNEXPANDED FILL	EXPANDED FILL (13) FACTOR 1.25	MASS ORDINATE +/- (14)	WASTE	208.0100 BORROW
SOUTH CROSSOVER INSTALL	1786	70	1340	447	-	-	469	586	-140	-	140
SOUTH CROSSOVER REMOVAL	-	-	-	-	-	-	-	-	-	-	-
NORTH CROSSOVER INSTALL	641	65	429	212	-	-	847	1059	-847	-	850
NORTH CROSSOVER REMOVAL	3458	-	3458	-	-	-	-	-	-	-	-
WIDENING INSTALL	265	65	-	265	-	-	-	-	265	265	-
WIDENING REMOVAL	205	-	205	-	-	-	-	-	-	-	-
LEFT SHOULDER	1092	-	1092	-	-	-	-	-	-	-	-
RIGHT SHOULDER	2639	-	2639	-	-	-	-	-	-	-	-
RAMP SHOULDERS	323	-	323	-	-	-	-	-	-	-	-
MEDIAN CROSSOVERS & SIDEROADS	1619	-	1619	-	-	-	-	-	-	-	-
GORES	53	-	53	-	-	-	-	-	-	-	-
GRAND TOTAL	12,090	200	11,158	924	0	0	1,316	1,645	-722	265	990
TOTAL COMMON EXC	12,290										

NOTES:

(1) COMMON EXCAVATION IS THE SUM OF THE CUT AND EBS EXCAVATION COLUMNS. ITEM NUMBER 205.0100

(2) SALVAGED/UNSUABLE PAVEMENT MATERIAL IS INCLUDED IN CUT.

(3) EBS EXCAVATION TO BE BACKFILLED WITH SELECT BORROW MATERIAL. NOTE: THIS IS DESIGNERS CHOICE, CAN BE BACKFILLED WITH BORROW, OR CUT AS WELL.

(4) SALVAGED/UNUSABLE PAVEMENT MATERIAL

5) AVAILABLE MATERIAL = CUT - SALVAGED/UNUSUABLE PAVEMENT MATERIAL

(9) REDUCED EBS IN FILL - EXCAVATED EBS MATERIAL IS USUABLE IN FILLS OUTSIDE THE 1:1 SLOPE. EBS IN FILL REDUCTION FACTOR = 0.80

(11) EXPANDED EBS BACKFILL - THIS IS TO BE FILLED WITH SELECT BORROW MATERIAL. EBS BACKFILL FACTOR = 1.30. ITEM NUMBER 208.1100

(13) EXPANDED FILL FACTOR = 1.25

DEPENDING ON SELECTIONS: EXPANDED FILL = (UNEXPANDED FILL - EXPANDED ROCK - REDUCED MARSH - REDUCED EBS) * FILL FACTOR

OR EXPANDED FILL = (UNEXPANDED FILL - EXPANDED ROCK - REDUCED EBS) * FILL FACTOR

OR EXPANDED FILL = (UNEXPANDED FILL - EXPANDED ROCK - REDUCED MARSH) * FILL FACTOR

OR EXPANDED FILL = (UNEXPANDED FILL - EXPANDED ROCK) * FILL FACTOR

(14) THE MASS ORDINATE + OR - QTY CALCULATED FOR THE DIVISION. PLUS QUANTITY INDICATES AN EXCESS OF MATERIAL WITHIN THE DIVISION. MINUS INDICATES A SHORTAGE OF MATERIAL WITHIN THE DIVISION.

3

BASE AGGREGATE

CATEGORY	STATION	TO	STATION	LOCATION	211.0400 PREPARE FOUNDATION FOR ASPHALTIC SHOULDERS STA	* 305.0110 BASE AGGREGATE DENSE 3/4-INCH TON	* 305.0120 BASE AGGREGATE DENSE 1 1/4-INCH TON	* 624.0100 WATER MGAL	REMARKS
0010	544+00	-	602+00	LT	58	403	-	-	
0010	602+00	-	785+00	LT	183	1,271	-	-	
0010	785+00	-	1015+75	LT	231	1,603	-	-	
0010	544+00	-	602+00	RT	58	269	-	-	
0010	602+00	-	785+00	RT	183	848	-	-	
0010	785+00	-	1015+75	RT	231	1,069	-	-	
0010	607+00	-	779+00	NB LT	172	1,195	-	-	
0010	607+00	-	779+00	NB RT	172	797	-	-	
0010		-		RAMPS	2,850	2,000	-	-	
0010		-		B-68-121	-	-	165	4	
0010	BEGIN	-	END	UNDISTRIBUTED / DSLT TRAILER BASE	-	-	30	1	USE BAD 1 1/4-INCH AS DIRECTD BY THE ENGINEER AND FOR STABILIZING TRAFFIC CONTROL TRAILERS WHERE DIRECTED
				TOTAL 0010	4,140	9,460	200	5	

* ADDITIONAL QUANITITY INCLUDED ELSEWHERE

HMA SHOULDERS

CATEGORY	STATION	TO	STATION	LOCATION	455.0605 TACK COAT GAL	460.5224 HMA PAVEMENT 4 LT 58-28 S TON	465.0510 ASPHALTIC RUMBLE STRIPS, SHOULDER DIVIDED ROADWAY LF
0010	544+00	-	1015+75	LEFT SHOULDER	-	3,023	47,180
0010				RIGHT SHOULDER	-	7,289	-
0010				RAMP SHOULDERS	-	1,189	-
0010				MEDIAN TURNBAY, SIDEROADS AND CROSSOVE	1,408	2,024	-
0010				GORES	-	148	-
0010				STH 22 SHOULDERS	-	19	
0010				CTH X/MAIN STREET BTW RAMPS	202	307	-
				TOTAL 0010	1,610	14,000	47,180

3

CONCRETE PAVEMENT

CATEGORY	STATION	TO	STATION	LOCATION	415.0070 CONCRETE PAVEMENT 7-INCH SY	415.0120 CONCRETE PAVEMENT 12-INCH SY	415.0210 CONCRETE PAVEMENT GAPS EACH	415.0410 CONCRETE PAVEMENT APPROACH SLAB SY	416.0610 DRILLED TIE BARS EACH	416.0620 DRILLED DOWEL BARS EACH	416.1710 CONCRETE PAVEMENT REPAIR SY	416.1720 CONCRETE PAVEMENT REPLACEMENT SY	420.1000 CONTINUOUS DIAMOND GRINDING CONCRETE PAVEMENT SY	602.3210 CONCRETE RUMBLE STRIPS, SHOULDER DIVIDED ROADWAY LF	SPV.0180.01 SPECIAL (01. HPC PAVEMENT 10-INCH) SY	REMARKS
0010	543+47	-	605+00	P.O.B. TO CROSSOVER START	-	-	5	-	519	1740	682	1694	3095	-		SEGMENT 1
0010	605+00	-	783+00	CROSSOVER START TO CROSSOVER END	-	-	-	-	7615	1560	583	806	2011	-	24560	CROSSOVER SEGMENT
0010	783+00	-	841+50	CROSSOVER END TO TANNING SUPPLY	-	-	-	-	351	700	169	1099	1447	-	44	SEGMENT 2A
0010	841+50	-	900+00	TANNING SUPPLY TO STA. 900	-	-	-	-	49	200	65	28	186	-	127	SEGMENT 2B
0010	900+00	-	964+75	STA. 900 TO WIDENING START	-	-	-	-	579	960	214	1856	2545	-	27	SEGMENT 3A
0010	964+75	-	1016+95	WIDENING START TO P.O.E.	-	-	-	-	300	900	302	982	1608	-	-	SEGMENT 3B
0010		-		USH 10 PROJECT WIDE	-	-	-	-	-	-	-	-	2500	-	-	REPAIR OLD PATCHES
0010		-		USH 10 PROJECT WIDE	-	-	-	-	140	1200	467	-	105	-	42	AS DIRECTED BY THE ENGINEER
0010		-		CTH F	-	-	-	147	-	-	-	-	-	-	-	B-68-104
0010		-		STH 22	61	40	-	367	187	380	218	577	1328	-	-	B-68-121
0010		-		RIGHT SHOULDER	-	-	-	-	-	-	-	-	-	47180	-	
				TOTAL 0010	61	40	5	514	9,740	7,640	2,700	7,042	14,830	47,180	24,800	

3

B-68-121 PATH ITEMS

CATEGORY	LOCATION	204.9090.S.01 REMOVING (ITEM DESCRIPTION) (01. PIPE HANDRAIL) LF	465.0105 ASPHALTIC SURFACE TON	601.0150 CONCRETE CURB INTEGRAL TYPE D LF	601.0413 CONCRETE CURB & GUTTER 6-INCH SLOPED 30-INCH TYPE G LF	602.0410 CONCRETE SIDEWALK 5-INCH SF	602.0505 CURB RAMP DETECTABLE WARNING FIELD YELLOW SF	602.0605 CURB RAMP DETECTABLE WARNING FIELD RADIAL YELLOW SF	SPV.0060.07 SPECIAL (07. CONCRETE BASE HANDRAIL) EACH	SPV.0090.02 SPECIAL (02. 42-INCH HANDRAIL) LF
0010	STH 22	16	8	13	258	382	62	25	3	16
	TOTAL 0010	16	8	13	258	382	62	25	3	16

ADJUSTING AND CLEANING INLETS

CATEGORY	STATION TO	STATION	LOCATION	601.0411 CONCRETE CURB & GUTTER 30-INCH TYPE D LF	611.8115 ADJUSTING INLET COVERS EACH	SPV.0060.06 SPECIAL (06. CLEANING STORM SEWER STRUCTURES) EACH	SPV.0060.08 SPECIAL (08. MOUNTABLE CURB PLATE) EACH	REMARKS
0010	-	40+44	SB CTH A LT	-	2	1	-	CURB ASSOCIATED WITH THIS ADJUSTMENT IS INCLUDED IN THE PATH ITEMS MQ TABLE
0010		41+90	SB CTH A LT	-	1	-	-	
			STH 22/54	10	1	-	1	
0010	-	822+43	SB CTH X LT AT WB USH 10 ON RAMP	10	1	-	-	
0010		822+56	NB CTH X RT AT EB USH 10 ON RAMP	-	-	1	-	
0010	-	823+03	SB CTH X LT AT WB USH 10 ON RAMP	10	1	1	-	
0010	-							
			TOTAL 0010	30	6	3	1	

MOVING SIGN

CATEGORY	STATION	LOCATION	634.0614 POSTS WOOD 4X6-INCH X 14-FT EACH	638.2102 MOVING SIGNS TYPE II EACH	REMARKS
0010	52+75, LT	STH 22	1	1	R6-2L (ONE WAY)
		TOTAL 0000	1	1	

CONCRETE SURFACE DRAINS

CATEGORY	LOCATION	520.8000 CONCRETE COLLARS FOR PIPE EACH	521.1012 APRON ENDWALLS FOR CULVERT PIPE STEEL 12-INCH EACH	530.0112 CULVERT PIPE CORRUGATED POLYETHYLENE 12-INCH LF	601.0586 CONCRETE CURB & GUTTER 4-INCH SLOPED 30-INCH TYPE TBTT LF	606.0200 RIPRAP MEDIUM CY	611.0630 INLET COVERS TYPE HM-GJ EACH	611.0654 INLET COVERS TYPE V EACH	611.3220 INLETS 2X2-FT EACH	612.0212 PIPE UNDERDRAIN UNPERFORATED 12-INCH LF	645.0120 GEOTEXTILE TYPE HR SY
0010	B-68-121 RT	1	1	96	40	-	1	2	3	96	-
0010	B-68-83 RT	-	1	110	40	3	-	1	1	110	6
0010	B-68-104 RT	-	1	165	40	3	-	1	1	165	6
0010											
	TOTAL 0010	1	3	371	120	6	1	4	5	371	12

3

CULVERTS

CATEGORY	LOCATION	522.0424 CULVERT PIPE REINFORCED CONCRETE CLASS IV 24-INCH LF	522.1024 APRON ENDWALLS FOR CULVERT PIPE REINFORCED CONCRETE 24-INCH EACH	633.5200 MARKERS CULVERT END EACH
0010	Culvert 68010006106	8	1	1
0010	Culvert 68010006110	80	1	1
0010	Culvert 6801006099	32	1	1
	TOTAL 0010	120	3	3

CULVERTS AND WINGWALL GRADING

LOCATION	SPV.0060.01 SPECIAL (01. GRADING SHAPING AND FINISHING CULVERT REPLACEMENTS) (EACH)	SPV.0060.02 SPECIAL (02. GRADING SHAPING AND FINISHING STRUCTURE WINGWALLS) (EACH)	* SALVAGED TOPSOIL (SY)	* EROSION MAT URBAN CLASS I TYPE B (SY)	* FERTILIZER TYPE B (CWT)	* SEED WATER (MGAL)	* SEEDING MIXTURE NO. 20 (LB)
CULVERT #68010006099	1	-	9	9	0.005	0.2	0.4
CULVERT #68010006106	1	-	4	4	0.003	0.1	0.2
CULVERT #68010006110	1	-	14	14	0.009	0.4	0.6
CTH F SE WINGWALL	-	1	11	11	0.007	0.3	0.5
CTH F F NW WINGWALL	-	1	11	11	0.007	0.3	0.5
	3	2					

* NON-BID ITEM, ITEMS AND QUANTITIES LISTED FOR BID INFORMATION ONLY, ITEMS INCIDENTAL TO BARRIER SYSTEM GRADING SHAPING FINISHING.

MGS GUARDRAIL

LOCATION	614.0010 BARRIER SYSTEM GRADING SHAPING FINISHING (EACH)	614.0397 GUARDRAIL MOW STRIP EMULSIFIED ASPHALT (SY)	614.2300 MGS GUARDRAIL 3 (LF)	614.2500 MGS THRIE BEAM TRANSITION (LF)	614.2610 MGS GUARDRAIL TERMINAL EAT (EACH)	* EXCAVATION COMMON (CY)	* BORROW (CY)	* TOPSOIL (SY)	* EROSION MAT URBAN CLASS I TYPE B (SY)	* FERTILIZER TYPE B (CWT)	* SEED WATER (MGAL)	* / ** SEEDING MIXTURE NO. 30 (LB)
STH 22 NB RT	1	41	12.5	39.4	1	10	-	58	58	0.04	1.30	2.59
STH 22 SB LT	-	32	-	-	-	-	-	-	-	-	-	-
B-68-83 LT	1	153	300.0	39.4	1	34.0	-	209	209	0.13	4.70	9
B-68-83 RT	1	129	237.5	39.4	1			227	227	0.14	5.10	10
B-68-104 LT	1	158	312.5	39.4	1	56.0	-	303	303	0.19	6.80	14
B-68-104 RT	1	134	250.0	39.4	1			302	302	0.2	6.80	14
	5	647	1,112.5	197	5							

* NON-BID ITEM, ITEMS AND QUANTITIES LISTED FOR BID INFORMATION ONLY, ITEMS INCIDENTAL TO BARRIER SYSTEM GRADING SHAPING FINISHING.
** NO. 30 SEED MIXTURE TO BE USED GENERALLY WITHIN 15 FEET OF THE SHOULDER WHERE A SALT-TOLERANT TURF IS PREFERRED.

EROSION CONTROL

CATEGORY	LOCATION	625.0100 TOPSOIL SY	627.0200 MULCHING SY	628.1504 SILT FENCE LF	628.1520 SILT FENCE MAINTENANCE LF	628.1905 MOBILIZATIONS EROSION CONTROL EACH	628.1910 MOBILIZATIONS EMERGENCY EROSION CONTROL EACH	628.2008 EROSION MAT URBAN CLASS I TYPE B SY	628.7005 INLET PROTECTION TYPE A EACH	628.7555 CULVERT PIPE CHECKS EACH	628.7570 ROCK BAGS EACH	629.0210 FERTILIZER TYPE B CWT	630.0120 SEEDING MIXTURE NO. 20 LB	630.0130 SEEDING MIXTURE NO. 30 LB	630.0200 SEEDING TEMPORARY LB	630.0500 SEED WATER MGAL	REMARKS
0010	STH 22 NB RT	-	-	158	158	-	-	-	-	-	44	-	-	-	-	-	
0010	B-68-83 LT	-	-	162	162	-	-	-	-	-	22	-	-	-	-	-	
0010	B-68-83 RT	-	-	373	373	-	-	-	-	-	66	-	-	-	-	-	
0010	B-68-104 LT	-	-	77	77	-	-	-	-	-	44	-	-	-	-	-	
0010	B-68-104 RT	-	-	489	489	-	-	-	-	-	66	-	-	-	-	-	
0010	CULVERT #68010006099	-	-	26	26	-	-	-	-	-	-	-	-	-	-	-	
0010	CULVERT #68010006106	-	-	25	25	-	-	-	-	-	-	-	-	-	-	-	
0010	CULVERT #68010006110	-	-	26	26	-	-	-	1	-	-	-	-	-	-	-	
0010	NORTH CROSSOVER INSTALL	2005	2005	-	-	-	-	-	-	3	-	-	-	55	55	45.1	
0010	NORTH CROSSOVER REMOVAL	5470	-	-	-	-	-	5470	-	-	-	3.45	247	-	-	122.9	
0010	SOUTH CROSSOVER INSTALL	3746	3746	-	-	-	-	-	-	3	-	-	-	102	102	84.2	
0010	SOUTH CROSSOVER REMOVAL	5039	-	-	-	-	-	5039	-	-	-	3.18	227	-	-	113.2	
0010	WIDENING INSTALL	1167	1167	-	-	-	-	-	-	-	-	-	-	32	32	26.3	
0010	WIDENING REMOVAL	1550	-	-	-	-	-	1550	-	-	-	0.98	-	70	-	34.9	
0010	PROJECT WIDE	-	-	-	-	3	2	-	-	4	-	-	-	-	-	-	
	TOTAL 0010	18,977	6,918	1,336	1,336	3	2	12,059	1	10	242	7.61	474	259	189	426.6	

3

3

TEMPORARY DRAINAGE

CATEGORY	LOCATION	520.2018 CULVERT PIPE TEMPORARY 18-INCH LF	SPV.0060.03 SPECIAL (03. TEMPORARY APRON ENDWALLS FOR CULVERT PIPE SLOPED SIDE DRAINS STEEL 18-INCH 10 TO 1) EACH	SPV.0060.04 SPECIAL (04. TEMPORARY INLETS MEDIAN 1 GRATE) EACH	SPV.0060.05 SPECIAL (05. TEMPORARY INLET COVERS TYPE MS) EACH	REMARKS
0010	CROSSOVER	194	1	1	1	
0010						
	TOTAL 0010	194	1	1	1	

TEMPORARY BARRIER

CATEGORY	STATION	TO	STATION	LOCATION	603.8000 CONCRETE BARRIER TEMPORARY PRECAST DELIVERED LF	603.8125 CONCRETE BARRIER TEMPORARY PRECAST INSTALLED LF	603.8500 ANCHORING CONCRETE BARRIER TEMPORARY PRECAST LF
0010		-		BRIDGE STAGE 1	375	375	130
0010		-		BRIDGE STAGE 2	375	375	130
0010	993+00	-	976+00	WIDENING	1800	1800	-
				TOTAL 0010	2,550	2,550	260

3

TEMPORARY PAVING

CATEGORY	STATION	TO	STATION	LOCATION	* 305.0110 BASE AGGREGATE DENSE 3/4-INCH TON	* 305.0120 BASE AGGREGATE DENSE 1 1/4-INCH TON	465.0125 ASPHALTIC SURFACE TEMPORARY TON	* 624.0100 WATER MGAL	REMARKS
0010		-		CROSSOVER 1	600	3,353	723	68	
0010		-		CROSSOVER 2	650	4,202	1,838	85	
0010		-		REMOVAL	-	-	-	-	
0010	969+00	-	993+72	WIDENING	-	767	666	16	
0010	969+00	-	993+72	REMOVAL	-	-	-	-	
				TOTAL 0010	1,250	8,330	3,230	170	

* ADDITIONAL QUANITITY INCLUDED ELSEWHERE

TEMPORARY MARKING

CATEGORY	STATION	TO	STATION	LOCATION	643.3170 TEMPORARY MARKING LINE EPOXY 6-INCH (YELLOW) LF	643.3170 TEMPORARY MARKING LINE EPOXY 6-INCH (WHITE) LF	643.3180 TEMPORARY MARKING LINE REMOVABLE TAPE 6-INCH (YELLOW) LF	643.3180 TEMPORARY MARKING LINE REMOVABLE TAPE 6-INCH (WHITE) LF	646.9000 MARKING REMOVAL LINE 4-INCH LF	646.9055 MARKING REMOVAL LINE GROOVED CONTRAST PERMANENT TAPE 4-INCH LF
0010	606+00	-	786+00	WB LANE LINE ON USH 10	-	-	-	-	-	4500
0010	543+70	-	1016+00	EB LANE LINE ON USH 10	-	-	-	-	-	11808
0010		-		EAST CROSSOVER	4796	1933	-	-	3425	-
0010	626+25	-	764+00	TWO-WAY TRAFFIC CONTROL	27944	13703	-	-	-	-
0010		-		WEST CROSSOVER	1802	3137	-	-	3425	-
0010	967+80	-	994+35	WIDENING	-	-	2448	2844	-	-
0010		-		BRIDGE STAGE 1		-	996	2214	800	-
0010		-		BRIDGE STAGE 2	-	-	1188	1185	-	-
0010		-		SEGMENT 1 - STAGE 1	-	780		-	-	-
0010		-		SEGMENT 1 - STAGE 2	-	780		-	-	-
0010		-		SEGMENT 1 - STAGE 3	-	780		-	-	-
0010		-		SEGMENT 2 - STAGE 1	-	780		-	-	-
0010		-		SEGMENT 2 - STAGE 2	-	780		-	-	-
0010		-		SEGMENT 2 - STAGE 3	-	780		-	-	-
0010		-		SEGMENT 3 - STAGE 1	-	780		-	-	-
0010		-		SEGMENT 3 - STAGE 2	-	780		-	-	-
0010		-		SEGMENT 3 - STAGE 3	-	780		-	-	-
				TOTAL 0010	60,335		10,875		7,650	16,308

HIGH TENSION CABLE BARRIER

CATEGORY	LOCATION	SPV.0090.01 SPECIAL (01. SALVAGE AND REINSTALL HIGH TENSION CABLE BARRIER) LF
0010	CROSSOVER	775
0010		
	TOTAL 0010	775

3

SMART WORK ZONE

CATEGORY	STATION	TO	STATION	LOCATION	ANTICIPATED DURATION DAY	DIGITAL SPEED REDUCTION ITEM 643.0370.S: DIGITAL SPEED LIMIT TRAILERS (DSLT)	DIGITAL SPEED REDUCTION SYSTEM (DSRS) DAY	CONNECTED ARROW BOARDS ITEM 643.0810: CONNECTED ARROW BOARDS #	TC CONNECTED ARROW BOARD DAY	BASIC TRAFFIC QUEUE WARNING SYSTEM ITEM 643.1205.S: PORTABLE TRAFFIC SENSORS (PTS)	FLASHING BEACON SIGNS (FBS)	BASIC TRAFFIC QUEUE WARNING SYSTEM DAY	CONNECTED WORK ZONE ITEM 643.1220: CONNECTED WORK ZONE START AND END LOCATION MARKERS #	TC CONNECTED WORK ZONE START AND END LOCATION MARKERS DAY
0010	605+00	-	783+00	CROSSOVER TRAFFIC	45	2	90	2	90	3	3	45	2	90
0010	595+00	-	630+00	NORTH CROSSOVER CONSTRUCTION	10	-	-	2	20	3	3	10	2	20
0010	744+00	-	786+00	SOUTH CROSSOVER CONSTRUCTION	10	-	-	2	20	3	3	10	2	20
0010				BRIDGE STAGE 1	12	-	-	1	12	-	-	-	2	24
0010				BRIDGE STAGE 2	12	-	-	1	12	-	-	-	2	24
0010	543+47	-	605+00	SEGMENT 1 - STAGE 1	10	2	10	1	10	3	3	10	2	20
0010	543+47	-	605+00	SEGMENT 1 - STAGE 2	20	2	20	1	20	3	3	20	2	40
0010	543+47	-	605+00	SEGMENT 1 - STAGE 3	44	2	44	2	88	3	3	44	2	88
0010	543+47	-	605+00	SEGMENT 1 - STAGE 4	10	2	10	1	10	3	3	10	2	20
0010	783+00	-	900+00	SEGMENT 2 - STAGE 1	10	3	10	1	10	3	3	10	2	20
0010	783+00	-	900+00	SEGMENT 2 - STAGE 2	30	3	30	1	30	3	3	30	2	60
0010	783+00	-	900+00	SEGMENT 2 - STAGE 3	20	3	20	1	20	3	3	20	2	40
0010	783+00	-	900+00	SEGMENT 2 - STAGE 4	10	3	10	1	10	3	3	10	2	20
0010	900+00	-	1016+95	SEGMENT 3 - STAGE 1	15	3	15	1	15	3	3	15	2	30
0010	900+00	-	1016+95	SEGMENT 3 - STAGE 2	18	3	18	1	18	3	3	18	2	36
0010	900+00	-	1016+95	SEGMENT 3 - STAGE 3	30	3	30	1	30	3	3	30	2	60
0010	900+00	-	1016+95	SEGMENT 3 - STAGE 4	10	3	10	1	10	3	3	10	2	20
				TOTAL 0010			317		425			292		632

3

TRAFFIC CONTROL

CATEGORY	STATION	TO	STATION	LOCATION	ANTICIPATED DURATION DAY	633.1100 DELINEATORS TEMPORARY EACH	#	643.0300 TRAFFIC CONTROL DRUMS DAY	#	643.0420 TRAFFIC CONTROL BARRICADES TYPE III DAY	643.0500 TRAFFIC CONTROL FLEXIBLE TUBULAR MARKER POSTS EACH	643.0600 TRAFFIC CONTROL FLEXIBLE TUBULAR MARKER BASES EACH	#	643.0705 TRAFFIC CONTROL WARNING LIGHTS TYPE A DAY	#	643.0715 TRAFFIC CONTROL WARNING LIGHTS TYPE C DAY	#	643.0900 TRAFFIC CONTROL SIGNS DAY	CYCLE	643.0920 TRAFFIC CONTROL COVERING SIGNS TYPE II EACH	643.1000 TRAFFIC CONTROL SIGNS FIXED MESSAGE SF	644.1810 TEMPORARY PEDESTRIAN BARRICADE LF
0010	605+00	-	783+00	CROSSOVER TRAFFIC	45	62	222	9,990	38	1,710	302	302	76	3,420	44	1,980	59	2,655	-	-	-	-
0010	595+00	-	630+00	NORTH CROSSOVER CONSTRUCTION	10	-	96	960	2	20	-	-		-	32	320	2	20	-	-	-	-
0010	744+00	-	786+00	SOUTH CROSSOVER CONSTRUCTION	10	-	108	1,080	2	20	-	-		-	32	320	2	20	-	-	-	-
0010				BRIDGE STAGE 1	12	-	62	744	4	48	-	-	8	96	28	336	14	168	-	-	-	-
0010				BRIDGE STAGE 2	12	-	44	528	4	48	-	-	8	96	24	288	14	168	-	-	-	-
0010	543+47	-	605+00	SEGMENT 1 - STAGE 1	10	-	214	2,140	6	60	-	-	12	120	48	480	20	200	-	-	-	-
0010	543+47	-	605+00	SEGMENT 1 - STAGE 2	20	-	114	2,280	6	120	-	-	12	240	41	820	18	360	-	-	-	-
0010	543+47	-	605+00	SEGMENT 1 - STAGE 3	44	-	214	9,416	6	264	-	-	12	528	48	2,112	20	880	-	-	-	-
0010	543+47	-	605+00	SEGMENT 1 - STAGE 4	10	-	114	1,140	6	60	-	-	12	120	41	410	18	180	-	-	-	-
0010	783+00	-	900+00	SEGMENT 2 - STAGE 1	10	-	260	2,600	10	100	-	-	20	200	72	720	28	280	-	-	-	-
0010	783+00	-	900+00	SEGMENT 2 - STAGE 2	30	-	199	5,970	10	300	-	-	20	600	41	1,230	26	780	-	-	-	-
0010	783+00	-	900+00	SEGMENT 2 - STAGE 3	20	-	260	5,200	10	200	-	-	20	400	72	1,440	28	560	-	-	-	-
0010	783+00	-	900+00	SEGMENT 2 - STAGE 4	10	-	199	1,990	10	100	-	-	20	200	41	410	26	260	-	-	-	-
0010	900+00	-	1016+95	SEGMENT 3 - STAGE 1	15	-	288	4,320	10	150	-	-	20	300	16	240	44	660	-	-	-	-
0010	900+00	-	1016+95	SEGMENT 3 - STAGE 2	18	-	290	5,220	10	180	-	-	20	360	16	288	38	684	-	-	-	-
0010	900+00	-	1016+95	SEGMENT 3 - STAGE 3	30	-	288	8,640	10	300	-	-	20	600	16	480	44	1,320	-	-	-	-
0010	900+00	-	1016+95	SEGMENT 3 - STAGE 4	10	-	290	2,900	10	100	-	-	20	200	16	160	38	380	-	-	-	-
0010				ADVANCE WIDTH SIGNS	94	-		-		-	-	-		-		-	61	5,734	-	-	-	-
0010				CTH X RAMP DETOUR	14	-	40	560	10	140	-	-	13	182		-	190	2,660	1	9	36	-
0010				CTH X BRIDGE DETOUR	28	-		-	10	280	-	-	4	112		-	223	6,244	1	10	36	-
0010				STH 22/54 EB RAMP DETOUR	14	-	40	560	12	168	-	-	13	182		-	235	3,290	1	6	36	-
0010				STH 22/54 BRIDGE DETOUR	20	-		-	21	420	-	-	10	200		-	172	3,440	1	5	36	24
0010				STH 22/54 WB RAMP DETOUR	14	-	20	280	6	84	-	-	9	126		-	178	2,492	1	12	18	-
0010				UNDISTRIBUTED		5		500		50	10	10		100		100		250	1	5	64	-
				TOTAL 0010		67		67,018		4,922	312	312		8,382		12,134		33,685		47	226	24

3

DELINEATORS

CATEGORY	LOCATION	633.0100 DELINEATOR POSTS STEEL EACH	633.0500 DELINEATOR REFLECTORS EACH
0010	UNDISTRIBUTED	88	88
	TOTAL 0000	88	88

MARKING

CATEGORY	STATION	TO	STATION	LOCATION	646.2025 MARKING LINE GROOVED BLACK EPOXY 6-INCH LF	646.2040 MARKING LINE GROOVED WET REF EPOXY 6-INCH LF	646.2050 MARKING LINE GROOVED PERMANENT TAPE 6-INCH LF	646.4050 MARKING LINE GROOVED PERMANENT TAPE 10-INCH LF	646.5020 MARKING ARROW EPOXY EACH	646.5420 MARKING AERIAL ENFORCEMENT BAR EPOXY EACH	646.6466 COLD WEATHER MARKING EPOXY 6-INCH LF	646.7220 MARKING CHEVRON EPOXY 24-INCH LF	SPV.0060.09 REMOVING RAISED PAVEMENT MARKERS AND FILLING VOIDS EACH
0010	606+00	-	786+00	WB YELLOW EDGELINE ON USH 10	-	18,000	-	-	-	-	18,000	-	-
0010	606+00	-	786+00	WB WHITE EDGELINE ON USH 10	-	18,000	-	-	-	-	18,000	-	-
0010	606+00	-	786+00	WB LANE LINE ON USH 10	4,500	-	4,500	-	-	-	4,500	-	-
0010	543+70	-	1016+00	EB YELLOW EDGELINE ON USH 10	-	47,230	-	-	-	-	18,000	-	-
0010	543+70	-	1016+00	EB WHITE EDGELINE ON USH 10	-	47,230	-	-	-	-	18,000	-	-
0010	543+70	-	1016+00	EB LANE LINE ON USH 10	11,808		11,808	-	-	-	4,500	-	-
0010		-		STH 22 OFF RAMP	-	4,870	-	700	-	-	-	180	-
0010	552+69	-	558+00	STH 22 OFF RAMP DASHED LINE	-	-	-	133	-	-	-	-	-
0010		-		STH 22 ON RAMP	-	3,400	-	1,220	-	-	-	-	-
0010	643+75	-	644+75		-	-	-	100	-	-	-	-	-
0010		-		VAUGHAN RD	-	-	-	320	-	-	-	-	-
0010		-		HARRINGTON RD	-	-	-	120	-	-	-	-	-
0010	686+07	-	687+07		-	-	-	100	-	-	-	-	-
0010		-		HOLIDAY RD	-	-	-	350	-	-	-	-	-
0010		-		REEK RD	-	-	-	120	-	-	-	-	-
0010	739+80	-	740+80		-	-	-	100	-	-	-	-	-
0010	758+15	-	759+35		-	-	-	120	-	-	-	-	-
0010	784+15	-	785+85		-	-	-	170	-	-	-	-	-
0010		-		CTH X OFF RAMP	-	2,100		960	1	-	-	408	-
0010	805+19	-	807+36	CTH X OFF RAMP DASHED LINE	-	-	-	55	-	-	-	-	-
0010		-		CTH X ON RAMP	-	1,900		1,710	-	-	-	-	-
0010		-		STH F ON RAMP	-	5,400		1,430	-	-	-	-	-
0010	905+40	-	906+60		-			120	-	-	-	-	-
0010	912+80	-	914+00		-	-	-	120	-	-	-	-	-
0010		-		LITTLE RIVER RD	-	-	-	350	-	-	-	-	-
0010		-		EVANSWOOD RD	-	-	-	130	-	-	-	-	-
0010	942+55	-	943+85		-	-	-	130	-	-	-	-	-
0010	950+10	-	951+40		-	-	-	130	-	-	-	-	-
0010		-		CTH U	-	-	-	380	-	-	-	-	-
0010	983+45	-	984+45		-	-	-	100	-	-	-	-	-
0010	995+75	-	996+75		-	-	-	100	-	-	-	-	-
0010				OLD HWY 49	-	-	-	320	-	-	-	-	-
		-		UNDISTRIBUTED	-	-	-	-	-	2	-	-	70
				TOTAL 0010	16,308	148,130	16,308	9,588	1	2	81,000	588	70

3

CONSTRUCTION STAKING

CATEGORY	STATION	TO	STATION	LOCATION	650.4000 CONSTRUCTION STAKING STORM SEWER EACH	650.4500 CONSTRUCTION STAKING SUBGRADE LF	650.5000 CONSTRUCTION STAKING BASE LF	650.5500 CONSTRUCTION STAKING CURB GUTTER AND CURB & GUTTER LF	650.6000 CONSTRUCTION STAKING PIPE CULVERTS EACH	650.7000 CONSTRUCTION STAKING CONCRETE PAVEMENT LF	650.8000 CONSTRUCTION STAKING RESURFACING REFERENCE LF	650.9000 CONSTRUCTION STAKING CURB RAMPS EACH	650.9920 CONSTRUCTION STAKING SLOPE STAKES LF
0010	655+24	-	677+35		-	-	-	-	-	2,211	-	-	-
0010	716+16	-	778+14		-	-	-	-	-	6,198	-	-	-
0010	821+34	-	821+82		-	-	-	-	-	48	-	-	-
0010	867+76	-	868+26		-	-	-	-	-	50	-	-	-
0010	867+83	-	868+53		-	-	-	-	-	70	-	-	-
0010	869+43	-	871+16		-	-	-	-	-	173	-	-	-
0010	869+43	-	869+84		-	-	-	-	-	41	-	-	-
0010	869+69	-	870+00		-	-	-	-	-	31	-	-	-
0010	48+51	-	49+13		-	-	-	-	-	62	-	-	-
0010	51+60	-	51+82		-	-	-	-	-	22	-	-	-
0010				PERMANENT	5	-	-	408	3	-	47,350	4	-
0010				CROSSOVERS	1	5,778	5,778	-	3	-	-	-	11,556
0010				WIDENING	-	2,469	2,469	-	-	-	-	-	2,469
				TOTAL 0010	6	8,247	8,247	408	6	8,906	47,350	4	14,025

EASTBOUND REPAIRS

CATEGORY	STATION	TO	STATION	LOCATION	SPV.0030.01 ASPHLATIC MASTIC JOINT SEALING CWT	SPV.0090.03 CONCRETE JOINT AND CRACK CLEANING LF	SPV.0195.01 CONCRETE JOINT AND CRACK REPAIR (HMA) TON	REMARKS
0010	543+70	-	1016+00	EASTBOUND	100	1,600	20	
				TOTAL 0010	100	1600	20	

SAWING

CATEGORY	LOCATION	690.0150 SAWING ASPHALT LF	690.0250 SAWING CONCRETE LF	REMARKS
0010		341	-	SAWING ASPHALT FOR SHOULDER ENDS
0010		-	30,595	
0010		127	147	B-68-121
0010		1,500		PAVEMENT WIDENING REMOVAL
	TOTAL 0010	1,968	30,742	

3

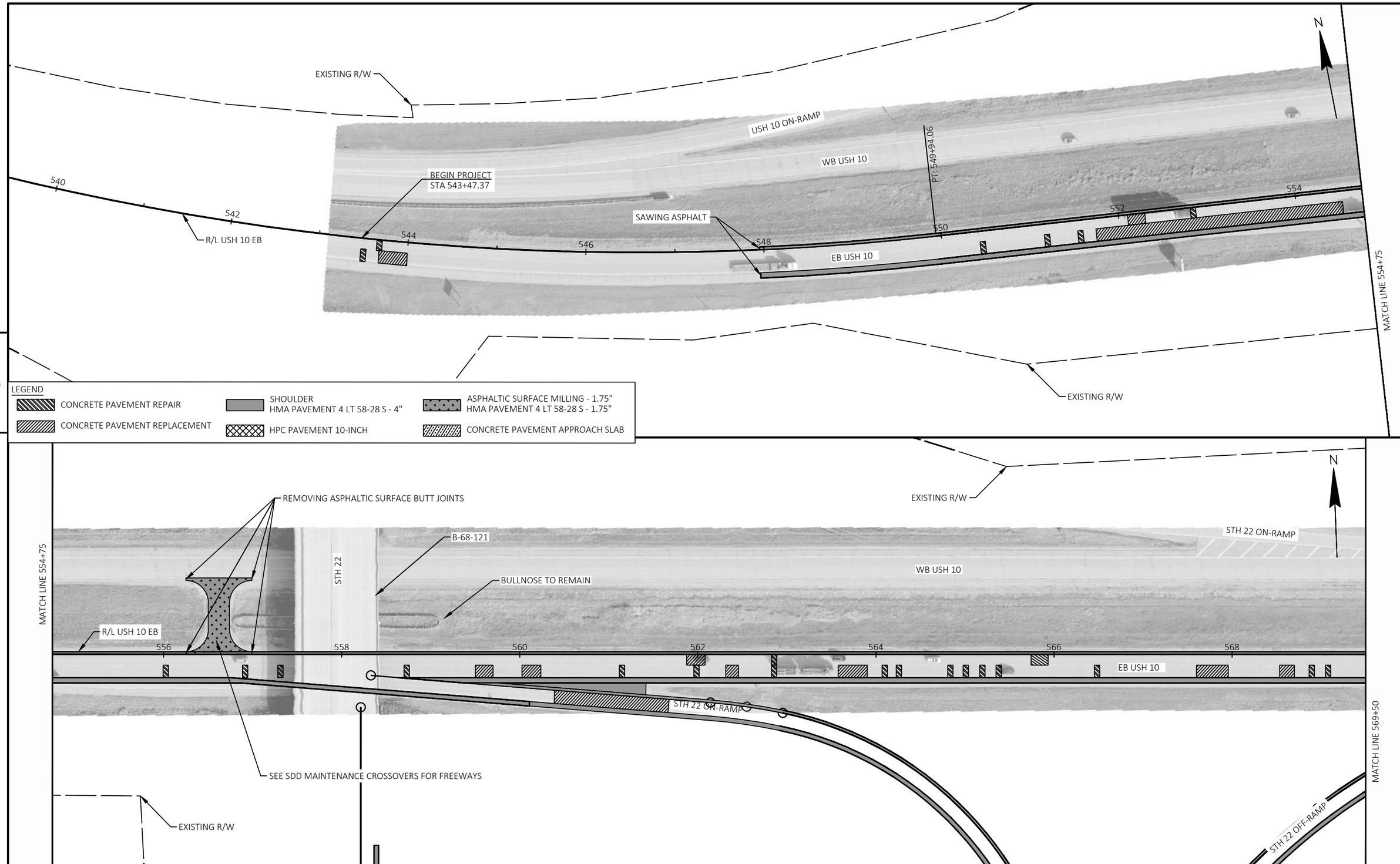

PROJECT NO: 1510-02-60	HWY: USH 10	COUNTY: WAUPACA	PLAN SHEETS	SHEET 117	E

5

5

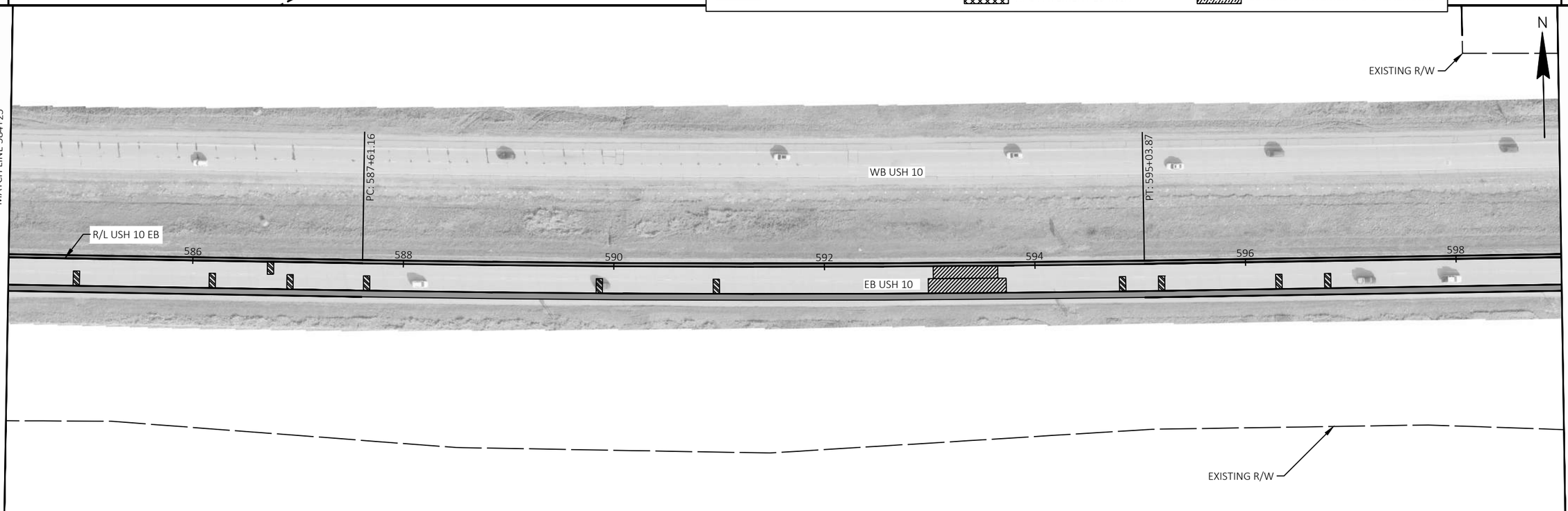

PROJECT NO: 1510-02-60	HWY: USH 10	COUNTY: WAUPACA	PLAN SHEETS	SHEET 118	E

FILE NAME : Y:\MILWAUKEE\20300S\20335.01\ENG_DOCS\1510-02-60\15100260\SHEETS\050201-PN.DWG
LAYOUT NAME - 02
PLOT DATE : 6/18/2026 2:54 PM
PLOT BY : SCHWIERKING, EMMA
PLOT NAME :
PLOT SCALE : 1 IN:100 FT
WISDOT/CADDS SHEET 44

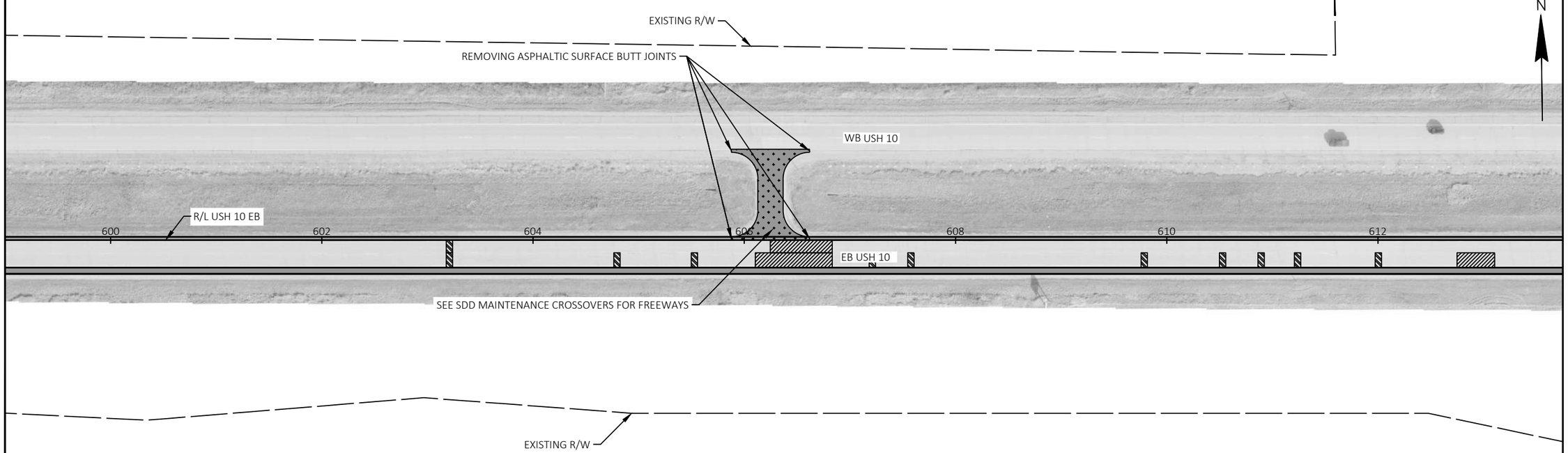

5

5

LEGEND

- CONCRETE PAVEMENT REPAIR
- CONCRETE PAVEMENT REPLACEMENT
- SHOULDER HMA PAVEMENT 4 LT 58-28 S - 4"
- HPC PAVEMENT 10-INCH
- ASPHALTIC SURFACE MILLING - 1.75" HMA PAVEMENT 4 LT 58-28 S - 1.75"
- CONCRETE PAVEMENT APPROACH SLAB

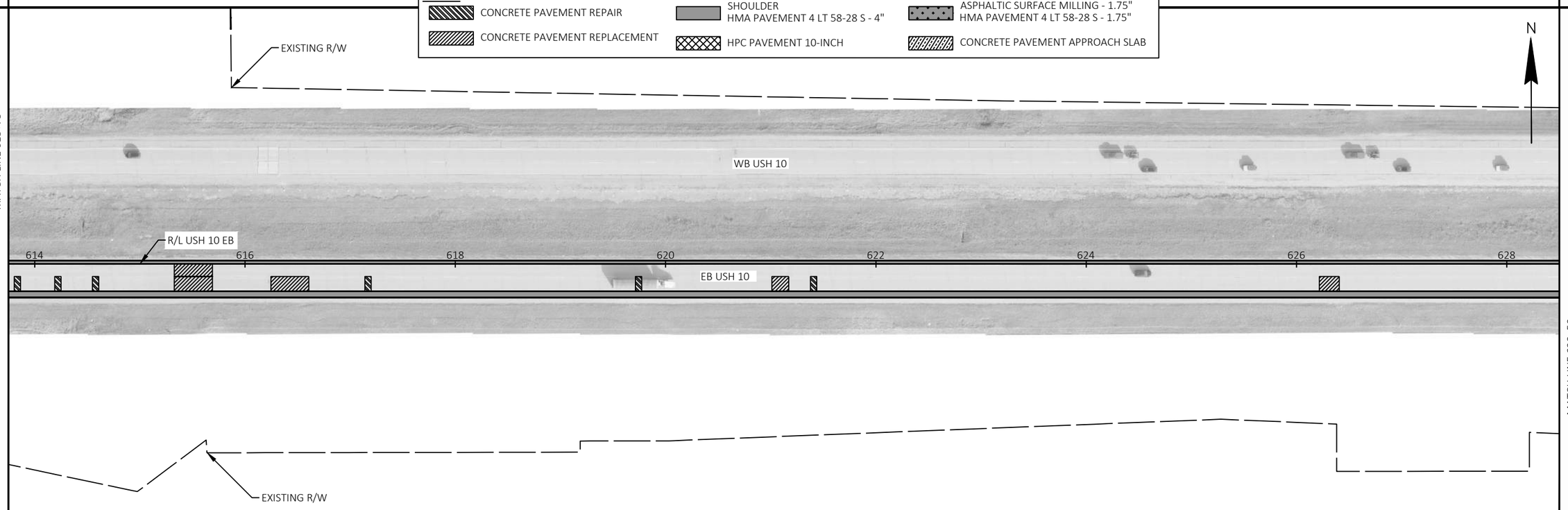

PROJECT NO: 1510-02-60	HWY: USH 10	COUNTY: WAUPACA	PLAN SHEETS	SHEET 119	E

FILE NAME : Y:\MILWAUKEE\20300S\20335.01\ENG_DOCS\1510-02-60\15100260\SHEETS\050201-PN.DWG
LAYOUT NAME - 03
PLOT DATE : 6/18/2026 2:54 PM
PLOT BY : SCHWIERKING, EMMA
PLOT NAME :
PLOT SCALE : 1 IN:100 FT

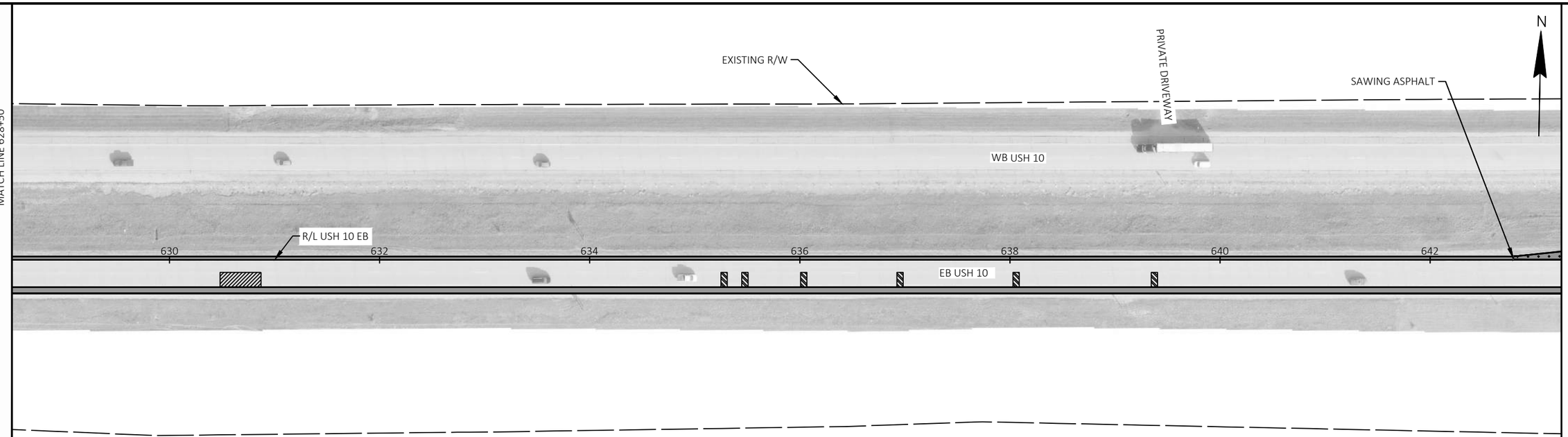

5

5

LEGEND

- CONCRETE PAVEMENT REPAIR
- CONCRETE PAVEMENT REPLACEMENT
- SHOULDER HMA PAVEMENT 4 LT 58-28 S - 4"
- HPC PAVEMENT 10-INCH
- ASPHALTIC SURFACE MILLING - 1.75" HMA PAVEMENT 4 LT 58-28 S - 1.75"
- CONCRETE PAVEMENT APPROACH SLAB

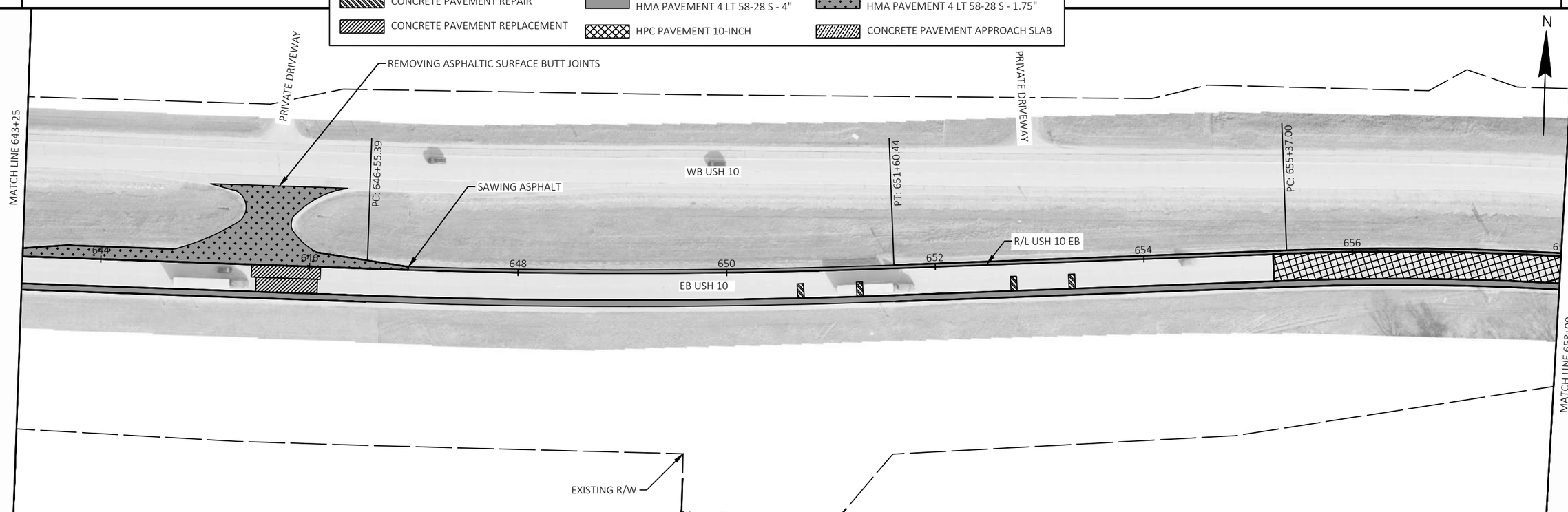

PROJECT NO: 1510-02-60	HWY: USH 10	COUNTY: WAUPACA	PLAN SHEETS	SHEET 120	E

FILE NAME : Y:\MILWAUKEE\20300S\20335.01\ENG_DOCS\1510-02-60\15100260\SHEETS\050201-PN.DWG
LAYOUT NAME - 04
PLOT DATE : 6/18/2026 2:54 PM
PLOT BY : SCHWIERKING, EMMA
PLOT NAME :
PLOT SCALE : 1 IN:100 FT
WISDOT/CADDS SHEET 44

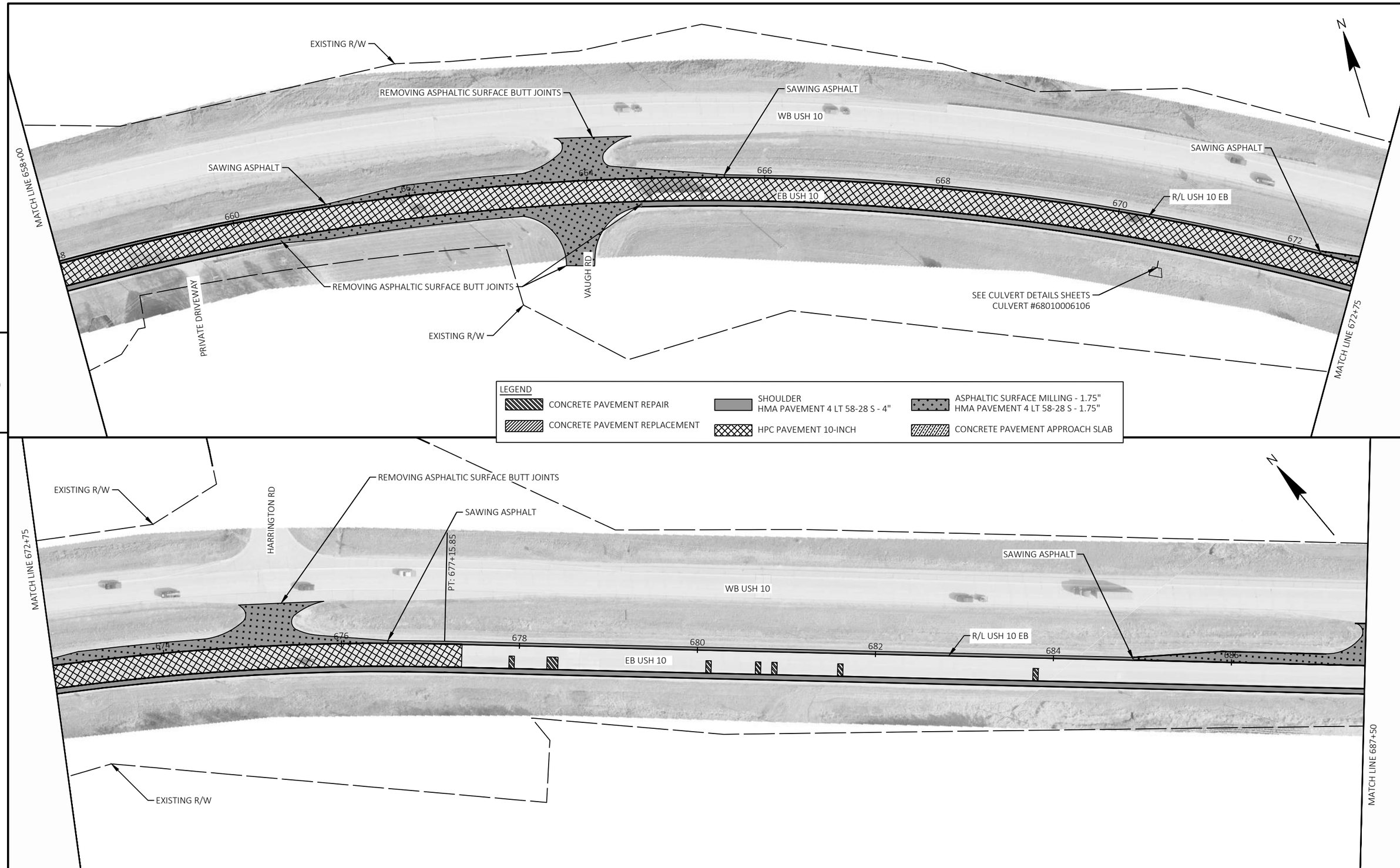

5

5

PROJECT NO: 1510-02-60	HWY: USH 10	COUNTY: WAUPACA	PLAN SHEETS	SHEET 121	E

FILE NAME : Y:\MILWAUKEE\20300S\20335.01\ENG_DOCS\1510-02-60\15100260\SHEETS\050201-PN.DWG
LAYOUT NAME - 05
PLOT DATE : 6/18/2026 2:51 PM
PLOT BY : SCHWIERKING, EMMA
PLOT NAME :
PLOT SCALE : 1 IN:100 FT
WISDOT/CADDS SHEET 44

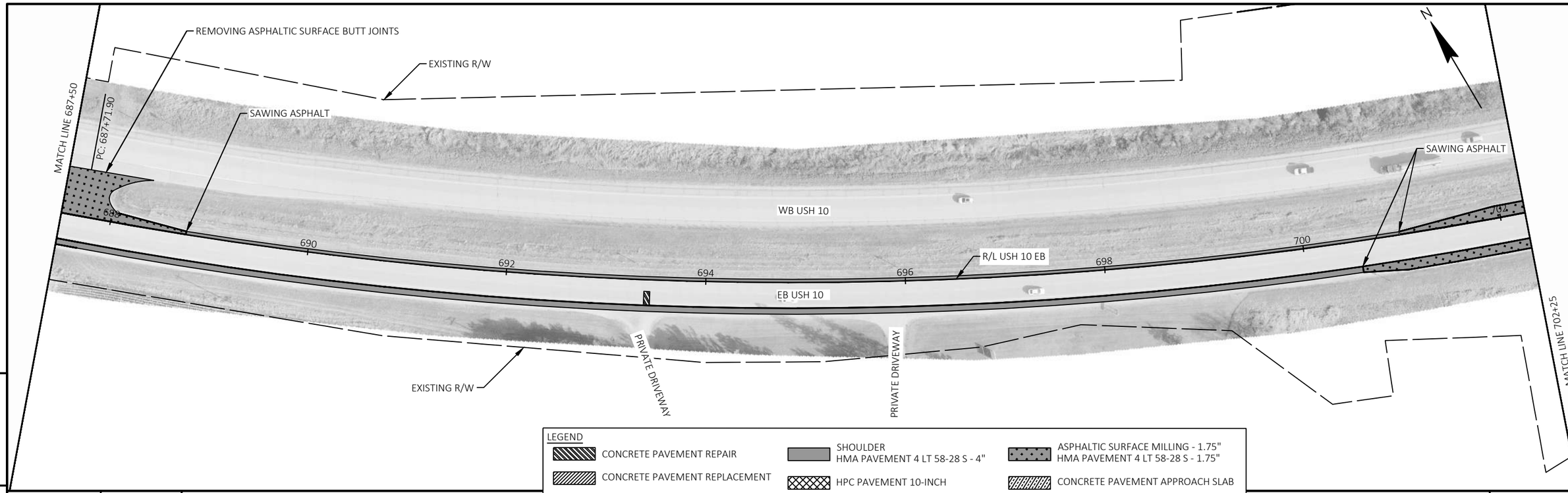

PROJECT NO: 1510-02-60	HWY: USH 10	COUNTY: WAUPACA	PLAN SHEETS	SHEET 122	E

FILE NAME : Y:\MILWAUKEE\20300S\20335.01\ENG_DOCS\1510-02-60\15100260\SHEETS\050201-PN.DWG
LAYOUT NAME - 06
PLOT DATE : 6/18/2026 2:53 PM
PLOT BY : SCHWIERKING, EMMA
PLOT NAME :
PLOT SCALE : 1 IN:100 FT
WISDOT/CADDS SHEET 44

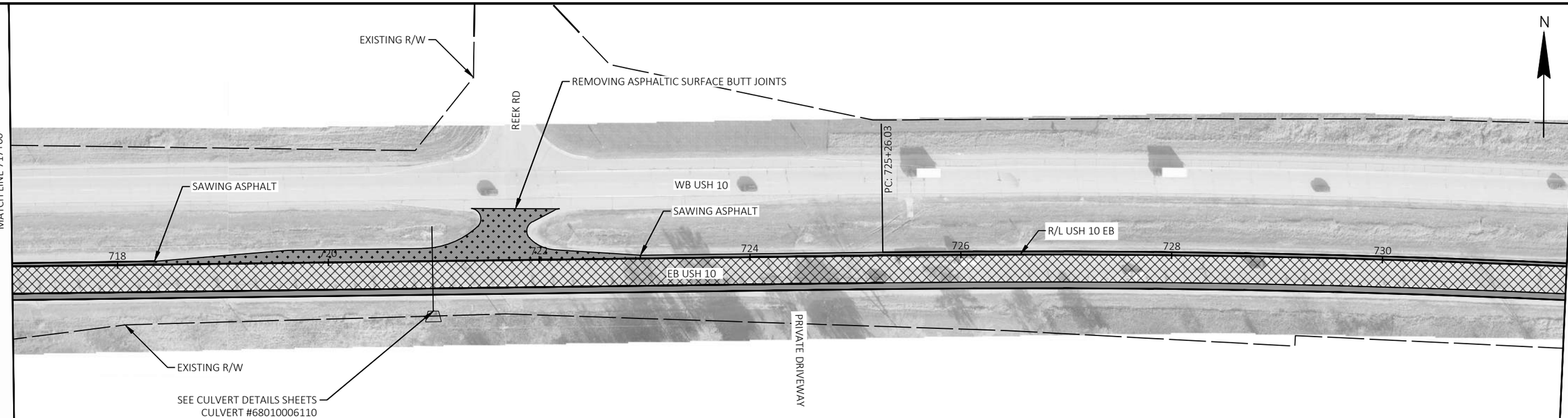

5

5

LEGEND

- CONCRETE PAVEMENT REPAIR
- CONCRETE PAVEMENT REPLACEMENT
- SHOULDER HMA PAVEMENT 4 LT 58-28 S - 4"
- HPC PAVEMENT 10-INCH
- ASPHALTIC SURFACE MILLING - 1.75" HMA PAVEMENT 4 LT 58-28 S - 1.75"
- CONCRETE PAVEMENT APPROACH SLAB

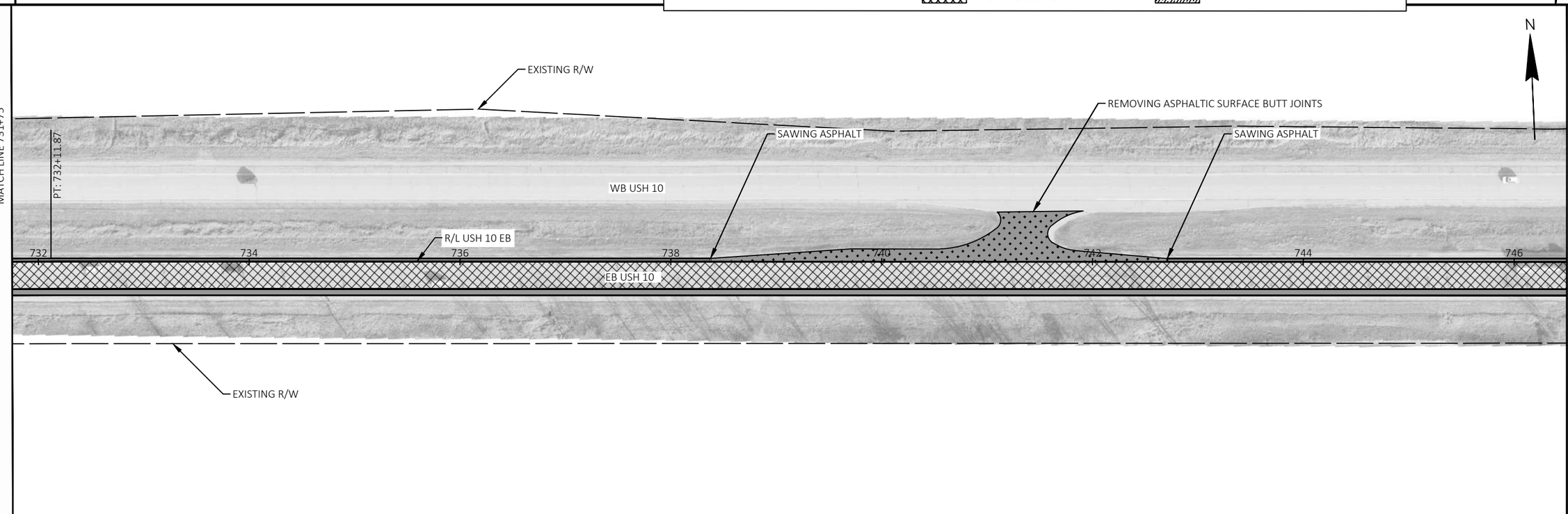

PROJECT NO: 1510-02-60	HWY: USH 10	COUNTY: WAUPACA	PLAN SHEETS	SHEET 123	E

FILE NAME : Y:\MILWAUKEE\20300S\20335.01\ENG_DOCS\1510-02-60\15100260\SHEETS\050201-PN.DWG
LAYOUT NAME - 07
PLOT DATE : 6/18/2026 2:56 PM
PLOT BY : SCHWIERKING, EMMA
PLOT NAME :
PLOT SCALE : 1 IN:100 FT
WISDOT/CADDS SHEET 44

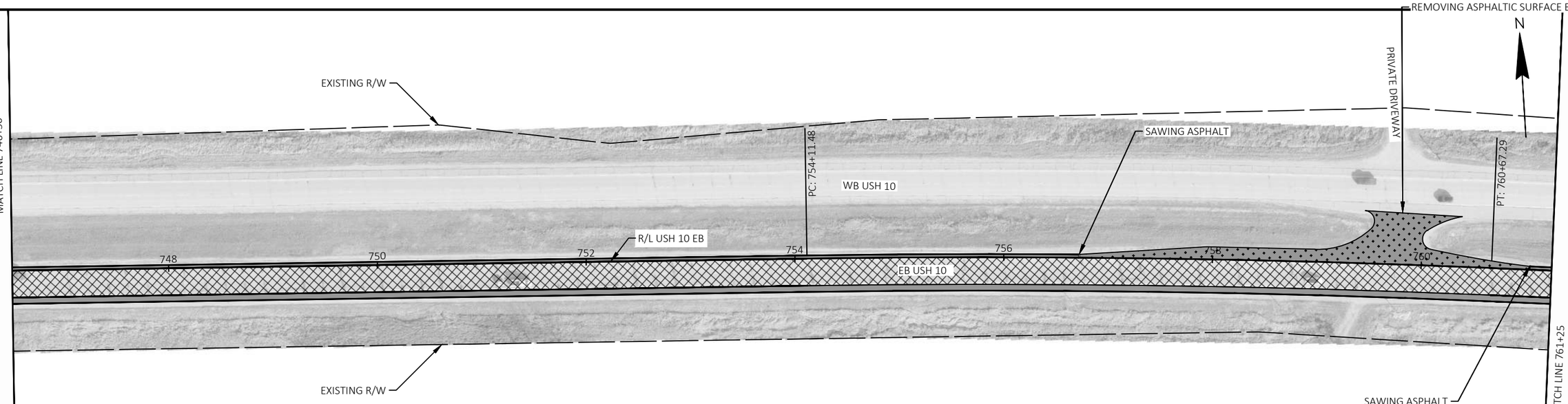

5

5

LEGEND

- CONCRETE PAVEMENT REPAIR
- CONCRETE PAVEMENT REPLACEMENT
- SHOULDER HMA PAVEMENT 4 LT 58-28 S - 4"
- HPC PAVEMENT 10-INCH
- ASPHALTIC SURFACE MILLING - 1.75" HMA PAVEMENT 4 LT 58-28 S - 1.75"
- CONCRETE PAVEMENT APPROACH SLAB

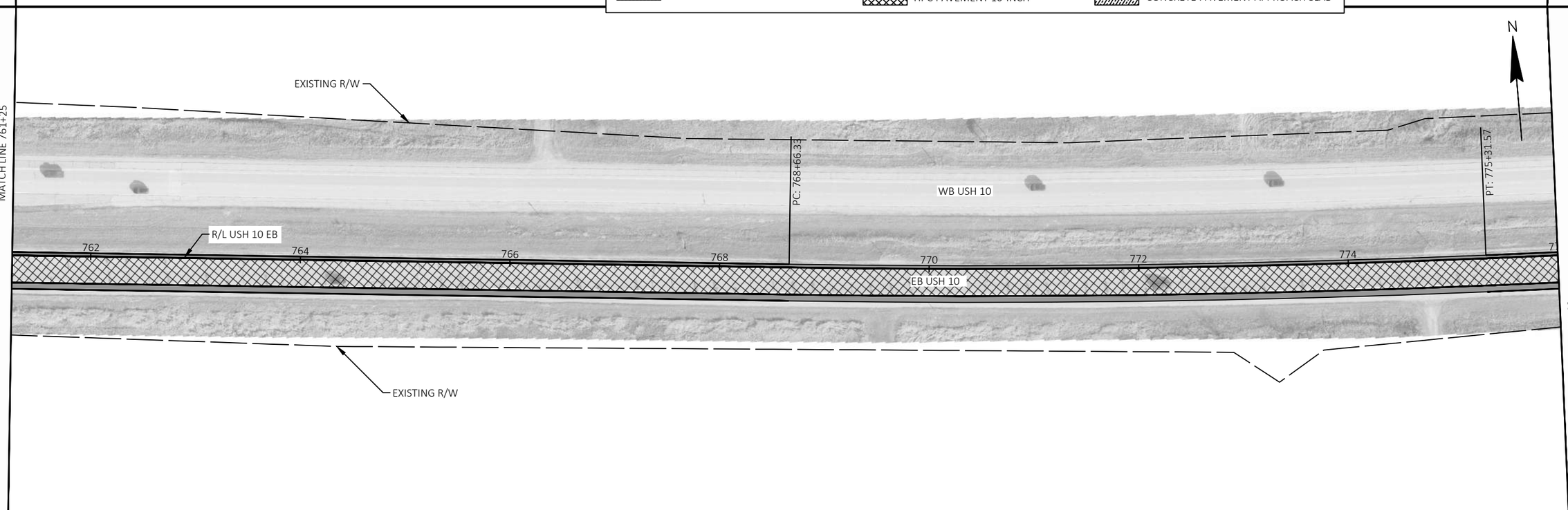

PROJECT NO: 1510-02-60	HWY: USH 10	COUNTY: WAUPACA	PLAN SHEETS	SHEET 124	E

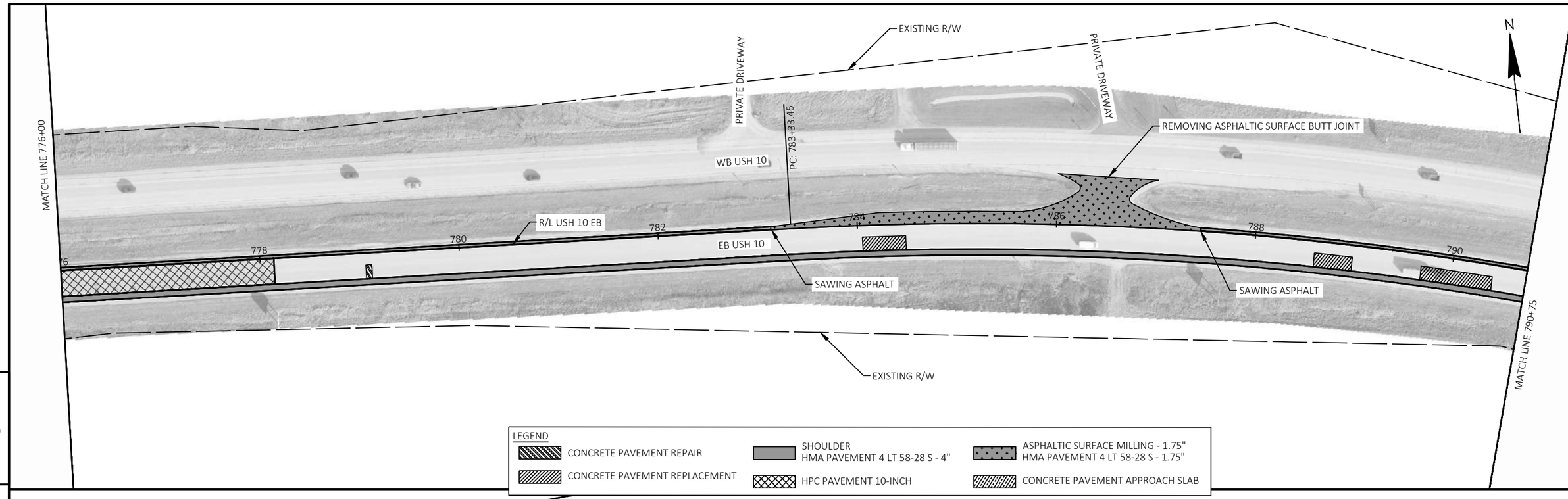

PROJECT NO: 1510-02-60	HWY: USH 10	COUNTY: WAUPACA	PLAN SHEETS	SHEET 125	E

FILE NAME : Y:\MILWAUKEE\20300S\20335.01\ENG_DOCS\1510-02-60\15100260\SHEETS\050201-PN.DWG
LAYOUT NAME - 09
PLOT DATE : 6/18/2026 2:53 PM
PLOT BY : SCHWIERKING, EMMA
PLOT NAME :
PLOT SCALE : 1 IN:100 FT
WISDOT/CADDS SHEET 44

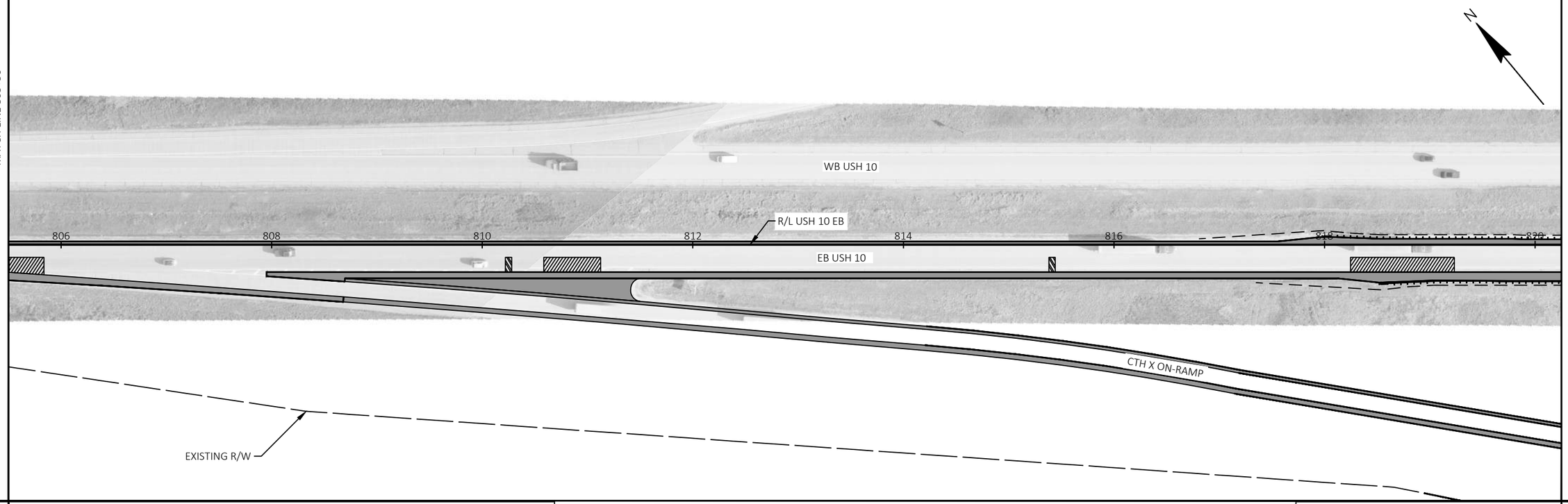

5

5

LEGEND

- CONCRETE PAVEMENT REPAIR
- CONCRETE PAVEMENT REPLACEMENT
- SHOULDER HMA PAVEMENT 4 LT 58-28 S - 4"
- HPC PAVEMENT 10-INCH
- ASPHALTIC SURFACE MILLING - 1.75" HMA PAVEMENT 4 LT 58-28 S - 1.75"
- CONCRETE PAVEMENT APPROACH SLAB

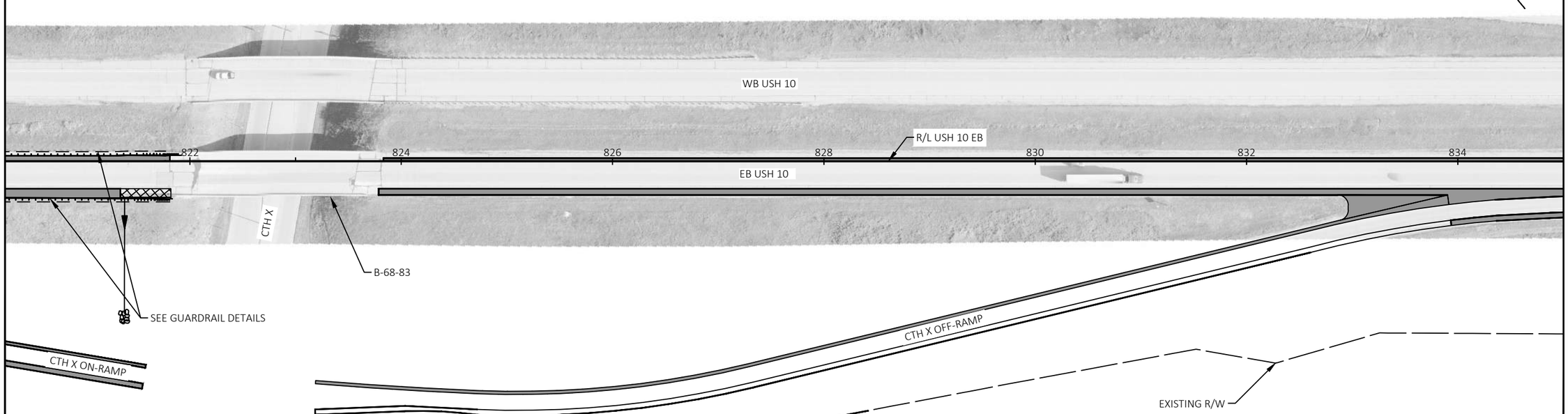

PROJECT NO: 1510-02-60	HWY: USH 10	COUNTY: WAUPACA	PLAN SHEETS	SHEET 126	E

FILE NAME : Y:\MILWAUKEE\20300S\20335.01\ENG_DOCS\1510-02-60\15100260\SHEETS\050201-PN.DWG
LAYOUT NAME - 10
PLOT DATE : 6/18/2026 2:52 PM
PLOT BY : SCHWIERKING, EMMA
PLOT NAME :
PLOT SCALE : 1 IN:100 FT

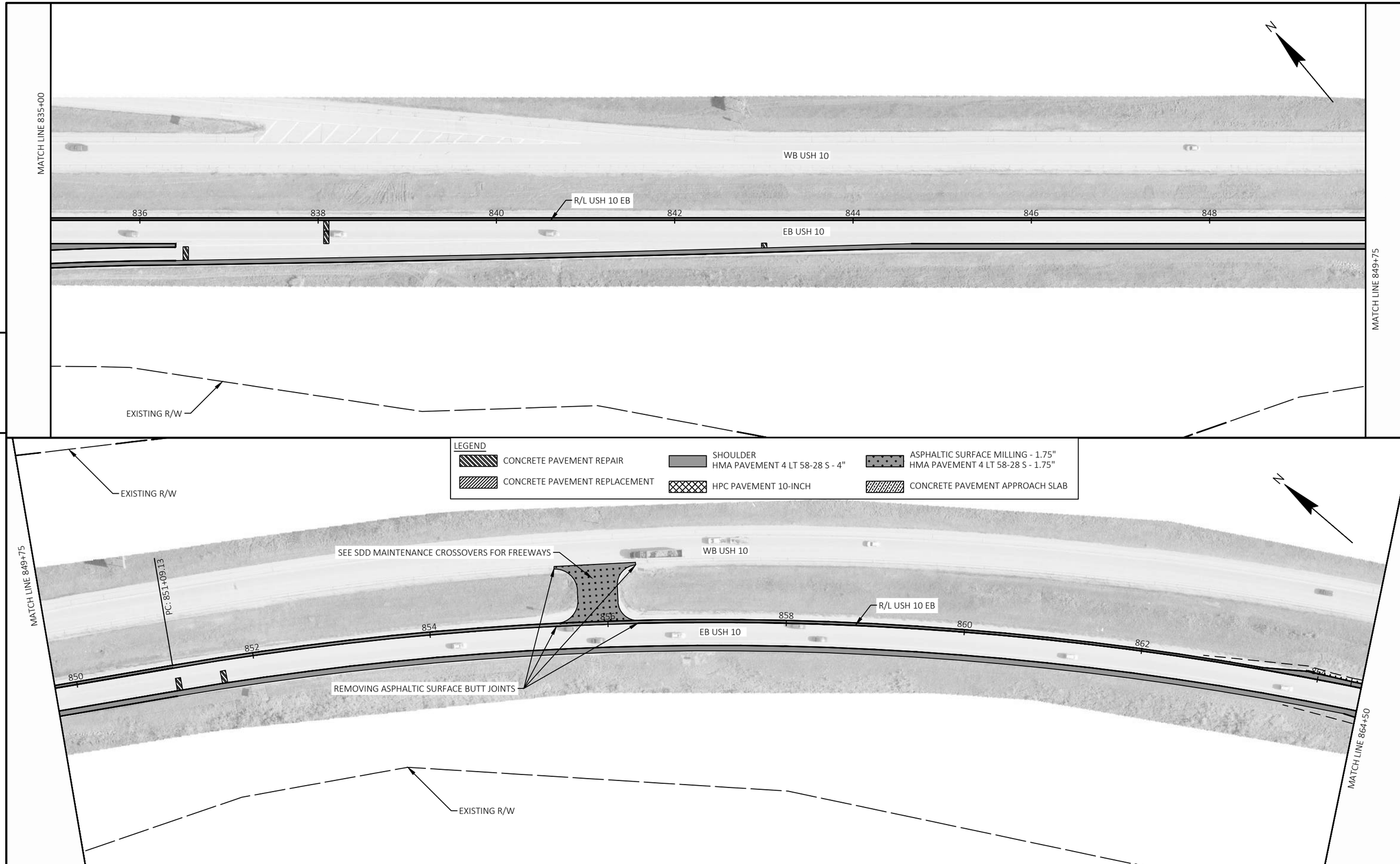

PROJECT NO: 1510-02-60	HWY: USH 10	COUNTY: WAUPACA	PLAN SHEETS	SHEET 127	E

FILE NAME : Y:\MILWAUKEE\20300S\20335.01\ENG_DOCS\1510-02-60\15100260\SHEETS\050201-PN.DWG
LAYOUT NAME - 11
PLOT DATE : 6/18/2026 2:55 PM PLOT BY : SCHWIERKING, EMMA PLOT NAME : PLOT SCALE : 1 IN:100 FT

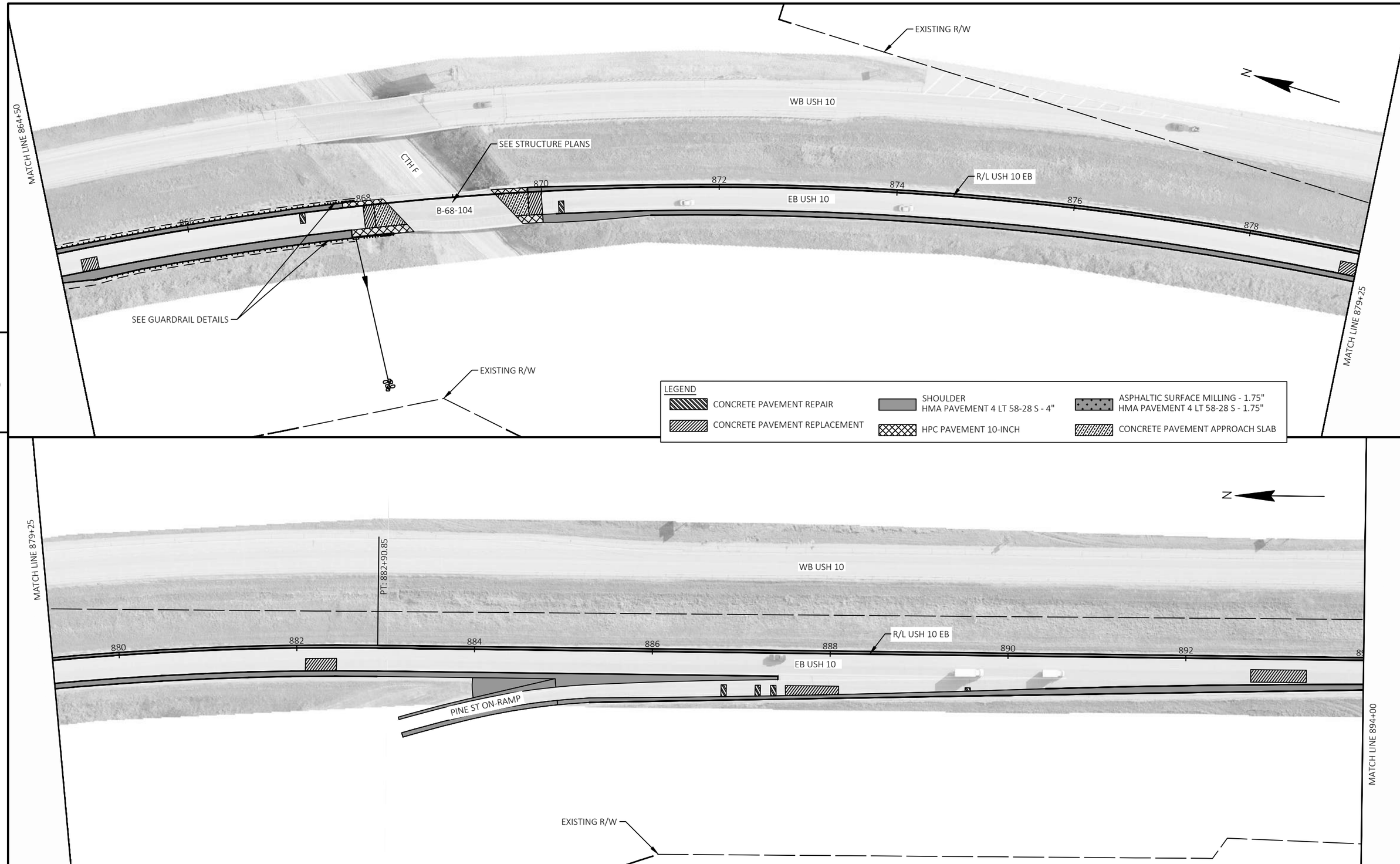

5

5

PROJECT NO: 1510-02-60	HWY: USH 10	COUNTY: WAUPACA	PLAN SHEETS	SHEET 128	E

FILE NAME : Y:\MILWAUKEE\20300S\20335.01\ENG_DOCS\1510-02-60\15100260\SHEETS\050201-PN.DWG
LAYOUT NAME - 12
PLOT DATE : 6/18/2026 2:55 PM
PLOT BY : SCHWIERKING, EMMA
PLOT NAME :
PLOT SCALE : 1 IN:100 FT
WISDOT/CADDS SHEET 44

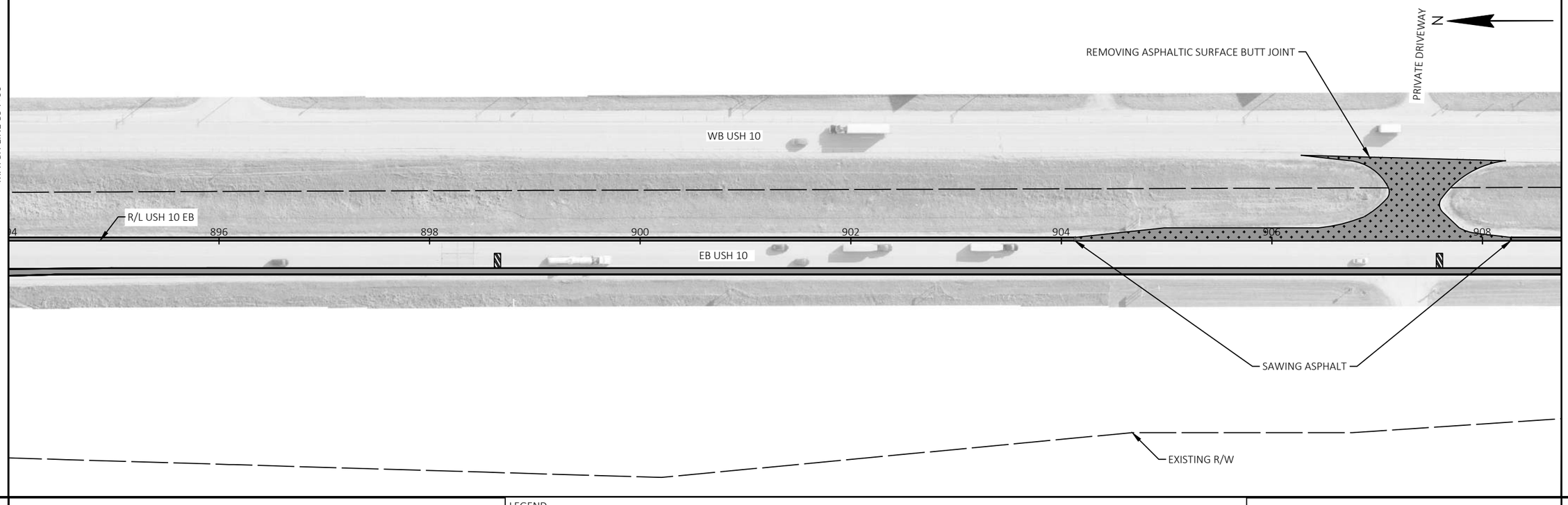

5

5

LEGEND

- CONCRETE PAVEMENT REPAIR
- CONCRETE PAVEMENT REPLACEMENT
- SHOULDER HMA PAVEMENT 4 LT 58-28 S - 4"
- HPC PAVEMENT 10-INCH
- ASPHALTIC SURFACE MILLING - 1.75" HMA PAVEMENT 4 LT 58-28 S - 1.75"
- CONCRETE PAVEMENT APPROACH SLAB

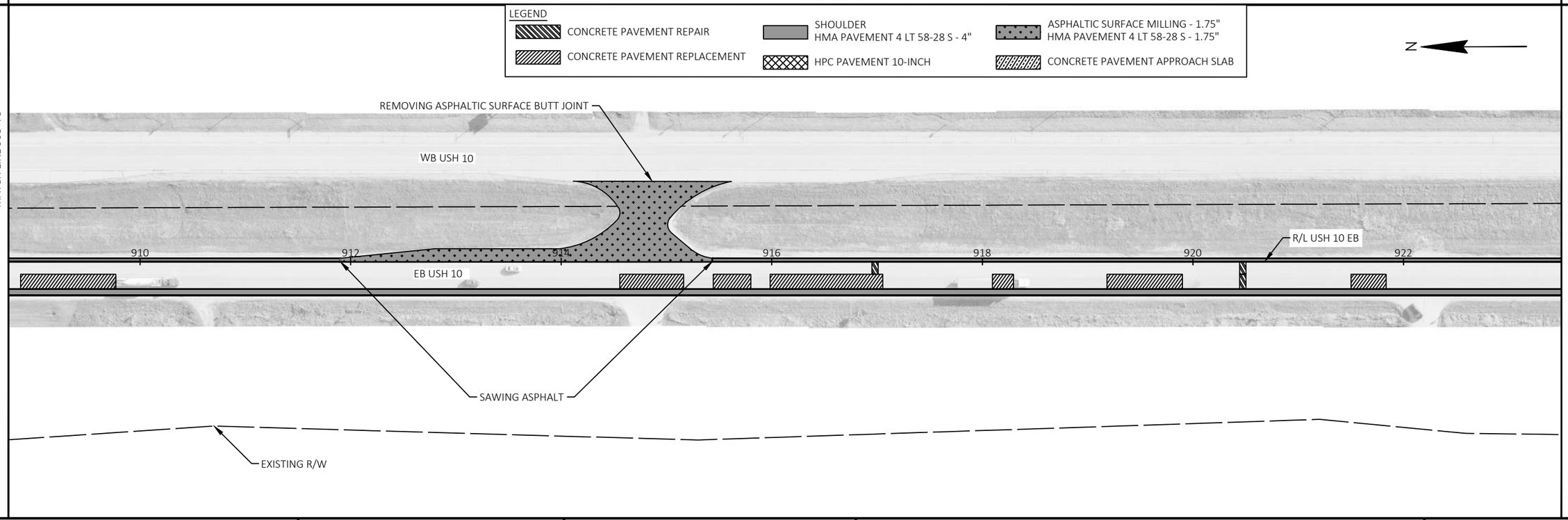

PROJECT NO: 1510-02-60	HWY: USH 10	COUNTY: WAUPACA	PLAN SHEETS	SHEET 129	E

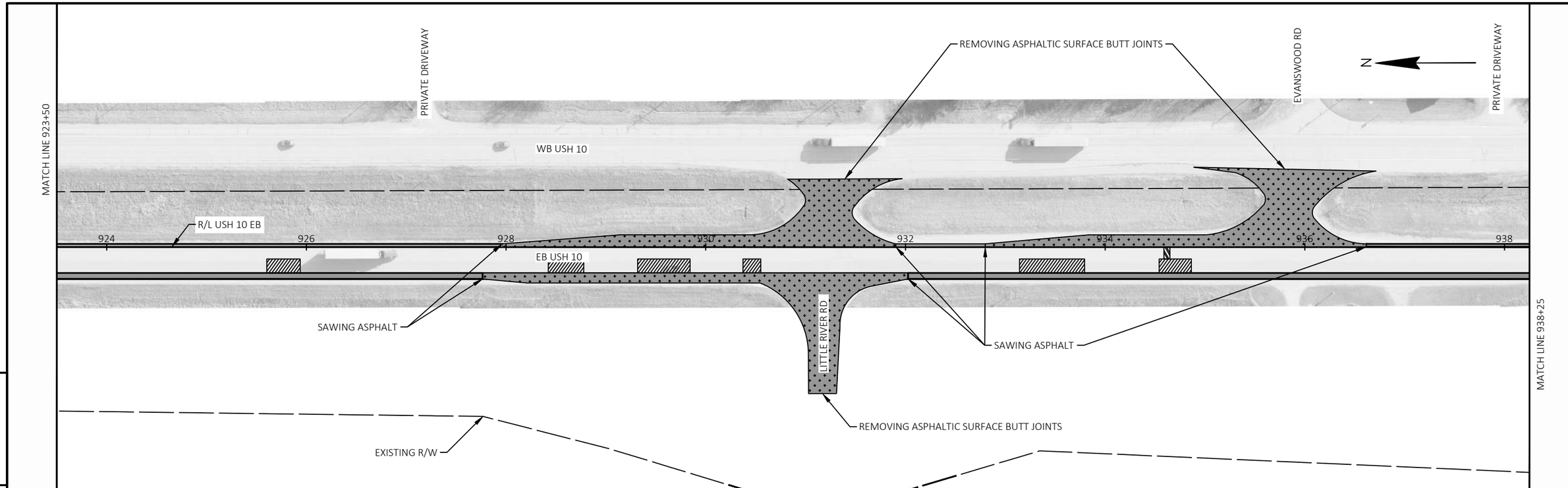

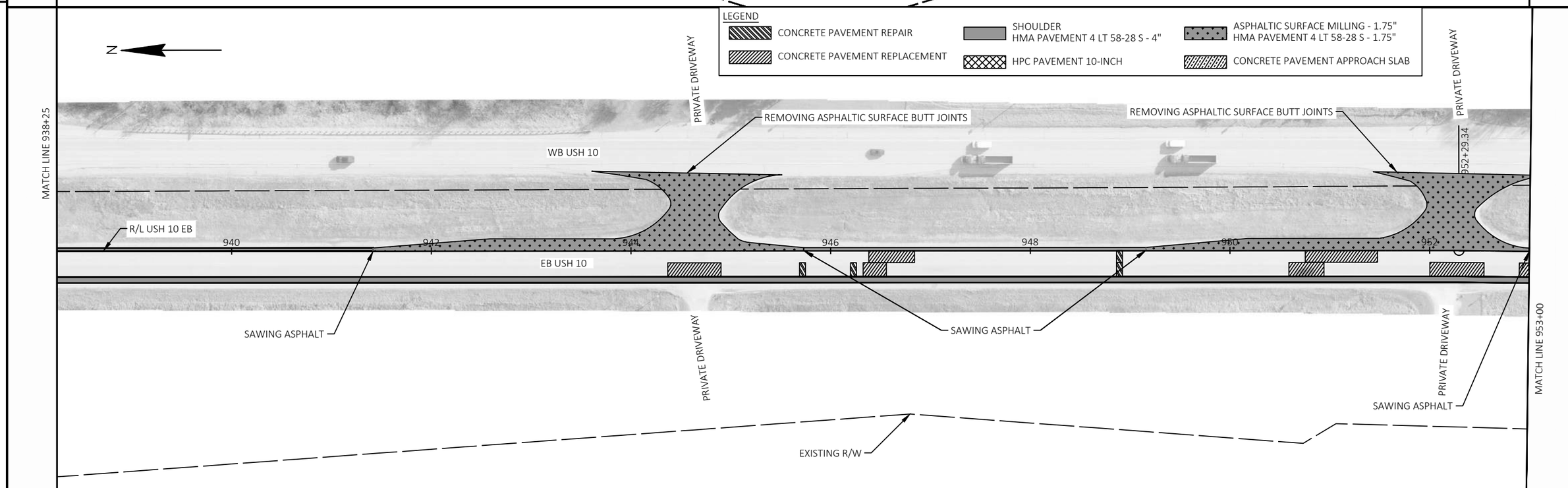

PROJECT NO: 1510-02-60	HWY: USH 10	COUNTY: WAUPACA	PLAN SHEETS	SHEET 130	E

FILE NAME : Y:\MILWAUKEE\20300S\20335.01\ENG_DOCS\1510-02-60\15100260\SHEETS\050201-PN.DWG
LAYOUT NAME - 14
PLOT DATE : 6/18/2026 2:51 PM PLOT BY : SCHWIERKING, EMMA PLOT NAME : PLOT SCALE : 1 IN:100 FT
WISDOT/CADDS SHEET 44

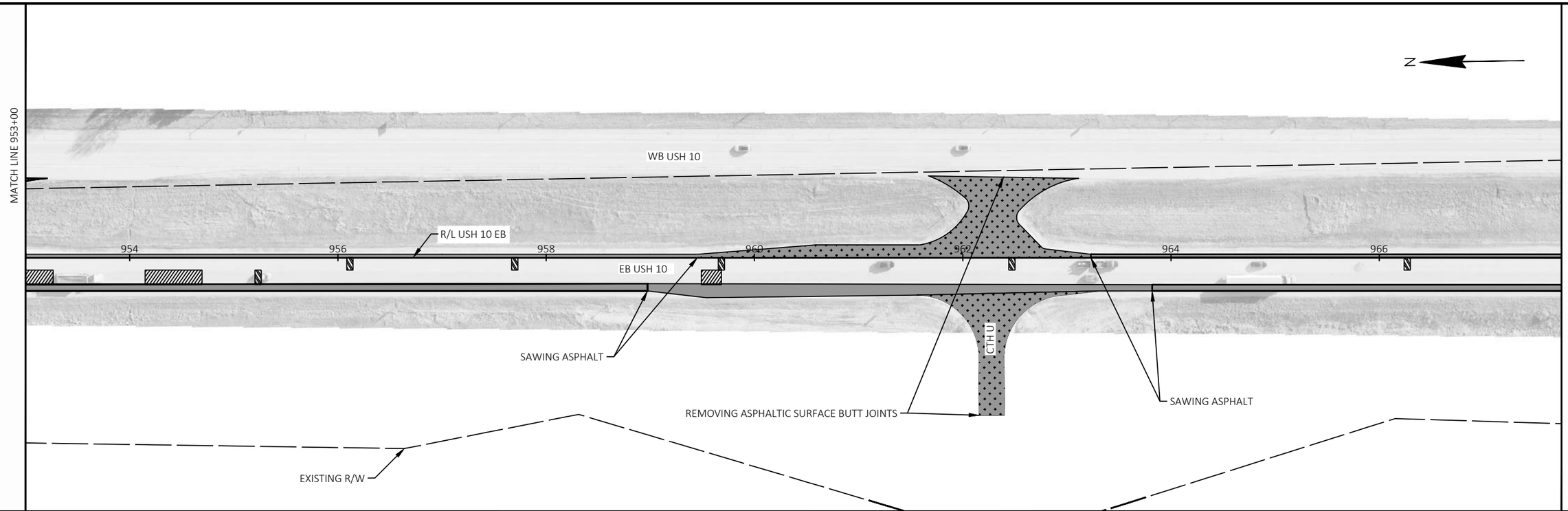

5

5

LEGEND

- CONCRETE PAVEMENT REPAIR
- CONCRETE PAVEMENT REPLACEMENT
- SHOULDER HMA PAVEMENT 4 LT 58-28 S - 4"
- HPC PAVEMENT 10-INCH
- ASPHALTIC SURFACE MILLING - 1.75" HMA PAVEMENT 4 LT 58-28 S - 1.75"
- CONCRETE PAVEMENT APPROACH SLAB

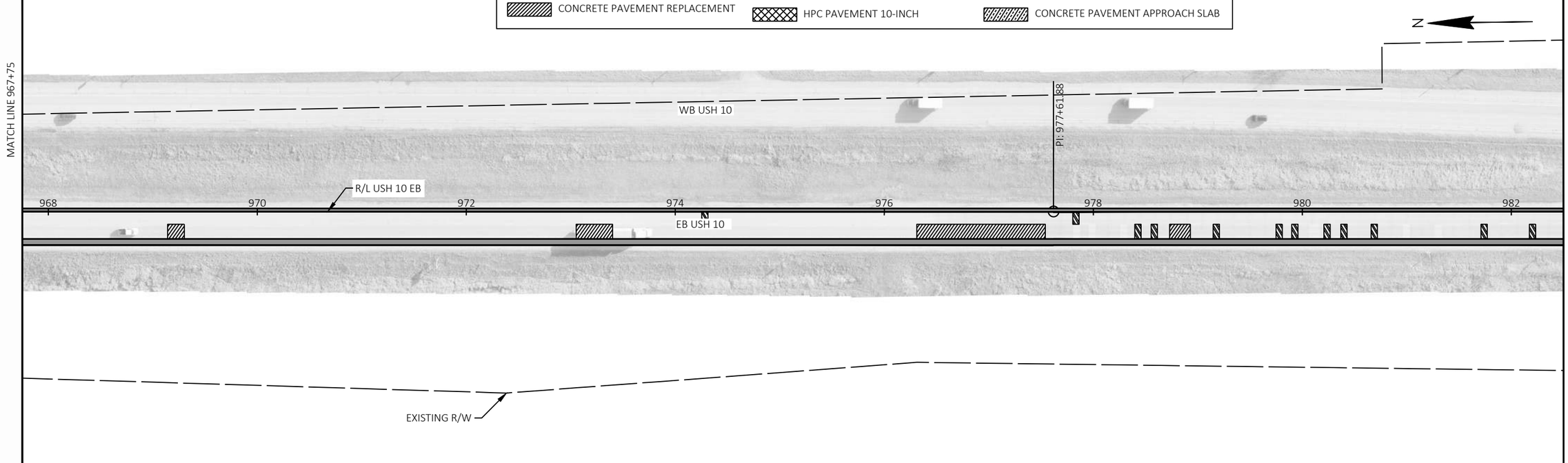

PROJECT NO: 1510-02-60	HWY: USH 10	COUNTY: WAUPACA	PLAN SHEETS	SHEET 131	E

FILE NAME : Y:\MILWAUKEE\20300S\20335.01\ENG_DOCS\1510-02-60\15100260\SHEETS\050201-PN.DWG
LAYOUT NAME - 15
PLOT DATE : 6/18/2026 2:55 PM PLOT BY : SCHWIERKING, EMMA PLOT NAME : PLOT SCALE : 1 IN:100 FT

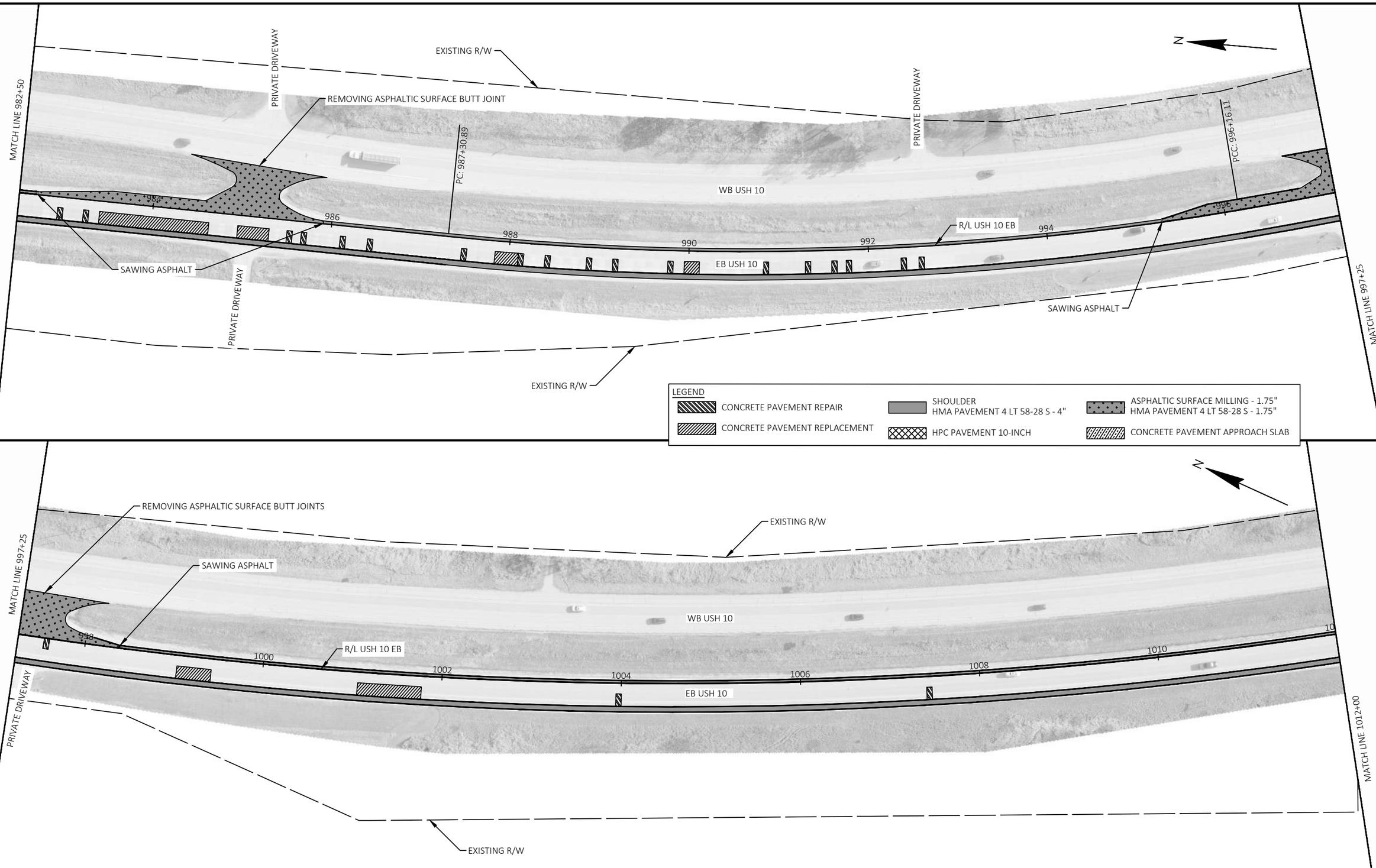

PROJECT NO: 1510-02-60	HWY: USH 10	COUNTY: WAUPACA	PLAN SHEETS	SHEET 132	E

FILE NAME : Y:\MILWAUKEE\20300S\20335.01\ENG_DOCS\1510-02-60\15100260\SHEETS\050201-PN.DWG
LAYOUT NAME - 16
PLOT DATE : 6/18/2026 2:52 PM PLOT BY : SCHWIERKING, EMMA PLOT NAME : PLOT SCALE : 1 IN:100 FT
WISDOT/CADDS SHEET 44

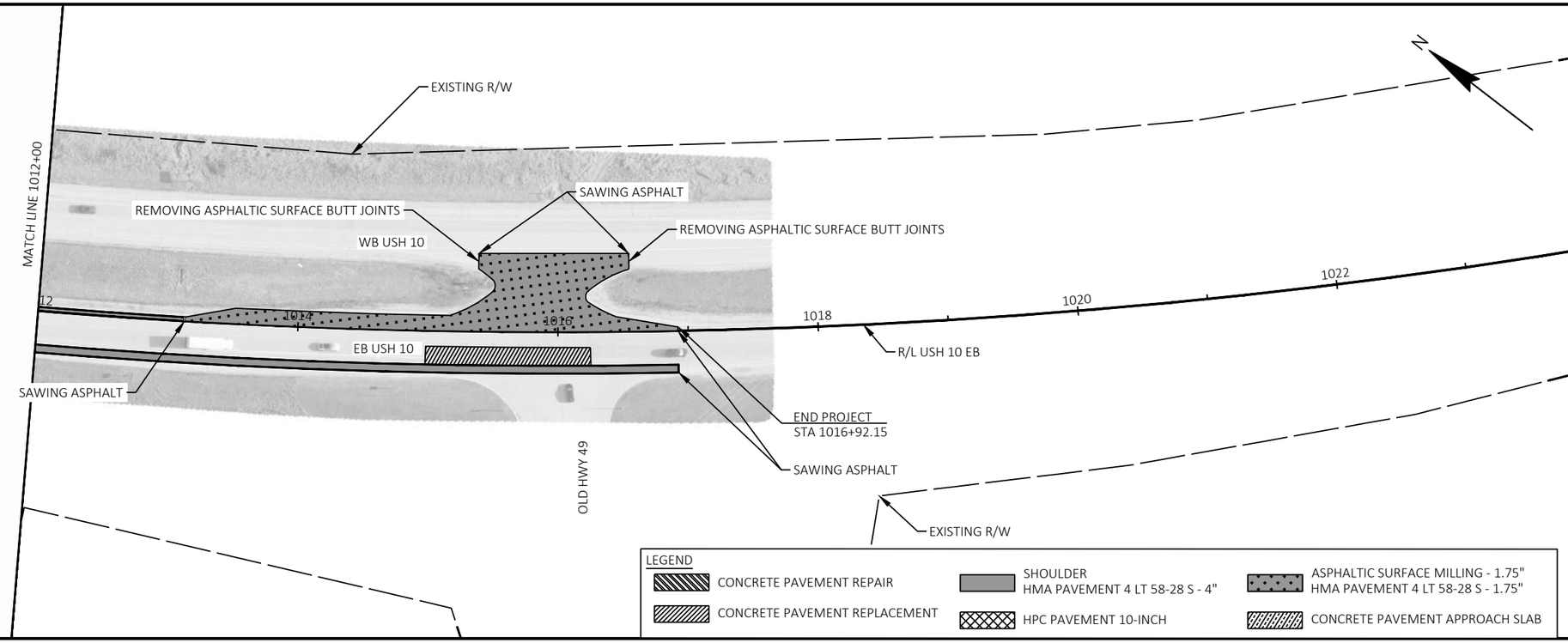

5

5

PROJECT NO: 1510-02-60	HWY: USH 10	COUNTY: WAUPACA	PLAN SHEETS	SHEET 133	E

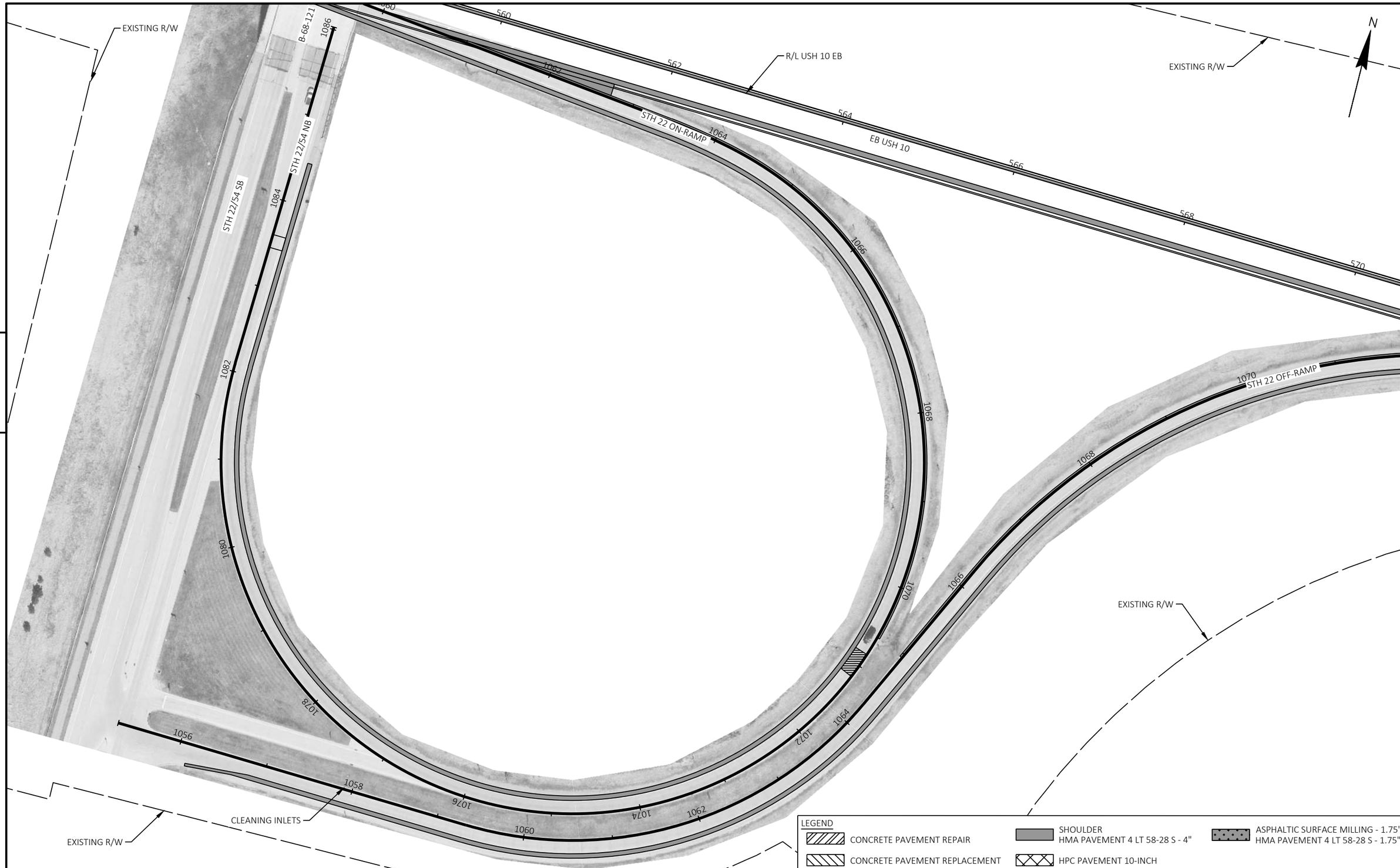

5

5

PROJECT NO: 1510-02-60	HWY: USH 10	COUNTY: WAUPACA	PLAN SHEETS - RAMPS	SHEET 134	E

FILE NAME : Y:\MILWAUKEE\20300S\20335.01\ENG_DOCS\1510-02-60\15100260\SHEETS\050202-PN.DWG
LAYOUT NAME - 18
PLOT DATE : 5/29/2026 11:42 AM
PLOT BY : SAYRE, EMMA
PLOT NAME :
PLOT SCALE : 1 IN:100 FT
WISDOT/CADDS SHEET 44

5

5

PROJECT NO: 1510-02-60	HWY: USH 10	COUNTY: WAUPACA	PLAN SHEETS - RAMPS	SHEET 135	E

FILE NAME : Y:\MILWAUKEE\20300S\20335.01\ENG_DOCS\1510-02-60\15100260\SHEETS\050202-PN.DWG
LAYOUT NAME - 34
PLOT DATE : 5/29/2026 11:43 AM
PLOT BY : SAYRE, EMMA
PLOT NAME :
PLOT SCALE : 1 IN:100 FT
WISDOT/CADDS SHEET 44

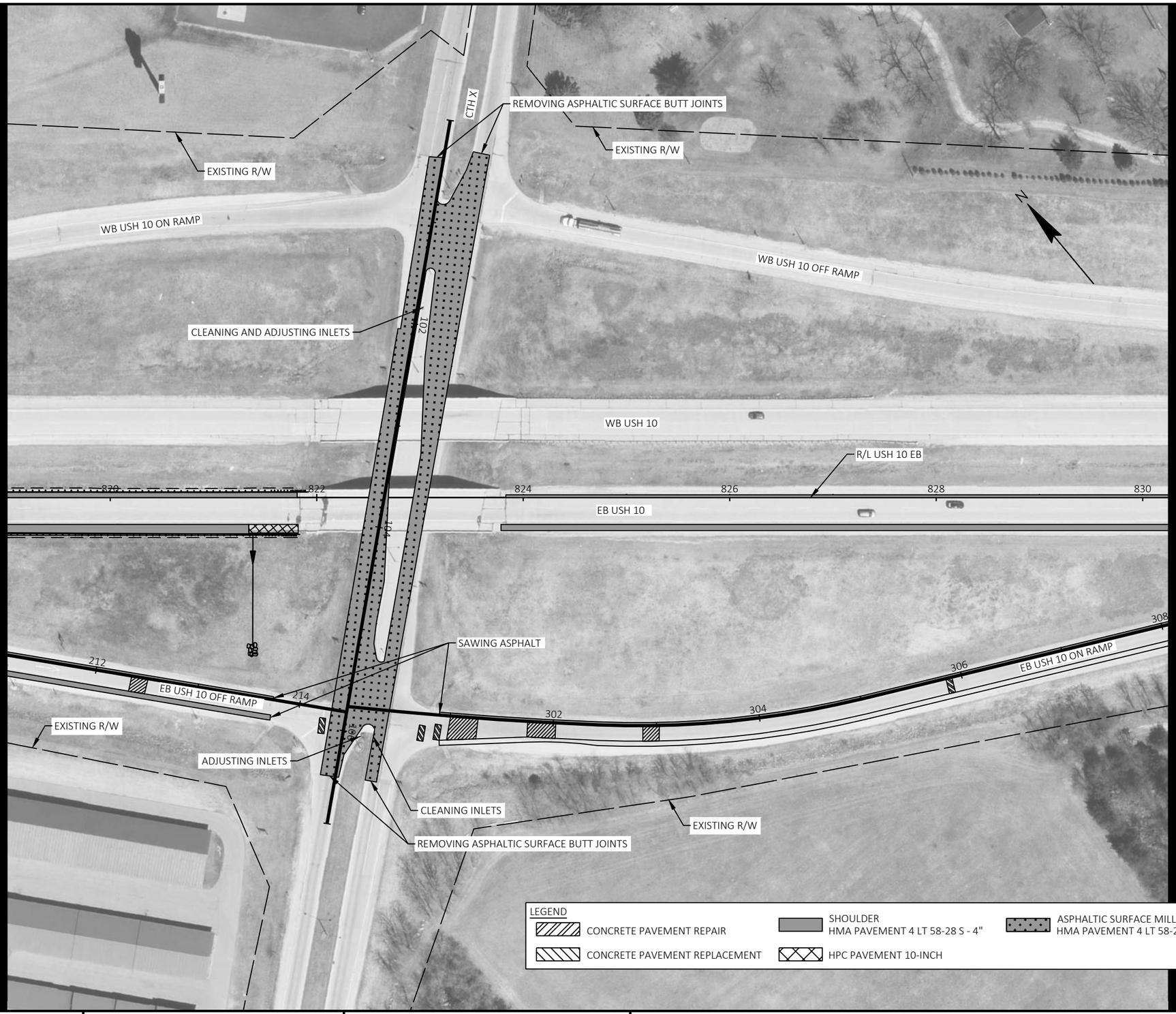

5

5

PROJECT NO: 1510-02-60	HWY: USH 10	COUNTY: WAUPACA	PLAN SHEETS - RAMPS	SHEET 136	E

FILE NAME : Y:\MILWAUKEE\20300S\20335.01\ENG_DOCS\1510-02-60\15100260\SHEETS\050202-PN.DWG
LAYOUT NAME - 35
PLOT DATE : 5/29/2026 11:43 AM PLOT BY : SAYRE, EMMA PLOT NAME : PLOT SCALE : 1 IN:100 FT

WISDOT/CADDS SHEET 44

5

5

PROJECT NO: 1510-02-60	HWY: USH 10	COUNTY: WAUPACA	PLAN SHEETS - RAMPS	SHEET 137	E

FILE NAME : Y:\MILWAUKEE\20300S\20335.01\ENG_DOCS\1510-02-60\15100260\SHEETS\050202-PN.DWG
LAYOUT NAME - 36
PLOT DATE : 5/29/2026 11:43 AM
PLOT BY : SAYRE, EMMA
PLOT NAME :
PLOT SCALE : 1 IN:100 FT

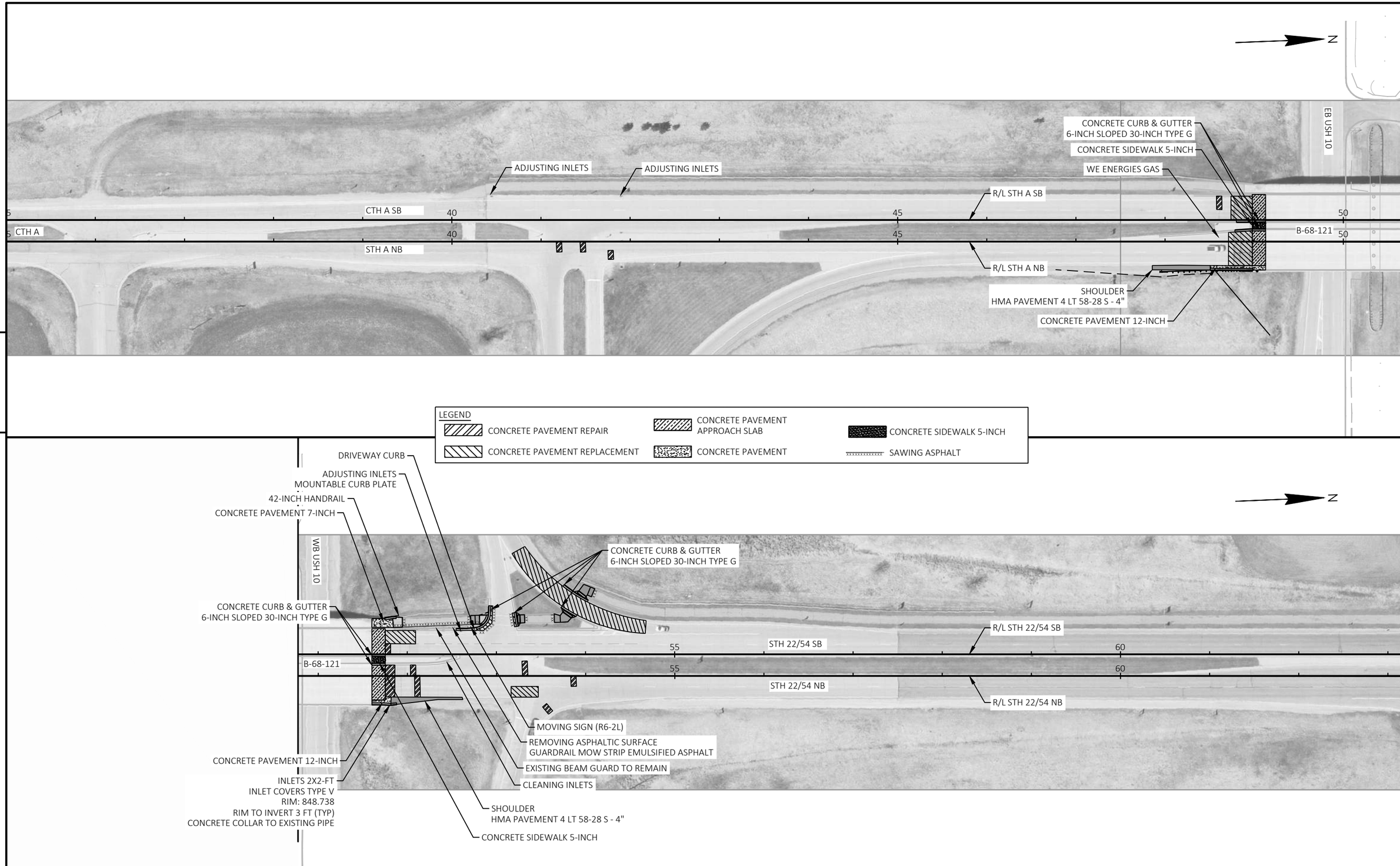

PROJECT NO: 1510-02-60	HWY: USH 10	COUNTY: WAUPACA	PLAN SHEETS - STH 22	SHEET 138	E

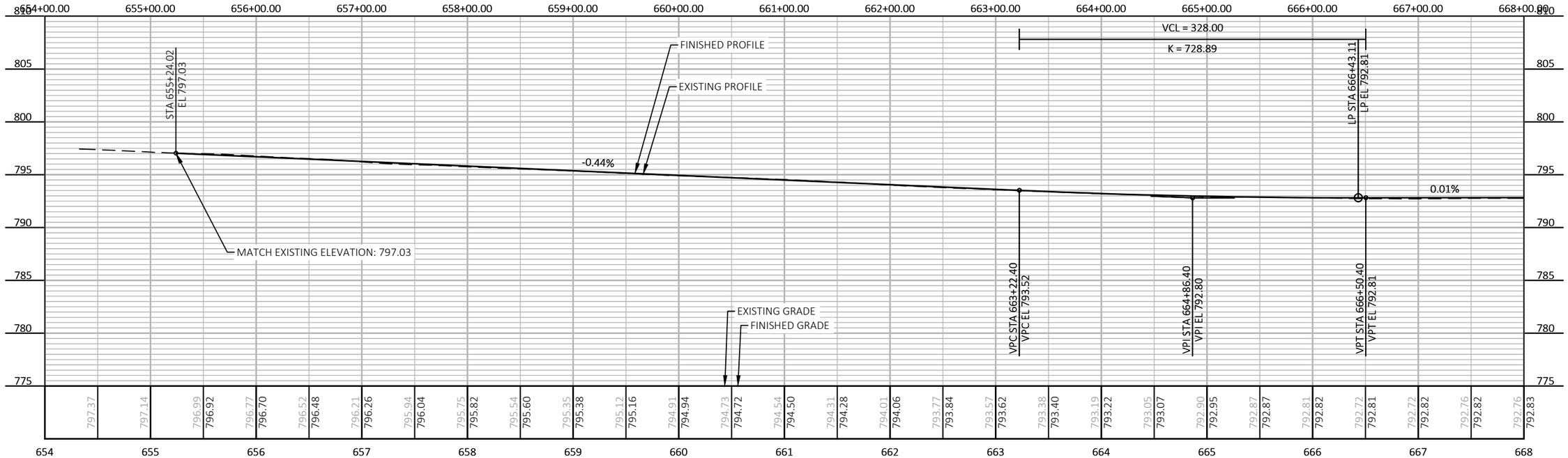

5

5

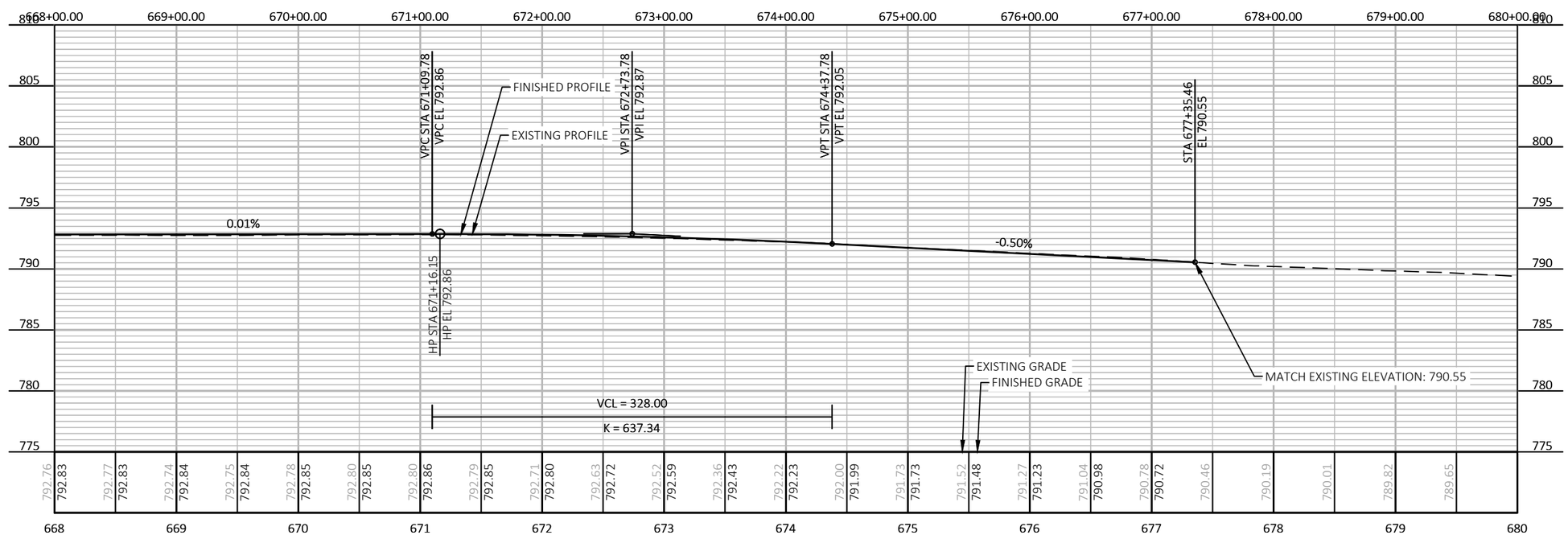

PROJECT NO: 1510-02-60	HWY: USH 10	COUNTY: WAUPACA	PROFILE SHEETS	SHEET 139	E

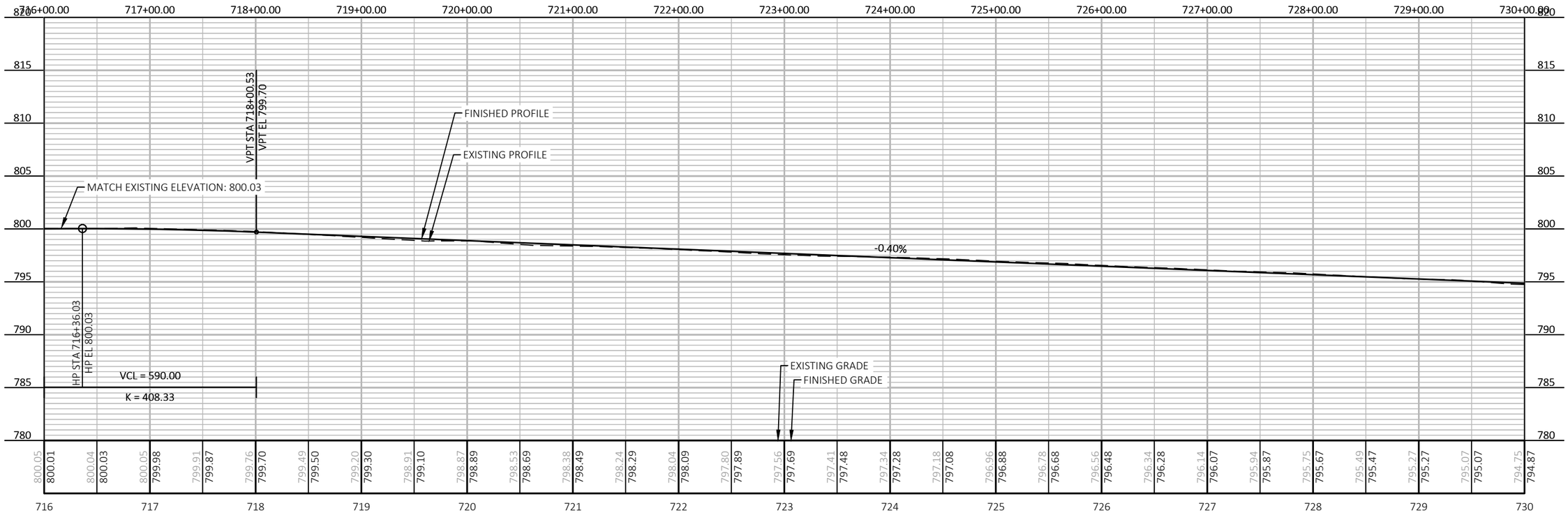

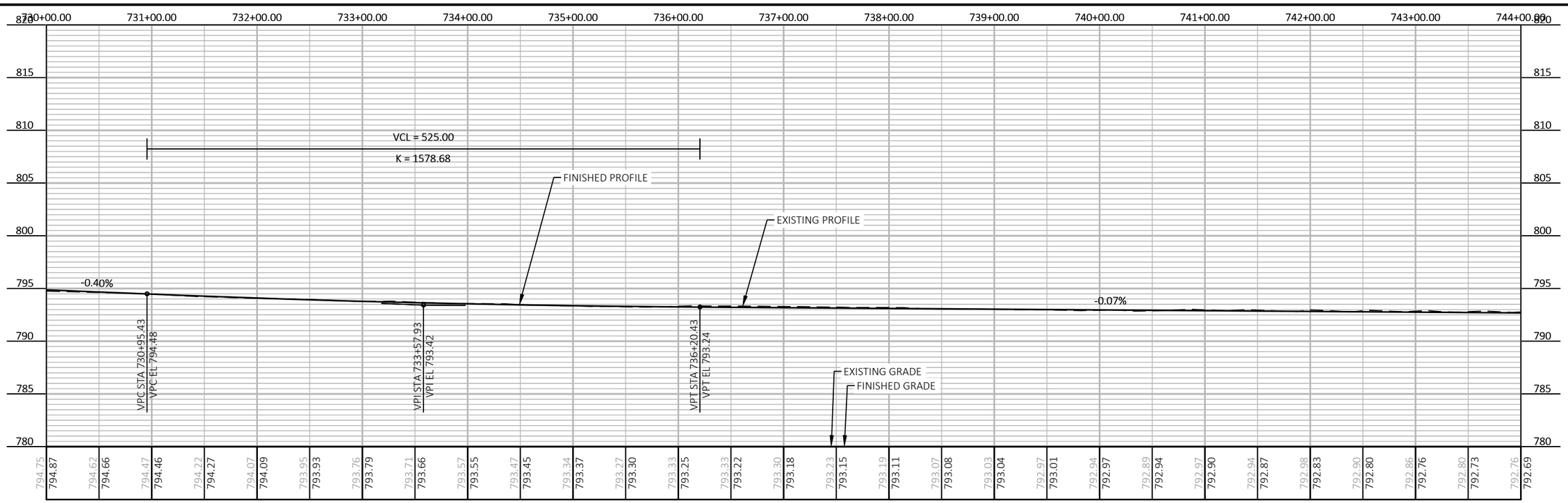

5

5

PROJECT NO: 1510-02-60	HWY: USH 10	COUNTY: WAUPACA	PROFILE SHEETS	SHEET 140	E

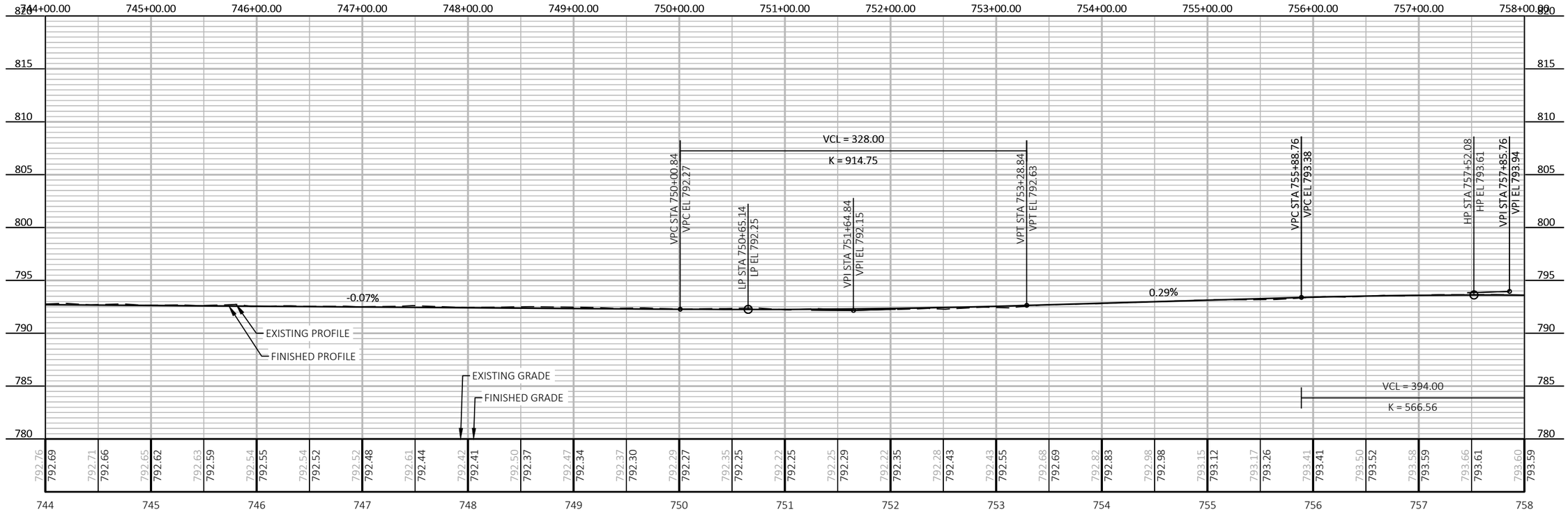

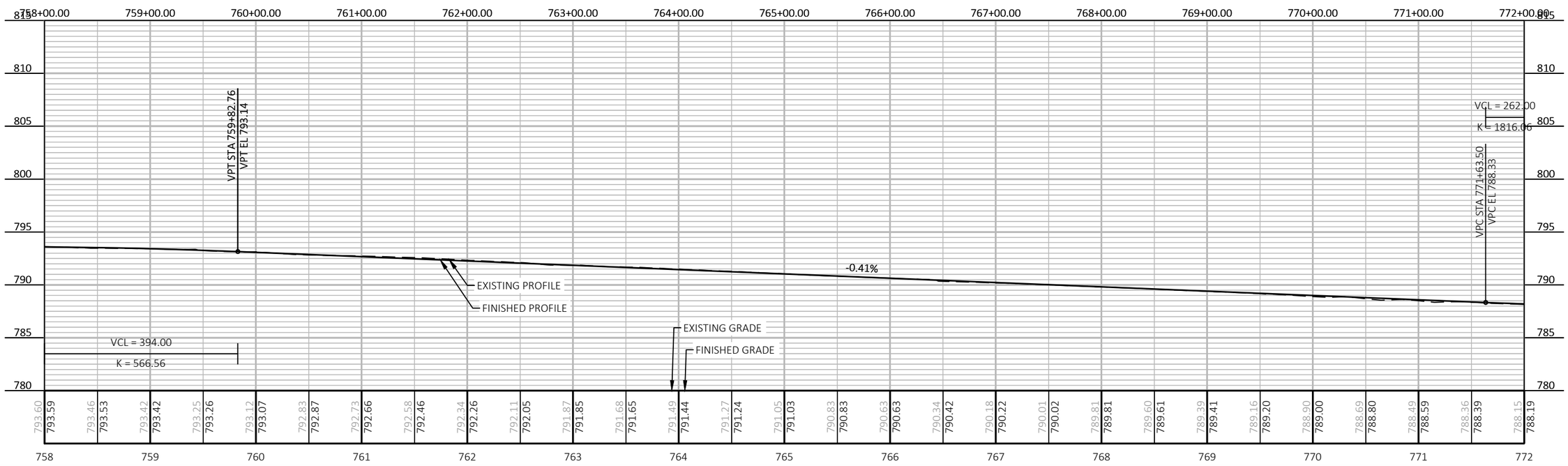

PROJECT NO: 1510-02-60	HWY: USH 10	COUNTY: WAUPACA	PROFILE SHEETS	SHEET 141	E

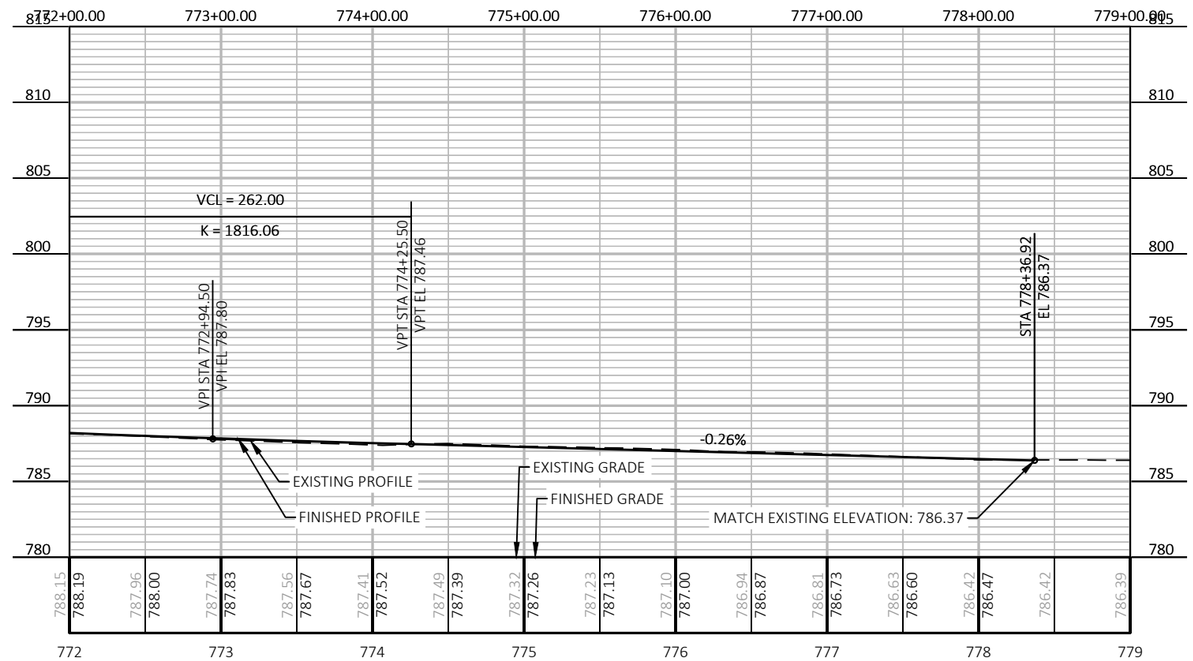

SUPERELEVATION TABLE

CURVE NO.	BEGIN S.E. ROTATION	PC	ATTAIN FULL S.E.	BEGIN S.E. ROTATION	PT	NC	CURVE RADII	MAX S.E.
4	653+07.67	655+37.00	656+09.67	676+43.18	677+15.85	679+45.18	2788.71'	5.2%
5	685+67.90	687+71.90	688+31.90	715+56.01	716+16.01	718+20.01	3,887.94'	4.3%
6	723+86.03	725+26.03	725+54.03	731+83.87	732+11.87	733+51.87	11,384.94'	2.0%
7	752+71.48	754+11.48	754+39.48	760+39.29	760+67.29	762+07.29	11,384.94'	2.0%
8	767+26.33	768+66.33	768+94.33	775+03.57	775+31.57	776+71.57	11,548.98'	2.0%

Standard Detail Drawing List

08A05-22B	INLET COVERS TYPE B, B-A, C, MS, MS-A, DW AND WM
08A05-22C	INLET COVERS TYPE F, HM, HM-S, S, T, HM-GJ AND HM-GJ-S
08A05-22D	INLET COVERS TYPE V, V-B, AND VV-B
08C07-03	INLETS 2X2-FT, 2X2.5-FT, 2X3-FT, 2.5X3-FT & 2X3.5-FT
08C08-03	INLETS MEDIAN 1 AND 2 GRATE
08D01-24A	CONCRETE CURB AND GUTTER
08D01-24B	CONCRETE CURB, TIES AND CURB AND GUTTER APPLICATIONS
08D02-08A	CONCRETE SURFACE DRAINS FLUME TYPE AT STRUCTURES
08D02-08B	CONCRETE SURFACE DRAINS FLUME TYPE AT STRUCTURES
08D02-08C	CONCRETE SURFACE DRAINS FLUME TYPE AT STRUCTURES
08D03-09A	CONCRETE SURFACE DRAINS DROP INLET TYPE AT STRUCTURES
08D03-09B	CONCRETE SURFACE DRAINS DROP INLET TYPE AT STRUCTURES
08D05-22A	CURB RAMPS TYPES 1 AND 1-A
08D05-22B	CURB RAMPS TYPES 2 AND 3
08D05-22C	CURB RAMPS TYPES 4A AND 4A1
08D05-22D	CURB RAMPS TYPES 4B AND 4B1
08D05-22E	CURB RAMPS TYPES 5, 6, 7A, 7B & 8
08D05-22F	CURB RAMPS RADIAL DETECTABLE WARNING FIELD
08D05-22G	CURB RAMPS RECTANGULAR AND RADIAL DETECTABLE WARNING PLATES
08E09-06	SILT FENCE
08E10-02	INLET PROTECTION TYPES A, B, C AND D
08E15-01	CULVERT PIPE CHECK
08F01-11	APRON ENDWALLS FOR CULVERT PIPE
08F04-08	JOINT TIES FOR CONCRETE PIPE AND CONCRETE COLLAR DETAIL
11A01-06	MAINTENANCE CROSSOVER FOR FREEWAYS
13A03-07	CONCRETE PAVEMENT SHOULDERS
13A05-06A	SHOULDER RUMBLE STRIPS, DIVIDED ROADWAY
13A05-06B	SHOULDER RUMBLE STRIPS, DIVIDED ROADWAY
13B02-09A	CONCRETE PAVEMENT APPROACH SLAB
13C01-19	CONCRETE PAVEMENT LONGITUDINAL JOINTS AND TIES
13C09-18A	CONCRETE PAVEMENT REPAIR AND REPLACEMENT
13C09-18B	CONCRETE PAVEMENT REPAIR AND REPLACEMENT
13C09-18C	CONCRETE PAVEMENT REPAIR AND REPLACEMENT
13C11-15A	RURAL DOWELED CONCRETE PAVEMENT
13C11-15B	RURAL DOWELED CONCRETE PAVEMENT
13C18-08A	CONCRETE PAVEMENT JOINTING
13C18-08B	CONCRETE PAVEMENT STEEL REINFORCEMENT
13C18-08C	CONCRETE PAVEMENT JOINT TYPES
13C18-08D	CONCRETE PAVEMENT JOINTING AT UTILITY FIXTURES
13C18-08F	CONCRETE PAVEMENT INTERSECTION BOXOUT FOR INTEGRAL CURB AND GUTTER
14B07-16A	CONCRETE BARRIER TEMPORARY PRECAST, 12'-6"
14B07-16B	CONCRETE BARRIER TEMPORARY PRECAST, 12'-6"
14B07-16C	CONCRETE BARRIER TEMPORARY PRECAST, 12'-6"
14B07-16D	CONCRETE BARRIER TEMPORARY PRECAST, 12'-6"
14B07-16E	CONCRETE BARRIER TEMPORARY PRECAST, 12'-6"
14B07-16F	CONCRETE BARRIER TEMPORARY PRECAST, 12'-6"
14B07-16G	CONCRETE BARRIER TEMPORARY PRECAST, 12'-6"
14B07-16H	CONCRETE BARRIER TEMPORARY PRECAST, 12'-6"
14B07-16I	CONCRETE BARRIER TEMPORARY PRECAST, 12'-6"
14B07-16J	CONCRETE BARRIER TEMPORARY PRECAST, 12'-6"
14B07-16K	CONCRETE BARRIER TEMPORARY PRECAST, 12'-6"
14B07-16L	CONCRETE BARRIER TEMPORARY PRECAST, 12'-6"
14B07-16M	CONCRETE BARRIER TEMPORARY PRECAST, 12'-6"
14B07-16N	CONCRETE BARRIER TEMPORARY PRECAST, 12'-6"
14B28-04A	GUARDRAIL MOW STRIP
14B42-07A	MIDWEST GUARDRAIL SYSTEM (MGS) GUARDRAIL
14B42-07B	MIDWEST GUARDRAIL SYSTEM (MGS) GUARDRAIL
14B42-07C	MIDWEST GUARDRAIL SYSTEM (MGS) GUARDRAIL
14B42-07D	MIDWEST GUARDRAIL SYSTEM (MGS) GUARDRAIL
14B44-04A	MIDWEST GUARDRAIL SYSTEM ENERGY ABSORBING TERMINAL (MGS)
14B44-04B	MIDWEST GUARDRAIL SYSTEM ENERGY ABSORBING TERMINAL (MGS)
14B44-04C	MIDWEST GUARDRAIL SYSTEM ENERGY ABSORBING TERMINAL (MGS)
14B45-05A	MIDWEST GUARDRAIL SYSTEM THRIE BEAM TRANSITION (MGS)
14B45-05B	MIDWEST GUARDRAIL SYSTEM THRIE BEAM TRANSITION (MGS)
14B45-05C	MIDWEST GUARDRAIL SYSTEM THRIE BEAM TRANSITION (MGS)
14B45-05D	MIDWEST GUARDRAIL SYSTEM THRIE BEAM TRANSITION (MGS)

6

Standard Detail Drawing List

15A03-02A	FLEXIBLE MARKER POST FOR CULVERT END
15A03-02B	FLEXIBLE MARKER POST FOR CULVERT END
15A04-08A	FLEXIBLE DELINEATOR POST
15A04-08C	DELINEATOR POST WITH REFLECTIVE SHEETING
15A04-08D	CHANNELIZING DEVICES, PERMANENT FLEXIBLE TUBULAR MARKER POST
15A04-08E	DELINEATOR POST WITH REFLECTIVE SHEETING
15C02-10D	ON RAMP LANE CLOSURE
15C02-10E	OFF RAMP LANE CLOSURE
15C02-10F	ADVANCED WIDTH RESTRICTION SIGNING
15C02-10G	TRAFFIC CONTROL FOR ENTRANCE RAMP CLOSURE
15C02-10H	MODIFIED ROUTE ASSEMBLY FOR DETOUR SIGNING
15C03-05	BARRICADES AND SIGNS FOR SIDEROAD CLOSURES
15C04-05	TRAFFIC CONTROL, ADVANCE WARNING SIGNS 45 M.P.H. OR GREATER TWO-WAY UNDIVIDED ROAD OPEN TO TRAFFIC
15C07-16C	PAVEMENT MARKING ARROWS
15C08-24A	PERMANENT LONGITUDINAL PAVEMENT MARKINGS
15C08-24B	TEMPORARY LONGITUDINAL PAVEMENT MARKING
15C11-11A	CHANNELIZING DEVICES FLEXIBLE TUBULAR MARKER POST
15C11-11B	CHANNELIZING DEVICES DRUMS, CONES, BARRICADES AND VERTICAL PANELS
15C14-05	AERIAL ENFORCEMENT BARS PAVEMENT MARKING DETAILS
15C19-11B	MOVING PAVEMENT MARKING OPERATION MULTI-LANE UNDIVIDED ROADWAY
15C31-08A	PAVEMENT MARKING EXIT RAMP AND PARALLEL EXIT RAMP
15C31-08B	PAVEMENT MARKING MAJOR SPLIT FREEWAY TO FREEWAY
15C31-08C	PAVEMENT MARKING ENTRANCE RAMP AND PARALLEL ENTRANCE RAMP
15C31-08D	PAVEMENT MARKING LANE DROP AND LANE REDUCTION
15D06-07	TRAFFIC CONTROL, TWO LANE TWO WAY OPERATION
15D09-08	TRAFFIC CONTROL, SINGLE LANE CROSSOVER EXIT
15D11-10	TRAFFIC CONTROL, SINGLE LANE CROSSOVER
15D12-16D	TRAFFIC CONTROL, LANE CLOSURE, BASIC TRAFFIC QUEUE WARNING SYSTEM
15D12-16G	TRAFFIC CONTROL, LANE CLOSURE , DIGITAL SPEED REDUCTION SYSTEM
15D15-08C	TRAFFIC CONTROL, TAPERED ENTRANCE RAMP WITHIN LANE CLOSURE
15D15-08D	TRAFFIC CONTROL, TAPERED ENTRANCE RAMP WITHIN LANE CLOSURE
15D15-08E	TRAFFIC CONTROL, PARALLEL EXIT RAMP WITHIN LANE CLOSURE
15D16-07	TRAFFIC CONTROL, EXIT RAMP CLOSURE
15D39-03	TRAFFIC CONTROL, DROP-OFF SIGNING
15D40-07D	TRAFFIC CONTROL, PARTIAL LANE SHIFT MULTILANE DIVIDED 50 MPH AND GREATER
15D47-03B	TRAFFIC CONTROL, INGRESS/EGRESS WITHOUT BARRIER

6

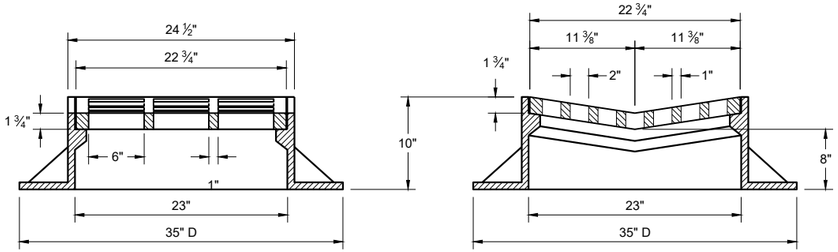

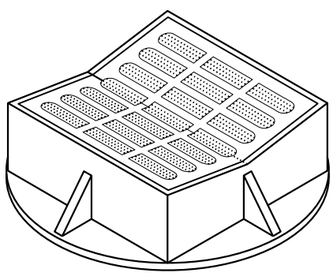

TYPE "B"

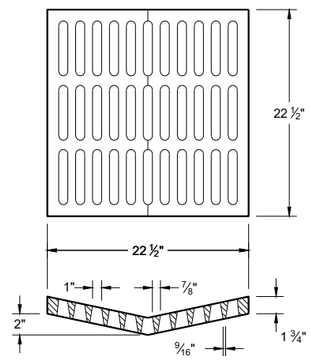

ALTERNATIVE GRATE FOR TYPE "B" COVER

USE WHERE PEDESTRIAN OF BICYCLE TRAFFIC IS POSSIBLE

NOTED AS TYPE B - A ON THE DRAINAGE TABLE

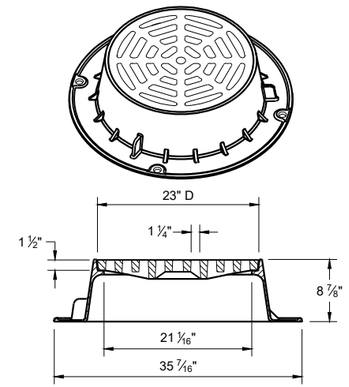

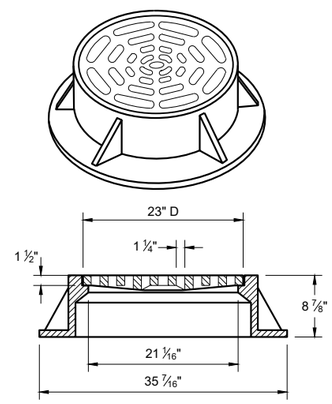

TYPE "C"

NOTE: EITHER CASTING IS ACCEPTABLE

GENERAL NOTES

DETAILS OF CONSTRUCTION, MATERIALS AND WORKMANSHIP NOT SHOWN ON THIS DRAWING SHALL CONFORM TO THE PERTINENT REQUIREMENTS OF THE STANDARD SPECIFICATIONS AND THE APPLICABLE SPECIAL PROVISIONS.

DETAIL DRAWINGS FOR PROPOSED ALTERNATE DESIGNS FOR CATCH BASIN, MANHOLE AND INLET COVERS SHALL BE SUBMITTED TO THE ENGINEER FOR APPROVAL PROVIDING THAT SUCH ALTERNATE DESIGNS MAKE PROVISION FOR EQUIVALENT CAPACITY AND STRENGTH.

ROUND FRAMES AND COVERS SHALL HAVE CONTINUOUSLY MACHINED BEARING SURFACES TO PREVENT ROCKING AND RATTLING.

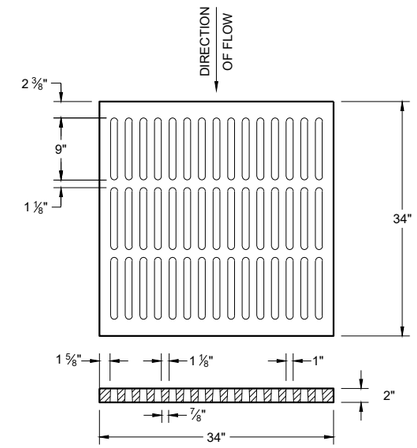

ALTERNATIVE TYPE "MS"

USE WHERE PEDESTRIAN OF BICYCLE TRAFFIC IS PERMITTED

NOTED AS TYPE MS-A ON THE DRAINAGE TABLE

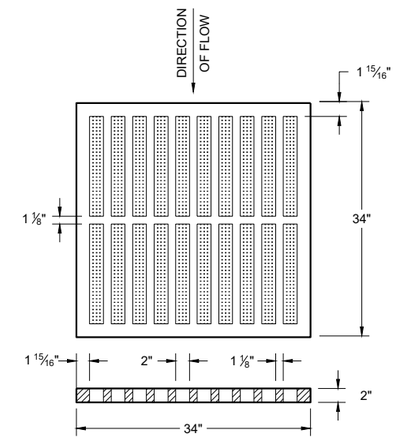

TYPE "MS"

USE ON FREEWAYS AND EXPRESSWAYS

NOTED AS TYPE MS ON THE DRAINAGE TABLE

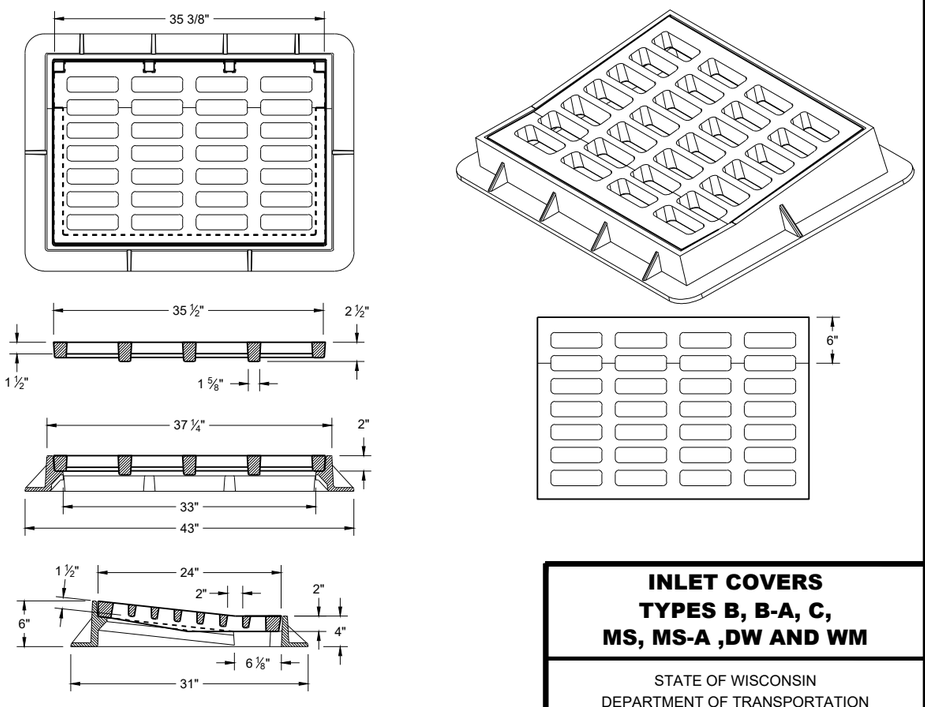

TYPE "DW"

NOTES: FOR USE IN A SUMP CONDITION. THIS OPTION IS ONLY TO BE USED IF NO OTHER INLETS ARE APPLICABLE.

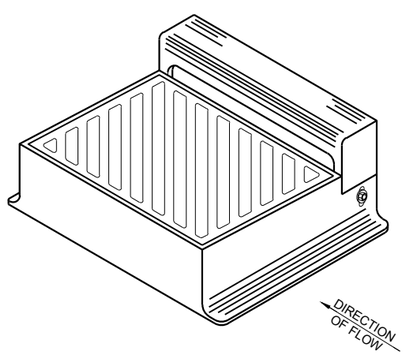

DIAGONAL SLOTS SHALL BE ORIENTEDTO THE DIRECTION OF FLOW AS ILLUSTRATED.
GRATES ARE MANUFACTURED TO BE REVERSIBLE.

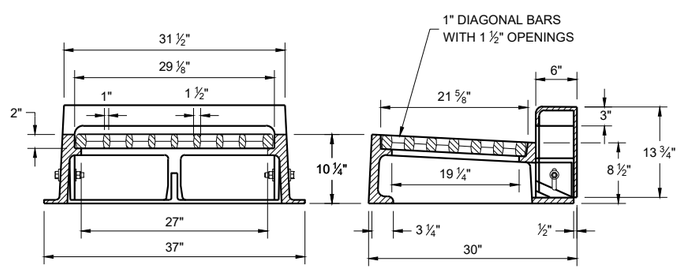

TYPE "WM"

NOTE: CURB BOX HEIGHT ADJUSTABLE 6" - 9"

INLET COVERS
TYPES B, B-A, C,
MS, MS-A ,DW AND WM

STATE OF WISCONSIN
DEPARTMENT OF TRANSPORTATION

APPROVED
February 2025 — DATE
/S/ Rodney Taylor — ROADWAY STANDARDS DEVELOPMENT UNIT SUPERVISOR
FHWA

6

6

SDD 08A05-22b

SDD 08A05-22b

GENERAL NOTES

DETAILS OF CONSTRUCTION, MATERIALS AND WORKMANSHIP NOT SHOWN ON THIS DRAWING SHALL CONFORM TO THE PERTINENT REQUIREMENTS OF THE STANDARD SPECIFICATIONS AND THE APPLICABLE SPECIAL PROVISIONS.

DETAIL DRAWINGS FOR PROPOSED ALTERNATE DESIGNS FOR INLET COVERS SHALL BE SUBMITTED TO THE ENGINEER FOR APPROVAL PROVIDING THAT SUCH ALTERNATE DESIGNS MAKE PROVISION FOR EQUIVALENT CAPACITY AND STRENGTH.

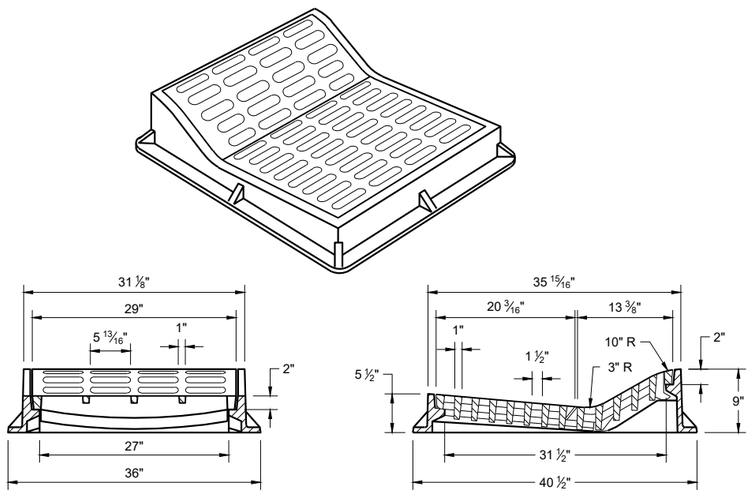

TYPE "F"

USE WITH TYPES "A" AND "D" CONCRETE CURB AND GUTTER, 36"

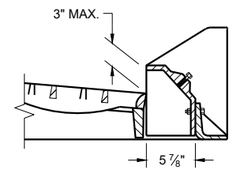

ALTERNATIVE CURB BOX FOR TYPE "HM" COVER

USE WITH TYPES "G" AND "J" CONCRETE CURB AND GUTTER, 30 INCH
NOTED AS TYP "HM-GJ" ON DRAINAGE TABLE

NOTE:
SPECIAL GRATE FOR THE TYPE "H" COVER MAY ALSO BE USED FOR THE TYPE "HM-GJ" COVER.

NOTED AS TYPE HM-GJ-S ON THE DRAINAGE TABLE.

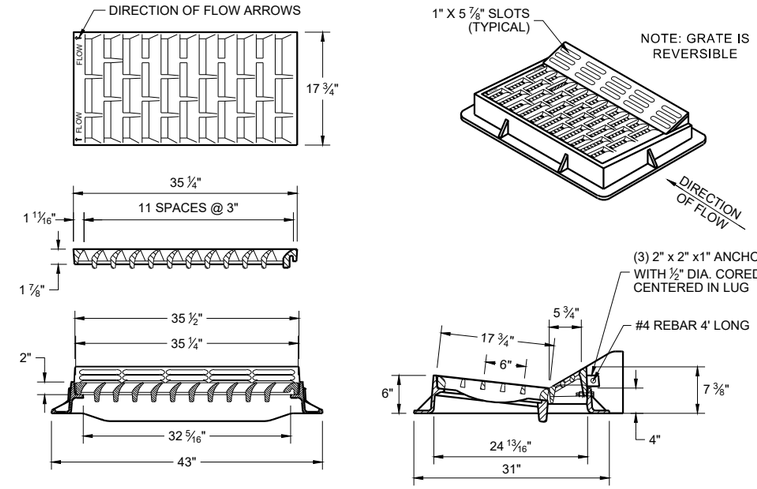

TYPE "HM"

USE WITH TYPES "A" AND "D" CONCRETE CURB AND GUTTER, 36"

NOTE:
SPECIAL GRATE FOR THE TYPE "H" COVER MAY ALSO BE USED FOR THE TYPE "HM-GJ" COVER.

NOTED AS TYPE HM-GJ-S ON THE DRAINAGE TABLE.

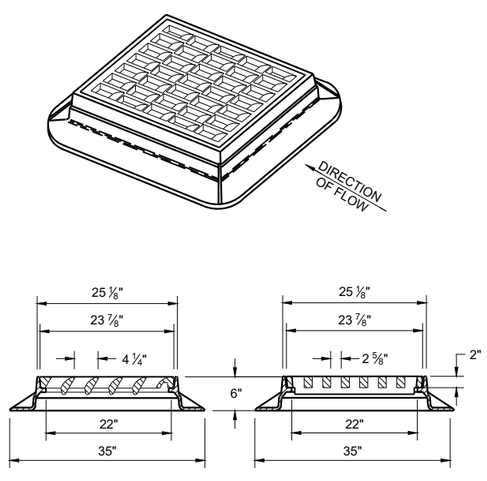

TYPE "S"

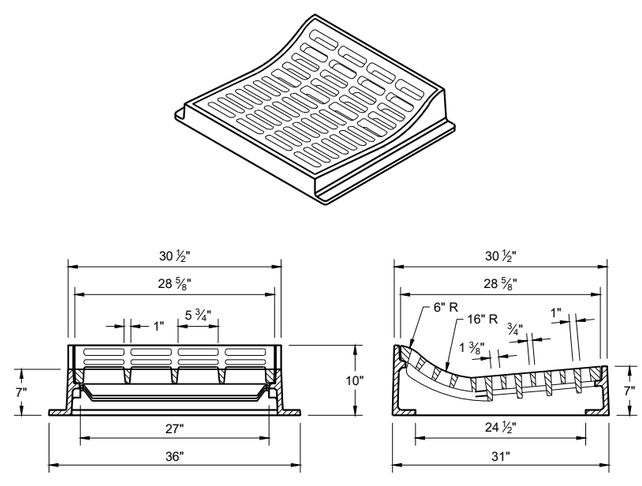

TYPE "T"

USE WITH TYPES "R" AND "T" CONCRETE CURB AND GUTTER, 36"

INLET COVERS
TYPES F, HM, HM-S, S, T, HM-GJ AND HM-GJ-S

STATE OF WISCONSIN
DEPARTMENT OF TRANSPORTATION

APPROVED
February 2025 — DATE
/S/ Rodney Taylor — ROADWAY STANDARDS DEVELOPMENT UNIT SUPERVISOR
FHWA

6

SDD 08A05-22c

GENERAL NOTES

DETAILS OF CONSTRUCTION, MATERIALS AND WORKMANSHIP NOT SHOWN ON THIS DRAWING SHALL CONFORM TO THE PERTINENT REQUIREMENTS OF THE STANDARD SPECIFICATIONS AND THE APPLICABLE SPECIAL PROVISIONS.

DETAIL DRAWINGS FOR PROPOSED ALTERNATE DESIGNS FOR INLET COVERS SHALL BE SUBMITTED TO THE ENGINEER FOR APPROVAL PROVIDING THAT SUCH ALTERNATE DESIGNS MAKE PROVISION FOR EQUIVALENT CAPACITY AND STRENGTH.

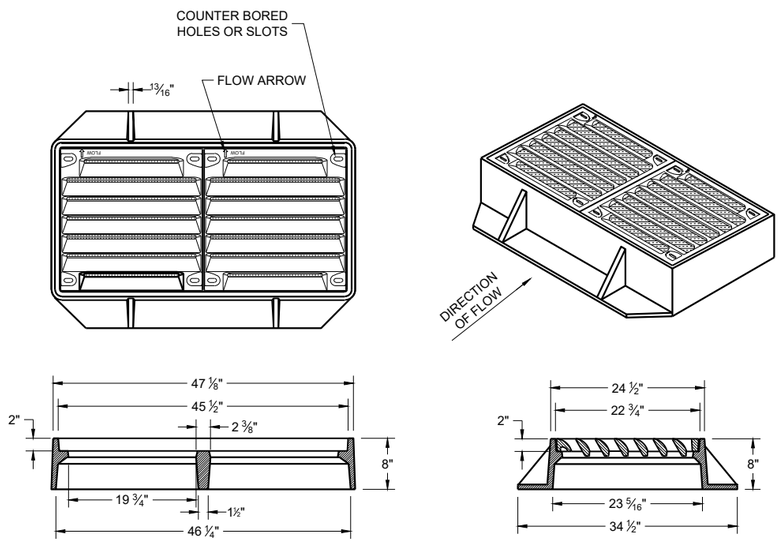

TYPE "VV-B"

NOTES: ALL HARDWARE TO BE SUPPLIED BY CASTING MANUFACTURER
ALL DRILLING AND TAPPING GRATES AND FRAMES BY CASTING MANUFACTURER

TYPE V
FRAME - CAST GRAY IRON ASTM A48 CLASS 35B
3/8" DIA. X 1/16" DRILL START IN 8 LOCATIONS
GRATE - CAST GRAY IRON ASTM A-48, CLASS 35B

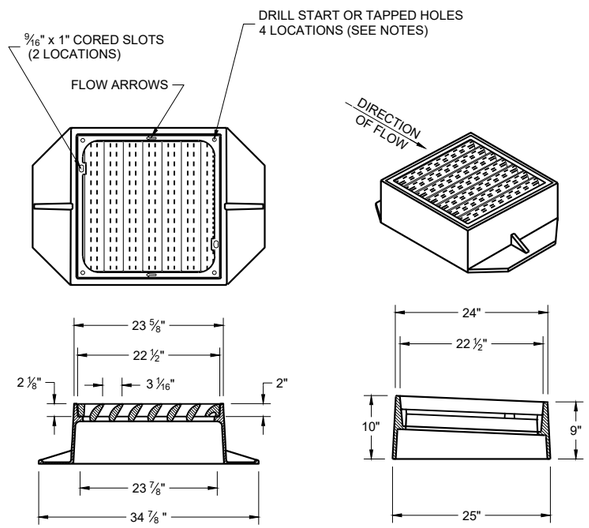

TYPE "V"

NOTES: ALL HARDWARE TO BE SUPPLIED BY CASTING MANUFACTURER ALL DRILLING AND TAPPING GRATES AND FRAMES BY CASTING MANUFACTURER

TYPE V
FRAME - CAST GRAY IRON ASTM A48 CLASS 40A
3/8" DIA. X 1/16" DRILL START IN 4 LOCATIONS
GRATE - CAST GRAY IRON ASTM A-48, CLASS 35B

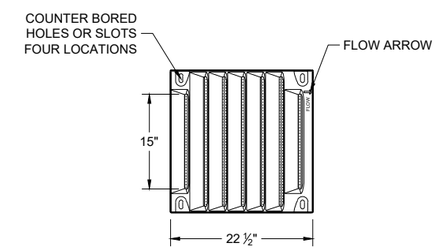

BOLT DOWN GRATE FOR TYPE "V" AND "VV-B" COVER

NOTES: ALL HARDWARE TO BE SUPPLIED BY CASTING MANUFACTURER NOTED AS TYPE "V-B" OR "VV-B" (FOR DOUBLE GRATE) ON DRAINAGE TABLE

TAP 1/2" -13 HOLES IN FOUR LOCATIONS PER GRATE IN FRAME TO BOLT GRATE(S).
FRAME - CAST GRAY IRON ASTM A48 CLASS 40A

GRATE - CAST DUCTILE IRON ASTM A536, 55+KSI YIELD
BOLTS - 1/2" -13 STAINLESS STEEL BOLTS WITH WASHERS
TORQUE BOLTS TO MANUFACTURER SPECIFICATION DO NOT OVERTIGHTEN.

6

6

SDD 08A05-22d

SDD 08A05-22d

INLET COVERS
TYPES V, V-B, AND VV-B

STATE OF WISCONSIN
DEPARTMENT OF TRANSPORTATION

APPROVED
February 2025 — DATE
/S/ Rodney Taylor — ROADWAY STANDARDS DEVELOPMENT UNIT SUPERVISOR

FHWA

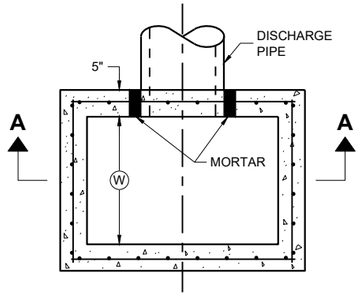

PLAN VIEW

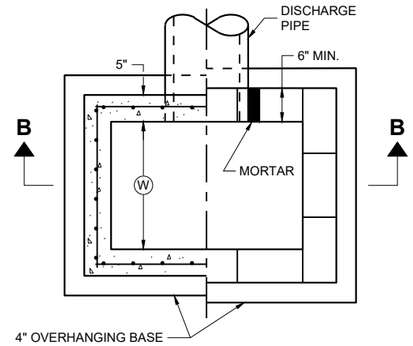

PLAN VIEW

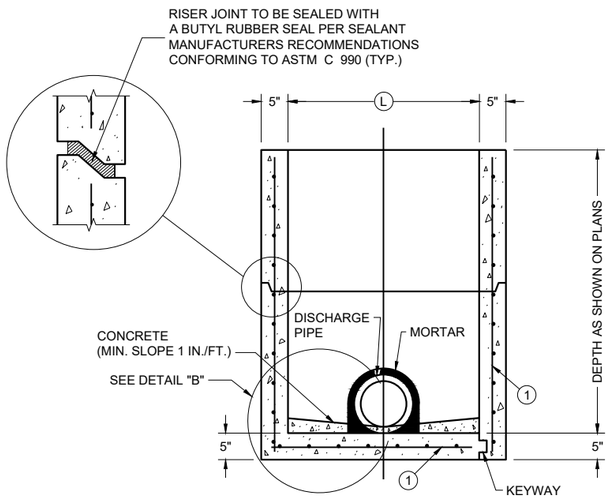

PRECAST REINFORCED CONCRETE WITH MONOLITHIC BASE

PRECAST REINFORCED CONCRETE WITH INTEGRAL BASE

SECTION A - A

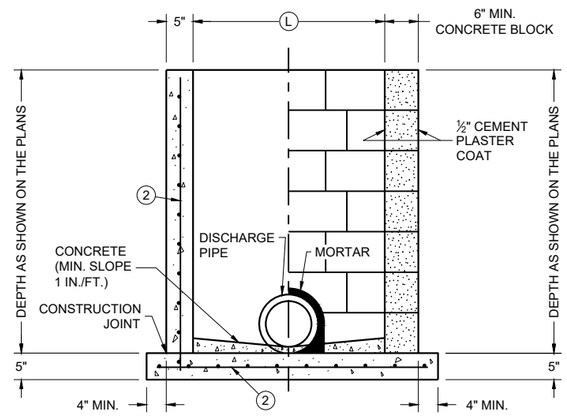

CAST IN PLACE REINFORCED CONCRETE

CONCRETE BLOCK WITH CAST IN PLACE OR PRECAST REINFORCED CONCRETE BASE (1)

SECTION B - B

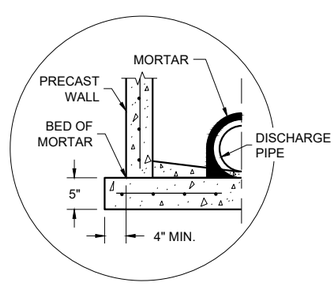

SEPARATE PRECAST REINFORCED CONCRETE BASE OPTION

DETAIL "B"

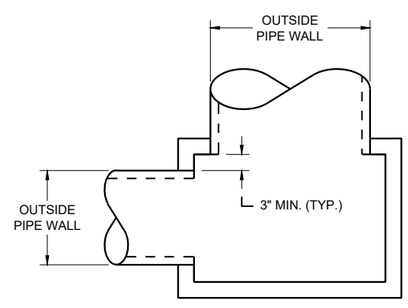

DETAIL "A"

GENERAL NOTES

DETAILS OF CONSTRUCTION, MATERIALS AND WORKMANSHIP N0T SHOWN ON THIS DRAWING SHALL CONFORM TO THE PERTINENT REQUIREMENTS OF THE STANDARD SPECIFICATIONS AND THE APPLICABLE SPECIAL PROVISIONS.

UNLESS OTHERWISE AUTHORIZED IN WRITING BY THE ENGINEER, THE CONTRACTOR SHALL NOT ORDER AND DELIVER PRECAST INLET UNITS REQUIRED FOR THE PROJECT UNTIL A LIST OF SIZES IS FURNISHED BY THE ENGINEER.

DETAILED DRAWINGS FOR PROPOSED ALTERNATE DESIGNS FOR UNDERGROUND DRAINAGE STRUCTURES SHALL BE SUBMITTED TO THE ENGINEER FOR APPROVAL PROVIDING THAT SUCH ALTERNATE DESIGNS MAKE PROVISION FOR EQUIVALENT CAPACITY AND STRENGTH.

ALL PRECAST INLET UNITS SHALL CONFORM TO THE PERTINENT REQUIREMENTS OF ASTM C 913.

ALL DRAINAGE STRUCTURES ARE DESIGNATED ON THE PLANS AS "MANHOLES 3X3-L", "CATCH BASINS 4-B", "INLETS 2X3-H", ETC. THE FIRST NUMBERS DESIGNATES THE SIZE OF THE STRUCTURE, AND THE FOLLOWING LETTER DESIGNATES THE TYPE OF COVER TO BE USED TO COMPRISE THE COMPLETE UNIT.

BASES SHALL BE PLACED ON A BED OF MATERIAL AT LEAST 6 INCHES IN DEPTH, WHICH MEETS THE REQUIREMENTS OF FOUNDATION BACKFILL. THIS BEDDING SHALL BE COMPACTED AND PROVIDE UNIFORM SUPPORT FOR THE ENTIRE AREA OF THE BASE.

ALL BAR STEEL REINFORCEMENT SHALL BE EMBEDDED 2 INCHES CLEAR UNLESS OTHERWISE SHOWN OR NOTED.

PRECAST REINFORCED RISERS SHALL HAVE A TONGUE AND GROOVE JOINT WITH TONGUE UP OR DOWN.

4" OVERHANGING BASES ARE REQUIRED FOR CAST-IN-PLACE REINFORCED CONCRETE AND CONCRETE BLOCK INSTALLATIONS. 4" OVERHANG IS REQUIRED WHEN SEPARATE PRECAST BASE IS PROVIDED. OVERHANG IS NOT REQUIRED ON PRECAST STRUCTURES WITH AN INTEGRAL OR MONOLITHIC BASE.

MAXIMUM INSIDE PIPE DIAMETER DETERMINED BY 3" CLEARANCE ON EACH SIDE OF THE OUTSIDE WALL OF THE PIPE. SEE DETAIL "A". ASSUMES PIPE ENTERS PERPENDICULAR TO THE STRUCTURE.

(1) FOR PRECAST INLETS AND REINFORCED CONCRETE BASES PROVIDE REINFORCING STEEL IN ACCORDANCE TO ASTM C 913
(2) CONTRACTOR TO PROVIDE DRAWING(S) STAMPED BY A PROFESSIONAL ENGINEER FOR STEEL REINFORCING DESIGN FOR CAST-IN-PLACE STRUCTURES.

CATCH BASIN COVER MATRIX

INLET SIZE	WIDTH (W) (FT.)	LENGTH (L) (FT.)	INLET COVER TYPE									
			ALL A'S	ALL B'S	BW	F	ALL H'S	S	T	V	WM	V V-B
2 X 2-FT	2	2	X	X				X				
2 X 2.5-FT	2	2.5			X			X	X	X	X	
2 X 3-FT	2	3					X					
2.5 X 3-FT	2.5	3				X						
2 X 3.5-FT	2	3.5										X

PIPE MATRIX

CATCH BASIN SIZE	MAXIMUM INSIDE PIPE DIAMETER FOR TWO PIPES	
	WIDTH (IN)	LENGTH (IN)
2 X 2-FT	12	12
2 X 2.5-FT	12	18
2 X 3-FT	12	24
2.5 X 3-FT	18	24
2 X 3.5-FT	12	30

INLETS 2 X 2-FT, 2 X 2.5-FT, 2 X 3-FT, 2.5 X 3-FT AND 2X3.5-FT

INLETS 2 X 2-FT, 2 X 2.5-FT, 2 X 3-FT, 2.5 X 3-FT AND 2 X 3.5-FT

STATE OF WISCONSIN
DEPARTMENT OF TRANSPORTATION

APPROVED
December 2023 — DATE
/S/ Rodney Taylor — ROADWAY STANDARDS DEVELOPMENT UNIT SUPERVISOR
FHWA

6

SDD 08C07-03

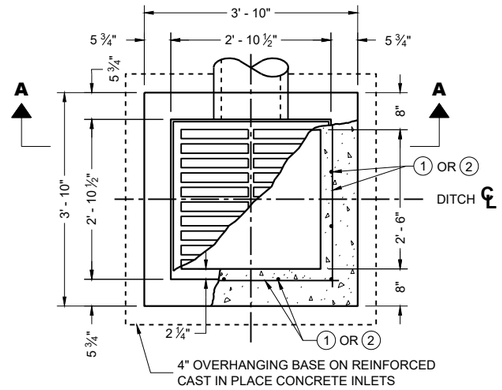

PLAN VIEW

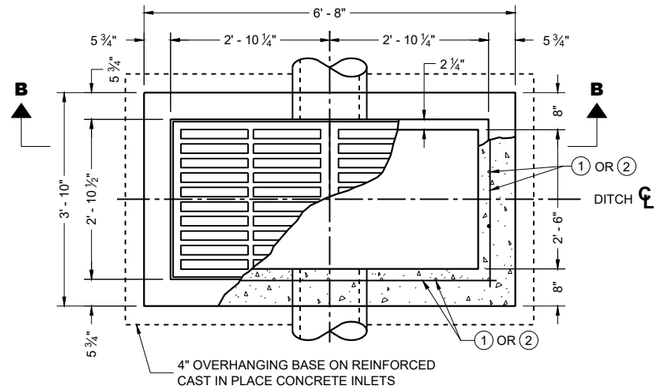

PLAN VIEW

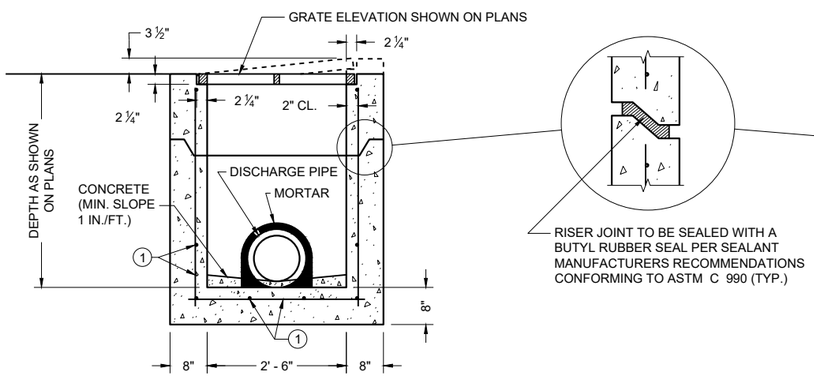

PRECAST REINFORCED CONCRETE SECTION A - A

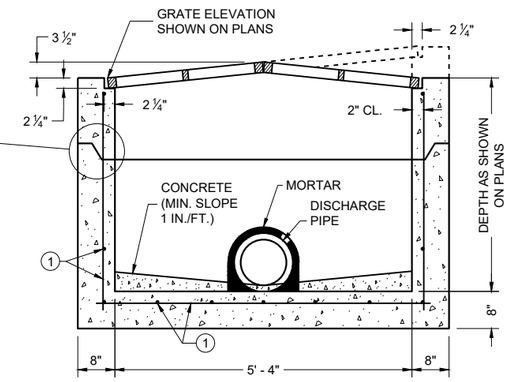

PRECAST REINFORCED CONCRETE SECTION B - B

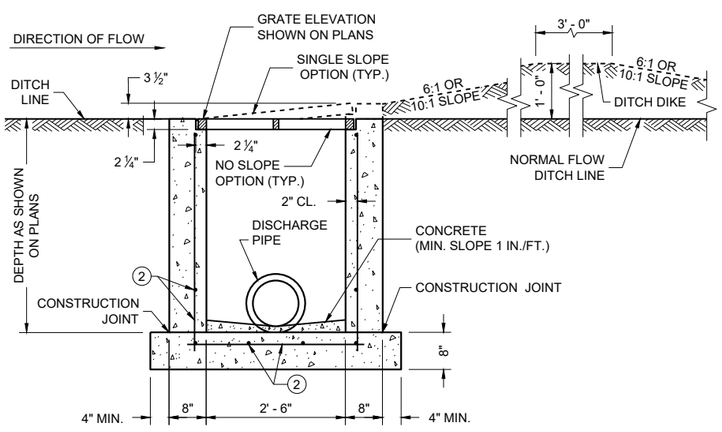

REINFORCED CAST IN PLACE CONCRETE SECTION A - A

INLETS MEDIAN 1 GRATE

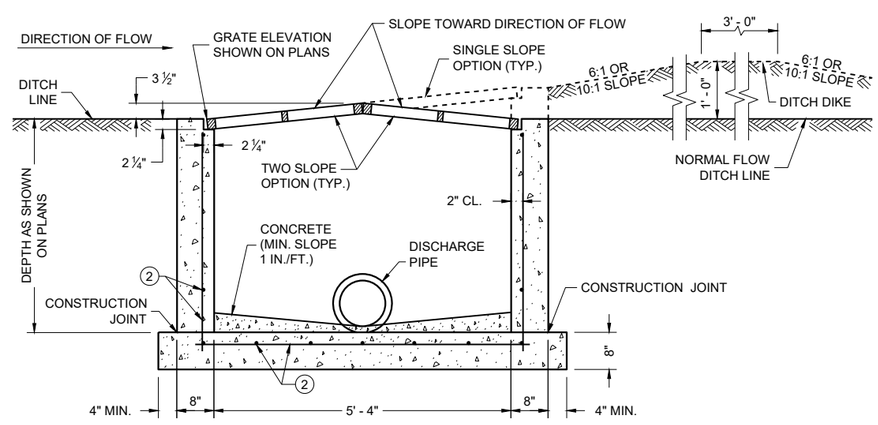

REINFORCED CAST IN PLACE CONCRETE SECTION B - B

INLETS MEDIAN 2 GRATE

GENERAL NOTES

DETAILS OF CONSTRUCTION, MATERIALS AND WORKMANSHIP N0T SHOWN ON THIS DRAWING SHALL CONFORM TO THE PERTINENT REQUIREMENTS OF THE STANDARD SPECIFICATIONS AND THE APPLICABLE SPECIAL PROVISIONS.

UNLESS OTHERWISE AUTHORIZED IN WRITING BY THE ENGINEER, THE CONTRACTOR SHALL NOT ORDER AND DELIVER PRECAST INLET UNITS REQUIRED FOR THE PROJECT UNTIL A LIST OF SIZES IS FURNISHED BY THE ENGINEER.

DETAILED DRAWINGS FOR PROPOSED ALTERNATE DESIGNS FOR INLETS WHICH MAY INCLUDE PRECAST REINFORCED CONCRETE INLETS, SHALL BE SUBMITTED TO THE ENGINEER FOR APPROVAL PROVIDING THAT SUCH ALTERNATE DESIGNS MAKE PROVISION FOR EQUIVALENT CAPACITY AND STRENGTH.

ALL MEDIAN INLETS ARE DESIGNATED ON THE PLANS AS "INLETS, 1G-MS", ETC. THE FIRST NUMBER AND LETTER DESIGNATE THE TYPE OF STRUCTURE, AND THE FOLLOWING LETTERS DESIGNATE THE TYPE OF COVER TO BE USED TO COMPRISE THE COMPLETE UNIT.

BASES SHALL BE PLACED ON A BED OF MATERIAL AT LEAST 6 INCHES IN DEPTH, WHICH MEETS THE REQUIREMENTS OF FOUNDATION BACKFILL. THIS BEDDING SHALL BE COMPACTED AND PROVIDE UNIFORM SUPPORT FOR THE ENTIRE AREA OF THE BASE.

ALL PRECAST INLET UNITS SHALL CONFORM TO THE PERTINENT REQUIREMENTS OF ASTM C 913.

ALL BAR STEEL REINFORCEMENT SHALL BE EMBEDDED 2 INCHES CLEAR UNLESS OTHERWISE SHOWN OR NOTED.

PRECAST REINFORCED RISERS SHALL HAVE A TONGUE AND GROOVE JOINT WITH TONGUE UP OR DOWN.

MAXIMUM INSIDE PIPE DIAMETER DETERMINED BY 3" CLEARANCE ON EACH SIDE OF THE OUTSIDE WALL OF THE PIPE. SEE DETAIL "A". ASSUMES PIPE ENTERS PERPENDICULAR TO THE STRUCTURE.

1 FOR PRECAST INLETS AND REINFORCED CONCRETE BASES PROVIDE REINFORCING STEEL IN ACCORDANCE TO ASTM C 913.

2 CONTRACTOR TO PROVIDE DRAWING(S) STAMPED BY A PROFESSIONAL ENGINEER FOR STEEL REINFORCING DESIGN FOR CAST-IN-PLACE STRUCTURES.

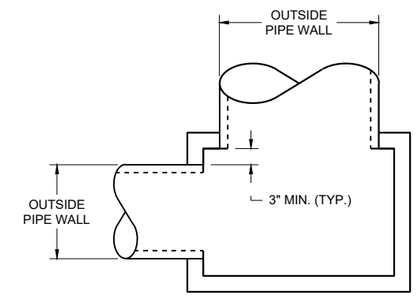

DETAIL "A"

PIPE MATRIX

INLET SIZE	MAXIMUM INSIDE PIPE DIAMETER	
	WIDTH (IN)	LENGTH (IN)
1 GRATE	18	18
2 GRATE	18	42

INLETS
MEDIAN 1 AND 2 GRATE

STATE OF WISCONSIN
DEPARTMENT OF TRANSPORTATION

APPROVED
December 2023 — DATE
/S/ Rodney Taylor — ROADWAY STANDARDS DEVELOPMENT UNIT SUPERVISOR
FHWA

6

SDD 08C08-03

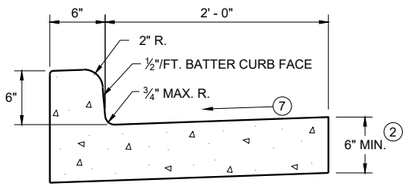

TYPES A (1) & D

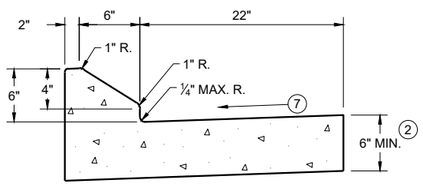

6" SLOPED CURB TYPES G (1) & J

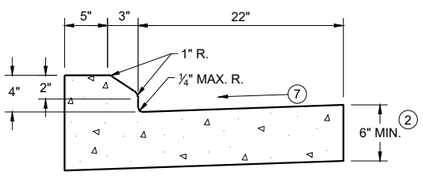

4" SLOPED CURB TYPES G (1) & J

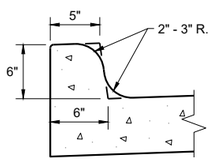

TYPES K (1) & L
(OPTIONAL CURB SHAPE)

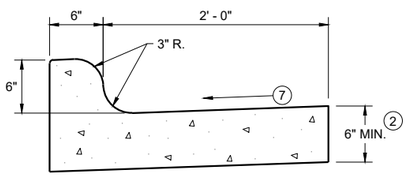

TYPES K (1) & L

CONCRETE CURB AND GUTTER 30"

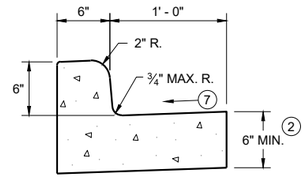

TYPES A (1) & D

CONCRETE CURB AND GUTTER 18"

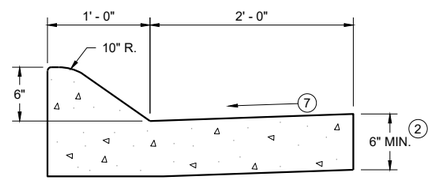

6" SLOPED CURB TYPES A (1) & D

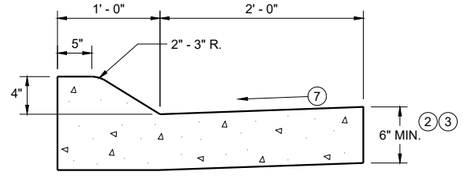

4" SLOPED CURB TYPES A (1) & D

CONCRETE CURB AND GUTTER 36"

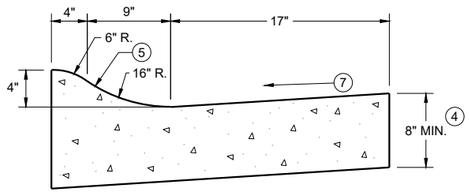

4" SLOPED CURB TYPES R (1) & T
CONCRETE CURB AND GUTTER 30"

TBT & TBTT	X
30"	22"
36"	28"

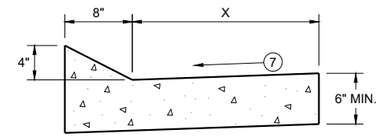

TYPES TBT & TBTT (1)

CONCRETE CURB AND GUTTER

PAVEMENT THICKNESS AND MAXIMUM CONCRETE PANEL WIDTH TABLE

PAVEMENT THICKNESS	MAXIMUM PANEL WIDTH
LESS THAN 10"	12'
10" & ABOVE	15'

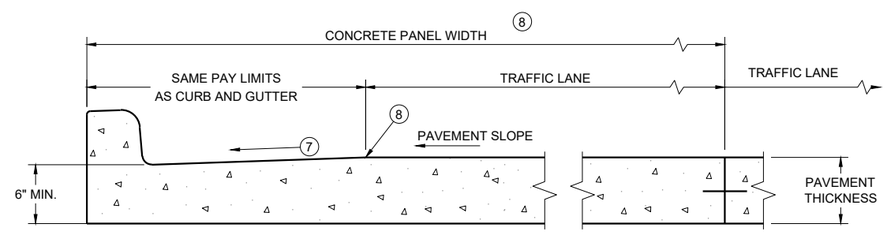

PARTIAL SECTION OF PAVEMENT WITH INTEGRAL CURB AND GUTTER *

* BIKE LANE IS NOT SHOWN

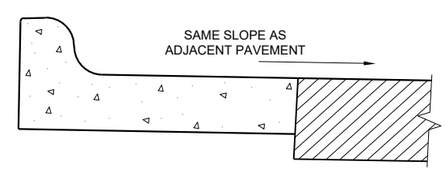

REVERSE SLOPE GUTTER (6)
(TYPICAL FOR ALL CURB & GUTTER TYPES)

GENERAL NOTES

DETAILS OF CONSTRUCTION AND WORKMANSHIP NOT SHOWN ON THIS DRAWING SHALL CONFORM TO THE PERTINENT REQUIREMENTS OF THE CONTRACT.

PAVEMENT TIES AND TIE BARS SHALL BE EPOXY COATED IN CONFORMANCE WITH SUBSECTION 505.2.6.2 OF THE STANDARD SPECIFICATIONS.

INTEGRAL CURB AND GUTTER SHALL CONFORM TO THE DETAILS SHOWN FOR CONCRETE CURB AND GUTTER INCLUDING THE TRANSVERSE GUTTER SLOPE.

UNLESS OTHERWISE SHOWN ON THE TYPICAL CROSS SECTIONS, THE BASE AGGREGATE AND COMMON EXCAVATION LIMITS ARE 2' - 0" BEHIND THE BACK OF CURBS.

(1) TIE BARS ARE REQUIRED FOR CURB AND GUTTERS TYPES A, G, K, R, AND TBTT.

(2) THE BOTTOM OF CURB AND GUTTER MAY BE CONSTRUCTED EITHER LEVEL OR PARALLEL TO THE SLOPE OF THE SUBGRADE OR BASE AGGREGATE PROVIDED A 6" MINIMUM GUTTER THICKNESS IS MAINTAINED.

(3) USE 8" MINIMUM GUTTER THICKNESS WHEN USED WITH AN ADJACENT CONCRETE TRUCK APRON PLACED BEHIND BACK OF CURB.

(4) THE BOTTOM OF CURB AND GUTTER MAY BE CONSTRUCTED EITHER LEVEL OR PARALLEL TO THE SLOPE OF THE SUBGRADE OR BASE AGGREGATE PROVIDED A 8" MINIMUM GUTTER THICKNESS IS MAINTAINED.

(5) UNLESS OTHERWISE NOTED, FOR STAKING PURPOSES THE FACE OF CURB IS 6" FROM THE BACK OF CURB.

(6) WHEN REVERSE SLOPE GUTTER IS REQUIRED, THE LOCATION(S) WILL BE SHOWN ELSEWHERE IN THE PLAN.

(7) USE 4% GUTTER CROSS SLOPE UNLESS OTHERWISE NOTED IN THE PLANS.

(8) INCLUDE LONGITUDINAL JOINT AND TIE BARS ALONG LANE EDGE WHEN CONCRETE PANEL WIDTH EXCEEDS THE MAXIMUM WIDTH PER TABLE BELOW. LONGITUDINAL JOINT(S) ARE NOT ALLOWED WITHIN TRAFFIC LANES AND BIKE LANES. LONGITUDINAL JOINT MAY BE SAWED.

(9) SLOPE TO BE REVERSE SLOPE MATCHING THE SLOPE OF THE PAVEMENT AND THE CIRCULATORY ROADWAY

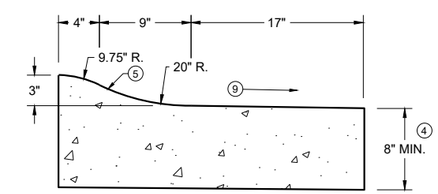

3" SLOPED CURB TYPES R (1) & T

CONCRETE CURB AND GUTTER

STATE OF WISCONSIN
DEPARTMENT OF TRANSPORTATION

6

SDD 08D01-24a

6

SDD 08D01-24a

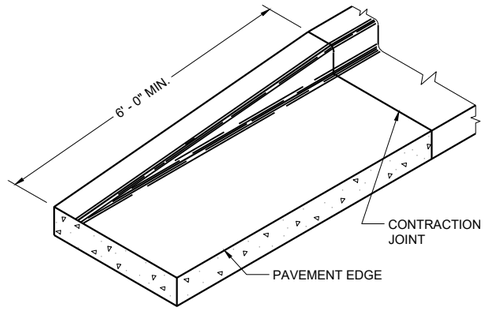

END SECTION CURB AND GUTTER

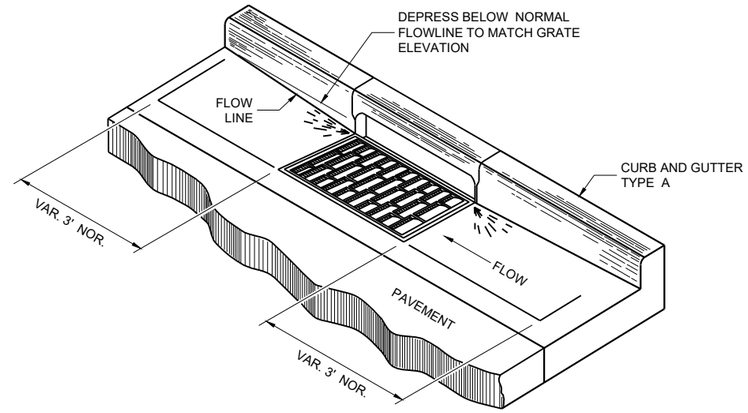

DETAIL OF CURB AND GUTTER AT INLETS

(TYPICAL H INLET COVER SHOWN)

GENERAL NOTES

DETAILS OF CONSTRUCTION AND WORKMANSHIP NOT SHOWN ON THIS DRAWING SHALL CONFORM TO THE PERTINENT REQUIREMENTS OF THE CONTRACT.

PAVEMENT TIES AND TIE BARS SHALL BE EPOXY COATED IN CONFORMANCE WITH SUBSECTION 505.2.6.2 OF THE STANDARD SPECIFICATIONS.

UNLESS OTHERWISE SHOWN ON THE TYPICAL CROSS SECTIONS, THE BASE AGGREGATE AND COMMON EXCAVATION LIMITS ARE 2' - 0" BEHIND THE BACK OF CURBS.

(1) TIE BARS ARE REQUIRED FOR CURB AND GUTTERS TYPES A, G, K, R, AND TBTT.

(2) THE BOTTOM OF CURB AND GUTTER MAY BE CONSTRUCTED EITHER LEVEL OR PARALLEL TO THE SLOPE OF THE SUBGRADE OR BASE AGGREGATE PROVIDED A 6" MINIMUM GUTTER THICKNESS IS MAINTAINED.

(10) REFER TO SDD 08D18 AND 08D19 FOR ADDITIONAL DRIVEWAY ENTRANCE CURB DETAILS.

(11) PLACE 1" THICK EXPANSION JOINT MATERIAL BETWEEN VERTICAL FACE CURB TYPES EXTENDING FROM THE TOP OF CURB TO 1 INCH BELOW THE ADJOINING CONCRETE SURFACE. RIGID CONCRETE STRUCTURES INCLUDE RAISED CONCRETE MEDIANS, CONCRETE SAFETY ISLANDS, SPLITTER ISLANDS, OR LOCATIONS IDENTIFIED ON THE PLANS.

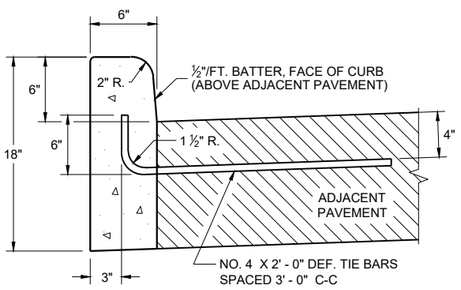

TYPES A (1) & D

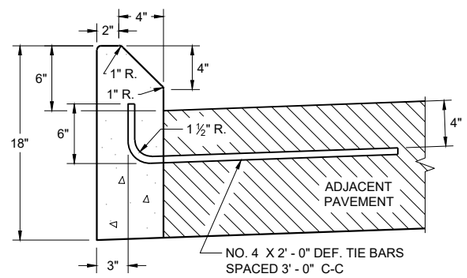

TYPES G (1) & J

CONCRETE CURB

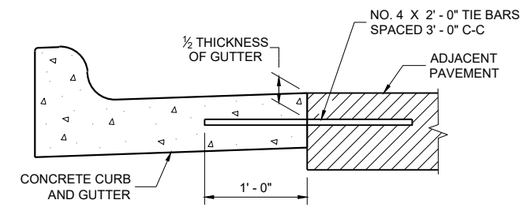

TYPICAL TIE BAR LOCATION (1)

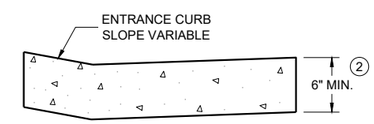

DRIVEWAY ENTRANCE CURB (10)

(WHEN DIRECTED BY THE ENGINEER)

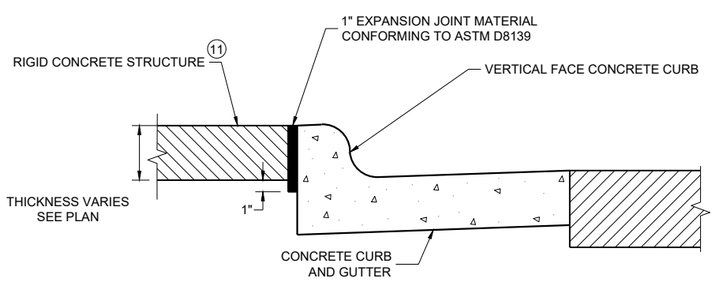

EXPANSION JOINT DETAIL FOR VERTICAL CURB ABUTTING A RIGID STRUCTURE (11)

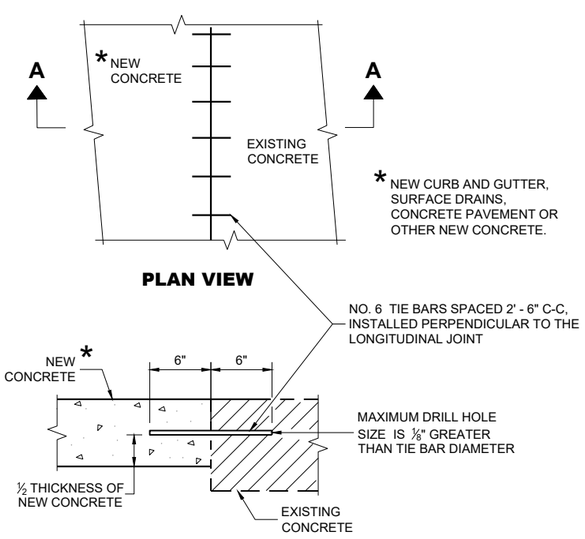

PLAN VIEW

SECTION A - A

TIE BARS DRILLED INTO EXISTING PAVEMENT

CONCRETE CURB, TIES AND CURB AND GUTTER APPLICATIONS

STATE OF WISCONSIN
DEPARTMENT OF TRANSPORTATION

APPROVED
February 2025 — DATE
/S/ Rodnery Taylor — ROADWAY STANDARDS DEVELOPMENT UNIT SUPERVISOR

FHWA

6

SDD 08D01-24b

GENERAL NOTES

DETAILS OF CONSTRUCTION, MATERIALS AND WORKMANSHIP NOT SHOWN ON THIS DRAWING SHALL CONFORM TO THE PERTINENT REQUIREMENTS OF THE STANDARD SPECIFICATIONS AND THE APPLICABLE SPECIAL PROVISIONS.

ALL STEEL REINFORCEMENT SHALL BE EMBEDDED 2 INCHES CLEAR UNLESS OTHERWISE SHOWN OR NOTED.

1. USE A JOINT SEALANT CONFORMING TO STANDARD SPECIFICATION 415.2.6.
2. NO. 4 X 2' - 0" TIE BARS SPACED AT 12" C-C TO BE PLACED BY BRIDGE CONTRACTOR OR DRILLED TIE BARS PLACED AS DIRECTED BY THE ENGINEER.
3. PAVED CONCRETE SHOULDER (SDD 13A03) OR CONCRETE DRAINAGE SLAB.
4. CONCRETE PAVEMENT APPROACH SLAB (SHOWN) OR STRUCTURE APPROACH SLAB AND CONCRETE PAVEMENT APPROACH SLAB. SEE SDD 13B02.
5. PAVED CONCRETE SHOULDER (SDD 13A03) OR ASPHALT SHOULDER.
6. CONCRETE CURB AND GUTTER 4-INCH SLOPED 36-INCH TYPE TBT OR TBTT. USE TYPE TBTT CURB WITH NO. 4 X 2' -0" TIE BARS SPACED AT 3' - 0" C-C ONLY WHEN ADJACENT TO CONCRETE PAVEMENTS.
7. PLACE FLUME BEFORE MSG THRIE BEAM TRANSITION POST 1 (SEE SDD 14B45)
8. CENTER FLUME BETWEEN POSTS. 6-INCH MINIMUM SEPARATION FROM OUTSIDE EDGE OF FLUME TO POSTS.
9. MINIMUM REINFORCEMENT SHALL BE 4" X 4" - W3.0 X W3.0 OR NO. 3 BARS LONGITUDINAL AND TRANSVERSE SPACING 12" C -C.
10. SEE ROADWAY PLANS FOR FLUME LOCATION.
11. START CURB AND GUTTER TRANSITION OR END SECTION.
12. DEPRESS FLOW LINE (SEE DETAIL)

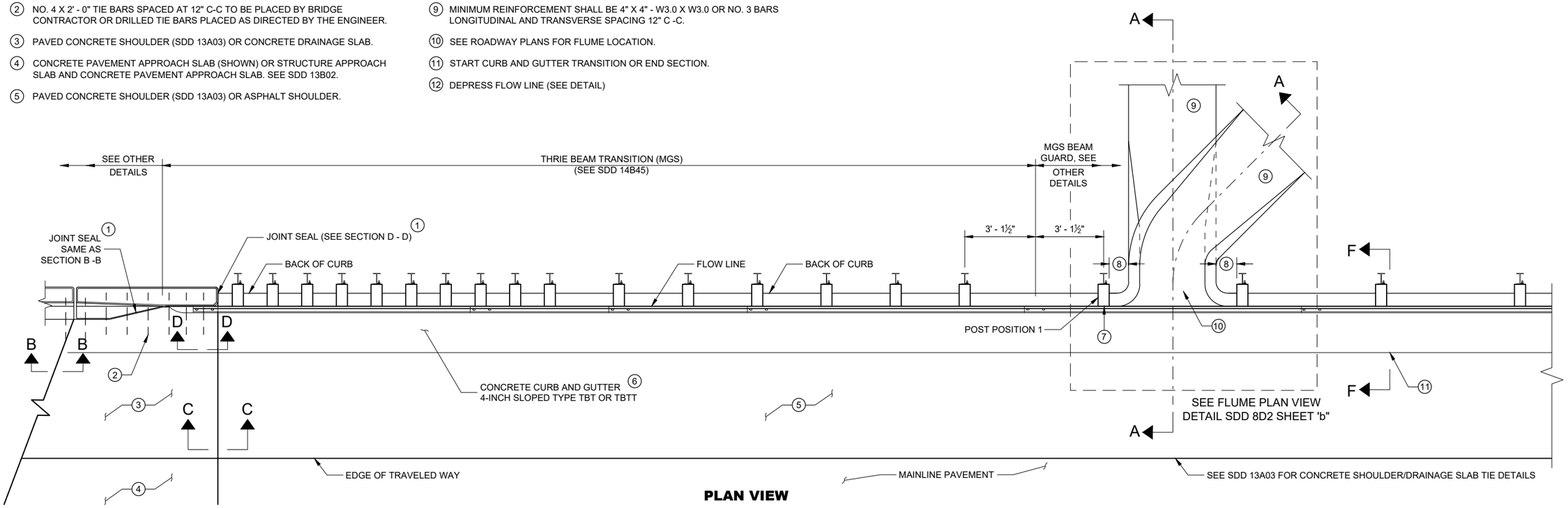

PLAN VIEW

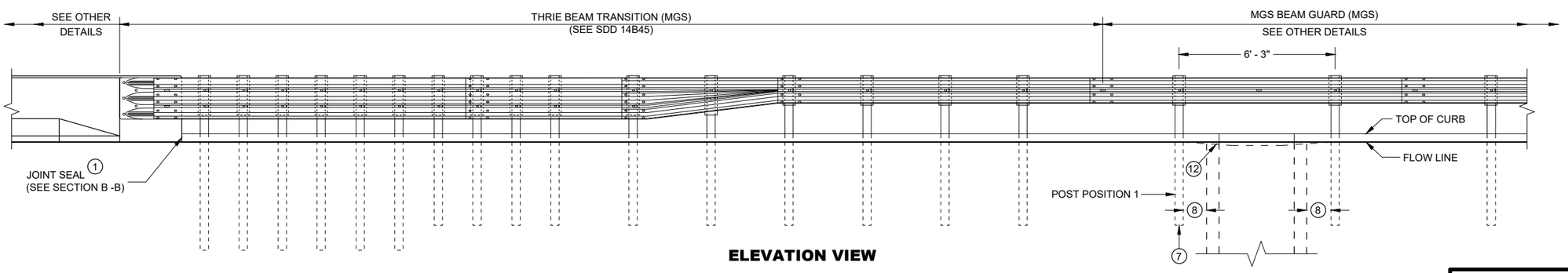

ELEVATION VIEW

CONCRETE SURFACE DRAINS FLUME TYPE AT STRUCTURES

STATE OF WISCONSIN
DEPARTMENT OF TRANSPORTAT

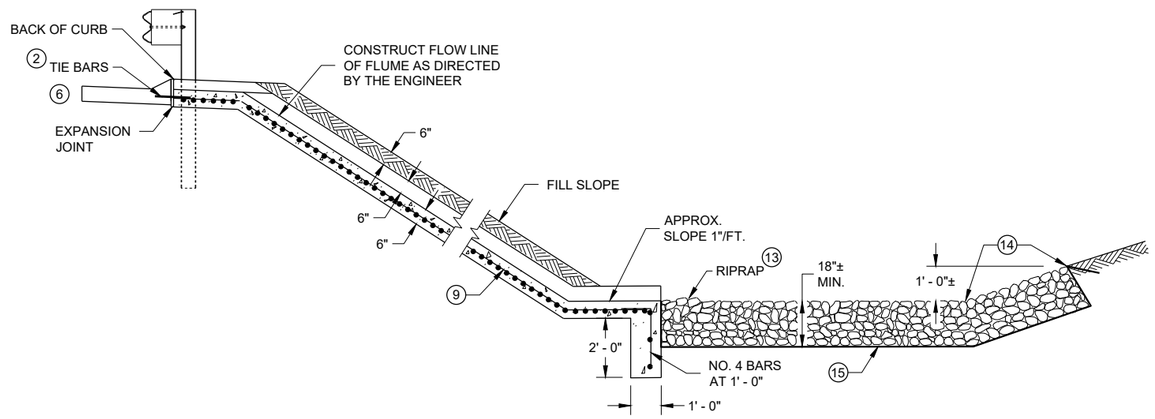

SECTION A - A

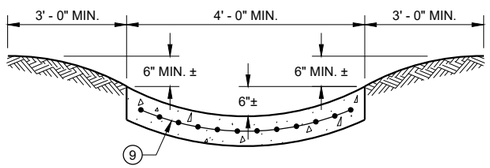

SECTION G - G

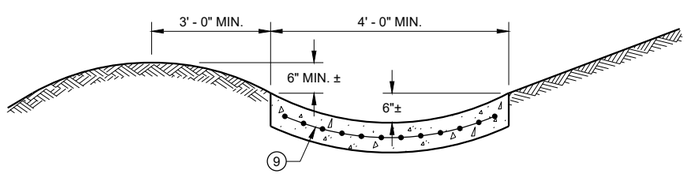

SECTION H - H

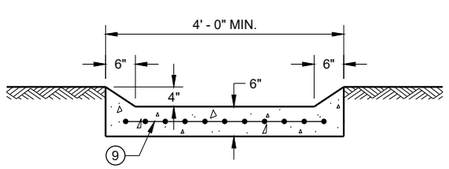

SECTION I - I

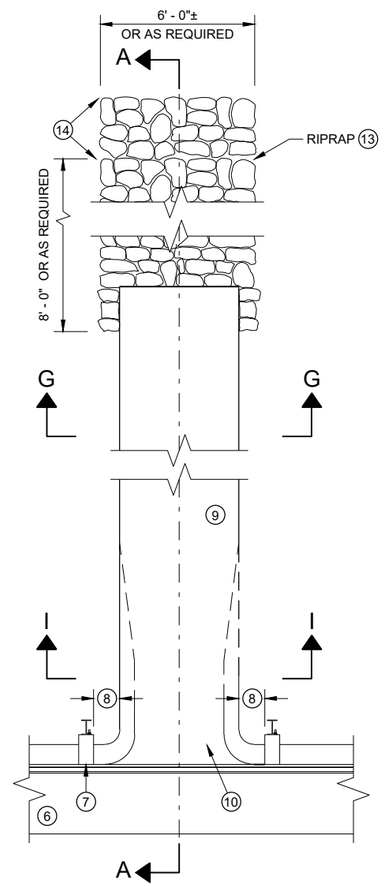

PLAN VIEW PERPENDICULAR FLUME

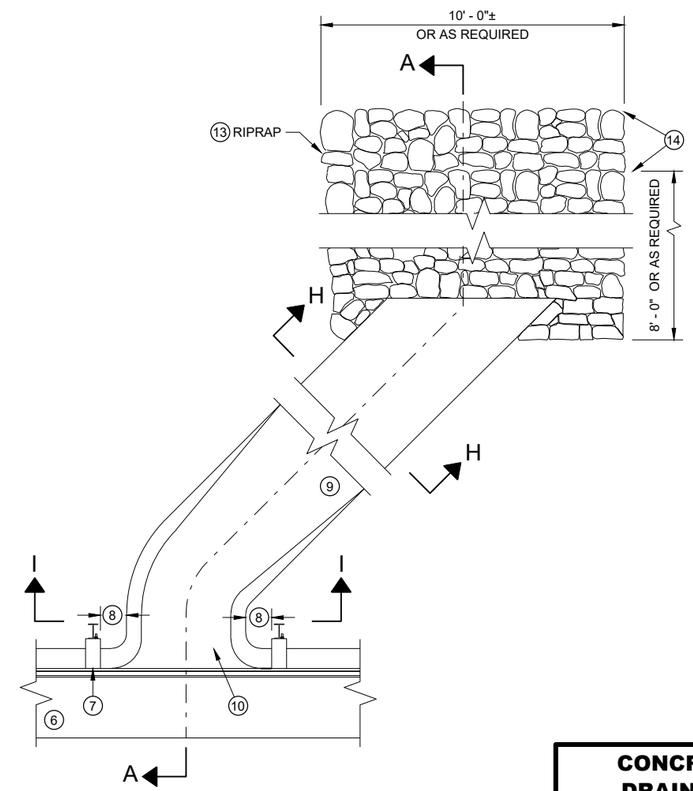

PLAN VIEW SKEWED FLUME

GENERAL NOTES

DETAILS OF CONSTRUCTION, MATERIALS AND WORKMANSHIP NOT SHOWN ON THIS DRAWING SHALL CONFORM TO THE PERTINENT REQUIREMENTS OF THE STANDARD SPECIFICATIONS AND THE APPLICABLE SPECIAL PROVISIONS.

ALL STEEL REINFORCEMENT SHALL BE EMBEDDED 2 INCHES CLEAR UNLESS OTHERWISE SHOWN OR NOTED.

1. USE A JOINT SEALANT CONFORMING TO STANDARD SPECIFICATION 415.2.6.
2. NO. 4 X 2' - 0" TIE BARS SPACED AT 12" C-C TO BE PLACED BY BRIDGE CONTRACTOR OR DRILLED TIE BARS PLACED AS DIRECTED BY THE ENGINEER.
3. PAVED CONCRETE SHOULDER (SDD 13A03) OR CONCRETE DRAINAGE SLAB.
4. CONCRETE PAVEMENT APPROACH SLAB (SHOWN) OR STRUCTURE APPROACH SLAB AND CONCRETE PAVEMENT APPROACH SLAB. SEE SDD 13B02 AND STRUCTURE PLANS.
5. PAVED CONCRETE SHOULDER (SDD 13A03) OR ASPHALT SHOULDER.
6. CONCRETE CURB AND GUTTER 4-INCH SLOPED 36-INCH TYPE TBT OR TBTT. USE TYPE TBTT CURB WITH NO. 4 X 2' -0" TIE BARS SPACED AT 3' - 0" C-C ONLY WHEN ADJACENT TO CONCRETE PAVEMENTS.
7. PLACE FLUME BEFORE MSG THRIE BEAM TRANSITION POST 1 (SEE SDD 14B45)
8. CENTER FLUME BETWEEN POSTS. 6-INCH MINIMUM SEPARATION FROM OUTSIDE EDGE OF FLUME TO POSTS.
9. MINIMUM REINFORCEMENT SHALL BE 4" X 4" - W3.0 X W3.0 OR NO. 3 BARS LONGITUDINAL AND TRANSVERSE SPACING 12" C -C.
10. SEE ROADWAY PLANS FOR FLUME LOCATION.
11. START CURB AND GUTTER TRANSITION OR END SECTION.
12. DEPRESS FLOW LINE (SEE DETAIL)
13. MEDIUM RIPRAP UNLESS OTHERWISE SPECIFIED.
14. LIMITS OF ADDITIONAL RIPRAP WHEN SPECIAL DITCH AS REQUIRED.
15. GEOTEXTILE TYPE HR.

CONCRETE SURFACE DRAINS FLUME TYPE AT STRUCTURES

STATE OF WISCONSIN
DEPARTMENT OF TRANSPORTAT

6

SDD 08D02 - 08b

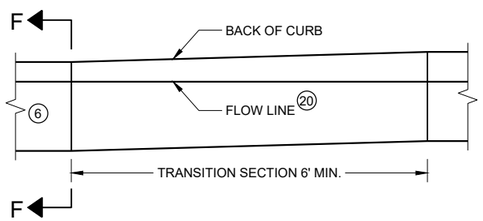

CURB AND GUTTER TRANSITION SECTION
CONCRETE CURB AND GUTTER 4-INCH SLOPED
36 INCH TYPE TBT OR TBTT

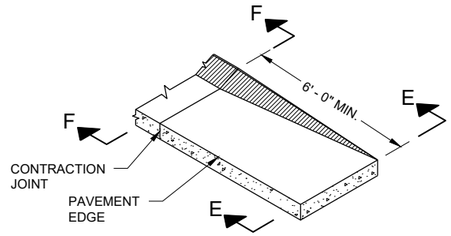

CURB AND GUTTER END SECTION
CONCRETE CURB AND GUTTER 4-INCH SLOPED
36 INCH TYPE TBT OR TBTT

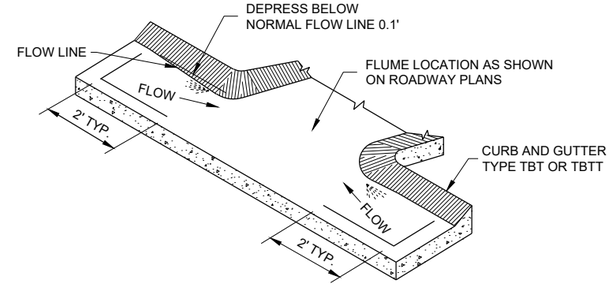

CURB AND GUTTER FLOW LINE DEPRESSION
AT FLUMES CONCRETE CURB AND GUTTER
4-INCH SLOPED 36 INCH TYPE TBT OR TBTT

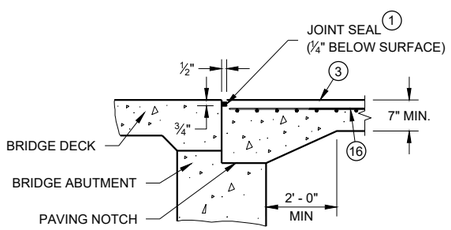

SECTION B-B 4

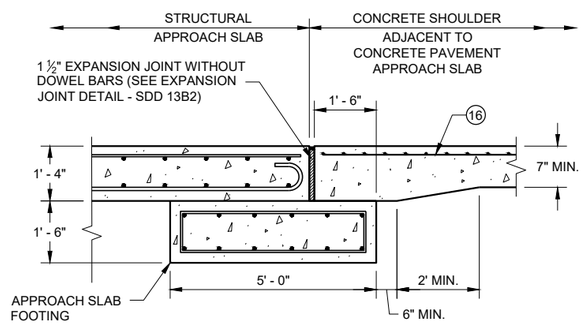

SECTION C - C
JOINT DETAIL FOR BRIDGE WITH STRUCTURAL
APPROACH SLAB AND CONCRETE APPROACH SLAB

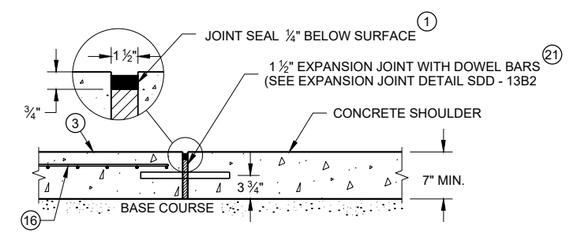

SECTION C - C
JOINT DETAIL FOR BRIDGE APPROACH
WITH CONCRETE SHOULDERS

GENERAL NOTES

DETAILS OF CONSTRUCTION, MATERIALS AND WORKMANSHIP NOT SHOWN ON THIS DRAWING SHALL CONFORM TO THE PERTINENT REQUIREMENTS OF THE STANDARD SPECIFICATIONS AND THE APPLICABLE SPECIAL PROVISIONS.

ALL STEEL REINFORCEMENT SHALL BE EMBEDDED 2 INCHES CLEAR UNLESS OTHERWISE SHOWN OR NOTED.

1. USE A JOINT SEALANT CONFORMING TO STANDARD SPECIFICATION 415.2.6.
2. NO. 4 X 2' - 0" TIE BARS SPACED AT 12" C-C TO BE PLACED BY BRIDGE CONTRACTOR OR DRILLED TIE BARS PLACED AS DIRECTED BY THE ENGINEER.
3. PAVED CONCRETE SHOULDER (SDD 13A03) OR CONCRETE DRAINAGE SLAB.
4. CONCRETE PAVEMENT APPROACH SLAB (SHOWN) OR STRUCTURE APPROACH SLAB AND CONCRETE PAVEMENT APPROACH SLAB. SEE SDD 13B02 AND STRUCTURE PLANS.
5. PAVED CONCRETE SHOULDER (SDD 13A03) OR ASPHALT SHOULDER.
6. CONCRETE CURB AND GUTTER 4-INCH SLOPED 36-INCH TYPE TBT OR TBTT. USE TYPE TBTT CURB WITH NO. 4 X 2' -0" TIE BARS SPACED AT 3' - 0" C-C ONLY WHEN ADJACENT TO CONCRETE PAVEMENTS.
7. PLACE FLUME BEFORE MSG THRIE BEAM TRANSITION POST 1 (SEE SDD 14B45)
8. CENTER FLUME BETWEEN POSTS. 6-INCH MINIMUM SEPARATION FROM OUTSIDE EDGE OF FLUME TO POSTS.
9. MINIMUM REINFORCEMENT SHALL BE 4" X 4" - W3.0 X W3.0 OR NO. 3 BARS LONGITUDINAL AND TRANSVERSE SPACING 12" C -C.
10. SEE ROADWAY PLANS FOR FLUME LOCATION.
11. START CURB AND GUTTER TRANSITION OR END SECTION.
12. DEPRESS FLOW LINE (SEE DETAIL)
13. MEDIUM RIPRAP UNLESS OTHERWISE SPECIFIED.
14. LIMITS OF ADDITIONAL RIPRAP WHEN SPECIAL DITCH IS REQUIRED.
15. GEOTEXTILE TYPE HR.
16. MINIMUM REINFORCEMENT SHALL BE 6" X 6" - W4.0 X W4.0 OR NO. 3 BARS LONGITUDINAL AND TRANSVERSE SPACING 12" C - C.
17. MSG THRIE BEAM TRANSITION POST 1. SEE SDD 14B45 FOR ADDITIONAL CONSTRUCTION DETAILS AND ACCEPTABLE MATERIALS.
18. MAINTAIN WIDTH, THICKNESS AND CROSS SLOPE OF ADJACENT TYPE TBT OR TBTT CURB. SEE NOTE 6 FOR TIE BAR SPACING.
19. ALIGN FACE OF POST BLOCK WITH FLOW LINE.
20. MAINTAIN FLOW LINE AT EDGE OF PAVEMENT/FACE OF BEAM GUARD AS APPLICABLE.
21. DO NOT CONSTRUCT AN EXPANSION JOINT OR INSTALL DOWEL BARS WHEN ABUTTING HMA PAVEMENTS.

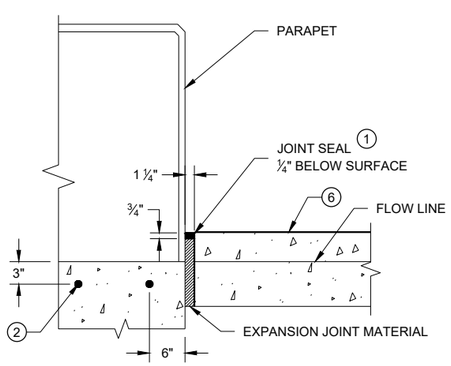

SECTION D - D

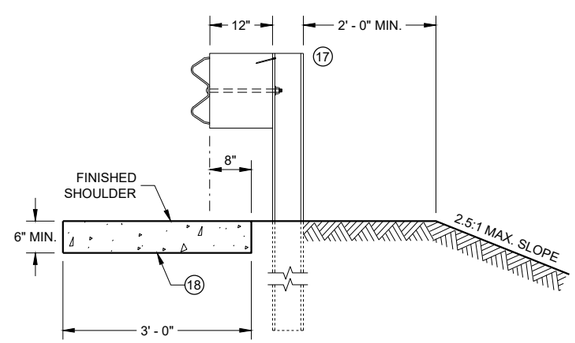

SECTION E - E

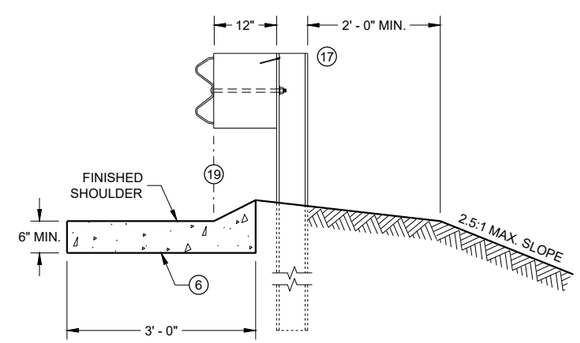

SECTION F - F

CONCRETE SURFACE DRAINS FLUME TYPE AT STRUCTURES

STATE OF WISCONSIN
DEPARTMENT OF TRANSPORTATION

APPROVED
May 2023 — DATE
/S/ Rodney Taylor — ROADWAY STANDARDS DEVE ENGINEER

FHWA

6

SDD 08D02 - 08c

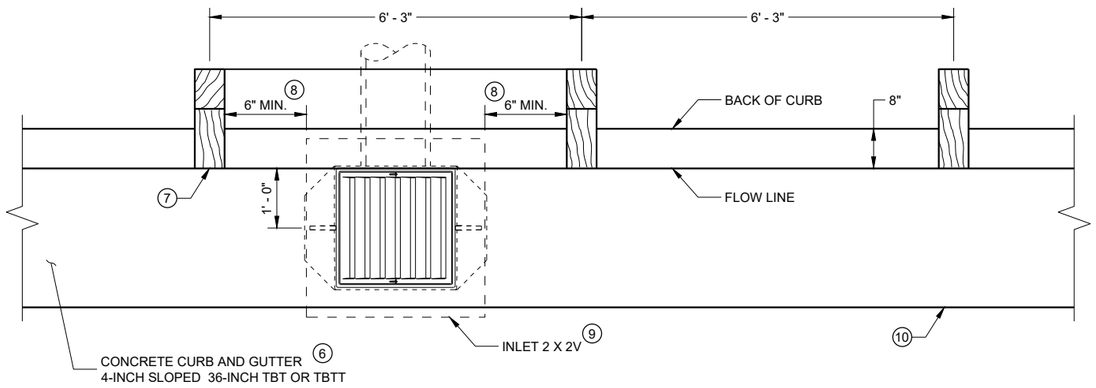

INLET PLAN VIEW

(NOTE: RAIL NOT SHOWN FOR CLARITY)

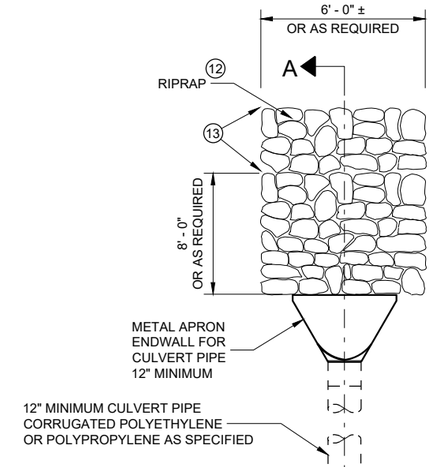

GENERAL NOTES

DETAILS OF CONSTRUCTION, MATERIALS AND WORKMANSHIP NOT SHOWN ON THIS DRAWING SHALL CONFORM TO THE PERTINENT REQUIREMENTS OF THE STANDARD SPECIFICATIONS AND THE APPLICABLE SPECIAL PROVISIONS.

ALL STEEL REINFORCEMENT SHALL BE EMBEDDED 2 INCHES CLEAR UNLESS OTHERWISE SHOWN OR NOTED.

1. USE A JOINT SEALANT CONFORMING TO STANDARD SPECIFICATION 415.2.6.
2. NO. 4 X 2' - 0" TIE BARS SPACED AT 12" C-C TO BE PLACED BY BRIDGE CONTRACTOR OR DRILLED TIE BARS PLACED AS DIRECTED BY THE ENGINEER.
3. PAVED CONCRETE SHOULDER (SDD 13A03) OR CONCRETE DRAINAGE SLAB.
4. CONCRETE PAVEMENT APPROACH SLAB (SHOWN) OR STRUCTURE APPROACH SLAB AND CONCRETE PAVEMENT APPROACH SLAB. SEE SDD 13B02.
5. PAVED CONCRETE SHOULDER (SDD 13A03) OR ASPHALT SHOULDER.
6. CONCRETE CURB AND GUTTER 4-INCH SLOPED 36-INCH TYPE TBT OR TBTT. USE TYPE TBTT CURB WITH NO. 4 X 2' -0" TIE BARS SPACED AT 3' - 0" C-C ONLY WHEN ADJACENT TO CONCRETE PAVEMENTS.
7. PLACE DRAINAGE STRUCTURE BEFORE MSG THRIE BEAM TRANSITION POST 1 (SEE SDD 14B45)
8. CENTER DRAINAGE STRUCTURE BETWEEN POSTS. 6-INCH MINIMUM SEPARATION FROM OUTSIDE WALL OF DRAINAGE STRUCTURE TO POSTS.
9. SEE SDD 08A05 AND 08C07 FOR DETAILS. SEE ROADWAY PLANS FOR LOCATION.
10. START CURB AND GUTTER TRANSITION OR END SECTION.
11. DEPRESS FLOW LINE (SEE DETAIL)
12. MEDIUM RIPRAP UNLESS OTHERWISE SPECIFIED.
13. LIMITS OF ADDITIONAL RIPRAP WHEN SPECIAL DITCH IS REQUIRED.

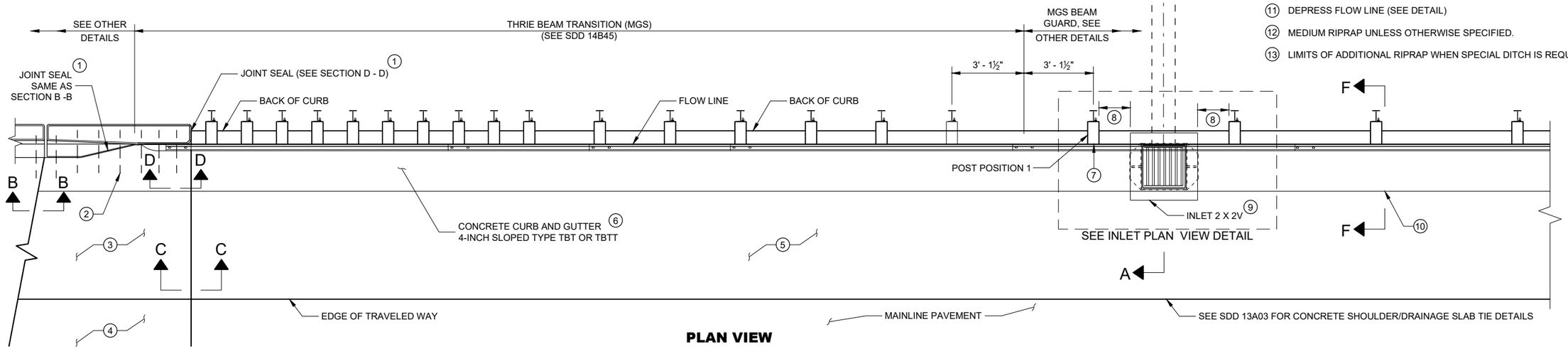

PLAN VIEW

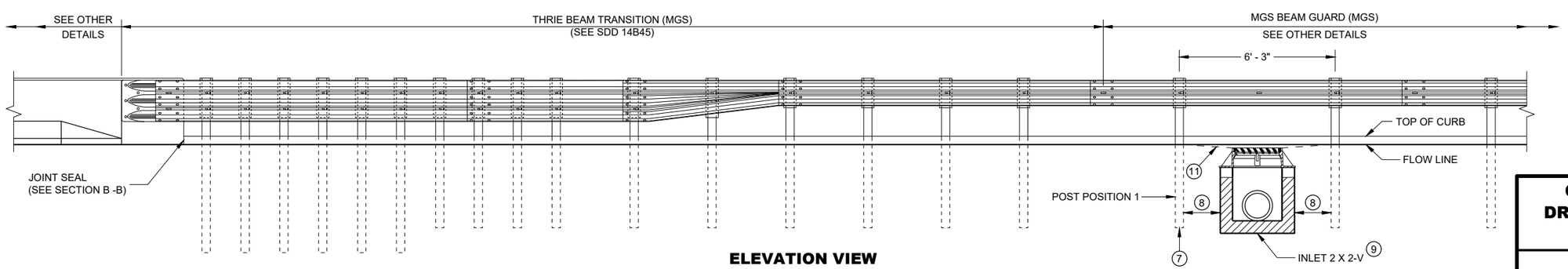

ELEVATION VIEW

CONCRETE SURFACE DRAINS DROP INLET TYPE AT STRUCTURES

STATE OF WISCONSIN
DEPARTMENT OF TRANSPORTA

6

SDD 08D03 - 09a

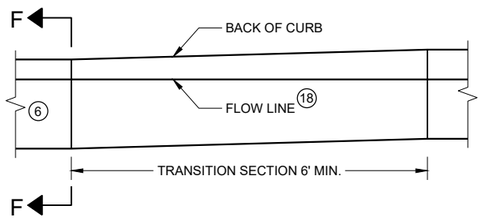

CURB AND GUTTER TRANSITION SECTION CONCRETE CURB AND GUTTER 4-INCH SLOPED 36 INCH TYPE TBT OR TBTT

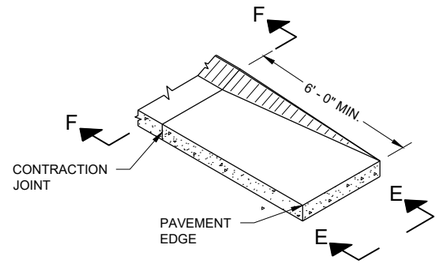

CURB AND GUTTER END SECTION CONCRETE CURB AND GUTTER 4-INCH SLOPED 36 INCH TYPE TBT OR TBTT

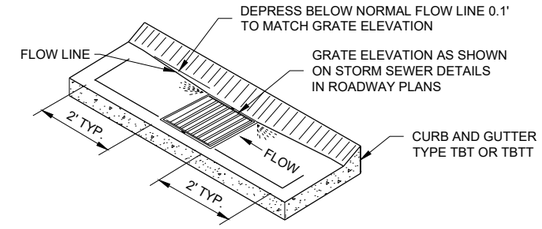

CURB AND GUTTER FLOW LINE DEPRESSION AT INLETS CONCRETE CURB AND GUTTER 4-INCH SLOPED 36 INCH TYPE TBT OR TBTT

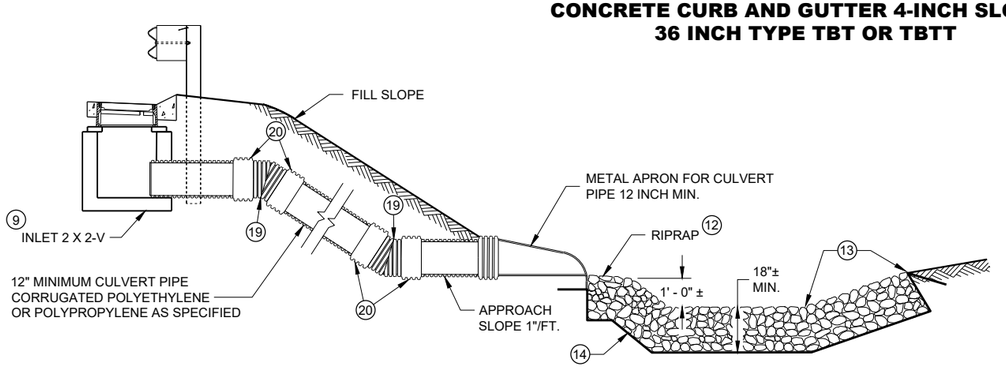

SECTION A - A

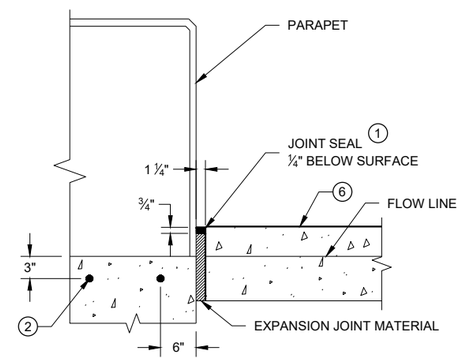

SECTION D - D

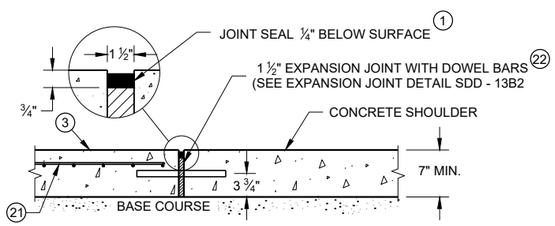

SECTION C - C

JOINT DETAIL FOR BRIDGE APPROACH WITH CONCRETE SHOULDERS

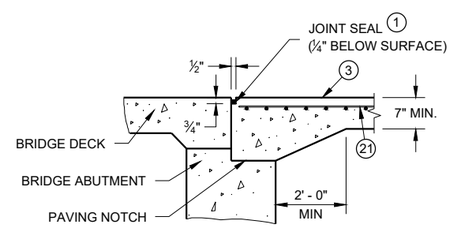

SECTION B-B 4

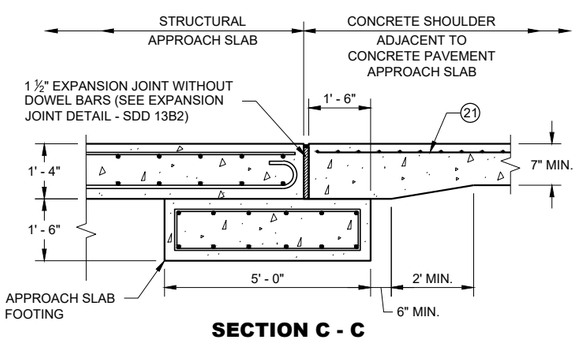

SECTION C - C

JOINT DETAIL FOR BRIDGE WITH STRUCTURAL APPROACH SLAB AND CONCRETE APPROACH SLAB

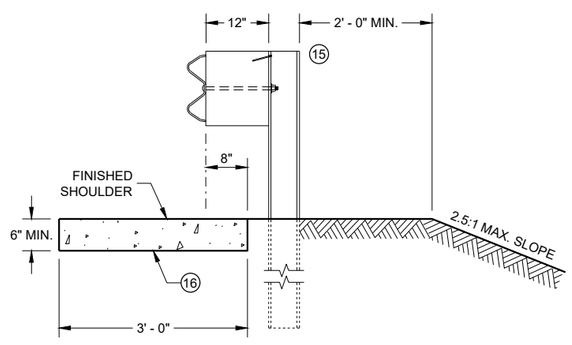

SECTION E - E

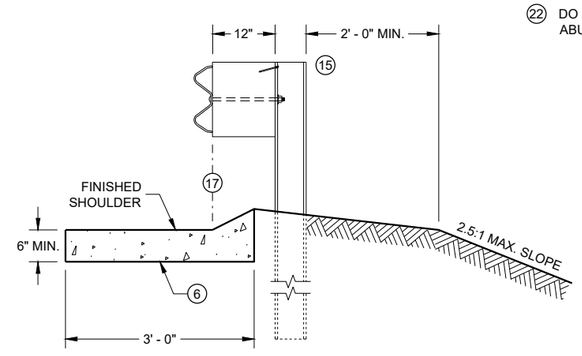

SECTION F - F

GENERAL NOTES

DETAILS OF CONSTRUCTION, MATERIALS AND WORKMANSHIP NOT SHOWN ON THIS DRAWING SHALL CONFORM TO THE PERTINENT REQUIREMENTS OF THE STANDARD SPECIFICATIONS AND THE APPLICABLE SPECIAL PROVISIONS.

ALL STEEL REINFORCEMENT SHALL BE EMBEDDED 2 INCHES CLEAR UNLESS OTHERWISE SHOWN OR NOTED.

1. USE A JOINT SEALANT CONFORMING TO STANDARD SPECIFICATION 415.2.6.
2. NO. 4 X 2' - 0" TIE BARS SPACED AT 12" C-C TO BE PLACED BY BRIDGE CONTRACTOR OR DRILLED TIE BARS PLACED AS DIRECTED BY THE ENGINEER.
3. PAVED CONCRETE SHOULDER (SDD 13A03) OR CONCRETE DRAINAGE SLAB.
4. CONCRETE PAVEMENT APPROACH SLAB (SHOWN) OR STRUCTURE APPROACH SLAB AND CONCRETE PAVEMENT APPROACH SLAB. SEE SDD 13B02 AND STRUCTURE PLANS.
5. PAVED CONCRETE SHOULDER (SDD 13A03) OR ASPHALT SHOULDER.
6. CONCRETE CURB AND GUTTER 4-INCH SLOPED 36-INCH TYPE TBT OR TBTT. USE TYPE TBTT CURB WITH NO. 4 X 2' -0" TIE BARS SPACED AT 3' - 0" C-C ONLY WHEN ADJACENT TO CONCRETE PAVEMENTS.
7. PLACE DRAINAGE STRUCTURE BEFORE MSG THRIE BEAM TRANSITION POST 1 (SEE SDD 14B45)
8. CENTER DRAINAGE STRUCTURE BETWEEN POSTS. 6-INCH MINIMUM SEPARATION FROM OUTSIDE WALL OF DRAINAGE STRUCTURE TO POSTS.
9. SEE SDD 08A05 AND 08C07 FOR DETAILS. SEE ROADWAY PLANS FOR LOCATION.
10. START CURB AND GUTTER TRANSITION OR END SECTION.
11. DEPRESS FLOW LINE (SEE DETAIL)
12. MEDIUM RIPRAP UNLESS OTHERWISE SPECIFIED.
13. LIMITS OF ADDITIONAL RIPRAP WHEN SPECIAL DITCH IS REQUIRED.
14. GEOTEXTILE TYPE HR.
15. MSG THRIE BEAM TRANSITION POST 1. SEE SDD 14B45 FOR ADDITIONAL CONSTRUCTION DETAILS AND ACCEPTABLE MATERIALS.
16. MAINTAIN WIDTH, THICKNESS AND CROSS SLOPE OF ADJACENT TYPE TBT OR TBTT CURB. SEE NOTE 6 FOR TIE BAR SPACING.
17. ALIGN FACE OF POST BLOCK WITH FLOW LINE.
18. MAINTAIN FLOW LINE AT EDGE OF PAVEMENT/FACE OF BEAM GUARD AS APPLICABLE.
19. MANUFACTURER SUPPLIED BEND.
20. MANUFACTURER SUPPLIED EXTERNAL MECHANICAL COUPLING OR A MANUFACTURER RECOMMENDED COUPLING WITH A MASTIC IMPREGNATED GEOTEXTILE WRAP AND MECHANICAL FASTENING BANDS.
21. MINIMUM REINFORCEMENT SHALL BE 6" X 6" - W4.0 X W4.0 OR NO. 3 BARS LONGITUDINAL AND TRANSVERSE SPACING 12" C - C.
22. DO NOT CONSTRUCT AN EXPANSION JOINT OR INSTALL DOWEL BARS WHEN ABUTTING HMA PAVEMENTS.

CONCRETE SURFACE DRAINS DROP INLET TYPE AT STRUCTURES

STATE OF WISCONSIN
DEPARTMENT OF TRANSPORTATION

APPROVED
May 2023 — DATE
/S/ Rodney Taylor — ROADWAY STANDARDS DEVE ENGINEER

FHWA

6

SDD 08D03 - 09b

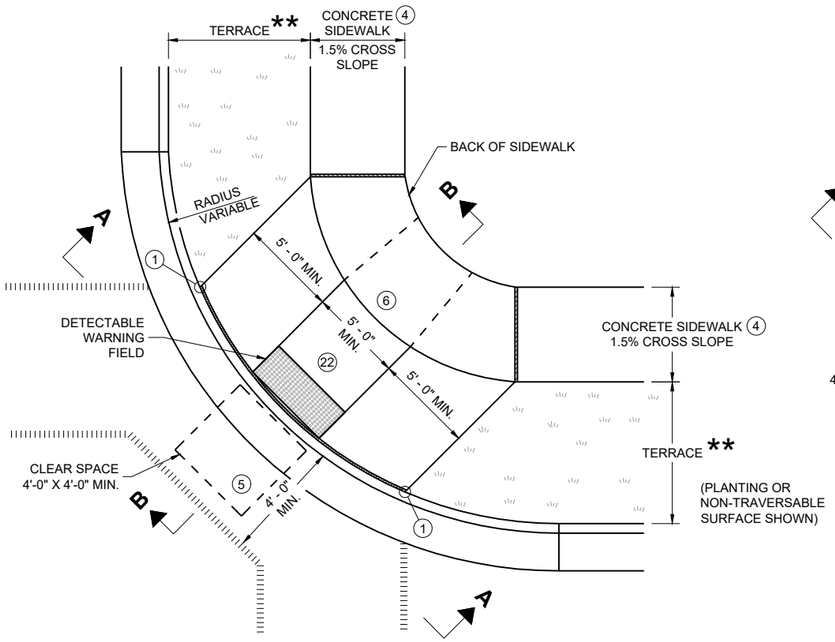

PLAN VIEW

CURB RAMP TYPE 1

(CENTER OF CORNER RADIUS)

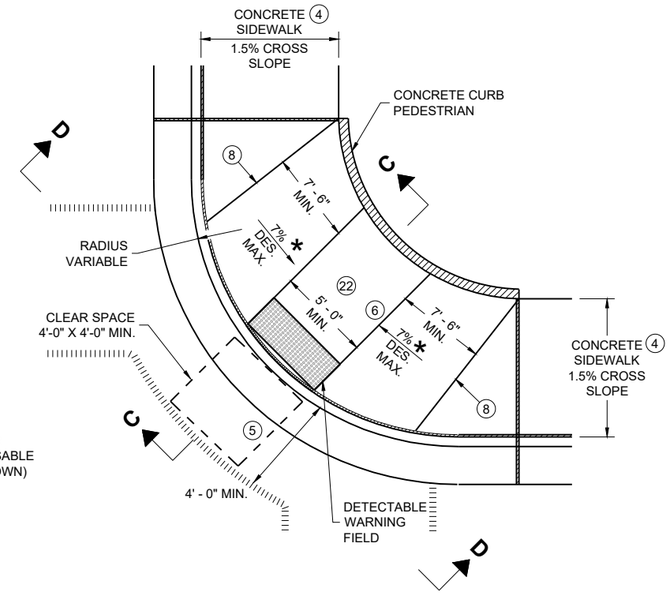

PLAN VIEW

CURB RAMP TYPE 1 - A

(NO TERRACE)

GENERAL NOTES

AVOID PLACING DRAINAGE STRUCTURES, JUNCTION BOXES OR OTHER OBSTRUCTIONS IN FRONT OF CURB RAMP ACCESS AREAS.

DETAILS OF CONSTRUCTION, MATERIALS AND WORKMANSHIP NOT SHOWN ON THIS DRAWING SHALL CONFORM TO THE PERTINENT REQUIREMENTS OF THE STANDARD SPECIFICATIONS AND THE APPLICABLE SPECIAL PROVISIONS.

WHEN NECESSARY, THE SIDEWALK ELEVATION MAY BE LOWERED TO MEET THE HIGH POINT ON THE CURB RAMP.

TYPE 1 CURB RAMPS SHALL HAVE A NORMAL SIDEWALK APRON AND CURB ON BOTH SIDES OF CURB RAMP.

DETECTABLE WARNING FILED SHALL BE MEASURED AND PAID BY THE SQUARE FOOT AS "CURB RAMP DETECTABLE WARNING FIELD". THE CONCRETE PEDESTRIAN CURB, IF NEEDED, SHALL BE MEASURED AND PAID BY THE LINEAR FOOT AS "CONCRETE CURB PEDESTRIAN". CONCRETE SIDEWALK IN THE CURB RAMP AREA SHALL BE MEASURED AND PAID BY THE SQUARE FOOT AS CONCRETE SIDEWALK, INCLUDING THE AREA UNDER THE DETECTABLE WARNING FIELD.

SELECT CURB RAMP DETECTABLE WARNING FIELD MATERIALS AND DEVICES FROM THE DEPARTMENT'S APPROVED MATERIALS LIST. THE COLOR OF THE DETECTABLE WARNING FIELD IS SPECIFIED ELSEWHERE AND IS INCIDENTAL TO THE BID ITEM OF "CURB RAMP DETECTABLE WARNING FIELD"

DETECTABLE WARNING FIELDS THAT ARE INSTALLED AS A GROUP OR SIDE BY SIDE, SHALL BE FROM THE SAME MANUFACTURER.

SURFACE TEXTURE OF THE RAMP SHALL BE OBTAINED BY COARSE BROOMING TRANSVERSE TO THE SLOPE OF THE CURB RAMP.

(1) THIS POINT IS AN EXTENSION OF OUTSIDE EDGE OF APPROACHING SIDEWALK WHERE IT MEETS THE BACK OF CONCRETE CURB. POINT LOCATION MAY BE ADJUSTED TO ALIGN WITH BEGINNING OF FULL-HEIGHT CURB IF THIS DISTANCE IS SHORT.

(2) GRADE CHANGE BETWEEN GUTTER COUNTER SLOPE AND THE CURB RAMP SLOPE IS DESIRABLY 11% OR LESS AND SHALL NOT EXCEED 13.3%. TYPICAL GUTTER COUNTER SLOPE IS 4% BUT MAY BE MODIFIED TO FIT FIELD CONDITIONS. PROVIDE LONGITUDINAL DRAINAGE AROUND CURB AND AWAY FROM CURB RAMP. NO VERTICAL LIPS OR DISCONTINUITIES ARE ALLOWED. SLOPE OF CURB HEAD OPENING SHALL MATCH THE RAMP SLOPE, MINIMALLY 1.5%, DESIRABLY 7% OR LESS, AND SHALL NOT EXCEED A MAXIMUM OF 8.3%. WHEN ADJACENT TO 1.5% LANDING, CONSTRUCT CURB HEAD OPENING AT 1.5% IN THE DIRECTION OF PEDESTRIAN TRAVEL.

(3) MAXIMUM 8.3% CURB RAMP SLOPE IS ALLOWABLE WITH GUTTER COUNTER SLOPE OF 5% MAXIMUM AND A 13.3% MAXIMUM GRADE CHANGE.

(4) ±0.5% CONSTRUCTION TOLERANCE IN SIDEWALK CROSS SLOPE. THE SIDEWALK CROSS SLOPE SHALL NOT EXCEED 2.1% WITHOUT PRIOR APPROVAL FROM THE ENGINEER.

(5) PROVIDE A CLEAR SPACE IN THE STREET AND GUTTER AREA. WHEN THE GUTTER CROSS SLOPE EXCEEDS 2.1%, CONSTRUCT THE CLEAR SPACE IN THE STREET AREA AND THE 4 FOOT WIDTH IS MEASURED FROM THE FLANGE LINE. FOR RECONSTRUCTION AND MODERNIZATION PROJECTS THE CLEAR SPACE SLOPE PARALLEL TO THE CURBLINE SHOULD BE 2.1% MAX FOR CROSSINGS THAT ARE STOP AND YIELD CONTROLLED, AND 5% MAX FOR THOSE THAT ARE SIGNAL CONTROLLED. FOR PERPETUATION AND REHABILITATION PROJECTS THE SLOPE OF THE CLEAR SPACE PARALLEL TO THE CURBLINE WILL MATCH THE ROADWAY LONGITUDINAL SLOPE. THE SLOPE OF THE CLEAR SPACE PERPENDICULAR TO THE CURBLINE WILL MATCH THE ROADWAY CROSS SLOPE BUT SHOULD NOT EXCEED 5% UNLESS THE ROADWAY IS SUPERELEVATED (WHEN SUPERELEVATED THE ROADWAY CROSS SLOPE SHOULD MATCH THE SUPERELEVATION).

(6) PROVIDE A 5 FOOT BY 5 FOOT LANDING. SLOPE PERPENDICULAR TO CURB SHALL BE 2.1% MAXIMUM. SLOPE PARALLEL TO CURB SHALL MATCH THE CURB AND GUTTER LONGITUDINAL SLOPE.

(8) PROVIDE GRADE BREAK PERPENDICULAR TO DIRECTION OF WHEELCHAIR TRAVEL.

(17) A MAXIMUM 2-INCH CONCRETE BORDER IS PERMITTED ALONG ALL SIDES OF THE DETECTABLE WARNING FIELD SURFACE.

(22) THE ENTIRE RAMP SHALL BE A PLANAR SURFACE. DO NOT WARP THE RUNNING SLOPE OR CROSS SLOPE OF THE RAMP. WARPING OF THE SIDEWALK CROSS SLOPE SHALL TAKE PLACE BETWEEN THE LANDING AND MATCH POINT.

LEGEND

- ½" EXPANSION JOINT SIDEWALK
- CONTRACTION JOINT FIELD LOCATED
- PAVEMENT MARKING CROSSWALK (WHITE)
- * MAXIMUM 8.3%
- ** WIDTH SHOWN ELSEWHERE IN THE PLANS

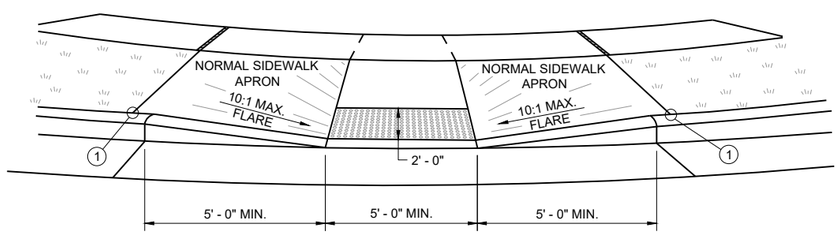

VIEW A - A FOR TYPE 1

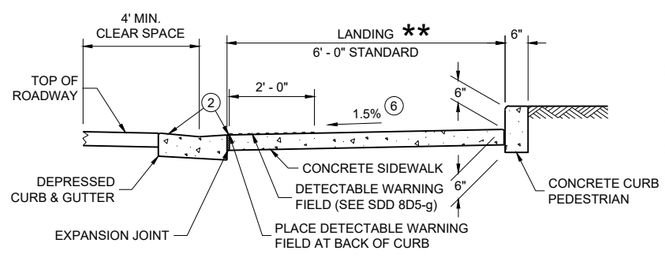

SECTION C - C FOR TYPE 1 - A

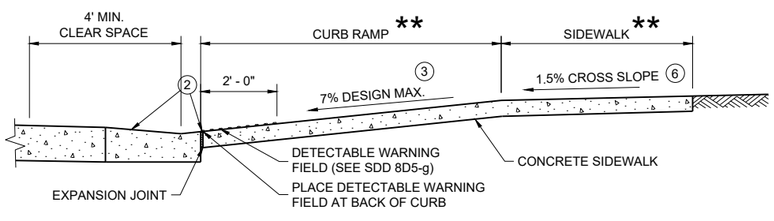

SECTION B - B FOR TYPE 1

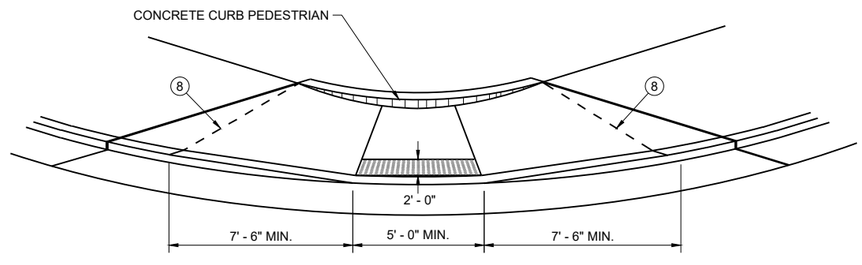

VIEW D - D FOR TYPE 1 - A

CURB RAMPS TYPE 1 AND 1-A

STATE OF WISCONSIN
DEPARTMENT OF TRANSPORTATION

6

SDD 08D05-22a

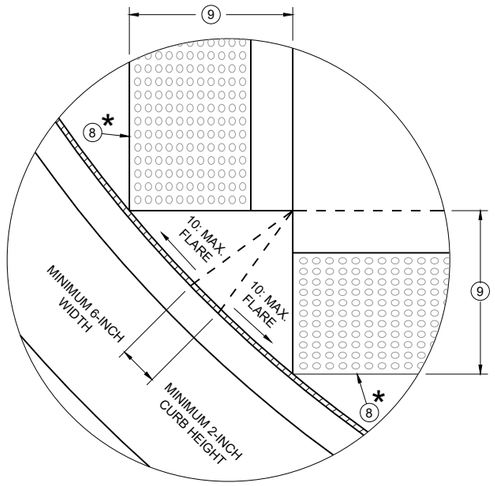

DETAIL A

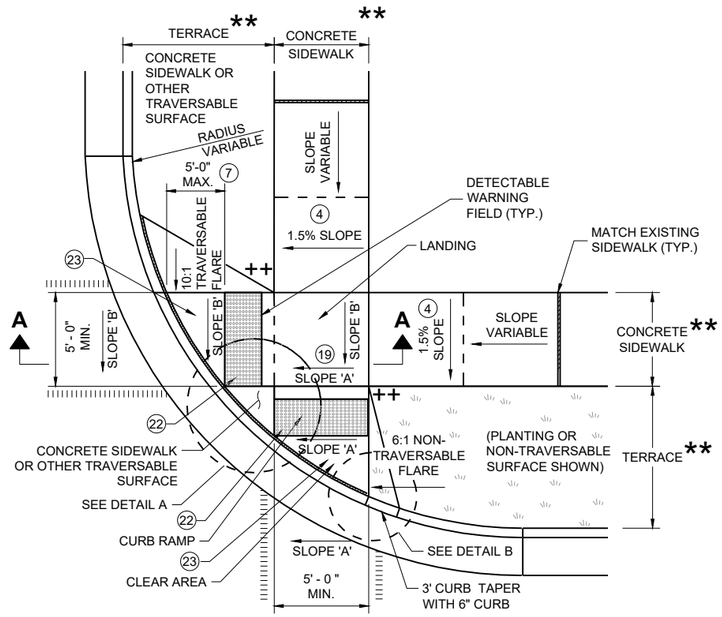

PLAN VIEW

CURB RAMP TYPE 2

(CENTER OF CORNER RADIUS)

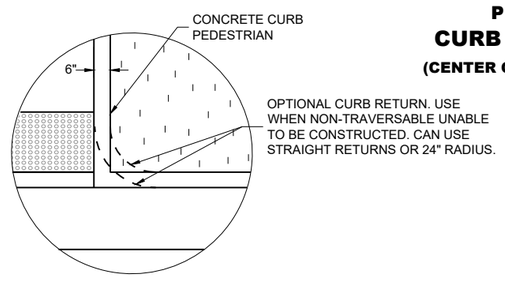

DETAIL B

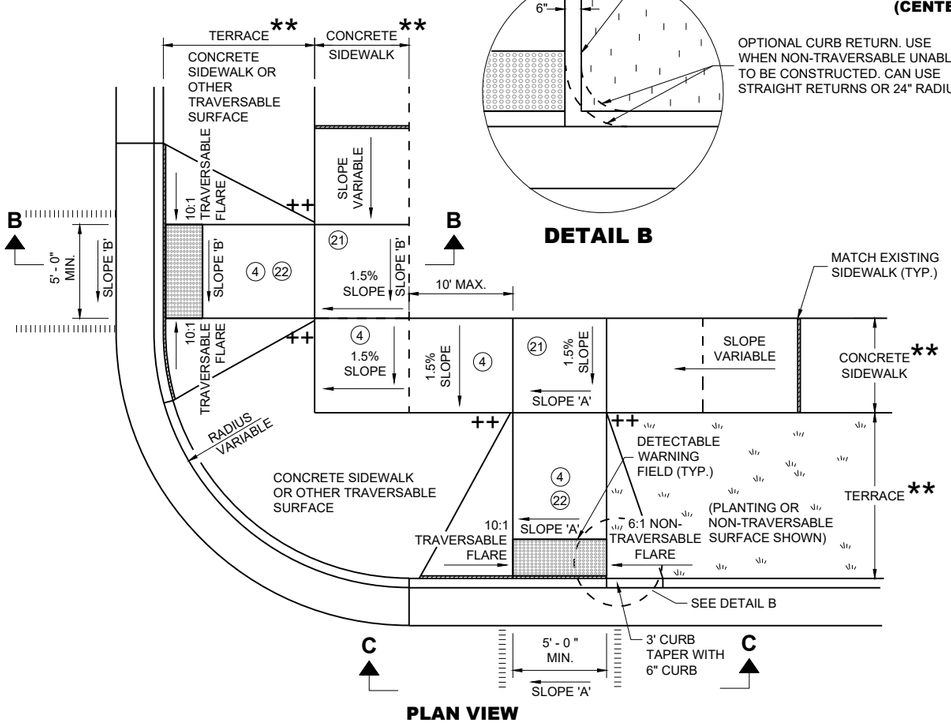

PLAN VIEW

CURB RAMP TYPE 3

(OUTSIDE OF CROSSWALK AREA)

GENERAL NOTES

AVOID PLACING DRAINAGE STRUCTURES, JUNCTION BOXES OR OTHER OBSTRUCTIONS IN FRONT OF CURB RAMP ACCESS AREAS.

DETAILS OF CONSTRUCTION, MATERIALS AND WORKMANSHIP NOT SHOWN ON THIS DRAWING SHALL CONFORM TO THE PERTINENT REQUIREMENTS OF THE STANDARD SPECIFICATIONS AND THE APPLICABLE SPECIAL PROVISIONS.

DETECTABLE WARNING FIELDS THAT ARE INSTALLED AS A GROUP OR SIDE BY SIDE SHALL BE FROM THE SAME MANUFACTURER.

2 GRADE CHANGE BETWEEN GUTTER COUNTER SLOPE AND THE CURB RAMP SLOPE IS DESIRABLY 11% OR LESS AND SHALL NOT EXCEED 13.3%. TYPICAL GUTTER COUNTER SLOPE IS 4% BUT MAY BE MODIFIED TO FIT FIELD CONDITIONS. PROVIDE LONGITUDINAL DRAINAGE AROUND CURB AND AWAY FROM CURB RAMP. NO VERTICAL LIPS OR DISCONTINUITIES ARE ALLOWED. SLOPE OF CURB HEAD OPENING SHALL MATCH THE RAMP SLOPE, MINIMALLY 1.5%, DESIRABLY 7% OR LESS, AND SHALL NOT EXCEED A MAXIMUM OF 8.3%. WHEN ADJACENT TO 1.5% LANDING, CONSTRUCT CURB HEAD OPENING AT 1.5% IN THE DIRECTION OF PEDESTRIAN TRAVEL.

3 MAXIMUM 8.3% CURB RAMP SLOPE IS ALLOWABLE WITH GUTTER COUNTER SLOPE OF 5% MAXIMUM AND A 13.3% MAXIMUM GRADE CHANGE.

4 ±0.5% CONSTRUCTION TOLERANCE IN SIDEWALK CROSS SLOPE. THE SIDEWALK CROSS SLOPE SHALL NOT EXCEED 2.1% WITHOUT PRIOR APPROVAL FROM THE ENGINEER.

7 WHEN GRADE BREAK DISTANCE EXCEEDS 5 FEET, USE RADIAL DETECTABLE WARNING FIELD PER SDD 8D5-f.

8 PROVIDE GRADE BREAK PERPENDICULAR TO DIRECTION OF WHEELCHAIR TRAVEL.

9 WHEN DISTANCE IS LESS THAN 6' - 0", IT MAY BE DIFFICULT TO ACHIEVE A 7% DESIGN MAXIMUM SLOPE OR FLATTER ALONG THE RAMP. REDUCE CURB HEIGHT IN TRIANGLE AREA TO ACHIEVE 7% DESIGN MAXIMUM SLOPE OR FLATTER ON RAMP. CONSTRUCT 2-INCH MINIMUM CURB HEIGHT BETWEEN 10:1 FLARES.

17 A MAXIMUM 2-INCH CONCRETE BORDER IS PERMITTED ALONG ALL SIDES OF THE DETECTABLE WARNING FIELD SURFACE.

19 WHERE A LANDING SERVES TWO CURB RAMPS, THE LANDING SLOPE SHALL NOT EXCEED THE CROSS SLOPE AT THE BOTTOM OF THE RAMP OR WITHIN THE CROSSWALK PARALLEL TO THE DIRECTION OF TRAVEL.

21 PROVIDE A LANDING WITH A SLOPE PARALLEL TO ROADWAY THAT MATCHES SLOPE AT THE BOTTOM OF THE ADJACENT RAMP. SLOPE PERPENDICULAR TO ROADWAY SHALL BE 2.1% MAXIMUM. STANDARD LANDING SIZE IS 5 FEET BY 5 FEET.

22 THE ENTIRE RAMP SHALL BE A PLANAR SURFACE. DO NOT WARP THE RUNNING SLOPE OR CROSS SLOPE OF THE RAMP. WARPING OF THE SIDEWALK CROSS SLOPE SHALL TAKE PLACE BETWEEN THE LANDING AND MATCH POINT.

23 THE CLEAR AREA BETWEEN THE BOTTOM OF RAMP AND BACK OF CURB SHALL BE SLOPED SO THAT WATER DRAINS OUT OF ONE SIDE OR BOTH SIDES OF THE CURB OPENING.

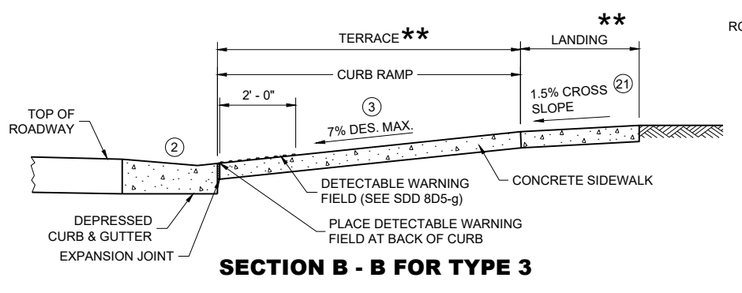

SECTION B - B FOR TYPE 3

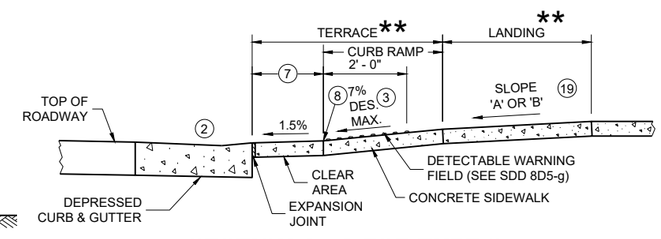

SECTION A - A FOR TYPE 2

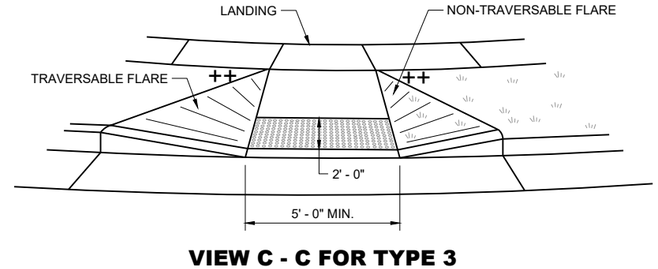

VIEW C - C FOR TYPE 3

LEGEND

▬▬▬	½" EXPANSION JOINT SIDEWALK
– – – –	CONTRACTION JOINT SIDEWALK
|||||||||||	PAVEMENT MARKING CROSSWALK (WHITE)
*	MAXIMUM 2.1% SLOPE IN ALL DIRECTIONS IN FRONT OF GRADE BREAK
**	WIDTH SHOWN ELSEWHERE IN THE PLANS
++	CONSTRUCT 6" WEDGE TO AVOID CONCRETE BREAKAGE

CURB RAMPS TYPE 2 AND 3

STATE OF WISCONSIN
DEPARTMENT OF TRANSPORTATION

6

SDD 08D05-22b

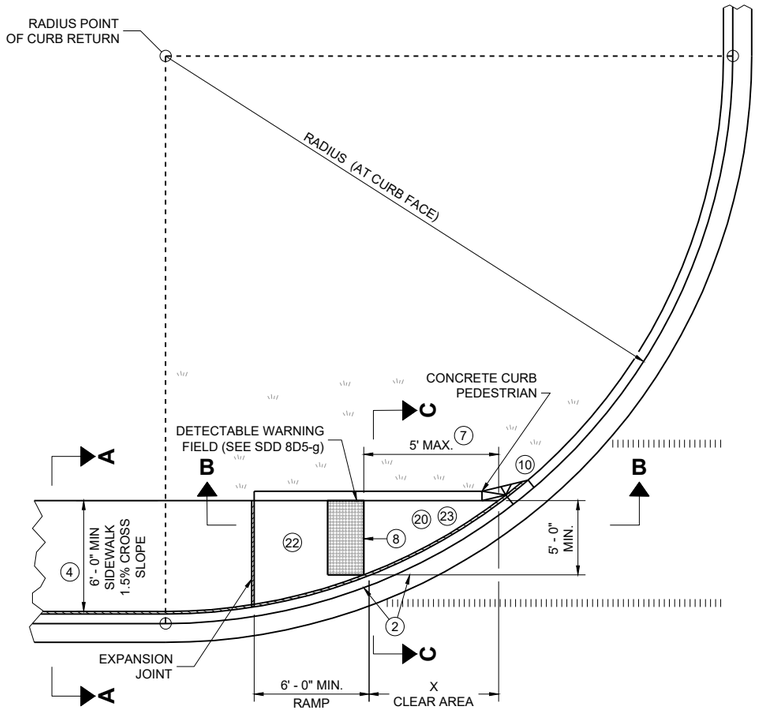

PLAN VIEW

CURB RAMP TYPE 4A

LEGEND

- ½" EXPANSION JOINT SIDEWALK
- CONTRACTION JOINT SIDEWALK
- PAVEMENT MARKING CROSSWALK (WHITE)
- ++ CONSTRUCT 6" WEDGE TO AVOID CONCRETE BREAKAGE

RADIUS (AT CURB FACE)	X
10 FEET	4' - 7"

INTERMEDIATE RADII CAN BE INTERPOLATED

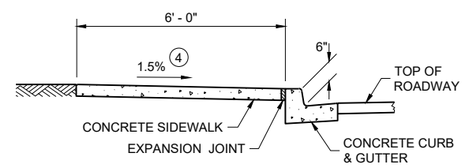

SECTION A - A FOR TYPE 4A

GENERAL NOTES

AVOID PLACING DRAINAGE STRUCTURES, JUNCTION BOXES OR OTHER OBSTRUCTIONS IN FRONT OF CURB RAMP ACCESS AREAS.

DETAILS OF CONSTRUCTION, MATERIALS AND WORKMANSHIP NOT SHOWN ON THIS DRAWING SHALL CONFORM TO THE PERTINENT REQUIREMENTS OF THE STANDARD SPECIFICATIONS AND THE APPLICABLE SPECIAL PROVISIONS.

DETECTABLE WARNING FIELDS THAT ARE INSTALLED AS A GROUP OR SIDE BY SIDE, SHALL BE FROM THE SAME MANUFACTURER.

(2) GRADE CHANGE BETWEEN GUTTER COUNTER SLOPE AND THE CURB RAMP SLOPE IS DESIRABLY 11% OR LESS AND SHALL NOT EXCEED 13.3%. TYPICAL GUTTER COUNTER SLOPE IS 4% BUT MAY BE MODIFIED TO FIT FIELD CONDITIONS. PROVIDE LONGITUDINAL DRAINAGE AROUND CURB AND AWAY FROM CURB RAMP. NO VERTICAL LIPS OR DISCONTINUITIES ARE ALLOWED. SLOPE OF CURB HEAD OPENING SHALL MATCH THE RAMP SLOPE, MINIMALLY 1.5%, DESIRABLY 7% OR LESS, AND SHALL NOT EXCEED A MAXIMUM OF 8.3%. WHEN ADJACENT TO 1.5% LANDING, CONSTRUCT CURB HEAD OPENING AT 1.5% IN THE DIRECTION OF PEDESTRIAN TRAVEL.

(3) MAXIMUM 8.3% CURB RAMP SLOPE IS ALLOWABLE WITH GUTTER COUNTER SLOPE OF 5% MAXIMUM AND A 13.3% MAXIMUM GRADE CHANGE.

(4) ±0.5% CONSTRUCTION TOLERANCE IN SIDEWALK CROSS SLOPE. THE SIDEWALK CROSS SLOPE SHALL NOT EXCEED 2.1% WITHOUT PRIOR APPROVAL FROM THE ENGINEER.

(7) WHEN THIS GRADE BREAK DISTANCE EXCEEDS 5 FEET, USE RADIAL DETECTABLE WARNING FIELD PER SDD 8D5-f.

(8) PROVIDE GRADE BREAK PERPENDICULAR TO DIRECTION OF WHEELCHAIR TRAVEL.

(10) INSTALL TRANSITION NOSE (INCIDENTAL TO OTHER PAY ITEMS). DO NOT MARK TRANSITION NOSE.

(17) A MAXIMUM 2-INCH CONCRETE BORDER IS PERMITTED ALONG ALL SIDES OF THE DETECTABLE WARNING FIELD SURFACE.

(20) MAXIMUM 1.5% DESIGN MAXIMUM AND 2.1% PROWAG MAXIMUM RUNNING SLOPE ON CLEAR AREA. CROSS SLOPE OF CLEAR AREA SHALL MATCH THE CROSS SLOPE OF THE ADJACENT CROSSWALK.

(22) THE ENTIRE RAMP SHALL BE A PLANAR SURFACE. DO NOT WARP THE RUNNING SLOPE OR CROSS SLOPE OF THE RAMP. WARPING OF THE SIDEWALK CROSS SLOPE SHALL TAKE PLACE BETWEEN THE LANDING AND MATCH POINT.

(23) THE CLEAR AREA BETWEEN THE BOTTOM OF RAMP AND BACK OF CURB SHALL BE SLOPED SO THAT WATER DRAINS OUT OF ONE SIDE OR BOTH SIDES OF THE CURB OPENING.

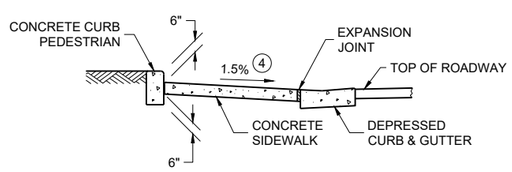

SECTION C - C FOR TYPE 4A

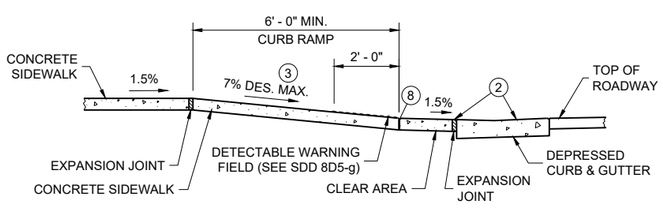

SECTION B - B FOR TYPE 4A AND TYPE 4A1

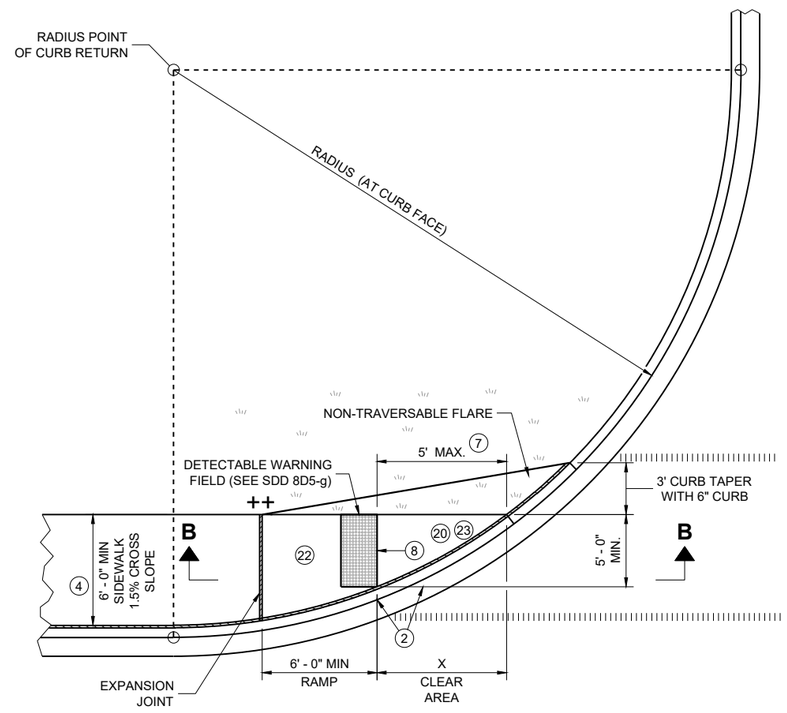

PLAN VIEW

CURB RAMP TYPE 4A1

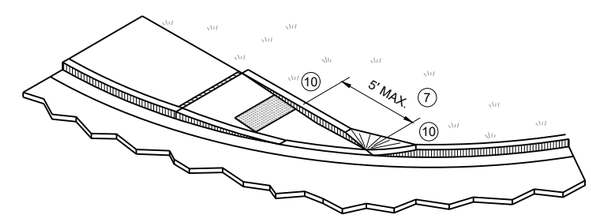

ISOMETRIC VIEW FOR TYPE 4A

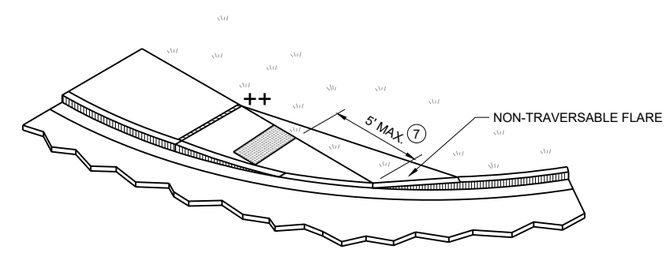

ISOMETRIC VIEW FOR TYPE 4A1

CURB RAMPS
TYPE 4A AND 4A1

STATE OF WISCONSIN
DEPARTMENT OF TRANSPORTATION

6

6

SDD 08D05-22c

SDD 08D05-22c

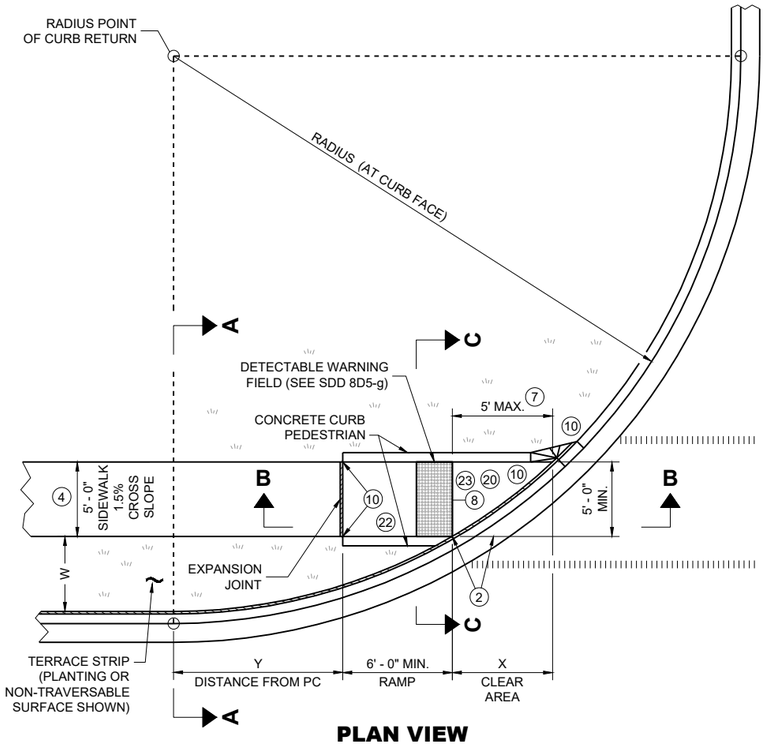

PLAN VIEW
CURB RAMP TYPE 4B

RADIUS (AT CURB FACE)	W = 3' - 0"		W = 4' - 0"		W = 5' - 0"		W = 6' - 0"		W = 7' - 0"		W = 8' - 0"		W = 9' - 0"		W = 10' - 0"	
	X	Y	X	Y	X	Y	X	Y	X	Y	X	Y	X	Y	X	Y
10 FEET	2' - 10 ¼"	0' - 5"	2' - 1"	1' - 4 ½"	1' - 5"	2' - 1"	0' - 10"	2' - 7 ½"	0' - 3 ¼"	3' - 0 ¼"						
15 FEET	4' - 6 ¾"	2' - 1 ¾"	3' - 9"	3' - 5 ¾"	3' - 1 ¼"	4' - 6"	2' - 6 ¾"	5' - 4 ½"	2' - 1"	6' - 1"	1' - 8"	6' - 8 ½"	1' - 3 ¼"	7' - 2 ½"	0' - 10 ¾"	7' - 7 ¼"
20 FEET			4' - 11 ½"	5' - 1 ¾"	4' - 3 ¼"	6' - 5 ½"	3' - 8 ¾"	7' - 7"	3' - 3"	8' - 6 ½"	2' - 10"	9' - 4 ½"	2' - 5 ½"	10' - 1 ¼"	2' - 1 ¼"	10' - 9"
30 FEET									4' - 10 ¾"	12' - 5 ¾"	4' - 5 ½"	13' - 7 ¾"	4' - 0 ¾"	14' - 8 ½"	3' - 8 ½"	15' - 8 ¼"
40 FEET															4' - 10 ¾"	19' - 8 ¼"

INTERMEDIATE RADII CAN BE INTERPOLATED
DIMENSION "Y" IS CALCULATED BASED ON 6'-0" RAMP LENGTH
DIMENSION "X" IS CALCULATED BASED ON 5'-0" SIDEWALK WIDTH

LEGEND

- ½" EXPANSION JOINT SIDEWALK
- CONTRACTION JOINT SIDEWALK
- PAVEMENT MARKING CROSSWALK (WHITE)
- * MAXIMUM 2.1% SLOPE IN ALL DIRECTIONS IF FRONT OF GRADE BREAK
- ++ CONSTRUCT 6" WEDGE TO AVOID CONCRETE BREAKAGE

GENERAL NOTES

AVOID PLACING DRAINAGE STRUCTURES, JUNCTION BOXES OR OTHER OBSTRUCTIONS IN FRONT OF CURB RAMP ACCESS AREAS.

DETAILS OF CONSTRUCTION, MATERIALS AND WORKMANSHIP NOT SHOWN ON THIS DRAWING SHALL CONFORM TO THE PERTINENT REQUIREMENTS OF THE STANDARD SPECIFICATIONS AND THE APPLICABLE SPECIAL PROVISIONS.

DETECTABLE WARNING FIELDS THAT ARE INSTALLED AS A GROUP OR SIDE BY SIDE, SHALL BE FROM THE SAME MANUFACTURER.

(2) GRADE CHANGE BETWEEN GUTTER COUNTER SLOPE AND THE CURB RAMP SLOPE IS DESIRABLY 11% OR LESS AND SHALL NOT EXCEED 13.3%. TYPICAL GUTTER COUNTER SLOPE IS 4% BUT MAY BE MODIFIED TO FIT FIELD CONDITIONS. PROVIDE LONGITUDINAL DRAINAGE AROUND CURB AND AWAY FROM CURB RAMP. NO VERTICAL LIPS OR DISCONTINUITIES ARE ALLOWED. SLOPE OF CURB HEAD OPENING SHALL MATCH THE RAMP SLOPE, MINIMALLY 1.5%, DESIRABLY 7% OR LESS, AND SHALL NOT EXCEED A MAXIMUM OF 8.3%. WHEN ADJACENT TO 1.5% LANDING, CONSTRUCT CURB HEAD OPENING AT 1.5% IN THE DIRECTION OF PEDESTRIAN TRAVEL.

(3) MAXIMUM 8.3% CURB RAMP SLOPE IS ALLOWABLE WITH GUTTER COUNTER SLOPE OF 5% MAXIMUM AND A 13.3% MAXIMUM GRADE CHANGE.

(4) ±0.5% CONSTRUCTION TOLERANCE IN SIDEWALK CROSS SLOPE. THE SIDEWALK CROSS SLOPE SHALL NOT EXCEED 2.1% WITHOUT PRIOR APPROVAL FROM THE ENGINEER.

(7) WHEN THIS GRADE BREAK DISTANCE EXCEEDS 5 FEET, USE RADIAL DETECTABLE WARNING FIELD PER SDD 8D5-f.

(8) PROVIDE GRADE BREAK PERPENDICULAR TO DIRECTION OF WHEELCHAIR TRAVEL.

(10) INSTALL TRANSITION NOSE (INCIDENTAL TO OTHER PAY ITEMS). DO NOT MARK TRANSITION NOSE.

(17) A MAXIMUM 2-INCH CONCRETE BORDER IS PERMITTED ALONG ALL SIDES OF THE DETECTABLE WARNING FIELD SURFACE.

(20) MAXIMUM 1.5% DESIGN MAXIMUM AND 2.1% PROWAG MAXIMUM RUNNING SLOPE ON CLEAR AREA. CROSS SLOPE OF CLEAR AREA SHALL MATCH THE CROSS SLOPE OF THE ADJACENT CROSSWALK.

(22) THE ENTIRE RAMP SHALL BE A PLANAR SURFACE. DO NOT WARP THE RUNNING SLOPE OR CROSS SLOPE OF THE RAMP. WARPING OF THE SIDEWALK CROSS SLOPE SHALL TAKE PLACE BETWEEN THE LANDING AND MATCH POINT.

(23) THE CLEAR AREA BETWEEN THE BOTTOM OF RAMP AND BACK OF CURB SHALL BE SLOPED SO THAT WATER DRAINS OUT OF ONE SIDE OR BOTH SIDES OF THE CURB OPENING.

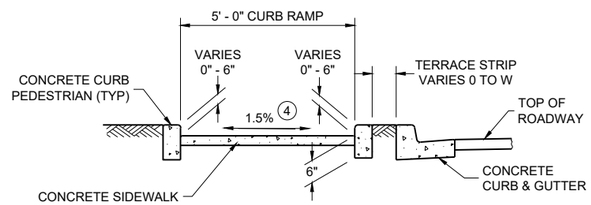

SECTION C - C FOR TYPE 4B

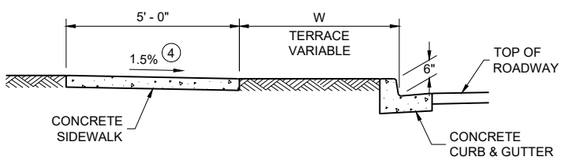

SECTION A - A FOR TYPE 4B

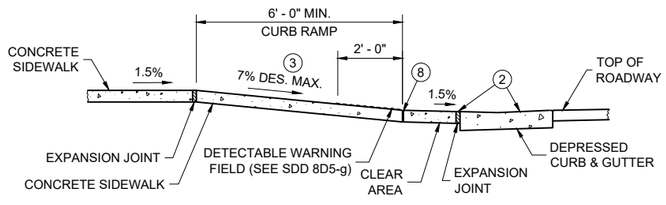

SECTION B - B FOR TYPE 4B AND TYPE 4B1

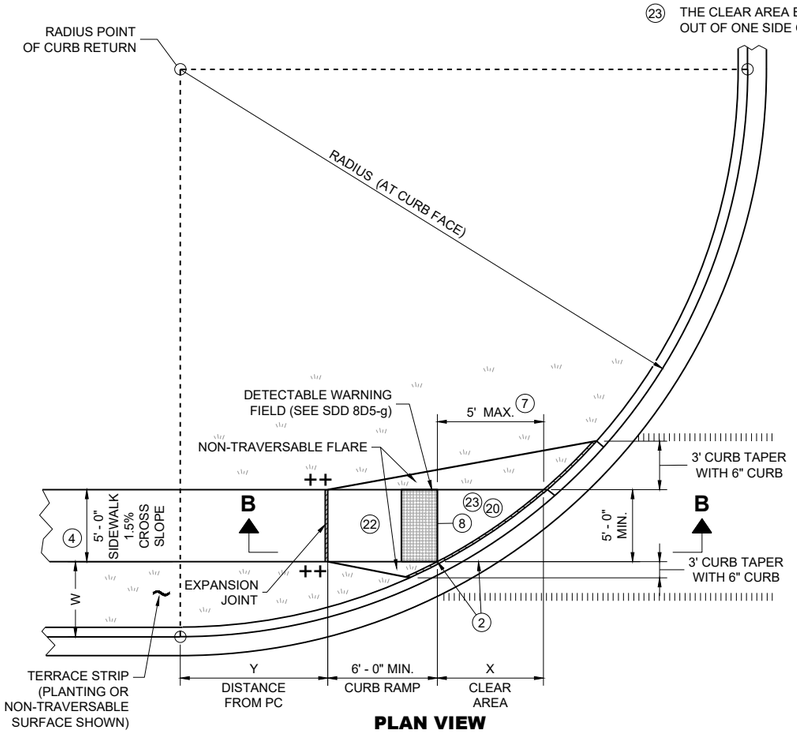

PLAN VIEW
CURB RAMP TYPE 4B1

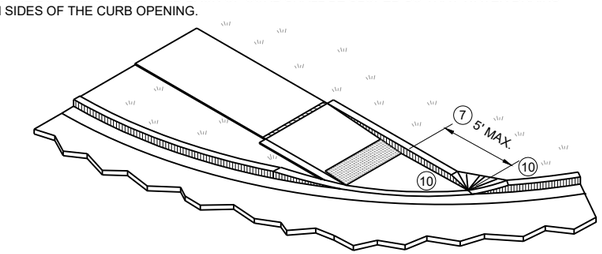

ISOMETRIC VIEW FOR TYPE 4B

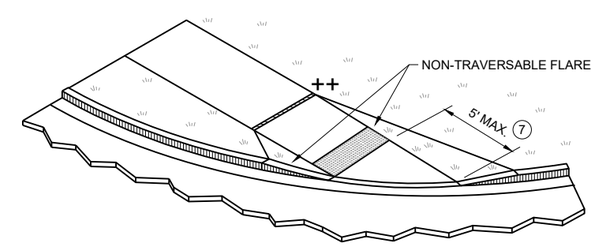

ISOMETRIC VIEW FOR TYPE 4B1

CURB RAMPS TYPE 4B AND 4B1

STATE OF WISCONSIN
DEPARTMENT OF TRANSPORTATION

6

SDD 08D05-22d

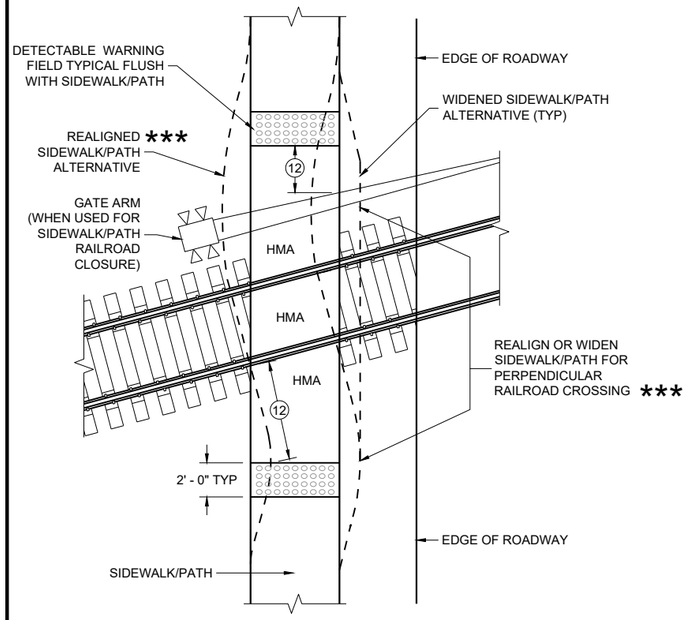

CURB RAMP TYPE 8

DETECTABLE WARNINGS FOR SIDEWALKS OR SHARED USE PATHS AT RAILROAD CROSSINGS

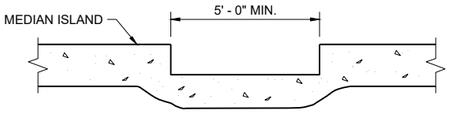

SECTION A - A FOR TYPE 5

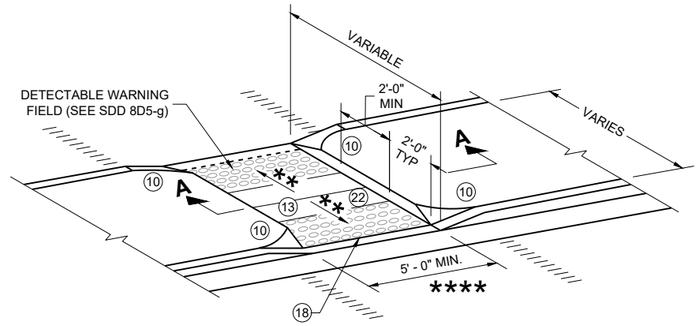

CURB RAMP TYPE 5

MEDIAN ISLAND NON-ELEVATED PEDESTRIAN CROSSING

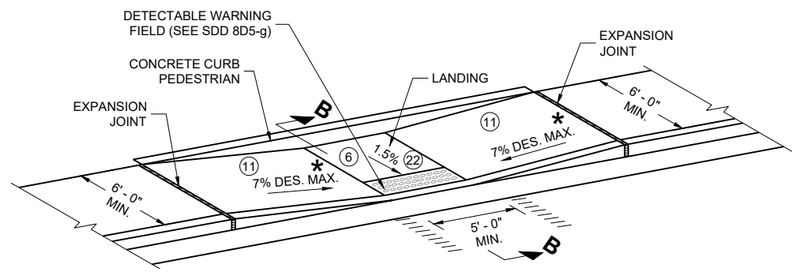

CURB RAMP TYPE 7A

FOR INTERSECTIONS AND MID BLOCK CROSSINGS

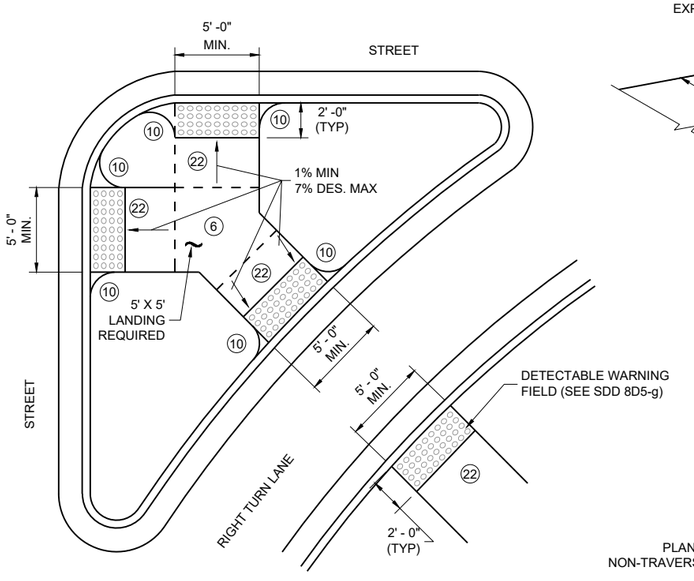

CURB RAMP TYPE 6

DETECTABLE WARNING AT ISLANDS

REFER TO GENERAL NOTES (2) AND (3) FOR ALL ISLAND CURB RAMPS

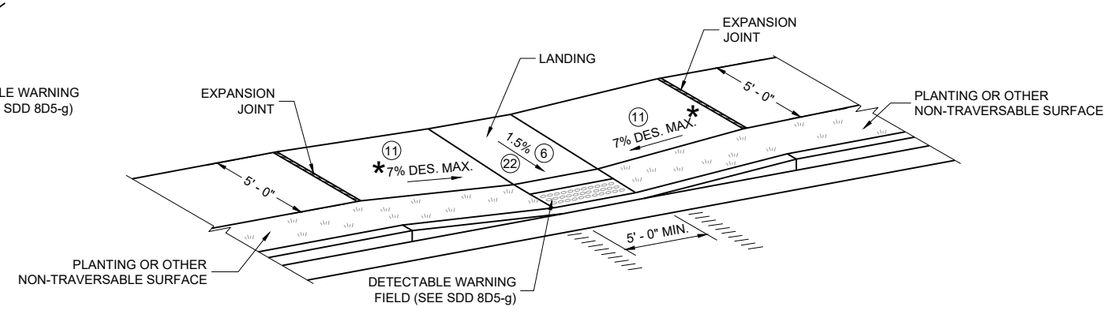

CURB RAMP TYPE 7B

FOR INTERSECTIONS AND MID BLOCK CROSSINGS

GENERAL NOTES

AVOID PLACING DRAINAGE STRUCTURES, JUNCTION BOXES OR OTHER OBSTRUCTIONS IN FRONT OF CURB RAMP ACCESS AREAS.

DETAILS OF CONSTRUCTION, MATERIALS AND WORKMANSHIP NOT SHOWN ON THIS DRAWING SHALL CONFORM TO THE PERTINENT REQUIREMENTS OF THE STANDARD SPECIFICATIONS AND THE APPLICABLE SPECIAL PROVISIONS.

SIDEWALK CROSS SLOPE SHALL NOT EXCEED 2.1%.

DETECTABLE WARNING FIELDS THAT ARE INSTALLED AS A GROUP OR SIDE BY SIDE, SHALL BE FROM THE SAME MANUFACTURER.

(2) GRADE CHANGE BETWEEN GUTTER COUNTER SLOPE AND THE CURB RAMP SLOPE IS DESIRABLY 11% OR LESS AND SHALL NOT EXCEED 13.3%. TYPICAL GUTTER COUNTER SLOPE IS 4% BUT MAY BE MODIFIED TO FIT FIELD CONDITIONS. PROVIDE LONGITUDINAL DRAINAGE AROUND CURB AND AWAY FROM CURB RAMP. NO VERTICAL LIPS OR DISCONTINUITIES ARE ALLOWED. SLOPE OF CURB HEAD OPENING SHALL MATCH THE RAMP SLOPE, MINIMALLY 1.5%, DESIRABLY 7% OR LESS, AND SHALL NOT EXCEED A MAXIMUM OF 8.3%. WHEN ADJACENT TO 1.5% LANDING, CONSTRUCT CURB HEAD OPENING AT 1.5% IN THE DIRECTION OF PEDESTRIAN TRAVEL.

(3) MAXIMUM 8.3% CURB RAMP SLOPE IS ALLOWABLE WITH GUTTER COUNTER SLOPE OF 5% MAXIMUM AND A 13.3% MAXIMUM GRADE CHANGE.

(4) ±0.5% CONSTRUCTION TOLERANCE IN SIDEWALK CROSS SLOPE. THE SIDEWALK CROSS SLOPE SHALL NOT EXCEED 2.1% WITHOUT PRIOR APPROVAL FROM THE ENGINEER.

(6) PROVIDE A 5 FOOT BY 5 FOOT LANDING. SLOPE PERPENDICULAR TO CURB SHALL BE 2.1% MAXIMUM. SLOPE PARALLEL TO CURB SHALL MATCH THE CURB AND GUTTER LONGITUDINAL SLOPE.

(10) INSTALL TRANSITION NOSE (INCIDENTAL TO OTHER PAY ITEMS). DO NOT MARK TRANSITION NOSE.

(11) SLOPE SIDEWALK TOWARD LANDING AS SHOWN WHERE THERE IS NO TERRACE OR WHERE THE TERRACE WIDTH IS LESS THAN 6 FEET WIDE.

(12) THE EDGE OF THE DETECTABLE WARNING FIELD NEAREST TO A RAILROAD CROSSING SHALL BE 1.5 FEET ±0.1' FROM THE FACE OF THE GATE ARM IF THE GATE ARM EXTENDS ACROSS THE SIDEWALK/PATH. WHERE THERE IS NO PEDESTRIAN GATE, THE EDGE OF THE DETECTABLE WARNING FIELD NEAREST TO THE RAILROAD TRACK IS 15 FEET MAXIMUM AND 12 FEET MINIMUM, 15 FEET TYPICAL FROM THE NEAREST RAIL.

(13) DO NOT INSTALL DETECTABLE WARNING FIELDS AT THE EDGES OF STEET-LEVEL PEDESTRIAN REFUGE ISLANDS IF A MINIMUM 2 FOOT CONCRETE SURFACE WITHOUT DETECTABLE WARNINGS (MEASURED IN THE DIRECTION OF PEDESTRIAN TRAVEL) CANNOT BE ACHIEVED.

(17) A MAXIMUM 2-INCH CONCRETE BORDER IS PERMITTED ALONG ALL SIDES OF THE DETECTABLE WARNING FIELD SURFACE.

(18) WHEN THE DISTANCE BETWEEN THE BACK OF CURBS IS LESS THAN 6 FEET BUT THE FACE OF CURB TO FACE OF CURB DISTANCE IS 6 FEET OR GREATER THEN THE DETECTABLE WARNING FIELDS MAY BE MOVED SO THAT THE EDGE OF THE WARNING FIELD IS PLACED AT THE GUTTER FLOWLINE. MAINTAIN A MINIMUM OF TWO FEET BETWEEN DETECTABLE WARNING FIELD PANELS.

(22) THE ENTIRE RAMP SHALL BE A PLANAR SURFACE. DO NOT WARP THE RUNNING SLOPE OR CROSS SLOPE OF THE RAMP. WARPING OF THE SIDEWALK CROSS SLOPE SHALL TAKE PLACE BETWEEN THE LANDING AND MATCH POINT.

LEGEND

- ½" EXPANSION JOINT SIDEWALK
- CONTRACTION JOINT FIELD LOCATED
- PAVEMENT MARKING CROSSWALK (WHITE)
- * MAXIMUM 8.3%
- ** 1% MINIMUM (PROVIDE DRAINAGE)
- *** DETAILS TO BE DETERMINED BY ENGINEER
- **** FOR SHARED USE PATHS, WIDTH MUST BE AS WIDE AS THE CROSSWALK

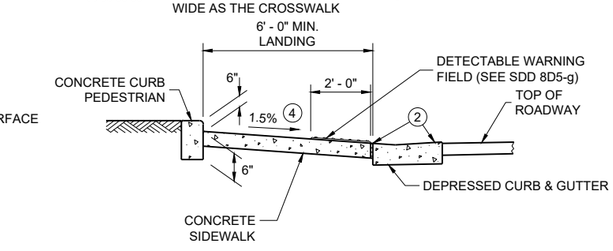

SECTION B - B FOR TYPE 7A

CURB RAMPS TYPE 5, 6, 7A, 7B & 8

STATE OF WISCONSIN
DEPARTMENT OF TRANSPORTATION

6

6

SDD 08D05-22e

SDD 08D05-22e

RADIAL DETECTABLE WARNING FIELD PLACEMENT WHEN 5 FOOT GRADE BREAK DISTANCE PER SDD 8D5-c IS EXCEEDED

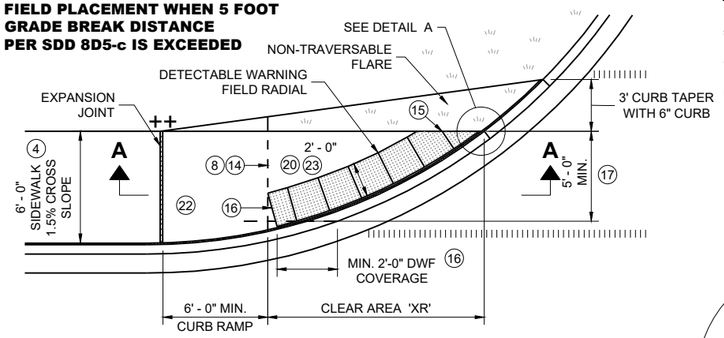

PLAN VIEW

CURB RAMP TYPE 4A1

(GRADE BREAK DISTANCE GREATER THAN 5 FEET)

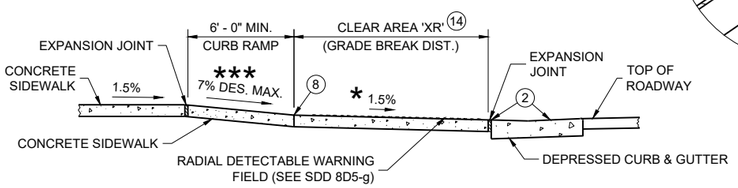

SECTION A - A FOR TYPE 4A1

LEGEND

═══	½" EXPANSION JOINT SIDEWALK
– – – –	CONTRACTION JOINT SIDEWALK
|||||||||||	PAVEMENT MARKING CROSSWALK (WHITE)
**	WIDTH SHOWN ELSEWHERE IN THE PLANS
***	MAXIMUM 8.3%
++	CONSTRUCT 6" WEDGE TO AVOID CONCRETE BREAKAGE

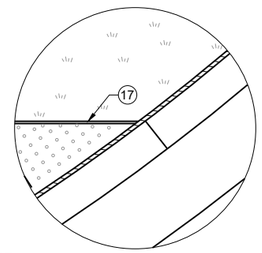

DETAIL A

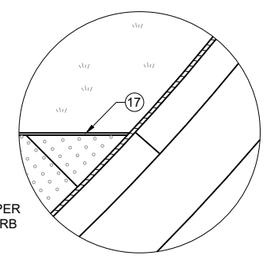

DETAIL B

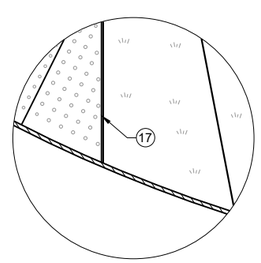

DETAIL C

GENERAL NOTES

AVOID PLACING DRAINAGE STRUCTURES, JUNCTION BOXES OR OTHER OBSTRUCTIONS IN FRONT OF CURB RAMP ACCESS AREAS.

DETAILS OF CONSTRUCTION, MATERIALS AND WORKMANSHIP NOT SHOWN ON THIS DRAWING SHALL CONFORM TO THE PERTINENT REQUIREMENTS OF THE STANDARD SPECIFICATIONS AND THE APPLICABLE SPECIAL PROVISIONS.

DETECTABLE WARNING FIELDS THAT ARE INSTALLED AS A GROUP OR SIDE BY SIDE, SHALL BE FROM THE SAME MANUFACTURER.

APPLY RADIAL DETECTABLE WARNING PLACEMENT SIMILARLY FOR TYPE 4A AND 4A1 CURB RAMPS AND SIMILARLY FOR TYPE 4B AND 4B1 CURB RAMPS. TYPE 4A AND 4B CURB RAMPS ARE NOT SHOWN.

REFER TO SDD 8D5-g FOR ADDITIONAL RADIAL PLATE REQUIREMENTS.

FIELD CUTS AT INTERMEDIATE JOINTS WITHIN THE RADIAL DETECTABLE WARNING FILED ARE PROHIBITED.

DETERMINE FINAL RADIAL WARNING FIELD CONFIGURATION AD ITS INDIVIDUAL PLATE LOCATIONS. PERFORM PRE-LAYOUT PRIOR TO PLACEMENT IN PLASTIC CONCRETE. FOLLOW MANUFACTURER'S PRODUCT LIST AND INSTALLATION RECOMMENDATIONS.

(2) GRADE CHANGE BETWEEN GUTTER COUNTER SLOPE AND THE CURB RAMP SLOPE IS DESIRABLY 11% OR LESS AND SHALL NOT EXCEED 13.3%. TYPICAL GUTTER COUNTER SLOPE IS 4% BUT MAY BE MODIFIED TO FIT FIELD CONDITIONS. PROVIDE LONGITUDINAL DRAINAGE AROUND CURB AND AWAY FROM CURB RAMP. NO VERTICAL LIPS OR DISCONTINUITIES ARE ALLOWED. SLOPE OF CURB HEAD OPENING SHALL MATCH THE RAMP SLOPE, MINIMALLY 1.5%, DESIRABLY 7% OR LESS, AND SHALL NOT EXCEED A MAXIMUM OF 8.3%. WHEN ADJACENT TO 1.5% LANDING, CONSTRUCT CURB HEAD OPENING AT 1.5% IN THE DIRECTION OF PEDESTRIAN TRAVEL.

(3) MAXIMUM 8.3% CURB RAMP SLOPE IS ALLOWABLE WITH GUTTER COUNTER SLOPE OF 5% MAXIMUM AND A 13.3% MAXIMUM GRADE CHANGE.

(4) ±0.5% CONSTRUCTION TOLERANCE IN SIDEWALK CROSS SLOPE. THE SIDEWALK CROSS SLOPE SHALL NOT EXCEED 2.1% WITHOUT PRIOR APPROVAL FROM THE ENGINEER.

(6) PROVIDE A 5 FOOT BY 5 FOOT LANDING. SLOPE PERPENDICULAR TO CURB SHALL BE 2.1% MAXIMUM. SLOPE PARALLEL TO CURB SHALL MATCH THE CURB AND GUTTER LONGITUDINAL SLOPE.

(8) PROVIDE GRADE BREAK PERPENDICULAR TO DIRECTION OF WHEELCHAIR TRAVEL.

(14) CONSULT ENGINEER IF GRADE BREAK LOCATION (END OF LANDING DIMENSION "XR") REQUIRES FIELD ADJUSTMENT WHEN ESTABLISHING FINAL RADIAL DETECTABLE WARNING FIELD LOCATION.

(15) FIELD SAW CUTS ALONG RADIAL DETECTABLE WARNING PLATES WILL BE NECESSARY TO MATCH EACH CURB RAMP EDGE. AVOID CUTTING THROUGH DOMES WHENEVER POSSIBLE. MAKE FIELD CUTS TRUE TO LINE AND WITHIN ⅛" DEVIATION. SMOOTH EDGES OF FIELD CUT PLATES.

(16) USE 1' X 2" RECTANGULAR END PLATE AT END OF TYPE 4A1 RAMP AND PROVIDE MINIMUM 2' - 0" DETECTABLE WARNING FIELD COVERAGE (IN DIRECTION OF PEDESTRIAN TRAVEL) ALONG THE ENTIRE CURB RAMP WIDTH.

(17) A MAXIMUM 2-INCH CONCRETE BORDER IS PERMITTED ALONG ALL SIDES OF THE DETECTABLE WARNING FIELD SURFACE.

(19) WHERE A LANDING SERVES TWO CURB RAMPS, THE LANDING SLOPE SHALL NOT EXCEED THE CROSS SLOPE AT THE BOTTOM OF THE RAMP OR WITHIN THE CROSSWALK PARALLEL TO THE DIRECTION OF TRAVEL.

(20) MAXIMUM 1.5% DESIGN MAXIMUM AND 2.1% PROWAG MAXIMUM RUNNING SLOPE ON CLEAR AREA. CROSS SLOPE OF CLEAR AREA SHALL MATCH THE CROSS SLOPE OF THE ADJACENT CROSSWALK.

(22) THE ENTIRE RAMP SHALL BE A PLANAR SURFACE. DO NOT WARP THE RUNNING SLOPE OR CROSS SLOPE OF THE RAMP. WARPING OF THE SIDEWALK CROSS SLOPE SHALL TAKE PLACE BETWEEN THE LANDING AND MATCH POINT.

(23) THE CLEAR AREA BETWEEN THE BOTTOM OF RAMP AND BACK OF CURB SHALL BE SLOPED SO THAT WATER DRAINS OUT OF ONE SIDE OR BOTH SIDES OF THE CURB OPENING.

RADIAL DETECTABLE WARNING FIELD PLACEMENT WHEN 5 FOOT GRADE BREAK DISTANCE PER SDD 8D5-d IS EXCEEDED

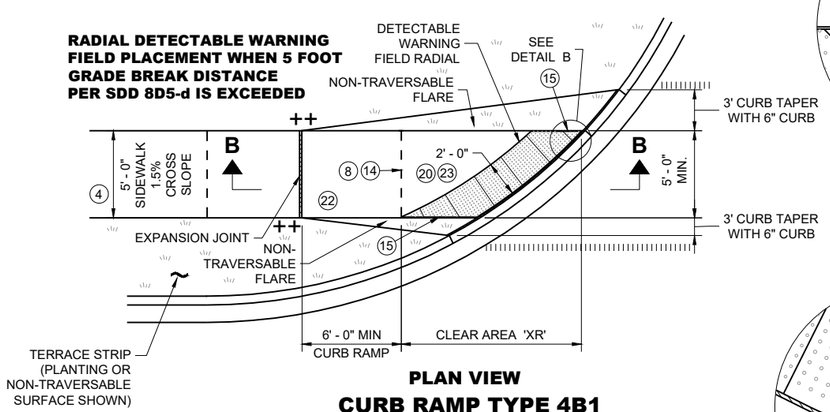

PLAN VIEW

CURB RAMP TYPE 4B1

(GRADE BREAK DISTANCE GREATER THAN 5 FEET)

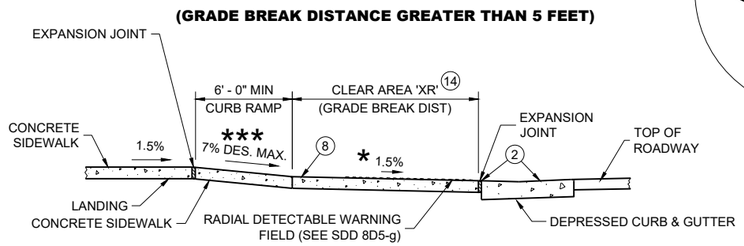

SECTION B - B FOR TYPE 4B1

RADIAL DETECTABLE WARNING FIELD PLACEMENT WHEN 5 FOOT GRADE BREAK DISTANCE PER SDD 8D5-b IS EXCEEDED

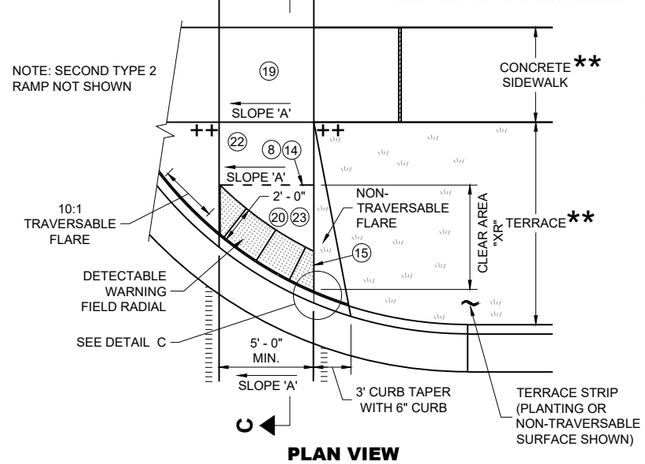

PLAN VIEW

CURB RAMP TYPE 2

(GRADE BREAK DISTANCE GREATER THAN 5 FEET)

(ON LINE WITH SIDEWALK)

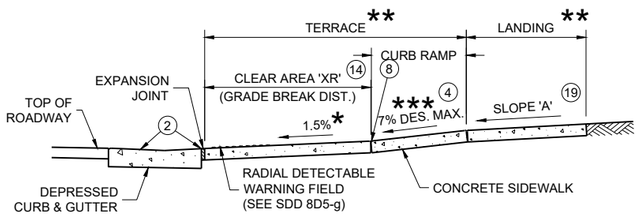

SECTION C - C FOR TYPE 2

CURB RAMPS
RADIAL DETECTABLE WARNING

STATE OF WISCONSIN
DEPARTMENT OF TRANSPORTATION

6

6

SDD 08D05-22f

SDD 08D05-22f

	MIN.	MAX.
A	1.6"	2.4"
B	0.65"	1.5"
C	*	*
D	0.9"	1.4"

* THE C DIMENSION IS 50% TO 65% OF THE D DIMENSION.

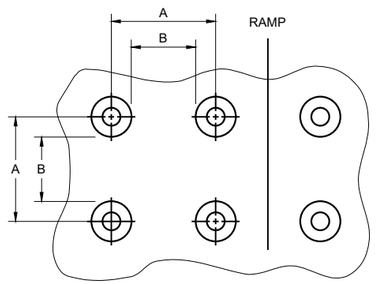

PLAN VIEW

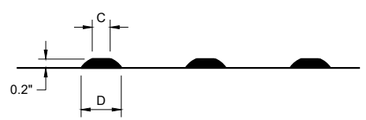

ELEVATION VIEW

TRUNCATED DOMES
DETECTABLE WARNING PATTERN DETAIL

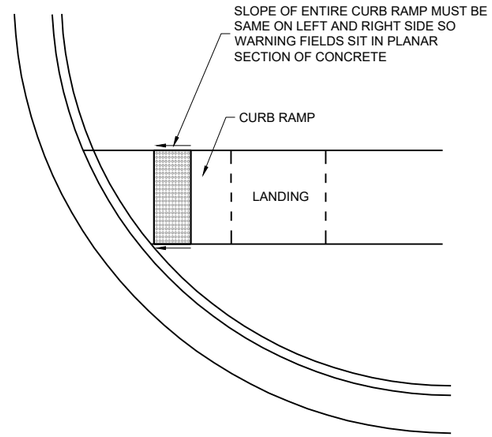

DETECTABLE WARNING FIELD
PLANAR INSTALLATION

GENERAL NOTES

DETECTABLE WARNING FIELDS THAT ARE INSTALLED AT A CURB RAMP SHALL BE FROM THE SAME MANUFACTURER.

PLACE ALL DETECTABLE WARNING FIELD SYSTEMS IN ACCORDANCE TO THE MANUFACTURER'S RECOMMENDATION.

FIELD CUTS AT INTERMEDIATE JOINTS WITHIN THE RADIAL DETECTABLE WARNING FILED ARE PROHIBITED.

DETERMINE FINAL RADIAL WARNING FIELD CONFIGURATION AND ITS INDIVIDUAL PLATE LOCATIONS. PERFORM PRE-LAYOUT PRIOR TO PLACEMENT IN PLASTIC CONCRETE. FOLLOW MANUFACTURER'S PRODUCT LIST AND INSTALLATION RECOMMENDATIONS.

FOR RADIAL DETECTABLE WARNING FIELD APPLICATIONS WHERE STANDARD RADIAL PLATES ARE NOT AVAILABLE AT AN INTERSECTION CURB RADIUS, A COMBINATION OF SQUARE OR RECTANGULAR PLATES AND RADIAL PLATES MAY BE USED TO FORM RADIAL CONFIGURATION. RADIAL WEDGE PLATES IN COMBINATION WITH SQUARE PLATES ARE ALSO ACCEPTABLE. FOLLOW MANUFACTURER'S RECOMMENDATIONS.

REFER TO CONTRACT AND STANDARD SPECIFICATIONS FOR FIELD CUTTING REQUIREMENTS.

DO NOT EMBED IN CONCRETE ANY FIELD-CUT PLATES WITH CUT EDGES SHORTER THAN 6 INCHES. CONSULT WITH MANUFACTURER FOR RE-DRILLING AND ANCHORING REQUIREMENTS OF FIELD-CUT PLATES.

(15) FIELD SAW CUTS ALONG RADIAL DETECTABLE WARNING PLATES WILL BE NECESSARY TO MATCH EACH CURB RAMP EDGE. AVOID CUTTING THROUGH DOMES WHENEVER POSSIBLE. MAKE FIELD CUTS TRUE TO LINE AND WITHIN ⅛" DEVIATION. SMOOTH EDGES OF FIELD CUT PLATES.

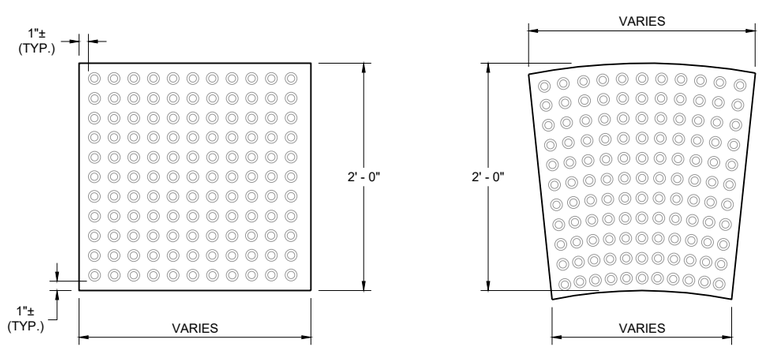

RECTANGULAR PLATES **RADIAL PLATES**

PLAN VIEW
DETECTABLE WARNING FIELDS (TYPICAL)

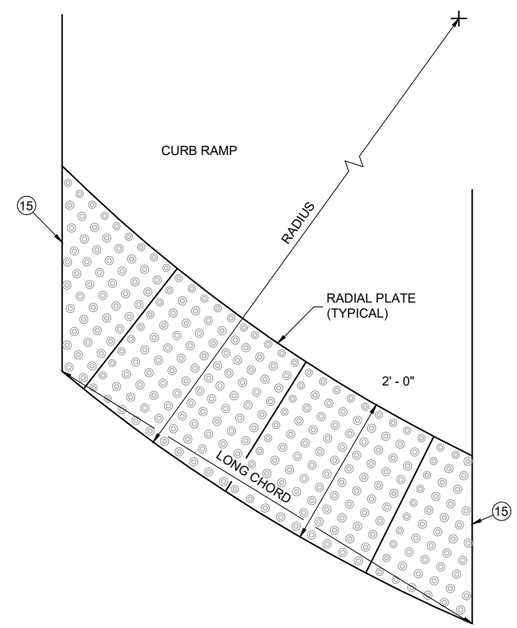

PLAN VIEW
RADIAL DETECTABLE WARNING FIELD ATTRIBUTES

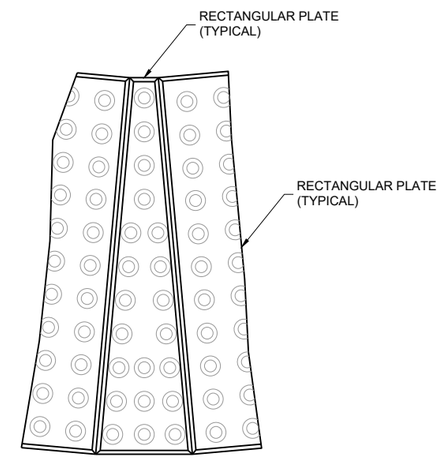

PLAN VIEW
RADIAL WEDGE PLATE CONNECTION DETAIL

6

6

SDD 08D05-22g

SDD 08D05-22g

CURB RAMPS
RECTANGULAR AND RADIAL DETECTABLE WARNING PLATES

STATE OF WISCONSIN
DEPARTMENT OF TRANSPORTATION

APPROVED
February 2025 — DATE
/S/ Rodney Taylor — <position>
FHWA

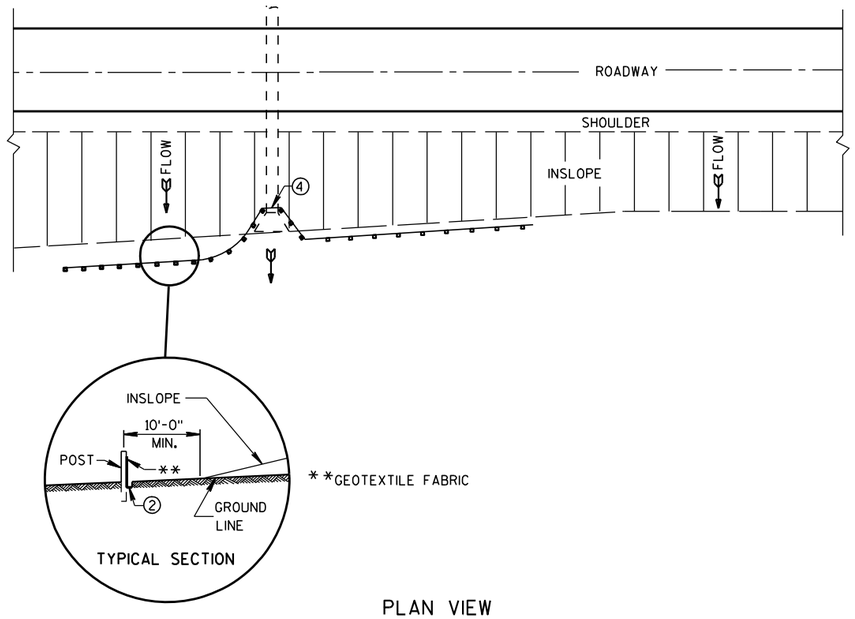

PLAN VIEW

TYPICAL APPLICATION OF SILT FENCE

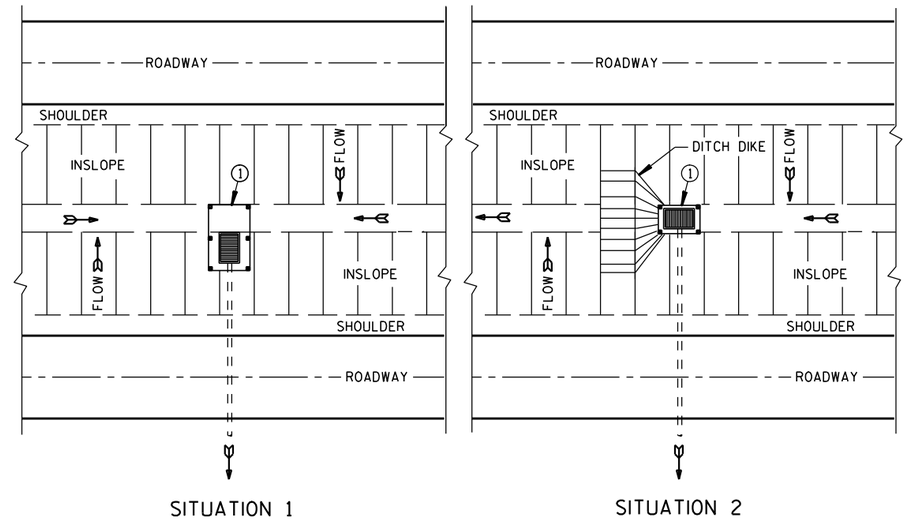

PLAN VIEW

SILT FENCE AT MEDIAN SURFACE DRAINS

GENERAL NOTES

DETAILS OF CONSTRUCTION NOT SHOWN ON THIS DRAWING SHALL CONFORM TO THE PERTINENT REQUIREMENTS OF THE STANDARD SPECIFICATIONS AND APPLICABLE SPECIAL PROVISIONS.

① HORIZONTAL BRACE REQUIRED WITH 2" X 4" WOODEN FRAME OR EQUIVALENT AT TOP OF POSTS.

② FOR MANUAL INSTALLATIONS THE TRENCH SHALL BE A MINIMUM OF 4" WIDE & 6" DEEP TO BURY AND ANCHOR THE GEOTEXTILE FABRIC. FOLD MATERIAL TO FIT TRENCH AND BACKFILL & COMPACT TRENCH WITH EXCAVATED SOIL.

③ WOOD POSTS SHALL BE A MINIMUM SIZE OF 1⅛" X 1⅛" OF OAK OR HICKORY.

④ SILT FENCE TO EXTEND ACROSS THE TOP OF THE PIPE.

⑤ CONSTRUCT SILT FENCE FROM A CONTINUOUS ROLL IF POSSIBLE BY CUTTING LENGTHS TO AVOID JOINTS. IF A JOINT IS NECESSARY USE ONE OF THE FOLLOWING TWO METHODS; A) OVERLAP THE END POSTS AND TWIST, OR ROTATE, AT LEAST 180 DEGREES. B) HOOK THE END OF EACH SILT FENCE LENGTH.

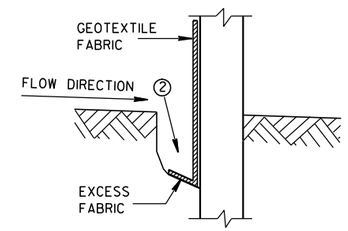

TRENCH DETAIL

NOTE: ADDITIONAL POST DEPTH OR TIE BACKS MAY BE REQUIRED IN UNSTABLE SOILS

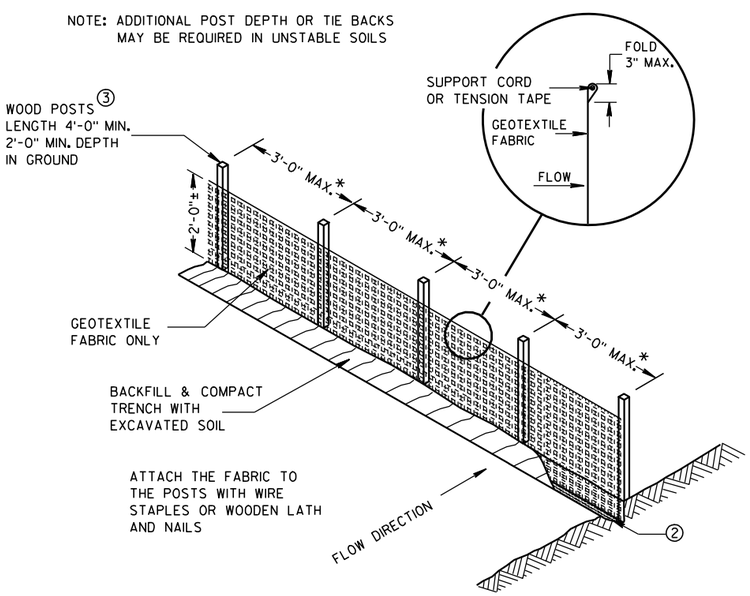

*NOTE: 8'-0" POST SPACING ALLOWED IF A WOVEN GEOTEXTILE FABRIC IS USED.

SILT FENCE

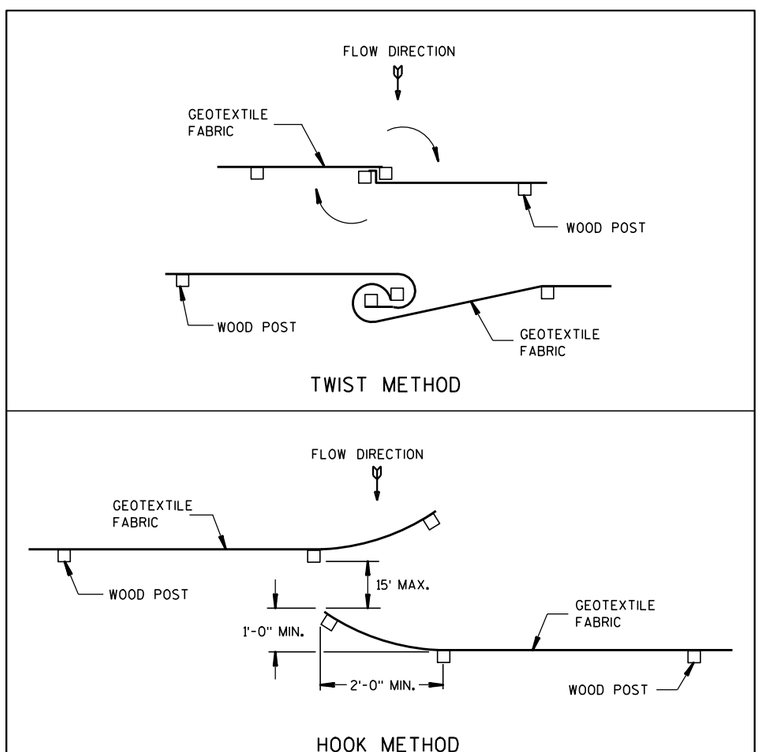

JOINING TWO LENGTHS OF SILT FENCE ⑤

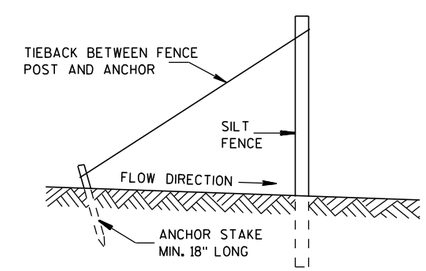

SILT FENCE TIE BACK

(WHEN REQUIRED BY THE ENGINEER)

SILT FENCE
STATE OF WISCONSIN DEPARTMENT OF TRANSPORTATION
APPROVED 4-29-05 /S/ Beth Cann----- DATE CHIEF ROADWAY DEVELOP ENGINEER FHWA

6

6

S.D.D. 8 E 9-6

S.D.D. 8 E 9-6

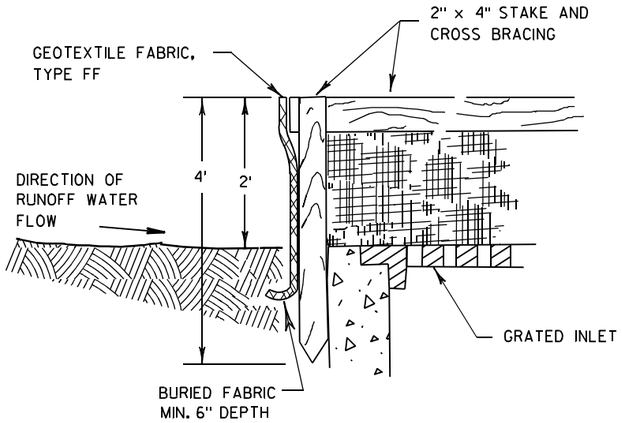

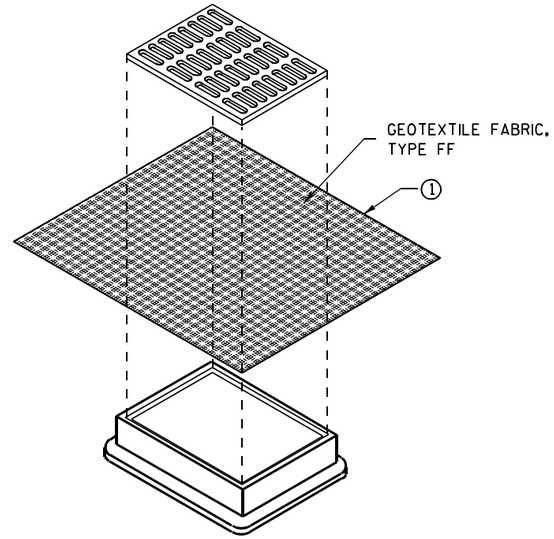

INLET PROTECTION, TYPE B
(WITHOUT CURB BOX)
(CAN BE INSTALLED IN ANY INLET WITHOUT A CURB BOX)

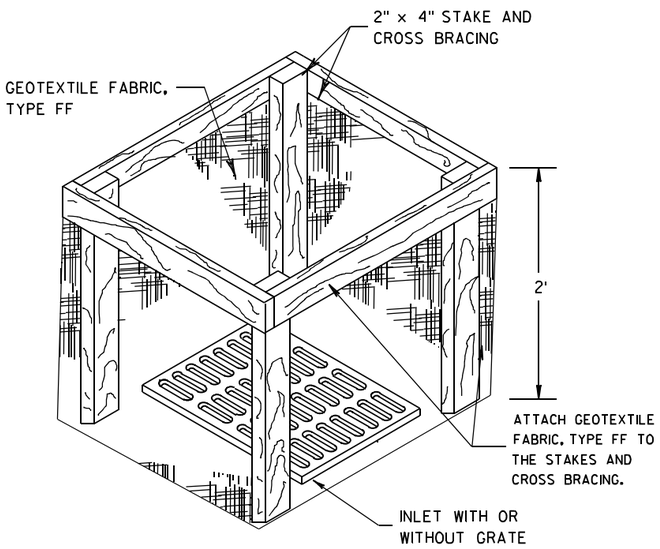

INLET PROTECTION, TYPE A

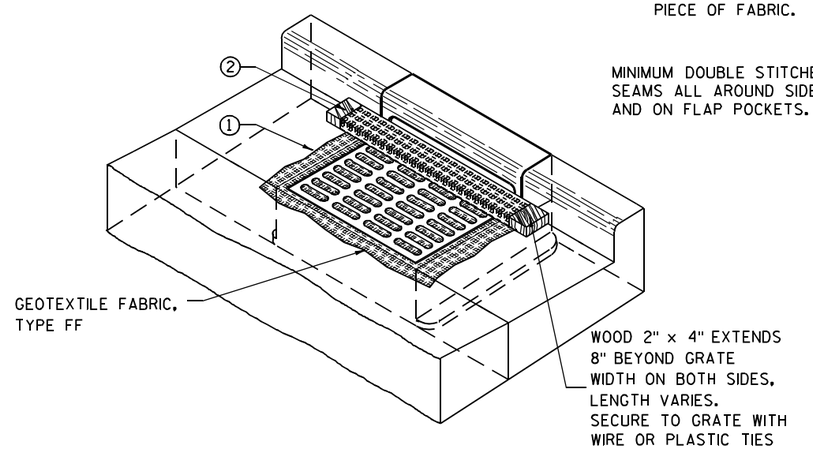

INLET PROTECTION, TYPE C (WITH CURB BOX)

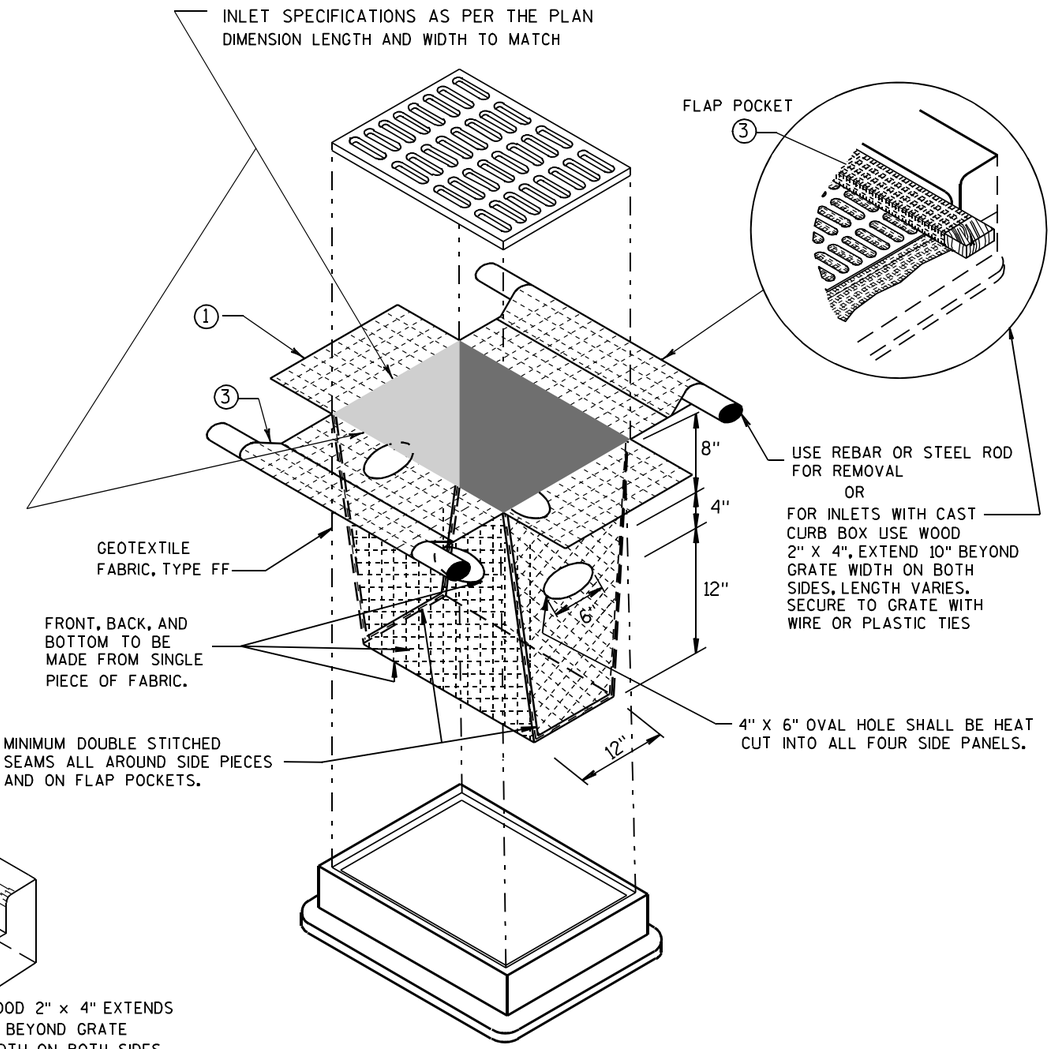

INLET PROTECTION, TYPE D
(CAN BE INSTALLED IN ANY INLET TYPE WITH
OR WITHOUT A CURB BOX AS PER NOTE 2)

GENERAL NOTES

INLET PROTECTION DEVICES SHALL BE MAINTAINED OR REPLACED AT THE DIRECTION OF THE ENGINEER.

MANUFACTURED ALTERNATIVES APPROVED AND LISTED ON THE DEPARTMENT'S EROSION CONTROL PRODUCT ACCEPTABILITY LIST MAY BE SUBSTITUTED.

WHEN REMOVING OR MAINTAINING INLET PROTECTION, CARE SHALL BE TAKEN SO THAT THE SEDIMENT TRAPPED ON THE GEOTEXTILE FABRIC DOES NOT FALL INTO THE INLET. ANY MATERIAL FALLING INTO THE INLET SHALL BE REMOVED IMMEDIATELY.

1 FINISHED SIZE, INCLUDING FLAP POCKETS WHERE REQUIRED, SHALL EXTEND A MINIMUM OF 10" AROUND THE PERIMETER TO FACILITATE MAINTENANCE OR REMOVAL.

2 FOR INLET PROTECTION, TYPE C (WITH CURB BOX), AN ADDITIONAL 18" OF FABRIC IS WRAPPED AROUND THE WOOD AND SECURED WITH STAPLES. THE WOOD SHALL NOT BLOCK THE ENTIRE HEIGHT OF THE CURB BOX OPENING.

3 FLAP POCKETS SHALL BE LARGE ENOUGH TO ACCEPT WOOD 2X4.

INSTALLATION NOTES

TYPE B & C

TRIM EXCESS FABRIC IN THE FLOW LINE TO WITHIN 3" OF THE GRATE.

THE CONTRACTOR SHALL DEMONSTRATE A METHOD OF MAINTENANCE, USING A SEWN FLAP, HAND HOLDS OR OTHER METHOD TO PREVENT ACCUMULATED SEDIMENT FROM ENTERING THE INLET.

TYPE D

DO NOT INSTALL INLET PROTECTION TYPE D IN INLETS SHALLOWER THAN 30", MEASURED FROM THE BOTTOM OF THE INLET TO THE TOP OF THE GRATE.

TRIM EXCESS FABRIC IN THE FLOW LINE TO WITHIN 3" OF THE GRATE.

THE INSTALLED BAG SHALL HAVE A MINIMUM SIDE CLEARANCE, BETWEEN THE INLET WALLS AND THE BAG, MEASURED AT THE BOTTOM OF THE OVERFLOW HOLES, OF 3". WHERE NECESSARY THE CONTRACTOR SHALL CINCH THE BAG, USING PLASTIC ZIP TIES, TO ACHIEVE THE 3" CLEARANCE. THE TIES SHALL BE PLACED AT A MAXIMUM OF 4" FROM THE BOTTOM OF THE BAG.

INLET PROTECTION
TYPE A, B, C, AND D

STATE OF WISCONSIN
DEPARTMENT OF TRANSPORTATION

APPROVED
10/16/02 — DATE
/S/ Beth Cannon — CHIEF ROADWAY DEVELOPMENT ENGINEER
FHWA

6

S.D.D. 8 E 10-2

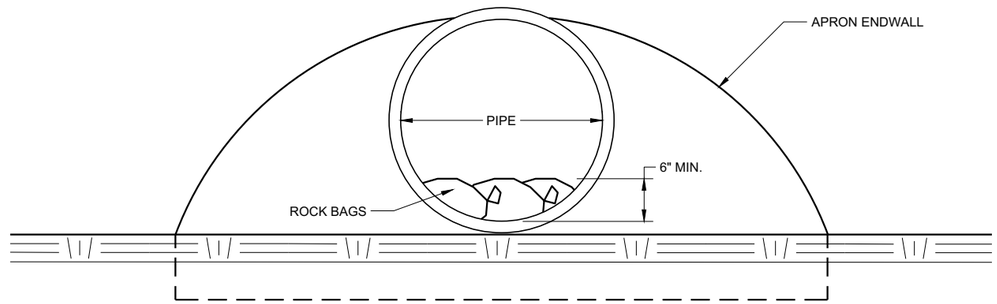

END VIEW

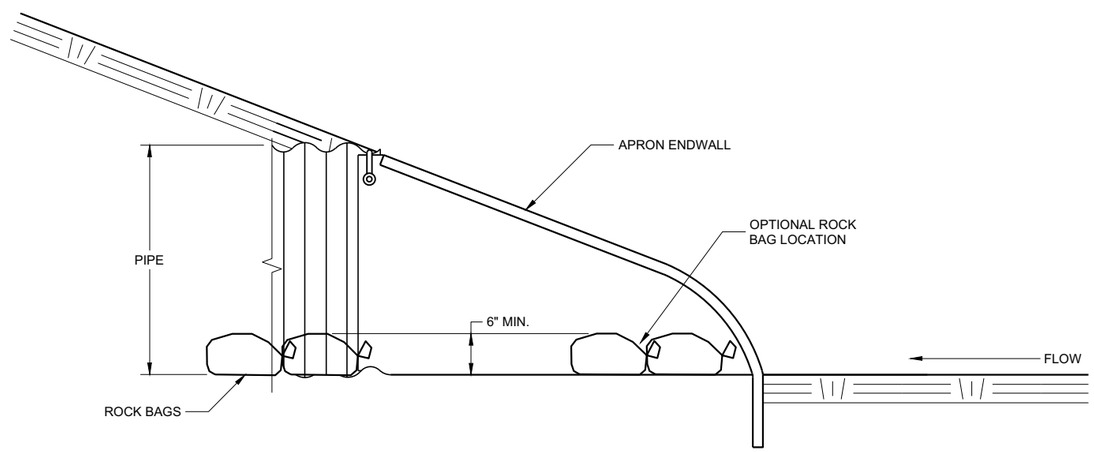

SIDE VIEW

CULVERT PIPE CHECK

(INSTALL ON INLET END ONLY)

CULVERT PIPE CHECK

STATE OF WISCONSIN
DEPARTMENT OF TRANSPORTATION

APPROVED
May 2019 — DATE
/S/ Daniel Schave — EROSION CONTROL ENGI
FHWA

6

6

SDD 08E15 - 01

SDD 08E15 - 01

METAL APRON ENDWALLS

PIPE DIA. (IN.)	MIN. THICK. (Inches) STEEL	MIN. THICK. (Inches) ALUM.	DIMENSIONS (Inches) A (±1")	B (MAX.)	H (±1")	L (±1 1/2")	L1 ①	L2 ①	W (±2")	APPROX. SLOPE	BODY
12	.064	.060	6	6	6	21	12	17 1/2	24	2 1/2 to 1	1 Pc.
15	.064	.060	7	8	6	26	14	21 3/4	30	2 1/2 to 1	1 Pc.
18	.064	.060	8	10	6	31	15	28 1/4	36	2 1/2 to 1	1 Pc.
21	.064	.060	9	12	6	36	18	29 5/8	42	2 1/2 to 1	1 Pc.
24	.064	.075	10	13	6	41	18	37 1/4	48	2 1/2 to 1	1 Pc.
30	.079	.075	12	16	8	51	18	52 1/4	60	2 1/2 to 1	1 Pc.
36	.079	.105	14	19	9	60	24	59 3/4	72	2 1/2 to 1	2 Pc.
42	.109	.105	16	22	11	69	24	75 5/8	84	2 1/2 to 1	2 Pc.
48	.109	.105	18	27	12	78	24	81	90	2 1/4 to 1	3 Pc.
54	.109	.105	18	30	12	84	30	85 1/2	102	2 1/4 to 1	3 Pc.
60	.109×	.105×	18	33	12	87	—	—	114	2 to 1	3 Pc.
66	.109×	.105×	18	36	12	87	—	—	120	2 to 1	3 Pc.
72	.109×	.105×	18	39	12	87	—	—	126	2 to 1	3 Pc.
78	.109×	.105×	18	42	12	87	—	—	132	1 1/2 to 1	3 Pc.
84	.109×	.105×	18	45	12	87	—	—	138	1 1/2 to 1	3 Pc.
90	.109×	.105×	18	37	12	87	—	—	144	1 1/2 to 1	3 Pc.
96	.109×	.105×	18	35	12	87	—	—	150	1 1/2 to 1	3 Pc.

× EXCEPT CENTER PANEL
SEE GENERAL NOTES

REINFORCED CONCRETE APRON ENDWALLS

PIPE DIA. (IN.)	DIMENSIONS (Inches) T	A	B	C	D	E	G	APPROX. SLOPE
12	2	4	24	48 7/8	72 7/8	24	2	3 to 1
15	2 1/4	6	27	46	73	30	2 1/4	3 to 1
18	2 1/2	9	27	46	73	36	2 1/2	3 to 1
21	2 3/4	9	36	37 1/2	73 1/2	42	2 3/4	3 to 1
24	3	9 1/2	43 1/2	30	73 1/2	48	3	3 to 1
27	3 1/4	10 1/2	49 1/2	24	73 1/2	54	3 1/4	3 to 1
30	3 1/2	12	54	19 3/4	73 1/2	60	3 1/2	3 to 1
36	4	15	63	34 3/4	97 3/4	72	4	3 to 1
42	4 1/2	21	63	35	98	78	4 1/2	3 to 1
48	5	24	72	26	98	84	5	3 to 1
54	5 1/2	27	65	*33 1/4-**35	*98 1/4-**100	90	5 1/2	2 2/5 to 1
60	6	*30-**35	60	39	99	96	5	2 to 1
66	6 1/2	*24-**30	*72-**78	*21-**27	99	102	5 1/2	2 to 1
72	7	*24-**36	78	21	99	108	6	2 to 1
78	7 1/2	*24-**36	78	21	99	114	6 1/2	2 to 1
84	8	36	90 1/2	21	111 1/2	120	6 1/2	1 1/2 to 1
90	8 1/2	41	87 1/2	24	111 1/2	132	6 1/2	1 1/2 to 1

*MINIMUM
**MAXIMUM

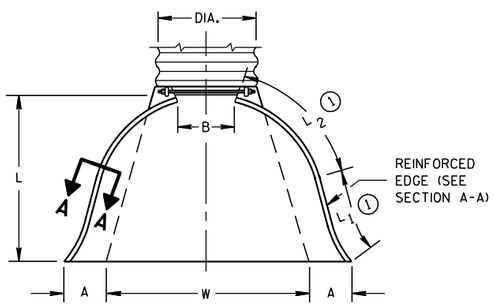

PLAN VIEW

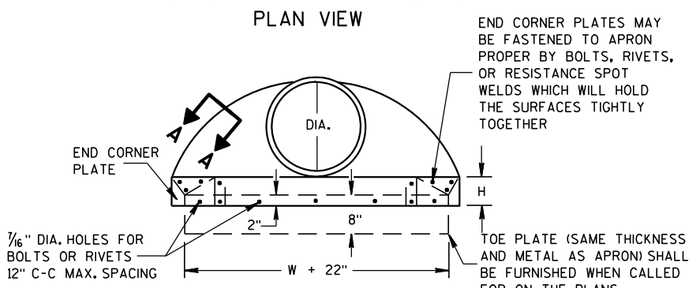

END VIEW

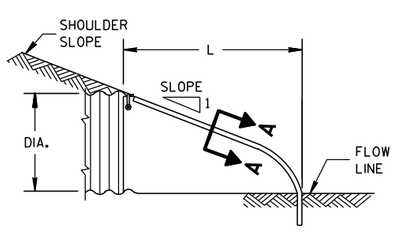

SIDE ELEVATION

METAL ENDWALLS

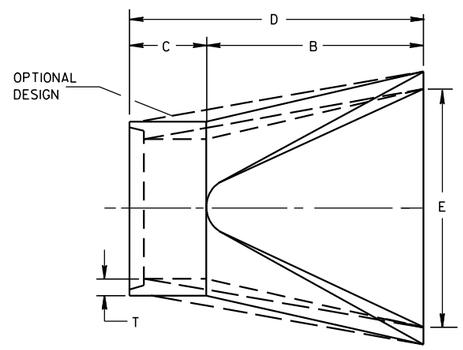

PLAN

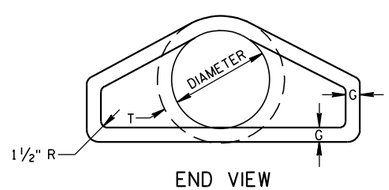

END VIEW

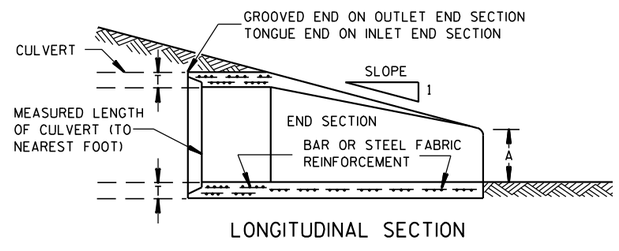

LONGITUDINAL SECTION

CONCRETE ENDWALLS

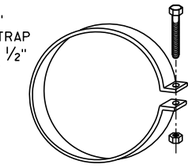

ALTERNATE FOR TYPE 1 CONNECTION

END SECTION CONNECTOR STRAP

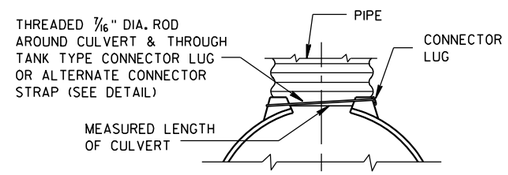

TYPE 1
FOR 12" THRU 24" CORR. PIPE

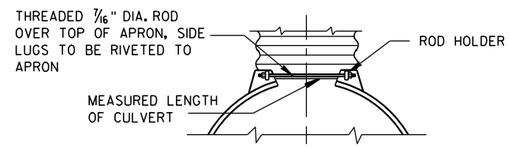

TYPE 2
FOR 30" THRU 96" CORR. PIPE

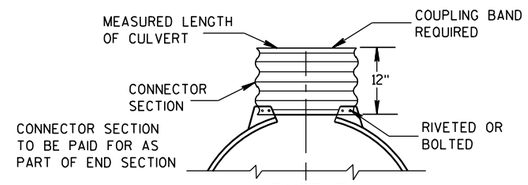

TYPE 3
FOR 42" THRU 96" CORR. PIPE

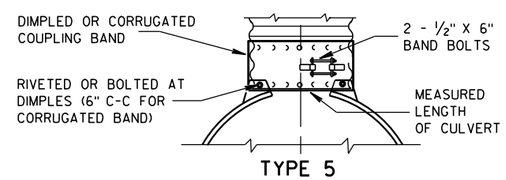

TYPE 5
ALTERNATE FOR:
ALL SIZES CORRUGATED CIRCULAR PIPE

NOTE: DIMPLED BAND FITS OVER OUTSIDE OF ENDWALL, AND CORRUGATED BAND FITS INSIDE ENDWALL. DIMPLED BAND MAY BE USED WITH HELICALLY CORRUGATED PIPE.

FOR CIRCUMFERENTIALLY CORRUGATED PIPE USE ENDWALL CONNECTION DETAILS 1, 2, 3 OR 5 AS APPLICABLE.

FOR HELICALLY CORRUGATED PIPE USE ENDWALL CONNECTION DETAILS 1, 2 OR 5.

FOR HELICALLY CORRUGATED PIPES WITH TWO CIRCUMFERENTIAL CORRUGATIONS AT EACH END USE ENDWALL CONNECTION DETAILS 1, 2 OR 3.

CONNECTION DETAILS

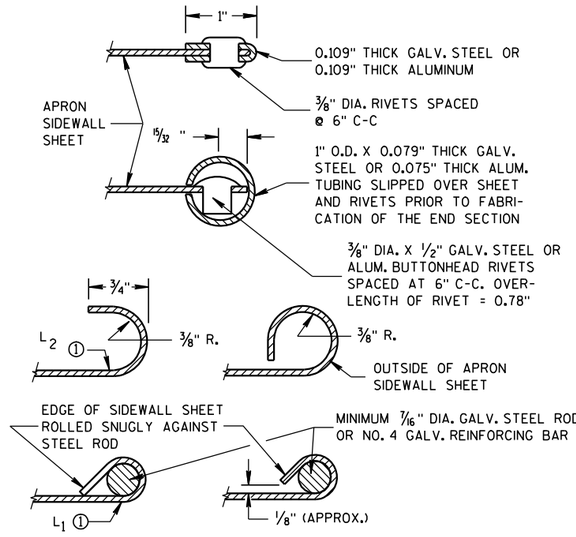

SECTION A-A

GENERAL NOTES

DETAILS OF CONSTRUCTION, MATERIALS AND WORKMANSHIP NOT SHOWN ON THIS DRAWING SHALL CONFORM TO THE PERTINENT REQUIREMENTS OF THE STANDARD SPECIFICATIONS AND THE APPLICABLE SPECIAL PROVISIONS.

CONCRETE CULVERT ENDWALLS MAY NOT BE USED WITH GALVANIZED STEEL OR ALUMINUM CULVERT PIPE OR VISE VERSA. GALVANIZED STEEL OR ALUMINUM ENDWALLS SHALL NORMALLY BE INSTALLED ON CULVERT PIPE OF THE SAME METAL.

ALL THREE PIECE STEEL APRON ENDWALLS FOR 60" DIAMETER PIPE AND LARGER SHALL HAVE 0.109" SIDES AND 0.138" CENTER PANELS. ALL THREE PIECE ALUMINUM APRON ENDWALLS FOR 60" DIAMETER PIPE AND LARGER SHALL HAVE 0.105" SIDES AND 0.134" CENTER PANELS. THE WIDTH OF CENTER PANELS SHALL BE GREATER THAN 20 PERCENT OF THE PIPE PERIMETER.

LAP SEAMS SHALL BE TIGHTLY JOINED BY GALVANIZED RIVETS OR BOLTS FOR STEEL UNITS AND ALUMINUM RIVETS AND BOLTS FOR ALUMINUM UNITS. FOR THE 60" THROUGH 96" DIAMETER APRON ENDWALL SIZES, THE REINFORCED EDGES AND CENTER PANEL SEAMS SHALL BE FURTHER REINFORCED WITH GALVANIZED STEEL OR ALUMINUM STIFFENER ANGLES. THE ANGLES SHALL BE ATTACHED BY GALVANIZED NUTS AND BOLTS FOR STEEL UNITS AND ALUMINUM NUTS AND BOLTS FOR ALUMINUM UNITS.

WHERE TWO OR MORE PIPES WITH APRON ENDWALLS ARE LAID ADJACENT TO EACH OTHER, THEY SHALL BE SEPARATED BY A DISTANCE SUFFICIENT TO PROVIDE A MINIMUM CLEARANCE OF 6 INCHES BETWEEN APRON ENDWALLS.

① FOR PIPE SIZES UP TO 60" DIAMETER, A 180° ROLLED EDGE MAY BE USED INSTEAD OF STEEL ROD REINFORCEMENT. SEE SECTION A-A.

APRON ENDWALLS FOR CULVERT PIPE

STATE OF WISCONSIN
DEPARTMENT OF TRANSPORTATION

APPROVED
11/30/94 — DATE
/S/ Rory L. Rhinesmith — CHIEF ROADWAY DEVELOPMENT ENGINEER
FHWA

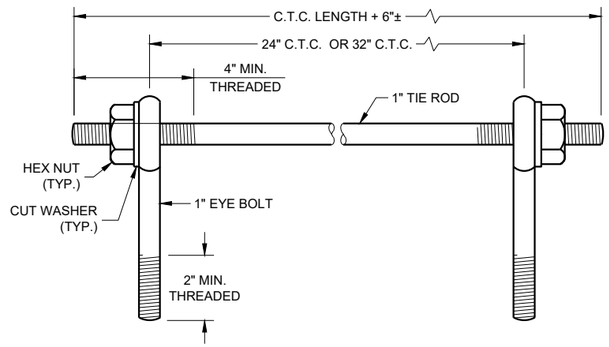

EYE BOLTS AND TIE ROD

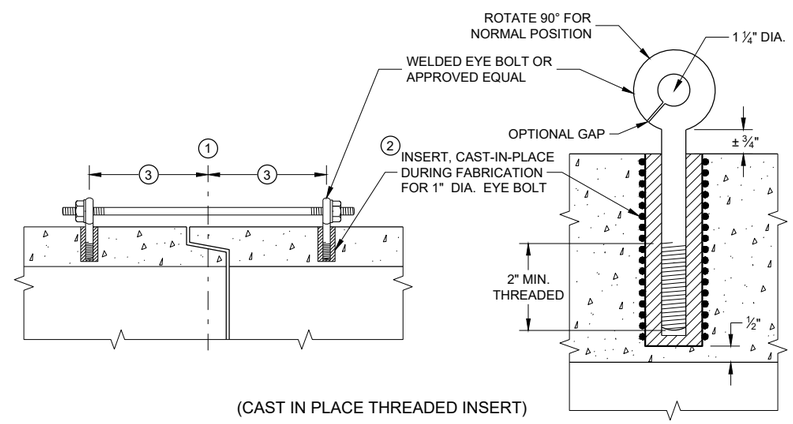

(CAST IN PLACE THREADED INSERT)

LONGITUDINAL SECTIONS

EYE BOLT AND TIE ROD ASSEMBLY (ALTERNATE NO. 1)

GENERAL NOTES

DETAILS OF CONSTRUCTION, MATERIALS, AND WORKMANSHIP NOT SHOWN ON THIS DRAWING SHALL CONFORM TO THE PERTINENT REQUIREMENTS OF THE STANDARD SPECIFICATIONS AND APPLICABLE SPECIAL PROVISIONS.

CONCRETE CULVERT AND STORM SEWER PIPE SHALL BE TIED TOGETHER IN THE MANNER ILLUSTRATED BY THIS DETAIL AT LOCATIONS DESIGNATED IN THE STANDARD SPECIFICATIONS AND THE PLAN. THE CONTRACTOR MAY USE EITHER ALTERNATE 1, 2 OR 3 FOR DRAINAGE STRUCTURES. ONLY ALTERNATE 1 AND 3 MAY BE USED FOR CATTLE PASSES, UNLESS OTHERWISE STATED IN THE CONTRACT. THE MATERIALS, FABRICATION AND WORK NECESSARY TO TIE THE PIPE BY THIS DETAIL WILL BE CONSIDERED INCIDENTAL TO THE PIPE AND APRON ENDWALLS IF REQUIRED.

DETAILED DRAWINGS FOR PROPOSED ALTERNATE DESIGNS FOR JOINT TIES SHALL BE SUBMITTED TO THE ENGINEER FOR APPROVAL.

JOINT TIES TO BE HOT-DIP GALVANIZED PER ASTM A 153.

1. CENTER LINE OF TONGUE AND GROOVE OR BELL AND SPIGOT JOINTS.
2. THE INSIDE OF THE THREADED INSERTS SHALL BE CLEAN TO ALLOW THE INSERTION OF THREADED EYE BOLTS.
3. HOLES SHALL BE CAST-IN-PLACE OR DRILLED PER THE APPLICABLE DETAIL, AND EQUAL DISTANCE FROM THE CENTERLINE OF THE JOINT.
4. BOLT PROJECTION INSIDE OF PIPE SHALL NOT EXCEED 2 INCHES.
5. OPENING TO BE ROD DIAMETER PLUS 1 INCH.
6. LENGTH ADEQUATE TO EXTEND TO WITHIN ½ INCH OF THE INNER SURFACE OF THE PIPE.
7. EYE BOLT LENGTH DETERMINED BY WALL THICKNESS, BELL THICKNESS AND BOLT PROJECTION INSIDE PIPE.

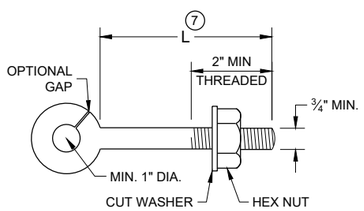

EYE BOLT 7

NOTE: TWO EYE BOLTS MAY BE USED WITH A 30" OR 38" LONG THREADED ROD IN LIEU OF THE 90° BENT TIE ROD.

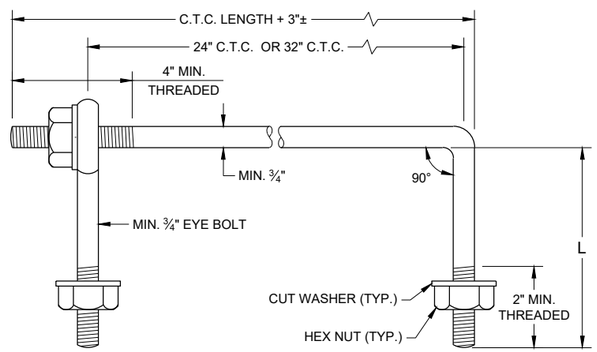

EYE BOLT AND TIE ROD

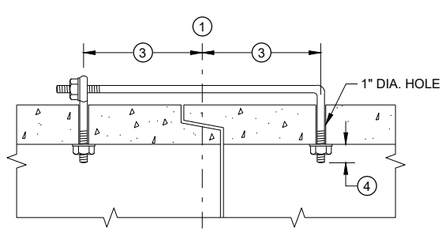

(TONGUE AND GROOVE PIPE)

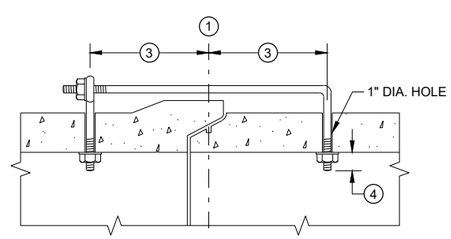

(MODIFIED BELL PIPE)

LONGITUDINAL SECTION

(JOINT TIES FOR 18" TO 66" DIA. CONCRETE PIPE)

EYE BOLT AND TIE ROD ASSEMBLY (ALTERNATE NO. 2)

ADJUSTABLE TIE ROD TABLE

PIPE DIAMETER	TIE ROD DIAMETER	D	L_1	N
12 - 60	⅝	⅝	5	½
66 - 84	¾	¾	5	½
90 - 144	1	1	7	1 7/16

DIMENSIONS SHOWN ARE IN INCHES

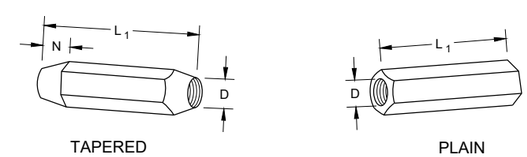

RIGHT AND LEFT THREADS

SLEEVE NUTS

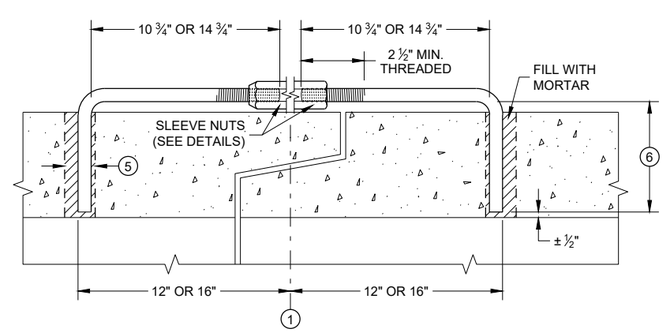

LONGITUDINAL SECTION

ADJUSTABLE TIE ROD (ALTERNATE NO. 3)

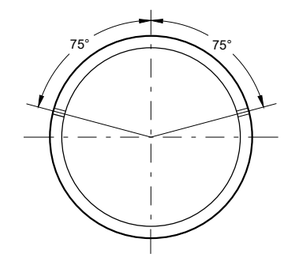

PLACEMENT OF (2) CAST-IN-PLACE INSERTS OR HOLES DURING FABRICATION FOR PIPE SECTIONS REQUIRING TIE RODS

TRANSVERSE SECTION

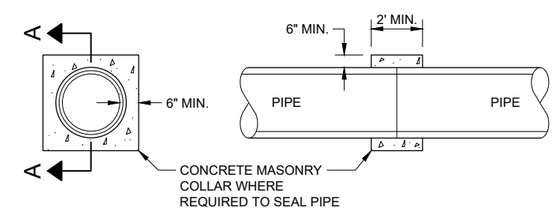

SECTION A - A

CONCRETE COLLAR DETAIL

JOINT TIES FOR CONCRETE PIPE AND CONCRETE COLLAR DETAIL

STATE OF WISCONSIN
DEPARTMENT OF TRANSPORTATION

APPROVED
November 2021 — DATE
/S/ Rodney Taylor — ROADWAY STANDARDS DEVE ENGINEER
FHWA

6

SDD 08F04 - 08

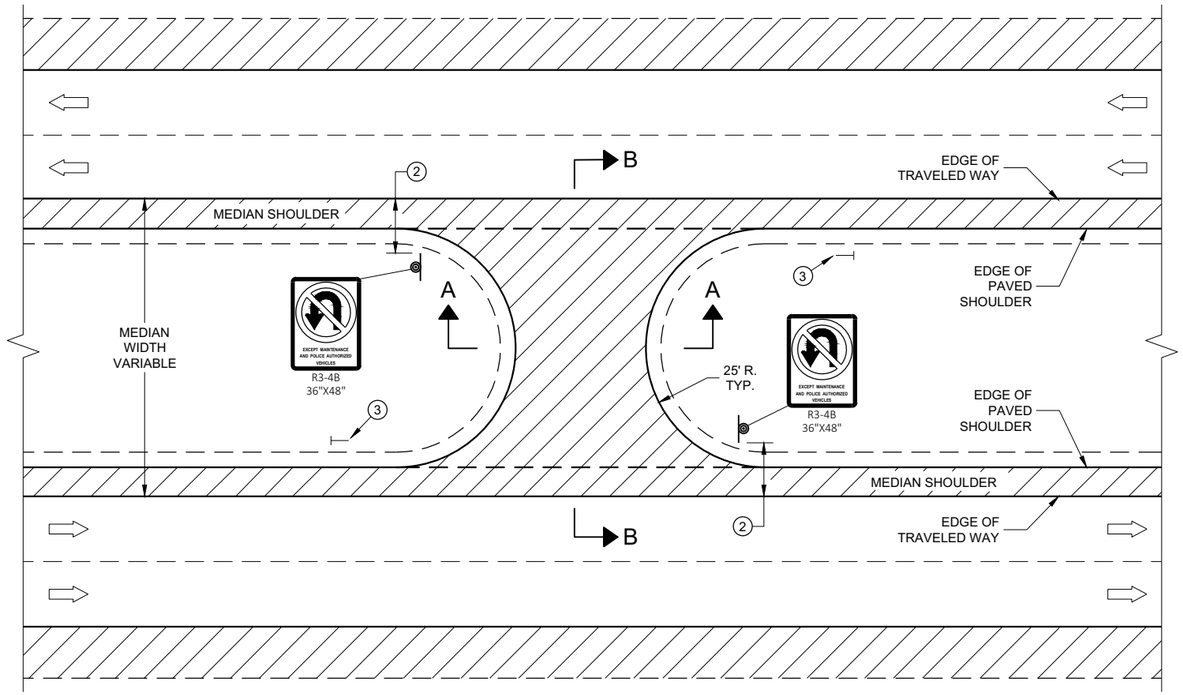

PLAN VIEW

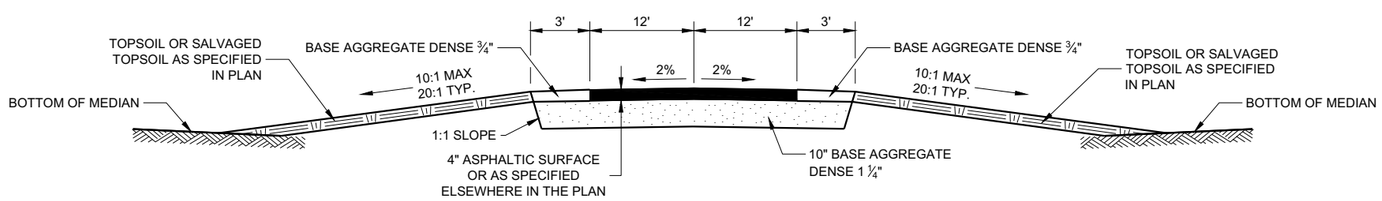

SECTION A-A

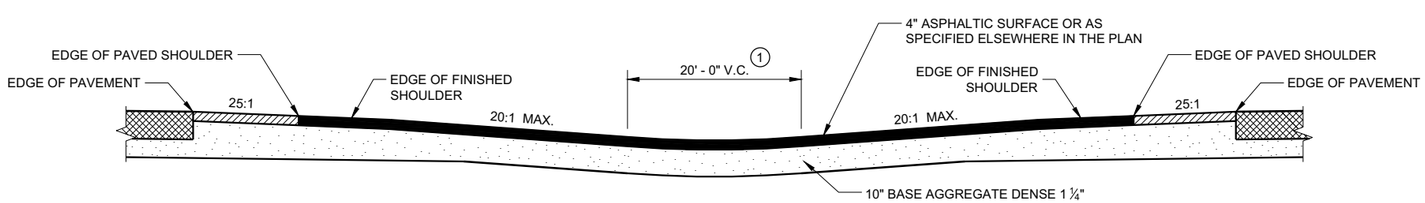

SECTION B-B

GENERAL NOTES

1. ADJUST VERTICAL CURVE LOCATION LATERALLY TO MAINTAIN 20:1 MAX.
2. SIGNING DETAILS AND SPECIFICATIONS ARE PROVIDED ELSEWHERE IN THE CONTRACT.
3. INSTALL DELINEATOR. SEE STANDARD DETAIL DRAWING 15A4.

LEGEND

- SIGN ON PERMANENT SUPPORT
- DELINEATOR
- DIRECTION OF TRAFFIC

MAINTENANCE CROSSOVER FOR FREEWAYS

STATE OF WISCONSIN
DEPARTMENT OF TRANSPORTATION

APPROVED
November 2019 — DATE
/S/ Rodney Taylor — ROADWAY STANDARDS DEVE ENGINEER
FHWA

6

SDD 11A01 - 06

GENERAL NOTES

DETAILS OF CONSTRUCTION, MATERIALS AND WORKMANSHIP NOT SHOWN ON THIS DRAWING SHALL CONFORM TO THE PERTINENT REQUIREMENTS OF THE STANDARD SPECIFICATIONS AND SPECIAL PROVISIONS.

TRANSVERSE JOINT DETAILS ARE SHOWN ELSEWHERE IN THE PLAN.

FINISH THE SHOULDER PAVEMENT CONFORMING TO SUBSECTION 415.3.8 OF THE STANDARD SPECIFICATIONS.

TIE BARS SHALL CONFORM TO SUBSECTION 505.2.4 OF THE STANDARD SPECIFICATIONS.

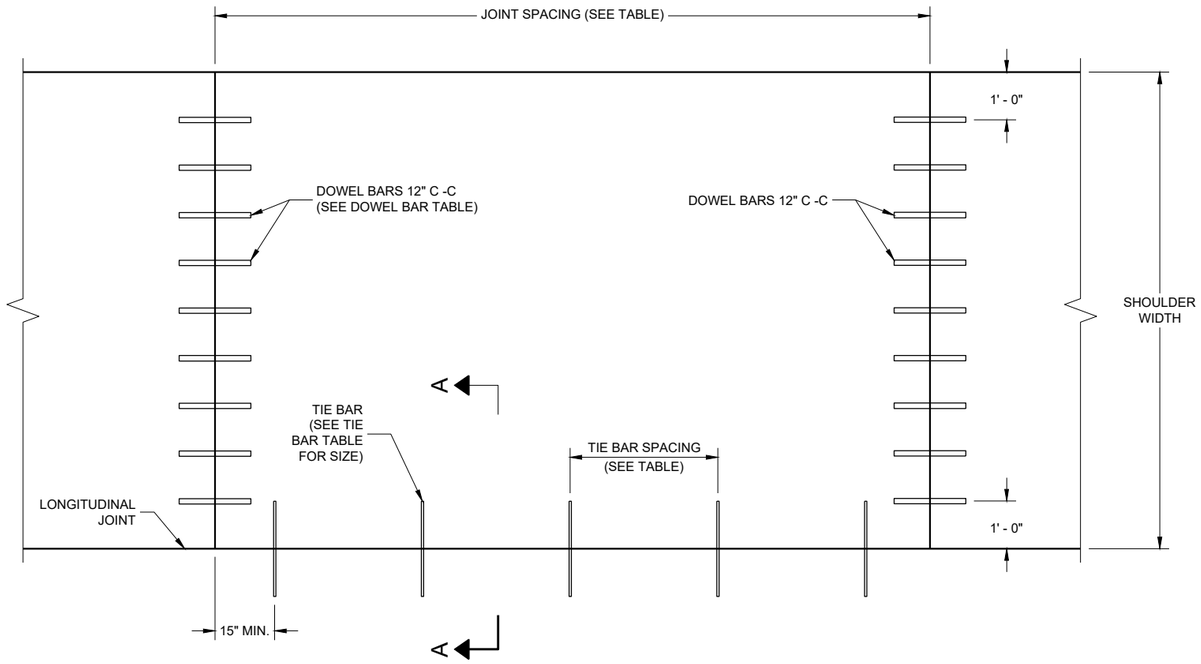

PLAN VIEW

CONCRETE PAVEMENT SHOULDER

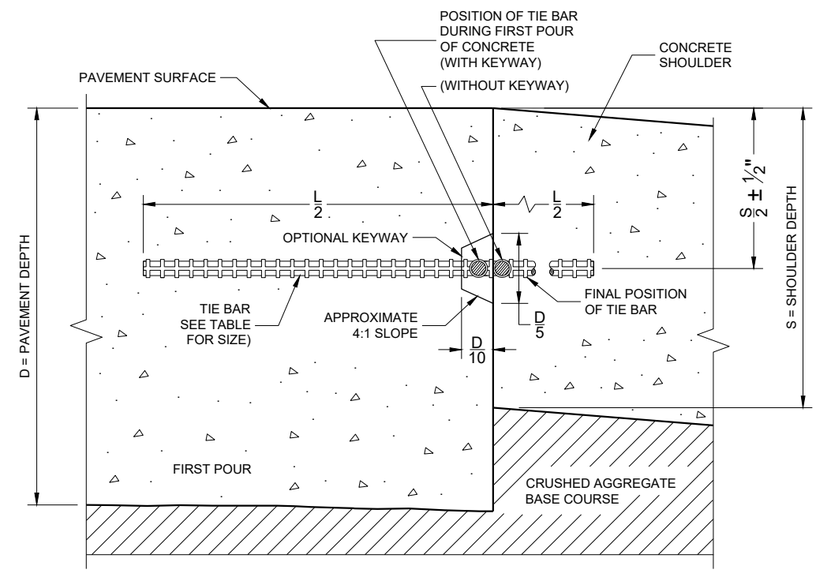

SECTION A - A

LONGITUDINAL CONSTRUCTION JOINT

TIE BAR TABLE

PAVEMENT DEPTH (D)	TIE BAR SIZE	TIE BAR LENGTH (L)	MAX. TIE BAR SPACING
<10 ½"	NO. 4	30"	36"
>10 ½"	NO. 5	36"	36"
	NO. 4 *	30"	24" **

* SUBSTITUTE BENT BATS AT LONGITUDINAL JOINTS WHEN EQUIPMENT LIMITATIONS DURING CONSTRUCTION WARRANT (e.g. AUXILIARY LANES OR TURN LANES.

** CONFORM TO 15" MINIMUM SPACING FROM TRANSVERSE JOINTS; SPACING BETWEEN TIE BARS WILL BE 30" AT TRANSVERSE JOINTS.

PAVEMENT DEPTH, DOWEL BAR SIZE AND JOINT SPACING TABLE

PAVEMENT DEPTH (D)	DOWEL BAR DIAMETER ***	CONTRACTION JOINT SPACING
6", 6 ½"	NONE	12"
7", 7 ½"	1"	14"
8" & ABOVE	1 ¼"	15"

*** FOR DOWELED CONCRETE SHOULDERS WITH TRAPEZOIDAL CROSS SECTIONS, CHOSE THE APPROPRIATE DOWEL BAR DIAMETER BASED ON THE SMALLER PAVEMENT DEPTH (LIKELY THE OUTSIDE EDGE OF THE SHOULDER). IF USING BASKETS, USE BASKETS FRO THE AVERAGE THICKNESS OF THE CROSS SECTION.

CONCRETE PAVEMENT SHOULDERS

STATE OF WISCONSIN
DEPARTMENT OF TRANSPORTATION

APPROVED
November 2022 — DATE
/S/ Peter Kemp — PAVEMENT SUPERVISOR

FHWA

GENERAL NOTES

SDD 13A5, SHEET "b" SHOWS THE LOCATION OF THE RUMBLE STRIPS AT RAMP AND GORE LOCATIONS.

RUMBLE STRIPS ON EXPRESSWAYS:
DO NOT INSTALL SHOULDER RUMBLE STRIPS ACROSS SIDE ROAD INTERSECTIONS, COMMERCIAL AND PRIVATE DRIVEWAYS, ADJACENT TO RIGHT TURN LANES, LEFT TURN LANES, TURN LANE TAPERS, 25' IN ADVANCE OF BRIDGE DECKS, 25' IN ADVANCE OF BRIDGE APPROACHES, OR 100 FEET IN ADVANCE OF RAILROAD CROSSINGS.

(1) CONCRETE PAVEMENT - RUMBLE STRIPS SHALL BE A MINIMUM OF 6 INCHES AWAY FROM TRANSVERSE JOINTS.

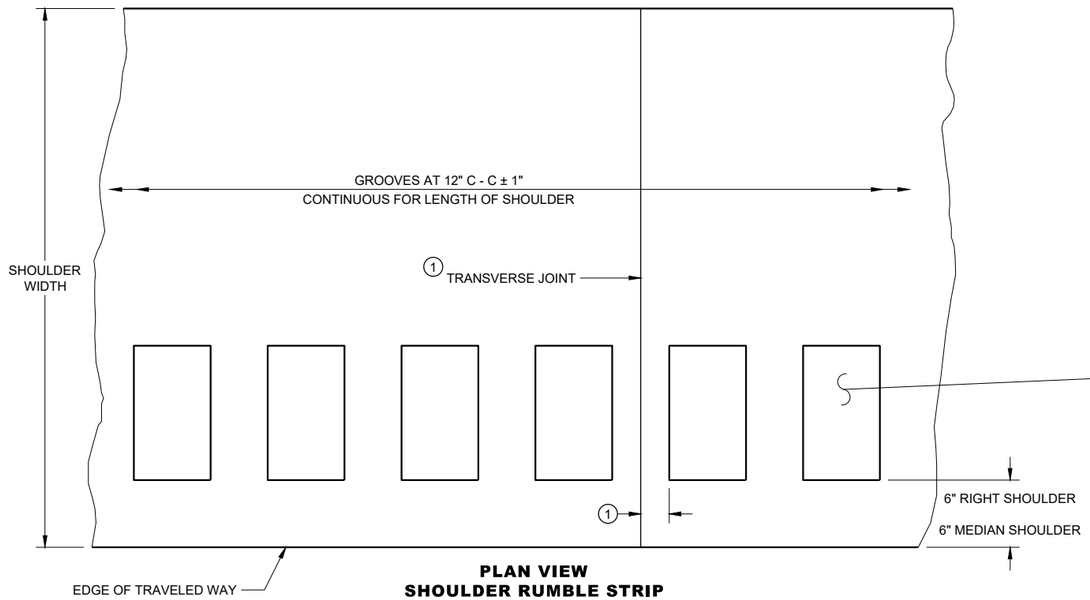

PLAN VIEW
SHOULDER RUMBLE STRIP

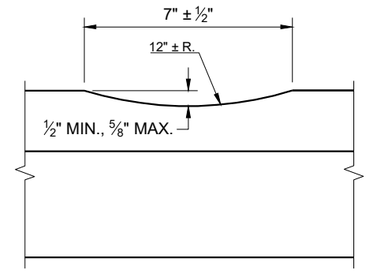

SECTION A - A

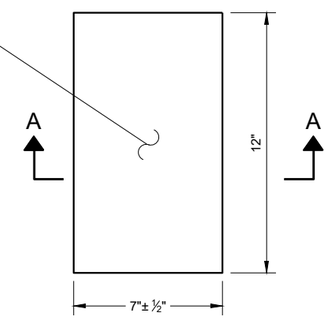

PLAN VIEW
(SINGLE GROOVE)

PLACEMENT DETAIL FOR RUMBLE STRIP

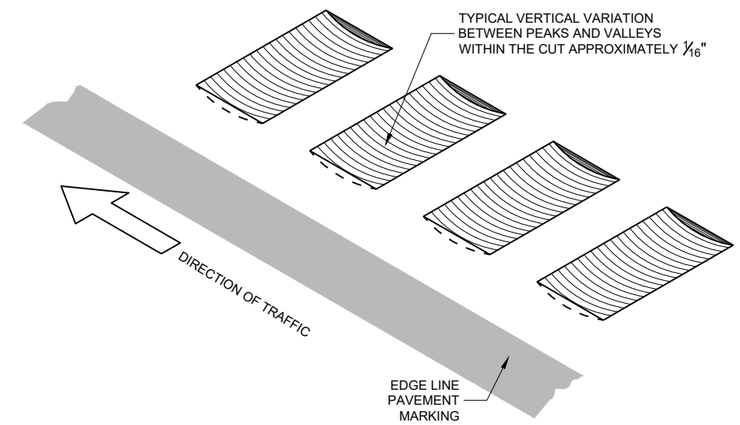

ISOMETRIC

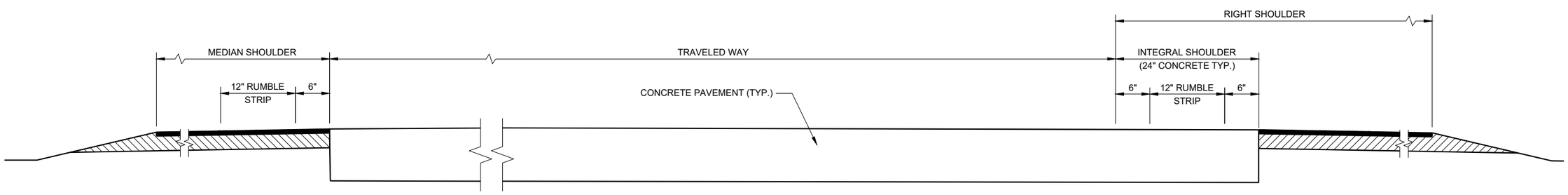

SECTION VIEW

TYPICAL SHOULDER RUMBLE STRIPS
(ONE ROADWAY IS SHOWN)

SHOULDER RUMBLE STRIPS, DIVIDED ROADWAY

STATE OF WISCONSIN
DEPARTMENT OF TRANSPORTATION

6
SDD 13A05-06a

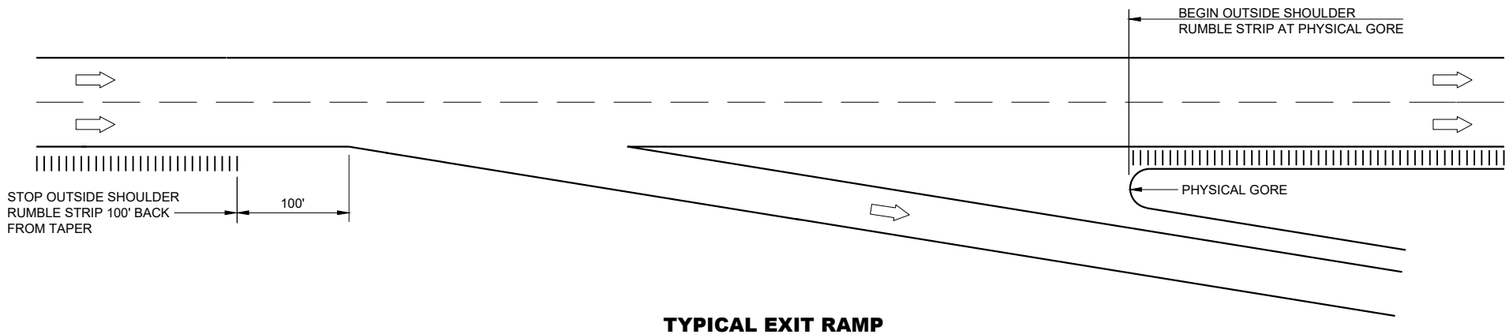

TYPICAL EXIT RAMP

GENERAL NOTES

NO RUMBLE STRIP ON EXIT, DIRECTIONAL OR ENTRANCE RAMPS, EXCEPT NEAR THE ENTRANCE TAPER END AND ALONG THE PARALLEL RAMP AREA AS SHOWN.

RUMBLE STRIPS ON EXPRESSWAYS:
DO NOT INSTALL SHOULDER RUMBLE STRIPS ACROSS SIDE ROAD INTERSECTIONS, COMMERCIALAND PRIVATE DRIVEWAYS, ADJACENT TO RIGHT TURN LANES, LEFT TURN LANES, TURN LANE TAPERS, 25' IN ADVANCE OF BRIDGE DECKS, 25' IN ADVANCE OF BRIDGE APPROACHES, OR 100 FEET IN ADVANCE OF RAILROAD CROSSINGS.

LEGEND

DIRECTION OF TRAFFIC

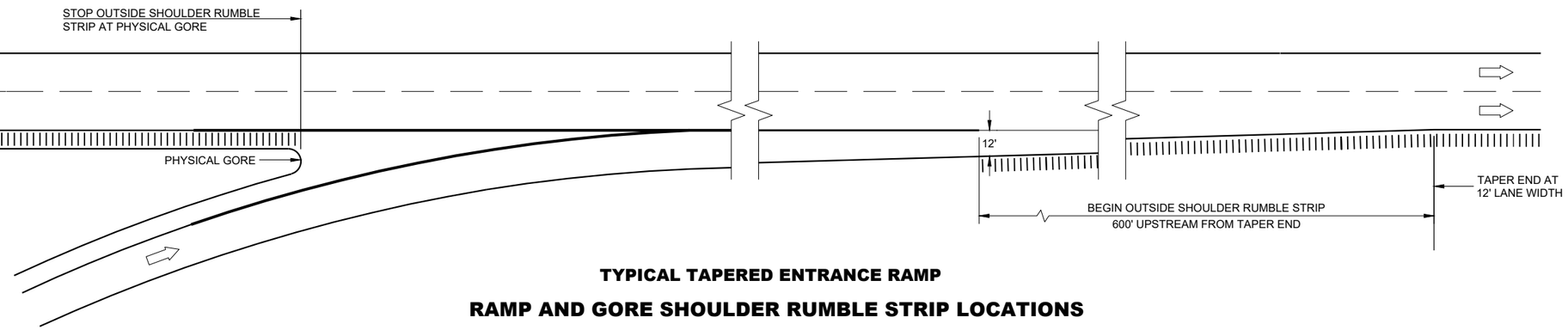

TYPICAL TAPERED ENTRANCE RAMP

RAMP AND GORE SHOULDER RUMBLE STRIP LOCATIONS

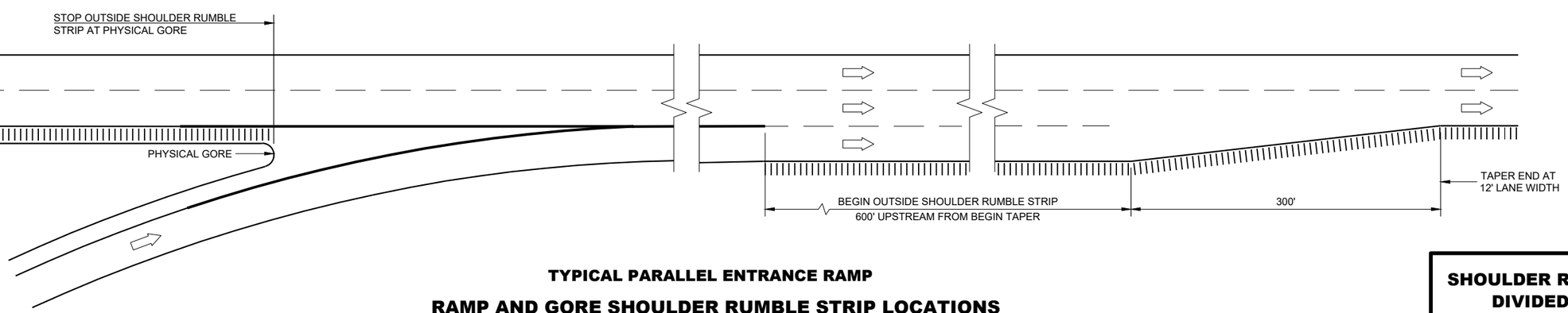

TYPICAL PARALLEL ENTRANCE RAMP

RAMP AND GORE SHOULDER RUMBLE STRIP LOCATIONS

SHOULDER RUMBLE STRIPS, DIVIDED ROADWAY

STATE OF WISCONSIN
DEPARTMENT OF TRANSPORTATION

APPROVED
May 2023 — DATE
/S/ Rodney Taylor — ROADWAY DESIGN STAND UNIT SUPERVISOR
FHWA

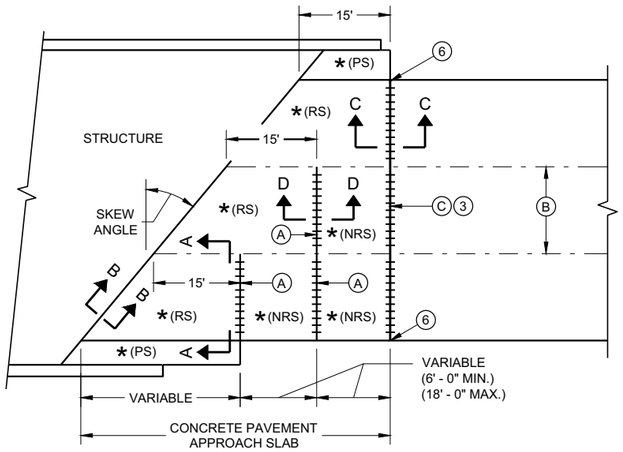

SKEWED APPROACH
(PAVEMENT MORE THAN TWO LANES)

* (RS) = REINFORCED CONCRETE SLAB

* (PS) = PAVED CONCRETE SHOULDER OR CONCRETE DRAINAGE SLAB

* (NRS) - NON - REINFORCED CONCRETE SLAB

*** STANDARD DOWEL BAR DIAMETER (SEE SDD 13C11 AND SDD 13C13)

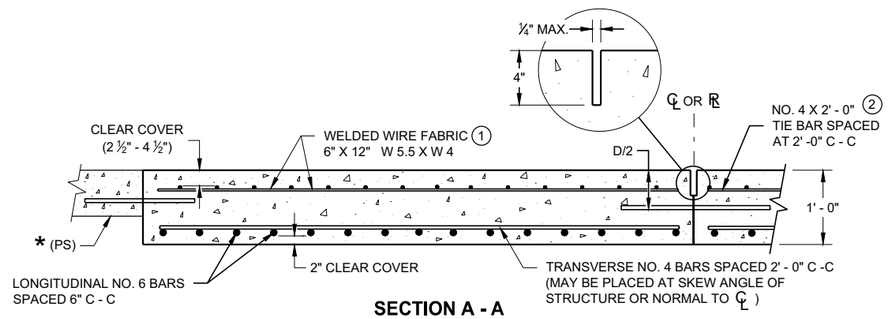

SECTION A - A
REINFORCEMENT POSITIONING DETAIL

GENERAL NOTES

THE CONTRACTOR MAY SPLICE NO. 6 BARS IN THE APPROACH SLAB FOR SKEWED STRUCTURES ONLY. STAGGER SPLICES WITH A MAXIMUM OF ONE SPLICE PER BAR. THE LENGTH OF LAP IS 20 INCHES.

TACK WELD DOWEL BARS TO THE BASKETS ON ALTERNATE ENDS.

1. THE CONTRACTOR MAY USE NO. 4 BARS SPACED AT 2' - 0 " C - C IN BOTH THE LONGITUDINAL AND TRANSVERSE DIRECTIONS FOR TOP REINFORCEMENT AS AN ALTERNATIVE TO THE WELDED WIRE FABRIC.
2. THE CONTRACTOR MAY OMIT THE BARS BETWEEN REINFORCED SLABS WHERE SLAB REINFORCEMENT BARS EXTEND ACROSS THE CENTERLINE OR REFERENCE LINE.
3. DO NOT CONSTRUCT AN EXPANSION JOINT OR INSTALL DOWEL BARS WHEN ABUTTING AN HMA PAVEMENT.
4. USE A JOINT SEALANT CONFORMING TO STANDARD SPECIFICATION 415.2.6.
5. PLACE EXPANSION CAP ON THE END OF THE DOWEL THAT IS NOT TACK WELDED TO THE BASKET. DO NOT FORCE DOWEL BAR PAST THE DOWEL STOP.
6. EXTEND EXPANSION JOINT THROUGH ANY ADJACENT TIED CONCRETE.

(A) STANDARD CONTRACTION JOINT NORMAL TO ℄ OR ℞.

(B) STANDARD LONGITUDINAL JOINT WITH TIE BARS.

(C) 1 ½" EXPANSION JOINT WITH DOWEL BARS NORMAL TO ℄ OR ℞ .

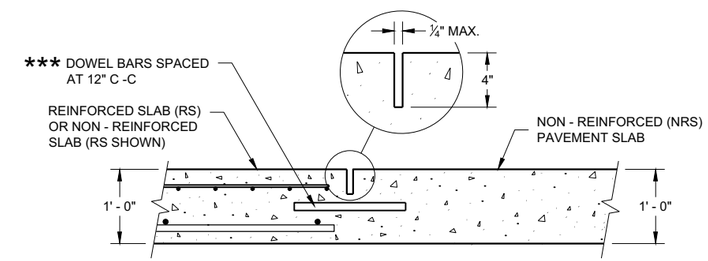

SECTION D - D
CONTRACTION JOINT

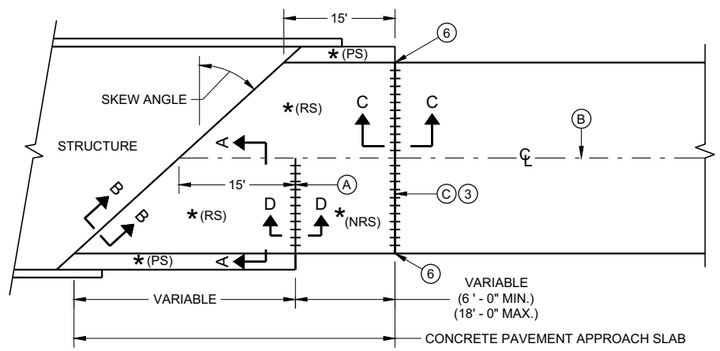

SKEWS > 20°
(PAVEMENT WIDTH ≤ 30')

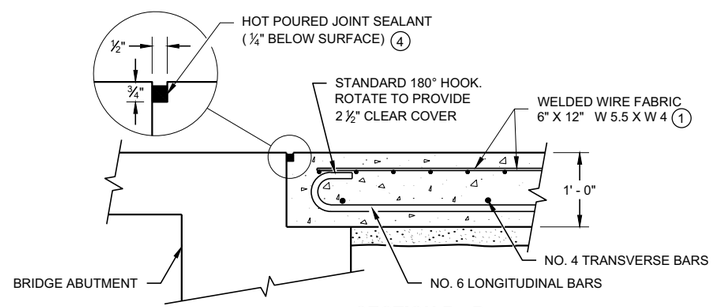

SECTION B - B
BEND DETAIL
BOTTOM REINFORCEMENT

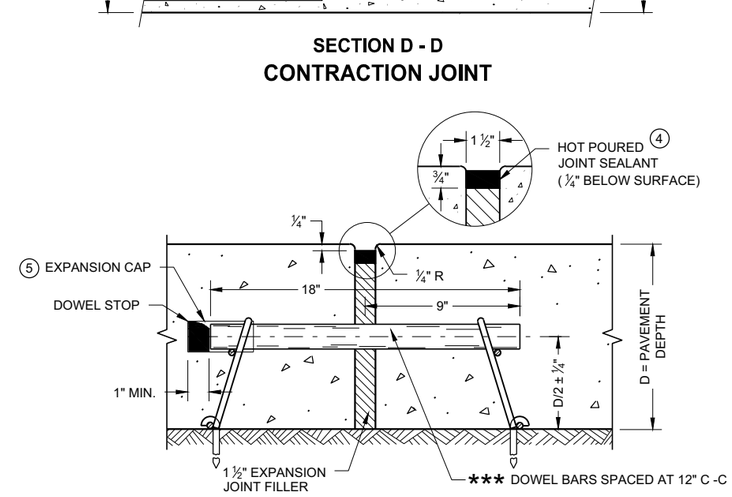

EXPANSION JOINT DETAIL

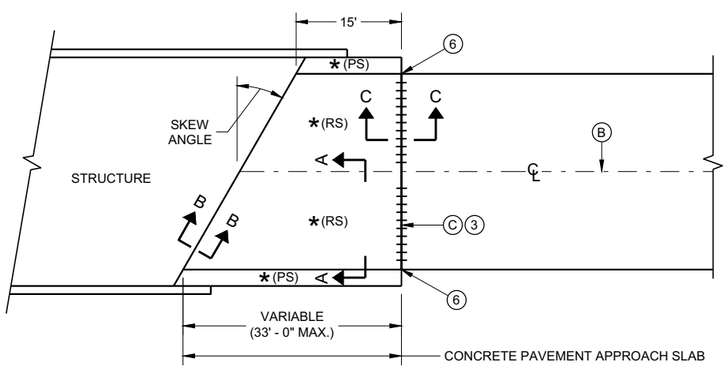

SKEWS ≤ 20°
(PAVEMENT WIDTH ≤ 30')

APPROACH SLAB AND ADJACENT PAVEMENT

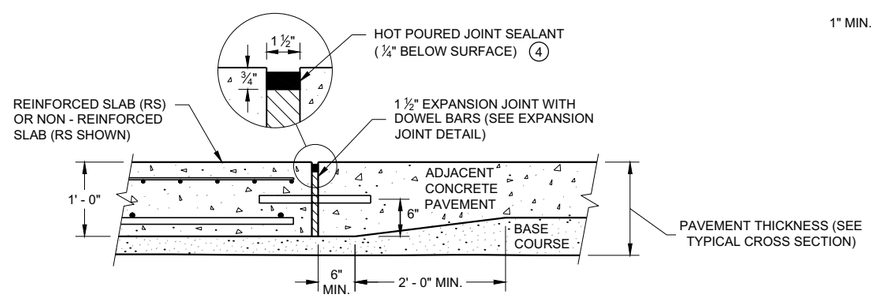

SECTION C - C
TRANSITION DETAIL
APPROACH SLAB TO ADJACENT PAVEMENT

CONCRETE PAVEMENT APPROACH SLAB

STATE OF WISCONSIN
DEPARTMENT OF TRANSPORTATION

APPROVED
November 2018 /S/ Peter Kemp, P.E.
DATE PAVEMENT SUPERVIS

FHWA

SDD 13B02 - 09a

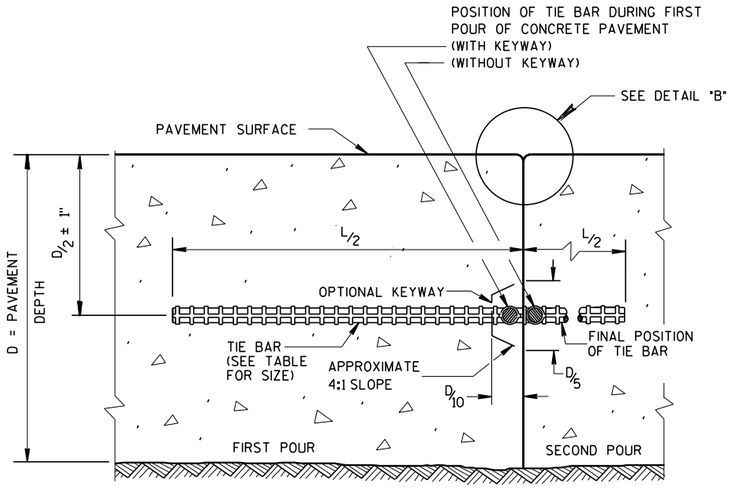

CONSTRUCTION JOINT

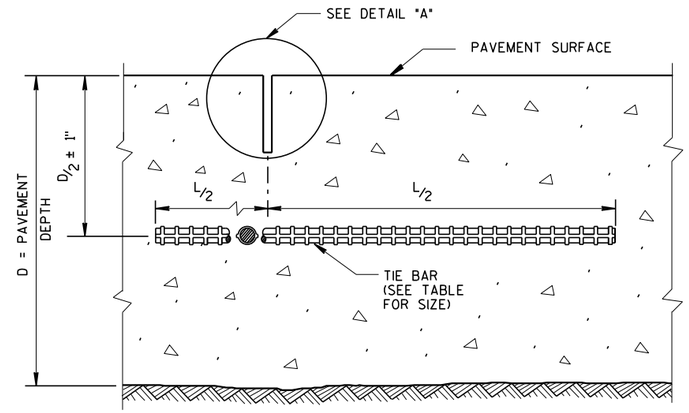

SAWED JOINT

GENERAL NOTES

CREATE A LONGITUDINAL JOINT FOR PAVEMENT WIDTHS GREATER THAN 15 FEET.

CORRELATE LONGITUDINAL JOINTS WITH LANE LINES WHEN POSSIBLE.

1. ANCHOR TIE BARS INTO DRILLED HOLES WITH AN EPOXY.
2. PAVEMENT THAT WAS IN PLACE PRIOR TO THE CONTRACT.

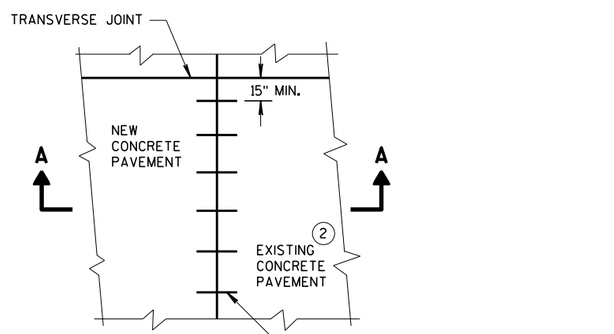

PLAN VIEW

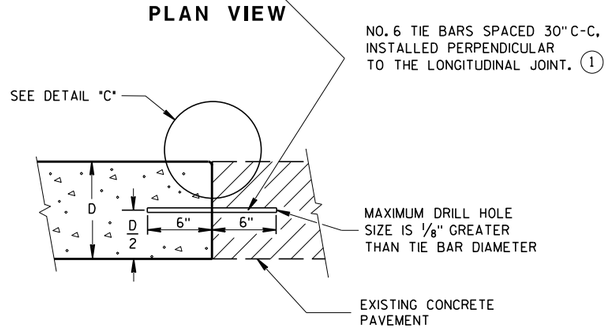

SECTION A-A
LONGITUDINAL CONSTRUCTION JOINT TIE BARS ANCHORED INTO EXISTING PAVEMENT

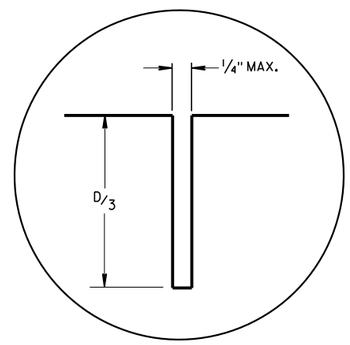

DETAIL "A"

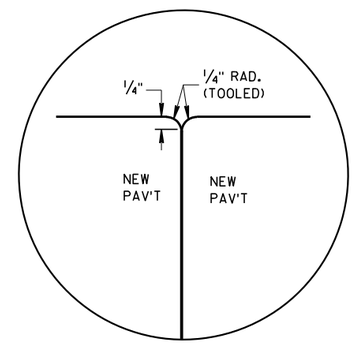

DETAIL "B"

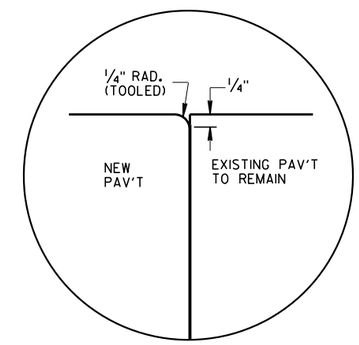

DETAIL "C"

TIE BAR TABLE

PAVEMENT DEPTH (D)	TIE BAR SIZE	TIE BAR LENGTH (L)	MAX. TIE BAR SPACING
< 10 1/2"	NO. 4	30"	36"
≥ 10 1/2"	NO. 5	36"	36"
	NO. 4 *	30"	24" **

* SUBSTITUTE BENT BARS AT LONGITUDINAL JOINTS WHEN EQUIPMENT LIMITATIONS DURING CONSTRUCTION WARRANT (e.g. AUXILIARY LANES OR TURN LANES)

** CONFORM TO 15" MINUMUM SPACING FROM TRANSVERSE JOINTS; SPACING BETWEEN TIE BARS WILL BE 30" AT TRANSVERSE JOINTS.

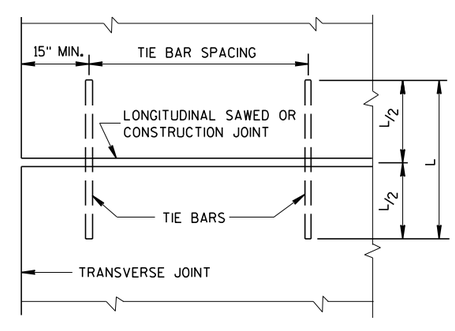

PLAN VIEW
SHOWING LOCATION OF TIE BARS

CONCRETE PAVEMENT
LONGITUDINAL JOINTS AND TIES

STATE OF WISCONSIN
DEPARTMENT OF TRANSPORTATION

APPROVED
March 2018 — DATE
/S/ Peter Kerr — PAVEMENT SUPE
FHWA

6

S.D.D. 13 C 1-19

GENERAL NOTES

SAW CUT, DRILL, AND LIFT OUT EXISTING CONCRETE PAVEMENT WITHIN THE BOUNDARIES OF CONCRETE REPAIR AREAS. THE CONTRACTOR MAY MAKE ADDITIONAL SAW CUTS INSIDE THE REPAIR LIMITS TO REDUCE WEIGHT AND SIZE OF CONCRETE PIECES.

PROVIDE A 6 FOOT MINIMUM DISTANCE FROM BOUNDARIES OF CONCRETE REPAIR AREA TO ADJACENT TRANSVERSE JOINT OR CRACK.

THE LENGTH OF THE REPAIRS MAY VARY FROM THE DIMENSIONS SHOWN IF THE EXISTING CONCRETE PAVEMENT IS NON-DOWELED AND THE PAVEMENT IS TO BE OVERLAID AFTER REPAIRING.

(1) DOWEL BARS MAY NOT BE PRESENT.

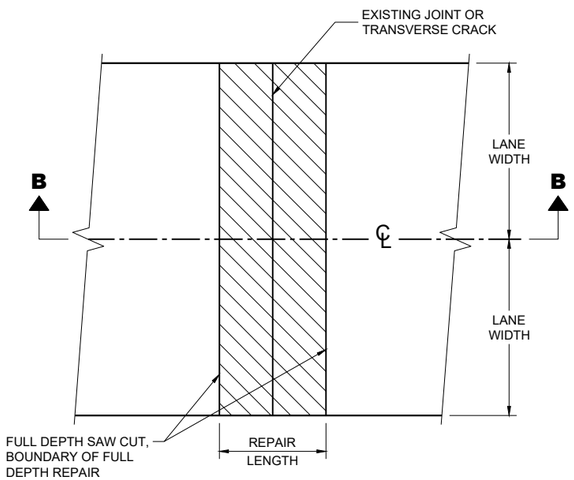

PLAN VIEW
(DOUBLE LANE REPAIR)

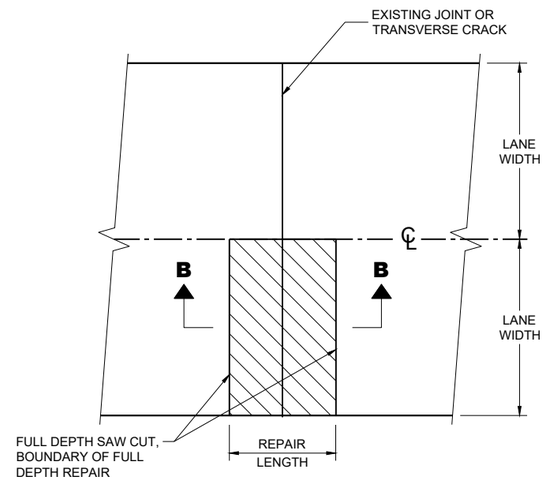

PLAN VIEW
(SINGLE LANE REPAIR)

FULL DEPTH CONCRETE PAVEMENT REMOVAL

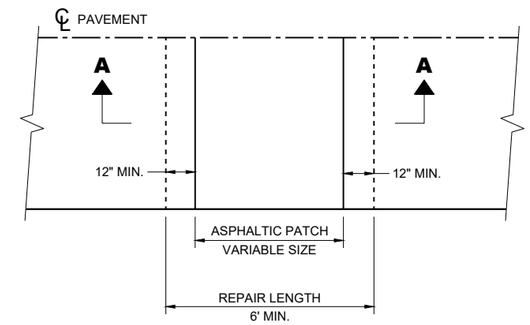

PLAN VIEW

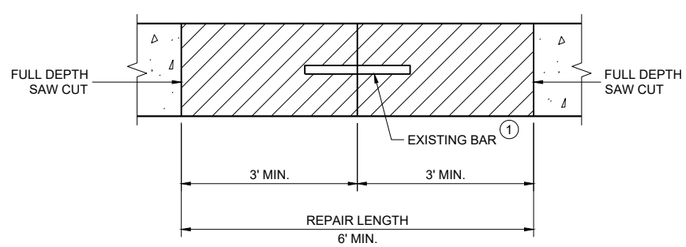

SECTION B - B

CONCRETE REMOVAL

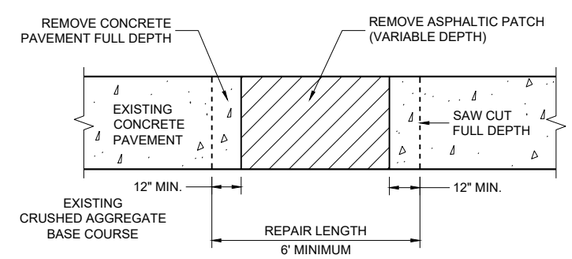

SECTION A - A

HMA PATCH REMOVAL

CONCRETE PAVEMENT REPAIR AND REPLACEMENT

STATE OF WISCONSIN
DEPARTMENT OF TRANSPORTATION

6

6

SDD 13C09-18a

SDD 13C09-18a

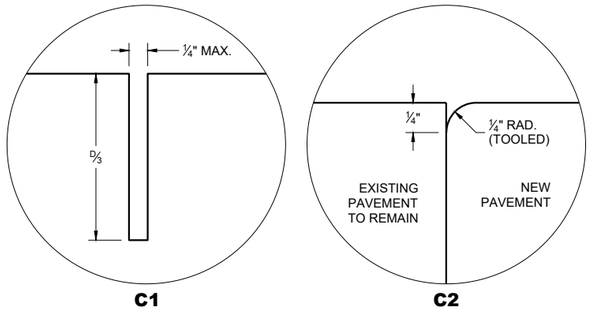

TRANSVERSE JOINTS

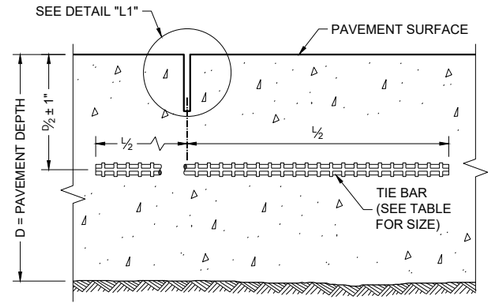

SECTION C - C

SAWED LONGITUDINAL JOINT

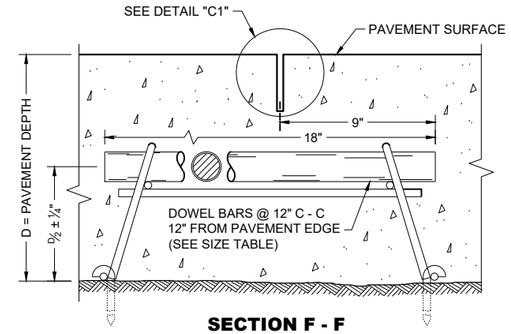

SECTION F - F

DOWELED CONTRACTION JOINT

GENERAL NOTES

INSTALL DOWEL BARS PARALLEL TO THE PAVEMENT CENTERLINE AND PAVEMENT SURFACE.

CONCRETE PAVEMENT REPAIRS OF EXISTING NON-DOWELED CONCRETE PAVEMENTS DO NOT NEED TO BE DOWELED.

ANCHOR DOWEL BARS AND TIE BARS INTO DRILLED HOLES WITH AN EPOXY.

FOR MULTI-LANE CONCRETE PAVEMENT REPLACEMENTS, PROVIDE A MINIMUM DISTANCE OF 15 INCHES FROM ALL TRANSVERSE JOINTS OR EDGES OF REPLACEMENT TO THE CENTER OF THE TIE BAR NEAREST THAT JOINT OR EDGE.

(1) APPLY A THIN UNIFORM COATING OF SURFACE TREATMENT TO THE FREE END OF DOWEL BARS TO PREVENT BONDING.

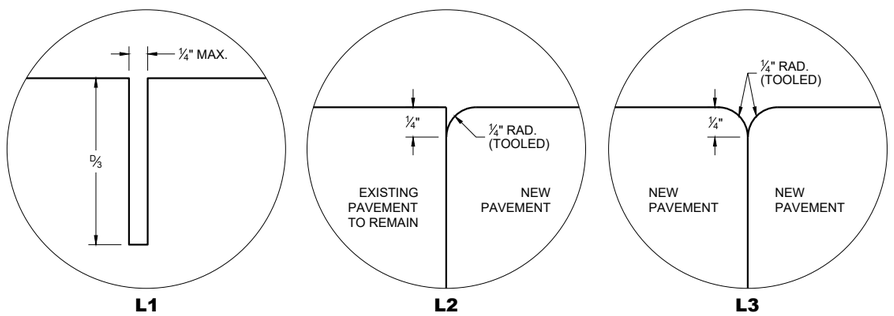

LONGITUDINAL JOINTS

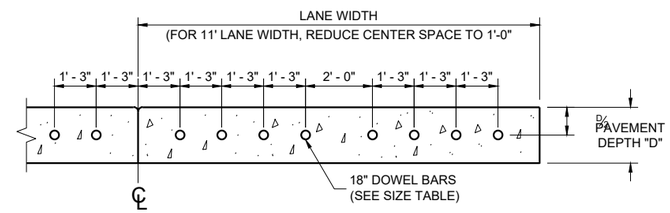

SECTION E - E

DRILLED DOWEL BAR CONSTRUCTION JOINT

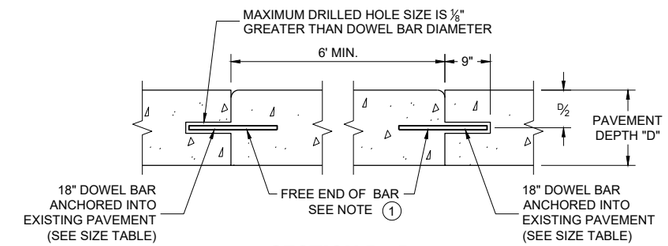

SECTION D - D

TIE BAR TABLE

PAVEMENT DEPTH (D)	TIE BAR SIZE	TIE BAR LENGTH (L)	MAX. TIE BAR SPACING
< 10 ½"	NO. 4	30"	36"
≥ 10 ½"	NO. 5	36"	36"
	NO. 4*	30"	24" **

* SUBSTITUTE BENT BARS AT LONGITUDINAL JOINTS WHEN EQUIPMENT LIMITATIONS DURING CONSTRUCTION WARRANT (e.g. AUXILIARY LANES OR TURN LANES)

** CONFORM TO 15" MINIMUM SPACING FROM TRANSVERSE JOINTS; SPACING BETWEEN TIE BARS WILL BE 30" AT TRANSVERSE JOINTS.

PAVEMENT DEPTH, DOWEL BAR SIZE AND JOINT SPACING TABLE

PAVEMENT DEPTH (D)	DOWEL BAR DIAMETER	DRILLED DOWEL BAR DIAMETER	CONTRACTION JOINT SPACING
6", 6 ½"	NONE	NONE	12'
7", 7 ½"	1"	1"	14'
8" & ABOVE	1 ¼"	1 ¼"	15'

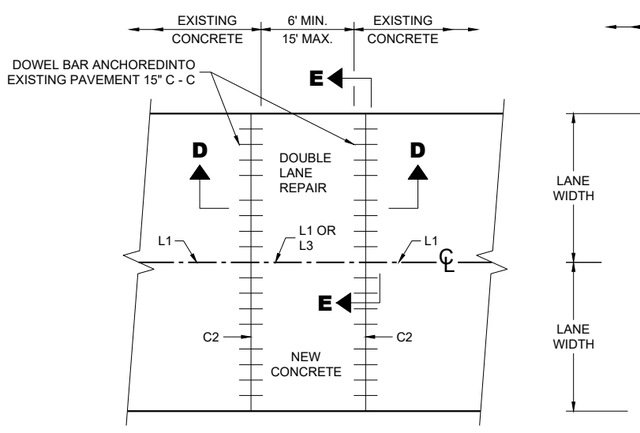

PLAN VIEW

MULTILANE CONCRETE PAVEMENT REPAIR

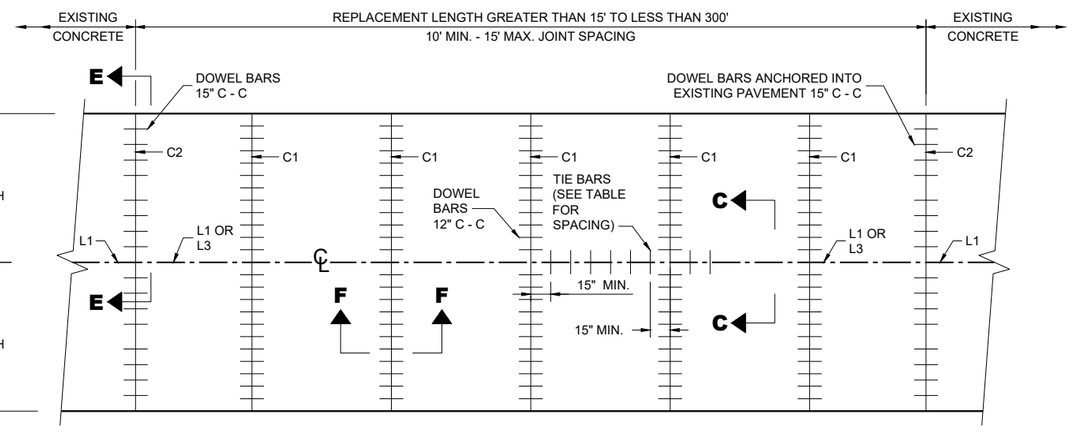

PLAN VIEW

MULTILANE CONCRETE PAVEMENT REPLACEMENT

CONCRETE PAVEMENT REPAIR AND REPLACEMENT

STATE OF WISCONSIN
DEPARTMENT OF TRANSPORTATION

6

6

SDD 13C09-18b

SDD 13C09-18b

GENERAL NOTES

1. WITH THE APPROVAL OF THE ENGINEER, FOR SINGLE LANE PAVEMENT REPLACEMENTS LESS THAN 30 FEET IN LENGTH, THE CONTRACTOR MAY INSTALL DRILLED TIE BARS ON 6:1 SKEW HORIZONTALLY, DIRECTION OF SKEW ALTERNATING WITH EACH SUCCESSIVE BAR. DRIVE SKEWED TIE BARS TO A DEPTH OF 6 INCHES IN A HOLE OF SUCH A DIAMETER AS TO PROVIDE A TIGHT DRIVEN FIT.
2. USE AN ENGINEER APPROVED BOND BREAKER (E.G. RELEASE AGENT, CURING COMPOUND) FOR SINGLE LANE REPAIRS UP TO 15 FEET IN LENGTH.
3. ANCHOR TIE BARS INTO DRILLED HOLES WITH AN EPOXY.

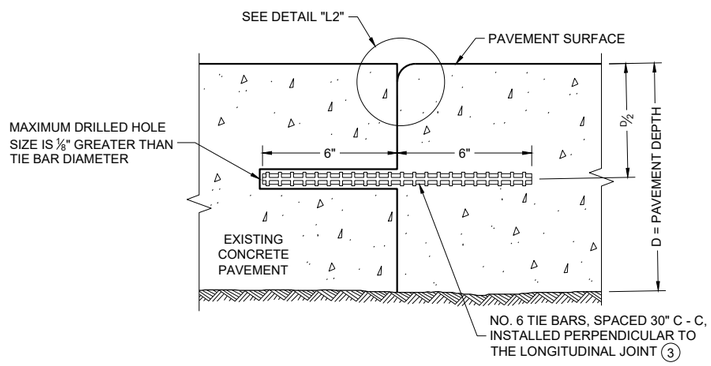

SECTION G - G

TIE BARS ANCHORED INTO EXISTING PAVEMENT

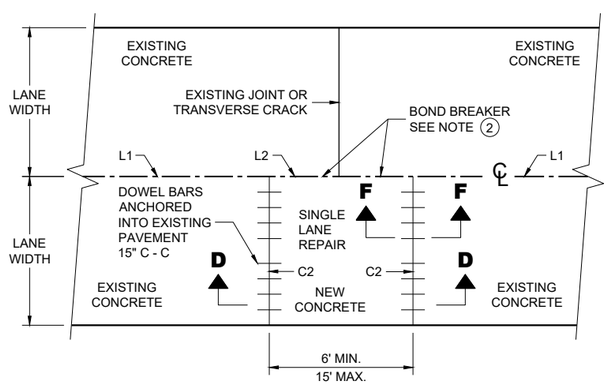

PLAN VIEW

SINGLE LANE CONCRETE PAVEMENT REPAIR

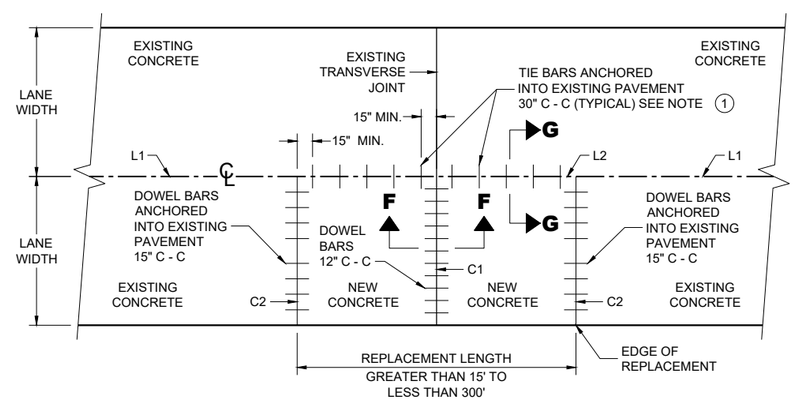

PLAN VIEW

SINGLE LANE CONCRETE PAVEMENT REPLACEMENT

6

SDD 13C09-18c

CONCRETE REPAIR AND REPLACEMENT

STATE OF WISCONSIN
DEPARTMENT OF TRANSPORTATION

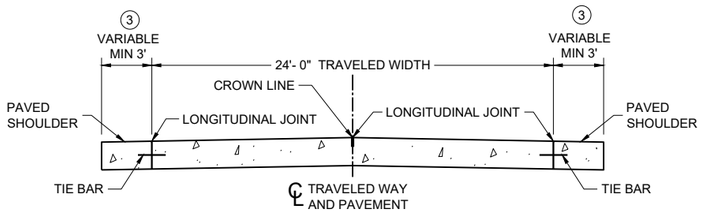

SECTION A - A

TWO-LANE TWO-WAY HIGHWAY 1

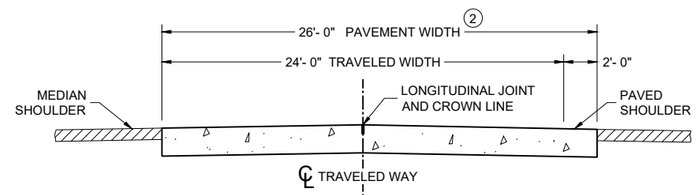

SECTION B - B

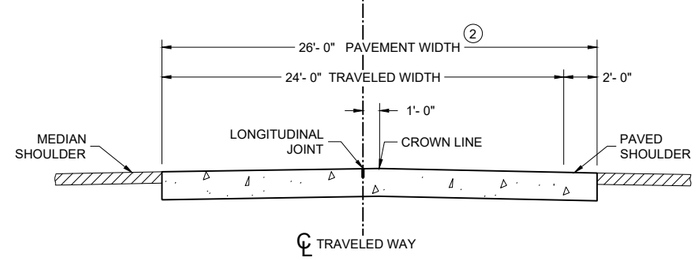

ALTERNATIVE SECTION B - B

DIVIDED HIGHWAY 1

GENERAL NOTES

CONTRACTION JOINTS

CONSTRUCT TRANSVERSE CONTRACTION JOINTS NORMAL TO THE CENTERLINE. SHOW THE LOCATION OF CONTRACTION JOINTS THROUGH INTERSECTIONS ON THE PLANS OR AS DIRECTED BY THE ENGINEER.

INSTALL DOWEL BARS PARALLEL TO THE PAVEMENT CENTERLINE AND PAVEMENT SURFACE.

FOR PAVEMENT SLABS OF VARYING WIDTHS, LOCATE THE OUTER MOST DOWEL BAR SO THAT THE CENTER OF THE BAR IS A MINIMUM OF 6 INCHES FROM AND A MAXIMUM OF 18 INCHES FROM THE FREE EDGE OF PAVEMENT.

CONSTRUCTION JOINTS

LOCATE CONSTRUCTION JOINTS A MINIMUM OF 6 FEET FROM THE NEAREST CONTRACTION JOINT AND ALIGN PARALLEL TO THE CONTRACTION JOINTS.

1. REFER TO TYPICAL CROSS SECTIONS FOR ADDITIONAL DETAILS.
2. MEASURE THE ENTIRE PAVED WIDTH INCLUDING THE PORTION(S) LABELED "PAVED SHOULDER" AS CONCRETE PAVEMENT.
3. SHOULDER WIDTHS LESS THAN 3 FEET SHALL BE PAVED INTEGRAL TO THE MAINLINE CONCRETE PAVEMENT, SEE SECTION B-B.

PAVEMENT DEPTH, DOWEL BAR SIZE AND JOINT SPACING TABLE

PAVEMENT DEPTH (D)	DOWEL BAR DIAMETER	CONTRACTION JOINT SPACING
6", 6 ½"	NONE	12'
7", 7 ½"	1"	14'
8" & ABOVE	1 ¼"	15'

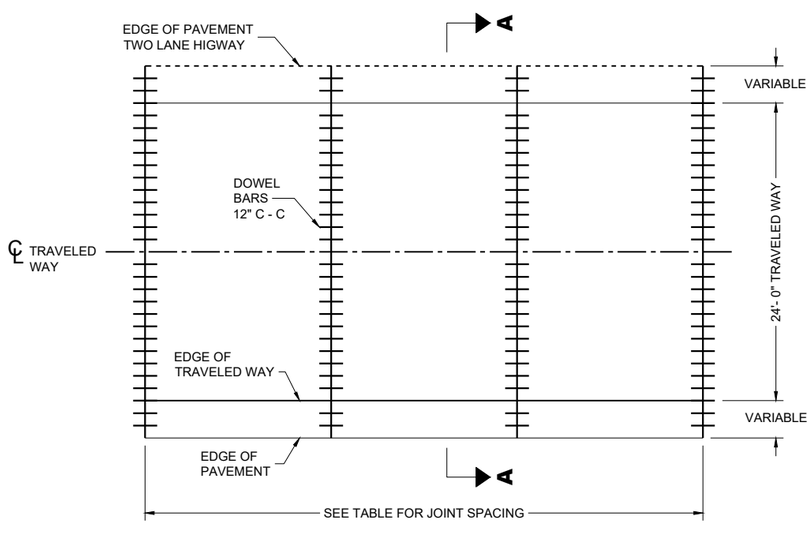

CONTRACTION JOINT LAYOUT FOR TWO-LANE TWO-WAY HIGHWAY

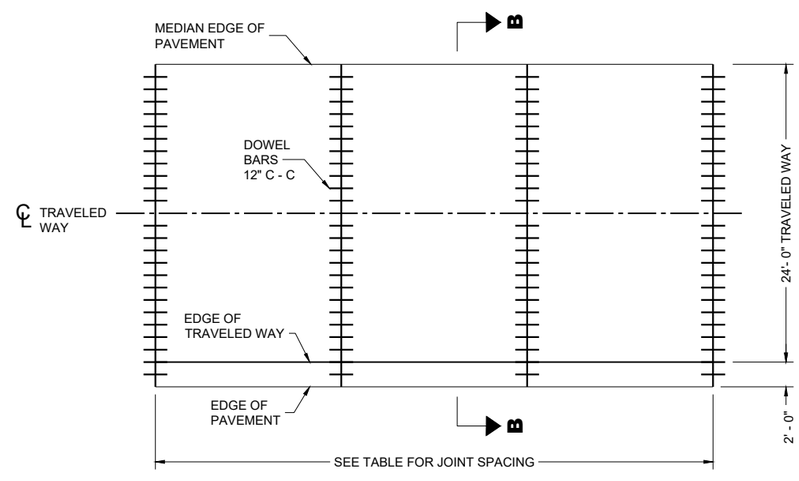

CONTRACTION JOINT LAYOUT FOR DIVIDED HIGHWAY

6

SDD 13C11-15a

RURAL DOWELED CONCRETE PAVEMENT

STATE OF WISCONSIN
DEPARTMENT OF TRANSPORTATION

GENERAL NOTES

1. OBTAIN THE ENGINEER'S APPROVAL FOR THE USE OF ALTERNATIVE DESIGNS OF THE DOWEL ASSEMBLY. USE MECHANICAL DOWEL BAR INSERTERS OR DOWEL ASSEMBLIES WHEN CONSTRUCTION CONTRACTION JOINTS.
2. SECURE BASKETS WITH ANCHORS TO HOLD DOWEL BARS IN THE CORRECT POSITION AND ALIGNMENT. TYPE, LOCATION, NUMBER AND LENGTH OF ANCHORS ARE DEPENDENT UPON FIELD CONDITIONS.
3. FORM OR SAW CONSTRUCTION JOINTS. PROVIDE A ¼" RADIUS AT FORMED JOINTS.
4. PROVIDE A SMOOTH VERTICAL FACE FOR THE ENTIRE DEPTH OF THE PAVEMENT WHEN FORMING CONSTRUCTION JOINTS.
5. INSTALL DOWEL BARS AT CONSTRUCTION JOINTS BY FORMING OR DRILLING. INSTALL FORMED DOWEL BARS 12 INCHES C - C AND 12 INCHES FROM PAVEMENT EDGE. REMOVE EXCESS CONCRETE FROM THE FREE END OF THE DOWEL BAR IF DOWEL BARS ARE FORMED THROUGH A HEADER BOARD. INSTALL DRILLED DOWEL BARS ACCORDING TO THE "DRILLED DOWEL BAR CONSTRUCTION JOINT" DETAIL.
6. APPLY A THIN UNIFORM COATING OF SURFACE TREATMENT TO THE FREE END OF DOWEL BARS TO PREVENT BONDING.
7. ANCHOR DOWEL BARS AND TIE BARS INTO DRILLED HOLES WITH AN EPOXY. MAXIMUM DRILLED HOLE SIZE IS ⅛" GREATER THAN DOWEL BAR DIAMETER, 9 INCHES IN LENGTH.

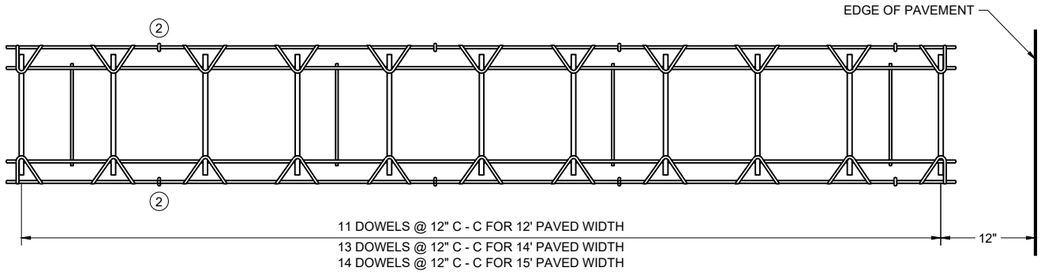

PLAN VIEW

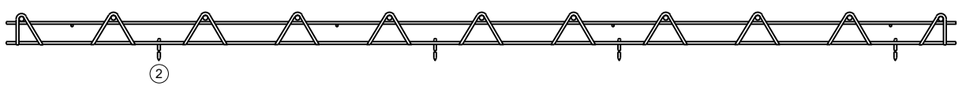

SIDE VIEW

(NORMAL TO CENTERLINE)

CONTRACTION JOINT DOWEL ASSEMBLY (1)

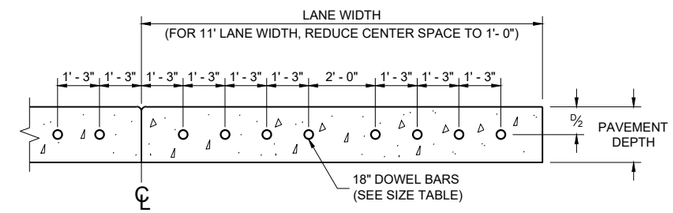

DRILLED DOWEL BAR CONSTRUCTION JOINT (7)

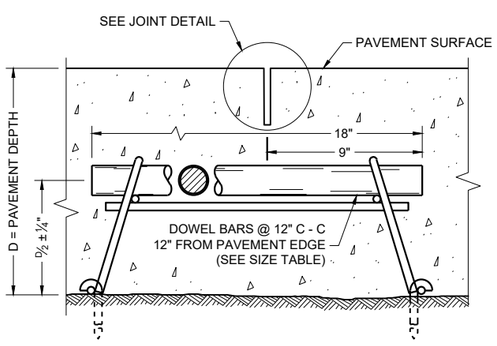

DOWELED CONTRACTION JOINT

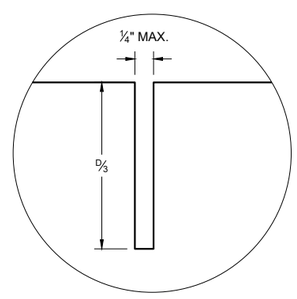

JOINT DETAIL

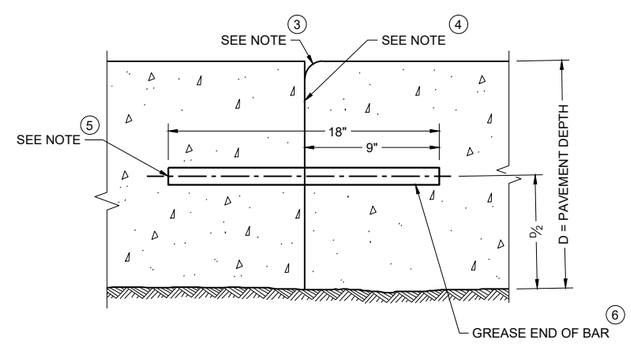

TRANSVERSE CONSTRUCTION JOINT

RURAL DOWELED CONCRETE PAVEMENT

STATE OF WISCONSIN
DEPARTMENT OF TRANSPORTATION

APPROVED
November 2025 — DATE
/S/ Peter Kemp P.E. — PAVEMENT SUPERVISOR
FHWA

6

SDD 13C11-15b

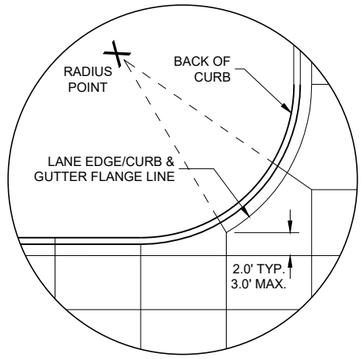

DETAIL "A"

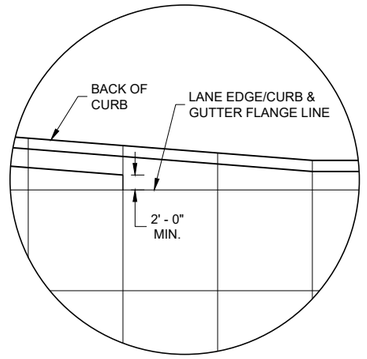

DETAIL "B"

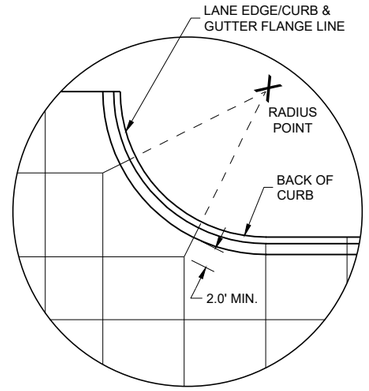

DETAIL "C"

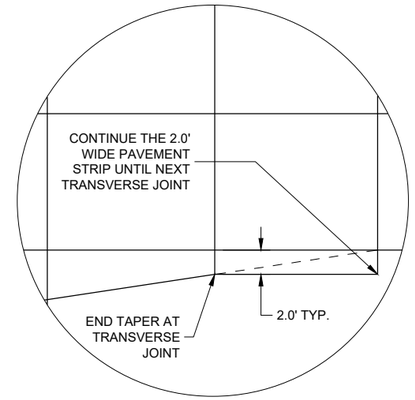

DETAIL "D"

GENERAL NOTES

THE PRIMARY ROADWAY CONTROLS THE TRANSVERSE JOINT PATTERN.

ALIGN NEW JOINTS WITH EXISTING JOINTS OR CRACKS.

CONSTRUCT TRANSVERSE JOINTS PERPENDICULAR TO THE ROADWAY.

ADJUST TRANSVERSE JOINTS TO ALIGN WITH UTILITY FIXTURES (E.G MANHOLES AND INLETS) IN THE PAVEMENT STRUCTURE WHEN POSSIBLE. WATER VALVES DO NOT REQUIRE JOINT ADJUSTMENT.

AVOID SLABS LESS THAN 2 FEET WIDE OR GREATER THAN 15 FEET WIDE.

SEE TABLE FOR TRANSVERSE JOINT SPACING. JOINT SPACING SPECIFIED IS MAXIMUM AND ACTUAL SPACING CAN BE ADJUSTED TO ACCOMMODATE INTERSECTIONS.

AVOID ANGLES LESS THAN 60° BY DOGLEGGING JOINTS THROUGH CURVE RADIUS POINTS. USE 90° ANGLES WHEN POSSIBLE.

CORRELATE LONGITUDINAL JOINTS WITH LANE LINES WHEN POSSIBLE.

1. PROVIDE TRANSVERSE JOINTS AT ALL PAVEMENT WIDTH CHANGES.
2. CONSTRUCT DOWELED EXPANSION JOINT ON THE SIDE ROAD OF AN INTERSECTION IF THE SIDE ROAD IS CONCRETE PAVEMENT AND GREATER THAN 300 FEET IN LENGTH. ALIGN EXPANSION JOINT WITH EDGE OF RADIUS.
3. THE ENGINEER MAY APPROVE SLIGHT VARIATIONS FROM THESE JOINTING DETAILS.

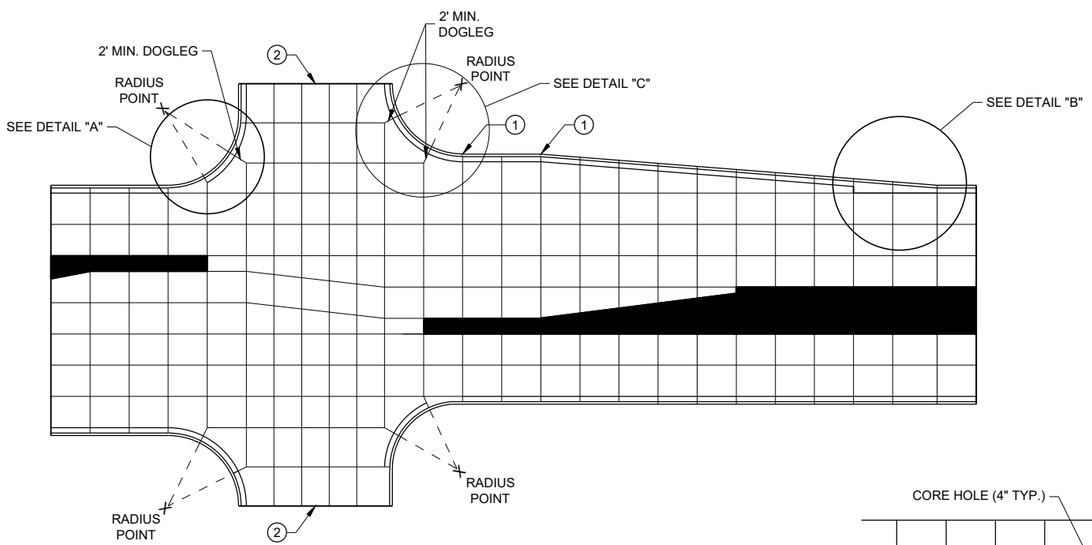

STANDARD INTERSECTION

PAVEMENT DEPTH AND JOINT SPACING TABLE

PAVEMENT DEPTH (D)	CONTRACTION JOINT SPACING
6", 6 ½"	12'
7", 7 ½"	14'
8" & ABOVE	15'

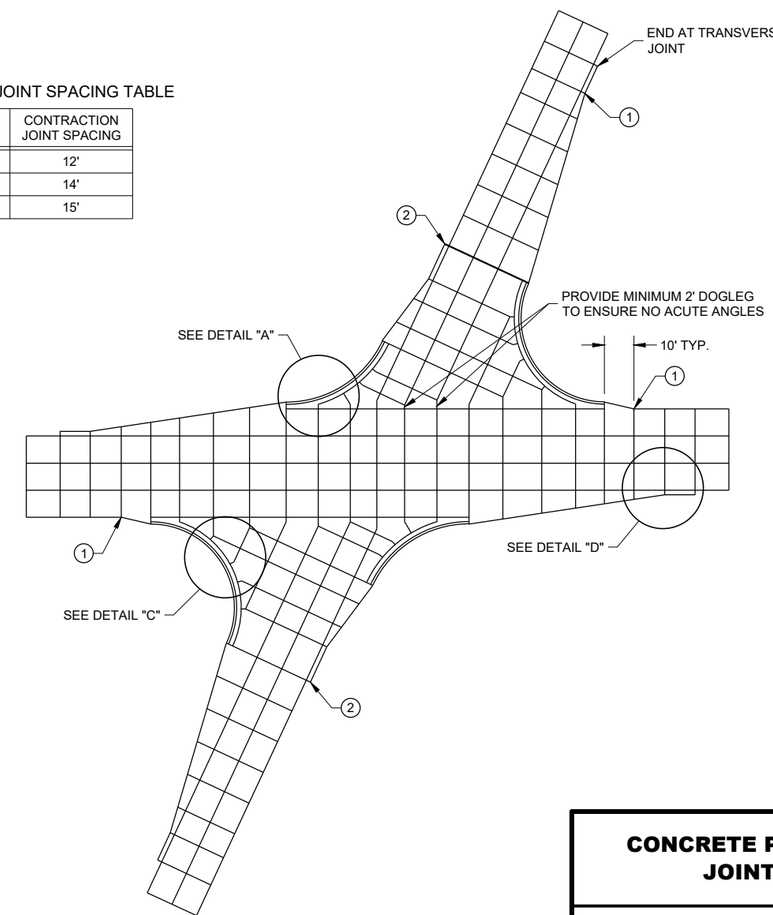

SKEWED INTERSECTION

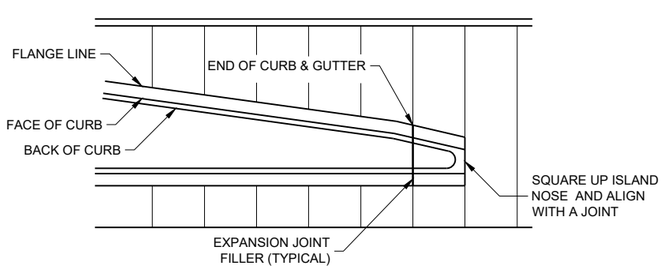

APPROACH TO MEDIAN

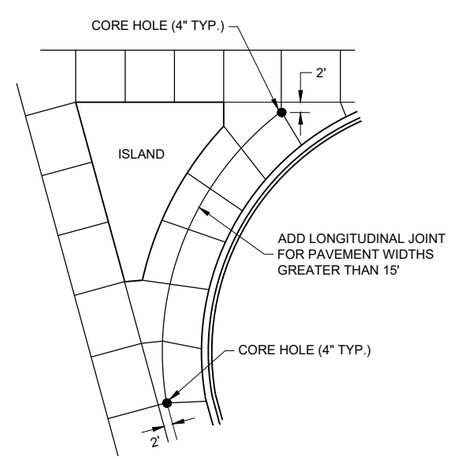

LARGE RIGHT TURN

CONCRETE PAVEMENT JOINTING

STATE OF WISCONSIN
DEPARTMENT OF TRANSPORTA

6

SDD 13C18 - 08a

LEGEND

POTENTIAL DOWELED EXPANSION JOINT

DOWELED JOINT

TIED JOINT

GENERAL NOTES

USE AN EXPANSION JOINT FILLER MEETING THE REQUIREMENTS OF STANDARD SPECIFICATION 415.

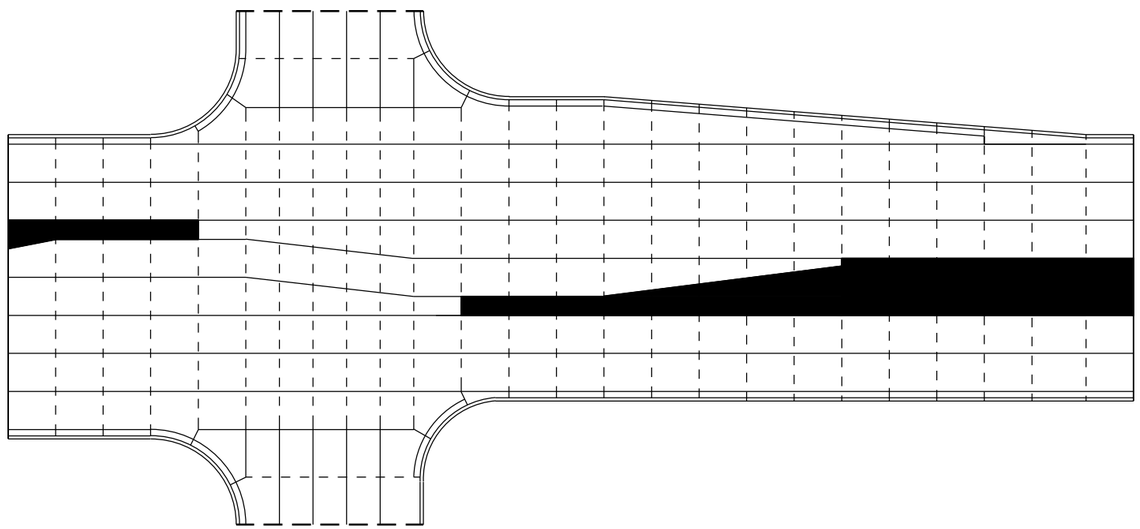

STANDARD INTERSECTION

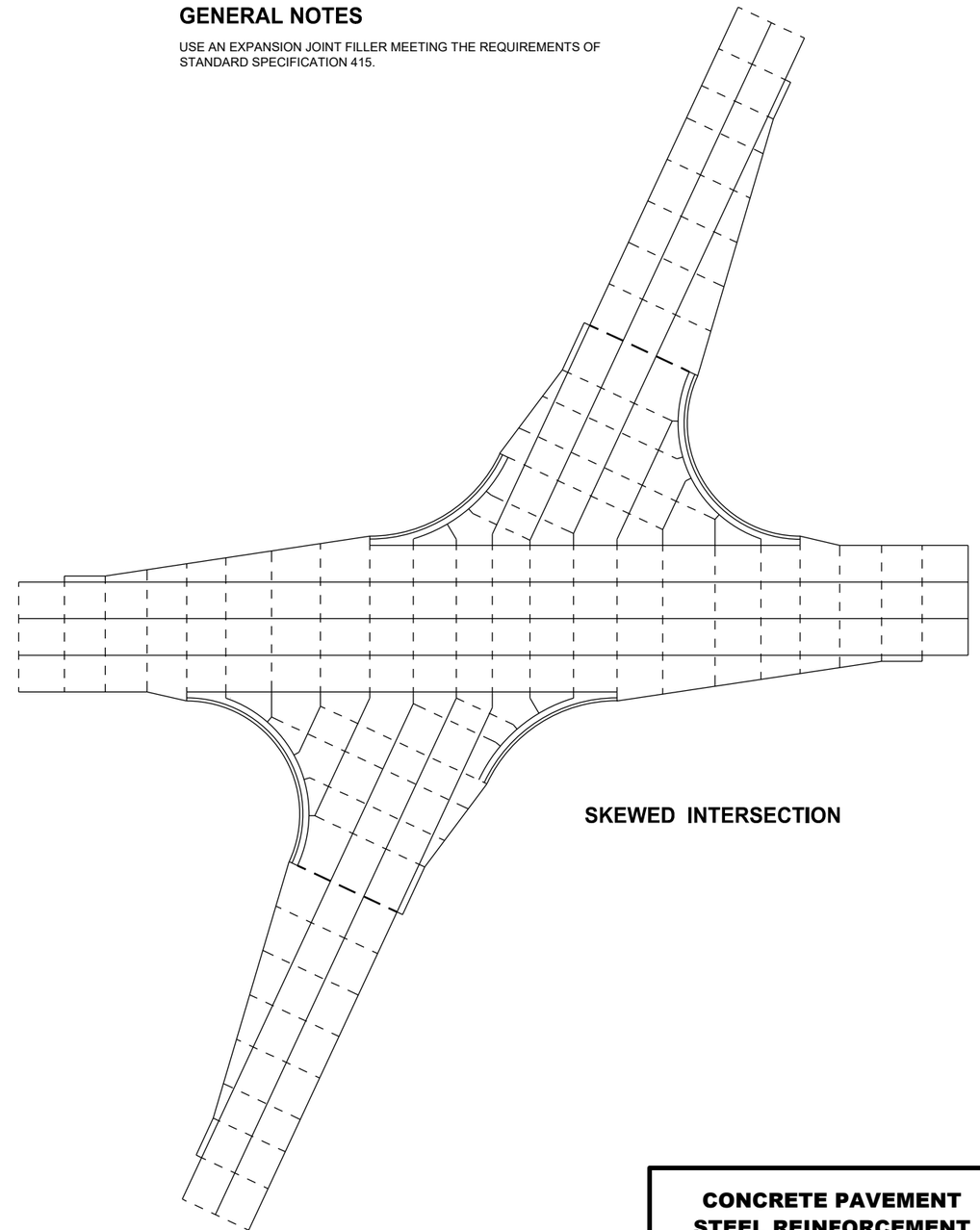

SKEWED INTERSECTION

CONCRETE PAVEMENT STEEL REINFORCEMENT

STATE OF WISCONSIN
DEPARTMENT OF TRANSPORTA

6

SDD 13C18 - 08b

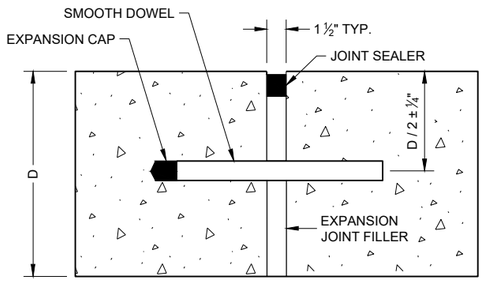

DOWELED TRANSVERSE (1)

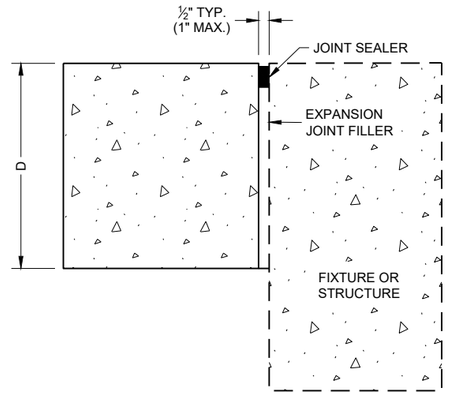

UNTIED - LONGITUDINAL

EXPANSION JOINTS

TIE BAR TABLE

PAVEMENT DEPTH (D)	TIE BAR SIZE	TIE BAR LENGTH (L)	MAX. TIE BAR SPACING
< 10 ½"	NO. 4	30"	36"
≥ 10 ½"	NO. 5	36"	36"
	NO. 4 *	30"	24" **

* SUBSTITUTE BENT BARS AT LONGITUDINAL JOINTS WHEN EQUIPMENT LIMITATIONS DURING CONSTRUCTION WARRANT (e.g. AUXILIARY LANES OR TURN LANES)

** CONFORM TO 15" MINIMUM SPACING FROM TRANSVERSE JOINTS; SPACING BETWEEN TIE BARS WILL BE 30" AT TRANSVERSE JOINTS.

GENERAL NOTES

1. USE DOWELED EXPANSION JOINTS ON SIDE ROADS AT INTERSECTIONS (TO ISOLATETHE SIDE ROAD FROM THE THROUGH STREET) IF THE SIDE ROAD IS CONCRETE PAVEMENT AND GREATER THAN 300 FEET IN LENGTH.
2. SPACE CONTRACTION JOINTS IN ACCORDANCE WITH SDD 13C4, 13C11 OR 13C13.
3. LOCATE CONSTRUCTION JOINTS A MINIMUM OF 6 FEET FROM THE NEAREST CONTRACTION JOINT AND ALIGN PARALLEL TO CONTRACTION JOINTS.
4. CONSTRUCTION JOINTS CAN BE FORMED OR SAWED.
5. IF JOINT IS FORMED, PROVIDE A ¼" RADIUS.
6. ANCHOR TIE BARS INTO DRILLED HOLES WITH AN EPOXY.

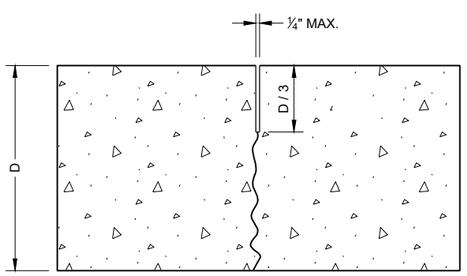

UNDOWELED TRANSVERSE

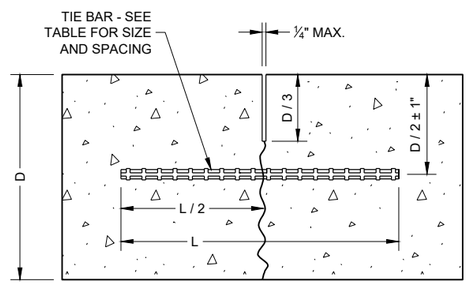

TIED LONGITUDINAL

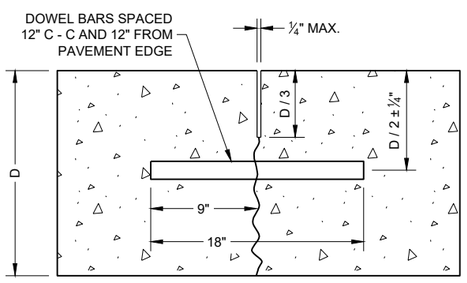

DOWELED TRANSVERSE

CONTRACTION JOINTS (2)

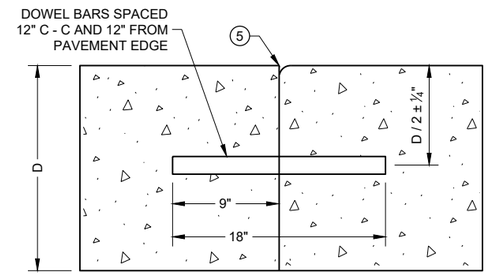

DOWELED TRANSVERSE (3)

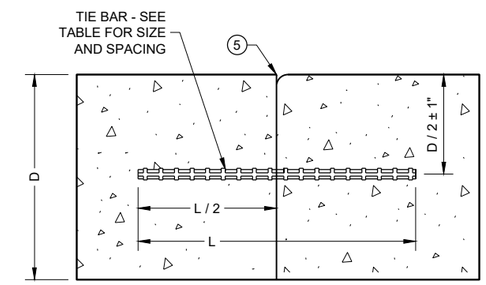

TIED LONGITUDINAL

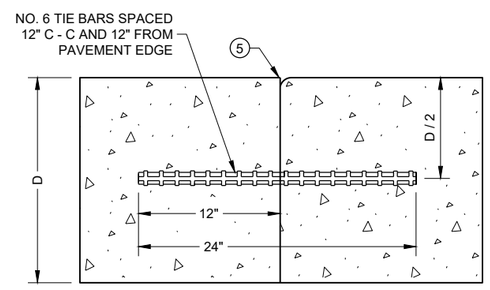

TIED TRANSVERSE (3)

(FOR USE ON NON-DOWELED PAVEMENTS ONLY)

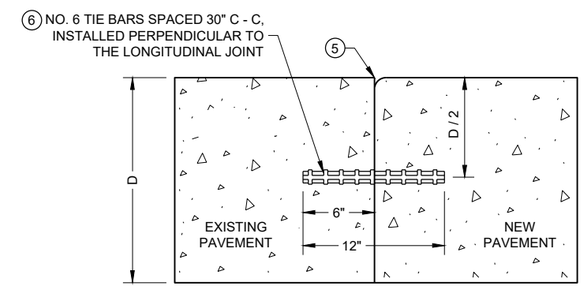

TIED LONGITUDINAL TO EXISTING

CONSTRUCTION JOINTS (4)

CONCRETE PAVEMENT JOINT TYPES

STATE OF WISCONSIN
DEPARTMENT OF TRANSPORTAT

6
SDD 13C18 - 08c

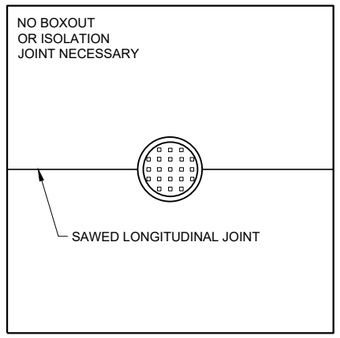

MANHOLE WITH LONGITUDINAL JOINT

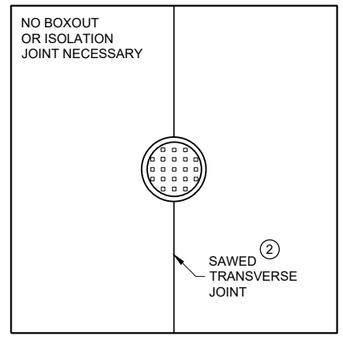

MANHOLE WITH TRANSVERSE JOINT

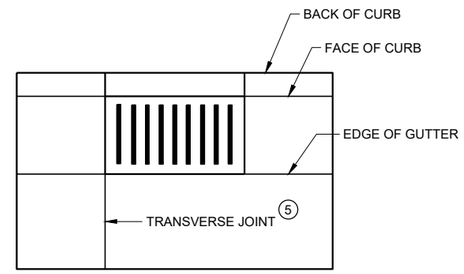

INLET WITH TRANSVERSE JOINT

GENERAL NOTES

1. USE BOXOUTS WHEN UTILITY STRUCTURE IS IN THE PATH OF CONSTRUCTION JOINTS. PROVIDE A 1 FOOT MINIMUM CLEARANCE BETWEEN THE EXTERIOR LIMIT OF THE STRUCTURE TO THE DIAMOND BOXOUT.
2. ADJUST TRANSVERSE JOINT TO INTERSECT MANHOLE IF POSSIBLE.
3. IF DISTANCE BETWEEN THE LONGITUDINAL JOINT AND THE EDGE OF MANHOLE IS 2 FEET OR LESS, DIVERT THE LONGITUDINAL JOINT AT A 2:1 TAPER RATE TO THE CENTER OF THE MANHOLE. IF THE DISTANCE IS GREATER THAN 2 FEET, DO NOT DIVERT THE JOINT AND SAW AS NORMAL. PLACE REINFORCEMENT REBAR AROUND THE MANHOLE.
4. IF THE DISTANCE FROM THE EDGE OF THE MANHOLE TO THE NEAREST TRANSVERSE JOINT IS LESS 4 FEET OR LESS, REDIRECT JOINT TO INTERSECT THE CENTER OF THE MANHOLE. IF DISTANCE IS GREATER THAN 4 FEET, DO NOT DIVERT THE JOINT AND SAW AS NORMAL. PLACE REINFORCEMENT REBAR AROUND THE MANHOLE.
5. ALIGN TRANSVERSE JOINT WITH ONE EDGE OF INLET WHEN PRACTICAL.

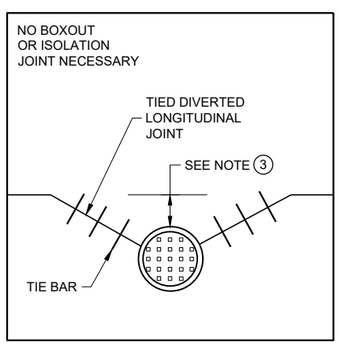

MANHOLE WITH DIVERTED LONGITUDINAL CONTRACTION JOINT

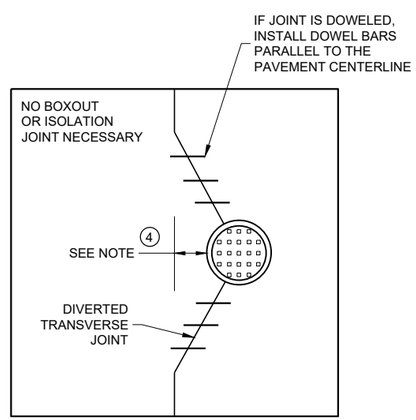

MANHOLE WITH DIVERTED TRANSVERSE CONTRACTION JOINT

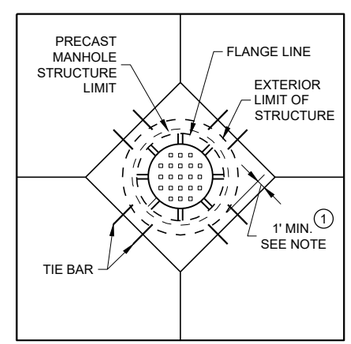

DIAGONAL MANHOLE BOXOUT FOR CONSTRUCTION JOINTS

CONCRETE PAVEMENT JOINTING AT UTILITY FIXTURES

STATE OF WISCONSIN
DEPARTMENT OF TRANSPORTATION

APPROVED
May 2023 — DATE
/S/ Peter Kemp P.E. — PAVEMENT SUPERVISOR
FHWA

6

SDD 13C18 - 08d

LEGEND

- - - - - - DOWELED JOINT
——— TIED JOINT
EXPANSION JOINT
— — POTENTIAL DOWELED EXPANSION JOINT (1)
DIRECTION OF TRAFFIC

GENERAL NOTES

(1) CONSTRUCT DOWELED EXPANSION JOINT ON THE SIDE ROAD OF AN INTERSECTION IF THE SIDE ROAD IS CONCRETE PAVEMENT AND GREATER THAN 300 FEET IN LENGTH. ALIGN EXPANSION JOINT WITH THE EDGE OF RADIUS.

(2) PROVIDE TIED JOINT AT THE FLANGE OF SCAB ON CURB IF SCAB ON CURB AND GUTTER IS USE.

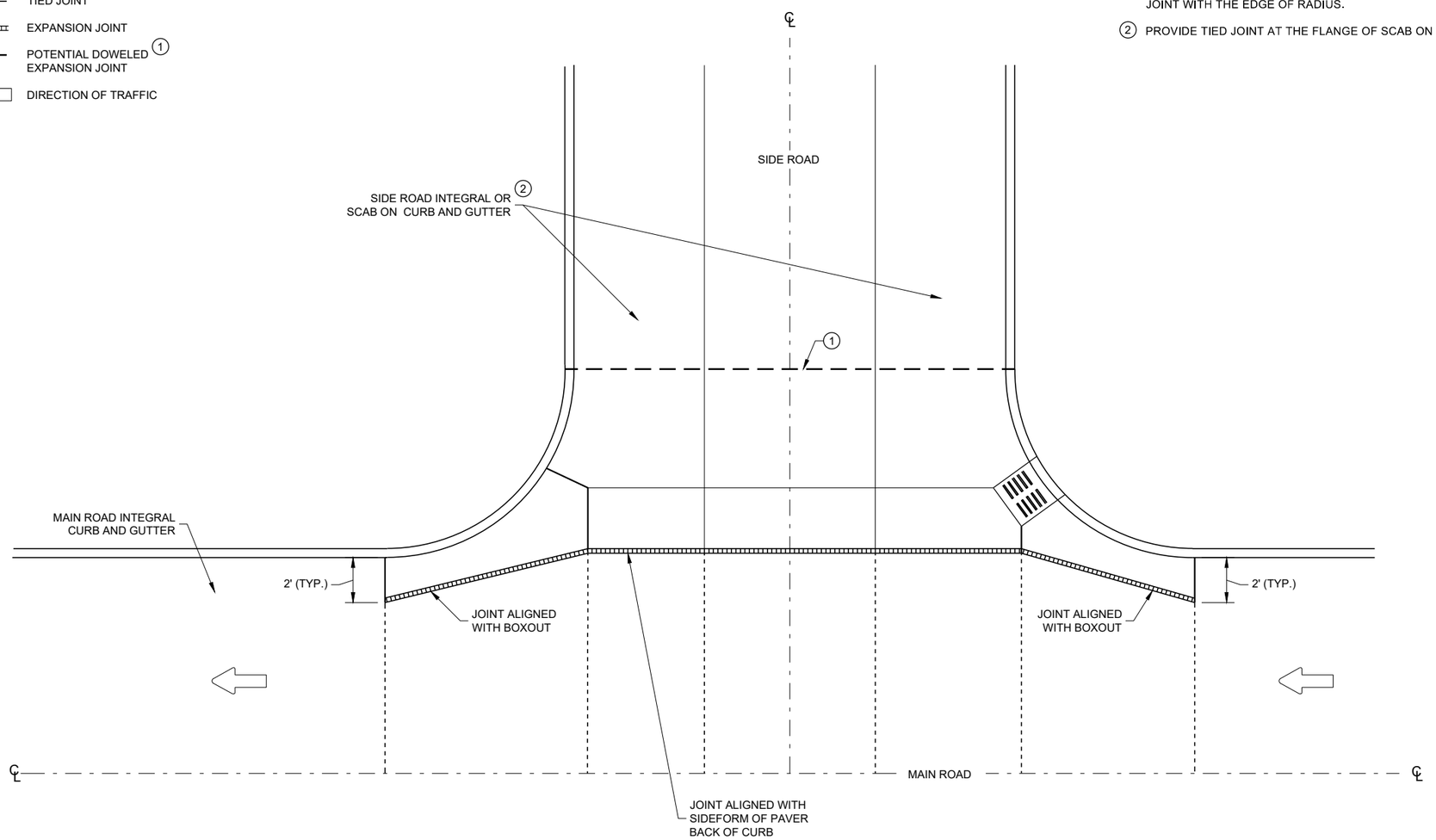

INTERSECTION BOXOUT FOR INTEGRAL CURB AND GUTTER

CONCRETE PAVEMENT INTERSECTION BOXOUT FOR INTEGRAL CURB AND GUTTER

STATE OF WISCONSIN
DEPARTMENT OF TRANSPORTATION

APPROVED
May 2023 — DATE
/S/ Peter Kemp P.E. — PAVEMENT SUPERVISOR
FHWA

6
SDD 13C18 - 08f

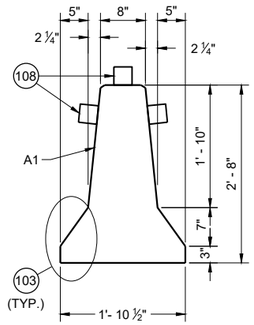

CROSS SECTION

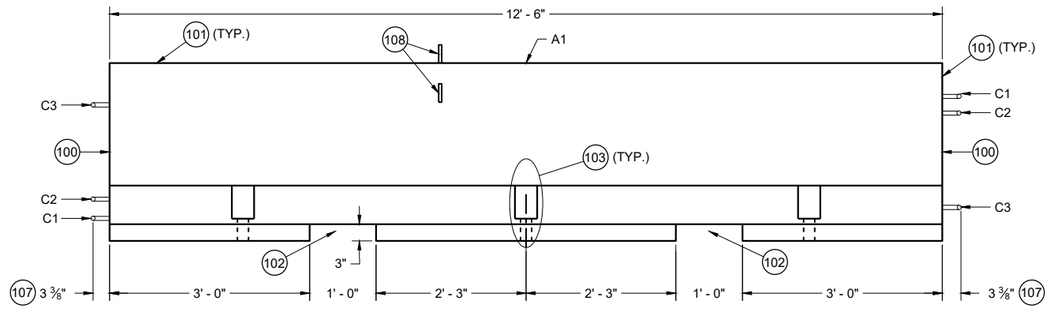

PROFILE VIEW

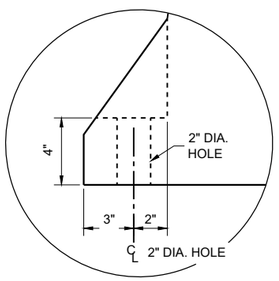

ANCHOR BLOCK DETAIL

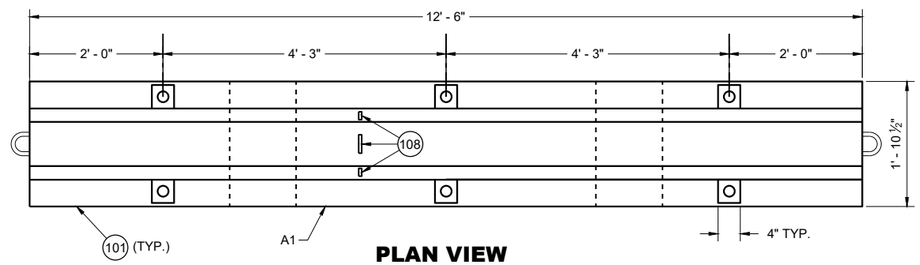

PLAN VIEW

TEMPORARY BARRIER

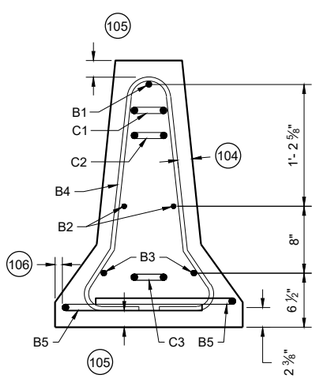

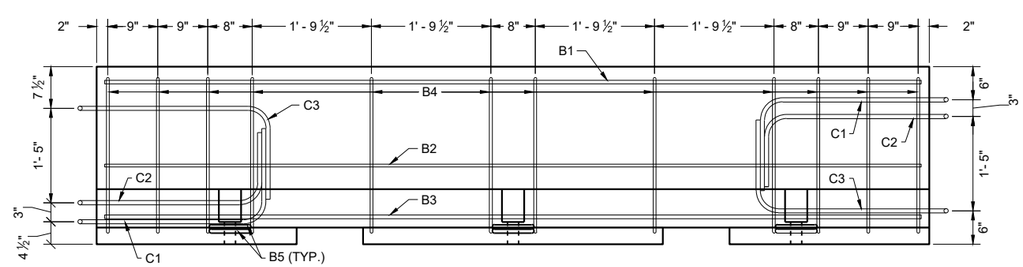

PROFILE VIEW

TEMPORARY BARRIER REINFORCEMENT

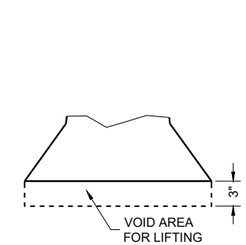

LIFTING SLOT DETAIL (TYP.)

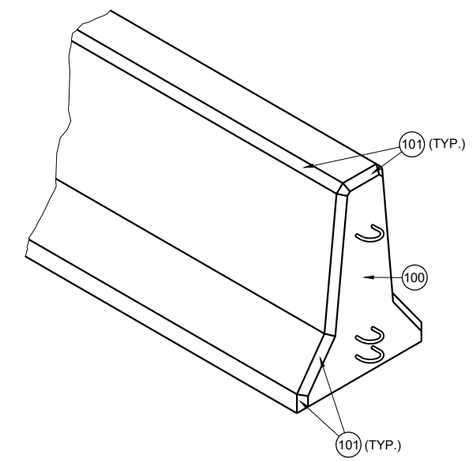

GENERAL NOTES

PLACE BARRIER ON PAVED SURFACE. BEFORE PLACEMENT OF TEMPORARY BARRIER, REMOVE ALL LOOSE MATERIAL FROM PAVED SURFACE.

LOOP BARS C1, C2 AND C3 ARE NOT FOR PLACEMENT OR MOVEMENT OF BARRIER.

100 PERMANENTLY FORM INTO ONE END OF BARRIER THE FOLLOWING INFORMATION:
- A. TYPE OF BARRIER: WI-CBTP
- B. MANUFACTURER
- C. DATE OF MANUFACTURE (MONTH AND YEAR)

101 1" OPTIONAL CHAMFER

102 SEE LIFTING SLOT DETAIL

103 SEE ANCHOR BLOCK DETAIL

104 1 ¾" MIN. CLEAR COVER

105 2" MIN. CLEAR COVER

106 1" MIN. CLEAR COVER

107 ± ⅛" MEASURED FROM FACE OF CONCRETE BARRIER TO OUTSIDE OF LOOP BAR (TYP.)

108 USE DELINEATORS CONFORMING TO SECTION 633 OF THE STANDARD SPECIFICATIONS. CONTRACTOR MY USE ALTERNATE SHAPES AND HOUSING. INSTALL DELINEATORS ACCORDING TO MANUFACTURERS INSTRUCTION. INSTALL YELLOW REFLECTORS WHEN BARRIER IS LOCATED LEFT OF TRAFFIC AND WHITE WHEN BARRIER IS LOCATED RIGHT OF TRAFFIC. SPACE DELINEATORS A MAXIMUM OF 25 FEET APART, PROVIDE TOP MOUNTED DELINEATORS IN ADDITION TO SIDE MOUNTED DELINEATORS ON BARRIER INSTALLATIONS LOCATED ON A CURVED ALIGNMENT LONGER THAT 200 FEET AND ON BARRIERS USED TO SEPARATE OPPOSING TRAFFIC.

CONCRETE BARRIER TEMPORARY PRECAST, 12' - 6"

STATE OF WISCONSIN
DEPARTMENT OF TRANSPORTATION

6
SDD 14B07-16a

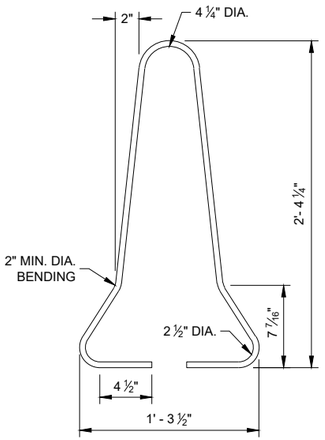

B4 BAR DETAIL

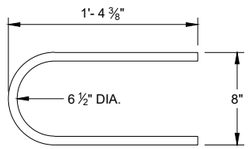

B5 BAR DETAIL

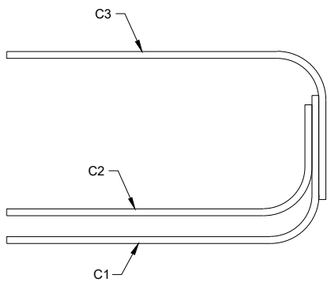

PROFILE VIEW

LOOP BAR ASSEMBLY

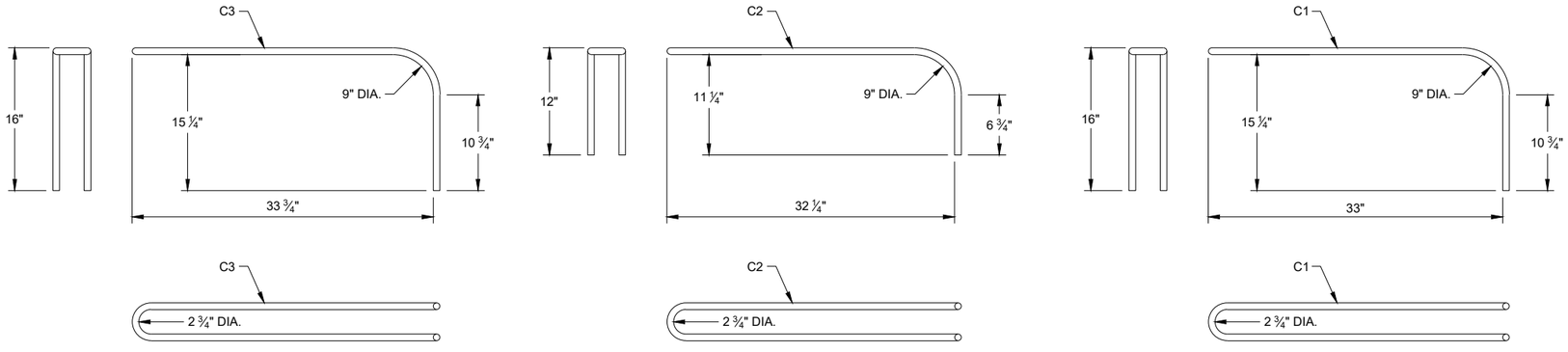

C BAR DETAILS

CONCRETE BARRIER TEMPORARY PRECAST, 12' - 6"

STATE OF WISCONSIN
DEPARTMENT OF TRANSPORTAT

6

SDD 14B07-16b

6

SDD 14B07-16b

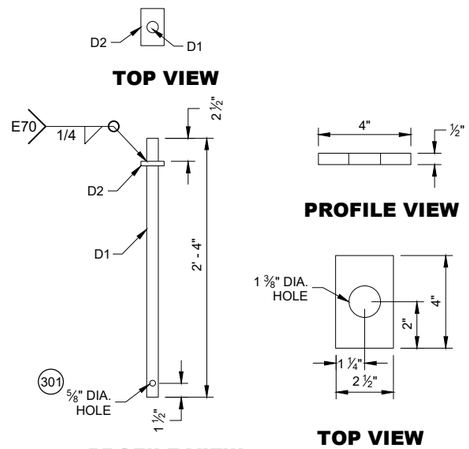

CONNECTOR PIN ASSEMBLY

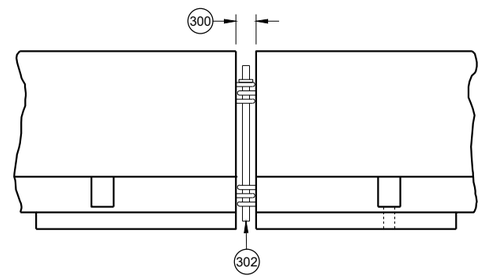

CONNECTING TEMPORARY BARRIER SECTIONS

GENERAL NOTES

300 SET WITH 3 ⅝" WOOD BLOCK.

301 HOLE IS OPTIONAL.

302 CONNECTOR PIN ASSEMBLY.

303 CONCRETE PAVEMENT, APPROACH SLAB, OR DECK.

304 CONCRETE DECK.

305 DO NOT USE ON CONCRETE BRIDGE DECK WITH ASPHALT OVERLAY OR CONCRETE PAVEMENT WITH ASPHALT OVERLAY.

306 MINIMUM OF 2" OF ASPHALT.

307 ASPHALT ANCHOR PIN ASSEMBLY

308 IF DRILLING A PILOT HOLE, THE MAX, DIA. OF THE HOLE IS 3/4"

309 WHEN THERE IS ASPHALT OVERLAYING CONCRETE PAVEMENT, A 1 5/8" DIA. PILOT HOLE CAN BE DRILLED INTO THE OVERLAY AND CONCRETE. IF NEEDED DRILL A 3/4" PILOT HOLE IN BASE COURSE.

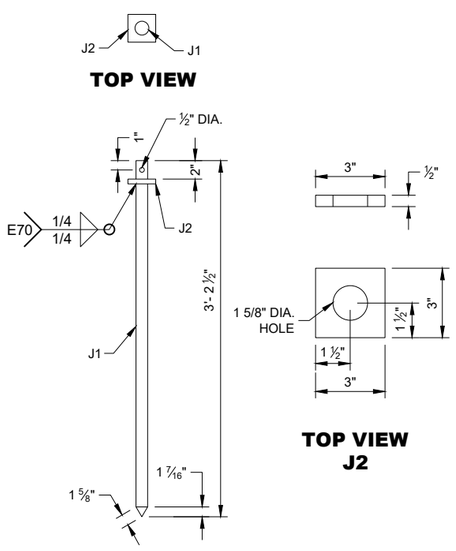

PROFILE VIEW

ASPHALT ANCHOR PIN ASSEMBLY

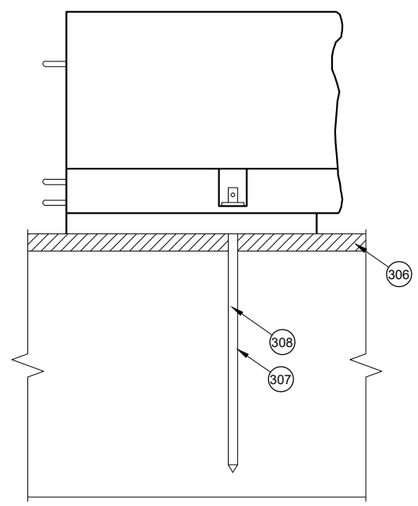

SIDE VIEW

ASPHALT ANCHOR INSTALLATION THROUGH ASPHALT PAVEMENT

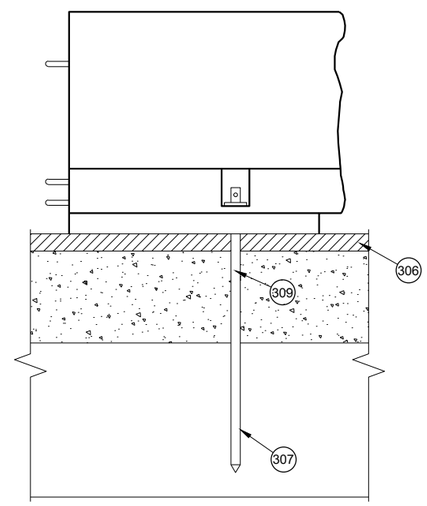

SIDE VIEW

ASPHALT ANCHOR INSTALLATION THROUGH ASPHALT OVERLAY ON TOP OF CONCRETE PAVEMENT

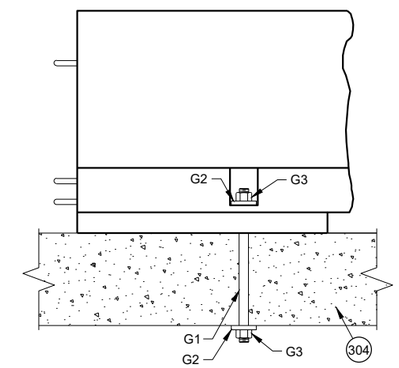

SIDE VIEW

THROUGH BOLT ANCHOR INSTALLATION 305

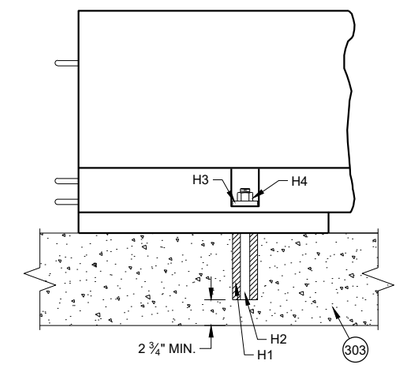

SIDE VIEW

ADHESIVE ANCHOR INSTALLATION 305

CONCRETE BARRIER TEMPORARY PRECAST, 12' - 6"

STATE OF WISCONSIN
DEPARTMENT OF TRANSPORTAT

6

SDD 14B07-16c

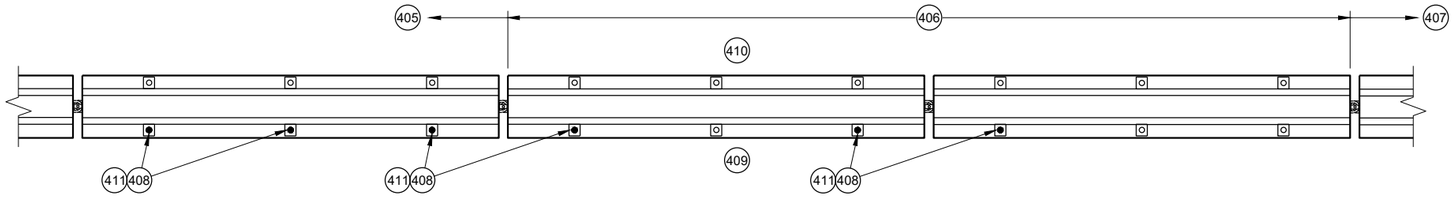

PLAN VIEW

TRANSITION FROM FREE STANDING TO ANCHORED BARRIER

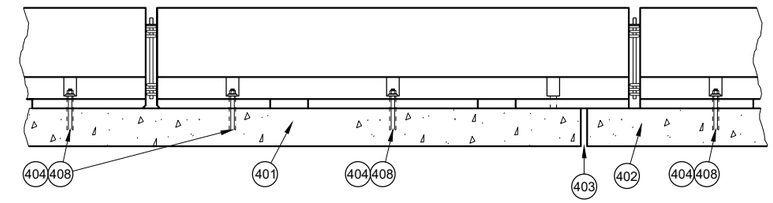

PROFILE VIEW

ANCHORED BARRIER NEAR EXPANSION JOINT (400)

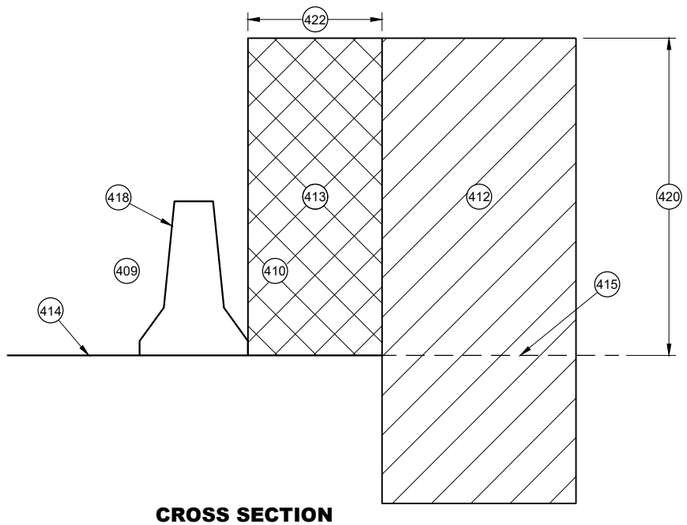

CROSS SECTION

FREE STANDING BARRIER

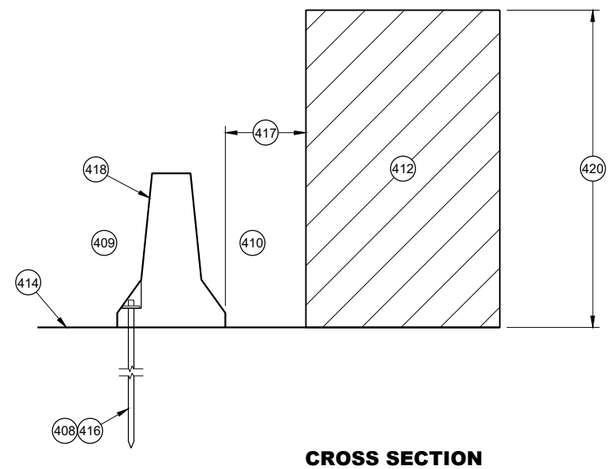

CROSS SECTION

ANCHORED BARRIER FOR OBJECTS ABOVE THE GRADE LINE AND NEAR THE BARRIER

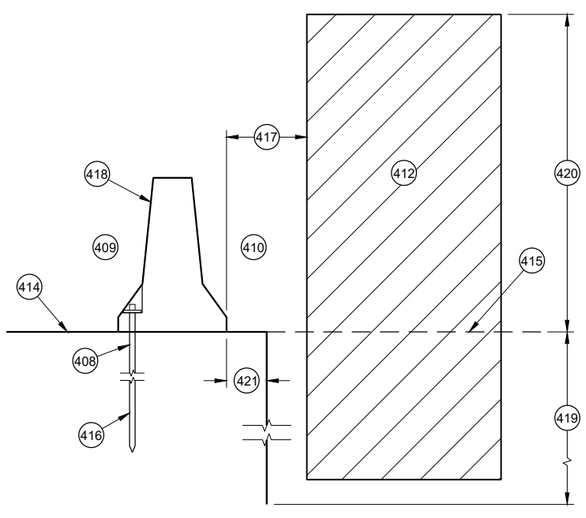

CROSS SECTION

ANCHORED BARRIER NEAR VERTICAL DROP OFF

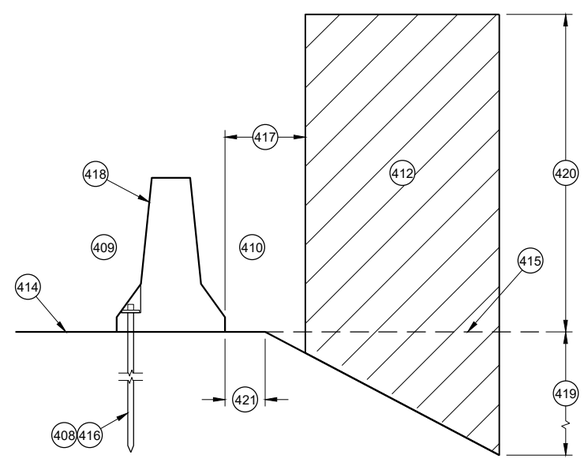

CROSS SECTION

ANCHORED BARRIER NEAR A SLOPE

GENERAL NOTES

(400) NO SINGLE CONCRETE BARRIER SECTION SHALL BE ANCHORED TO BOTH THE BRIDGE DECK AND THE APPROACH SLAB. ALL ANCHOR BOLT LOCATIONS SHALL BE ANCHORED TO THE DECK IN ACCORDANCE WITH THE DETAIL. NO MORE THAN ONE ANCHOR BOLT SHALL BE ELIMINATED FROM A BARRIER SECTION WHEN SPANNING AN EXPANSION JOINT.

(401) CONCRETE DECK

(402) CONCRETE DECK OR APPROACH SLAB.

(403) EXPANSION JOINT

(404) ADHESIVE ANCHOR SHOWN. SEE ANCHOR DETAILS.

(405) ANCHORED TEMPORARY BARRIER

(406) TRANSITION FROM ANCHORED TEMPORARY BARRIER TO FREE STANDING

(407) FREE STANDING BARRIER

(408) REMOVE ALL ANCHORS WHEN NO LONGER NEEDED. FILL CONCRETE PAVEMENTS, DECKS AND APPROACH SLABS WITH NON-SHRINK COMMERCIAL GROUT FROM THE APPROVED PRODUCT LIST. FILL ASPHALT PAVEMENTS WITH ASTM D6690 TYPE II RUBBERIZED CRACK FILLER.

(409) TRAFFIC SIDE

(410) NON-TRAFFIC SIDE

(411) ANCHOR LOCATION. SEE ANCHORING DETAILS.

(412) WORK AREA

(413) AREA FREE OF OBJECTS AND WORKERS

(414) GRADE LINE

(415) EXTENDED GRADE LINE

(416) ANCHORED TEMPORARY BARRIER. SEE BOLT THROUGH DECK, REMOVABLE ADHESIVE ANCHOR, OR AN ASPHALT ANCHOR ROD DETAILS FOR MORE INFORMATION. ASPHALT ANCHOR ROD SHOWN.

(417) WHEN OBJECTS EXTEND ABOVE THE GRADE. A MINIMUM OF 1 FOOT IS REQUIRED FROM BACK OF BARRIER TO OBJECT.

(418) OBJECTS ARE NOT TO BE PLACED ON, MOUNTED TO, OR ALLOWED TO LEAN AGAINST THE BARRIER WITHOUT WRITTEN PERMISSION OF THE PROJECT ENGINEER.

(419) DEPTHS OF 3 FEET OR MORE.

(420) Y = 6.5'

(421) OFFSET FROM BACK OF BARRIER EDGE:

CONCRETE PAVEMENT	0.5'
ASPHALT	0.5'

(422) POSTED SPEED (MPH):

45 OR GREATER	4.0'
40 OR LOWER	2.0'

CONCRETE BARRIER TEMPORARY PRECAST, 12' - 6"

STATE OF WISCONSIN
DEPARTMENT OF TRANSPORTAT

6

SDD 14B07-16d

GENERAL NOTES

500 EXISTING RIGID BARRIERS (VARIES)

501 TEMPORARY BARRIER

502 SEE OTHER DETAIL ON HOW TO ANCHOR TEMPORARY BARRIER (BARRIER ASPHALT ANCHOR SHOWN).

503 ANCHORS ARE REQUIRED ON BOTH SIDE OF THE TEMPORARY BARRIER.

504 NESTED RAILS ARE REQUIRED ON BOTH SIDES OF THE TEMPORARY BARRIER FOR ALL INSTALLATIONS.

505 TRAFFIC TRAVELS FROM PERMANENT BARRIER TO TEMPORARY BARRIER.

506 TRAFFIC TRAVELS FROM TEMPORARY BARRIER TO PERMANENT BARRIER.

507 VERTICAL BARRIER

508 SAFETY SHAPE BARRIER

509 SINGLE SLOPE BARRIER

510 CAP END PLATE PLACED FLUSH WITH UPSTREAM END OF RIGID BARRIER.

511 BENT THRIE BEAM TO FIT.

512 THRIE BEAM PIECES ARE OFFSET 15 ¼" TO PREVENT INTERFERENCE FROM THE ANCHORS ON OPPOSING SIDES.

513 TWO (2) P1, P2 AND P3 ARE REQUIRED

514 FIVE (5) N1, N2 AND N3 ARE REQUIRED

515 TWO (2) R1, R2 AND R3 ARE REQUIRED

516 CUT WOOD BLOCK TO FIT.

517 SEE THRIE BEAM RAIL TERMINAL CONNECTOR DETAIL ASSEMBLY.

518 CAP ASSEMBLY

519 4" MAX. GAP BETWEEN TEMPORARY BARRIER AND RIGID BARRIER.

520 ALL TWELVE SPLICE HOLES REQUIRE M1 AND M2

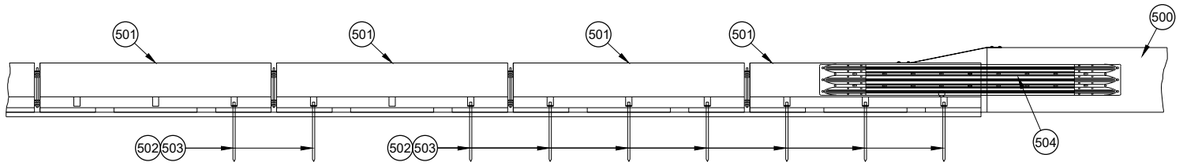

PROFILE VIEW

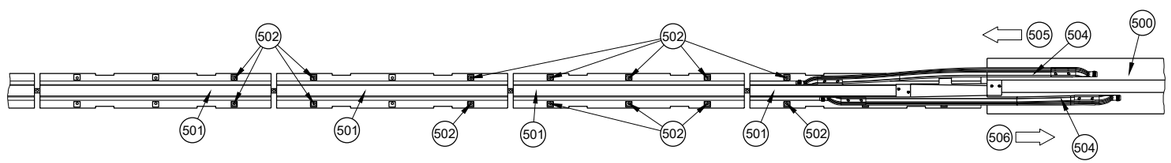

PLAN VIEW
TRANSITION TO RIGID BARRIER

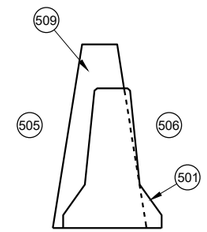

CROSS SECTION TEMPORARY BARRIER PLACEMENT SINGLE SLOPE

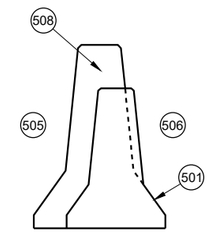

CROSS SECTION TEMPORARY BARRIER PLACEMENT SAFETY SHAPE

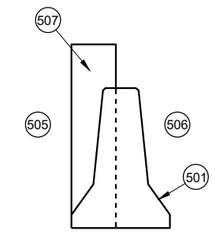

CROSS SECTION TEMPORARY BARRIER PLACEMENT VERTICAL

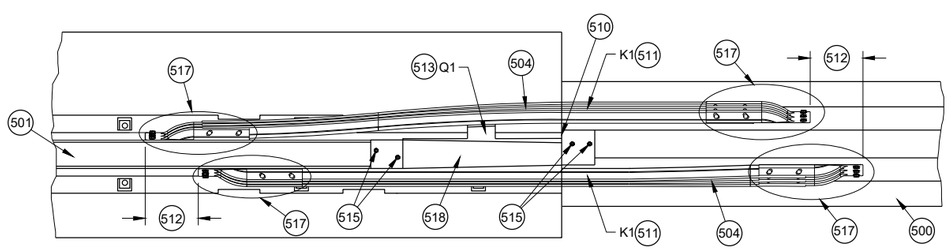

PLAN DETAIL VIEW
TRANSITION TO RIGID BARRIER

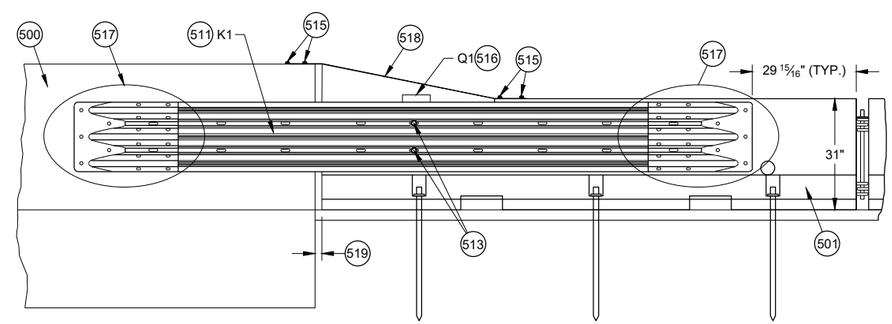

BACK DETAIL VIEW
TRANSITION TO RIGID BARRIER

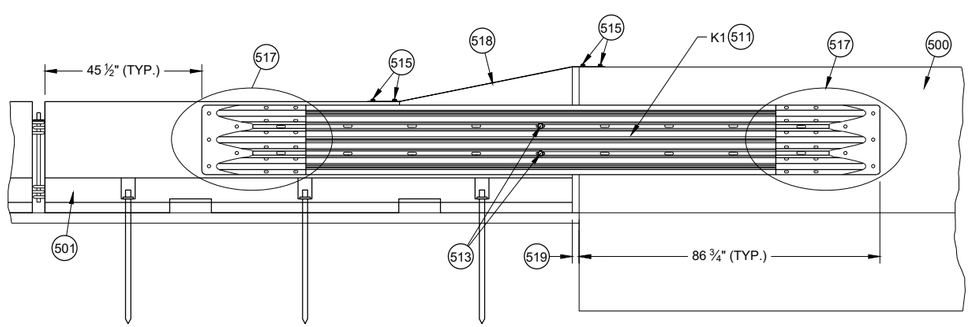

FRONT DETAIL VIEW
TRANSITION TO RIGID BARRIER

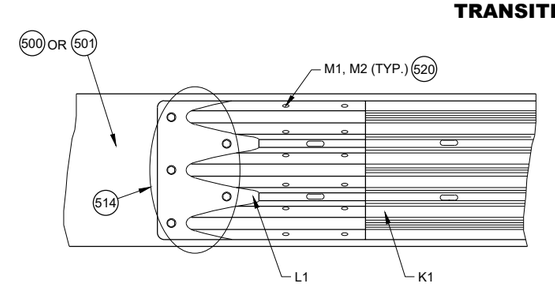

517 DETAIL PLAN VIEW
THRIE BEAM RAIL TERMINAL CONNECTOR ASSEMBLY

CONCRETE BARRIER TEMPORARY PRECAST, 12' - 6"

STATE OF WISCONSIN
DEPARTMENT OF TRANSPORTAT

6

SDD 14B07-16e

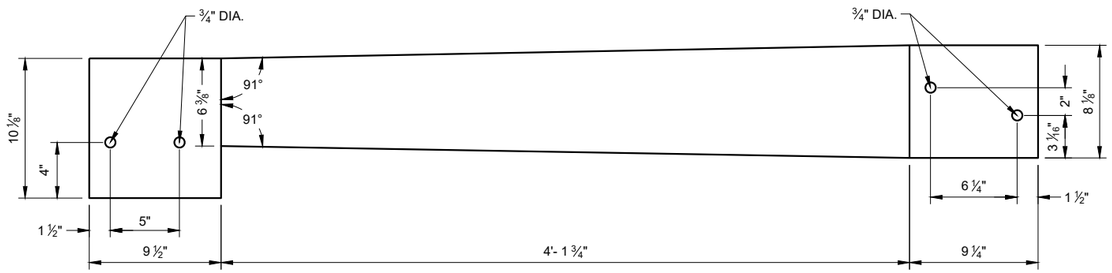

TOP VIEW
S1

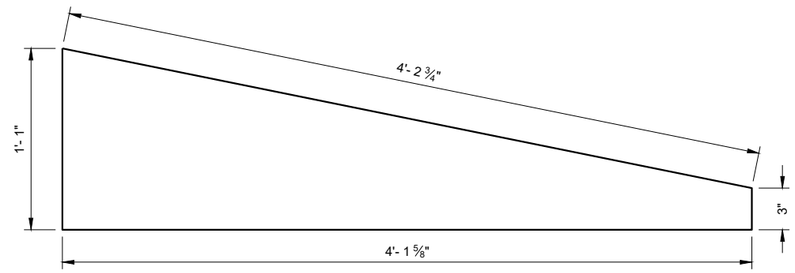

SIDE VIEW
S3

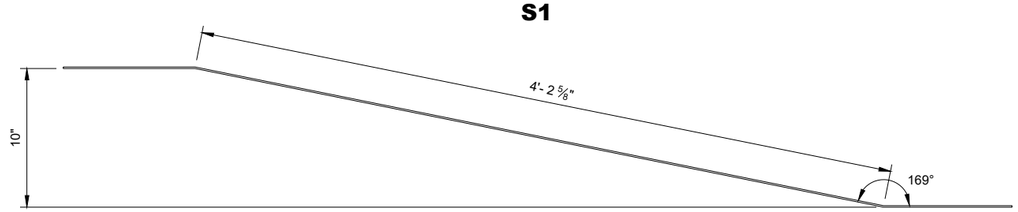

ELEVATION VIEW
S1

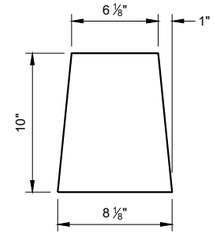

S2

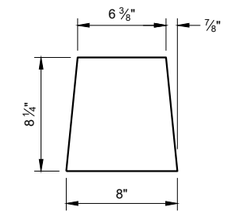

S4

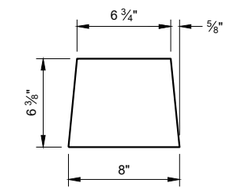

S5

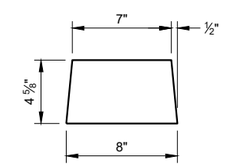

S6

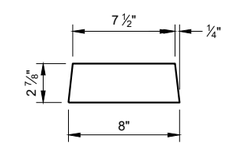

S7

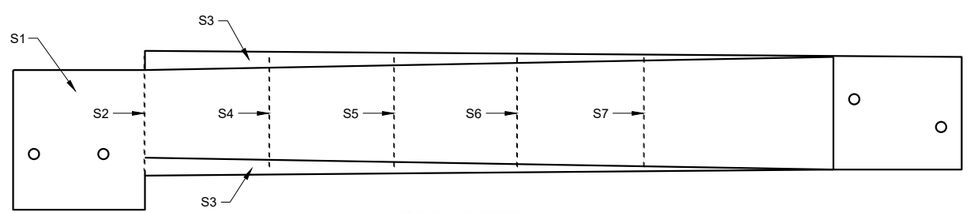

PLAN VIEW

GENERAL NOTES

STITCH WELD GUSSET PLATES AND END PLATES ON THREE SIDES

STITCH WELD TWO SIDE PLATES TO TOP PLATE, END PLATE AND GUSSETS.

600 SIDE PLATES (S3) NOT SHOWN FOR CLARITY.

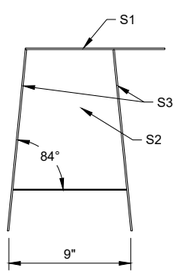

BACK VIEW

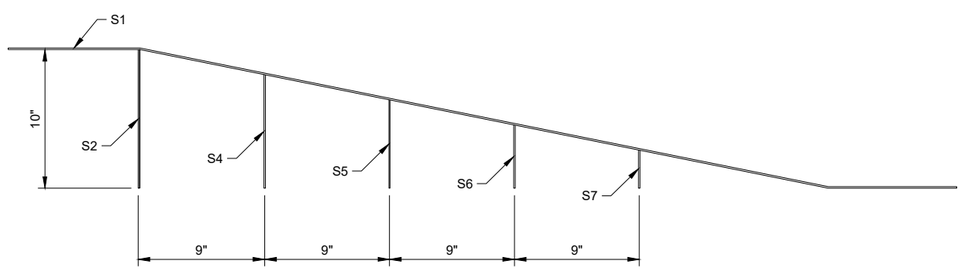

SIDE VIEW 600

42" TOP CAP ASSEMBLY

CONCRETE BARRIER TEMPORARY PRECAST, 12' - 6"

STATE OF WISCONSIN
DEPARTMENT OF TRANSPORTAT

6

SDD 14B07-16f

6

SDD 14B07-16f

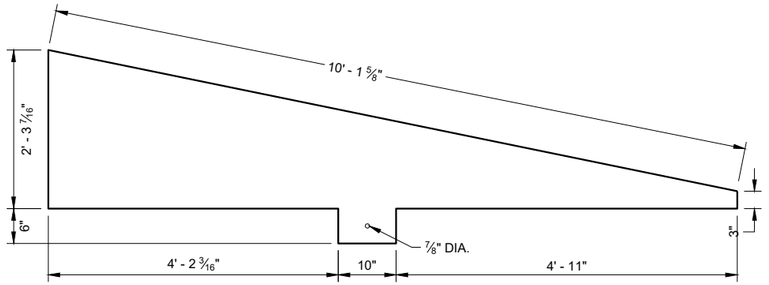

SIDE VIEW
T4

END VIEW

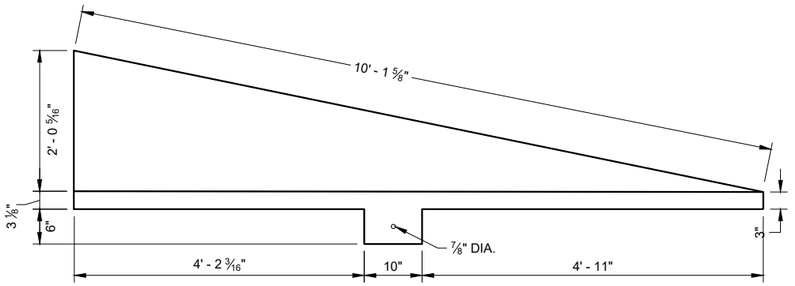

SIDE VIEW
T3

END VIEW

GENERAL NOTES

STITCH WELD GUSSET PLATES AND END PLATES ON THRIE SIDES

STITCH WELD TWO SIDE PLATES TO TOP PLATE, END PLATE AND GUSSETS.

SIDE PLATES, TOP PLATE, END PLATE AND GUSSETS ARE 12 GAUGE ASTM A36 GALVANIZED STEEL.

700 SIDE PLATES (T3 AND T4) NOT SHOWN FOR CLARITY.

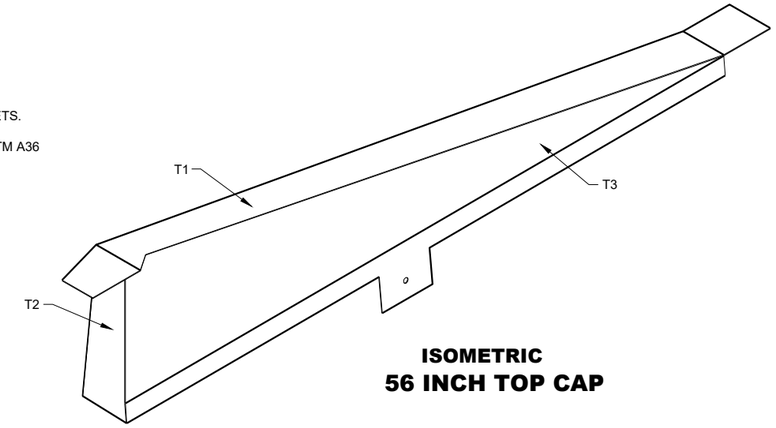

ISOMETRIC
56 INCH TOP CAP

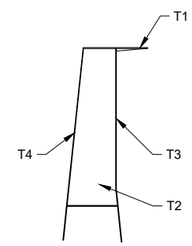

END VIEW
56 INCH TOP CAP

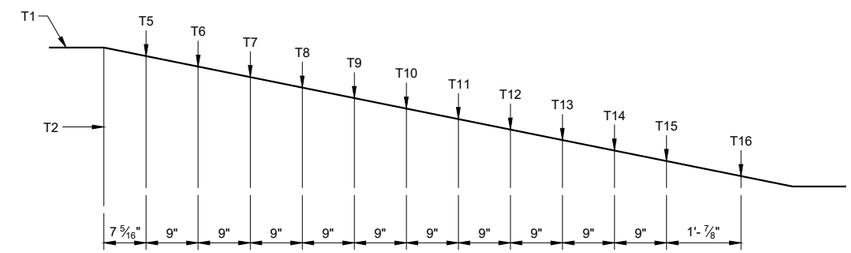

SIDE VIEW
56 INCH TOP CAP 700

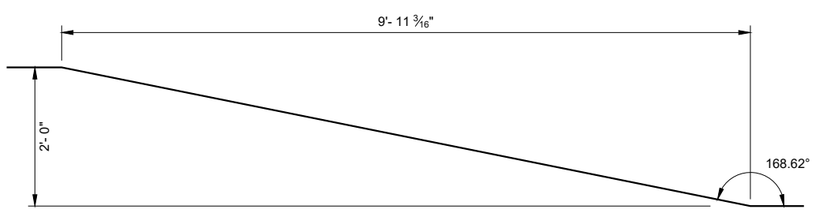

SIDE VIEW
TOP PLATE T1

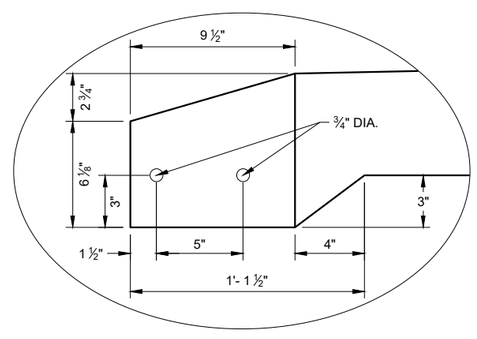

DETAIL "A"

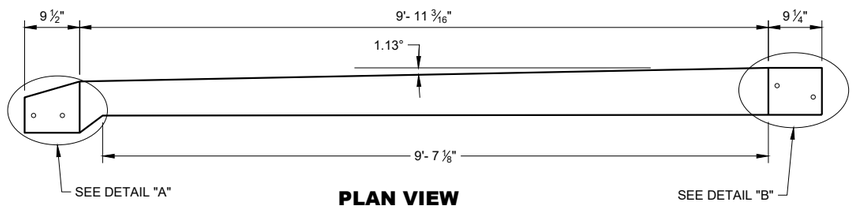

PLAN VIEW
TOP PLATE T1

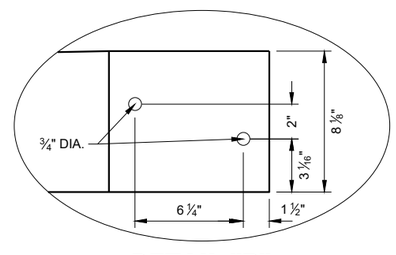

DETAIL "B"

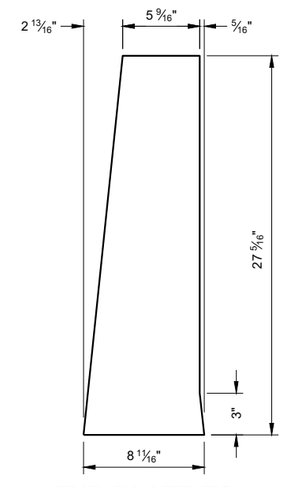

END PLATE T2

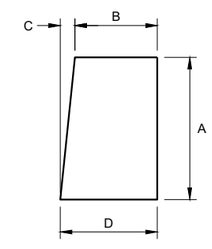

GUSSET PLATES
T5 - T16

GUSSET DIMENSIONS				
GUSSET NO.	A	B	C	D
T5	22 13/16"	5 11/16"	2 5/16"	8 1/16"
T6	21"	5 7/8"	2 3/16"	8 1/16"
T7	19 3/16"	6 1/16"	1 15/16"	8 1/16"
T8	17 3/8"	6 1/4"	1 13/16"	8 1/16"
T9	15 5/16"	6 7/16"	1 9/16"	8 1/16"
T10	13 3/4"	6 5/8"	1 7/16"	8 1/16"
T11	11 15/16"	6 13/16"	1 1/4"	8 1/16"
T12	10 1/8"	7"	1 1/16"	8 1/16"
T13	8 5/16"	7 3/16"	7/8"	8 1/16"
T14	6 1/2"	7 3/8"	11/16"	8 1/16"
T15	4 11/16"	7 9/16"	1/2"	8"
T16	2 7/8"	7 3/4"	1/4"	8"

CONCRETE BARRIER TEMPORARY PRECAST, 12' - 6"

STATE OF WISCONSIN
DEPARTMENT OF TRANSPORTATION

SDD 14B07-16g

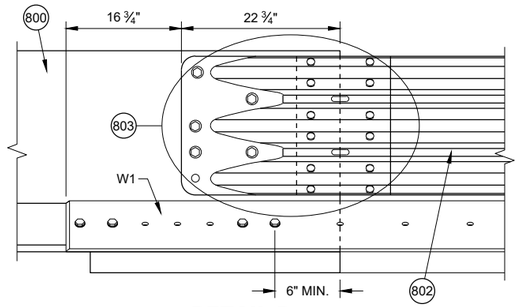

DETAIL D

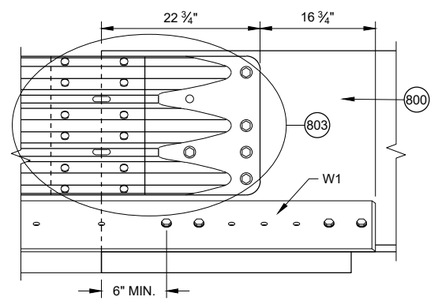

DETAIL E

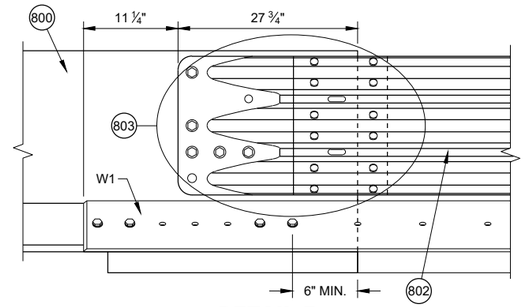

DETAIL F

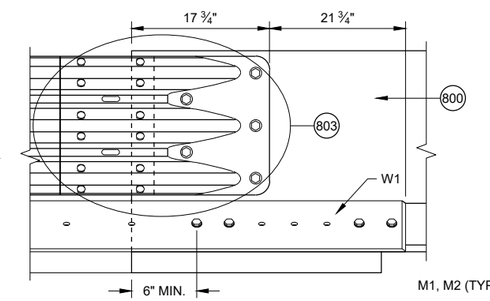

DETAIL G

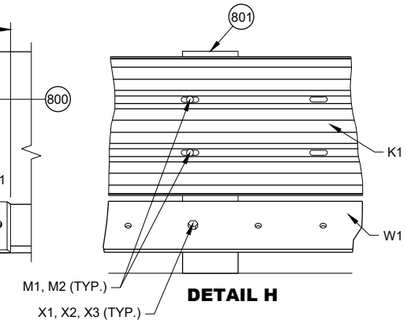

DETAIL H

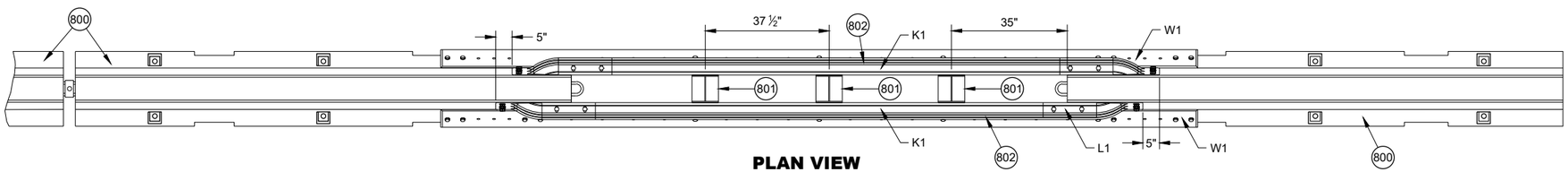

PLAN VIEW

GENERAL NOTES

(800) FREE STANDING TEMPORARY BARRIER

(801) GAP STIFFENER ASSEMBLY

(802) THRIE BEAMS ARE NESTED ON BOTH SIDES OF THE TEMPORARY BARRIER.

(803) SEE THRIE BEAM RAIL TERMINAL CONNECTOR DETAIL

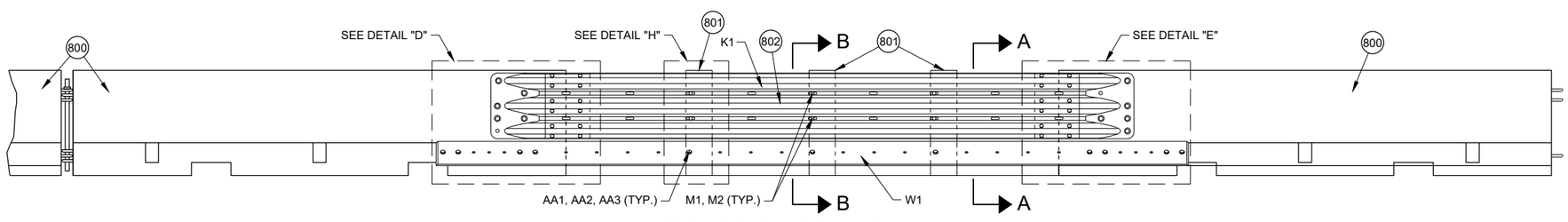

FRONT ELEVATION VIEW

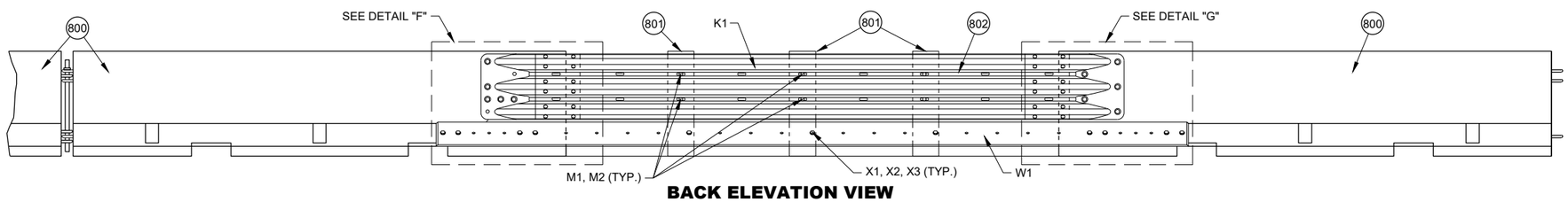

BACK ELEVATION VIEW

PORTABLE CONCRETE BARRIER GAP THRIE BEAM COVER

CONCRETE BARRIER TEMPORARY PRECAST, 12' - 6"

STATE OF WISCONSIN
DEPARTMENT OF TRANSPORTA

6

SDD 14B07-16h

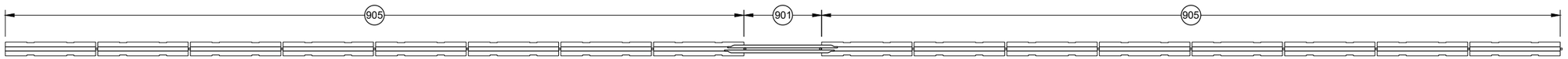

PLAN VIEW
GAP WITHIN SPACING

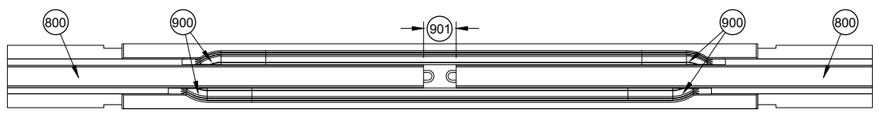

PLAN VIEW
TEMPORARY BARRIER GAP OVER 4" TO 1' MAX. (904)

GENERAL NOTES

(900) SEE OTHER DETAILS FOR TEMPORARY GAP HARDWARE (TYP.)

(901) TEMPORARY BARRIER GAP

(902) GAP STIFFENER ASSEMBLY CENTERED IN THE GAP.

(903) GAP STIFFENER ASSEMBLY IS OFFSET 18 ¾" FROM CENTER

(904) MINIMUM NUMBER OF GAP STIFFENERS SHOWN FOR THE GAP RANGE SHOWN.

(905) MINIMUM OF 8 CONTINUOUS FREE STANDING TEMPORARY BARRIERS

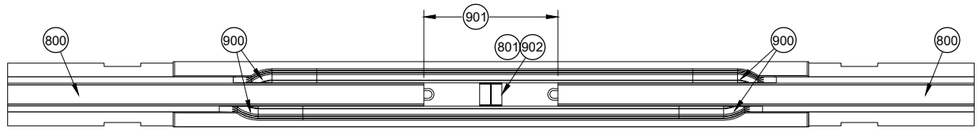

PLAN VIEW
TEMPORARY BARRIER GAP OVER 1' TO 4' MAX. (904)

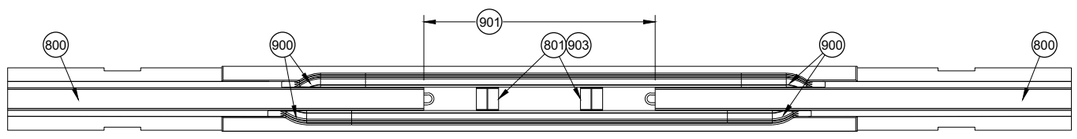

PLAN VIEW
TEMPORARY BARRIER GAP OVER 4' TO 7' MAX. (904)

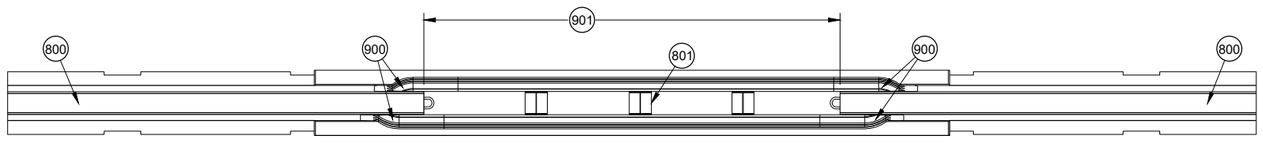

PLAN VIEW
TEMPORARY BARRIER GAP OVER 7' TO 12.5' MAX. (904)

CONCRETE BARRIER TEMPORARY PRECAST, 12' - 6"

STATE OF WISCONSIN
DEPARTMENT OF TRANSPORTAT

6
SDD 14B07-16i

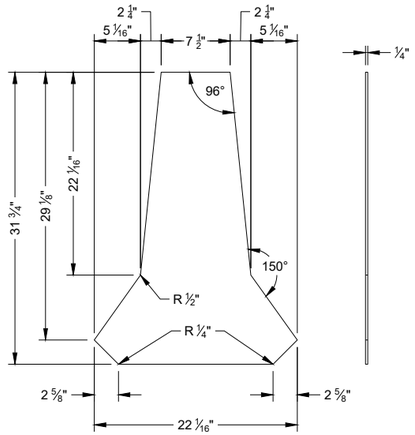

PROFILE VIEW

SIDE VIEW

STIFFENER ASSEMBLY CENTER PANEL U1

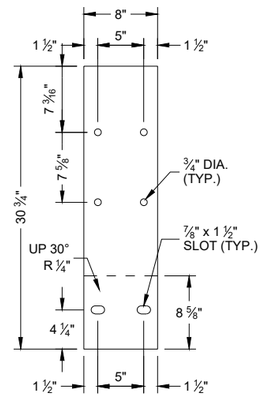

FLAT PATTERN

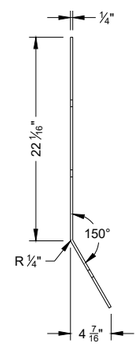

SIDE VIEW

STIFFENER ASSEMBLY SIDE PANEL U2

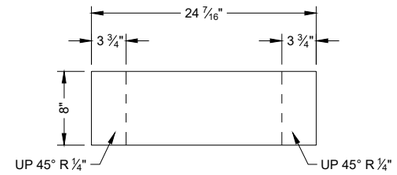

FLAT PATTERN

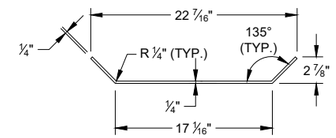

PROFILE VIEW

STIFFENER ASSEMBLY BOTTOM PANEL U3

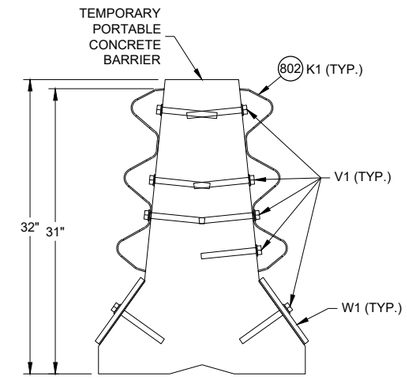

SECTION A - A

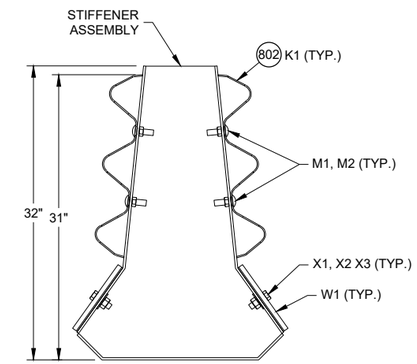

SECTION B - B

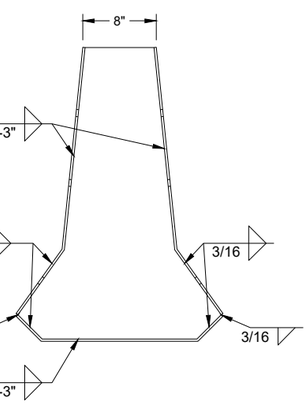

PROFILE VIEW

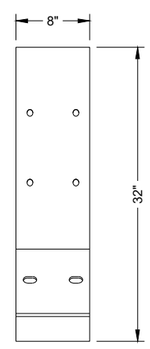

SIDE VIEW

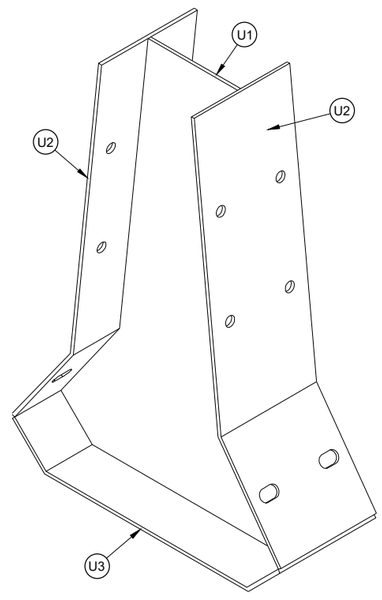

ISOMETRIC

GAP STIFFENER ASSEMBLY

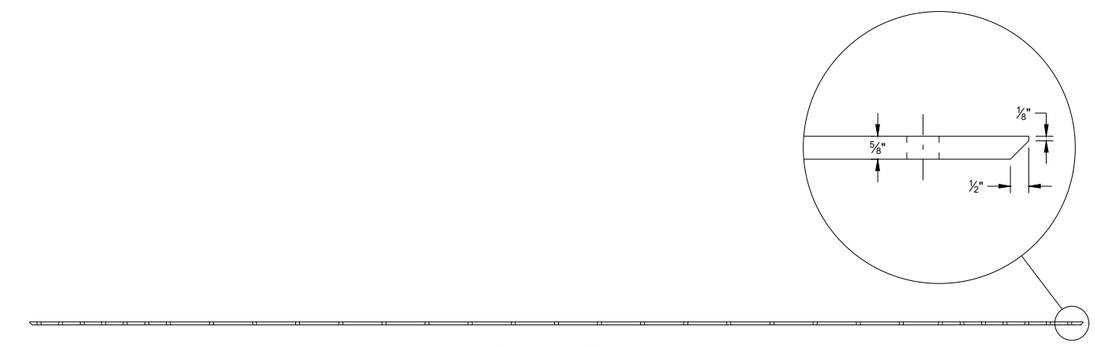

PLAN VIEW

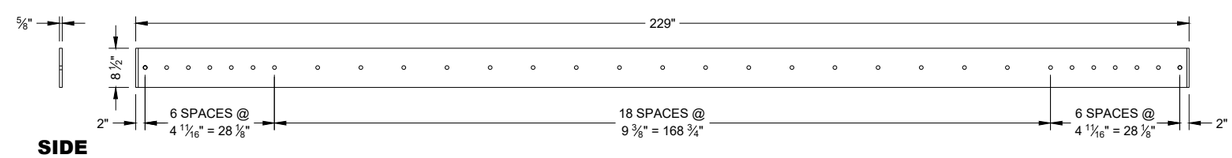

SIDE VIEW

ELEVATION VIEW

W1 TOE PLATE

CONCRETE BARRIER TEMPORARY PRECAST, 12' - 6"

STATE OF WISCONSIN
DEPARTMENT OF TRANSPORTAT

6

SDD 14B07-16j

GENERAL NOTES

1100 1" DIA. HOLE

1101 ¾" DIA. HOLE

1102 PROVIDE HOLES IN THRIE BEAM TERMINAL CONNECTOR TO LIMIT STEEL REINFORCEMENT OR LOOP BAR CONFLICT. CONTRACTOR MAY FIELD DRILL ADDITIONAL HOLE OR PROVIDE THRIE BEAM TERMINAL CONNECTOR WITH ADDITIONAL HOLES FROM SUPPLIER.

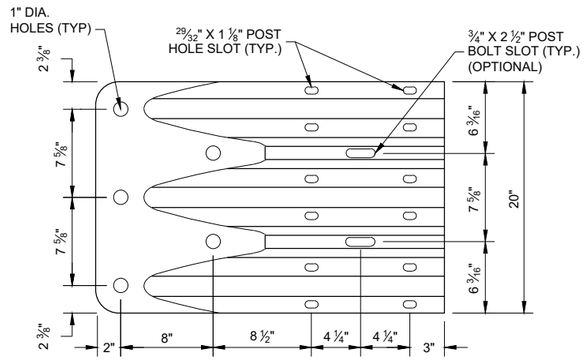

ELEVATION VIEW

THRIE BEAM TERMINAL CONNECTOR

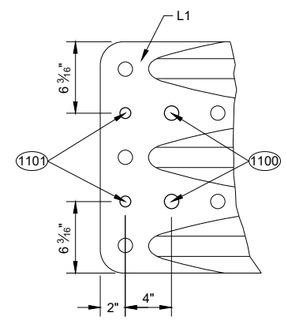

ELEVATION VIEW

ADDITIONAL THRIE BEAM 1102 TERMINAL CONNECTOR HOLE DETAIL

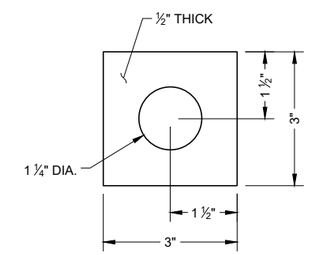

PLATE WASHER DETAIL G2, H3

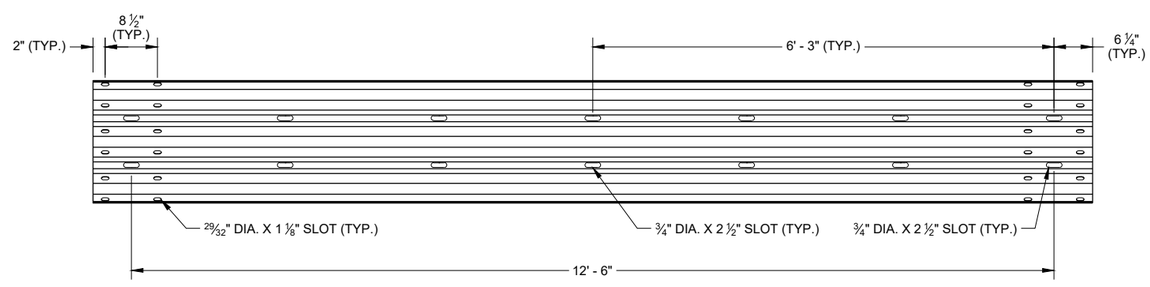

SLOTTED THRIE BEAM RAIL K1

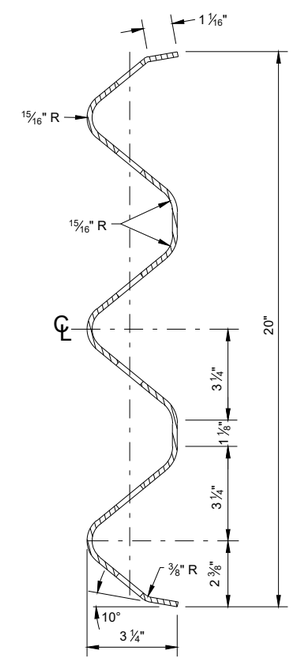

SECTION THROUGH BEAM K1

CONCRETE BARRIER TEMPORARY PRECAST, 12' - 6"

STATE OF WISCONSIN
DEPARTMENT OF TRANSPORTAT

6

SDD 14B07-16k

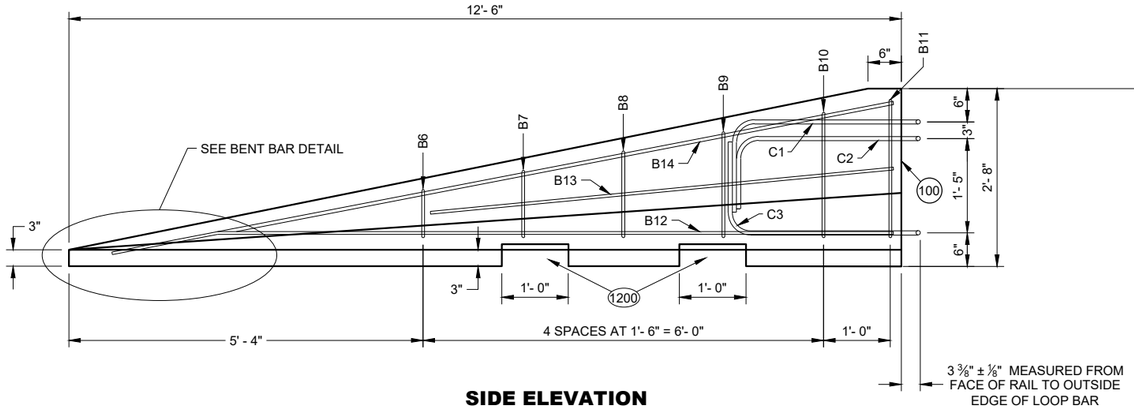

SIDE ELEVATION
(FOR CONNECTION TO LEFT END OF BARRIER)

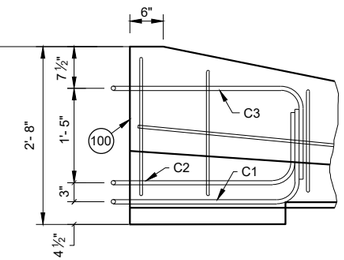

SIDE ELEVATION
LOOP BAR ASSEMBLY INVERTED FOR OPPOSITE END
(FOR CONNECTION TO RIGHT END OF BARRIER)

GENERAL NOTES

1200 SEE LIFTING SLOT DETAIL. LOCATION OF LIFTING SLOTS DETERMINED BY CONTRACTOR.

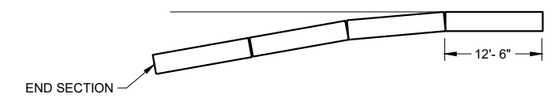

FLARE AT BARRIER END

POSTED SPEED, (MPH)	FLARE RATE
40 OR LESS	6:1
45 OR GREATER	8:1

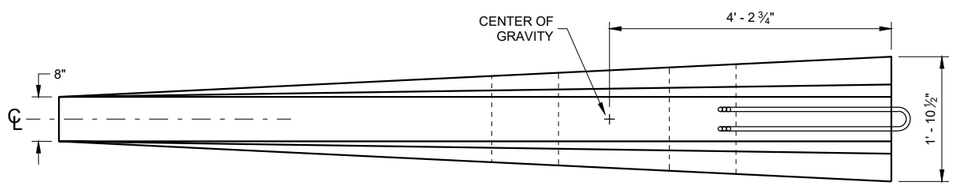

PLAN VIEW

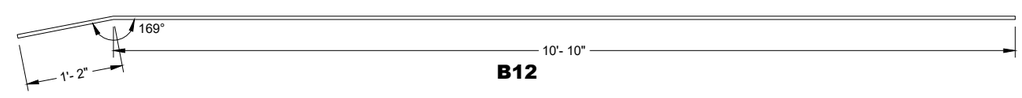

B12

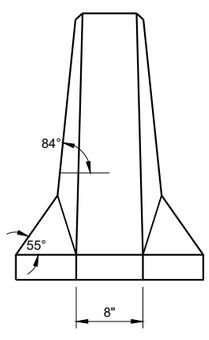

FRONT ELEVATION

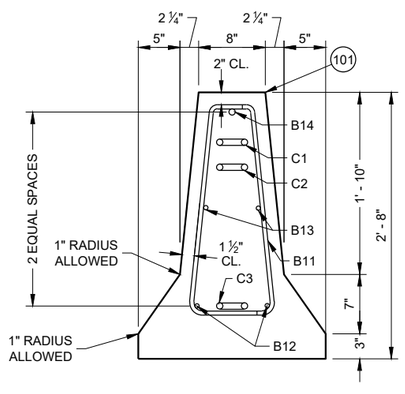

END SECTION

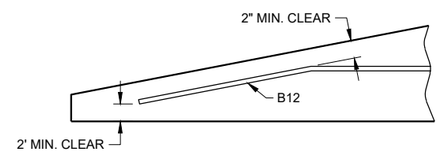

BENT BAR DETAIL

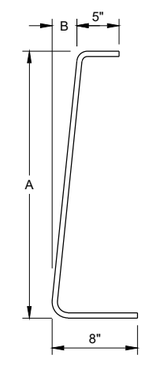

BAR	A	B
B6	10"	1"
B7	1'- 1"	1 ¼"
B8	1'- 5"	1 ⅝"
B9	1'- 8"	1 ⅞"
B10	2'- 0 ½"	2 ⅜"
B11	2'- 3"	2 ¾"

B BARS
2 OF EACH SIZE REQUIRED FOR STIRRUP ASSEMBLY

DETAILS OF BARRIER TAPER SECTION

CONCRETE BARRIER TEMPORARY PRECAST, 12' - 6"

STATE OF WISCONSIN
DEPARTMENT OF TRANSPORTAT

6

SDD 14B07-16I

BILL OF MATERIALS - CONCRETE BARRIER PRECAST

PART	DESCRIPTION	MATERIALS SPECIFICATIONS	NOTES
A1	PRECAST TEMPORARY BARRIER - CONCRETE	MIN. = f'c 5000 PSI	
B1	REBAR	STANDARD SPEC. 505.2 GRADE 60 UNCOATED REBAR	#5 REBAR, LENGTH 12'-2"
B2	REBAR	STANDARD SPEC. 505.2 GRADE 60 UNCOATED REBAR	#4 REBAR, LENGTH 12'-2"
B3	REBAR	STANDARD SPEC. 505.2 GRADE 60 UNCOATED REBAR	#5 REBAR, LENGTH 12'-2"
B4	REBAR	STANDARD SPEC. 505.2 GRADE 60 UNCOATED REBAR	#4 REBAR, LENGTH 6'-0"
B5	REBAR	STANDARD SPEC. 505.2 GRADE 60 UNCOATED REBAR	#6 REBAR, LENGTH 2'-11"
B6	REBAR	STANDARD SPEC. 505.2 GRADE 60 UNCOATED REBAR	#4 REBAR, LENGTH 1'-11"
B7	REBAR	STANDARD SPEC. 505.2 GRADE 60 UNCOATED REBAR	#4 REBAR, LENGTH 2'-2"
B8	REBAR	STANDARD SPEC. 505.2 GRADE 60 UNCOATED REBAR	#4 REBAR, LENGTH 2'-6"
B9	REBAR	STANDARD SPEC. 505.2 GRADE 60 UNCOATED REBAR	#4 REBAR, LENGTH 2'-9"
B10	REBAR	STANDARD SPEC. 505.2 GRADE 60 UNCOATED REBAR	#4 REBAR, LENGTH 3'-2"
B11	REBAR	STANDARD SPEC. 505.2 GRADE 60 UNCOATED REBAR	#4 REBAR, LENGTH 3'-4"
B12	REBAR	STANDARD SPEC. 505.2 GRADE 60 UNCOATED REBAR	#4 REBAR, LENGTH 12'-0"
B13	REBAR	STANDARD SPEC. 505.2 GRADE 60 UNCOATED REBAR	#4 REBAR, LENGTH 7'-9"
B14	REBAR	STANDARD SPEC. 505.2 GRADE 60 UNCOATED REBAR	#5 REBAR, LENGTH 11'-9"
C1	LOOP BAR	ASTM A709 GRADE 70 SMOOTH BAR OR ASTM A706 GRADE 60 REBAR UNCOATED	¾" DIA.
C2	LOOP BAR	ASTM A709 GRADE 70 SMOOTH BAR OR ASTM A706 GRADE 60 REBAR UNCOATED	¾" DIA.
C3	LOOP BAR	ASTM A709 GRADE 70 SMOOTH BAR OR ASTM A706 GRADE 60 REBAR UNCOATED	¾" DIA.
D1	CONNECTION PIN - ROD	ASTM A36 MIN. STRENGTH 36 KSI / ASTM A529 MAX. STRENGTH 50 KSI / ASTM A572 MAX STRENGTH 50 KSI / ASTM A709 MAX STRENGTH 50 KSI / ASTM A992 MAX STRENGTH 50 KSI	1 ¼" DIA.
D2	CONNECTION PIN - TOP PLATE	ASTM A36 MIN. STRENGTH 36 KSI / ASTM A529 MAX. STRENGTH 50 KSI / ASTM A572 MAX STRENGTH 50 KSI / ASTM A709 MAX STRENGTH 50 KSI / ASTM A992 MAX STRENGTH 50 KSI	
G1	BOLT THROUGH ANCHOR - THREADED ROD	HOT DIP AASHTO M232 CLASS / ASTM A153 CLASS C / ASTM F2329 C OR MECHANICAL GALVANIZE TO AASHTO M298 CLASS 55 TYPE 2 / ASTM B695 CLASS 55 TYPE 2 A307 GRADE A OR SAE J429 GRADE 2 UNC	1 ⅛" DIA.
G2	BOLT THROUGH ANCHOR - WASHER, SQUARE	ASTM A36 MIN. STRENGTH 36 KSI / ASTM A529 MAX. STRENGTH 50 KSI / ASTM A572 MAX STRENGTH 50 KSI / ASTM A709 MAX STRENGTH 50 KSI / ASTM A992 MAX STRENGTH 50 KSI	
G3	BOLT THROUGH ANCHOR - NUT	HOT DIP AASHTO M232 CLASS / ASTM A153 CLASS C / ASTM F2329 C OR MECHANICAL GALVANIZE TO AASHTO M298 CLASS 55 TYPE 2 / ASTM B695 CLASS 55 UNC OVER TAP NUTS AS SPECIFIED IN AASHTO 291 / ASTM A 563 HEAVY HEX HEAD ASTM A563DH OR SAE J995 GRADE 5	
H1	ADHESIVE ANCHOR - ADHESIVE	ICC-ES-AC308 5 ¼" EMBEDMENT WITH A MIN. BOND STRENGTH OF 1,650 PSI. SEE 603.2 AND 603.3.1.2 OF THE WISCONSIN STANDARD SPECIFICATIONS FOR MORE INFORMATION ON ADHESIVE ANCHORS.	
H2	ADHESIVE ANCHOR - THREADED ROD	HOT DIP AASHTO M232 CLASS / ASTM A153 CLASS C / ASTM F2329 C OR MECHANICAL GALVANIZE TO AASHTO M298 CLASS 55 TYPE 2 / ASTM B695 CLASS 55 TYPE 2 A307 GRADE A / SAE J429 GRADE 2 UNC	1 ⅛" DIA.
H3	ADHESIVE ANCHOR - WASHER, SQUARE	ASTM A36 MIN. STRENGTH 36 KSI / ASTM A529 MAX. STRENGTH 50 KSI / ASTM A572 MAX STRENGTH 50 KSI / ASTM A709 MAX STRENGTH 50 KSI / ASTM A992 MAX STRENGTH 50 KSI	
H4	ADHESIVE ANCHOR - NUT	HOT DIP AASHTO M232 CLASS / ASTM A153 CLASS C / ASTM F2329 C OR MECHANICAL GALVANIZE TO AASHTO M298 CLASS 55 TYPE 2 / ASTM B695 CLASS 55 UNC OVER TAP NUTS AS SPECIFIED IN AASHTO 291 / ASTM A 563 HEAVY HEX HEAD ASTM A563DH OR SAE J995 GRADE 5	
J1	ASPHALT ANCHOR PIN - ROD	ASTM A36 MIN. STRENGTH 36 KSI / ASTM A529 MAX. STRENGTH 50 KSI / ASTM A572 MAX STRENGTH 50 KSI / ASTM A709 MAX STRENGTH 50 KSI / ASTM A992 MAX STRENGTH 50 KSI	1 ½" DIA.
J2	ASPHALT ANCHOR PIN - STOP PLATE	ASTM A36 MIN. STRENGTH 36 KSI / ASTM A529 MAX. STRENGTH 50 KSI / ASTM A572 MAX STRENGTH 50 KSI / ASTM A709 MAX STRENGTH 50 KSI / ASTM A992 MAX STRENGTH 50 KSI	
K1	THRIE BEAM RAIL	AASHTO M180 CLASS A TYPE 2 APPROVED PRODUCER	12 GAUGE
L1	THRIE BEAM RAIL - TERMINAL	AASHTO M180 CLASS A TYPE 2 APPROVED PRODUCER	12 GAUGE

PART	DESCRIPTION	MATERIALS SPECIFICATIONS	NOTES
M1	SPLICE BOLT	HOT DIP AASHTO M232 CLASS / ASTM A153 CLASS C / ASTM F2329 C OR MECHANICAL GAL. TO AASHTO M298 CLASS 55 TYPE 2 / ASTM B695 CLASS 55 TYPE 2 UNC AASHTO M180 HEAD ASTM A307 GRADE B OR SAE J429 GRADE 2 OR ASTM F1554 GRADE 36	⅝" DIA.
M2	SPLICE BOLT - NUT	HOT DIP AASHTO M232 CLASS / ASTM A153 CLASS C / ASTM F2329 C OR MECHANICAL GALVANIZE TO AASHTO M298 CLASS 55 TYPE 2 / ASTM B695 CLASS 55 UNC OVER TAP NUTS AS SPECIFIED IN AASHTO 291 / ASTM A 563 AASHTO M180 RECESSED HEAVY HEX HEAD ASTM A563DH OR SAE J995 GRADE 5	
N1	THRIE BEAM RAIL TERMINAL - MECHANICAL ANCHOR	HOT DIP AASHTO M232 CLASS / ASTM A153 CLASS C / ASTM F2329 C OR MECHANICAL GALVANIZE TO AASHTO M298 CLASS 55 TYPE 2 / ASTM B695 CLASS 55 UNC OVER TAP NUTS AS SPECIFIED IN AASHTO 291 / ASTM A 563 AASHTO M180 RECESSED HEAVY HEX HEAD ASTM A563DH OR SAE J995 GRADE 5	¾" DIA. LENGTH 6"
N2	THRIE BEAM RAIL TERMINAL - WASHER	HOT DIP AASHTO M232 CLASS / ASTM A153 CLASS C / ASTM F2329 C OR MECHANICAL GALVANIZE TO AASHTO M298 CLASS 55 TYPE 2 / ASTM B695 CLASS 55 TYPE 2 F436 TYPE 1	
N3	THRIE BEAM RAIL TERMINAL MECHANICAL OR ADHESIVE ANCHOR	MINIMUM MECHANICAL OR ADHESIVE ANCHOR STRENGTH REQUIREMENTS: ULTIMATE TENSILE LOAD 17.9 KIPS AND ULTIMATE SHEAR LOAD 21.96 KIPS. SEE 603.2 AND 603.3.1.2 OF THE WISCONSIN STANDARD SPECIFICATIONS FOR MORE INFORMATION ON ADHESIVE ANCHORS.	
P1	THRIE BEAM RAIL CONNECTION 1-BOLT	HOT DIP AASHTO M232 CLASS / ASTM A153 CLASS C / ASTM F2329 C OR MECHANICAL GALVANIZE TO AASHTO M298 CLASS 55 TYPE 2 / ASTM B695 CLASS 55 UNC OVER TAP NUTS AS SPECIFIED IN AASHTO 291 / ASTM A 563 AASHTO M180 RECESSED HEAVY HEX HEAD ASTM A563DH OR SAE J995 GRADE 5	¾" DIA.
P2	THRIE BEAM RAIL CONNECTION 1-WASHER	HOT DIP AASHTO M232 CLASS / ASTM A153 CLASS C / ASTM F2329 C OR MECHANICAL GAL. TO AASHTO M298 CLASS 55 TYPE 2 / ASTM B695 CLASS 55 TYPE 2 F436 TYPE 1	
P3	THRIE BEAM RAIL CONNETION 1- MECHANICAL OR ADHESIVE ANCHOR	MINIMUM MECHANICAL OR ADHESIVE ANCHOR STRENGTH REQUIREMENTS: ULTIMATE TENSILE LOAD 9.48 KIPS AND ULTIMATE SHEAR LOAD 10.48 KIPS. SEE 603.2 AND 603.3.1.2 OF THE WISCONSIN STANDARD SPECIFICATIONS FOR MORE INFORMATION ON ADHESIVE ANCHORS.	
Q1	BLOCK WOOD	SEE STANDARD SPEC. 614	
R1	CAP - BOLT	HOT DIP AASHTO M232 CLASS / ASTM A153 CLASS C / ASTM F2329 C OR MECHANICAL GALVANIZE TO AASHTO M298 CLASS 55 TYPE 2 / ASTM B695 CLASS 55 UNC OVER TAP NUTS AS SPECIFIED IN AASHTO 291 / ASTM A 563 AASHTO M180 RECESSED HEAVY HEX HEAD ASTM A563DH OR SAE J995 GRADE 5	⅝" DIA.
R2	CAP- BOLT - WASHER	HOT DIP AASHTO M232 CLASS / ASTM A153 CLASS C / ASTM F2329 C OR MECHANICAL GAL. TO AASHTO M298 CLASS 55 TYPE 2 / ASTM B695 CLASS 55 TYPE 2 F436 TYPE 1	
R3	CAP - BOLT - MECHANICAL ANCHOR	MINIMUM MECHANICAL OR ADHESIVE ANCHOR STRENGTH REQUIREMENTS ULTIMATE TENSILE LOAD 12.14 KIPS AND ULTIMATE SHEAR LOAD 17.5 KIPS.SEE 603.2 AND 603.3.1.2 OF THE WISCONSIN STANDARD SPECIFICATIONS FOR MORE INFORMATION ON ADHESIVE ANCHORS.	12 GAUGE
S1	CAP 42-INCH TOP PLATE	AASHTO M111 / ASTM A123 ASTM A36 MIN. STRENGTH 36 KSI, OR ASTM A529 MAX. STRENGTH 50 KSI, OR ASTM A572 MAX. STRENGTH 50 KSI, OR ASTM A709 MAX. STRENGTH 50 KSI, OR ASTM A992 MAX. STRENGTH 50 KSI	12 GAUGE
S2	CAP 42-INCH END PLATE	AASHTO M111 / ASTM A123 ASTM A36 MIN. STRENGTH 36 KSI, OR ASTM A529 MAX. STRENGTH 50 KSI, OR ASTM A572 MAX. STRENGTH 50 KSI, OR ASTM A709 MAX. STRENGTH 50 KSI, OR ASTM A992 MAX. STRENGTH 50 KSI	12 GAUGE
S3	CAP 42-INCH SIDE PLATE	AASHTO M111 / ASTM A123 ASTM A36 MIN. STRENGTH 36 KSI, OR ASTM A529 MAX. STRENGTH 50 KSI, OR ASTM A572 MAX. STRENGTH 50 KSI, OR ASTM A709 MAX. STRENGTH 50 KSI, OR ASTM A992 MAX. STRENGTH 50 KSI	12 GAUGE
S4	CAP 42-INCH GUSSET 1	AASHTO M111 / ASTM A123 ASTM A36 MIN. STRENGTH 36 KSI, OR ASTM A529 MAX. STRENGTH 50 KSI, OR ASTM A572 MAX. STRENGTH 50 KSI, OR ASTM A709 MAX. STRENGTH 50 KSI, OR ASTM A992 MAX. STRENGTH 50 KSI	12 GAUGE
S5	CAP 42-INCH GUSSET 2	AASHTO M111 / ASTM A123 ASTM A36 MIN. STRENGTH 36 KSI, OR ASTM A529 MAX. STRENGTH 50 KSI, OR ASTM A572 MAX. STRENGTH 50 KSI, OR ASTM A709 MAX. STRENGTH 50 KSI, OR ASTM A992 MAX. STRENGTH 50 KSI	12 GAUGE
S6	CAP 42-INCH GUSSET 3	AASHTO M111 / ASTM A123 ASTM A36 MIN. STRENGTH 36 KSI, OR ASTM A529 MAX. STRENGTH 50 KSI, OR ASTM A572 MAX. STRENGTH 50 KSI, OR ASTM A709 MAX. STRENGTH 50 KSI, OR ASTM A992 MAX. STRENGTH 50 KSI	12 GAUGE
S7	CAP 42-INCH GUSSET 4	AASHTO M111 / ASTM A123 ASTM A36 MIN. STRENGTH 36 KSI, OR ASTM A529 MAX. STRENGTH 50 KSI, OR ASTM A572 MAX. STRENGTH 50 KSI, OR ASTM A709 MAX. STRENGTH 50 KSI, OR ASTM A992 MAX. STRENGTH 50 KSI	12 GAUGE

CONCRETE BARRIER TEMPORARY PRECAST, 12' - 6"

STATE OF WISCONSIN
DEPARTMENT OF TRANSPORTAT

6

SDD 14B07-16m

BILL OF MATERIALS - CONCRETE BARRIER PRECAST

PART	DESCRIPTION	MATERIALS SPECIFICATIONS	NOTES
T1	CAP 56-INCH TOP PLATE	AASHTO M111 / ASTM A123 ASTM A36 MIN. STRENGTH 36 KSI, OR ASTM A529 MAX. STRENGTH 50 KSI, OR ASTM A572 MAX. STRENGTH 50 KSI, OR ASTM A709 MAX. STRENGTH 50 KSI, OR ASTM A992 MAX. STRENGTH 50 KSI	12 GAUGE
T2	CAP 56-INCH END PLATE	AASHTO M111 / ASTM A123 ASTM A36 MIN. STRENGTH 36 KSI, OR ASTM A529 MAX. STRENGTH 50 KSI, OR ASTM A572 MAX. STRENGTH 50 KSI, OR ASTM A709 MAX. STRENGTH 50 KSI, OR ASTM A992 MAX. STRENGTH 50 KSI	12 GAUGE
T3	CAP 56-INCH SIDE PLATE 1	AASHTO M111 / ASTM A123 ASTM A36 MIN. STRENGTH 36 KSI, OR ASTM A529 MAX. STRENGTH 50 KSI, OR ASTM A572 MAX. STRENGTH 50 KSI, OR ASTM A709 MAX. STRENGTH 50 KSI, OR ASTM A992 MAX. STRENGTH 50 KSI	12 GAUGE
T4	CAP 56-INCH SIDE PLATE 2	AASHTO M111 / ASTM A123 ASTM A36 MIN. STRENGTH 36 KSI, OR ASTM A529 MAX. STRENGTH 50 KSI, OR ASTM A572 MAX. STRENGTH 50 KSI, OR ASTM A709 MAX. STRENGTH 50 KSI, OR ASTM A992 MAX. STRENGTH 50 KSI	12 GAUGE
T5	CAP 56-INCH GUSSET 1	AASHTO M111 / ASTM A123 ASTM A36 MIN. STRENGTH 36 KSI, OR ASTM A529 MAX. STRENGTH 50 KSI, OR ASTM A572 MAX. STRENGTH 50 KSI, OR ASTM A709 MAX. STRENGTH 50 KSI, OR ASTM A992 MAX. STRENGTH 50 KSI	12 GAUGE
T6	CAP 56-INCH GUSSET 2	AASHTO M111 / ASTM A123 ASTM A36 MIN. STRENGTH 36 KSI, OR ASTM A529 MAX. STRENGTH 50 KSI, OR ASTM A572 MAX. STRENGTH 50 KSI, OR ASTM A709 MAX. STRENGTH 50 KSI, OR ASTM A992 MAX. STRENGTH 50 KSI	12 GAUGE
T7	CAP 56-INCH GUSSET 3	AASHTO M111 / ASTM A123 ASTM A36 MIN. STRENGTH 36 KSI, OR ASTM A529 MAX. STRENGTH 50 KSI, OR ASTM A572 MAX. STRENGTH 50 KSI, OR ASTM A709 MAX. STRENGTH 50 KSI, OR ASTM A992 MAX. STRENGTH 50 KSI	12 GAUGE
T8	CAP 42-INCH GUSSET 4	AASHTO M111 / ASTM A123 ASTM A36 MIN. STRENGTH 36 KSI, OR ASTM A529 MAX. STRENGTH 50 KSI, OR ASTM A572 MAX. STRENGTH 50 KSI, OR ASTM A709 MAX. STRENGTH 50 KSI, OR ASTM A992 MAX. STRENGTH 50 KSI	12 GAUGE
T9	CAP 42-INCH GUSSET 5	AASHTO M111 / ASTM A123 ASTM A36 MIN. STRENGTH 36 KSI, OR ASTM A529 MAX. STRENGTH 50 KSI, OR ASTM A572 MAX. STRENGTH 50 KSI, OR ASTM A709 MAX. STRENGTH 50 KSI, OR ASTM A992 MAX. STRENGTH 50 KSI	12 GAUGE
T10	CAP 42-INCH GUSSET 6	AASHTO M111 / ASTM A123 ASTM A36 MIN. STRENGTH 36 KSI, OR ASTM A529 MAX. STRENGTH 50 KSI, OR ASTM A572 MAX. STRENGTH 50 KSI, OR ASTM A709 MAX. STRENGTH 50 KSI, OR ASTM A992 MAX. STRENGTH 50 KSI	12 GAUGE
T11	CAP 42-INCH GUSSET 7	AASHTO M111 / ASTM A123 ASTM A36 MIN. STRENGTH 36 KSI, OR ASTM A529 MAX. STRENGTH 50 KSI, OR ASTM A572 MAX. STRENGTH 50 KSI, OR ASTM A709 MAX. STRENGTH 50 KSI, OR ASTM A992 MAX. STRENGTH 50 KSI	12 GAUGE
T12	CAP 42-INCH GUSSET 8	AASHTO M111 / ASTM A123 ASTM A36 MIN. STRENGTH 36 KSI, OR ASTM A529 MAX. STRENGTH 50 KSI, OR ASTM A572 MAX. STRENGTH 50 KSI, OR ASTM A709 MAX. STRENGTH 50 KSI, OR ASTM A992 MAX. STRENGTH 50 KSI	12 GAUGE
T13	CAP 42-INCH GUSSET 9	AASHTO M111 / ASTM A123 ASTM A36 MIN. STRENGTH 36 KSI, OR ASTM A529 MAX. STRENGTH 50 KSI, OR ASTM A572 MAX. STRENGTH 50 KSI, OR ASTM A709 MAX. STRENGTH 50 KSI, OR ASTM A992 MAX. STRENGTH 50 KSI	12 GAUGE
T14	CAP 42-INCH GUSSET 10	AASHTO M111 / ASTM A123 ASTM A36 MIN. STRENGTH 36 KSI, OR ASTM A529 MAX. STRENGTH 50 KSI, OR ASTM A572 MAX. STRENGTH 50 KSI, OR ASTM A709 MAX. STRENGTH 50 KSI, OR ASTM A992 MAX. STRENGTH 50 KSI	12 GAUGE
T15	CAP 42-INCH GUSSET 11	AASHTO M111 / ASTM A123 ASTM A36 MIN. STRENGTH 36 KSI, OR ASTM A529 MAX. STRENGTH 50 KSI, OR ASTM A572 MAX. STRENGTH 50 KSI, OR ASTM A709 MAX. STRENGTH 50 KSI, OR ASTM A992 MAX. STRENGTH 50 KSI	12 GAUGE
T16	CAP 42-INCH GUSSET 12	AASHTO M111 / ASTM A123 ASTM A36 MIN. STRENGTH 36 KSI, OR ASTM A529 MAX. STRENGTH 50 KSI, OR ASTM A572 MAX. STRENGTH 50 KSI, OR ASTM A709 MAX. STRENGTH 50 KSI, OR ASTM A992 MAX. STRENGTH 50 KSI	12 GAUGE
U1	GAP STIFFENER	AASHTO M111 / ASTM A123 ASTM A36 MIN. STRENGTH 36 KSI, OR ASTM A529 MAX. STRENGTH 50 KSI, OR ASTM A572 MAX. STRENGTH 50 KSI, OR ASTM A709 MAX. STRENGTH 50 KSI, OR ASTM A992 MAX. STRENGTH 50 KSI	
U2	GAP STIFFENER - CONNECTOR PLATE 1	AASHTO M111 / ASTM A123 ASTM A36 MIN. STRENGTH 36 KSI, OR ASTM A529 MAX. STRENGTH 50 KSI, OR ASTM A572 MAX. STRENGTH 50 KSI, OR ASTM A709 MAX. STRENGTH 50 KSI, OR ASTM A992 MAX. STRENGTH 50 KSI	
U3	GAP STIFFENER - CONNECTOR PLATE 2	AASHTO M111 / ASTM A123 ASTM A36 MIN. STRENGTH 36 KSI, OR ASTM A529 MAX. STRENGTH 50 KSI, OR ASTM A572 MAX. STRENGTH 50 KSI, OR ASTM A709 MAX. STRENGTH 50 KSI, OR ASTM A992 MAX. STRENGTH 50 KSI	

PART	DESCRIPTION	MATERIALS SPECIFICATIONS	NOTES
V1	THRIE BEAM RAIL TERMINAL MECHANICAL OR ADHESIVE ANCHOR	MINIMUM MECHANICAL OR ADHESIVE ANCHOR STRENGTH REQUIREMENTS ULTIMATE TENSILE LOAD 24.0 KIPS AND ULTIMATE SHEAR LOAD 21.5 KIPS. SEE 603.2 AND 603.3.1.2 OF THE WISCONSIN STANDARD SPECIFICATIONS FOR MORE INFORMATION ON ADHESIVE ANCHORS.	¾" DIA.
V2	GAP STIFFENER - BOLT - NUT	HOT DIP AASHTO M232 CLASS / ASTM A153 CLASS C / ASTM F2329 C O R MECHANICAL GALVANIZE TO AASHTO M298 CLASS 50 TYPE 1 / ASTM B695 CLASS 50 TYPE 1 UNC OVER TAP NUTS AS SPECIFIED IN AASHTO 291/ASTM A 563 HEAVY HEX HEAD ASTM A563DH OR SAE J995 GRADE 5	
W1	TOE PLATE	AASHTO M111/ASTM A123 ASTM A36 MIN STRENGTH 36 KSI, OR ASTM A529 MAX. STRENGTH 50 KSI, OR ASTM A572 MAX. STRENGTH 50 KSI, OR ASTM A709 MAX. STRENGTH 50 KSI, OR ASTM A992 MAX. STRENGTH 50 KSI	
X1	TOE PLATE - CONNECTION BOLT	HOT DIP AASHTO M232 CLASS / ASTM A153 CLASS C / ASTM F2329 C OR MECHANICAL GALVANIZE TO AASHTO M298 CLASS 55 TYPE 2 / ASTM B695 CLASS 55 TYPE 2 UNC HEAVY HEX HEAD OR AASTHO M180 HEAD, ASTM F3125 GRADE A325 TYPE 1 HEAVY HEX HEAD OR SAE J429 GRADE 5 HEAVY HEX HEAD / ASTM A449 TYPE 1 HEAVY HEX HEAD. BOLTS MAY BE FULLY THREADED. PROVIDE ENOUGH THREADING FOR PROPER TIGHTENING OF BOLT.	¾" DIA.
X2	TOE PLATE - CONNECTION BOLT - WASHER	HOT DIP AASHTO M232 CLASS / ASTM A153 CLASS C / ASTM F2329 C OR MECHANICAL GALVANIZE TO AASHTO M298 CLASS 55 TYPE 2 / ASTM B695 CLASS 55 TYPE 2 F436 TYPE 1 (HARDEN WASHER ONLY)	
X3	TOE PLATE - CONNECTION BOLT - NUT	HOT DIP AASHTO M232 CLASS / ASTM A153 CLASS C / ASTM F2329 C OR MECHANICAL GALVANIZE TO AASHTO M298 CLASS 55 TYPE 2 / ASTM B695 CLASS 55 UNC OVER TAP NUTS AS SPECIFIED IN AASHTO 291 / ASTM A 563 HEAVY HEX HEAD ASTM A563DH OR SAE J995 GRADE 5	

CONCRETE BARRIER TEMPORARY PRECAST, 12' - 6"

STATE OF WISCONSIN
DEPARTMENT OF TRANSPORTATION

APPROVED
February 2023 — DATE
/S/ Rodney Taylor — ROADWAY STANDARDS DEVE ENGINEER
FHWA

6

SDD 14B07-16n

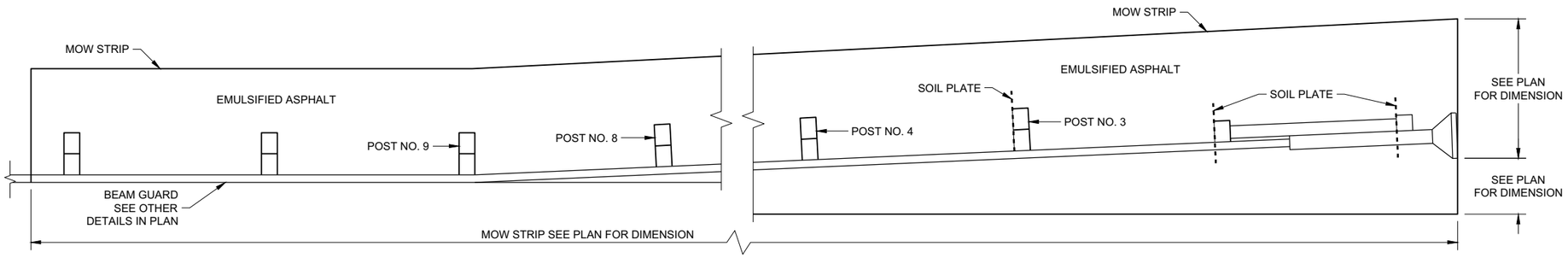

PLAN VIEW
MOW STRIP LAYOUT FOR ENERGY ABSORBING TERMINAL

GENERAL NOTES

ONLY USE STEEL POSTS IN CONCRETE AND ASPHALT MOW STRIPS.

1. CONTROLLED LOW-STRENGTH BACKFILL OR EMULSIFIED ASPHALT.
2. DEPTH OF MOW STRIP:
   ASPHALT - 4"
   CONCRETE - 4"
   EMULSIFIED ASPHALT - 1" OR LESS
3. FOR EMULSIFIED ASPHALT, MOW STRIP STRIP LEAVE OUTS NOT REQUIRED. (TYPICAL FOR ALL POSTS)

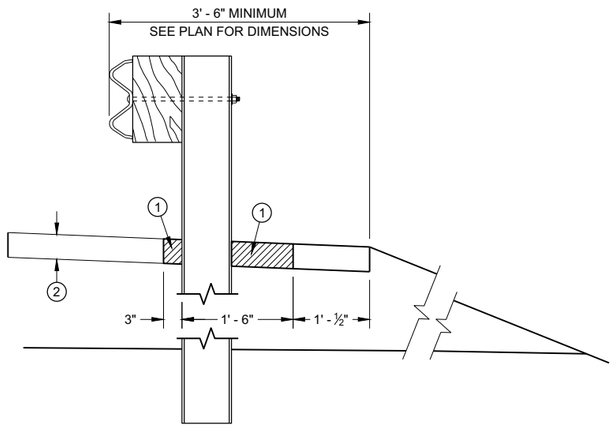

SECTION A - A

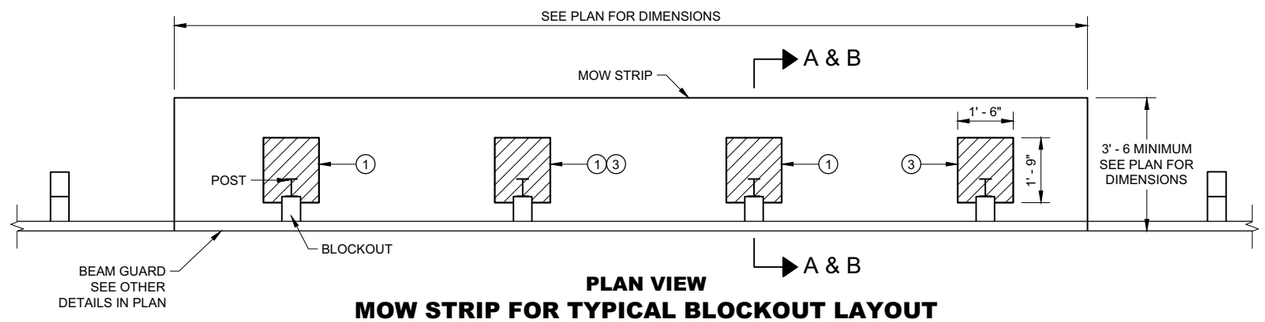

PLAN VIEW
MOW STRIP FOR TYPICAL BLOCKOUT LAYOUT

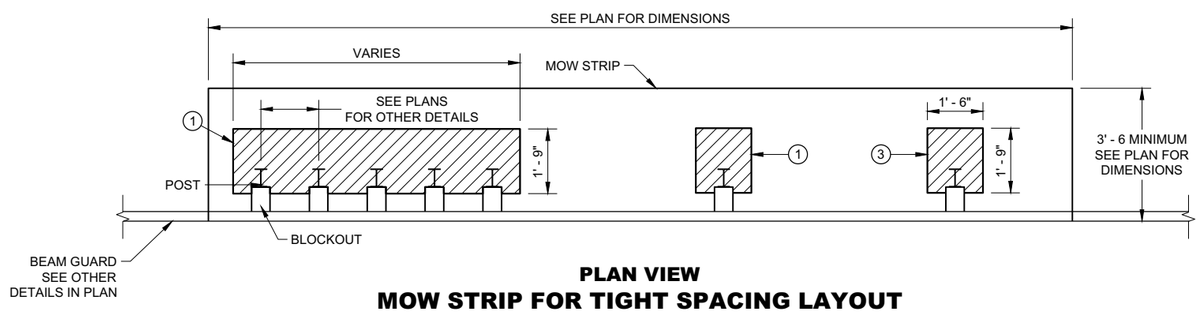

PLAN VIEW
MOW STRIP FOR TIGHT SPACING LAYOUT

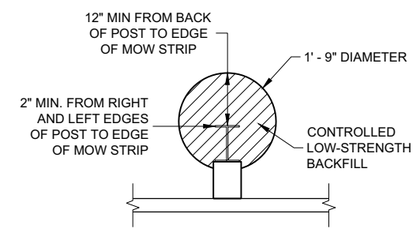

ALTERNATIVE HMA
MOW STRIP DESIGN

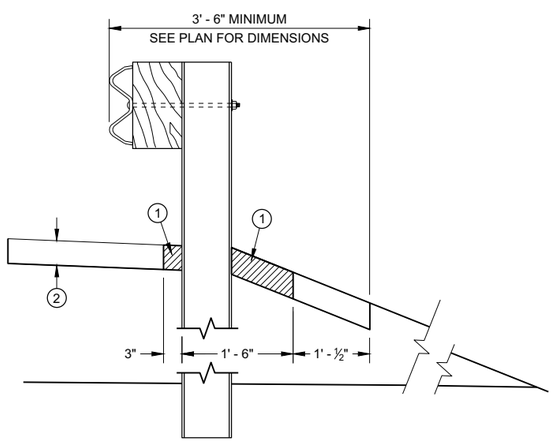

SECTION B - B

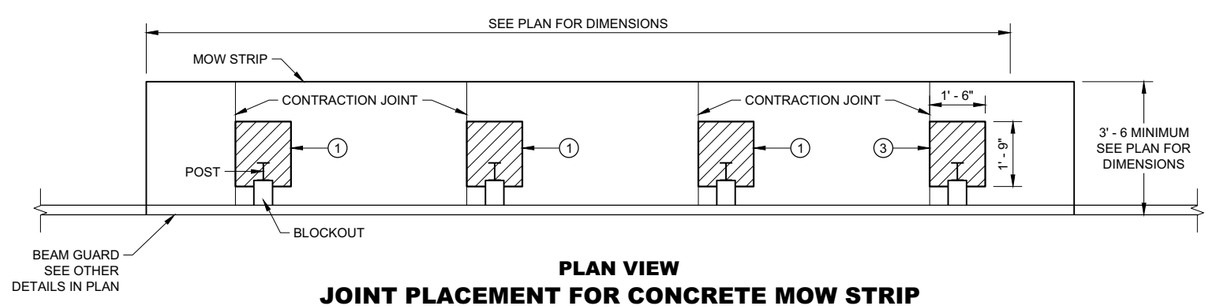

PLAN VIEW
JOINT PLACEMENT FOR CONCRETE MOW STRIP

GUARDRAIL MOW STRIP

STATE OF WISCONSIN
DEPARTMENT OF TRANSPORTA

6

6

SDD 14B28 - 04a

SDD 14B28 - 04a

1. WOOD OR STEEL POSTS (w6X9 OR w6X8.5) MAY BE USED. DO NOT INTERMIX WOOD AND STEEL POSTS. INSTALL STEEL POSTS WITH HOLES ON APPROACHING TRAFFIC SIDE.
2. USE WOOD OR APPROVED PLASTIC BLOCKOUTS. WOOD BLOCKOUTS MAY BE CONSTRUCTED OUT OF TWO OR MORE WOOD BLOCKOUTS. SEE ALTERNATE WOOD BLOCKOUT DETAIL. DIMENSIONS OF APPROVED PLASTIC BLOCKOUTS MAY VARY.
3. IF ROCK IS ENCOUNTERED DURING EXCAVATION, PROVIDE A HOLE 12 INCHES IN DIAMETER EXTENDING 20 INCHES DEEP INTO THE ROCK. PLACE APPROXIMATELY 2 1/2" INCHES OF GRANULAR MATERIAL IN THE BOTTOM OF THE HOLE. CUT THE POSTS THE TO LENGTH AMD INSTALL. BACKFILL WITH EXCAVATED MATERIAL AND COMPACT. BACKFILL IS TO BE FREE OF LARGE ROCKS.
4. WHEN THE DISTANCE FROM BACK OF POST TO SHOULDER HINGE POINT IS LESS THAN 2 FEET INSTALL LONGER POST AT HALF POST SPACING (K).
5. FOR NEW MGS INSTALLATION TOP OF W-BEAM RAIL TOLERANCE IS ±1". FOR EXISTING MGS INSTALLATION TOP OF W-BEAM IS BETWEEN 27 ¾" TO 32".
6. WHEN USING STEEL POST AND WOOD BLOCKOUTS INSTALL FOUR 16D GALVANIZED NAILS. INSTALL NAILS AT THE BACK CORNERS OF THE BLOCK AND BEND THE NAILS OVER THE FLANGE OF THE STEEL POST.
7. TOTAL POST LENGTH FOR TYPE K IS 7' - 0". TOTAL POST LENGTH FOR OTHER MGS TYPES IS 6' - 0".

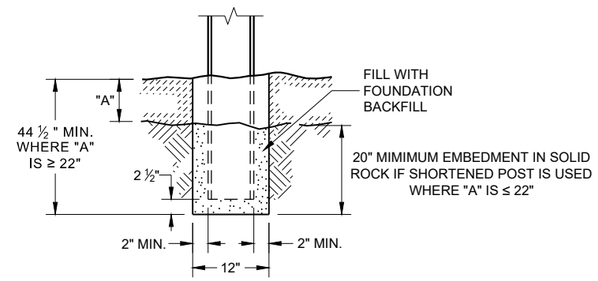

END VIEW
SETTING STEEL OR WOOD POST IN ROCK (3)

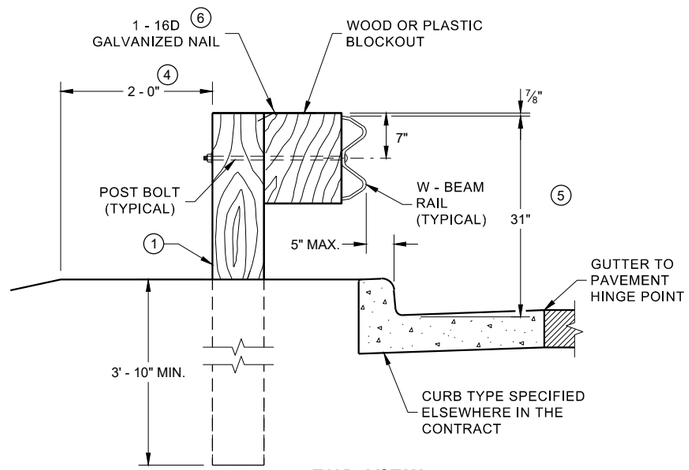

END VIEW
LOCATED ALONG A CURBED ROADWAY

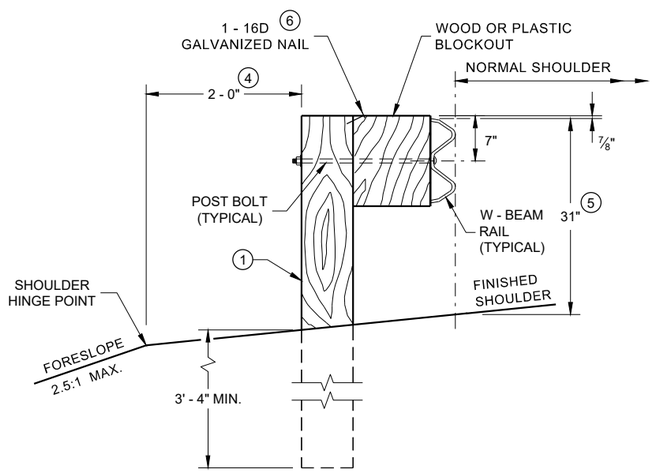

END VIEW
LOCATED ALONG A ROADWAY SHOULDER STANDARD INSTALLATION

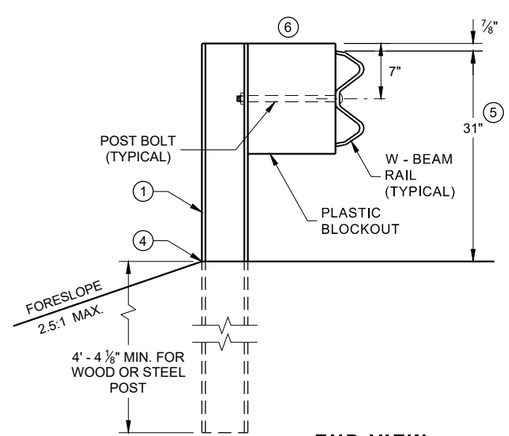

END VIEW
MGS LONGER POST AT HALFPOST SPACING W BEAM (K)

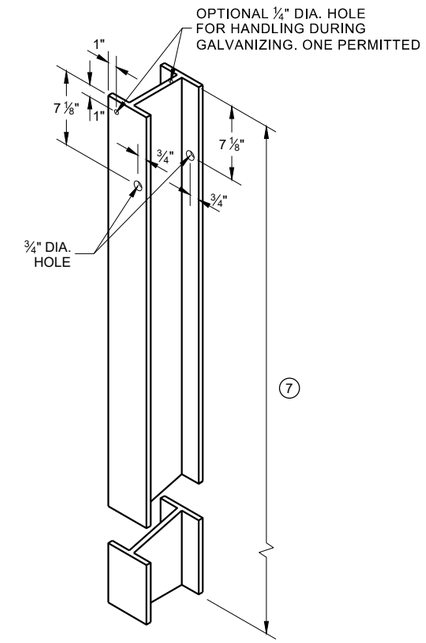

STEEL POST & HOLE PUNCHING DETAIL (W 6 X 9) (1)

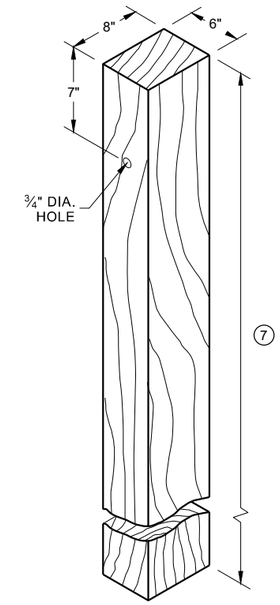

WOOD POST (6" X 8") NOMINAL (1)

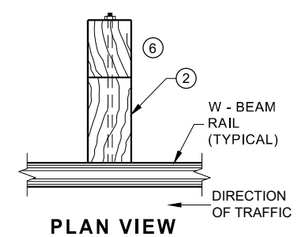

PLAN VIEW WOOD POST, BLOCKOUT & BEAM

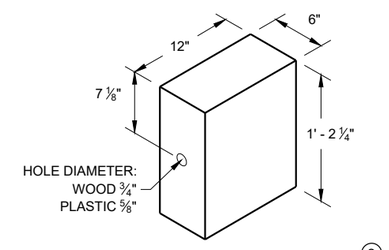

WOOD OR PLASTIC BLOCKOUT (2)

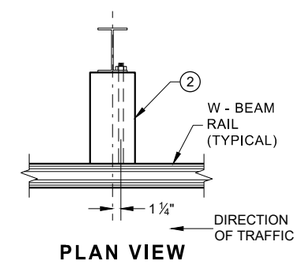

PLAN VIEW STEEL POST, PLASTIC BLOCKOUT & BEAM

MIDWEST GUARDRAIL SYSTEM (MGS) GUARDRAIL

STATE OF WISCONSIN
DEPARTMENT OF TRANSPORTA 200

6

6

SDD 14B42 - 07a

SDD 14B42 - 07a

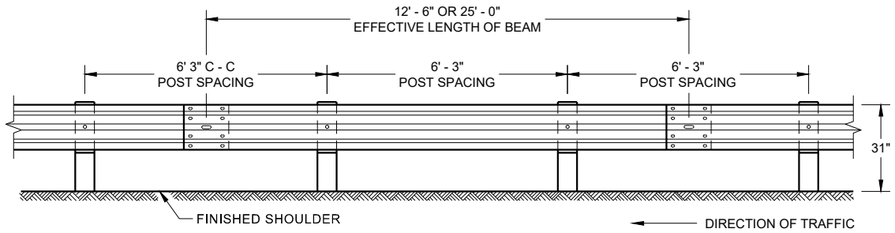

FRONT VIEW
POST SPACING STANDARD INSTALLATION

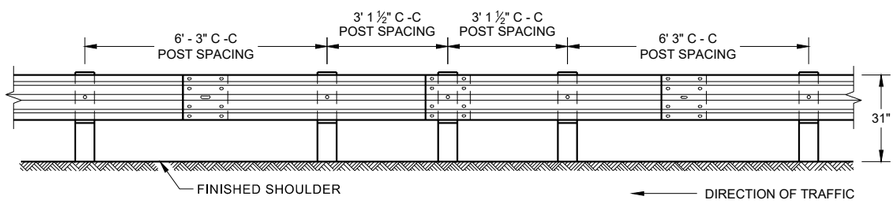

FRONT VIEW
HALF POST SPACING (HS) AND HALF POST SPACING WITH LONGER POSTS (K)

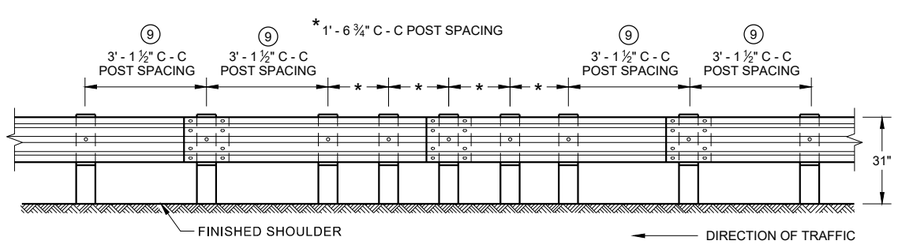

FRONT VIEW
QUARTER POST SPACING (QS)

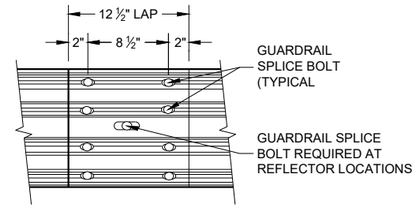

FRONT VIEW
MID-SPAN BEAM SPLICE

GENERAL NOTES

8 DO NOT INSTALL REFLECTORS ON THE FIRST 50 FEET OF THE APPROACH END OF THE ENERGY ABSORBING TERMINAL.

9 25 FEET OF HALF POST SPACING IS REQUIRED ON APPROACH AND DEPARTURE ENDS OF QUARTER POST SPACING.

POST BOLTS ARE A ⅝" DIAMETER ASTM A307 GUARDRAIL BOLT. A POST BOLT REQUIRES ⅝" DIAMETER A563A DOUBLE RECESSED (DR) HEAVY HEX NUT AND ⅝" DIAMETER F844 FLAT WASHER. POST BOLTS MAY BE LONGER IF MULTIPLE BLOCKOUTS ARE BEING USED.

GUARD RAIL SPLICE BOLTS ARE A ⅝" DIAMETER ASTM A307 GUARDRAIL HEAD BOLT. A GUARDRAIL SPLICE BOLT REQUIRES ⅝" DIAMETER A563A DOUBLE RECESSED (DR) HEAVY HEX NUT.

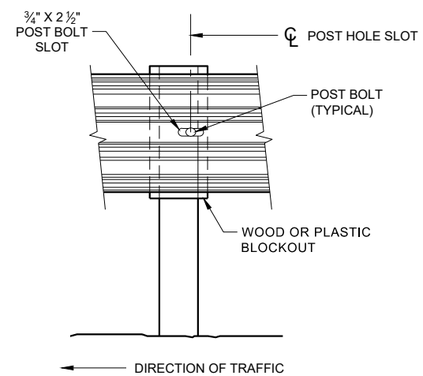

FRONT VIEW AT STEEL POST

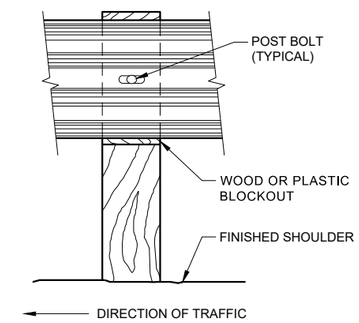

FRONT VIEW AT WOOD POST

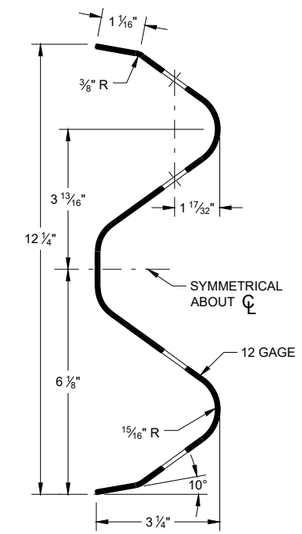

SECTION THRU W-BEAM RAIL

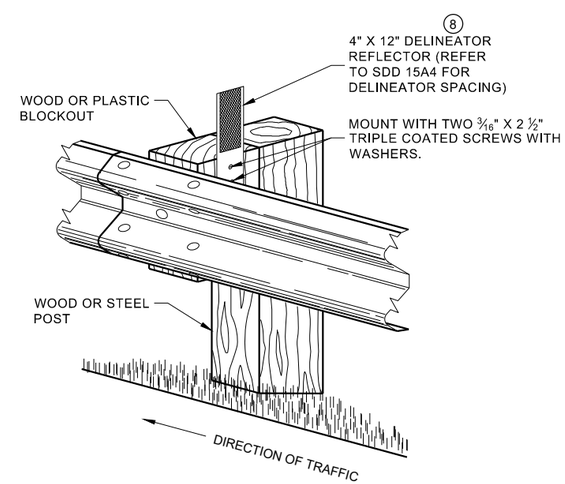

ONE SIDED REFLECTOR DETAIL AND TYPICAL INSTALLATION

MIDWEST GUARDRAIL SYSTEM (MGS) GUARDRAIL

STATE OF WISCONSIN
DEPARTMENT OF TRANSPORTA

6

SDD 14B42 - 07b

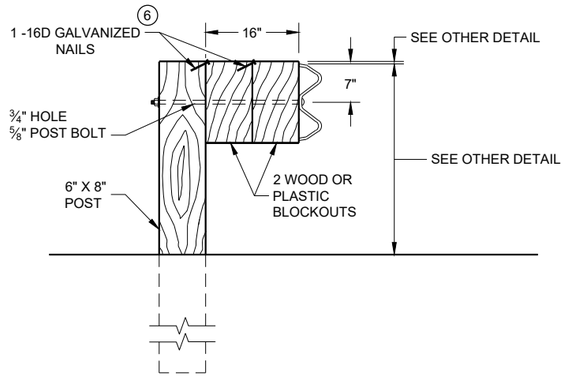

DETAIL FOR 16" BLOCKOUT DEPTH

IT IS ACCEPTABLE TO USE BLOCKOUTS UP TO 16" DEEP TO INCREASE THE POST OFFSET TO AVOID UNDERGROUND OBSTACLES. THERE IS NO LIMIT TO THE NUMBER OF POSTS THAT CAN HAVE ADDITIONAL BLOCKOUTS UP TO 16" DEEP.

NOTE:

1. ALL FILLETS SHALL HAVE A MINIMUM RADIUS OF 3/16".
2. IF THE BOLT EXTENDS MORE THAN ¼" FROM THE NUT THE BOLT SHOULD BE TRIMMED BACK.

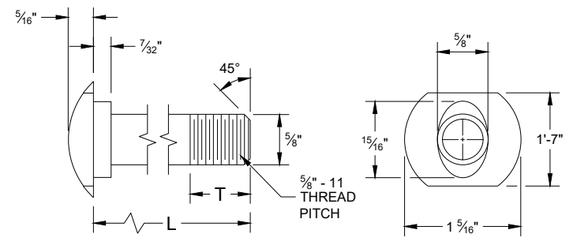

POST BOLT TABLE

L	T (MIN.)
1 ¼"	1 ⅛"
2"	1 ¾"
10"	4"
14"	4 1/16"
18"	4"
21"	4 1/16"
25"	4"

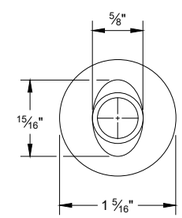

ALTERNATE BOLT HEAD

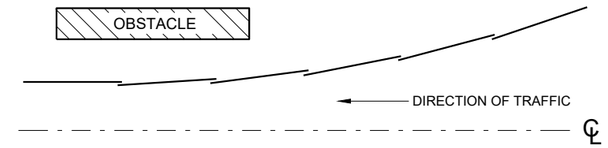

PLAN VIEW
BEAM LAPPING DETAIL

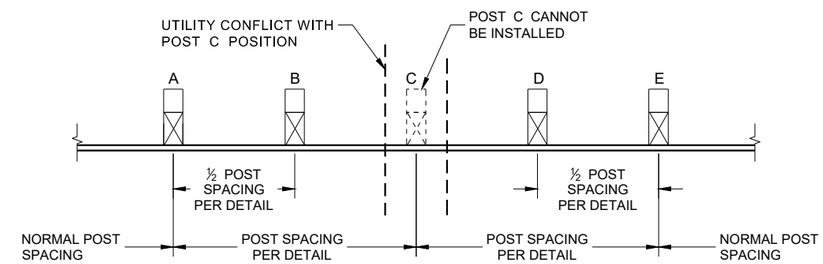

POST DRIVING FOR CONTINUOUS UNDERGROUND OBSTRUCTION

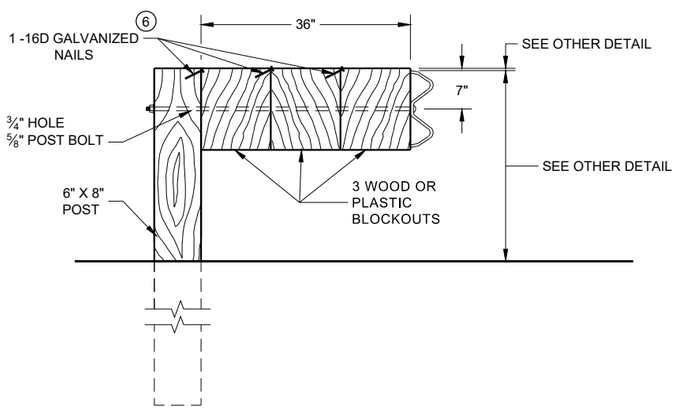

DETAIL FOR 36" BLOCKOUT DEPTH

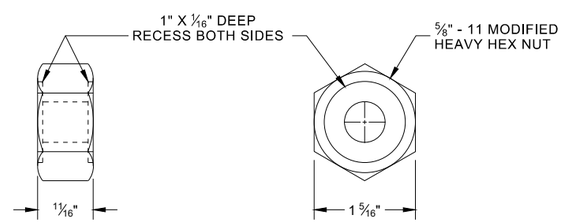

POST BOLT, SPLICE BOLT AND RECESS NUT

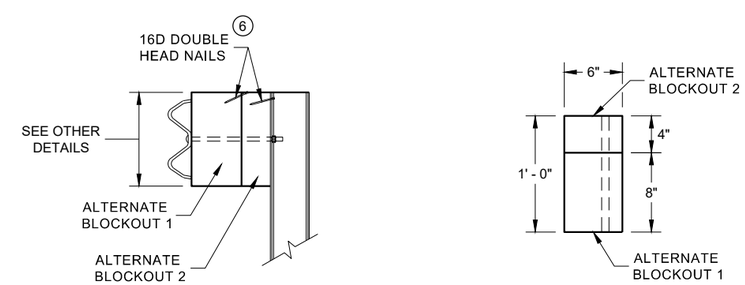

SIDE VIEW

PLAN VIEW

ALTERNATE WOOD BLOCKOUT DETAIL

NOTES: UNDER SPECIAL CIRCUMSTANCES, SUCH AS AVOIDING OBSTACLES THAT ARE NOT RELOCATED, IT IS ACCEPTABLE TO INSTALL ADDITIONAL BLOCKOUTS TO OBTAIN UP TO 36" DEPTH FOR ONE OR TWO POSTS IN A SECTION OF GUARDRAIL.

DO NOT USE 16" OR 36" BLOCKOUTS IF IT CAUSES THE POST TO BE DRIVEN BEYOND SHOULDER HINGE POINT OR CAUSES A FIXED OBJECT TO BE WITHIN THE DEFLECTION DISTANCE OF THE BARRIER.

(6) WHEN USING STEEL POST AD WOOD BLOCKOUTS, INSTALL FOUR 16D GALVANIZED NAILS. INSTALL NAILS AT THE BACK CORNERS OF THE BLOCK AND BEND THE NAILS OVER THE FLANGE OF THE STEEL POST.

MIDWEST GUARDRAIL SYSTEM (MGS) GUARDRAIL

STATE OF WISCONSIN
DEPARTMENT OF TRANSPORTA

6

SDD 14B42 - 07c

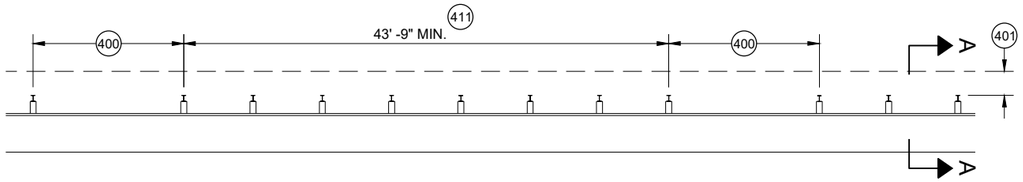

MISSING POST IN MGS GUARDRAIL

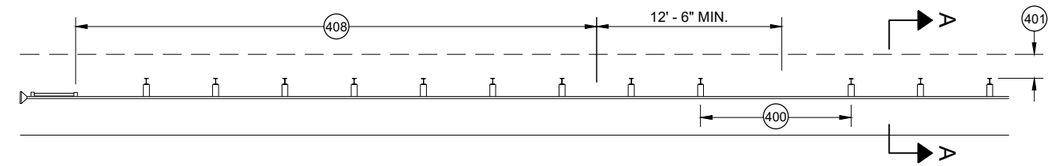

MISSING POST IN MGS GUARDRAIL NEAR EAT

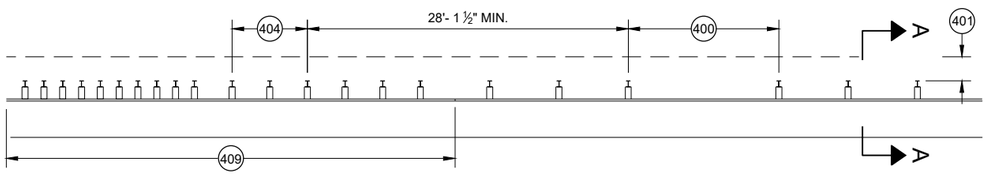

MISSING POST IN MGS GUARDRAIL NEAR AN APPROACH TRANSITION

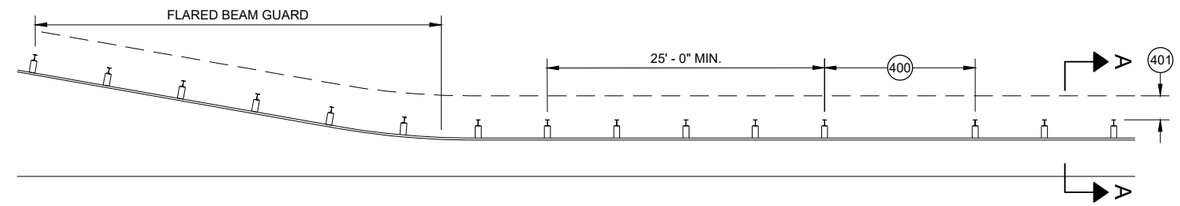

MISSING POST IN MGS GUARDRAIL NEAR FLARED BEAM GUARD

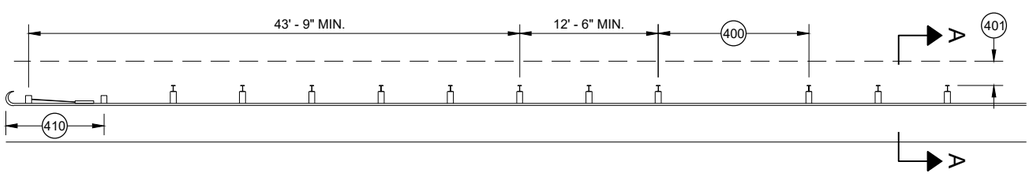

MISSING POST IN MGS GUARDRAIL NEAR A TYPE 2 END TERMINAL

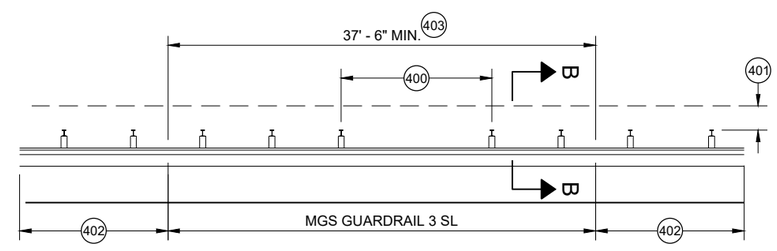

MISSING POST IN SHORT SPAN MGS GUARDRAIL NEAR CURB (SL) 407

400 MAX SPAN 12' - 6"
401 2' MIN.
402 MGS GUARDRAIL 3
403 NESTING BEAM GUARD
404 ASYMMETRIC TRANSITION
405 SOIL WELL DRAINED AND COMPACTED
406 SEE OTHER DRAWINGS IN THIS SDD
407 SEE OTHER DRAWINGS FOR MIN. SPACING BETWEEN SPANS
408 SEE SDD 14B44
409 SEE SDD 14B45
410 SEE SDD 14B47
411 MINIMUM DISTANCE BETWEEN MISSING POST SPANS.

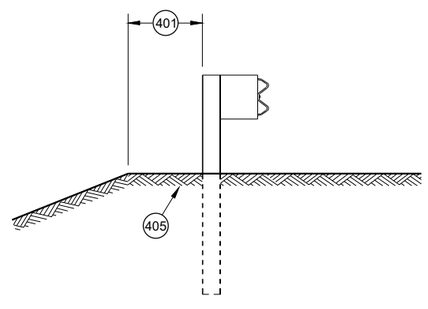

SECTION A - A 406

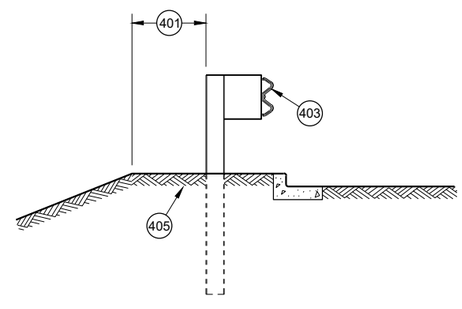

SECTION B - B 406

MIDWEST GUARDRAIL SYSTEM (MGS) GUARDRAIL

STATE OF WISCONSIN
DEPARTMENT OF TRANSPORTATION

APPROVED
May 2021 — DATE
/S/ Rodney Taylor — ROADWAY STANDARDS DEVE UNIT SUPERVISOR
FHWA

6

SDD 14B42 - 07d

GENERAL NOTES

(A) THE SLOPE IN THE AREA BOUNDED BY THE GRADELINE, THE HINGE POINT LINE (HPL) AND THE CLEAR ZONE LIMITS (CZL) SHALL BE 4:1 OR FLATTER.

(B) AFTER FINAL ASSEMBLY, RECHECK CABLE TO BE SURE IT IS TAUT AND HAS NOT RELAXED

(C) DIFFERENT MANUFACTURERS REQUIRE DIFFERENT PERFORATED W - BEAM RAIL END PANELS. SEE MANUFACTURER'S INFORMATION.

(D) ATTACH ALUMINUM SHEET TO E.A.T. HEAD USING 4 STAINLESS STEEL SELF - TAPPING SCREWS. ONE SCREW PER CORNER.

(E) HARDWARE MAY VARY BETWEEN MANUFACTURER. SEE MANUFACTURER'S DRAWING FOR INFORMATION.

DIMENSIONS MAY VARY, MANUFACTURER'S INFORMATION.

SEE SDD 14B42 FOR MORE INFORMATION.

* DO NOT ATTACH BLOCKOUTS TO POST 1 AND 2.

DO NOT INSTALL REFLECTORS ON THE FIRST 50 FEET OF THE APPROACH END OF THE ENERGY ABSORBING TERMINAL.

SEE MANUFACTURER'S DRAWING FOR SPLICE LOCATION, HARDWARE DIMENSIONS AND INSTALLATION INSTRUCTIONS.

THE CENTER OF THE UPPER 3 ½" DIAMETER HOLE ON POST NUMBER 3 THROUGH POST 9 IS TO BE FLUSH WITH THE GROUND LINE UP TO A MAXIMUM OF 2" ABOVE GROUND LINE. WOOD BLOCKS ON POSTS NUMBERED 3 THROUGH 9 MAY BE ADJUSTED UP TO 3" ABOVE THE TOP OF POST.

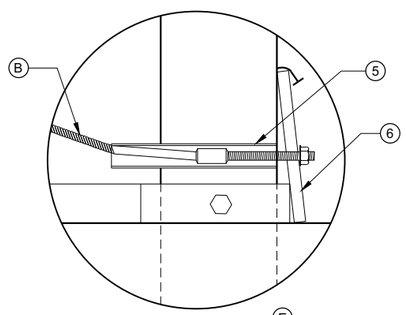

DETAIL "A" (E)

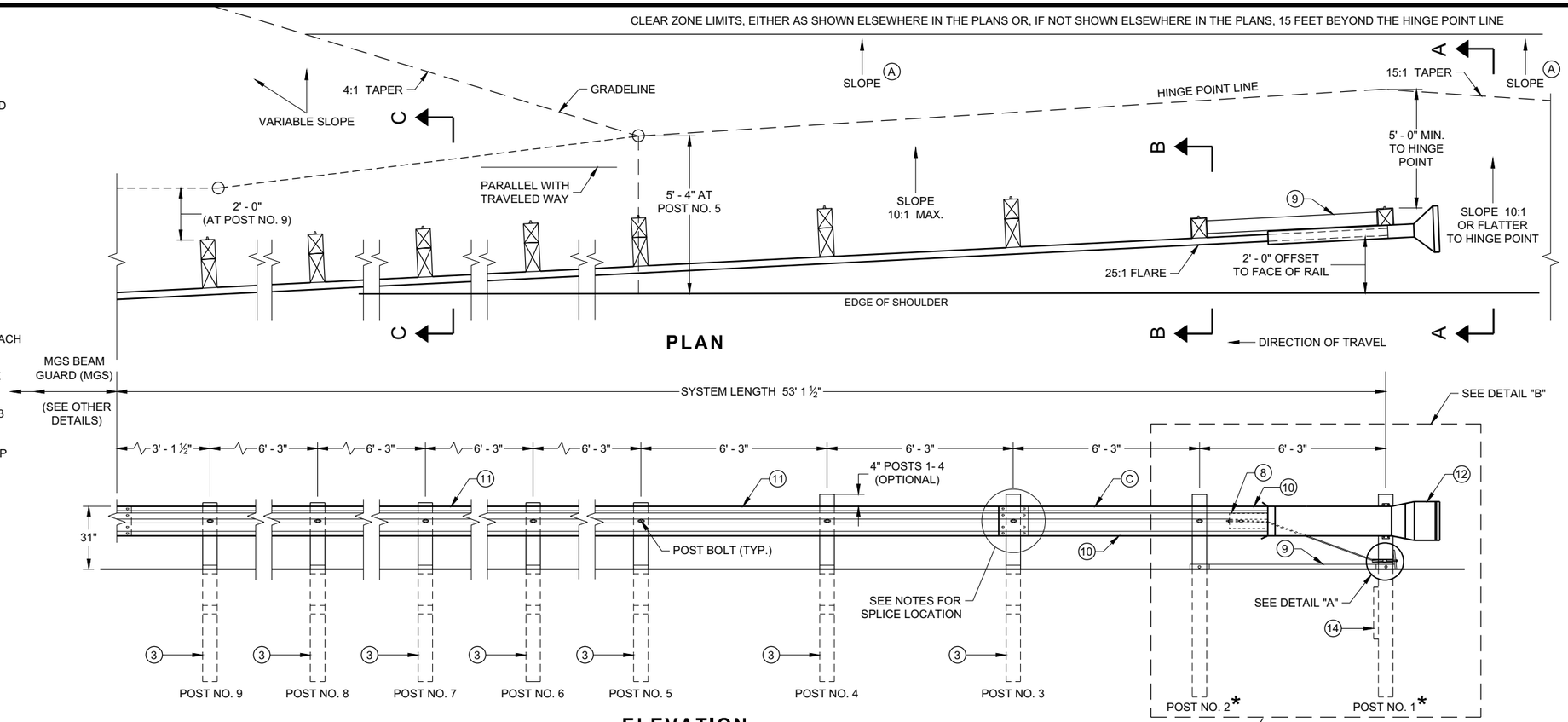

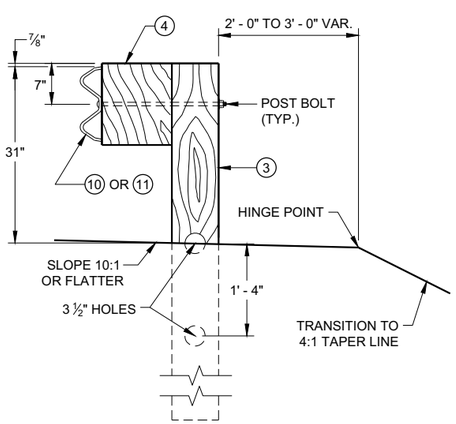

SECTION C - C
TYPICAL AT POST NOS. 3 - 9

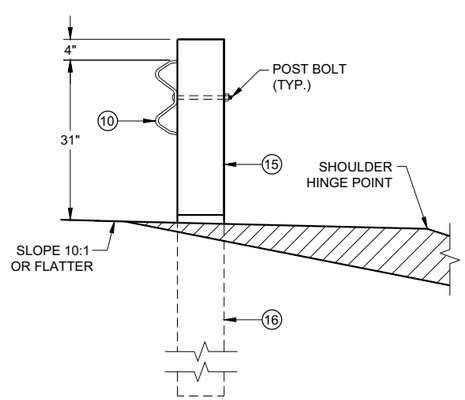

SECTION B - B
TYPICAL AT POST NO. 2*

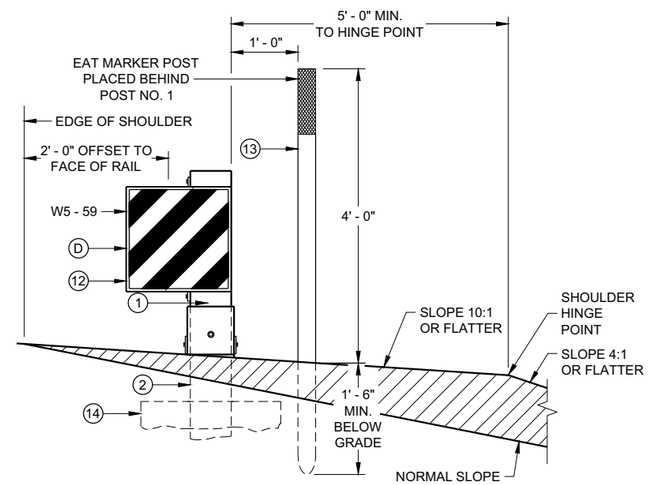

SECTION A - A
TYPICAL AT POST NO. 1*

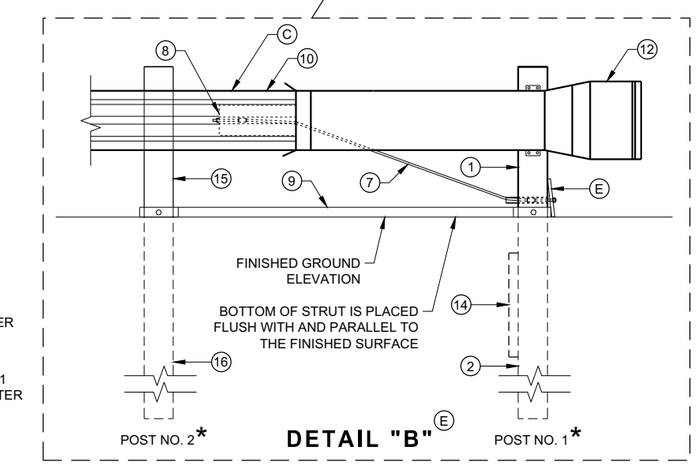

DETAIL "B" (E)

MIDWEST GUARDRAIL SYSTEM ENERGY ABSORBING TERMINAL (MGS)

STATE OF WISCONSIN
DEPARTMENT OF TRANSPORTATION

6

SDD 14B44 - 04a

BILL OF MATERIALS

PART NO.	DESCRIPTION MATERIALS PROVIDED BY MGS EAT MANUFACTURER. SEE MANUGACTURER'S DETAILS FOR MORE INFORMATION.
1	UPPER POST NO. 1 6" X 6" TUBE
2	LOWER POST NO. 1
3	WOOD CRT
4	WOOD BLOCKOUT
5	PIPE SLEEVE
6	BEARING PLATE
7	BCT CABLE ASSEMBLY
8	ANCHOR CABLE BOX
9	GROUND STRUT
10	PERFORATED W-BEAM RAIL END PANEL, 12'-6" LONG.
11	STANDARD W-BEAM RAIL. MULTIPLE SECTIONS REQUIRED. SECTIONS VARY IN LENGTH.
12	IMPACT HEAD
13	EAT MARKER POST - YELLOW (SEE APPROVED PRODUCTS LIST)
14	SOIL PLATE
15	UPPER POST NO. 2
16	LOWER POST NO. 2

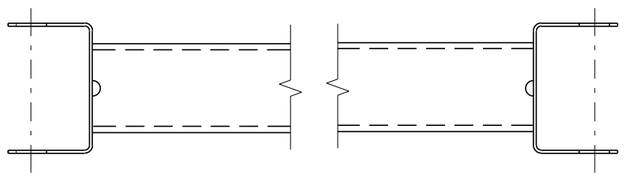

GENERIC GROUND STRUT 9 E

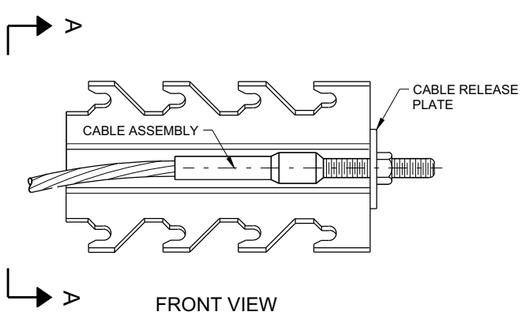

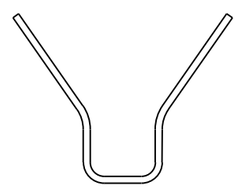

SECTION A - A

GENERIC ANCHOR CABLE BOX 9 E

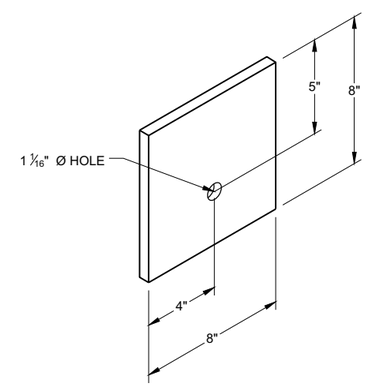

BEARING PLATE 6 E

MIDWEST GUARDRAIL SYSTEM ENERGY ABSORBING TERMINAL (MGS)

STATE OF WISCONSIN
DEPARTMENT OF TRANSPORTAT

6

SDD 14B44 - 04b

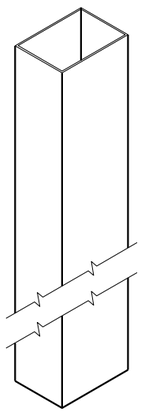

UPPER POST NO. 1 (1) (E)

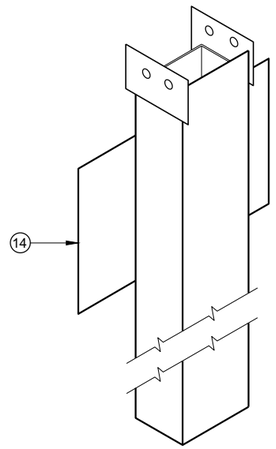

LOWER POST NO. 1 (2) (E)

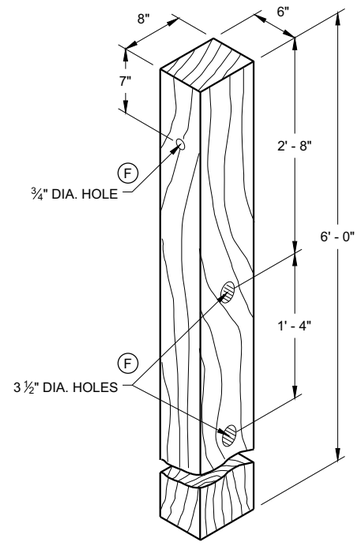

WOOD CRT POST (3) (E)
POSTS NUMBER 3-9

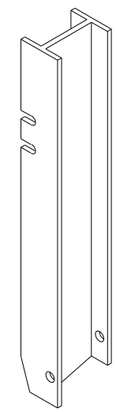

UPPER POST NO. 2 (15) (E)

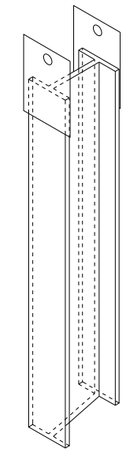

LOWER POST NO. 2 (16) (E)

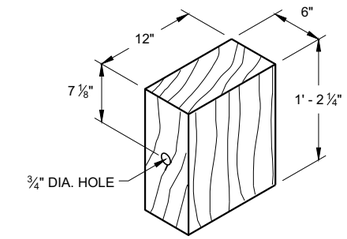

WOOD BLOCKOUT (4)
REQ'D. AT ALL POSTS EXCEPT POST NO'S 1 & 2

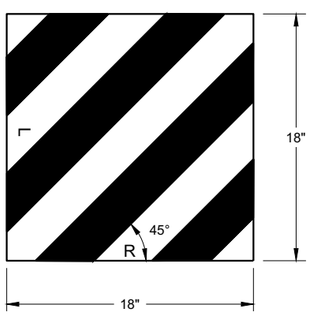

W5 - 59

REFLECTIVE SHEETING DETAIL (E)

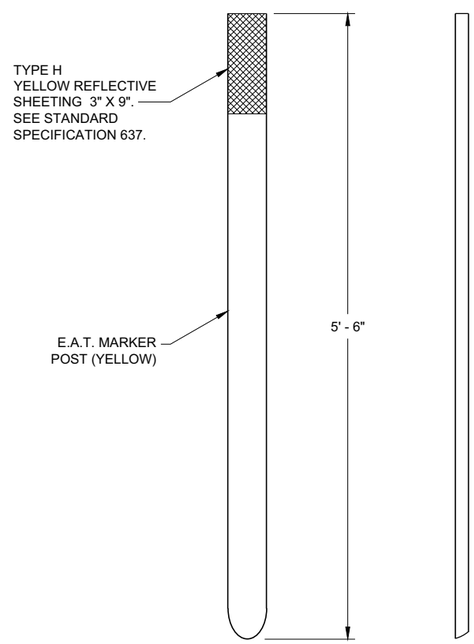

FRONT VIEW SIDE VIEW

E.A.T. MARKER POST (13)

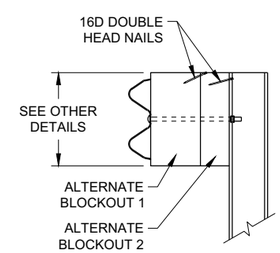

SIDE VIEW

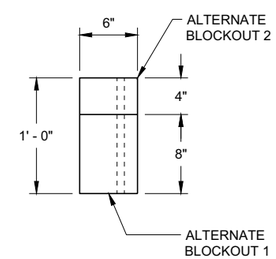

TOP VIEW

ALTERNATE WOOD BLOCKOUT DETAIL

MIDWEST GUARDRAIL SYSTEM ENERGY ABSORBING TERMINAL (MGS)

STATE OF WISCONSIN
DEPARTMENT OF TRANSPORTATION

APPROVED
7/2018 — DATE
/S/ Rodney Taylor — ROADWAY STANDARDS DEVE UNIT SUPERVISOR
FHWA

6

SDD 14B44 - 04c

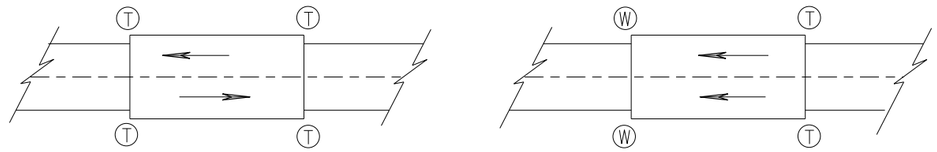

TWO WAY TRAFFIC **ONE WAY TRAFFIC**

(T) THRIE BEAM CONNECTION

(W) W-BEAM CONNECTION WHEN REQUIRED

TYPICAL LOCATIONS OF THRIE BEAM AND W-BEAM CONNECTIONS TO BRIDGE

GENERAL NOTES

IF ROCK IS ENCOUNTERED, REMOVE ROCK TO FULL DEPTH OF POST PLUS 2½", AND 12" DIAMETER AROUND POST. SEE 14B42 FOR MORE DETAILS.

TRANSITION USES STEEL POSTS ONLY.

SEE STANDARD DETAIL DRAWING 14 B 42 FOR MORE INFORMATION.

POST 2 THROUGH 17 USES STEEL POST ONLY

(1) BRIDGE RAILING TYPE "W" DOES NOT REQUIRE A TERMINAL CONNECTOR.

(2) OPTIONAL CURB AND GUTTER OR DRAINAGE FEATURE SEE PLAN FOR INFORMATION.

(13) STEEL OR WOOD POST IS ACCEPTABLE AT POST 1. SEE SDD14B42

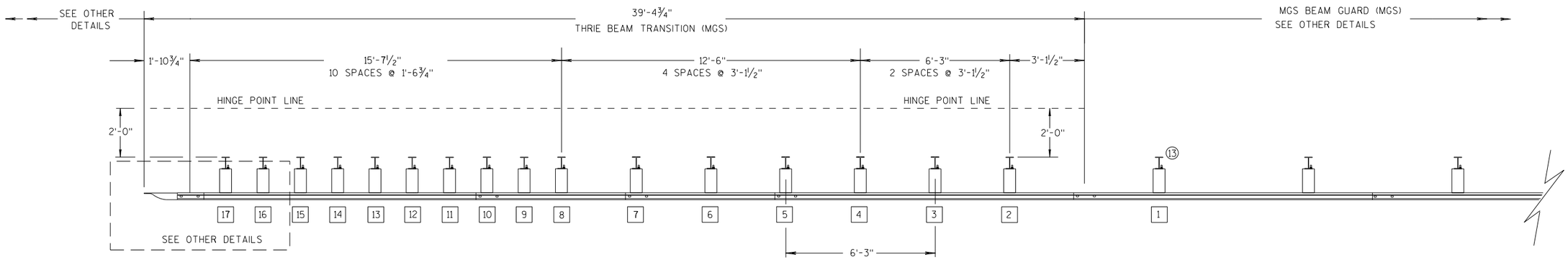

PLAN VIEW

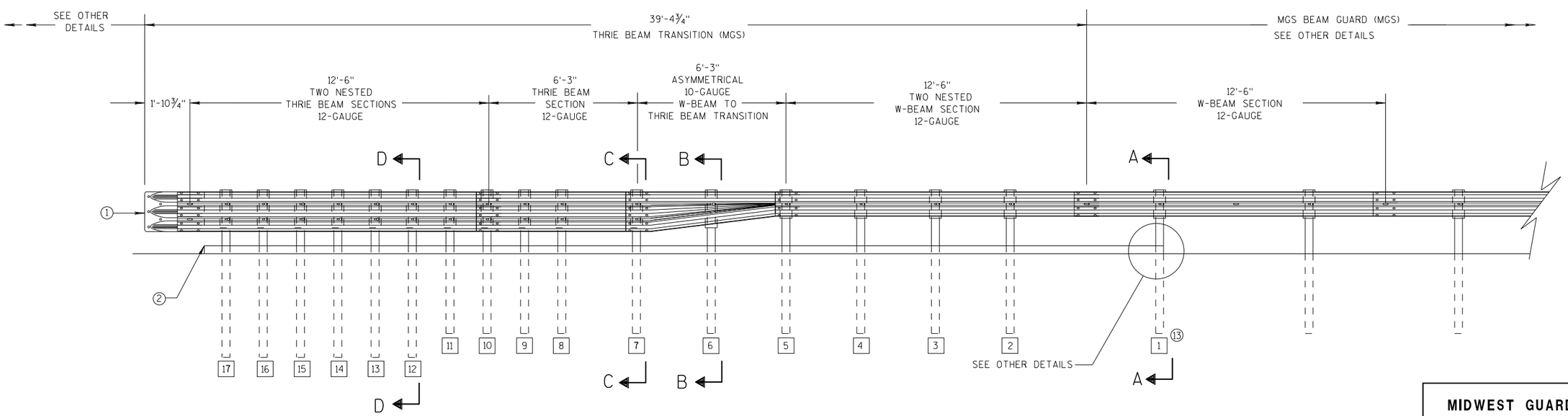

ELEVATION VIEW

MIDWEST GUARDRAIL SYSTEM THRIE BEAM TRANSITION

MIDWEST GUARDRAIL SYSTEM THRIE BEAM TRANSITION (MGS)

STATE OF WISCONSIN
DEPARTMENT OF TRANSPOR

6

S.D.D. 14 B 45-5a

GENERAL NOTES

(2) OPTIONAL CURB AND GUTTER OR DRAINAGE FEATURE SEE PLAN FOR INFORMATION.

(3) WHEN USING STEEL POSTS AND WOOD BLOCKOUTS INSTALL FOUR 10D GALVANIZED NAILS. INSTALL NAILS AT THE BACK CORNERS OF THE BLOCK AND BEND THE NAILS OVER THE FLANGE OF THE STEEL POST.

(4) TOLERANCE FOR TOP OF W-BEAM RAIL IS ± 1".

(13) STEEL OR WOOD POST IS ACCEPTABLE AT POST 1. SEE SDD 14B42

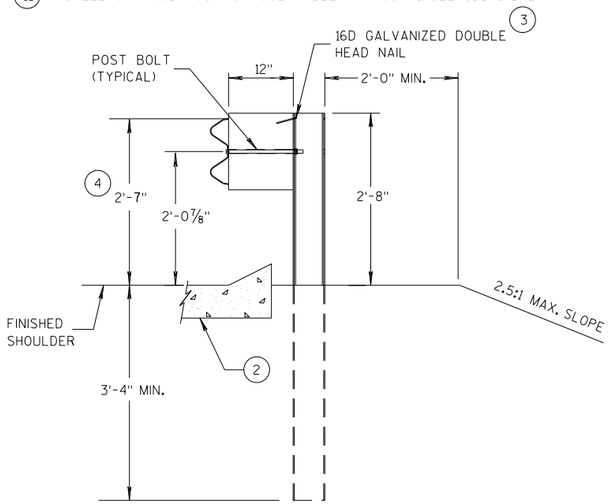

SECTION A-A (13)

POSTS 1-5

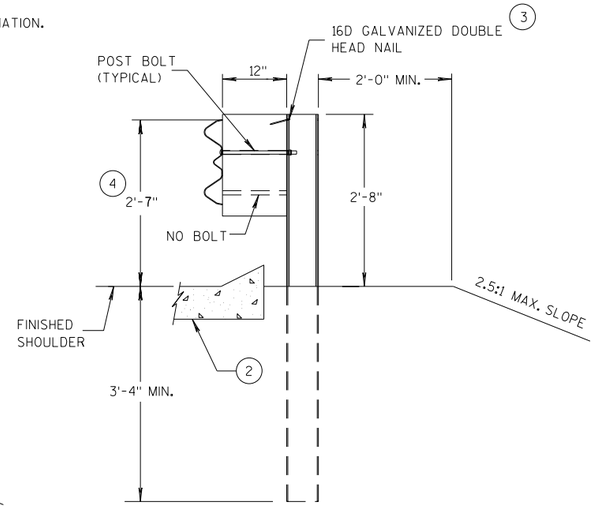

SECTION B-B

POST 6

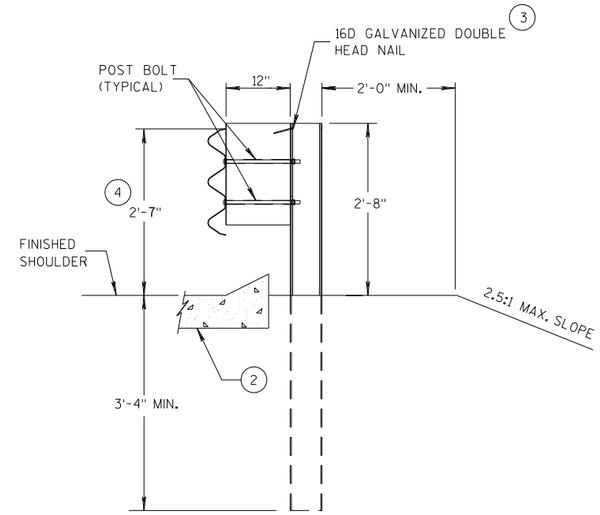

SECTION C-C

POSTS 7-11

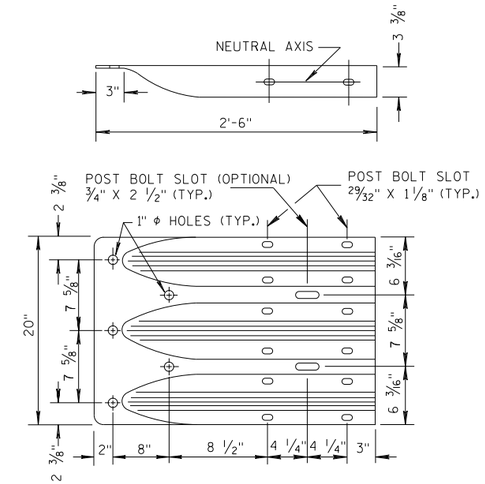

THRIE BEAM TERMINAL CONNECTOR

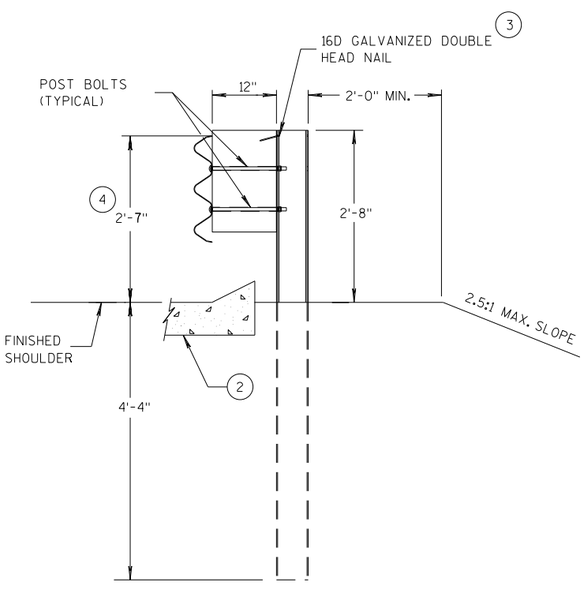

SECTION D-D

POSTS 12-17

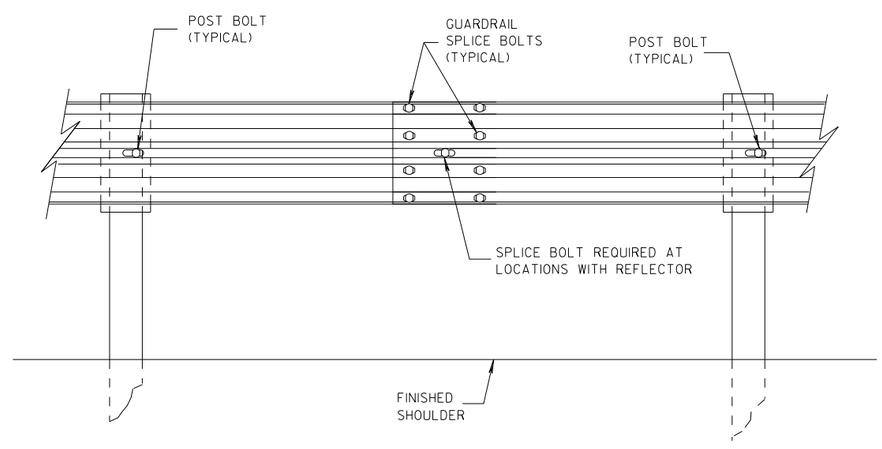

SPLICE DETAIL

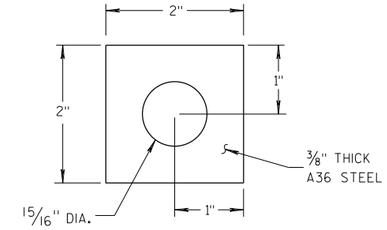

PLATE WASHER DETAIL

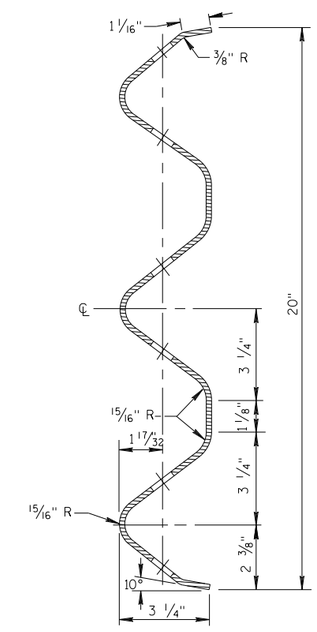

SECTION THRU THRIE BEAM RAIL ELEMENT

MIDWEST GUARDRAIL SYSTEM
THRIE BEAM TRANSITION (MGS)

STATE OF WISCONSIN
DEPARTMENT OF TRANSPOR

6

S.D.D. 14 B 45-5b

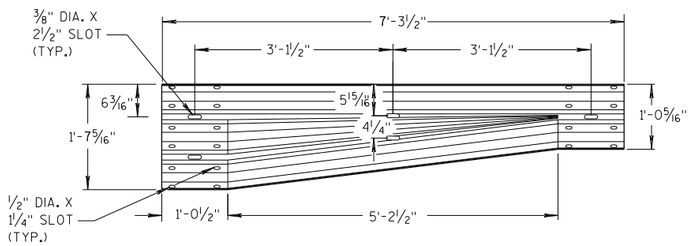

W-BEAM TO THRIE BEAM TRANSITION SECTION

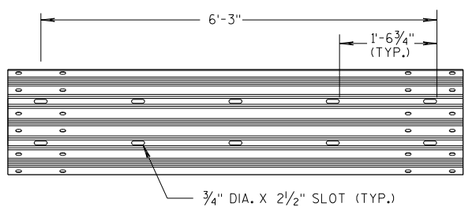

6'-3" THRIE BEAM SECTION

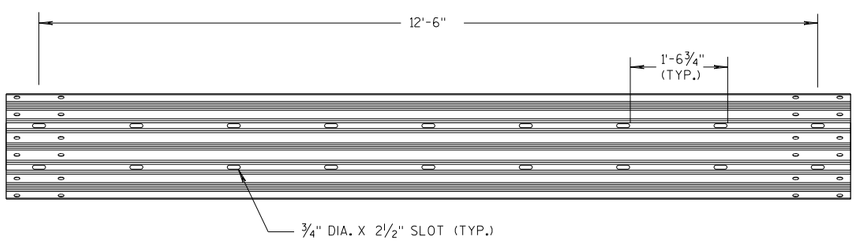

12'-6" THRIE BEAM SECTION

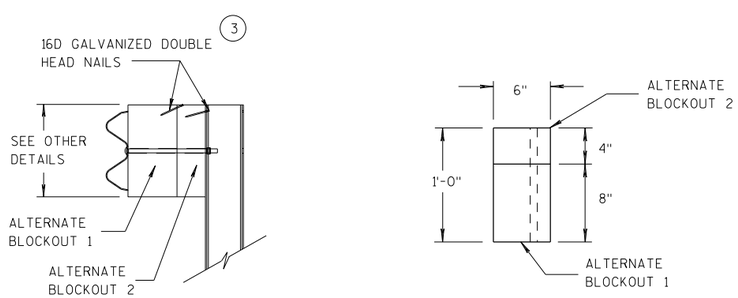

ALTERNATE WOOD BLOCKOUT DETAIL

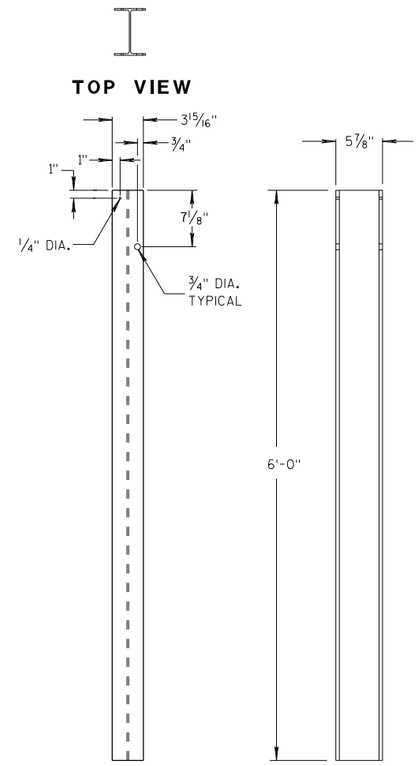

STEEL POSTS 1-5 (13)

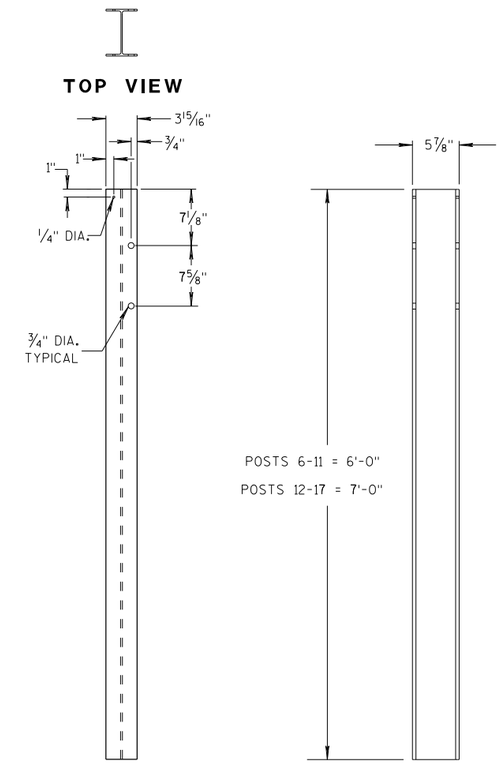

STEEL POSTS 6-17

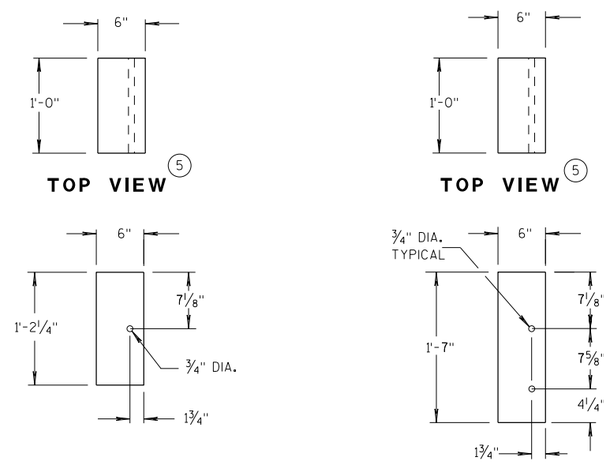

BLOCKOUT POSTS 1-5

BLOCKOUT POSTS 6-17

GENERAL NOTES

STEEL POSTS ARE W6X9 OR W6X8.5.

BOLT HOLES FOR POST ARE ON FRONT AND OF SIDE OF POST.

(3) WHEN USING STEEL POSTS AND WOOD BLOCKOUTS INSTALL FOUR 16D GALVANIZED NAILS. INSTALL NAILS AT THE BACK CORNERS OF THE BLOCK AND BEND THE NAILS OVER THE FLANGE OF THE STEEL POST.

(5) WOOD BLOCKS MAY BE CONSTRUCTED OUT OF 2 WOOD BLOCKS. SEE ALTERNATE WOOD BLOCK DETAIL.

(13) STEEL OR WOOD POST IS ACCEPTABLE AT POST 1. SEE SDD 14B42.

MIDWEST GUARDRAIL SYSTEM
THRIE BEAM TRANSITION (MGS)

STATE OF WISCONSIN
DEPARTMENT OF TRANSPOR

6

S.D.D. 14 B 45-5c

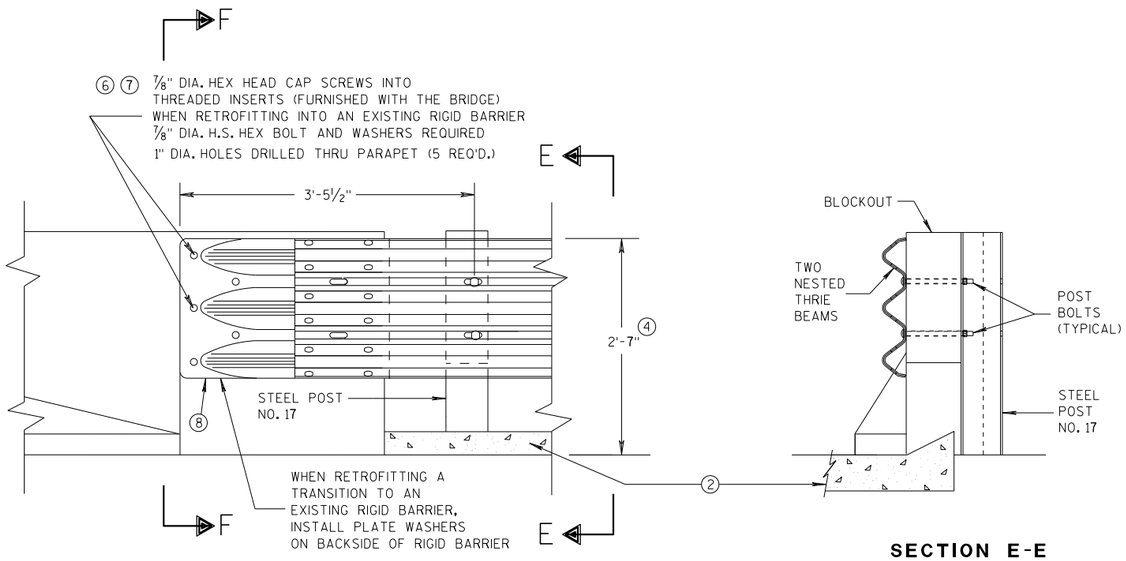

FRONT VIEW

SECTION E-E

THRIE BEAM CONNECTION TO BRIDGE PARAPET WITH SQUARE ENDS

GENERAL NOTES

THESE ARE TYPICAL CONNECTION DETAILS. ADJUST THE POSTION OF CONNECTIONS TO EXISTING BRIDGES TO FIT THE ACTUAL BRIDGE AND SITE DIMENSIONS.

② OPTIONAL CURB AND GUTTER OR DRAINAGE FEATURE SEE PLAN FOR INFORMATION.

④ TOLERANCE FOR TOP OF BEAM IS ± 1".

⑥ DRILLING BOLT HOLES THROUGH THE PARAPET, BOLTS, NUTS, WASHERS AND REPAIRING DAMAGED CONCRETE ARE INCIDENTAL TO THE CONTRACT.

⑦ BOLTS MAY BE A325 BOLTS OR A449 BOLTS. BOLT LENGTH AND THREADING LENGTH ARE TO ALLOW FOR A TIGHT CONNECTION BETWEEN RIGID BARRIER AND THRIE BEAM CONNECTION PLATE. CONTRACTOR IS TO FIELD VERIFY BOLT LENGTH AND THREAD LENGTH. ONE ROUND WASHER REQUIRED BETWEEN BOLT HEAD AND THRIE BEAM CONNECTOR PLATE. BOLTS THAT EXTEND THROUGH THE PARAPET AND OUT THE BACK FACE REQUIRE A HARDENED ROUND STEEL WASHER THAT IS 2" O.D. X 5/32" THICK AND ONE PLATE WASHER. REPAIR ANY DAMAGED CONCRETE FROM BOLT INSTALLATION.

⑧ THE RECESS FOR A W-BEAM CONNECTION, WHICH EXISTS ON SOME PARAPETS OF THIS TYPE, SHALL BE FILLED WITH A TREATED TIMBER BLOCKOUT. BLOCKOUT SIZE IS 1'-6" X 2'-0" X 3 1/2".

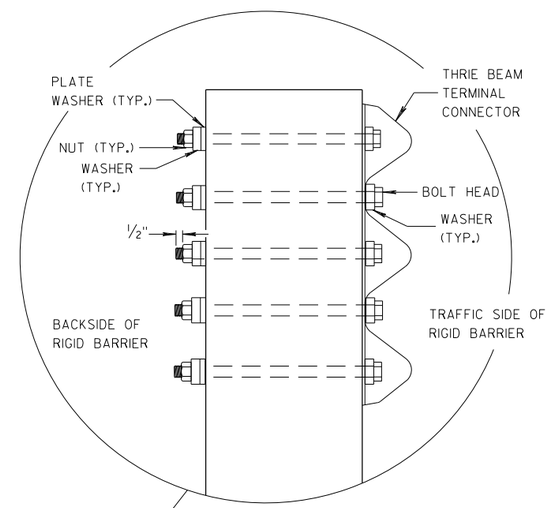

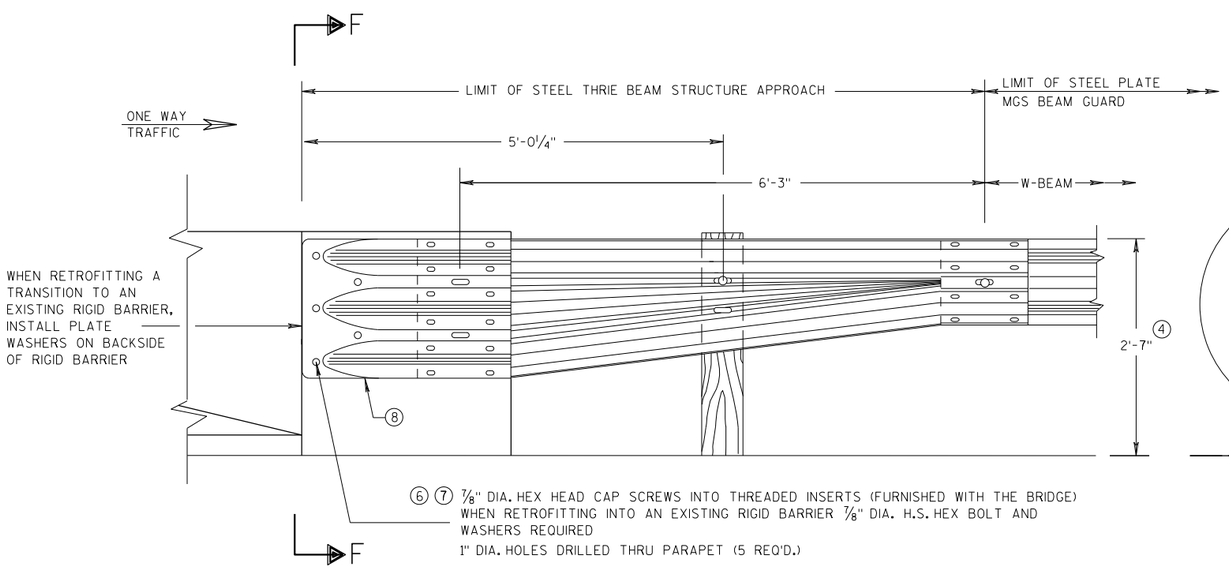

FRONT VIEW

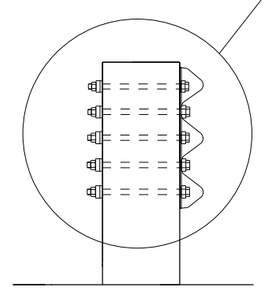

SECTION F-F

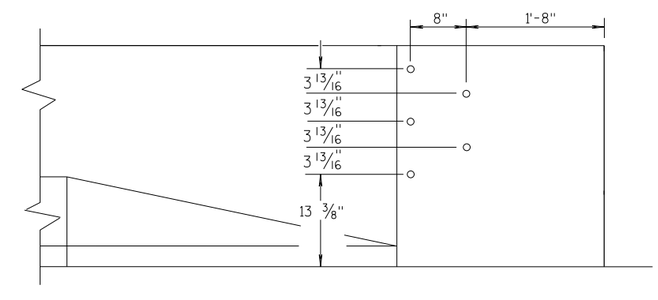

DRILL HOLE LOCATION

W BEAM TRANSITION AND CONNECTION TO BRIDGE PARAPETS WITH SQUARE ENDS

(USE ONLY ON THE TRAFFIC EXIT END OF ONE WAY BRIDGES)

MIDWEST GUARDRAIL SYSTEM THRIE BEAM TRANSITION (MGS)

STATE OF WISCONSIN
DEPARTMENT OF TRANSPORTATION

APPROVED
07/2018 — DATE
/S/ Rodney Taylor — ROADWAY STANDARDS D[illegible] UNIT SUPERVI[illegible]
FHWA

6

S.D.D. 14 B 45-5d

GENERAL NOTES

DETAILS OF CONSTRUCTION, MATERIALS AND WORKMANSHIP NOT SHOWN ON THIS DRAWING SHALL CONFORM TO THE PERTINENT REQUIREMENTS OF THE STANDARD SPECIFICATIONS AND THE APPLICABLE SPECIAL PROVISIONS.

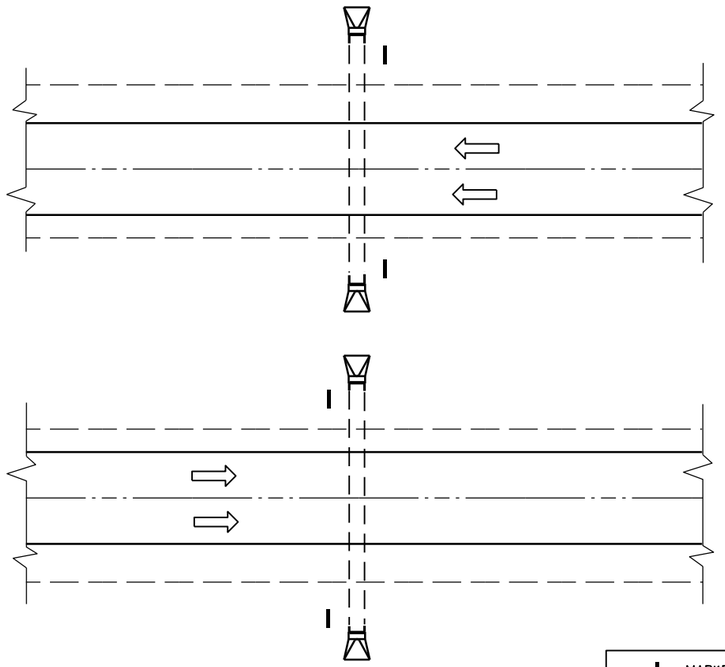

PLAN VIEW

DIVIDED HIGHWAY

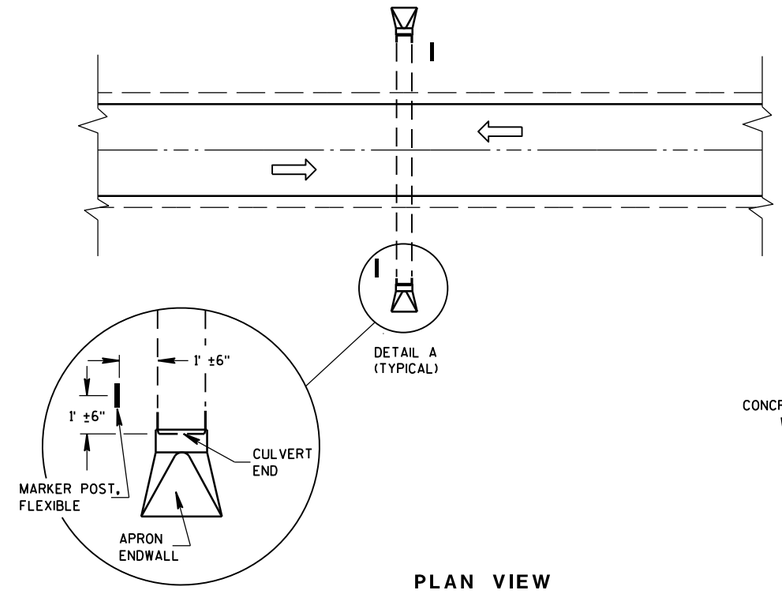

DETAIL A
(TYPICAL)

PLAN VIEW

UNDIVIDED HIGHWAY

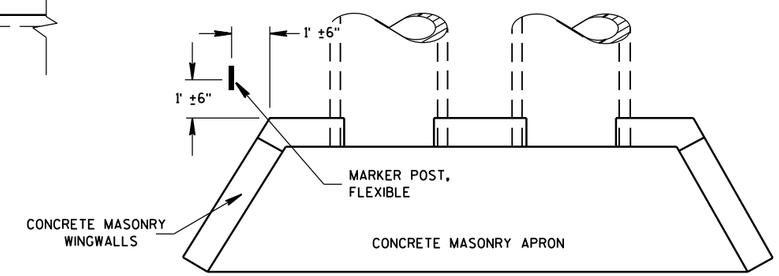

PLAN VIEW

CONCRETE MASONRY ENDWALLS FOR CULVERT PIPE AND PIPE ARCH

MARKER POST, FLEXIBLE

DIRECTION OF TRAFFIC FLOW

FLEXIBLE MARKER POST LOCATION

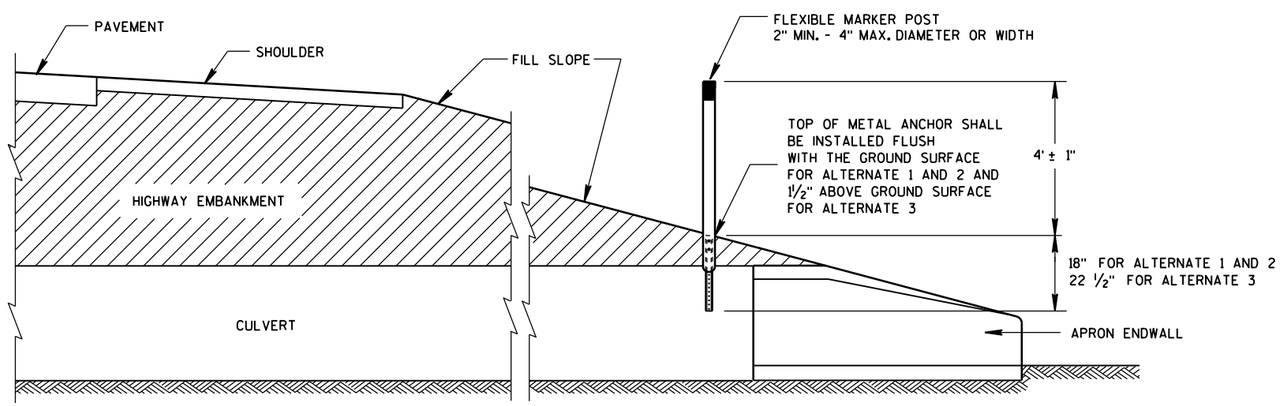

CROSS SECTION

FLEXIBLE MARKER POST

FLEXIBLE MARKER POST FOR CULVERT END

STATE OF WISCONSIN
DEPARTMENT OF TRANSPORTATION

6

6

S.D.D. 15 A 3-2a

S.D.D. 15 A 3-2a

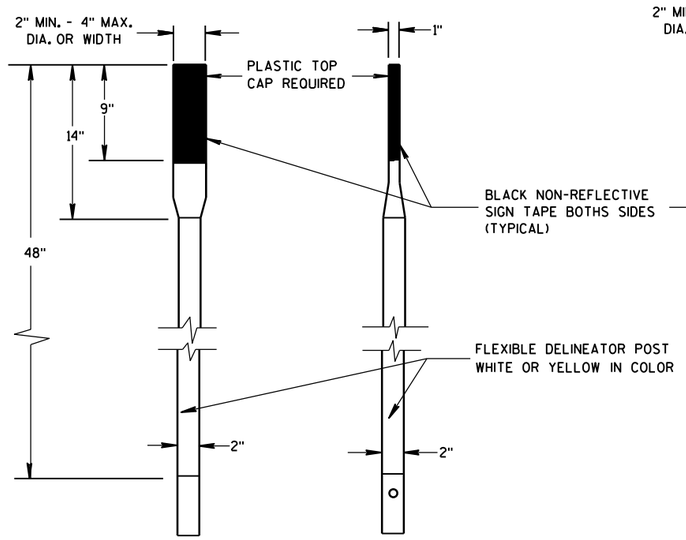

FRONT VIEW SIDE VIEW

ALTERNATE 1

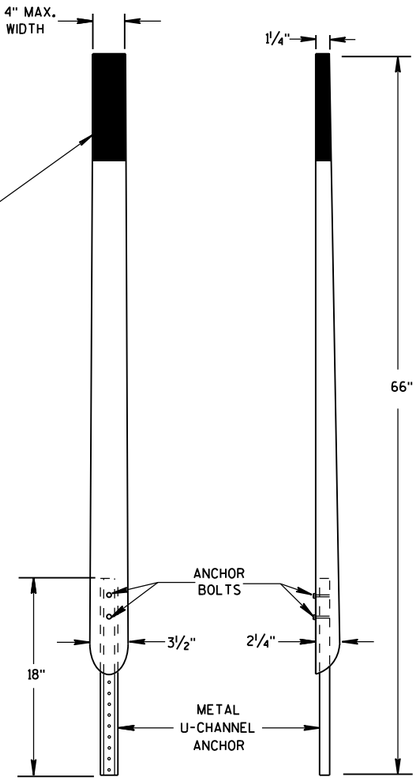

FRONT VIEW SIDE VIEW

ALTERNATE 2

FLEXIBLE MARKER POSTS

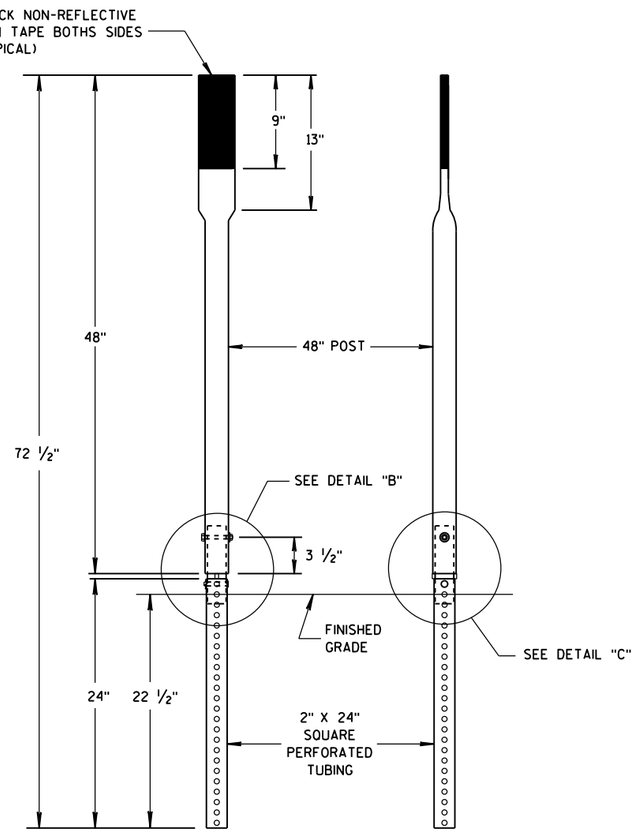

FRONT VIEW SIDE VIEW

ALTERNATE 3

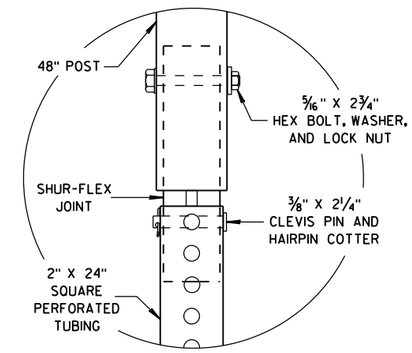

DETAIL B

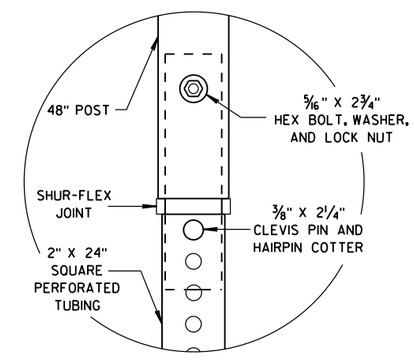

DETAIL C

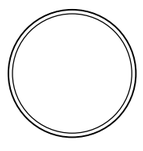

SECTION A-A

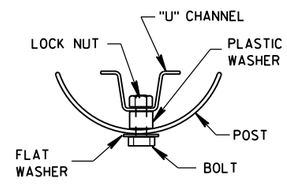

SECTION B-B

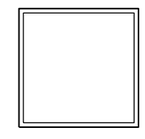

SECTION C-C

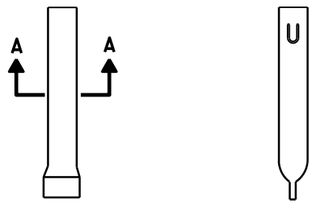

FRONT VIEW SIDE VIEW

ALTERNATE 1

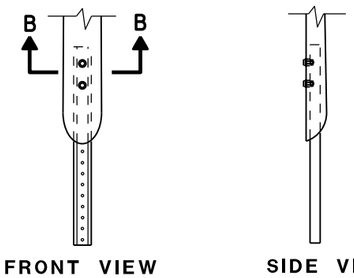

FRONT VIEW SIDE VIEW

ALTERNATE 2

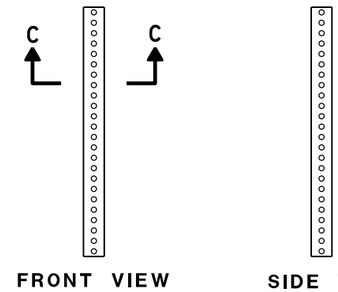

FRONT VIEW SIDE VIEW

ALTERNATE 3

FLEXIBLE MARKER POST ANCHORS

FLEXIBLE MARKER POST
FOR CULVERT END

STATE OF WISCONSIN
DEPARTMENT OF TRANSPORTATION

APPROVED
10/1/2012 /S/ Travis Feltes
DATE STATE TRAFFIC ENGINEER
FHWA

6

6

S.D.D. 15 A 3-2b

S.D.D. 15 A 3-2b

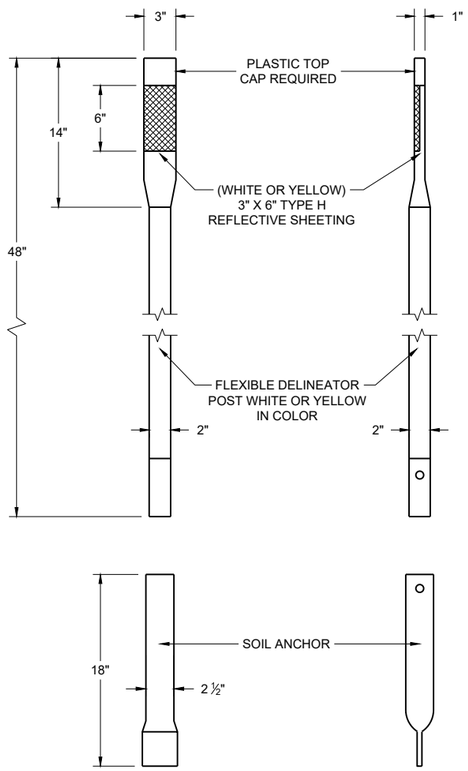

FRONT VIEW **SIDE VIEW**

ALTERNATE 1

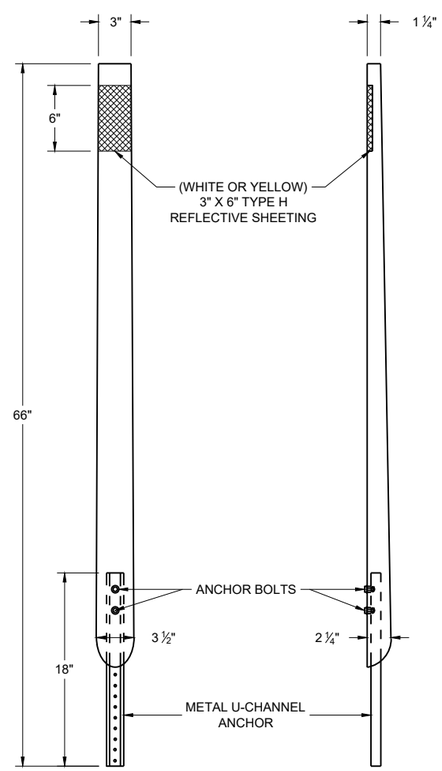

FRONT VIEW **SIDE VIEW**

ALTERNATE 2

FLEXIBLE DELINEATOR POSTS

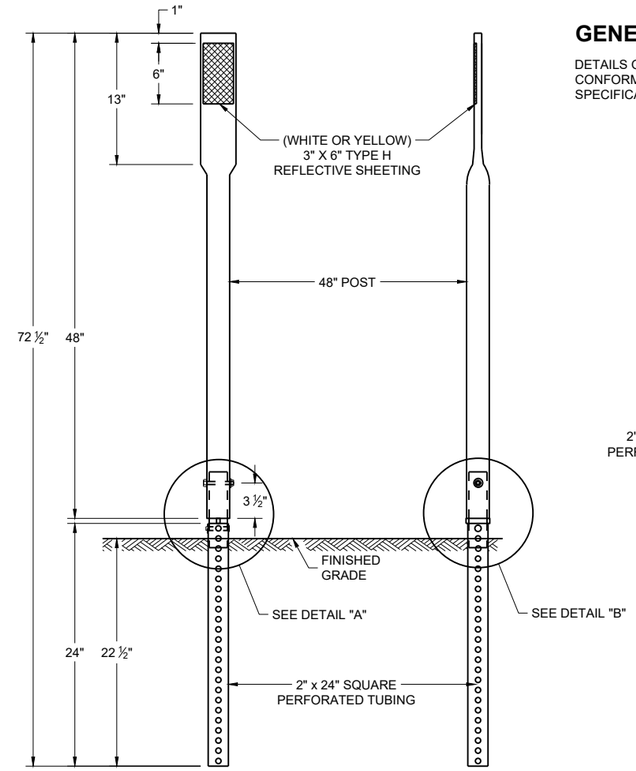

FRONT VIEW **SIDE VIEW**

ALTERNATE 3

GENERAL NOTES

DETAILS OF CONSTRUCTION NOT SHOWN ON THIS DRAWING SHALL CONFORM TO THE PERTINENT REQUIREMENTS OF THE STANDARD SPECIFICATIONS AND THE APPLICABLE SPECIAL PROVISIONS.

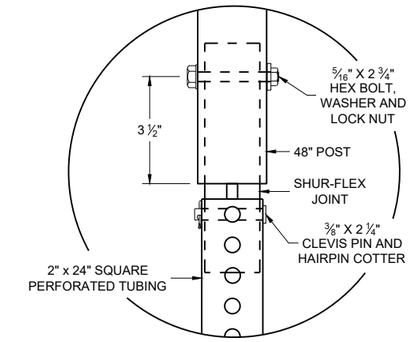

DETAIL A

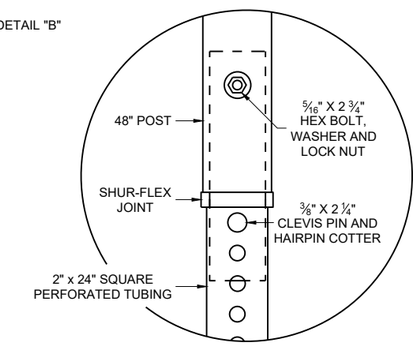

DETAIL B

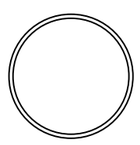

SECTION A - A

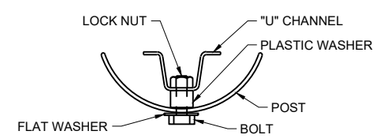

SECTION B - B

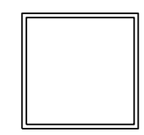

SECTION C - C

REFLECTOR SPACING TABLE

REFLECTOR SPACING	LOCATION
* 100' C-C	RAMPS
400' C-C	MAINLINE

* START AT BEGINNING OF RAMP TAPER AND END AT END OF RAMP TAPER

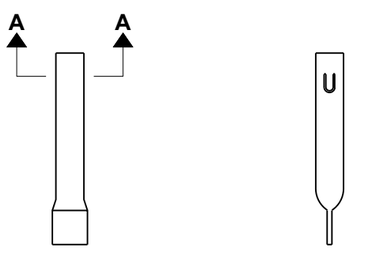

FRONT VIEW **SIDE VIEW**

ALTERNATE 1

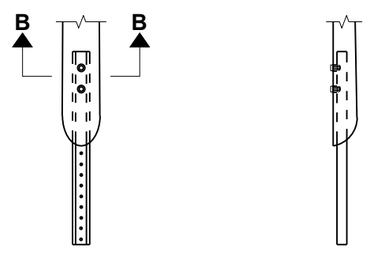

FRONT VIEW **SIDE VIEW**

ALTERNATE 2

FLEXIBLE MARKER POST ANCHORS

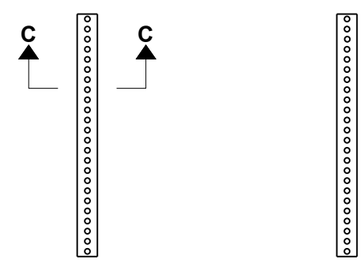

FRONT VIEW **SIDE VIEW**

ALTERNATE 3

FLEXIBLE DELINEATOR POST

STATE OF WISCONSIN
DEPARTMENT OF TRANSPORTATION

APPROVED
March 2024 — DATE
/S/ Jeannie Silver — Statewide Pavement Marking Engineer
FHWA

6

SDD 15A04-08a

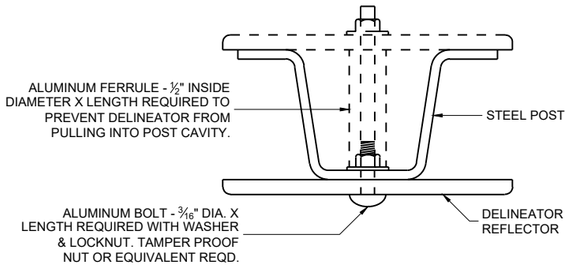

MOUNTING DETAIL FOR DELINEATOR REFLECTOR

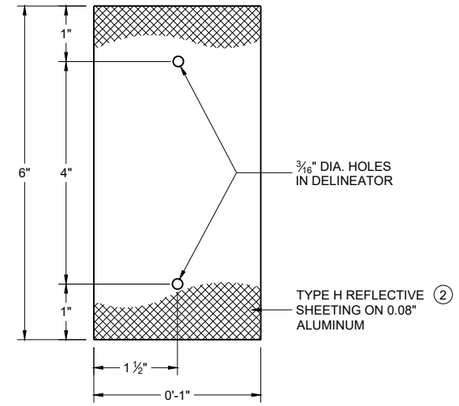

DETAIL "A" 3" X 6" DELINEATOR REFLECTOR

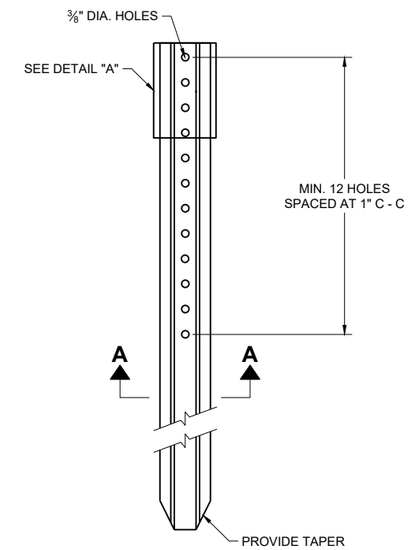

DELINEATOR POST

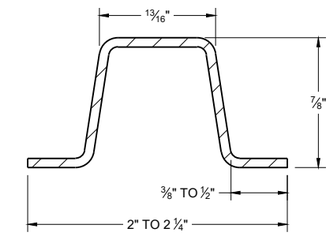

SECTION A - A

WEIGHT 1.12 LBS PER FT. \ 0.1 LB.

REFLECTOR SPACING TABLE

REFLECTOR SPACING	LOCATION
* 100' C-C	RAMPS
400' C-C	MAINLINE

* START AT BEGINNING OF RAMP TAPER AND END AT END OF RAMP TAPER

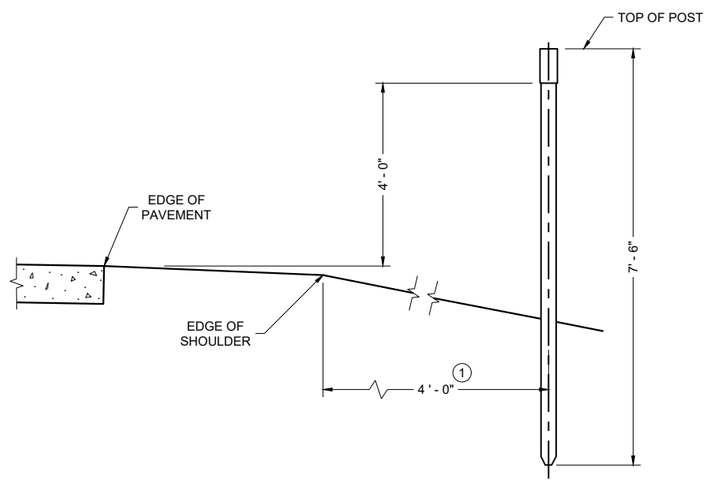

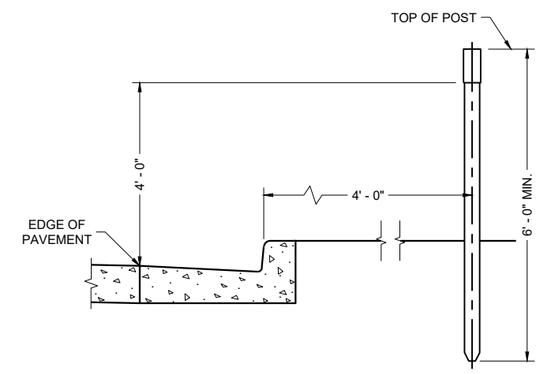

TYPICAL INSTALLATIONS OF DELINEATOR POSTS

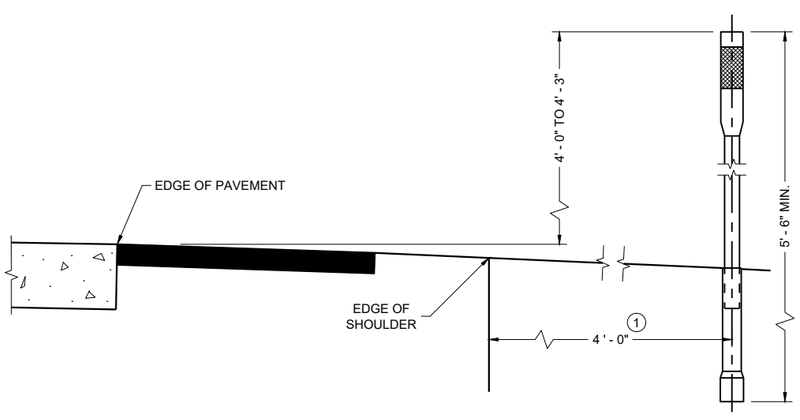

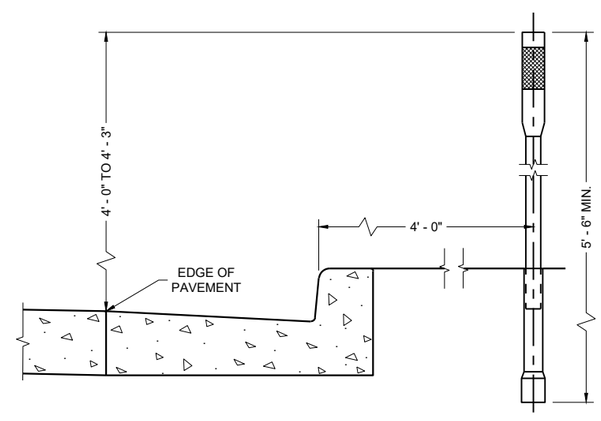

TYPICAL INSTALLATIONS OF FLEXIBLE DELINEATOR POSTS

GENERAL NOTES

DETAILS OF CONSTRUCTION NOT SHOWN ON THIS DRAWING SHALL CONFORM TO THE PERTINENT REQUIREMENTS OF TEH STANDARD SPECIFICATIONS AND THE APPLICABLE SPECIAL PROVISIONS.

1. DELINEATORS SHALL BE PLACED AT A CONSTANT DISTANCE FROM THE EDGE OF THE SHOULDER FOR THE LENGTH OF THE INSTALLATION.
2. FURNISH TYPE H SHEETING FROM THE APPROVED PRODUCTS LIST.

DELINEATOR POST WITH REFLECTIVE SHEETING

STATE OF WISCONSIN
DEPARTMENT OF TRANSPORTATION

APPROVED
March 2024 — DATE
/S/ Jeannie Silver — Statewide Pavement Marking Engineer

FHWA

6

SDD 15A04-08c

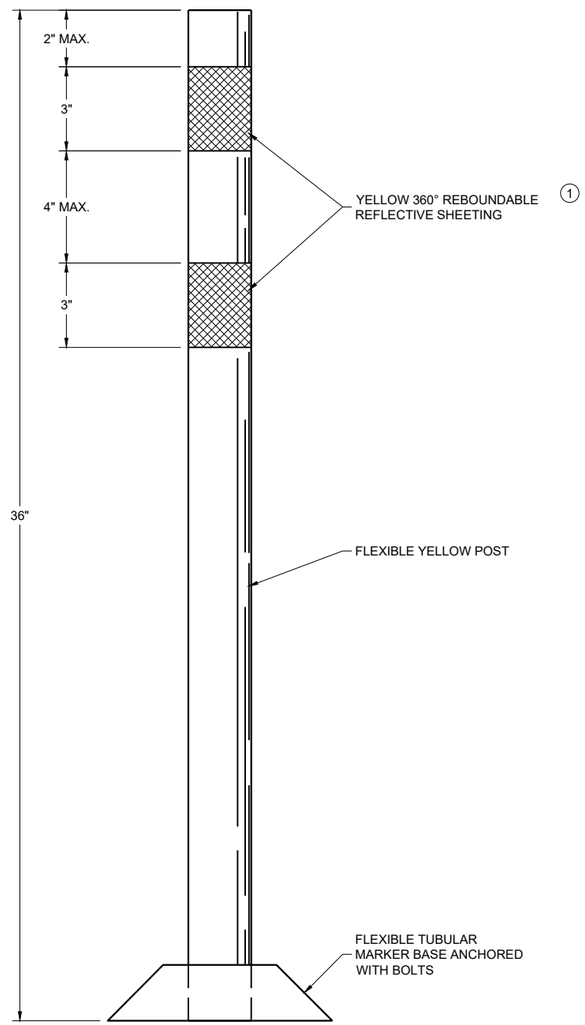

PERMANENT FLEXIBLE TUBULAR MARKER POST

GENERAL NOTES

DETAILS OF CONSTRUCTION NOT SHOWN ON THIS DRAWING SHALL CONFORM TO THE PERTINENT REQUIREMENTS OF THE STANDARD SPECIFICATIONS AND THE APPLICABLE SPECIAL PROVISIONS.

SURFACE MOUNTED BASES SHALL BE FURNISHED IN ACCORDANCE WITH MANUFACTURERS RECOMMENDATIONS TO BE COMPATIBLE WITH FLEXIBLE TUBULAR MARKER POSTS TO A SIZE AND SHAPE THAT WILL PROVIDE A STABLE POST FOUNDATION WHEN SECURED TO THE PAVEMENT.

THE ASPHALTIC ADHESIVE OR BUTYL PAD FURNISHED SHALL BE IN ACCORDANCE WITH MANUFACTURERS RECOMMENDATIONS, UNLESS DIRECTED BY THE ENGINEER TO USE BOLTS.

1 REFLECTIVE SHEETING SHALL FOLLOW THE REQUIREMENTS IN THE APPROVED PRODUCTS LISTING FOR SIGN SHEETING.

CHANNELIZING DEVICES PERMANENT FLEXIBLE TUBULAR MARKER POST

STATE OF WISCONSIN
DEPARTMENT OF TRANSPORTATION

APPROVED
March 2024 — DATE
/S/ Jeannie Silver — Statewide Pavement Marking Engineer
FHWA

6

SDD 15A04-08d

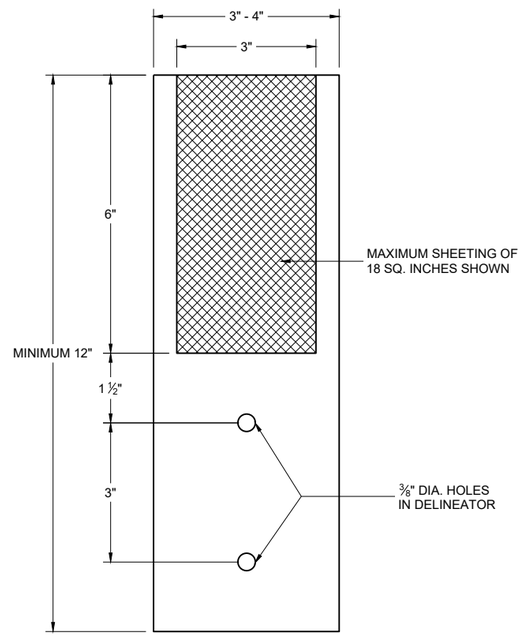

4" x 12" DELINEATOR WITH REFLECTIVE SHEETING

REFLECTOR SPACING TABLE

REFLECTOR SPACING	MINIMUM NUMBER OF REFLECTORS
100' C-C	3

DELINEATOR POST WITH REFLECTIVE SHEETING

STATE OF WISCONSIN
DEPARTMENT OF TRANSPORTATION

APPROVED
March 2024 — DATE
/S/ Jeannie Silver — Statewide Pavement Marking Engineer
FHWA

6

SDD 15A04-08e

THIS DRAWING PROVIDES GENERAL GUIDANCE ON TYPICAL TO SIGN LAYOUT AND SPACING. SEE PROJECT TO SIGNING SHEETS FOR SPECIFIC DETAILS FOR EACH PROJECT.

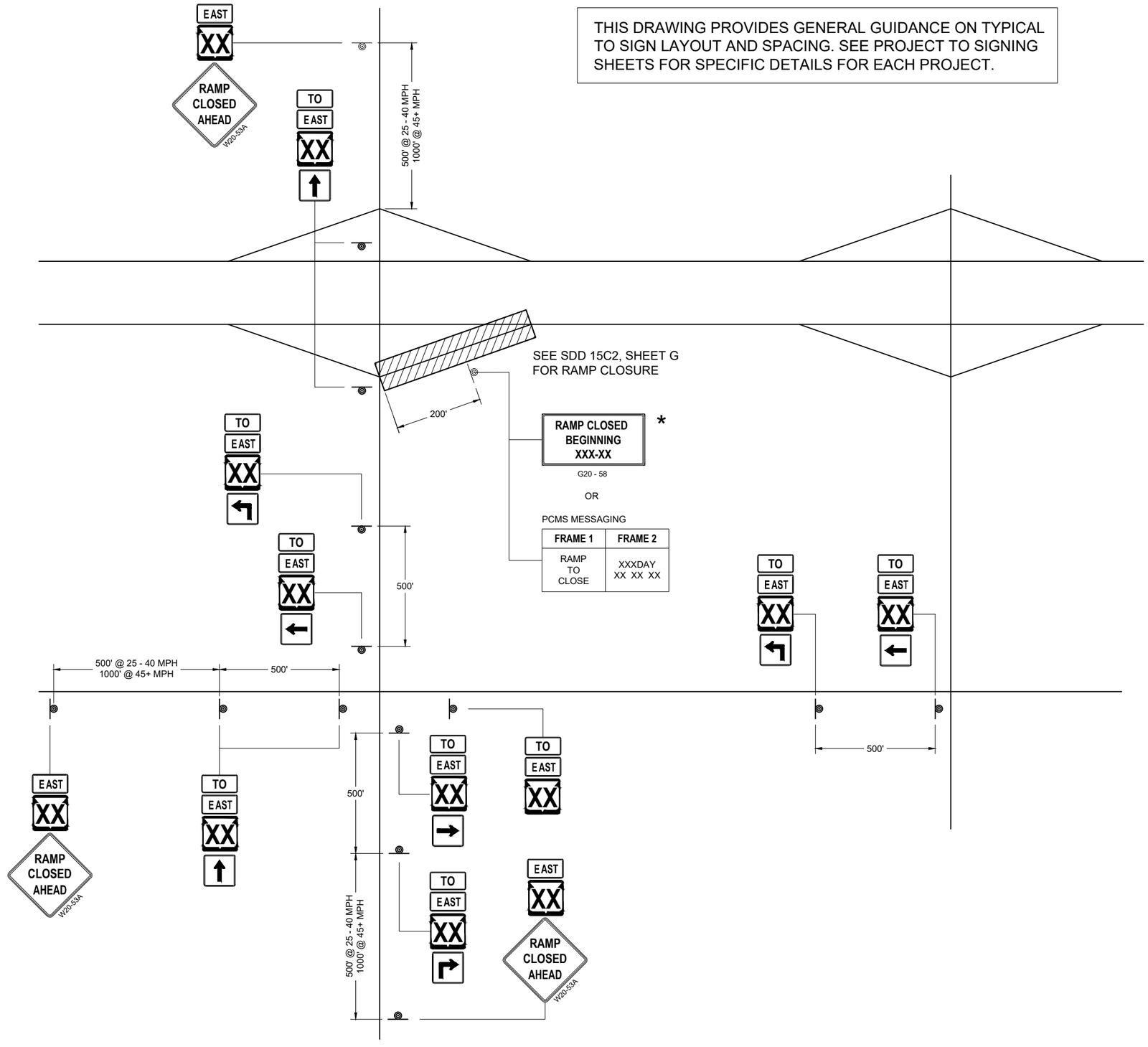

LEGEND

SIGN ON PERMANENT SUPPORT

TO EAST — MO4 - 5, M3 - X

XX M1 - 6 OR XX M1 - 4 OR INTERSTATE XX M1 - 1

M05 - 1 OR M06 - 1 OR M06 - 1

GENERAL NOTES

THE EXACT NUMBER, LOCATION AND SPACING OF ALL SIGNS SHALL BE ADJUSTED TO FIT FIELD CONDITIONS AS APPROVED BY THE ENGINEER.

IF THERE ARE ANY ROUTE MARKER ASSEMBLIES THAT WILL REMAIN IN PLACE, ADJUST THE LOCATION OF THE TO ROUTE SIGNS TO CORRESPOND WITH THE EXISTING ASSEMBLIES. SEE SPECIFIC PROJECT TO SIGNING DETAIL SHEETS. MODIFY EXISTING SIGNS WHERE POSSIBLE.

THE SPACING BETWEEN TRAFFIC CONTROL AND TO SIGNS SHOULD BE ADJUSTED TO NOT CONFLICT WITH AND TO PROVIDE A DESIRABLE MINIMUM OF 200 FEET CLEARANCE TO EXISTING SIGNS THAT WILL REMAIN IN PLACE.

ANY SIGNS TEMPORARY OR EXISTING, WHICH CONFLICT WITH TRAFFIC CONTROL " IN USE" SHALL BE REMOVED OR COVERED AS NEEDED AND AS APPROVED BY THE ENGINEER.

SIGNS THAT SHALL BE IN PLACE LESS THAN 7 CONTINUOUS DAYS AND NIGHTS MAY BE MOUNTED ON PORTABLE SUPPORTS.

"MO" SIGNS ARE THE SAME AS "M" SIGNS EXCEPT THE BACKGROUND IS ORANGE.

SIGN SIZES SHALL BE AS FOLLOW:
- M3 - X SHALL BE 24" X 12". (36" X 18" IF NEEDED TO MATCH EXISTING SIGNS).
- MO4 - 5 SHALL BE 24" X 12". (36" X 18" IF NEEDED TO MATCH EXISTING SIGNS).
- M1 - 1, M1 - 4, AND M1 - 6 SHALL BE 24" X 24" (36" X 36" IF NEEDED TO MATCH EXISTING SIGNS).
- MO5 - 1, MO5 - 2, AND MO6 - 1, SHALL BE 21" X 21". (30" X 30" IF NEEDED TO MATCH EXISTING SIGNS).
- W20 - 53A SHALL BE 48" X 48"

* PLACE "RAMP CLOSED BEGINNING" SIGN 7 CALENDAR DAYS PRIOR TO CLOSURE OR AS DIRECTED BY THE ENGINEER. SEE WISCONSIN STANDARD SIGN PLATES FOR LAYOUT.

ON RAMP LANE CLOSURE

STATE OF WISCONSIN
DEPARTMENT OF TRANSPORTATION

APPROVED
November 2025 — DATE
/S/ Andrew Heidtke — WORK ZONE ENGINEER
FHWA

THIS DRAWING PROVIDES GENERAL GUIDANCE ON TYPICAL "TO" MO-4 SIGN LAYOUT AND SPACING. SEE PROJECT TO SIGNING SHEETS FOR SPECIFIC DETAILS FOR EACH PROJECT.

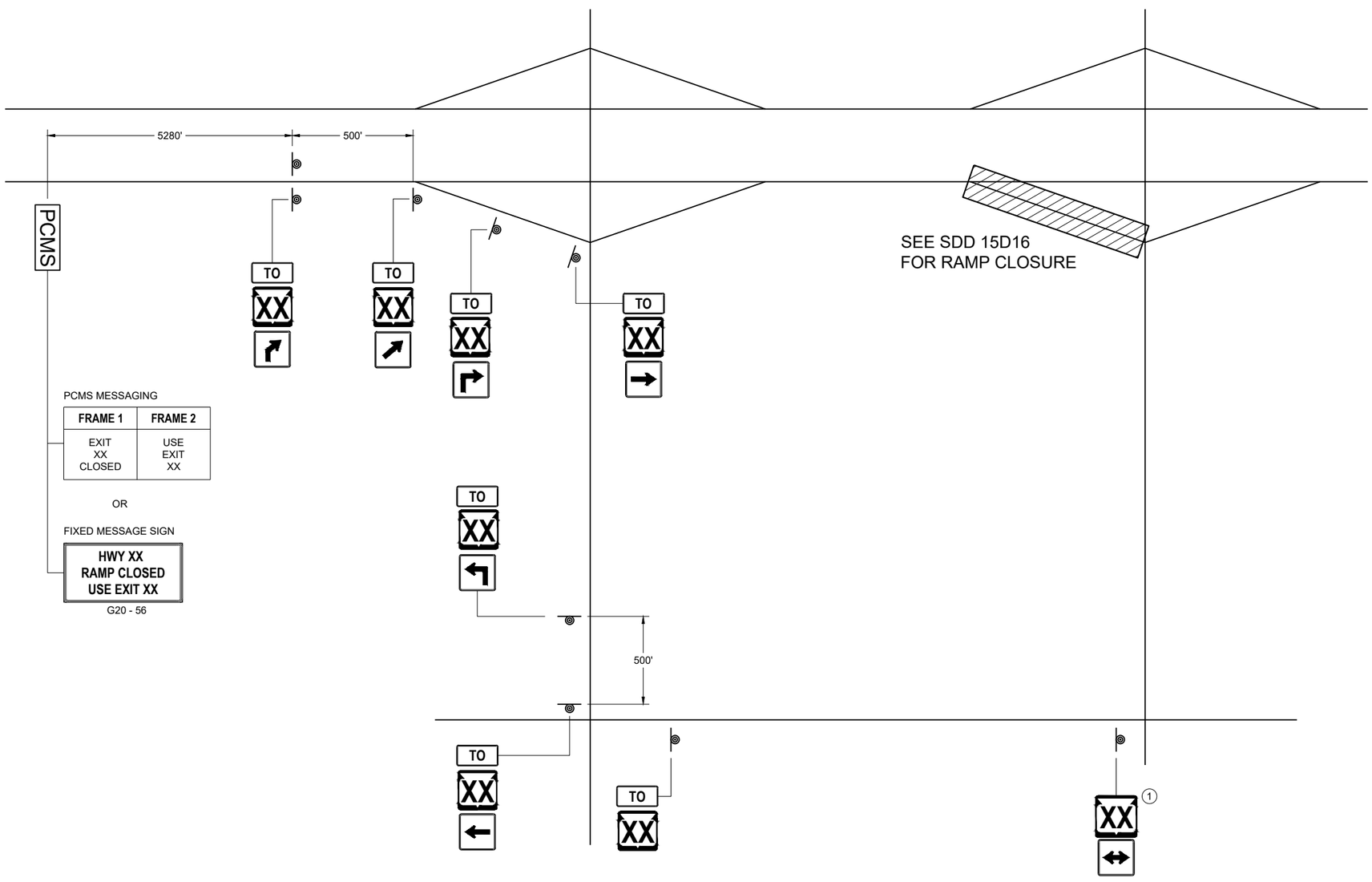

PCMS MESSAGING

FRAME 1	FRAME 2
EXIT XX CLOSED	USE EXIT XX

OR

FIXED MESSAGE SIGN

HWY XX
RAMP CLOSED
USE EXIT XX

G20 - 56

LEGEND

SIGN ON PERMANENT SUPPORT

PCMS PORTABLE CHANGEABLE MESSAGE SIGN

TO MO4 - 5

XX M1 - 4 OR XX M1 - 6 OR COUNTY X M1 - 5A

M05 - 1 OR M05 - 2 OR M06 - 1 OR M06 - 2 OR M06 - 4

GENERAL NOTES

SEE SDD 15D16 "TRAFFIC CONTROL, EXIT RAMP CLOSURE" DETAIL FOR TRAFFIC CONTROL AT EXIT RAMP CLOSURE.

THE EXACT NUMBER, LOCATION AND SPACING OF ALL SIGNS SHALL BE ADJUSTED TO FIT FIELD CONDITIONS AS APPROVED BY THE ENGINEER.

IF THERE ARE ANY ROUTE MARKER ASSEMBLIES THAT WILL REMAIN IN PLACE, ADJUST THE LOCATION OF THE "TO" MO-4 ROUTE SIGNS TO CORRESPOND WITH THE EXISTING ASSEMBLIES. SEE SPECIFIC PROJECT TO SIGNING DETAIL SHEETS. MODIFY EXISTING SIGNS WHERE POSSIBLE.

THE SPACING BETWEEN TRAFFIC CONTROL AND "TO" MO-4 SIGNS SHOULD BE ADJUSTED TO NOT CONFLICT WITH AND TO PROVIDE A DESIRABLE MINIMUM OF 200 FEET CLEARANCE TO EXISTING SIGNS THAT WILL REMAIN IN PLACE.

ANY SIGNS TEMPORARY OR EXISTING, WHICH CONFLICT WITH TRAFFIC CONTROL " IN USE" SHALL BE REMOVED OR COVERED AS NEEDED AND AS APPROVED BY THE ENGINEER.

SIGNS THAT SHALL BE IN PLACE LESS THAN 7 CONTINUOUS DAYS AND NIGHTS MAY BE MOUNTED ON PORTABLE SUPPORTS.

"MO" SIGNS ARE THE SAME AS "M" SIGNS EXCEPT THE BACKGROUND IS ORANGE.

SIGN SIZES SHALL BE AS FOLLOW:

- MO4 - 5 SHALL BE 24" X 12". (36" X 18" IF NEEDED TO MATCH EXISTING SIGNS).
- M1 - 4, M1 - 5A, AND M1 - 6 SHALL BE 24" X 24" (36" X 36" IF NEEDED TO MATCH EXISTING SIGNS).
- MO5 - 1, MO5 - 2, AND MO6 - 1, SHALL BE 21" X 21". (30" X 30" IF NEEDED TO MATCH EXISTING SIGNS).

(1) ONLY ADD IF THERE ARE NO EXISTING ROUTE MARKERS FOR THE INTERSECTING ROADWAY.

OFF RAMP LANE CLOSURE

STATE OF WISCONSIN
DEPARTMENT OF TRANSPORTATION

APPROVED
November 2025 — DATE
/S/ Andrew Heidtke — WORK ZONE ENGINEER

FHWA

6
SDD 15C02-10e

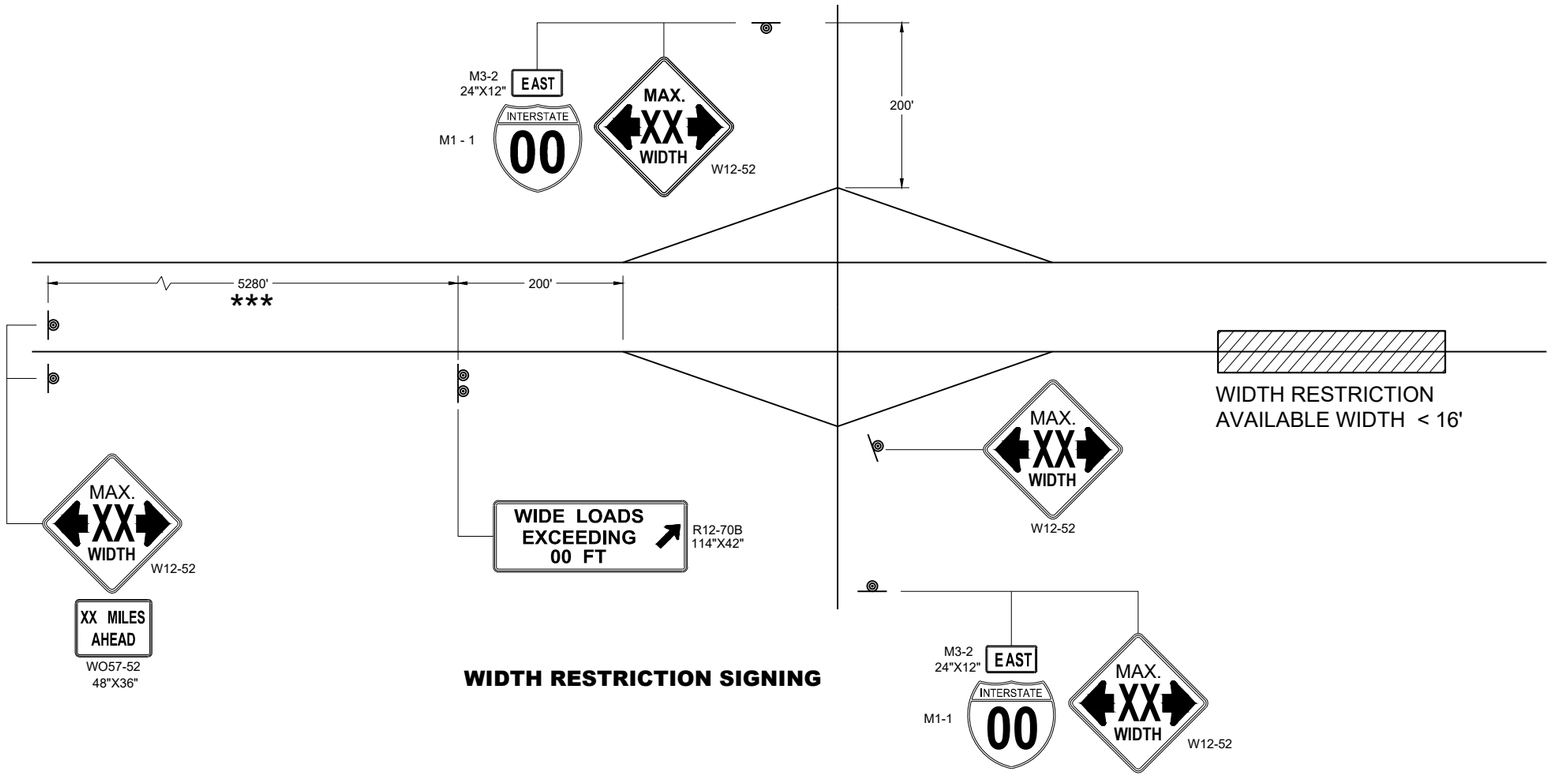

WIDTH RESTRICTION SIGNING

LEGEND

◎ SIGN ON PERMANENT SUPPORT

GENERAL NOTES

THE EXACT NUMBER, LOCATION AND SPACING OF ALL SIGNS SHALL BE ADJUSTED TO FIT FIELD CONDITIONS AS APPROVED BY THE ENGINEER.

THE SPACING BETWEEN SIGNS SHOULD BE ADJUSTED TO NOT CONFLICT WITH AND TO PROVIDE A DESIRABLE MINIMUM OF 200 FEET CLEARANCE TO EXISTING SIGNS THAT WILL REMAIN IN PLACE.

ANY SIGNS TEMPORARY OR EXISTING, WHICH CONFLICT WITH TRAFFIC CONTROL " IN USE" SHALL BE REMOVED OR COVERED AS NEEDED AND AS APPROVED BY THE ENGINEER.

ALL SIGNS ARE 48" X 48" UNLESS OTHERWISE NOTED.

"WO" SIGNS ARE THE SAME AS "W" SIGNS EXCEPT THE BACKGROUND IS ORANGE.

WIDTH ON SIGN TO BE APPROXIMATELY ONE FOOT LESS THAN AVAILABLE WIDTH.

* PLACE 500 FEET AFTER THE W20 - 1A AND 500 FEET BEFORE ADDITIONAL SIGNS FOR ROADWAYS WITH A PRE - CONSTRUCTION SPEED LIMIT OF 45 MPH OR MORE. FOR 35-40 MPH, USE 350 FOOT TYPICAL SPACING. FOR 25-30 MPH, USE 200 FOOT TYPICAL SPACING.

** SIGN SHALL BE VISIBLE FROM ROADWAY.

*** ADDITIONAL SIGNS NEEDED IF THERE IS AN ON RAMP BETWEEN SIGNS.

WIDTH ON SIGN TO BE APPROX. 1 - FOOT LESS THAN AVAILABLE WIDTH

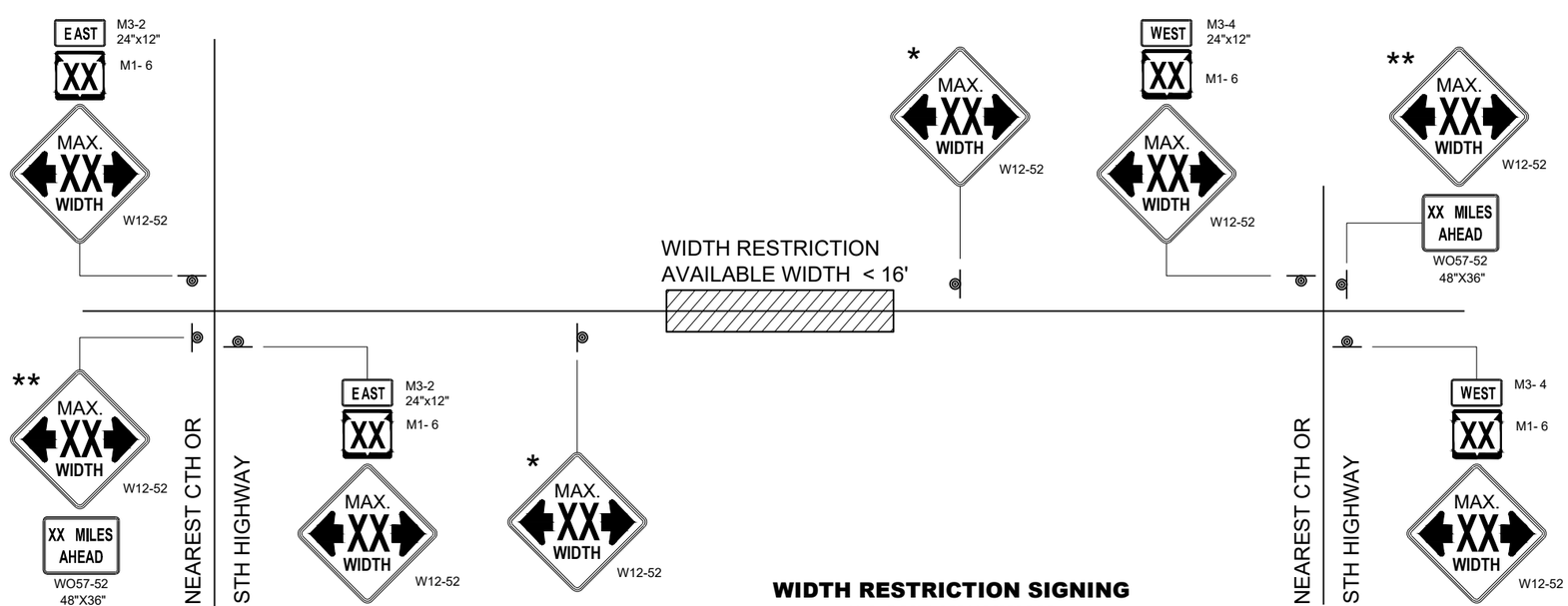

WIDTH RESTRICTION SIGNING
2 LANE HIGHWAY

ADVANCED WIDTH RESTRICTION SIGNING

STATE OF WISCONSIN
DEPARTMENT OF TRANSPORTATION

APPROVED
November 2025 — DATE
/S/ Andrew Heidtke — WORK ZONE ENGINEER
FHWA

6
SDD 15C02-10f

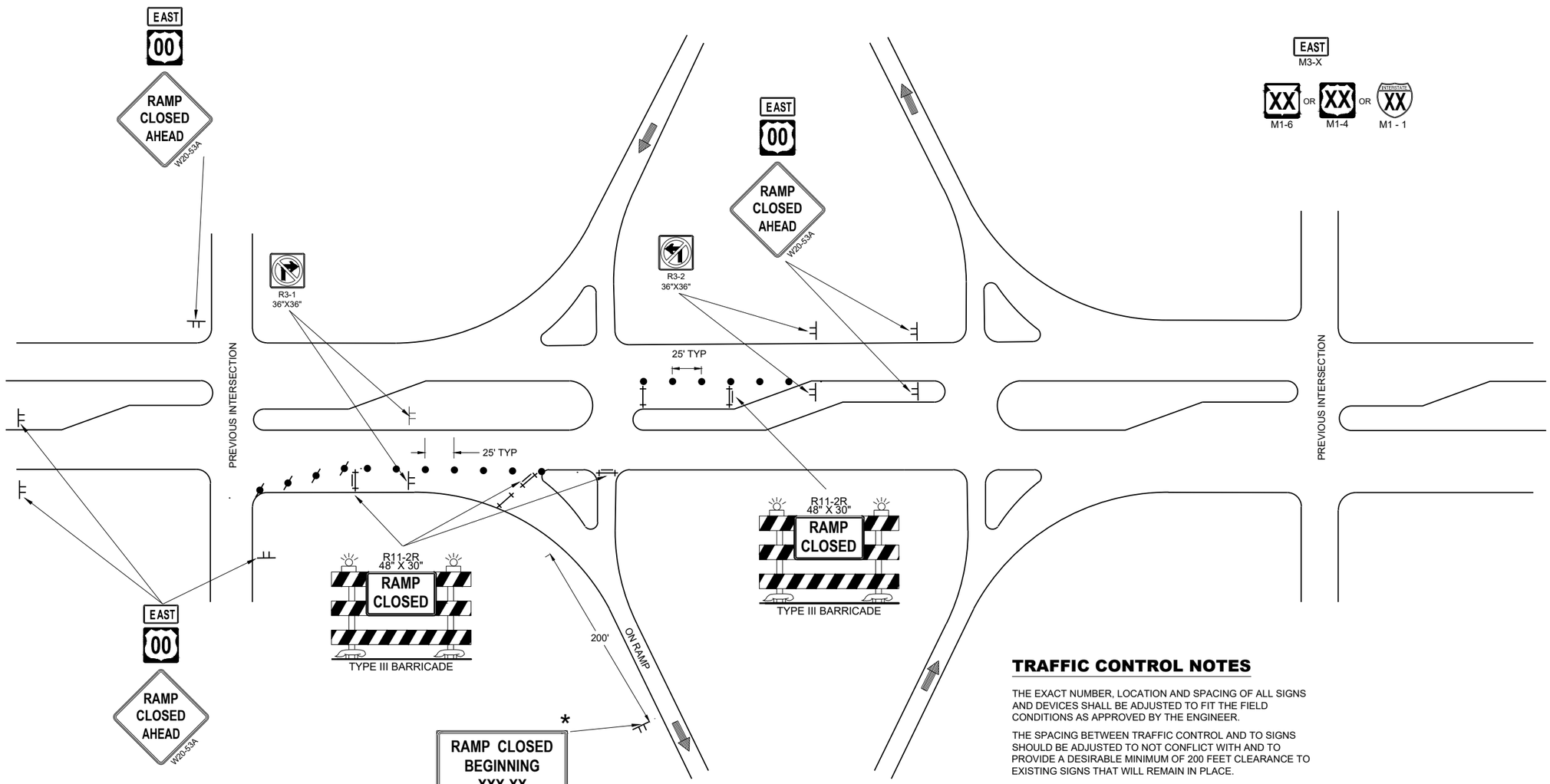

OR

PCMS MESSAGING

FRAME 1	FRAME 2
RAMP TO CLOSE	XXX DAY XX XX XX

LEGEND

- ● TRAFFIC CONTROL DRUM
- TRAFFIC CONTROL DRUM WITH TYPE "C" STEADY BURN LIGHT
- TYPE III BARRICADE
- TYPE III BARRICADE WITH ATTACHED SIGN
- SIGN ON PERMANENT SUPPORT
- SIGN ON TEMPORARY SUPPORT
- DIRECTION OF TRAFFIC

TRAFFIC CONTROL NOTES

THE EXACT NUMBER, LOCATION AND SPACING OF ALL SIGNS AND DEVICES SHALL BE ADJUSTED TO FIT THE FIELD CONDITIONS AS APPROVED BY THE ENGINEER.

THE SPACING BETWEEN TRAFFIC CONTROL AND TO SIGNS SHOULD BE ADJUSTED TO NOT CONFLICT WITH AND TO PROVIDE A DESIRABLE MINIMUM OF 200 FEET CLEARANCE TO EXISTING SIGNS THAT WILL REMAIN IN PLACE.

ANY SIGNS TEMPORARY OR EXISTING, WHICH CONFLICT WITH THE TRAFFIC CONTROL "IN USE" SHALL BE REMOVED OR COVERED AS NEEDED AND AS APPROVED BY THE ENGINEER.

SIGNS THAT SHALL BE IN PLACE LESS THAN 7 CONTINUOUS DAYS AND NIGHTS MAY BE MOUNTED ON PORTABLE SUPPORTS.

SIGN SIZES SHALL BE AS FOLLOWS:
- · M3–X SHALL BE 24"x24" (36" x18" IF NEEDED TO MATCH EXISTING SIGNS)
- · M1-1, M1-4, AND M1-6 SHALL BE 24"x24" (36"x36" IF NEEDED TO MATCH EXISTING SIGNS)
- · W20-53A SHALL BE 48"X48"

* PLACE "RAMP CLOSED BEGINNING" SIGN 7 CALENDAR DAYS PRIOR TO CLOSURE OR AS DIRECTED BY THE ENGINEER. SEE WISCONSIN STANDARD SIGN PLATES FOR LAYOUT.

TRAFFIC CONTROL FOR ENTRANCE RAMP CLOSURE

TRAFFIC CONTROL FOR ENTRANCE RAMP CLOSURE

STATE OF WISCONSIN
DEPARTMENT OF TRANSPORTATION

APPROVED
November 2025 — DATE
/S/ Andrew Heidtke — WORK ZONE ENGINEER
FHWA

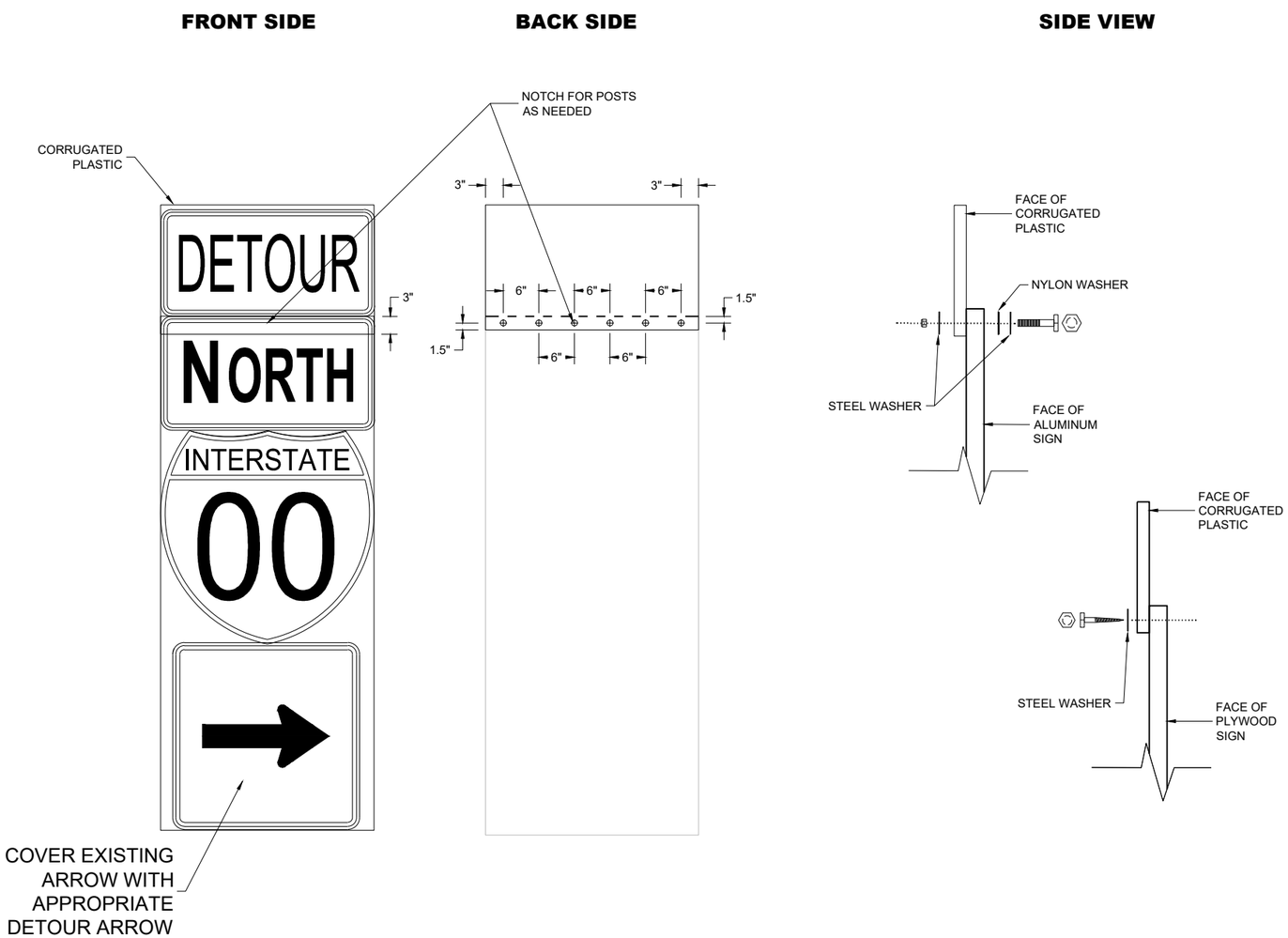

GENERAL NOTES

CELLS OF CORRUGATED PLASTIC SHALL BE VERTICALLY ORIENTED.

PROVIDE A 0.4-INCH THICK BASE CORRUGATED PLASTIC WITH A 0.035-INCH WALL THICKNESS AND 0.4-INCH CELL SIZE.

FOR 36" WIDE SIGNS: USE 6 FASTENERS AS SHOWN.

FOR 24" WIDE SIGNS: USE 4 FASTENERS WITH EDGE SPACING AS SHOWN AND 6" SPACING BETWEEN FASTENERS.

METAL WASHERS, NUTS, BOLTS AND LAGS SHALL HAVE HEXAGONAL HEADS AND SHALL BE EITHER:

A. HOT DIP GALVANIZED IN ACCORDANCE WITH ASTM DESIGNATION: A 153, CLASS D, OR SC 3.
B. ELECTRO-GALVANIZED IN ACCORDANCE WITH ASTM DESIGNATION: B 633, TYPE III, SC3

THREADS ON BOLTS AND NUTS SHALL BE MANUFACTURED WITH SUFFICIENT ALLOWANCE FOR THE CADMIUM PLATE OR GALVANIZED COATING TO PERMIT THE NUTS TO RUN FREELY ON THE BOLTS.

PLYWOOD SIGNS:
LAG SCREWS - 5/16" x 1"
ALUMINUM SIGNS:
MACHINE BOLTS - 5/16" x 1-1/4" LENGTH W/NUTS
WASHERS:
1-1/4" O.D. x 3/8" I.D. x 1/16" STEEL
1-1/4" O.D. x 3/8" I.D. x .080 NYLON

MODIFIED ROUTE ASSEMBLY FOR DETOUR SIGNING

MODIFIED ROUTE ASSEMBLY FOR DETOUR SIGNING

STATE OF WISCONSIN
DEPARTMENT OF TRANSPORTATION

APPROVED
November 2025 — DATE
/S/ Andrew Heidtke — WORK ZONE ENGINEER
FHWA

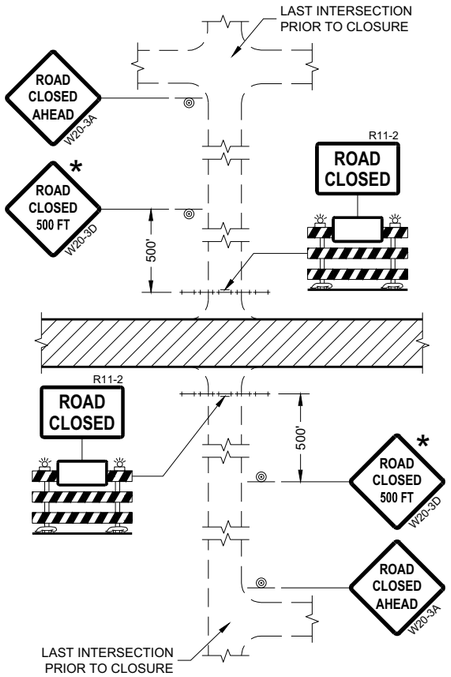

DETAIL 1
(NO ACCESS TO PROJECT)

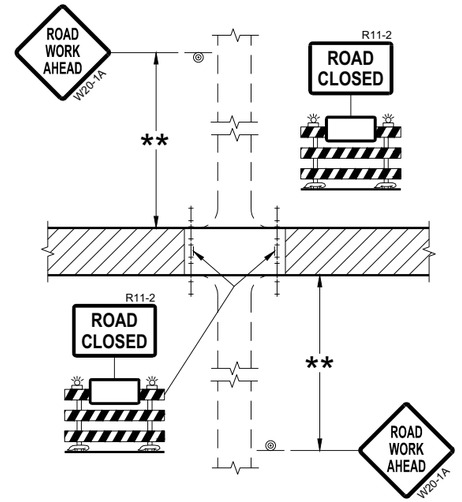

DETAIL 2
(PUBLIC CROSS-TRAFFIC MAINTAINED.
NO ACCESS TO PROJECT)

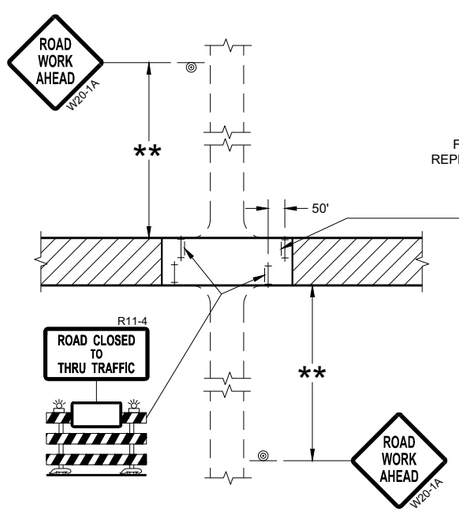

DETAIL 3
(PUBLIC CROSS-TRAFFIC MAINTAINED.
CONTRACTOR, LOCAL BUSINESS AND
RESIDENT ACCESS TO PROJECT)

FOR BRIDGE OR CULVERT
REPLACEMENT, USE ADDITIONAL
SIGN ON BARRICADE

BRIDGE OUT
XX MILES AHEAD
R11-3C

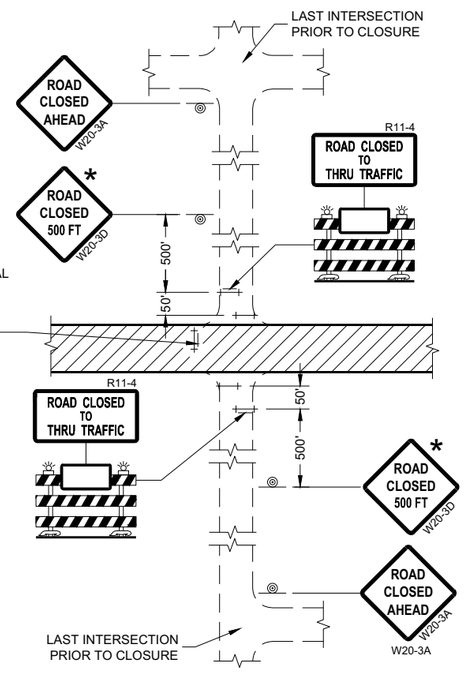

DETAIL 4
(CONTRACTOR, LOCAL BUSINESS AND
RESIDENT ACCESS TO PROJECT)

GENERAL NOTES

THE EXACT NUMBER, LOCATION, AND SPACING OF ALL SIGNS AND BARRICADES SHALL BE ADJUSTED TO FIT FIELD CONDITIONS AS APPROVED BY THE ENGINEER.

ANY SIGNS TEMPORARY OR EXISTING, WHICH CONFLICT WITH TRAFFIC CONTROL "IN USE" SHALL BE REMOVED OR COVERED AS NEEDED AND AS APPROVED BY THE ENGINEER.

THE SPACING BETWEEN TRAFFIC CONTROL SIGNS SHOULD BE ADJUSTED TO NOT CONFLICT WITH AND SHOULD PROVIDE A DESIRABLE MINIMUM OF 200 FEET CLEARANCE (500 FEET DESIRABLE) TO EXISTING SIGNS THAT WILL REMAIN IN PLACE.

IF A "STOP" SIGN MUST BE REMOVED FOR A WORK OPERATION, A TEMPORARY "STOP" SIGN SHALL BE PLACED PRIOR TO THE SIGN REMOVAL, OR A FLAGGER SHALL BE PROVIDED UNTIL THE SIGN IS REESTABLISHED.

BARRICADES THAT MUST BE MOVED FOR A WORK OPERATION SHALL BE IMMEDIATELY REESTABLISHED UPON COMPLETION OF THE OPERATION OR FOR CONTINUING OPERATIONS, AT THE END OF EACH WORKING DAY.

SIGNS THAT WILL BE IN PLACE LESS THAN SEVEN CONTINUOUS DAYS AND NIGHTS MAY BE MOUNTED ON PORTABLE SUPPORTS.

ALL TYPE III BARRICADES SHALL HAVE RAILS REFLECTORIZED ON BOTH FACES. STRIPES SHALL BE PROPERLY SLOPED DOWN TOWARD THE TRAFFIC SIDE OR AS SHOWN IN THE ROAD CLOSURE BARRICADE DETAIL "D" FOR FULL ROAD CLOSURES.

TYPE "A" LOW-INTENSITY FLASHING WARNING LIGHTS SHALL BE VISIBLE ON BOTH SIDES OF THE BARRICADE.

THE R11-2, R11-3, AND R11-4 SIGNS PLACED ON BARRICADES SHALL COVER NO MORE THAN THE TOP RAIL. THE SIGNS SHALL NOT COVER ANY PORTION OF THE MIDDLE OR BOTTOM RAILS.

ALL SIGNS SHALL BE 48" X 48" UNLESS OTHERWISE NOTED BELOW:
R11-2 SHALL BE 48" X 30".
R11-4 AND R11-3 SHALL BE 60" X 30".

* OMIT THE "ROAD CLOSED 500 FT." SIGN IF THE LAST INTERSECTION IS 500 FEET OR LESS FROM THE WORK ZONE.

** 500' MAX. OR AT LAST INTERSECTION, WHICHEVER IS CLOSEST.

LEGEND

- SIGN ON PERMANENT SUPPORT
- TYPE III BARRICADE
- TYPE III BARRICADE WITH ATTACHED SIGN
- TYPE "A" WARNING LIGHT (FLASHING)
- WORK AREA

BARRICADES AND SIGNS FOR SIDEROAD CLOSURES

STATE OF WISCONSIN
DEPARTMENT OF TRANSPORTATION

APPROVED
July 2018 — DATE
/S/ Andrew Heidtke — WORK ZONE ENGINEE
FHWA

6
SDD 15C03 - 05

GENERAL NOTES

THE EXACT NUMBER, LOCATION, AND SPACING OF ALL SIGNS AND DEVICES SHALL BE ADJUSTED TO FIT FIELD CONDITIONS.

THE SPACING BETWEEN TRAFFIC CONTROL SIGNS SHOULD BE ADJUSTED TO NOT CONFLICT WITH AND SHOULD PROVIDE A MINIMUM OF 200 FEET (500 FEET DESIRABLE) CLEARANCE TO EXISTING SIGNS THAT WILL REMAIN IN PLACE.

ALL SIGNS ARE 48" X 48" UNLESS OTHERWISE NOTED.

SIGNS THAT WILL BE IN PLACE LESS THAN SEVEN CONTINUOUS DAYS AND NIGHTS MAY BE MOUNTED ON PORTABLE SUPPORTS.

IF A "STOP" SIGN MUST BE REMOVED FOR A WORK OPERATION, A TEMPORARY "STOP" SIGN SHALL BE PLACED PRIOR TO THE SIGN REMOVAL, OR A FLAGGER SHALL BE PROVIDED UNTIL THE SIGN IS REESTABLISHED.

* OMIT G20-1 SIGNS IF LENGTH OF WORK AREA IS 2 MILES OR LESS

** PLACE AN ADDITIONAL W20-1A "ROAD WORK AHEAD" SIGN IF WORK AREA WITHIN THE PROJECT IS SEPARATED BY MORE THAN 2 MILES FROM PREVIOUS WORK AREA.

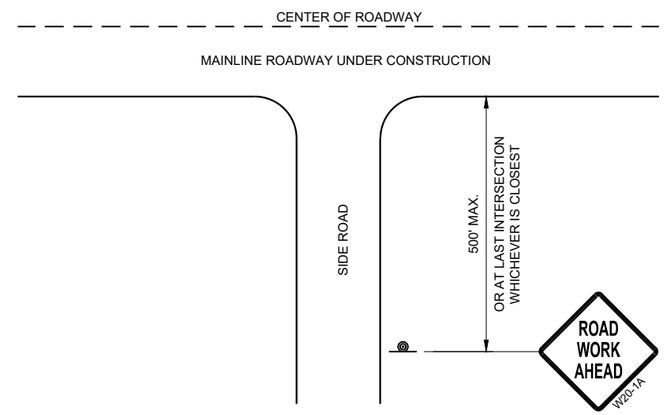

TYPICAL SIDE ROAD APPROACH WARNING SIGN DETAIL

LEGEND

- SIGN ON PERMANENT SUPPORT
- DIRECTION OF TRAFFIC
- WORK AREA

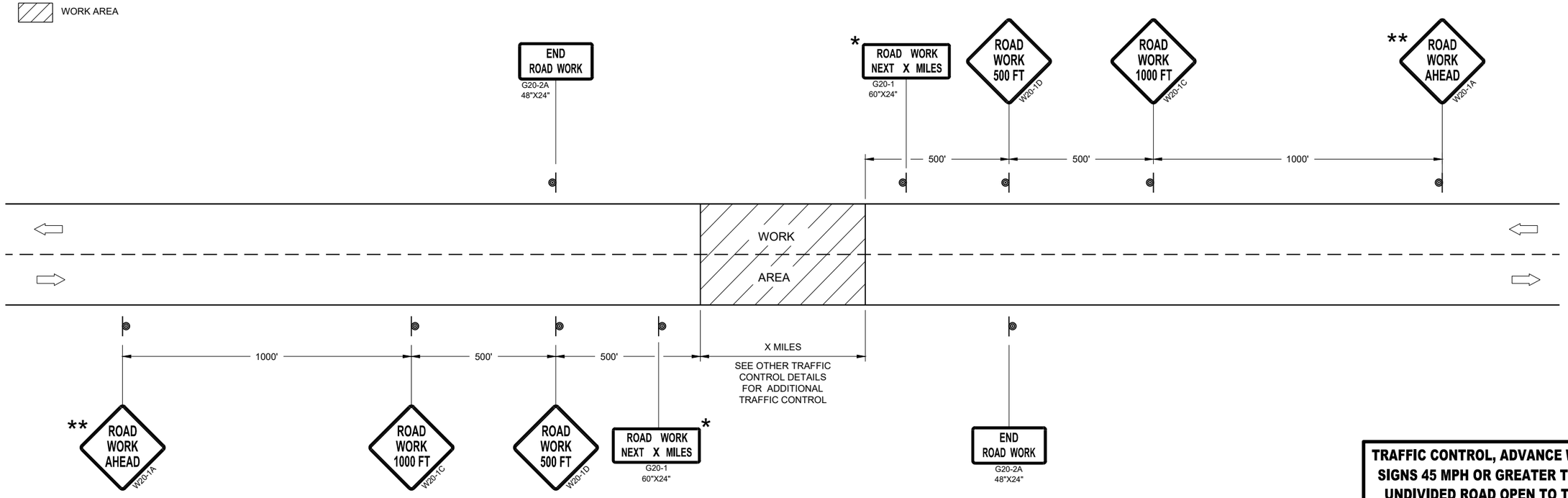

TRAFFIC CONTROL, ADVANCE WARNING SIGNS 45MPH OR GREATER

TRAFFIC CONTROL, ADVANCE WARNING SIGNS 45 MPH OR GREATER TWO-WAY UNDIVIDED ROAD OPEN TO TRAFFIC

STATE OF WISCONSIN
DEPARTMENT OF TRANSPORTATION

APPROVED
July 2018 — DATE
/S/ Andrew Heidtke — WORK ZONE ENGINEE
FHWA

6
SDD 15C04 - 05

GENERAL NOTES

DETAILS OF INSTALLATION, MATERIALS AND WORKMANSHIP NOT SHOWN ON THIS DRAWING SHALL CONFORM TO THE PERTINENT REQUIREMENTS OF THE STANDARD SPECIFICATIONS AND APPLICABLE SPECIAL PROVISIONS.

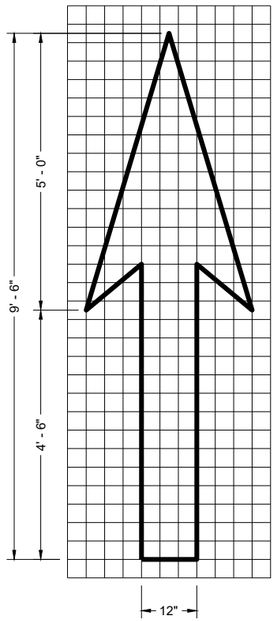

TYPE 1

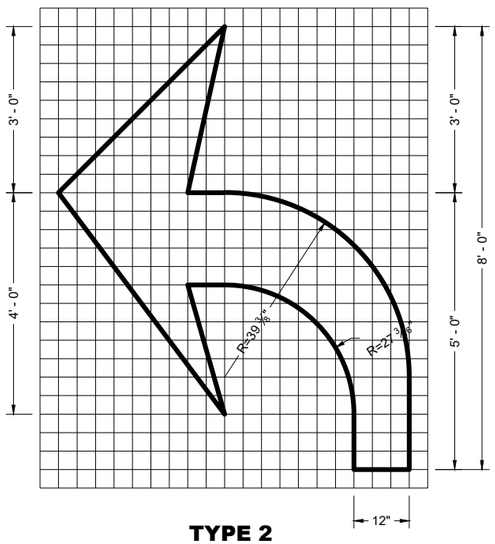

TYPE 2

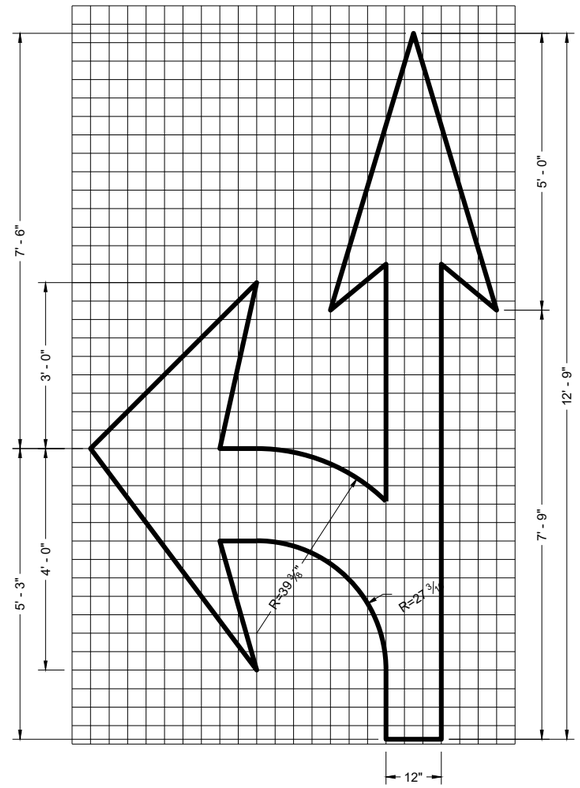

TYPE 3

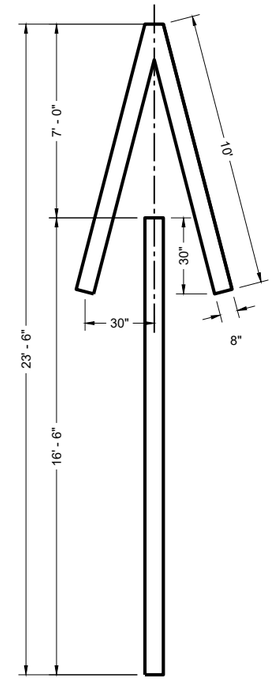

TYPE 4

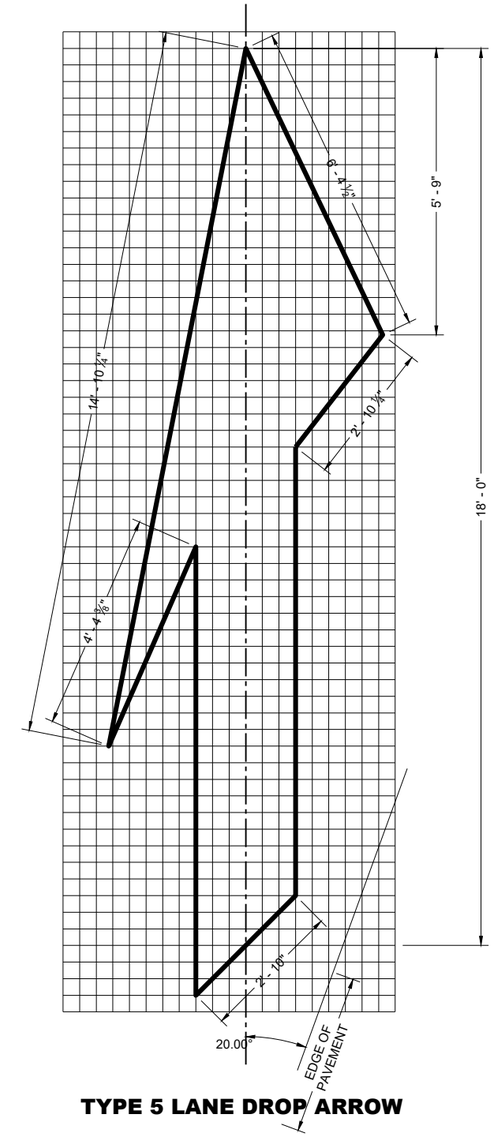

TYPE 5 LANE DROP ARROW

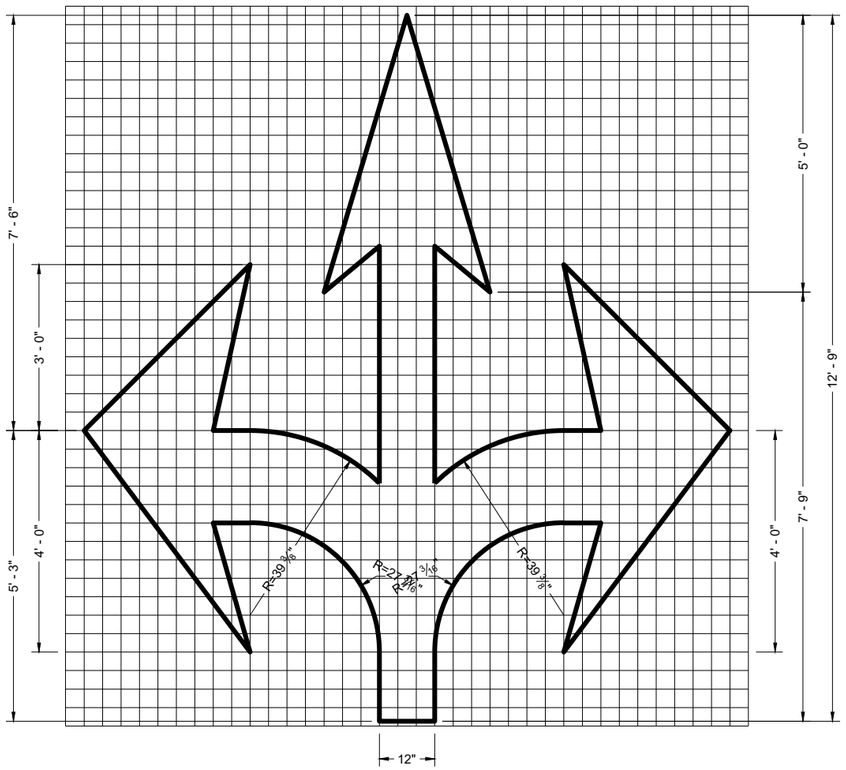

TYPE 6

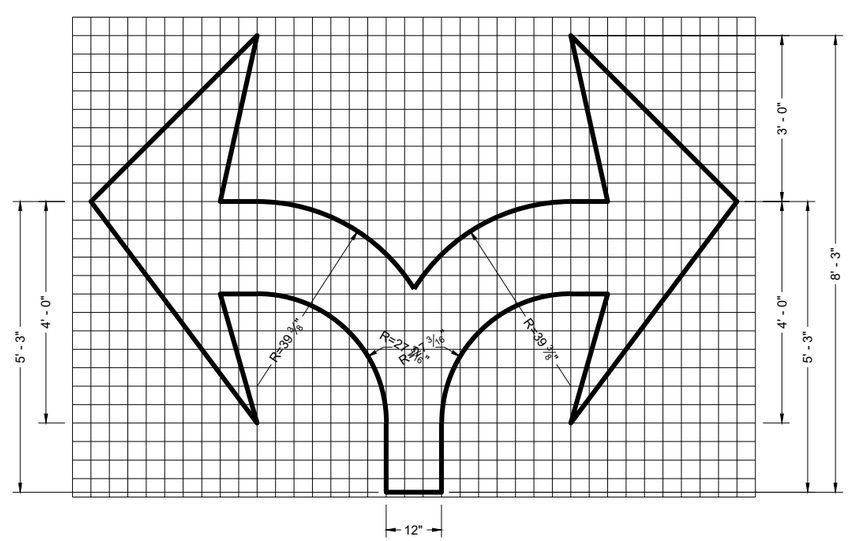

TYPE 7

6

SDD 15C07-16c

PAVEMENT MARKING ARROWS

STATE OF WISCONSIN
DEPARTMENT OF TRANSPORTATION

APPROVED
November 2024 — DATE
/S/ Jeannie Silver — STATE SIGNING AND MARKING ENGINEER

FHWA

6

SDD 15C07-16c

*CONFIRM MARKING LINE WIDTH WITH THE MISCELLANEOUS QUANTITIES

GENERAL NOTES

DETAILS OF CONSTRUCTION NOT SHOWN ON THIS DRAWING SHALL CONFORM TO STANDARD SPECIFICATIONS AND SPECIAL PROVISIONS.

1. LOCATE THE NO PASSING ZONE W14-3 SIGN WITHIN 50 FEET OF THE "T" MARKING
2. MEASURE FROM EDGE OF MARKING TO JOINT LINE. THIS DOES NOT INCLUDE SPACE NEEDED FOR GROOVING OPERATIONS.

LEGEND

"T" MARKING

SIGN ON PERMANENT SUPPORT

DIRECTION OF TRAFFIC

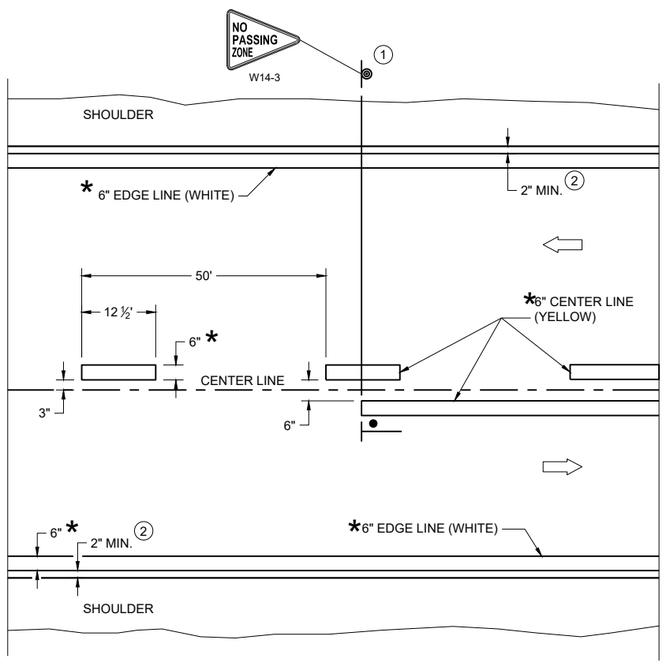

TWO WAY TRAFFIC

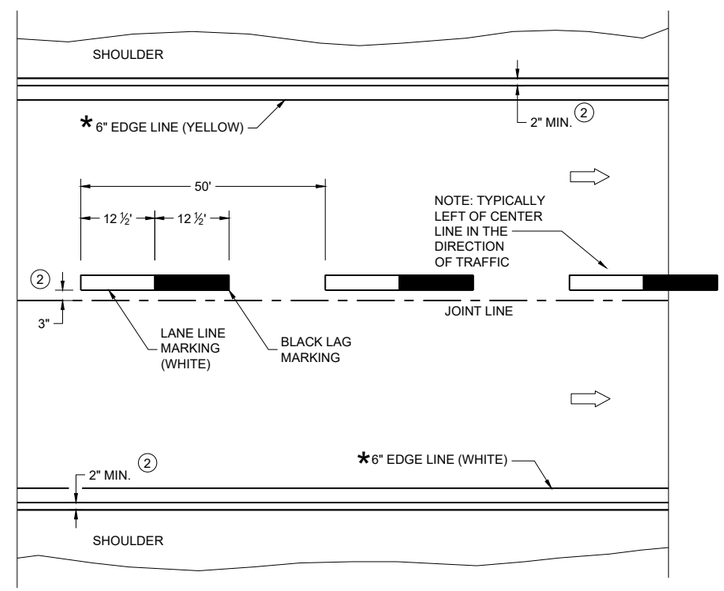

ONE WAY TRAFFIC

PERMANENT PAVEMENT MARKING

6

SDD 15C08-24a

PERMANENT LONGITUDINAL PAVEMENT MARKINGS

STATE OF WISCONSIN
DEPARTMENT OF TRANSPORTATION

APPROVED
December 2024 — DATE
/S/ Jeannie Silver — Statewide Pavement Marking Engineer
FHWA

6

SDD 15C08-24a

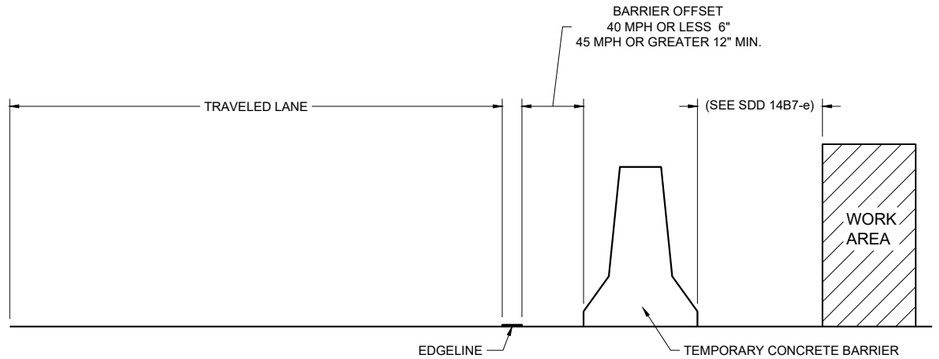

TEMPORARY BARRIER OFFSET FROM EDGELINE

GENERAL NOTES

DETAILS OF CONSTRUCTION NOT SHOWN ON THIS DRAWING SHALL CONFORM TO STANDARD SPECIFICATIONS AND SPECIAL PROVISIONS.

LEGEND

DIRECTION OF TRAFFIC

*CONFIRM MARKING LINE WIDTH WITH THE MISCELLANEOUS QUANTITIES

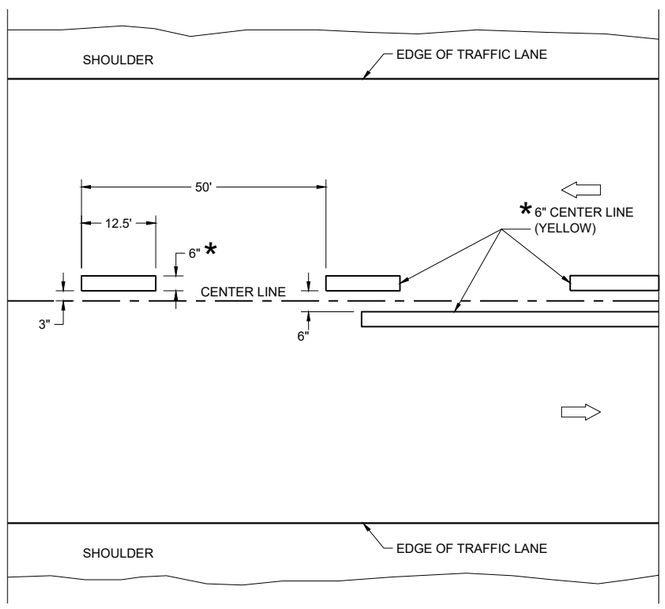

TWO WAY TRAFFIC

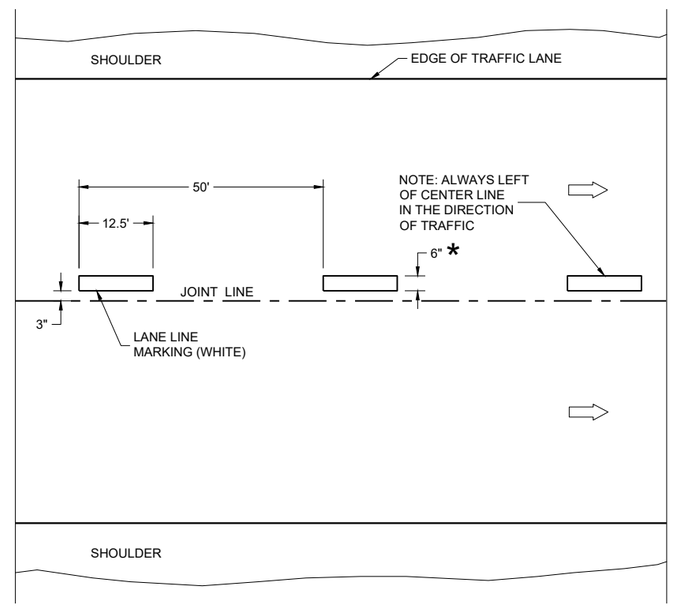

ONE WAY TRAFFIC

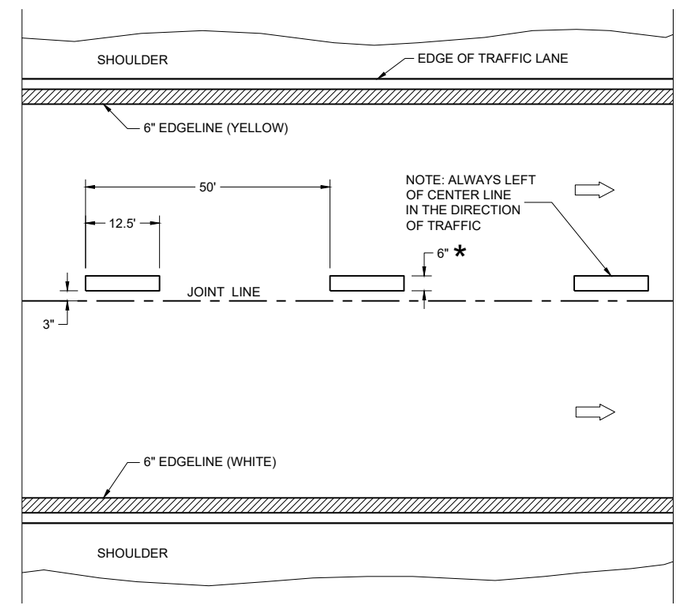

FREEWAYS AND EXPRESSWAYS

TEMPORARY PAVEMENT MARKING

TEMPORARY LONGITUDINAL PAVEMENT MARKING
STATE OF WISCONSIN DEPARTMENT OF TRANSPORTATION
APPROVED December 2024 — DATE /S/ Jeannie Silver — Statewide Pavement Marking Engineer FHWA

6

SDD 15C08-24b

6

SDD 15C08-24b

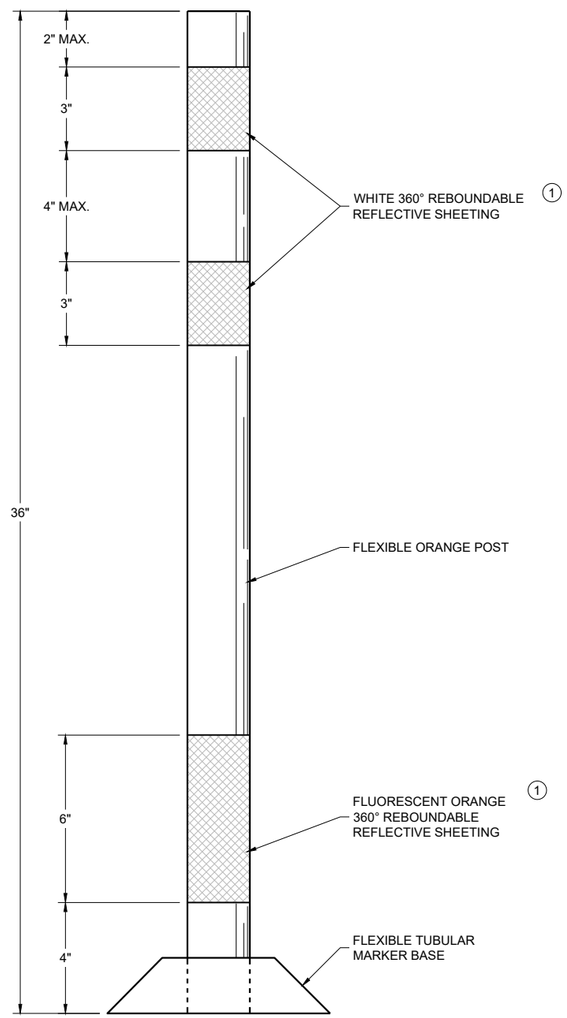

FLEXIBLE TUBULAR MARKER POST WORK ZONE

GENERAL NOTES

DETAILS OF CONSTRUCTION NOT SHOWN ON THIS DRAWING SHALL CONFORM TO THE PERTINENT REQUIREMENTS OF THE STANDARD SPECIFICATIONS AND THE APPLICABLE SPECIAL PROVISIONS.

SURFACE MOUNTED BASES SHALL BE FURNISHED IN ACCORDANCE WITH MANUFACTURERS RECOMMENDATIONS TO BE COMPATIBLE WITH FLEXIBLE TUBULAR MARKER POSTS TO A SIZE AND SHAPE THAT WILL PROVIDE A STABLE POST FOUNDATION WHEN SECURED TO THE PAVEMENT.

THE ASPHALTIC ADHESIVE OR BUTYL PAD FURNISHED SHALL BE IN ACCORDANCE WITH MANUFACTURERS RECOMMENDATIONS, UNLESS DIRECTED BY THE ENGINEER TO USE BOLTS.

1 REFLECTIVE SHEETING SHALL FOLLOW THE REQUIREMENTS IN THE APPROVED PRODUCTS LISTING FOR SIGN SHEETING.

6

CHANNELIZING DEVICES
FLEXIBLE TUBULAR MARKER POST

STATE OF WISCONSIN
DEPARTMENT OF TRANSPORTATION

SDD 15C11-11a

GENERAL NOTES

1. REFLECTIVE SHEETING SHALL FOLLOW THE REQUIREMENTS IN THE APPROVED PRODUCTS LISTING FOR SIGN SHEETING.
2. LOCATION OF WARNING LIGHTS WHEN SHOWN ON THE PLAN.

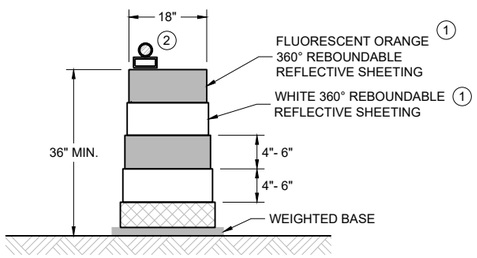

DRUM

BALLAST WIDTHS
RANGE FROM 24"-36"

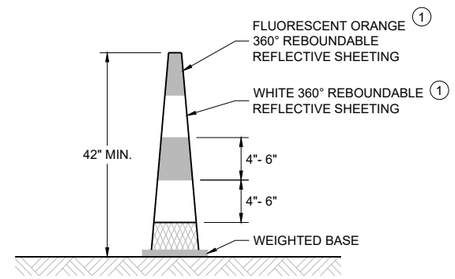

42" CONE

DO NOT USE IN TAPERS
½ SPACING OF DRUMS

BALLAST WIDTHS
RANGE FROM 14"-20"

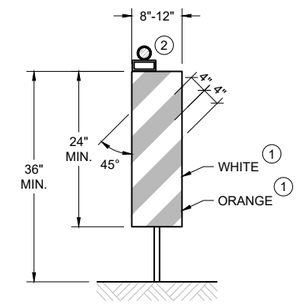

VERTICAL PANEL

THE STRIPES SHALL SLOPE DOWNWARD TO
THE TRAFFIC SIDE FOR CHANNELIZATION.

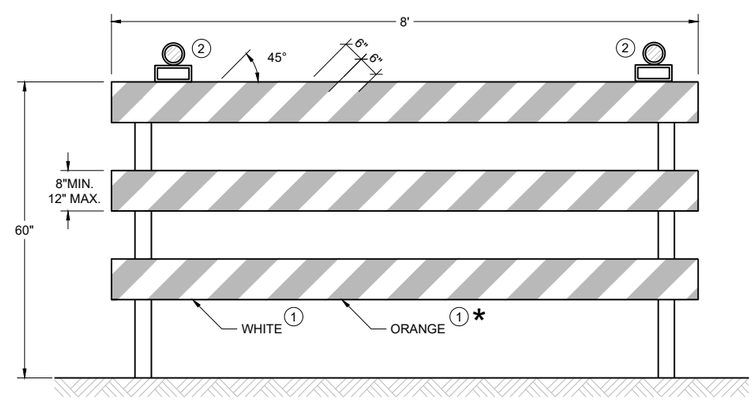

TYPE III BARRICADE

IF SIGN MOUNTED, DO NOT COVER MORE THAN 50% OF THE TOP
TWO RAILS OR 33% OF THE TOTAL AREA OF THE THREE RAILS.

* IF USED FOR A PERMANENT APPLICATION USE RED SHEETING.

CHANNELIZING DEVICES
DRUMS, CONES, BARRICADES
AND VERTICAL PANELS

STATE OF WISCONSIN
DEPARTMENT OF TRANSPORTATION

APPROVED
February 2026 — DATE
/S/ Andrew Heidtke — WORK ZONE ENGINEER
FHWA

6

SDD 15C11-11b

GENERAL NOTES

(1) PLACE TWO TO FIVE AERIAL OR VASCAR BARS AT 660 FOOT SPACING.

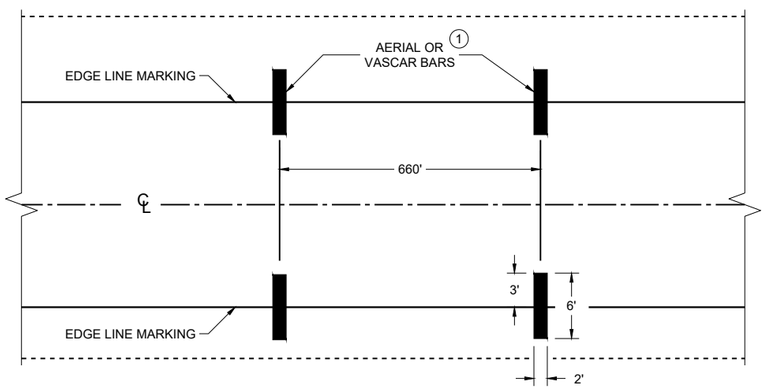

TYPICAL FOR TWO WAY OR ONE WAY TRAFFIC

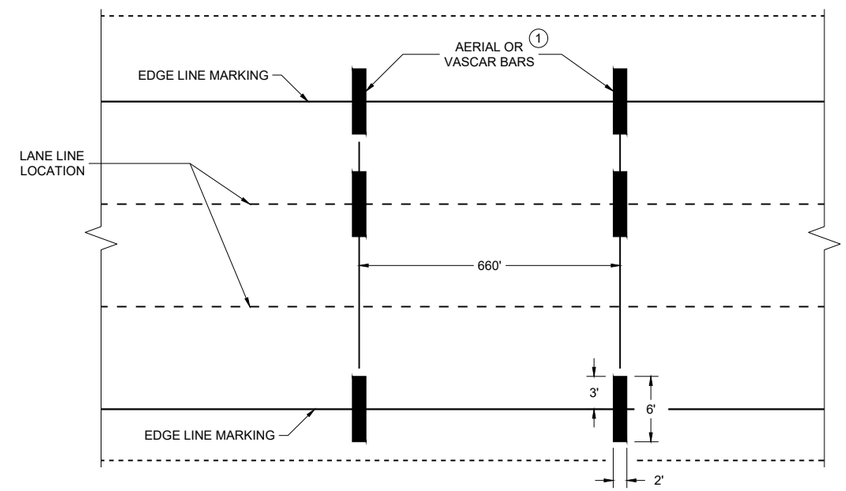

TYPICAL FOR MULTILANE TRAFFIC

SPEED ENFORCEMENT ZONE WITH AERIAL OR VASCAR BARS

AERIAL ENFORCEMENT BARS PAVEMENT MARKING DETAILS

STATE OF WISCONSIN
DEPARTMENT OF TRANSPORTATION

APPROVED
February 2025 — DATE
/S/ Matthew R. Rauch — STATE SIGNING AND MARKING ENGINEER

FHWA

6
SDD 15C14-05

LEGEND

V1 LEAD VEHICLE

V2 MARKING VEHICLE

V3 SHADOW VEHICLE

TRUCK MOUNTED ATTENUATOR (TMA)

SIGN ON TEMPORARY SUPPORT

DIRECTION OF TRAFFIC

ARROW PANEL (CAUTION)

GENERAL NOTES

ALL VEHICLES SHALL BE EQUIPPED WITH TWO 360 DEGREE HIGH INTENSITY YELLOW FLASHING LIGHTS OR STROBE LIGHTS AND OPERATED WITH HEADLIGHTS TURNED ON.

ALL VEHICLES SHALL BE EQUIPPED WITH REAR FACING TYPE B OR C FLASHING ARROW PANEL. SIGNS PLACED ON VEHICLES MUST NOT OBSCURE THE ARROW PANEL.

ALL SIGNS ARE 48" X 48" UNLESS OTHERWISE SPECIFIED.

DISTANCE BETWEEN VEHICLES MAY VARY ACCORDING TO TERRAIN, SIGHT DISTANCE, PAINT DRYING TIME, AND OTHER FACTORS. WHENEVER ADEQUATE STOPPING SIGHT DISTANCE EXISTS TO THE REAR, SHADOW VEHICLES SHOULD MAINTAIN THE MINIMUM DISTANCE FROM THE WORK VEHICLE AND PROCEED AT THE SAME SPEED AS THE WORK VEHICLE. SHADOW VEHICLES SHOULD SLOW DOWN IN ADVANCE OF VERTICAL AND HORIZONTAL CURVES THAT RESTRICT SIGHT DISTANCE.

WHEN WORK ACTIVITY BLOCKS THE LEFT LANE, REVERSE TRAFFIC CONTROL.

WHEN A RAMP INTERSECTS THE FACILITY ON WHICH THE WORK IS BEING PERFORMED, PROVIDE ADDITIONAL TRAFFIC CONTROLS AS SPECIFIED IN THE CONTRACT OR AS APPROVED BY THE ENGINEER.

WORKERS SHALL NOT PERFORM WORK FROM ANY SHADOW OR PROTECTION VEHICLES.

WHEN NO WORK ACTIVITY IS TAKING PLACE, REMOVE OR LAY STATIONARY SIGNS AND SUPPORTS FLAT ON THE GRADE WITH UPRIGHTS ORIENTED PARALLEL TO AND DOWNSTREAM FROM TRAFFIC.

CONES SHOULD BE USED BETWEEN THE MARKING AND SHADOW VEHICLES AT 100 FOOT SPACING. CONES MAY BE OMITTED ON PAINTED LINE IF APPROVED BY THE ENGINEER. CONSIDER PAVEMENT MARKING DRY OR CURE TIMES AND TRAFFIC VOLUME.

CONES SHALL HAVE A MINIMUM HEIGHT OF 28" FOR WET PAVEMENT MARKINGS.

(1) SIGNS SHALL BE REPEATED APPROXIMATELY EVERY THREE MILES AND AFTER EVERY MAJOR INTERSECTION.

(2) IF CONSTRUCTION WORK ZONE SIGNS ARE IN PLACE, W20-1A OR W21-63 ARE NOT REQUIRED.

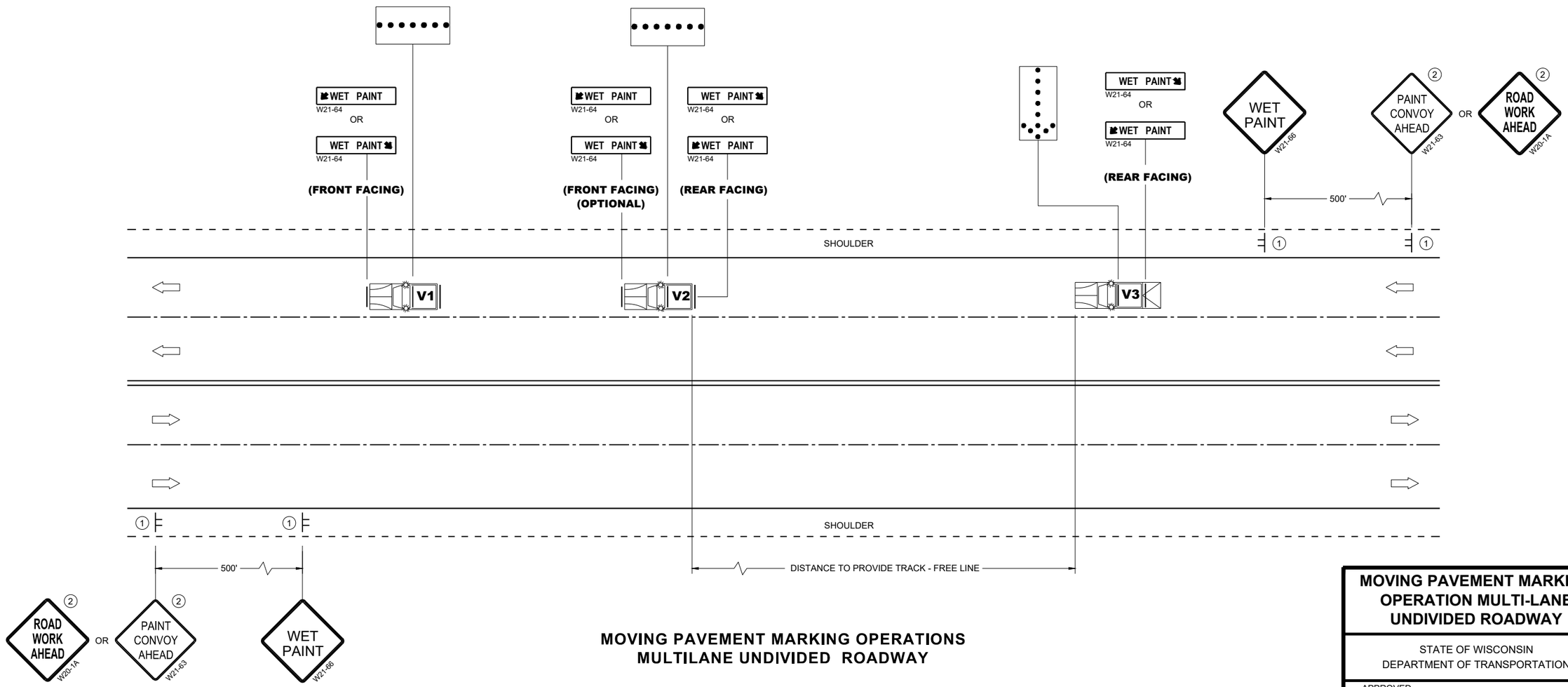

MOVING PAVEMENT MARKING OPERATIONS
MULTILANE UNDIVIDED ROADWAY

MOVING PAVEMENT MARKING OPERATION MULTI-LANE UNDIVIDED ROADWAY

STATE OF WISCONSIN
DEPARTMENT OF TRANSPORTATION

APPROVED
November 2025 — DATE
/S/ Andrew Heidtke — STATE ELECTRICAL ENGINEER

FHWA

GENERAL NOTES

PLACE GROOVE 3 INCHES LEFT OF JOINT.

LEGEND

SIGN ON PERMANENT SUPPORT

DIRECTION OF TRAVEL

*CONFIRM MARKING LINE WIDTH WITH THE MISCELLANEOUS QUANTITIES

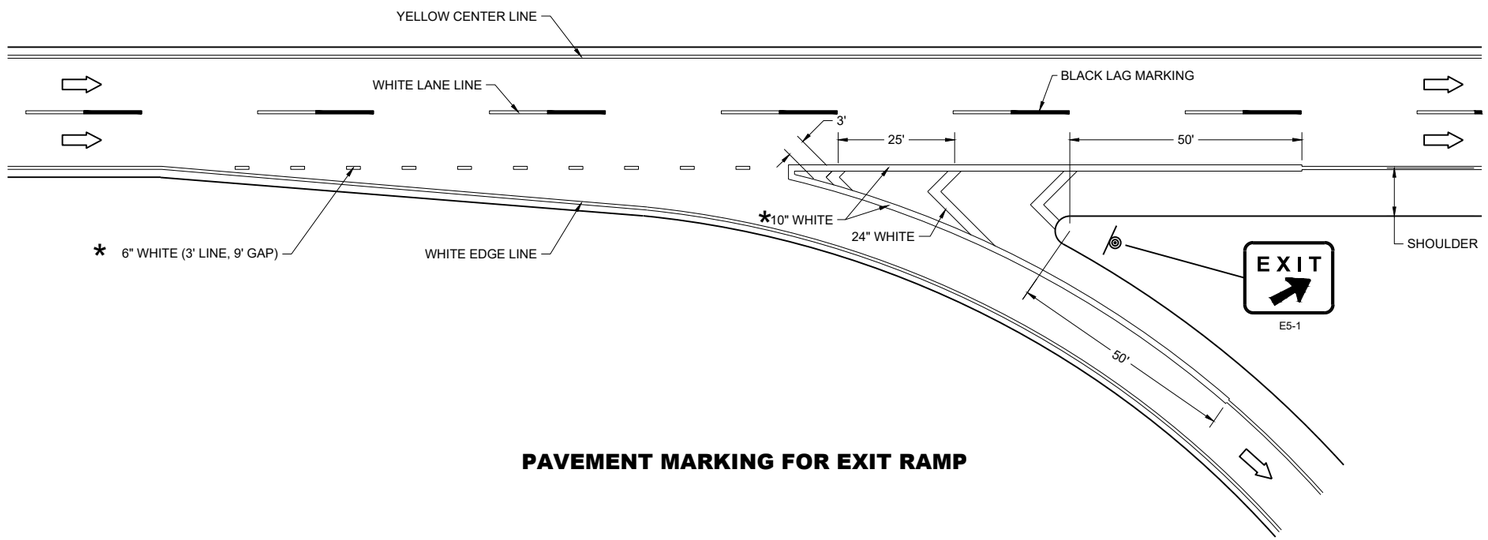

PAVEMENT MARKING FOR EXIT RAMP

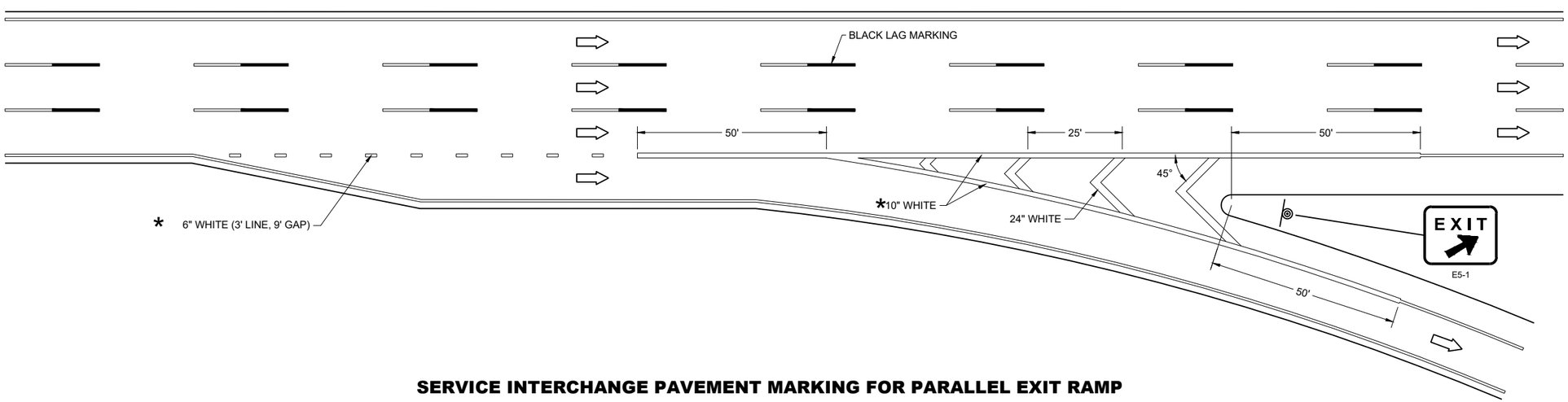

SERVICE INTERCHANGE PAVEMENT MARKING FOR PARALLEL EXIT RAMP

PAVEMENT MARKING, EXIT RAMP AND PARALLEL EXIT RAMP

STATE OF WISCONSIN
DEPARTMENT OF TRANSPORTATION

6
SDD 15C31-08a

GENERAL NOTES

PLACE GROOVE 3 INCHES LEFT OF JOINT.

LEGEND

SIGN ON PERMANENT SUPPORT

DIRECTION OF TRAVEL

*CONFIRM MARKING LINE WIDTH WITH THE MISCELLANEOUS QUANTITIES

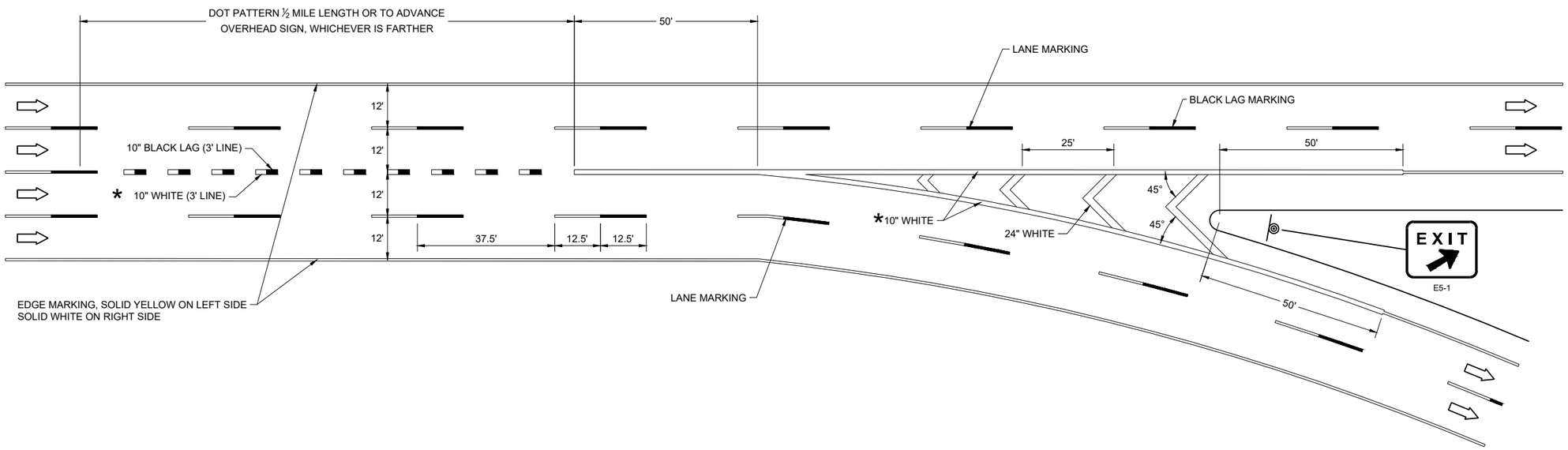

6

6

SDD 15C31-08b

SDD 15C31-08b

PAVEMENT MARKING, MAJOR SPLIT FREEWAY TO FREEWAY

STATE OF WISCONSIN
DEPARTMENT OF TRANSPORTATION

GENERAL NOTES

PLACE GROOVE 3 INCHES LEFT OF JOINT.

LEGEND

DIRECTION OF TRAVEL

*CONFIRM MARKING LINE WIDTH WITH THE MISCELLANEOUS QUANTITIES

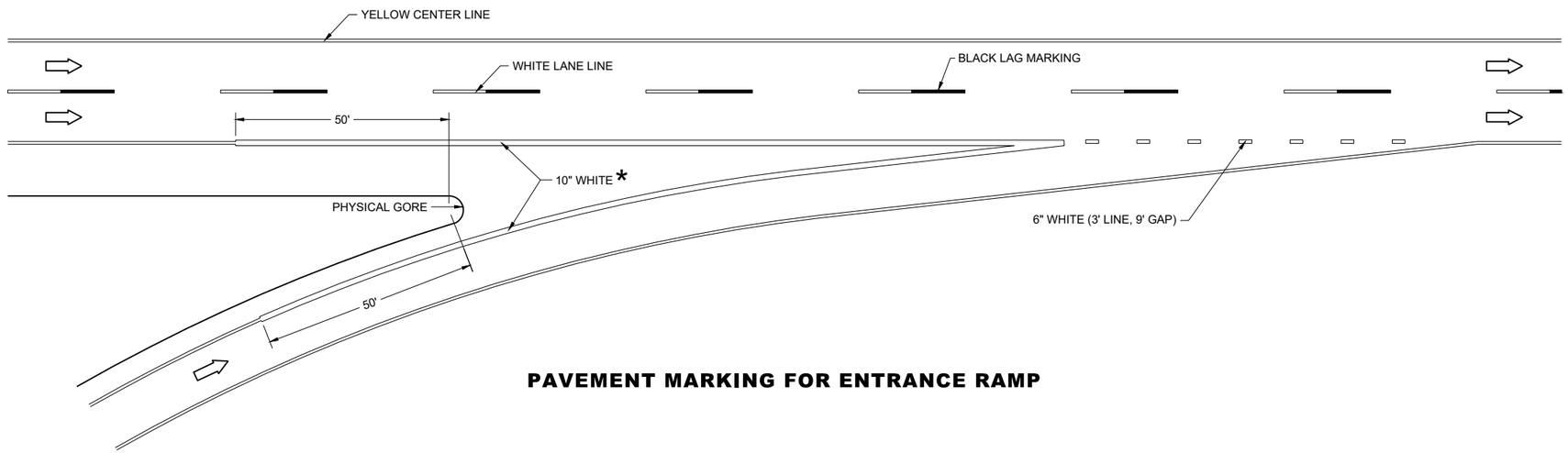

PAVEMENT MARKING FOR ENTRANCE RAMP

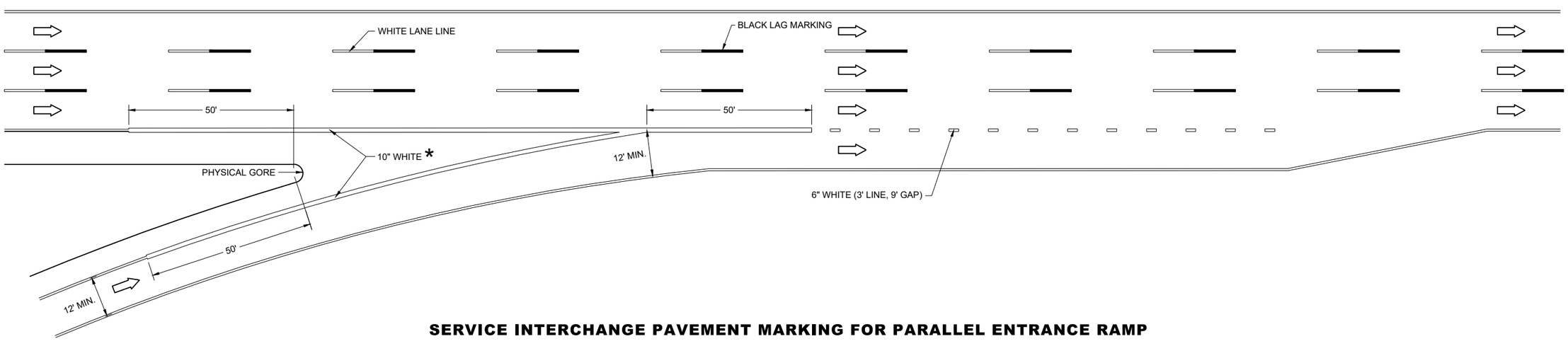

SERVICE INTERCHANGE PAVEMENT MARKING FOR PARALLEL ENTRANCE RAMP

PAVEMENT MARKING, ENTRANCE RAMP AND PARALLEL ENTRANCE RAMP

STATE OF WISCONSIN
DEPARTMENT OF TRANSPORTATION

6
SDD 15C31-08c

LEGEND

DIRECTION OF TRAVEL

GENERAL NOTES

PLACE GROOVE 3 INCHES LEFT OF JOINT.

*CONFIRM MARKING LINE WIDTH WITH THE MISCELLANEOUS QUANTITIES

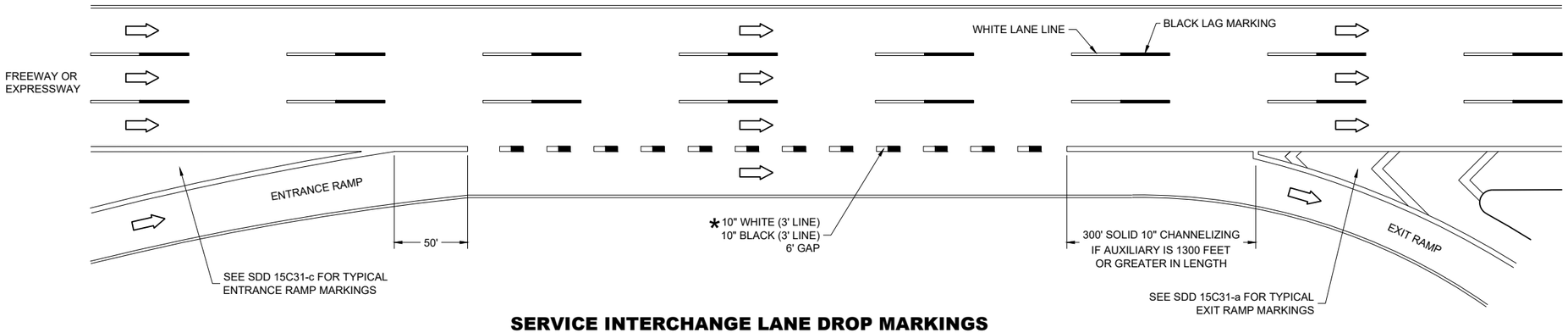

SERVICE INTERCHANGE LANE DROP MARKINGS

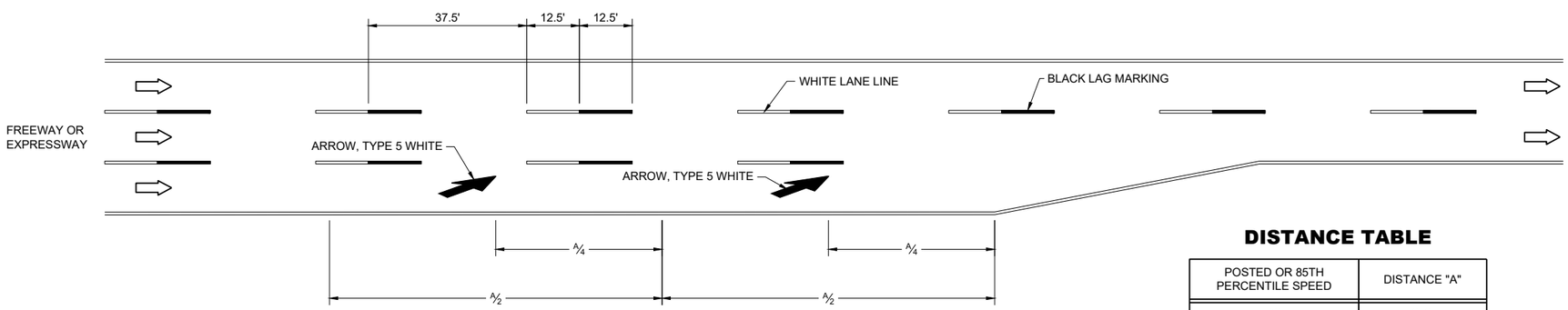

LANE REDUCTION MARKINGS

DISTANCE TABLE

POSTED OR 85TH PERCENTILE SPEED	DISTANCE "A"
40	670'
45	775'
50	885'
55	990'
60	1100'
65	1200'
70	1250'

PAVEMENT MARKING, LANE DROP AND LANE REDUCTION

STATE OF WISCONSIN
DEPARTMENT OF TRANSPORTATION

APPROVED
November 2024 — DATE
/S/ Matthew Rauch — WORK ZONE ENGINEER
FHWA

6

SDD 15C31-08d

LEGEND

- SIGN ON PERMANENT SUPPORT
- DELINEATOR, FLEXIBLE/TUBULAR MARKER
- DIRECTION OF TRAFFIC

GENERAL NOTES

ALL SIGNS ARE 48"X48" UNLESS OTHERWISE NOTED.

"WO" SIGN IS THE SAME AS "W" SIGN EXCEPT THE BACKGROUND IS ORANGE.

ANY SIGNS TEMPORARY OR EXISTING, WHICH CONFLICT WITH THE TRAFFIC CONTROL "IN USE" SHALL BE REMOVED OR COVERED AS NEEDED AND AS APPROVED BY THE ENGINEER. NO WARNING LIGHTS SHALL BE WORKING ON COVERED OR "DOWNED" SIGNS.

THE EXACT NUMBER, LOCATION, AND SPACING OF ALL SIGNS AND DEVICES SHALL BE ADJUSTED TO FIT FIELD CONDITIONS AS APPROVED BY THE ENGINEER.

THE SPACING BETWEEN SIGNS SHOULD BE ADJUSTED TO NOT CONFLICT WITH AND TO PROVIDE A MINIMUM OF 200 FEET (500' DESIRABLE) DISTANCE TO EXISTING SIGNS.

A SINGLE ROW OF FLEXIBLE TUBULAR MARKERS ON CENTERLINE EXTEND FOR THE ENTIRE LENGTH OF TWO-WAY TRAFFIC AT 50 FOOT SPACING.

COVER EXISTING CENTERLINE STRIPE WITH TEMPORARY PAVEMENT MARKING LINE, 6 INCH DOUBLE YELLOW.

PARTIAL NUMBERS ON SIGNS SHALL BE DISPLAYED AS A WHOLE NUMBER(AS NEEDED) FOLLOWED BY A FRACTION. SIGNS SHALL NOT DISPLAY NUMBERS IN DECIMAL FORM.

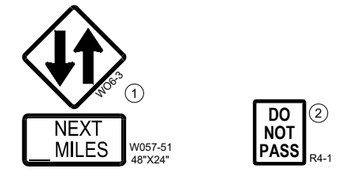

1. THE WO6-3 AND WO57-51 SHALL BE LOCATED 200 FEET BEYOND THE END OF THE ACCELERATION LANE OF EACH ENTRANCE RAMP AND / OR 500 FEET BEYOND ANY SIDE ROAD. THE R4-1 SHALL BE LOCATED 1000 FEET BEYOND THE WO6-3 AND THE WO57-51 AND THE SIGNS SHALL BE ALTERNATED WITH ONE MILE INTERVALS BETWEEN THE SIGNS.
2. CONVENTIONAL: 24" X 30"
   FREEWAY AND EXPRESSWAY: 36" X 48"

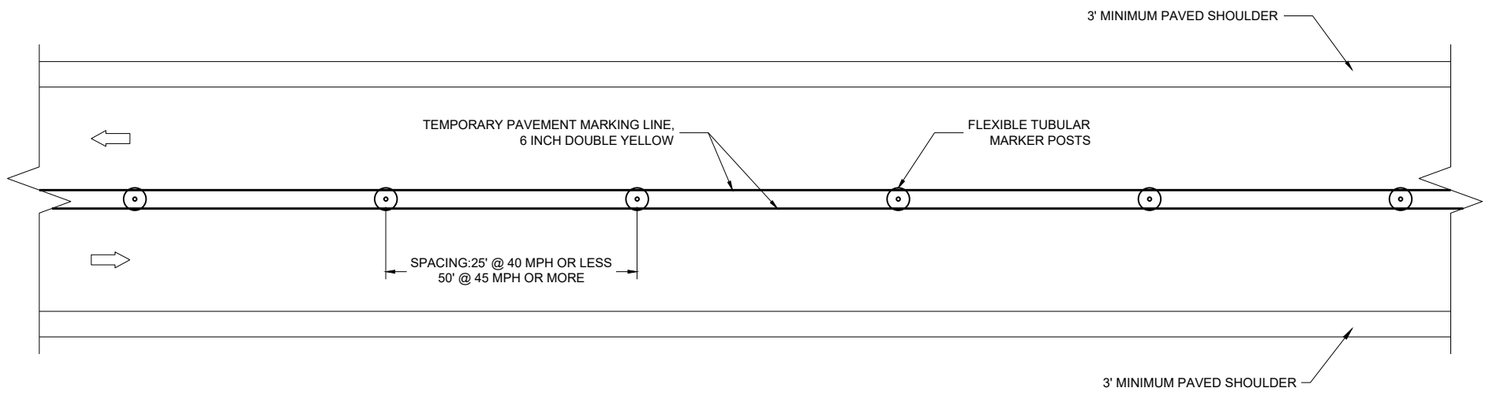

TWO LANE, TWO WAY OPERATION

6

SDD 15D06-07

TRAFFIC CONTROL
TWO LANE TWO WAY
OPERATION

STATE OF WISCONSIN
DEPARTMENT OF TRANSPORTATION

APPROVED
November 2025 — DATE
/S/ Andrew Heidtke — WORK ZONE TRAFFIC SAFETY ENGINEER
FHWA

6

SDD 15D06-07

LEGEND

- SIGN ON PERMANENT SUPPORT
- TRAFFIC CONTROL DRUM
- DELINEATOR FLEXIBLE / TUBULAR MARKER
- TEMPORARY DELINEATOR (STEEL POST DELINEATOR) COLOR OF DELINEATOR SHALL MATCH THE RESPECTIVE EDGE LINE MARKING
- DIRECTION OF TRAFFIC
- REMOVE PAVEMENT MARKINGS

INSTALL THE R4-1 SIGN 1000 FEET BEYOND THE WO6-3 SIGN WITH THE WO57-51 AND ALTERNATE THE SEQUENCE OF THESE SIGNS EVERY 1 MILE.

GENERAL NOTES

ALL SIGNS ARE 48"X48" UNLESS OTHERWISE NOTED.

"WO" SIGN IS THE SAME AS "W" SIGN EXCEPT THE BACKGROUND IS ORANGE.

ANY SIGNS TEMPORARY OR EXISTING, WHICH CONFLICT WITH THE TRAFFIC CONTROL "IN USE" SHALL BE REMOVED OR COVERED AS NEEDED AND AS APPROVED BY THE ENGINEER. NO WARNING LIGHTS SHALL BE WORKING ON COVERED OR "DOWNED" SIGNS.

THE EXACT NUMBER, LOCATION, AND SPACING OF ALL SIGNS AND DEVICES SHALL BE ADJUSTED TO FIT FIELD CONDITIONS AS APPROVED BY THE ENGINEER.

THE SPACING BETWEEN SIGNS SHOULD BE ADJUSTED TO NOT CONFLICT WITH AND TO PROVIDE A MINIMUM OF 200 FEET (500' DESIRABLE) DISTANCE TO EXISTING SIGNS.

PARTIAL NUMBERS ON SIGNS SHALL BE DISPLAYED AS A WHOLE NUMBER(AS NEEDED) FOLLOWED BY A FRACTION. SIGNS SHALL NOT DISPLAY NUMBERS IN DECIMAL FORM.

1 CONVENTIONAL: 24" X 30"
FREEWAY AND EXPRESSWAY: 36" X 48"

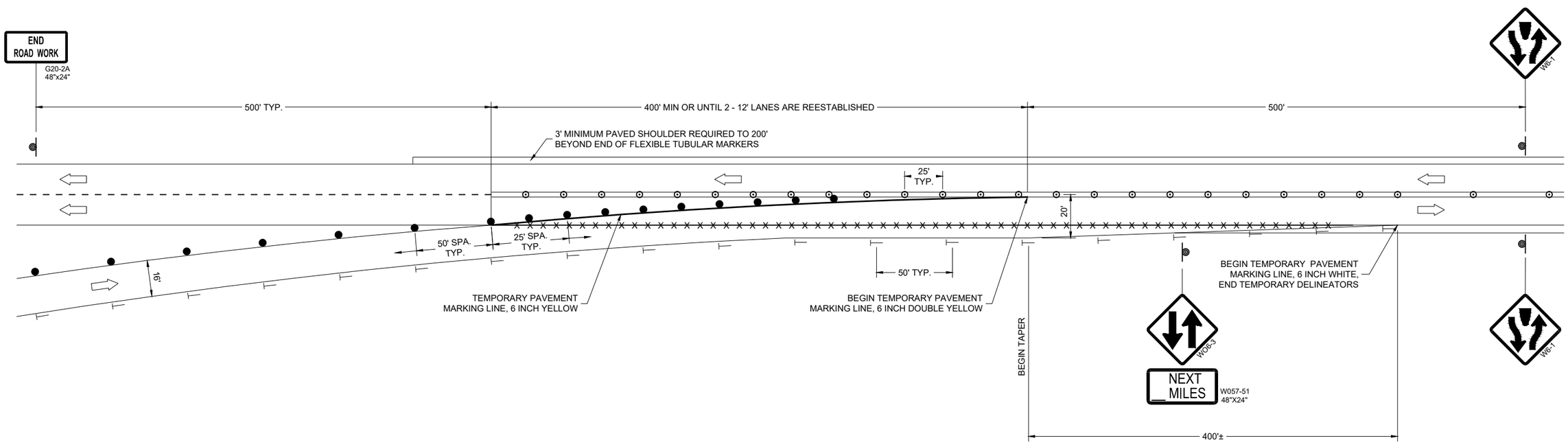

6

6

SDD 15D09-08

SDD 15D09-08

TRAFFIC CONTROL,
SINGLE LANE
CROSSOVER EXIT

STATE OF WISCONSIN
DEPARTMENT OF TRANSPORTATION

APPROVED
November 2025 — DATE
/S/ Andrew Heidtke — WORK ZONE TRAFFIC SAFETY ENGINEER
FHWA

LEGEND

- SIGN ON PERMANENT SUPPORT
- TRAFFIC CONTROL DRUM
- TRAFFIC CONTROL DRUM WITH TYPE "C" STEADY BURN LIGHT
- DELINEATOR FLEXIBLE / TUBULAR MARKER
- TEMPORARY DELINEATOR (STEEL POST WITH SINGLE DELINEATOR) COLOR OF DELINEATOR SHALL MATCH THE COLOR OF THE RESPECTIVE EDGELINE MARKING
- TEMPORARY DELINEATOR (DOUBLE SIDED)
- TYPE "A" WARNING LIGHT (FLASHING)
- TYPE III BARRICADE
- TYPE III BARRICADE WITH ATTACHED SIGN
- DIRECTION OF TRAFFIC
- REMOVE PAVEMENT MARKINGS
- WORK AREA

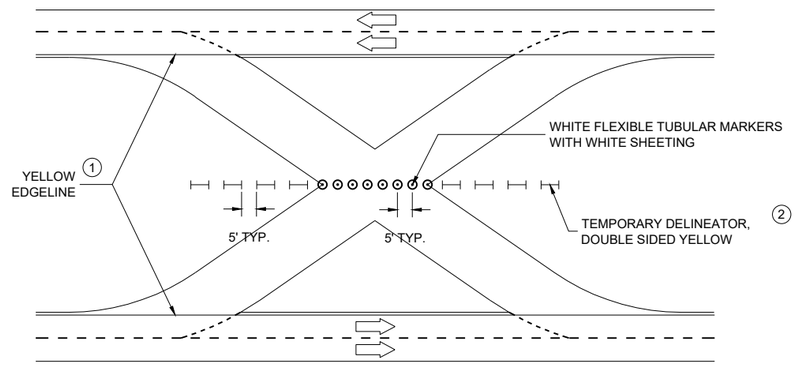

TRAFFIC CONTROL FOR CROSSOVER THAT IS NOT IN USE

GENERAL NOTES

ALL SIGNS ARE 48"X48" UNLESS OTHERWISE NOTED.

"WO" SIGN IS THE SAME AS "W" SIGN EXCEPT THE BACKGROUND IS ORANGE.

ANY SIGNS TEMPORARY OR EXISTING, WHICH CONFLICT WITH THE TRAFFIC CONTROL "IN USE" SHALL BE REMOVED OR COVERED AS NEEDED AND AS APPROVED BY THE ENGINEER. NO WARNING LIGHTS SHALL BE WORKING ON COVERED OR "DOWNED" SIGNS.

THE EXACT NUMBER, LOCATION, AND SPACING OF ALL SIGNS AND DEVICES SHALL BE ADJUSTED TO FIT FIELD CONDITIONS AS APPROVED BY THE ENGINEER.

THE SPACING BETWEEN PROPOSED SIGNS SHOULD BE ADJUSTED TO NOT CONFLICT WITH AND TO PROVIDE A MINIMUM OF 200 FEET (500' DESIRABLE) DISTANCE TO EXISTING SIGNS.

REVERSE DEVICES WHEN OTHER LEG OF CROSSOVER IS IN USE.

FOR PERMANENT CROSSOVER, PAVEMENT MARKING SHOULD CONFORM TO SECTION 646 OF THE STANDARD SPECIFICATIONS.

FOR PERMANENT CROSSOVER, INSTALL PERMANENT DELINEATORS ACCORDING TO SECTION 633 OF THE STANDARD SPECIFICATIONS.

(1) FOR PERMANENT CROSSOVER, PAVEMENT MARKING SHOULD CONFORM TO SECTION 646 OF THE STANDARD SPECIFICATIONS.

(2) FOR PERMANENT CROSSOVER, INSTALL PERMANENT DELINEATORS ACCORDING TO SECTION 633 OF THE STANDARD SPECIFICATIONS.

(3) USE ONLY IF DESIGN SPEED IS 10 MPH BELOW POSTED SPEED.

(4) IF BEGINNING OF LANE SHIFT IS 1200' OR LESS FROM THE END OF FROM THE END OF THE LANE CLOSURE TAPER, PLACE THE WO1-4L SIGN 200' AFTER THE END OF THE LANE CLOSURE TAPER.

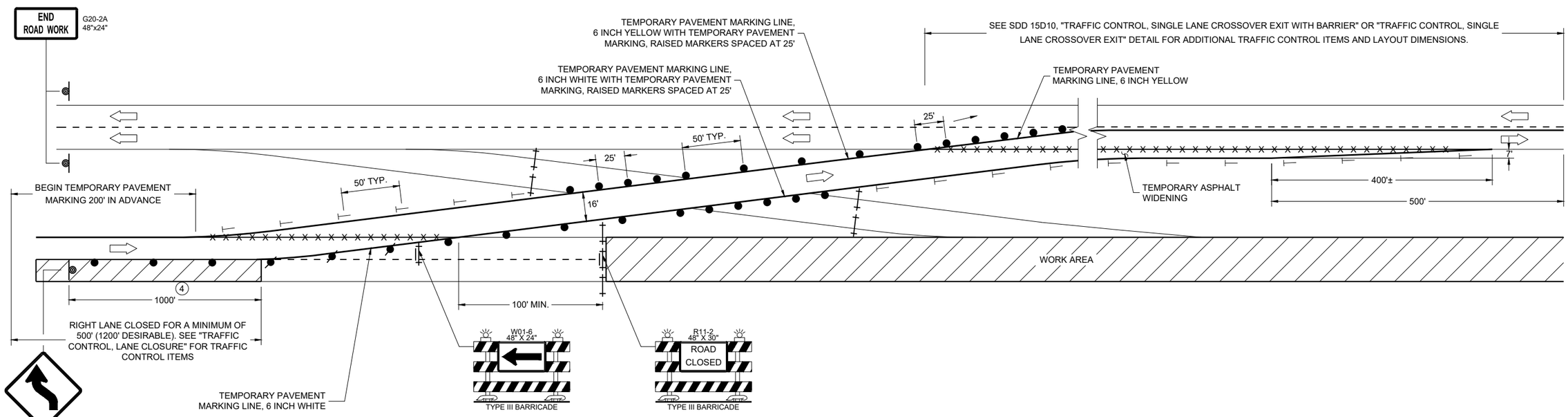

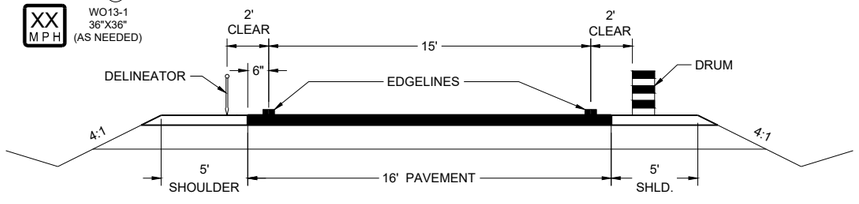

TYPICAL TEMPORARY CROSSOVER ROADWAY DIMENSIONS
(SEE PLAN FOR ROADWAY DESIGN ELEMENTS)

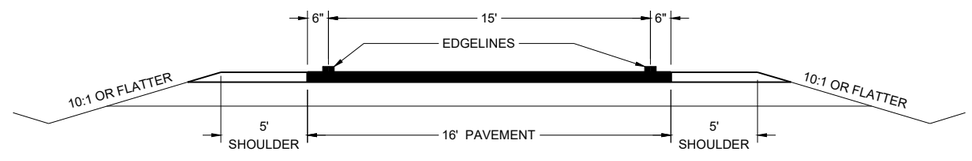

TYPICAL CROSSOVER TO REMAIN IN PLACE ROADWAY DIMENSIONS
(SEE PLAN FOR ROADWAY DESIGN ELEMENTS)

TRAFFIC CONTROL, SINGLE LANE CROSSOVER

STATE OF WISCONSIN
DEPARTMENT OF TRANSPORTATION

APPROVED
November 2025 — DATE
/S/ Andrew Heidtke — WORK ZONE TRAFFIC SAFETY ENGINEER
FHWA

LEGEND

- SIGN ON PERMANENT SUPPORT
- TRAFFIC CONTROL DRUM
- TRAFFIC CONTROL DRUM WITH TYPE "C" STEADY BURN LIGHT
- TYPE III BARRICADE WITH ATTACHED SIGN
- TYPE "A" WARNING LIGHT (FLASHING)
- REMOVING PAVEMENT MARKINGS
- DIRECTION OF TRAFFIC
- WORK AREA
- (S) WZ START LOCATION MARKER
- (E) WZ END LOCATION MARKER
- CONNECTED ARROW BOARD
- PCMS — PORTABLE CHANGEABLE MESSAGE SIGN
- S — PORTABLE TRAFFIC SENSOR (PTS)
- FBS — FLASHING BEACON SIGNS
- STOPPED OR SLOW TRAFFIC WHEN FLASHING — WO8-76, 96" x 48"

GENERAL NOTES

THE EXACT NUMBER, LOCATION, AND SPACING OF ALL SIGNS, INCLUDING FBS AND DEVICES SHALL BE ADJUSTED TO FIT FIELD CONDITIONS AS APPROVED BY THE ENGINEER.

THE SPACING BETWEEN SIGNS SHOULD BE ADJUSTED TO NOT CONFLICT WITH AND TO PROVIDE A MINIMUM OF 200 FEET (500 FEET DESIRABLE) CLEARANCE TO EXISTING SIGNS.

THIS LANE CLOSURE IS TYPICAL FOR CLOSING RIGHT LANE - REVERSE FOR CLOSING LEFT LANE.

ALL SIGNS ARE 48" x 48" UNLESS OTHERWISE NOTED.

"WO" SIGNS ARE THE SAME AS "W" SIGNS EXCEPT THE BACKGROUND IS ORANGE.

ANY SIGNS TEMPORARY OR EXISTING, WHICH CONFLICT WITH TRAFFIC CONTROL "IN USE" SHALL BE REMOVED OR COVERED AS NEEDED OR AS APPROVED BY THE ENGINEER. NO WARNING LIGHTS SHALL BE WORKING ON "COVERED" OR "DOWNED SIGNS.

FOR A LANE CLOSURE THAT IS IN PLACE LESS THAN 7 CONTINUOUS DAYS AND NIGHTS, THE ADVANCED WARNING SIGNS MAY BE MOUNTED ON PORTABLE SUPPORTS.

REMOVE PAVEMENT MARKINGS AND PLACE TEMPORARY PAVEMENT MARKING LINE IF LANE CLOSURE IS TO BE IN PLACE 4 OR MORE CONTINUOUS DAYS AND NIGHTS. WARNING LIGHTS ARE NOT REQUIRED IF THE LANE CLOSURE IS A DAYTIME ONLY OPERATION.

IF THE HORIZONTAL ALIGNMENT IS SUCH THAT A CURVE MAY REQUIRE ADDITIONAL DELINEATION, THE DEVICE SPACING MAY BE DECREASED TO 50 FEET.

ADJUSTMENTS IN BUFFER SPACE NEED TO BE INCORPORATED WHEN THE LANE CLOSURE OCCURS NEAR AN INTERCHANGE EXIT OR ENTRANCE RAMP OR INTERSECTION. THE LANE CLOSURE MUST TAKE PLACE FAR ENOUGH IN ADVANCE OF AN EXIT OR ENTRANCE RAMP TO STILL ALLOW FOR ADEQUATE BUFFER SPACE. THE MINIMUM LENGTH OF THE BUFFER SPACE BEFORE AN EXIT RAMP SHOULD BE ONE HALF THE LENGTH OF THE TRANSITION AREA. THE ENTRANCE RAMP SHOULD BE FOLLOWED BY THE ORIGINAL BUFFER SPACE LENGTH OF 800 FEET DESIRABLE PRIOR TO ANOTHER TRAFFIC CONTROL CHANGE SUCH AS A CROSSOVER MANEUVER.

CONSIDER ROADWAY GEOMETRICS WHEN LOCATING SIGNS AND ARROW BOARD SO THE DRIVER HAS A CLEAR VIEW OF THE ARROW BOARD AND LANE CLOSURE DRUMS.

PORTABLE TRAFFIC SENSOR (PTS) MAY BE MOUNTED ON THE FBS, ARROW BOARD OR OTHER TRAILER DEVICES.

1. 5 DRUMS SPACED AT 10 FOOT INTERVALS AS NEEDED.
2. IF THERE ARE MORE THAN TWO LANES OR IF SPECIFIED IN THE PLANS, PLACE FBS ON BOTH SIDES OF THE ROADWAY.
3. IF THERE IS AN APPROVED TEMPORARY SPEED DECLARATION, ADD WO-3-5 SIGNS 400 FEET AFTER THE W20-5G SIGNS AND ADD R2-1 SIGNS (48"x60") 700 FEET AFTER THE WO3-5 SIGNS. A SPEED LIMIT SIGN SHALL BE LOCATED 1500 FEET BEYOND THE END OF THE ACCELERATION LANE OF EACH ENTRANCE RAMP. PLACE A SPEED LIMIT SIGN A MINIMUM OF EVERY 3 MILES. INCLUDE A "RESUME SPEED LIMIT" SIGN 200 FEET MINIMUM (800 FEET DESIRABLE) BEYOND THE G30-3A "END ROAD WORK" SIGN
4. DRUMS IN A CLOSED LANE THAT MUST BE MOVED FOR A WORK OPERATION SHALL BE IMMEDIATELY REESTABLISHED UPON COMPLETION OF THE OPERATION, OR FOR CONTINUING OPERATIONS, AT THE END OF EACH WORKING DAY.

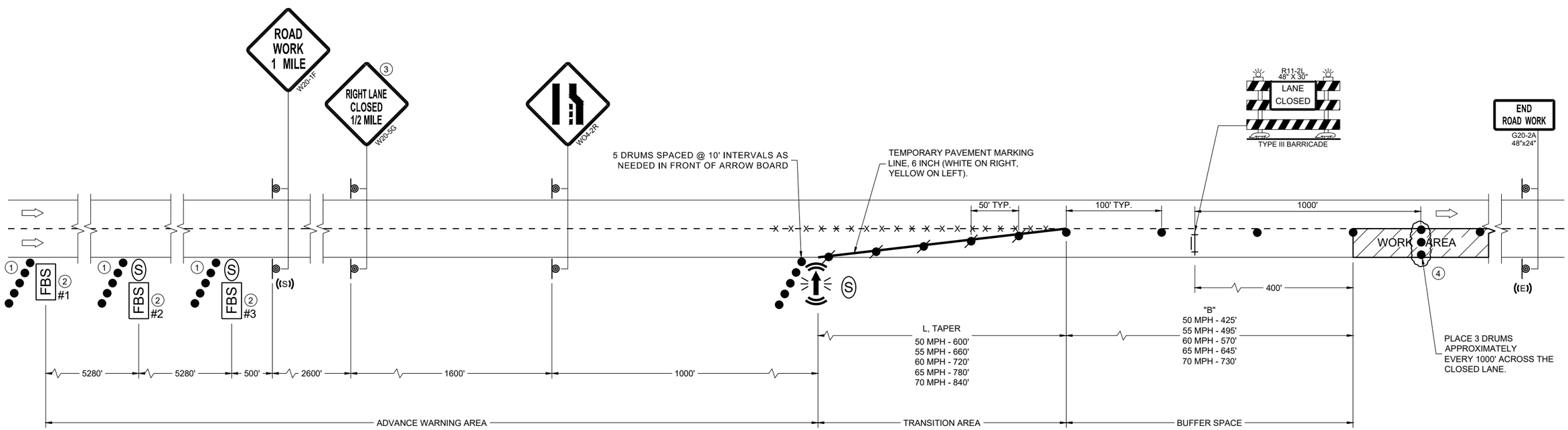

TRAFFIC CONTROL, LANE CLOSURE, BASIC TRAFFIC QUEUE WARNING SYSTEM

STATE OF WISCONSIN
DEPARTMENT OF TRANSPORTATION

APPROVED
November 2025 — DATE
/S/ Erin Schwark — ROADWAY STANDARDS DEVELOPMENT UNIT SUPERVISOR

FHWA

6

SDD 15D12-16d

GENERAL NOTES

THE EXACT NUMBER, LOCATION, AND SPACING OF ALL SIGNS AND DEVICES SHALL BE ADJUSTED TO FIT FIELD CONDITIONS AS APPROVED BY THE ENGINEER.

THE SPACING BETWEEN SIGNS SHOULD BE ADJUSTED TO NOT CONFLICT WITH AND TO PROVIDE A MINIMUM OF 200 FEET (500 FEET DESIRABLE) CLEARANCE TO EXISTING SIGNS.

THIS LANE CLOSURE IS TYPICAL FOR CLOSING RIGHT LANE - REVERSE FOR CLOSING LEFT LANE.

ALL SIGNS ARE 48" x 48" UNLESS OTHERWISE NOTED.

"WO" SIGNS ARE THE SAME AS "W" SIGNS EXCEPT THE BACKGROUND IS ORANGE.

ANY SIGNS TEMPORARY OR EXISTING, WHICH CONFLICT WITH TRAFFIC CONTROL "IN USE" SHALL BE REMOVED OR COVERED AS NEEDED OR AS APPROVED BY THE ENGINEER.

CONSIDER ROADWAY GEOMETRICS WHEN LOCATING SIGNS AND ARROW BOARD SO THE DRIVER HAS A CLEAR VIEW OF THE ARROW BOARD AND LANE CLOSURE DRUMS.

FOR A LANE CLOSURE THAT IS IN PLACE LESS THAN 7 CONTINUOUS DAYS AND NIGHTS, THE ADVANCED WARNING SIGNS MAY BE MOUNTED ON PORTABLE SUPPORTS.

REMOVE PAVEMENT MARKINGS AND PLACE TEMPORARY PAVEMENT MARKING LINE IF LANE CLOSURE IS TO BE IN PLACE 4 OR MORE CONTINUOUS DAYS AND NIGHTS.

WARNING LIGHTS ARE NOT REQUIRED IF THE LANE CLOSURE IS A DAYTIME ONLY OPERATION.

IF THE HORIZONTAL ALIGNMENT IS SUCH THAT A CURVE MAY REQUIRE ADDITIONAL DELINEATION, THE DEVICE SPACING MAY BE DECREASED TO 50 FEET.

ADJUSTMENTS IN BUFFER SPACE NEED TO BE INCORPORATED WHEN THE LANE CLOSURE OCCURS NEAR AN INTERCHANGE EXIT OR ENTRANCE RAMP OR INTERSECTION. THE LANE CLOSURE MUST TAKE PLACE FAR ENOUGH IN ADVANCE OF AN EXIT OR ENTRANCE RAMP TO STILL ALLOW FOR ADEQUATE BUFFER SPACE. THE MINIMUM LENGTH OF THE BUFFER SPACE BEFORE AN EXIT RAMP SHOULD BE ONE HALF THE LENGTH OF THE TRANSITION AREA. THE ENTRANCE RAMP SHOULD BE FOLLOWED BY THE ORIGINAL BUFFER SPACE LENGTH OF 800 FEET DESIRABLE PRIOR TO ANOTHER TRAFFIC CONTROL CHANGE SUCH AS A CROSSOVER MANEUVER.

IF THE SPEED LIMIT WILL CHANGE BASED ON THE PRESENCE OF WORKERS, USE THE TAPER LENGTH THAT MATCHES THE HIGHER OF THE TWO SPEEDS FOR A CONTINUOUS LANE CLOSURE.

EXISTING POST MOUNTED SPEED LIMIT SIGNS SHOULD BE COVERED OR REMOVED.

1. POST NON-CONSTRUCTION SPEED LIMIT.
2. IF THE LANE CLOSURE MOVES DOWNSTREAM, LEAVE DSLT IN PLACE.
3. PLACE DSLT AT EXISTING POST MOUNTED SPEED LIMIT SIGN AFTER THE END OF THE ACCELERATION LANE OF EACH ENTRANCE RAMP. IF THERE IS NOT AN EXISTING SIGN, PLACE 1,500 FEET BEYOND THE END OF THE ACCELERATION LANE OF EACH ENTRANCE RAMP
4. FOR LEFT LANE CLOSURES, DSLT REMAINS ON RIGHT SHOULDER.
5. 5 DRUMS SPACED @ 10' INTERVALS AS NEEDED.

LEGEND

- SIGN ON PERMANENT SUPPORT
- TRAFFIC CONTROL DRUM
- TRAFFIC CONTROL DRUM WITH TYPE "C" STEADY BURN LIGHT
- TYPE III BARRICADE WITH ATTACHED SIGN
- TYPE "A" WARNING LIGHT (FLASHING)
- REMOVING PAVEMENT MARKINGS
- DIRECTION OF TRAFFIC
- WORK AREA
- CONNECTED ARROW BOARD
- DIGITAL SPEED LIMIT TRAILER (DSLT)
- WZ START LOCATION MARKER
- WZ END LOCATION MARKER

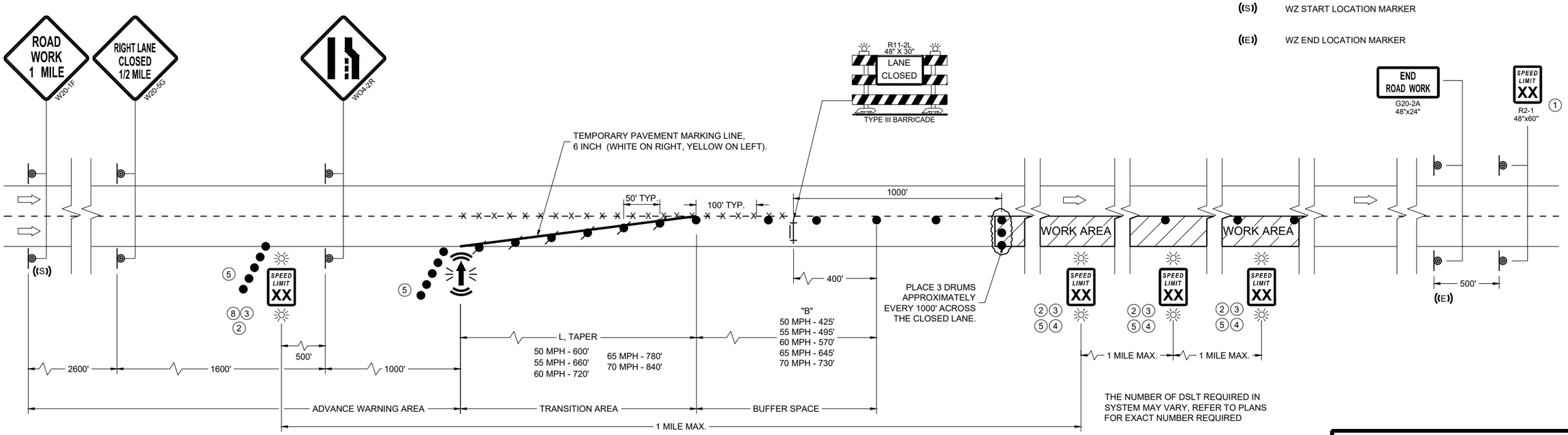

TRAFFIC CONTROL, LANE CLOSURE, DIGITAL SPEED REDUCTION SYSTEM

STATE OF WISCONSIN
DEPARTMENT OF TRANSPORTATION

APPROVED
November 2025 — DATE
/S/ Andrew Heidtke — ROADWAY STANDARDS DEVELOPMENT UNIT SUPERVISOR

FHWA

6
SDD 15D12-16g

LEGEND

SIGN ON PERMANENT SUPPORT

SIGN ON TEMPORARY SUPPORT

TRAFFIC CONTROL DRUM

TRAFFIC CONTROL DRUM WITH TYPE "C" STEADY BURN LIGHT

REMOVING PAVEMENT MARKING (SEE GENERAL NOTES)

TYPE III BARRICADE WITH ATTACHED SIGN

FLAGS, 16" X 16" MIN., ORANGE

DIRECTION OF TRAFFIC

GENERAL NOTES

THE INSTALLATIONS SHOWN ON THIS SHEET ARE TYPICAL EXAMPLES AND ARE NOT INTENDED TO REPRESENT ANY PARTICULAR RAMP. AT SPECIFIC FIELD LOCATIONS, SIMILAR INSTALLATIONS SHALL BE USED AND ADJUSTED TO THE GEOMETRICS OF THE RAMP AS COORDINATED WITH THE ENGINEER.

THE EXACT NUMBER, LOCATION, AND SPACING OF ALL SIGNS AND DEVICES SHALL BE ADJUSTED TO FIT FIELD CONDITIONS AS APPROVED BY THE ENGINEER.

THE SPACING BETWEEN TRAFFIC CONTROL SIGNS SHOULD BE ADJUSTED TO NOT CONFLICT WITH AND SHOULD PROVIDE A MINIMUM OF 200 FEET (500 FEET DESIRABLE) CLEARANCE TO EXISTING SIGNS THAT WILL REMAIN IN PLACE.

ALL SIGNS ARE 48" X 48" UNLESS OTHERWISE NOTED.

"WO" IS THE SAME AS "W" EXCEPT THE BACKGROUND IS ORANGE.

SEE SEPARATE LANE CLOSURE DETAIL FOR TYPICAL SPACING OF TYPE III BARRICADES AND R11-2L "LANE CLOSED" SIGNS.

YIELD SIGN AND WARNING SIGNS ON ENTRANCE RAMP ARE ALSO APPROPRIATE FOR CLOSURE OF THE MAINLINE LEFT LANE. OMIT THE YIELD SIGN IF MORE THAN ONE LANE REMAINS OPEN ON THE MAINLINE AND THE RAMP TAPER IS AT LEAST AS LONG AS THE NORMAL ENTRANCE RAMP TAPER AT THE SITE.

SIGNS THAT WILL BE IN PLACE LESS THAN 7 CONSECUTIVE DAYS AND NIGHTS OR THAT WILL BE PLACED IN A CLOSED LANE, MAY BE MOUNTED ON PORTABLE SUPPORTS. USE SUPPORTS THAT PROVIDE A MINIMUM OF 5 FEET FROM THE BOTTOM OF THE SIGN TO THE PAVEMENT.

IF INDICATED IN MISCELLANEOUS QUANTITIES, SUBSTITUTE FLEXIBLE TUBULAR MARKERS FOR DRUMS IN THE GORE BETWEEN THE ENTRANCE RAMP AND MAINLINE TRAFFIC.

ANY SIGNS TEMPORARY OR EXISTING, WHICH CONFLICT WITH TRAFFIC CONTROL "IN USE" SHALL BE REMOVED OR COVERED AS NEEDED AND AS APPROVED BY THE ENGINEER.

REMOVE PAVEMENT MARKINGS AND PLACE TEMPORARY PAVEMENT MARKING LINES IF LANE CLOSURE IS TO BE IN PLACE FOR 4 OR MORE CONTINUOUS DAYS AND NIGHTS.

WARNING LIGHTS ARE NOT REQUIRED IF THE LANE CLOSURE IS A DAYTIME ONLY OPERATION.

(1) CONSULT WITH REGIONAL WORK ZONE ENGINEER IF NEED TO REDUCE LENGTH EXISTS.

(2) IF LOCATED AFTER INITIAL LANE CLOSURE BARRICADE AND "LANE CLOSED" SIGN, USE 3 DRUMS IN PLACE OF BARRICADE AND SIGN.

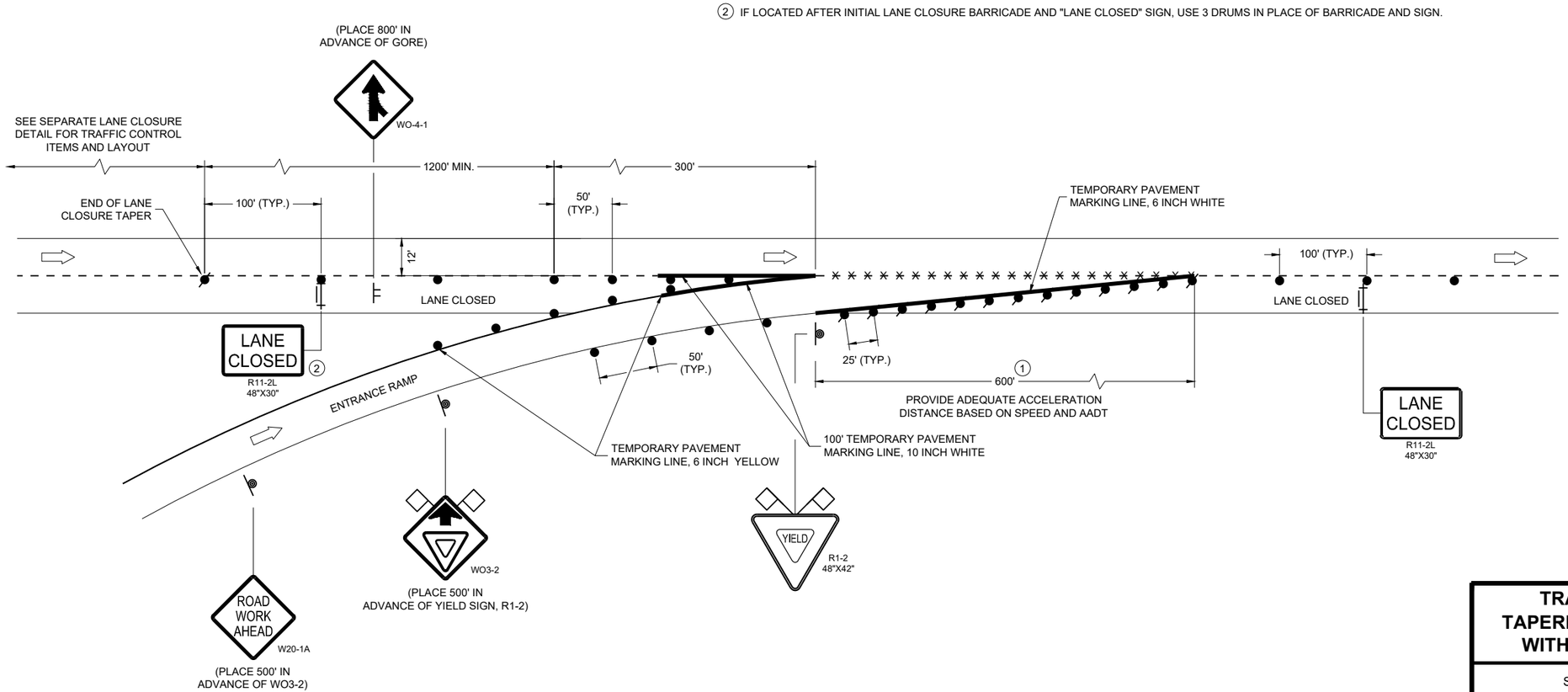

TRAFFIC CONTROL, TAPERED ENTRANCE RAMP WITHIN LANE CLOSURE

STATE OF WISCONSIN
DEPARTMENT OF TRANSPORTATION

APPROVED
February 2025 — DATE
/S/ Andrew Heidtke — <position>

FHWA

6

SDD 15D15-08c

LEGEND

SIGN ON PERMANENT SUPPORT

SIGN ON TEMPORARY SUPPORT

TRAFFIC CONTROL DRUM

TRAFFIC CONTROL DRUM WITH TYPE "C" STEADY BURN LIGHT

TYPE III BARRICADE WITH ATTACHED SIGN

FLAGS, 16" X 16" MIN., ORANGE

DIRECTION OF TRAFFIC

GENERAL NOTES

THE INSTALLATIONS SHOWN ON THIS SHEET ARE TYPICAL EXAMPLES AND ARE NOT INTENDED TO REPRESENT ANY PARTICULAR RAMP. AT SPECIFIC FIELD LOCATIONS, SIMILAR INSTALLATIONS SHALL BE USED AND ADJUSTED TO THE GEOMETRICS OF THE RAMP AS COORDINATED WITH THE ENGINEER.

THE EXACT NUMBER, LOCATION, AND SPACING OF ALL SIGNS AND DEVICES SHALL BE ADJUSTED TO FIT FIELD CONDITIONS AS APPROVED BY THE ENGINEER.

THE SPACING BETWEEN TRAFFIC CONTROL SIGNS SHOULD BE ADJUSTED TO NOT CONFLICT WITH AND SHOULD PROVIDE A MINIMUM OF 200 FEET (500 FEET DESIRABLE) CLEARANCE TO EXISTING SIGNS THAT WILL REMAIN IN PLACE.

ALL SIGNS ARE 48" X 48" UNLESS OTHERWISE NOTED.

"WO" IS THE SAME AS "W" EXCEPT THE BACKGROUND IS ORANGE.

SEE SEPARATE LANE CLOSURE DETAIL FOR TYPICAL SPACING OF TYPE III BARRICADES AND R11-2L "LANE CLOSED" SIGNS.

YIELD SIGN AND WARNING SIGNS ON ENTRANCE RAMP ARE ALSO APPROPRIATE FOR CLOSURE OF THE MAINLINE LEFT LANE. OMIT THE YIELD SIGN IF MORE THAN ONE LANE REMAINS OPEN ON THE MAINLINE AND THE RAMP TAPER IS AT LEAST AS LONG AS THE NORMAL ENTRANCE RAMP TAPER AT THE SITE.

SIGNS THAT WILL BE IN PLACE LESS THAN 7 CONSECUTIVE DAYS AND NIGHTS OR THAT WILL BE PLACED IN A CLOSED LANE, MAY BE MOUNTED ON PORTABLE SUPPORTS. USE SUPPORTS THAT PROVIDE A MINIMUM OF 5 FEET FROM THE BOTTOM OF THE SIGN TO THE PAVEMENT.

IF INDICATED IN MISCELLANEOUS QUANTITIES, SUBSTITUTE FLEXIBLE TUBULAR MARKERS FOR DRUMS IN THE GORE BETWEEN THE ENTRANCE RAMP AND MAINLINE TRAFFIC.

ANY SIGNS TEMPORARY OR EXISTING, WHICH CONFLICT WITH TRAFFIC CONTROL "IN USE" SHALL BE REMOVED OR COVERED AS NEEDED AND AS APPROVED BY THE ENGINEER.

WARNING LIGHTS ARE NOT REQUIRED IF THE LANE CLOSURE IS A DAYTIME ONLY OPERATION.

(1) PLACE YIELD SIGN TO PROVIDE ADEQUATE SIGHT DISTANCE AND ACCELERATION DISTANCE.

(2) IF LOCATED AFTER INITIAL LANE CLOSURE BARRICADE AND "LANE CLOSED" SIGN, USE 3 DRUMS IN PLACE OF BARRICADE AND SIGN.

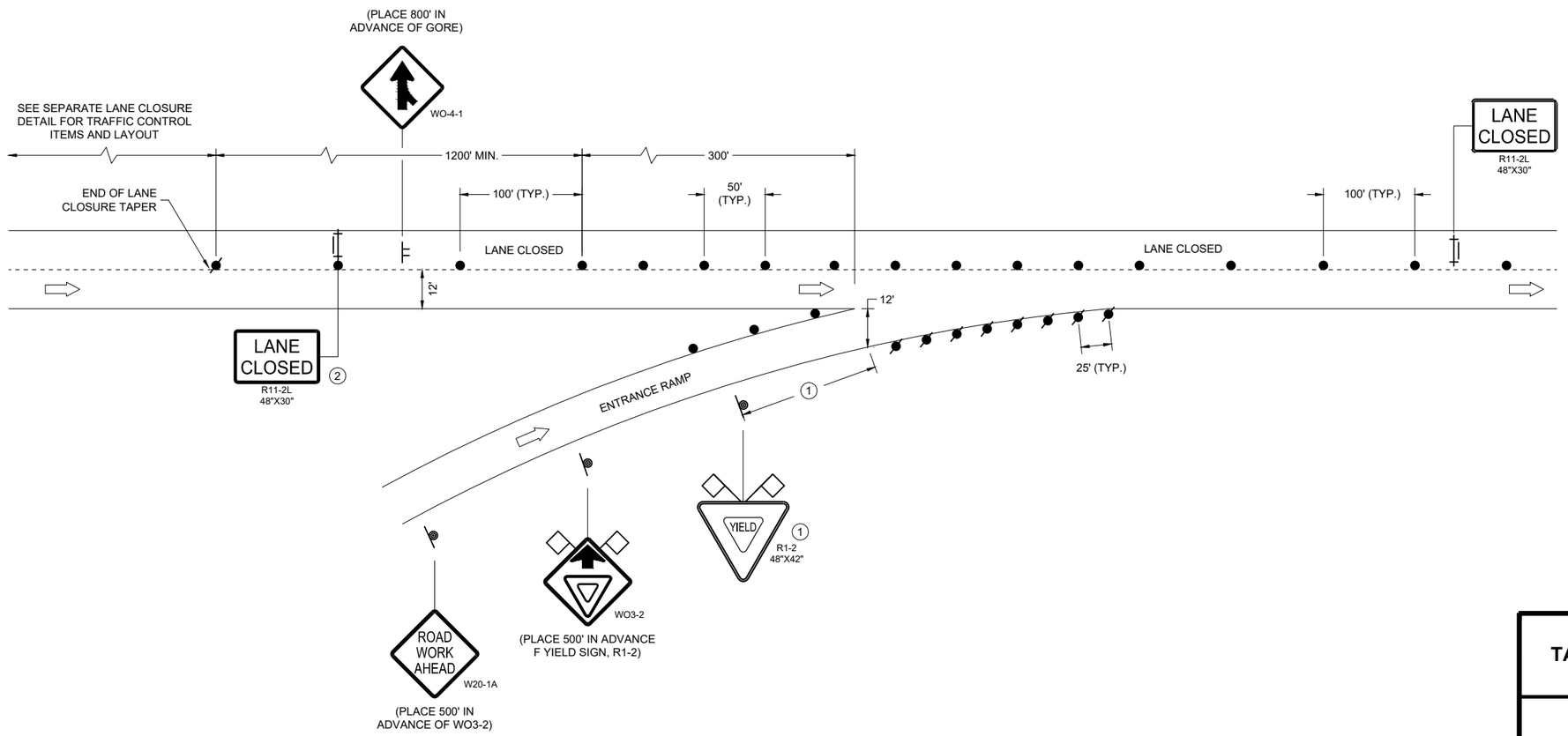

TRAFFIC CONTROL, TAPERED ENTRANCE RAMP WITHIN LANE CLOSURE

STATE OF WISCONSIN
DEPARTMENT OF TRANSPORTATION

APPROVED
February 2025 — DATE
/S/ Andrew Heidtke — WORK ZONE ENGINEER
FHWA

6
SDD 15D15-08d

LEGEND

SIGN ON PERMANENT SUPPORT

SIGN ON TEMPORARY SUPPORT

TRAFFIC CONTROL DRUM

TRAFFIC CONTROL DRUM WITH TYPE "C" STEADY BURN LIGHT

REMOVING PAVEMENT MARKING (SEE GENERAL NOTES)

TYPE III BARRICADE WITH ATTACHED SIGN

DIRECTION OF TRAFFIC

GENERAL NOTES

THE INSTALLATIONS SHOWN ON THIS SHEET ARE TYPICAL EXAMPLES AND ARE NOT INTENDED TO REPRESENT ANY PARTICULAR RAMP. AT SPECIFIC FIELD LOCATIONS, SIMILAR INSTALLATIONS SHALL BE USED AND ADJUSTED TO THE GEOMETRICS OF THE RAMP AS COORDINATED WITH THE ENGINEER.

THE EXACT NUMBER, LOCATION, AND SPACING OF ALL SIGNS AND DEVICES SHALL BE ADJUSTED TO FIT FIELD CONDITIONS AS APPROVED BY THE ENGINEER.

THE SPACING BETWEEN TRAFFIC CONTROL SIGNS SHOULD BE ADJUSTED TO NOT CONFLICT WITH AND SHOULD PROVIDE A MINIMUM OF 200 FEET (500 FEET DESIRABLE) CLEARANCE TO EXISTING SIGNS THAT WILL REMAIN IN PLACE.

ALL SIGNS ARE 48" X 48" UNLESS OTHERWISE NOTED.

"WO" IS THE SAME AS "W" EXCEPT THE BACKGROUND IS ORANGE.

SEE SEPARATE LANE CLOSURE DETAIL FOR TYPICAL SPACING OF TYPE III BARRICADES AND R11-2L "LANE CLOSED" SIGNS.

SIGNS THAT WILL BE IN PLACE LESS THAN 7 CONSECUTIVE DAYS AND NIGHTS OR THAT WILL BE PLACED IN A CLOSED LANE, MAY BE MOUNTED ON PORTABLE SUPPORTS.

IF INDICATED IN MISCELLANEOUS QUANTITIES, SUBSTITUTE FLEXIBLE TUBULAR MARKERS FOR DRUMS IN THE GORE BETWEEN THE EXIT RAMP AND MAINLINE TRAFFIC.

ANY SIGNS TEMPORARY OR EXISTING, WHICH CONFLICT WITH TRAFFIC CONTROL "IN USE" SHALL BE REMOVED OR COVERED AS NEEDED AND AS APPROVED BY THE ENGINEER.

REMOVE PAVEMENT MARKINGS AND PLACE TEMPORARY PAVEMENT MARKING LINES IF LANE CLOSURE IS TO BE IN PLACE FOR 4 OR MORE CONTINUOUS DAYS AND NIGHTS.

WARNING LIGHTS ARE NOT REQUIRED IF THE LANE CLOSURE IS A DAYTIME ONLY OPERATION.

(1) IF LOCATED AFTER INITIAL LANE CLOSURE BARRICADE AND "LANE CLOSED" SIGN, USE 3 DRUMS IN PLACE OF BARRICADE AND SIGN.

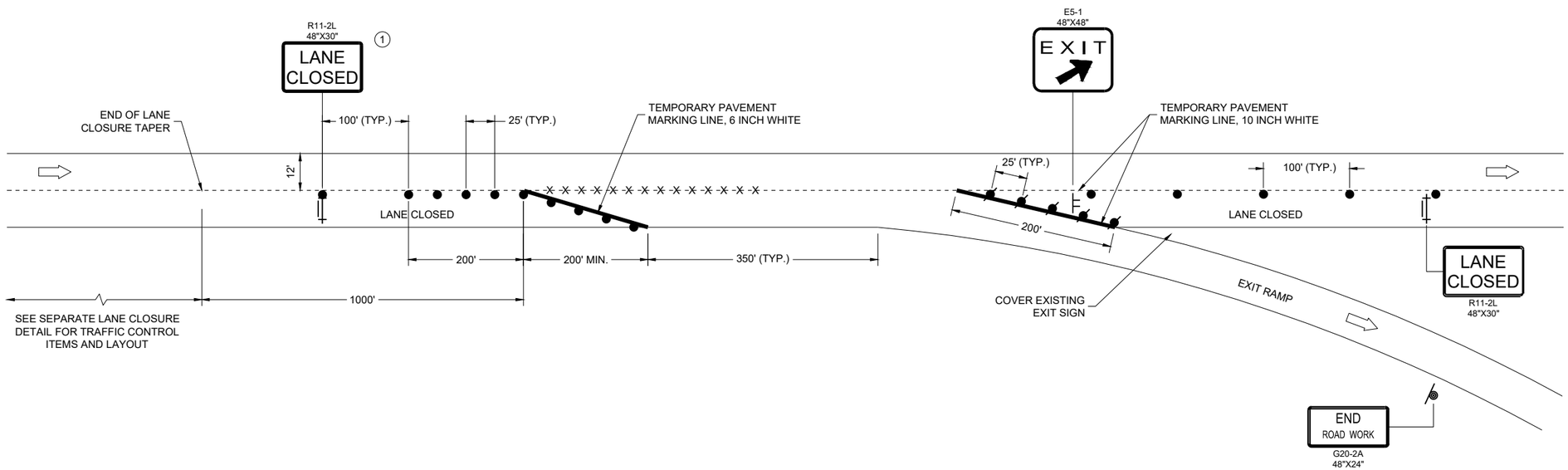

TRAFFIC CONTROL, PARALLEL EXIT RAMP WITHIN LANE CLOSURE

STATE OF WISCONSIN
DEPARTMENT OF TRANSPORTATION

APPROVED
February 2025 — DATE
/S/ Andrew Heidtke — WORK ZONE ENGINEER
FHWA

6
SDD 15D15-08e

LEGEND

- TYPE III BARRICADE
- TYPE III BARRICADE WITH ATTACHED SIGN
- TRAFFIC CONTROL DRUM
- SIGN ON PERMANENT SUPPORT
- TYPE "A" WARNING LIGHT (FLASHING)
- DIRECTION OF TRAFFIC

GENERAL NOTES

THIS RAMP CLOSURE DETAIL IS TYPICAL FOR CLOSING A RIGHT SIDE EXIT RAMP. FOR A LEFT SIDE EXIT RAMP, REVERSE THE TRAFFIC CONTROL.

THE EXACT NUMBER, LOCATION, AND SPACING OF ALL SIGNS AND DEVICES SHALL BE ADJUSTED TO FIT FIELD CONDITIONS AS APPROVED BY THE ENGINEER.

THE SPACING BETWEEN TRAFFIC CONTROL SIGNS SHOULD BE ADJUSTED TO NOT CONFLICT WITH AND SHOULD PROVIDE A MINIMUM OF 200 FEET (500 FEET DESIRABLE) CLEARANCE TO EXISTING SIGNS THAT WILL REMAIN IN PLACE.

ALL SIGNS ARE 48" X 48" UNLESS OTHERWISE NOTED.

SIGNS THAT WILL BE IN PLACE LESS THAN 7 CONTINUOUS DAYS AND NIGHTS MAY BE MOUNTED ON PORTABLE SUPPORTS.

ANY SIGNS, TEMPORARY OR EXISTING, WHICH CONFLICT WITH TRAFFIC CONTROL "IN USE" SHALL BE REMOVED OR COVERED AS NEEDED AND AS APPROVED BY THE ENGINEER.

PLACE TEMPORARY PAVEMENT MARKING LINE IF RAMP CLOSURE IS TO BE IN PLACE 4 OR MORE CONTINUOUS DAYS AND NIGHTS.

WORK AREAS WITH A DROP OFF ALONG THE EDGE OF AN OPEN TRAVEL LANE SHALL BE LEVELED WITH TEMPORARY FILL WHEN THE CONTRACTOR IS NOT WORKING ADJACENT TO THE TRAVEL LANE. DRUMS SHALL BE PLACED ENTIRELY OUTSIDE THE TRAVEL LANE, ALLOWING THE FULL UNOBSTRUCTED LANE WIDTH, WHEN WORK IS NOT IN PROGRESS.

WHERE MEDIAN BARRIER IS IN PLACE, SIGNS SHOWN ON LEFT SIDE OF ROADWAY MAY BE OMITTED FOR RIGHT SIDE RAMP CLOSURES OF LESS THAN 12 - HOUR DURATION.

1. W20 - 1A AND G20 - 2A SIGNS ARE NOT REQUIRED IF THE RAMP CLOSURE IS WITHIN A LARGER WORK ZONE WHERE THESE SIGNS ARE ALREADY PRESENT.
2. PLACE "RAMP CLOSED BEGINNING" SIGN OR PCMS 7 CALENDAR DAYS PRIOR TO CLOSURE OR AS DIRECTED BY THE ENGINEER. SEE WISCONSIN STANDARD SIGN PLATES FOR SIGN LAYOUT.

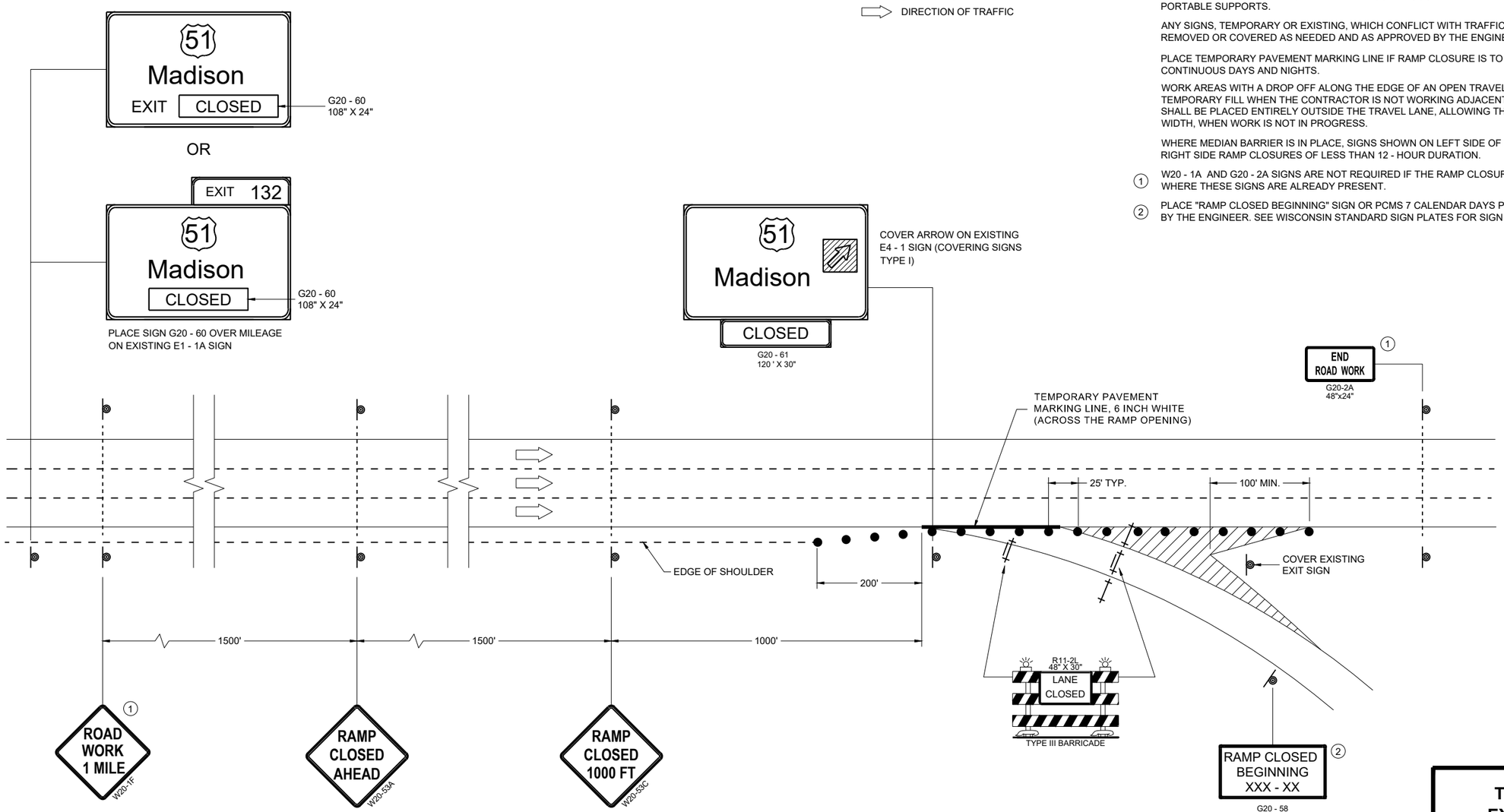

OR

PCMS MESSAGING

FRAME 1	FRAME 2
RAMP TO CLOSE	XXXDAY XX XX XX

TRAFFIC CONTROL, EXIT RAMP CLOSURE

STATE OF WISCONSIN
DEPARTMENT OF TRANSPORTATION

APPROVED
November 2025 — DATE
/S/ Andrew Heidtke — <position>

FHWA

6

SDD 15D16-07

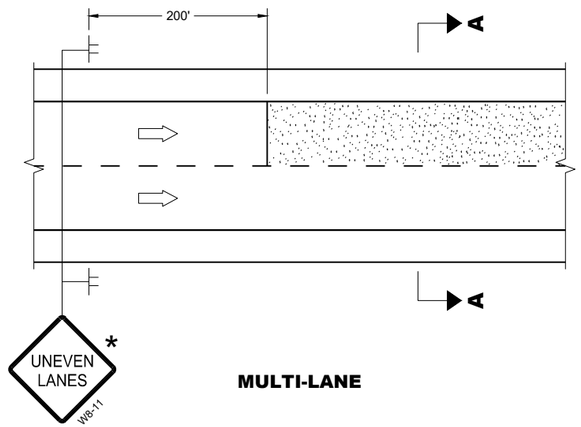

MULTI-LANE

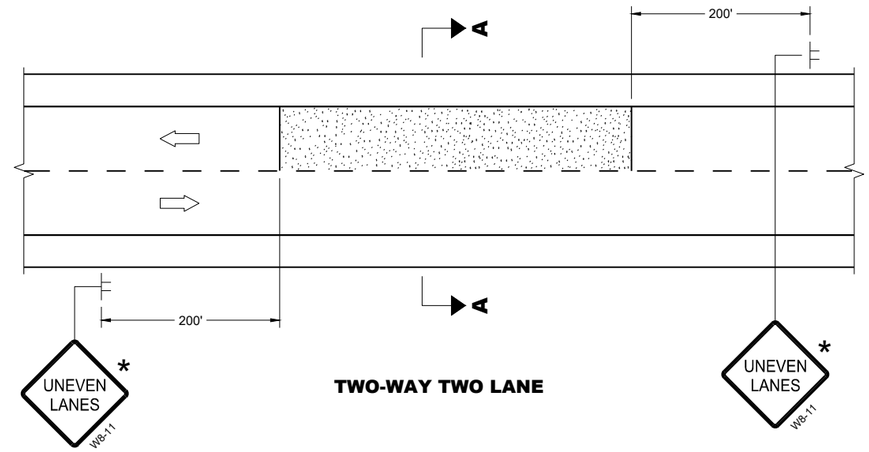

TWO-WAY TWO LANE

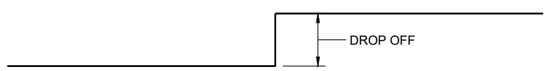

SECTION A - A

OR

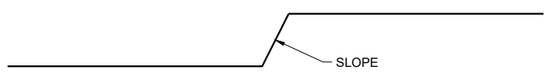

SECTION A - A

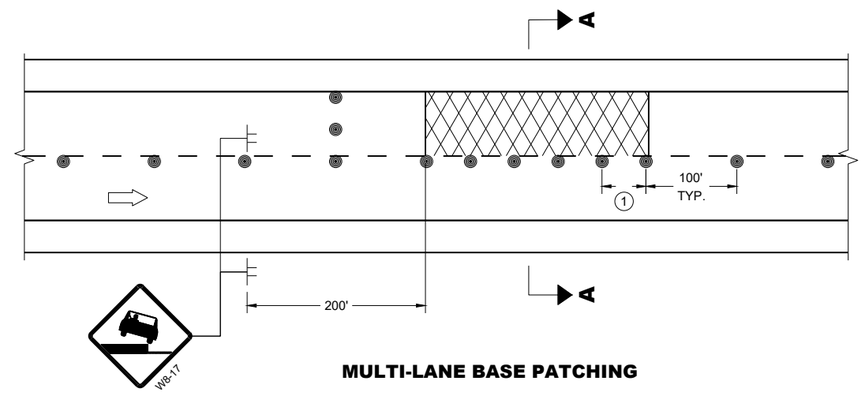

MULTI-LANE BASE PATCHING

ADJACENT LANE DROP-OFFS

GENERAL NOTES

FOR SPOT LOCATIONS USE ENGINEERING JUDGEMENT WHEN PLACING ADDITIONAL SIGNS.

ALL SIGNS ARE 48" X 48" UNLESS OTHERWISE NOTED.

"WO" SIGNS ARE THE SAME AS "W" SIGNS EXCEPT THE BACKGROUND IS ORANGE.

WARNING LIGHTS ARE NOT REQUIRED IF THE LANE CLOSURE IS A DAYTIME ONLY OPERATION.

* IF THE DROP-OFF IS CONTINUOUS ALONG THE PROJECT, PLACE ADDITIONAL SIGNS EVERY 1 MILE AND AFTER EVERY ENTRANCE RAMP.

(1) USE CLOSER SPACING WHEN DELINEATING DROP-OFF.

LEGEND

- SIGN ON TEMPORARY SUPPORT
- TRAFFIC CONTROL DRUM
- TYPE III BARRICADE WITH ATTACHED SIGN
- TYPE "A" WARNING LIGHT (FLASHING)
- DIRECTION OF TRAFFIC
- WORK AREA WITH DROP-OFF
- MILLED SURFACE

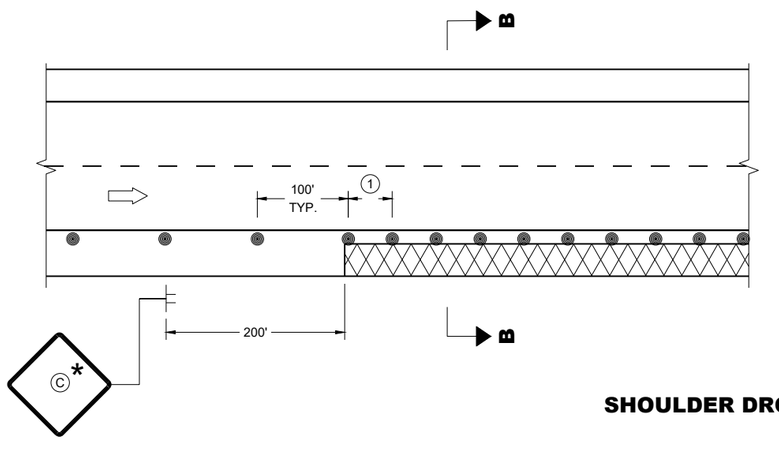

SHOULDER DROP-OFFS

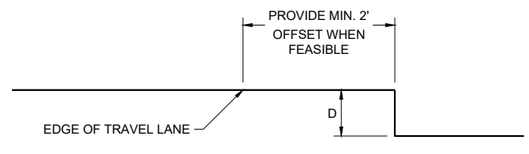

SECTION B - B

D	SIGN (C)
< 2" WITH A SLOPE STEEPER THAN 3:1	LOW SHOULDER WO8-9
2" < 6" WITH A SLOPE STEEPER THAN 3:1	SHOULDER DROP - OFF W8-9A **PROVIDE A 3:1 OR FLATTER SLOPE OF MATERIAL ADJACENT TO THE PAVEMENT**

TRAFFIC CONTROL, DROP-OFF SIGNING

STATE OF WISCONSIN
DEPARTMENT OF TRANSPORTATION

APPROVED
February 2025 — DATE
/S/ Andrew Heidtke — WORK ZONE ENGINEER

FHWA

6

SDD 15D39-03

LEGEND

- TYPE III BARRICADE WITH ATTACHED SIGN
- SIGN ON PERMANENT SUPPORT
- TRAFFIC CONTROL DRUM
- TRAFFIC CONTROL DRUM WITH TYPE "C" STEADY BURN LIGHT
- TYPE "A" WARNING LIGHT (FLASHING)
- DIRECTION OF TRAFFIC
- WORK AREA
- REMOVING PAVEMENT MARKING (SEE GENERAL NOTES)
- CONCRETE BARRIER TEMPORARY PRECAST

GENERAL NOTES

THE EXACT NUMBER, LOCATION, AND SPACING OF ALL SIGNS AND DEVICES SHALL BE ADJUSTED TO FIT FIELD CONDITIONS AS APPROVED BY THE ENGINEER.

THE SPACING BETWEEN SIGNS SHOULD BE ADJUSTED TO NOT CONFLICT WITH AND TO PROVIDE A MINIMUM OF 200 FEET, (500 FEET DESIRABLE) DISTANCE TO EXISTING SIGNS.

THIS LANE CLOSURE IS TYPICAL FOR LANE SHIFT LEFT - REVERSE FOR SHIFTING RIGHT.

ALL SIGNS ARE 48"x48" UNLESS OTHERWISE NOTED.

"WO" IS THE SAME AS "W" EXCEPT THE BACKGROUND IS ORANGE.

ANY SIGNS TEMPORARY OR EXISTING, WHICH CONFLICT WITH TRAFFIC CONTROL "IN USE" SHALL BE REMOVED OR COVERED AS NEEDED AND AS APPROVED BY THE ENGINEER. NO WARNING LIGHTS SHALL BE WORKING ON ANY "COVERED" OR "DOWNED" SIGNS.

CONSIDER GEOMETRICS WHEN LOCATING SIGNS AND ARROW BOARDS SO THE DRIVER HAS A CLEAR VIEW OF THE ARROW BOARD AND LANE CLOSURE DRUMS FOR A MINIMUM 1500 FEET IN FRONT OF DRUMS.

FOR A LANE CLOSURE THAT IS IN PLACE LESS THAN 7 CONTINUOUS DAYS AND NIGHTS, THE ADVANCED WARNING SIGNS MAY BE MOUNTED ON PORTABLE SUPPORTS.

REMOVE PAVEMENT MARKINGS AND PLACE TEMPORARY PAVEMENT MARKING LINES IF LANE CLOSURE IS TO BE IN PLACE FOR 4 OR MORE CONTINUOUS DAYS AND NIGHTS.

WARNING LIGHTS ARE NOT REQUIRED IF THE LANE CLOSURE IS A DAYTIME ONLY OPERATION.

IF THE HORIZONTAL ALIGNMENT IS SUCH THAT A CURVE MAY REQUIRE ADDITIONAL DELINEATION, THE DEVICE SPACING MAY BE DECREASED TO 50 FEET.

ADJUSTMENTS IN BUFFER SPACE NEED TO BE INCORPORATED WHEN THE LANE SHIFT OCCURS NEAR AN INTERCHANGE EXIT OR ENTRANCE RAMP. THE LANE SHIFT MUST TAKE PLACE FAR ENOUGH IN ADVANCE OF AN EXIT OR ENTRANCE RAMP TO STILL ALLOW FOR ADEQUATE BUFFER SPACE. THE MINIMUM LENGTH OF THE BUFFER SPACE BEFORE AN EXIT RAMP SHOULD BE 1/2 THE LENGTH OF THE TRANSITION AREA. THE ENTRANCE RAMP SHOULD BE FOLLOWED BY THE ORIGINAL BUFFER SPACE LENGTH OF 800 FEET DESIRABLE PRIOR TO ANOTHER TRAFFIC CONTROL CHANGE SUCH AS A CROSSOVER MANEUVER.

1. USE ONLY WHEN T<600', OMIT WO1-4R.
2. IF NEEDED, USE ONLY IF DESIGN SPEED IS 10 MPH BELOW POSTED SPEED.
3. IF THE BEGINNING OF LANE SHIFT TAPER IS 1200 FEET OR LESS FROM END OF LANE CLOSURE TAPER, PLACE THE WO1-4L SIGN 200 FEET AFTER THE END OF THE LANE CLOSURE TAPER.
4. IF THE BEGINNING OF THE SECOND LANE SHIFT TAPER IS 1200 FEET OR LESS FROM END OF THE FIRST LANE CLOSURE TAPER, PLACE THE WO1-4L SIGN 200 FEET AFTER THE END OF THE FIRST LANE CLOSURE TAPER.
5. DRUMS IN A CLOSED LANE THAT MUST BE MOVED FOR A WORK OPERATION SHALL BE IMMEDIATELY REESTABLISHED UPON COMPLETION OF THE OPERATION, OR FOR CONTINUING OPERATIONS, AT THE END OF EACH WORKING DAY.

POSTED SPEED LIMIT PRIOR TO WORK STARTING (MPH)	SHIFTING TAPER L/2 W, LATERAL OFFSET (FT)									BUFFER SPACE (B) FEET
	1	2	3	4	5	6	7	8	9	
50	25	50	75	100	125	150	175	200	225	425
55	28	55	83	110	138	165	193	220	248	495
60	30	60	90	120	150	180	210	240	270	570
65	33	65	98	130	163	195	228	260	293	645
70	35	70	105	140	175	210	245	280	315	730

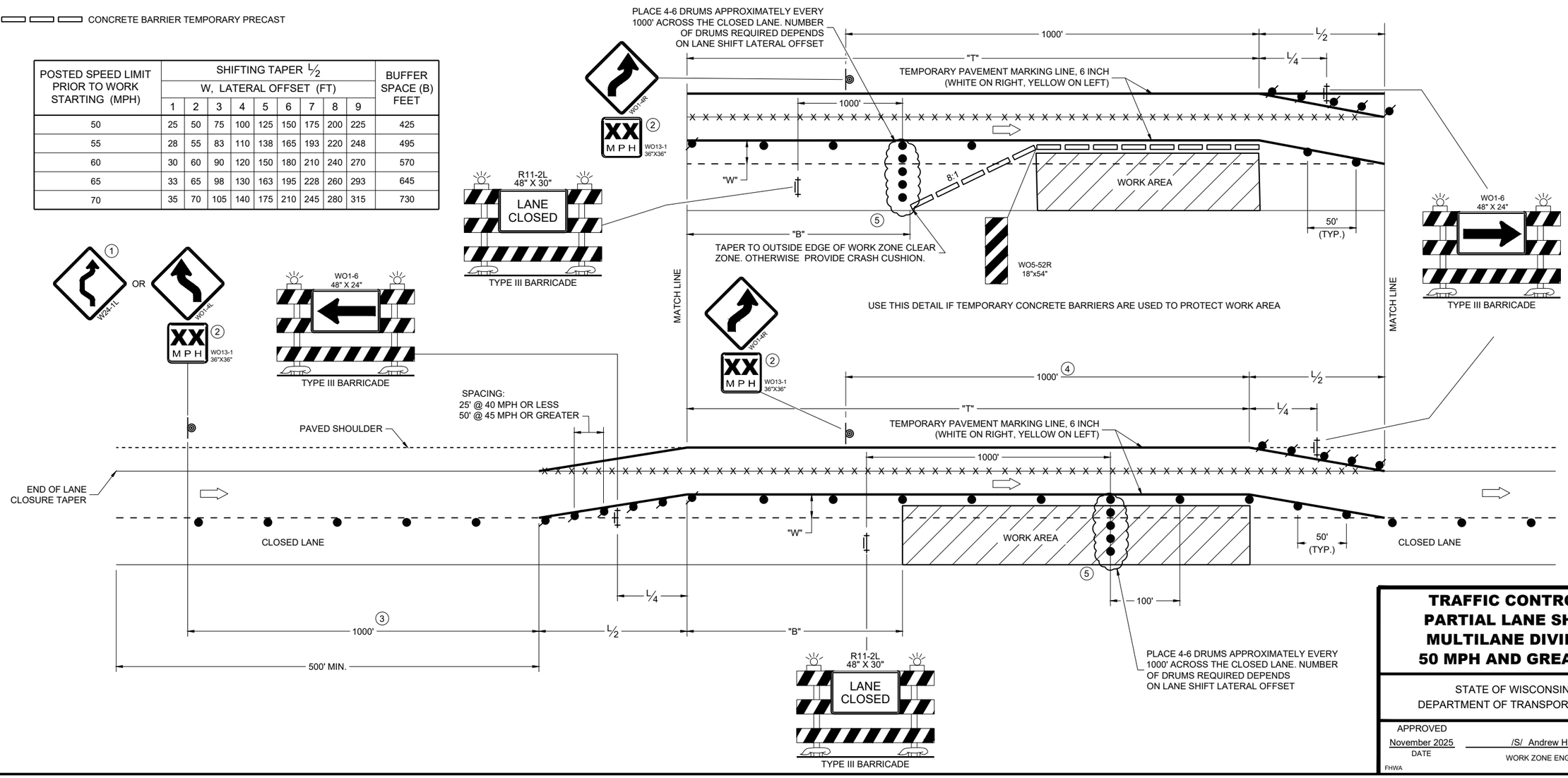

TRAFFIC CONTROL, PARTIAL LANE SHIFT MULTILANE DIVIDED 50 MPH AND GREATER

STATE OF WISCONSIN
DEPARTMENT OF TRANSPORTATION

APPROVED
November 2025 — DATE
/S/ Andrew Heidtke — WORK ZONE ENGINEER
FHWA

6

SDD 15D40-07d

LEGEND

- SIGN ON PERMANENT SUPPORT
- TRAFFIC CONTROL DRUM
- TRAFFIC CONTROL DRUM WITH TYPE "C" STEADY BURN LIGHT
- TYPE III BARRICADE WITH ATTACHED SIGN
- DIRECTION OF TRAFFIC
- CONSTRUCTION TRAFFIC
- WORK AREA

TABLE 1

S (MPH)	INGRESS, L	EGRESS, L
50	435'	720'
55	480'	960'
60	530'	1200'
65	570'	1410'
70	615'	1620'

LEGEND

ALL SIGNS ARE 48"X48" UNLESS OTHERWISE NOTED.

"WO" SIGN IS THE SAME AS "W" SIGN EXCEPT THE BACKGROUND IS ORANGE.

ANY SIGNS TEMPORARY OR EXISTING, WHICH CONFLICT WITH THE TRAFFIC CONTROL "IN USE" SHALL BE REMOVED OR COVERED AS NEEDED AND AS APPROVED BY THE ENGINEER. NO WARNING LIGHTS SHALL BE WORKING ON COVERED OR "DOWNED" SIGNS.

THE EXACT NUMBER, LOCATION, AND SPACING OF ALL SIGNS AND DEVICES SHALL BE ADJUSTED TO FIT FIELD CONDITIONS AS APPROVED BY THE ENGINEER.

WORK ZONE INGRESS/EGRESS LOCATIONS SHALL BE APPROVED BY THE ENGINEER. LOCATIONS FOR WORK ZONE ACCESS TO/FROM THE FREEWAY SHALL NOT BE USED FOR INGRESS AND EGRESS AT THE SAME TIME.

THIS ACCESS DETAIL IS TYPICAL FOR LEFT LANE ACCESS, FOR RIGHT LANE ACCESS, REVERSE THE TRAFFIC CONTROL

TEMPORARY SUPPORTS MAY BE USED IF PLACED BEHIND TEMPORARY BARRIER WALL

TRUCKS SHALL USE FLASHING YELLOW BEACON WHEN ENTERING AND EXITING LIVE TRAFFIC.

(1) REMOVE OR COVER WHEN ACCESS IS NOT NEEDED.

(2) WHEN INGRESS / EGRESS IS NOT IN USE, PLACE DRUMS WITH 100' SPACING ALONG THE LANE LINE OF THE ENTRANCE / EXIT OF THE INGRESS / EGRESS.

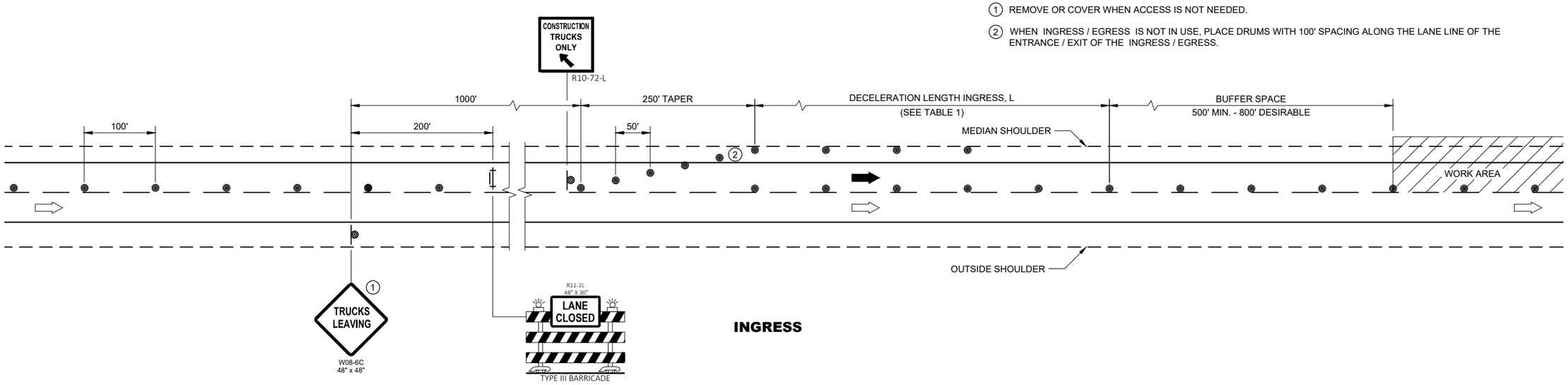

INGRESS

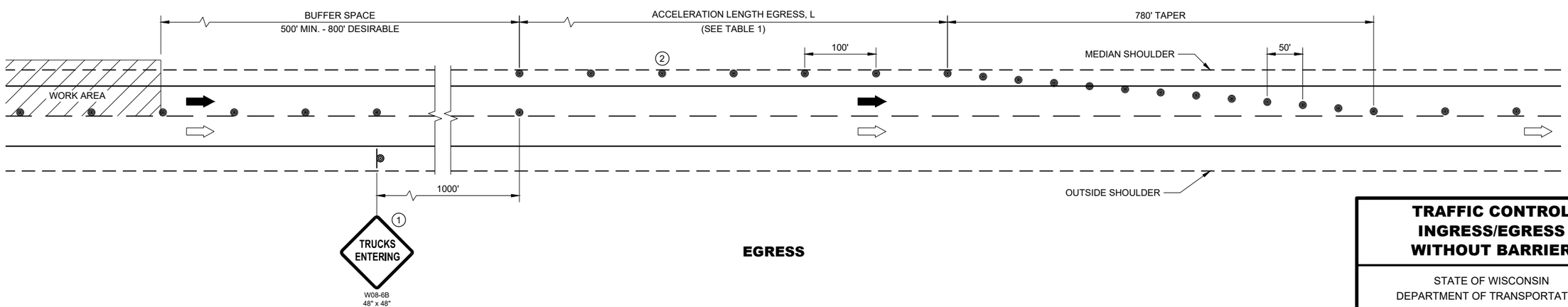

EGRESS

TRAFFIC CONTROL INGRESS/EGRESS WITHOUT BARRIER

STATE OF WISCONSIN
DEPARTMENT OF TRANSPORTATION

APPROVED
May 2023 — DATE
/S/ Andrew Heidtke — WORK ZONE ENGINEE
FHWA

6

SDD 15D47-03b

URBAN AREA

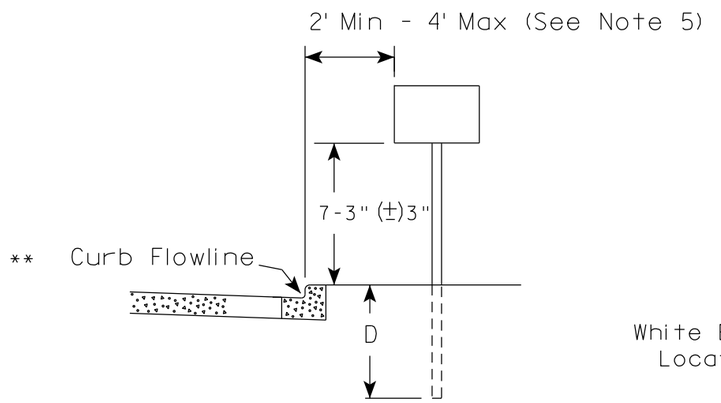

RURAL AREA (See Note 2)

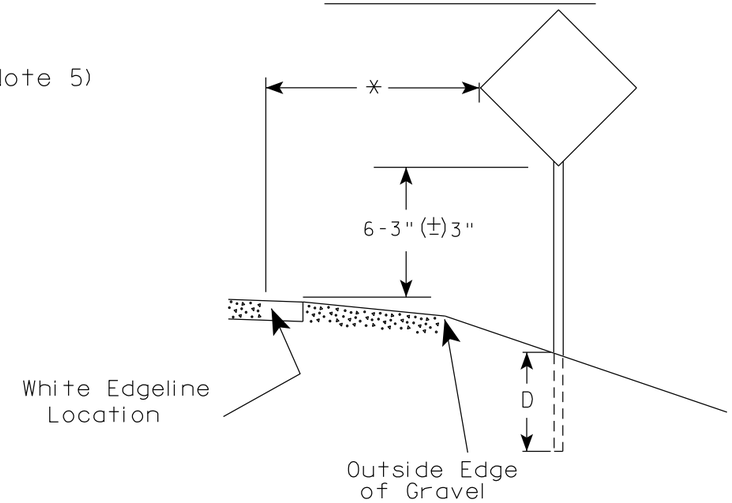

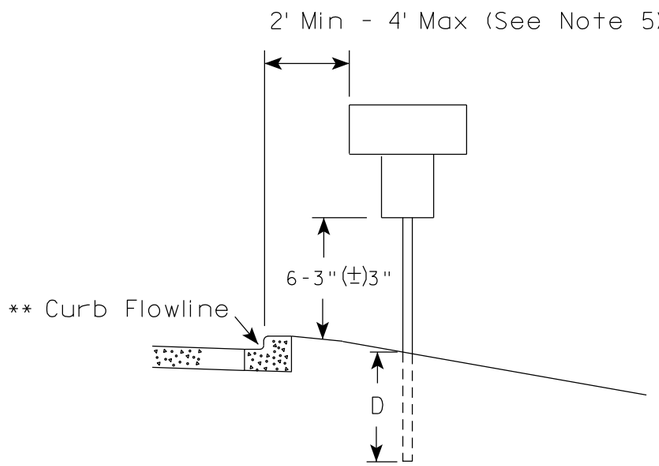

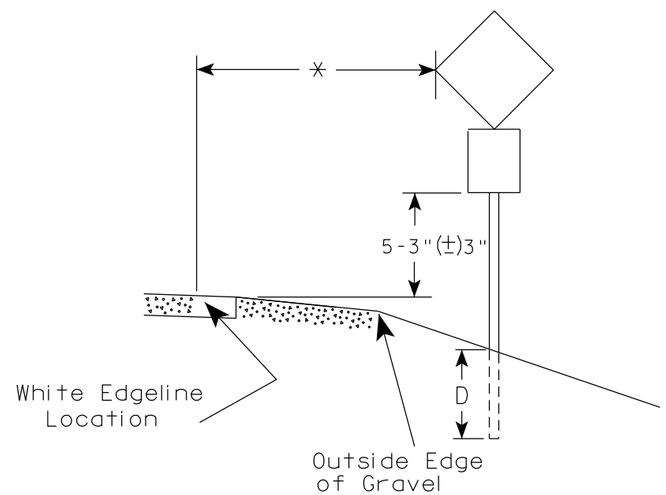

** The existence of curb and gutter does not in itself mandate the vertical clearance illustrated. That height is typically measured where there is sidewalk adjacent to the roadway or parking is permitted. In the absence of sidewalk vertical clearance is measured from the top of the curb. Offset of signs is measured from the flow line.

* 6 feet from edge of a paved shoulder or 12 feet from the edge of pavement (edge line location) or 2 feet from outside edge of gravel, whichever is greater unless directed by project engineer.

GENERAL NOTES

1. Signs wider than 4 feet or 20 sq.ft or larger, shall be mounted on multiple posts. Refer to plate A4-4.
2. If signs are mounted on or behind barrier wall, see A4-10 sign plate.
   The Double Arrow sign (W12-1D) shall be mounted at a height of 2'-3" (±) 3". The Chevron sign (W1-8), Roundabout Chevron panel (R6-4B), Enhanced Reference Markers, Clearance Markers (W5-52), Mile Markers (D10 series), In Road Object Markers (W5-54) & End of Road Markers (W5-56) shall be mounted at a height of 4'-3" (±) 3".
3. For expressways and freeways, mounting height is 7'- 3" (±) 3" or 6'-3" (±) 3" depending upon existence of a sub-sign.
4. Minimum mounting height for signs mounted on traffic signal poles is 5'- 3" (±) 3".
5. Offset distance shall be consistent with existing signs or consistent throughout length of project.
6. Folding signs shall be mounted at a height of 5'-3" (±) 3" or as directd by the Engineer.

POST EMBEDMENT DEPTH

Area of Sign Installation (Sq. Ft.)	D (Min)
20 or Less	4'
Greater than 20	5'

TYPICAL INSTALLATION OF PERMANENT TYPE II SIGNS ON SINGLE POSTS

WISCONSIN DEPT OF TRANSPORTATION

APPROVED Matthew R Rauch
for State Traffic Engineer

DATE 12/6/23 PLATE NO. A4-3.23

7 7

PROJECT NO:	HWY:	COUNTY:		SHEET NO: 247	E

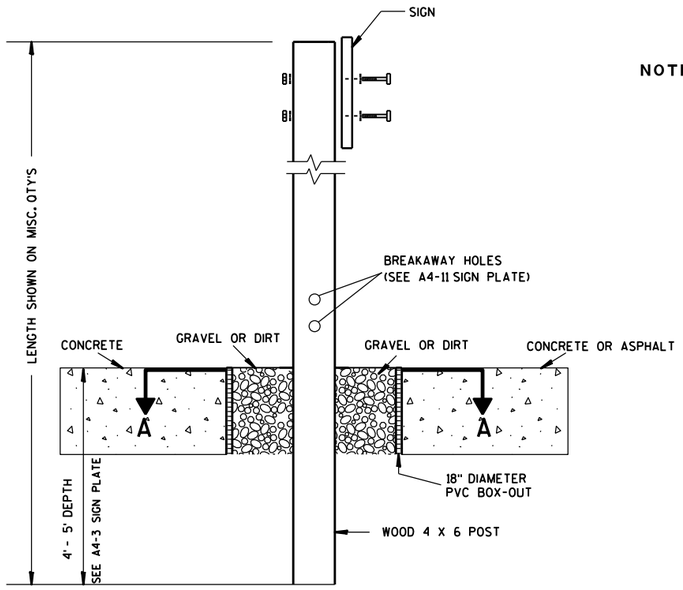

ELEVATION VIEW

DETAIL OF WOOD 4 X 6 SIGN POST IN BOX-OUT

NOTES:
1. ALL MATERIAL TO BE APPROVED BY ENGINEER PRIOR TO INSTALLATION
2. SEE SIGN PLATE A4-8 FOR SIGN HARDWARE REQUIREMENTS
3. 18 INCH X 18 INCH SQUARE BOX-OUTS MAY BE USED FOR INSTALLATIONS IN EXISTING CONCRETE OR ASPHALT LOCATIONS.

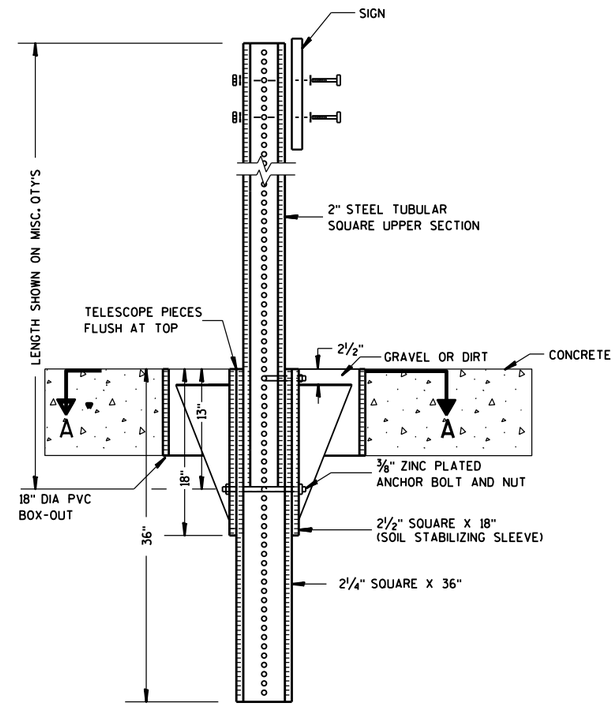

ELEVATION VIEW

DETAIL OF STEEL 2 X 2 SIGN POST IN BOX-OUT

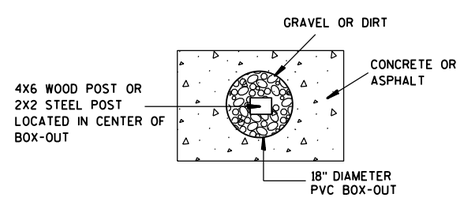

PLAN VIEW

FOR NEW CONCRETE/ASPHALT INSTALLATIONS

SIGN POST
BOX-OUTS
A4-3B

WISCONSIN DEPT OF TRANSPORTATION

APPROVED Matthew R Rauch
for State Traffic Engineer

DATE 1/27/14 PLATE NO. A4-3B.1

PROJECT NO:	HWY:	COUNTY:		SHEET NO:	E

URBAN AREA

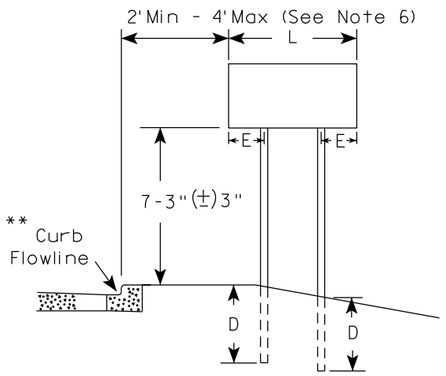

RURAL AREA (See Note 3)

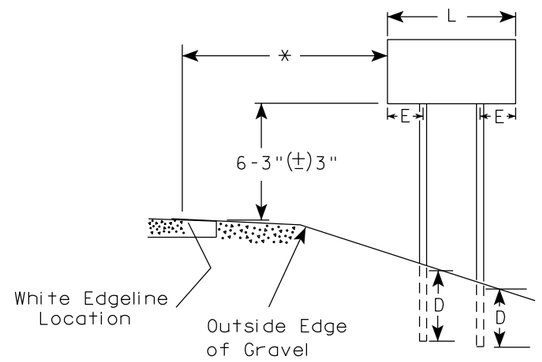

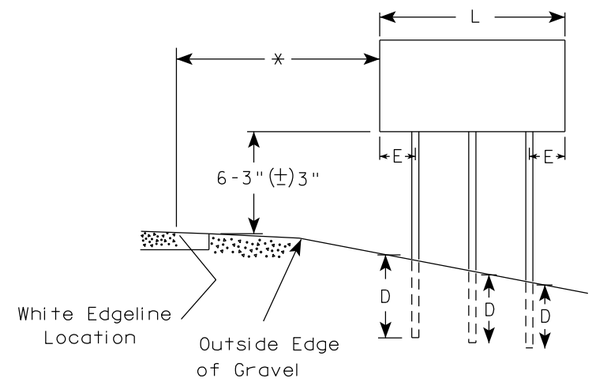

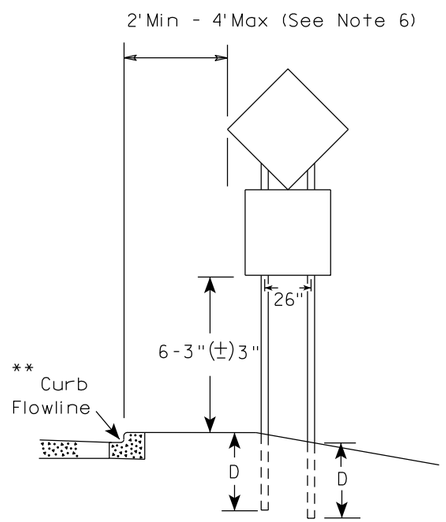

48" DIAMOND WARNING SIGN

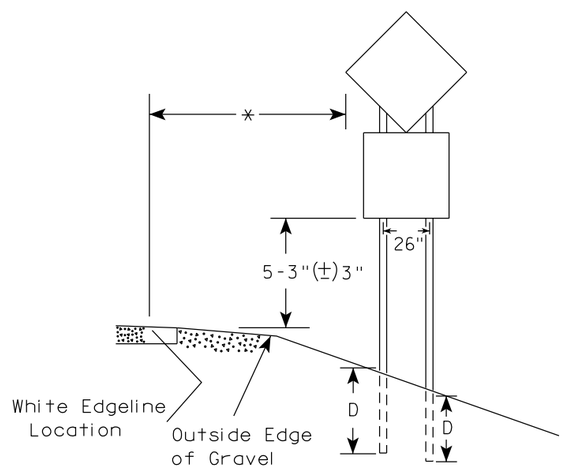

48" DIAMOND WARNING SIGN

GENERAL NOTES

1. For 3 or 4 post installations, individual post spacing shall be greater than 3'-6".
2. See tables below for required number of posts.
3. For expressways and freeways, mounting height is 7'-3" (±) 3" or 6'-3" (±) 3" depending upon existence of sub-sign.
4. The (±) tolerance for mounting height is 3 inches.
5. J-Assemblies are considered to be one sign for mounting height.
6. Offset distance shall be consistent with existing signs or consistent throughout length of project.
7. Folding signs shall be mounted at a height of 5'-3" (±) 3" or as directed by the engineer.
8. The Double Arrow sign (W12-1) shall be mounted at a height of 2'-3" (±) 3". The Chevron sign (W1-8), Roundabout Chevron panel (R6-4B), Clearance Markers (W5-52), Mile Markers (D10 series), In Road Object Markers (W5-54) & End of Road Markers (W5-56) shall be mounted at a height of 4"-3" (±) 3".

* 6 feet from edge of a paved shoulder or 12 feet from the edge of pavement (edge line location) or 2 feet from outside edge of gravel, whichever is greater unless directed by project engineer.

** The existence of curb and gutter does not in itself mandate the vertical clearance illustrated. That height is typically measured where there is sidewalk adjacent to the roadway or parking is permitted. In the absence of sidewalk vertical clearance is measured from the top of the curb. Offset of signs is measured from the flow line.

*** See A4-3 sign plate for signs 4' or less in width and less than 20 S.F. in area.

SIGN SHAPE OTHER THAN DIAMOND (TWO POSTS REQUIRED)	
L	E
*** Greater than 48" Less than 60"	12"
60" to 108"	L/5

SIGN SHAPE OTHER THAN DIAMOND (THREE POSTS REQUIRED)	
L	E
Greater than 108" to 144"	12"

POST EMBEDMENT DEPTH

Area of Sign Installation (Sq. Ft.)	D (Min)
20 or Less	4'
Greater than 20	5'

TYPICAL INSTALLATION OF TYPE II SIGNS ON MULTIPLE POSTS

WISCONSIN DEPT OF TRANSPORTATION

APPROVED Matthew R Rauch
for State Traffic Engineer

DATE 12/6/23 PLATE NO. A4-4.16

7

7

PROJECT NO:	HWY:	COUNTY:		SHEET NO: 249	E

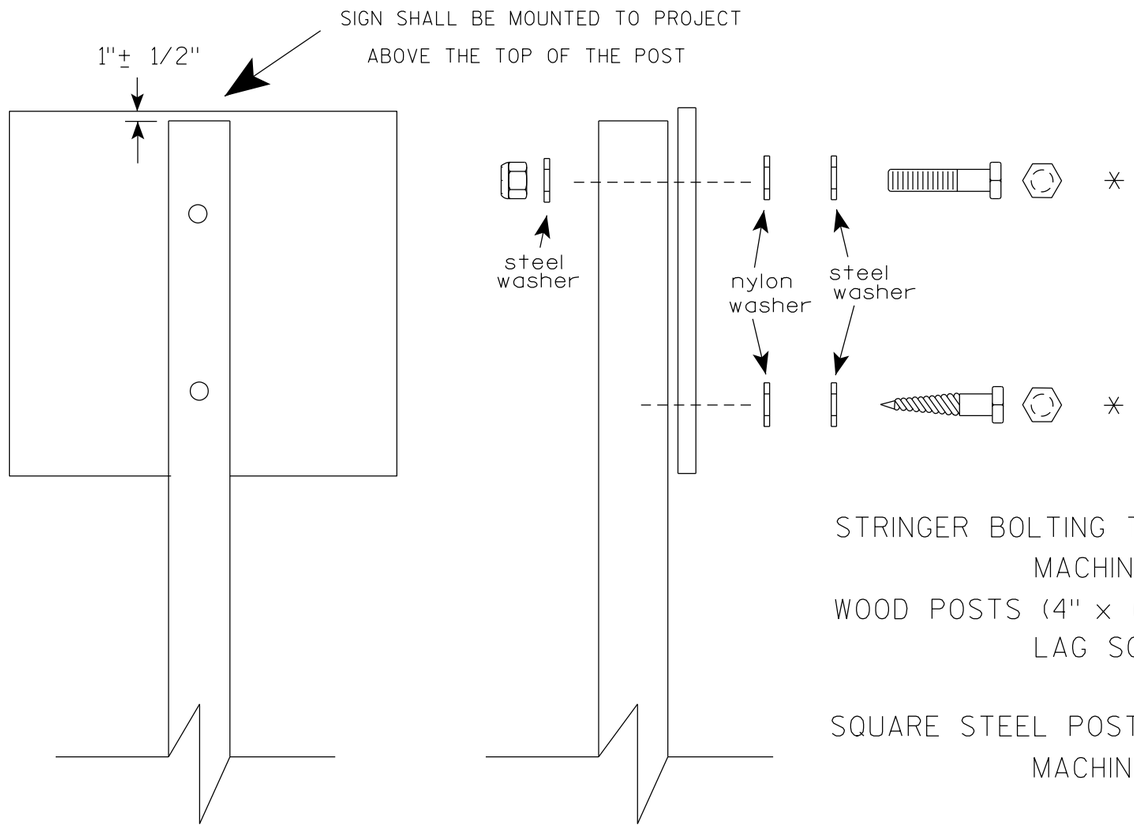

Nuts, bolts and lags used for mounting signs shall have hexagonal heads and shall be either :

a. Hot dip galvanized in accordance with ASTM Designation: A 153, Class D, or SC 3

b. Electro-galvanized in accordance with ASTM Designation : B 633, TYPE III, SC 3.

Threads on bolts and nuts shall be manufactured with sufficient allowance for the cadmium plate or galvanized coating to permit the nuts to run freely on the bolts.

STRINGER BOLTING TO ALUMINUM SIGNS (SEE SIGN PLATE A4-18)

MACHINE BOLTS - 5/16" X 1-3/4" Length w/ lock nuts

WOOD POSTS (4" x 6")

LAG SCREWS - 3/8" X 3" (NO STRINGERS ON BACK OF SIGN)
3/8" X 4" (STRINGERS ON BACK OF SIGN)

SQUARE STEEL POSTS (2" x 2")

MACHINE BOLTS - 3/8" X 3-1/4" Length w/ nuts (NO STRINGER ON BACK OF SIGN)
3/8" X 5" Length w/ nuts (STRINGERS ON BACK OF SIGN)

RIVETS - 9/32 " (6605-9-6) BULB-TITE, TRI-FOLD, ALUMINUM BODY/MANDREL
O.D. FLANGE .720-.765 INCH, GRIP RANGE .042-.375 INCH

WASHERS (ALL POSTS) -

1-1/4" O.D. X 3/8" I.D. X 1/16" STEEL
1-1/4" O.D. X 3/8" I.D. X .080 NYLON

* Two different fastening systems are shown for illustration purposes. On any individual sign, either one or the other system shall be used. Actual number of fasteners per sign varies with the sign area, but normally there are two. For a single post installation, all signs greater than 9 sq. ft. require the use of 3 fasteners.

ATTACHMENT OF SIGNS TO POSTS

WISCONSIN DEPT OF TRANSPORTATION

APPROVED Matthew R Rauch
for State Traffic Engineer

DATE 4/1/2020 PLATE NO. A4-8.9

PROJECT NO:

SHEET NO: 250 E

TELESCOPIC TUBING ANCHORS
TWO PIECE SYSTEM

2 1/4 " SQUARE
12 GAUGE
PERFORATED
GALVANIZED FINISH

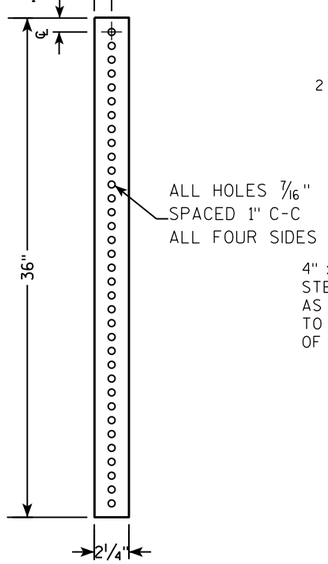

2 1/2 " SQUARE
12 GAUGE
OMNI-DIRECTIONAL
PERFORATED
SOIL STABILIZING SLEEVE
GALVANIZED FINISH

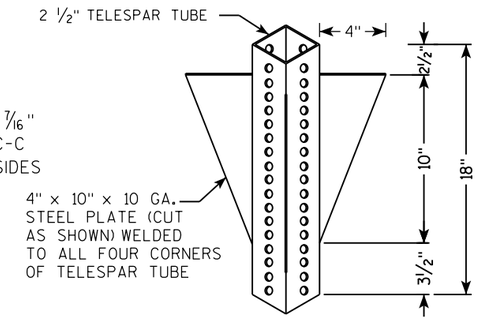

DETAIL OF TUBULAR STEEL SIGN POST
(IN POURED CONCRETE OR ASPHALT)

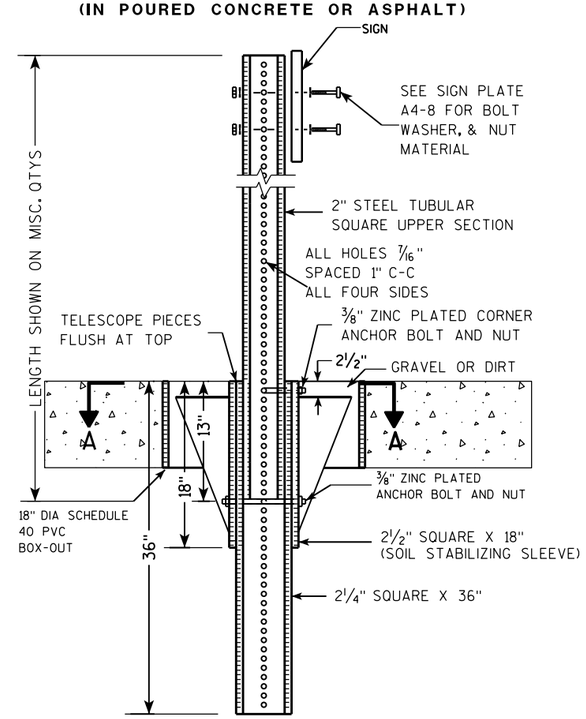

DETAIL OF TUBULAR STEEL SIGN POST
(IN LOCATIONS OTHER THAN POURED CONCRETE OR ASPHALT)

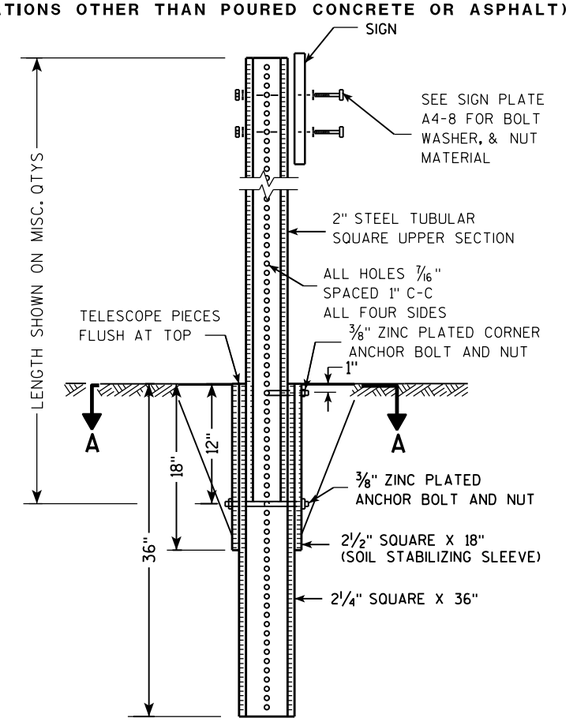

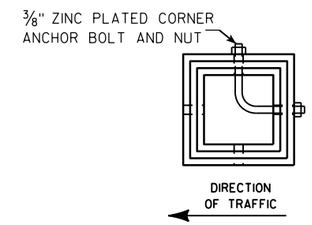

SECTION A-A

Area of Sign Installation (Sq. Ft.)	Number of Required Posts
9 or less	1
Greater than 9 less than or equal to 18	2
Greater than 18 less than or equal to 27	3

Signs wider than 3 feet or larger than 9 sq. ft shall be mounted on multiple posts (see above table).

TUBULAR STEEL
SIGN POST
A4-9

WISCONSIN DEPT OF TRANSPORTATION

APPROVED Matthew R Rauch
for State Traffic Engineer

DATE 2/05/15 PLATE A4-9.9

7

7

PROJECT NO:	HWY:	COUNTY:		SHEET NO:	E

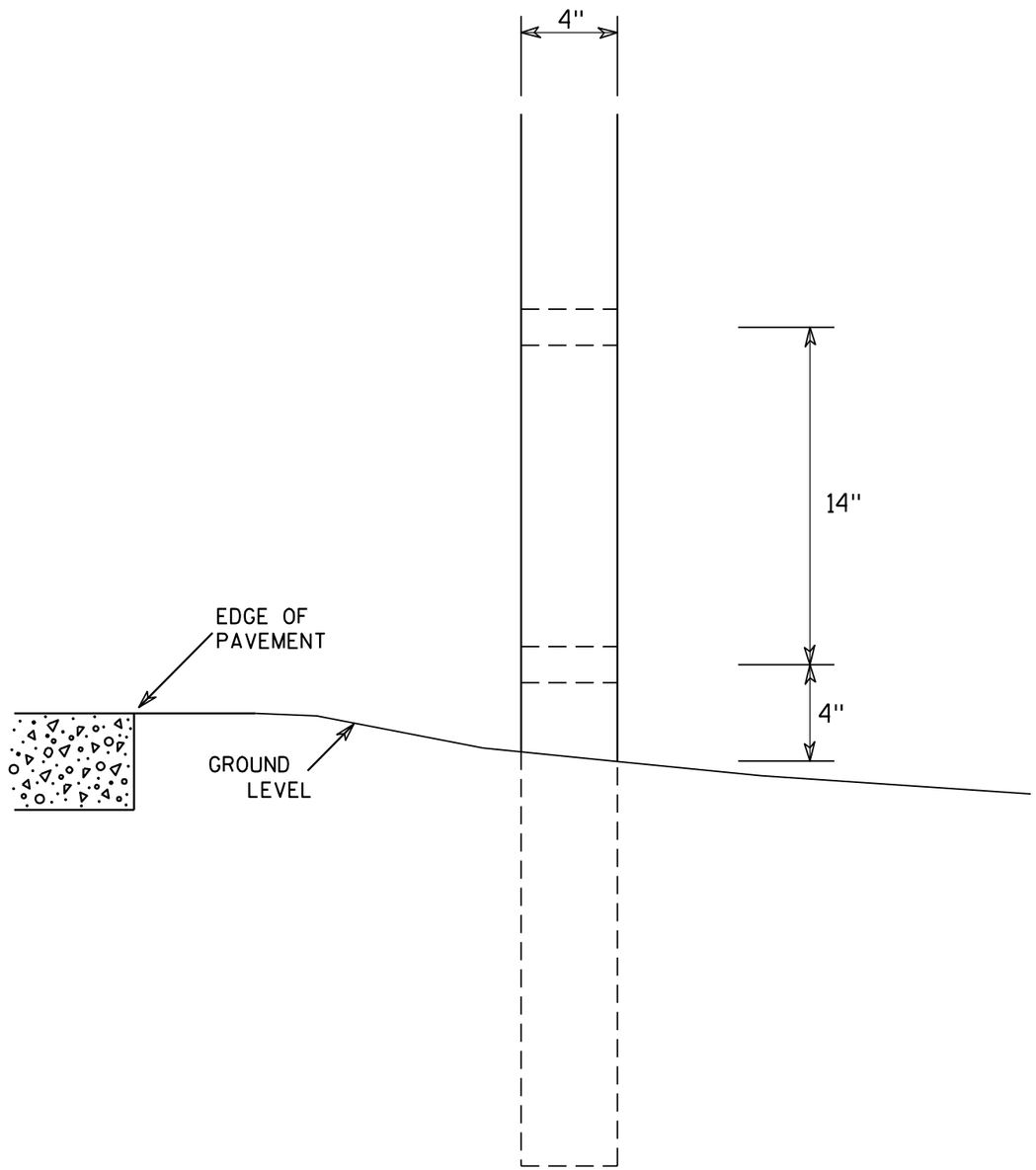

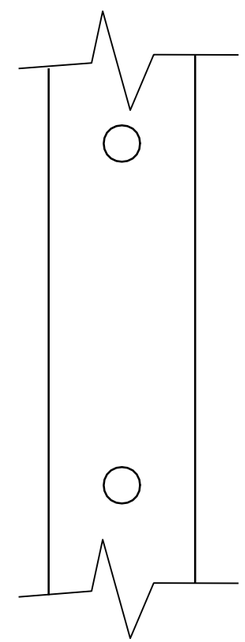

SIDE VIEW

GENERAL NOTES

1. All 4 x 6 Wood Posts shall be modified by having two 1½" diameter holes drilled perpendicular to the roadway centerline.

4 X 6 WOOD POST MODIFICATIONS

WISCONSIN DEPT OF TRANSPORTATION

APPROVED Chester J Spang for State Traffic Engineer

DATE 3/27/97 PLATE NO. A4-11.2

PROJECT NO:	HWY:	COUNTY:		SHEET NO: 252	E

SIGN LAYOUT WITH VARIOUS SIZED MESSAGES

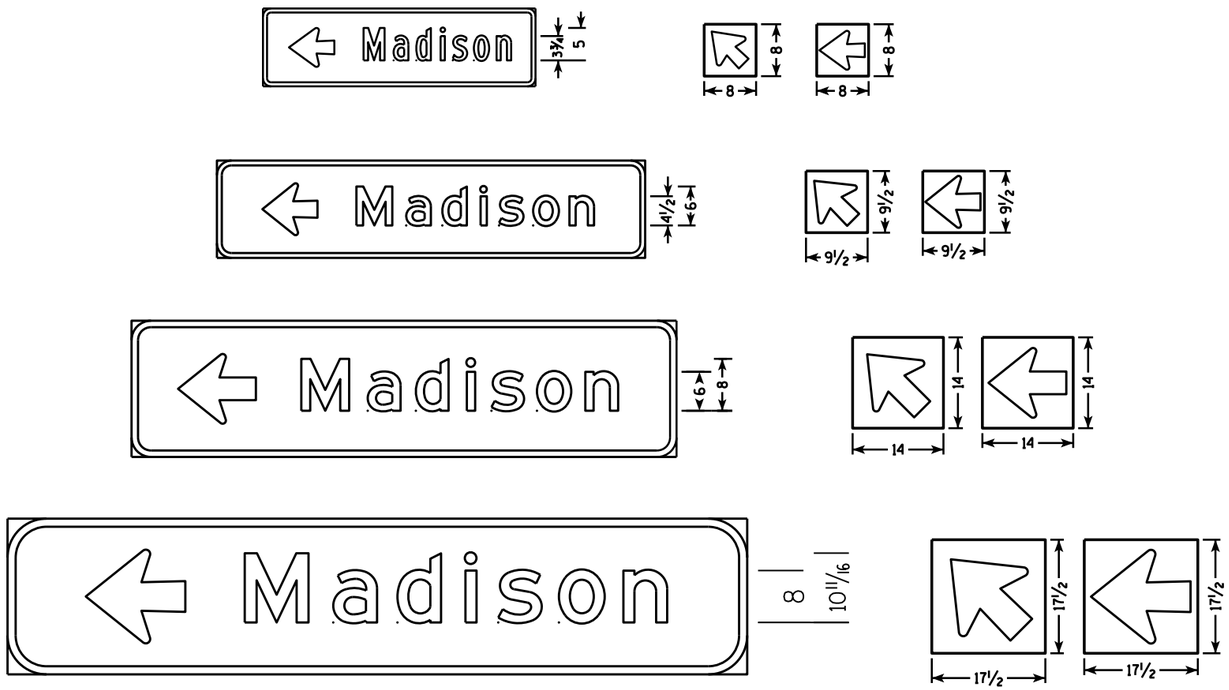

GENERAL NOTES

1. Materials shall conform to Standard Specification Section 637.
   Base - Sheet Aluminum 0.040" Thickness
   Sheeting - Orange Type F Reflective
   Arrow - Black Non-Reflective
2. Arrow signs shall be fastened to permanent sign by either aluminum rivets or aluminum self-tapping sheet metal screws. There shall be a minmum of 2 fasteners used per arrow sign.
3. There shall be a spacer consisting of a 0.08" nylon washer between the back of the arrow sign and the face of the permanent sign.
4. Arrows are per standard plate A1-2
5. Use separate arrow sign for each destination
6. Tilt arrow is always at 45 degrees
7. Arrow is centered on arrow sign

Lower Case Copy Size	Standard Width (Single Arrow)	2 Line Tilt Arrow Cover Width	3 Line Tilt Arrow Cover Width	Height
3¾" Series C	8	9 ½	14 ½	8
4½" Series D & E	9 ½	10	15	9 ½
6" Series D & E	14	16	20 ½	14
8" Series E	17 ½	20 ½	25	17 ½

BEFORE

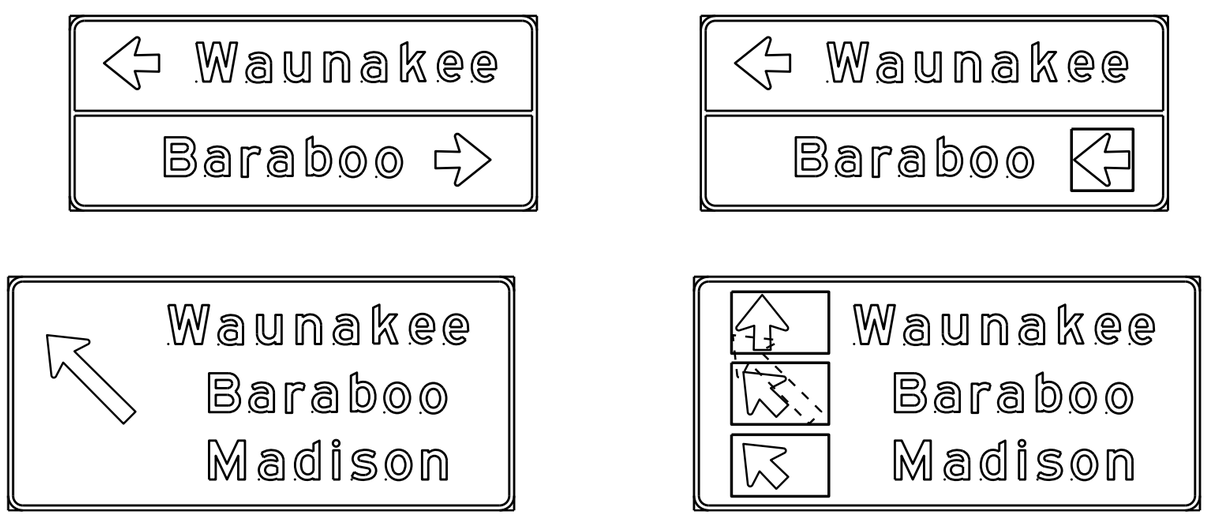

AFTER

DESTINATION DIRECTIONAL ARROW FOR DETOUR SIGNS

WISCONSIN DEPT OF TRANSPORTATION

APPROVED Matthew R Rauch
for State Traffic Engineer

DATE 10/08/14

A4-12.2

PROJECT NO:

SHEET NO: E

BANDING

SINGLE SIGN

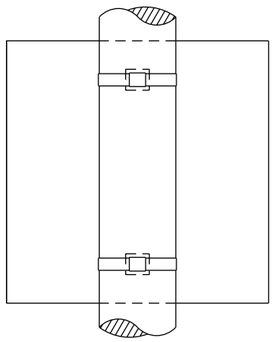

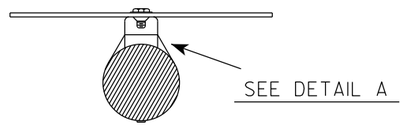

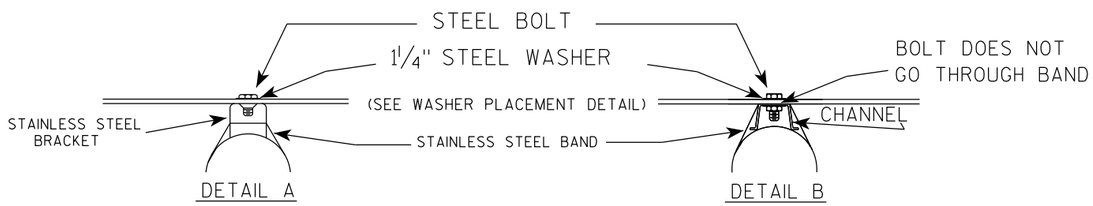

WASHER PLACEMENT

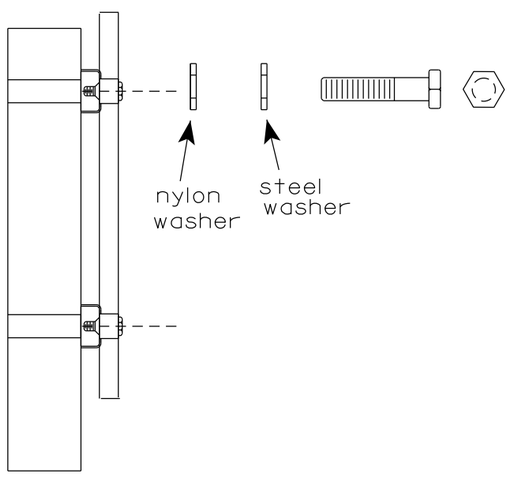

WASHERS (ALL POSTS) -
1-1/4" O.D. X 3/8" I.D. X 1/16" STEEL
1-1/4" O.D. X 3/8" I.D. X .080 NYLON
FOR ALL TYPE H SIGNS

GENERAL NOTES

1. Any sign over 3 feet in width shall use the V-Block banding method. See A5-10 standard plate.
2. Signs 3 feet or greater in height shall have three bracket bands installed. Signs less than 3 feet in height shall have two bracket bands installed.
3. Banding and assembly bracket shall be stainless steel. All bands shall be 3/4" in width and 0.025" thickness.
4. ALL SIGN MOUNTING BOLTS AND WASHERS SHALL BE EITHER:
   a. Hot dip or mechanically galvanized in accordance with ASTM Designation: A 153, Class D
   b. Electro-galvanized in accordance with ASTM designation: B 633, Type III, SC 3

"J" ASSEMBLY

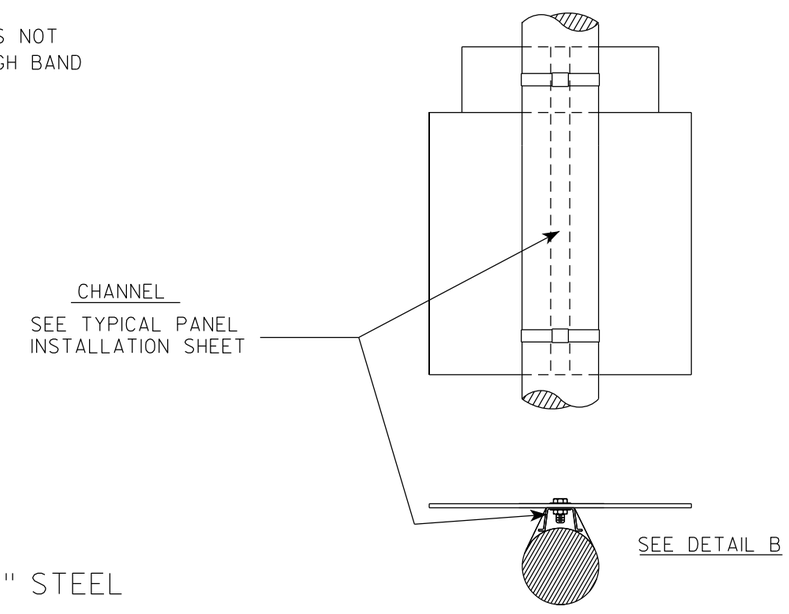

STANDARD SIGN
SIGN BANDING DETAILS

WISCONSIN DEPT OF TRANSPORTATION

APPROVED Matthew R Rauch for State Traffic Engineer

DATE 6/10/19 PLATE NO. A5-9.4

PROJECT NO:	HWY:	COUNTY:		SHEET NO: 254	E

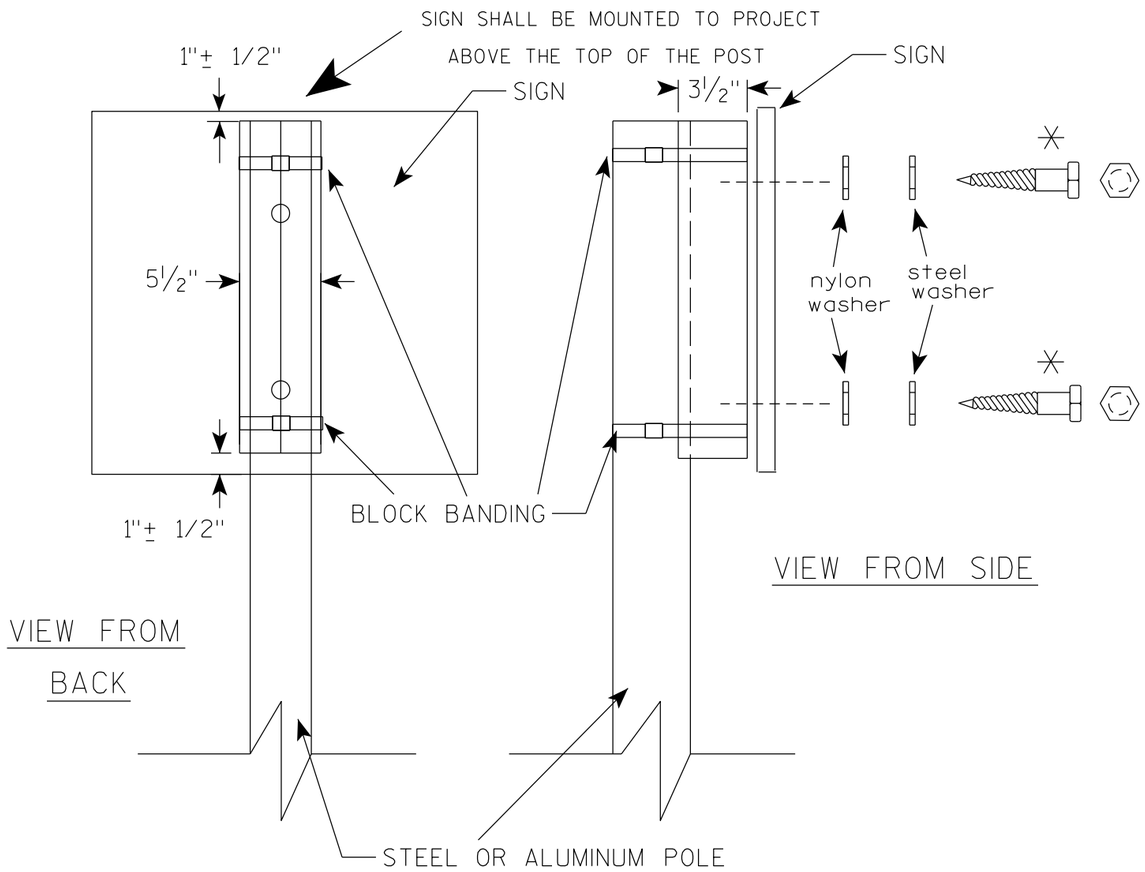

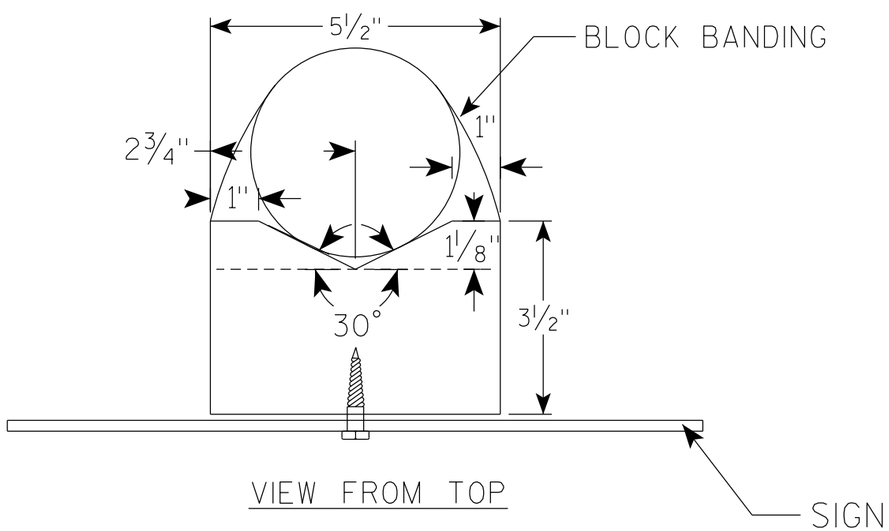

GENERAL NOTES

1. WOOD 4"X6" POST MATERIAL SHALL CONFORM TO 507.2.2 OF THE WisDOT STANDARD SPECIFICATIONS
2. BLOCK BANDING AND CLIPS SHALL BE STAINLESS STEEL, 3/4" WIDTH AND 0.025" THICKNESS
3. SIGNS 3' OR GREATER IN HEIGHT SHALL UTILIZE 3 BLOCK BANDS. SIGNS UNDER 3' IN HEIGHT SHALL UTILIZE 2 BLOCK BANDS
4. ACTUAL NUMBER OF FASTENERS PER SIGN VARIES WITH THE SIGN AREA, BUT NORNALLY THERE ARE TWO. FOR SIGNS GREATER THAN 9 S.F. 3 FASTENERS SHALL BE USED.
5. ALL SIGN MOUNTING BOLTS AND WASHERS SHALL BE EITHER:
   a. Hot dip or mechanically galvanized in accordance with ASTM Designation: A 153, Class D
   b. Electro-galvanized in accordance with ASTM Designation : B 633, TYPE III, SC 3
6. ALL BOLTS SHALL HAVE HEXAGONAL HEADS.
7. STEEL WASHERS SHALL BE 1 1/4" O.D. X 3/8" I.D. X 1/16"
8. NYLON WASHERS SHALL BE 1 1/4" O.D. X 3/8" I.D. X .080 FOR TYPE H OR TYPE F FACE SIGN

✳ LAG BOLTS SHALL BE 3/8" X 2 1/2"

7

7

BLOCK BANDING DETAIL
(V-BLOCK OPTION)

WISCONSIN DEPT OF TRANSPORTATION

APPROVED Matthew R Rauch
for State Traffic Engineer

DATE 4/19/2022 PLATE NO. A5-10.3

PROJECT NO:				SHEET NO: 255	E

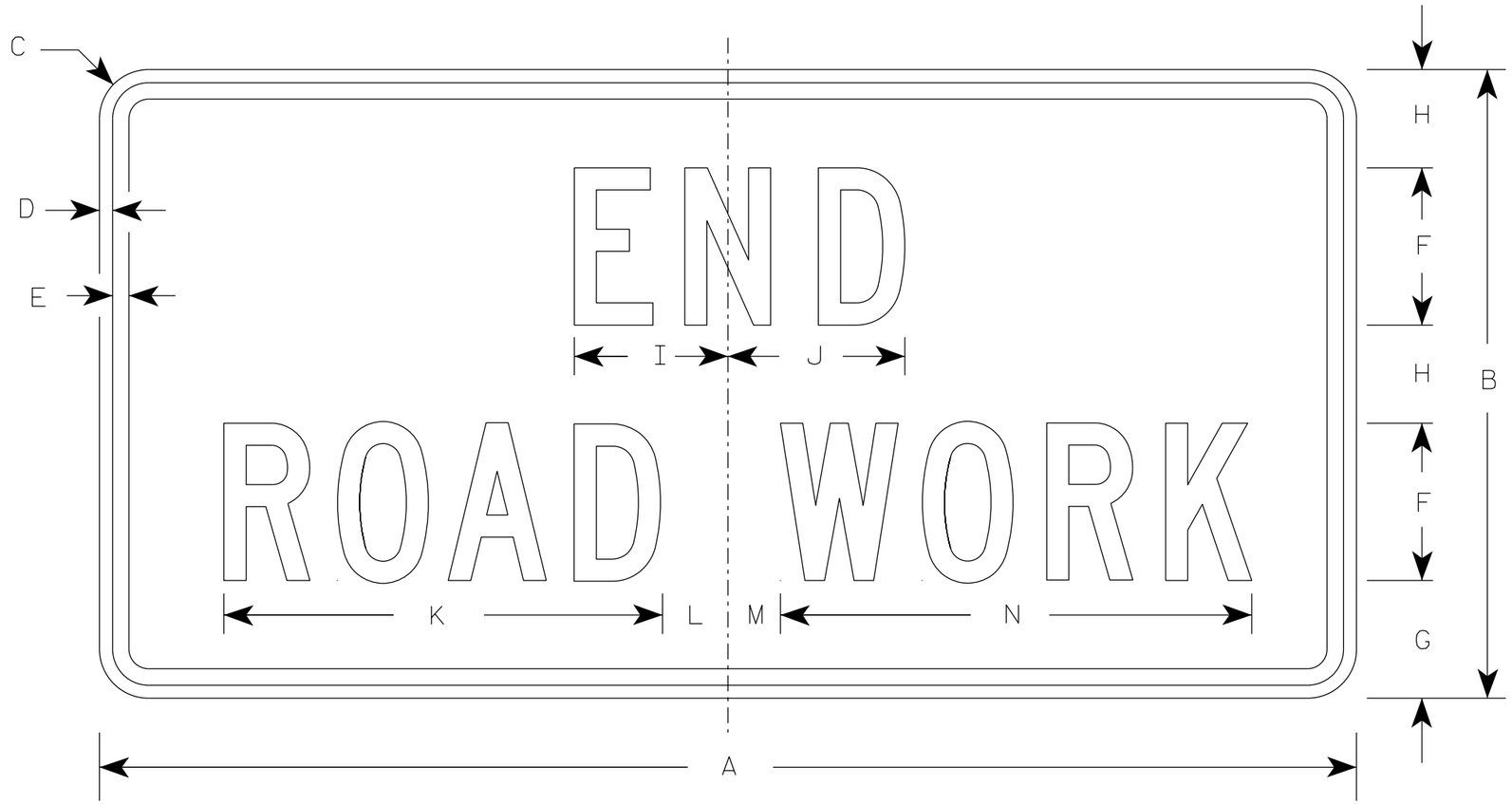

G20-2A

NOTES

1. Sign is Type II - Type F Reflective
2. Color:
   Background - Orange
   Message - Black
3. Message Series - C
4. Corners may be square or rounded when base material is plywood but borders shall be rounded as shown. When base material is metal, the corners and borders shall be rounded.

SIZE	A	B	C	D	E	F	G	H	I	J	K	L	M	N	O	P	Q	R	S	T	U	V	W	X	Y	Z	Area sq. ft.
1	36	18	1 1/2	3/8	1/2	4	3 3/4	2 1/2	4 1/8	4 1/8	11 1/8	2	1	12 1/8													4.5
2	48	24	1 7/8	1/2	5/8	6	4 1/2	3 3/4	5 7/8	6 3/4	16 3/4	2 1/2	1 3/4	18 1/2													8.0
2M	48	24	1 7/8	1/2	5/8	6	4 1/2	3 3/4	5 7/8	6 3/4	16 3/4	2 1/2	1 3/4	18 1/2													8.0
3	48	24	1 7/8	1/2	5/8	6	4 1/2	3 3/4	5 7/8	6 3/4	16 3/4	2 1/2	1 3/4	18 1/2													8.0
4	48	24	1 7/8	1/2	5/8	6	4 1/2	3 3/4	5 7/8	6 3/4	16 3/4	2 1/2	1 3/4	18 1/2													8.0
5	48	24	1 7/8	1/2	5/8	6	4 1/2	3 3/4	5 7/8	6 3/4	16 3/4	2 1/2	1 3/4	18 1/2													8.0

STANDARD SIGN

G20-2A

WISCONSIN DEPT OF TRANSPORTATION

APPROVED Matthew R Rauch
for State Traffic Engineer

DATE 1/26/2023 PLATE NO. G20-2A.10

PROJECT NO: | HWY: | COUNTY: | SHEET NO: 256 | E

NOTES

1. Sign is Type II - Type F Reflective
2. Color:
   Background - Orange
   Message - Black
3. Message Series - D
4. Substitute appropriate numeral and adjust spacing to achieve proper balance.

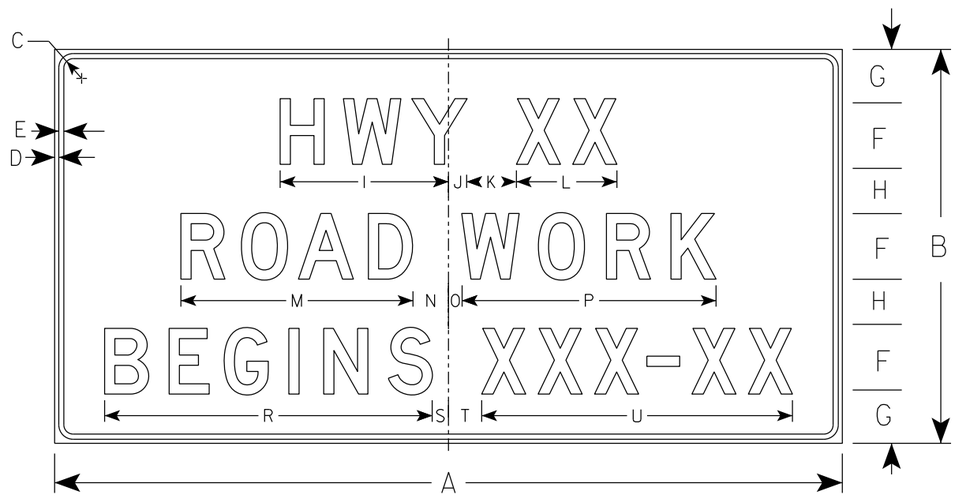

G20-57

SIZE	A	B	C	D	E	F	G	H	I	J	K	L	M	N	O	P	Q	R	S	T	U	V	W	X	Y	Z	Area sq. ft.
1																											
2																											
3	72	36	1 1/8	1/2	5/8	6	5	4	15 5/8	1 5/8	5	9 1/4	21 1/4	3 1/2	1 1/2	23 1/4		29 7/8	1 3/4	3 1/4	28 1/2						18.0
4	96	48	2 1/4	3/4	1	8	6 1/2	5 1/2	20 5/8	2 1/4	6	12 1/4	28 1/4	4 3/8	1 5/8	31		39 1/4	2	4	37 7/8						32.0
5																											

STANDARD SIGN

G20-57

WISCONSIN DEPT OF TRANSPORTATION

APPROVED Matthew R Rauch
For State Traffic Engineer

DATE 1/22/19 PLATE NO. G20-57.3

PROJECT NO: | HWY: | COUNTY: | SHEET NO: 257 | E

NOTES

1. Sign is Type II- Type F Reflective
2. Color:
   Background - Orange
   Message - Black
3. Message Series - D

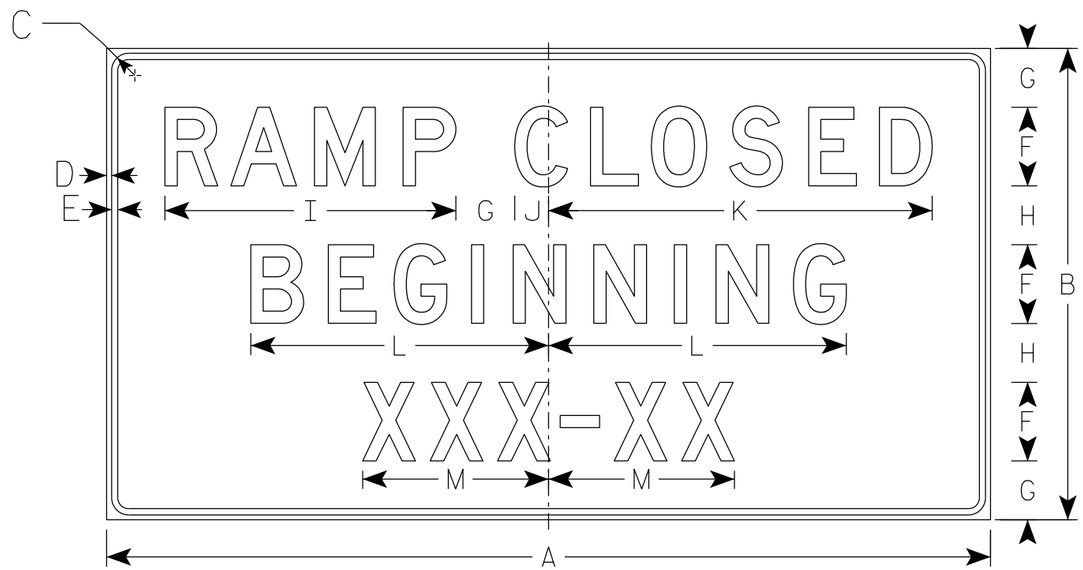

G20-58

SIZE	A	B	C	D	E	F	G	H	I	J	K	L	M	N	O	P	Q	R	S	T	U	V	W	X	Y	Z	Area sq. ft.
1																											
2	72	36	1 5/8	5/8	3/4	6	5	4	22 1/4	2 3/8	29 1/2	22 3/4	14 1/4														18.0
3	90	48	1 5/8	5/8	3/4	8	6	6	29 5/8	3 3/8	39	30 3/8	19														30.0
4																											
5																											

STANDARD SIGN
G20-58

WISCONSIN DEPT OF TRANSPORTATION

APPROVED Matthew R Rauch
for State Traffic Engineer

DATE 10/19/2020 PLATE NO. G20-58.2

PROJECT NO:	HWY:	COUNTY:		SHEET NO: 258	E

NOTES

1. Sign is Type II- Type F Reflective
2. Color:
   Background - Orange
   Message - Black
3. Message Series - E
4. Material shall be .040 aluminmum

G20-60

SIZE	A	B	C	D	E	F	G	H	I	J	K	L	M	N	O	P	Q	R	S	T	U	V	W	X	Y	Z	Area sq. ft.
1																											
2																											
3																											
4	108	24				12	6	14 7/8	78 1/4																		18.0
5																											

STANDARD SIGN
G20-60

WISCONSIN DEPT OF TRANSPORTATION

APPROVED Matthew R Rauch
for State Traffic Engineer

DATE 5/13/15 PLATE NO. G20-60.1

PROJECT NO: | HWY: | COUNTY: | SHEET NO: E

NOTES

1. Sign is Type II - Type H Reflective
2. Color:
   Background - White
   Message - Black
3. Message Series - D except 3 number signs Series C

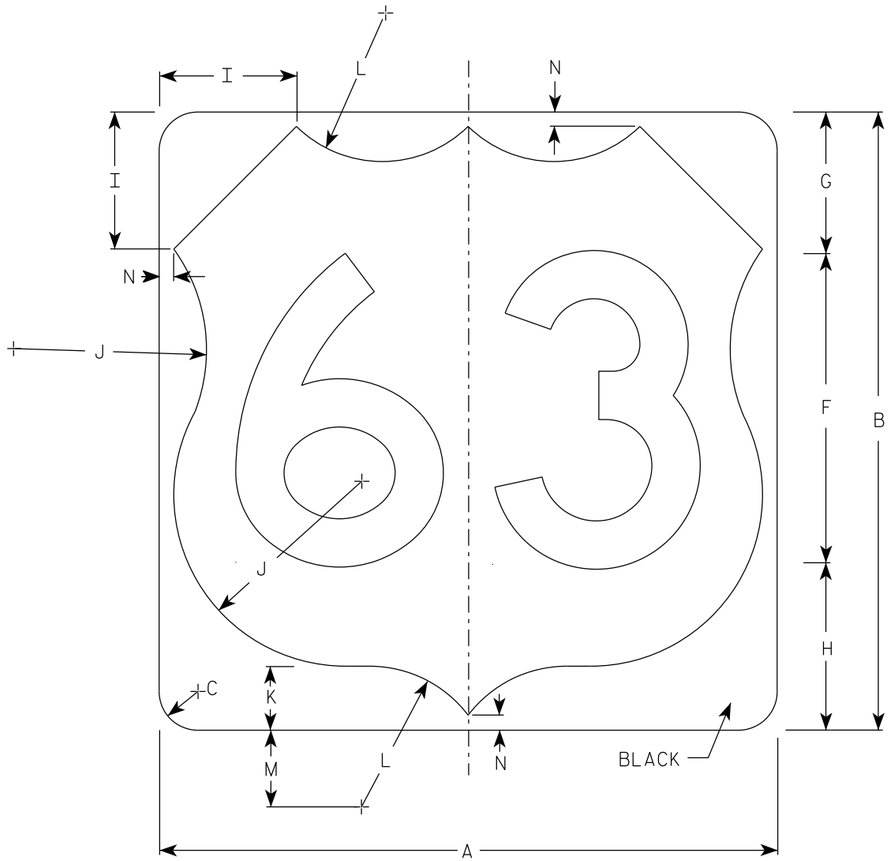

M1-4

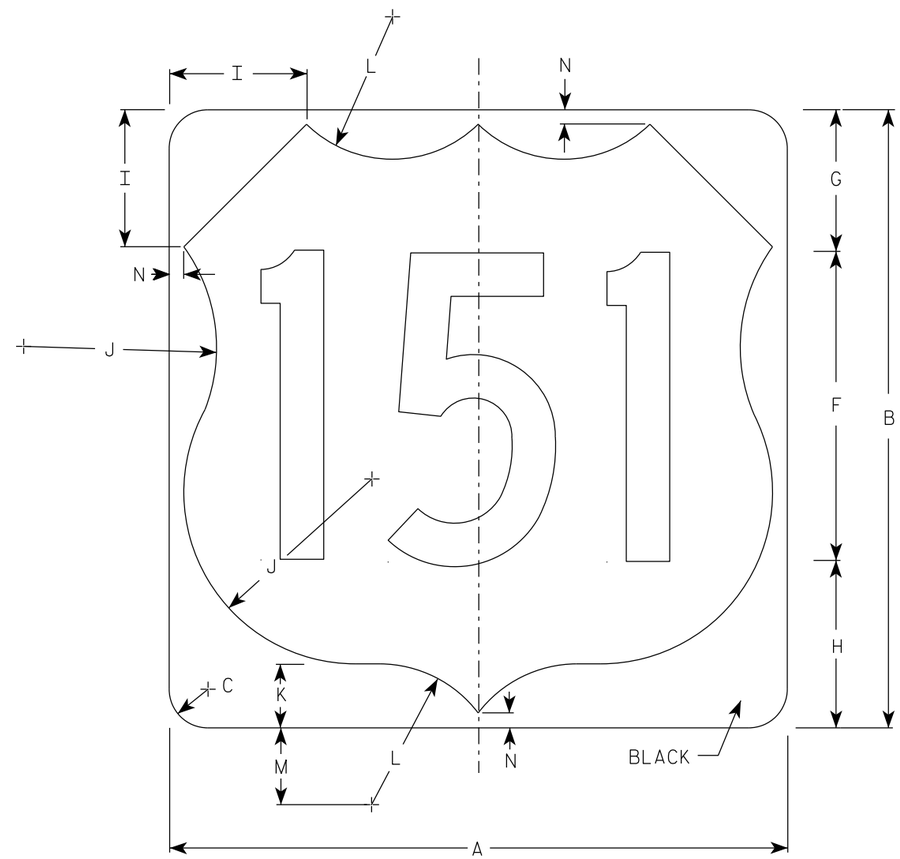

M1-4

SIZE	A	B	C	D	E	F	G	H	I	J	K	L	M	N	O	P	Q	R	S	T	U	V	W	X	Y	Z	Area sq. ft.
1																											
2	24	24	1 1/2			12	5 1/2	6 1/2	5	7 1/2	2 1/2	5 1/2	3	1/2													4.0
2M	24	24	1 1/2			12	5 1/2	6 1/2	5	7 1/2	2 1/2	5 1/2	3	1/2													4.0
3	36	36	2 1/4			18	8 1/4	9 1/4	7 1/4	11 1/4	3 3/4	8 1/4	4 1/2	3/4													9.0
4	36	36	2 1/4			18	8 1/4	9 1/4	7 1/4	11 1/4	3 3/4	8 1/4	4 1/2	3/4													9.0
5	36	36	2 1/4			18	8 1/4	9 1/4	7 1/4	11 1/4	3 3/4	8 1/4	4 1/2	3/4													9.0

USH MARKER
M1-4 FOR ASSEMBLIES

WISCONSIN DEPT OF TRANSPORTATION

APPROVED Matthew R Rauch
for State Traffic Engineer

DATE 12/20/22 PLATE NO. M1-4.11

PROJECT NO: | HWY: | COUNTY: | SHEET NO: 260 | E

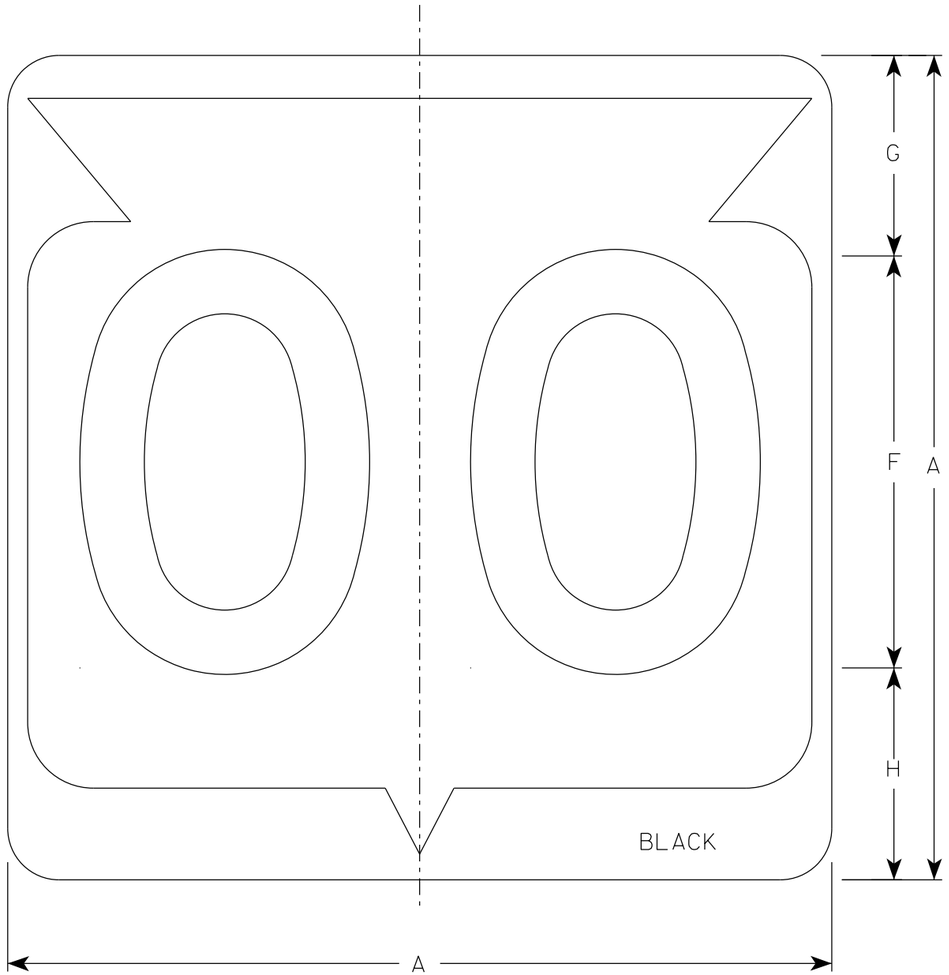

M1-6

NOTES

1. Sign is Type II - Type H Reflective
2. Color:
   Background - White
   Message - Black
3. Message Series - D except 3 number signs Series C

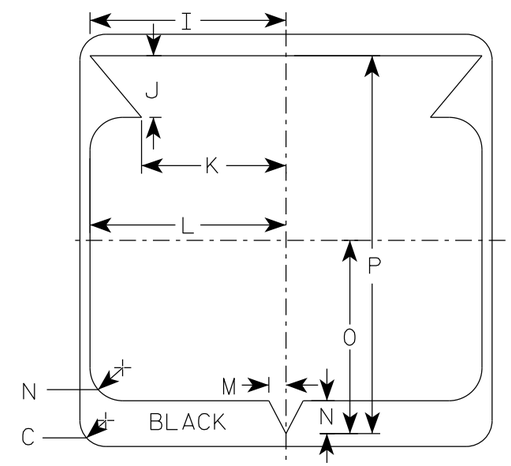

SIZE	A	B	C	D	E	F	G	H	I	J	K	L	M	N	O	P	Q	R	S	T	U	V	W	X	Y	Z	Area sq. ft.
1																											
2	24		1 1/2			12	5 1/2	6 1/2	10 1/4	2 1/2	8 7/8	11 1/2	1	1 7/8	11 1/4	21 7/8											4.0
2M	24		1 1/2			12	5 1/2	6 1/2	10 1/4	2 1/2	8 7/8	11 1/2	1	1 7/8	11 1/4	21 7/8											4.0
3	36		2 1/4			18	8 3/4	9 1/4	15 3/8	5 3/8	12 5/8	17 1/8	1 1/2	2 7/8	16 7/8	33											9.0
4	36		2 1/4			18	8 3/4	9 1/4	15 3/8	5 3/8	12 5/8	17 1/8	1 1/2	2 7/8	16 7/8	33											9.0
5	36		2 1/4			18	8 3/4	9 1/4	15 3/8	5 3/8	12 5/8	17 1/8	1 1/2	2 7/8	16 7/8	33											9.0

STATE ROUTE MARKER
M1-6 FOR ASSEMBLIES

WISCONSIN DEPT OF TRANSPORTATION

APPROVED Matthew R Rauch
for State Traffic Engineer

DATE 11/8/2022 PLATE NO. M1-6.11

PROJECT NO:	HWY:	COUNTY:		SHEET NO: 261	E

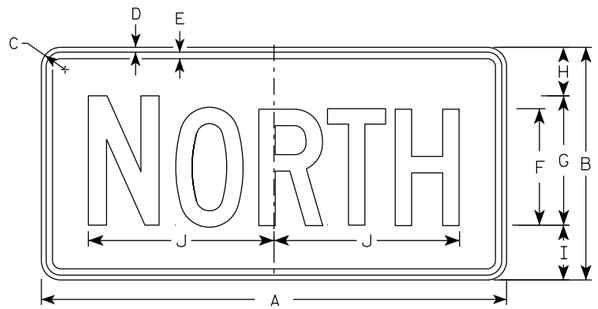

M3-1
MM3-1
MP3-1

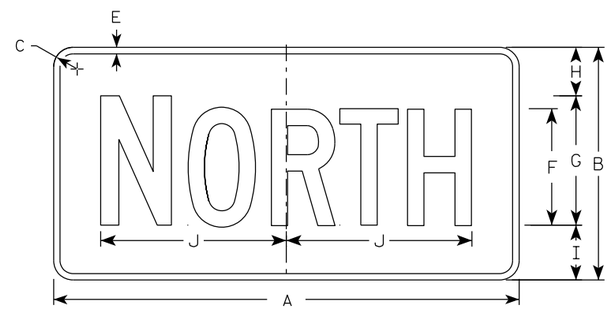

MB3-1
MK3-1
MN3-1

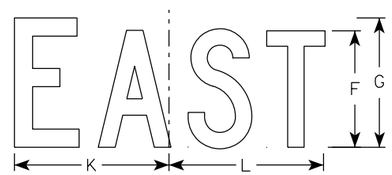

M3-2
MM3-2
MP3-2

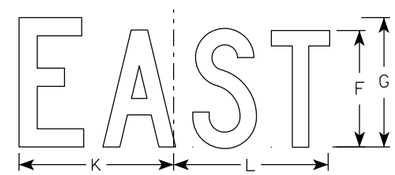

MB3-2
MK3-2
MN3-2

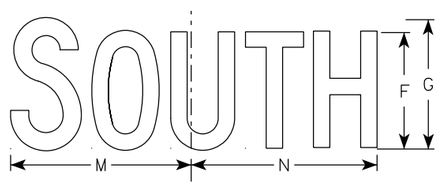

M3-3
MM3-3
MP3-3

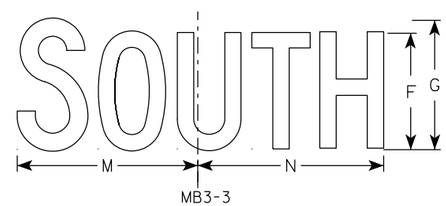

MB3-3
MK3-3
MN3-3

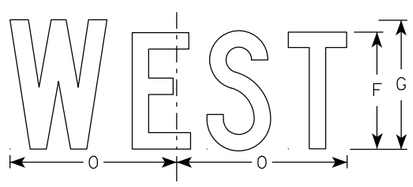

M3-4
MM3-4
MP3-4

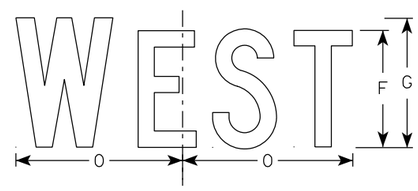

MB3-4
MK3-4
MN3-4

NOTES

1. All Signs Type II - Type H Reflective
2. Color:
   Background - See note 5
   Message - See note 5
3. Message Series - C
4. Corners may be square or rounded when base material is plywood but borders shall be rounded as shown. When base material is metal, the corners and borders shall be rounded.
5. M3-1 thru M3-4 Background - White
   Message - Black
   MB3-1 thru MB3-4 Background - Blue
   Message - White
   MK3-1 thru MK3-4 Background - Green
   Message - White
   MM3-1 thru MM3-4 Background - White
   Message - Green
   MN3-1 thru MN3-4 Background - Brown
   Message - White
   MP3-1 thru MP3-4 Background - White
   Message - Blue
6. Note the first letter of each direction is larger than the remainder of the message.

SIZE	A	B	C	D	E	F	G	H	I	J	K	L	M	N	O	P	Q	R	S	T	U	V	W	X	Y	Z	Area sq. ft.
1																											
2S	24	12	1 1/2	3/8	3/8	6	7	2 1/4	2 3/4	10 1/4	7 7/8	8 3/8	10 1/4	9 3/4	8 3/4												2.00
2M	24	12	1 1/2	3/8	3/8	6	7	2 1/4	2 3/4	10 1/4	7 7/8	8 3/8	10 1/4	9 3/4	8 3/4												2.00
3	36	18	1 1/2	3/8	1/2	9	10	3 3/4	4 1/4	14 3/8	12	12 1/8	14	14 1/8	13												4.5
4	36	18	1 1/2	3/8	1/2	9	10	3 3/4	4 1/4	14 3/8	12	12 1/8	14	14 1/8	13												4.5
5	36	18	1 1/2	3/8	1/2	9	10	3 3/4	4 1/4	14 3/8	12	12 1/8	14	14 1/8	13												4.5

STANDARD SIGNS
M3-1 THRU M3-4
SERIES

WISCONSIN DEPT OF TRANSPORTATION

APPROVED Matthew R Rauch
For State Traffic Engineer

DATE 2/8/2023 PLATE NO. M3-1.15

PROJECT NO: | HWY: | COUNTY: | SHEET NO: 262 | E

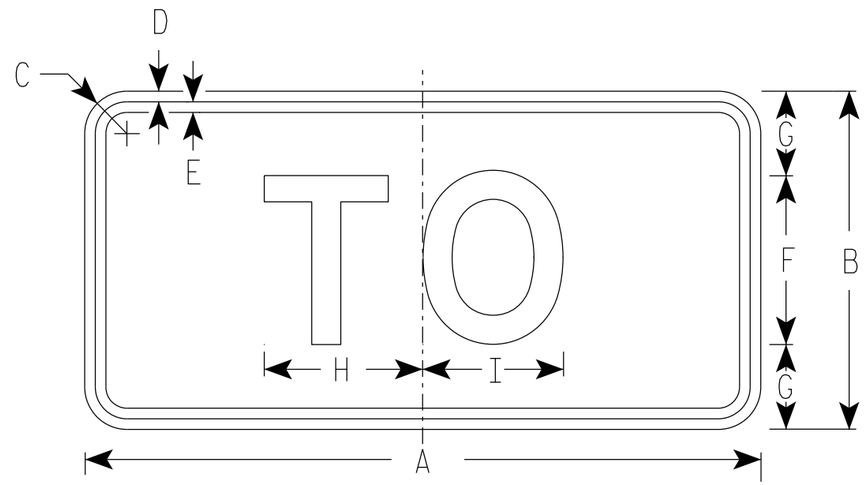

M4-5
MM4-5
MP4-5
M04-5

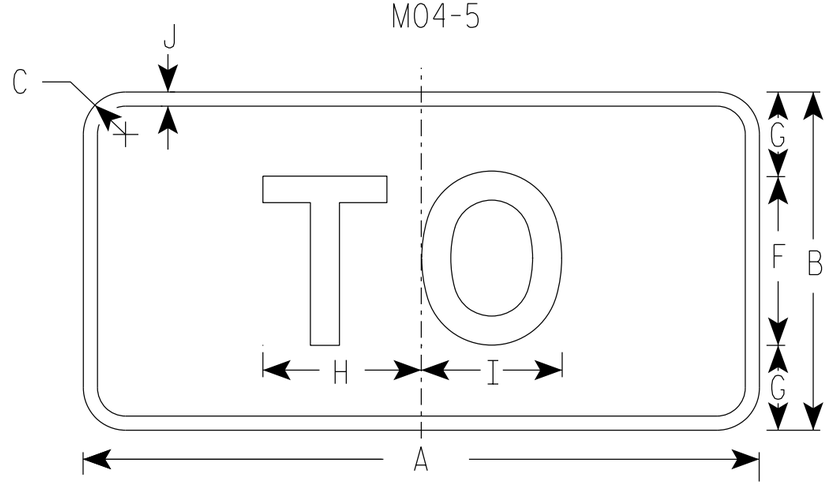

MB4-5
MK4-5
MN4-5

NOTES

1. Sign is Type II - Type H Reflective
2. Color:
   Background - See note 5
   Message - See note 5
3. Message Series - E
4. Corners may be square or rounded when base material is plywood but borders shall be rounded as shown. When base material is metal, the corners and borders shall be rounded.
5. M4-5 Background - White
   Message - Black

   MB4-5 Background - Blue
   Message - White

   MK4-5 Background - Green
   Message - White

   MM4-5 Background - White
   Message - Green

   MN4-5 Background - Brown
   Message - White

   MP4-5 Background - White
   Message - Blue

   M04-5 Background - Orange Type F Reflective
   Message - Black

SIZE	A	B	C	D	E	F	G	H	I	J	K	L	M	N	O	P	Q	R	S	T	U	V	W	X	Y	Z	Area sq. ft.
1																											
2S	24	12	1 1/2	3/8	3/8	6	3	5 3/8	5 1/4	1/2																	2.00
2M	24	12	1 1/2	3/8	3/8	6	3	5 3/8	5 1/4	1/2																	2.00
3	36	18	1 1/2	3/8	1/2	9	4 1/2	8 1/4	8 3/8	1/2																	4.5
4	36	18	1 1/2	3/8	1/2	9	4 1/2	8 1/4	8 3/8	1/2																	4.5
5	36	18	1 1/2	3/8	1/2	9	4 1/2	8 1/4	8 3/8	1/2																	4.5

STANDARD SIGN
M4-5

WISCONSIN DEPT OF TRANSPORTATION

APPROVED Matthew R Rauch
for State Traffic Engineer

DATE 2/8/2023 PLATE NO. M4-5.11

PROJECT NO: | HWY: | COUNTY: | SHEET NO: 263 | E

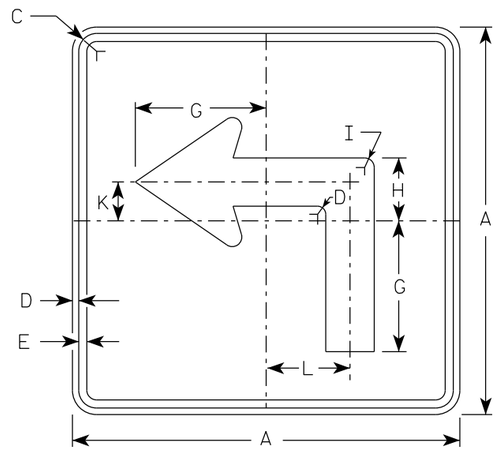

M5-1L
MM5-1L
MO5-1L
MP5-1L

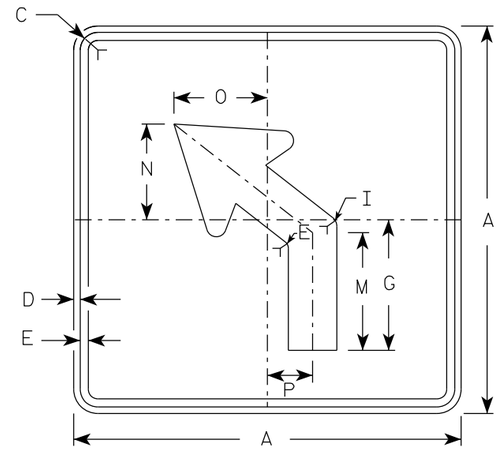

M5-2L
MM5-2L
MO5-2L
MP5-2L

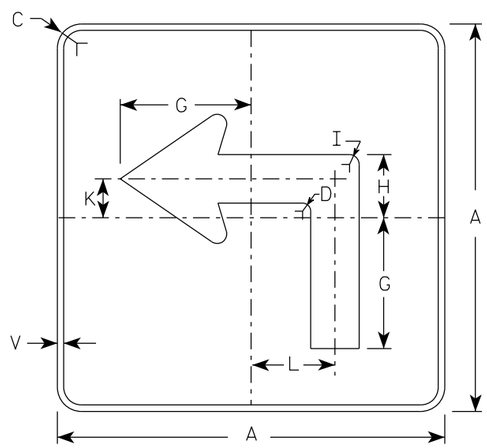

MB5-1L
MK5-1L
MN5-1L
MR5-1L

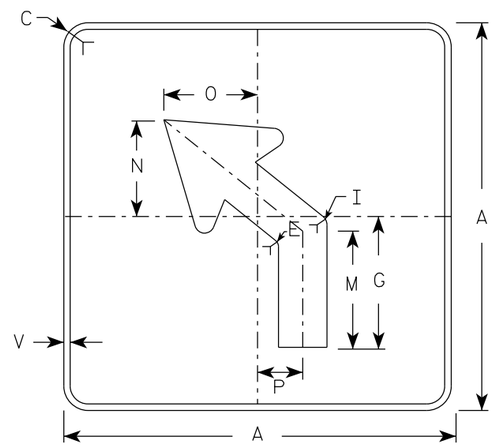

MB5-2L
MK5-2L
MN5-2L
MR5-2L

NOTES

1. Signs are Type II - Type H reflective except as shown
2. Color:
   Background - See note 4
   Message - See note 4
3. Corners may be square or rounded when base material is plywood but borders shall be rounded as shown. When base material is metal, the corners and borders shall be rounded.
4. M5-1 and M5-2 Background - White
   Message - Black
   MB5-1 and MB5-2 Background - Blue
   Message - White
   MK5-1 and MK5-2 Background - Green
   Message - White
   MM5-1 and MM5-2 Background - White
   Message - Green
   MN5-1 and MN5-2 Background - Brown
   Message - White
   MO5-1 and MO5-2 Background - Orange - Type F Reflective
   Message - Black
   MP5-1 and MP5-2 Background - White
   Message - Blue
   MR5-1 and MR5-2 Background - Brown
   Message - Yellow
5. M5-1R same as M5-1L except arrow points right.
6. M5-2R same as M5-2L except arrow tilts right.

ARROW DETAIL

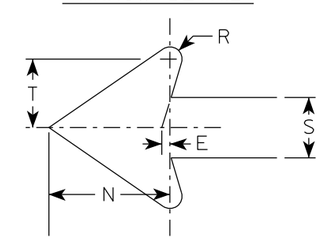

SIZE	A	B	C	D	E	F	G	H	I	J	K	L	M	N	O	P	Q	R	S	T	U	V	W	X	Y	Z	Area sq. ft.
1																											
2S	21		1 1/2	3/8	3/8		7	3 3/8	5/8		2 1/8	4 1/2	6 3/8	5 1/4	5	2 1/2		1/2	2 5/8	3		1/2					3.06
2M	21		1 1/2	3/8	3/8		7	3 3/8	5/8		2 1/8	4 1/2	6 3/8	5 1/4	5	2 1/2		1/2	2 5/8	3		1/2					3.06
3	30		1 7/8	1/2	5/8		10 1/8	4 7/8	7/8		3	6 1/2	9 1/8	7 1/2	7 1/4	3 1/2		3/4	3 3/4	4 1/4		1/2					6.25
4	30		1 7/8	1/2	5/8		10 1/8	4 7/8	7/8		3	6 1/2	9 1/8	7 1/2	7 1/4	3 1/2		3/4	3 3/4	4 1/4		1/2					6.25
5	30		1 7/8	1/2	5/8		10 1/8	4 7/8	7/8		3	6 1/2	9 1/8	7 1/2	7 1/4	3 1/2		3/4	3 3/4	4 1/4		1/2					6.25

STANDARD SIGN
M5-1 & M5-2

WISCONSIN DEPT OF TRANSPORTATION

APPROVED Matthew R Rauch
for State Traffic Engineer

DATE 2/13/2023 PLATE NO. M5-1.15

PROJECT NO: | HWY: | COUNTY: | SHEET NO: 264 | E

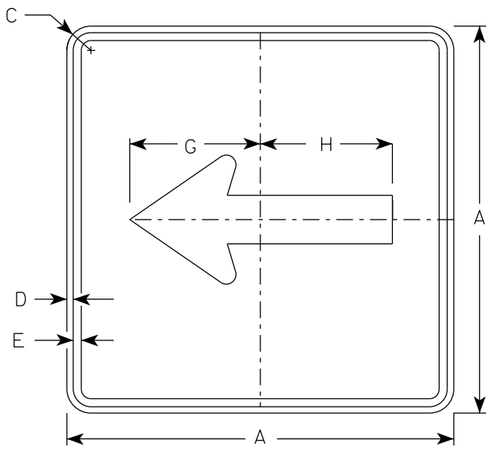

M6-1
MM6-1
MO6-1
MP6-1

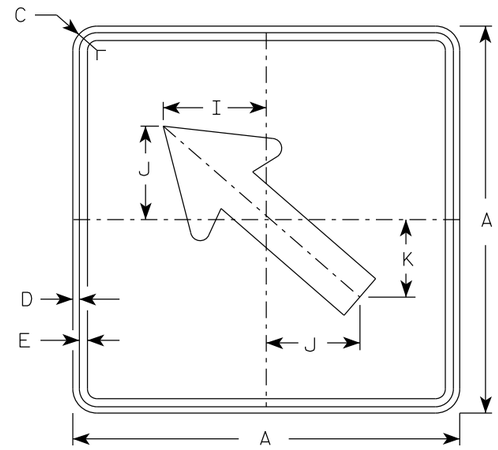

M6-2
MM6-2
MO6-2
MP6-2

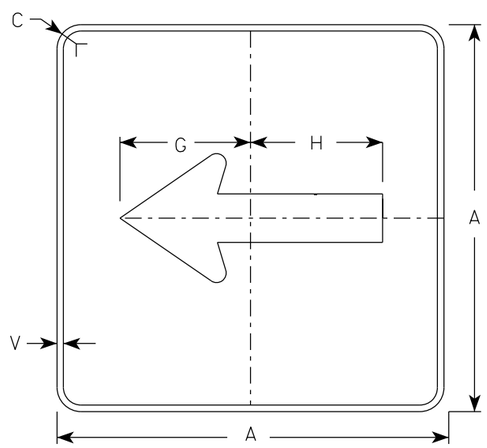

MB6-1
MK6-1
MN6-1
MR6-1

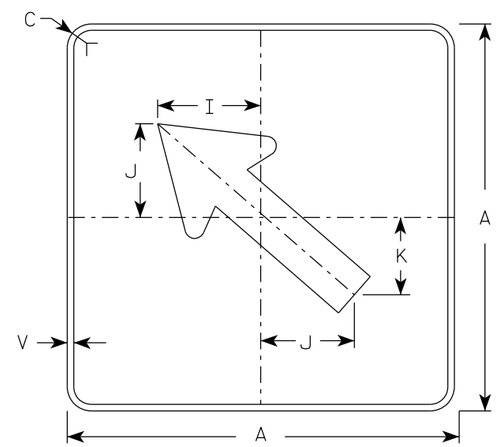

MB6-2
MK6-2
MN6-2
MR6-2

NOTES

1. Signs are Type II - Type H Reflective except as Shown
2. Color:
   Background - See note 4
   Message - See note 4
3. Corners may be square or rounded when base material is plywood but borders shall be rounded as shown. When base material is metal, the corners and borders shall be rounded.
4. M6-1 and M6-2 Background - White
   Message - Black
   MB6-1 and MB6-2 Background - Blue
   Message - White
   MK6-1 and MK6-2 Background - Green
   Message - White
   MM6-1 and MM6-2 Background - White
   Message - Green
   MN6-1 and MN6-2 Background - Brown
   Message - White
   MO6-1 and MO6-2 Background - Orange - Type F Reflective
   Message - Black
   MP6-1 and MP6-2 Background - White
   Message - Blue
   MR6-1 and MR6-2 Background - Brown
   Message - Yellow

ARROW DETAIL

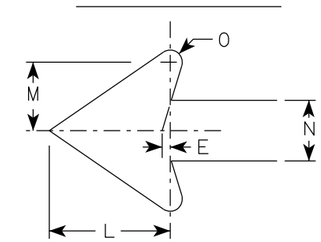

SIZE	A	B	C	D	E	F	G	H	I	J	K	L	M	N	O	P	Q	R	S	T	U	V	W	X	Y	Z	Area sq. ft.
1																											
2S	21		1 1/2	3/8	3/8		7 1/2	7 1/8	5 5/8	5	4 1/4	5 1/4	3	2 5/8	1/2							1/2					3.06
2M	21		1 1/2	3/8	3/8		7 1/2	7 1/8	5 5/8	5	4 1/4	5 1/4	3	2 5/8	1/2							1/2					3.06
3	30		1 7/8	1/2	5/8		10 3/4	10 1/4	8	7 1/4	6	7 1/2	4 1/4	3 3/4	3/4							1/2					6.25
4	30		1 7/8	1/2	5/8		10 3/4	10 1/4	8	7 1/4	6	7 1/2	4 1/4	3 3/4	3/4							1/2					6.25
5	30		1 7/8	1/2	5/8		10 3/4	10 1/4	8	7 1/4	6	7 1/2	4 1/4	3 3/4	3/4							1/2					6.25

STANDARD SIGN
M6-1 & M6-2
SERIES

WISCONSIN DEPT OF TRANSPORTATION

APPROVED Matthew R Rauch
for State Traffic Engineer

DATE 2/13/2023 PLATE NO. M6-1.16

PROJECT NO: | HWY: | COUNTY: | SHEET NO: 265 | E

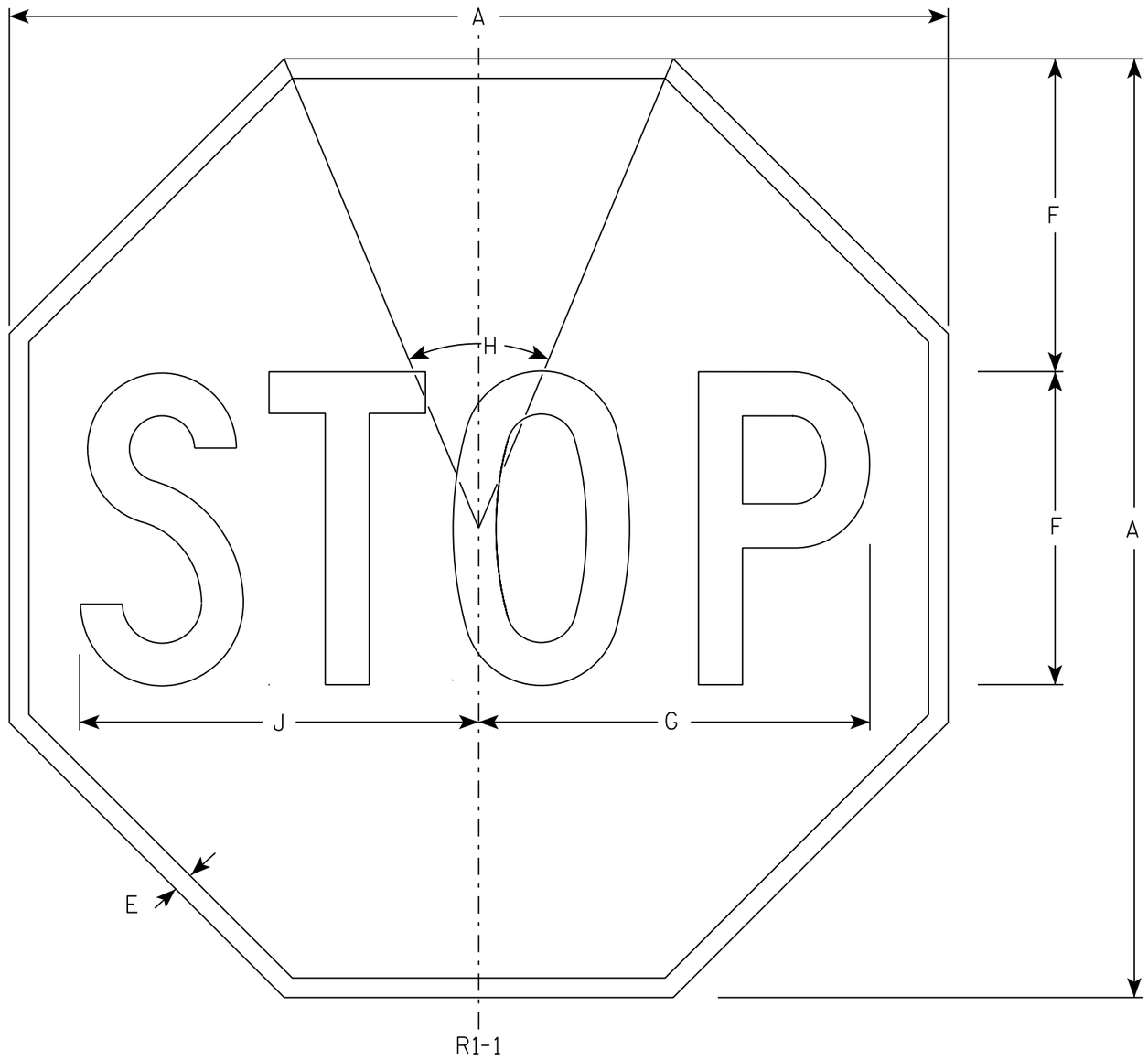

NOTES

1. Sign is Type II - Type H Reflective - reference WIS DOT Standard Specification for HIGHWAY and STRUCTURE CONSTRUCTION latest edition.
2. Color:
   Background - Red
   Message - White
3. Message Series - C

SIZE	A	B	C	D	E	F	G	H	I	J	K	L	M	N	O	P	Q	R	S	T	U	V	W	X	Y	Z	Area sq. ft.
1	30				5/8	10	12 1/2	45°		12 3/4																	5.18
2S	30				5/8	10	12 1/2	45°		12 3/4																	5.18
2M	36				3/4	12	15	45°		15 3/8																	7.46
3	36				3/4	12	15	45°		15 3/8																	7.46
4	48				1	16	20	45°		20 1/2																	13.25
5	48				1	16	20	45°		20 1/2																	13.25
6	18				3/8	6	7 3/4	45°		7 3/4																	1.86
7	12				1/4	4	5	45°		5 1/8																	0.78

STANDARD SIGN
R1-1

WISCONSIN DEPT OF TRANSPORTATION

APPROVED Matthew R Rauch
for State Traffic Engineer

DATE 11/12/15 PLATE NO. R1-1.13

PROJECT NO: | HWY: | COUNTY: | SHEET NO: 266 | E

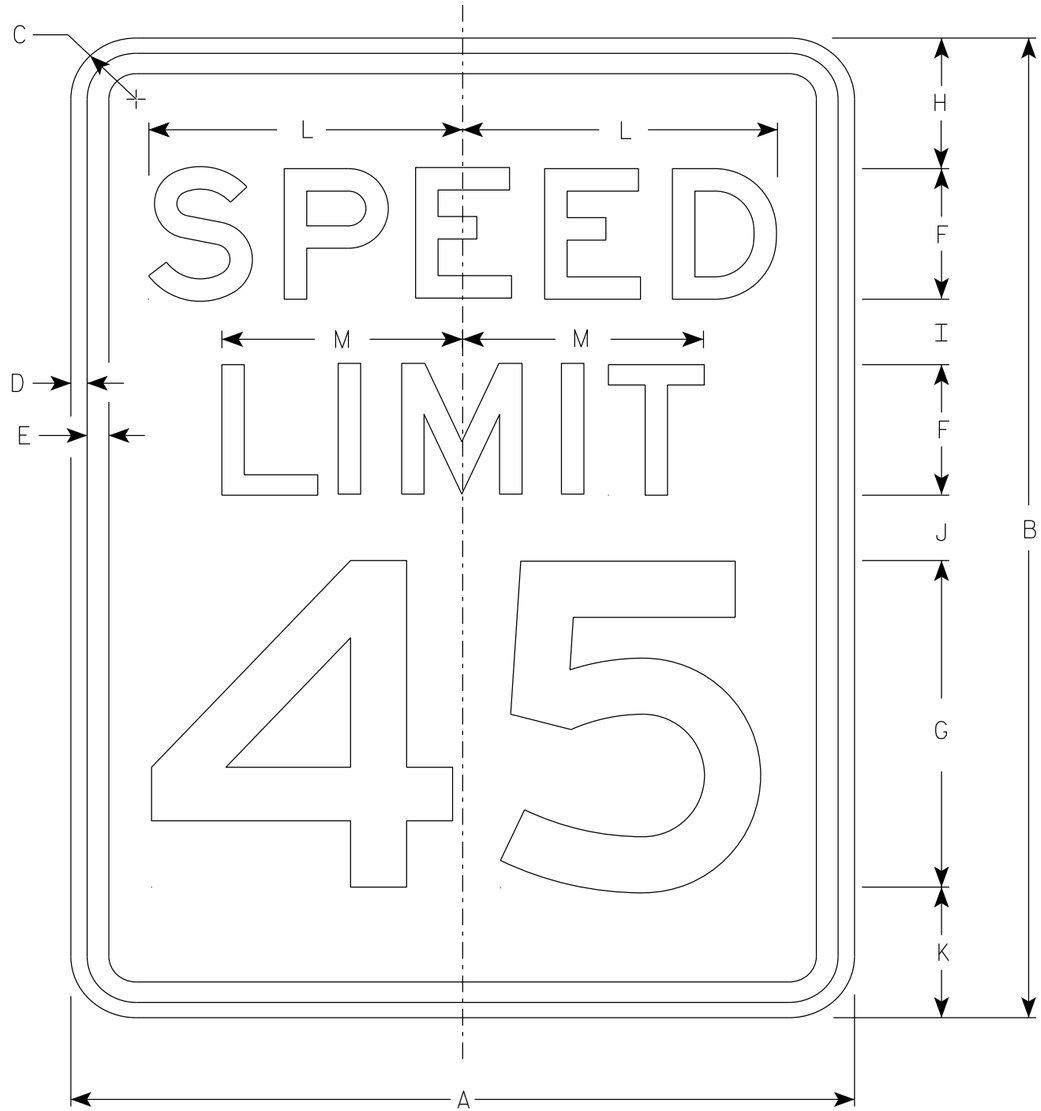

R2-1

NOTES

1. Sign is Type II - Type H Reflective
2. Color:
   Background - White
   Message - Black
3. Message Series - E
4. Substitute appropriate numerals and optically adjust spacing to achieve proper balance.

SIZE	A	B	C	D	E	F	G	H	I	J	K	L	M	N	O	P	Q	R	S	T	U	V	W	X	Y	Z	Area sq. ft.
1	18	24	1 1/2	3/8	1/2	3	8	3	2	2	3	7 1/4	5 1/2														3.0
2S	24	30	1 1/2	3/8	1/2	4	10	3	2 1/4	3 3/8	3 3/8	9 5/8	7 3/8														5.0
2M	30	36	1 7/8	1/2	5/8	5	12	5	2 1/2	2 1/2	4	12	9 1/4														7.5
3	36	48	1 7/8	1/2	5/8	6	14	6	5	5	6	14 3/8	11														12.0
4	36	48	1 7/8	1/2	5/8	6	14	6	5	5	6	14 3/8	11														12.0
5	48	60	3	3/4	1	8	20	6	4 1/2	6 3/4	6 3/4	19 1/4	14 5/8														20.0

STANDARD SIGN
R2-1

WISCONSIN DEPT OF TRANSPORTATION

APPROVED Matthew R Rauch
for State Traffic Engineer

DATE 2/1/23 PLATE NO. R2-1.14

PROJECT NO: | HWY: | COUNTY: | SHEET NO: 267 | E

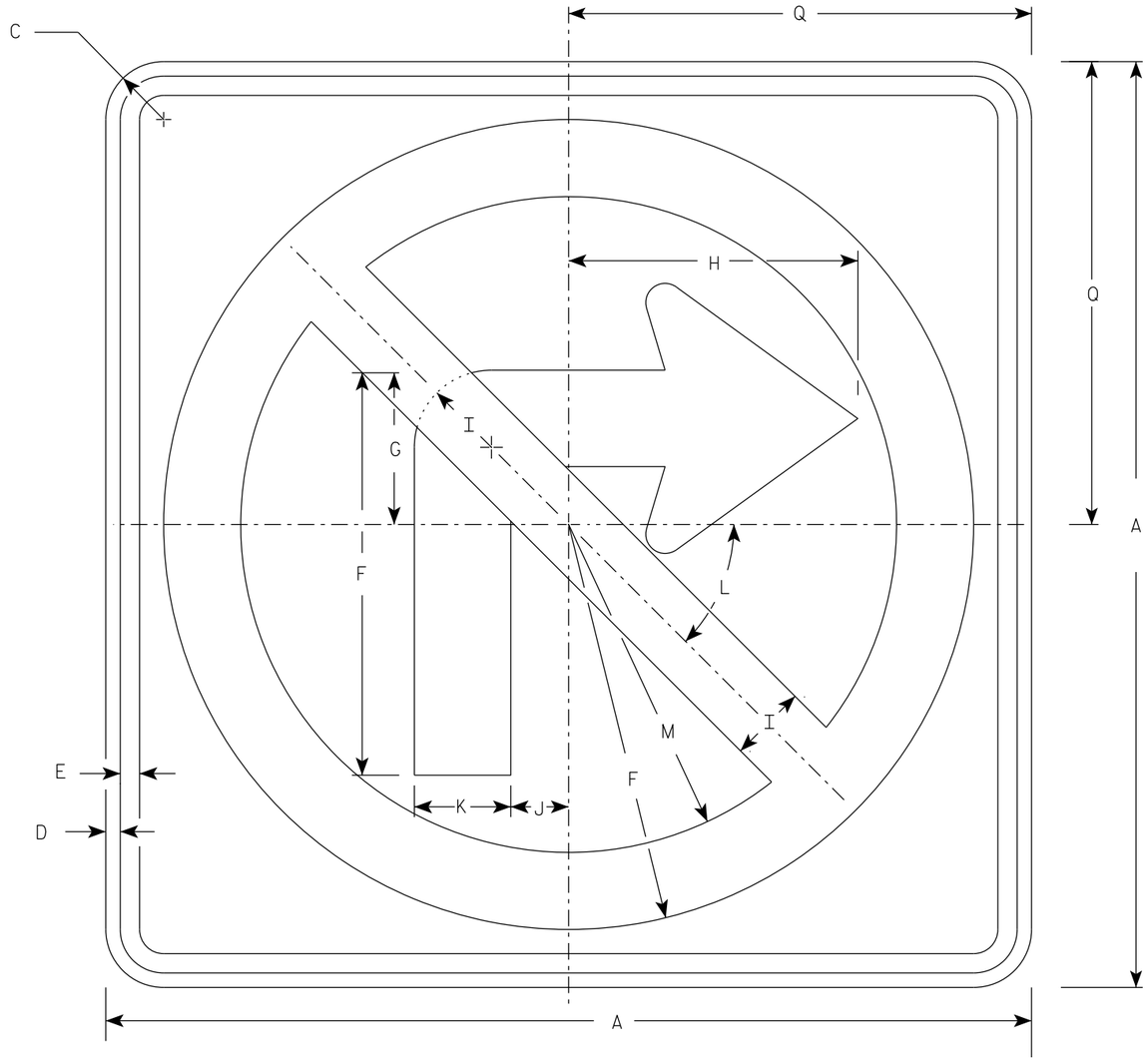

R3-1

NOTES

1. Sign is Type II - Type H Reflective
2. Color:
   Background - White
   Message - See note 3
3. Border & Arrow are non reflective black, the circle with diagonal bar is reflective red.

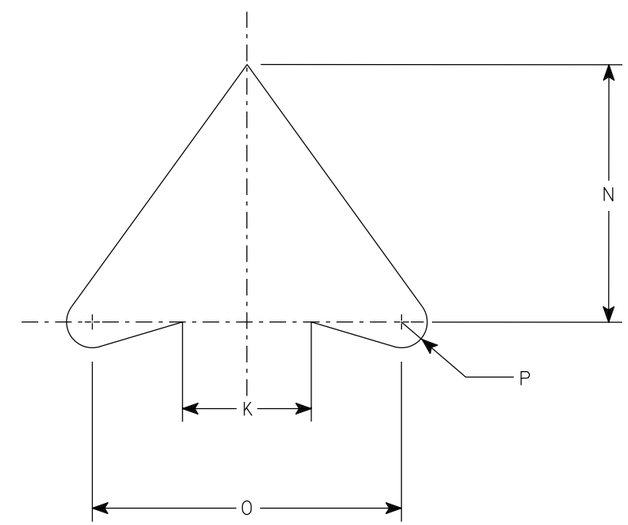

ARROW DETAIL

SIZE	A	B	C	D	E	F	G	H	I	J	K	L	M	N	O	P	Q	R	S	T	U	V	W	X	Y	Z	Area sq. ft.
1	24		1 1/2	3/8	1/2	10 1/2	4	7 1/2	2	1 1/2	2 1/2	45	8 1/2	5	6	1/2	12										4.0
2S	24		1 1/2	3/8	1/2	10 1/2	4	7 1/2	2	1 1/2	2 1/2	45°	8 1/2	5	6	1/2	12										4.0
2M	36		2 1/4	5/8	3/4	15 3/4	6	11 1/4	3	2 1/4	3 3/4	45	12 3/4	7 1/2	9	3/4	18										9.0
3	36		2 1/4	5/8	3/4	15 3/4	6	11 1/4	3	2 1/4	3 3/4	45	12 3/4	7 1/2	9	3/4	18										9.0
4	36		2 1/4	5/8	3/4	15 3/4	6	11 1/4	3	2 1/4	3 3/4	45°	12 3/4	7 1/2	9	3/4	18										9.0
5	48		2 1/4	3/4	1	21	8	15	4	3	5	45°	17	10	12	1	24										16.0

STANDARD SIGN

R3-1

WISCONSIN DEPT OF TRANSPORTATION

APPROVED Matthew R Rauch
for State Traffic Engineer

DATE 2/2/23 PLATE NO. R3-1.6

PROJECT NO: | HWY: | COUNTY: | SHEET NO: 268 | E

NOTES

1. Sign is Type II - Type H Reflective
2. Color:
   Background - White
   Message - See note 3
3. Border & Arrow are non reflective black, the circle with diagonal bar is reflective red.

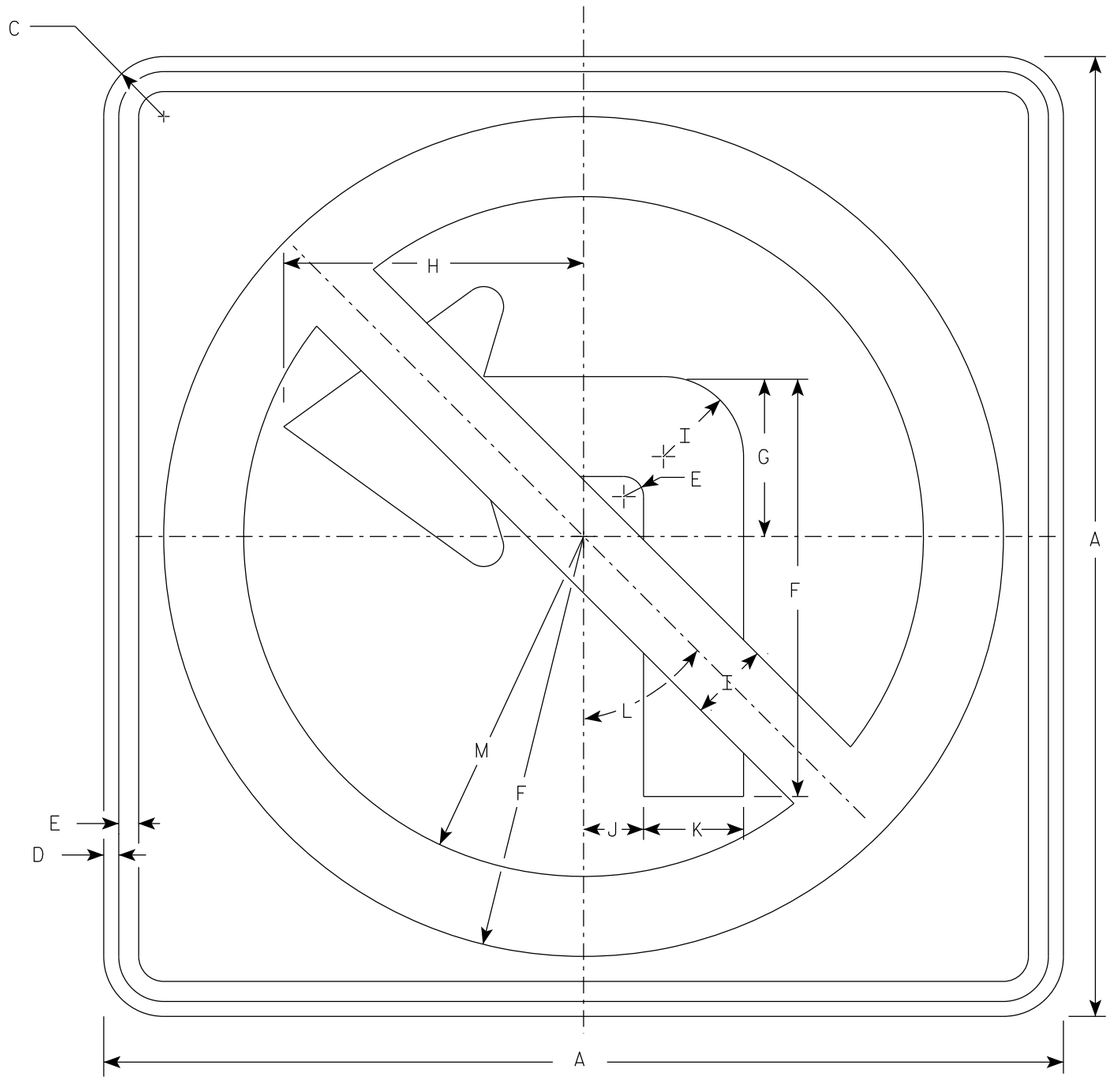

R3-2

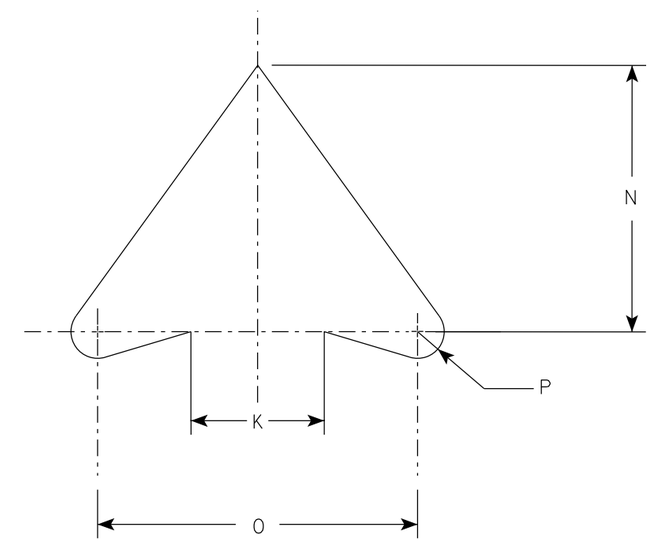

ARROW DETAIL

SIZE	A	B	C	D	E	F	G	H	I	J	K	L	M	N	O	P	Q	R	S	T	U	V	W	X	Y	Z	Area sq. ft.
1	24		1 1/2	3/8	1/2	10 1/2	4	7 1/2	2	1 1/2	2 1/2	45°	8 1/2	5	6	1/2											4.0
2S	24		1 1/2	3/8	1/2	10 1/2	4	7 1/2	2	1 1/2	2 1/2	45°	8 1/2	5	6	1/2											4.0
2M	36		2 1/4	5/8	3/4	15 3/4	6	11 1/4	3	2 1/4	3 3/4	45°	12 3/4	7 1/2	9	3/4											9.0
3	36		2 1/4	5/8	3/4	15 3/4	6	11 1/4	3	2 1/4	3 3/4	45°	12 3/4	7 1/2	9	3/4											9.0
4	36		2 1/4	5/8	3/4	15 3/4	6	11 1/4	3	2 1/4	3 3/4	45°	12 3/4	7 1/2	9	3/4											9.0
5	48		2 1/4	3/4	1	21	8	15	4	3	5	45°	17	10	12	1											16.0

STANDARD SIGN
R3-2

WISCONSIN DEPT OF TRANSPORTATION

APPROVED Matthew R Rauch
For State Traffic Engineer

DATE 2/2/23 PLATE NO. R3-2.11

PROJECT NO: | HWY: | COUNTY: | SHEET NO: 269 | E

NOTES

1. Sign is Type II - Type H Reflective
2. Color:
   Background - White
   Message - Black
3. Message Series - D

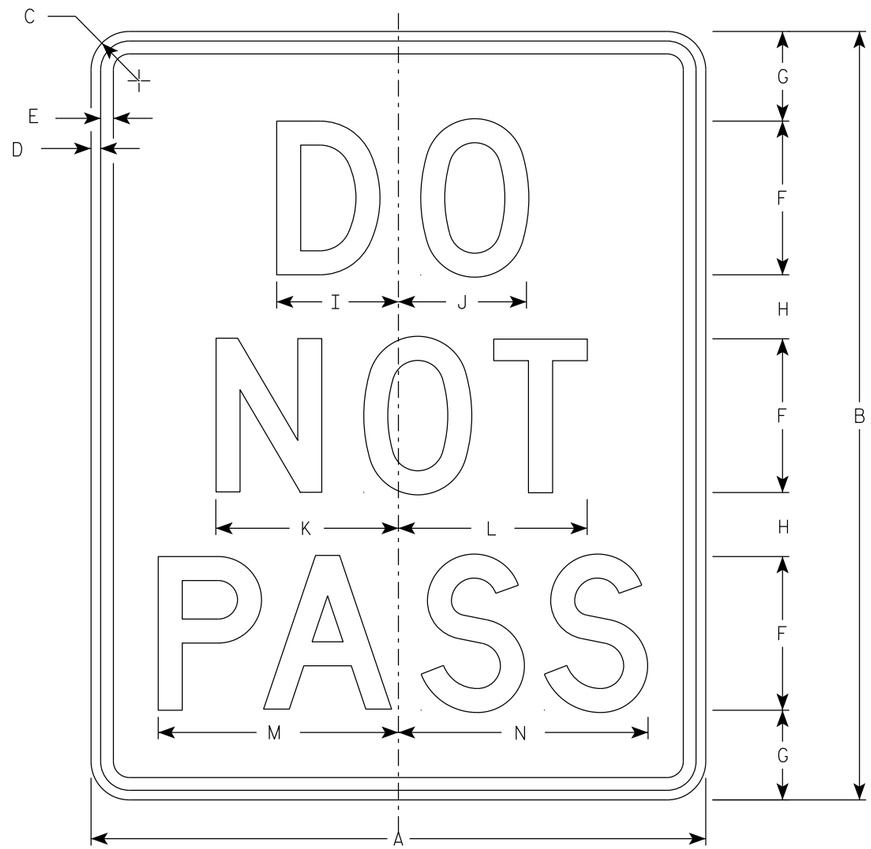

R4-1

SIZE	A	B	C	D	E	F	G	H	I	J	K	L	M	N	O	P	Q	R	S	T	U	V	W	X	Y	Z	Area sq. ft.
1	18	24	1 1/2	3/8	1/2	4	3 1/2	2 1/2	3 1/8	3 1/4	4 3/4	4 7/8	6 1/4	6 1/2													3.0
2S	24	30	1 1/2	3/8	1/2	6	3 1/2	2 1/2	4 3/4	5	7 1/8	7 3/8	9 3/8	9 3/4													5.0
2M	24	30	1 1/2	3/8	1/2	6	3 1/2	2 1/2	4 3/4	5	7 1/8	7 3/8	9 3/8	9 3/4													5.0
3	36	48	1 7/8	5/8	3/4	8	7	5	6 1/4	6 5/8	9 1/2	9 3/4	12 1/2	13													12.0
4	36	48	1 7/8	5/8	3/4	8	7	5	6 1/4	6 5/8	9 1/2	9 3/4	12 1/2	13													12.0
5	48	60	3	3/4	1	10	8	7	7 3/4	8 3/8	11 7/8	12 1/4	15 5/8	16 1/4													20.0

STANDARD SIGN
R4-1

WISCONSIN DEPT OF TRANSPORTATION

APPROVED Matthew R Rauch
for State Traffic Engineer

DATE 3/16/23 PLATE NO. R4-1.8

PROJECT NO: | HWY: | COUNTY: | SHEET NO: 270 | E

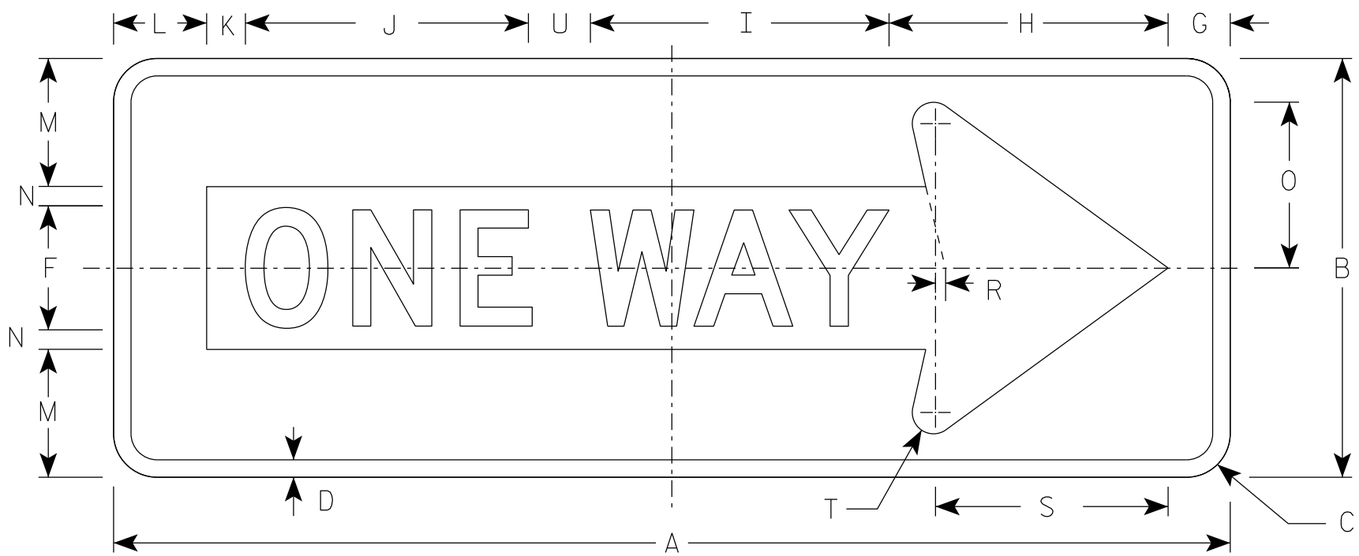

R6-1 R

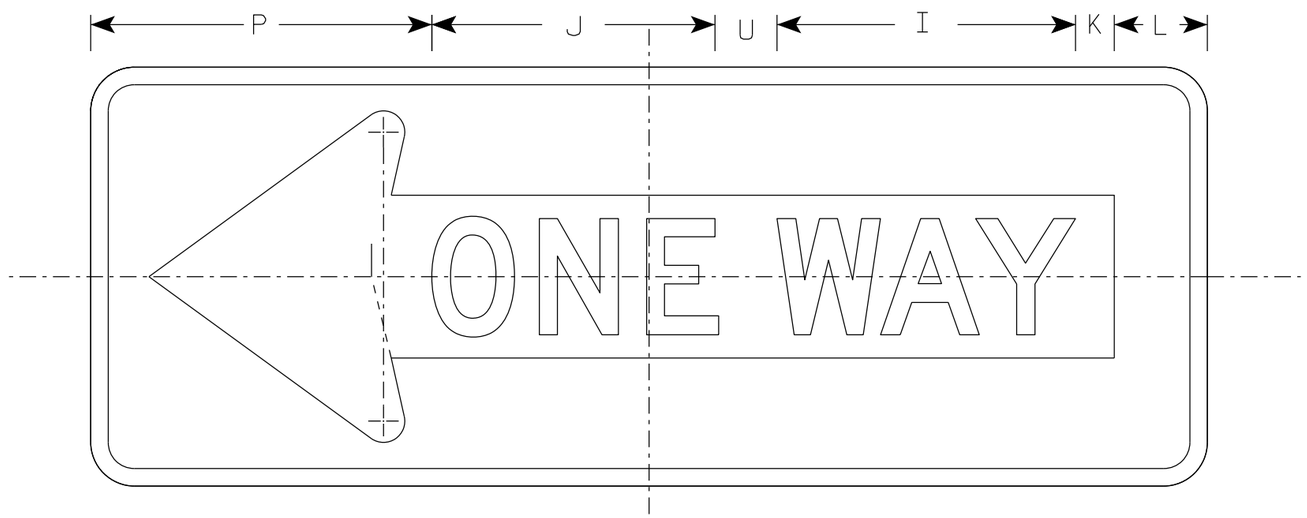

R6-1 L

NOTES

1. Sign is Type II - Type H Reflective
2. Color:
   Background - Black
   Message - Black Legend & White Arrow & Border
3. Message Series - D

SIZE	A	B	C	D	E	F	G	H	I	J	K	L	M	N	O	P	Q	R	S	T	U	V	W	X	Y	Z	Area sq. ft.
1																											
2S	36	12	1 1/2	1/2		4	2	7 1/2	9 5/8	9 1/8	1 1/4	3	3 3/8	5/8	4 3/8	11		3/8	7 1/2	3/4	2						3.0
2M	48	18	1 7/8	3/4		5	2 1/2	11	13	12 1/4	2 3/4	3 1/2	5 1/2	1	7 1/8	13 1/2		1/2	10 1/8	7/8	3						6.0
3	48	18	1 7/8	3/4		5	2 1/2	11	13	12 1/4	2 3/4	3 1/2	5 1/2	1	7 1/8	13 1/2		1/2	10 1/8	7/8	3						6.0
4	48	18	1 7/8	3/4		5	2 1/2	11	13	12 1/4	2 3/4	3 1/2	5 1/2	1	7 1/8	13 1/2		1/2	10 1/8	7/8	3						6.0
5																											

STANDARD SIGN
R6-1 L&R

WISCONSIN DEPT OF TRANSPORTATION

APPROVED Matthew R Rauch
for State Traffic Engineer

DATE 4/7/2025 PLATE NO. R6-1.5

PROJECT NO:

SHEET NO: 271 E

NOTES

1. Sign is Type II - Type H Reflective
2. Color:
   Background - White
   Message - Black
3. Message Series - D
4. R6-2L same as R6-2R except arrow points to the left.

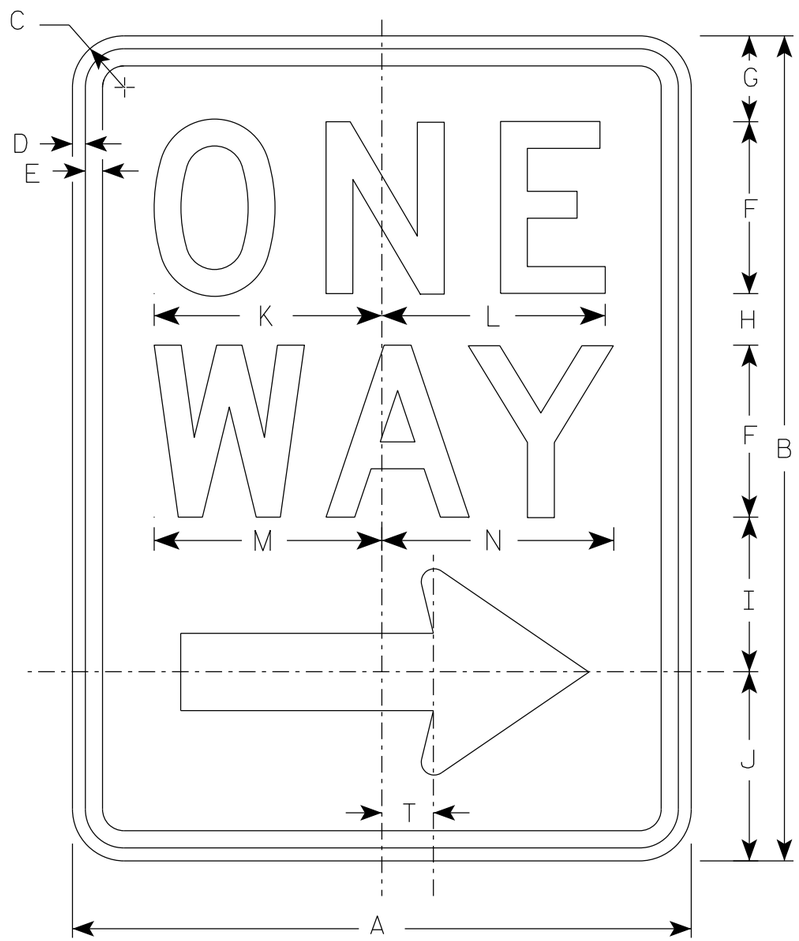

R6-2R

Arrow Detail

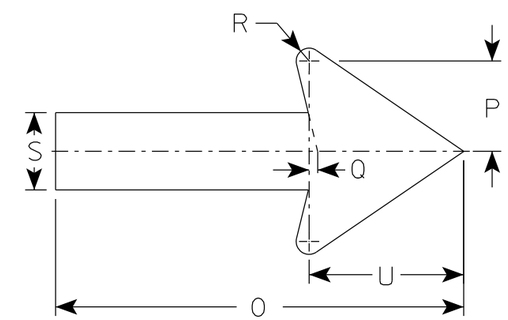

SIZE	A	B	C	D	E	F	G	H	I	J	K	L	M	N	O	P	Q	R	S	T	U	V	W	X	Y	Z
1	18	24	1 1/2	3/8	1/2	5	2 1/2	1 1/2	4 1/2	5 1/2	6 5/8	6 1/2	6 5/8	6 3/4	11 7/8	2 5/8	1/4	3/8	2 1/4	1 1/2	4 1/2					
2S	24	1 1/2	1 1/2	3/8	1/2	6	3	2 1/2	5 1/2	7	8 1/8	8 1/8	8 1/2	8 5/8	16	3 1/2	3/8	1/2	3	2	6					
2M	30	36	1 7/8	1/2	5/8	8	2 1/2	2 5/8	6 7/8	8	10 1/2	10 1/2	11 1/4	11 1/4	20	4 3/8	1/2	5/8	3 3/4	2 1/2	7 1/2					
3	36	48	1 7/8	1/2	5/8	10	5 1/4	3 1/4	9	10 1/2	12 3/4	12 3/4	13 1/4	13 1/2	24	5 5/8	1/2	3/4	4 3/4	3	9					
4	36	48	1 7/8	1/2	5/8	10	5 1/4	3 1/4	9	10 1/2	12 3/4	12 3/4	13 1/4	13 1/2	24	5 5/8	1/2	3/4	4 3/4	3	9					
5																										

STANDARD SIGN
R6-2 R&L

WISCONSIN DEPT OF TRANSPORTATION

APPROVED Matthew R Rauch
for State Traffic Engineer

DATE 11/2/10 PLATE NO. R6-2.8

PROJECT NO: | HWY: | COUNTY: | SHEET NO: 272 | E

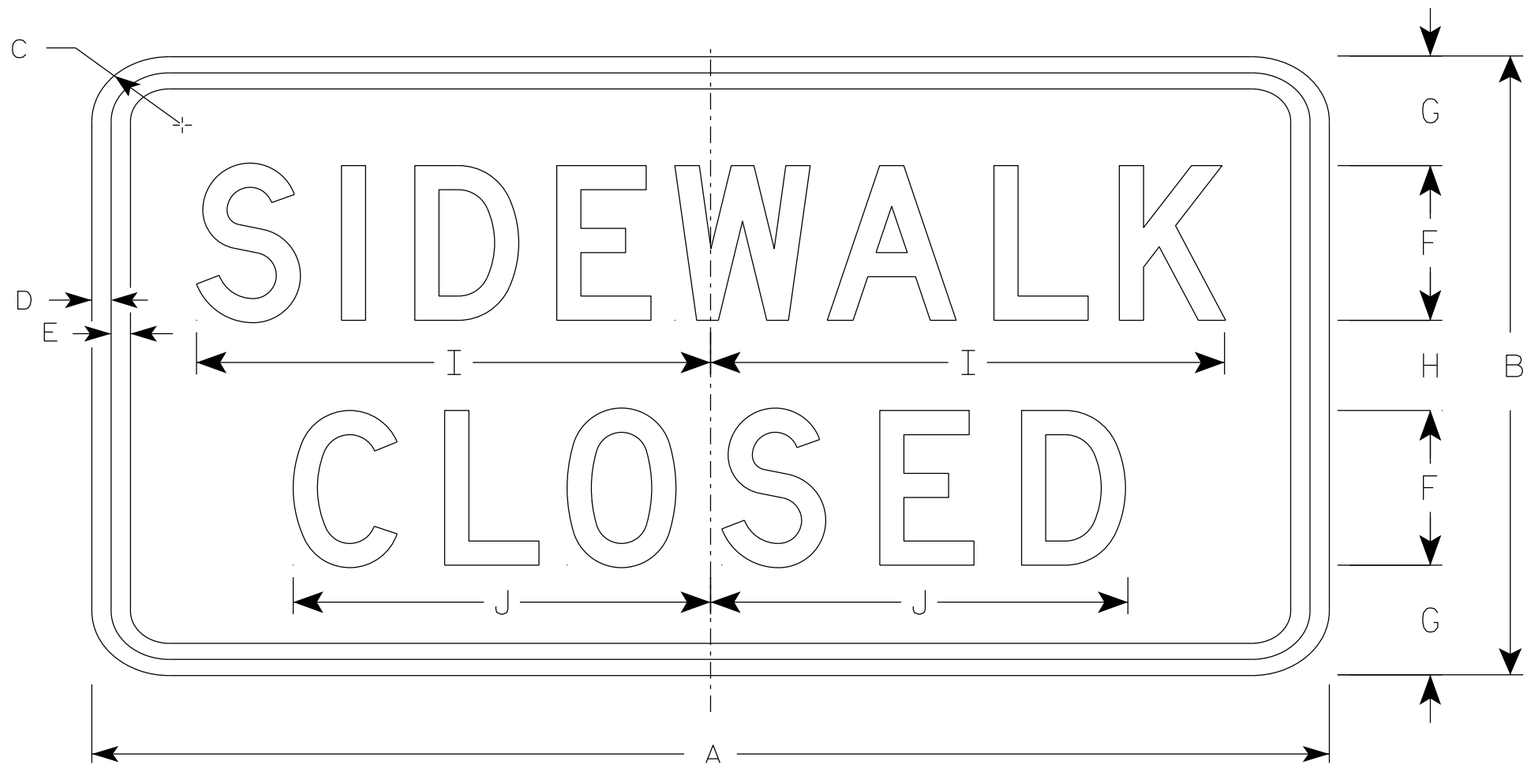

R9-9

NOTES

1. Sign is Type II - Type H Reflective
2. Color:
   Background - White
   Message - Black
3. Message Series - C
4. Use Size 2 for Sidewalks. Use Size 3 for Paths and Trails.

SIZE	A	B	C	D	E	F	G	H	I	J	K	L	M	N	O	P	Q	R	S	T	U	V	W	X	Y	Z	Area sq. ft.
1																											
2S	24	12	1 1/2	1/2	1/2	3	2 1/8	1 3/4	10	8 1/8																	2.0
2M	24	12	1 1/2	1/2	1/2	3	2 1/8	1 3/4	10	8 1/8																	2.0
3	30	18	1 1/2	1/2	1/2	4	3 1/2	3	12 1/2	10 1/4																	3.75
4																											
5																											

STANDARD SIGN
R9-9

WISCONSIN DEPT OF TRANSPORTATION

APPROVED Matthew R Rauch
for State Traffic Engineer

DATE 1/24/24 PLATE NO. R9-9.7

PROJECT NO: | HWY: | COUNTY: | SHEET NO: 273 | E

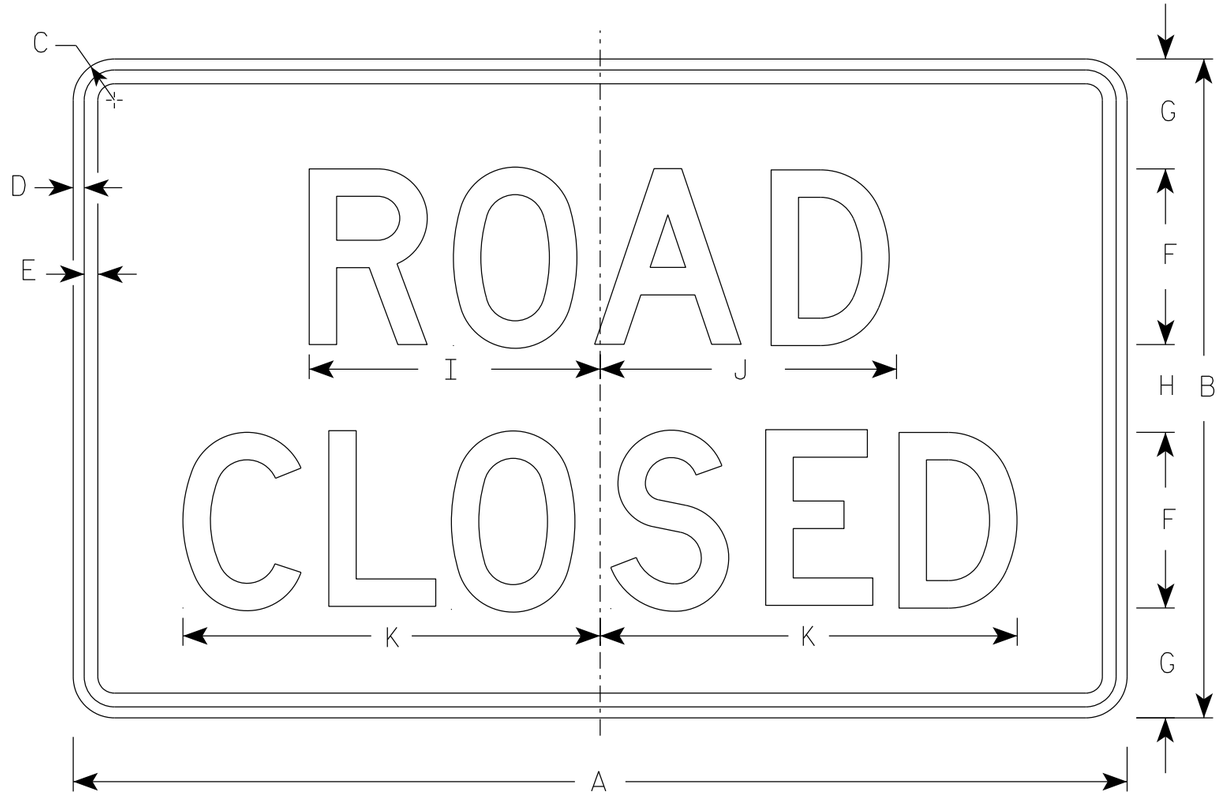

R11-2

NOTES

1. Sign is Type II - Type H Reflective
2. Color:
   Background - White
   Message - Black
3. Message Series - D
4. Corners may be square or rounded when base material is plywood but borders shall be rounded as shown. When base material is metal, the corners and borders shall be rounded.
5. Modify the message as required.

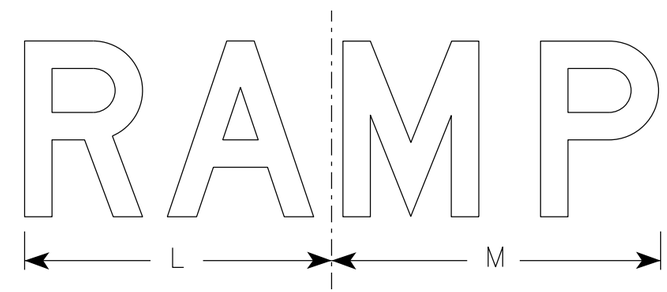

R11-2R

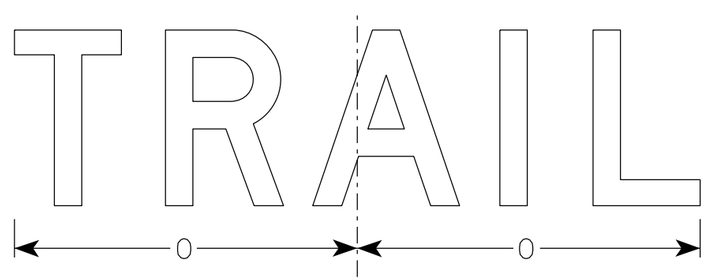

R11-2T

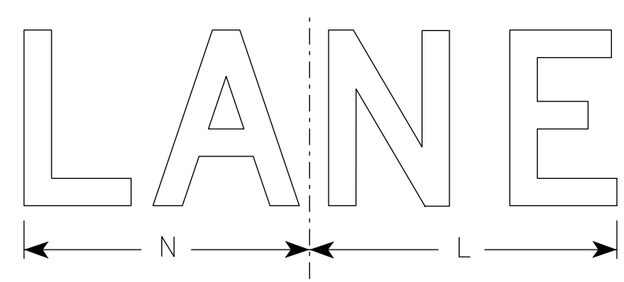

R11-2L

SIZE	A	B	C	D	E	F	G	H	I	J	K	L	M	N	O	P	Q	R	S	T	U	V	W	X	Y	Z	Area sq. ft.
1																											
2S	48	30	1 7/8	1/2	5/8	8	5	4	13 1/4	13 1/2	19	14	15	13	15 5/8												10.0
2M	48	30	1 7/8	1/2	5/8	8	5	4	13 1/4	13 1/2	19	14	15	13	15 5/8												10.0
3	48	30	1 7/8	1/2	5/8	8	5	4	13 1/4	13 1/2	19	14	15	13	15 5/8												10.0
4	48	30	1 7/8	1/2	5/8	8	5	4	13 1/4	13 1/2	19	14	15	13	15 5/8												10.0
5	48	30	1 7/8	1/2	5/8	8	5	4	13 1/4	13 1/2	19	14	15	13	15 5/8												10.0

STANDARD SIGN
R11-2

WISCONSIN DEPT OF TRANSPORTATION

APPROVED Matthew R Rauch
for State Traffic Engineer

DATE 2/5/24 PLATE NO. R11-2.12

PROJECT NO: | HWY: | COUNTY: | SHEET NO: E

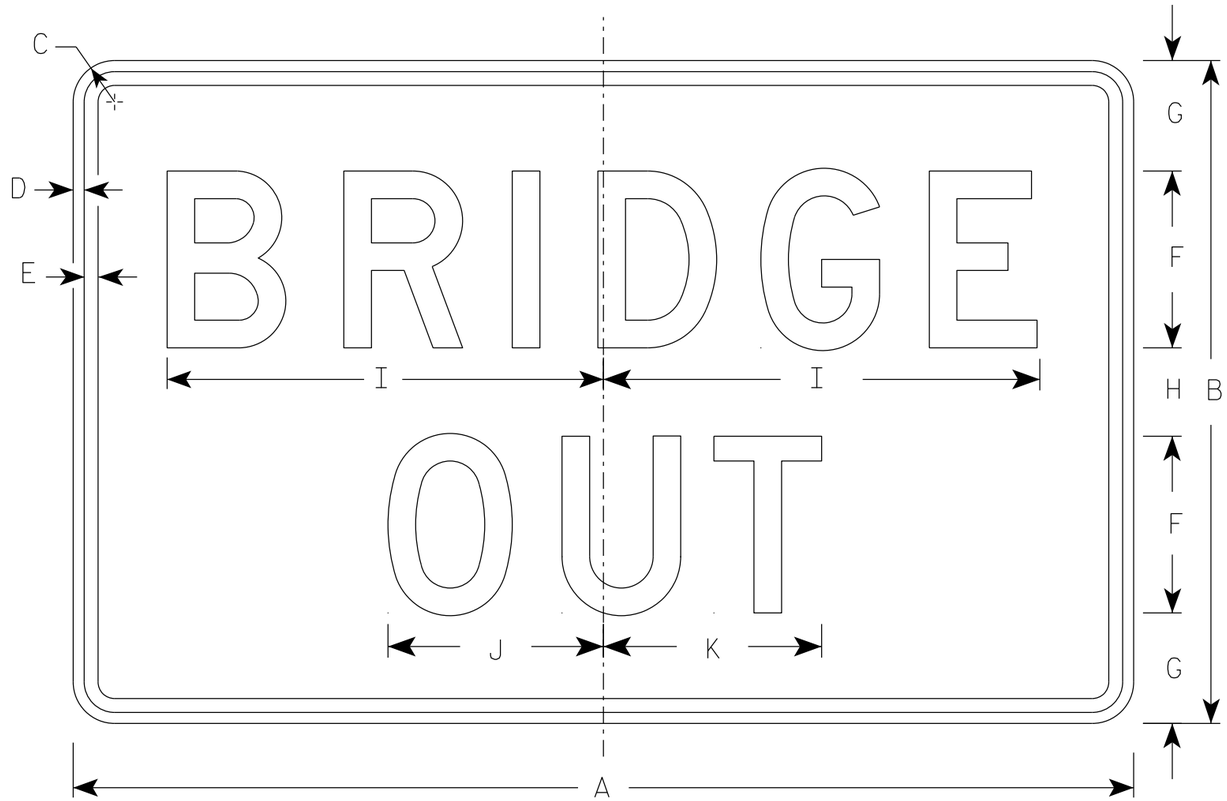

R11-2B

NOTES

1. Sign is Type II - Type H Reflective
2. Color:
   Background - White
   Message - Black
3. Message Series - D
4. Corners may be square or rounded when base material is plywood but borders shall be rounded as shown. When base material is metal, the corners and borders shall be rounded.

SIZE	A	B	C	D	E	F	G	H	I	J	K	L	M	N	O	P	Q	R	S	T	U	V	W	X	Y	Z	Area sq. ft.
1																											
2S	48	30	1 7/8	1/2	5/8	8	5	4	19 3/4	9 3/4	9 7/8																10.0
2M	48	30	1 7/8	1/2	5/8	8	5	4	19 3/4	9 3/4	9 7/8																10.0
3	48	30	1 7/8	1/2	5/8	8	5	4	19 3/4	9 3/4	9 7/8																10.0
4	48	30	1 7/8	1/2	5/8	8	5	4	19 3/4	9 3/4	9 7/8																10.0
5	48	30	1 7/8	1/2	5/8	8	5	4	19 3/4	9 3/4	9 7/8																10.0

STANDARD SIGN
R11-2B

WISCONSIN DEPT OF TRANSPORTATION

APPROVED Matthew R Rauch
For State Traffic Engineer

DATE 2/5/24 PLATE NO. R11-2B.3

PROJECT NO:

SHEET NO: 275 E

NOTES

1. Sign is Type II - Type H Reflective
2. Color:
   Background - White
   Message - Black
3. Message Series - C
4. Corners may be square or rounded when base material is plywood but borders shall be rounded as shown. When base material is metal, the corners and borders shall be rounded.
5. Substitute appropriate numerals to nearest quarter mile and optically adjust spacing to achieve proper balance.

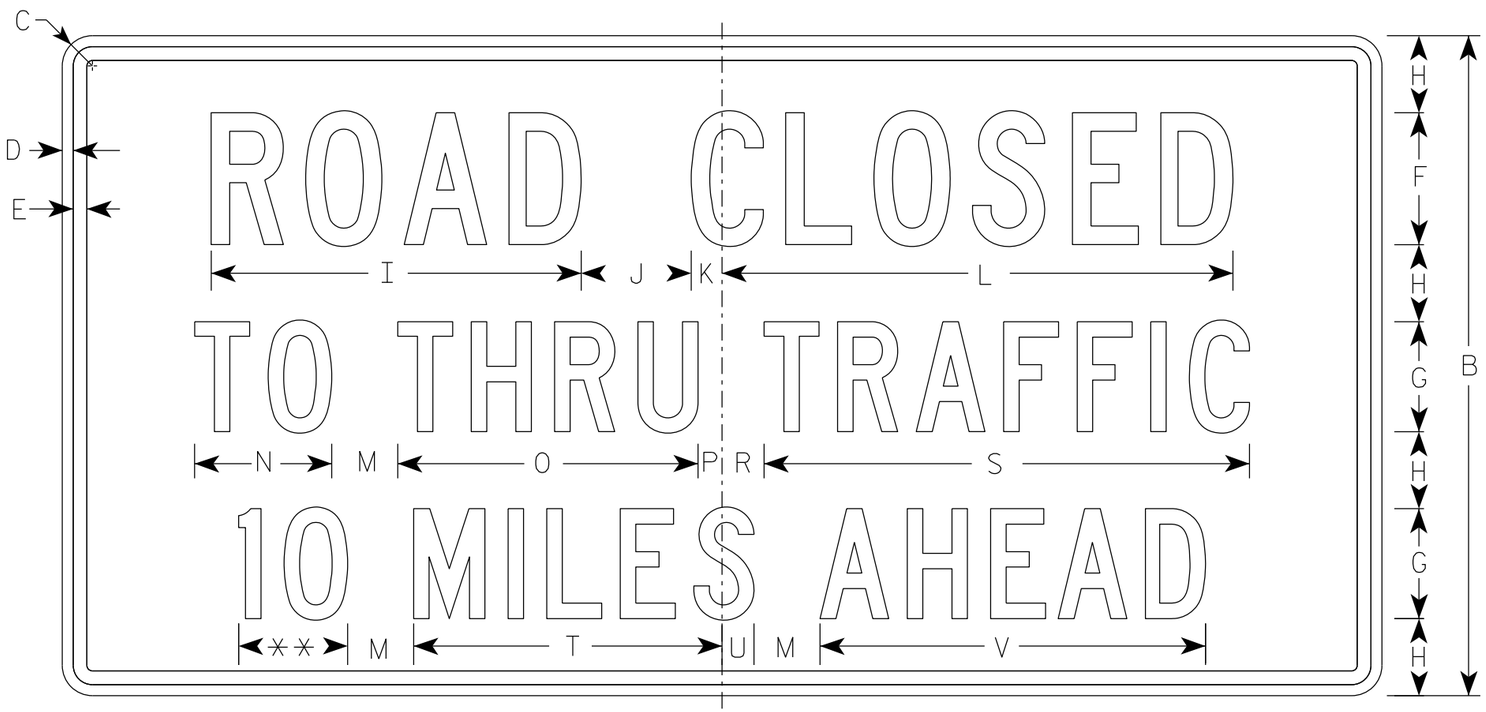

R11-3

** See Note 5

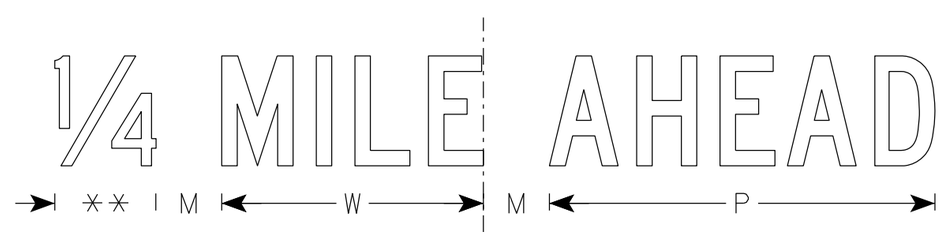

SIZE	A	B	C	D	E	F	G	H	I	J	K	L	M	N	O	P	Q	R	S	T	U	V	W	X	Y	Z	Area sq. ft.
1	36	18	1 1/2	3/8	3/8	4	3	2	11 1/4	3	1 1/8	15 3/8	2	3 3/4	8 1/4	5/8		1 3/8	13 1/4	8 3/8	7/8	10 1/2	7 1/8				4.5
2S	60	30	1 7/8	1/2	5/8	6	5	3 1/2	16 7/8	5	1 3/8	23 1/4	3	6 1/4	13 5/8	1 1/8		1 7/8	22 1/8	14	1 1/2	17 1/2	11 7/8				12.5
2M	60	30	1 7/8	1/2	5/8	6	5	3 1/2	16 7/8	5	1 3/8	23 1/4	3	6 1/4	13 5/8	1 1/8		1 7/8	22 1/8	14	1 1/2	17 1/2	11 7/8				12.5
3																											
4																											
5																											

STANDARD SIGN
R11-3

WISCONSIN DEPT OF TRANSPORTATION

APPROVED Matthew R Rauch
for State Traffic Engineer

DATE 2/5/24 PLATE NO. R11-3.10

PROJECT NO: | HWY: | COUNTY: | SHEET NO: 276 | E

NOTES

1. Sign is Type II - Type H Reflective
2. Color:
   Background - White
   Message - Black
3. Message Series - C
4. Corners may be square or rounded when base material is plywood but borders shall be rounded as shown. When base material is metal, the corners and borders shall be rounded.
5. Substitute appropriate numerals to nearest quarter mile and optically adjust spacing to achieve proper balance.

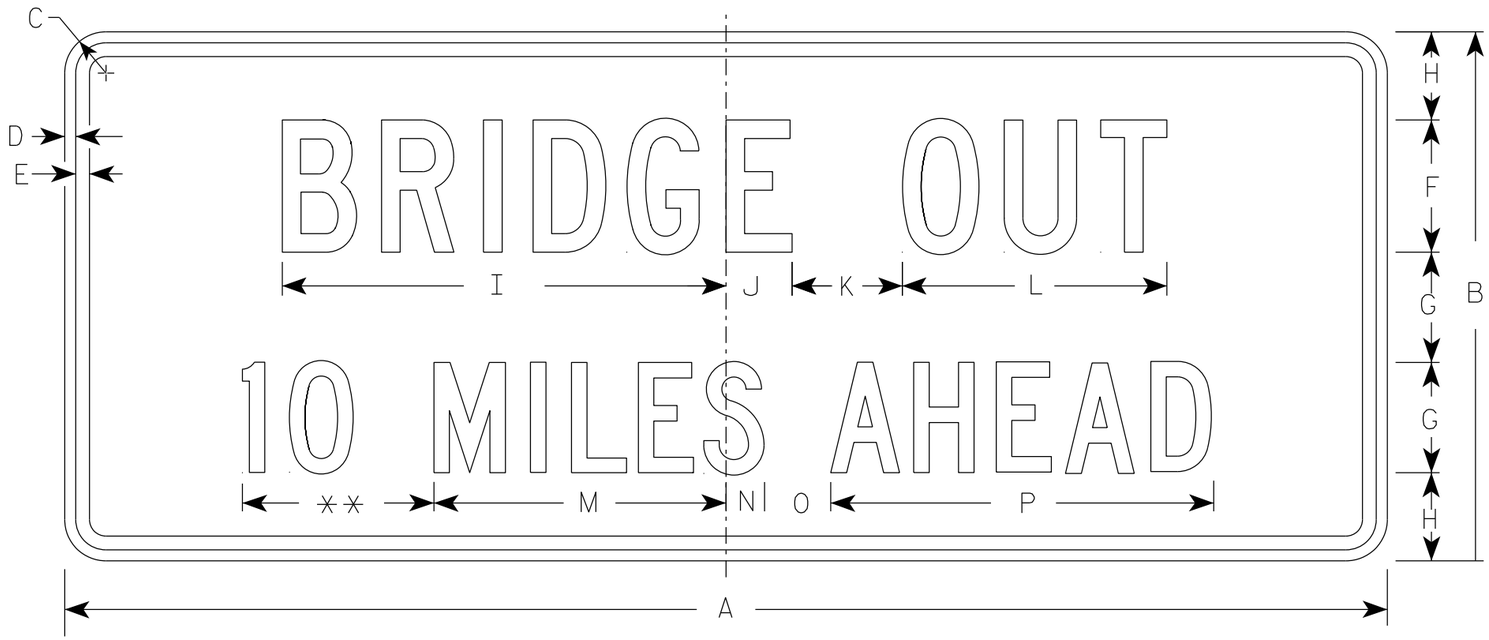

R11-3C

** See Note 5

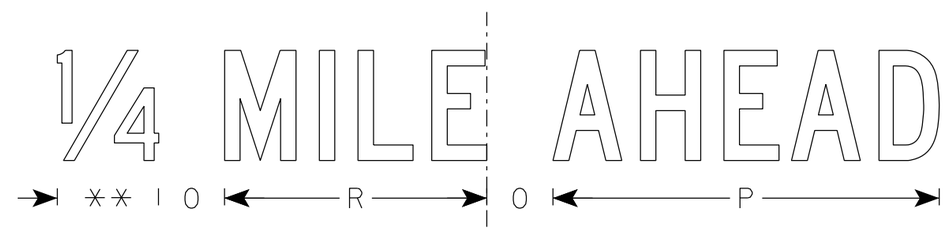

SIZE	A	B	C	D	E	F	G	H	I	J	K	L	M	N	O	P	Q	R	S	T	U	V	W	X	Y	Z	Area sq. ft.
1	36	15	1 1/2	1/2	5/8	4	3	2 1/2	13 1/4	2 1/4	3	8	8	1 1/2	2	10 3/4		7 1/8									3.75
2S	60	24	1 7/8	1/2	5/8	6	5	4	20 1/8	3	5	12	13 1/4	1 3/4	3	17 3/8		11 7/8									10.0
2M	60	24	1 7/8	1/2	5/8	6	5	4	20 1/8	3	5	12	13 1/4	1 3/4	3	17 3/8		11 7/8									10.0
3																											
4																											
5																											

STANDARD SIGN
R11-3C

WISCONSIN DEPT OF TRANSPORTATION

APPROVED Matthew R Rauch
for State Traffic Engineer

DATE 2/5/24 PLATE NO. R11-3C.4

PROJECT NO:

SHEET NO: 277 E

NOTES

1. Sign is Type II - Type H Reflective
2. Color:
   Background - White
   Message - Black
3. Message Series - E except as noted
4. Corners may be square or rounded when base material is plywood but borders shall be rounded as shown. When base material is metal, the corners and borders shall be rounded.

** Substitute appropriate message, optically center message

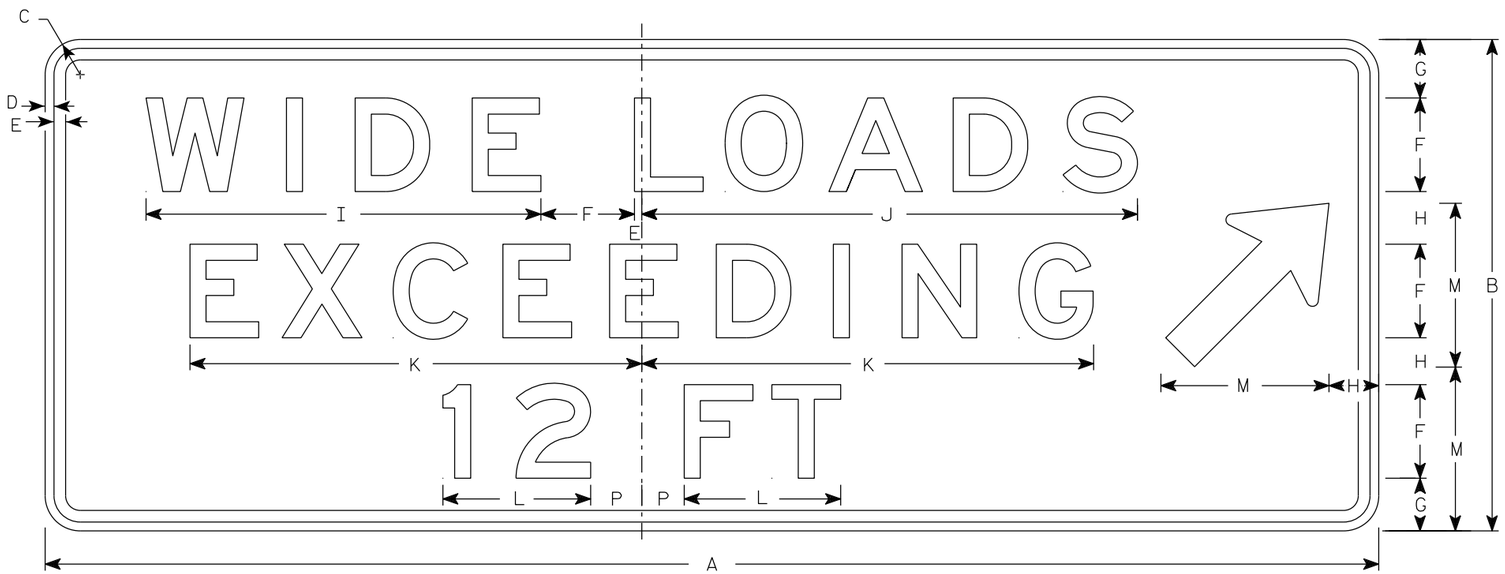

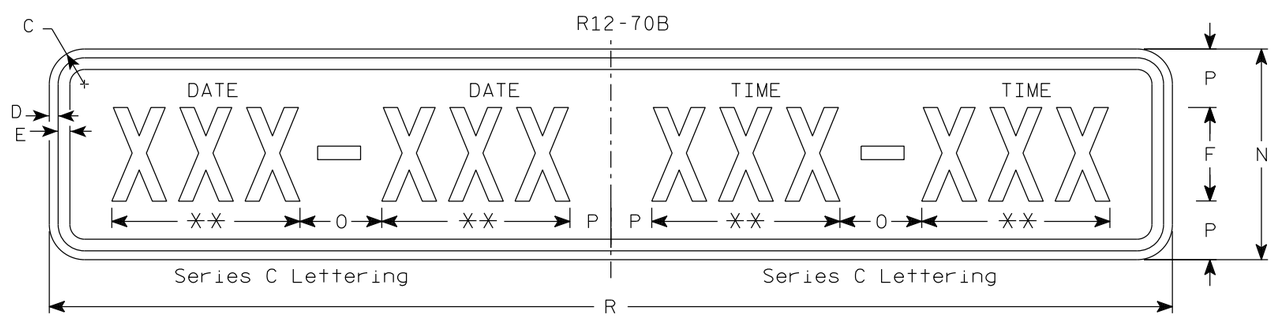

R12-70C

SIZE	A	B	C	D	E	F	G	H	I	J	K	L	M	N	O	P	Q	R	S	T	U	V	W	X	Y	Z	R12-70 Area sq. ft.	R12-70C Area sq. ft.
1																												
2S	90	36	3	1/2	5/8	6	4	5	20 7/8	28 3/8	24 5/8	8 1/8	12	12	6	3		66									22.5	5.5
2M	90	36	3	1/2	5/8	6	4	5	20 7/8	28 3/8	24 5/8	8 1/8	12	12	6	3		66									22.5	5.5
3	90	36	3	1/2	5/8	6	4	5	20 7/8	28 3/8	24 5/8	8 1/8	12	12	6	3		66									22.5	5.5
4	114	42	3	3/4	1	8	5	4	34	42	39	13	14	18	7	3 1/2		96									36.75	12.0
5	114	42	3	3/4	1	8	5	4	34	42	39	13	14	18	7	3 1/2		96									36.75	12.0

TYPICAL SIGN
R12-70B

WISCONSIN DEPT OF TRANSPORTATION

APPROVED Matthew R Rauch
for State Traffic Engineer

DATE 2/9/24 PLATE NO. R12-70B.4

PROJECT NO: | HWY: | COUNTY: | SHEET NO: 278 | E

NOTES

1. Sign is Type II - Type F Reflective
2. Color:
   Background - Yellow
   Message - Black
3. Message Series - B

W4-4P

SIZE	A	B	C	D	E	F	G	H	I	J	K	L	M	N	O	P	Q	R	S	T	U	V	W	X	Y	Z	Area sq. ft.
1																											
2S	24	12	1 1/2	3/8	3/8	3	2 1/4	1 1/2	8	1 1/2	3/8	10	6 1/4	2 1/4	2 1/4	6 1/4											2.0
2M	24	12	1 1/2	3/8	3/8	3	2 1/4	1 1/2	8	1 1/2	3/8	10	6 1/4	2 1/4	2 1/4	6 1/4											2.0
3	36	15	1 1/2	3/8	1/2	4	2 5/8	1 3/4	10 3/4	2 3/8	3/8	13 1/2	8 3/8	3	3 1/8	8 3/8											3.75
4	42	18	1 1/2	3/8	1/2	5	3	2	13 3/8	3 1/8	3/8	16 7/8	10 1/2	3 5/8	3 7/8	10 3/8											5.25
5																											

STANDARD SIGN

W4-4P

WISCONSIN DEPT OF TRANSPORTATION

APPROVED Matthew R Rauch
For State Traffic Engineer

DATE 9/5/2023 PLATE NO. W4-4P.3

PROJECT NO: | HWY: | COUNTY: | SHEET NO: 279 | E

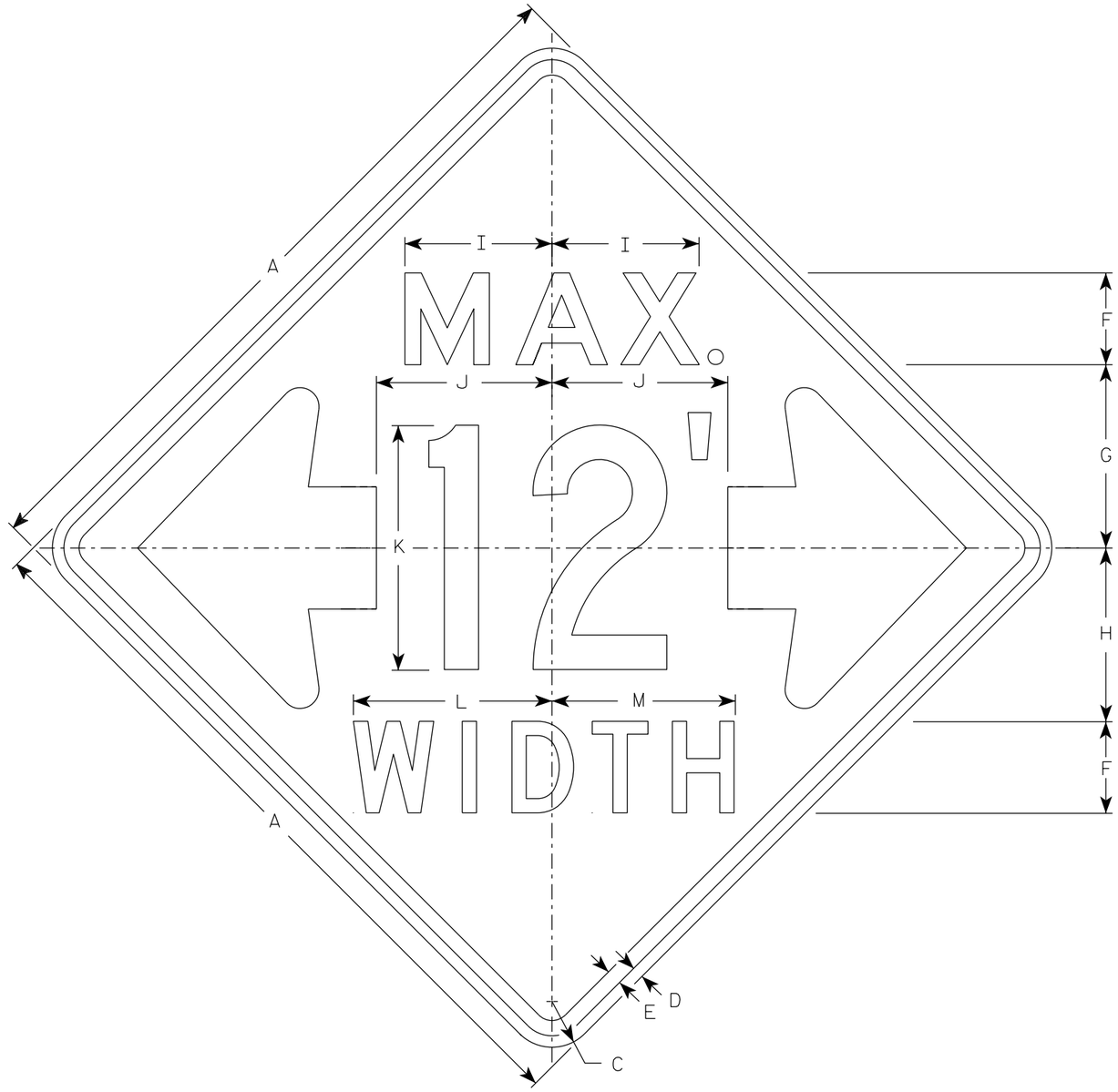

W12-52

NOTES

1. Sign is Type II - Type F Reflective
2. Color:
   Background - Orange
   Message - Black
3. Message Series - See note 5
4. The top line is series E, the numerals are series C, and the bottom line is series D.
5. Substitute appropriate numerals and adjust spacing as required.

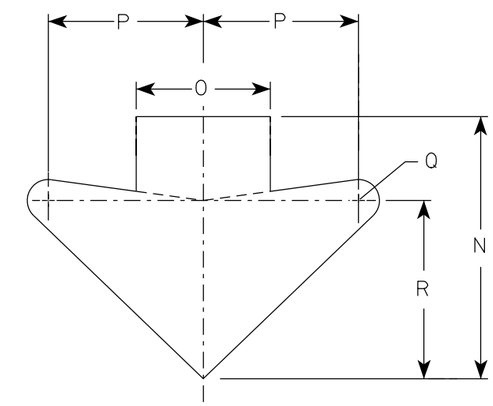

ARROW DETAIL

SIZE	A	B	C	D	E	F	G	H	I	J	K	L	M	N	O	P	Q	R	S	T	U	V	W	X	Y	Z	Area sq. ft.
1																											
2S	48		3	¾	1	6	12	11 ⅜	9 ⅝	11 ½	16	13	12	15 ⅝	8	9 ¼	1 ¼	10 ⅝									16.0
2M	48		3	¾	1	6	12	11 ⅜	9 ⅝	11 ½	16	13	12	15 ⅝	8	9 ¼	1 ¼	10 ⅝									16.0
3																											
4																											
5																											

STANDARD SIGN
W12-52

WISCONSIN DEPT OF TRANSPORTATION

APPROVED Matthew R Rauch
for State Traffic Engineer

DATE 3/10/2024 PLATE NO. W12-52.8

PROJECT NO: | HWY: | COUNTY: | SHEET NO: 280 | E

NOTES

1. Sign is Type II - Type F Reflective
2. Color:
   Background - Orange
   Message - Black
3. Message Series - C
4. Corners may be square or rounded when base material is plywood but borders shall be rounded as shown. When base material is metal, the corners and borders shall be rounded.

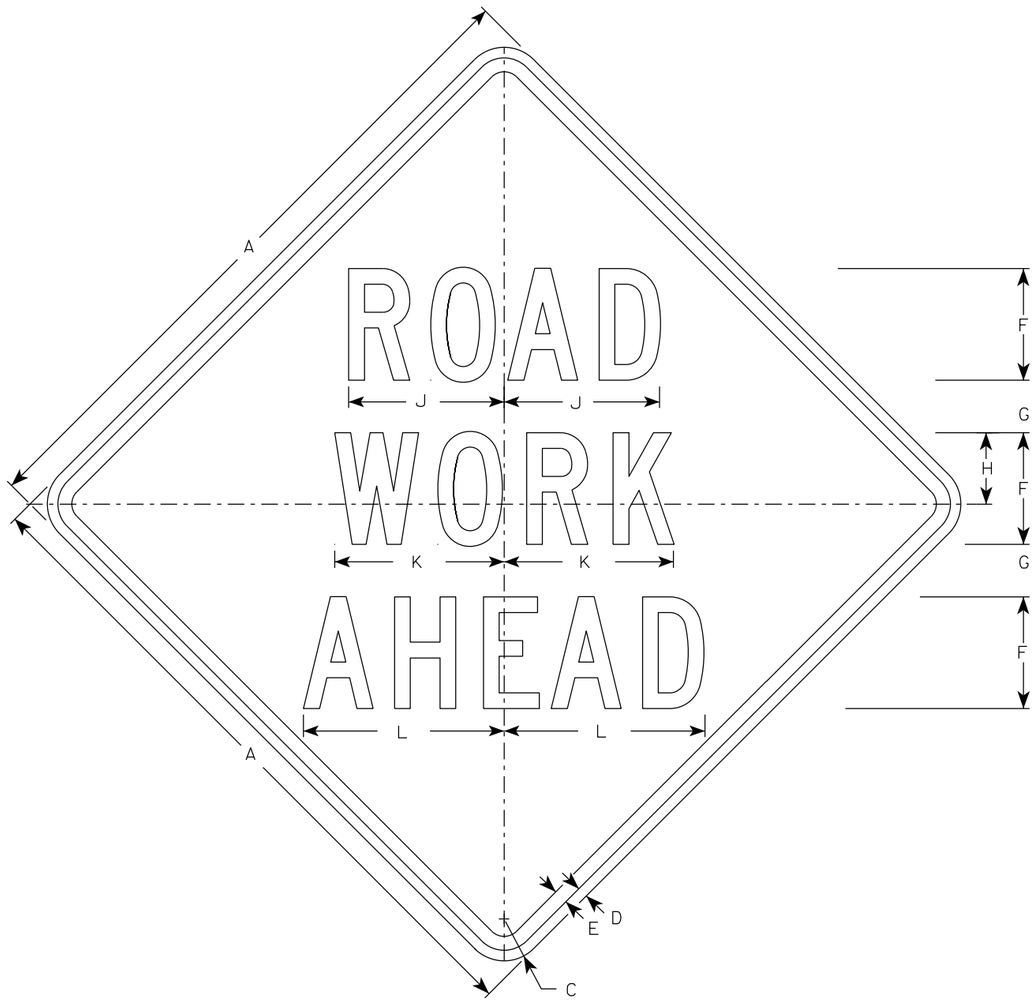

W20-1A

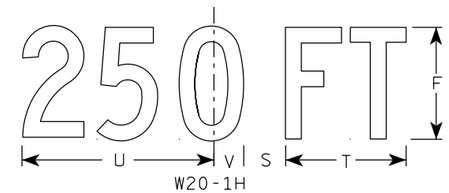

W20-1H

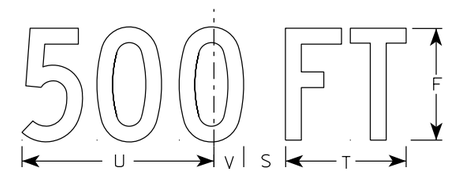

W20-1D

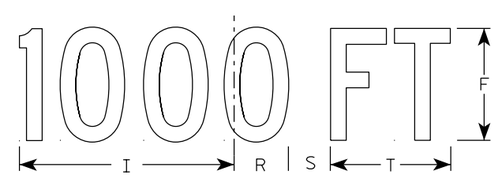

W20-1C

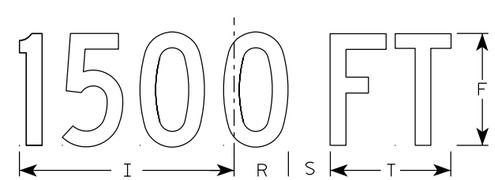

W20-1B

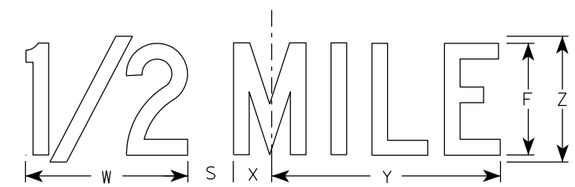

W20-1G

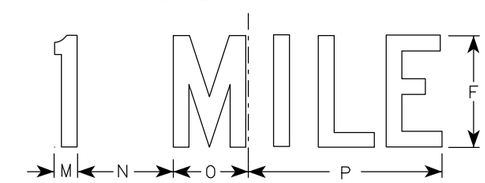

W20-1F

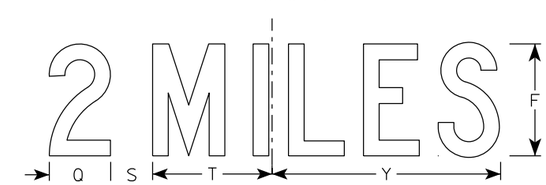

W20-1E

SIZE	A	B	C	D	E	F	G	H	I	J	K	L	M	N	O	P	Q	R	S	T	U	V	W	X	Y	Z	Area sq. ft.
1	36		2 1/4	5/8	3/4	5	2 5/8	3 1/4	10 1/8	7	7 5/8	8 7/8	1 1/8	4 1/2	3 1/2	9	3 1/4	2 1/2	2 1/4	5 5/8	9	1 3/8	8	1 3/4	10 3/4	6	9.0
2S	48		3	3/4	1	8	3 3/4	5 1/8	15 3/8	11 1/8	12 1/8	14 3/8	1 5/8	6 7/8	5 3/8	13 7/8	4 3/8	3 7/8	3	8 5/8	13 3/4	2 1/8	11 7/8	2 3/4	16 3/8	9	16.0
2M	48		3	3/4	1	8	3 3/4	5 1/8	15 3/8	11 1/8	12 1/8	14 3/8	1 5/8	6 7/8	5 3/8	13 7/8	4 3/8	3 7/8	3	8 5/8	13 3/4	2 1/8	11 7/8	2 3/4	16 3/8	9	16.0
3	48		3	3/4	1	8	3 3/4	5 1/8	15 3/8	11 1/8	12 1/8	14 3/8	1 5/8	6 7/8	5 3/8	13 7/8	4 3/8	3 7/8	3	8 5/8	13 3/4	2 1/8	11 7/8	2 3/4	16 3/8	9	16.0
4	48		3	3/4	1	8	3 3/4	5 1/8	15 3/8	11 1/8	12 1/8	14 3/8	1 5/8	6 7/8	5 3/8	13 7/8	4 3/8	3 7/8	3	8 5/8	13 3/4	2 1/8	11 7/8	2 3/4	16 3/8	9	16.0
5	48		3	3/4	1	8	3 3/4	5 1/8	15 3/8	11 1/8	12 1/8	14 3/8	1 5/8	6 7/8	5 3/8	13 7/8	4 3/8	3 7/8	3	8 5/8	13 3/4	2 1/8	11 7/8	2 3/4	16 3/8	9	16.0

STANDARD SIGN
W20-1A, B, C, D, E, F, G & H

WISCONSIN DEPT OF TRANSPORTATION

APPROVED Matthew R Rauch
for State Traffic Engineer

DATE 1/10/2024 PLATE NO. W20-1.12

PROJECT NO:

SHEET NO: 281 E

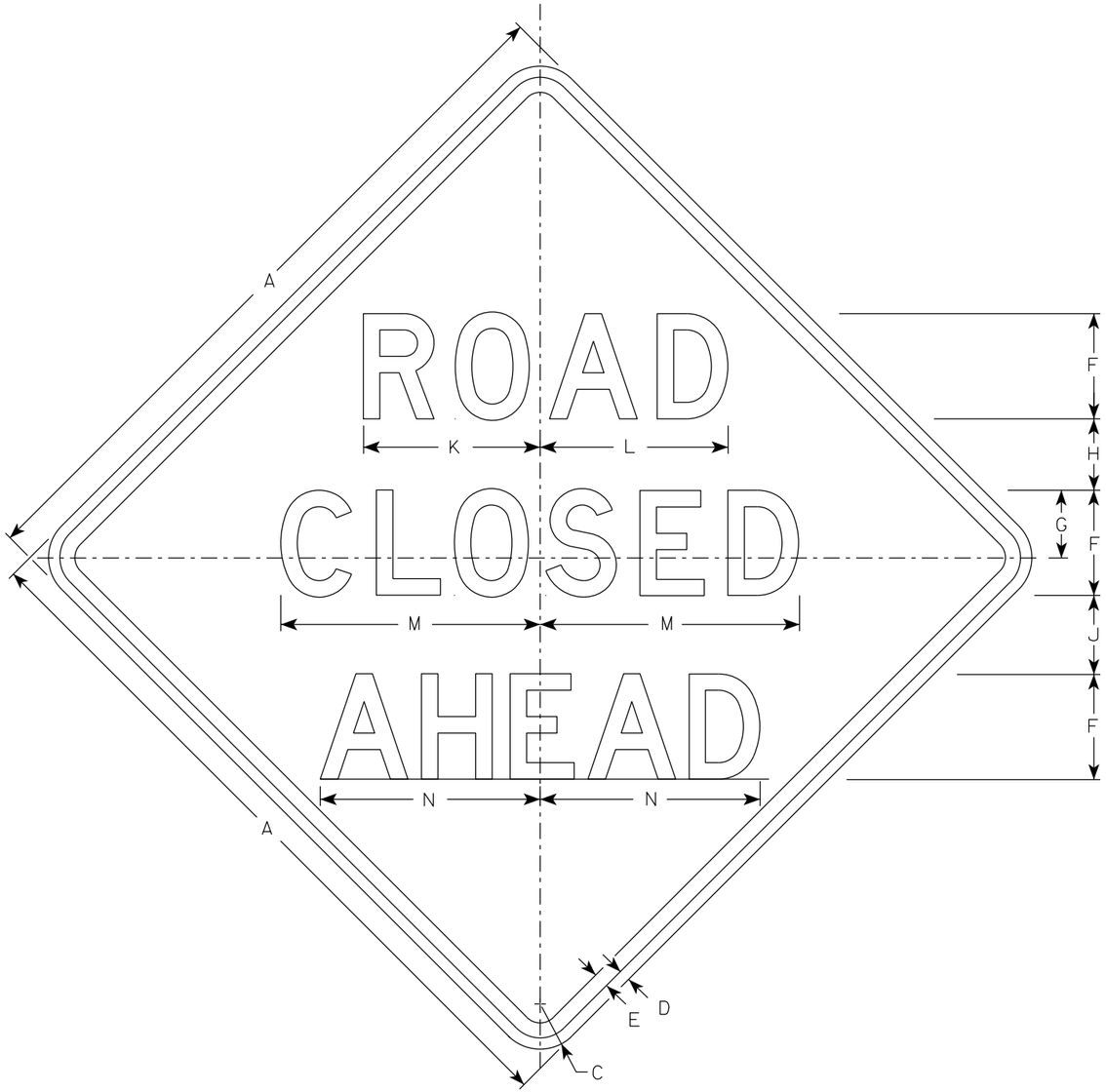

W20-3A

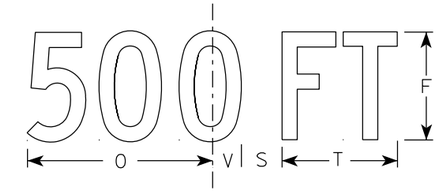

W20-3D

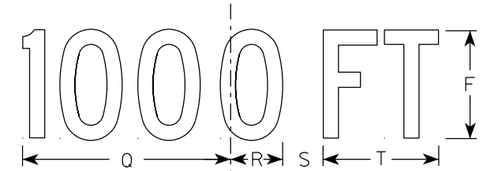

W20-3C

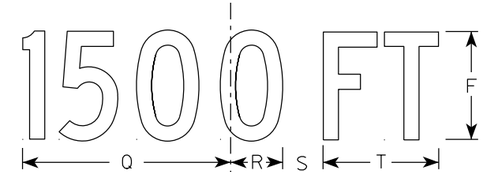

W20-3B

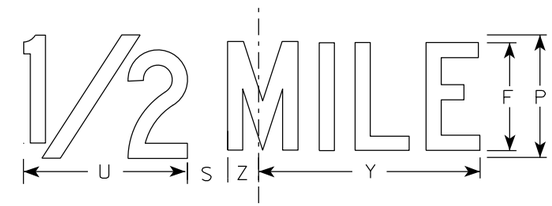

W20-3G

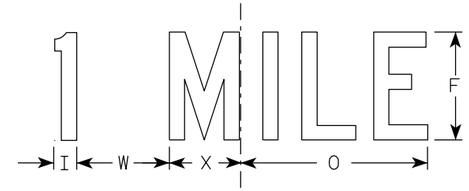

W20-3F

NOTES

1. Sign is Type II - Type F Reflective
2. Color:
   Background - Orange
   Message - Black
3. Message Series - see note 5
4. Corners may be square or rounded when base material is plywood but borders shall be rounded as shown. When base material is metal, the corners and borders shall be rounded.
5. Lines 1 and 2 are Series D.
   Line 3 is Series D for AHEAD and Series C for all other distances.

SIZE	A	B	C	D	E	F	G	H	I	J	K	L	M	N	O	P	Q	R	S	T	U	V	W	X	Y	Z	Area sq. ft.
1	36		2 1/4	5/8	3/4	5	3 3/8	3 1/2	1 1/8	4	8 3/8	8 7/8	12 1/2	11	9	6	10 1/8	2 1/2	1 7/8	5 5/8	8	1 3/8	4 1/2	3 1/2	10 3/4	1 3/4	9.0
2S	48		3	3/4	1	7	4 1/2	4 3/4	1 1/2	5 1/4	11 3/4	12 1/2	17 1/4	14 5/8	12	8	13 1/2	3 3/8	2 5/8	7 1/2	10 5/8	1 7/8	6	4 5/8	14 3/8	2 3/8	16.0
2M	48		3	3/4	1	7	4 1/2	4 3/4	1 1/2	5 1/4	11 3/4	12 1/2	17 1/4	14 5/8	12	8	13 1/2	3 3/8	2 5/8	7 1/2	10 5/8	1 7/8	6	4 5/8	14 3/8	2 3/8	16.0
3	48		3	3/4	1	7	4 1/2	4 3/4	1 1/2	5 1/4	11 3/4	12 1/2	17 1/4	14 5/8	12	8	13 1/2	3 3/8	2 5/8	7 1/2	10 5/8	1 7/8	6	4 5/8	14 3/8	2 3/8	16.0
4	48		3	3/4	1	7	4 1/2	4 3/4	1 1/2	5 1/4	11 3/4	12 1/2	17 1/4	14 5/8	12	8	13 1/2	3 3/8	2 5/8	7 1/2	10 5/8	1 7/8	6	4 5/8	14 3/8	2 3/8	16.0
5	48		3	3/4	1	7	4 1/2	4 3/4	1 1/2	5 1/4	11 3/4	12 1/2	17 1/4	14 5/8	12	8	13 1/2	3 3/8	2 5/8	7 1/2	10 5/8	1 7/8	6	4 5/8	14 3/8	2 3/8	16.0

STANDARD SIGN
W20-3A, B, C, D, F & G

WISCONSIN DEPT OF TRANSPORTATION

APPROVED Matthew R Rauch
for State Traffic Engineer

DATE 1/10/2024 PLATE NO. W20-3.8

PROJECT NO: | HWY: | COUNTY: | SHEET NO: 282 | E

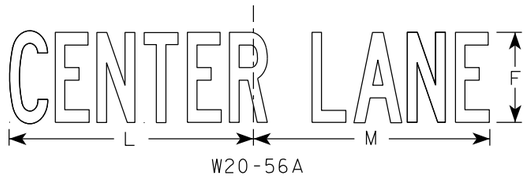

W20-56A

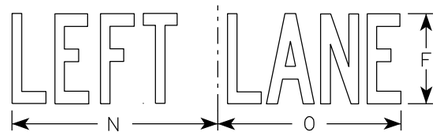

W20-55A

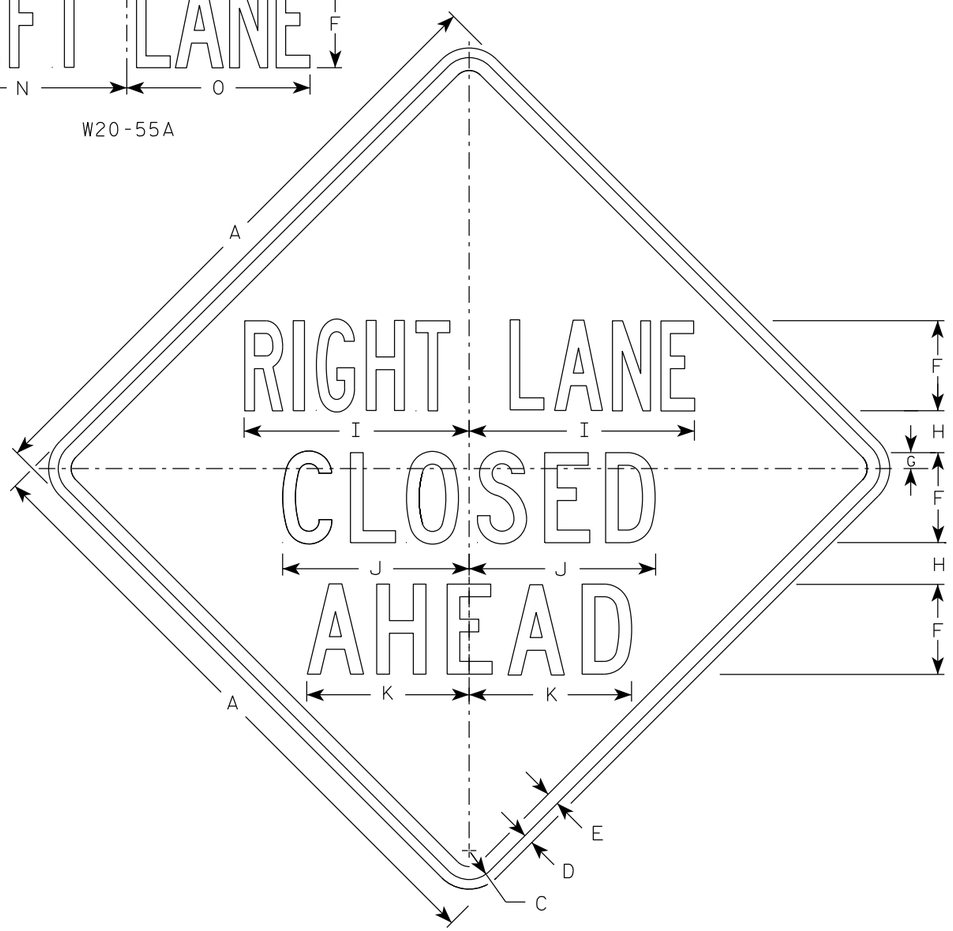

W20-5A

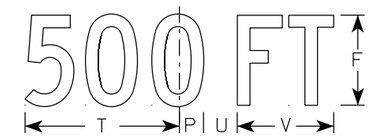

W20-5D

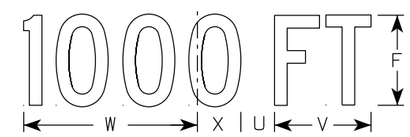

W20-5C

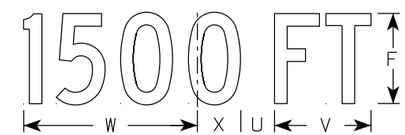

W20-5B

W20-5G

W20-5F

NOTES

1. Sign is Type II - Type F Reflective
2. Color:
   Background - Orange
   Message - Black
3. Message Series - See Note 5
4. Corners may be square or rounded when base material is plywood but borders shall be rounded as shown. When base material is metal, the corners and borders shall be rounded.
5. " _____ LANE" is Series B.
   All other copy is Series C.

SIZE	A	B	C	D	E	F	G	H	I	J	K	L	M	N	O	P	Q	R	S	T	U	V	W	X	Y	Z	Area sq. ft.
1	36	6	2 1/4	5/8	3/4	5	7/8	2 1/2	13 1/8	10 3/4	9 1/2	14 1/4	13 5/8	12	12	1 3/8	1 1/8	4 1/2	3 1/2	9	1 7/8	5 5/8	10 1/8	2 1/2	1 3/4	8	9.0
2S	48	8	3	3/4	1	7	1 1/4	3 1/4	17 1/2	14 3/8	12 5/8	19	18 3/8	16	14 1/4	1 7/8	1 1/2	6	4 5/8	12	2 5/8	7 1/2	13 1/2	3 3/8	2 3/8	10 5/8	16.0
2M	48	8	3	3/4	1	7	1 1/4	3 1/4	17 1/2	14 3/8	12 5/8	19	18 3/8	16	14 1/4	1 7/8	1 1/2	6	4 5/8	12	2 5/8	7 1/2	13 1/2	3 3/8	2 3/8	10 5/8	16.0
3	48	8	3	3/4	1	7	1 1/4	3 1/4	17 1/2	14 3/8	12 5/8	19	18 3/8	16	14 1/4	1 7/8	1 1/2	6	4 5/8	12	2 5/8	7 1/2	13 1/2	3 3/8	2 3/8	10 5/8	16.0
4	48	8	3	3/4	1	7	1 1/4	3 1/4	17 1/2	14 3/8	12 5/8	19	18 3/8	16	14 1/4	1 7/8	1 1/2	6	4 5/8	12	2 5/8	7 1/2	13 1/2	3 3/8	2 3/8	10 5/8	16.0
5	48	8	3	3/4	1	7	1 1/4	3 1/4	17 1/2	14 3/8	12 5/8	19	18 3/8	16	14 1/4	1 7/8	1 1/2	6	4 5/8	12	2 5/8	7 1/2	13 1/2	3 3/8	2 3/8	10 5/8	16.0

STANDARD SIGN

W20-5A, B, C, D, F & G

WISCONSIN DEPT OF TRANSPORTATION

APPROVED Matthew R Rauch
for State Traffic Engineer

DATE 3/27/24 PLATE NO. W20-5.12

PROJECT NO:	HWY:	COUNTY:		SHEET NO: 283	E

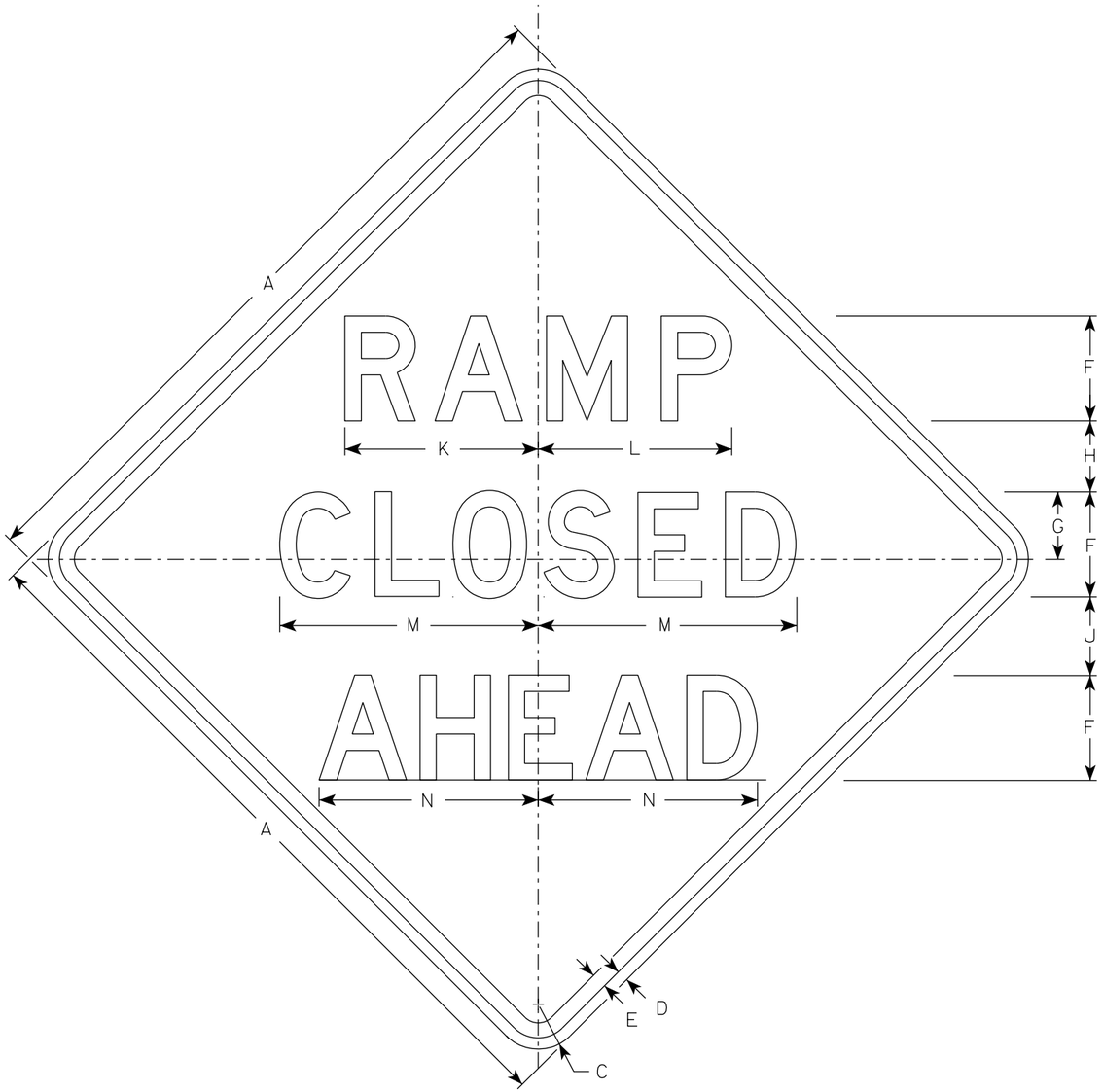

W20-53A

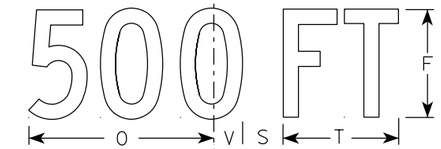

W20-53D

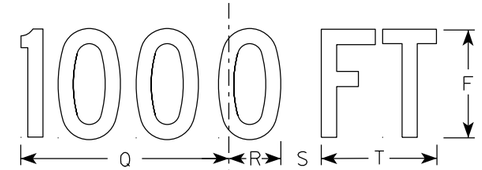

W20-53C

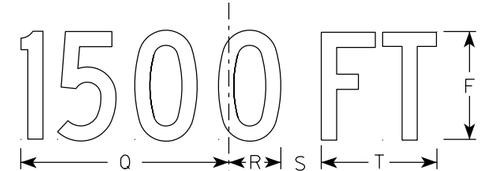

W20-53B

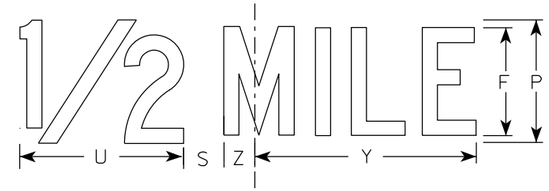

W20-53G

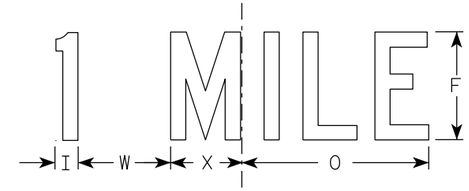

W20-53F

NOTES

1. Sign is Type II - Type F Reflective
2. Color:
   Background - Orange
   Message - Black
3. Message Series - see note 5
4. Corners may be square or rounded when base material is plywood but borders shall be rounded as shown. When base material is metal, the corners and borders shall be rounded.
5. Lines 1 and 2 are Series D.
   Line 3 is Series D for AHEAD and Series C for all other distances.

SIZE	A	B	C	D	E	F	G	H	I	J	K	L	M	N	O	P	Q	R	S	T	U	V	W	X	Y	Z	Area sq. ft.
1	36		2 1/4	5/8	3/4	5	3 3/8	3 1/2	1 1/8	4	9 1/4	9 1/4	12 1/2	11	9	6	10 1/8	2 1/2	1 7/8	5 5/8	8	1 3/8	4 1/2	3 1/2	10 3/4	1 3/4	9.0
2S	48		3	3/4	1	7	4 1/2	4 3/4	1 1/2	5 1/4	12 7/8	12 7/8	17 1/4	14 5/8	12	8	13 1/2	3 3/8	2 5/8	7 1/2	10 5/8	1 7/8	6	4 5/8	14 3/8	2 3/8	16.0
2M	48		3	3/4	1	7	4 1/2	4 3/4	1 1/2	5 1/4	12 7/8	12 7/8	17 1/4	14 5/8	12	8	13 1/2	3 3/8	2 5/8	7 1/2	10 5/8	1 7/8	6	4 5/8	14 3/8	2 3/8	16.0
3	48		3	3/4	1	7	4 1/2	4 3/4	1 1/2	5 1/4	12 7/8	12 7/8	17 1/4	14 5/8	12	8	13 1/2	3 3/8	2 5/8	7 1/2	10 5/8	1 7/8	6	4 5/8	14 3/8	2 3/8	16.0
4	48		3	3/4	1	7	4 1/2	4 3/4	1 1/2	5 1/4	12 7/8	12 7/8	17 1/4	14 5/8	12	8	13 1/2	3 3/8	2 5/8	7 1/2	10 5/8	1 7/8	6	4 5/8	14 3/8	2 3/8	16.0
5	48		3	3/4	1	7	4 1/2	4 3/4	1 1/2	5 1/4	12 7/8	12 7/8	17 1/4	14 5/8	12	8	13 1/2	3 3/8	2 5/8	7 1/2	10 5/8	1 7/8	6	4 5/8	14 3/8	2 3/8	16.0

STANDARD SIGN
W20-53A,B,C,D,F,G

WISCONSIN DEPT OF TRANSPORTATION

APPROVED Matthew R Rauch
for State Traffic Engineer

DATE 1/10/2024 PLATE NO. W20-53.2

PROJECT NO: | HWY: | COUNTY: | SHEET NO: E

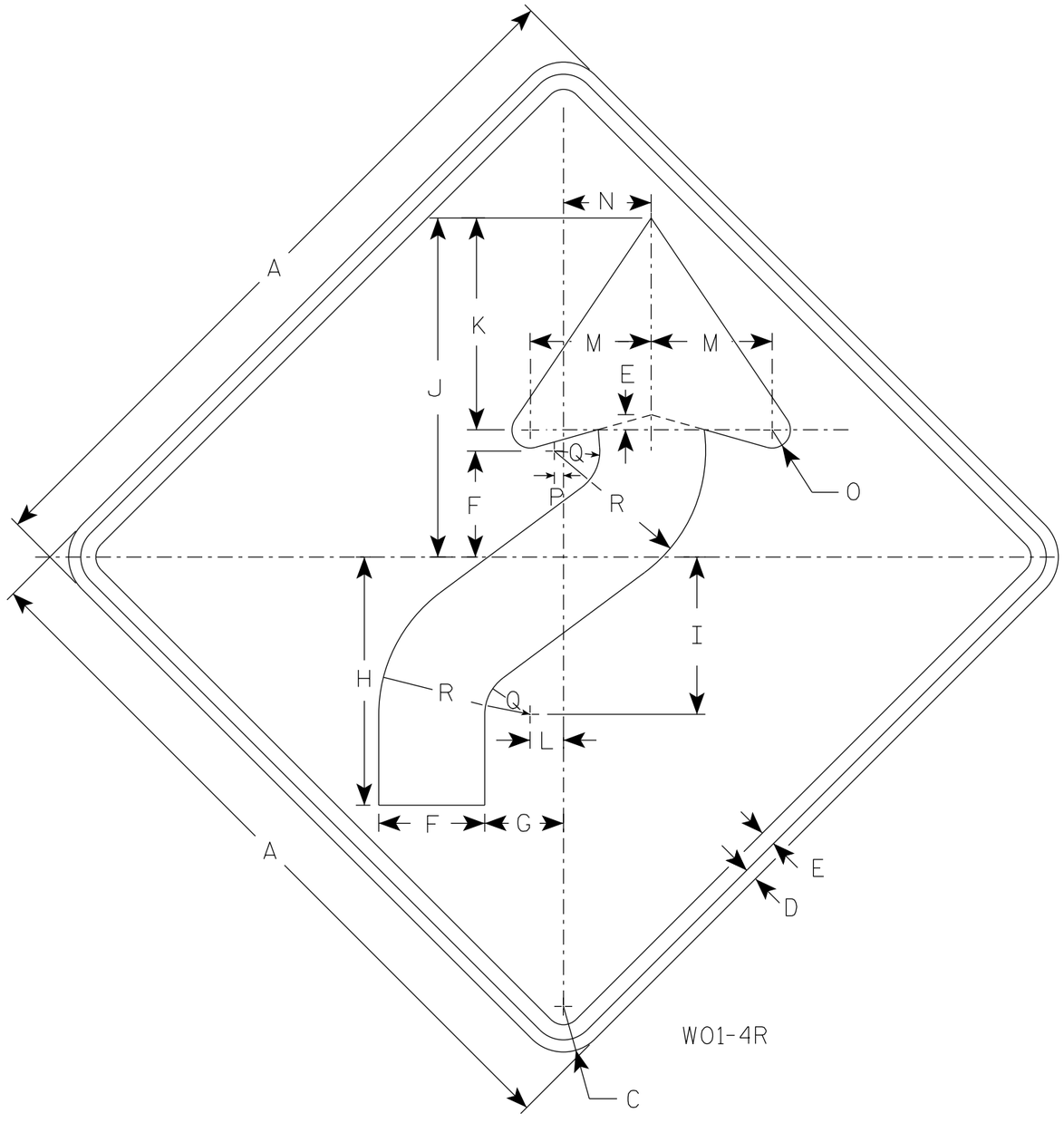

W01-4R

NOTES

1. Sign is Type II - Type F Reflective
2. Color:
   Background - Orange
   Message - Black
3. Corners may be square or rounded when base material is plywood but borders shall be rounded as shown. When base material is metal, the corners and borders shall be rounded.
4. W01-4L is the same as W01-4R except the arrow is reversed along the vertical centerline.

SIZE	A	B	C	D	E	F	G	H	I	J	K	L	M	N	O	P	Q	R	S	T	U	V	W	X	Y	Z	Area sq. ft.
1	36		2 1/4	5/8	3/4	5 1/4	4	12 3/8	7 7/8	16 7/8	10 1/2	1 5/8	6	4 1/2	1	1/2	2 1/4	7 1/2									9.0
2S	48		3	3/4	1	7	5 1/4	16 1/2	10 1/2	22 1/2	14	2 1/4	8	6	1 1/4	5/8	3	10									16.0
2M	48		3	3/4	1	7	5 1/4	16 1/2	10 1/2	22 1/2	14	2 1/4	8	6	1 1/4	5/8	3	10									16.0
3	48		3	3/4	1	7	5 1/4	16 1/2	10 1/2	22 1/2	14	2 1/4	8	6	1 1/4	5/8	3	10									16.0
4	48		3	3/4	1	7	5 1/4	16 1/2	10 1/2	22 1/2	14	2 1/4	8	6	1 1/4	5/8	3	10									16.0
5	48		3	3/4	1	7	5 1/4	16 1/2	10 1/2	22 1/2	14	2 1/4	8	6	1 1/4	5/8	3	10									16.0

STANDARD SIGN
W01-4

WISCONSIN DEPT OF TRANSPORTATION

APPROVED Matthew R Rauch
For State Traffic Engineer

DATE 1/24/2024 PLATE NO. W01-4.2

PROJECT NO: | HWY: | COUNTY: | SHEET NO: 285 | E

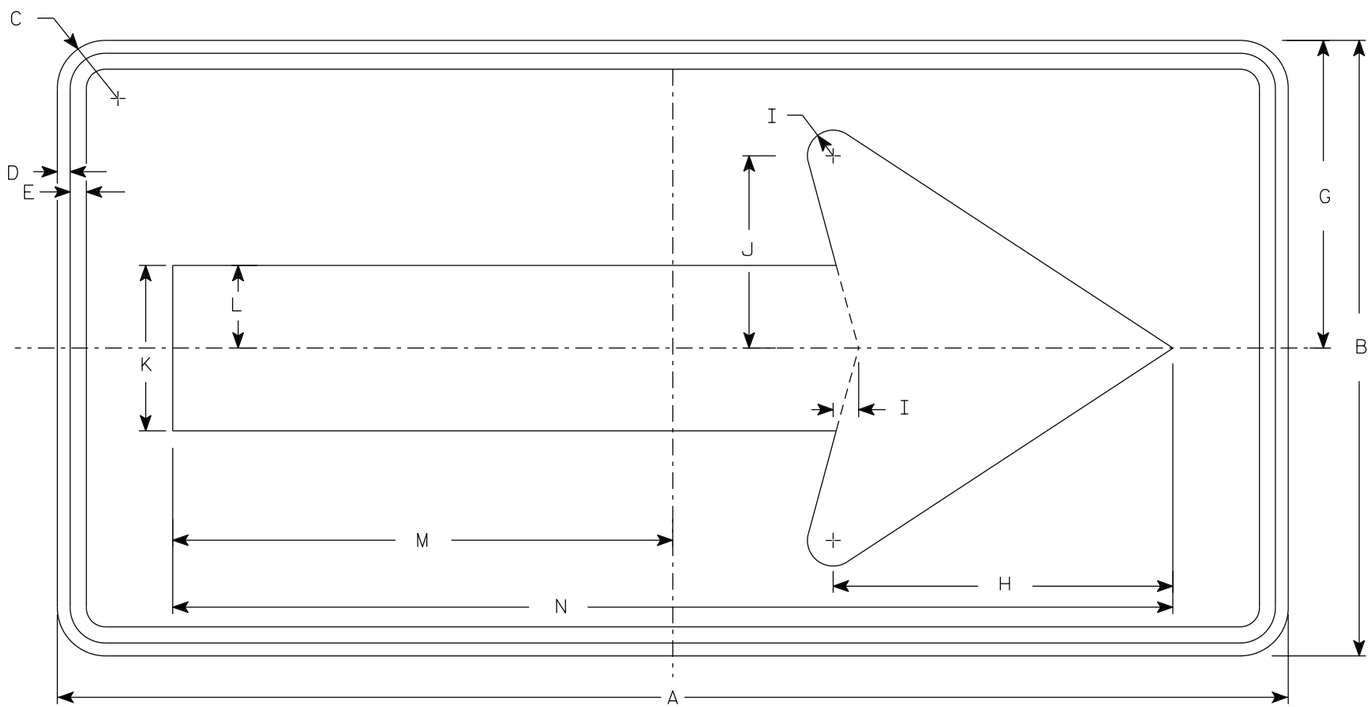

W01-6

NOTES

1. Sign is Type II - Type F Reflective
2. Color:
   Background - Orange
   Message - Black
3. Corners may be square or rounded when base material is plywood but borders shall be rounded as shown. When base material is metal, the corners and borders shall be rounded.

SIZE	A	B	C	D	E	F	G	H	I	J	K	L	M	N	O	P	Q	R	S	T	U	V	W	X	Y	Z	Area sq. ft.
1																											
2S	48	24	1 7/8	1/2	5/8		12	13 1/4	1	7 1/2	6 1/2	3 1/4	19 1/2	39													8.0
2M	48	24	1 7/8	1/2	5/8		12	13 1/4	1	7 1/2	6 1/2	3 1/4	19 1/2	39													8.0
3	60	30	1 7/8	1/2	5/8		15	16 1/4	1 1/4	9 1/4	8	4	24 3/8	48 3/4													12.5
4	60	30	1 7/8	1/2	5/8		15	16 1/4	1 1/4	9 1/4	8	4	24 3/8	48 3/4													12.5
5	60	30	1 7/8	1/2	5/8		15	16 1/4	1 1/4	9 1/4	8	4	24 3/8	48 3/4													12.5

STANDARD SIGN
W01-6

WISCONSIN DEPT OF TRANSPORTATION

APPROVED Matthew R Rauch
for State Traffic Engineer

DATE 1/24/2024 PLATE NO. W01-6.2

PROJECT NO: | HWY: | COUNTY: | SHEET NO: E

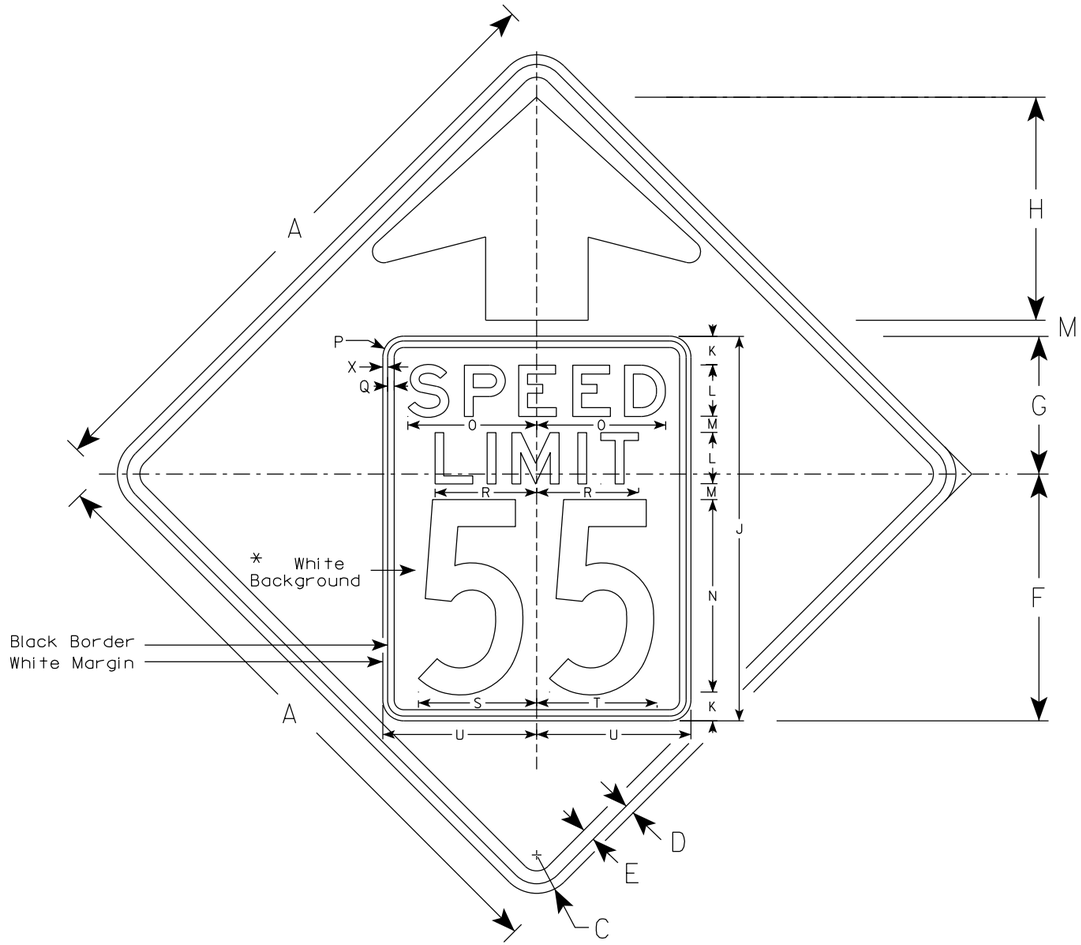

W03-5

NOTES

1. Sign is Type II - Type F Reflective
2. Color: *
   Background - ORANGE*
   Message - BLACK
3. Message Series - C for numbers Series E for wording
4. Substitute appropriate numerals and optically adjust spacing to achieve proper balance

*Speed Limit Sign shall have a White Background

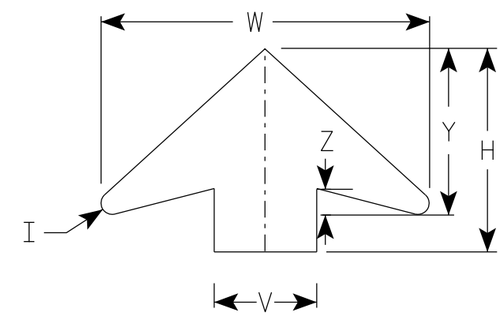

ARROW DETAIL

SIZE	A	B	C	D	E	F	G	H	I	J	K	L	M	N	O	P	Q	R	S	T	U	V	W	X	Y	Z	Area sq. ft.
1	36		2 1/4	5/8	3/4	14 1/2	9 1/2	11 1/2	5/8	24	2	3	1	12	7 1/8	1 1/2	3/8	5 3/4	7 1/4	7 1/8	9	6	19 1/4	3/8	9 3/4	1 5/8	9.0
2S	48		3	3/4	1	19 1/4	10 3/4	17 3/8	7/8	30	2 1/4	4	1 1/4	15	10	1 5/8	1/2	8	9 1/4	9 3/8	12	8	25 5/8	3/8	13	2	16.0
2M	48		3	3/4	1	19 1/4	10 3/4	17 3/8	7/8	30	2 1/4	4	1 1/4	15	10	1 5/8	1/2	8	9 1/4	9 3/8	12	8	25 5/8	3/8	13	2	16.0
3	48		3	3/4	1	19 1/4	10 3/4	17 3/8	7/8	30	2 1/4	4	1 1/4	15	10	1 5/8	1/2	8	9 1/4	9 3/8	12	8	25 5/8	3/8	13	2	16.0
4	48		3	3/4	1	19 1/4	10 3/4	17 3/8	7/8	30	2 1/4	4	1 1/4	15	10	1 5/8	1/2	8	9 1/4	9 3/8	12	8	25 5/8	3/8	13	2	16.0
5	48		3	3/4	1	19 1/4	10 3/4	17 3/8	7/8	30	2 1/4	4	1 1/4	15	10	1 5/8	1/2	8	9 1/4	9 3/8	12	8	25 5/8	3/8	13	2	16.0

STANDARD SIGN
W03-5

WISCONSIN DEPT OF TRANSPORTATION

APPROVED Matthew R Rauch
for State Traffic Engineer

DATE 1/24/2024 PLATE NO. W03-5.2

PROJECT NO:

SHEET NO: 287 E

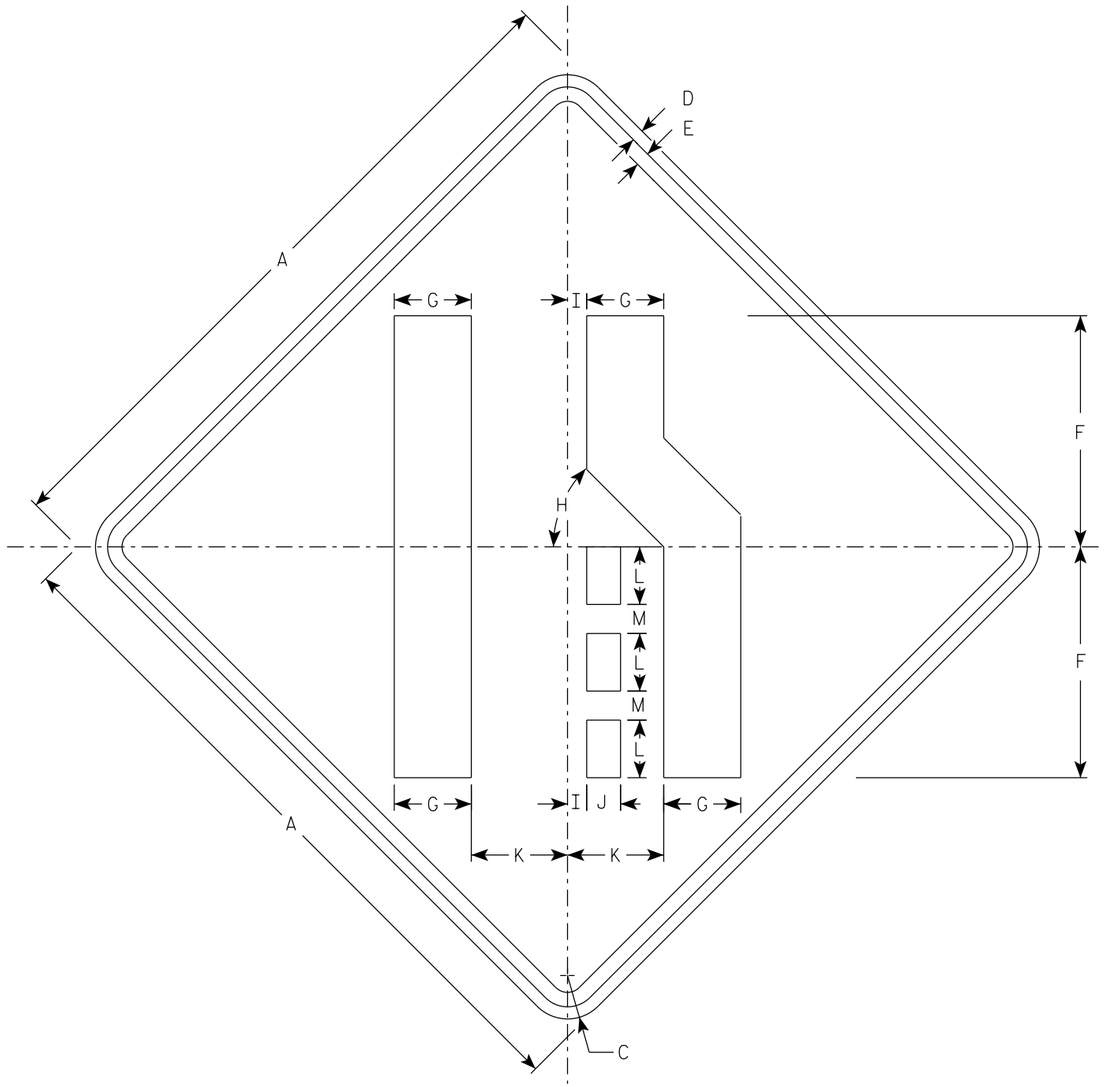

W04-2R

NOTES

1. Sign is Type II - Type F Reflective
2. Color:
   Background - Orange
   Message - Black
3. Corners may be square or rounded when base material is plywood but borders shall be rounded as shown. When base material is metal, the corners and borders shall be rounded.
4. W04-2L is the same as W04-2R except the symbol is reversed along the vertical centerline.

SIZE	A	B	C	D	E	F	G	H	I	J	K	L	M	N	O	P	Q	R	S	T	U	V	W	X	Y	Z	Area sq. ft.
1	36		2 1/4	5/8	3/4	12	4	45°	1	1 3/4	5	3	1 1/2														9.0
2S	48		3	3/4	1	16	5 3/8	45°	1 1/4	2 3/8	6 3/4	4	2														16.0
2M	48		3	3/4	1	16	5 3/8	45°	1 1/4	2 3/8	6 3/4	4	2														16.0
3	48		3	3/4	1	16	5 3/8	45°	1 1/4	2 3/8	6 3/4	4	2														16.0
4	48		3	3/4	1	16	5 3/8	45°	1 1/4	2 3/8	6 3/4	4	2														16.0
5	48		3	3/4	1	16	5 3/8	45°	1 1/4	2 3/8	6 3/4	4	2														16.0

STANDARD SIGN
W04-2

WISCONSIN DEPT OF TRANSPORTATION

APPROVED Matthew R Rauch
for State Traffic Engineer

DATE 1/25/2024 PLATE NO. W04-2.2

PROJECT NO:

SHEET NO: 288 E

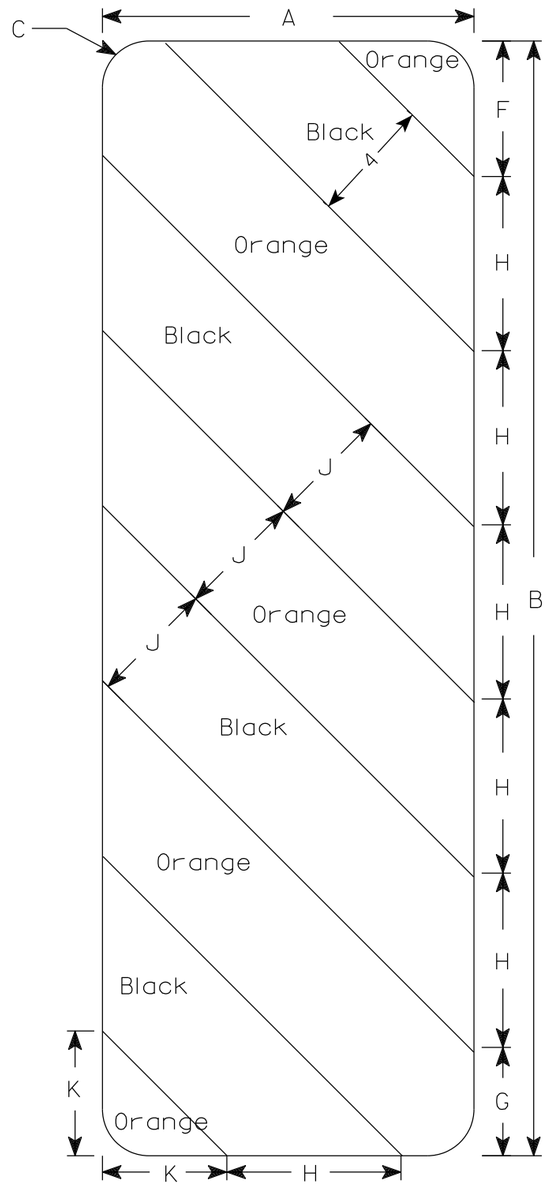

W05-52L

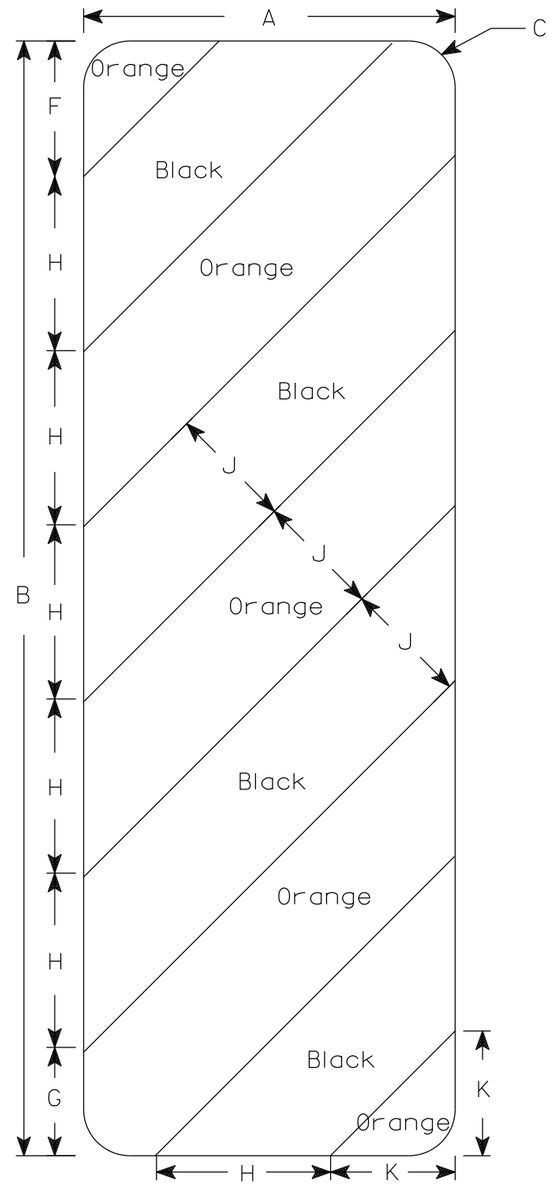

W05-52R

NOTES

1. Sign is Type II - Type F Reflective
2. Color:
   Background - Orange
   Message - Black
4. Alternate colors of stripes as shown.

SIZE	A	B	C	D	E	F	G	H	I	J	K	L	M	N	O	P	Q	R	S	T	U	V	W	X	Y	Z	Area sq. ft.
1																											
2S	12	36	1 1/2			4 3/8	3 1/2	5 5/8	45°	4	4																3.0
2M	12	36	1 1/2			4 3/8	3 1/2	5 5/8	45°	4	4																3.0
3	18	54	1 1/2			6	5 1/2	8 1/2	45°	6	6 9/16																6.75
4																											
5																											

STANDARD SIGN

W05-52L & W05-52R

WISCONSIN DEPT OF TRANSPORTATION

APPROVED Matthew R Rauch
for State Traffic Engineer

DATE 3/13/2024 PLATE NO. W05-52.2

PROJECT NO: | HWY: | COUNTY: | SHEET NO: 289 | E

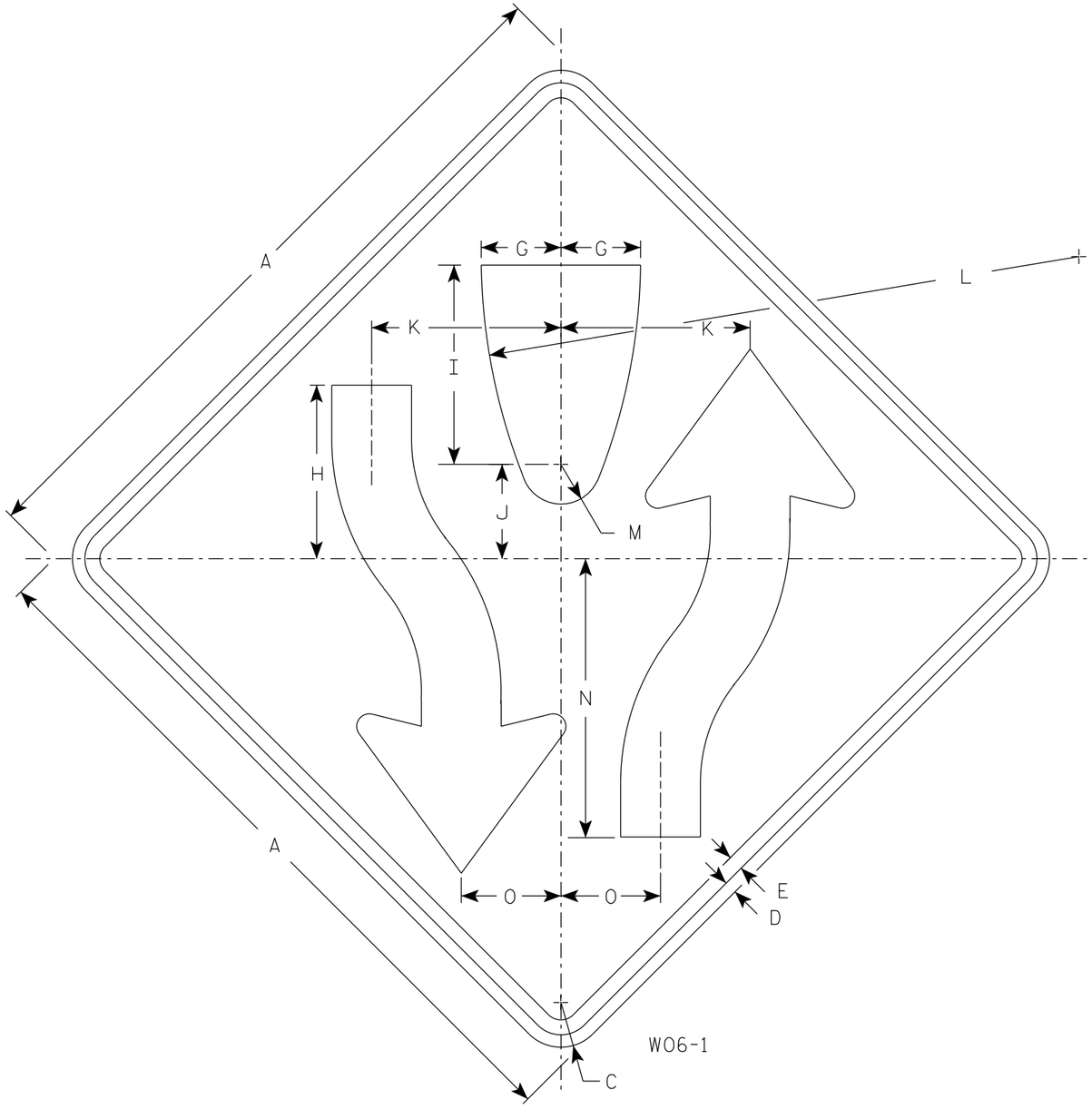

NOTES

1. Sign is Type II - Type F Reflective
2. Color:
   Background - Orange
   Message - Black
3. Corners may be square or rounded when base material is plywood but borders shall be rounded as shown. When base material is metal, the corners and borders shall be rounded.
4. W06-2 same as W06-1 but is rotated 180° when mounted.

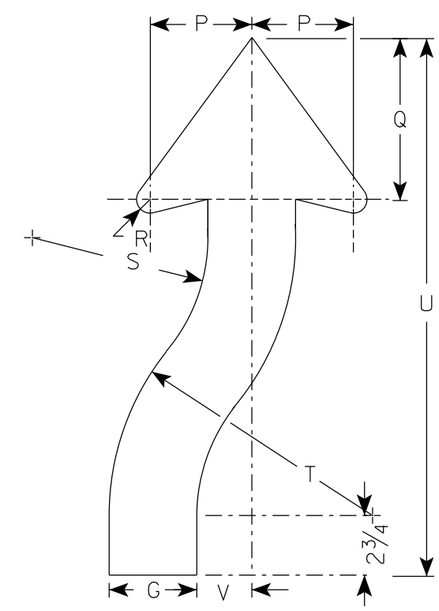

ARROW DETAIL

SIZE	A	B	C	D	E	F	G	H	I	J	K	L	M	N	O	P	Q	R	S	T	U	V	W	X	Y	Z	Area sq. ft.
1	36		2 1/4	5/8	3/4		4	8 3/4	10	4 3/4	9 1/2	30	2	14	5	4 5/8	7 3/8	7/8	8	12	24 1/2	2 1/2					9.0
2S	48		3	3/4	1		5 3/8	11 5/8	13 3/8	6 3/8	12 5/8	40	2 5/8	18 5/8	6 5/8	6 1/4	9 7/8	1 1/4	10 5/8	16	32 5/8	3 3/8					16.0
2M	48		3	3/4	1		5 3/8	11 5/8	13 3/8	6 3/8	12 5/8	40	2 5/8	18 5/8	6 5/8	6 1/4	9 7/8	1 1/4	10 5/8	16	32 5/8	3 3/8					16.0
3	48		3	3/4	1		5 3/8	11 5/8	13 3/8	6 3/8	12 5/8	40	2 5/8	18 5/8	6 5/8	6 1/4	9 7/8	1 1/4	10 5/8	16	32 5/8	3 3/8					16.0
4	48		3	3/4	1		5 3/8	11 5/8	13 3/8	6 3/8	12 5/8	40	2 5/8	18 5/8	6 5/8	6 1/4	9 7/8	1 1/4	10 5/8	16	32 5/8	3 3/8					16.0
5	48		3	3/4	1		5 3/8	11 5/8	13 3/8	6 3/8	12 5/8	40	2 5/8	18 5/8	6 5/8	6 1/4	9 7/8	1 1/4	10 5/8	16	32 5/8	3 3/8					16.0

STANDARD SIGN
W06-1 & W06-2

WISCONSIN DEPT OF TRANSPORTATION

APPROVED Matthew R Rauch
for State Traffic Engineer

DATE 1/30/2024 PLATE NO. W06-1.2

PROJECT NO: | HWY: | COUNTY: | SHEET NO: 290 | E

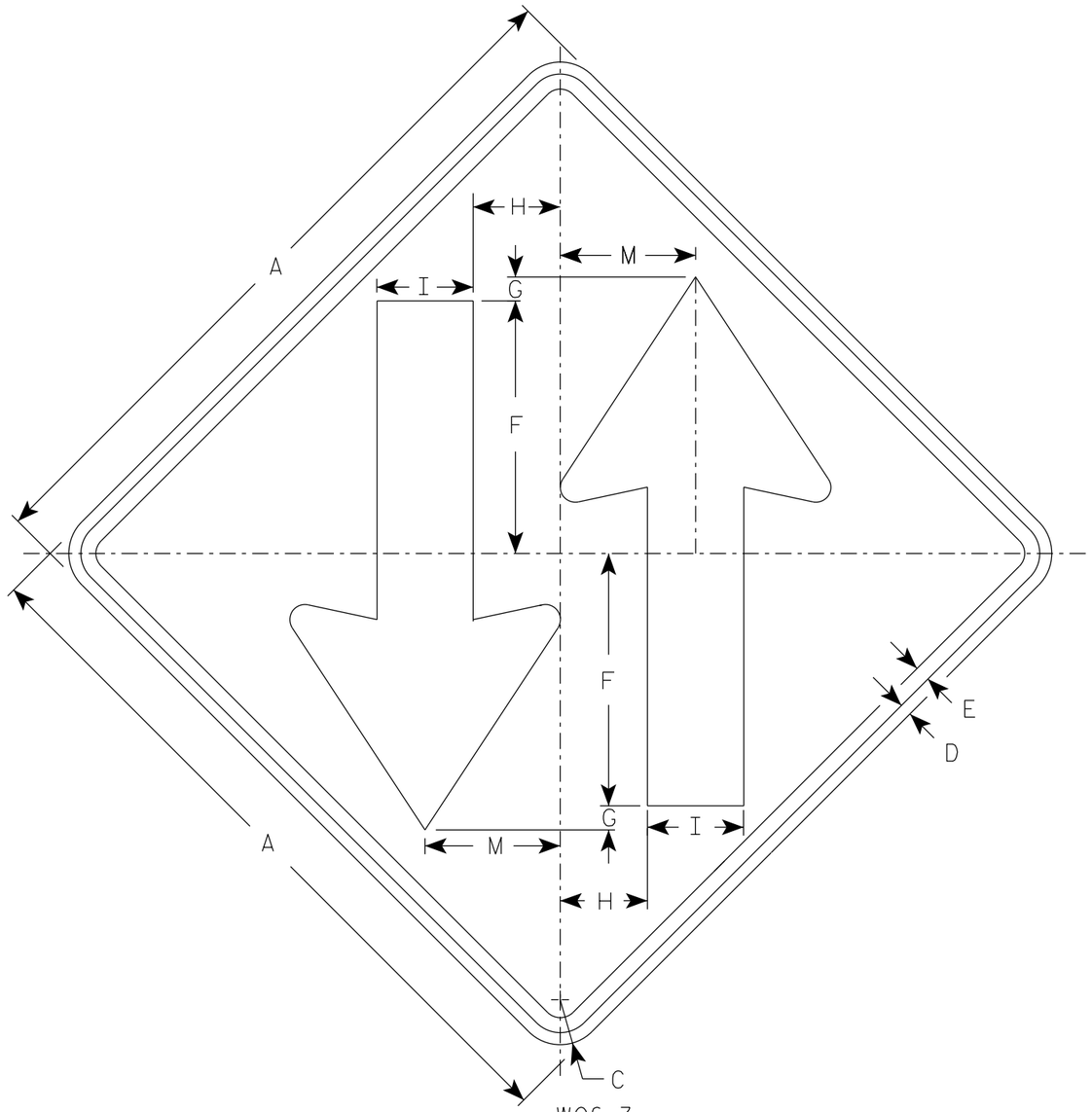

W06-3

NOTES

1. Sign is Type II - Type F Reflective
2. Color:
   Background - Orange
   Message - Black
3. Corners may be square or rounded when base material is plywood but borders shall be rounded as shown. When base material is metal, the corners and borders shall be rounded.

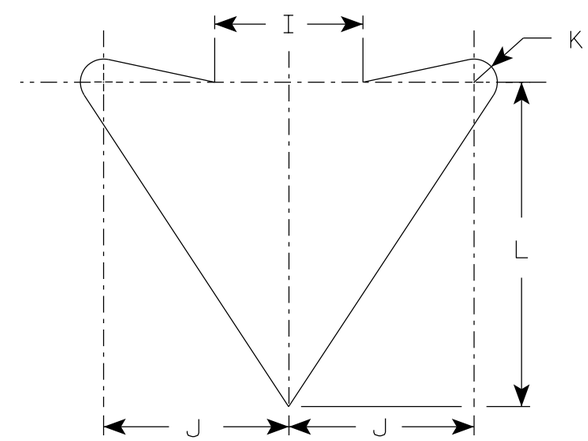

ARROW DETAIL

SIZE	A	B	C	D	E	F	G	H	I	J	K	L	M	N	O	P	Q	R	S	T	U	V	W	X	Y	Z	Area sq. ft.
1	36		2 1/4	5/8	3/4	12	1	4 1/4	5	6	3/4	10 1/2	6 3/4														9.0
2S	48		3	3/4	1	15 1/2	1	6	6	8	1	14	9														16.0
2M	48		3	3/4	1	15 1/2	1	6	6	8	1	14	9														16.0
3	48		3	3/4	1	15 1/2	1	6	6	8	1	14	9														16.0
4	48		3	3/4	1	15 1/2	1	6	6	8	1	14	9														16.0
5	48		3	3/4	1	15 1/2	1	6	6	8	1	14	9														16.0

STANDARD SIGN
W06-3

WISCONSIN DEPT OF TRANSPORTATION

APPROVED Matthew R Rauch
for State Traffic Engineer

DATE 1/30/2024 PLATE NO. W06-3.2

PROJECT NO:	HWY:	COUNTY:		SHEET NO: 291	E

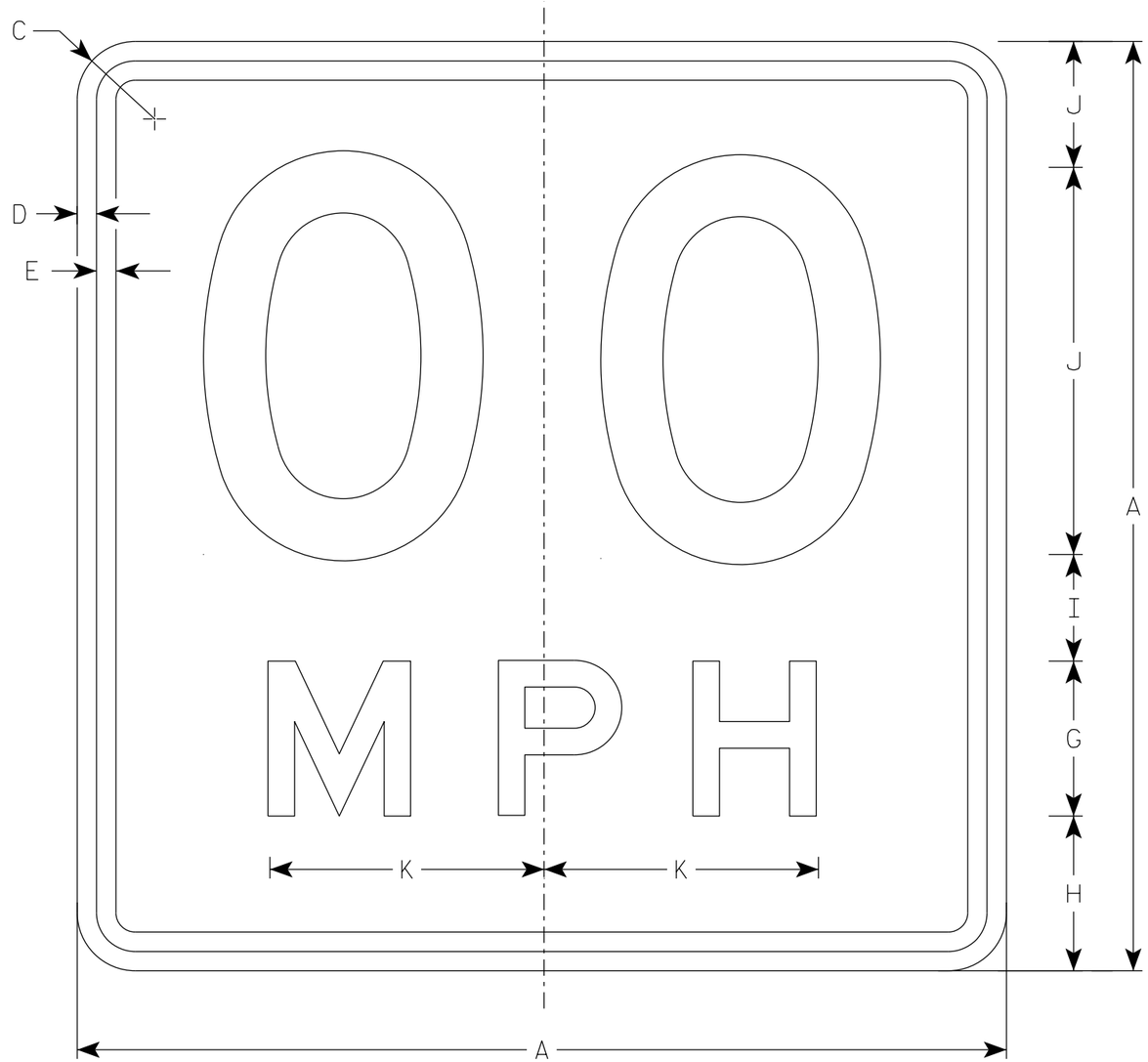

W013-1

NOTES

1. Sign is Type II - Type F Reflective
2. Color:
   Background - Orange
   Message - Black
3. Message Series - See Note 6
4. Corners may be square or rounded when base material is plywood but borders shall be rounded as shown. When base material is metal, the corners and borders shall be rounded.
5. Substitute appropriate numerals and optically space about centerline to achieve proper balance.
6. Line 1 is Series D
   Line 2 is Series E

SIZE	A	B	C	D	E	F	G	H	I	J	K	L	M	N	O	P	Q	R	S	T	U	V	W	X	Y	Z	Area sq. ft.
1	24		1 1/2	3/8	1/2	10	4	4	2 3/4	3 1/4	7 1/8																4.0
2S	36		2 1/4	5/8	3/4	16	6	5 1/2	4	4 1/2	10 5/8																9.0
2M	36		2 1/4	5/8	3/4	16	6	5 1/2	4	4 1/2	10 5/8																9.0
3	36		2 1/4	5/8	3/4	16	6	5 1/2	4	4 1/2	10 5/8																9.0
4	36		2 1/4	5/8	3/4	16	6	5 1/2	4	4 1/2	10 5/8																9.0
5	36		2 1/4	5/8	3/4	16	6	5 1/2	4	4 1/2	10 5/8																9.0

STANDARD SIGN
W013-1

WISCONSIN DEPT OF TRANSPORTATION

APPROVED Matthew R Rauch
for State Traffic Engineer

DATE 2/1/2024 PLATE NO. W013-1.2

PROJECT NO: | HWY: | COUNTY: | SHEET NO: 292 | E

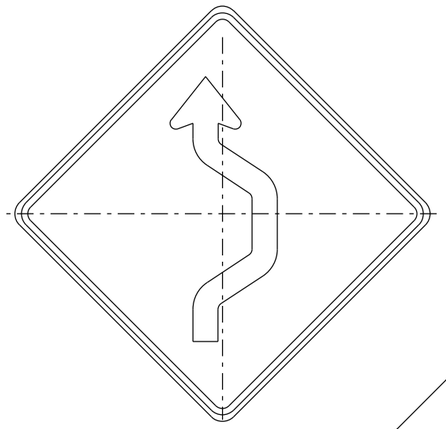

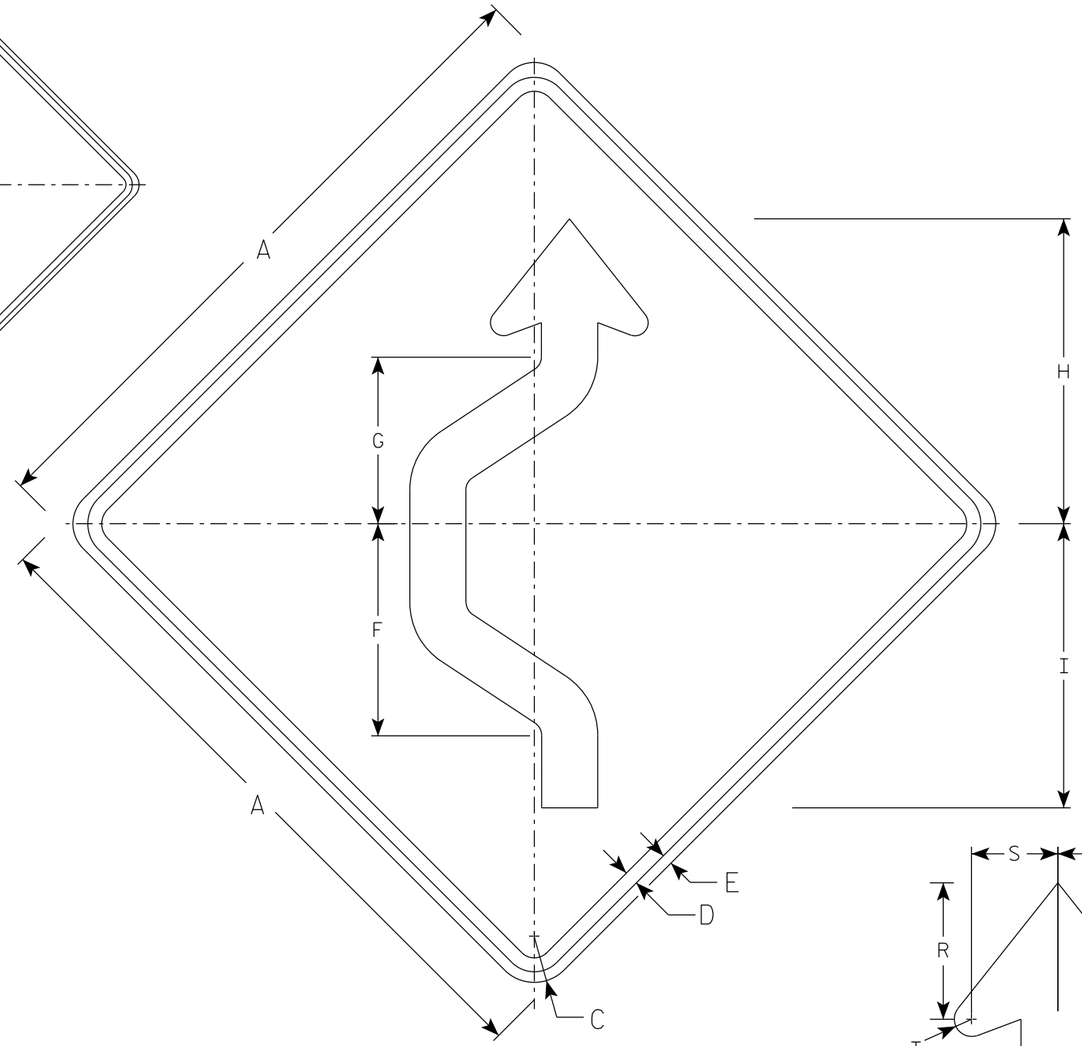

W024-1L

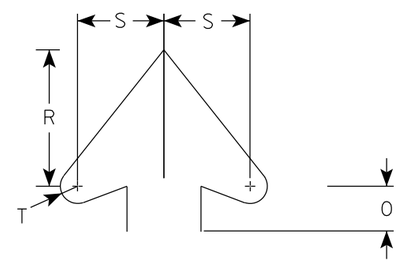

Arrowhead Detail

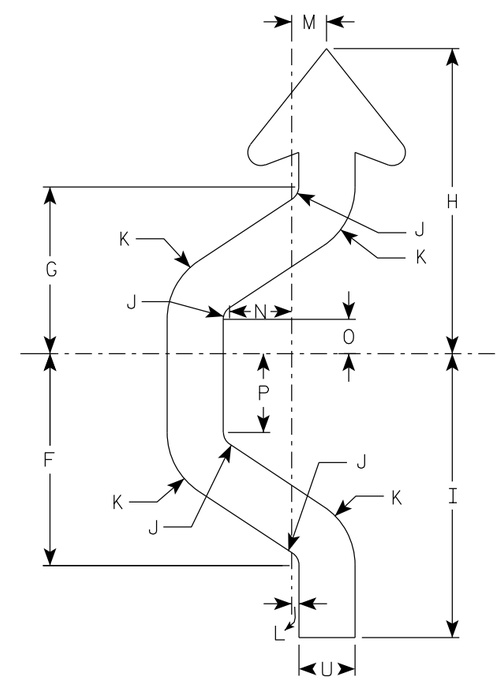

Arrow Detail

NOTES

1. Sign is Type II - Type F Reflective
2. Color:
   Background - Orange
   Message - Black
3. Corners may be square or rounded when base material is plywood but borders shall be rounded as shown. When base material is metal, the corners and borders shall be rounded.
4. W024-1R is the same as W024-1L except reversed along the vertical centerline.

SIZE	A	B	C	D	E	F	G	H	I	J	K	L	M	N	O	P	Q	R	S	T	U	V	W	X	Y	Z	Area sq. ft.
1	36		2 1/4	5/8	1/2	11 3/8	8 7/8	16 3/8	15 1/4	3/4	3 3/4	3/8	2	3 3/8	1 7/8	4 1/4		5 1/2	3 1/2	5/8	3						9.0
2S	48		3	1	3/4	15 1/8	11 7/8	21 3/4	20 1/4	1	5	1/2	2 1/2	4 3/8	2 3/8	5 5/8		7 3/8	4 3/4	7/8	4						16.0
2M	48		3	1	3/4	15 1/8	11 7/8	21 3/4	20 1/4	1	5	1/2	2 1/2	4 3/8	2 3/8	5 5/8		7 3/8	4 3/4	7/8	4						16.0
3	48		3	1	3/4	15 1/8	11 7/8	21 3/4	20 1/4	1	5	1/2	2 1/2	4 3/8	2 3/8	5 5/8		7 3/8	4 3/4	7/8	4						16.0
4	48		3	1	3/4	15 1/8	11 7/8	21 3/4	20 1/4	1	5	1/2	2 1/2	4 3/8	2 3/8	5 5/8		7 3/8	4 3/4	7/8	4						16.0
5	48		3	1	3/4	15 1/8	11 7/8	21 3/4	20 1/4	1	5	1/2	2 1/2	4 3/8	2 3/8	5 5/8		7 3/8	4 3/4	7/8	4						16.0

STANDARD SIGN
W024-1 L & R

WISCONSIN DEPT OF TRANSPORTATION

APPROVED Matthew R Rauch
for State Traffic Engineer

DATE 2/1/2024 PLATE NO. W024-1.2

PROJECT NO: | HWY: | COUNTY: | SHEET NO: 293 | E

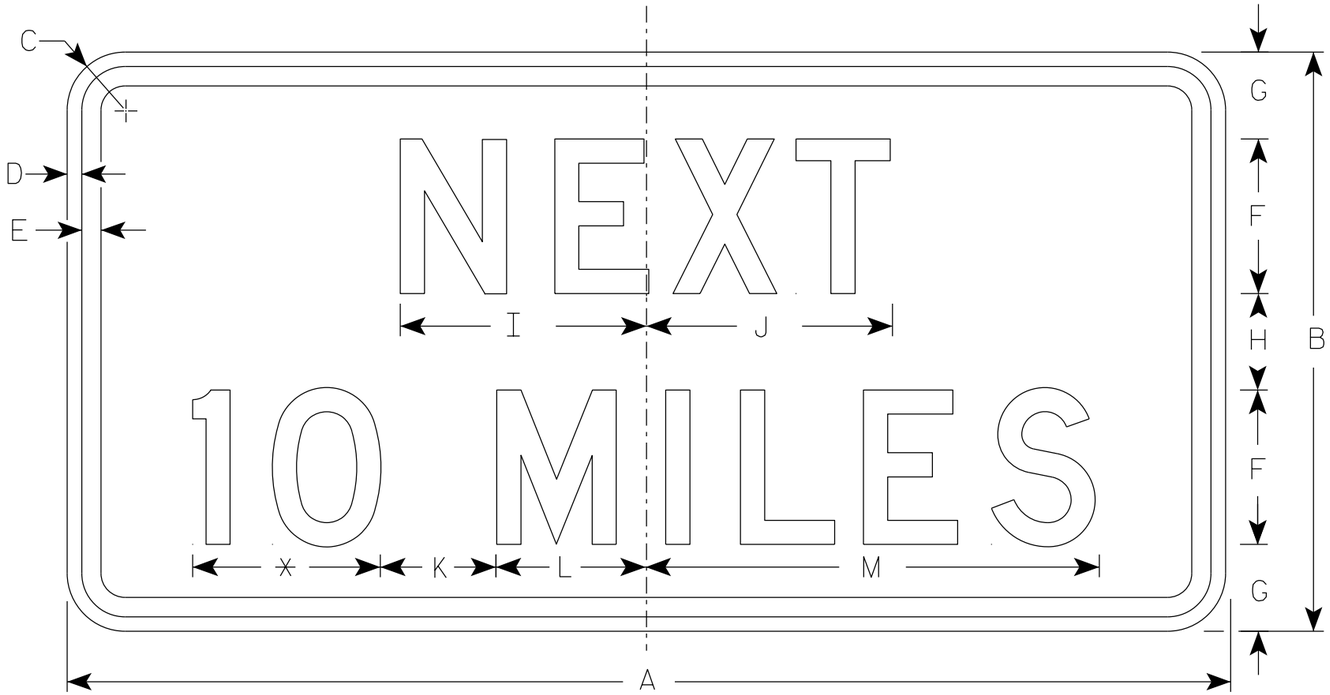

W057-51

* See note 5

NOTES

1. Sign is Type II - Type F Reflective
2. Color:
   Background - Orange
   Message - Black
3. Message Series - D
4. Corners may be square or rounded when base material is plywood but borders shall be rounded as shown. When base material is metal, the corners and borders shall be rounded.
5. Round distance to the nearest whole Mile and substitute appropriate numerals and optically adjust spacing to achieve proper balance.

SIZE	A	B	C	D	E	F	G	H	I	J	K	L	M	N	O	P	Q	R	S	T	U	V	W	X	Y	Z	Area sq. ft.
1	36	18	1 1/2	3/8	1/2	5	2 3/4	2 1/2	7 7/8	8	5	4 1/8	15 3/8														4.5
2S	48	24	1 7/8	1/2	5/8	6	4	4	10	10 1/8	6	5 5/8	19														8.0
2M	48	24	1 7/8	1/2	5/8	6	4	4	10	10 1/8	6	5 5/8	19														8.0
3	48	24	1 7/8	1/2	5/8	6	4	4	10	10 1/8	6	5 5/8	19														8.0
4	48	24	1 7/8	1/2	5/8	6	4	4	10	10 1/8	6	5 5/8	19														8.0
5	48	24	1 7/8	1/2	5/8	6	4	4	10	10 1/8	6	5 5/8	19														8.0

STANDARD SIGN
W057-51

WISCONSIN DEPT OF TRANSPORTATION

APPROVED Matthew R Rauch
for State Traffic Engineer

DATE 2/1/2024 PLATE NO. W057-51.4

PROJECT NO: | HWY: | COUNTY: | SHEET NO: 294 | E

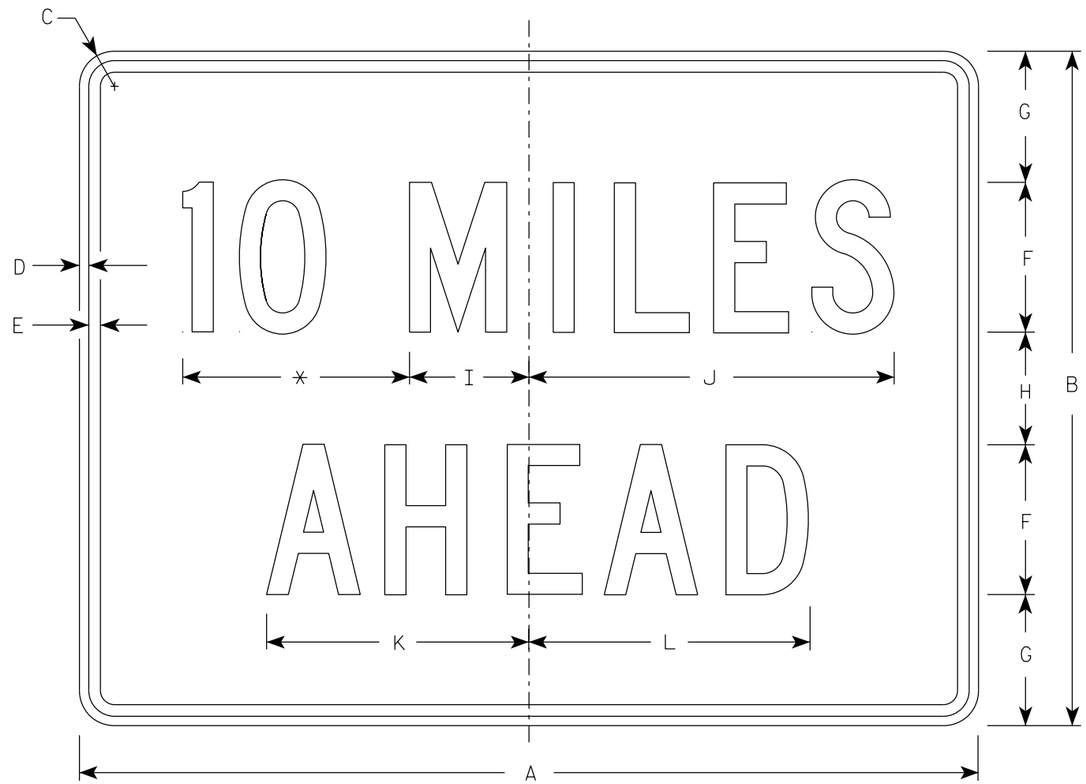

W057-52

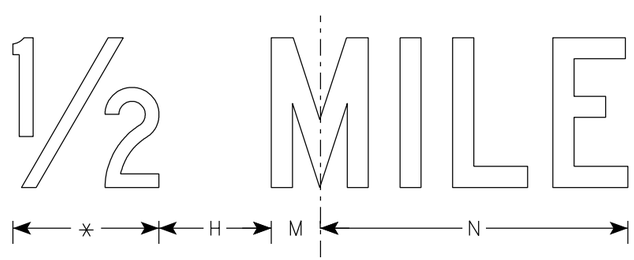

* See note 5

NOTES

1. Sign is Type II - Type F Reflective
2. Color:
   Background - Orange
   Message - Black
3. Message Series - C
4. Corners may be square or rounded when base material is plywood but borders shall be rounded as shown. When base material is metal, the corners and borders shall be rounded.
5. Substitute appropriate numerals to the nearest quarter mile and optically adjust spacing to achieve proper balance.

SIZE	A	B	C	D	E	F	G	H	I	J	K	L	M	N	O	P	Q	R	S	T	U	V	W	X	Y	Z	Area sq. ft.
1	36	24	1 1/2	3/8	1/2	6	4 1/2	3	4 3/4	14 5/8	10 5/8	11 3/8	2	12													6.0
2S	48	36	2 1/4	1/2	5/8	8	7	6	6 3/8	19 1/2	14	15	2 3/4	16 3/8													12.0
2M	48	36	2 1/4	1/2	5/8	8	7	6	6 3/8	19 1/2	14	15	2 3/4	16 3/8													12.0
3	48	36	2 1/4	1/2	5/8	8	7	6	6 3/8	19 1/2	14	15	2 3/4	16 3/8													12.0
4	48	36	2 1/4	1/2	5/8	8	7	6	6 3/8	19 1/2	14	15	2 3/4	16 3/8													12.0
5	48	36	2 1/4	1/2	5/8	8	7	6	6 3/8	19 1/2	14	15	2 3/4	16 3/8													12.0

STANDARD SIGN
W057-52

WISCONSIN DEPT OF TRANSPORTATION

APPROVED Matthew R Rauch
for State Traffic Engineer

DATE 2/1/2024 PLATE NO. W057-52.3

PROJECT NO: | HWY: | COUNTY: | SHEET NO: 295 | E

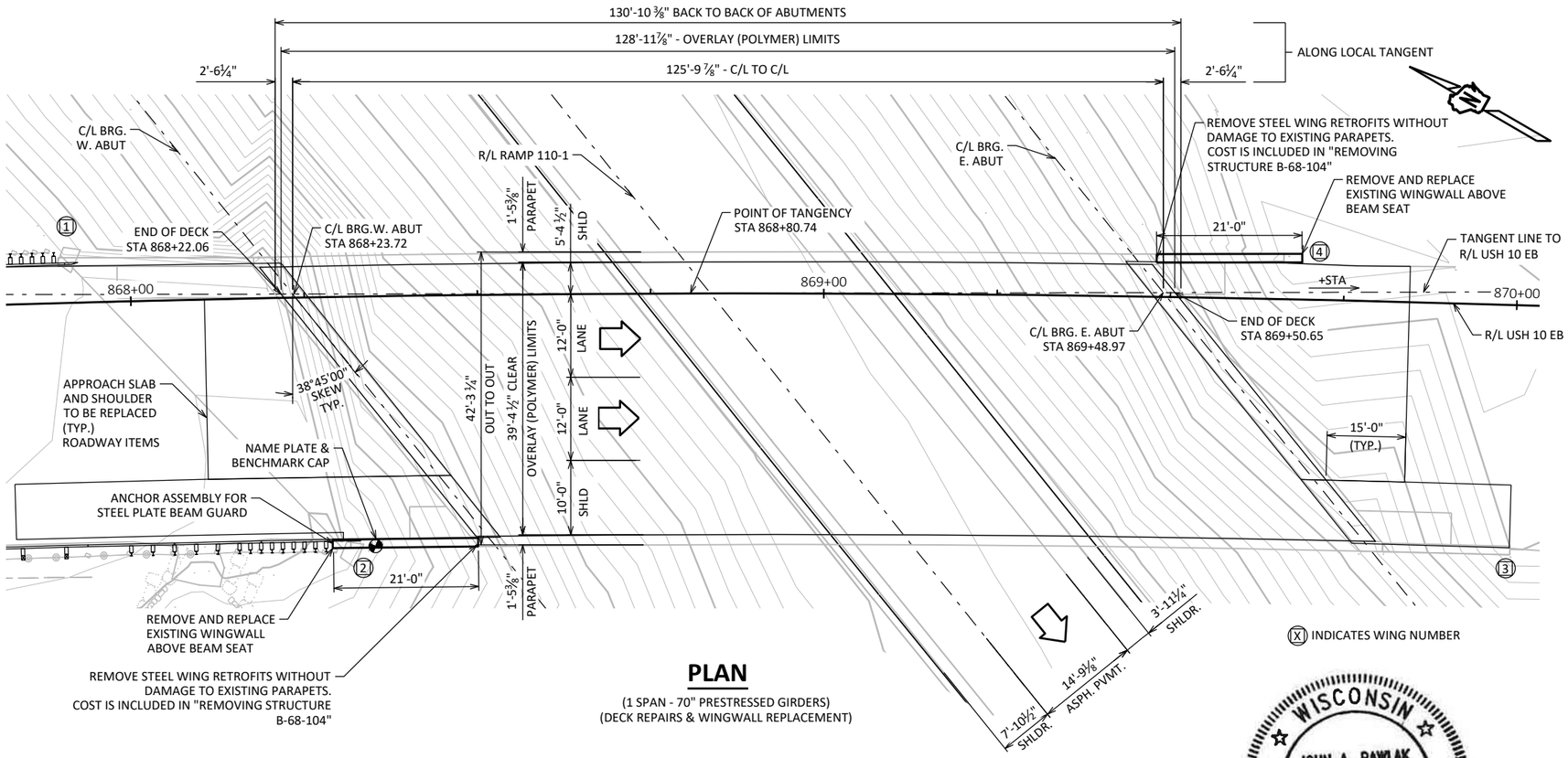

PLAN

(1 SPAN - 70" PRESTRESSED GIRDERS)
(DECK REPAIRS & WINGWALL REPLACEMENT)

WISCONSIN
JOHN A. PAWLAK
E-45057
MILWAUKEE
WISCONSIN
PROFESSIONAL ENGINEER
10/21/25

DESIGN DATA

LIVE LOAD:

INVENTORY RATING: HS26
OPERATING RATING: HS61
WISCONSIN STANDARD PERMIT VEHICLE (WIS-SPV): 250 (KIPS)

MATERIAL PROPERTIES:

CONCRETE MASONRY:
SUPERSTRUCTURE & STRUCTURAL APPROACH SLAB ——— f'_c = 4,000 PSI
ALL OTHER ——— f'_c = 3,500 PSI

BAR STEEL REINFORCEMENT
GRADE 60 ——— f_y = 60,000 PSI

EXISTING STRUCTURE

THE EXISTING BRIDGE IS A 130'-10 3/8"LONG, 42'-3 1/4 " WIDE SINGLE SPAN PRESTRESSED CONCRETE BRIDGE SUPPORTED ON ABUTMENTS. THE STRUCTURE BEGINS AT STA 868+22.06 AND ENDS AT STA 869+50.65. PLANS OF THE EXISTING BRIDGE ARE AVAILABLE FOR REVIEW AT WISDOT NC REGION OFFICE, 1681 SECOND AVE SOUTH, WISCONSIN RAPIDS, WI 54495, OR THROUGH THE WISDOT STRUCTURES WEBSITE.

GENERAL NOTES

DRAWINGS SHALL NOT BE SCALED.

EXISTING STRUCTURE DIMENSIONS ARE BASED ON THE ORIGINAL STRUCTURE PLANS.

ALL DIMENSIONS ARE IN FEET AND INCHES UNLESS NOTED OTHERWISE.

ALL STATIONS AND ELEVATIONS ARE IN FEET.

AREAS OF DECK PREPARATION TYPE 1, TYPE 2 AND CONCRETE SURFACE REPAIR SHALL BE DEFINED BY A 1" DEEP SAWCUT.

SPECIFIC LOCATIONS OF CONCRETE SURFACE REPAIR TO BE DETERMINED BY THE ENGINEER IN THE FIELD.

BAR STEEL REINFORCEMENT SHALL BE EMBEDDED 2" CLEAR UNLESS OTHERWISE SHOWN OR NOTED.

THE FIRST OR FIRST TWO DIGITS OF THE BAR MARK SIGNIFIES THE BAR SIZE.

PIGMENTED SURFACE SEALER TO BE APPLIED TO THE FRONT FACE AND TOP OF THE PARAPETS.

BEVEL EXPOSED EDGES OF CONCRETE 3/4" UNLESS OTHERWISE NOTED.

THE QUANTITY FOR BACKFILL STRUCTURE IS CALCULATED BASED ON THE DETAIL SHOWN IN THE PLANS.

THE CONTRACTOR SHALL SUPPLY A NEW NAME PLATE IN ACCORDANCE WITH SECTION 502.3.11 OF THE STANDARD SPECIFICATIONS AND THE STANDARD DETAIL DRAWINGS. NAME PLATE TO SHOW ORIGINAL CONSTRUCTION YEAR, 2001.

THE UPPER LIMITS OF "EXCAVATION FOR STRUCTURE BRIDGES B-68-104" SHALL BE THE EXISTING GROUNDLINE.

AT WINGWALLS ALL SPACES EXCAVATED AND NOT OCCUPIED BY THE NEW STRUCTURE SHALL BE BACKFILLED WITH BACKFILL SURFACE TYPE A.

INCORPORATE EXISTING VERTICAL STEEL REINFORCEMENT WHERE SHOWN AND EXTEND 24 BAR DIAMETERS INTO NEW WORK, UNLESS SPECIFIED OTHERWISE

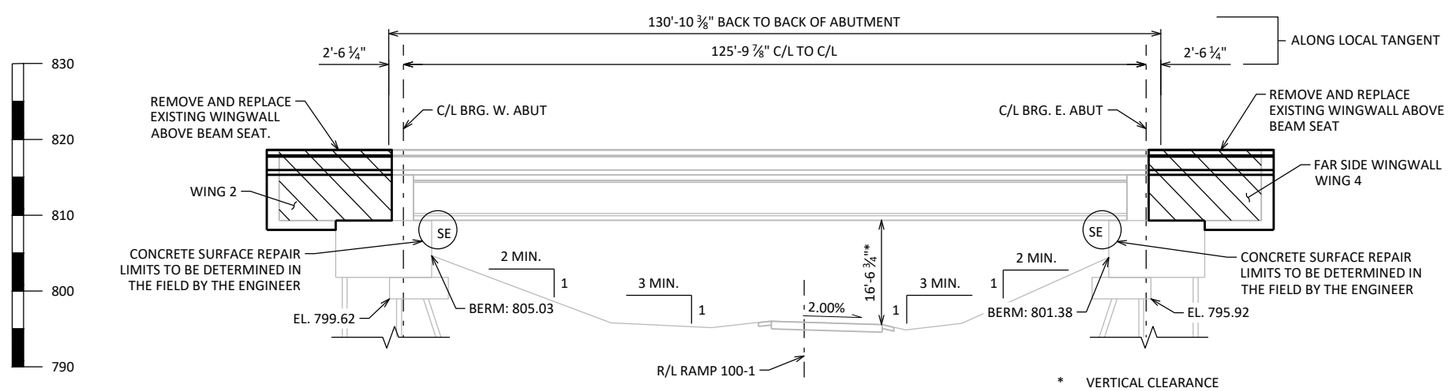

* VERTICAL CLEARANCE TAKEN FROM ASBUILT DRAWINGS (2001)

ELEVATION

(LOOKING NORTH, NORMAL TO SKEW)

BENCHMARKS

NAME	DESCRIPTION	ELEV	STA
10019	ALUM DISK IN PPT	817.67	868+34.77

LEGEND

HATCHED AREAS INDICATE CONCRETE REMOVALS

STRUCTURE DESIGN CONTACTS

BRIDGE OFFICE:
AARON BONK, PE
(608) 261-0261

CONSULTANT:
WILLIAM J. ZIPPEL, PE, SE
(414) 308-1321

TRAFFIC DATA

FEATURE ON: USH 10

AADT = 10810 (2028)
AADT = 12600 (2048)
R.D.S. = 65 MPH

SCOPE OF WORK B-68-104

1. CONCRETE SURFACE REPAIR
2. WINGWALL REPLACEMENT
3. ABUTMENT REPAIR
4. OVERLAY (POLYMER)

LIST OF DRAWINGS:

1. GENERAL PLANS
2. TYPICAL SECTION & QUANTITIES
3. STAGING PLAN
4 WINGWALL 2 REPLACEMENT
5. WINGWALL 4 REPLACEMENT
6. SLOPED FACE PARAPET "LF"

NO.	DATE	REVISION	BY

benesch
247 W Freshwater Way, Suite 650
Milwaukee, WI 53204
414-308-1310 Job No. 20335.01

STATE OF WISCONSIN
DEPARTMENT OF TRANSPORTATION

ACCEPTED JLR 10/23/25
CHIEF STRUCTURES DESIGN ENGINEER DATE

STRUCTURE B-68-104

USH 10 E.B. OVER RAMP 110-1

COUNTY WAUPACA | CITY WEYAUWEGA
DESIGN SPEC. REHABILITATION N/A
DESIGNED BY KRM | DESIGN CK'D GMH | DRAWN BY BJK | PLANS CK'D GMH

GENERAL PLANS

I.D. DATE:

8

8

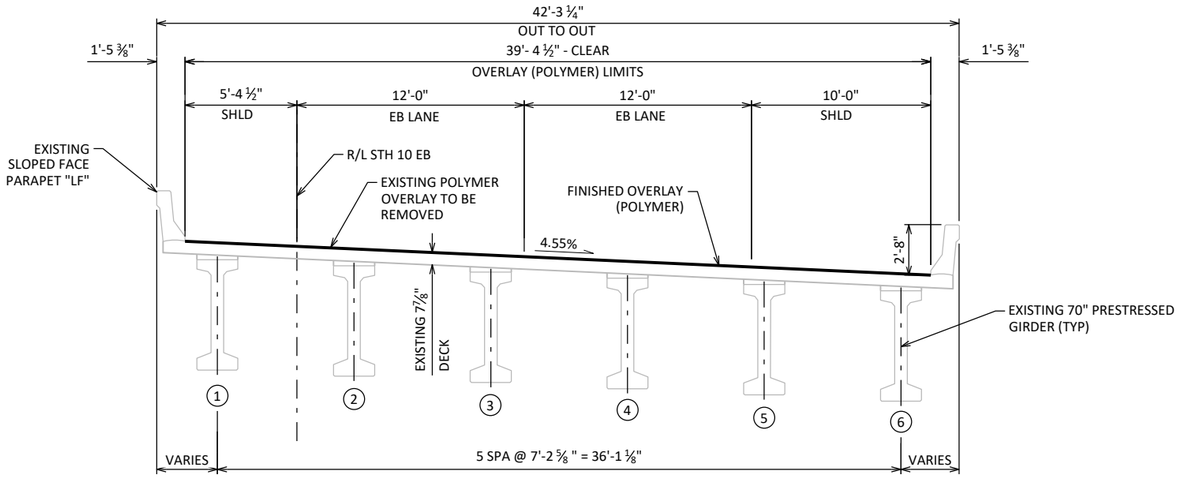

TYPICAL SECTION

(LOOKING EAST)

TOTAL ESTIMATED QUANTITIES

BID ITEM NUMBER	BID ITEMS	UNIT	WEST ABUT	EAST ABUT	SUPER	TOTALS
203.0220	REMOVING STRUCTURE B-68-104	EACH				1
206.1001	EXCAVATION FOR STRUCTURES BRIDGES B-68-104	EACH				1
210.1500	BACKFILL STRUCTURE TYPE A	TON	110	102		212
502.0100	CONCRETE MASONRY BRIDGES	CY	9.7	9.3		19
502.3205	PIGMENTED SURFACE SEALER RESEAL	SY	12	8	106	126
502.3210	PIGMENTED SURFACE SEALER	SY	9	9		18
502.4205	ADHESIVE ANCHORS NO. 5 BAR	EACH	28	28		56
502.4208	ADHESIVE ANCHORS NO. 8 BAR	EACH	2	2		4
509.0301	PREPARATION OF DECKS TYPE 1	SY			6	6
509.0302	PREPARATION OF DECKS TYPE 2	SY			3	3
509.0310.S	SAWING PAVEMENT DECK PREPARATION AREAS	LF			60	60
505.0600	BAR STEEL REINFORCEMENT HS COATED STRUCTURES	LB	2260	2220		4480
509.1500	CONCRETE SURFACE REPAIR	SF	13	10		23
509.2100.S	CONCRETE MASONRY DECK REPAIR	CY			1	1
509.5100.S	POLYMER OVERLAY	SY			565	565
509.9015.S	REMOVING POLYMER OVERLAY B-68-104	SY			565	565
516.0500	RUBBERIZED MEMBRANE WATERPROOFING	SY	4	4		8
612.0406	PIPE UNDERDRAIN WRAPPED 6-INCH	LF	50	50		100
614.0150	ANCHOR ASSEMBLIES FOR STEEL PLATE BEAM GUARD	EACH	2			2
645.0111	GEOTEXTILE TYPE DF SCHEDULE A	SY	19	19		38
	NON-BID ITEMS					
	PREFORMED JOINT FILLER	SIZE				½"
	NON-BITUMINOUS JOINT SEALER					
	NAME PLATE					

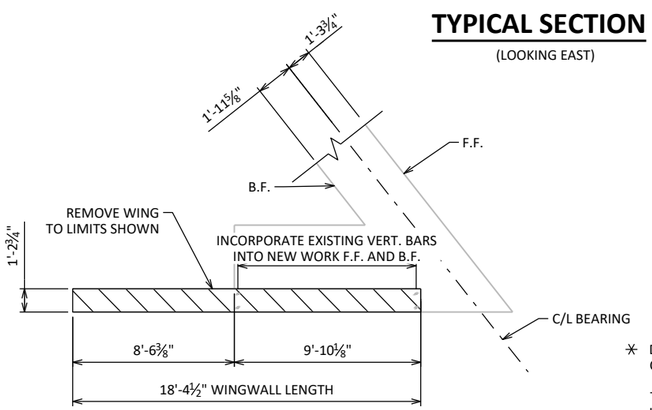

WINGWALL 2 - REMOVAL PLAN

(WINGWALL 4 IS SIMILAR)

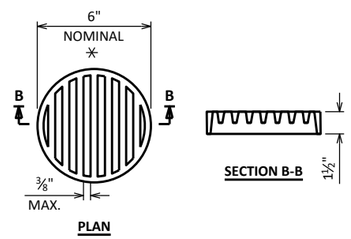

RODENT SHIELD DETAIL

✳ DIMENSIONS ARE APPROXIMATE. THE GRATE IS SIZED TO FIT INTO A PIPE COUPLING. ORIENT SO SLOTS ARE VERTICAL.

THE RODENT SHIELD, PIPE COUPLING AND SCREWS SHALL BE CONSIDERED INCIDENTAL TO THE BID ITEM "PIPE UNDERDRAIN WRAPPED 6-INCH".

THE RODENT SHIELD SHALL BE A PVC GRATE SIMILAR TO THIS DETAIL. THE GRATE IS COMMERCIALLY AVAILABLE AS A FLOOR STRAINER. A PIPE COUPLING IS REQUIRED FOR THE ATTACHMENT OF THIS SHIELD TO THE EXPOSED END OF THE PIPE UNDERDRAIN. THE SHIELD SHALL BE FASTENED TO THE PIPE COUPLING WITH TWO OR MORE NO. 10 X 1-INCH STAINLESS STEEL SHEET METAL SCREWS.

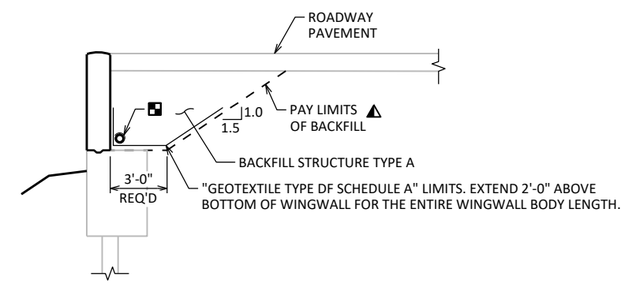

TYPICAL SECTION THRU WINGWALL

▲ BACKFILL PAY LIMITS. BACKFILL BEYOND BACKFILL PAY LIMITS SHALL BE INCIDENTAL TO EXCAVATION FOR STRUCTURES. LIMITS OF EXCAVATION SHALL BE DETERMINED BY THE CONTRACTOR.

▩ PIPE UNDERDRAIN WRAPPED (6-INCH). SLOPE 0.5% MIN. TO SUITABLE DRAINAGE. ATTACH RODENT SHIELD AT ENDS OF PIPE UNDERDRAIN.

NOTE: PLACE FILL EVEN WITH TOP OF WING, 2 FEET FROM WING TIP. TRANSITION FILL TO TOP OF CURB, IF PRESENT.

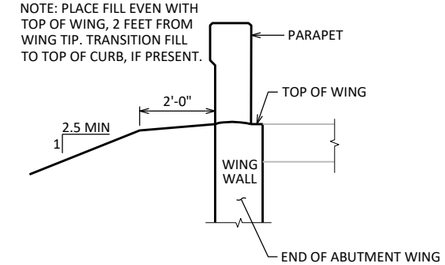

TYPICAL FILL SECTION AT WING TIPS

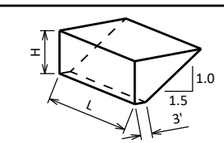

ABUTMENT BACKFILL DIAGRAM

L = OUT TO OUT OF ABUTMENT BODY INCLUDING WINGS (FT)
H = AVERAGE ABUTMENT FILL HEIGHT (FT)
EF = EXPANSION FACTOR (1.20 FOR CY BID ITEMS AND 1.00 FOR TON BID ITEMS)
V_{CF} = (L)(3.0')(H) + (L)(0.5)(1.5H)(H)
V_{CY} = V_{CF}(EF)/27
V_{TON} = V_{CY}(2.0)

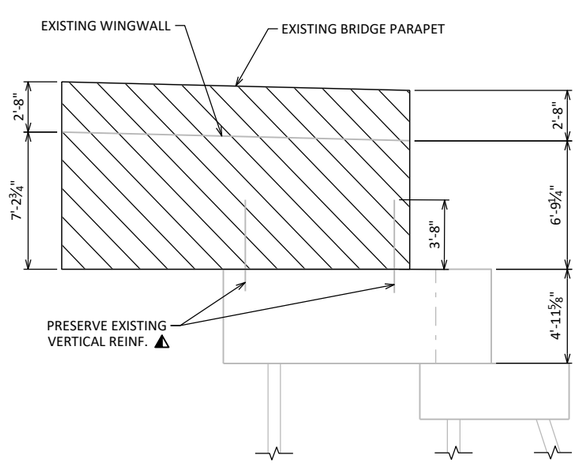

WINGWALL 2 - EXISTING ELEVATION

(WINGWALL 4 IS SIMILAR)

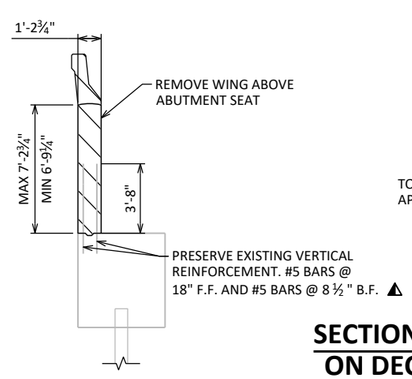

WINGWALL 2 - EXISTING SECTION

(WINGWALL 4 IS SIMILAR)

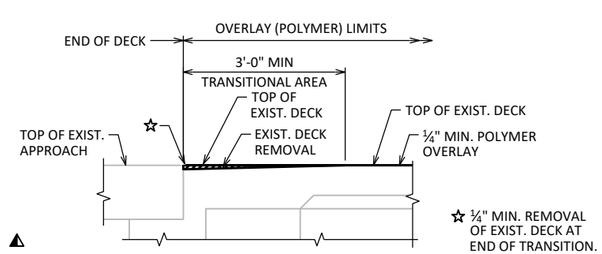

SECTION THRU ABUTMENT TRANSITIONAL AREA ON DECK AT SEMI-EXPANSION OR FIXED JOINT

(REMOVAL AND OVERLAY THICKNESS NOT TO SCALE)
NOTE: TRANSITIONAL AREA REQUIRED WHEN APPROACH PAVEMENT HAS BEEN PLACED PRIOR TO OVERLAY PLACEMENT.

LEGEND

F.F. - FRONT FACE
B.F. - BACK FACE
E.F. - EACH FACE

HATCHED AREAS INDICATE CONCRETE REMOVALS

▲ CLEAN, STRAIGHTEN, AND INCORPORATE INTO NEW WORK. DO NOT CUT BELOW LIMITS SHOWN. REPLACE DAMAGED OR CORRODED REINFORCEMENT AS DIRECTED BY THE ENGINEER.

NO.	DATE	REVISION	BY

STATE OF WISCONSIN
DEPARTMENT OF TRANSPORTATION

STRUCTURE B-68-104

DRAWN BY BJK PLANS CK'D GMH

TYPICAL SECTIONS & QUANTITIES

8

8

STATE PROJECT NUMBER

1510-02-60

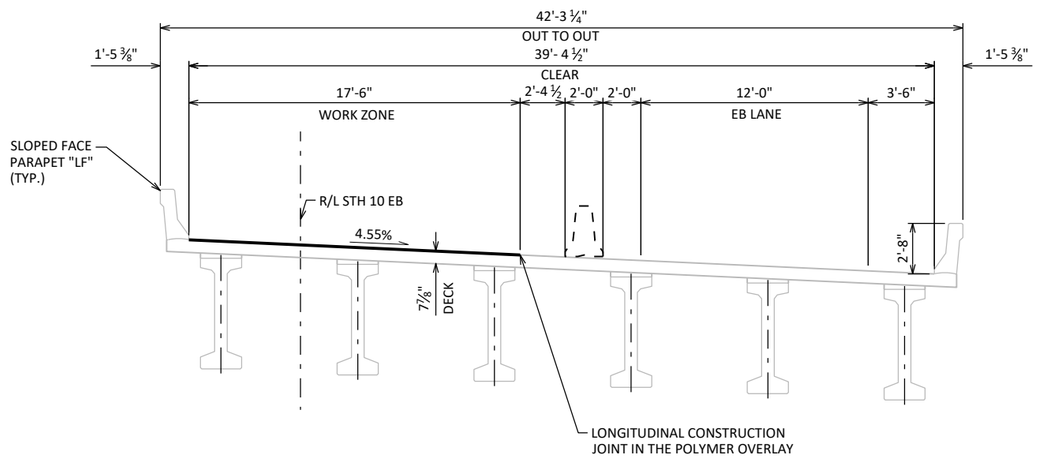

TYPICAL SECTION - STAGE 1

(LOOKING EAST)

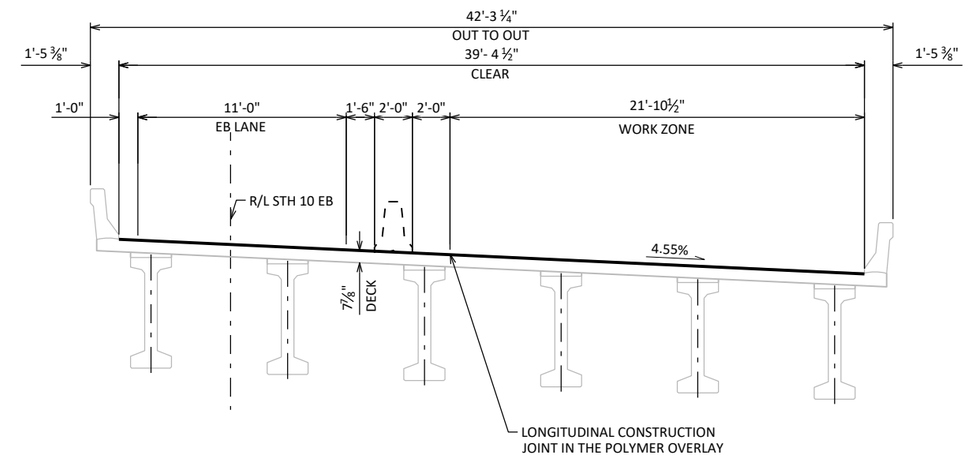

TYPICAL SECTION - STAGE 2

(LOOKING EAST)

8

8

NO.	DATE	REVISION	BY

STATE OF WISCONSIN
DEPARTMENT OF TRANSPORTATION

STRUCTURE B-68-104

DRAWN BY BJK | PLANS CK'D GMH

STAGING PLAN

SHEET 3 OF 6

STATE PROJECT NUMBER

1510-02-60

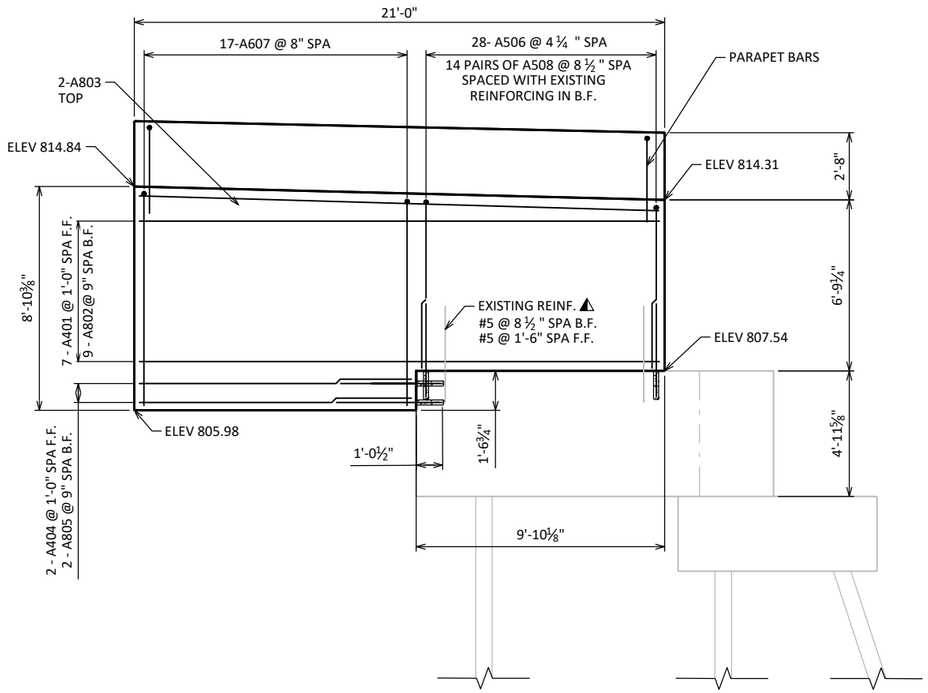

WINGWALL 2 - ELEVATION

(LOOKING NORTH)

BILL OF BARS

NOTE: THE FIRST OR FIRST TWO DIGITS OF THE BAR MARK SIGNIFIES THE BAR SIZE.

	BAR MARK	COAT	NO. REQ'D.	LENGTH	BENT	BAR SERIES	LOCATION
	A401	X	7	20'-8''			WING 2 UPPER HORIZ. FF
	A802	X	9	20'-8''			WING 2 UPPER HORIZ. BF
	A803	X	2	20'-8''			WING 2 TOP HORIZ. BAR
	A404	X	2	10'-10''			WING 2 BOTTOM HORIZ. FF
	A805	X	2	10'-10''			WING 2 BOTTOM HORIZ. BF
	A506	X	28	13'-6''	X		WING 2 FOOTING VERT. U-BARS
✳	A607	X	17	17'-3''	X	X	WING 2 EXTENSION VERT. U-BARS
	A508	X	28	4'-9''			WING 2 VERT. - ADHESIVE ANCHOR
	A809	X	2	6'-6''			WING 2 EXTENSION HORIZ. - ADHESIVE ANCHOR

✳ LENGTH SHOWN FOR BAR IS AN AVERAGE AND SHOULD ONLY BE USED FOR BAR WEIGHT CALCULATIONS. SEE BAR SERIES TABLE FOR ACTUAL LENGTHS.

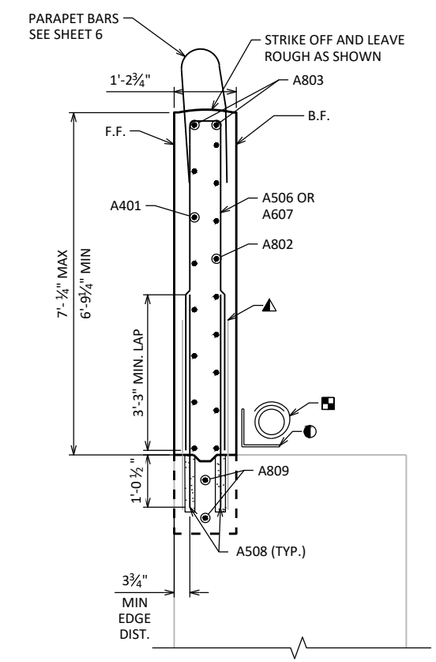

WINGWALL 2 - SECTION

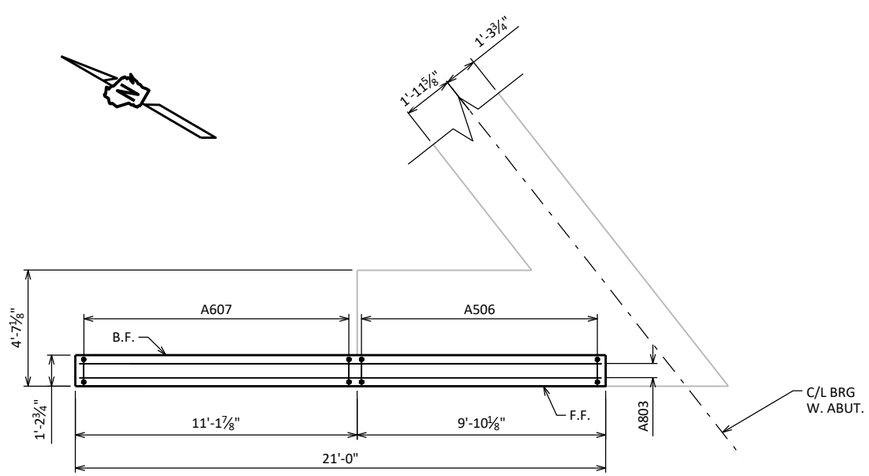

WINGWALL 2 - PLAN

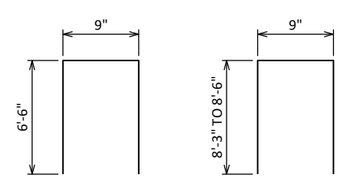

A506 **A607**

BAR SERIES TABLE

BAR NO	NO REQ'D	LENGTH
A607	1 SERIES OF 17	8'-3" TO 8'-6"

LEGEND

F.F. - FRONT FACE
B.F. - BACK FACE
E.F. - EACH FACE

⚠ CLEAN, STRAIGHTEN, AND INCORPORATE INTO NEW WORK. DO NOT CUT BELOW LIMITS SHOWN ON REMOVAL PLAN AND ELEVATION. REPLACE DAMAGED OR CORRODED REINFORCEMENT AS DIRECTED IN THE FIELD BY THE ENGINEER.

◐ 18" RUBBERIZED MEMBRANE WATERPROOFING

⬓ PIPE UNDERDRAIN WRAPPED 6-INCH. SLOPE 0.5% MIN. TO SUITABLE DRAINAGE. ATTACH RODENT SHIELD AT ENDS OF PIPE UNDERDRAIN.

NO.	DATE	REVISION	BY

STATE OF WISCONSIN
DEPARTMENT OF TRANSPORTATION

STRUCTURE B-68-104

DRAWN BY BJK | PLANS CK'D GMH

WING 2 REPLACEMENT

SHEET 4 OF 6

8

8

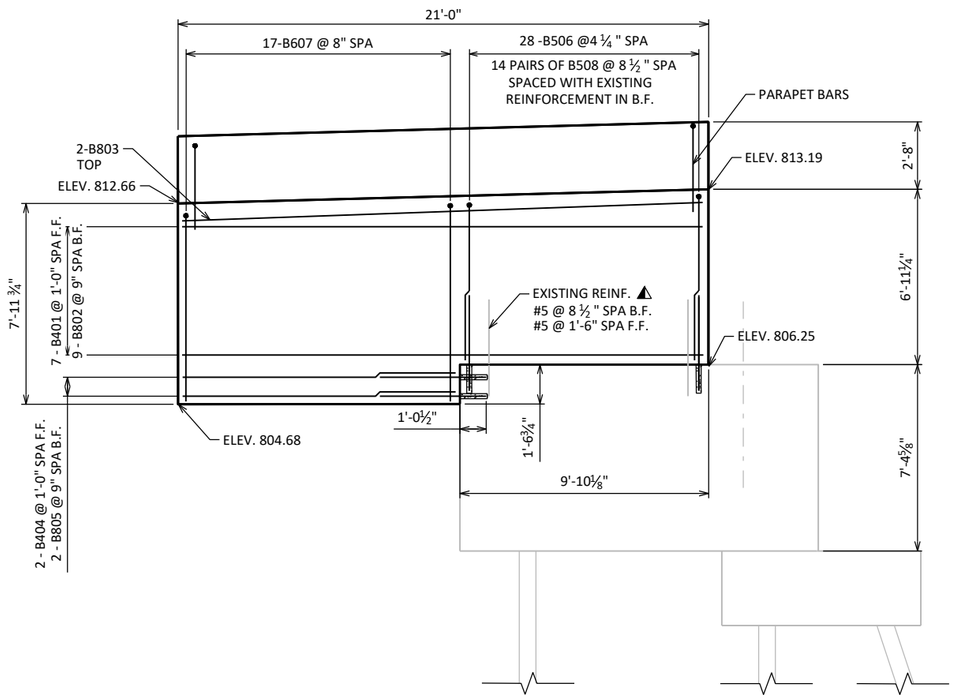

WINGWALL 4 - ELEVATION

(LOOKING SOUTH)

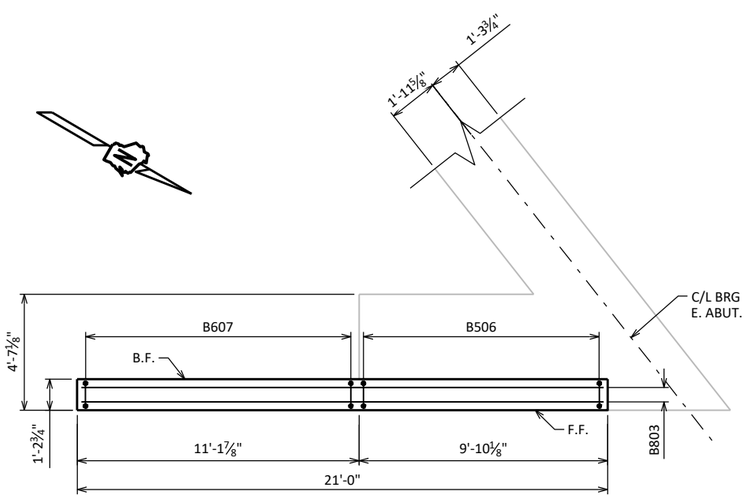

WINGWALL 4 - PLAN

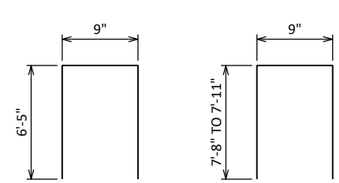

B506 **B607**

BAR SERIES TABLE

BAR NO	NO REQ'D	LENGTH
B607	1 SERIES OF 17	7'-8" TO 7'-11"

BILL OF BARS

NOTE: THE FIRST OR FIRST TWO DIGITS OF THE BAR MARK SIGNIFIES THE BAR SIZE.

BAR MARK	COAT	NO. REQ'D.	LENGTH	BENT	BAR SERIES	LOCATION
B401	X	7	20'-8''			WING 4 UPPER HORIZ. FF
B802	X	9	20'-8''			WING 4 UPPER HORIZ. BF
B803	X	2	20'-8''			WING 4 TOP HORIZ. BAR
B404	X	2	10'-10''			WING 4 BOTTOM HORIZ. FF
B805	X	2	10'-10''			WING 4 BOTTOM HORIZ. BF
B506	X	28	13'-4''	X		WING 4 FOOTING VERT. U-BARS
✳ B607	X	17	16'-1''	X	X	WING 4 EXTENSION VERT. U-BARS
B508	X	28	4'-9''			WING 4 VERT. - ADHESIVE ANCHOR
B809	X	2	6'-6''			WING 4 EXTENSION HORIZ. - ADHESIVE ANCHOR

✳ LENGTH SHOWN FOR BAR IS AN AVERAGE AND SHOULD ONLY BE USED FOR BAR WEIGHT CALCULATIONS. SEE BAR SERIES TABLE FOR ACTUAL LENGTHS.

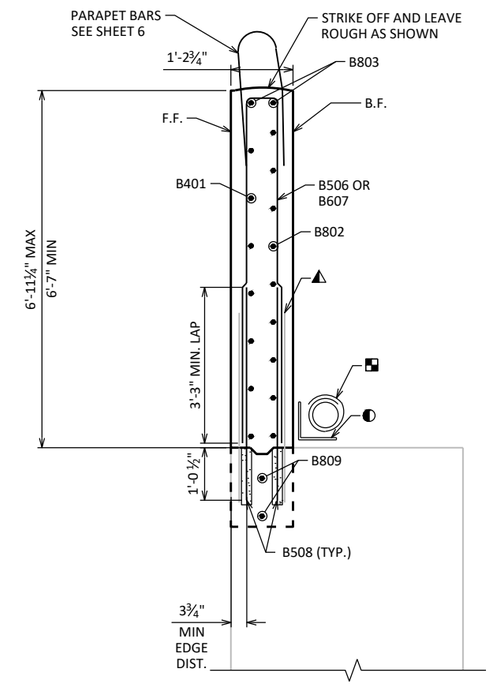

WINGWALL 4 - SECTION

LEGEND

F.F. - FRONT FACE
B.F. - BACK FACE
E.F. - EACH FACE

⚠ CLEAN, STRAIGHTEN, AND INCORPORATE INTO NEW WORK. DO NOT CUT BELOW LIMITS SHOWN ON REMOVAL PLAN AND ELEVATION. REPLACE DAMAGED OR CORRODED REINFORCEMENT AS DIRECTED IN THE FIELD BY THE ENGINEER.

◐ 18" RUBBERIZED MEMBRANE WATERPROOFING

⬓ PIPE UNDERDRAIN WRAPPED 6-INCH. SLOPE 0.5% MIN. TO SUITABLE DRAINAGE. ATTACH RODENT SHIELD AT ENDS OF PIPE UNDERDRAIN.

NO.	DATE	REVISION	BY

STATE OF WISCONSIN
DEPARTMENT OF TRANSPORTATION

STRUCTURE B-68-104

DRAWN BY BJK PLANS CK'D GMH

WING 4 REPLACEMENT

SHEET 5 OF 6
300

8

8

STATE PROJECT NUMBER

1510-02-60

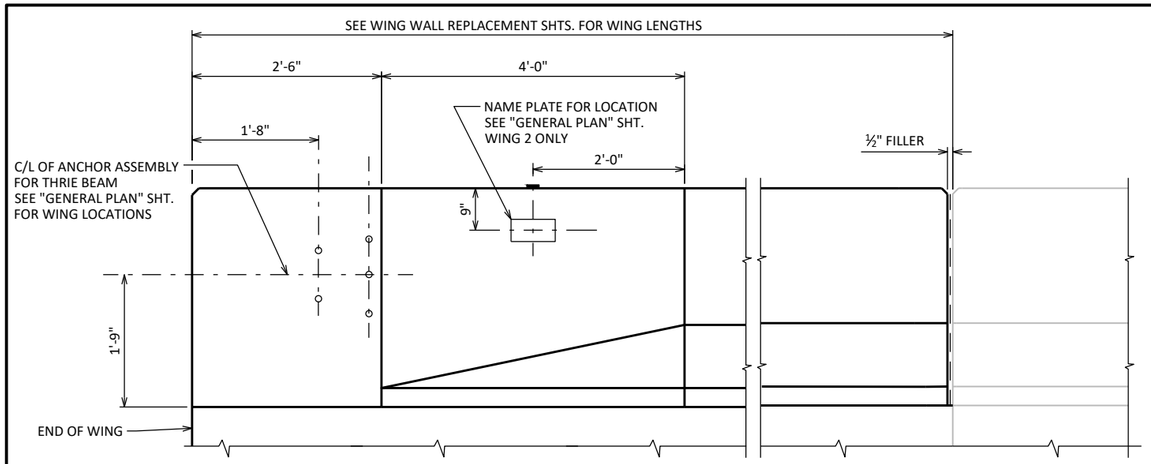

INSIDE ELEVATION

WING 2 SHOWN, WING 4 SIMILAR

◪ AVOID PLACING A BENCH MARK CAP BELOW A RAIL OR FENCE SYSTEM THAT IS ATTACHED TO THE TOP OF THE PARAPET

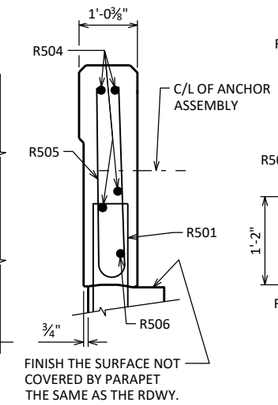

SECTION A-A

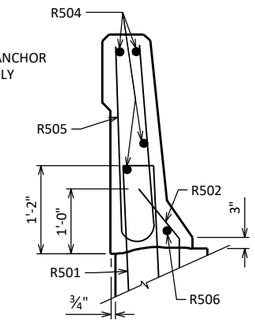

SECTION B-B

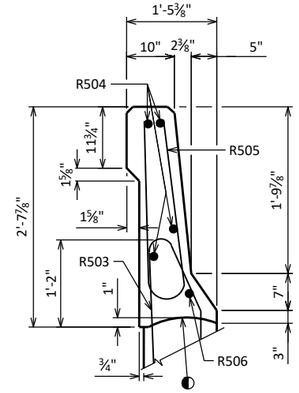

SECTION C-C

BILL OF BARS

FOR ABUTMENT PARAPETS

BAR MARK	COAT	EAST ABUT.	WEST ABUT.	LENGTH	BENT	BAR SERIES	LOCATION
R501	X	14	14	4'-7"	X		PARAPET VERT.
R502	X	8	8	2'-4"	X		PARAPET VERT.
R503	X	21	21	4'-7"	X		PARAPET VERT.
R504	X	4	4	20'-8"			PARAPET HORIZ.
R505	X	35	35	4'-10"	X		PARAPET VERT.
R506	X	1	1	20'-8"	X		PARAPET HORIZ.

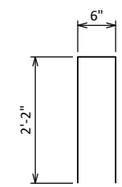

R501

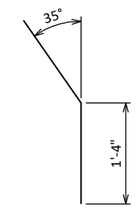

R502

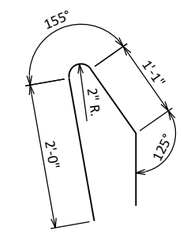

R503

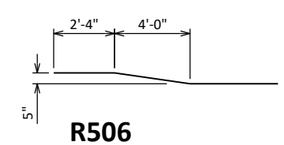

R506

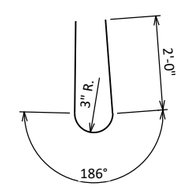

R505

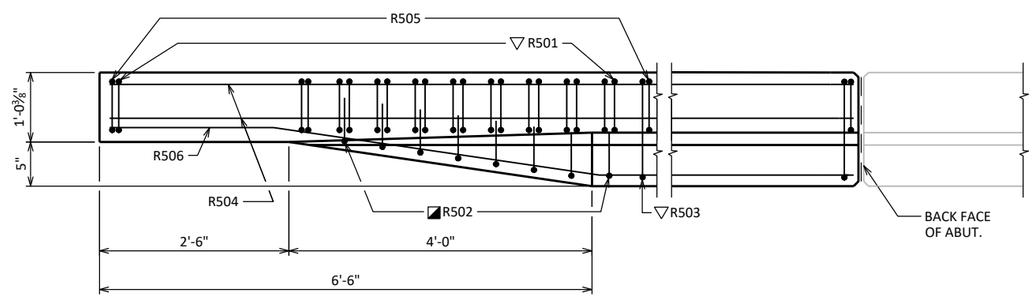

PLAN

WING 2 SHOWN, WING 4 SIMILAR

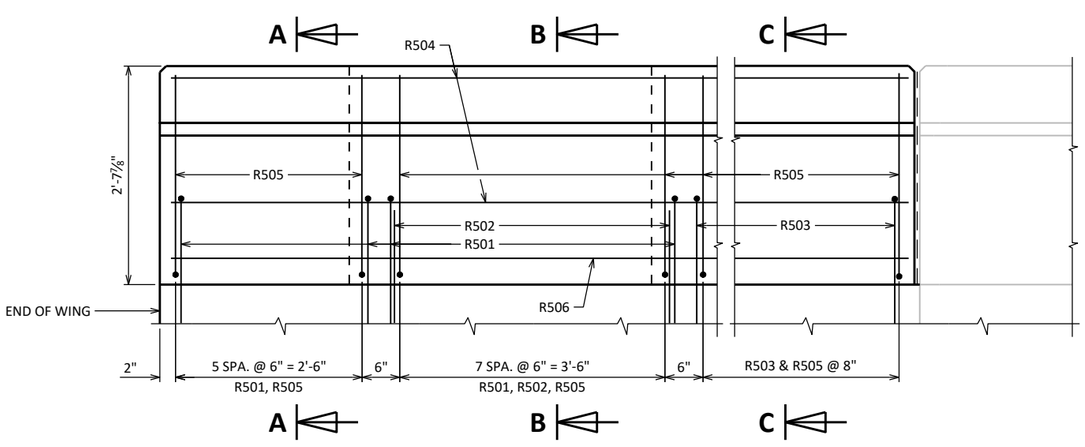

OUTSIDE ELEVATION

WING 2 SHOWN, WING 4 SIMILAR

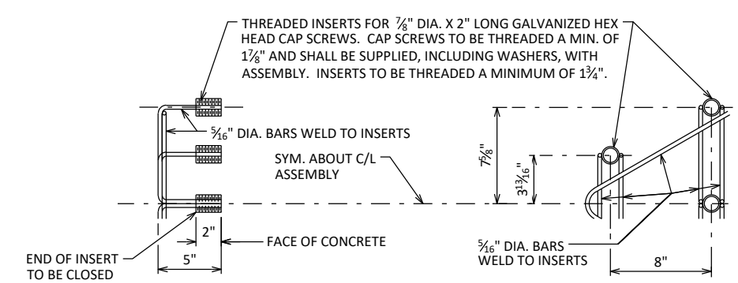

DETAIL OF ANCHOR ASSEMBLY

NOTE: HEX HEAD CAP SCREWS & WASHERS TO BE GALVANIZED IN ACCORDANCE WITH ASTM F2329.

ASSEMBLY SHALL BE BID ITEM "ANCHOR ASSEMBLIES FOR STEEL PLATE BEAM GUARD", EACH.

◐ CONST. JOINT - STRIKE OFF AS SHOWN.

◪ R502 BARS MAY BE PLACED AFTER CONCRETE IS POURED BUT BEFORE INITIAL SET HAS TAKEN PLACE. USE CARE TO PLACE R502 BARS CORRECTLY ALONG TRANSITION OF PARAPET.

▽ R501 AND R503 BARS TO BE TIED TO WING STEEL BEFORE WING IS POURED.

NO.	DATE	REVISION	BY

STATE OF WISCONSIN
DEPARTMENT OF TRANSPORTATION
STRUCTURES DESIGN SECTION

STRUCTURE B-68-104

DRAWN BY BJK | PLANS CK'D GMH

SLOPED FACE PARAPET "LF"

SHEET 6 OF 6

301

SCALE = 2.00

8

8

USH 10 WIDENING EARTHWORK														
		AREA (SF)				INCREMENTAL VOL (CY) (UNADJUSTED)				CUMULATIVE VOL (CY)				
STATION	DISTANCE	CUT	SALVAGED/UNUSABLE PAVEMENT MATERIAL	FILL	EBS	CUT	SALVAGED/UNUSABLE PAVEMENT MATERIAL	FILL	EBS	CUT	EXPANDED FILL	EXPANDED EBS BACKFILL	REDUCED EBS IN FILL	MASS ORDINATE
										1.00	1.25	1.30	0.80	
						NOTE 1	NOTE 2	NOTE 3		NOTE 1		NOTE 5	NOTE 7	NOTE 8
976+50.00	0.00	5.70	0.00	0.00	0.00	0	0	0	0	0	0	0	0	0
977+00.00	50.00	4.64	0.00	0.00	0.00	10	0	0	0	10	0	0	0	10
977+50.00	50.00	3.72	0.00	0.00	0.00	8	0	0	0	18	0	0	0	18
978+00.00	50.00	3.59	0.00	0.00	0.00	7	0	0	0	25	0	0	0	25
978+50.00	50.00	4.01	0.00	0.00	0.00	7	0	0	0	32	0	0	0	32
979+00.00	50.00	4.78	0.00	0.00	0.00	8	0	0	0	40	0	0	0	40
979+50.00	50.00	5.03	0.00	0.00	0.00	9	0	0	0	49	0	0	0	49
980+00.00	50.00	4.59	0.00	0.00	0.00	9	0	0	0	58	0	0	0	58
980+50.00	50.00	4.48	0.00	0.00	0.00	8	0	0	0	66	0	0	0	66
981+00.00	50.00	4.89	0.00	0.00	0.00	9	0	0	0	75	0	0	0	75
981+50.00	50.00	5.16	0.00	0.00	0.00	9	0	0	0	84	0	0	0	84
982+00.00	50.00	5.35	0.00	0.00	0.00	10	0	0	0	94	0	0	0	94
982+50.00	50.00	5.40	0.00	0.00	0.00	10	0	0	0	104	0	0	0	104
983+00.00	50.00	1.94	0.00	0.00	0.00	7	0	0	0	111	0	0	0	111
983+50.00	50.00	0.45	0.00	0.00	0.00	2	0	0	0	113	0	0	0	113
984+00.00	50.00	0.00	0.00	0.00	0.00	0	0	0	0	113	0	0	0	113
984+50.00	50.00	0.00	0.00	0.00	0.00	0	0	0	0	113	0	0	0	113
985+00.00	50.00	0.00	0.00	0.00	0.00	0	0	0	0	113	0	0	0	113
985+50.00	50.00	0.25	0.00	0.00	0.00	0	0	0	0	113	0	0	0	113
986+00.00	50.00	1.87	0.00	0.00	0.00	2	0	0	0	115	0	0	0	115
986+50.00	50.00	5.04	0.00	0.00	0.00	6	0	0	0	121	0	0	0	121
987+00.00	50.00	5.87	0.00	0.00	0.00	10	0	0	0	131	0	0	0	131
987+50.00	50.00	6.12	0.00	0.00	0.00	11	0	0	0	142	0	0	0	142
988+00.00	50.00	6.62	0.00	0.00	0.00	12	0	0	0	154	0	0	0	154
988+50.00	50.00	7.13	0.00	0.00	0.00	13	0	0	0	167	0	0	0	167
989+00.00	50.00	5.98	0.00	0.00	0.00	12	0	0	0	179	0	0	0	179
989+50.00	50.00	5.48	0.00	0.00	0.00	11	0	0	0	190	0	0	0	190
990+00.00	50.00	4.68	0.00	0.00	0.00	9	0	0	0	199	0	0	0	199
990+50.00	50.00	4.95	0.00	0.02	0.00	9	0	0	0	208	0	0	0	208
991+00.00	50.00	5.06	0.00	0.08	0.00	9	0	0	0	217	0	0	0	217
991+50.00	50.00	5.97	0.00	0.23	0.00	10	0	0	0	227	0	0	0	227
992+00.00	50.00	5.60	0.00	0.01	0.00	11	0	0	0	238	0	0	0	238
992+50.00	50.00	5.78	0.00	0.02	0.00	11	0	0	0	249	0	0	0	249
992+62.00	12.00	5.78	0.00	0.01	0.00	3	0	0	0	252	0	0	0	252
992+89.50	27.50	4.42	0.00	0.00	0.00	5	0	0	0	257	0	0	0	257
993+00.00	10.50	3.97	0.00	0.00	0.00	2	0	0	0	259	0	0	0	259
993+17.00	17.00	3.20	0.00	0.00	0.00	2	0	0	0	261	0	0	0	261
993+44.50	27.50	2.19	0.00	0.00	0.00	3	0	0	0	264	0	0	0	264
993+50.00	5.50	2.03	0.00	0.00	0.00	0	0	0	0	264	0	0	0	264
993+72.00	22.00	1.23	0.00	0.00	0.00	1	0	0	0	265	0	0	0	265

NOTES:	
1 - CUT	CUT INCLUDES SALVAGED/UNUSABLE PAVEMENT MATERIAL
2 - SALVAGED/UNUSABLE PAVEMENT MATERIAL	THIS DOES NOT SHOW UP IN CROSS SECTIONS
3 - FILL	DOES NOT INCLUDE UNUSABLE PAVEMENT EXC VOLUME
4 - EXPANDED MARSH BACKFILL	WILL BE BACKFILLED WITH GRANULAR BACKFILL (OR CUT, OR BORROW)
5 - EXPANDED EBS	WILL BE BACKFILLED WITH GRANULAR BACKFILL (OR CUT, OR BORROW)
6 - REDUCED MARSH IN FILL	REDUCED MARSH EXCAVATION THAT CAN BE USED IN FILL
7 - REDUCED EBS IN FILL	REDUCED EBS EXCAVATION THAT CAN BE USED IN FILL
8 - MASS ORDINATE	IF MARSH OR EBS TO BE BACKFILLED WITH COMMON OR BORROW: [(CUT - SALVAGED PAVT - EXPANDED MARSH EXC - EXPANDED EBS) - ((FILL - REDUCED MARSH IN FILL - REDUCED EBS IN FILL - EXPANDED ROCK) * FILL FACTOR)]
8 - MASS ORDINATE	IF MARSH AND EBS TO BE BACKFILLED WITH GRANULAR: [CUT - SALVAGED PAVT - ((FILL - REDUCED MARSH IN FILL - REDUCED EBS IN FILL - EXPANDED ROCK) * FILL FACTOR)]
8 - MASS ORDINATE	IF MARSH AND EBS TO BE BACKFILLED WITH COMMON OR BORROW: [(CUT - SALVAGED PAVT - EXPANDED MARSH EXC - EXPANDED EBS) - ((FILL - EXPANDED ROCK) * FILL FACTOR)]
8 - MASS ORDINATE	IF MARSH AND EBS TO BE BACKFILLED WITH GRANULAR: [CUT - SALVAGED PAVT - ((FILL - EXPANDED ROCK) * FILL FACTOR)]

EARTHWORK NORTH CROSSOVER														
		AREA (SF)				INCREMENTAL VOL (CY) (UNADJUSTED)				CUMULATIVE VOL (CY)				
STATION	DISTANCE	CUT	SALVAGED/UNUSABLE PAVEMENT MATERIAL	FILL	EBS	CUT	SALVAGED/UNUSABLE PAVEMENT MATERIAL	FILL	EBS	CUT	EXPANDED FILL	EXPANDED EBS BACKFILL	REDUCED EBS IN FILL	MASS ORDINATE
										1.00	1.25	1.30	0.80	
						NOTE 1	NOTE 2	NOTE 3		NOTE 1		NOTE 5	NOTE 7	NOTE 8
6+00.00	0.00	20.88	5.22	0.08	0.00	0	0	0	0	0	0	0	0	0
6+50.00	50.00	23.71	5.93	0.15	0.00	41	10	0	0	41	0	0	0	31
7+00.00	50.00	21.63	10.81	0.46	0.00	42	16	1	0	83	1	0	0	56
7+50.00	50.00	21.50	10.75	0.05	0.00	40	20	0	0	123	1	0	0	76
8+00.00	50.00	17.55	8.78	0.17	0.00	36	18	0	0	159	1	0	0	94
8+50.00	50.00	14.61	7.31	1.29	0.00	30	15	1	0	189	3	0	0	108
9+00.00	50.00	14.40	10.80	3.66	0.00	27	17	5	0	216	9	0	0	111
9+50.00	50.00	17.76	13.32	3.03	0.00	30	22	6	0	246	16	0	0	112
10+00.00	50.00	29.05	21.79	0.06	0.00	43	33	3	0	289	20	0	0	118
10+50.00	50.00	37.19	37.19	0.00	0.00	61	55	0	0	350	20	0	0	124
11+00.00	50.00	15.37	15.37	2.93	0.00	49	49	3	0	399	24	0	0	120
11+50.00	50.00	2.93	2.93	16.71	0.00	17	17	18	0	416	46	0	0	98
12+00.00	50.00	3.94	3.94	25.91	0.00	6	6	39	0	422	95	0	0	49
12+50.00	50.00	2.26	2.26	28.90	0.00	6	6	51	0	428	159	0	0	-15
13+00.00	50.00	1.47	1.47	36.42	0.00	3	3	60	0	431	234	0	0	-90
13+50.00	50.00	2.56	2.56	44.52	0.00	4	4	75	0	435	328	0	0	-184
14+00.00	50.00	4.20	4.20	48.31	0.00	6	6	86	0	441	435	0	0	-291
14+50.00	50.00	6.64	6.64	50.07	0.00	10	10	91	0	451	549	0	0	-405
15+00.00	50.00	1.99	1.99	49.03	0.00	8	8	92	0	459	664	0	0	-520
15+50.00	50.00	3.59	3.59	44.89	0.00	5	5	87	0	464	773	0	0	-629
16+00.00	50.00	5.72	5.72	34.30	0.00	9	9	73	0	473	864	0	0	-720
16+50.00	50.00	4.18	4.18	27.02	0.00	9	9	57	0	482	935	0	0	-791
17+00.00	50.00	3.84	3.84	21.17	0.00	7	7	45	0	489	991	0	0	-847
17+50.00	50.00	4.59	3.44	13.43	0.00	8	7	32	0	497	1031	0	0	-886
18+00.00	50.00	12.54	9.40	2.87	0.00	16	12	15	0	513	1050	0	0	-901
18+50.00	50.00	11.18	8.39	0.90	0.00	22	16	3	0	535	1054	0	0	-899
19+00.00	50.00	13.00	6.50	0.43	0.00	22	14	1	0	557	1055	0	0	-892
19+50.00	50.00	14.29	7.15	0.16	0.00	25	13	1	0	582	1056	0	0	-881
20+00.00	50.00	5.72	2.86	1.25	0.00	19	9	1	0	601	1058	0	0	-873
20+50.00	50.00	5.47	2.73	0.03	0.00	10	5	1	0	611	1059	0	0	-869
21+00.00	50.00	7.65	1.91	0.00	0.00	12	4	0	0	623	1059	0	0	-861
21+50.00	50.00	11.65	2.91	0.00	0.00	18	4	0	0	641	1059	0	0	-847

NOTES:	
1 - CUT	CUT INCLUDES SALVAGED/UNUSABLE PAVEMENT MATERIAL
2 - SALVAGED/UNUSABLE PAVEMENT MATERIAL	THIS DOES NOT SHOW UP IN CROSS SECTIONS
3 - FILL	DOES NOT INCLUDE UNUSABLE PAVEMENT EXC VOLUME
4 - EXPANDED MARSH BACKFILL	WILL BE BACKFILLED WITH GRANULAR BACKFILL (OR CUT, OR BORROW)
5 - EXPANDED EBS	WILL BE BACKFILLED WITH GRANULAR BACKFILL (OR CUT, OR BORROW)
6 - REDUCED MARSH IN FILL	REDUCED MARSH EXCAVATION THAT CAN BE USED IN FILL
7 - REDUCED EBS IN FILL	REDUCED EBS EXCAVATION THAT CAN BE USED IN FILL
8 - MASS ORDINATE	IF MARSH OR EBS TO BE BACKFILLED WITH COMMON OR BORROW: [(CUT - SALVAGED PAVT - EXPANDED MARSH EXC - EXPANDED EBS) - ((FILL - REDUCED MARSH IN FILL - REDUCED EBS IN FILL - EXPANDED ROCK) * FILL FACTOR)]
8 - MASS ORDINATE	IF MARSH AND EBS TO BE BACKFILLED WITH GRANULAR: [CUT - SALVAGED PAVT - ((FILL - REDUCED MARSH IN FILL - REDUCED EBS IN FILL - EXPANDED ROCK) * FILL FACTOR)]
8 - MASS ORDINATE	IF MARSH AND EBS TO BE BACKFILLED WITH COMMON OR BORROW: [(CUT - SALVAGED PAVT - EXPANDED MARSH EXC - EXPANDED EBS) - ((FILL - EXPANDED ROCK) * FILL FACTOR)]
8 - MASS ORDINATE	IF MARSH AND EBS TO BE BACKFILLED WITH GRANULAR: [CUT - SALVAGED PAVT - ((FILL - EXPANDED ROCK) * FILL FACTOR)]

EARTHWORK SOUTH CROSSOVER

STATION	REAL STATION	DISTANCE	AREA (SF)				INCREMENTAL VOL (CY) (UNADJUSTED)				CUMULATIVE VOL (CY)				
			CUT	SALVAGED/UNUSABLE PAVEMENT MATERIAL	FILL	EBS	CUT	SALVAGED/UNUSABLE PAVEMENT MATERIAL	FILL	EBS	CUT	EXPANDED FILL	EXPANDED EBS BACKFILL	REDUCED EBS IN FILL	MASS ORDINATE
											1.00	1.25	1.00	1.00	
							NOTE 1	NOTE 2	NOTE 3		NOTE 1		NOTE 5	NOTE 7	NOTE 8
766+00.00	76600.00	0.00	0.00	0.00	0.00	0.00	0	0	0	0	0	0	0	0	0
766+50.00	76650.00	50	0.00	0.00	0.00	0.00	0	0	0	0	0	0	0	0	0
767+00.00	76700.00	50	16.14	12.10	0.00	0.00	15	11	0	0	15	0	0	0	4
767+50.00	76750.00	50	14.04	10.53	0.18	0.00	28	21	0	0	43	0	0	0	11
768+00.00	76800.00	50	14.02	10.52	0.12	0.00	26	19	0	0	69	0	0	0	18
768+50.00	76850.00	50	35.85	26.89	0.00	0.00	46	35	0	0	115	0	0	0	29
769+00.00	76900.00	50	42.87	32.15	0.00	0.00	73	55	0	0	188	0	0	0	47
769+50.00	76950.00	50	39.88	29.91	0.00	0.00	77	57	0	0	265	0	0	0	67
770+00.00	77000.00	50	38.09	28.57	0.11	0.00	72	54	0	0	337	0	0	0	85
770+50.00	77050.00	50	34.96	26.22	1.67	0.00	68	51	2	0	405	3	0	0	100
771+00.00	77100.00	50	35.29	26.47	2.84	0.00	65	49	4	0	470	8	0	0	111
771+50.00	77150.00	50	27.90	20.93	4.95	0.00	59	44	7	0	529	16	0	0	117
772+00.00	77200.00	50	26.01	19.50	20.82	0.00	50	37	24	0	579	46	0	0	100
772+50.00	77250.00	50	28.03	21.02	17.10	0.00	50	38	35	0	629	90	0	0	68
773+00.00	77300.00	50	33.48	25.11	19.55	0.00	57	43	34	0	686	133	0	0	40
773+50.00	77350.00	50	32.36	24.27	18.60	0.00	61	46	35	0	747	176	0	0	11
774+00.00	77400.00	50	33.19	24.89	13.34	0.00	61	46	30	0	808	214	0	0	-12
774+50.00	77450.00	50	29.63	22.22	17.62	0.00	58	44	29	0	866	250	0	0	-34
775+00.00	77500.00	50	28.91	21.68	15.19	0.00	54	41	30	0	920	288	0	0	-59
775+50.00	77550.00	50	28.24	21.18	15.40	0.00	53	40	28	0	973	323	0	0	-81
776+00.00	77600.00	50	29.66	22.24	12.49	0.00	54	40	26	0	1027	355	0	0	-99
776+50.00	77650.00	50	31.31	23.48	9.19	0.00	56	42	20	0	1083	380	0	0	-110
777+00.00	77700.00	50	32.34	24.26	6.02	0.00	59	44	14	0	1142	398	0	0	-113
777+50.00	77750.00	50	31.54	23.65	11.10	0.00	59	44	16	0	1201	418	0	0	-118
778+00.00	77800.00	50	33.81	25.36	12.73	0.00	61	45	22	0	1262	445	0	0	-129
778+50.00	77850.00	50	31.57	23.68	14.55	0.00	61	45	25	0	1323	476	0	0	-144
779+00.00	77900.00	50	30.81	23.11	10.14	0.00	58	43	23	0	1381	505	0	0	-158
779+50.00	77950.00	50	27.82	20.86	9.31	0.00	54	41	18	0	1435	528	0	0	-168
780+00.00	78000.00	50	26.18	19.63	8.92	0.00	50	37	17	0	1485	549	0	0	-176
780+50.00	78050.00	50	27.67	20.76	5.33	0.00	50	37	13	0	1535	565	0	0	-179
781+00.00	78100.00	50	29.57	22.18	2.30	0.00	53	40	7	0	1588	574	0	0	-175
781+50.00	78150.00	50	28.80	21.60	2.17	0.00	54	41	4	0	1642	579	0	0	-167
782+00.00	78200.00	50	28.90	21.68	1.77	0.00	53	40	4	0	1695	584	0	0	-159
782+50.00	78250.00	50	34.51	25.88	0.17	0.00	59	44	2	0	1754	586	0	0	-146
783+00.00	78300.00	50	0.00	0.00	0.00	0.00	32	24	0	0	1786	586	0	0	-138

NOTES:	
1 - CUT	CUT INCLUDES SALVAGED/UNUSABLE PAVEMENT MATERIAL
2 - SALVAGED/UNUSABLE PAVEMENT MATERIAL	THIS DOES NOT SHOW UP IN CROSS SECTIONS
3 - FILL	DOES NOT INCLUDE UNUSABLE PAVEMENT EXC VOLUME
4 - EXPANDED MARSH BACKFILL	WILL BE BACKFILLED WITH GRANULAR BACKFILL (OR CUT, OR BORROW)
5 - EXPANDED EBS	WILL BE BACKFILLED WITH GRANULAR BACKFILL (OR CUT, OR BORROW)
6 - REDUCED MARSH IN FILL	REDUCED MARSH EXCAVATION THAT CAN BE USED IN FILL
7 - REDUCED EBS IN FILL	REDUCED EBS EXCAVATION THAT CAN BE USED IN FILL
8 - MASS ORDINATE	IF MARSH OR EBS TO BE BACKFILLED WITH COMMON OR BORROW: [(CUT - SALVAGED PAVT - EXPANDED MARSH EXC - EXPANDED EBS) - ((FILL - REDUCED MARSH IN FILL - REDUCED EBS IN FILL - EXPANDED ROCK) * FILL FACTOR)]
8 - MASS ORDINATE	IF MARSH AND EBS TO BE BACKFILLED WITH GRANULAR: [CUT - SALVAGED PAVT - ((FILL - REDUCED MARSH IN FILL - REDUCED EBS IN FILL - EXPANDED ROCK) * FILL FACTOR)]
8 - MASS ORDINATE	IF MARSH AND EBS TO BE BACKFILLED WITH COMMON OR BORROW: [(CUT - SALVAGED PAVT - EXPANDED MARSH EXC - EXPANDED EBS) - ((FILL - EXPANDED ROCK) * FILL FACTOR)]
8 - MASS ORDINATE	IF MARSH AND EBS TO BE BACKFILLED WITH GRANULAR: [CUT - SALVAGED PAVT - ((FILL - EXPANDED ROCK) * FILL FACTOR)]

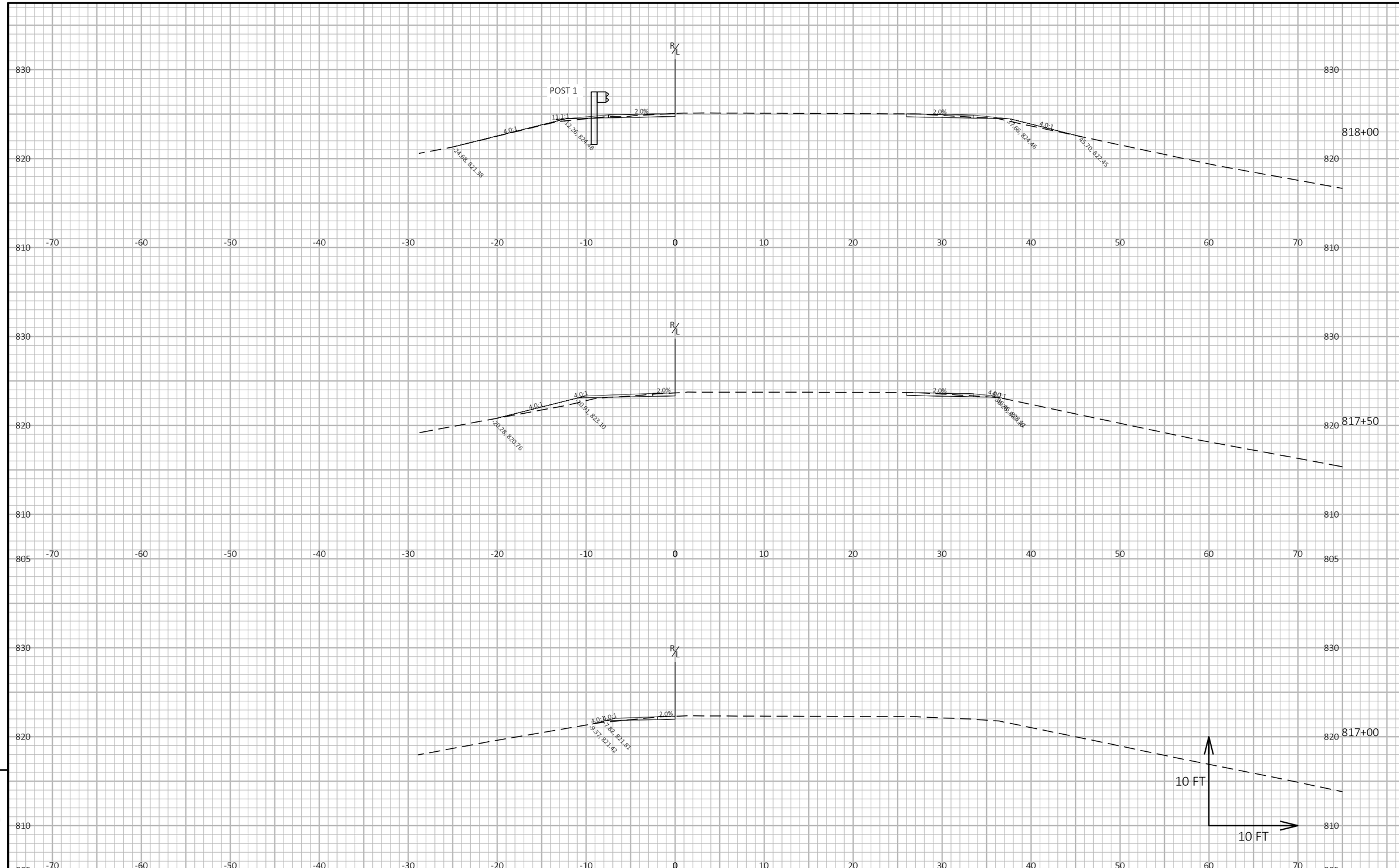

9

9

PROJECT NO: 1510-02-60	HWY: USH 10	COUNTY: WAUPACA	CROSS SECTIONS: STA 817+00 TO 822+00	SHEET 305	E

FILE NAME : Y:\MILWAUKEE\20300S\20335.01\ENG_DOCS\1510-02-60\15100260\SHEETS\090202-XS-816.DWG
LAYOUT NAME - 01
PLOT DATE : 7/28/2025 1:58 PM
PLOT BY : WEIGAND, BEN
PLOT NAME :
PLOT SCALE : 1 IN:10 FT HORZ. / 1 IN:10 FT VERT.
WISDOT/CADDS SHEET 49

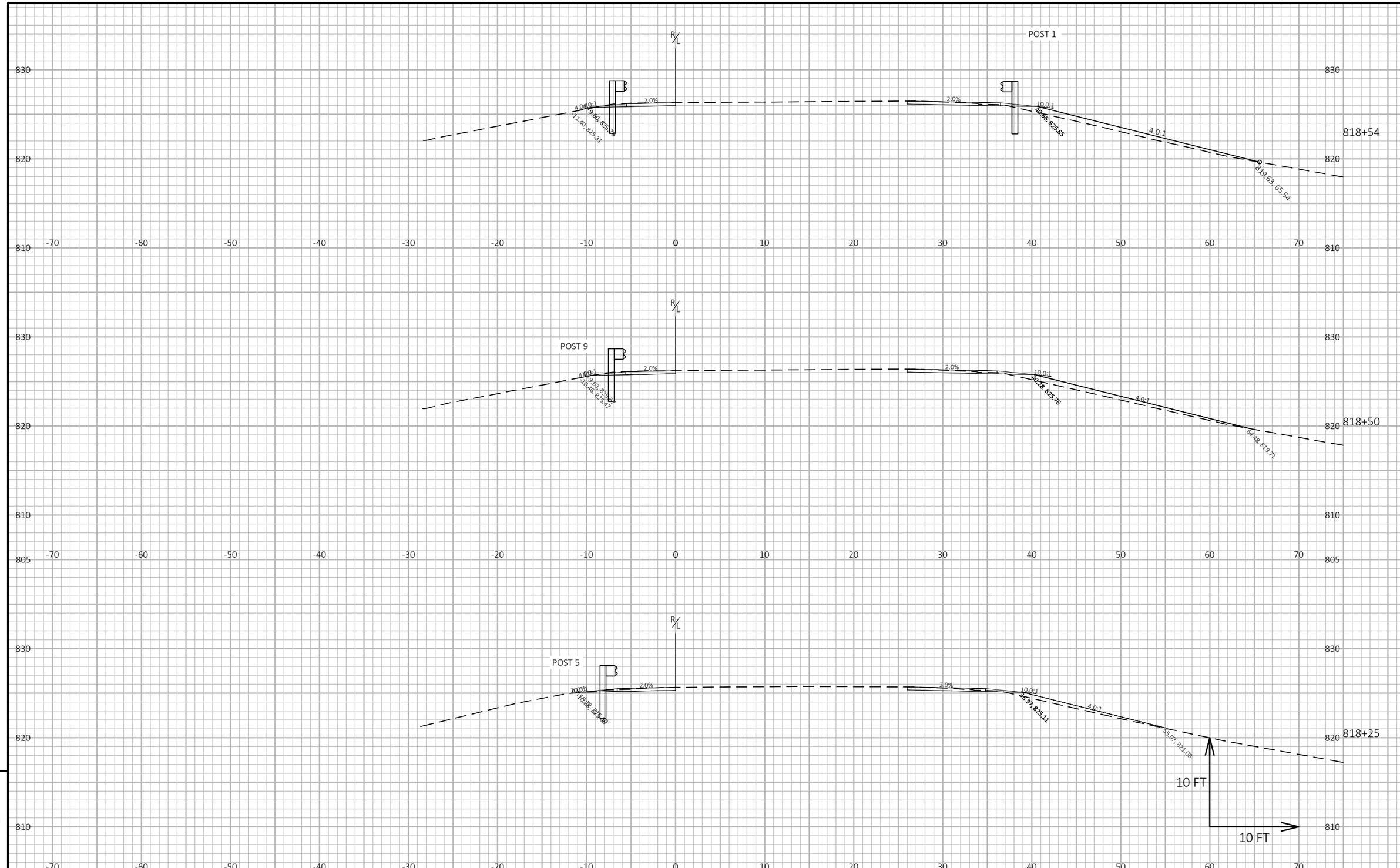

9

9

PROJECT NO: 1510-02-60	HWY: USH 10	COUNTY: WAUPACA	CROSS SECTIONS: STA 817+00 TO 822+00	SHEET 306	E

FILE NAME : Y:\MILWAUKEE\20300S\20335.01\ENG_DOCS\1510-02-60\15100260\SHEETS\090202-XS-816.DWG
LAYOUT NAME - 02

PLOT DATE : 7/31/2025 10:25 AM PLOT BY : STURM, LUKE PLOT NAME : **PLOT SCALE :** 1 IN:10 FT HORZ. / 1 IN:10 FT VERT.

WISDOT/CADDS SHEET 49

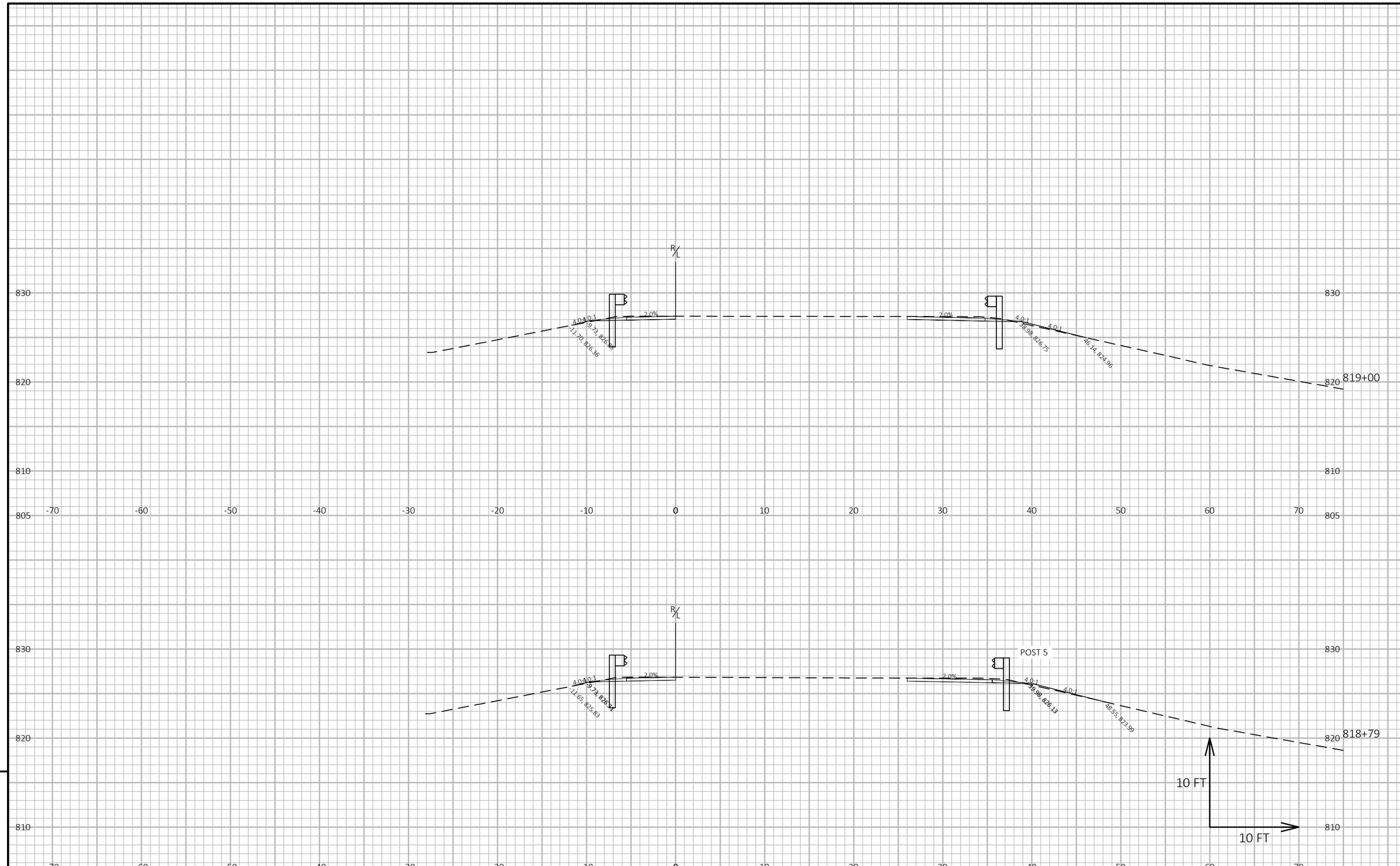

9

9

PROJECT NO: 1510-02-60	HWY: USH 10	COUNTY: WAUPACA	CROSS SECTIONS: STA 817+00 TO 822+00	SHEET 307	E

FILE NAME : Y:\MILWAUKEE\20300S\20335.01\ENG_DOCS\1510-02-60\15100260\SHEETS\090202-XS-816.DWG
LAYOUT NAME - 03
PLOT DATE : 7/28/2025 1:58 PM
PLOT BY : WEIGAND, BEN
PLOT NAME :
PLOT SCALE : 1 IN:10 FT HORZ. / 1 IN:10 FT VERT.
WISDOT/CADDS SHEET 49

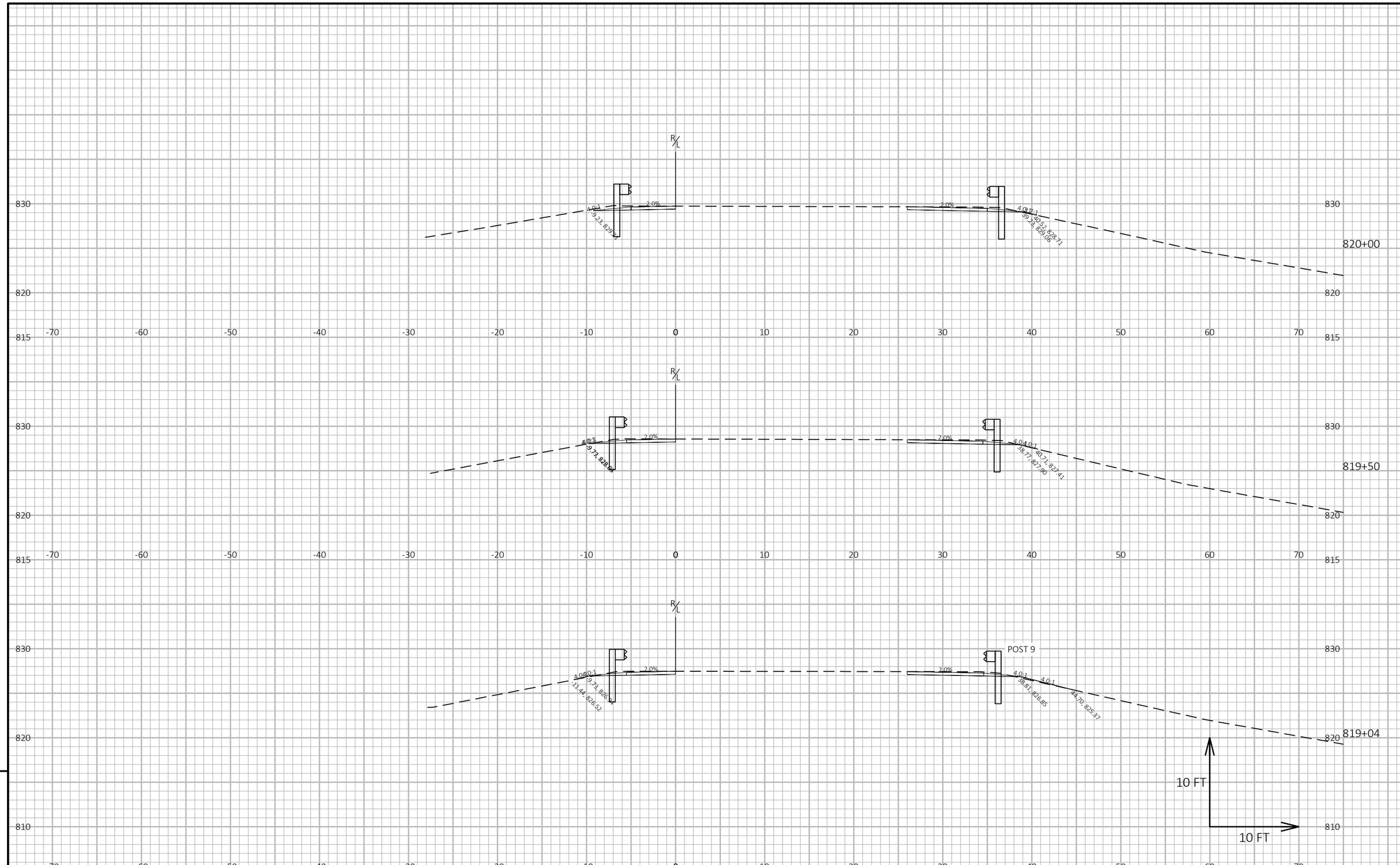

9

9

PROJECT NO: 1510-02-60	HWY: USH 10	COUNTY: WAUPACA	CROSS SECTIONS: STA 817+00 TO 822+00	SHEET 308	E

FILE NAME : Y:\MILWAUKEE\20300S\20335.01\ENG_DOCS\1510-02-60\15100260\SHEETS\090202-XS-816.DWG
LAYOUT NAME - 04

PLOT DATE : 7/28/2025 1:58 PM PLOT BY : WEIGAND, BEN PLOT NAME : PLOT SCALE : 1 IN:10 FT HORZ. / 1 IN:10 FT VERT.

WISDOT/CADDS SHEET 49

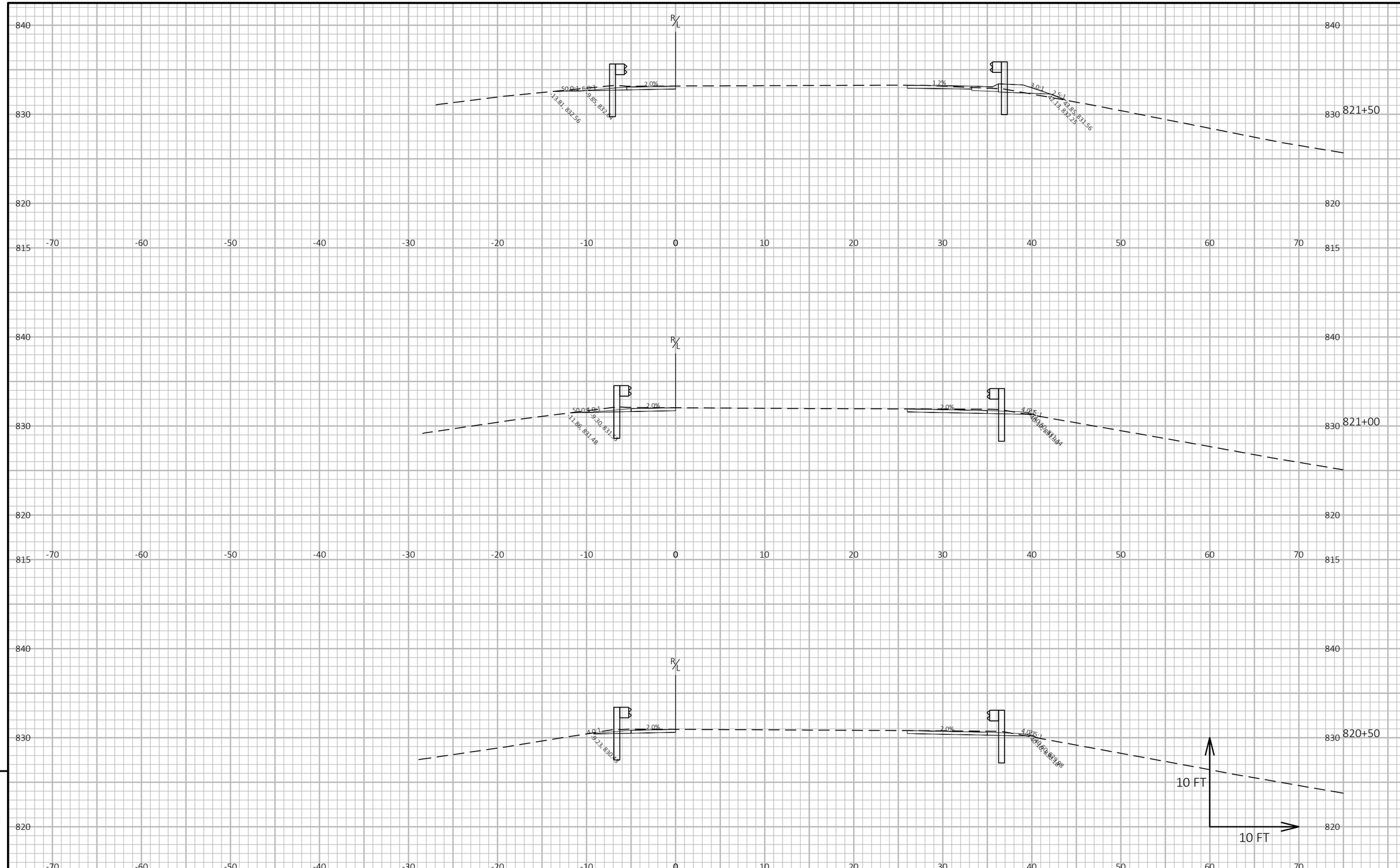

PROJECT NO: 1510-02-60	HWY: USH 10	COUNTY: WAUPACA	CROSS SECTIONS: STA 817+00 TO 822+00	SHEET 309	E

FILE NAME : Y:\MILWAUKEE\20300S\20335.01\ENG_DOCS\1510-02-60\15100260\SHEETS\090202-XS-816.DWG
LAYOUT NAME - 05
PLOT DATE : 7/28/2025 1:58 PM
PLOT BY : WEIGAND, BEN
PLOT NAME :
PLOT SCALE : 1 IN:10 FT HORZ. / 1 IN:10 FT VERT.
WISDOT/CADDS SHEET 49

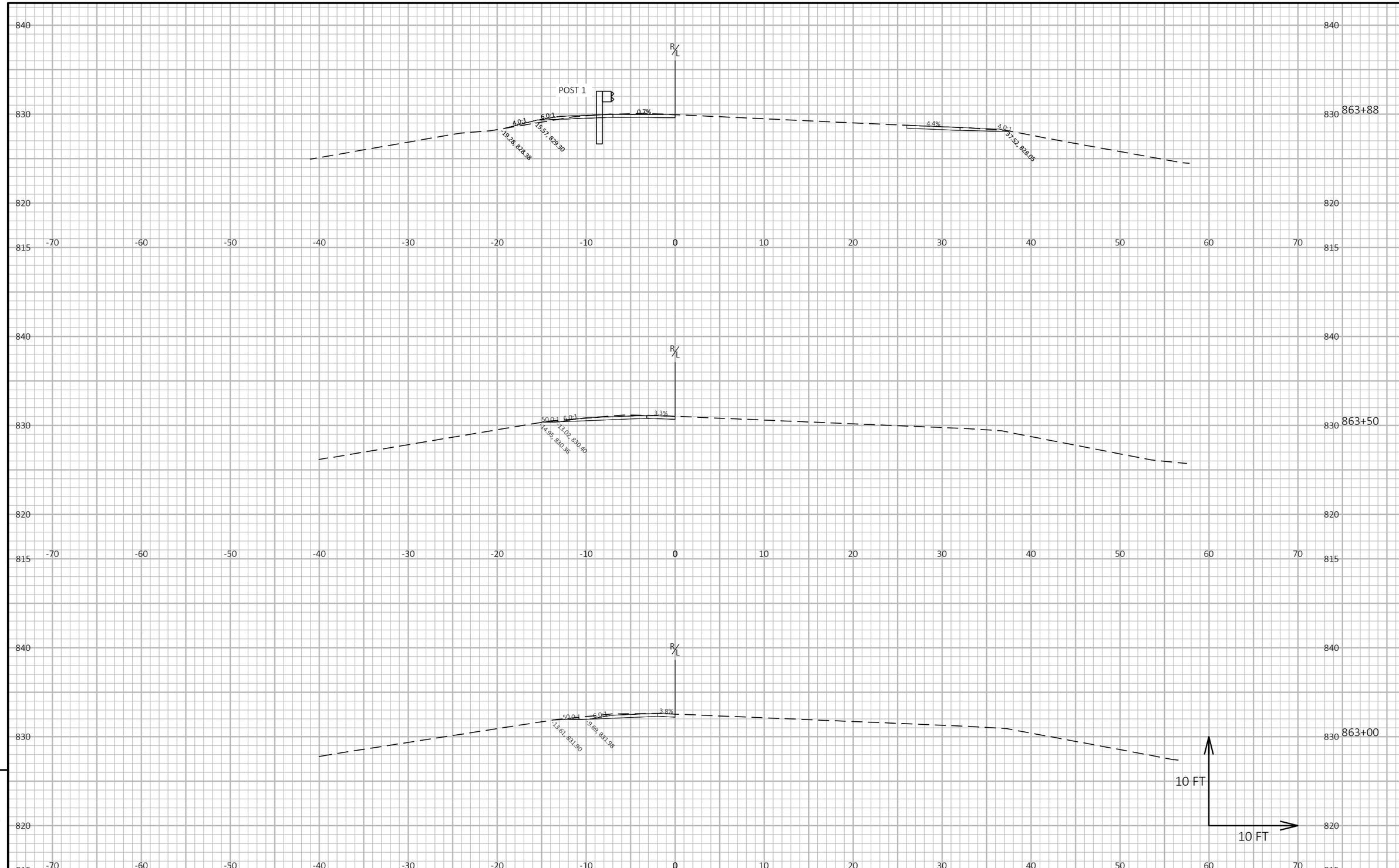

PROJECT NO: 1510-02-60	HWY: USH 10	COUNTY: WAUPACA	CROSS SECTIONS: STA 863+00 TO 868+50	SHEET 310	E

FILE NAME : Y:\MILWAUKEE\20300S\20335.01\ENG_DOCS\1510-02-60\15100260\SHEETS\090203-XS-862.DWG
LAYOUT NAME - 06
PLOT DATE : 7/28/2025 1:58 PM
PLOT BY : WEIGAND, BEN
PLOT NAME :
PLOT SCALE : 1 IN:10 FT HORZ. / 1 IN:10 FT VERT.
WISDOT/CADDS SHEET 49

9

9

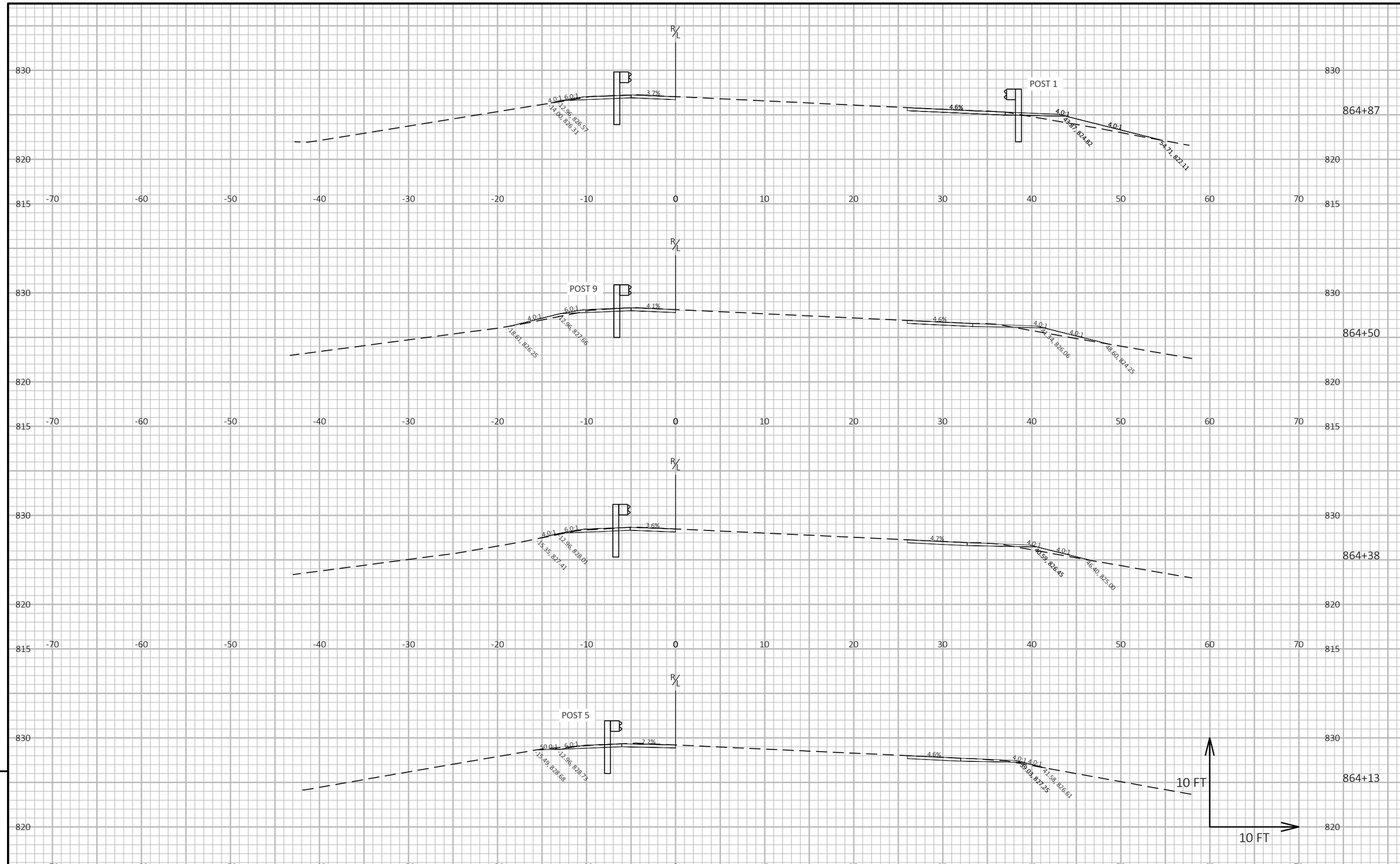

9

9

PROJECT NO: 1510-02-60	HWY: USH 10	COUNTY: WAUPACA	CROSS SECTIONS: STA 863+00 TO 868+50	SHEET 311	E

FILE NAME : Y:\MILWAUKEE\20300S\20335.01\ENG_DOCS\1510-02-60\15100260\SHEETS\090203-XS-862.DWG
LAYOUT NAME - 07

PLOT DATE : 7/28/2025 1:58 PM PLOT BY : WEIGAND, BEN PLOT NAME : **PLOT SCALE :** 1 IN:10 FT HORZ. / 1 IN:10 FT VERT.

WISDOT/CADDS SHEET 49

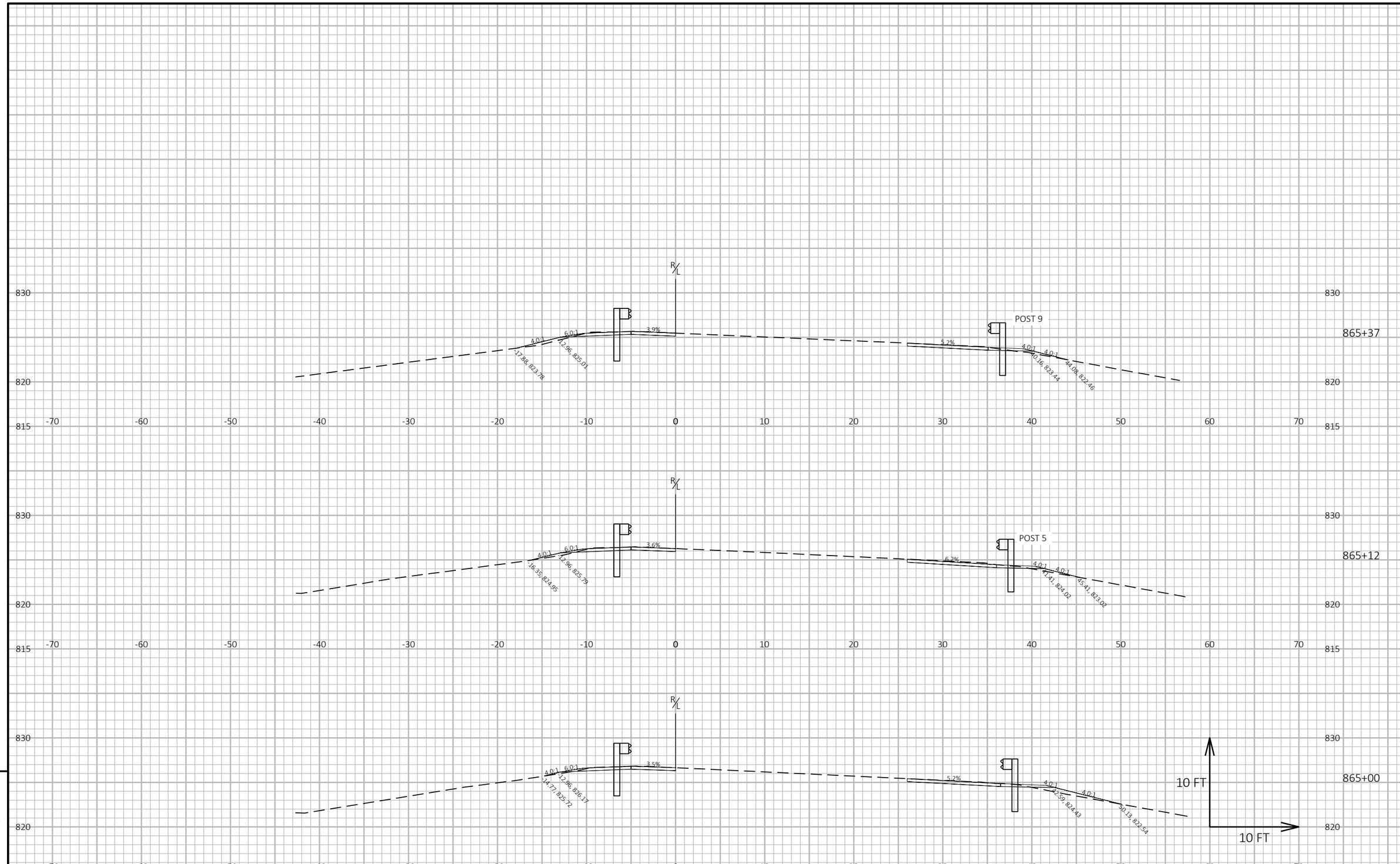

9

9

PROJECT NO: 1510-02-60	HWY: USH 10	COUNTY: WAUPACA	CROSS SECTIONS: STA 863+00 TO 868+50	SHEET 312	E

FILE NAME : Y:\MILWAUKEE\20300S\20335.01\ENG_DOCS\1510-02-60\15100260\SHEETS\090203-XS-862.DWG
LAYOUT NAME - 08

PLOT DATE : 7/28/2025 1:58 PM PLOT BY : WEIGAND, BEN PLOT NAME : **PLOT SCALE :** 1 IN:10 FT HORZ. / 1 IN:10 FT VERT.

WISDOT/CADDS SHEET 49

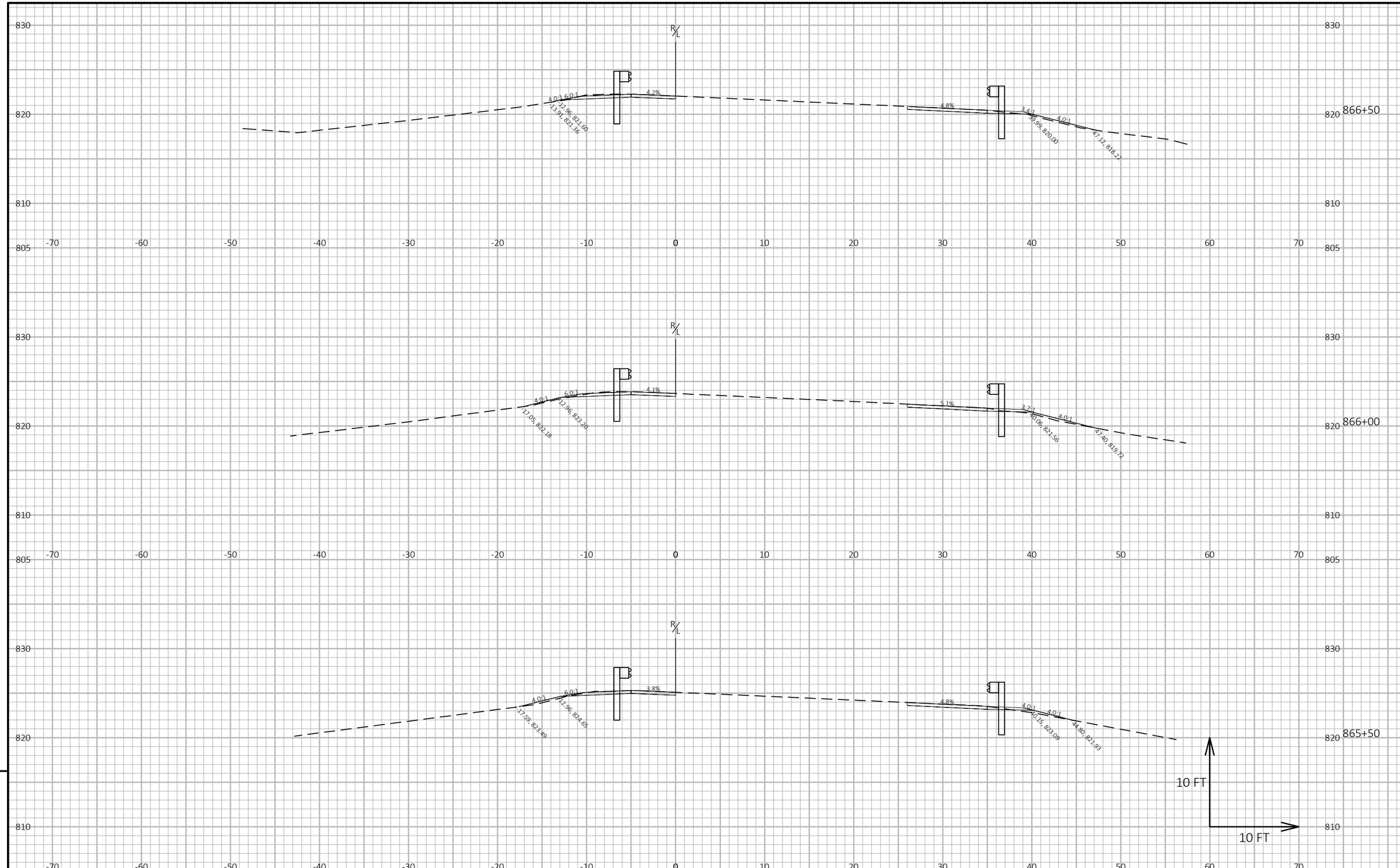

PROJECT NO: 1510-02-60	HWY: USH 10	COUNTY: WAUPACA	CROSS SECTIONS: STA 863+00 TO 868+50	SHEET 313	E

FILE NAME : Y:\MILWAUKEE\20300S\20335.01\ENG_DOCS\1510-02-60\15100260\SHEETS\090203-XS-862.DWG
LAYOUT NAME - 09
PLOT DATE : 7/28/2025 1:58 PM
PLOT BY : WEIGAND, BEN
PLOT NAME :
PLOT SCALE : 1 IN:10 FT HORZ. / 1 IN:10 FT VERT.
WISDOT/CADDS SHEET 49

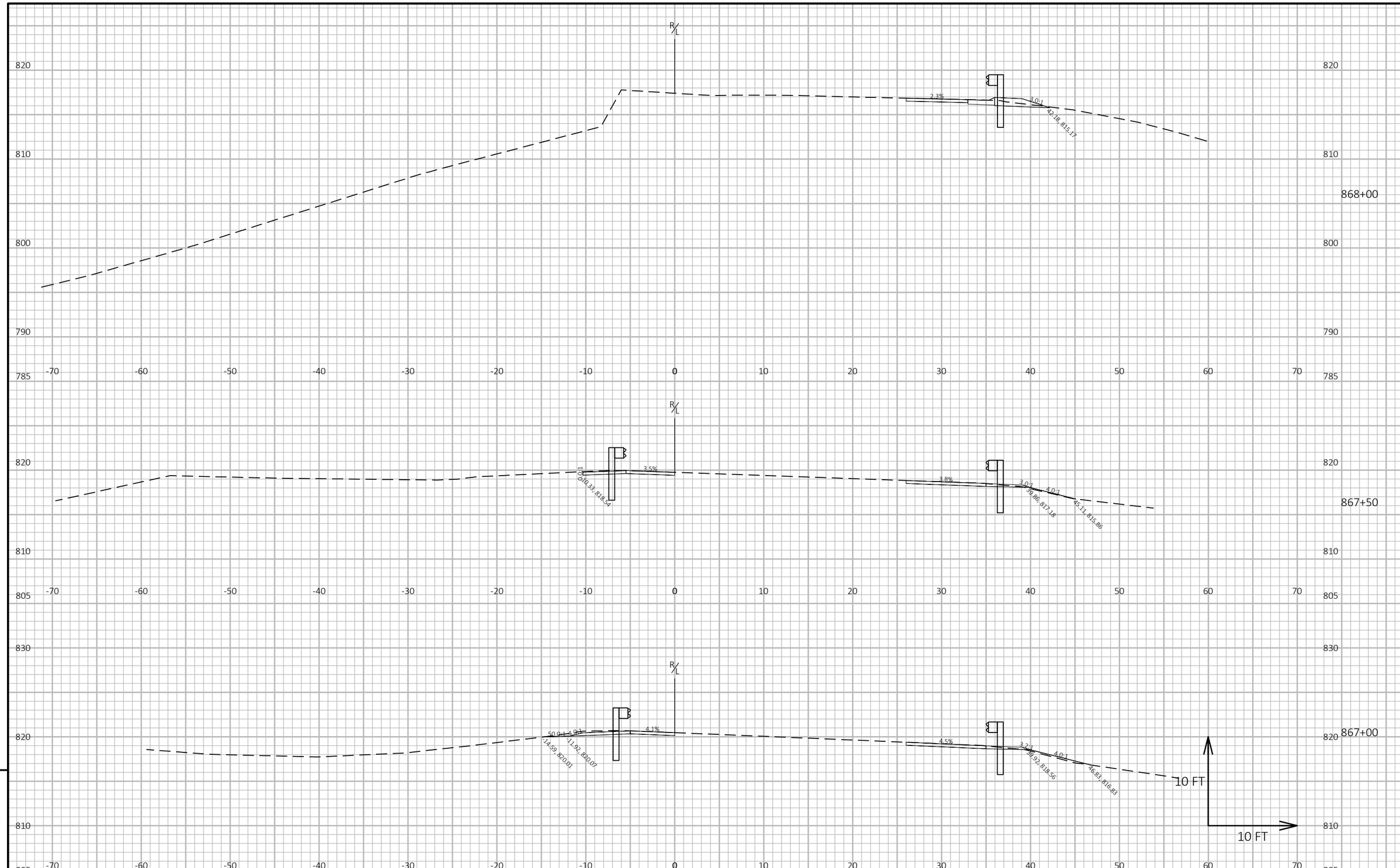

PROJECT NO: 1510-02-60	HWY: USH 10	COUNTY: WAUPACA	CROSS SECTIONS: STA 863+00 TO 868+50	SHEET 314	E

FILE NAME : Y:\MILWAUKEE\20300S\20335.01\ENG_DOCS\1510-02-60\15100260\SHEETS\090203-XS-862.DWG
LAYOUT NAME - 10
PLOT DATE : 7/28/2025 1:58 PM
PLOT BY : WEIGAND, BEN
PLOT NAME :
PLOT SCALE : 1 IN:10 FT HORZ. / 1 IN:10 FT VERT.
WISDOT/CADDS SHEET 49

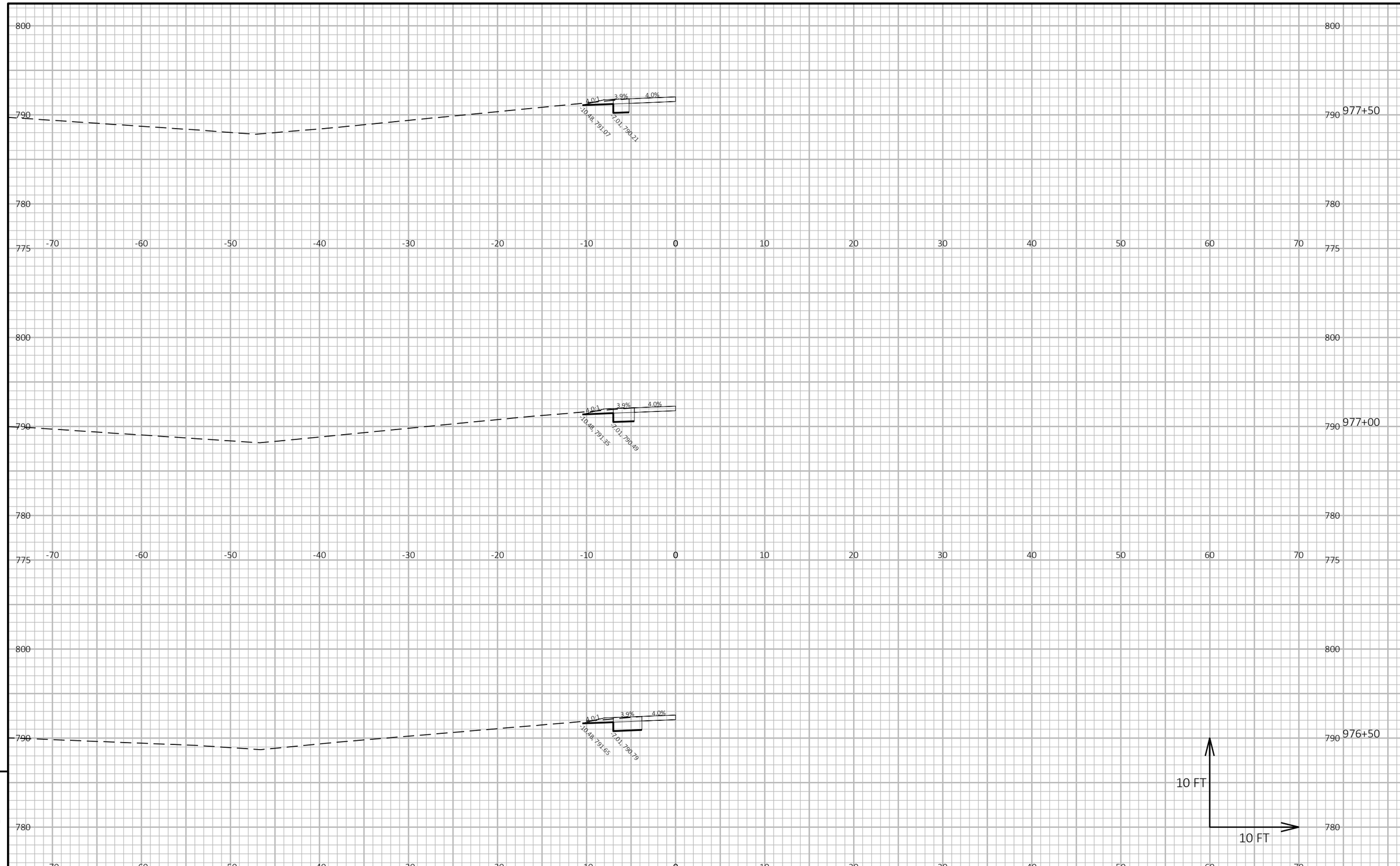

9

9

PROJECT NO: 1510-02-60	HWY: USH 10	COUNTY: WAUPACA	CROSS SECTIONS: WIDENING STA 976 TO STA 994	SHEET 315	E

FILE NAME : Y:\MILWAUKEE\20300S\20335.01\ENG_DOCS\1510-02-60\15100260\SHEETS\090205-XS-WIDE.DWG
LAYOUT NAME - 01

PLOT DATE : 7/28/2025 1:59 PM PLOT BY : WEIGAND, BEN PLOT NAME : **PLOT SCALE :** 1 IN:10 FT HORZ. / 1 IN:10 FT VERT.

WISDOT/CADDS SHEET 49

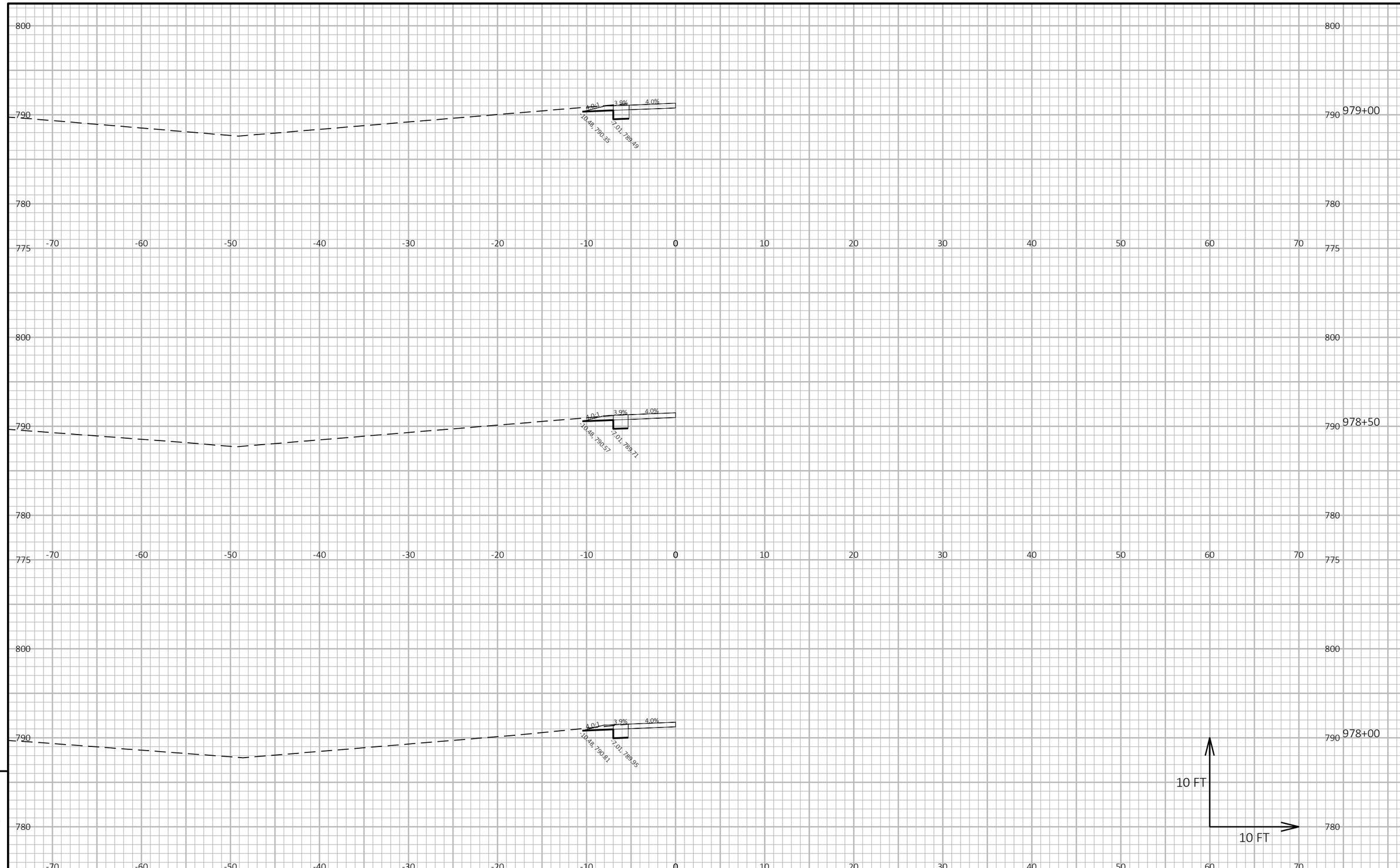

PROJECT NO: 1510-02-60	HWY: USH 10	COUNTY: WAUPACA	CROSS SECTIONS: WIDENING STA 976 TO STA 994	SHEET 316	E

FILE NAME : Y:\MILWAUKEE\20300S\20335.01\ENG_DOCS\1510-02-60\15100260\SHEETS\090205-XS-WIDE.DWG
LAYOUT NAME - 02
PLOT DATE : 7/28/2025 1:59 PM
PLOT BY : WEIGAND, BEN
PLOT NAME :
PLOT SCALE : 1 IN:10 FT HORZ. / 1 IN:10 FT VERT.
WISDOT/CADDS SHEET 49

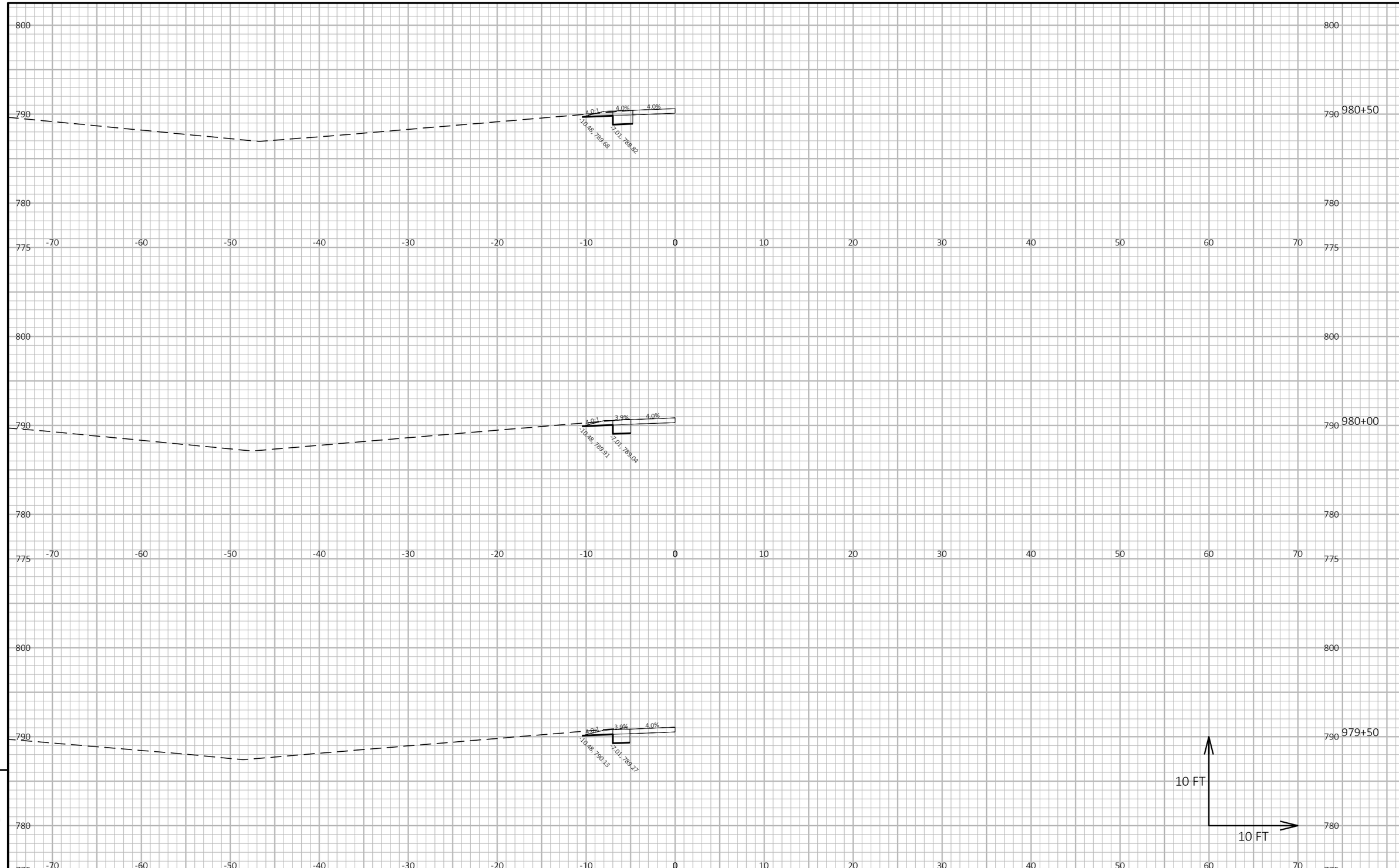

PROJECT NO: 1510-02-60	HWY: USH 10	COUNTY: WAUPACA	CROSS SECTIONS: WIDENING STA 976 TO STA 994	SHEET 317	E

FILE NAME : Y:\MILWAUKEE\20300S\20335.01\ENG_DOCS\1510-02-60\15100260\SHEETS\090205-XS-WIDE.DWG
LAYOUT NAME - 03
PLOT DATE : 7/28/2025 1:59 PM
PLOT BY : WEIGAND, BEN
PLOT NAME :
PLOT SCALE : 1 IN:10 FT HORZ. / 1 IN:10 FT VERT.
WISDOT/CADDS SHEET 49

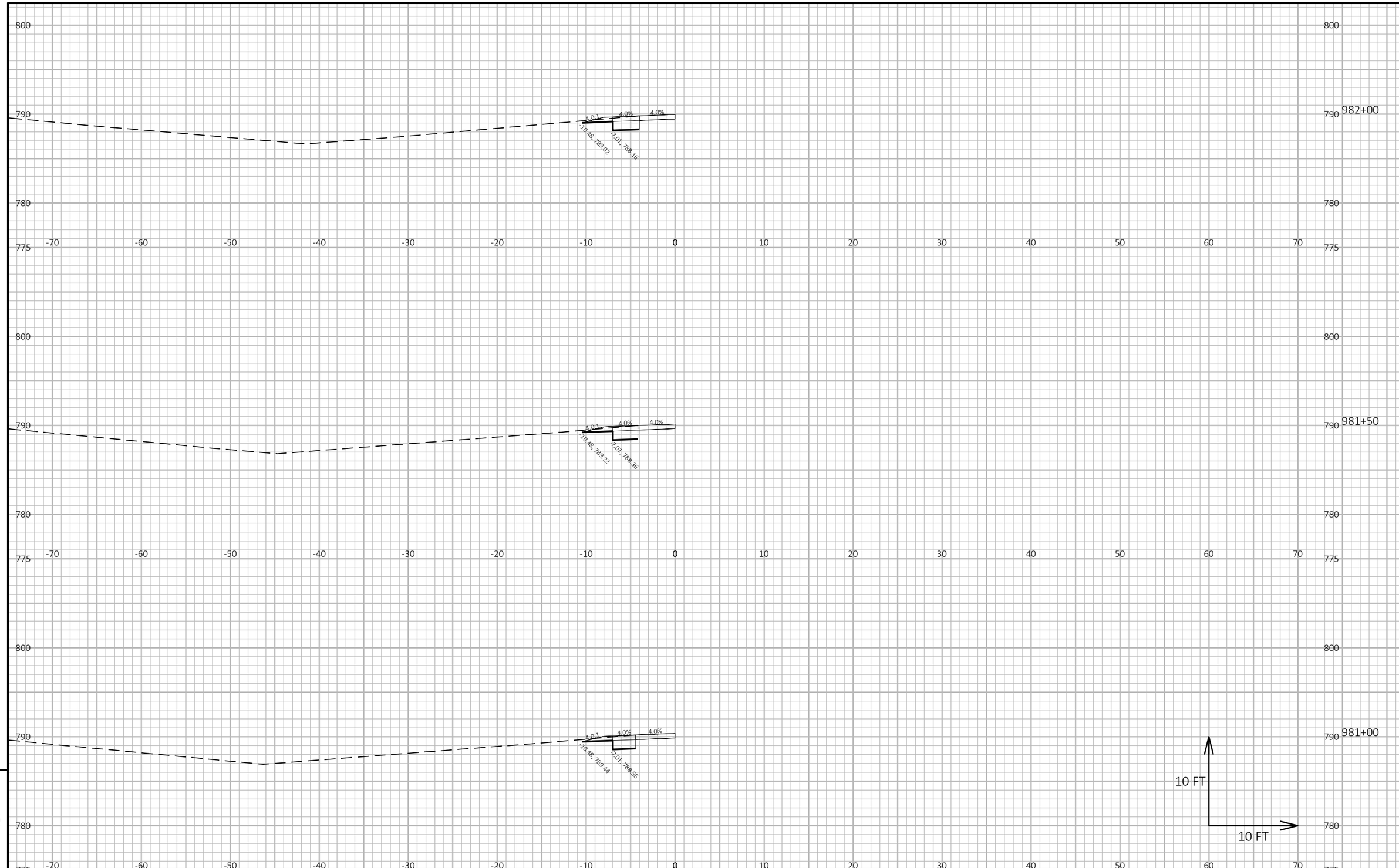

PROJECT NO: 1510-02-60	HWY: USH 10	COUNTY: WAUPACA	CROSS SECTIONS: WIDENING STA 976 TO STA 994	SHEET 318	E

FILE NAME : Y:\MILWAUKEE\20300S\20335.01\ENG_DOCS\1510-02-60\15100260\SHEETS\090205-XS-WIDE.DWG
LAYOUT NAME - 04
PLOT DATE : 7/28/2025 1:59 PM
PLOT BY : WEIGAND, BEN
PLOT NAME :
PLOT SCALE : 1 IN:10 FT HORZ. / 1 IN:10 FT VERT.
WISDOT/CADDS SHEET 49

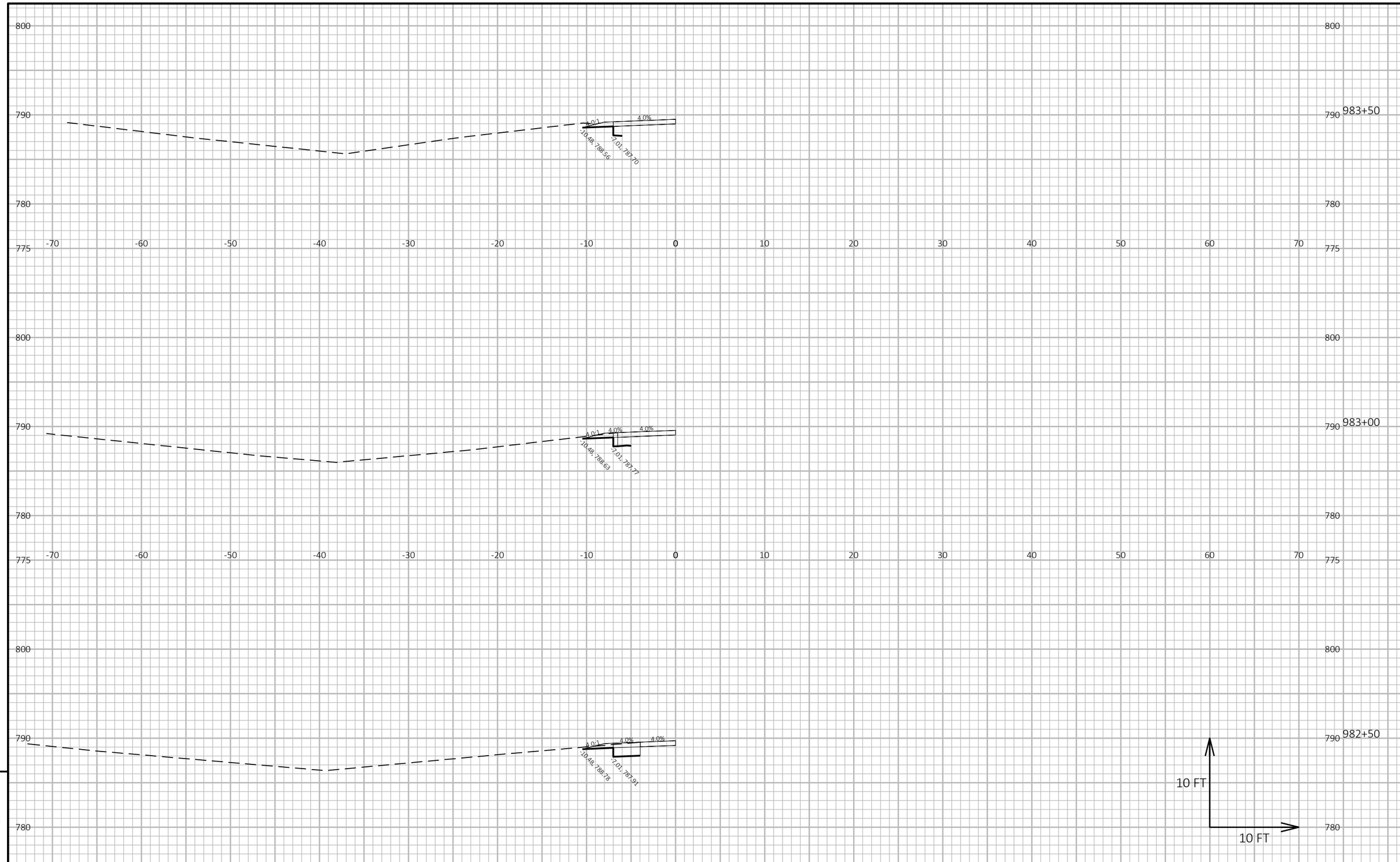

9

9

PROJECT NO: 1510-02-60	HWY: USH 10	COUNTY: WAUPACA	CROSS SECTIONS: WIDENING STA 976 TO STA 994	SHEET 319	E

FILE NAME : Y:\MILWAUKEE\20300S\20335.01\ENG_DOCS\1510-02-60\15100260\SHEETS\090205-XS-WIDE.DWG
LAYOUT NAME - 05

PLOT DATE : 7/28/2025 1:59 PM PLOT BY : WEIGAND, BEN PLOT NAME : PLOT SCALE : 1 IN:10 FT HORZ. / 1 IN:10 FT VERT.

WISDOT/CADDS SHEET 49

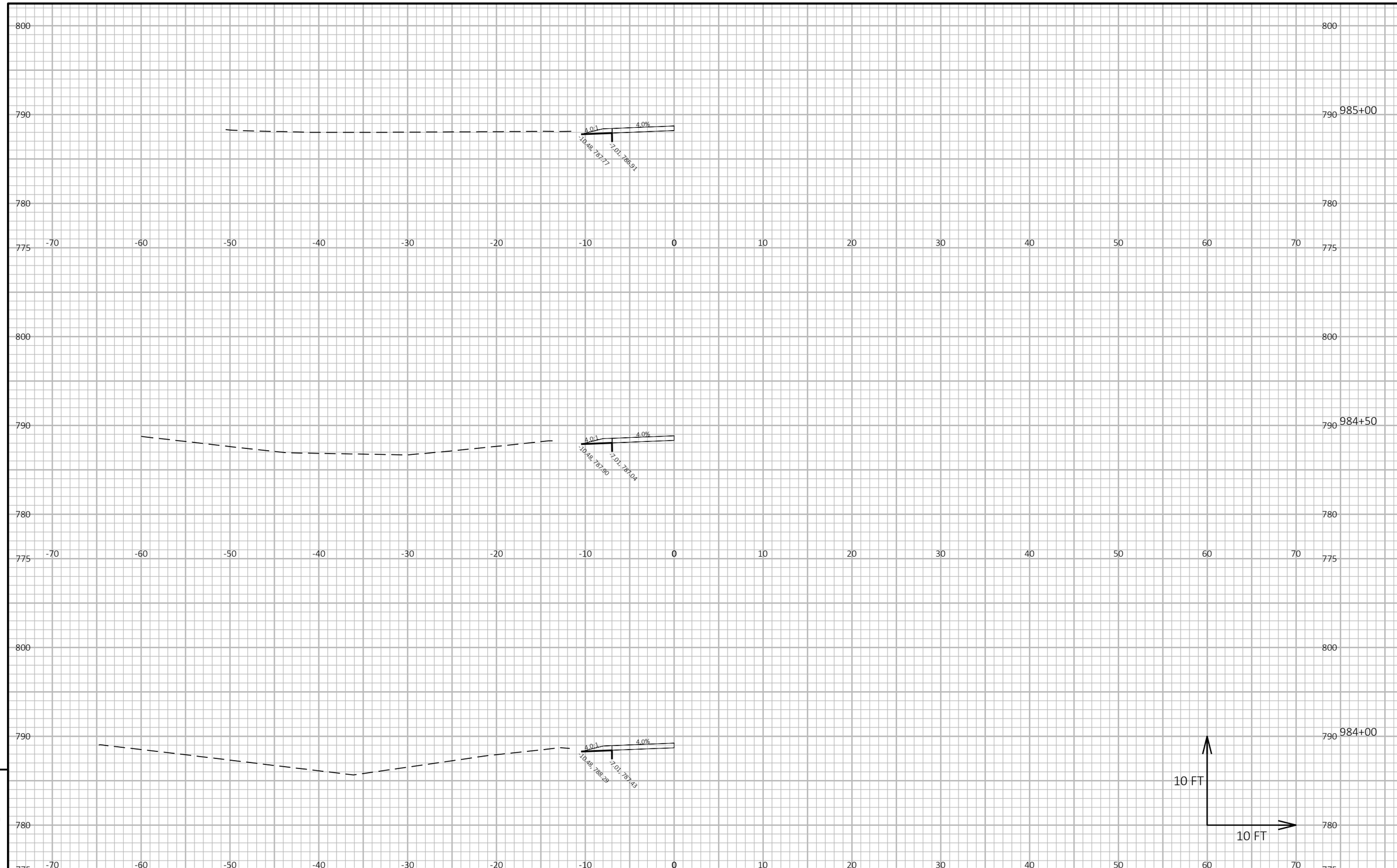

PROJECT NO: 1510-02-60	HWY: USH 10	COUNTY: WAUPACA	CROSS SECTIONS: WIDENING STA 976 TO STA 994	SHEET 320	E

FILE NAME : Y:\MILWAUKEE\20300S\20335.01\ENG_DOCS\1510-02-60\15100260\SHEETS\090205-XS-WIDE.DWG
LAYOUT NAME - 06
PLOT DATE : 7/28/2025 1:59 PM
PLOT BY : WEIGAND, BEN
PLOT NAME :
PLOT SCALE : 1 IN:10 FT HORZ. / 1 IN:10 FT VERT.

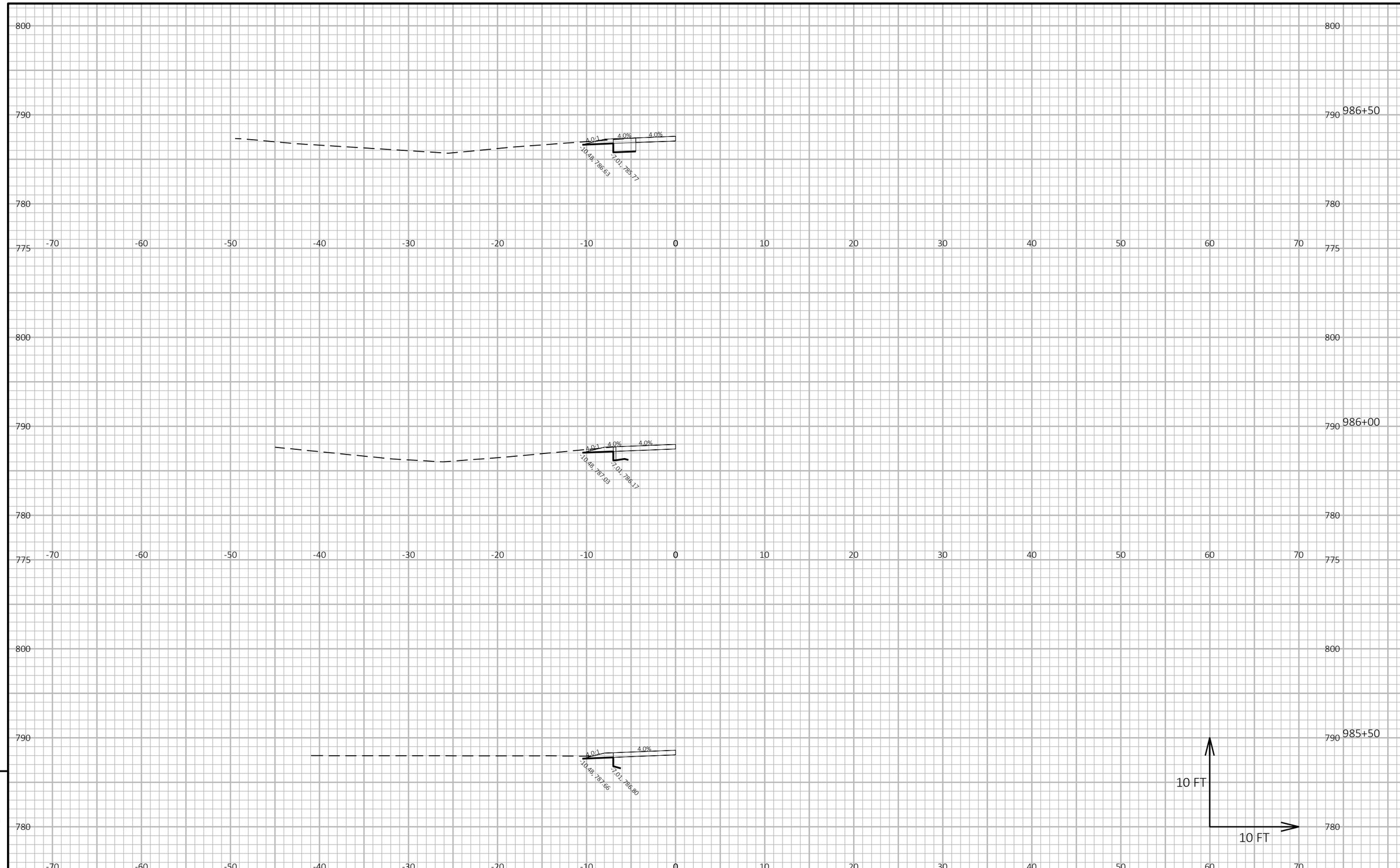

9

9

PROJECT NO: 1510-02-60	HWY: USH 10	COUNTY: WAUPACA	CROSS SECTIONS: WIDENING STA 976 TO STA 994	SHEET 321	E

FILE NAME : Y:\MILWAUKEE\20300S\20335.01\ENG_DOCS\1510-02-60\15100260\SHEETS\090205-XS-WIDE.DWG
LAYOUT NAME - 07

PLOT DATE : 7/28/2025 1:59 PM PLOT BY : WEIGAND, BEN PLOT NAME : PLOT SCALE : 1 IN:10 FT HORZ. / 1 IN:10 FT VERT.

WISDOT/CADDS SHEET 49

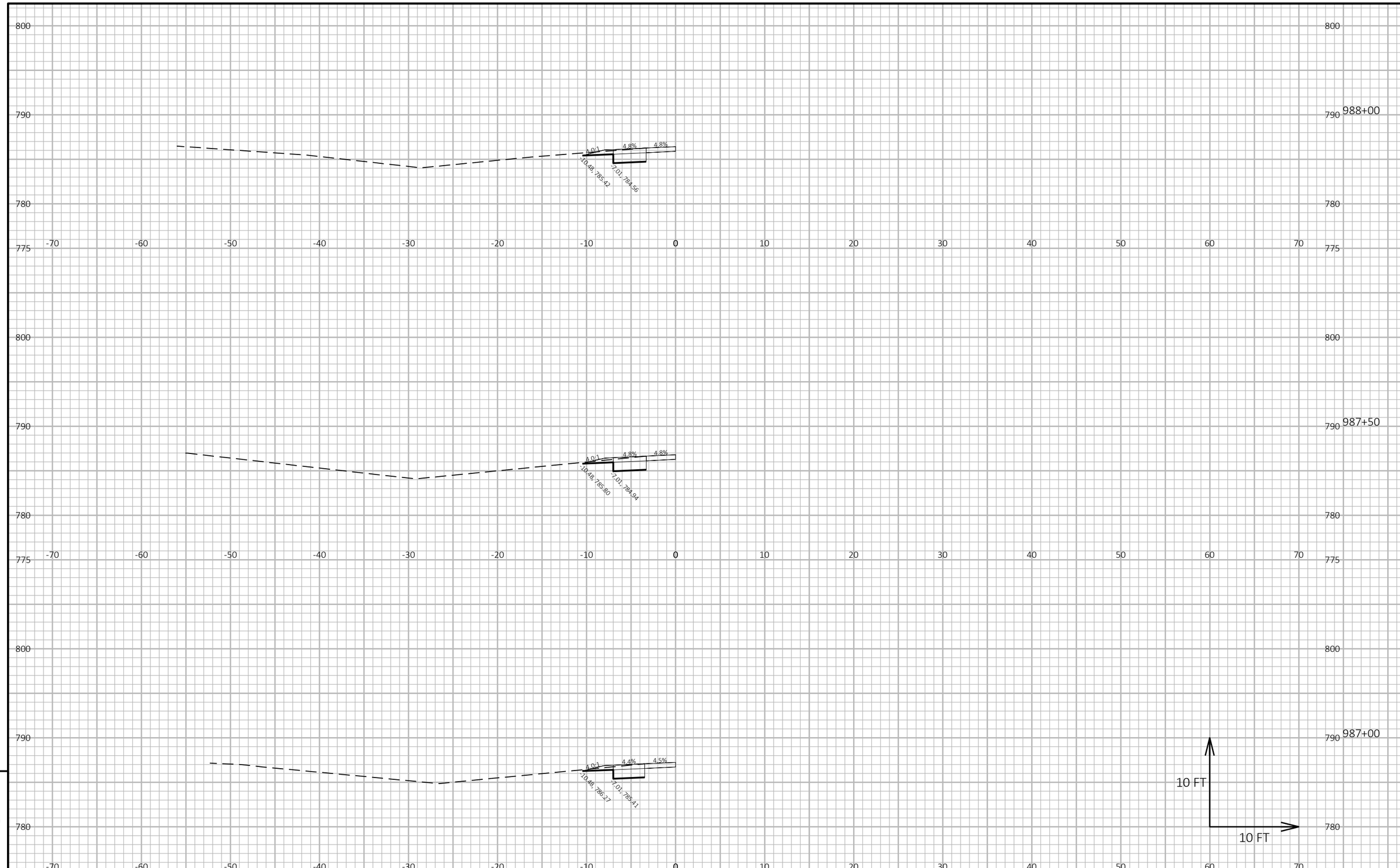

PROJECT NO: 1510-02-60	HWY: USH 10	COUNTY: WAUPACA	CROSS SECTIONS: WIDENING STA 976 TO STA 994	SHEET 322	E

FILE NAME : Y:\MILWAUKEE\20300S\20335.01\ENG_DOCS\1510-02-60\15100260\SHEETS\090205-XS-WIDE.DWG
LAYOUT NAME - 08
PLOT DATE : 7/28/2025 1:59 PM
PLOT BY : WEIGAND, BEN
PLOT NAME :
PLOT SCALE : 1 IN:10 FT HORZ. / 1 IN:10 FT VERT.
WISDOT/CADDS SHEET 49

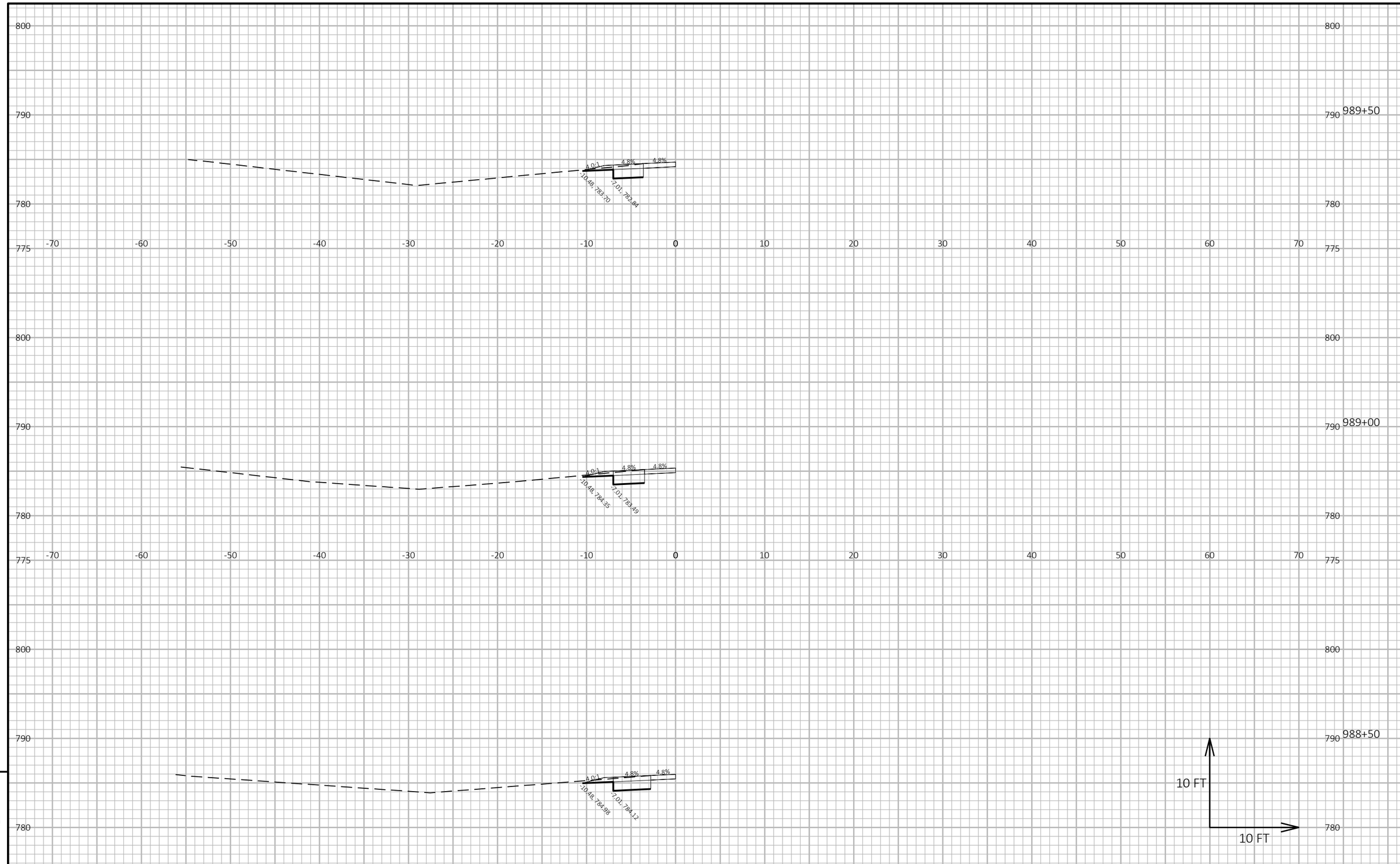

PROJECT NO: 1510-02-60	HWY: USH 10	COUNTY: WAUPACA	CROSS SECTIONS: WIDENING STA 976 TO STA 994	SHEET 323	E

FILE NAME : Y:\MILWAUKEE\20300S\20335.01\ENG_DOCS\1510-02-60\15100260\SHEETS\090205-XS-WIDE.DWG
LAYOUT NAME - 09
PLOT DATE : 7/28/2025 1:59 PM
PLOT BY : WEIGAND, BEN
PLOT NAME :
PLOT SCALE : 1 IN:10 FT HORZ. / 1 IN:10 FT VERT.
WISDOT/CADDS SHEET 49

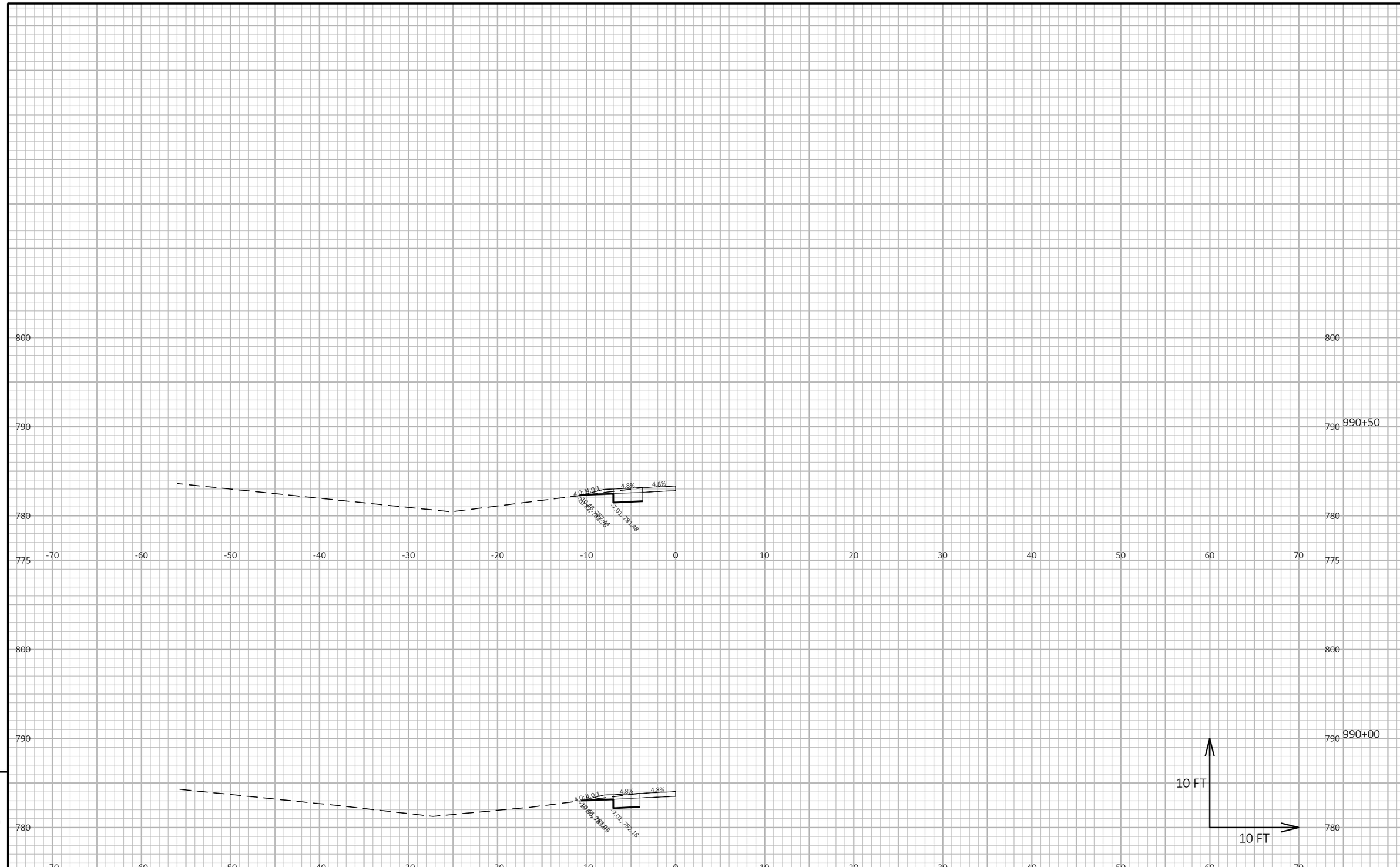

PROJECT NO: 1510-02-60	HWY: USH 10	COUNTY: WAUPACA	CROSS SECTIONS: WIDENING STA 976 TO STA 994	SHEET 324	E

FILE NAME : Y:\MILWAUKEE\20300S\20335.01\ENG_DOCS\1510-02-60\15100260\SHEETS\090205-XS-WIDE.DWG
LAYOUT NAME - 10
PLOT DATE : 7/28/2025 1:59 PM
PLOT BY : WEIGAND, BEN
PLOT NAME :
PLOT SCALE : 1 IN:10 FT HORZ. / 1 IN:10 FT VERT.
WISDOT/CADDS SHEET 49

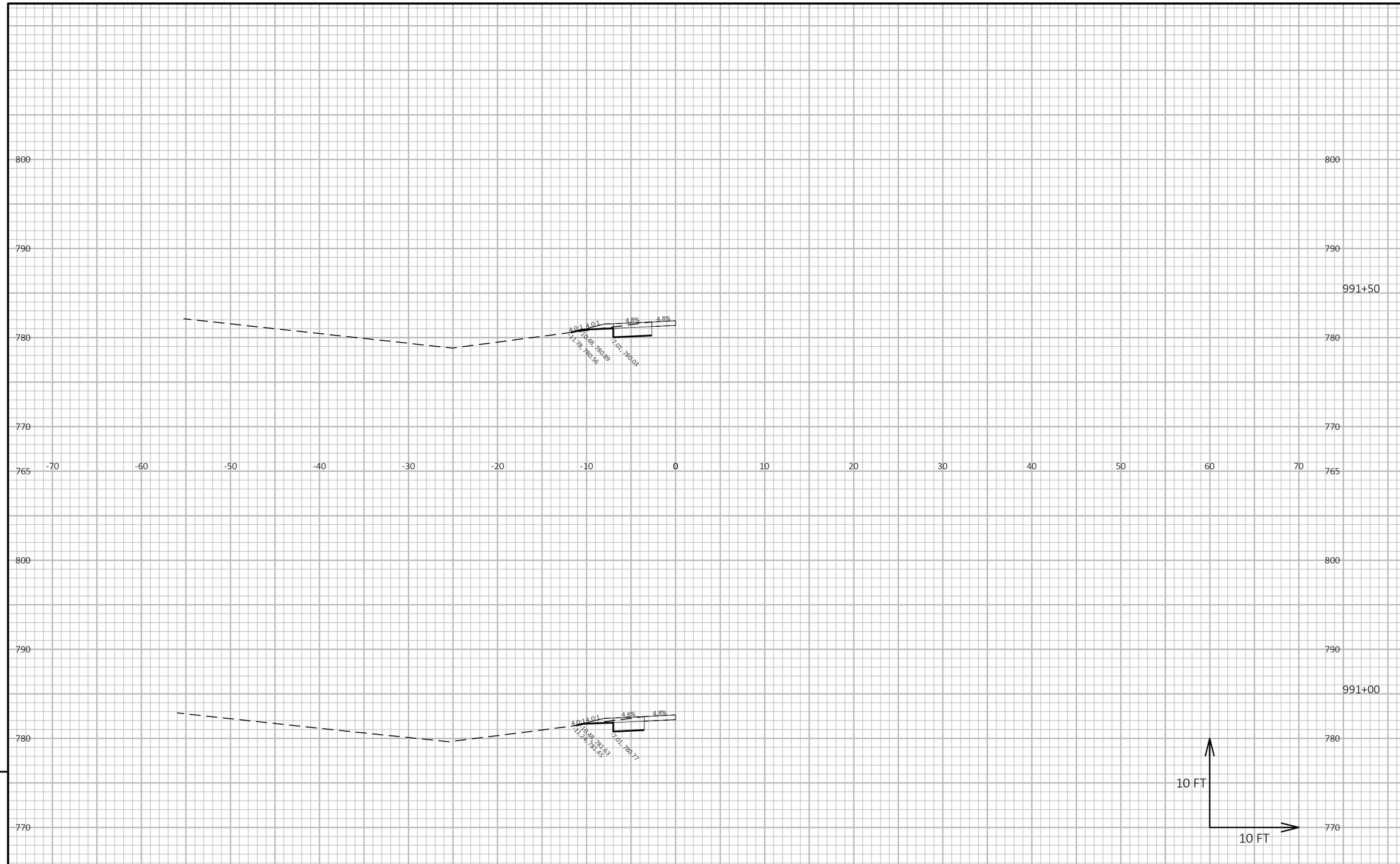

PROJECT NO: 1510-02-60	HWY: USH 10	COUNTY: WAUPACA	CROSS SECTIONS: WIDENING STA 976 TO STA 994	SHEET 325	E

FILE NAME : Y:\MILWAUKEE\20300S\20335.01\ENG_DOCS\1510-02-60\15100260\SHEETS\090205-XS-WIDE.DWG
LAYOUT NAME - 11
PLOT DATE : 7/28/2025 1:59 PM
PLOT BY : WEIGAND, BEN
PLOT NAME :
PLOT SCALE : 1 IN:10 FT HORZ. / 1 IN:10 FT VERT.
WISDOT/CADDS SHEET 49

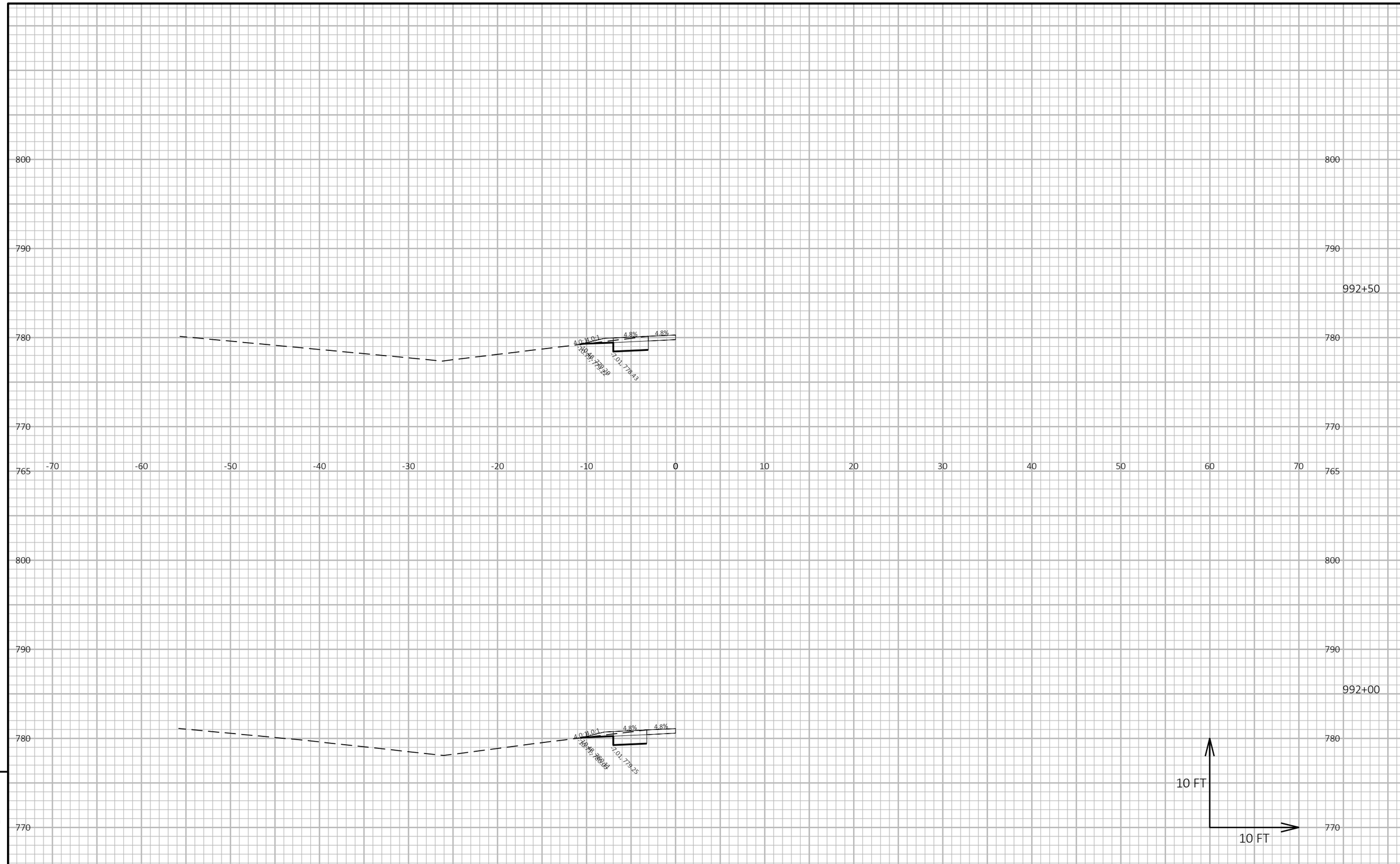

PROJECT NO: 1510-02-60	HWY: USH 10	COUNTY: WAUPACA	CROSS SECTIONS: WIDENING STA 976 TO STA 994	SHEET 326	E

FILE NAME : Y:\MILWAUKEE\20300S\20335.01\ENG_DOCS\1510-02-60\15100260\SHEETS\090205-XS-WIDE.DWG
LAYOUT NAME - 12
PLOT DATE : 7/28/2025 1:59 PM
PLOT BY : WEIGAND, BEN
PLOT NAME :
PLOT SCALE : 1 IN:10 FT HORZ. / 1 IN:10 FT VERT.
WISDOT/CADDS SHEET 49

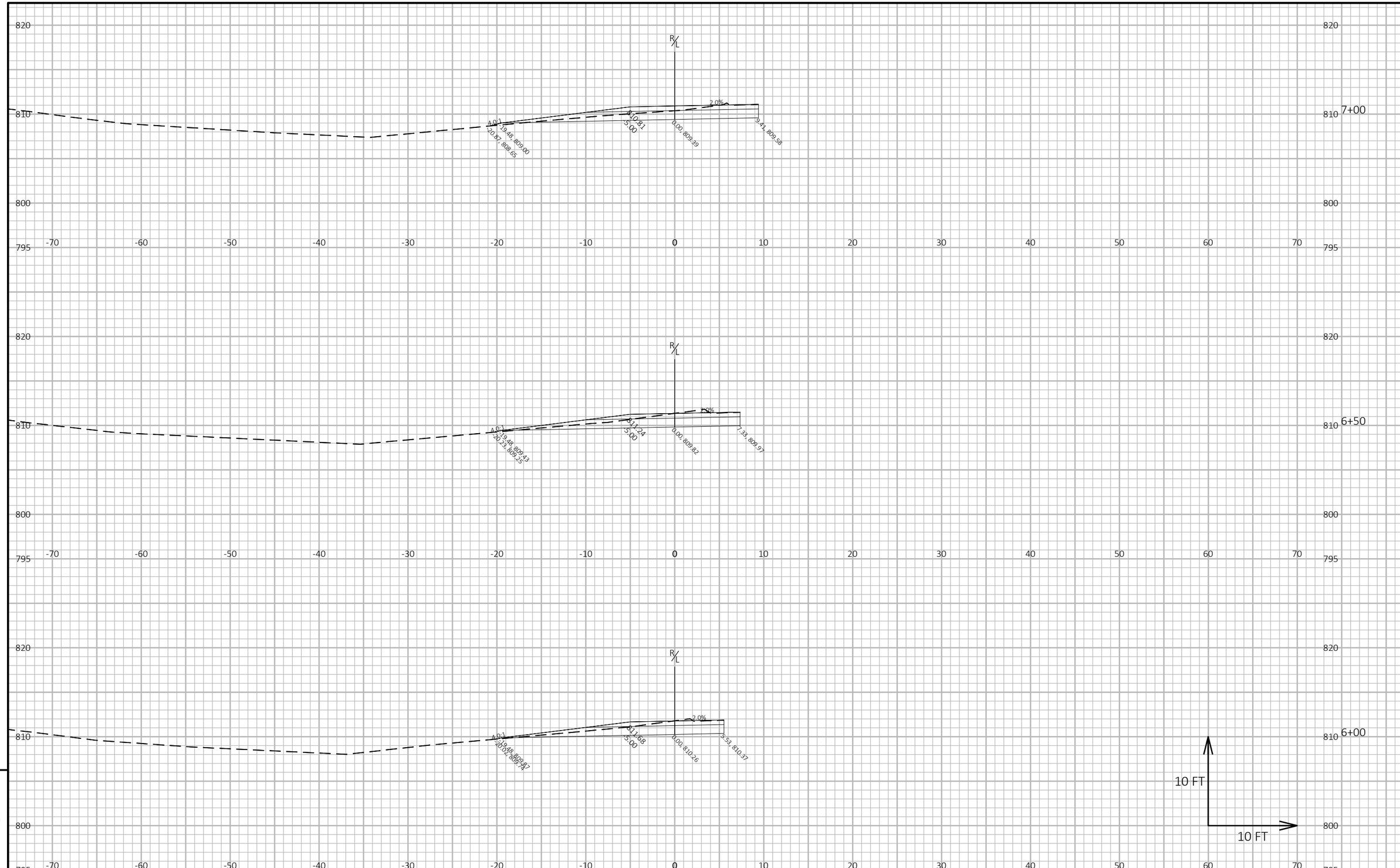

PROJECT NO: 1510-02-60	HWY: USH 10	COUNTY: WAUPACA	CROSS SECTIONS: NORTH CROSS OVER	SHEET 327	E

FILE NAME : Y:\MILWAUKEE\20300S\20335.01\ENG_DOCS\1510-02-60\15100260\SHEETS\090206-XS-XO.DWG
LAYOUT NAME - 01
PLOT DATE : 7/28/2025 2:00 PM
PLOT BY : WEIGAND, BEN
PLOT NAME :
PLOT SCALE : 1 IN:10 FT HORZ. / 1 IN:10 FT VERT.
WISDOT/CADDS SHEET 49

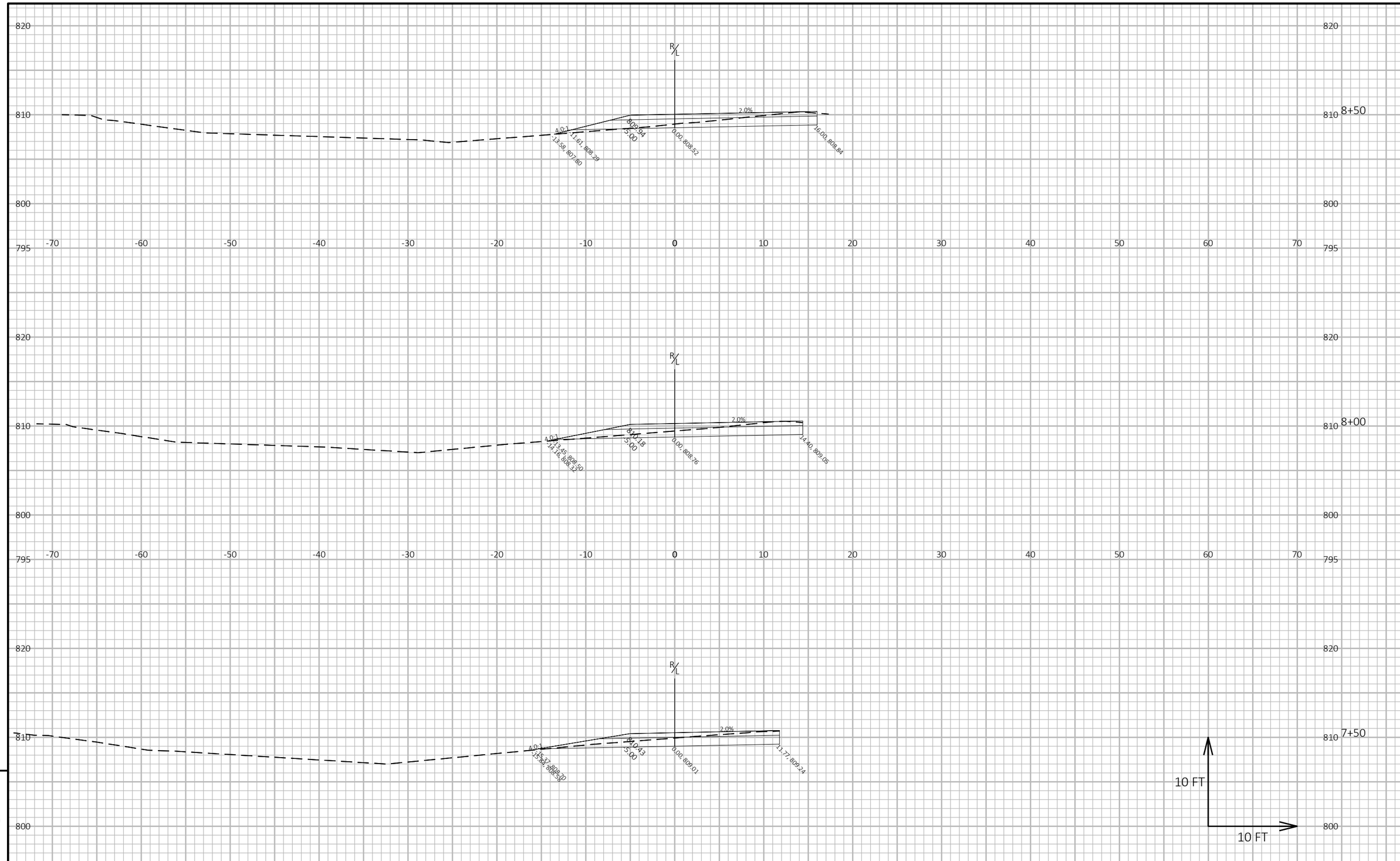

9

9

PROJECT NO: 1510-02-60	HWY: USH 10	COUNTY: WAUPACA	CROSS SECTIONS: NORTH CROSS OVER	SHEET 328	E

FILE NAME : Y:\MILWAUKEE\20300S\20335.01\ENG_DOCS\1510-02-60\15100260\SHEETS\090206-XS-XO.DWG
LAYOUT NAME - 02

PLOT DATE : 7/28/2025 2:00 PM PLOT BY : WEIGAND, BEN PLOT NAME : **PLOT SCALE :** 1 IN:10 FT HORZ. / 1 IN:10 FT VERT.

WISDOT/CADDS SHEET 49

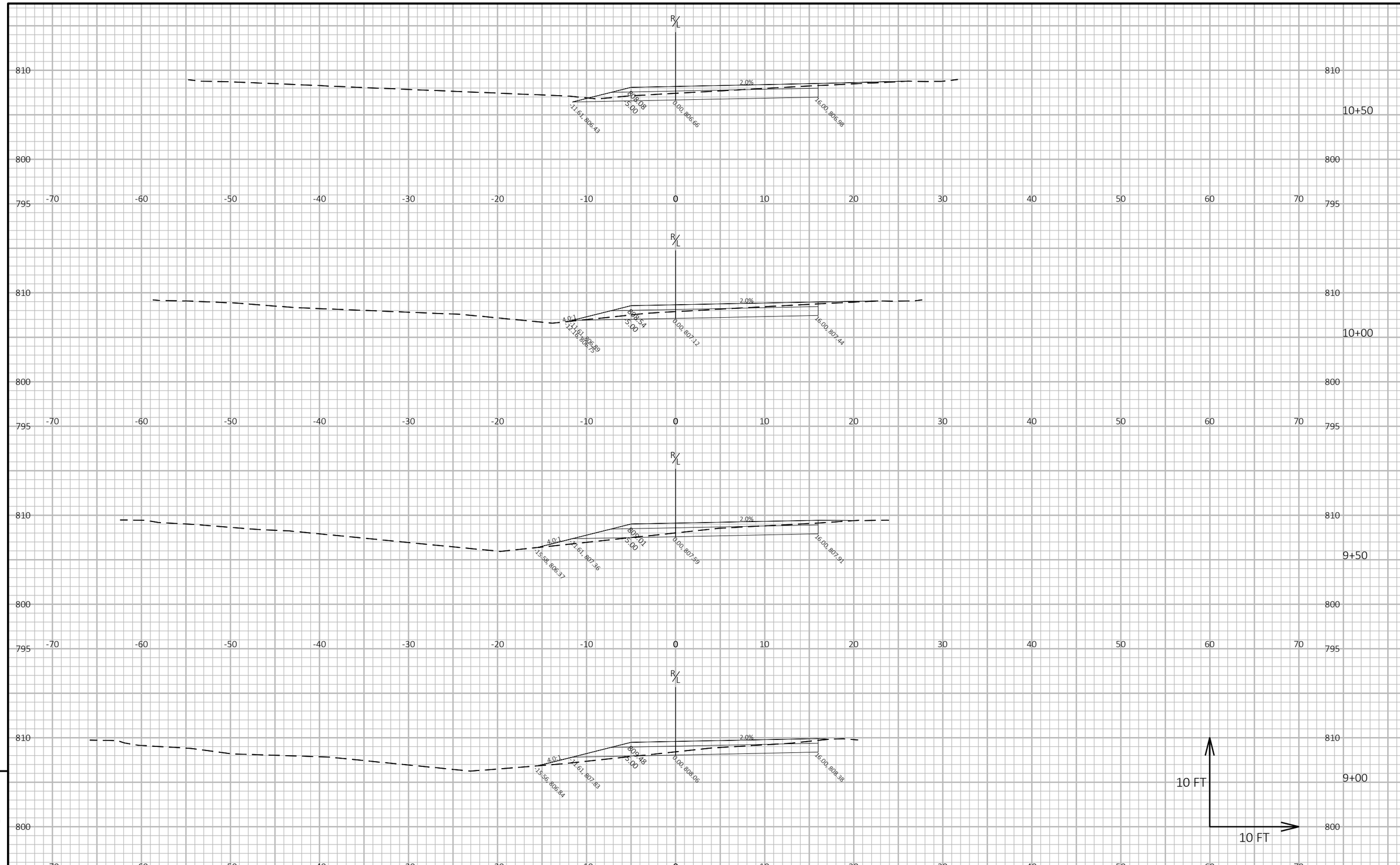

9

9

PROJECT NO: 1510-02-60	HWY: USH 10	COUNTY: WAUPACA	CROSS SECTIONS: NORTH CROSS OVER	SHEET 329	E

FILE NAME : Y:\MILWAUKEE\20300S\20335.01\ENG_DOCS\1510-02-60\15100260\SHEETS\090206-XS-XO.DWG
LAYOUT NAME - 03

PLOT DATE : 7/28/2025 2:00 PM PLOT BY : WEIGAND, BEN PLOT NAME : PLOT SCALE : 1 IN:10 FT HORZ. / 1 IN:10 FT VERT.

WISDOT/CADDS SHEET 49

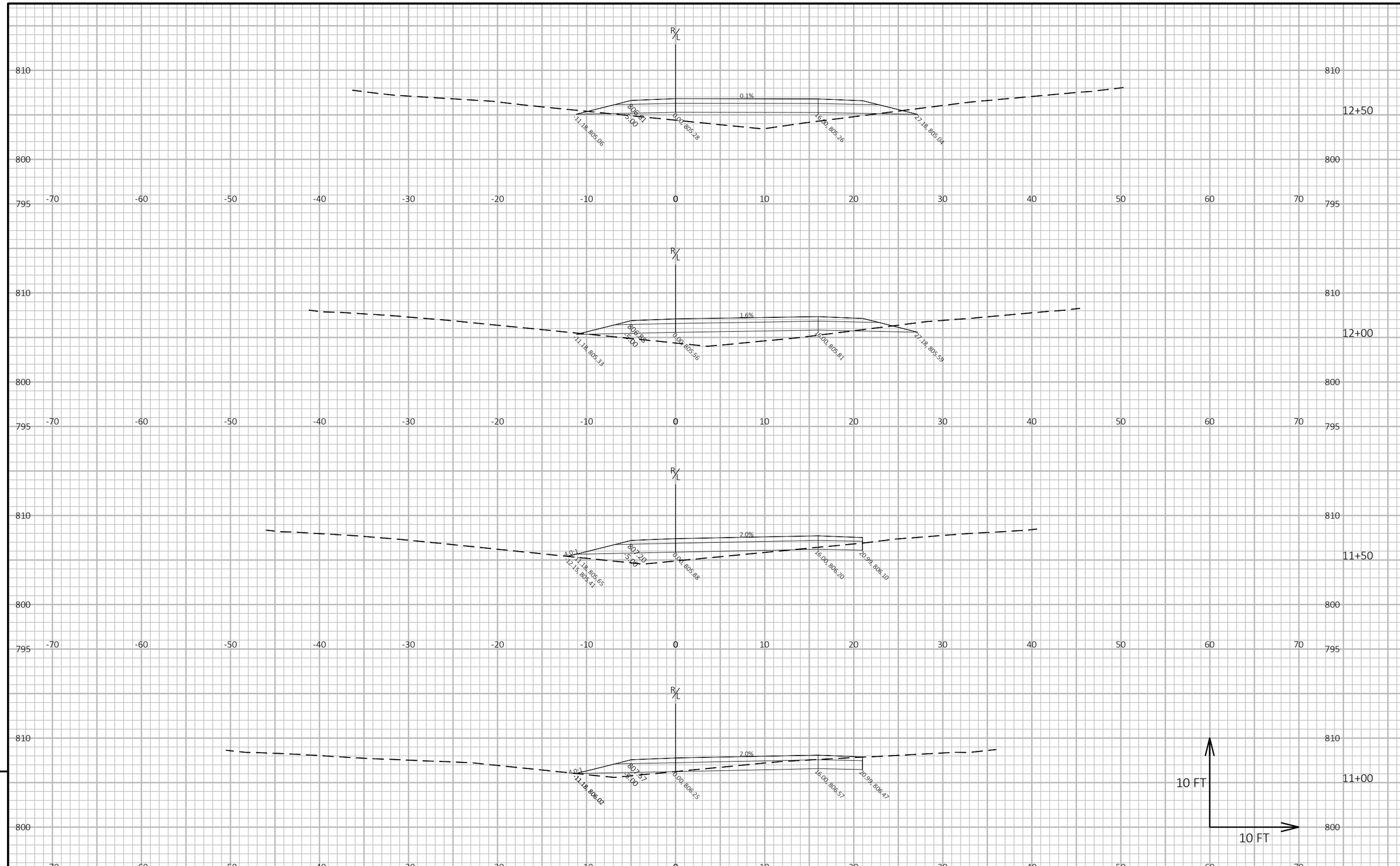

PROJECT NO: 1510-02-60	HWY: USH 10	COUNTY: WAUPACA	CROSS SECTIONS: NORTH CROSS OVER	SHEET 330	E

FILE NAME : Y:\MILWAUKEE\20300S\20335.01\ENG_DOCS\1510-02-60\15100260\SHEETS\090206-XS-XO.DWG
LAYOUT NAME - 04
PLOT DATE : 7/28/2025 2:00 PM
PLOT BY : WEIGAND, BEN
PLOT NAME :
PLOT SCALE : 1 IN:10 FT HORZ. / 1 IN:10 FT VERT.
WISDOT/CADDS SHEET 49

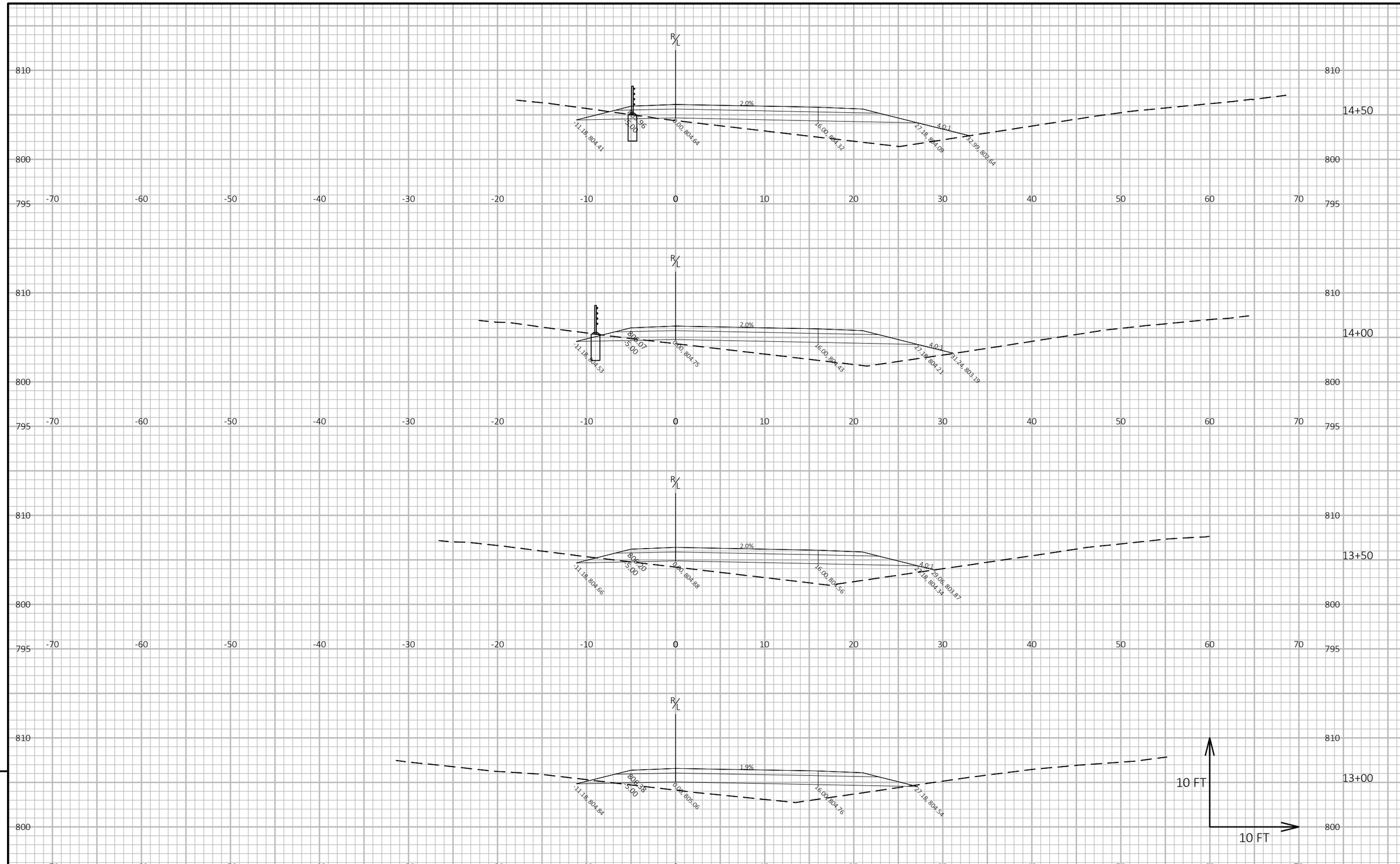

PROJECT NO: 1510-02-60	HWY: USH 10	COUNTY: WAUPACA	CROSS SECTIONS: NORTH CROSS OVER	SHEET 331	E

FILE NAME : Y:\MILWAUKEE\20300S\20335.01\ENG_DOCS\1510-02-60\15100260\SHEETS\090206-XS-XO.DWG
LAYOUT NAME - 05
PLOT DATE : 7/28/2025 2:00 PM
PLOT BY : WEIGAND, BEN
PLOT NAME :
PLOT SCALE : 1 IN:10 FT HORZ. / 1 IN:10 FT VERT.
WISDOT/CADDS SHEET 49

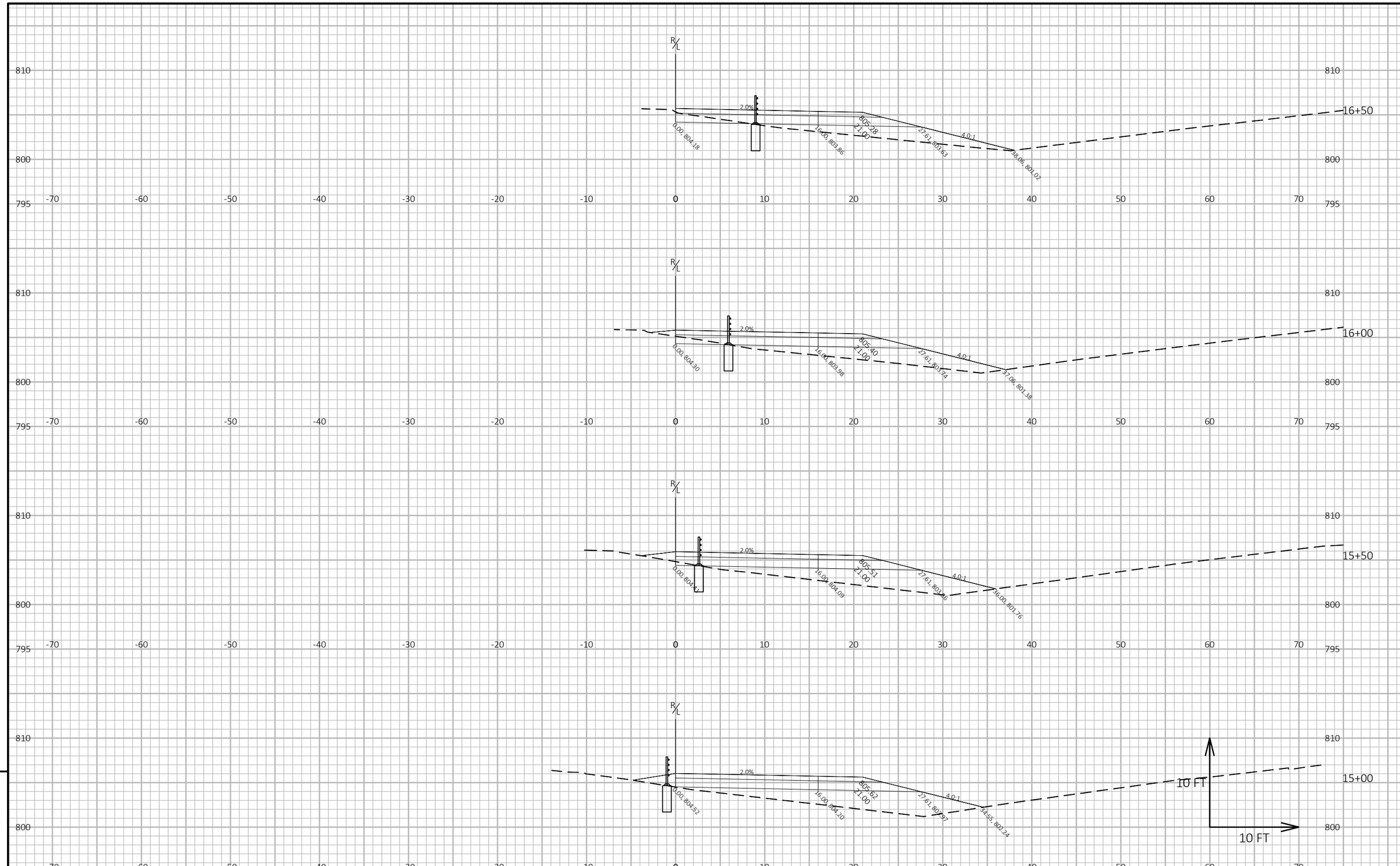

9

9

PROJECT NO: 1510-02-60	HWY: USH 10	COUNTY: WAUPACA	CROSS SECTIONS: NORTH CROSS OVER	SHEET 332	E

FILE NAME : Y:\MILWAUKEE\20300S\20335.01\ENG_DOCS\1510-02-60\15100260\SHEETS\090206-XS-XO.DWG
LAYOUT NAME - 06

PLOT DATE : 7/28/2025 2:00 PM PLOT BY : WEIGAND, BEN PLOT NAME : **PLOT SCALE :** 1 IN:10 FT HORZ. / 1 IN:10 FT VERT.

WISDOT/CADDS SHEET 49

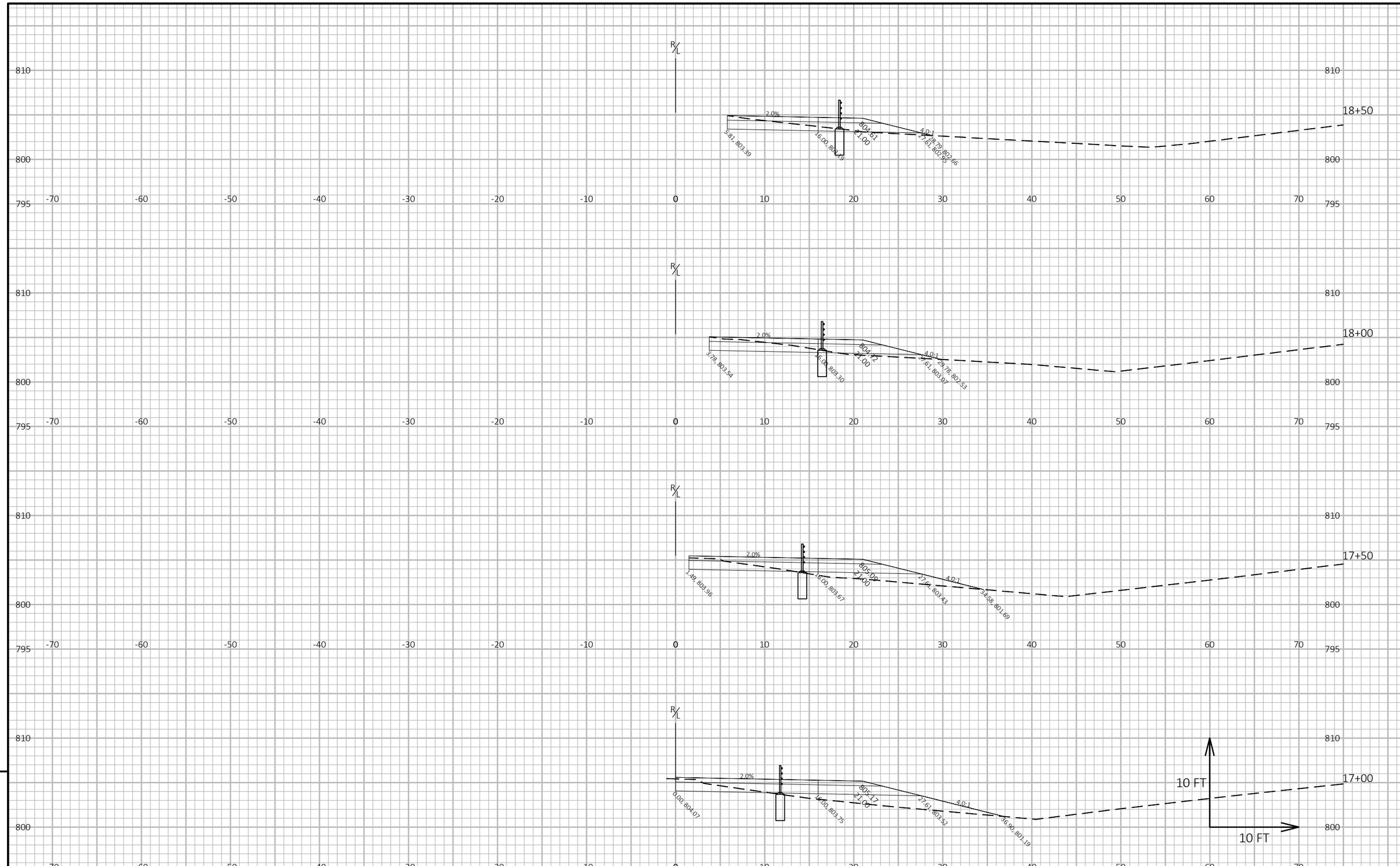

PROJECT NO: 1510-02-60	HWY: USH 10	COUNTY: WAUPACA	CROSS SECTIONS: NORTH CROSS OVER	SHEET 333	E

FILE NAME : Y:\MILWAUKEE\20300S\20335.01\ENG_DOCS\1510-02-60\15100260\SHEETS\090206-XS-XO.DWG
LAYOUT NAME - 07
PLOT DATE : 7/28/2025 2:00 PM
PLOT BY : WEIGAND, BEN
PLOT NAME :
PLOT SCALE : 1 IN:10 FT HORZ. / 1 IN:10 FT VERT.
WISDOT/CADDS SHEET 49

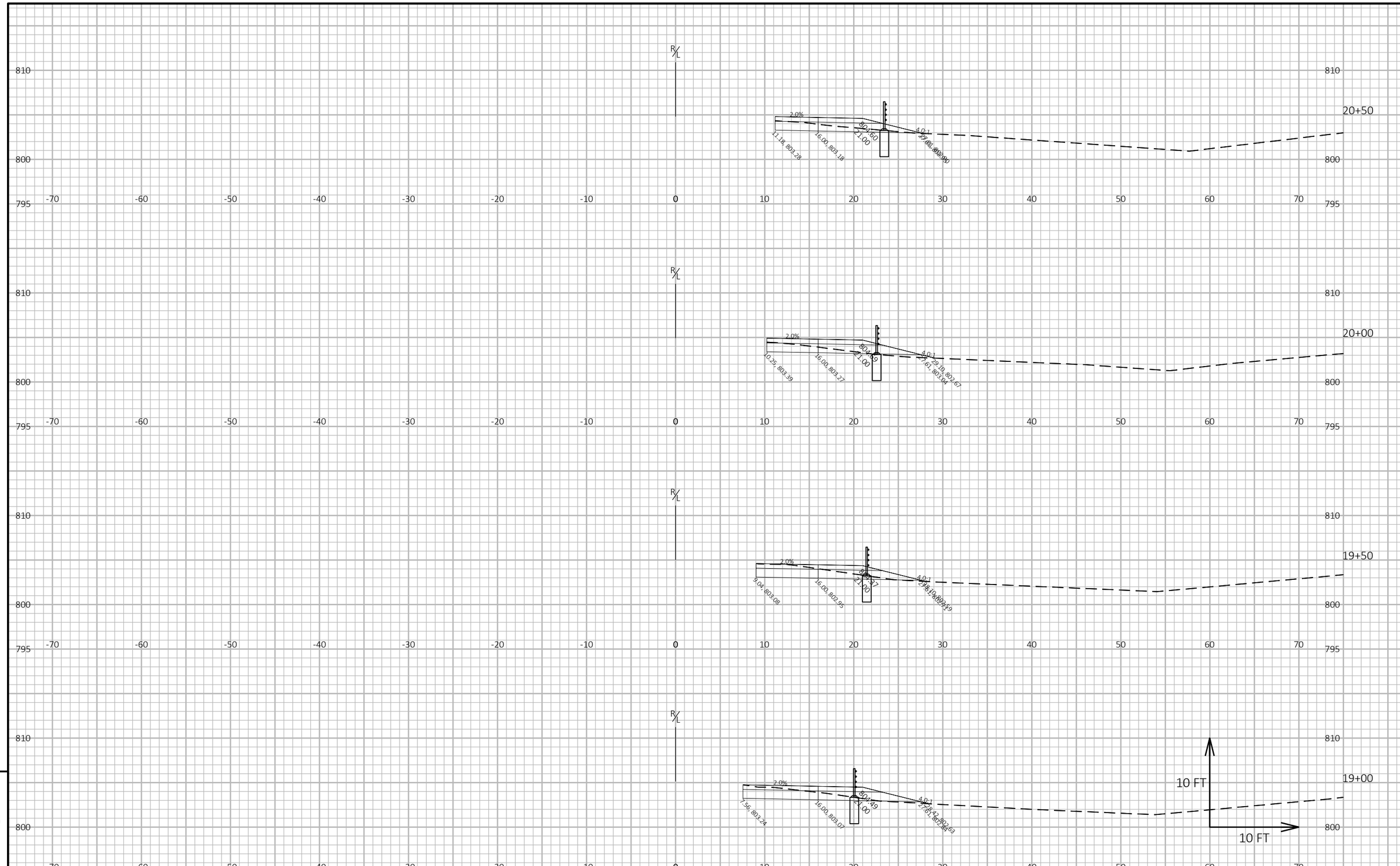

9

9

PROJECT NO: 1510-02-60	HWY: USH 10	COUNTY: WAUPACA	CROSS SECTIONS: NORTH CROSS OVER	SHEET 334	E

FILE NAME : Y:\MILWAUKEE\20300S\20335.01\ENG_DOCS\1510-02-60\15100260\SHEETS\090206-XS-XO.DWG
LAYOUT NAME - 08

PLOT DATE : 7/28/2025 2:00 PM PLOT BY : WEIGAND, BEN PLOT NAME : **PLOT SCALE :** 1 IN:10 FT HORZ. / 1 IN:10 FT VERT.

WISDOT/CADDS SHEET 49

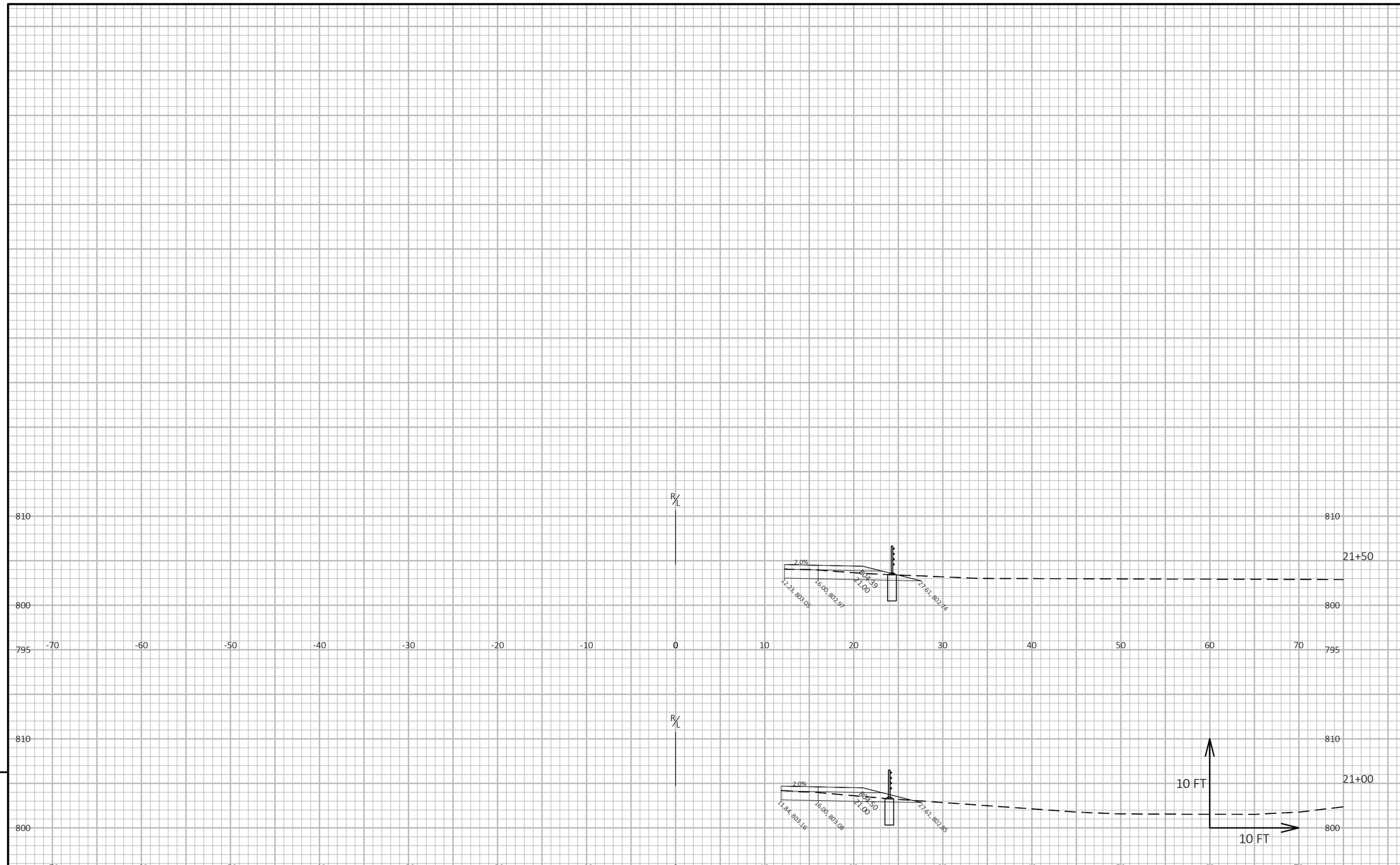

9

9

PROJECT NO: 1510-02-60	HWY: USH 10	COUNTY: WAUPACA	CROSS SECTIONS: NORTH CROSS OVER	SHEET 335	E

FILE NAME : Y:\MILWAUKEE\20300S\20335.01\ENG_DOCS\1510-02-60\15100260\SHEETS\090206-XS-XO.DWG
LAYOUT NAME - 09

PLOT DATE : 7/28/2025 2:00 PM PLOT BY : WEIGAND, BEN PLOT NAME : **PLOT SCALE :** 1 IN:10 FT HORZ. / 1 IN:10 FT VERT.

WISDOT/CADDS SHEET 49

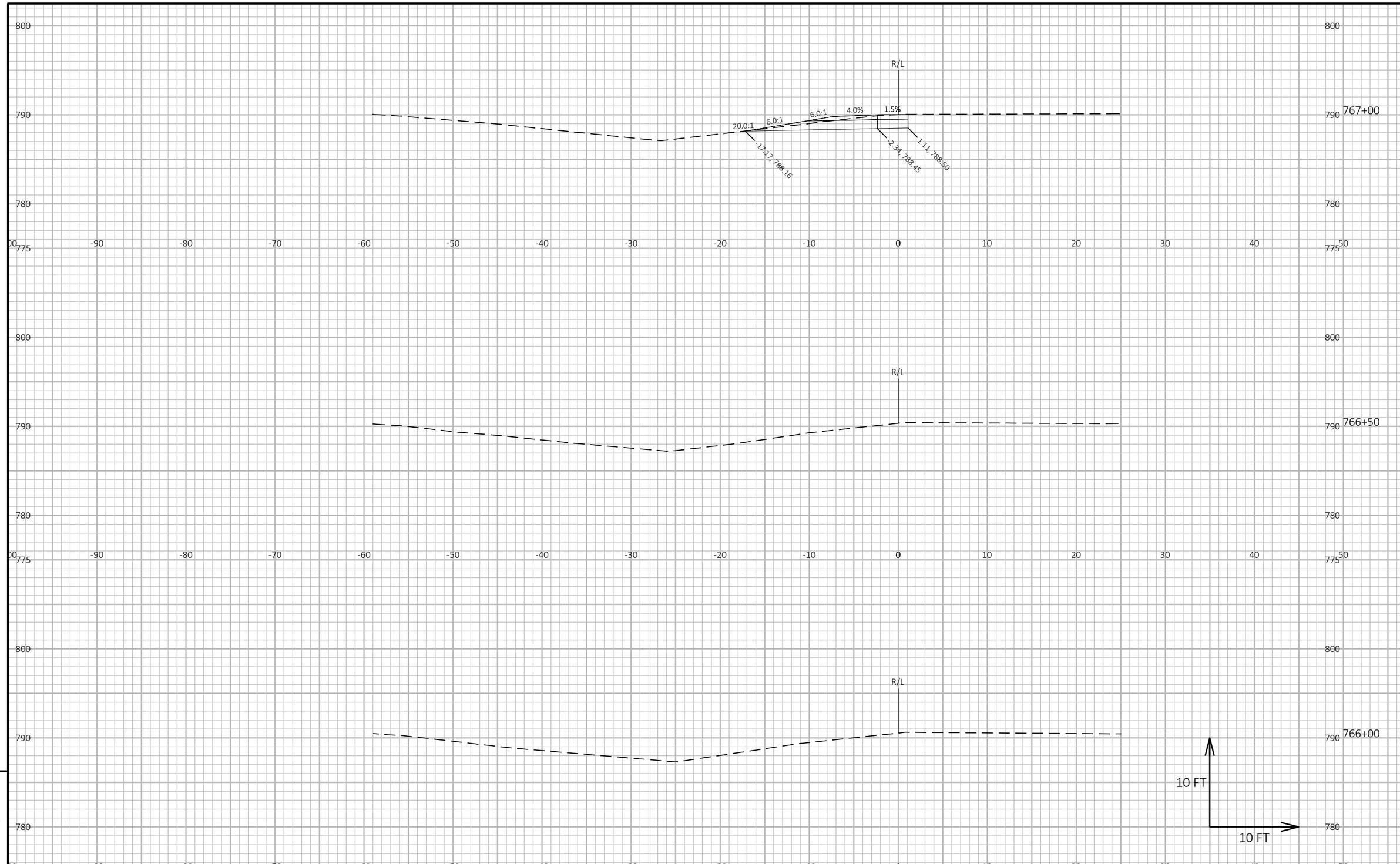

9

9

PROJECT NO: 1510-02-60	HWY: USH 10	COUNTY: WAUPACA	CROSS SECTIONS: SOUTH TWO WAY CROSS OVER	SHEET 336	E

FILE NAME : Y:\MILWAUKEE\20300S\20335.01\ENG_DOCS\1510-02-60\15100260\SHEETS\090206-XS-XO-2WAY.DWG
LAYOUT NAME - 11

PLOT DATE : 6/23/2026 5:02 PM PLOT BY : MINSKY, MICHAEL PLOT NAME : **PLOT SCALE :** 1 IN:10 FT HORZ. / 1 IN:10 FT VERT.

WISDOT/CADDS SHEET 49

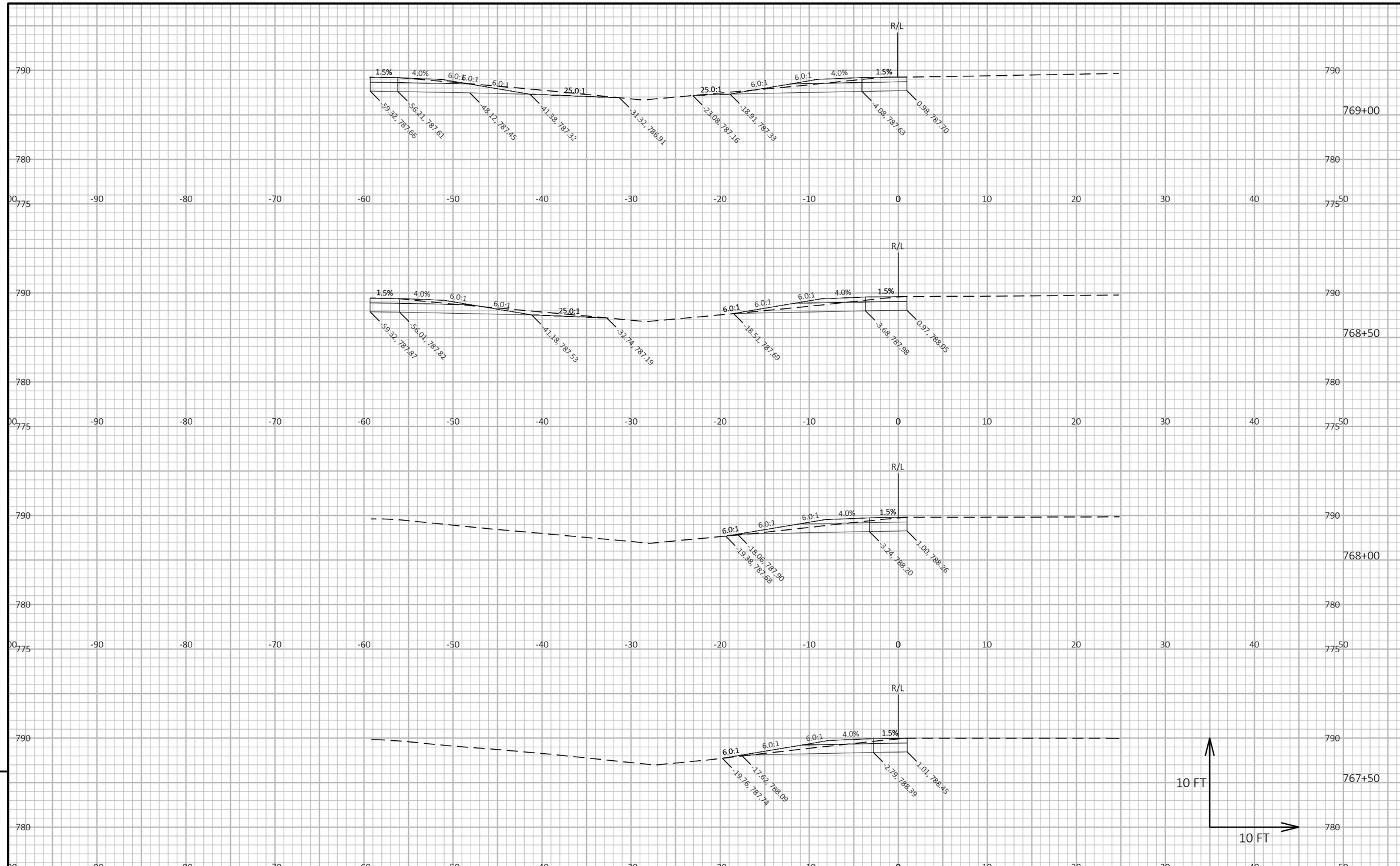

PROJECT NO: 1510-02-60	HWY: USH 10	COUNTY: WAUPACA	CROSS SECTIONS: SOUTH TWO WAY CROSS OVER	SHEET 337	E

FILE NAME : Y:\MILWAUKEE\20300S\20335.01\ENG_DOCS\1510-02-60\15100260\SHEETS\090206-XS-XO-2WAY.DWG
LAYOUT NAME - 12
PLOT DATE : 6/23/2026 5:02 PM
PLOT BY : MINSKY, MICHAEL
PLOT NAME :
PLOT SCALE : 1 IN:10 FT HORZ. / 1 IN:10 FT VERT.
WISDOT/CADDS SHEET 49

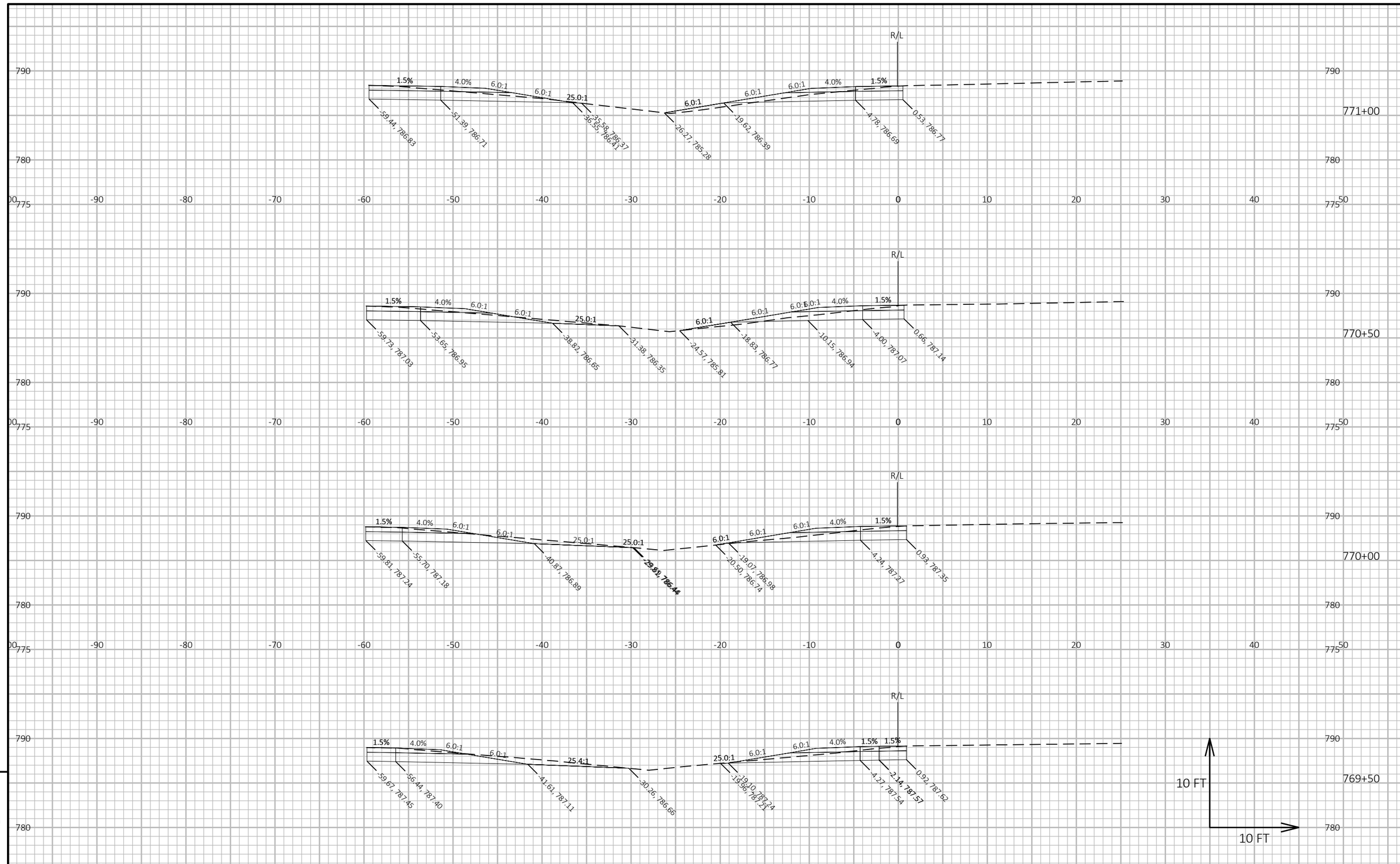

9

9

PROJECT NO: 1510-02-60	HWY: USH 10	COUNTY: WAUPACA	CROSS SECTIONS: SOUTH TWO WAY CROSS OVER	SHEET 338	E

FILE NAME : Y:\MILWAUKEE\20300S\20335.01\ENG_DOCS\1510-02-60\15100260\SHEETS\090206-XS-XO-2WAY.DWG
LAYOUT NAME - 13

PLOT DATE : 6/23/2026 5:04 PM PLOT BY : MINSKY, MICHAEL PLOT NAME : **PLOT SCALE :** 1 IN:10 FT HORZ. / 1 IN:10 FT VERT.

WISDOT/CADDS SHEET 49

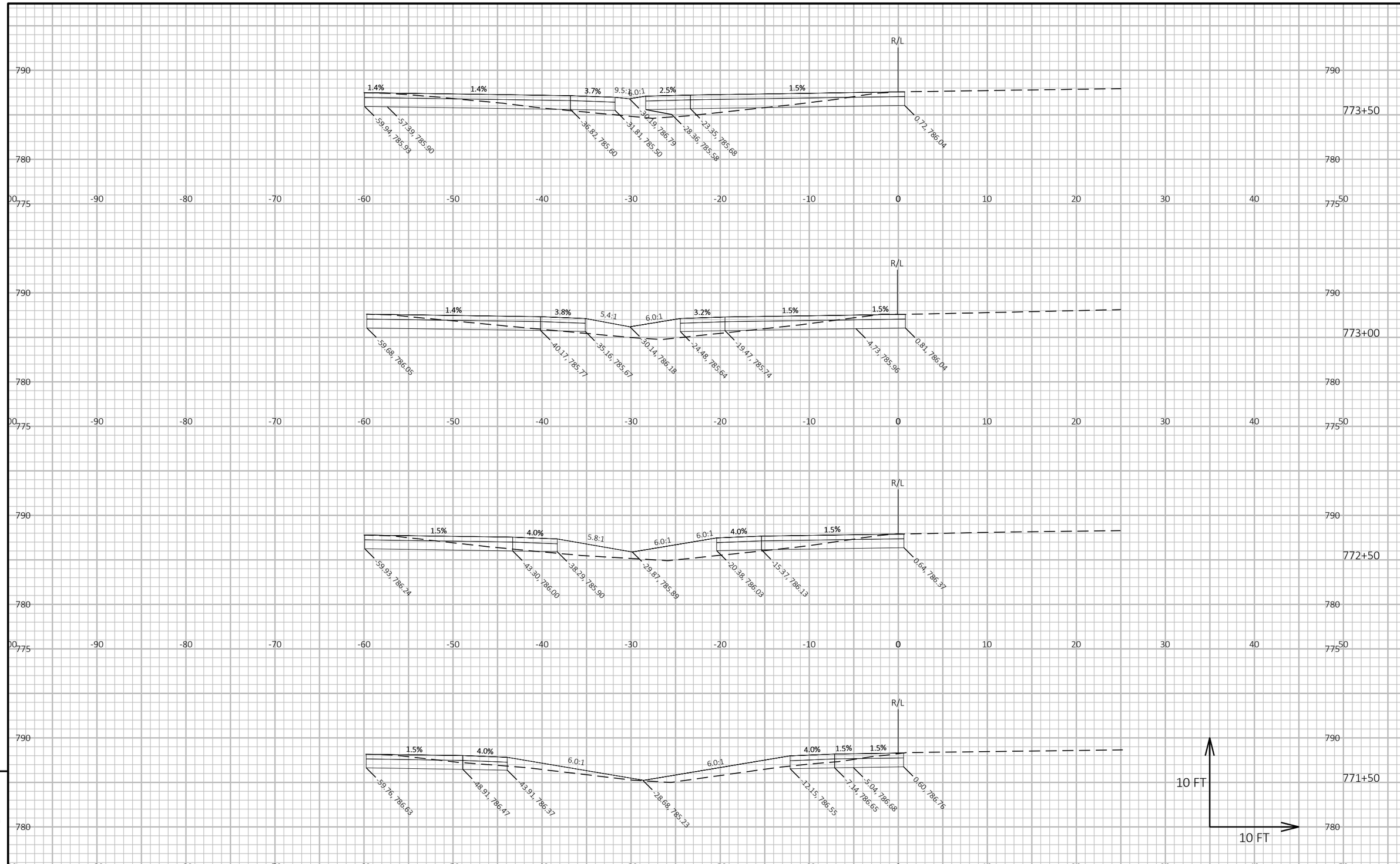

9

9

PROJECT NO: 1510-02-60	HWY: USH 10	COUNTY: WAUPACA	CROSS SECTIONS: SOUTH TWO WAY CROSS OVER	SHEET 339	E

FILE NAME : Y:\MILWAUKEE\20300S\20335.01\ENG_DOCS\1510-02-60\15100260\SHEETS\090206-XS-XO-2WAY.DWG
LAYOUT NAME - 14

PLOT DATE : 6/23/2026 5:03 PM PLOT BY : MINSKY, MICHAEL PLOT NAME : **PLOT SCALE :** 1 IN:10 FT HORZ. / 1 IN:10 FT VERT.

WISDOT/CADDS SHEET 49

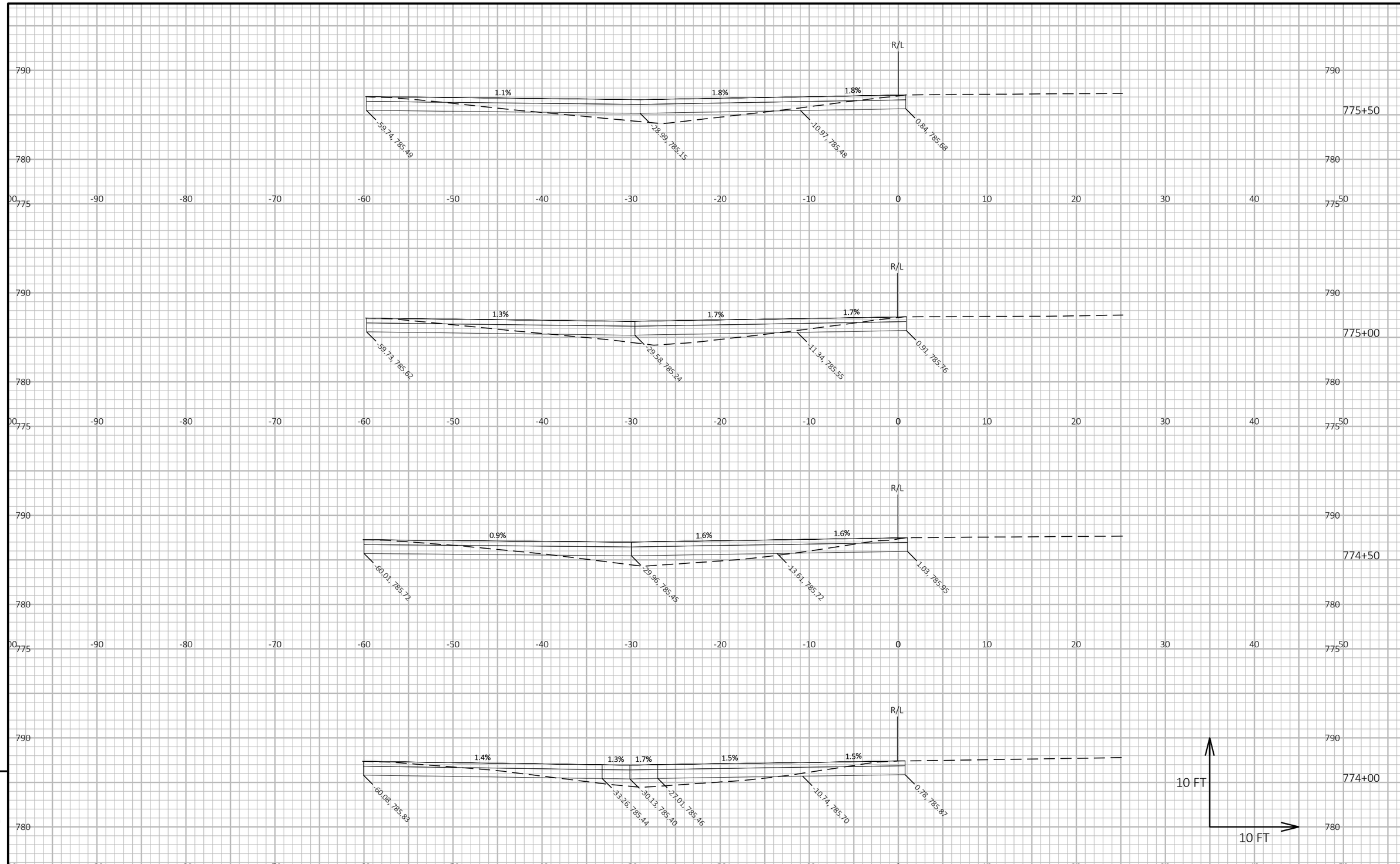

9

9

PROJECT NO: 1510-02-60	HWY: USH 10	COUNTY: WAUPACA	CROSS SECTIONS: SOUTH TWO WAY CROSS OVER	SHEET 340	E

FILE NAME : Y:\MILWAUKEE\20300S\20335.01\ENG_DOCS\1510-02-60\15100260\SHEETS\090206-XS-XO-2WAY.DWG
LAYOUT NAME - 15

PLOT DATE : 6/23/2026 5:03 PM PLOT BY : MINSKY, MICHAEL PLOT NAME : **PLOT SCALE :** 1 IN:10 FT HORZ. / 1 IN:10 FT VERT.

WISDOT/CADDS SHEET 49

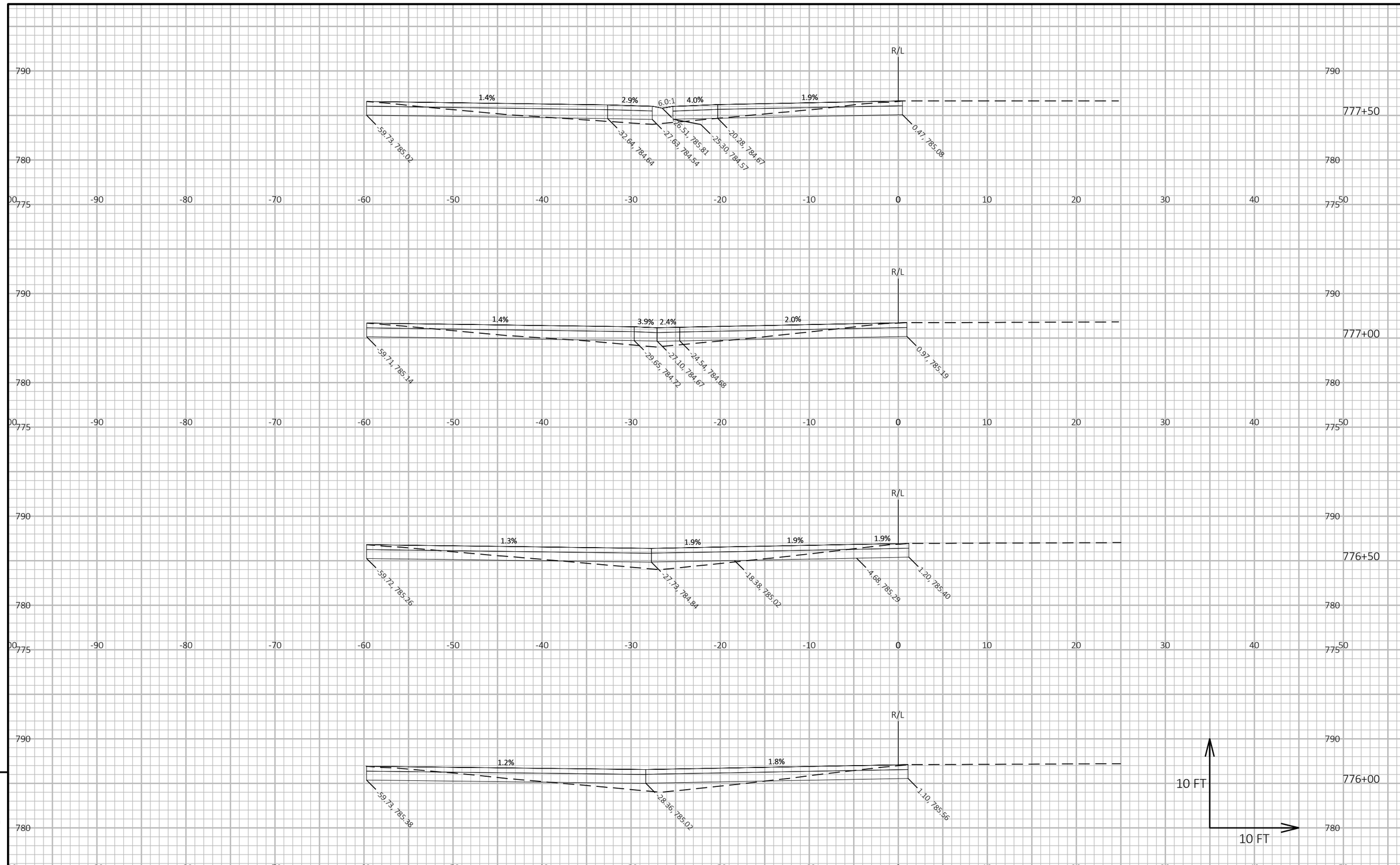

9

9

PROJECT NO: 1510-02-60	HWY: USH 10	COUNTY: WAUPACA	CROSS SECTIONS: SOUTH TWO WAY CROSS OVER	SHEET 341	E

FILE NAME : Y:\MILWAUKEE\20300S\20335.01\ENG_DOCS\1510-02-60\15100260\SHEETS\090206-XS-XO-2WAY.DWG
LAYOUT NAME - 16

PLOT DATE : 6/23/2026 5:04 PM PLOT BY : MINSKY, MICHAEL PLOT NAME : **PLOT SCALE :** 1 IN:10 FT HORZ. / 1 IN:10 FT VERT.

WISDOT/CADDS SHEET 49

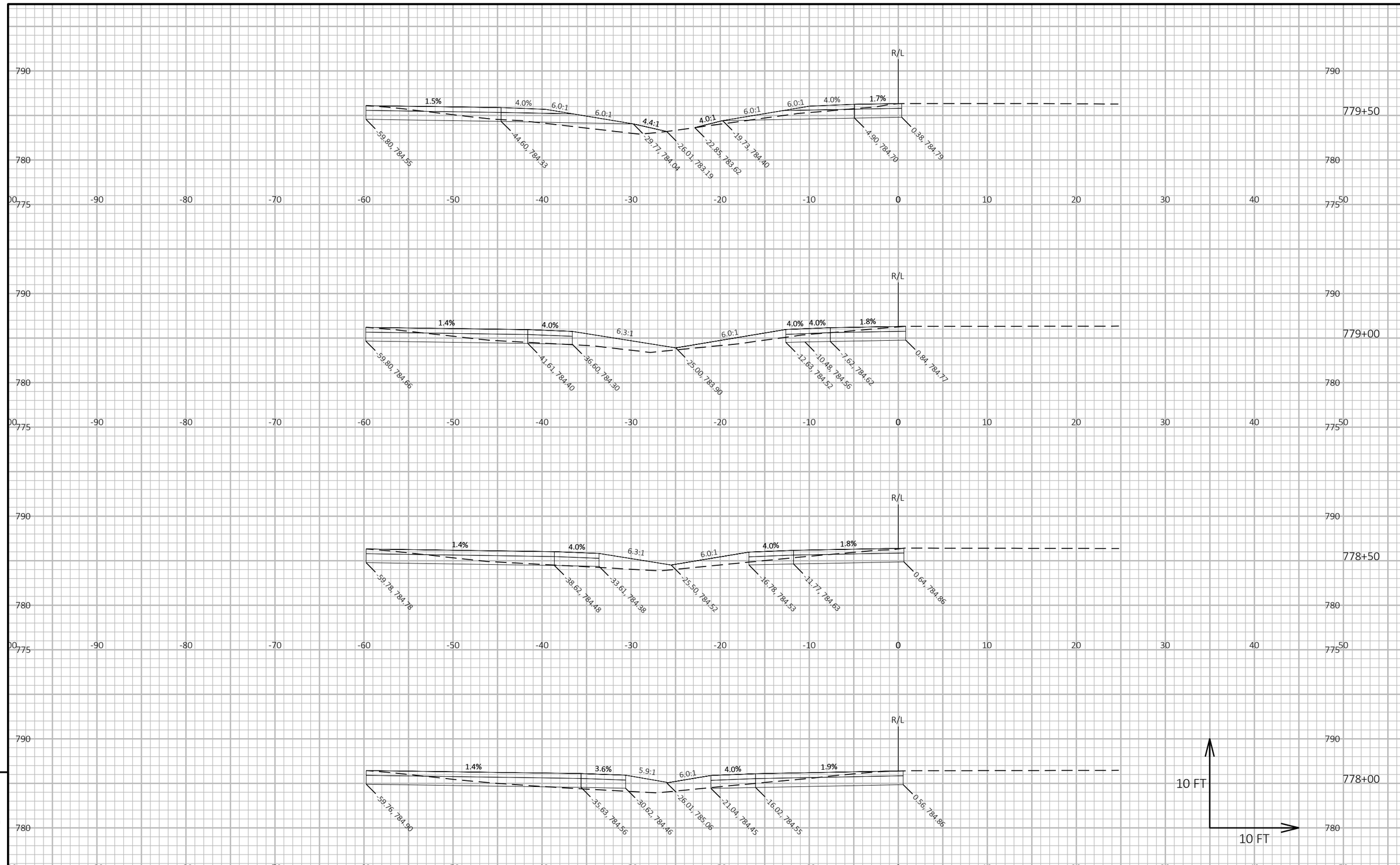

PROJECT NO: 1510-02-60	HWY: USH 10	COUNTY: WAUPACA	CROSS SECTIONS: SOUTH TWO WAY CROSS OVER	SHEET 342	E

FILE NAME : Y:\MILWAUKEE\20300S\20335.01\ENG_DOCS\1510-02-60\15100260\SHEETS\090206-XS-XO-2WAY.DWG
LAYOUT NAME - 17
PLOT DATE : 6/23/2026 5:05 PM
PLOT BY : MINSKY, MICHAEL
PLOT NAME :
PLOT SCALE : 1 IN:10 FT HORZ. / 1 IN:10 FT VERT.
WISDOT/CADDS SHEET 49

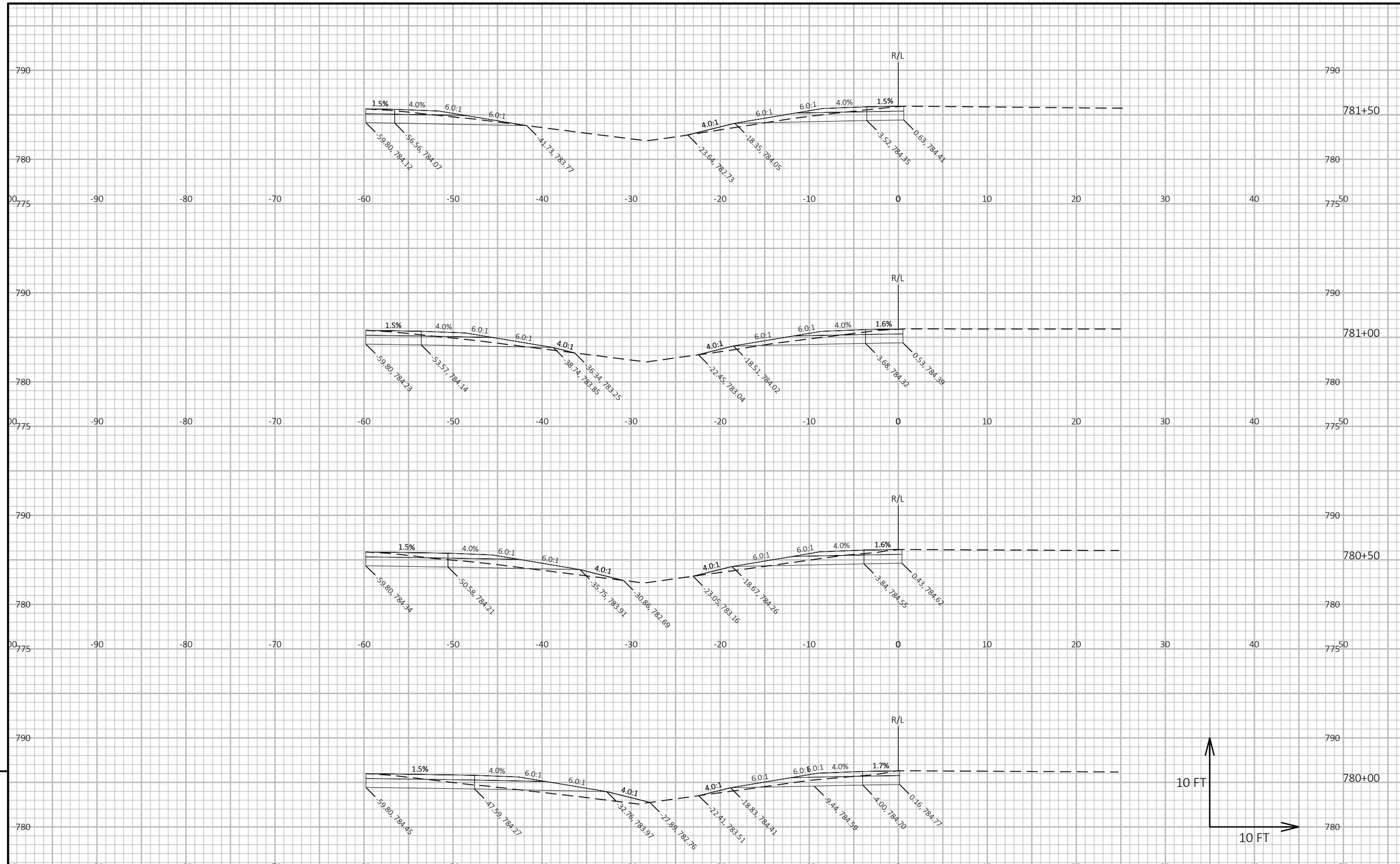

9

9

PROJECT NO: 1510-02-60	HWY: USH 10	COUNTY: WAUPACA	CROSS SECTIONS: SOUTH TWO WAY CROSS OVER	SHEET 343	E

FILE NAME : Y:\MILWAUKEE\20300S\20335.01\ENG_DOCS\1510-02-60\15100260\SHEETS\090206-XS-XO-2WAY.DWG
LAYOUT NAME - 18

PLOT DATE : 6/23/2026 5:05 PM PLOT BY : MINSKY, MICHAEL PLOT NAME : **PLOT SCALE :** 1 IN:10 FT HORZ. / 1 IN:10 FT VERT.

WISDOT/CADDS SHEET 49

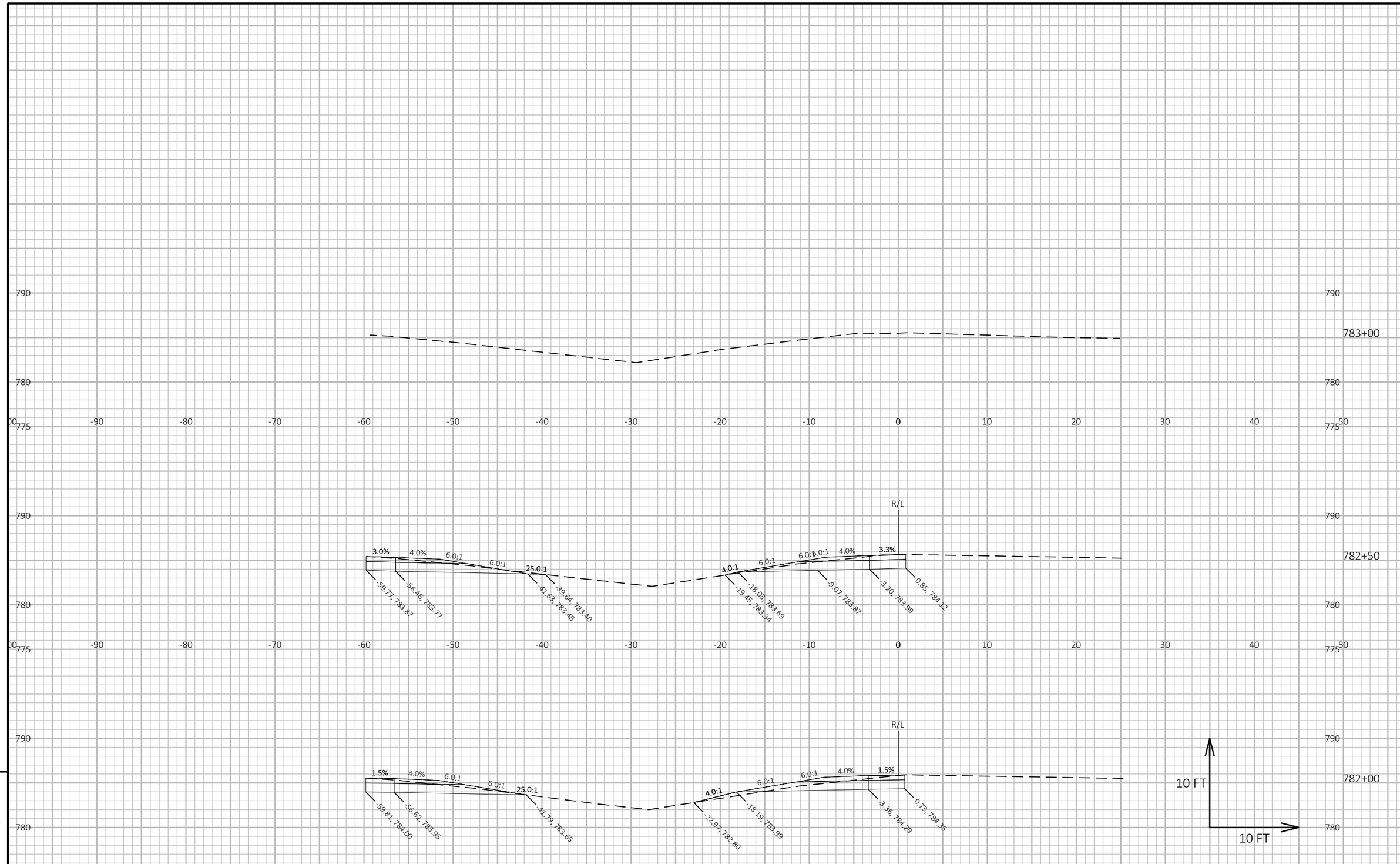

PROJECT NO: 1510-02-60	HWY: USH 10	COUNTY: WAUPACA	CROSS SECTIONS: SOUTH TWO WAY CROSS OVER	SHEET 344	E

FILE NAME : Y:\MILWAUKEE\20300S\20335.01\ENG_DOCS\1510-02-60\15100260\SHEETS\090206-XS-XO-2WAY.DWG
LAYOUT NAME - 19
PLOT DATE : 6/23/2026 5:05 PM
PLOT BY : MINSKY, MICHAEL
PLOT NAME :
PLOT SCALE : 1 IN:10 FT HORZ. / 1 IN:10 FT VERT.
WISDOT/CADDS SHEET 49

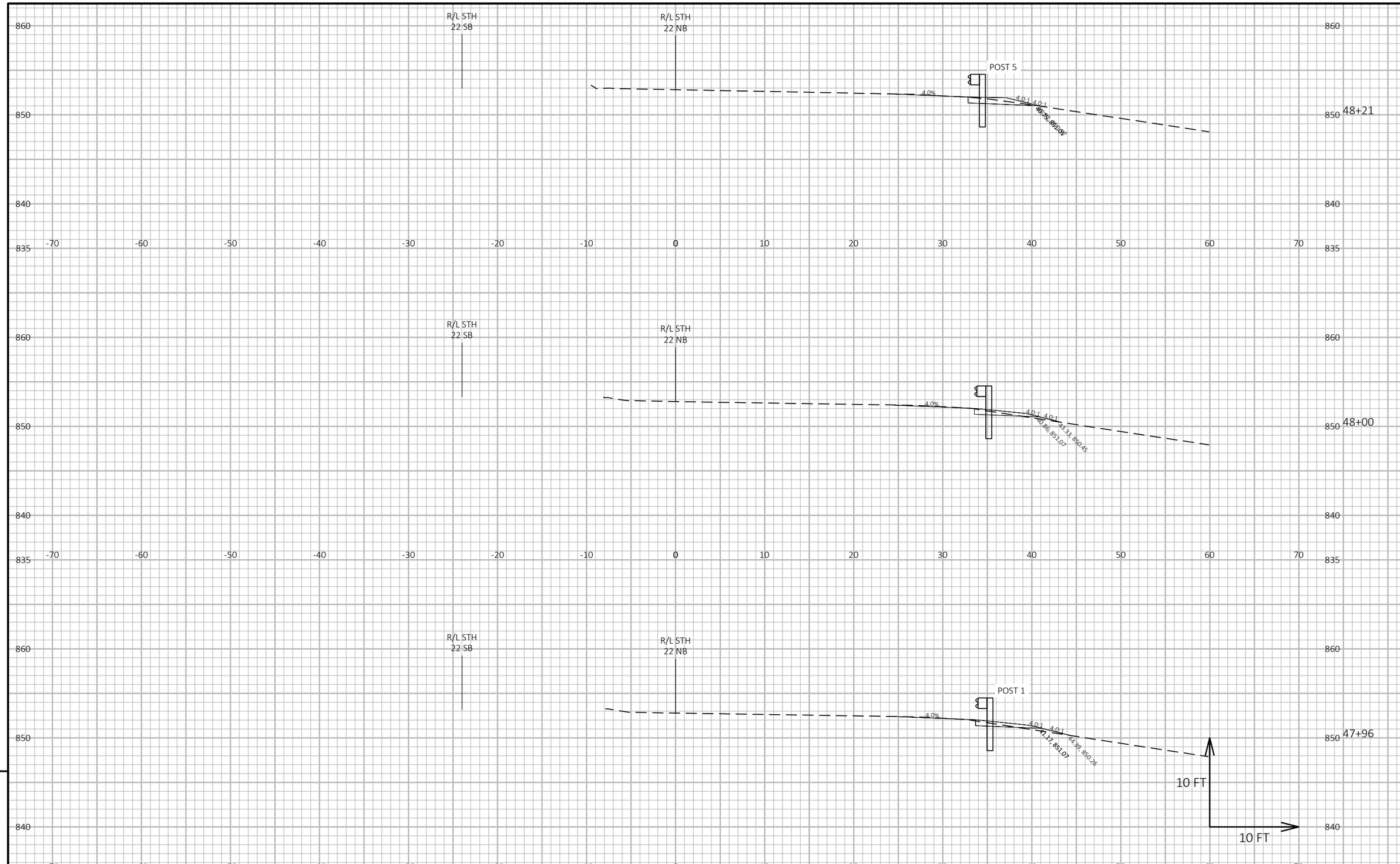

9

9

PROJECT NO: 1510-02-60	HWY: USH 10	COUNTY: WAUPACA	CROSS SECTIONS: STH 22 MGS	SHEET 345	E

FILE NAME : Y:\MILWAUKEE\20300S\20335.01\ENG_DOCS\1510-02-60\15100260\SHEETS\090204-XS-STH22.DWG
LAYOUT NAME - STH 22-1

PLOT DATE : 7/28/2025 2:01 PM PLOT BY : WEIGAND, BEN PLOT NAME : **PLOT SCALE :** 1 IN:10 FT HORZ. / 1 IN:10 FT VERT.

WISDOT/CADDS SHEET 49

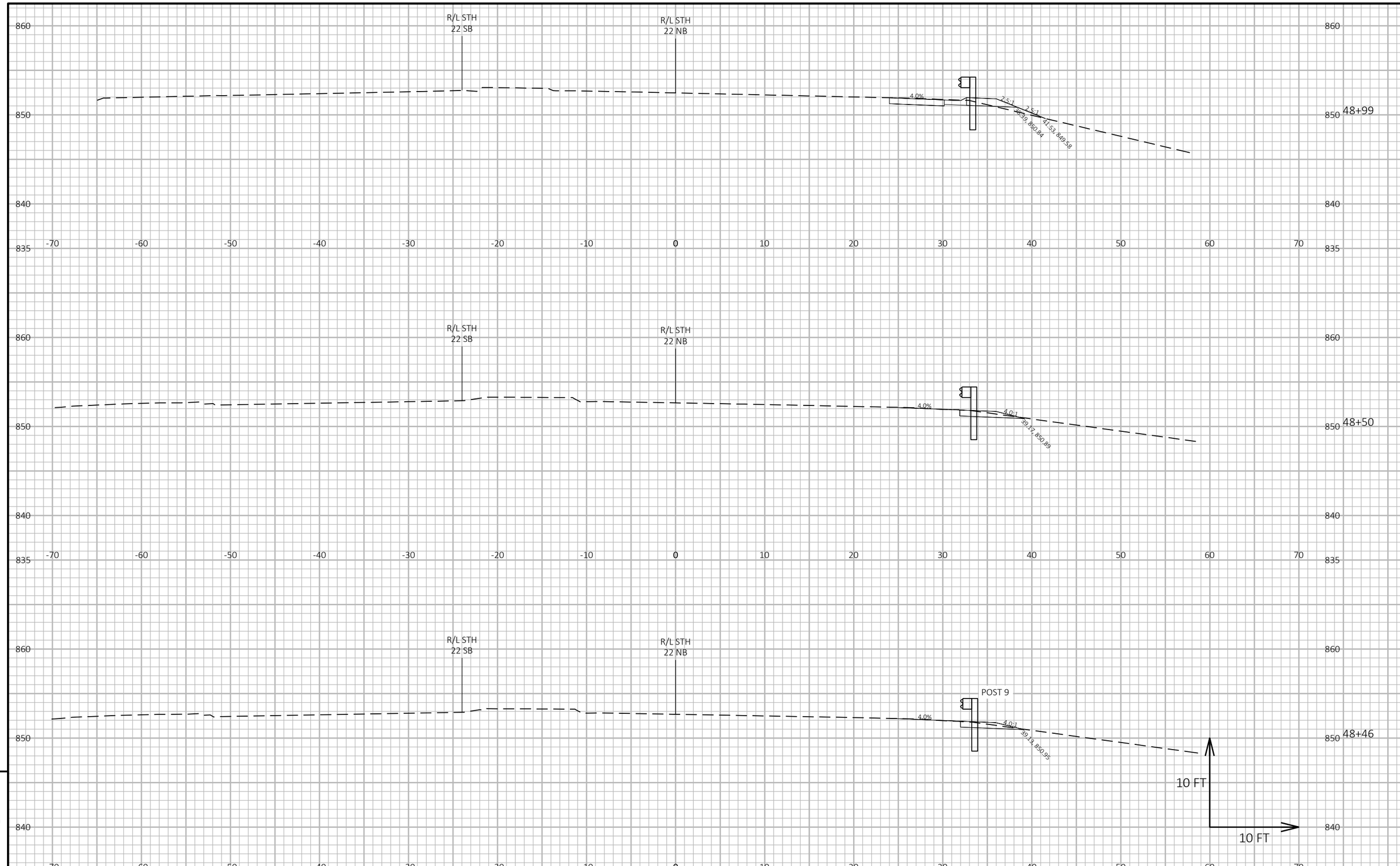

9

9

PROJECT NO: 1510-02-60	HWY: USH 10	COUNTY: WAUPACA	CROSS SECTIONS: STH 22 MGS	SHEET 346	E

FILE NAME : Y:\MILWAUKEE\20300S\20335.01\ENG_DOCS\1510-02-60\15100260\SHEETS\090204-XS-STH22.DWG
LAYOUT NAME - STH 22-2
PLOT DATE : 7/28/2025 2:01 PM
PLOT BY : WEIGAND, BEN
PLOT NAME :
PLOT SCALE : 1 IN:10 FT HORZ. / 1 IN:10 FT VERT.
WISDOT/CADDS SHEET 49

Notes

Wisconsin Department of Transportation

Dedicated people creating transportation solutions through innovation and exceptional service.

http://www.dot.wisconsin.gov