MAD SEPTEMBER 2026

PROJECT ID: 5738-00-74
WITH: 5738-00-75

COUNTY: SAUK

ORDER OF SHEETS

Section No.	1	Title
Section No.	2	Typical Sections and Details
Section No.	3	Estimate of Quantities
Section No.	3	Miscellaneous Quantities
Section No.	4	Right of Way Plat
Section No.	5	Plan and Profile
Section No.	6	Standard Detail Drawings
Section No.	7	Sign Plates
Section No.	8	Structure Plans
Section No.	9	Computer Earthwork Data
Section No.	9	Cross Sections

TOTAL SHEETS = 50

STATE OF WISCONSIN
DEPARTMENT OF TRANSPORTATION

PLAN OF PROPOSED IMPROVEMENT

T WOODLAND, DAVID DRIVE

BR PLUM CREEK, BRIDGE B-56-0256

LOC STR
SAUK COUNTY

STATE PROJECT	FEDERAL PROJECT	
	PROJECT	CONTRACT
5738-00-74	WISC 2026414	1

STATE PROJECT NUMBER
5738-00-74

N

DESIGN DESIGNATION

A.A.D.T.	2026	=	<100
A.A.D.T.	2046	=	<100
D.H.V.		=	28
D.D.		=	60/40
T.		=	4%
DESIGN SPEED		=	30 MPH
ESALS		=	7,300

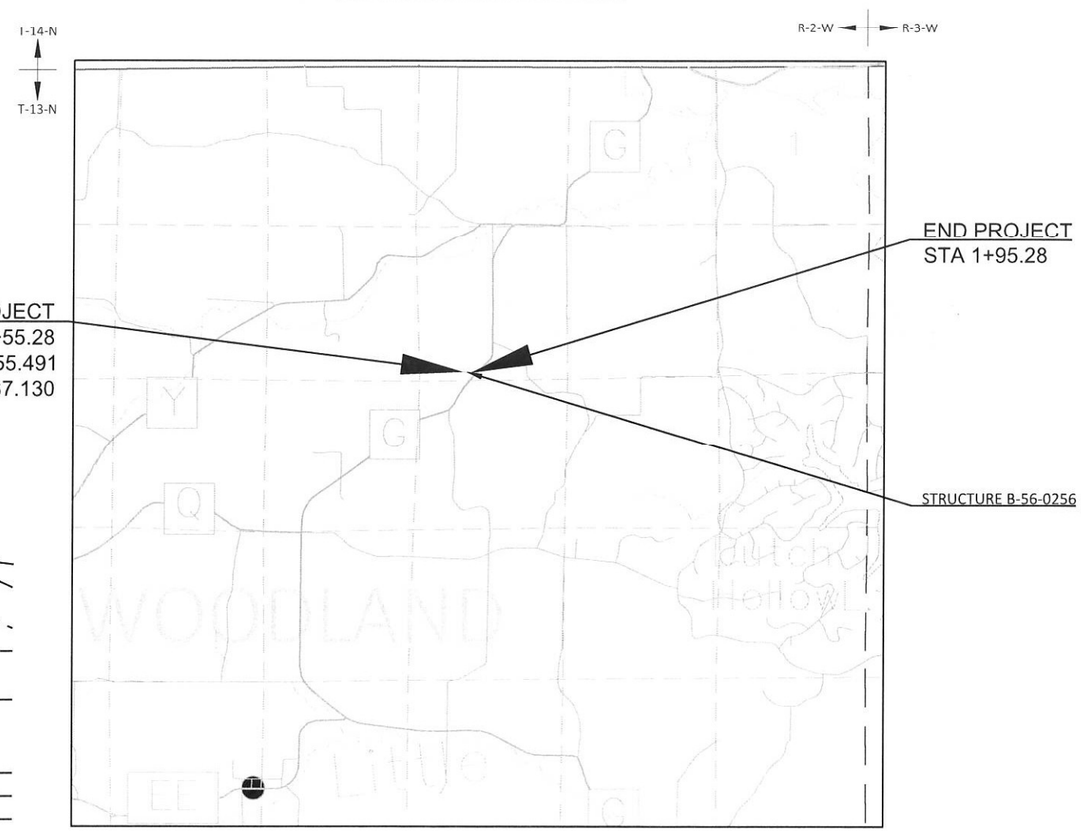

LAYOUT

SCALE 0 0.5 MI

TOTAL NET LENGTH OF CENTERLINE = 0.026 MI

HORIZONTAL POSITIONS SHOWN ON THIS PLAN ARE WISCONSIN COORDINATE REFERENCE SYSTEM (WISCRS), SAUK COUNTY, NAD83 (2011), IN U.S. SURVEY FEET. POSITIONS SHOWN ARE GRID COORDINATES, GRID BEARINGS, AND GRID DISTANCES. GRID DISTANCES ARE THE SAME AS GROUND DISTANCES.

ELEVATIONS ARE REFERENCED TO NAVD 88 (2012). GPS DERIVED ELEVATIONS ARE BASED ON GEOID 12A.

CONVENTIONAL SYMBOLS

PLAN

CORPORATE LIMITS
PROPERTY LINE
LOT LINE
LIMITED HIGHWAY EASEMENT
EXISTING RIGHT OF WAY
PROPOSED OR NEW R/W LINE
SLOPE INTERCEPT
REFERENCE LINE (300'FB')
EXISTING CULVERT
PROPOSED CULVERT (Box or Pipe)
COMBUSTIBLE FLUIDS (CAUTION)
MARSH AREA
WOODED OR SHRUB AREA

PROFILE

GRADE LINE
ORIGINAL GROUND
MARSH OR ROCK PROFILE (To be noted as such) (ROCK)
SPECIAL DITCH (LABEL)
GRADE ELEVATION (95.36)
CULVERT (Profile View)

UTILITIES

ELECTRIC — E —
FIBER OPTIC — FO —
GAS — G —
SANITARY SEWER — SAN —
STORM SEWER — SS —
TELEPHONE — T —
WATER — W —
UTILITY PEDESTAL
POWER POLE
TELEPHONE POLE

ACCEPTED FOR

TOWN OF WOODLAND

Date 3-12-26 Edward J. Woolever Chairman
(Signature and Title of Official)

ORIGINAL PLANS PREPARED BY

TEAM ENGINEERING

WISCONSIN JEREMY F. KRACHEY E-37258 WAUZEKA WIS PROFESSIONAL ENGINEER

Digitally signed by JEREMY F KRACHEY, E=KRACHEY@TEAMENGING.COM, C=US, O=TEAM ENGINEERING, INC., CN="JEREMY F KRACHEY, PE" Date: 2026.03.12 10:19:49-05'00'

DATE: _____ (Professional Engineer Signature)

STATE OF WISCONSIN
DEPARTMENT OF TRANSPORTATION

PREPARED BY

Surveyor	TEAM ENGINEERING INC
Designer	TEAM ENGINEERING INC
Project Manager	DELLA KOENIG, P.E.
Regional Examiner	SW REGION
Regional Supervisor	KYLE HEMP, P.E.

APPROVED FOR THE DEPARTMENT

DATE: _____ Digitally signed by Della Koenig P.E. Date: 2026.04.23 16:45:23-05'00'

E

LIST OF STANDARD ABBREVATIONS

ABUT.	Abutment
AC	Acre
AGG.	Aggregate
AH	Ahead
<	Angle
ASPH	Asphaltic
AVG.	Average
A.D.T.	Average Daily Traffic
BAD	Base Aggregate Dense
BK.	Back
BF	Back Fence
B.M	Bench Mark
BR.	Bridge
C/L	Center Line
CC	Center to Center
CTH	County Truck Highway
CR.	Creek
CY OR CU YD	Cubic Yard
CP	Culvert Pipe
C & G	Curb and Gutter
D	Degree of Curve
DHV	Design Hour Volume
DIA	Diameter
E	East
X	East Grid Coordinate
ELEC	Electric
EL OR ELEV	Elevation
ESALS	Equivalent Single Axle Loads
EBS	Excavation Below Subgrade
FF	Face to Face
FE	Field Entrance
F	Fill
FG	Finished Grade
FL OR F/L	Flow Line
FT	Foot
FTG	Footing
GN	Grid North
HT	Height
CWT	Hundredweight
HYD	Hydrant
INL	Inlet
ID	Inside Diameter
INV	Invert
IP	Iron Pipe or Pin
IRS	Iron Rod Set
JT	Joint
JCT	Junction
LHF	Left-Hand Forward
L	Length of Curve
LIN FT OR LF	Linear Foot
LC	Long Chord of Curve
MH	Manhole
MB	Mailbox
ML OR M/L	Match Line
N	North
Y	North Grid Coordinate
OAL	Overall Length
OD	Outside Diameter
PLE	Permanent Limited Easement
PT	Point
PC	Point of Curvature
PI	Point of Intersection
PRC	Point of Reverse Curvature
PT	Point of Tangency
POC	Point on Curve
POT	Point on Tangent
PVC	Polyvinyl Chloride
PCC	Portland Cement Concrete
LB	Pound
PSI	Pounds Per Square Inch
PE	Private Entrance
R	Radius
RR	Railroad
RL OR R/L	Reference Line
RP	Reference Point
RCCP	Reinforced Concrete Culvert Pipe
REQD	Required
RES	Residence or Residential
RW	Retaining Wall
RT	Right
RHF	Right-Hand Forward
R/W	Right-of-Way
R	River
RD	Road
RDWY	Roadway
SALV	Salvaged
SAN S	Sanitary Sewer
SEC	Section
SHLDR	Shoulder
SHR	Shrinkage
SW	Sidewalk
S	South
SQ	Square
SF OR SQ FT	Square Feet
SY OR SQ YD	Square Yard
STD	Standard
SDD	Standard Detail Drawings
STH	State Trunk Highways
STA	Station
SS	Storm Sewer
SG	Subgrade
SE	Superelevation
SL OR S/L	Survey Line
SV	Septic Vent
T	Tangent
TEL	Telephone
TEMP	Temporary
TI	Temporary Interest
TLE	Temporary Limited Easement
t	Ton
T OR TN	Town
TRANS	Transition
TL OR T/L	Transit Line
T	Trucks (percent of)
TYP	Typical
UNCL	Unclassified
UG	Underground Cable
USH	United States Highway
VAR	Variable
V	Velocity or Design Speed
VERT	Vertical
VC	Vertical Curve
VOL	Volume
WM	Water Main
WV	Water Valve
W	West
WB	Westbound
YD	Yard

GENERAL NOTES

THE LOCATIONS OF EXISTING AND PROPOSED UTILITY INSTALLATIONS AS SHOWN ON THE PLAN ARE APPROXIMATE. THERE MAY BE OTHER UTILITY INSTALLATIONS WITHIN THE PROJECT AREA THAT ARE NOT SHOWN.

4-INCH ASPHALTIC SURFACE SHALL BE PLACED WITH A 2 1/4-INCH LOWER LAYER AND A 1 3/4-INCH UPPER LAYER.

2

UTILITIES

LAVALLE TELEPHONE COOPERATIVE
COMLN
JOSH LIEN
S1421 STATE HWY 33, P.O. BOX 28
LAVALLE, WI 53941
PHONE: 608-434-2796
EMAIL: joshl@rgtc.coop
EMAIL: johnb@rgtc.coop

BRIGHTSPEED OF WESTERN WISCONSIN, LLC
COMLN
THOMAS DINEEN
1905 WARD AVENUE
LA CROSSE, WI 54601
PHONE: 319-423-5242
EMAIL: thomas.dineen@brightspeed.com
EMAIL: relocations@brightspeed.com
EMAIL: dshea@congruex.com

VERNON ELECTRIC COOPERATIVE
ELCTY
COLE CARY
110 SAUGSTAD RD.
WESTBY, WI 54667
PHONE: 608-634-7472
EMAIL: ccary@vernonelectric.org

DIGGERS HOTLINE
Dial 811 or (800)242-8511
www.DiggersHotline.com

DESIGNER

TEAM ENGINEERING, INC.
210 GUARD STREET
WAUZEKA, WI 53826
ATTN: JEREMY KRACHEY, P.E.
PH: (608) 875-5075
jkrachey@teamenginc.com

DNR CONTACT

DEPARTMENT OF NATURAL RESOURCES
101 S. WEBSTER STREET
MADISON, WI 53703
ATTN: ANDY BARTA
ENVIRONMENTAL ANALYSIS & REVIEW SPECIALIST
PH: (608) 235-2955
EMAIL: andrew.barta@wisconsin.gov

WISDOT CONTACT

ATTENTION: DELLA KOENIG, P.E.
LOCAL PROGRAM PROJECT MANAGER
WISDOT - SW REGION
2101 WRIGHT STREET
MADISON, WI 53704
WORK: (608) 246-7963
EMAIL: della.koenig@dot.wi.gov

RUNOFF COEFFICIENT TABLE

	HYDROLOGIC SOIL GROUP											
	A			B			C			D		
	SLOPE RANGE (PERCENT)			SLOPE RANGE (PERCENT)			SLOPE RANGE (PERCENT)			SLOPE RANGE (PERCENT)		
LAND USE:	0-2	2-6	6 & OVER	0-2	2-6	6 & OVER	0-2	2-6	6 & OVER	0-2	2-6	6 & OVER
ROW CROPS:	.08 .22	.16 .30	.22 .38	.12 .26	.20 .34	.27 .44	.15 .30	.24 .37	.33 .50	.19 .34	.28 .41	.38 .56
MEDIAN STRIPTURF:	.19 .24	.20 .26	.24 .30	.19 .25	.22 .28	.26 .33	.20 .26	.23 .30	.30 .37	.20 .27	.25 .32	.30 .40
SIDE SLOPETURF:			.25 .32			.27 .34			.28 .36			.30 .38
PAVEMENT:												
ASPHALT:	.70 - .95											
CONCRETE:	.80 - .95											
BRICK:	.70 - .80											
DRIVES, WALKS:	.75 - .85											
ROOFS:	.75 - .95											
GRAVEL ROADS, SHOULDERS:	.40 - .60											

TOTAL PROJECT AREA = 0.76 ACRES
TOTAL AREA EXPECTED TO BE DISTURBED BY CONSTRUCTION ACTIVITIES = 0.48 ACRES

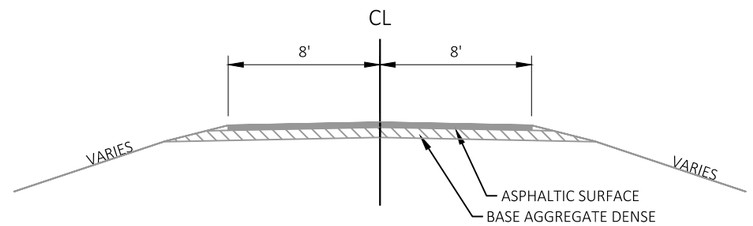

EXISTING TYPICAL SECTION - DAVID DRIVE

STA 0+55.28 - 1+05.28
STA 1+45.28 - 1+95.28

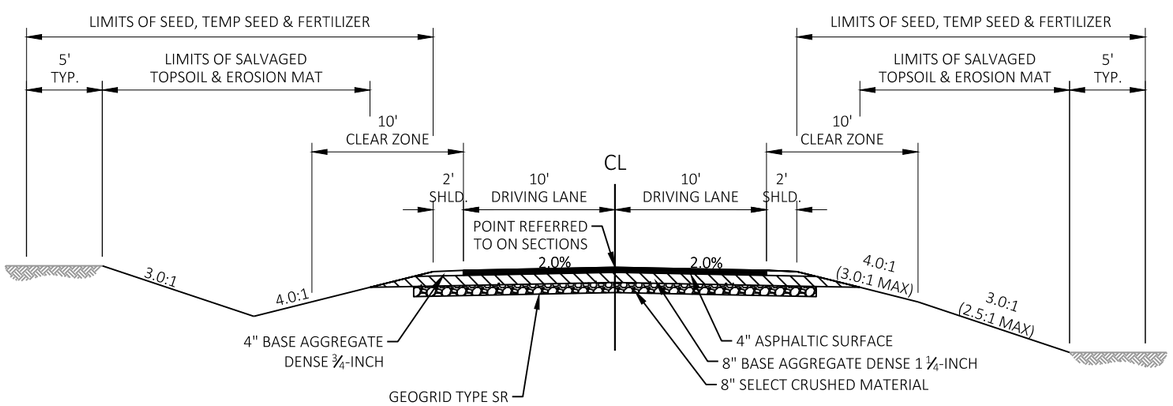

IN CUT

FINISHED TYPICAL SECTION - DAVID DRIVE

STA 0+55.28 - 0+95.28
STA 1+45.28 - 1+95.28

IN FILL

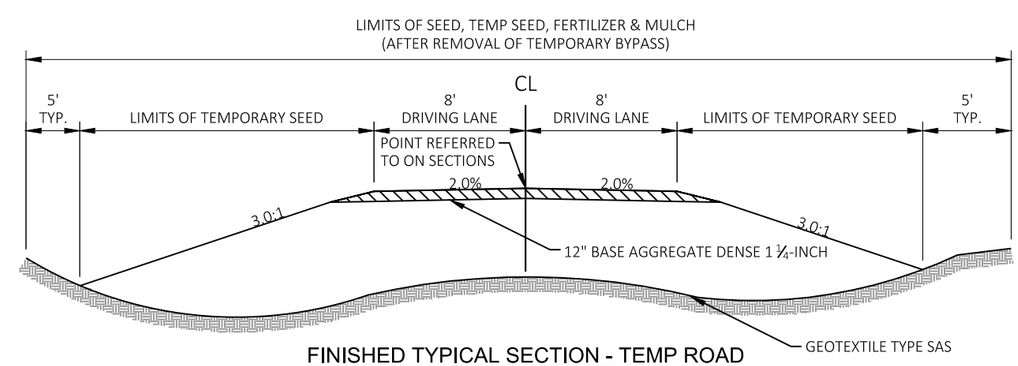

FINISHED TYPICAL SECTION - TEMP ROAD

STA 10+00 - 12+97.07

PROJECT NO: 5738-00-74	HWY: DAVID DRIVE	COUNTY: SAUK	TYPICAL SECTIONS	SHEET 3	E

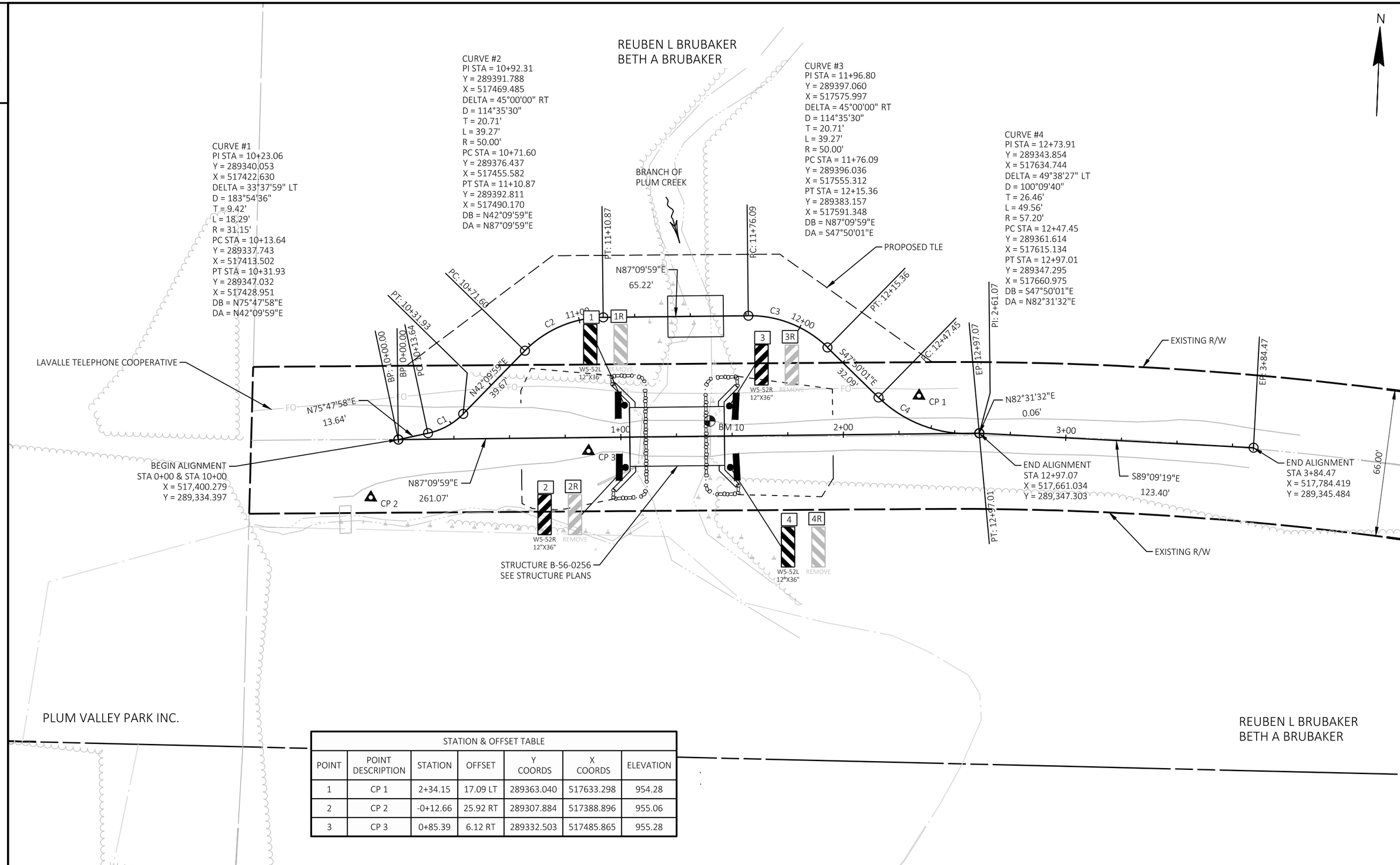

STATION & OFFSET TABLE

POINT	POINT DESCRIPTION	STATION	OFFSET	Y COORDS	X COORDS	ELEVATION
1	CP 1	2+34.15	17.09 LT	289363.040	517633.298	954.28
2	CP 2	-0+12.66	25.92 RT	289307.884	517388.896	955.06
3	CP 3	0+85.39	6.12 RT	289332.503	517485.865	955.28

2

LEGEND

- EROSION MAT URBAN CLASS I TYPE B
- SILT FENCE
- SLOPE INTERCEPT
- TURBIDITY BARRIER
- TEMPORARY DITCH CHECK
- SURFACE WATER FLOW
- SAW CUT
- DELINEATED WETLANDS
- TREELINE
- STREAM EDGE
- RIP RAP

N

TEMPORARY STRUCTURE (STA 11+48)

REUBEN L BRUBAKER
BETH A BRUBAKER

FINISHED C/L TEMPORARY BYPASS
(SEE TEMPORARY BYPASS PLAN AND PROFILE)

PROPOSED TLE

BYPASS TO BE REMOVED AND RESTORED

EXISTING R/W

PT: 11+10.87

PC: 11+76.09

PC: 10+71.60

PT: 10+31.93

PT: 12+15.96

PC: 12+47.45

PI: 2+61.07

EP: 12+97.07

PT: 12+97.01

BP: 10+00.00

BP: 0+00.00

PC: 10+13.64

C1

C2

C3

C4

11+00

12+00

1+00

2+00

FO

EXISTING C/L
DAVID DR

EXISTING C/L
DAVID DR

EXISTING R/W

STRUCTURE B-56-0256
SEE STRUCTURE PLANS

PROPERTY LINE

PLUM VALLEY PARK INC.

REUBEN L BRUBAKER
BETH A BRUBAKER

2

PROJECT NO: 5738-00-74	HWY: DAVID DRIVE	COUNTY: SAUK	PLAN DETAILS - EROSION CONTROL	SHEET 5	E

5738-00-74

Line	Item	Item Description	Unit	Total	Qty
0002	201.0105	Clearing	STA	3.000	3.000
0004	201.0205	Grubbing	STA	3.000	3.000
0006	203.0260	Removing Structure Over Waterway Minimal Debris (structure) 01. P-56-0933	EACH	1.000	1.000
0010	205.0100	Excavation Common	CY	414.000	414.000
0012	206.1001	Excavation for Structures Bridges (structure) 01. B-56-0256	EACH	1.000	1.000
0016	208.0100	Borrow	CY	118.000	118.000
0018	210.1500	Backfill Structure Type A	TON	446.000	446.000
0020	213.0100	Finishing Roadway (project) 01. 5738-00-74	EACH	1.000	1.000
0024	305.0110	Base Aggregate Dense 3/4-Inch	TON	30.000	30.000
0026	305.0120	Base Aggregate Dense 1 1/4-Inch	TON	520.000	520.000
0028	312.0110	Select Crushed Material	TON	150.000	150.000
0030	455.0605	Tack Coat	GAL	20.000	20.000
0032	465.0105	Asphaltic Surface	TON	70.000	70.000
0034	502.0100	Concrete Masonry Bridges	CY	148.000	148.000
0036	502.3200	Protective Surface Treatment	SY	188.000	188.000
0038	505.0400	Bar Steel Reinforcement HS Structures	LB	4,220.000	4,220.000
0040	505.0600	Bar Steel Reinforcement HS Coated Structures	LB	19,310.000	19,310.000
0042	513.4061	Railing Tubular Type M	LF	90.000	90.000
0044	516.0500	Rubberized Membrane Waterproofing	SY	10.000	10.000
0046	526.0101	Temporary Structure (station) 01. STA 11+48	EACH	1.000	1.000
0048	550.0020	Pre-Boring Rock or Consolidated Materials	LF	175.000	175.000
0050	550.1100	Piling Steel HP 10-Inch x 42 Lb	LF	245.000	245.000
0052	606.0300	Riprap Heavy	CY	70.000	70.000
0054	612.0406	Pipe Underdrain Wrapped 6-Inch	LF	140.000	140.000
0056	618.0100	Maintenance and Repair of Haul Roads (project) 01. 5738-00-74	EACH	1.000	1.000
0060	619.1000	Mobilization	EACH	0.500	0.500
0062	624.0100	Water	MGAL	10.000	10.000
0064	625.0500	Salvaged Topsoil	SY	400.000	400.000
0066	627.0200	Mulching	SY	1,250.000	1,250.000
0068	628.1504	Silt Fence	LF	700.000	700.000
0070	628.1520	Silt Fence Maintenance	LF	1,400.000	1,400.000
0072	628.1905	Mobilizations Erosion Control	EACH	4.000	4.000
0074	628.1910	Mobilizations Emergency Erosion Control	EACH	4.000	4.000
0076	628.2008	Erosion Mat Urban Class I Type B	SY	420.000	420.000
0078	628.6005	Turbidity Barriers	SY	280.000	280.000
0080	628.7504	Temporary Ditch Checks	LF	60.000	60.000
0082	629.0210	Fertilizer Type B	CWT	2.000	2.000
0084	630.0120	Seeding Mixture No. 20	LB	60.000	60.000
0086	630.0200	Seeding Temporary	LB	50.000	50.000
0088	630.0300	Seeding Borrow Pit	LB	20.000	20.000
0090	630.0500	Seed Water	MGAL	30.000	30.000
0092	633.1100	Delineators Temporary	EACH	22.000	22.000
0094	634.0614	Posts Wood 4x6-Inch x 14-FT	EACH	4.000	4.000
0096	637.2230	Signs Type II Reflective F	SF	12.000	12.000
0098	638.2602	Removing Signs Type II	EACH	4.000	4.000
0100	638.3000	Removing Small Sign Supports	EACH	4.000	4.000
0102	642.5001	Field Office Type B	EACH	0.500	0.500
0104	643.0300	Traffic Control Drums	DAY	1,690.000	1,690.000
0106	643.0420	Traffic Control Barricades Type III	DAY	845.000	845.000

5738-00-74

Line	Item	Item Description	Unit	Total	Qty
0108	643.0705	Traffic Control Warning Lights Type A	DAY	1,690.000	1,690.000
0110	643.0715	Traffic Control Warning Lights Type C	DAY	780.000	780.000
0112	643.0900	Traffic Control Signs	DAY	1,820.000	1,820.000
0114	643.5000	Traffic Control	EACH	0.500	0.500
0116	645.0111	Geotextile Type DF Schedule A	SY	100.000	100.000
0118	645.0120	Geotextile Type HR	SY	170.000	170.000
0120	645.0140	Geotextile Type SAS	SY	740.000	740.000
0122	645.0220	Geogrid Type SR	SY	300.000	300.000
0124	650.4500	Construction Staking Subgrade	LF	395.000	395.000
0126	650.5000	Construction Staking Base	LF	395.000	395.000
0128	650.6501	Construction Staking Structure Layout (structure) 01. B-56-0256	EACH	1.000	1.000
0132	650.9911	Construction Staking Supplemental Control (project) 01. 5738-00-74	EACH	1.000	1.000
0136	650.9920	Construction Staking Slope Stakes	LF	395.000	395.000
0138	690.0150	Sawing Asphalt	LF	50.000	50.000
0140	715.0502	Incentive Strength Concrete Structures	DOL	888.000	888.000
0144	ASP.1T0A	On-the-Job Training Apprentice at $5.00/HR	HRS	1,200.000	1,200.000
0146	ASP.1T0G	On-the-Job Training Graduate at $5.00/HR	HRS	600.000	600.000

3

DIVISION	FROM/TO STATION	LOCATION	205.0100 EXCAVATION COMMON (1) CUT (2)	AVAILABLE MATERIAL (5)	UNEXPANDED FILL	EXPANDED FILL (13) FACTOR 1.25	MASS ORDINATE +/- (14)	WASTE	208.0100 BORROW	COMMENT
DIVISION 1										
TEMP ROAD WEST	10+75.00/11+25.00		0	0	48	60	-60			
TEMP ROAD EAST	11+75.00/12+25.00		0	0	46	58	-58			
DIVISION 1 SUBTOTAL			0	0	94	118	-118	0	118	
DIVISION 2										
DAVID DRIVE WEST	0+55.28/1+04.03		69	69	48	60	9			
DAVID DRIVE EAST	1+47.26/1+95.28		52	52	21	26	26			
DIVISION 2 SUBTOTAL			121	121	69	86	35	35	0	
DIVISON 3										
REMOVAL OF TEMP ROAD	10+75.00/12+25.00		293	0	0	0	293			
GRAND TOTAL			414	121	163	204	210	35	118	

NOTES:

(1) COMMON EXCAVATION IS THE SUM OF THE CUT AND EBS EXCAVATION COLUMNS. ITEM NUMBER 205.0100

(2) SALVAGED/UNSUABLE PAVEMENT MATERIAL IS INCLUDED IN CUT.

(5) AVAILABLE MATERIAL = CUT - SALVAGED/UNUSUABLE PAVEMENT MATERIAL

(13) EXPANDED FILL FACTOR = 1.25

DEPENDING ON SELECTIONS:

EXPANDED FILL = UNEXPANDED FILL * FILL FACTOR

(14) THE MASS ORDINATE + OR - QTY CALCULATED FOR THE DIVISION. PLUS QUANTITY INDICATES AN EXCESS OF MATERIAL WITHIN THE DIVISION. MINUS INDICATES A SHORTAGE OF MATERIAL WITHIN THE DIVISION.

3

CLEARING ITEMS

CATEGORY	STATION	TO	STATION	LOCATION	201.0105 CLEARING STA	201.0205 GRUBBING STA	REMARKS
0010	10+00	-	12+97	TEMP ROAD, LT & RT	3	3	INCLUDES TREES ALONG DAVID ROAD
				TOTAL 0010	3	3	

SAWING ITEMS

CATEGORY	STATION	LOCATION	690.0150 SAWING ASPHALT LF
0010	0+55	CL	25
0010	1+95	CL	25
		TOTAL 0010	50

3

BASE AGGREGATE ITEMS

CATEGORY	STATION	TO	STATION	LOCATION	305.0110 BASE AGGREGATE DENSE 3/4-INCH TON	305.0120 BASE AGGREGATE DENSE 1 1/4-INCH TON	312.0110 SELECT CRUSHED MATERIAL TON	624.0100 WATER MGAL	645.0220 GEOGRID TYPE SR SY	645.0140 GEOTEXTILE TYPE SAS SY	645.0220 GEOGRID TYPE SR SY	650.4500 CONSTRUCTION STAKING SUBGRADE LF	650.5000 CONSTRUCTION STAKING BASE LF	650.9920 CONSTRUCTION STAKING SLOPE STAKES LF
0010	0+55.28	-	1+04.05	DAVID DRIVE	10	75	65	5	150	-	150	49	49	49
0010	1+46.55	-	1+95.28	DAVID DRIVE	10	75	65	5	150	-	150	49	49	49
0010	10+00	-	12+97.07	TEMP BYPASS ROAD	-	350	-	-	-	740	-	297	297	297
0010				UNDISTRIBUTED	10	20	20	-	-	-	-	-	-	-
				TOTAL 0010	30	520	150	10	300	740	300	395	395	395

ASPHALT ITEMS

CATEGORY	STATION	TO	STATION	LOCATION	455.0605 TACK COAT GAL	465.0105 ASPHALTIC SURFACE TON
0010	0+55.28	-	1+04.05	DAVID DRIVE	8	25
0010	1+46.55	-	1+95.28	DAVID DRIVE	8	25
0010				UNDISTRIBUTED	4	20
				TOTAL 0010	20	70

SIGN ITEMS

CATEGORY	STATION	LOCATION	SIGN CODE	SIZE	SIGN NO	634.0614 POSTS WOOD 4X6-INCH X 14-FT EACH	637.2230 SIGNS TYPE II REFLECTIVE F SF	638.2602 REMOVING SIGNS TYPE II EACH	638.3000 REMOVING SMALL SIGN SUPPORTS EACH
0010	1+01	LT	W5-52L	12" x 36"	1/1R	1	3	1	1
0010	1+01	RT	W5-52R	12" x 36"	2/2R	1	3	1	1
0010	1+50	LT	W5-52L	12" x 36"	3/3R	1	3	1	1
0010	1+50	RT	W5-52R	12" x 36"	4/4R	1	3	1	1
		TOTAL 0010				4	12	4	4

3

EROSION CONTROL ITEMS

CATEGORY	STATION	TO	STATION	LOCATION	628.1504 SILT FENCE LF	628.1520 SILT FENCE MAINTENANCE LF	628.1905 MOBILIZATIONS EROSION CONTROL EACH	628.1910 MOBILIZATIONS EMERGENCY EROSION CONTROL EACH	628.6005 TURBIDITY BARRIERS SY	628.7504 TEMPORARY DITCH CHECKS LF	REMARKS
0010	0+55.28	-	1+04.05	DAVID DRIVE	320	640	-	-	140	20	INCLUDES AROUND THE TEMP ROAD
0010	1+46.55	-	1+95.28	DAVID DRIVE	320	640	-	-	140	20	INCLUDES AROUND THE TEMP ROAD
0010				UNDISTRIBUTED	60	120	4	4	-	20	
				TOTAL 0010	700	1,400	4	4	280	60	

3

LANDSCAPING ITEMS

CATEGORY	STATION	TO	STATION	LOCATION	625.0500 SALVAGED TOPSOIL SY	627.0200 MULCHING SY	628.2008 EROSION MAT URBAN CLASS I TYPE B SY	629.0210 FERTILIZER TYPE B CWT	630.0120 SEEDING MIXTURE NO. 20 LB	630.0200 SEEDING TEMPORARY LB	630.0300 SEEDING BORROW PIT LB	630.0500 SEED WATER MGAL	REMARKS
0010	10+00	-	11+35	TEMPORARY BYPASS	-	200	-	-	-	5	-	-	INSTALLATION OF BYPASS
0010	11+60	-	12+97	TEMPORARY BYPASS	-	200	-	-	-	5	-	-	INSTALLATION OF BYPASS
0010	0+55	-	1+04	DAVID DRIVE	200	-	200	0.2	9	6	-	5	
0010	1+47	-	1+95	DAVID DRIVE	180	-	200	0.2	9	6	-	5	
0010	10+00	-	11+35	TEMPORARY BYPASS	-	400	-	0.4	18	10	-	10	REMOVAL OF BYPASS
0010	11+60	-	12+97	TEMPORARY BYPASS	-	400	-	0.4	18	10	-	10	REMOVAL OF BYPASS
0010				BORROW / WASTE PIT	-	-	-	-	-	-	17	-	
0010				UNDISTRIBUTED	20	50	20	0.8	6	8	3	-	
				TOTAL 0010	400	1,250	420	2.0	60	50	20	30	

TRAFFIC CONTROL

CATEGORY	STATION - STATION	LOCATION	DAYS	643.0300 TRAFFIC CONTROL DRUMS DAY	NO REQD	633.1100 DELINEATORS TEMPORARY EACH	643.0420 TRAFFIC CONTROL BARRICADES TYPE III DAY	NO REQD	643.0705 TRAFFIC CONTROL WARNING LIGHTS TYPE A DAY	NO REQD	643.0715 TRAFFIC CONTROL WARNING LIGHTS TYPE C DAY	NO REQD	643.0900 TRAFFIC CONTROL SIGNS DAY	NO REQD
0010	0+55 - 1+96	MAINLINE	65	-	-	-	845	13	1,690	26	-	-	390	6
0010	0+55 - 1+96	BYPASS	65	1,690	26	22	-	-	-	-	780	12	1,430	22
		TOTAL 0010		1,690		22	845		1,690		780		1,820	

R/W PROJECT NUMBER 5738-00-04	SHEET NUMBER	TOTAL SHEETS
FEDERAL PROJECT NUMBER	4.01	1

PLAT OF RIGHT OF WAY REQUIRED FOR

TOWN OF WOODLAND, DAVID DRIVE BRANCH OF PLUM CREEK, B-56-0256

DAVID DRIVE — SAUK

CONSTRUCTION PROJECT NUMBER 5738-00-74

CONVENTIONAL SYMBOLS

SECTION LINE
QUARTER LINE
SIXTEENTH LINE
NEW REFERENCE LINE
NEW R/W LINE
EXISTING R/W OR HE LINE
PROPERTY LINE
LOT, TIE & OTHER MINOR LINES
EXISTING CENTERLINE
CORPORATE LIMITS
NEW R/W (TCE OR HE) (HATCHING VARIES BY OWNER)
TEMPORARY LIMITED EASEMENT AREA
EASEMENT AREA (PERMANENT LIMITED OR RESTRICTED DEVELOPMENT)
BUILDING — TO BE REMOVED
BRIDGE — CULVERT

SECTION CORNER SYMBOL
SECTION CORNER MONUMENT
R/W MONUMENT (TO BE SET)
NON-MONUMENTED R/W POINT
FOUND SURVEY MONUMENT (SEE FOUND MONUMENT TABLE)
GEODETIC SURVEY MONUMENT
SIGN — PERMITTED SIGN
ACCESS RESTRICTED BY ACQUISITION
NO ACCESS (BY STATUTORY AUTHORITY)
ACCESS RESTRICTED (BY PREVIOUS PROJECT OR CONTROL)
NO ACCESS (NEW HIGHWAY)
PARCEL NUMBER (25) — UTILITY NUMBER (40)
PARALLEL OFFSETS

CONVENTIONAL UTILITY SYMBOLS

WATER
GAS
TELEPHONE
OVERHEAD TRANSMISSION LINES
ELECTRIC
CABLE TELEVISION
FIBER OPTIC
SANITARY SEWER
STORM SEWER
COMBINED SEWER
ELECTRIC TOWER
TRANSMISSION STRUCTURES

	COMPENSABLE	NON COMPENSABLE
ELECTRIC POLE		
TELEPHONE POLE		
PEDESTAL (LABEL TYPE) (TV, TEL, ELEC, ETC.)		

SCHEDULE OF LANDS & INTERESTS REQUIRED

OWNER'S NAMES ARE SHOWN FOR REFERENCE PURPOSES ONLY AND ARE SUBJECT TO CHANGE PRIOR TO THE TRANSFER OF LAND INTERESTS TO THE DEPARTMENT

PARCEL NUMBER	OWNER(S)	INTERESTS REQUIRED	R/W REQUIRED SF NEW	EXISTING	TOTAL	PLE ACRE	TLE ACRE
1	REUBEN L. BRUBAKER AND BETH A. BRUBAKER	TLE	--	--	--	--	0.19

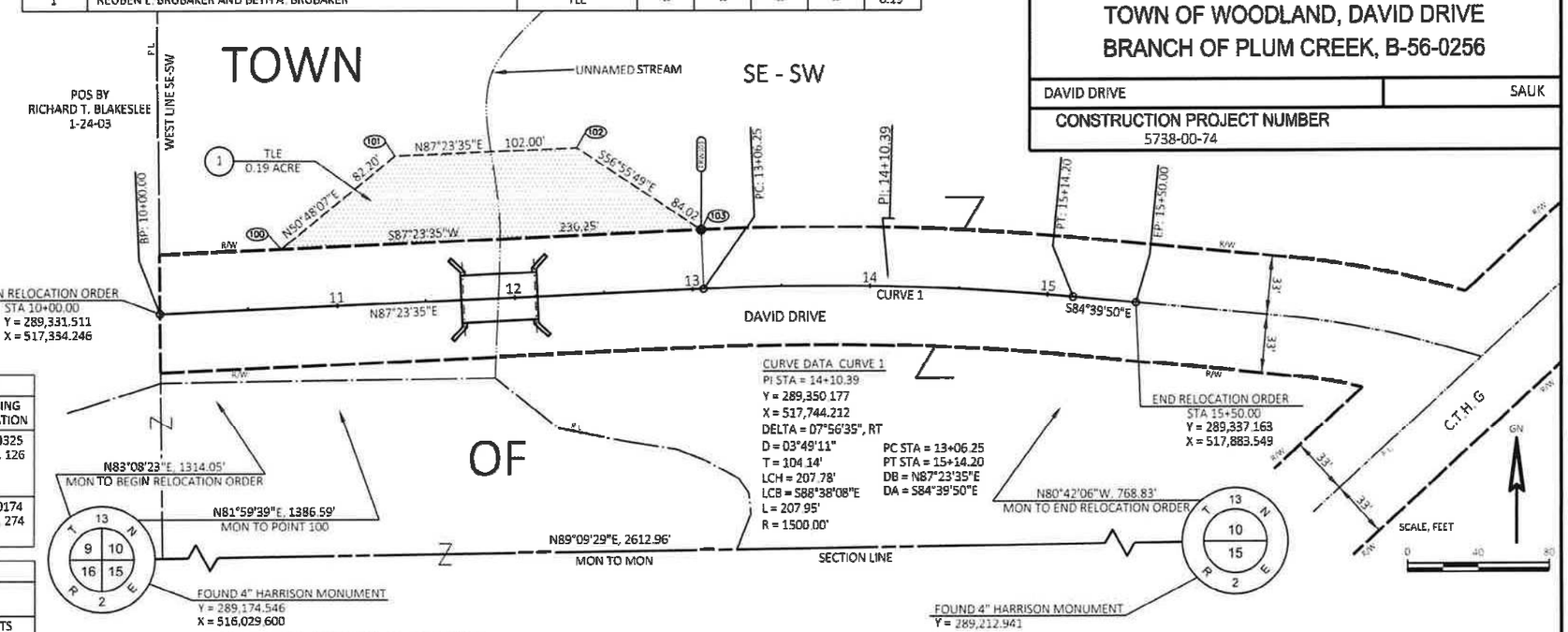

UTILITY EASEMENT TABLE			
UTILITY NO	PARCEL	OWNER	RECORDING INFORMATION
100	1	DAIRYLAND POWER COOPERATIVE ELECTRIC LINE EASEMENT BLANKET EASEMENT	DOC. 394325 V. 381, P. 126
101	1	NORTH-WEST TELEPHONE COMPANY UTILITY EASEMENT - BLANKET EASEMENT	DOC. 400174 V. 387, P. 274

UTILITY INTERESTS REQUIRED		
UTILITY NO	OWNER(S)	INTEREST REQUIRED
100	VERNON ELECTRIC COOPERATIVE	RELEASE OF RIGHTS
101	BRIGHTSPEED OF WESTERN WISCONSIN, LLC	RELEASE OF RIGHTS

END RELOCATION ORDER

124.22 FT NORTH AND 758.73 FT WEST OF THE SOUTH 1/4 CORNER OF SEC. 10, T13N, R2E
Y=289,337.163
X=517,883.549

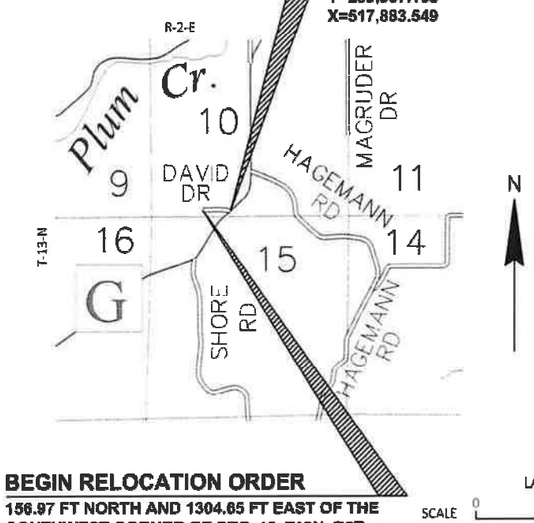

BEGIN RELOCATION ORDER

156.97 FT NORTH AND 1304.65 FT EAST OF THE SOUTHWEST CORNER OF SEC. 10, T13N, R2E
Y=289,331.511
X=517,334.246

LAYOUT
SCALE 0 — 2000

TOTAL NET LENGTH OF CENTERLINE = 0.10

CONVENTIONAL ABBREVIATIONS

ACCESS RIGHTS	AR	RECORDED AS	(100')
ACRES	AC	REEL / IMAGE	R/I
ALUMINUM	ALUM	REFERENCE LINE	R/L
AND OTHERS	ET AL	REMAINING	REM
BLOCK	BLK	RESTRICTIVE DEVELOPMENT EASEMENT	RDE
CENTERLINE	C/L	RIGHT	RT
CERTIFIED SURVEY MAP	CSM	RIGHT OF WAY	R/W
CONCRETE	CONC	SECTION	SEC
COUNTY TRUNK HIGHWAY	CTH	SEPTIC VENT	SEPV
CORNER	COR	SQUARE FEET	SF
DOCUMENT NUMBER	DOC	STATE TRUNK HIGHWAY	STH
EASEMENT	EASE	STATION	STA
EXISTING	EX	TELEPHONE PEDESTAL	TP
GAS VALVE	GV	TRANSPORTATION PROJECT PLAT	TPP
GRID NORTH	GN	UNITED STATES HIGHWAY	USH
IDENTIFICATION	ID	VOLUME	V
LEFT	LT		
MONUMENT	MON		
NATIONAL GEODETIC SURVEY	NGS		
NUMBER	NO		
OUTLOT	OL		
PAGE	P		
POINT OF TANGENCY	PT		
POINT OF BEGINNING	POB		
POINT OF CURVATURE	PC		
POINT OF COMPOUND CURVE	PCC		
POINT OF INTERSECTION	PI		
PROPERTY LINE	PL		

CURVE DATA ABBREVIATIONS

LONG CHORD	LCH
LONG CHORD BEARING	LCB
RADIUS	R
DEGREE OF CURVE	D
DELTA ANGLE	Δ /DELTA
LENGTH OF CURVE	L
TANGENT	T
DIRECTION AHEAD	DA
DIRECTION BACK	DB

NOTES:

POSITIONS SHOWN ON THIS PLAT ARE WISCONSIN COORDINATE REFERENCE SYSTEM COORDINATES (WISCRS), SAUK COUNTY, NAD83 (2011) IN US SURVEY FEET. VALUES SHOWN ARE GRID COORDINATES, GRID BEARINGS, AND GRID DISTANCES. GRID DISTANCES MAY BE USED AS GROUND DISTANCES.

ALL NEW RIGHT-OF-WAY MONUMENTS WILL BE TYPE 2 (TYPICALLY ¾" X 24" IRON REBARS), UNLESS OTHERWISE NOTED, AND WILL BE PLACED PRIOR TO THE COMPLETION OF THE PROJECT.

DIMENSIONING FOR THE NEW RIGHT-OF-WAY IS MEASURED ALONG AND PERPENDICULAR TO THE NEW REFERENCE LINES.

RIGHT-OF-WAY BOUNDARIES ARE DEFINED WITH COURSES OF THE PERIMETER OF THE HIGHWAY LANDS REFERENCED TO THE U.S. PUBLIC LAND SURVEY SYSTEM OR OTHER "SURVEYS" OF PUBLIC RECORD.

FOR THE CURRENT ACCESS/DRIVEWAY INFORMATION, CONTACT THE PLANNING UNIT OF THE WISCONSIN DEPARTMENT OF TRANSPORTATION OFFICE IN SW REGION LA CROSSE.

PARCEL AND UTILITY IDENTIFICATION NUMBERS MAY NOT POINT TO ALL AREAS OF ACQUISITION, AS NOTED ON THIS SHEET.

A TEMPORARY LIMITED EASEMENT (TLE) IS A RIGHT FOR CONSTRUCTION PURPOSES, AS DEFINED HEREIN, INCLUDING THE RIGHT TO OPERATE NECESSARY EQUIPMENT THEREON, THE RIGHT OF INGRESS AND EGRESS, AS LONG AS REQUIRED FOR SUCH PUBLIC PURPOSE, INCLUDING THE RIGHT TO PRESERVE, PROTECT, REMOVE, OR PLANT THEREON ANY VEGETATION THAT THE HIGHWAY AUTHORITIES MAY DEEM DESIRABLE. ALL (TLEs) ON THIS PLAT EXPIRE AT THE COMPLETION OF THE CONSTRUCTION PROJECT FOR WHICH THIS INSTRUMENT IS GIVEN.

PROPERTY LINES SHOWN ON THIS PLAT ARE DRAWN FROM DATA DERIVED FROM MAPS AND DOCUMENTS OF PUBLIC RECORD AND/OR EXISTING OCCUPATIONAL LINES. THIS PLAT MAY NOT BE A TRUE REPRESENTATION OF EXISTING PROPERTY LINES, EXCLUDING RIGHT-OF-WAY, AND SHOULD NOT BE USED AS A SUBSTITUTE FOR AN ACCURATE FIELD SURVEY.

EXISTING HIGHWAY RIGHT-OF-WAY SHOWN HEREIN IS BASED ON EXISTING ROADWAY CENTERLINE.

WOODLAND

RECEIVED JUL - 9 2025 By

STATION & OFFSET/COORDINATE TABLE				
POINT	STATION	OFFSET	Y COORDINATE	X COORDINATE
100	10+70.00	33.00' LT	289,367.661	517,402.673
101	11+36.00	82.00' LT	289,419.612	517,466.376
102	12+38.00	82.00' LT	289,424.251	517,568.270
103	13+00.25	33.00' LT	289,378.406	517,638.678

TEAM ENGINEERING

REVISION DATE

WISCONSIN STEVEN A. ALT S-3061 LONE ROCK WIS. LAND SURVEYOR

THIS PLAT IS A GRAPHIC REPRESENTATION AND IS FOR REFERENCE PURPOSES ONLY. DEEDS MUST BE CHECKED TO DETERMINE PROPERTY BOUNDARIES AND ACCESS RIGHTS.

TOWN OF WOODLAND

APPROVED FOR THE TOWN
DATE 7-9-25 Elvin J. Wotlver (Signature) Chairman

FILE NAME : T:\PROJECTS\2024\24-2053-1 T WOODLAND, DAVID DRIVE, P-56-0033, ID 5738-00-04\ROW\57380004_PLAT.DWG PLOT DATE : 1/20/2025 10:42 AM PLOT BY : PAIGE PLOT NAME :

BENCH MARKS			
NO.	STATION	ELEV.	DESCRIPTION
BM 1	1+40.04	954.94	CHISELED X
BM 2	-0+12.66	955.06	3/4" REBAR
BM 3	0+85.39	955.28	3/4" REBAR
BM 4	2+34.15	954.28	3/4" REBAR

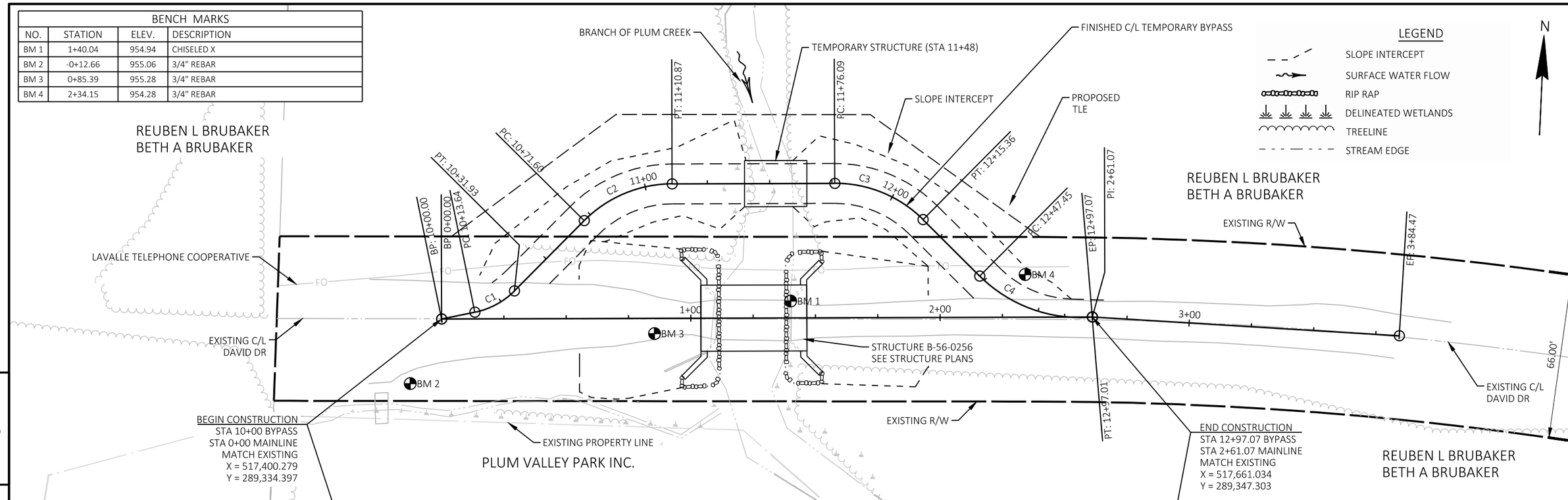

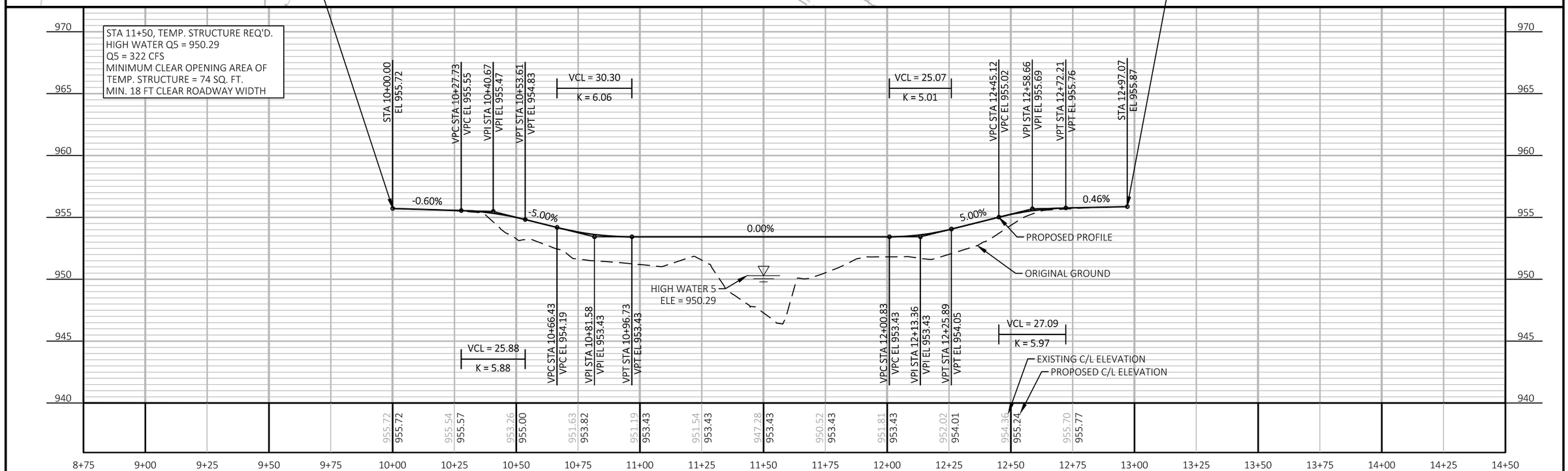

PROJECT NO: 5738-00-74	HWY: DAVID DRIVE	COUNTY: SAUK	PLAN AND PROFILE: TEMP ROAD	SHEET 12	E

FILE NAME : T:\PROJECTS\2024\24-2053-1 T WOODLAND, DAVID DRIVE, P-56-0933, ID 5738-00-04\DRAWINGS\57380004_PROPOSED LINEWORK.DWG
LAYOUT NAME - P&P Temp Road 1
PLOT DATE : 3/11/2026 10:31 AM PLOT BY : TYLER BUCHANAN PLOT NAME : PLOT SCALE : 1 IN:40 FT
WISDOT/CADDS SHEET 44

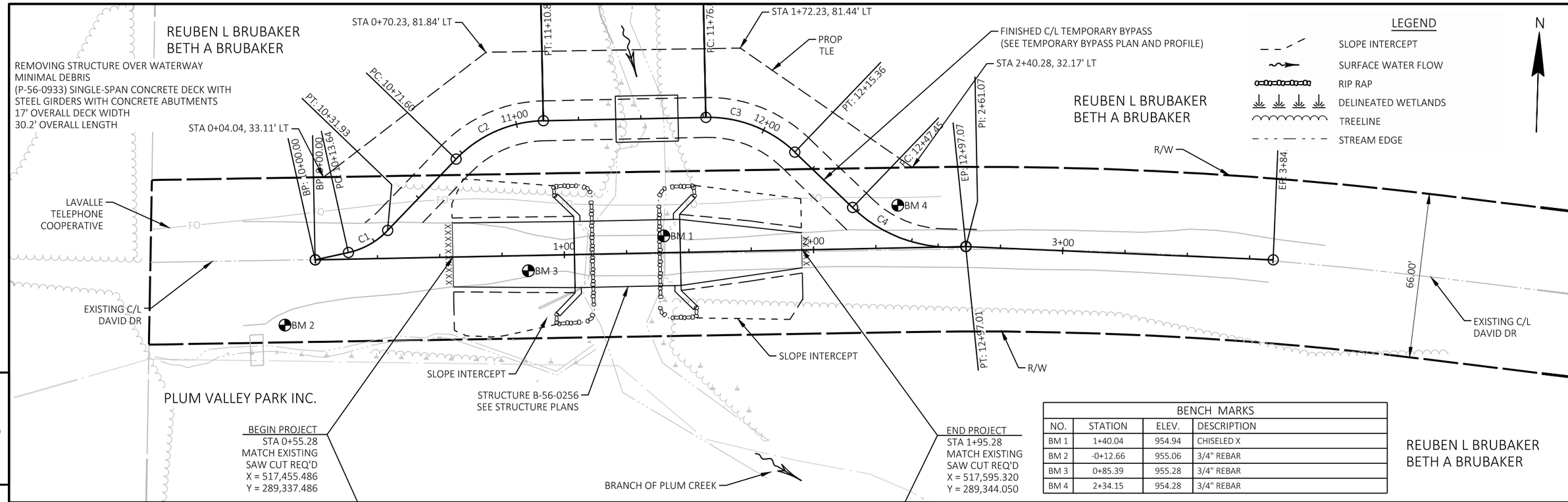

BENCH MARKS			
NO.	STATION	ELEV.	DESCRIPTION
BM 1	1+40.04	954.94	CHISELED X
BM 2	-0+12.66	955.06	3/4" REBAR
BM 3	0+85.39	955.28	3/4" REBAR
BM 4	2+34.15	954.28	3/4" REBAR

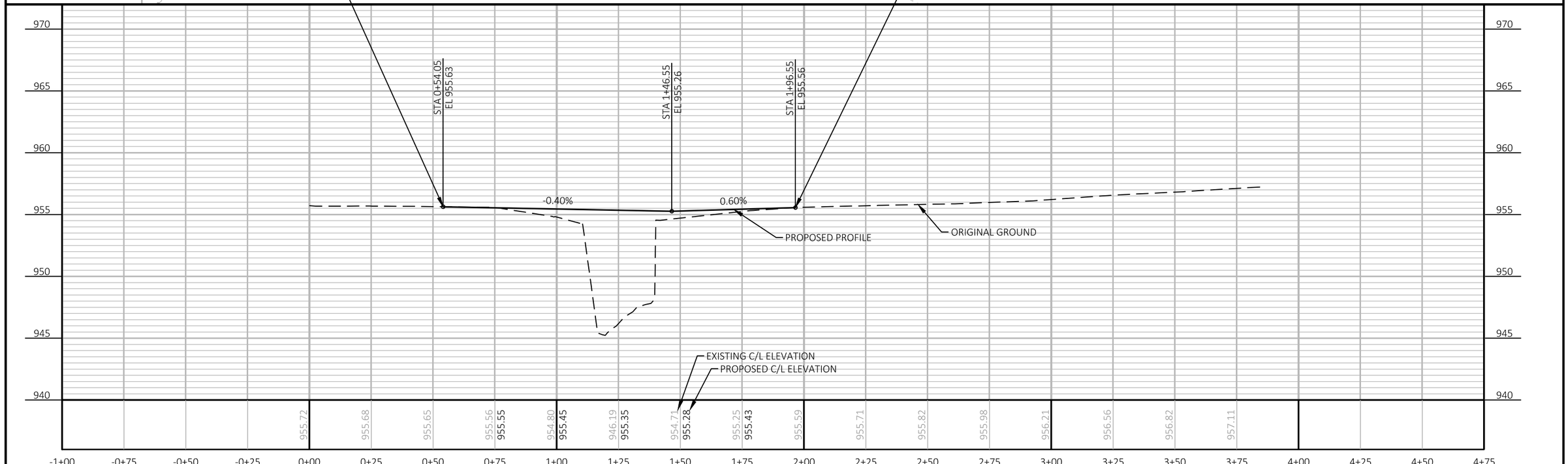

PROJECT NO: 5738-00-74	HWY: DAVID DRIVE	COUNTY: SAUK	PLAN AND PROFILE: DAVID DRIVE	SHEET 13	E

FILE NAME : T:\PROJECTS\2024\24-2053-1 T WOODLAND, DAVID DRIVE, P-56-0933, ID 5738-00-04\DRAWINGS\57380004_PROPOSED LINEWORK.DWG
LAYOUT NAME - P&P David Drive 1
PLOT DATE : 3/11/2026 10:31 AM PLOT BY : TYLER BUCHANAN PLOT NAME : PLOT SCALE : 1 IN:40 FT

Standard Detail Drawing List

08E08-03	TYPICAL INSTALLATIONS OF EROSION BALES / TEMPORARY DITCH CHECKS
08E09-06	SILT FENCE
08E11-02	TURBIDITY BARRIER
12A03-10	NAME PLATE (STRUCTURES)
13C19-03	HMA LONGITUDINAL JOINTS
15C02-10A	BARRICADES AND SIGNS FOR MAINLINE CLOSURES
15C02-10B	BARRICADES AND SIGNS FOR VARIOUS CLOSURES
15C06-12	SIGNING & MARKING FOR TWO LANE BRIDGES
15C11-11B	CHANNELIZING DEVICES DRUMS, CONES, BARRICADES AND VERTICAL PANELS
15D31-05	TRAFFIC CONTROL, TEMPORARY BYPASS ROADWAY

6

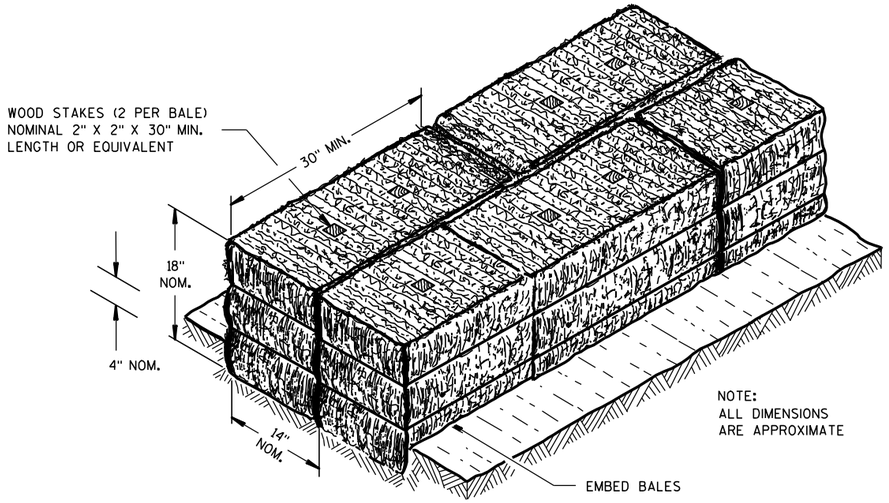

SECTION A-A

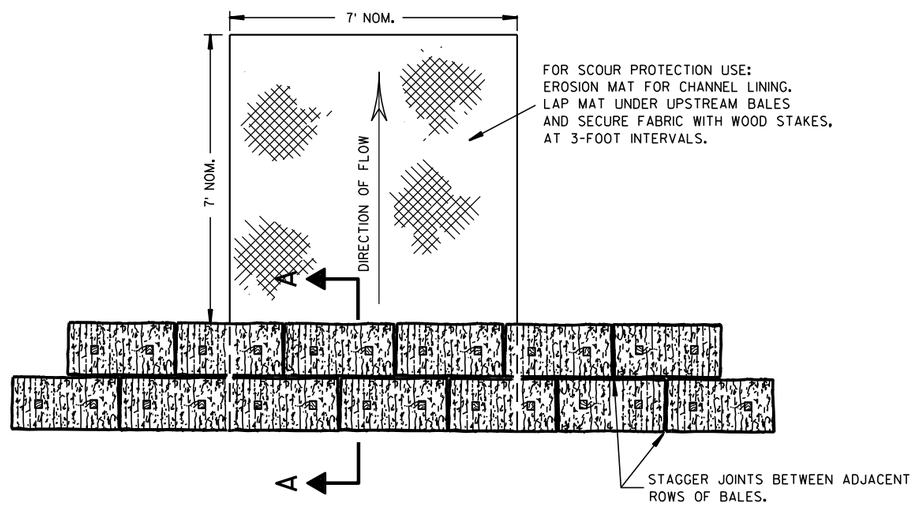

PLAN VIEW

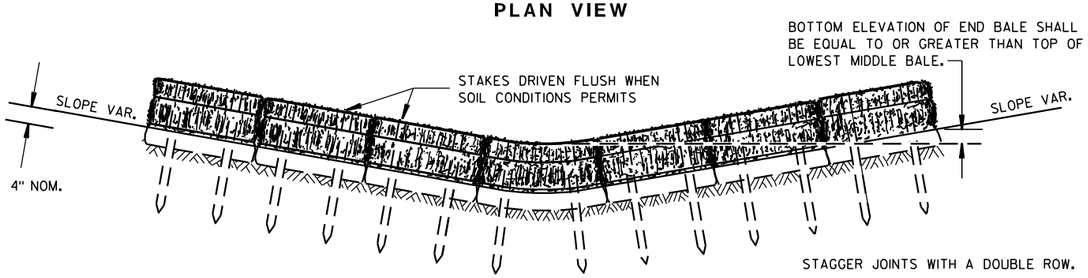

FRONT ELEVATION

TEMPORARY DITCH CHECK USING EROSION BALES ①

GENERAL NOTES

DETAILS OF CONSTRUCTION, MATERIALS AND WORKMANSHIP NOT SHOWN ON THIS DRAWING SHALL CONFORM TO THE PERTINENT REQUIREMENTS OF THE STANDARD SPECIFICATIONS AND THE APPLICABLE SPECIAL PROVISIONS.

① TEMPORARY DITCH CHECKS EITHER EROSION BALES OR MANUFACTURED SHALL BE PAID FOR UNDER THE BID ITEM OF TEMPORARY DITCH CHECK. THE DEPARTMENT WILL NOT PAY FOR TEMPORARY DITCH CHECKS CONSTRUCTED OF A SINGLE ROW OF EROSION BALES.

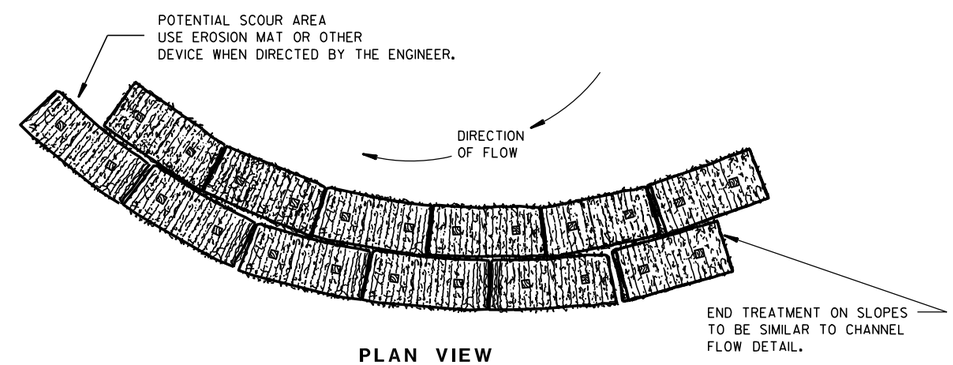

PLAN VIEW

WHEN ALTERING THE DIRECTION OF FLOW

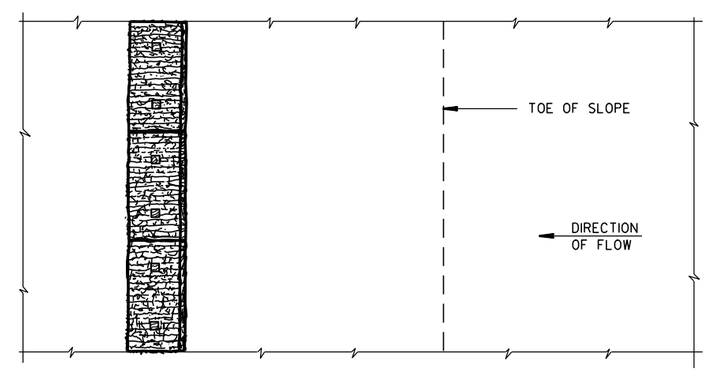

PLAN VIEW

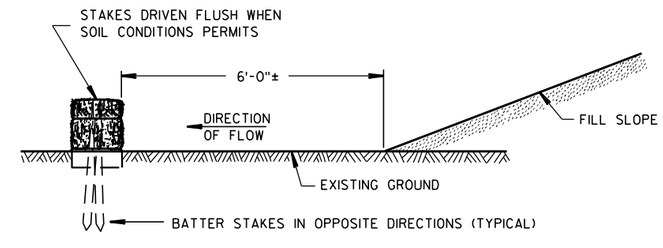

FRONT ELEVATION

WHEN EXISTING GROUND SLOPES AWAY FROM FILL SLOPE

EROSION BALES FOR SHEET FLOW

TYPICAL INSTALLATIONS OF EROSION BALES / TEMPORARY DITCH CHECKS

STATE OF WISCONSIN
DEPARTMENT OF TRANSPORTATION

APPROVED

6/04/02 — DATE

/S/ Beth Cann — CHIEF ROADWAY DEVELOPMENT ENGINEER

FHWA

6

6

S.D.D. 8 E 8-3

S.D.D. 8 E 8-3

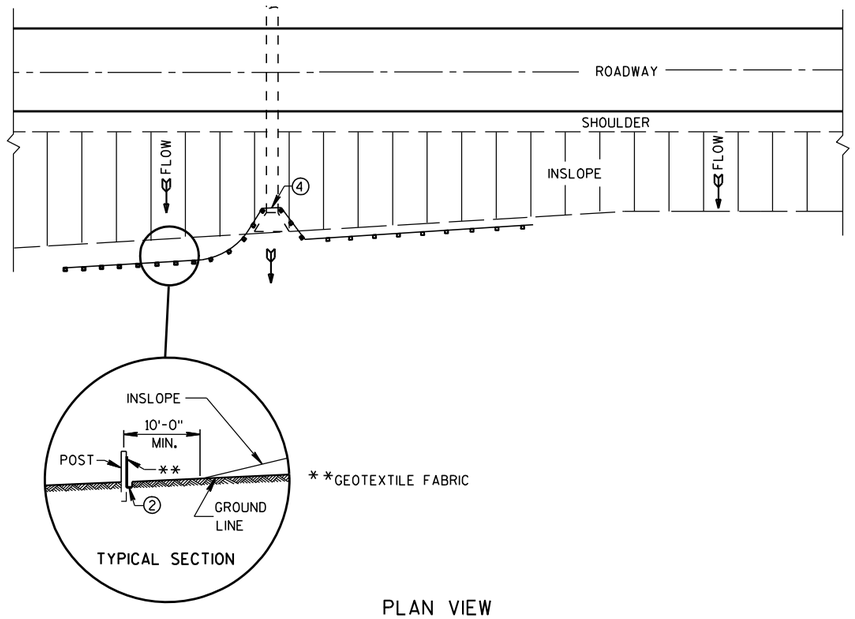

PLAN VIEW

TYPICAL APPLICATION OF SILT FENCE

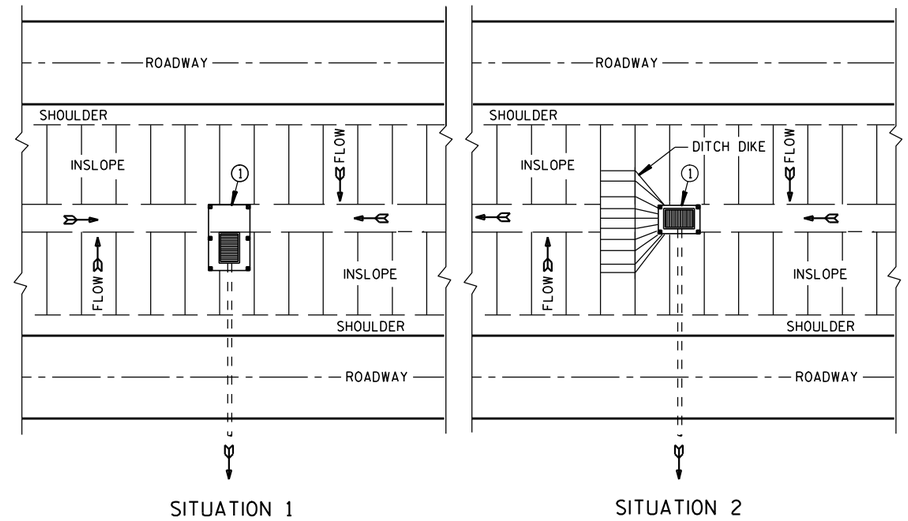

PLAN VIEW

SILT FENCE AT MEDIAN SURFACE DRAINS

GENERAL NOTES

DETAILS OF CONSTRUCTION NOT SHOWN ON THIS DRAWING SHALL CONFORM TO THE PERTINENT REQUIREMENTS OF THE STANDARD SPECIFICATIONS AND APPLICABLE SPECIAL PROVISIONS.

① HORIZONTAL BRACE REQUIRED WITH 2" X 4" WOODEN FRAME OR EQUIVALENT AT TOP OF POSTS.

② FOR MANUAL INSTALLATIONS THE TRENCH SHALL BE A MINIMUM OF 4" WIDE & 6" DEEP TO BURY AND ANCHOR THE GEOTEXTILE FABRIC. FOLD MATERIAL TO FIT TRENCH AND BACKFILL & COMPACT TRENCH WITH EXCAVATED SOIL.

③ WOOD POSTS SHALL BE A MINIMUM SIZE OF 1⅛" X 1⅛" OF OAK OR HICKORY.

④ SILT FENCE TO EXTEND ACROSS THE TOP OF THE PIPE.

⑤ CONSTRUCT SILT FENCE FROM A CONTINUOUS ROLL IF POSSIBLE BY CUTTING LENGTHS TO AVOID JOINTS. IF A JOINT IS NECESSARY USE ONE OF THE FOLLOWING TWO METHODS; A) OVERLAP THE END POSTS AND TWIST, OR ROTATE, AT LEAST 180 DEGREES. B) HOOK THE END OF EACH SILT FENCE LENGTH.

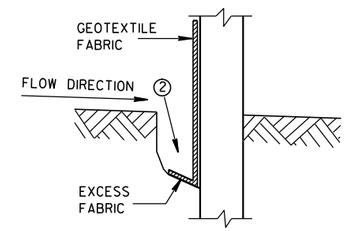

TRENCH DETAIL

NOTE: ADDITIONAL POST DEPTH OR TIE BACKS MAY BE REQUIRED IN UNSTABLE SOILS

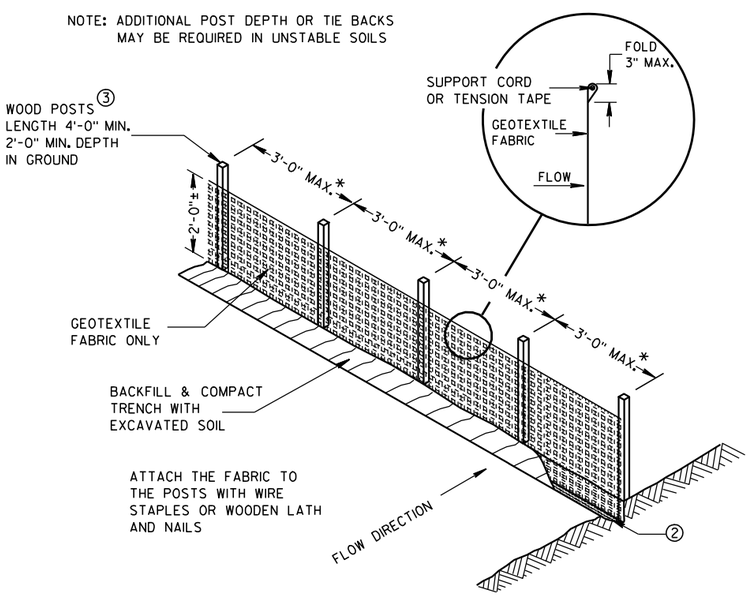

*NOTE: 8'-0" POST SPACING ALLOWED IF A WOVEN GEOTEXTILE FABRIC IS USED.

SILT FENCE

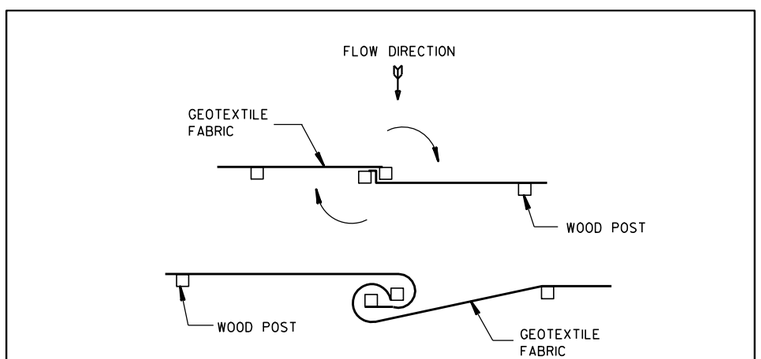

TWIST METHOD

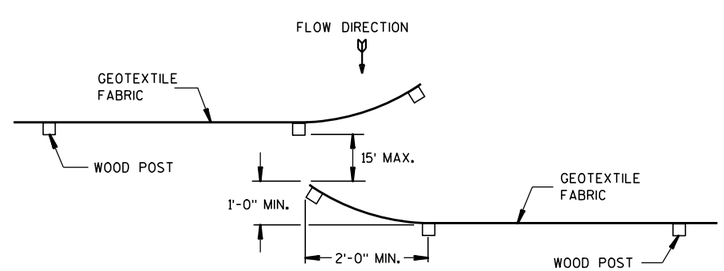

HOOK METHOD

JOINING TWO LENGTHS OF SILT FENCE ⑤

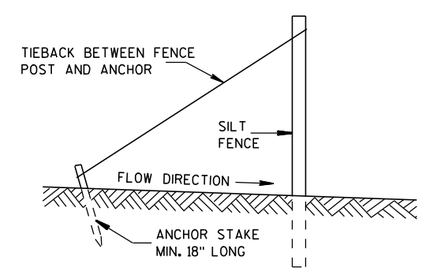

SILT FENCE TIE BACK

(WHEN REQUIRED BY THE ENGINEER)

SILT FENCE
STATE OF WISCONSIN DEPARTMENT OF TRANSPORTATION
APPROVED 4-29-05 DATE — /S/ Beth Cann[illegible] CHIEF ROADWAY DEVELOP[illegible]NEER FHWA

6

6

S.D.D. 8 E 9-6

S.D.D. 8 E 9-6

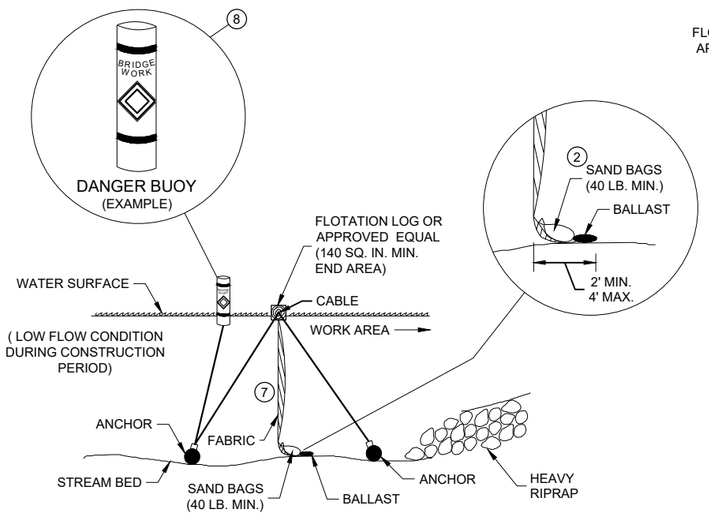

SECTION B - B

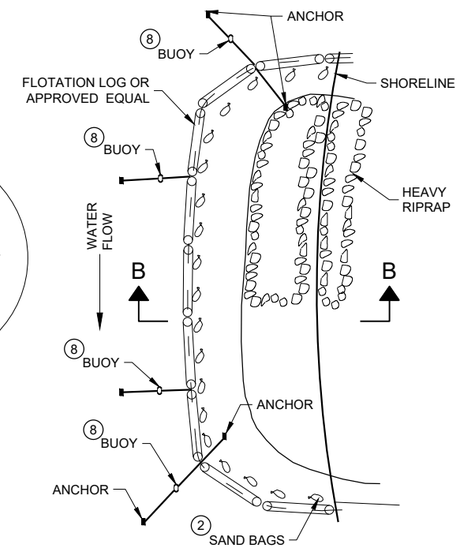

PLAN VIEW

TURBIDITY BARRIER - FLOAT ALTERNATIVE
CAUTION - SEE NOTE 6

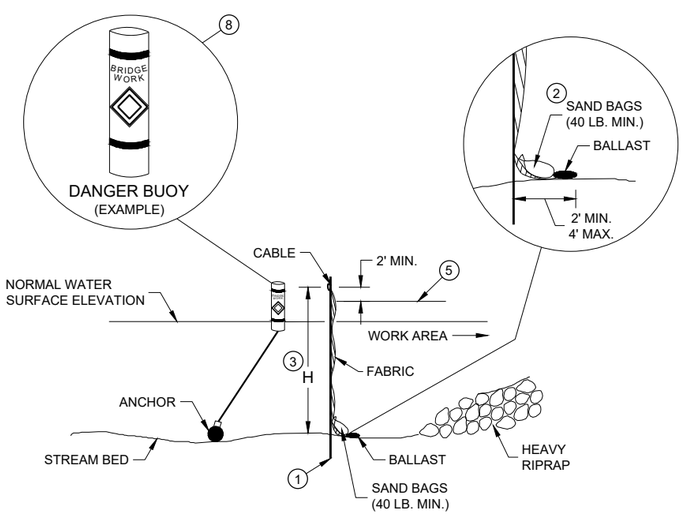

SECTION A - A

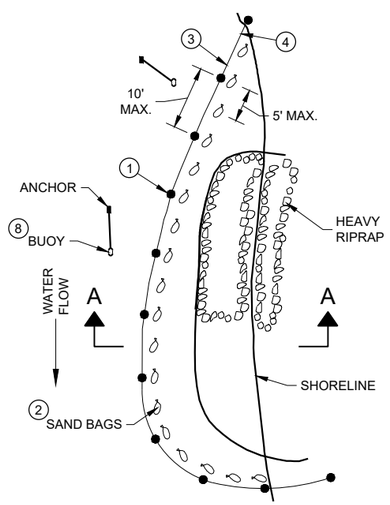

PLAN VIEW

TURBIDITY BARRIER - STANDARD POST INSTALLATION

TURBIDITY BARRIER PLACEMENT DETAILS

GENERAL NOTES

DETAILS OF CONSTRUCTION, MATERIALS AND WORKMANSHIP NOT SHOWN ON THIS DRAWING SHALL CONFORM TO THE PERTINENT REQUIREMENTS OF THE STANDARD SPECIFICATIONS AND THE APPLICABLE SPECIAL PROVISIONS.

TURBIDITY BARRIER MAY BE REMOVED AT THE ENGINEERS DISCRETION, WHEN PERMANENT EROSION CONTROL MEASURES HAVE BEEN ESTABLISHED.

1. DRIVEN STEEL POSTS, PIPES, OR CHANNELS. LENGTH SHALL BE SUFFICIENT TO SECURELY SUPPORT BARRIER AT HIGH WATER ELEVATIONS.
2. SAND BAGS TO BE USED AS ADDITIONAL BALLAST WHEN ORDERED BY THE ENGINEER TO MEET ADVERSE FIELD CONDITIONS. SPACE AS APPROPRIATE FOR SITE CONDITIONS.
3. WHEN BARRIER HEIGHT "H" EXCEEDS 8 FEET, POST SPACING MAY NEED TO BE DECREASED.
4. IN WATERWAYS SUBJECT TO FLUCTUATING WATER ELEVATIONS, PROVISIONS SHOULD BE MADE TO ALLOW THE WATER TO EQUALIZE ON EACH SIDE OF THE BARRIER. THIS MAY BE ACCOMPLISHED BY LEAVING A PORTION OF THE BARRIER OPEN ON THE UPSTREAM END.
5. ESTIMATED HIGH WATER ELEVATION DURING CONSTRUCTION PERIOD. MINIMUM BARRIER HEIGHT SHALL BE 2' GREATER THAN EITHER THE Q2 ELEVATION OR THE ESTIMATED HIGH WATER ELEVATION DURING CONSTRUCTION, WHICHEVER IS GREATER.
6. FLOAT ALTERNATIVE WILL ONLY BE ALLOWED WITH WRITTEN APPROVAL OF THE ENGINEER, AND IS MEANT FOR LOCATIONS WHERE BEDROCK PREVENTS THE INSTALLATION OF POSTS.
7. ALLOW SUFFICIENT SLACK VERTICALLY AND HORIZONTALLY SO THAT SEDIMENT BUILD UP WILL NOT SEPARATE OR LOWER THE TURBIDITY BARRIER.
8. USE AS DIRECTED BY COAST GUARD OR DNR PERMIT WHEN WORKING IN NAVIGABLE WATERWAYS.

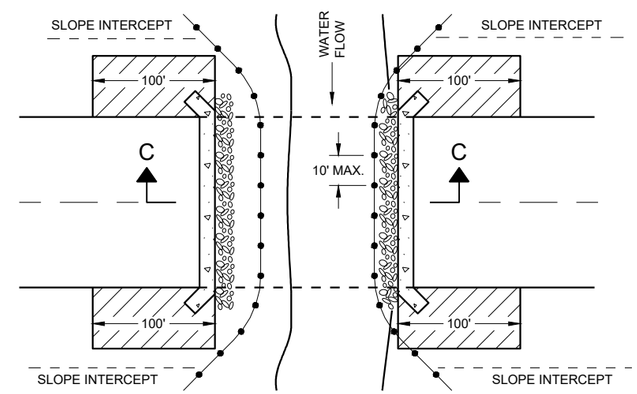

PLAN VIEW

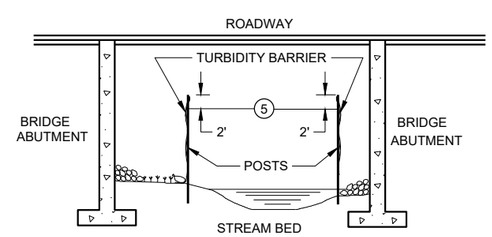

SECTION C - C

TURBIDITY BARRIER DETAIL SHOWING TYPICAL PLACEMENT AT STRUCTURES

TURBIDITY BARRIER

STATE OF WISCONSIN
DEPARTMENT OF TRANSPORTATION

APPROVED
6/4/02 — DATE
/S/ Beth Cannestra — CHIEF ROADWAY DEVELOPMENT ENGINEER
FHWA

6

SDD 08E11 - 02

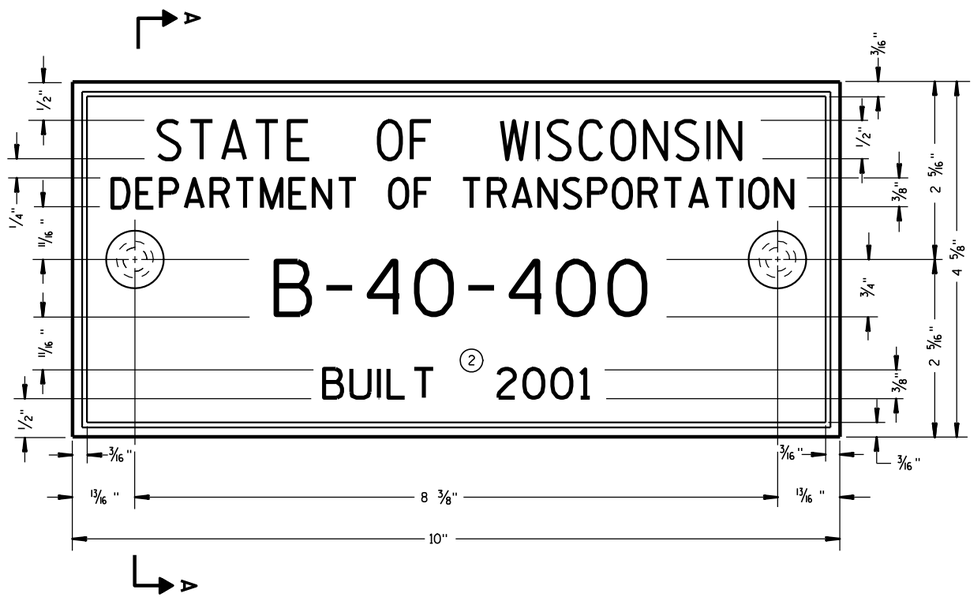

TYPICAL NAME PLATE

(BRIDGES, CULVERTS, AND RETAINING WALLS)

GENERAL NOTES

NAME PLATES TO BE INSTALLED ON BRIDGES, CULVERTS, AND RETAINING WALLS SHALL CONFORM TO THE REQUIREMENTS OF SECTION 502.3.11 OF THE STANDARD SPECIFICATIONS.

THE BRIDGE NUMBER AND YEAR BUILT SHOWN ON THIS DRAWING ARE EXAMPLES ONLY. SEE CONSTRUCTION PLANS FOR INDIVIDUAL NUMBERING AND YEAR BUILT.

(1) EPOXY RESIN SHALL BE FROM AN APPROVED MANUFACTURER AND USED IN ACCORDANCE WITH MANUFACTURER'S RECOMMENDATIONS.

(2) REHABILITATION OF AN EXISTING STRUCTURE SHOULD USE THE DATE OF ORIGINAL STRUCTURE CONSTRUCTION.

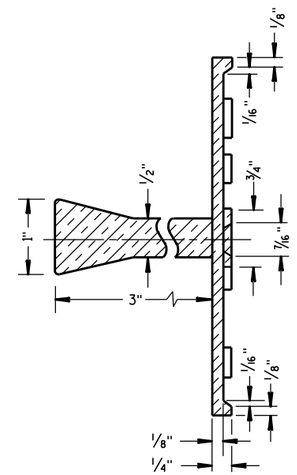

SECTION A-A

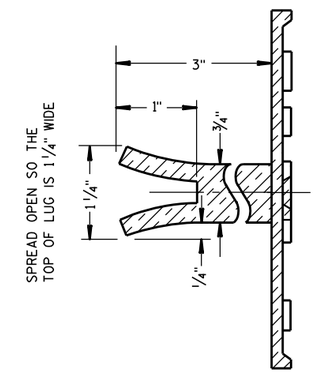

ALTERNATE LUG

6

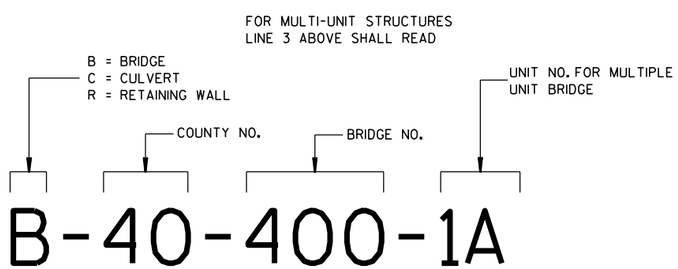

NUMBERING DESIGNATION
MULTI-UNIT STRUCTURES

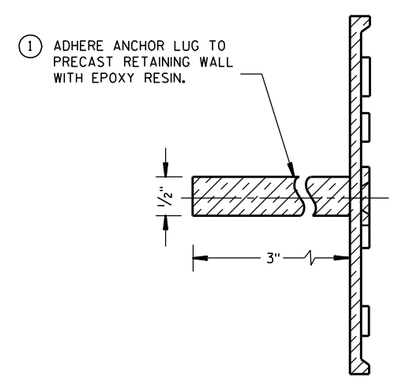

ALTERNATE LUG

(FOR ATTACHMENT TO PRECAST STRUCTURES)

NAME PLATE (STRUCTURES)		
STATE OF WISCONSIN DEPARTMENT OF TRANSPORTATION		
APPROVED		
3/26/10 DATE	/S/ Scot Beck-- CHIEF STRUCTURAL DEVELOP	ENGINEER
FHWA		

S.D.D. 12 A 3-10

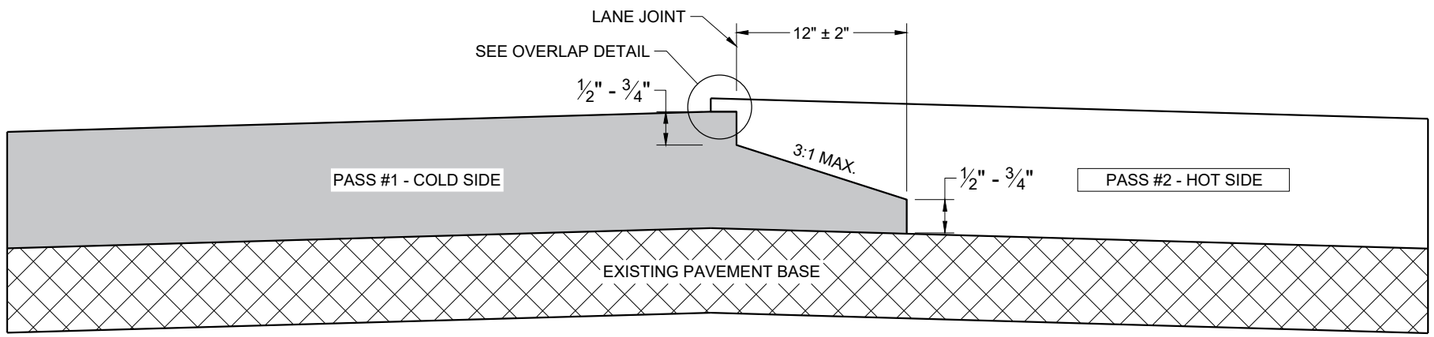

TYPICAL PAVEMENT CROSS SECTION
NOTCHED WEDGE JOINT

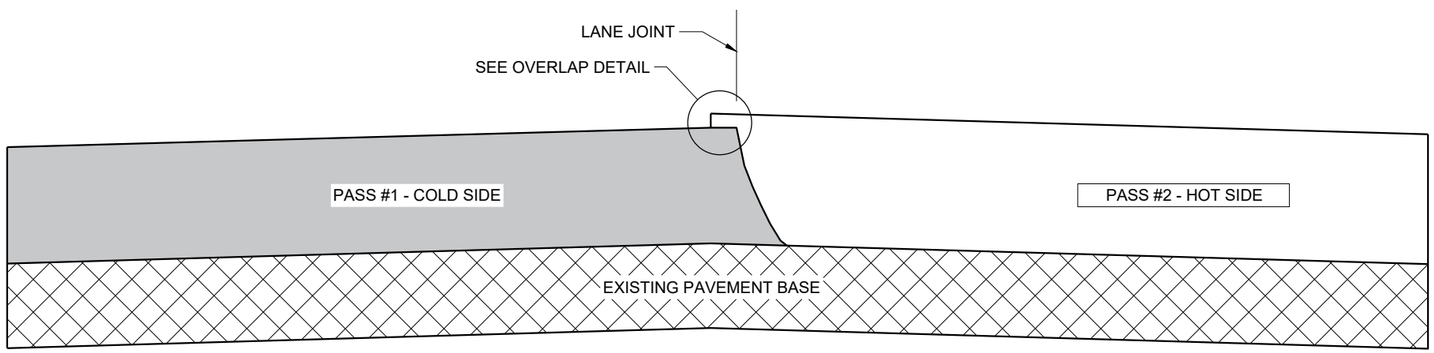

TYPICAL PAVEMENT CROSS SECTION
VERTICAL JOINT

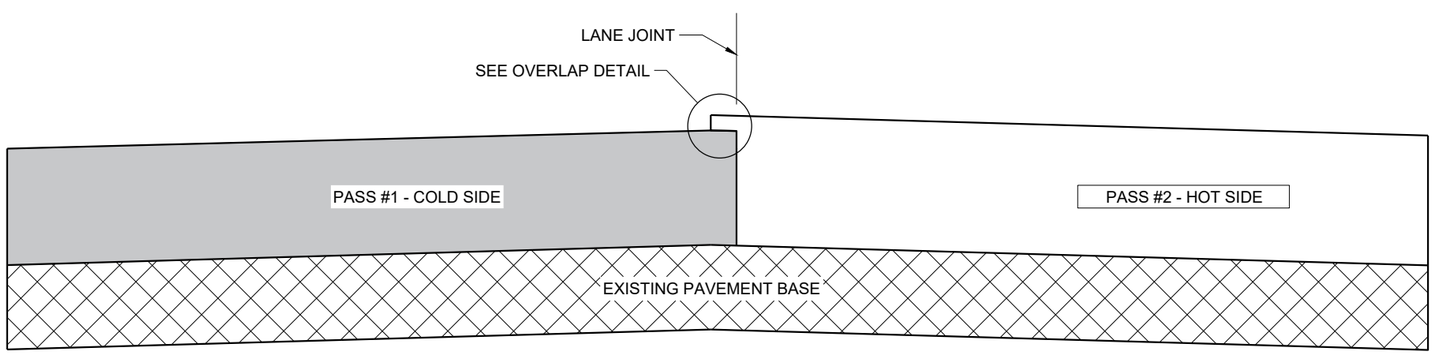

TYPICAL PAVEMENT CROSS SECTION
VERTICAL JOINT (MILLED)

GENERAL NOTES

IN ADDITION TO THE DETAILS PROVIDED IN THIS DRAWING, CONFORM TO STANDARD SPECIFICATION 450.3.2.8 FOR WHEN A NOTCHED WEDGE JOINT IS REQUIRED AND FOR GENERAL JOINT CONSTRUCTION REQUIREMENTS.

FOR ALL LONGITUDINAL JOINTS, ENSURE THE PAVER SCREED OVERLAPS THE PREVIOUSLY PLACED PAVEMENT BY 1" ± 0.5" AND THE HOT SIDE OF THE JOINT REMAINS HIGHER THAN THE COLD SIDE BY APPROXIMATELY 0.1" AFTER FINAL COMPACTION. (IT WILL BE FLUSH WHEN PAVING IN ECHELON.)

ONLY REMOVE THE LONGITUDINAL NOTCHED WEDGE JOINT FOR SMA PAVEMENT OR AS DIRECTED BY THE ENGINEER TO ADDRESS SPECIFIC LENGTHS OF JOINT DAMAGED BY TRAFFIC.

WHEN MILLING BACK OR REMOVING ANY LONGITUDINAL JOINT, LIMIT THE MATERIAL REMOVED TO 2" FROM THE TOP NOTCH OR FROM THE VERTICAL JOINT EDGE ON THE COLD SIDE OF THE JOINT.

USE LONGITUDINAL MILLED JOINT AS PLANS SHOW OR THE AS THE ENGINEER DIRECTS.

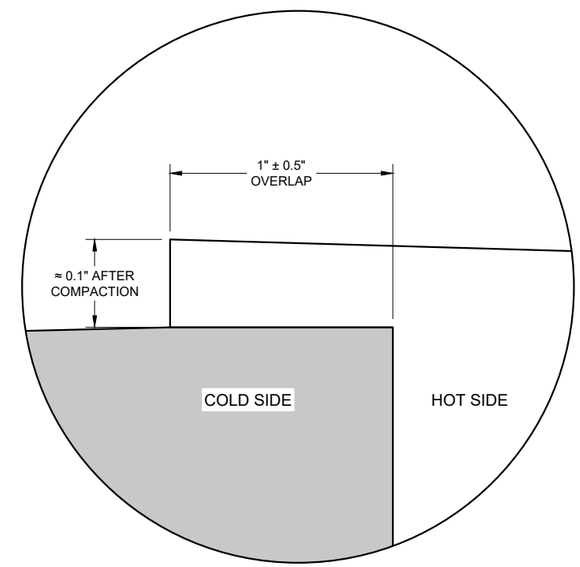

OVERLAP DETAIL (TYPICAL)

6

6

SDD 13C19 - 03

SDD 13C19 - 03

HMA LONGITUDINAL JOINTS

STATE OF WISCONSIN
DEPARTMENT OF TRANSPORTATION

APPROVED
November 2020 /S/ Steven Hefel
DATE HMA PAVEMENT ENGIN

FHWA

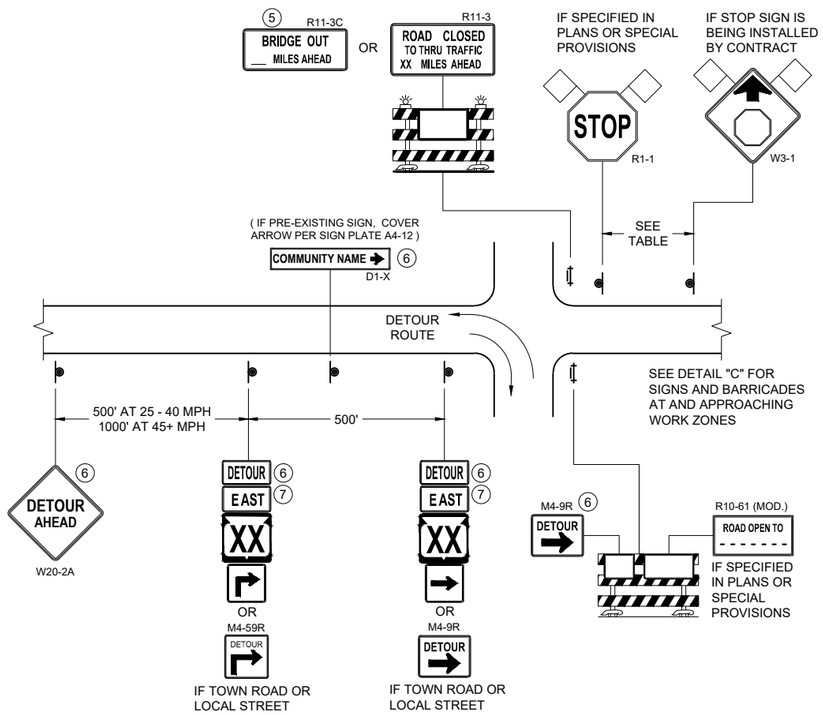

DETAIL A

MAINLINE CLOSURE WITH POSTED DETOUR

WORK ZONE GREATER THAN OR EQUAL TO ½ MILE FROM DETOUR ROUTE (1000 FEET IF URBAN)

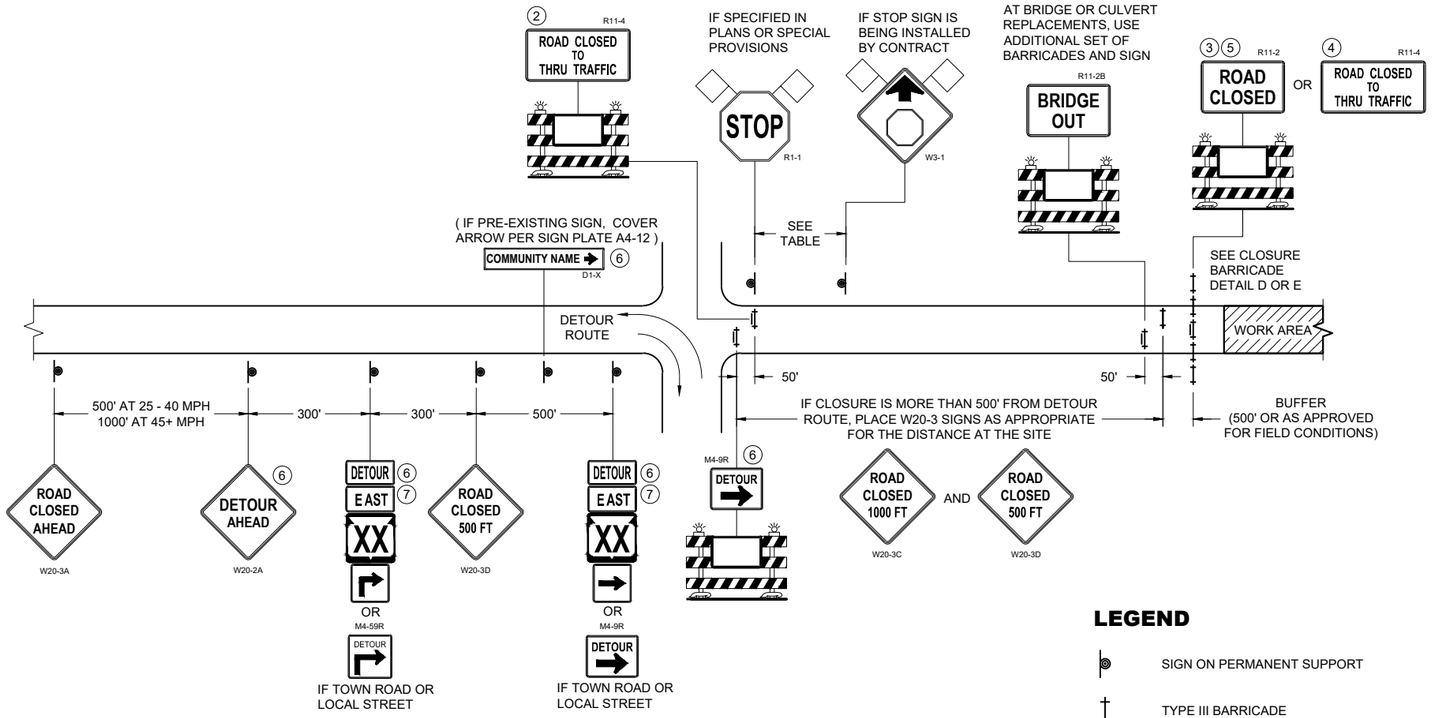

DETAIL B

MAINLINE CLOSURE WITH POSTED DETOUR

WORK ZONE LESS THAN ½ MILE FROM DETOUR ROUTE (1000 FEET IF URBAN)

LEGEND

- SIGN ON PERMANENT SUPPORT
- TYPE III BARRICADE
- TYPE III BARRICADE WITH ATTACHED SIGN
- TYPE "A" WARNING LIGHT (FLASHING)
- WORK AREA
- FLAGS, 16" X 16" MIN. (ORANGE)
- DETOUR — M4 - 8
- EAST — M3 - X
- XX (M1 - 4) OR XX (M1 - 6) OR COUNTY X (M1 - 5A)
- M05 - 1 OR M06 - 1

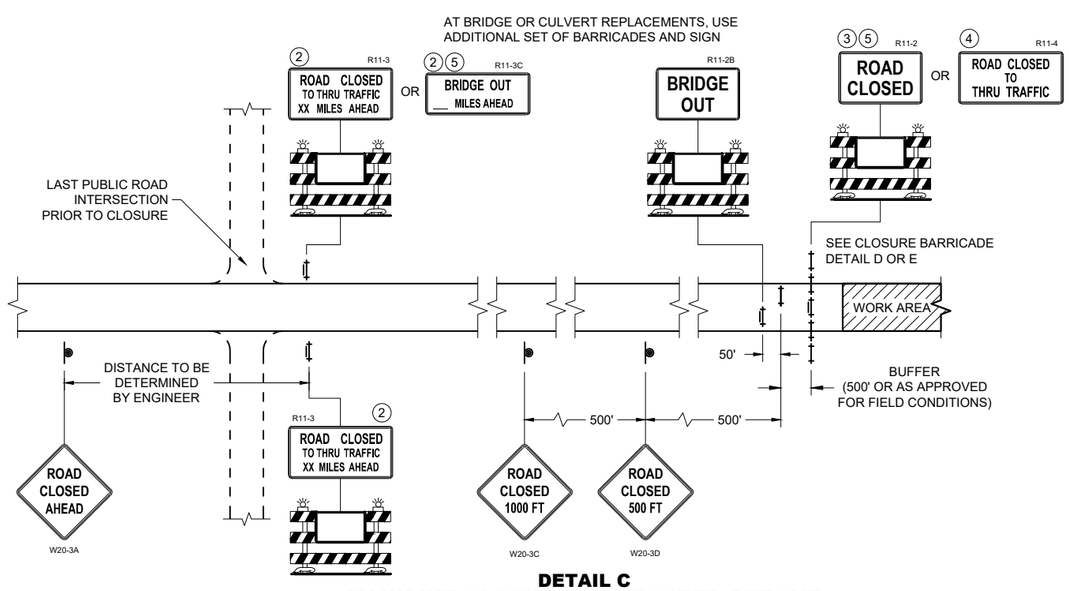

DETAIL C

MAINLINE CLOSURE, NO POSTED DETOUR

SPEED LIMIT (MPH)	"STOP AHEAD" ADVANCE WARNING DISTANCE (FT)
25	200
30	200
35	350
40	350
45	500
50	550
55	750

SEE SDD 15C2-SHEET "b" FOR GENERAL NOTES AND FOOTNOTES 1 THROUGH 7

BARRICADES AND SIGNS FOR MAINLINE CLOSURES

STATE OF WISCONSIN
DEPARTMENT OF TRANSPORTATION

APPROVED
November 2025 — DATE
/S/ Andrew Heidtke — WORK ZONE ENGINEER
FHWA

6

SDD 15C02-10a

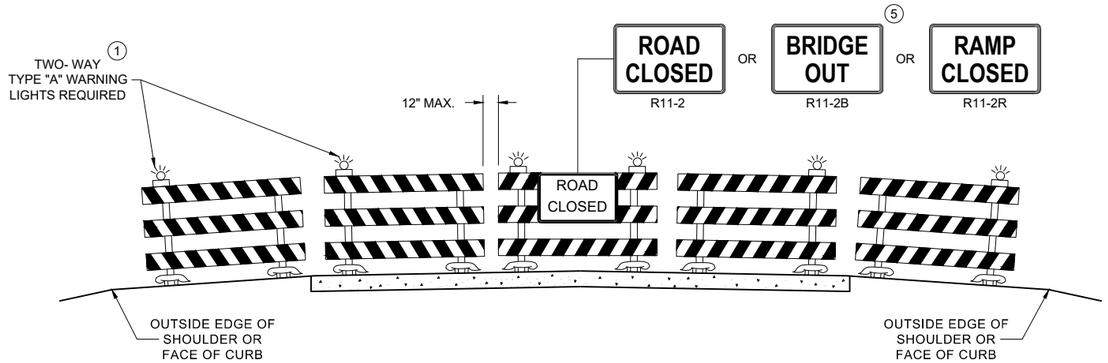

DETAIL D

ROAD CLOSURE BARRICADE DETAIL

APPROACH VIEW

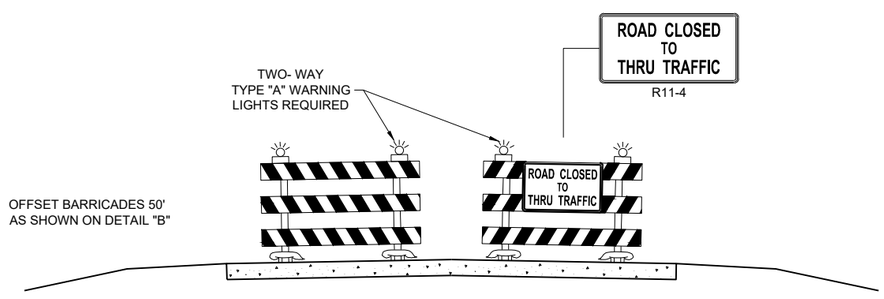

DETAIL E

LANE CLOSURE BARRICADE DETAIL

APPROACH VIEW

SEE SDD 15C2 - SHEET "a" FOR LEGEND

GENERAL NOTES

THE EXACT NUMBER, LOCATION, AND SPACING OF ALL SIGNS AND BARRICADES SHALL BE ADJUSTED TO FIT FIELD CONDITIONS AS APPROVED BY THE ENGINEER.

ANY SIGNS TEMPORARY OR EXISTING, WHICH CONFLICT WITH TRAFFIC CONTROL "IN USE", SHALL BE REMOVED OR COVERED AS NEEDED AND AS APPROVED BY THE ENGINEER.

THE SPACING BETWEEN TRAFFIC CONTROL SIGNS SHOULD BE ADJUSTED TO NOT CONFLICT WITH AND SHOULD PROVIDE A DESIRABLE MINIMUM OF 200 FEET CLEARANCE TO EXISTING SIGNS THAT WILL REMAIN IN PLACE.

BARRICADES THAT MUST BE MOVED FOR A WORK OPERATION SHALL BE IMMEDIATELY RE-ESTABLISHED UPON COMPLETION OF THE OPERATION, OR FOR CONTINUING OPERATIONS, AT THE END OF EACH WORKING DAY.

SIGNS THAT WILL BE IN PLACE LESS THAN 7 CONTINUOUS DAYS AND NIGHTS MAY BE MOUNTED ON PORTABLE SUPPORTS.

ALL TYPE III BARRICADES SHALL HAVE RAILS REFLECTORIZED ON BOTH FACES. STRIPES SHALL BE PROPERLY SLOPED DOWN TOWARD THE TRAFFIC SIDE OR AS SHOWN IN THE ROAD CLOSURE BARRICADE DETAIL "D" FOR FULL ROAD CLOSURES.

TYPE "A" LOW - INTENSITY FLASHING WARNING LIGHTS SHALL BE VISIBLE ON BOTH SIDES OF THE BARRICADE.

PARTIAL NUMBERS ON SIGNS SHALL BE DISPLAYED AS A WHOLE NUMBER(AS NEEDED) FOLLOWED BY A FRACTION. SIGNS SHALL NOT DISPLAY NUMBERS IN DECIMAL FORM.

"WO" AND "MO" SIGNS ARE THE SAME AS "W" AND "M" SIGNS EXCEPT THE BACKGROUND IS ORANGE.

ALL SIGNS SHALL BE 48" X 48" UNLESS OTHERWISE NOTED BELOW:

R11 - 2 SHALL BE 48" X 30"
R11 - 3 SHALL, R11 - 4 AND R10 - 61 SHALL BE 60 " X 30"
M4 - 9 SHALL BE 30" X 24"
M3 - X SHALL BE 24" X 12" (36" X 18" IF NEEDED TO MATCH EXISTING SIGNS)
M4 - 8 SHALL BE 24" X 12" (36" X 18" IF NEEDED TO MATCH EXISTING SIGNS)
M1 - 4, M1 - 5A AND M1 - 6 SHALL BE 24" X 24" (36" X 36" IF NEEDED TO MATCH EXISTING SIGNS)
MO5 - 1 AND MO6 - 1 SHALL BE 21" X 21" (30" X 30" IF NEEDED TO MATCH EXISTING SIGNS)
D1 - X SHALL BE AS SHOWN ON SPECIFIC PROJECT SIGNING DETAIL SHEETS.
R1 - 1 SHALL BE 36" X 36"

SIGNS PLACED ON TYPE III BARRICADES THAT ARE SIZES OTHER THAN 48"X30" SHALL HAVE A CORRUGATED POLYPROPYLENE OR POLYETHYLENE PLASTIC SIGN BASE.

1. TWO WARNING LIGHTS SHALL BE PROVIDED ON THE CENTER BARRICADE AND A MINIMUM OF ONE WARNING LIGHT SHALL BE PROVIDED ON EACH OF THE OTHER BARRICADES WITHIN THE ROADWAY LIMITS. SPACING OF THE WARNING LIGHTS SHALL BE UNIFORM TO THE EDGE OF ROADWAY AS SHOWN (APPROX. 8 FOOT LIGHT SPACING.
2. THESE SIGNS AND BARRICADES ARE NOT REQUIRED IF ROAD CLOSURE BEGINS AT AN INTERSECTION.
3. FOR ROAD CLOSURE WITHOUT LOCAL ACCESS TO PROJECT, SEE ROAD CLOSURE BARRICADE DETAIL "D".
4. FOR ROAD CLOSURE WITH LOCAL ACCESS TO PROJECT, SEE ROAD CLOSURE BARRICADE DETAIL "E".
5. FOR BRIDGE OR CULVERT REPLACEMENTS, SUBSTITUTE "BRIDGE OUT" INSTEAD OF "ROAD CLOSED" ON R11 - 2 AND R11 - 3 SIGNS.
6. INSTALL DETOUR AND COMMUNITY GUIDE SIGNS AND ARROWS ONLY IF SPECIFIED IN THE CONTRACT. IF THERE ARE EXISTING ROUTE MARKER ASSEMBLIES THAT WILL REMAIN IN PLACE, ADJUST THE LOCATION OF THE DETOUR ROUTE SIGNS TO CORRESPOND WITH THE EXISTING ASSEMBLIES. MODIFY EXISTING SIGNS WHERE POSSIBLE. SEE SPECIFIC PROJECT DETOUR SIGNING DETAIL SHEETS. IF DETOUR SIGNS ARE BEING INSTALLED BY OTHERS, PLACE THE CONTRACTED TRAFFIC CONTROL SIGNS TO ALLOW FOR PLACEMENT OF ALL WARNING, DETOUR AND GUIDE SIGNS AS SHOWN.
7. "EAST" CARDINAL DIRECTION MARKERS AND RIGHT TURN ARROWS ARE SHOWN. USE OTHER CARDINAL DIRECTIONS AND ARROWS AS APPROPRIATE.

BARRICADES AND SIGNS FOR VARIOUS CLOSURES

STATE OF WISCONSIN
DEPARTMENT OF TRANSPORTATION

APPROVED
November 2025 — DATE
/S/ Andrew Heidtke — WORK ZONE ENGINEER
FHWA

6

SDD 15C02-10b

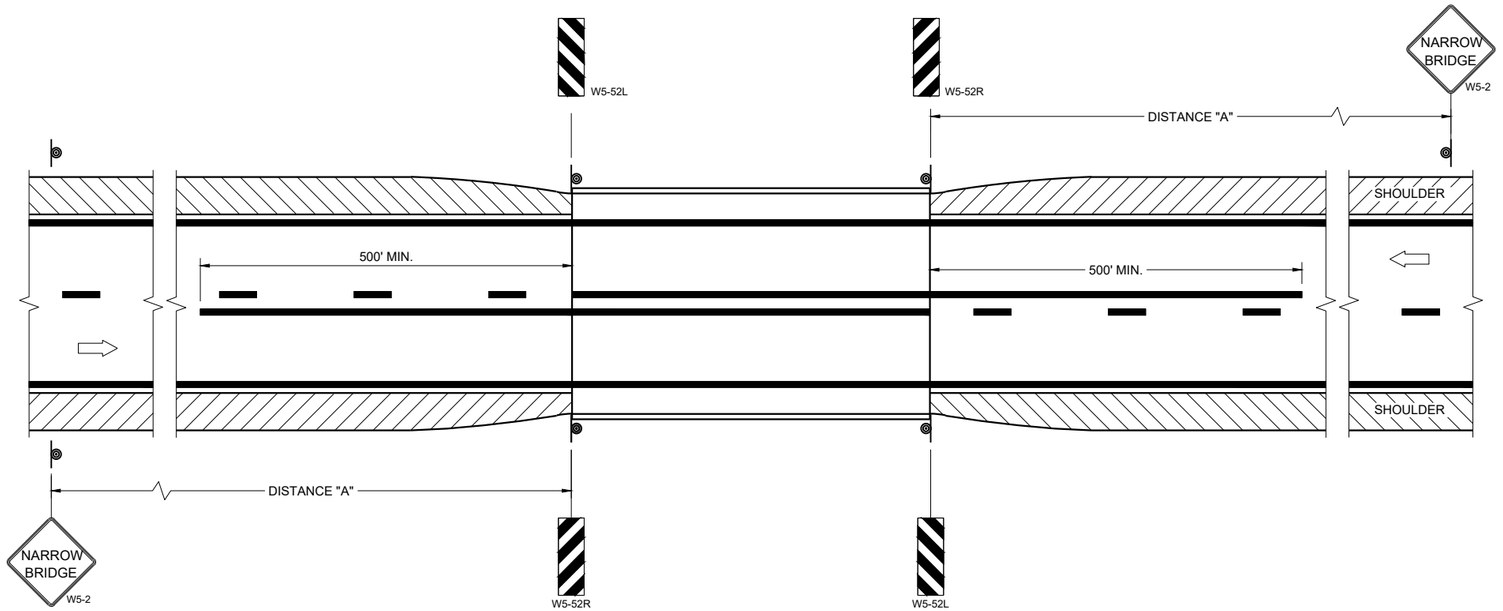

SITUATION 1

WARRANTING CRITERIA:
BRIDGE WIDTH IS AT LEAST 16 FEET BUT LESS THAN 24 FEET.

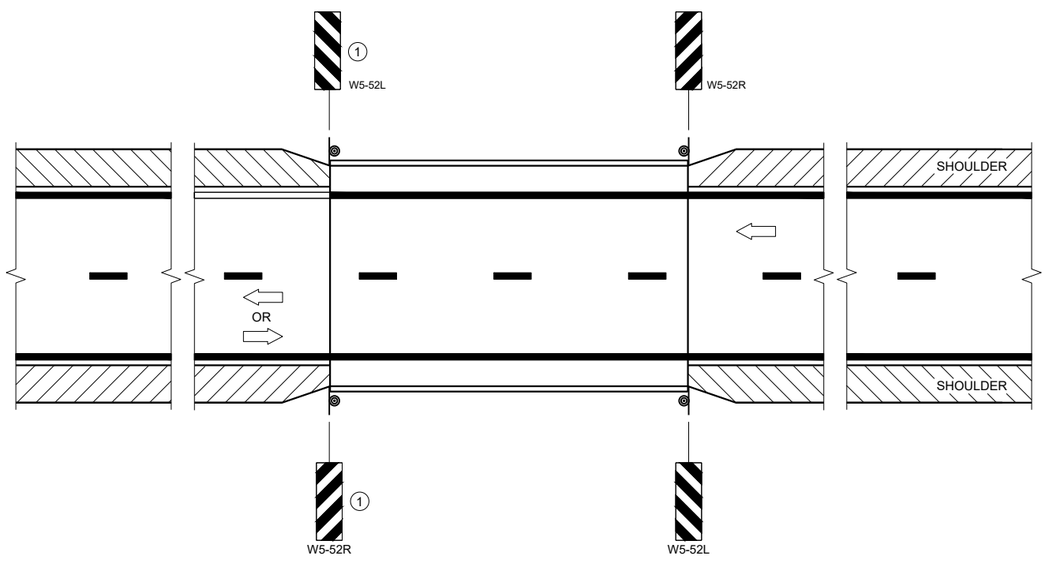

SITUATION 2

WARRANTING CRITERIA:
1. BRIDGE WIDTH IS AT LEAST 24 FEET AND
2. BRIDGE SHOULDER WIDTH IS LESS THAN 6 FEET

GENERAL NOTES

DETAILS OF TRAFFIC CONTROL DEVICES AND INSTALLATION NOT SHOWN ON THE DRAWING SHALL CONFORM TO THE PERTINENT REQUIREMENTS OF THE STANDARD SPECIFICATIONS, THE SPECIAL PROVISIONS, AND THE MANUAL ON UNIFORM TRAFFIC CONTROL DEVICES.

LOCATE W5-52 SIGN POST(S) BEHIND GUARDRAIL WHEN PRESENT.

PLACE THE EDGE OF THE W5-52 SIGN IN LINE WITH FACE OF CURB OR PARAPET.

ON BRIDGE ONLY PROJECTS, PLACE 300 FEET OF EDGELINE.

OMIT EDGELINES ON ROADWAYS WITHOUT EXISTING EDGELINES.

(1) OMIT ON ONE-WAY TRAVELED WAYS.

LEGEND

SIGN ON PERMANENT SUPPORT

DIRECTION OF TRAFFIC

DISTANCE TABLE

POSTED OR 85TH PERCENTILE SPEED	DISTANCE "A"
25	150'
30	200'
35	250'
40	300'
45	400'
50	550'
55	700'

SIGNING AND MARKING FOR TWO LANE BRIDGES

STATE OF WISCONSIN
DEPARTMENT OF TRANSPORTATION

APPROVED
May 2023 — DATE
/S/ Jeannie Silver — Statewide Pavement Marking Engineer
FHWA

GENERAL NOTES

1. REFLECTIVE SHEETING SHALL FOLLOW THE REQUIREMENTS IN THE APPROVED PRODUCTS LISTING FOR SIGN SHEETING.
2. LOCATION OF WARNING LIGHTS WHEN SHOWN ON THE PLAN.

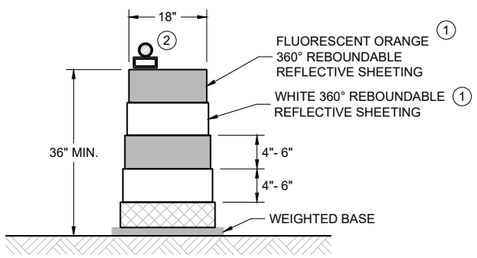

DRUM

BALLAST WIDTHS
RANGE FROM 24"-36"

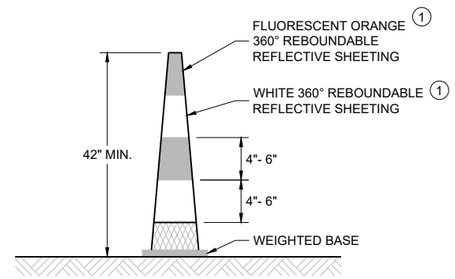

42" CONE

DO NOT USE IN TAPERS
½ SPACING OF DRUMS

BALLAST WIDTHS
RANGE FROM 14"-20"

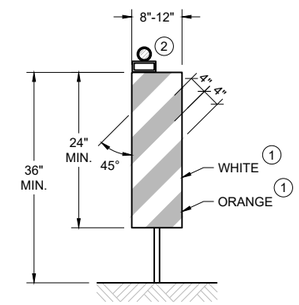

VERTICAL PANEL

THE STRIPES SHALL SLOPE DOWNWARD TO
THE TRAFFIC SIDE FOR CHANNELIZATION.

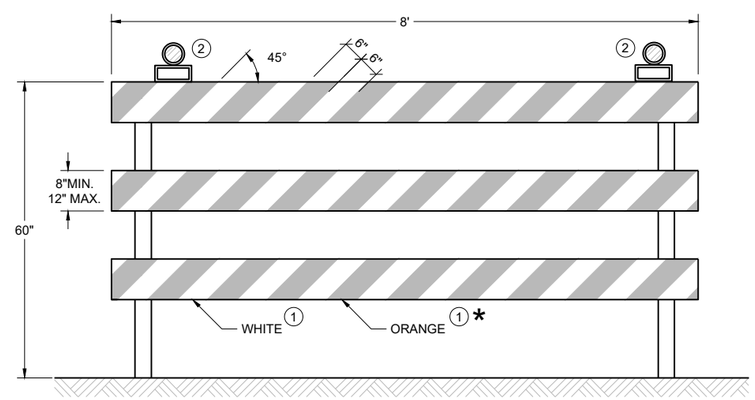

TYPE III BARRICADE

IF SIGN MOUNTED, DO NOT COVER MORE THAN 50% OF THE TOP
TWO RAILS OR 33% OF THE TOTAL AREA OF THE THREE RAILS.

* IF USED FOR A PERMANENT APPLICATION USE RED SHEETING.

CHANNELIZING DEVICES
DRUMS, CONES, BARRICADES
AND VERTICAL PANELS

STATE OF WISCONSIN
DEPARTMENT OF TRANSPORTATION

APPROVED
February 2026 — DATE
/S/ Andrew Heidtke — WORK ZONE ENGINEER

FHWA

6
SDD 15C11-11b

LEGEND

- SIGN ON PERMANENT SUPPORT
- TRAFFIC CONTROL DRUM
- TRAFFIC CONTROL DRUM WITH TYPE "C" STEADY BURN LIGHT
- TEMPORARY DELINEATOR (WHITE, SINGLE DELINEATOR)
- TYPE III BARRICADE
- TYPE III BARRICADE WITH ATTACHED SIGN
- TYPE "A" WARNING LIGHT (FLASHING)
- TEMPORARY RAISED PAVEMENT MARKERS (TWO WAY YELLOW)
- TEMPORARY STEEL PLATE BEAM GUARD AND END TREATMENT
- DIRECTION OF TRAFFIC
- REMOVE PAVEMENT MARKINGS
- WORK AREA

GENERAL NOTES

ALL SIGNS ARE 48"X48" UNLESS OTHERWISE NOTED.

"WO" IS THE SAME AS "W" EXCEPT THE BACKGROUND IS ORANGE.

ANY SIGNS TEMPORARY OR EXISTING, WHICH CONFLICT WITH THE TRAFFIC CONTROL "IN USE" SHALL BE REMOVED OR COVERED AS NEEDED AND AS APPROVED BY THE ENGINEER.

THE EXACT NUMBER, LOCATION, AND SPACING OF ALL SIGNS AND DEVICES SHALL BE ADJUSTED TO FIT FIELD CONDITIONS AS APPROVED BY THE ENGINEER.

THE SPACING BETWEEN SIGNS SHOULD BE ADJUSTED TO NOT CONFLICT WITH AND TO PROVIDE A MINIMUM OF 200 FEET (500' DESIRABLE) DISTANCE TO EXISTING SIGNS.

SIGN LAYOUTS SHALL BE IN ACCORDANCE WITH THE FHWA'S MANUAL ON STANDARD HIGHWAY SIGNS OR THE WISCONSIN STANDARD SIGN PLATES.

EQUIPMENT, VEHICLES, OR MATERIAL SHOULD NOT BE STORED IN BUFFER SPACE.

1. IF ADVISORY SPEED IS GREATER THAN 30 MPH, USE THE WO1-4 SIGN. IF ADVISORY SPEED IS 30 MPH OR LESS, USE THE WO1-3 SIGN.
2. WHEN THE DISTANCE TO / FROM THE NEXT CLOSEST NO-PASSING ZONE IS LESS THAN THE MINIMUM DISTANCE BETWEEN ZONES AS INDICATED IN THE SPECIFICATIONS, THE TWO ZONES SHALL BE CONNECTED.
3. OMIT THESE W01-6 SIGNS IF THE ADVISORY SPEED OF THE CURVE IS GREATER THAN 30 MPH.
4. TEMPORARY STEEL PLATE BEAM GUARD AND END TREATMENT WHEN INCLUDED IN THE CONTRACT. FOR LAYOUT, SEE DETAILS ELSEWHERE IN THE PLAN.

S (MPH)	BUFFER SPACE (DESIRABLE)
25	55'
30	85'
35	120'
40	170'
45	220'
50	280'
55	335'

S = NON-CONSTRUCTION SPEED LIMIT (MPH)

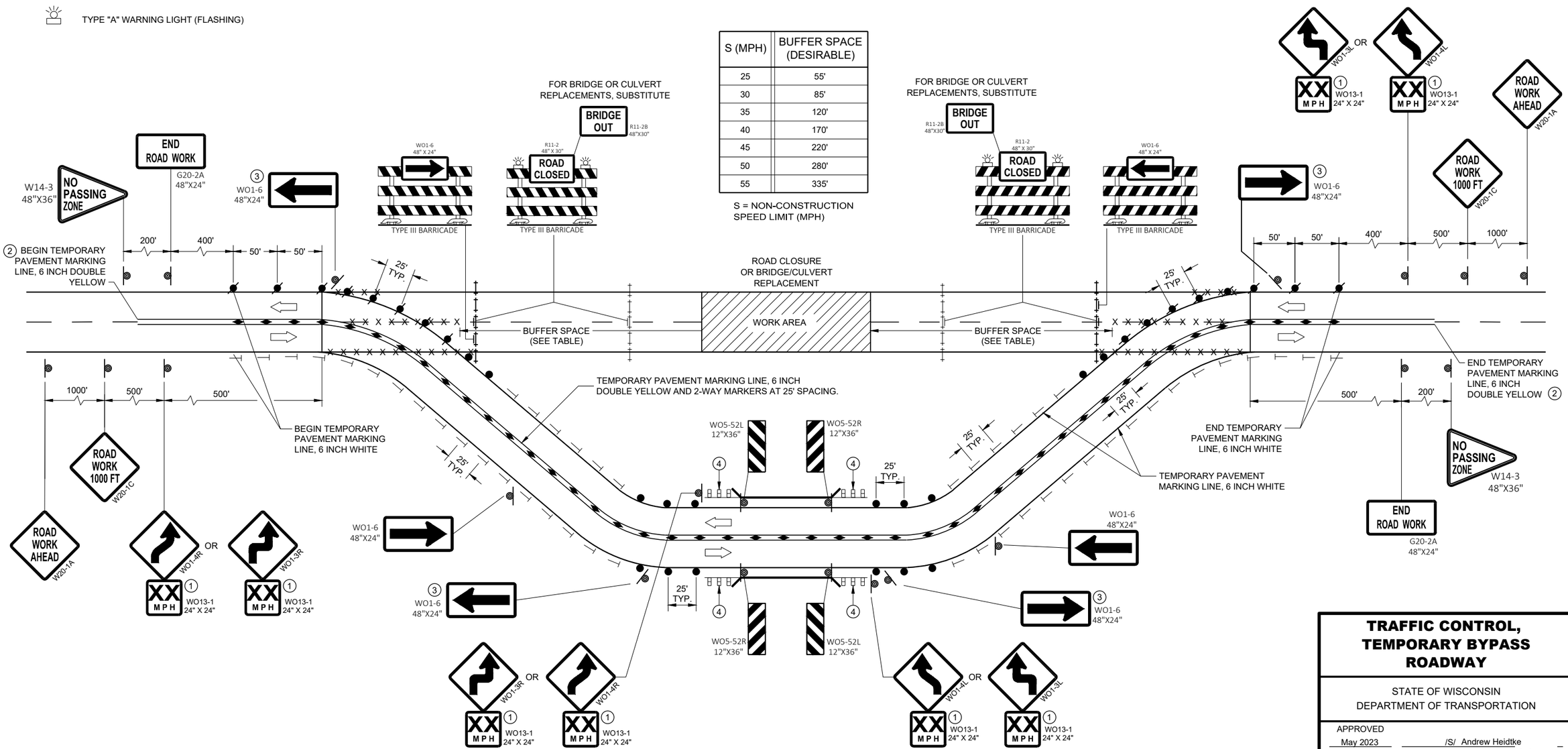

TRAFFIC CONTROL, TEMPORARY BYPASS ROADWAY

STATE OF WISCONSIN
DEPARTMENT OF TRANSPORTATION

APPROVED
May 2023 — DATE
/S/ Andrew Heidtke — WORK ZONE ENGINEER
FHWA

6
SDD 15D31-05

URBAN AREA

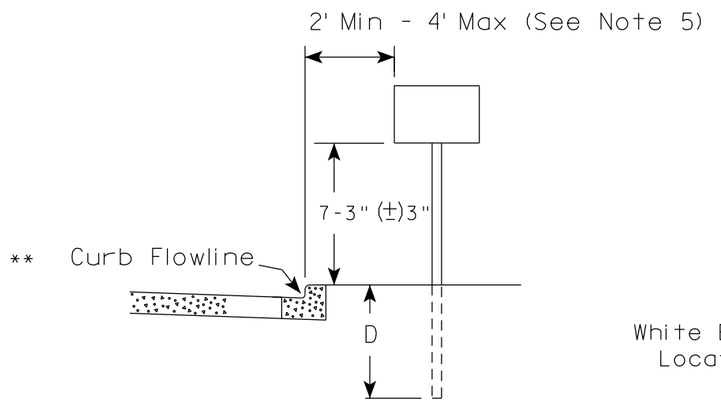

RURAL AREA (See Note 2)

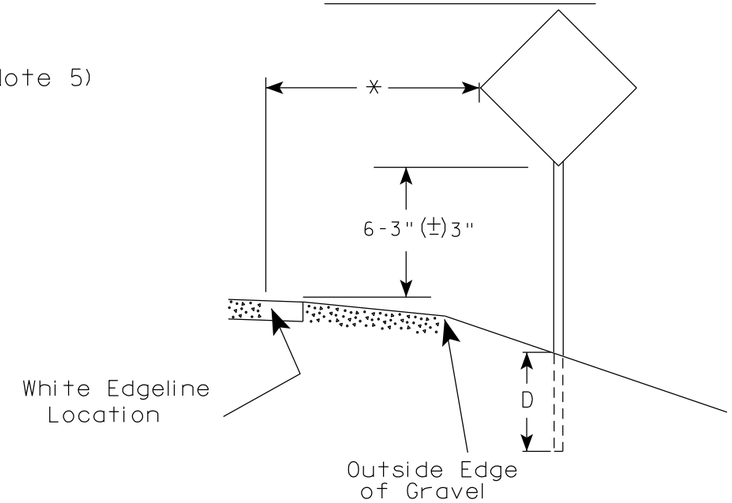

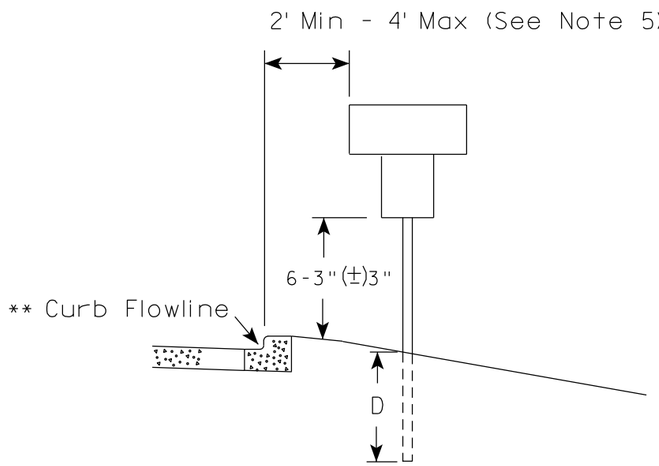

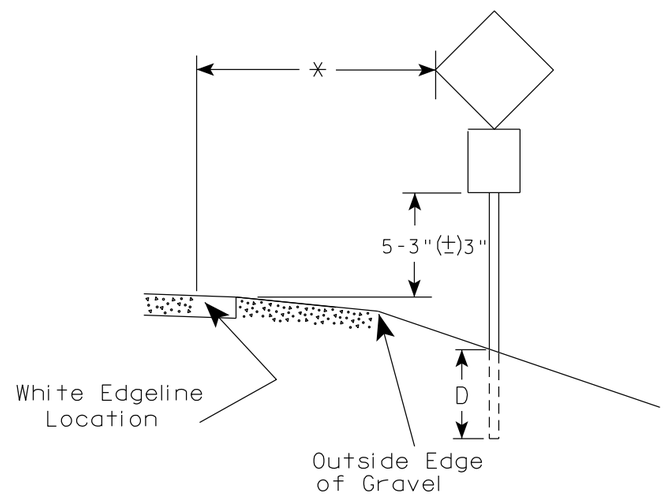

** The existence of curb and gutter does not in itself mandate the vertical clearance illustrated. That height is typically measured where there is sidewalk adjacent to the roadway or parking is permitted. In the absence of sidewalk vertical clearance is measured from the top of the curb. Offset of signs is measured from the flow line.

* 6 feet from edge of a paved shoulder or 12 feet from the edge of pavement (edge line location) or 2 feet from outside edge of gravel, whichever is greater unless directed by project engineer.

GENERAL NOTES

1. Signs wider than 4 feet or 20 sq.ft or larger, shall be mounted on multiple posts. Refer to plate A4-4.
2. If signs are mounted on or behind barrier wall, see A4-10 sign plate.
   The Double Arrow sign (W12-1D) shall be mounted at a height of 2'-3" (±) 3". The Chevron sign (W1-8), Roundabout Chevron panel (R6-4B), Enhanced Reference Markers, Clearance Markers (W5-52), Mile Markers (D10 series), In Road Object Markers (W5-54) & End of Road Markers (W5-56) shall be mounted at a height of 4'-3" (±) 3".
3. For expressways and freeways, mounting height is 7'- 3" (±) 3" or 6'-3" (±) 3" depending upon existence of a sub-sign.
4. Minimum mounting height for signs mounted on traffic signal poles is 5'- 3" (±) 3".
5. Offset distance shall be consistent with existing signs or consistent throughout length of project.
6. Folding signs shall be mounted at a height of 5'-3" (±) 3" or as directd by the Engineer.

POST EMBEDMENT DEPTH

Area of Sign Installation (Sq. Ft.)	D (Min)
20 or Less	4'
Greater than 20	5'

TYPICAL INSTALLATION OF PERMANENT TYPE II SIGNS ON SINGLE POSTS

WISCONSIN DEPT OF TRANSPORTATION

APPROVED Matthew R Rauch
for State Traffic Engineer

DATE 12/6/23 PLATE NO. A4-3.23

7 7

PROJECT NO:	HWY:	COUNTY:		SHEET NO: 25	E

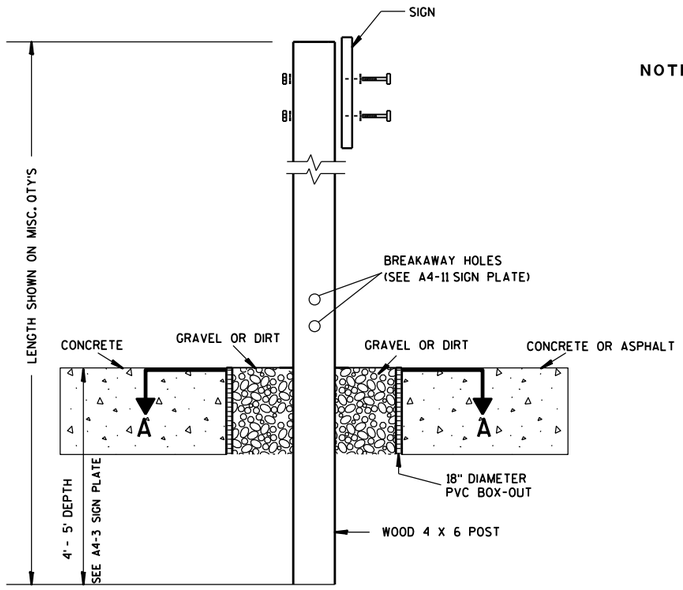

ELEVATION VIEW

DETAIL OF WOOD 4 X 6 SIGN POST IN BOX-OUT

NOTES:
1. ALL MATERIAL TO BE APPROVED BY ENGINEER PRIOR TO INSTALLATION
2. SEE SIGN PLATE A4-8 FOR SIGN HARDWARE REQUIREMENTS
3. 18 INCH X 18 INCH SQUARE BOX-OUTS MAY BE USED FOR INSTALLATIONS IN EXISTING CONCRETE OR ASPHALT LOCATIONS.

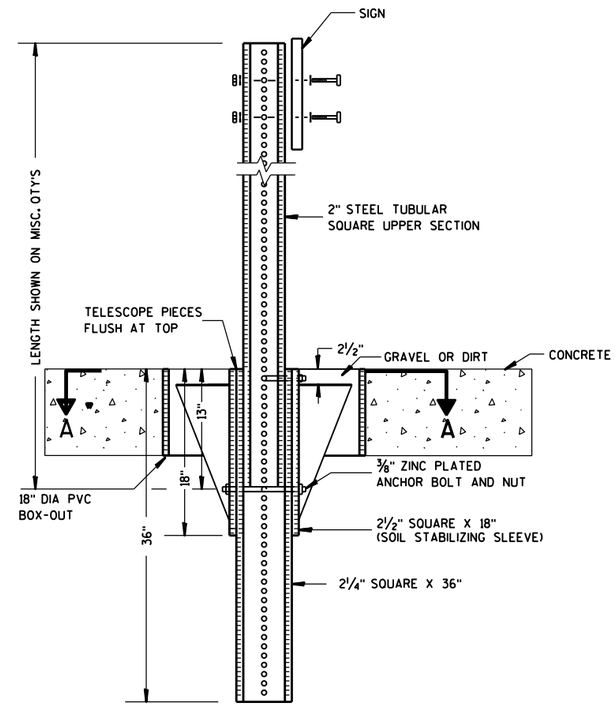

ELEVATION VIEW

DETAIL OF STEEL 2 X 2 SIGN POST IN BOX-OUT

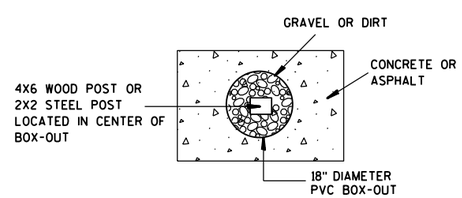

PLAN VIEW

FOR NEW CONCRETE/ASPHALT INSTALLATIONS

SIGN POST
BOX-OUTS
A4-3B

WISCONSIN DEPT OF TRANSPORTATION

APPROVED Matthew R Rauch
for State Traffic Engineer

DATE 1/27/14 PLATE NO. A4-3B.1

PROJECT NO:	HWY:	COUNTY:		SHEET NO:	E

URBAN AREA

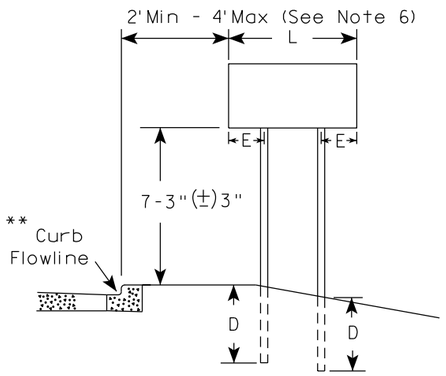

RURAL AREA (See Note 3)

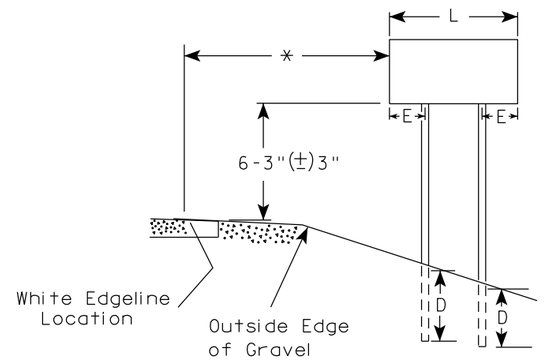

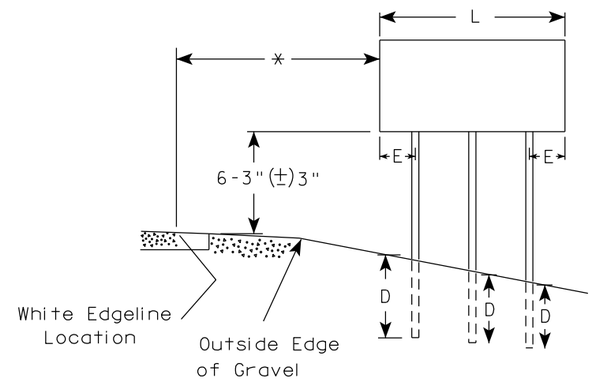

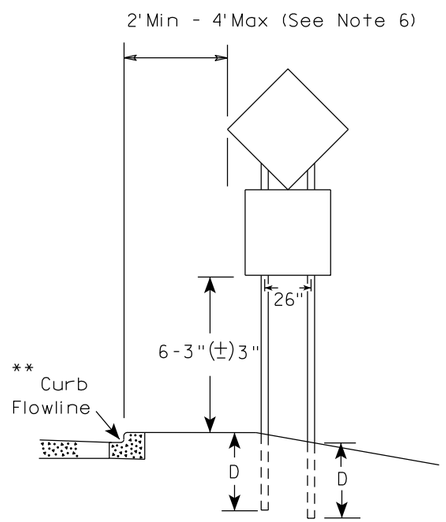

48" DIAMOND WARNING SIGN

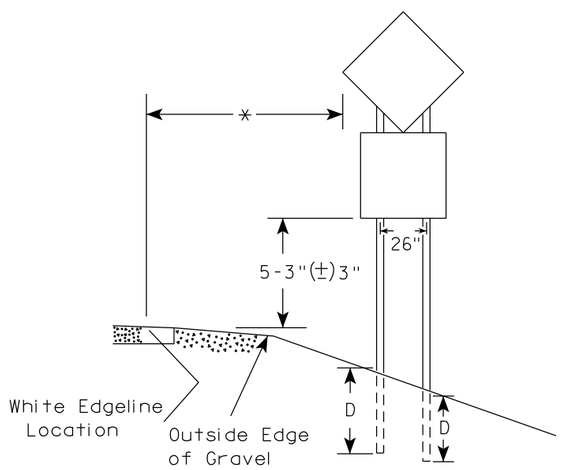

48" DIAMOND WARNING SIGN

GENERAL NOTES

1. For 3 or 4 post installations, individual post spacing shall be greater than 3'-6".
2. See tables below for required number of posts.
3. For expressways and freeways, mounting height is 7'-3" (±) 3" or 6'-3" (±) 3" depending upon existence of sub-sign.
4. The (±) tolerance for mounting height is 3 inches.
5. J-Assemblies are considered to be one sign for mounting height.
6. Offset distance shall be consistent with existing signs or consistent throughout length of project.
7. Folding signs shall be mounted at a height of 5'-3" (±) 3" or as directed by the engineer.
8. The Double Arrow sign (W12-1) shall be mounted at a height of 2'-3" (±) 3". The Chevron sign (W1-8), Roundabout Chevron panel (R6-4B), Clearance Markers (W5-52), Mile Markers (D10 series), In Road Object Markers (W5-54) & End of Road Markers (W5-56) shall be mounted at a height of 4"-3" (±) 3".

* 6 feet from edge of a paved shoulder or 12 feet from the edge of pavement (edge line location) or 2 feet from outside edge of gravel, whichever is greater unless directed by project engineer.

** The existence of curb and gutter does not in itself mandate the vertical clearance illustrated. That height is typically measured where there is sidewalk adjacent to the roadway or parking is permitted. In the absence of sidewalk vertical clearance is measured from the top of the curb. Offset of signs is measured from the flow line.

*** See A4-3 sign plate for signs 4' or less in width and less than 20 S.F. in area.

SIGN SHAPE OTHER THAN DIAMOND (TWO POSTS REQUIRED)	
L	E
*** Greater than 48" Less than 60"	12"
60" to 108"	L/5

SIGN SHAPE OTHER THAN DIAMOND (THREE POSTS REQUIRED)	
L	E
Greater than 108" to 144"	12"

POST EMBEDMENT DEPTH

Area of Sign Installation (Sq. Ft.)	D (Min)
20 or Less	4'
Greater than 20	5'

TYPICAL INSTALLATION OF TYPE II SIGNS ON MULTIPLE POSTS

WISCONSIN DEPT OF TRANSPORTATION

APPROVED Matthew R Rauch
for State Traffic Engineer

DATE 12/6/23 PLATE NO. A4-4.16

PROJECT NO:	HWY:	COUNTY:		SHEET NO: 27	E

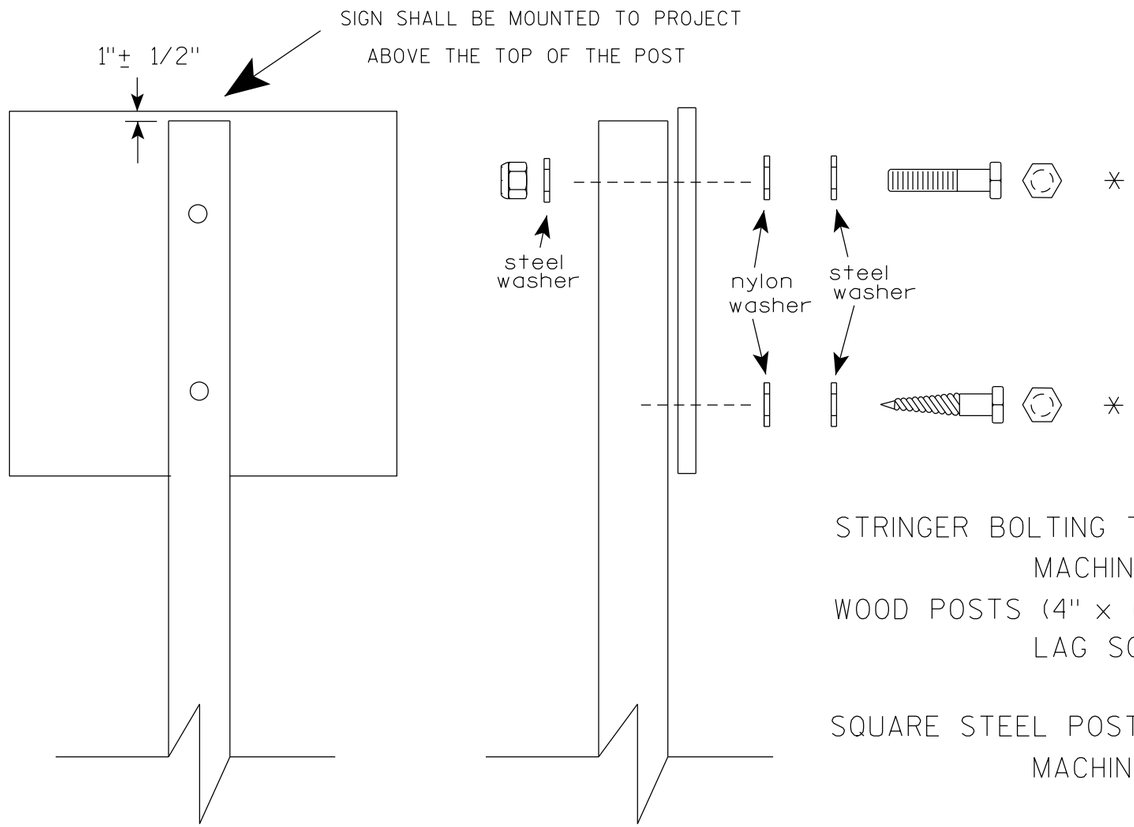

Nuts, bolts and lags used for mounting signs shall have hexagonal heads and shall be either :

a. Hot dip galvanized in accordance with ASTM Designation: A 153, Class D, or SC 3

b. Electro-galvanized in accordance with ASTM Designation : B 633, TYPE III, SC 3.

Threads on bolts and nuts shall be manufactured with sufficient allowance for the cadmium plate or galvanized coating to permit the nuts to run freely on the bolts.

STRINGER BOLTING TO ALUMINUM SIGNS (SEE SIGN PLATE A4-18)

MACHINE BOLTS - 5/16" X 1-3/4" Length w/ lock nuts

WOOD POSTS (4" x 6")

LAG SCREWS - 3/8" X 3" (NO STRINGERS ON BACK OF SIGN)
3/8" X 4" (STRINGERS ON BACK OF SIGN)

SQUARE STEEL POSTS (2" x 2")

MACHINE BOLTS - 3/8" X 3-1/4" Length w/ nuts (NO STRINGER ON BACK OF SIGN)
3/8" X 5" Length w/ nuts (STRINGERS ON BACK OF SIGN)

RIVETS - 9/32" (6605-9-6) BULB-TITE, TRI-FOLD, ALUMINUM BODY/MANDREL
O.D. FLANGE .720-.765 INCH, GRIP RANGE .042-.375 INCH

WASHERS (ALL POSTS) -

1-1/4" O.D. X 3/8" I.D. X 1/16" STEEL
1-1/4" O.D. X 3/8" I.D. X .080 NYLON

* Two different fastening systems are shown for illustration purposes. On any individual sign, either one or the other system shall be used. Actual number of fasteners per sign varies with the sign area, but normally there are two. For a single post installation, all signs greater than 9 sq. ft. require the use of 3 fasteners.

ATTACHMENT OF SIGNS TO POSTS

WISCONSIN DEPT OF TRANSPORTATION

APPROVED Matthew R Rauch
for State Traffic Engineer

DATE 4/1/2020 PLATE NO. A4-8.9

TELESCOPIC TUBING ANCHORS
TWO PIECE SYSTEM

2 1/4" SQUARE
12 GAUGE
PERFORATED
GALVANIZED FINISH

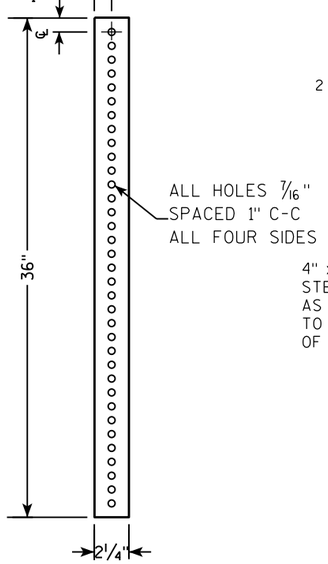

2 1/2" SQUARE
12 GAUGE
OMNI-DIRECTIONAL
PERFORATED
SOIL STABILIZING SLEEVE
GALVANIZED FINISH

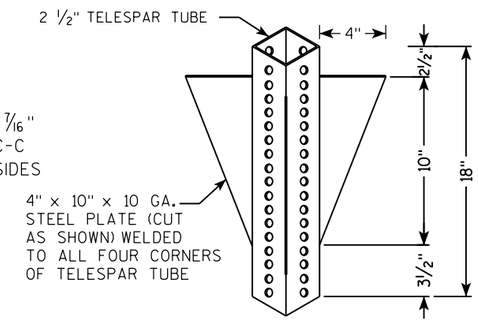

DETAIL OF TUBULAR STEEL SIGN POST
(IN POURED CONCRETE OR ASPHALT)

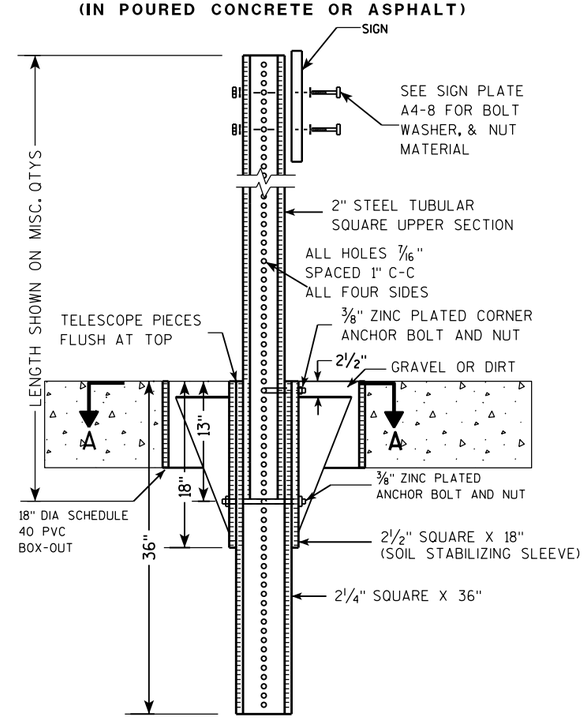

DETAIL OF TUBULAR STEEL SIGN POST
(IN LOCATIONS OTHER THAN POURED CONCRETE OR ASPHALT)

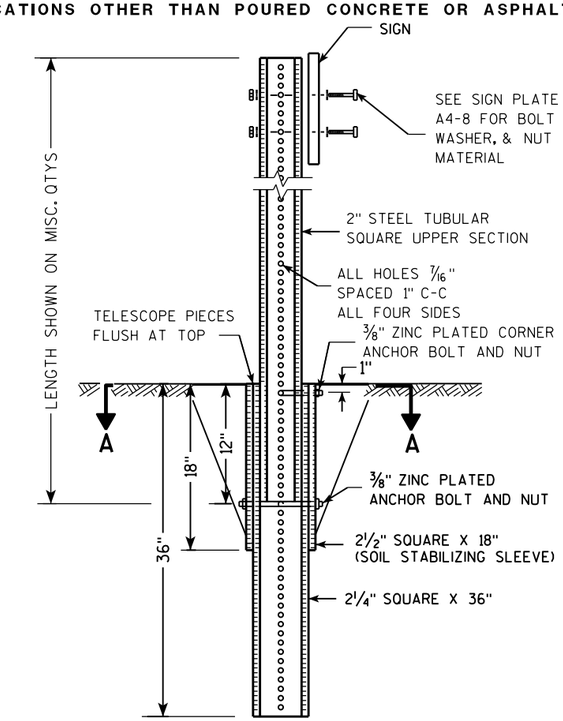

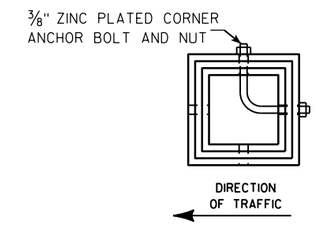

SECTION A-A

Area of Sign Installation (Sq. Ft.)	Number of Required Posts
9 or less	1
Greater than 9 less than or equal to 18	2
Greater than 18 less than or equal to 27	3

Signs wider than 3 feet or larger than 9 sq. ft shall be mounted on multiple posts (see above table).

TUBULAR STEEL
SIGN POST
A4-9

WISCONSIN DEPT OF TRANSPORTATION

APPROVED *Matthew R Rauch*
for State Traffic Engineer

DATE 2/05/15 PLATE A4-9.9

7 7

PROJECT NO:	HWY:	COUNTY:		SHEET NO:	E

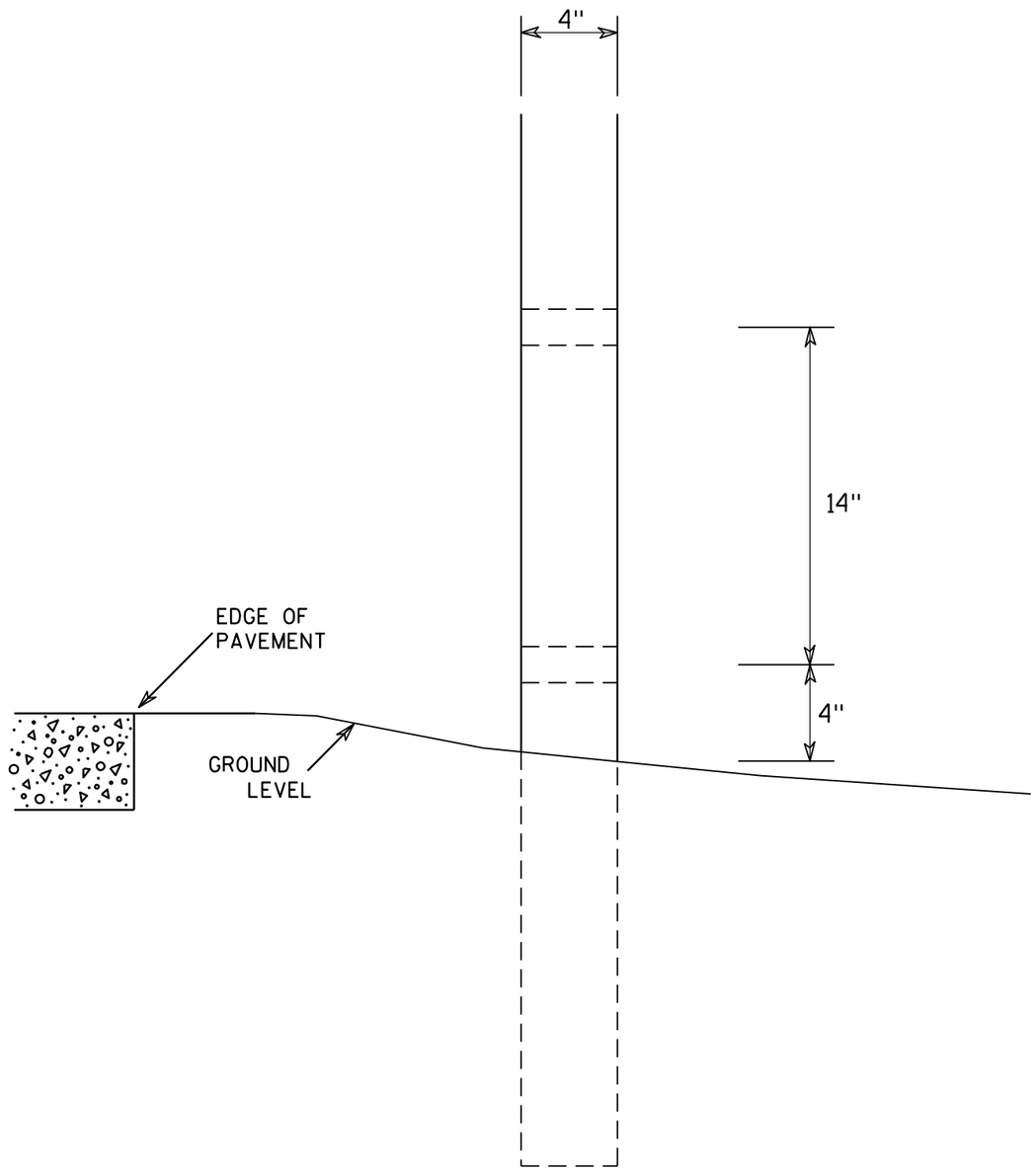

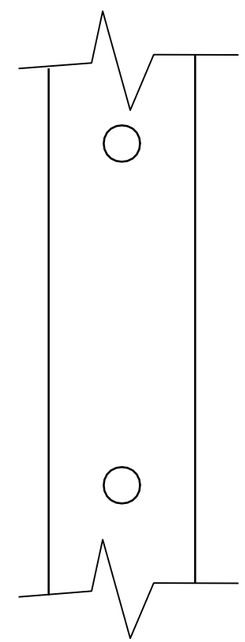

SIDE VIEW

GENERAL NOTES

1. All 4 x 6 Wood Posts shall be modified by having two 1½" diameter holes drilled perpendicular to the roadway centerline.

7

7

4 X 6 WOOD POST MODIFICATIONS

WISCONSIN DEPT OF TRANSPORTATION

APPROVED Chester J Spang for State Traffic Engineer

DATE 3/27/97 PLATE NO. A4-11.2

PROJECT NO:	HWY:	COUNTY:		SHEET NO: 30	E

BANDING

SINGLE SIGN

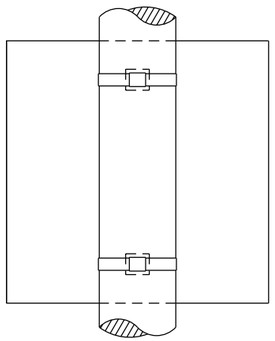

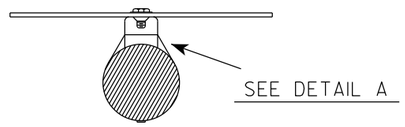

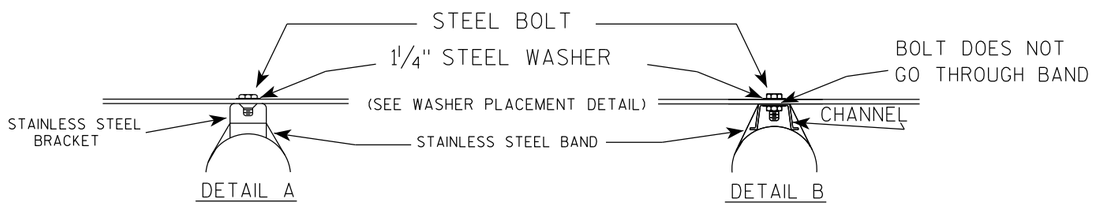

WASHER PLACEMENT

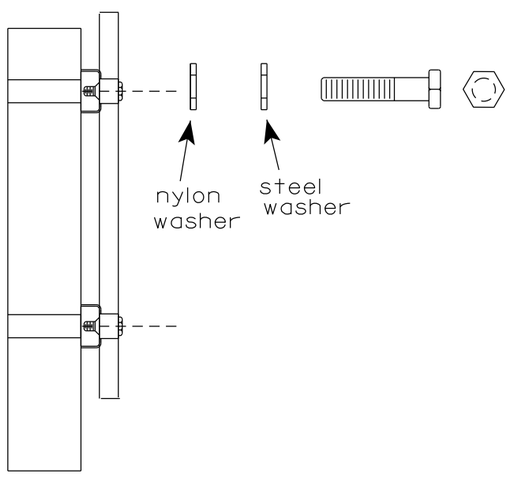

WASHERS (ALL POSTS) -
1-1/4" O.D. X 3/8" I.D. X 1/16" STEEL
1-1/4" O.D. X 3/8" I.D. X .080 NYLON
FOR ALL TYPE H SIGNS

GENERAL NOTES

1. Any sign over 3 feet in width shall use the V-Block banding method. See A5-10 standard plate.
2. Signs 3 feet or greater in height shall have three bracket bands installed. Signs less than 3 feet in height shall have two bracket bands installed.
3. Banding and assembly bracket shall be stainless steel. All bands shall be ¾" in width and 0.025" thickness.
4. ALL SIGN MOUNTING BOLTS AND WASHERS SHALL BE EITHER:
   a. Hot dip or mechanically galvanized in accordance with ASTM Designation: A 153, Class D
   b. Electro-galvanized in accordance with ASTM designation: B 633, Type III, SC 3

"J" ASSEMBLY

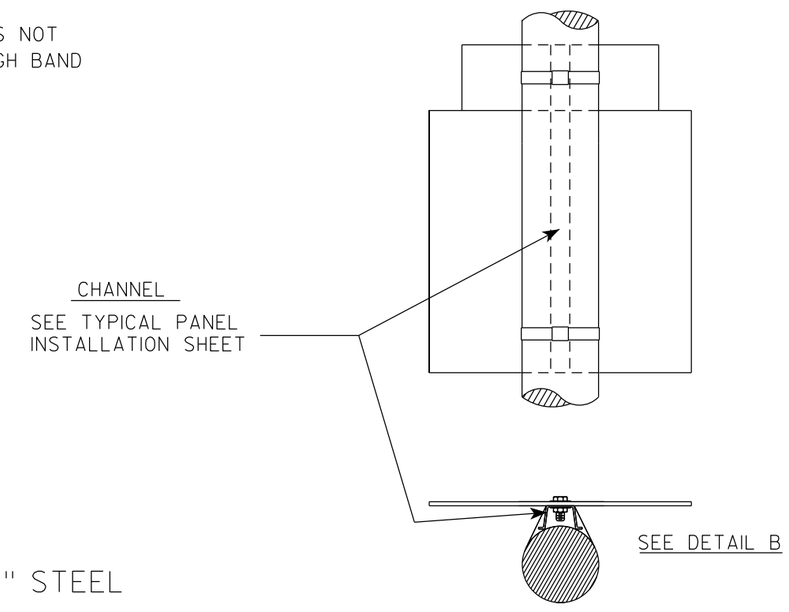

STANDARD SIGN
SIGN BANDING DETAILS

WISCONSIN DEPT OF TRANSPORTATION

APPROVED Matthew R Rauch for State Traffic Engineer

DATE 6/10/19 PLATE NO. A5-9.4

PROJECT NO:	HWY:	COUNTY:		SHEET NO: 31	E

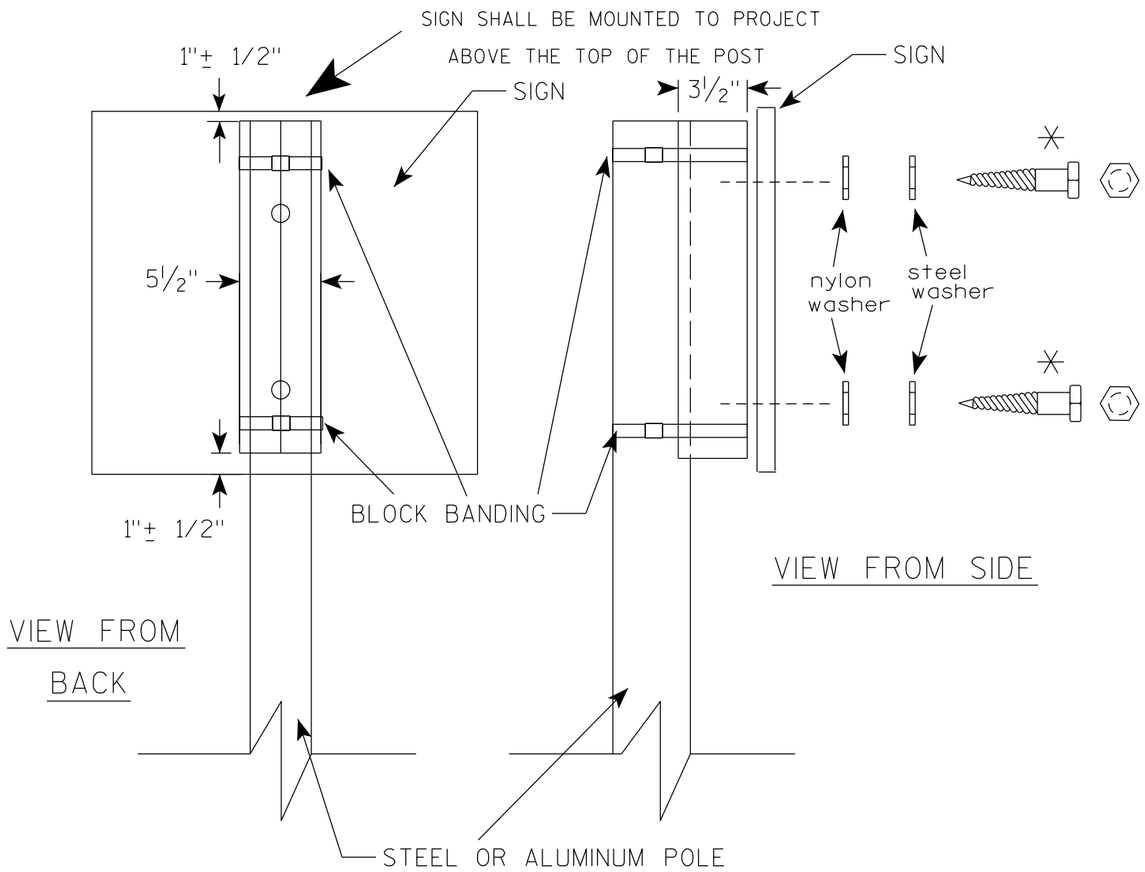

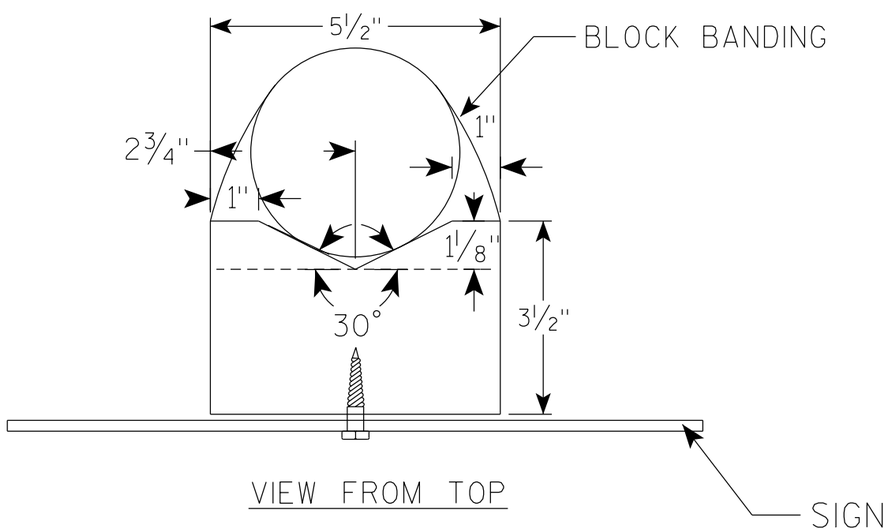

GENERAL NOTES

1. WOOD 4"X6" POST MATERIAL SHALL CONFORM TO 507.2.2 OF THE WisDOT STANDARD SPECIFICATIONS
2. BLOCK BANDING AND CLIPS SHALL BE STAINLESS STEEL, 3/4" WIDTH AND 0.025" THICKNESS
3. SIGNS 3' OR GREATER IN HEIGHT SHALL UTILIZE 3 BLOCK BANDS. SIGNS UNDER 3' IN HEIGHT SHALL UTILIZE 2 BLOCK BANDS
4. ACTUAL NUMBER OF FASTENERS PER SIGN VARIES WITH THE SIGN AREA, BUT NORNALLY THERE ARE TWO. FOR SIGNS GREATER THAN 9 S.F. 3 FASTENERS SHALL BE USED.
5. ALL SIGN MOUNTING BOLTS AND WASHERS SHALL BE EITHER:
   a. Hot dip or mechanically galvanized in accordance with ASTM Designation: A 153, Class D
   b. Electro-galvanized in accordance with ASTM Designation : B 633, TYPE III, SC 3
6. ALL BOLTS SHALL HAVE HEXAGONAL HEADS.
7. STEEL WASHERS SHALL BE 1 1/4" O.D. X 3/8" I.D. X 1/16"
8. NYLON WASHERS SHALL BE 1 1/4" O.D. X 3/8" I.D. X .080 FOR TYPE H OR TYPE F FACE SIGN

✳ LAG BOLTS SHALL BE 3/8" X 2 1/2"

7

7

BLOCK BANDING DETAIL
(V-BLOCK OPTION)

WISCONSIN DEPT OF TRANSPORTATION

APPROVED Matthew R Rauch
for State Traffic Engineer

DATE 4/19/2022 PLATE NO. A5-10.3

PROJECT NO:				SHEET NO: 32	E

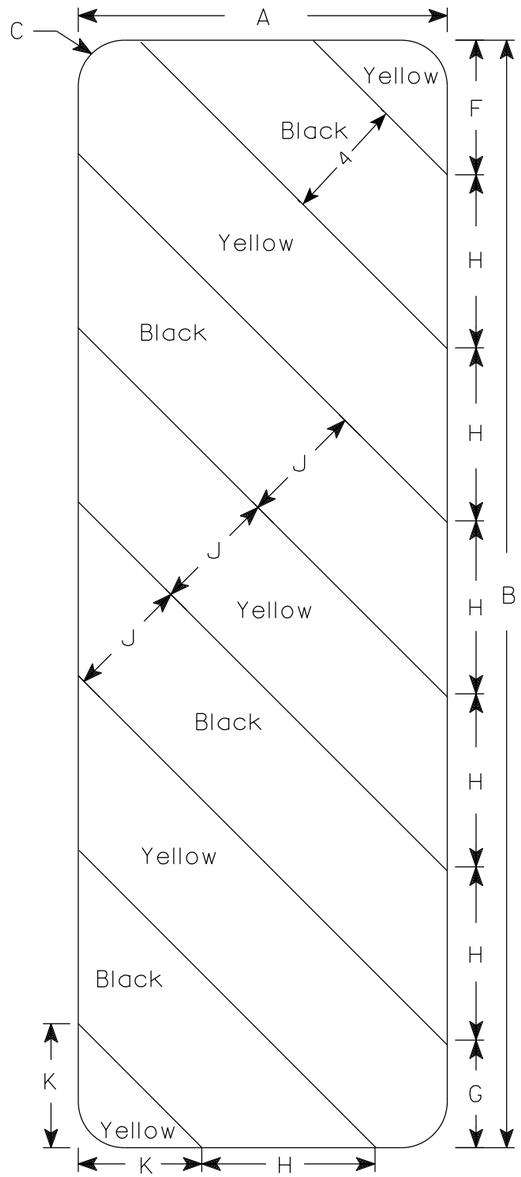

W5-52L

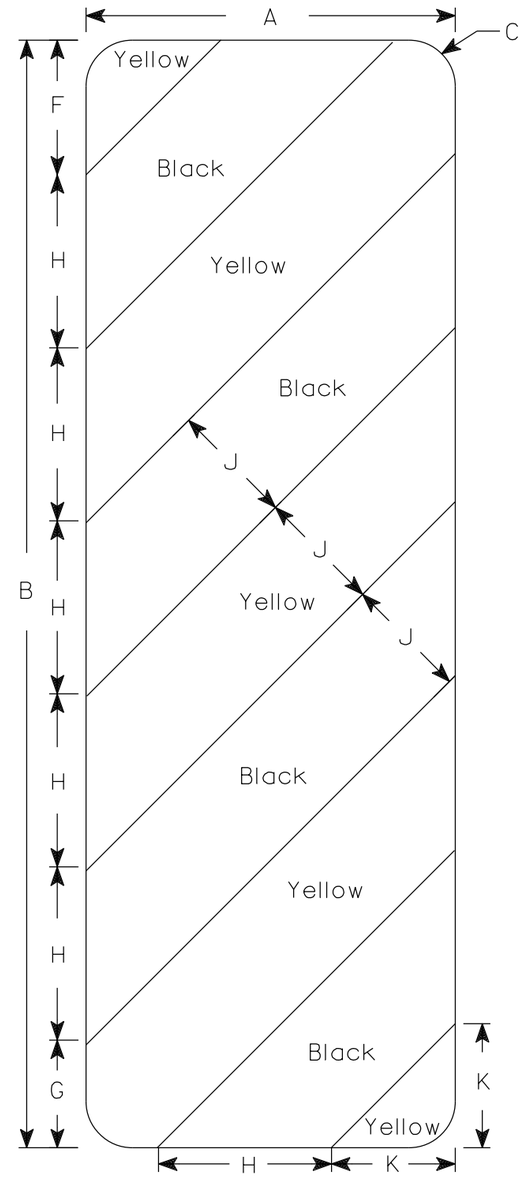

W5-52R

NOTES

1. Sign is Type II - Type F Reflective
2. Color:
   Background - Yellow
   Message - Black
3. Alternate colors of stripes as shown.

SIZE	A	B	C	D	E	F	G	H	I	J	K	L	M	N	O	P	Q	R	S	T	U	V	W	X	Y	Z	Area sq. ft.
1																											
2S	12	36	1 1/2			4 3/8	3 1/2	5 5/8	45°	4	4																3.0
2M	12	36	1 1/2			4 3/8	3 1/2	5 5/8	45°	4	4																3.0
3	18	54	1 1/2			6	5 1/2	8 1/2	45°	6	6 9/16																6.75
4																											
5																											

STANDARD SIGN
W5-52L & W5-52R

WISCONSIN DEPT OF TRANSPORTATION

APPROVED Matthew R Rauch
For State Traffic Engineer

DATE 3/4/2024 PLATE NO. W5-52.10

PROJECT NO: | HWY: | COUNTY: | SHEET NO: 33 | E

STATE PROJECT NUMBER

5738-00-74

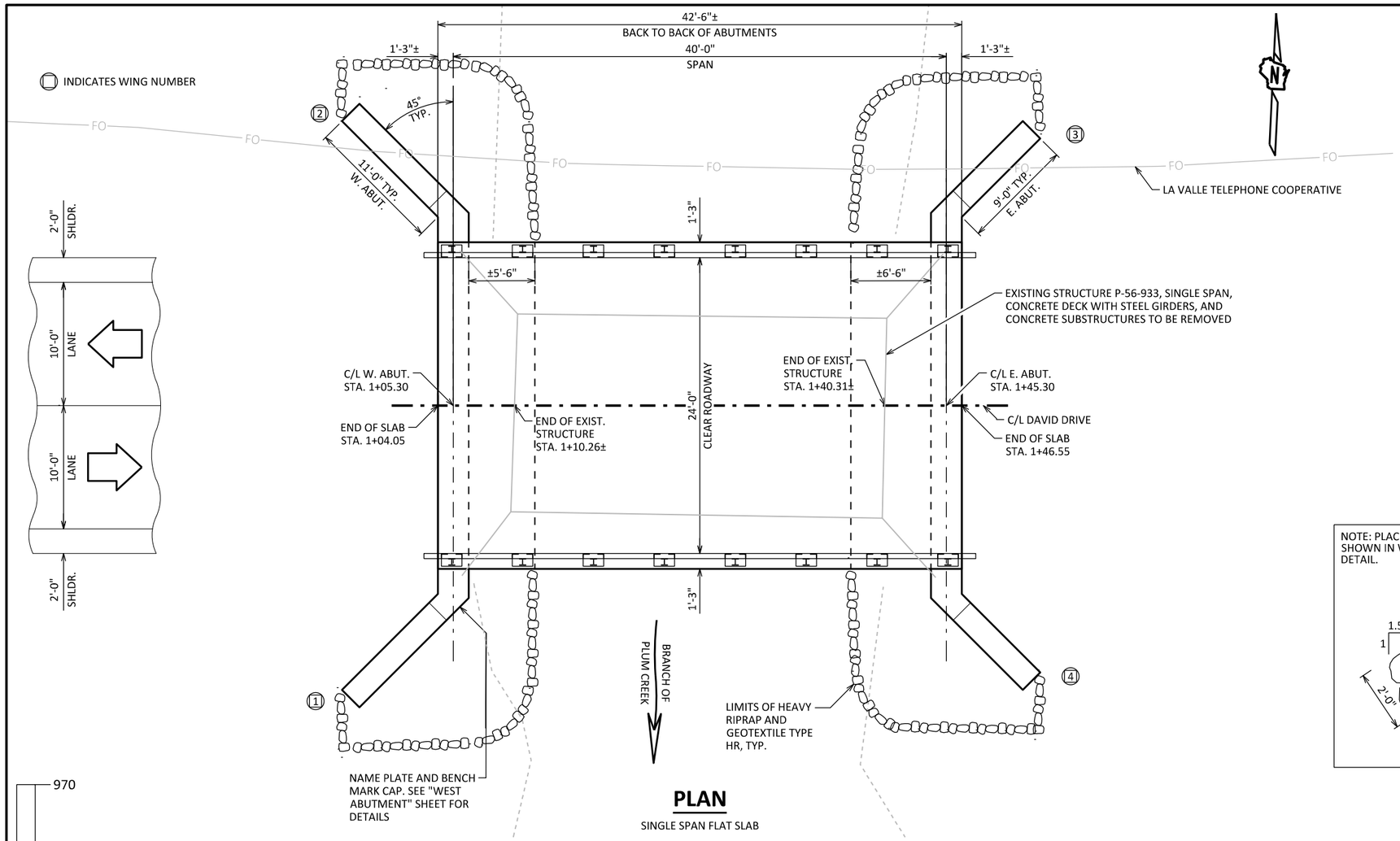

PLAN

SINGLE SPAN FLAT SLAB

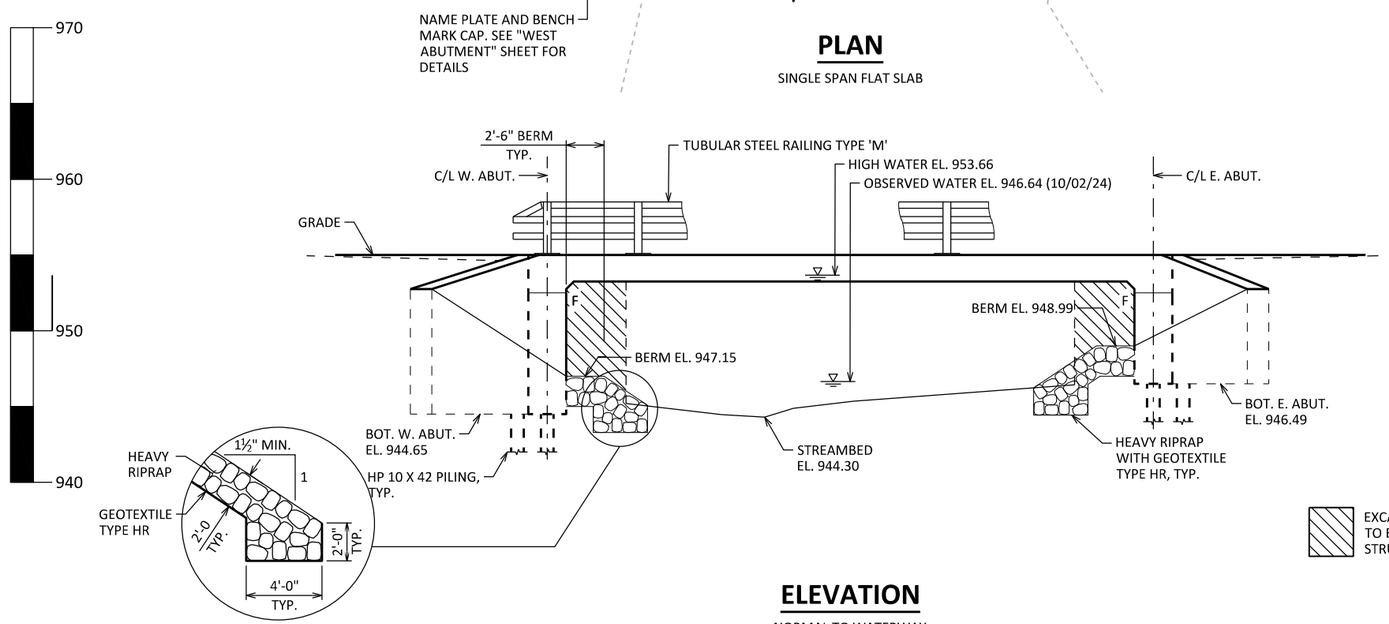

EXCAVATION AS INDICATED IN THE HATCH AREAS, TO BE INCLUDED IN THE BID ITEM "EXCAVATION FOR STRUCTURES BRIDGES B-56-256".

ELEVATION

NORMAL TO WATERWAY

THIS SHEET WAS CREATED BY THE WISDOT BUREAU OF STRUCTURES STANDARD BRIDGE DESIGN TOOL VERSION 1.1.0.0

DESIGN DATA

LIVE LOAD:

DESIGN LOADING: HL-93
INVENTORY RATING FACTOR: RF = 1.10
OPERATING RATING FACTOR: RF = 1.42
WISCONSIN STANDARD PERMIT VEHICLE (WIS.-SPV): 250 (KIPS)

STRUCTURE IS DESIGNED FOR A FUTURE WEARING SURFACE OF 20 POUNDS PER SQUARE FOOT.

MATERIAL PROPERTIES:

CONCRETE MASONRY:
SUPERSTRUCTURE — $f'c$ = 4,000 P.S.I.
ALL OTHER — $f'c$ = 3,500 P.S.I.

BAR STEEL REINFORCEMENT:
GRADE 60 — fy = 60,000 P.S.I.

FOUNDATION DATA

ABUTMENTS TO BE SUPPORTED ON HP 10 x 42 PILING SEATED IN PRE-BORED HOLES CORED 6 FEET MINIMUM INTO ROCK FOR THE WEST ABUTMENT AND 4 FEET MINIMUM INTO ROCK FOR THE EAST ABUTMENT. PILE DRIVING IS NOT REQUIRED. THE FACTORED AXIAL RESISTANCE OF THE PILES IN COMPRESSION USED FOR DESIGN IS 180 TONS MULTIPLIED BY A RESISTANCE FACTOR OF 0.5. ESTIMATED 17 FEET LONG FOR WEST ABUTMENT AND 18 FEET LONG FOR EAST ABUTMENT.

TRAFFIC VOLUME

DAVID DRIVE
ADT = 135 (2046)
R.D.S. = 30 M.P.H.

NOTE: PLACE HEAVY RIPRAP AS SHOWN IN WING ELEVATION DETAIL.

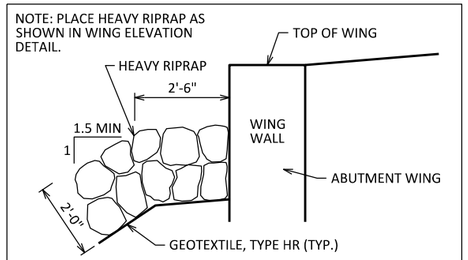

TYPICAL FILL SECTION AT WING

HYDRAULIC DATA

100 YEAR FREQUENCY

Q_{100} = 1370 C.F.S.
VEL. = 7.3 F.P.S.
HW_{100} = EL. 953.66
WATERWAY AREA = 188 SQ. FT.
DRAINAGE AREA = 2.18 SQ. MI.
ROADWAY OVERTOPPING = NA
SCOUR CRITICAL CODE = 5

2 YEAR FREQUENCY

Q_2 = 138 C.F.S.
VEL. = 2.6 F.P.S.
HW_2 = EL. 948.93

TEMPORARY STRUCTURE:

Q_5 = 322 C.F.S.
HW_5= EL. 950.23
WATERWAY AREA 74 SQ. FT.

LIST OF DRAWINGS

1. GENERAL PLAN
2. CROSS SECTION & QUANTITIES
3. SUBSURFACE EXPLORATION
4. WEST ABUTMENT
5. WEST ABUTMENT DETAILS
6. EAST ABUTMENT
7. EAST ABUTMENT DETAILS
8. SUPERSTRUCTURE
9. SUPERSTRUCTURE DETAILS
10. TUBULAR STEEL RAILING TYPE 'M'

STRUCTURE DESIGN CONTACTS:

JEREMY KRACHEY 608-988-7059
AARON BONK 608-261-0261

THESE PLANS ARE BASED UPON STANDARD BRIDGE PLANS DEVELOPED AND MAINTAINED BY THE WISCONSIN DEPARTMENT OF TRANSPORTATION THROUGH THE USE OF THE WISDOT STANDARD BRIDGE DESIGN TOOL. THE UNDERSIGNED DESIGNER CERTIFIES THE ACCURACY OF THE BRIDGE TYPE, SIZE AND LOCATION, HYDRAULICS AND FOUNDATION SUPPORT, AND INFORMATION IN THE PLANS THAT IS NOT PART OF THE STANDARD PLANS SUPPLIED BY THE DEPARTMENT. THE DESIGNER FURTHER CERTIFIES THAT USE OF THE STANDARD BRIDGE DESIGN TOOL FOR DEVELOPMENT OF THIS PLAN IS CONSISTENT WITH THE GUIDANCE PROVIDED IN THE WISDOT BRIDGE MANUAL.

WISCONSIN JEREMY F. KRACHEY E-37258 WAUZEKA PROFESSIONAL ENGINEER

Digitally signed by JEREMY F KRACHEY, PE
DN: C=US, E=JKRACHEY@TEAMENGINC.COM, O=TEAM ENGINEERING, INC.; CN="JEREMY F KRACHEY, PE"
Date: 2026.04.20 07:03:48-05'00'

NO.	DATE	REVISION	BY

ORIGINAL PLANS PREPARED BY: TEAM ENGINEERING

STATE OF WISCONSIN
DEPARTMENT OF TRANSPORATION

ACCEPTED JLR 05/11/26
CHIEF STRUCTURES DESIGN ENGINEER DATE

STRUCTURE B-56-256

DAVID DRIVE OVER BRANCH OF PLUM CREEK

COUNTY	TOWN
SAUK	WOODLAND

DESIGN SPEC.
AASHTO LRFD BRIDGE DESIGN SPECIFICATION

DESIGNED BY	DESIGNED CK'D	DRAWN BY	PLANS CK'D
JFK	JLB	BAS	RDG

GENERAL PLAN

SHEET 1 OF 10
34

SCALE = 10

I.D. DATE:

8

8

STATE PROJECT NUMBER
5738-00-74

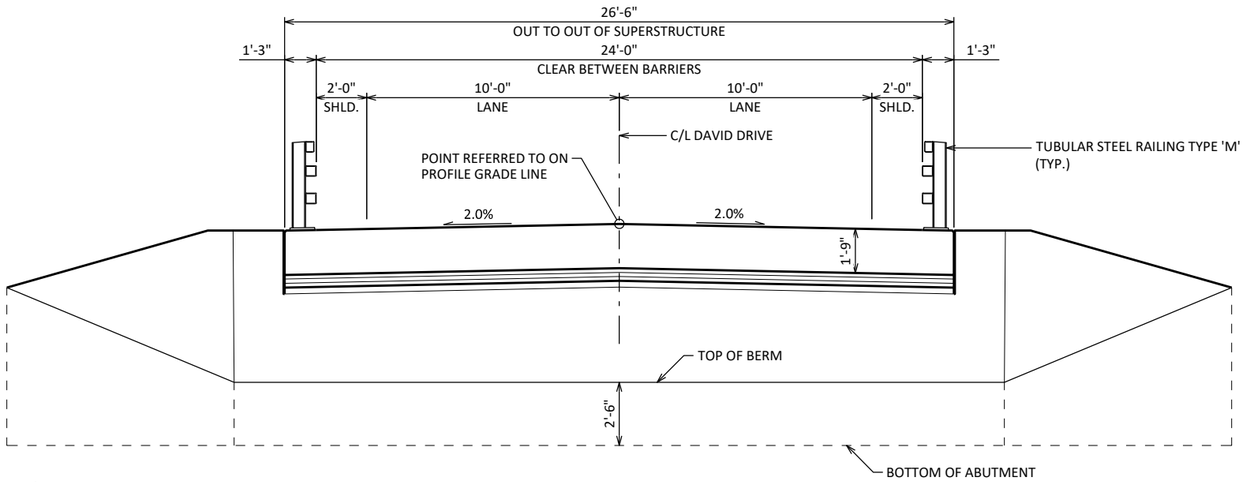

CROSS SECTION THRU ROADWAY

LOOKING UPSTATION
(PILING NOT SHOWN FOR CLARITY)

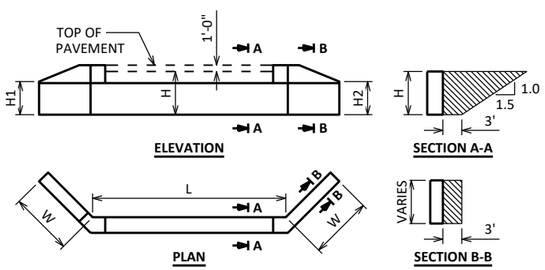

ABUTMENT BACKFILL DIAGRAM

L = ABUTMENT BODY LENGTH AT BACKFACE (FT)
H = AVERAGE ABUTMENT FILL HEIGHT (FT)
H1 = WING 1 HEIGHT AT TIP (FT)
H2 = WING 2 HEIGHT AT TIP (FT)
W = WING LENGTH (FT)
EF = EXPANSION FACTOR (1.20 FOR CY BID ITEMS AND 1.00 FOR TON BID ITEMS)
V_{CF} = (L)(3.0')(H) + (L)(0.5)(1.5H)(H) + (3')(0.5)(H1+H2+H+H)(W)
V_{CY} = V_{CF}(EF)/27
V_{TON} = V_{CY}(2.0)

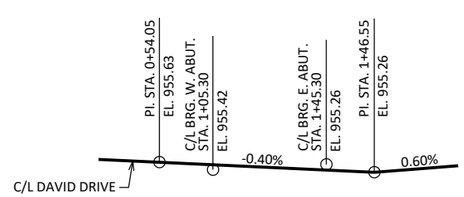

PROFILE GRADE LINE

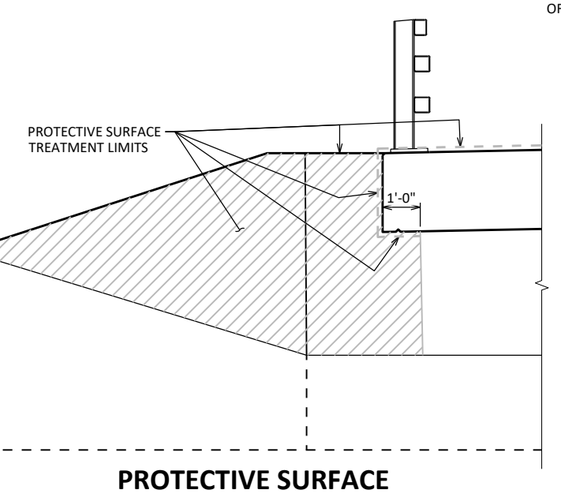

PROTECTIVE SURFACE TREATMENT DETAILS

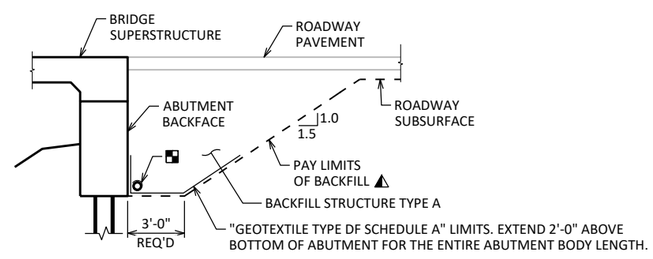

TYPICAL SECTION THRU ABUTMENT

▲ BACKFILL PAY LIMITS. BACKFILL BEYOND PAY LIMITS SHALL BE INCIDENTAL TO EXCAVATION FOR STRUCTURES. LIMITS OF EXCAVATION SHALL BE DETERMINED BY THE CONTRACTOR.

▪ PIPE UNDERDRAIN WRAPPED (6-INCH). SLOPE 0.5% MIN. TO SUITABLE DRAINAGE. ATTACH RODENT SHIELD AT ENDS OF PIPE UNDERDRAIN.

GENERAL NOTES

DRAWINGS SHALL NOT BE SCALED.

BAR STEEL REINFORCEMENT SHALL BE EMBEDDED 2" CLEAR UNLESS OTHERWISE SHOWN OR NOTED.

THE FIRST OR FIRST TWO DIGITS OF THE BAR MARK SIGNIFIES THE BAR SIZE.

BEVEL EXPOSED EDGES OF CONCRETE ¾" UNLESS OTHERWISE NOTED.

THE UPPER LIMITS OF "EXCAVATION FOR STRUCTURES B-56-256 " SHALL BE THE EXISTING GROUNDLINE.

AT THE BACK FACE OF ABUTMENT ALL VOLUME WHICH CANNOT BE PLACED BEFORE ABUTMENT CONSTRUCTION AND IS NOT OCCUPIED BY THE NEW STRUCTURE SHALL BE BACKFILLED WITH STRUCTURE BACKFILL TYPE A.

EXCAVATION BELOW THE ABUTMENT AND ABUTMENT BEDDING MATERIALS REQUIRES ENGINEER APPROVAL. GEOTEXTILE SHALL BE SET AT THE BOTTOM OF EXCAVATION AND EXTEND 2'-0" ABOVE BOTTOM OF ABUTMENT.

THE QUANTITY FOR BACKFILL STRUCTURE IS CALCULATED BASED ON THE DETAIL SHOWN IN THE PLANS.

THE SLOPE OF THE FILL IN FRONT OF THE ABUTMENTS SHALL BE COVERED WITH HEAVY RIPRAP AND GEOTEXTILE TYPE HR TO THE EXTENT SHOWN ON SHEET 1 AND THE ABUTMENT DETAILS.

AT ABUTMENTS, CONCRETE POURED UNDER WATER WILL BE ALLOWED AND SHALL BE DONE IN ACCORDANCE WITH SECTION 502.3.5.3 OF THE STANDARD SPECIFICATIONS.

SLAB FALSEWORK SHALL BE SUPPORTED ON PILES OR THE SUBSTRUCTURE UNLESS AN ALTERNATE METHOD IS APPROVED BY THE ENGINEER.

PROTECTIVE SURFACE TREATMENT TO BE APPLIED TO ENTIRE EXPOSED TOP OF SLAB, INCLUDING THE SLAB EDGE AND 1'-0" UNDER THE SLAB, THE TOP AND EXTERIOR EXPOSED FACE OF WINGS AND FRONT FACE OF ABUTMENT TO 1'-0" PAST THE EDGE OF SLAB.

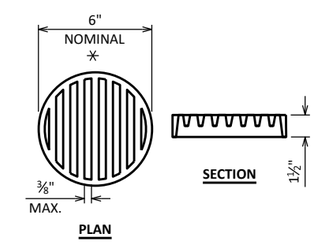

RODENT SHIELD DETAIL

✳ DIMENSIONS ARE APPROXIMATE. THE GRATE IS SIZED TO FIT INTO A PIPE COUPLING. ORIENT SO SLOTS ARE VERTICAL.

THE RODENT SHIELD, PIPE COUPLING AND SCREWS SHALL BE CONSIDERED INCIDENTAL TO THE BID ITEM "PIPE UNDERDRAIN WRAPPED 6-INCH".

THE RODENT SHIELD SHALL BE A PVC GRATE SIMILAR TO THIS DETAIL. THE GRATE IS COMMERCIALLY AVAILABLE AS A FLOOR STRAINER. A PIPE COUPLING IS REQUIRED FOR THE ATTACHMENT OF THIS SHIELD TO THE EXPOSED END OF THE PIPE UNDERDRAIN. THE SHIELD SHALL BE FASTENED TO THE PIPE COUPLING WITH TWO OR MORE NO. 10 X 1-INCH STAINLESS STEEL SHEET METAL SCREWS.

TOTAL ESTIMATED QUANTITIES

BID ITEM NUMBER	BID ITEMS	UNIT	SUPER	WEST ABUT.	EAST ABUT.	TOTALS
203.0260	REMOVING STRUCTURE OVER WATERWAY WITH MINIMAL DEBRIS P-56-933	EACH	---	---	---	1
206.1001	EXCAVATION FOR STRUCTURES BRIDGES (B-56-256)	EACH	---	---	---	1
210.1500	BACKFILL STRUCTURE TYPE A	TON	---	267	179	446
502.0100	CONCRETE MASONRY BRIDGES	CY	77	41	30	148
502.3200	PROTECTIVE SURFACE TREATMENT	SY	148	23	17	188
505.0400	BAR STEEL REINFORCEMENT HS STRUCTURES	LB	---	2180	2,040	4220
505.0600	BAR STEEL REINFORCEMENT HS COATED STRUCTURES	LB	15,920	1860	1,530	19310
513.4061	RAILING TUBULAR TYPE M	LF	90	---	---	90
516.0500	RUBBERIZED MEMBRANE WATERPROOFING	SY	---	5	5	10
526.0101	TEMPORARY STRUCTURE (11+48)	EACH	---	---	---	1
550.0020	PRE-BORING ROCK OR CONSOLIDATED MATERIALS	LF	---	77	98	175
550.1100	PILING STEEL HP 10-INCH X 42 LB	LF	---	119	126	245
606.0300	RIPRAP HEAVY	CY	---	35	35	70
612.0406	PIPE UNDERDRAIN WRAPPED 6-INCH	LF	---	70	70	140
645.0111	GEOTEXTILE TYPE DF SCHEDULE A	SY	---	50	50	100
645.0120	GEOTEXTILE TYPE HR	SY	---	85	85	170
	NON-BID ITEMS					
	FILLER	SIZE	---	---	---	½", ¾"

THIS SHEET WAS CREATED BY THE WISDOT BUREAU OF STRUCTURES STANDARD BRIDGE DESIGN TOOL VERSION 1.1.0.0

8

8

NO.	DATE	REVISION	BY

STATE OF WISCONSIN
DEPARTMENT OF TRANSPORTATION

STRUCTURE B-56-256

DRAWN BY BAS | PLANS CK'D JFK

CROSS SECTION & QUANTITIES

SHEET 2 OF 10
35

SCALE = 6.0

BORING #	DATE COMPLETED	NORTHING (Y)	EASTING (X)
1	9/24/2025	289334.41	517498.21
2	9/24/2025	289345.45	517551.89
BORINGS COMPLETED BY: GEOTEST, INC.			
REPORT COMPLETED BY: GEOTEST, INC.			
ALL COORDINATES REFERENCED TO WCCS NAD 83(91)		SAUK COUNTY	

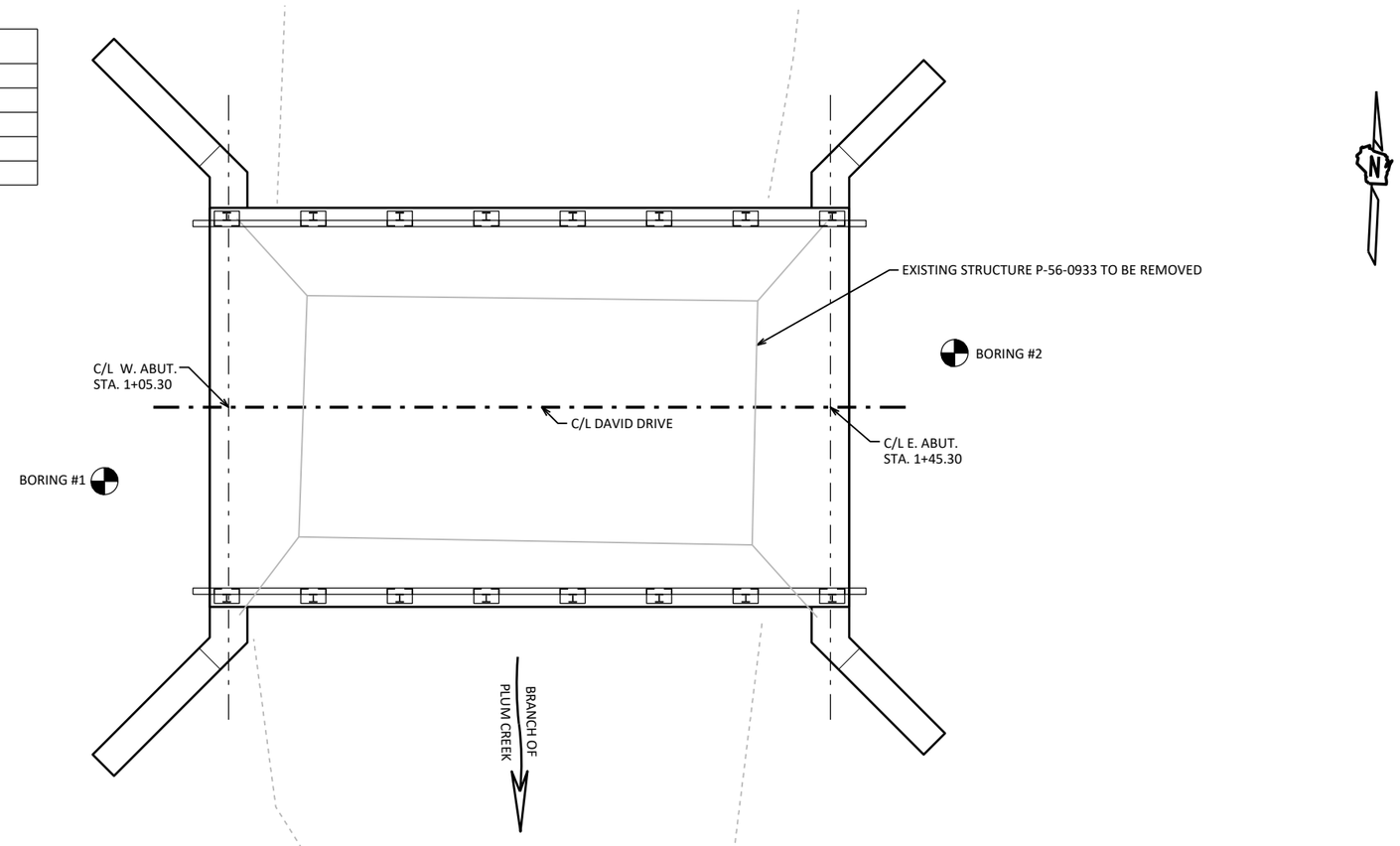

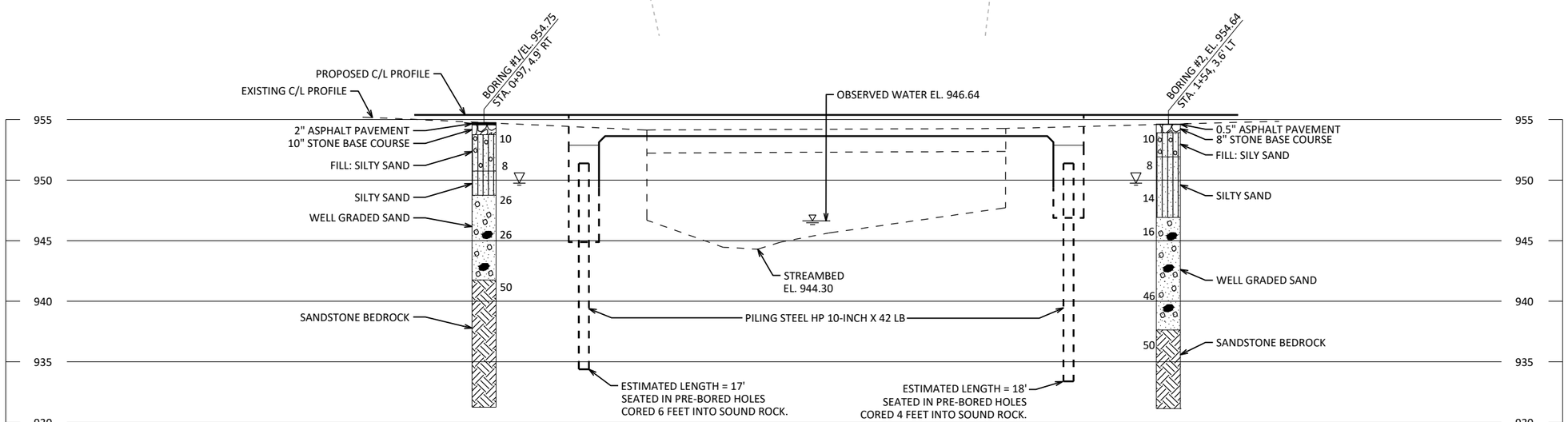

STATE PROJECT NUMBER

5738-00-74

MATERIAL SYMBOLS

ASPHALT, TOPSOIL, PEAT, CONCRETE, FILL, GRAVEL, SAND, CLAY, SILT, BOULDERS OR COBBLES, LIMESTONE, BEDROCK (UNKNOWN), SHALE, SANDSTONE, IGNEOUS/ META

LEGEND OF BORING

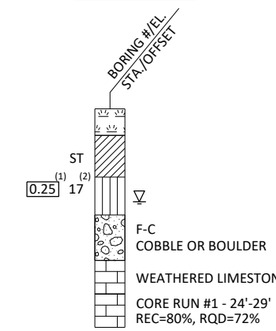

(1) UNCONFINED STRENGTH, AS DETERMINED BY A POCKET PENETROMETER (TSF)

(2) UNLESS OTHERWISE, SPECIFIED THE SPT 'N' VALUE IS BASED ON AASHTO T-206, STANDARD PENETRATION TEST. THE SPT 'N' VALUE PRESENTED HAS NOT BEEN CORRECTED FOR OVERBURDEN PRESSURE OR HAMMER EFFICIENCY.

GROUND WATER ELEVATION

AT TIME OF DRILLING
END OF DRILLING
AFTER DRILLING

ABBREVIATIONS

F-FINE M-MEDIUM C-COARSE ST-SHELBY TUBE

SUBSURFACE EXPLORATION FOR FOUNDATION DESIGN AND BIDDERS INFORMATION

BORINGS WERE COMPLETED AT POINTS APPROXIMATELY AS INDICATED ON THIS DRAWING TO OBTAIN INFORMATION CONCERNING THE CHARACTER OF SUBSURFACE MATERIALS FOUND AT THE SITE. BECAUSE THE INVESTIGATED DEPTHS ARE LIMITED AND THE AREA OF THE BORINGS IS VERY SMALL IN RELATION TO THE ENTIRE SITE, THE WISCONSIN DEPARTMENT OF TRANSPORTATION DOES NOT WARRANT SIMILAR SUBSURFACE CONDITIONS BELOW, BETWEEN, OR BEYOND THESE BORINGS. VARIATIONS IN SOIL CONDITIONS SHOULD BE EXPECTED AND FLUCTUATIONS IN GROUNDWATER LEVELS MAY OCCUR.

NO.	DATE	REVISION	BY

STATE OF WISCONSIN
DEPARTMENT OF TRANSPORTATION
STRUCTURES DESIGN SECTION

STRUCTURE B-56-256

DRAWN BY BAS PLANS CK'D

SUBSURFACE EXPLORATION

SHEET 3 OF 10

36

8

8

STATE PROJECT NUMBER

5738-00-74

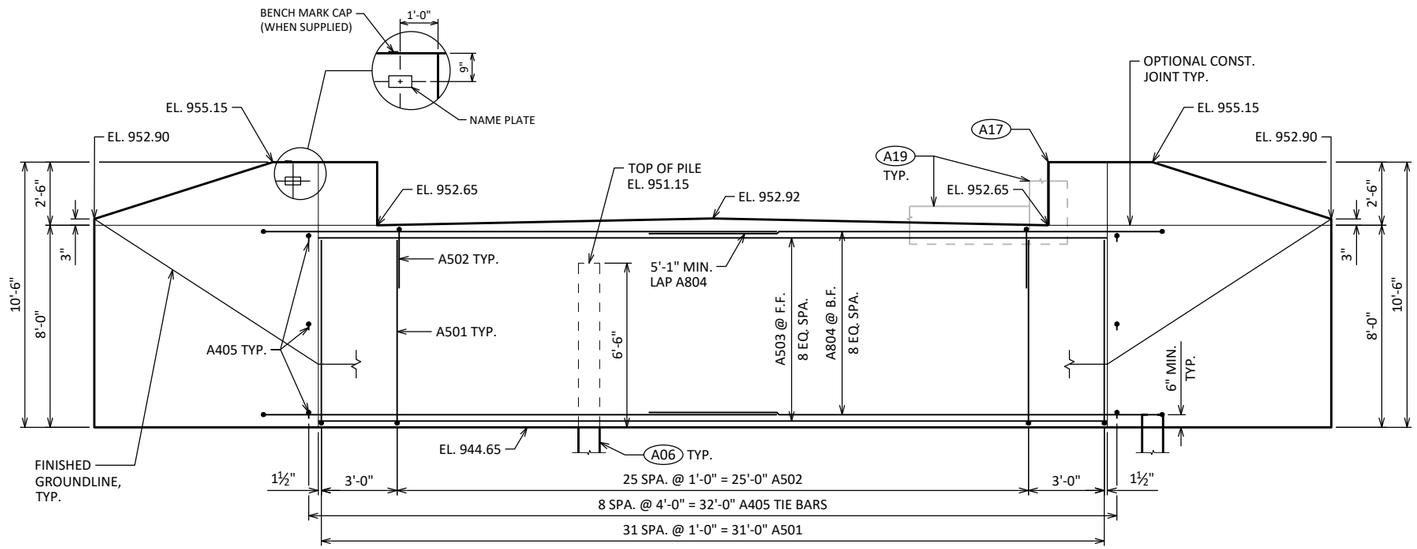

ELEVATION

LOOKING DOWNSTATION

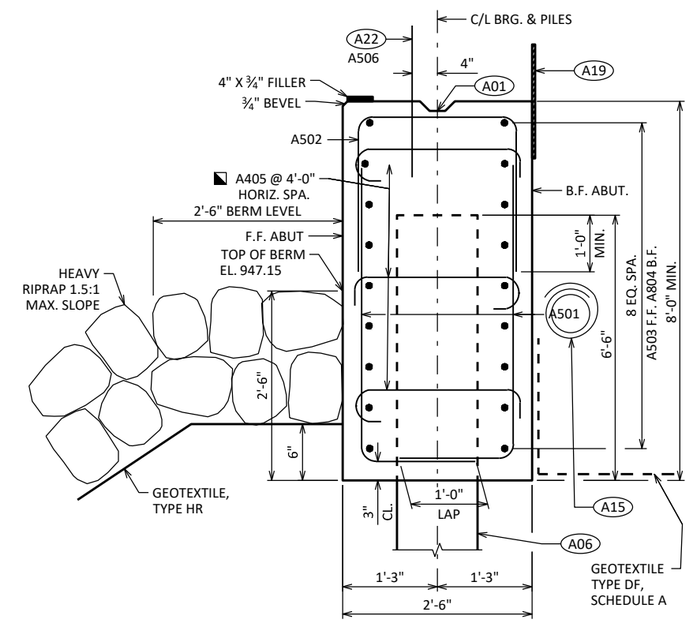

SECTION THRU BODY

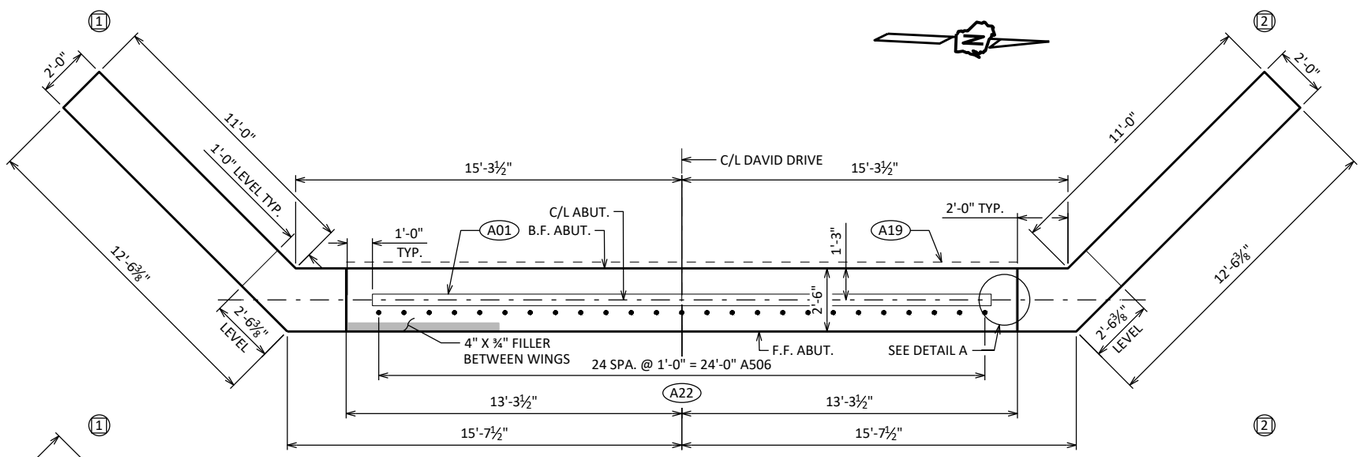

PLAN

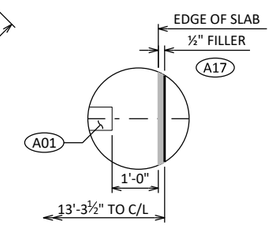

DETAIL A

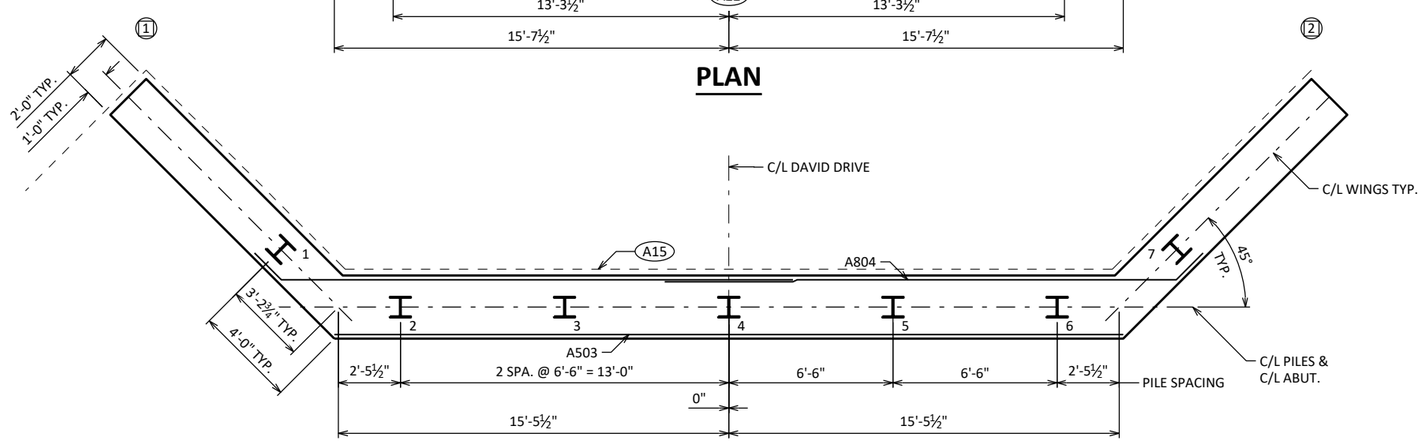

PILE PLAN

(A01) CONST. JOINT: KEYWAY FORMED BY A BEVELED 2X6.

(A06) SUPPORT ABUTMENT ON HP 10 x 42 PILING, ESTIMATED 17 FT LONG WITH A REQUIRED DRIVING RESISTANCE OF 180TONS PER PILE.

(A15) PIPE UNDERDRAIN WRAPPED (6-INCH). SLOPE 0.5% MIN. TO SUITABLE DRAINAGE. RODENT SHIELD REQUIRED. DISCHARGE 1 FT ABOVE NORMAL WATER

(A17) ½" FILLER: SEAL ALL EXPOSED HORIZ. & VERT. SURFACES OF ½" FILLER WITH NON-STAINING GRAY NON-BITUMINOUS JOINT SEALER. (1" DEEP AND HOLD ⅛" BELOW SURFACE OF CONCRETE). EXTEND SEALER 3" BELOW GUTTER LINE AT INSIDE FACE.

(A19) 18" RUBBERIZED MEMBRANE WATERPROOFING. SEAL ALL HORIZ. & VERT. JOINTS AT BACKFACE.

(A22) A506 BARS SPACED @ 1'-0" CNTRS. MAY BE PLACED AFTER CONCRETE IS POURED BUT BEFORE INITIAL SET HAS TAKEN PLACE. (EMBED 1'-0" INTO CONC.)

◪ ALTERNATE THE POSITION OF THE 90° AND 180° HOOKS AT EACH VERTICAL LAYER OF TIES.

NO.	DATE	REVISION	BY

STATE OF WISCONSIN
DEPARTMENT OF TRANSPORTATION

STRUCTURE B-56-256

DRAWN BY BAS | PLANS CK'D JFK

WEST ABUTMENT

SHEET 4

37

SCALE =

8

8

THIS SHEET WAS CREATED BY THE WISDOT BUREAU OF STRUCTURES STANDARD BRIDGE DESIGN TOOL VERSION 1.1.0.0

STATE PROJECT NUMBER

5738-00-74

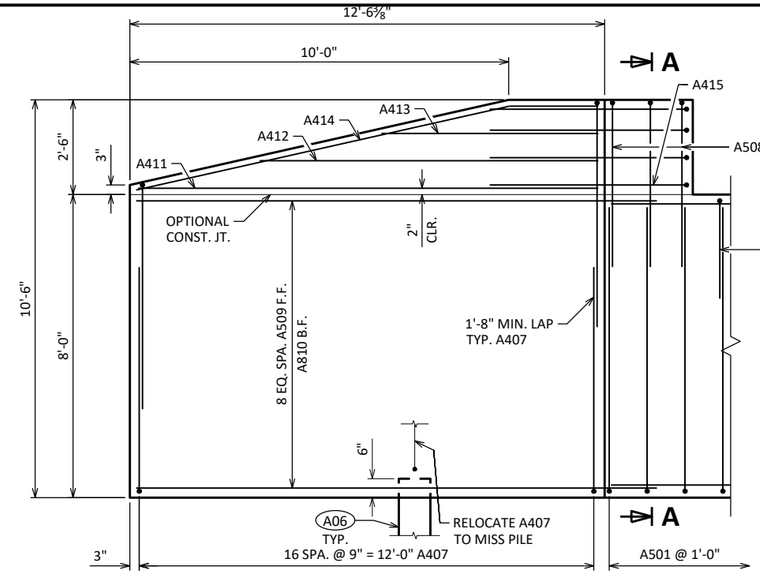

WING 1 ELEVATION

SHOWING F.F. WING

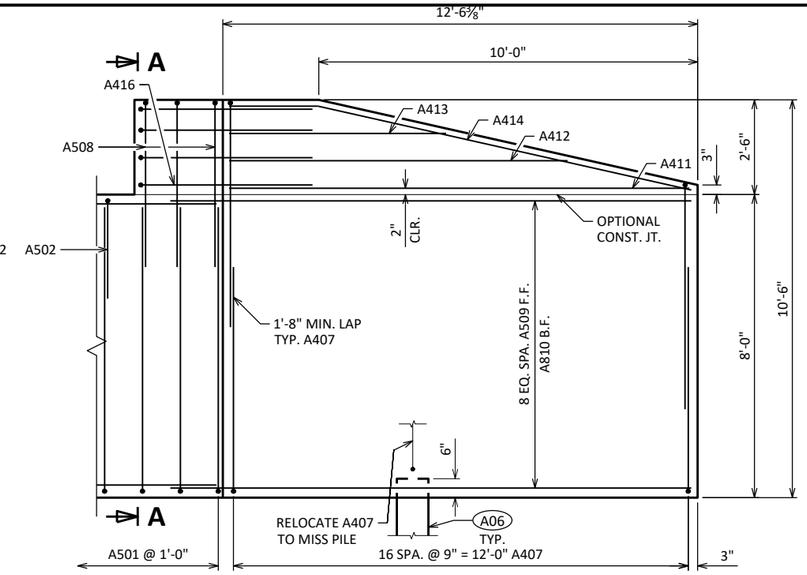

WING 2 ELEVATION

SHOWING F.F. WING

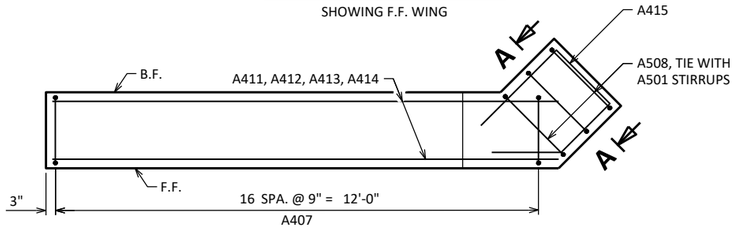

WING 1 PLAN

SHOWING UPPER WING REINFORCEMENT

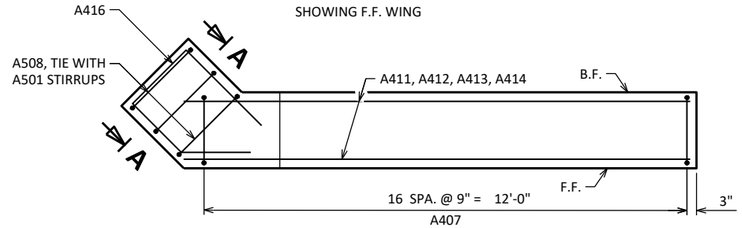

WING 2 PLAN

SHOWING UPPER WING REINFORCEMENT

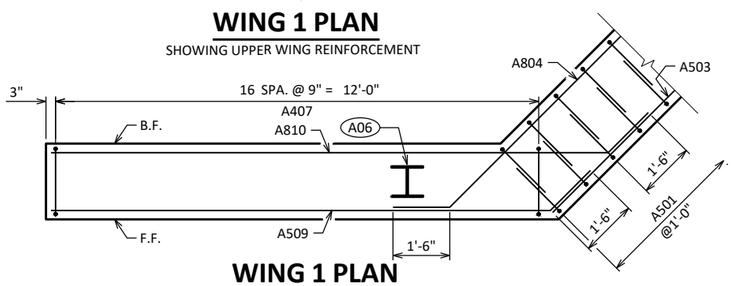

WING 1 PLAN

SHOWING LOWER WING REINFORCEMENT
WING 2 SIMILAR

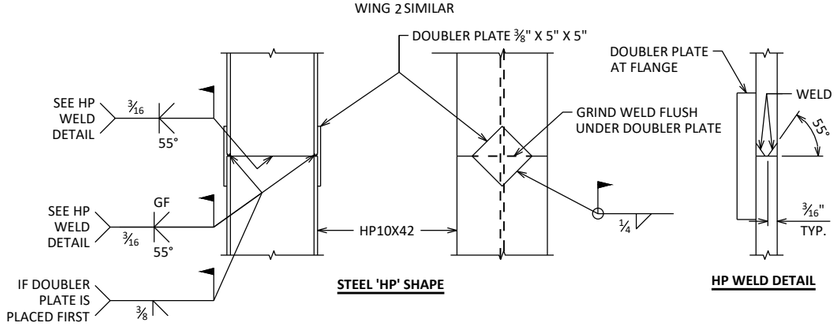

'HP' PILE DETAILS

THIS SHEET WAS CREATED BY THE WISDOT BUREAU OF STRUCTURES STANDARD BRIDGE DESIGN TOOL VERSION 1.1.0.0

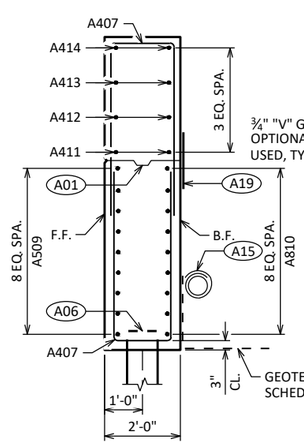

SECTION THRU WING 1

TYPICAL BOTH WINGS

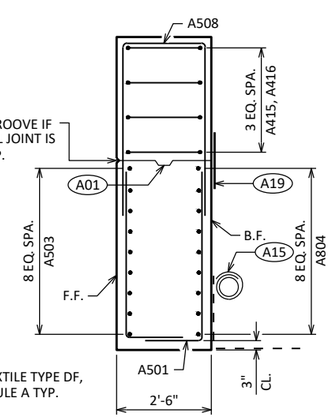

SECTION A-A

BILL OF BARS

NOTE: THE FIRST OR FIRST TWO DIGITS OF THE BAR MARK SIGNIFIES THE BAR SIZE.

BAR MARK	COAT	NO. REQ'D.	LENGTH	BENT	BAR SERIES	LOCATION
A501		64	9'-0"	X		ABUT BODY STIRRUPS
A502		26	7'-1"	X		ABUT BODY STIRRUPS - TOP U-BAR
A503		9	31'-3"			ABUT BODY HORIZ. - F.F.
A804		18	21'-7"	X		ABUT BODY HORIZ. - B.F.
A405		27	3'-0"	X		ABUT BODY TIE BARS
A506	X	25	2'-0"			ABUT BODY DOWEL BARS
A407	X	68	13'-4"	X		WING STIRRUPS
A508	X	6	10'-7"	X		WING CORNER STIRRUPS
A509	X	18	13'-9"	X		WING LOWER HORIZ - F.F.
A810	X	18	15'-3"	X		WING LOWER HORIZ. - B.F.
A411	X	4	12'-1"			WING UPPER HORIZ.
A412	X	4	8'-10"			WING UPPER HORIZ.
A413	X	4	5'-7"			WING UPPER HORIZ.
A414	X	4	11'-8"	X		WING TOP HORIZ.
A415	X	4	8'-3"	X		WING 1 UPPER HORIZ. CORNER
A416	X	4	8'-4"	X		WING 2 UPPER HORIZ. CORNER

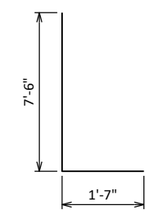

A501

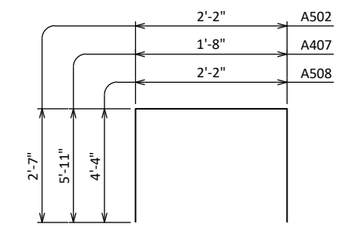

A502, A407, A508

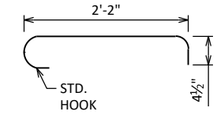

A405

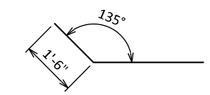

A804, A509, A810

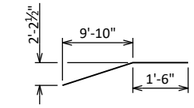

A414

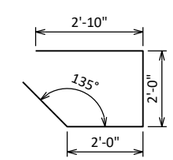

A415

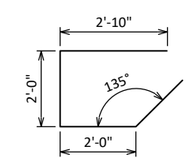

A416

(A01) OPTIONAL CONST. JOINT: KEYWAY FORMED BY A BEVELED 2X6. PROVIDE ¾" "V" GROOVE ON F.F. OF WINGWALL IF JOINT IS USED.

(A06) SUPPORT ABUTMENT ON HP 10 x 42 PILING, ESTIMATED 17 FT LONG WITH A REQUIRED DRIVING RESISTANCE OF 180TONS PER PILE.

(A15) PIPE UNDERDRAIN WRAPPED (6-INCH). SLOPE 0.5% MIN. TO SUITABLE DRAINAGE. RODENT SHIELD REQUIRED. DISCHARGE 1 FT ABOVE NORMAL WATER ELEVATION

(A19) 18" RUBBERIZED MEMBRANE WATERPROOFING, ONLY IF OPTIONAL CONSTRUCTION JOINT IS USED. COST INCIDENTAL TO BID ITEM "CONCRETE MASONRY STRUCTURES".

NO.	DATE	REVISION	BY

STATE OF WISCONSIN
DEPARTMENT OF TRANSPORTATION

STRUCTURE B-56-256

DRAWN BY BAS | PLANS CK'D JFK

WEST ABUTMENT DETAILS

SHEET 5 OF 10
38

SCALE =

8

8

STATE PROJECT NUMBER

5738-00-74

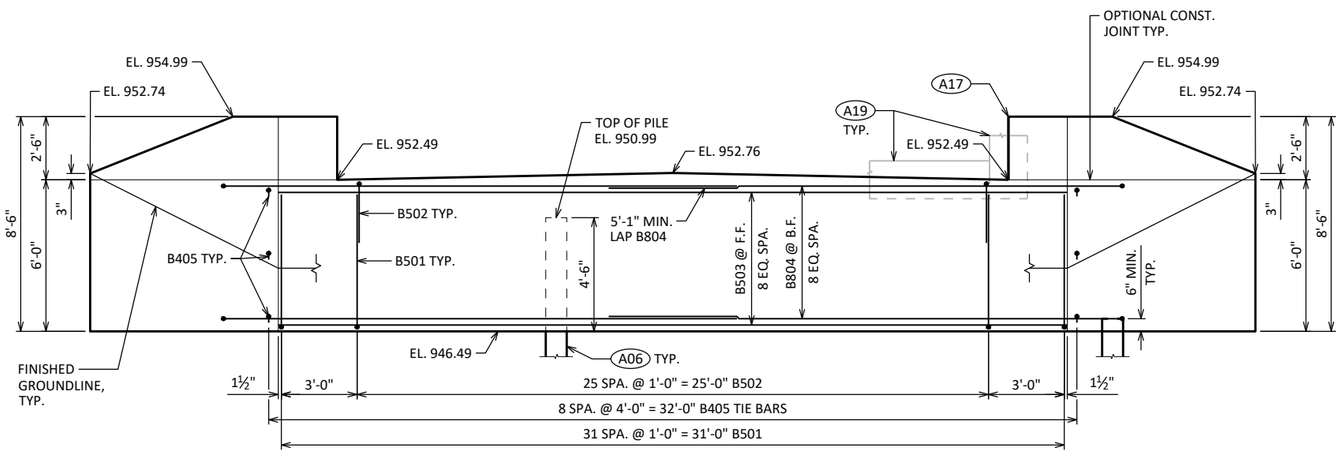

ELEVATION

LOOKING UPSTATION

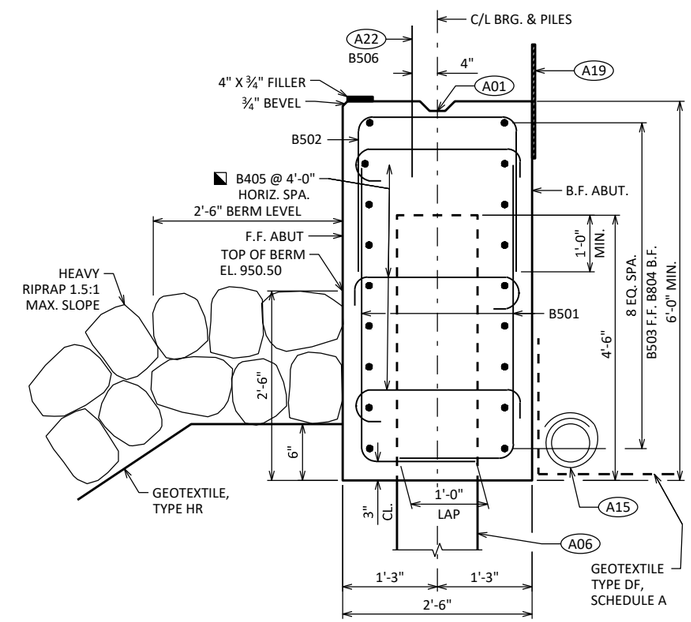

SECTION THRU BODY

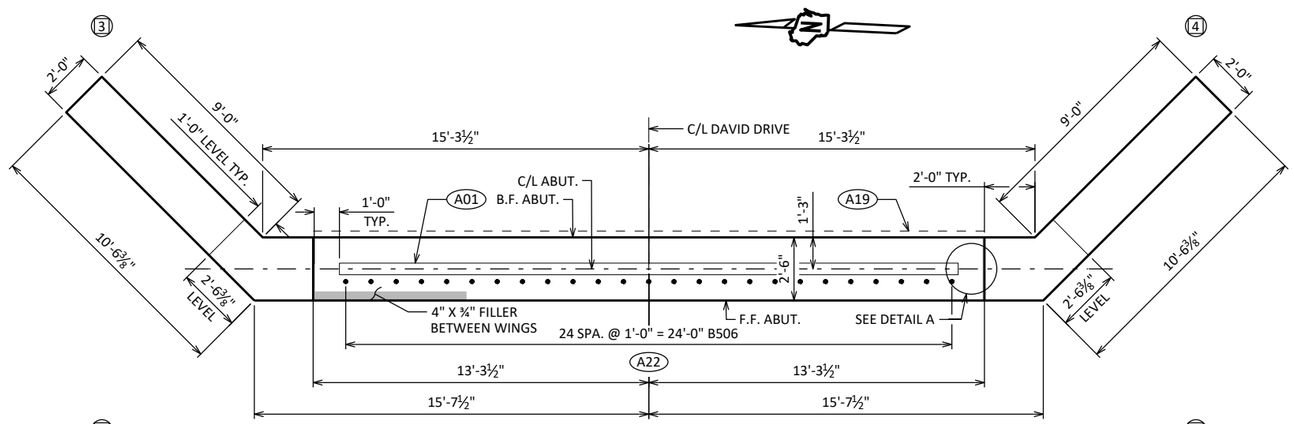

PLAN

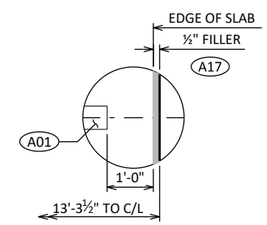

DETAIL A

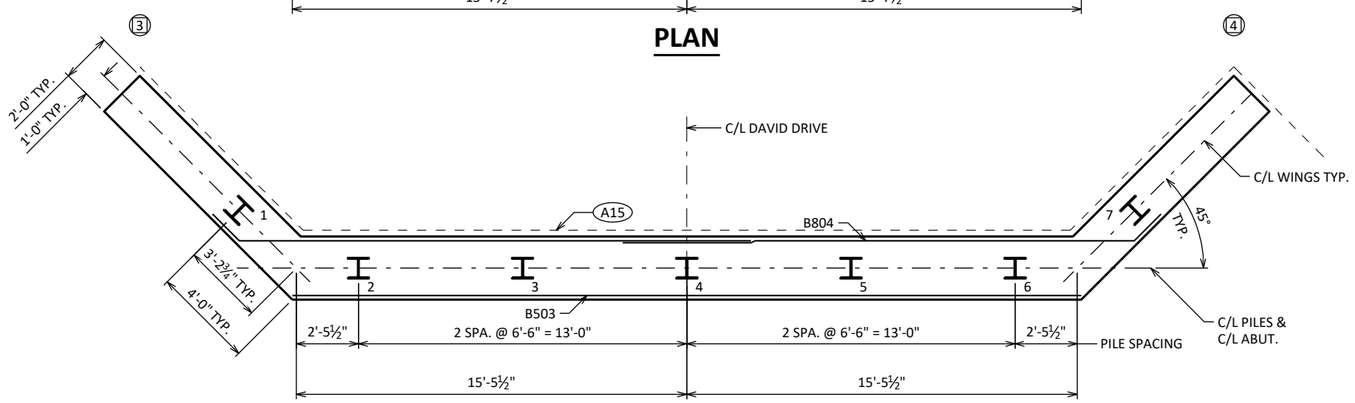

PILE PLAN

(A01) CONST. JOINT: KEYWAY FORMED BY A BEVELED 2X6.

(A06) SUPPORT ABUTMENT ON HP 10 x 42 PILING, ESTIMATED 18 FT LONG WITH A REQUIRED DRIVING RESISTANCE OF 180TONS PER PILE.

(A15) PIPE UNDERDRAIN WRAPPED (6-INCH). SLOPE 0.5% MIN. TO SUITABLE DRAINAGE. RODENT SHIELD REQUIRED. DISCHARGE 1 FT ABOVE NORMAL WATER

(A17) ½" FILLER: SEAL ALL EXPOSED HORIZ. & VERT. SURFACES OF ½" FILLER WITH NON-STAINING GRAY NON-BITUMINOUS JOINT SEALER. (1" DEEP AND HOLD ⅛" BELOW SURFACE OF CONCRETE). EXTEND SEALER 3" BELOW GUTTER LINE AT INSIDE FACE.

(A19) 18" RUBBERIZED MEMBRANE WATERPROOFING. SEAL ALL HORIZ. & VERT. JOINTS AT BACKFACE.

(A22) B506 BARS SPACED @ 1'-0" CNTRS. MAY BE PLACED AFTER CONCRETE IS POURED BUT BEFORE INITIAL SET HAS TAKEN PLACE. (EMBED 1'-0" INTO CONC.)

◪ ALTERNATE THE POSITION OF THE 90° AND 180° HOOKS AT EACH VERTICAL LAYER OF TIES.

NO.	DATE	REVISION	BY

STATE OF WISCONSIN
DEPARTMENT OF TRANSPORTATION

STRUCTURE B-56-256

DRAWN BY BAS | PLANS CK'D JFK

EAST ABUTMENT

SHEET 6 OF 10

39

SCALE =

8

8

THIS SHEET WAS CREATED BY THE WISDOT BUREAU OF STRUCTURES STANDARD BRIDGE DESIGN TOOL VERSION 1.1.0.0

STATE PROJECT NUMBER

5738-00-74

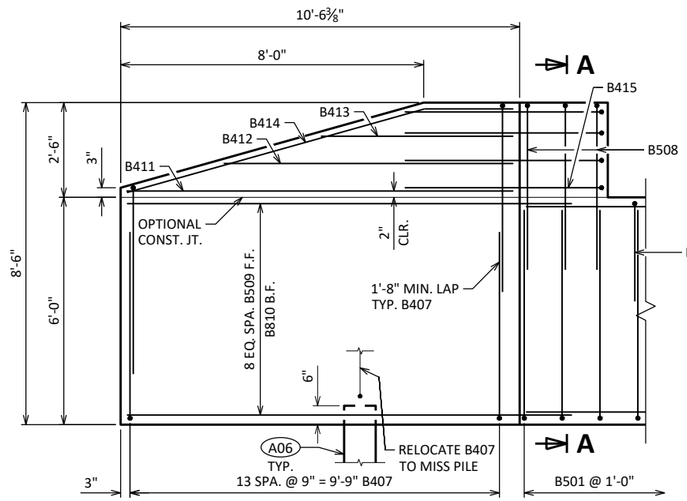

WING 3 ELEVATION

SHOWING F.F. WING

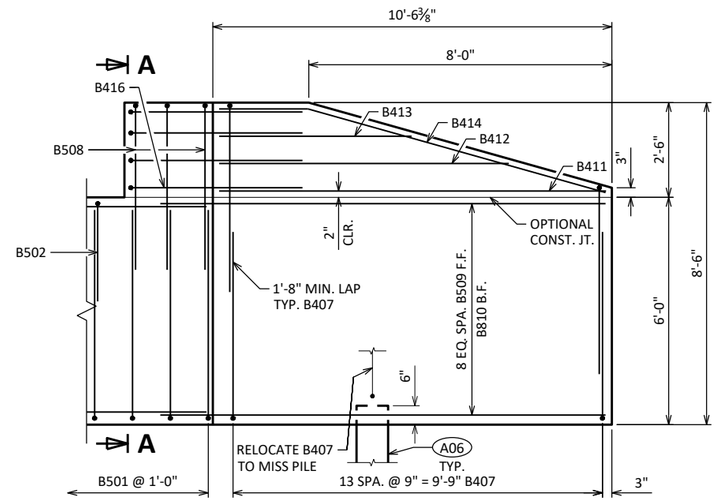

WING 4 ELEVATION

SHOWING F.F. WING

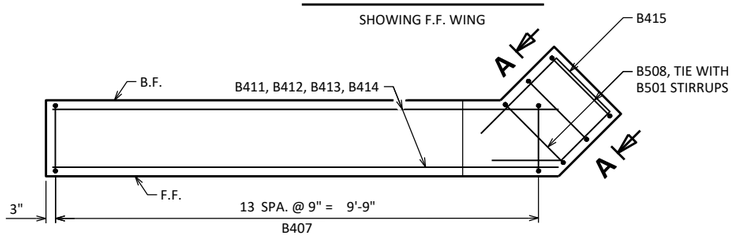

WING 3 PLAN

SHOWING UPPER WING REINFORCEMENT

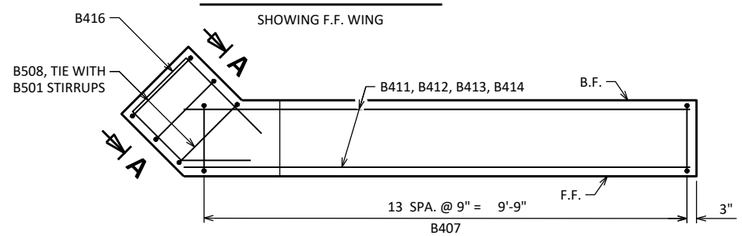

WING 4 PLAN

SHOWING UPPER WING REINFORCEMENT

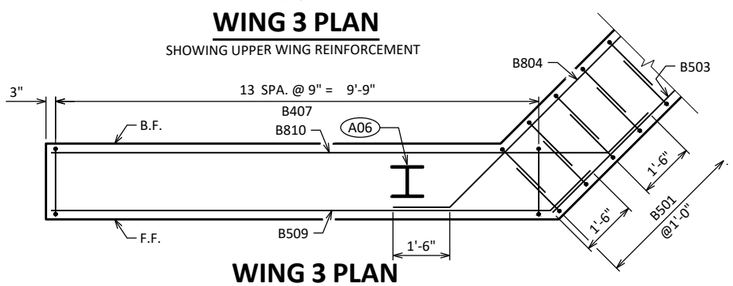

WING 3 PLAN

SHOWING LOWER WING REINFORCEMENT
WING 4 SIMILAR

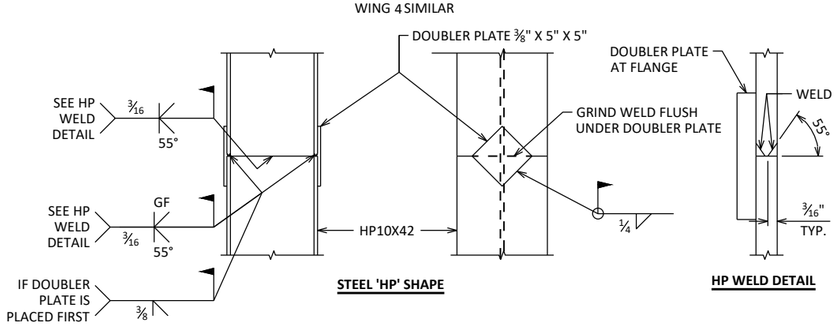

'HP' PILE DETAILS

THIS SHEET WAS CREATED BY THE WISDOT BUREAU OF STRUCTURES STANDARD BRIDGE DESIGN TOOL VERSION 1.1.0.0

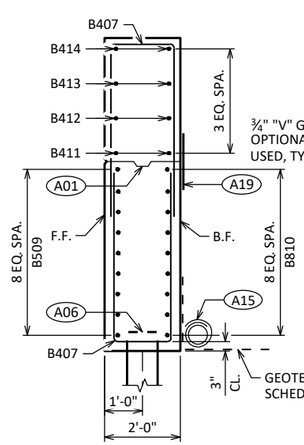

SECTION THRU WING 3

TYPICAL BOTH WINGS

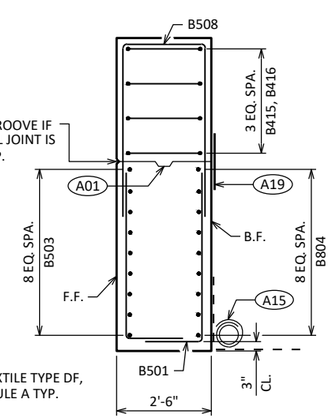

SECTION A-A

BILL OF BARS

NOTE: THE FIRST OR FIRST TWO DIGITS OF THE BAR MARK SIGNIFIES THE BAR SIZE.

BAR MARK	COAT	NO. REQ'D.	LENGTH	BENT	BAR SERIES	LOCATION
B501		64	7'-0"	X		ABUT BODY STIRRUPS
B502		26	7'-1"	X		ABUT BODY STIRRUPS - TOP U-BAR
B503		9	31'-3"			ABUT BODY HORIZ. - F.F.
B804		18	21'-7"	X		ABUT BODY HORIZ. - B.F.
B405		27	3'-0"	X		ABUT BODY TIE BARS
B506	X	25	2'-0"			ABUT BODY DOWEL BARS
B407	X	56	11'-4"	X		WING STIRRUPS
B508	X	6	10'-7"	X		WING CORNER STIRRUPS
B509	X	18	11'-9"	X		WING LOWER HORIZ - F.F.
B810	X	18	13'-3"	X		WING LOWER HORIZ. - B.F.
B411	X	4	10'-1"			WING UPPER HORIZ.
B412	X	4	7'-7"			WING UPPER HORIZ.
B413	X	4	5'-0"			WING UPPER HORIZ.
B414	X	4	9'-8"	X		WING TOP HORIZ.
B415	X	4	8'-3"	X		WING 3 UPPER HORIZ. CORNER
B416	X	4	8'-4"	X		WING 4 UPPER HORIZ. CORNER

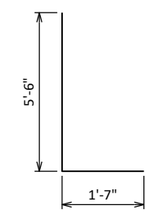

B501

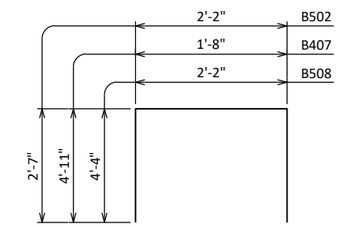

B502, B407, B508

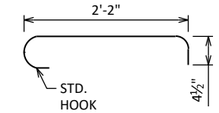

B405

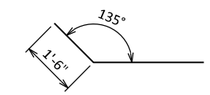

B804, B509, B810

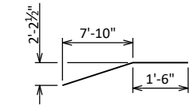

B414

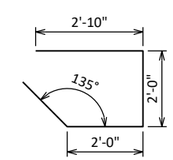

B415

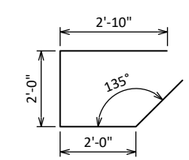

B416

(A01) OPTIONAL CONST. JOINT: KEYWAY FORMED BY A BEVELED 2X6. PROVIDE ¾" "V" GROOVE ON F.F. OF WINGWALL IF JOINT IS USED.

(A06) SUPPORT ABUTMENT ON HP 10 x 42 PILING, ESTIMATED 18 FT LONG WITH A REQUIRED DRIVING RESISTANCE OF 180TONS PER PILE.

(A15) PIPE UNDERDRAIN WRAPPED (6-INCH). SLOPE 0.5% MIN. TO SUITABLE DRAINAGE. RODENT SHIELD REQUIRED. DISCHARGE 1 FT ABOVE NORMAL WATER ELEVATION

(A19) 18" RUBBERIZED MEMBRANE WATERPROOFING, ONLY IF OPTIONAL CONSTRUCTION JOINT IS USED. COST INCIDENTAL TO BID ITEM "CONCRETE MASONRY STRUCTURES"

NO.	DATE	REVISION	BY

STATE OF WISCONSIN
DEPARTMENT OF TRANSPORTATION

STRUCTURE B-56-256

DRAWN BY BAS | PLANS CK'D JFK

EAST ABUTMENT DETAILS

SHEET 7 OF 10
40

SCALE =

8

8

STATE PROJECT NUMBER
5738-00-74

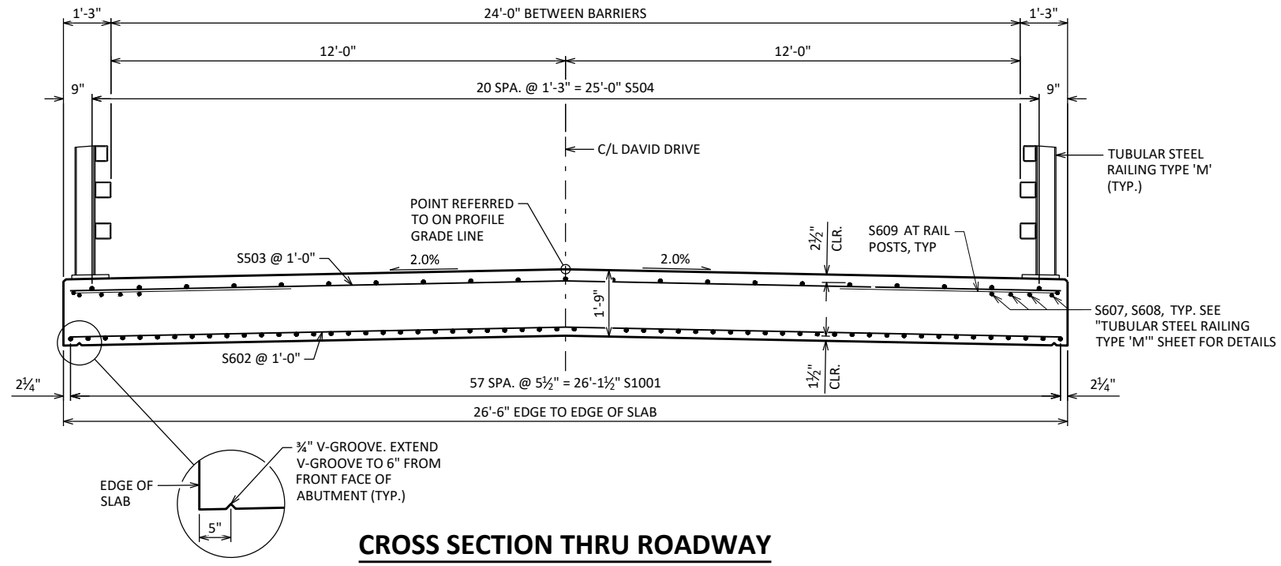

CROSS SECTION THRU ROADWAY

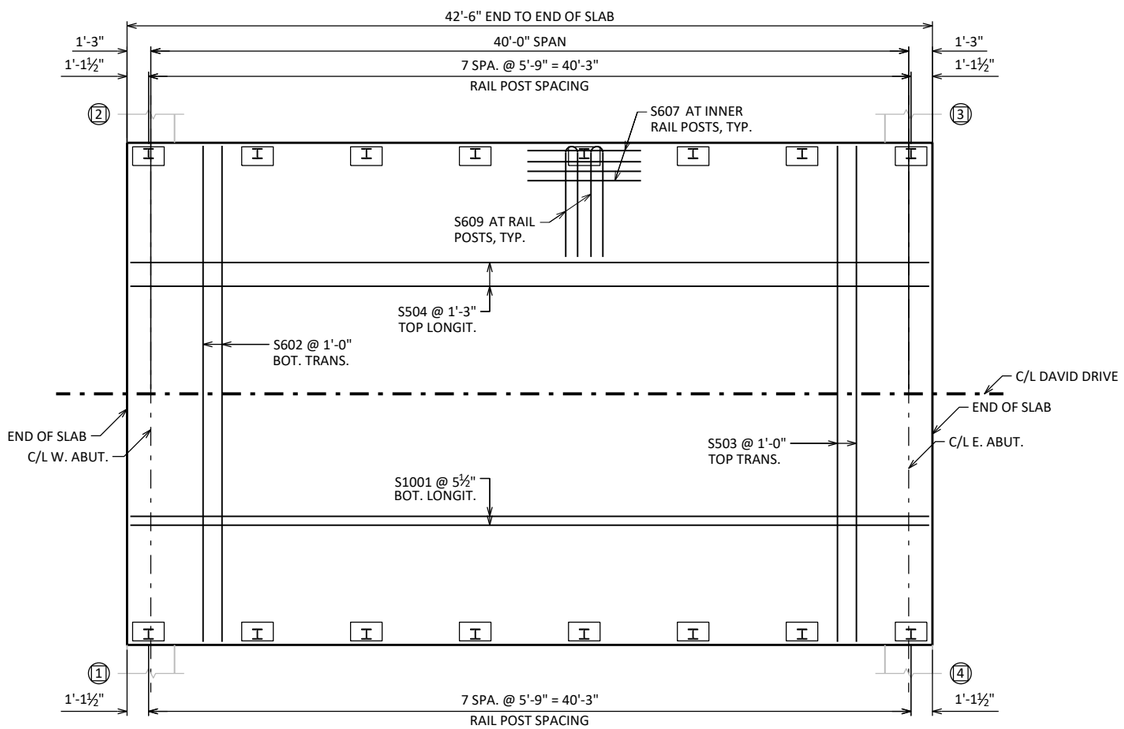

PLAN

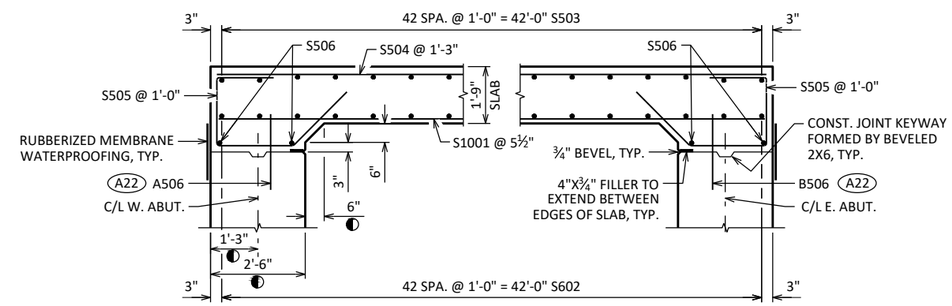

LONGITUDINAL SECTION

DIMENSIONS ARE GIVEN PARALLEL TO ℄ ROADWAY UNLESS OTHERWISE NOTED.

◐ MEASURED NORMAL TO THE ℄ OF ABUTMENT. DIMENSIONS ARE TYPICAL FOR BOTH ABUTMENTS.

A22 A506, B506 BARS SPACED @ 1'-0" CNTRS. MAY BE PLACED AFTER CONCRETE IS POURED BUT BEFORE INITIAL SET HAS TAKEN PLACE. (EMBED 1'-0" INTO CONC.)

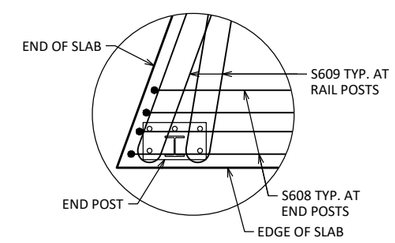

END POST DETAILS

NO.	DATE	REVISION	BY

STATE OF WISCONSIN
DEPARTMENT OF TRANSPORTATION

STRUCTURE B-56-256

DRAWN BY BAS | PLANS CK'D JFK

SUPERSTRUCTURE

SHEET 8 OF 10

41

SCALE =

8

8

THIS SHEET WAS CREATED BY THE WISDOT BUREAU OF STRUCTURES STANDARD BRIDGE DESIGN TOOL VERSION 1.1.0.0

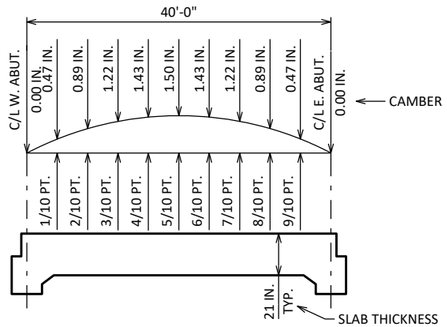

CAMBER AND SLAB THICKNESS DIAGRAM

CAMBER SHOWN IS BASED ON 3 TIMES DEAD LOAD DEFLECTIONS. CAMBER SPANS AS SHOWN TO PROVIDE FOR DEAD LOAD DEFLECTION AND FUTURE CREEP. CAMBER DOES NOT INCLUDE ALLOWANCE FOR FORM SETTLEMENT. PARAPETS PLACED ON TOP OF THE SLAB SHALL BE POURED AFTER FALSEWORK HAS BEEN RELEASED, EXCEPT FOR STAGED CONSTRUCTION.

TO DETERMINE FALSEWORK ELEVATION AT EDGE OF SLAB, CROWN OR REFERENCE LINE FOLLOW THIS PROCEDURE:

	TOP OF SLAB ELEVATION AT FINAL GRADE
LESS	SLAB THICKNESS
PLUS	CAMBER
PLUS	FORM SETTLEMENT/DEFLECTION DUE TO PLACEMENT OF SLAB CONCRETE (TO BE COMPUTED BY THE CONTRACTOR)
EQUALS	TOP OF SLAB FALSEWORK ELEVATION

TOP OF SLAB ELEVATIONS

LOCATION	C/L BRG. W. ABUT.	1/10 PT.	2/10 PT.	3/10 PT.	4/10 PT.	5/10 PT.	6/10 PT.	7/10 PT.	8/10 PT.	9/10 PT.	C/L BRG. E. ABUT.
N. EDGE OF DECK	955.15	955.13	955.12	955.10	955.09	955.07	955.05	955.04	955.02	955.01	954.99
CROWN OF R/L	955.42	955.40	955.39	955.37	955.36	955.34	955.32	955.31	955.29	955.28	955.26
S. EDGE OF DECK	955.15	955.13	955.12	955.10	955.09	955.07	955.05	955.04	955.02	955.01	954.99

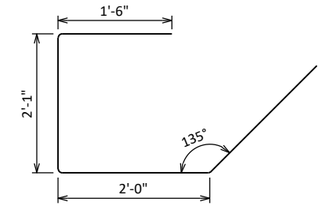

S505

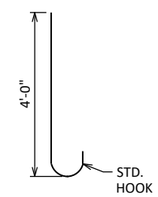

S608

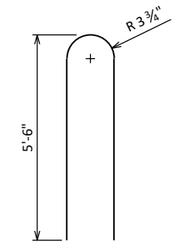

S609

STATE PROJECT NUMBER

5738-00-74

BILL OF BARS

NOTE: THE FIRST OR FIRST TWO DIGITS OF THE BAR MARK SIGNIFIES THE BAR SIZE.

BAR MARK	COAT	NO. REQ'D.	LENGTH	BENT	BAR SERIES	LOCATION
S1001	X	58	42'-2"			SLAB BOTTOM LONGITUDINAL
S602	X	43	26'-2"			SLAB BOTTOM TRANSVERSE
S503	X	43	26'-2"			SLAB TOP TRANSVERSE
S504	X	21	42'-2"			SLAB TOP LONGITUDINAL
S505	X	54	7'-4"	X		ABUTMENT DIAPHRAGM STIRRUPS
S506	X	4	26'-2"			ABUTMENT DIAPHRAGM LONGITUDINAL
S607	X	48	6'-0"			SLAB TOP LONGIT. UNDER RAIL POSTS
S608	X	16	4'-8"	X		SLAB TOP LONGIT. UNDER RAIL END POSTS
S609	X	32	11'-3"	X		SLAB TOP HOOKS UNDER RAIL POSTS

SURVEY TOP OF SLAB ELEVATIONS

LOCATION	ABUTMENT	5/10 PT.	ABUTMENT
N. EDGE OF DECK			
CROWN OR R/L			
S. EDGE OF DECK			

PRIOR TO RELEASING SLAB FALSEWORK, TAKE TOP OF SLAB ELEVATIONS AT THE C/L OF ABUTMENTS, THE C/L OF PIERS AND AT 5/10 PTS. TO VERIFY CAMBER. TAKE ELEVATIONS ALONG GUTTER LINES AND CROWN OR R/L. RECORD THE ELEVATIONS IN THE ABOVE TABLE FOR THE "AS BUILT" PLANS.

NOTES

FILL IN THE TABLE OF "SURVEY TOP OF SLAB ELEVATIONS" FOR EACH SPAN ON AS BUILT PLANS.

TOP TRANSVERSE BARS IN SLAB SHALL BE SUPPORTED BY INDIVIDUAL BAR CHAIRS AT APPROXIMATELY 3'-0" CENTERS EACH WAY. BOTTOM LONGITUDINAL BARS SHALL BE SUPPORTED BY CONTINUOUS BAR CHAIRS AT APPROXIMATELY 4'-0" CENTERS.

ALL SLAB THICKNESS DIMENSIONS ARE MINIMUM. ANY TOLERANCES NECESSARY TO CORRECT CONSTRUCTION DISCREPANCIES ARE TO BE PLUS (+).

NO.	DATE	REVISION	BY

STATE OF WISCONSIN
DEPARTMENT OF TRANSPORTATION

STRUCTURE B-56-256

DRAWN BY BAS PLANS CK'D JFK

SUPERSTRUCTURE DETAILS

SHEET 9 OF 10
42

SCALE =

8

8

THIS SHEET WAS CREATED BY THE WISDOT BUREAU OF STRUCTURES STANDARD BRIDGE DESIGN TOOL VERSION 1.1.0.0

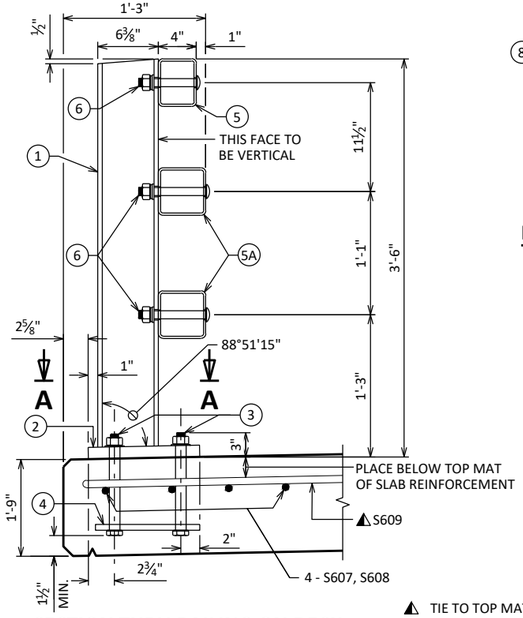

TIE TO TOP MAT OF STEEL.

SECTION THRU RAILING ON DECK

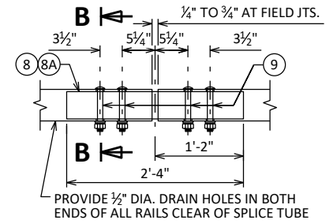

FIELD ERECTION JOINT DETAIL

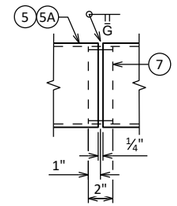

SHOP RAIL SPLICE DETAIL

LOCATION MUST BE SHOWN ON SHOP DRAWINGS

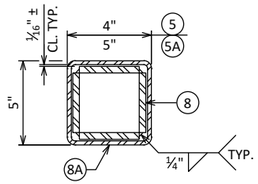

SECTION B-B

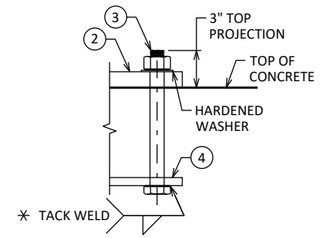

ANCHOR BOLTS

✳ ANCHOR BOLT ASSEMBLY MAY BE TACK WELDED, EITHER IN THE SHOP, OR IN THE FIELD AFTER THE ANCHOR PLATE IS PLACED.

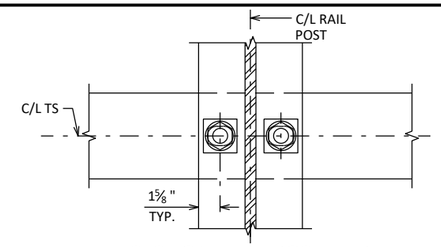

SECTION THRU POST WEB

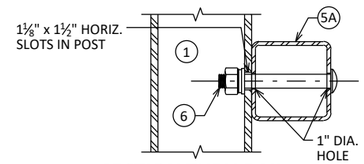

SECTION THRU RAIL

NOTE: CONNECTIONS AT LOWER RAILS SHOWN. CONNECTIONS AT TOP RAIL SIMILAR.

TYPICAL RAIL TO POST CONNECTIONS

LEGEND

1. W6 x 25 WITH 1⅛ " X 1½ " HORIZ. SLOTS ON EACH SIDE OF POST FOR BOLT NO. 6. CUT BOTTOM OF POST TO MATCH CROSS SLOPE OF ROADWAY. PLACE POST VERTICAL. PLACE POSTS NORMAL TO GRADE LINE.
2. PLATE 1 ¼" x 11 ¾" x 1'-8" WITH 1 7/16" OVERSIZED HOLES FOR ANCHOR BOLTS NO. 3. WELD TO NO. 1 AS SHOWN.
3. ASTM A449 - 1 ⅛" DIA. ANCHOR BOLTS WITH NUT AND HARDENED WASHER (ALL GALVANIZED). 5 REQ'D. PER POST. THREAD 3" AND PLACE NORMAL TO PLATE NO. 2. CHAMFER TOP OF BOLTS BEFORE THREADING. USE 1'-9" LONG IN ABUTMENT WINGS. AT POSTS ON CONCRETE SLAB SUPERSTRUCTURES WHERE THE SLAB THICKNESS IS > 16" USE 1'-3" LONG. USE 10 ¾" LONG AT ALL OTHER LOCATIONS. (AN EQUIVALENT THREADED ROD WITH NUTS AND HARDENED WASHERS MAY BE SUBSTITUTED FOR ANCHOR BOLTS IN WINGS IF REQ'D. FOR CONSTRUCTIBILITY.)
4. ⅝" x 11" x 1'-8" ANCHOR PLATE (GALVANIZED) WITH 1 3/16" DIA. HOLES FOR ANCHOR BOLTS NO. 3.
5. TS 5 x 4 x 0.25 STRUCTURAL TUBING. ATTACH TO NO. 1 WITH NO. 6.
5A. TS 5 x 5 x 0.25 STRUCTURAL TUBING. ATTACH TO NO. 1 WITH NO. 6.
6. ⅞" DIA. A325 SLOTTED ROUND HEAD BOLT WITH NUT, 3/16" X 1 ⅝" X 1 ⅝" MIN. WASHER, AND LOCK WASHER (2 REQ'D. AT EACH RAIL TO POST LOCATION).
7. SPLICE SLEEVE FABRICATED FROM ¼" PLATE. PROVIDE "SLIDING FIT".
8. ⅜" X 3 ⅝" X 2'-4" PLATE. 2 PER RAIL. USED IN NO. 5 & 5A.
8A. ⅜" X 2 ⅝" X 2'-4" PLATE USED IN NO. 5, ⅜" X 3 ⅝" X 2'-4" PLATE USED IN NO. 5A. 2 PER RAIL.
9. ⅞" DIA. A325 ROUND HEAD BOLT WITH NUT, WASHER, AND LOCK WASHER. USE 15/16" x 1 ¼" LONGIT. SLOTTED HOLES IN PLATE NO. 10A AT FIELD JOINTS AND 15/16" X 2 ¼" MIN. LONGIT. SLOTTED HOLES AT EXP. JOINTS IN PLATE NO. 8A. PROVIDE 15/16" DIA. ROUND HOLES IN TUBES NO. 5 AND NO. 5A.

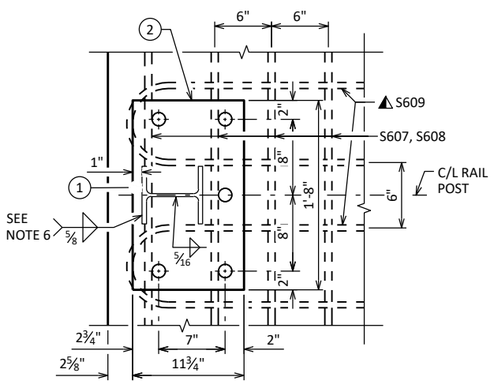

SECTION A-A

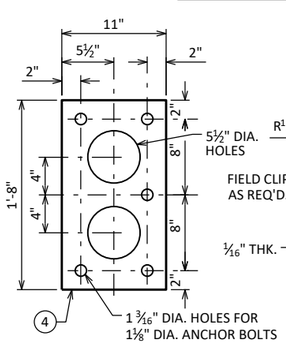

ANCHOR PLATE

AT RAIL TO DECK CONNECTION

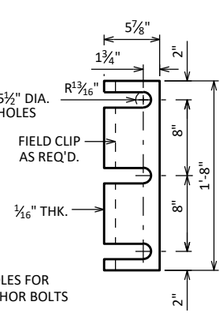

POST SHIM DETAIL

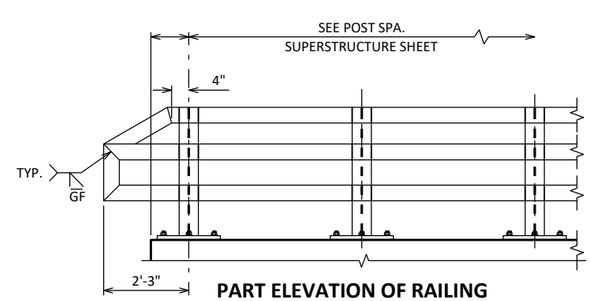

PART ELEVATION OF RAILING

GENERAL NOTES

1. BID ITEM SHALL BE "RAILING TUBULAR TYPE M" WHICH INCLUDES ALL ITEMS SHOWN.
2. RAIL POST AND BASE PLATES SHALL CONFORM TO THE REQUIREMENTS OF ASTM A709 GRADE 50. HOLLOW RAILING STRUCTURAL TUBING SHALL CONFORM TO THE REQUIREMENTS OF ASTM A500 GRADE B OR C WITH A CERTIFIED FY = 50 KSI. ANCHOR PLATES, AND SPLICE TUBE PLATES SHALL CONFORM TO THE REQUIREMENTS OF ASTM A709 GRADE 36.
3. THE NUT SECURING THE POST BASE PLATE TO THE CONCRETE SHALL BE TIGHTENED TO A SNUG FIT AND GIVEN AN ADDITIONAL ⅛ TURN.
4. RAILS SHALL BE CONTINUOUS OVER A MINIMUM OF THREE (3) POSTS WITHOUT SPLICES WHERE POSSIBLE.
5. ENDS OF TUBE SECTIONS SHALL BE SAWED. GRIND SMOOTH EXPOSED EDGES. ALL CUT ENDS SHALL BE TRUE AND SMOOTH.
6. WELD IS THE SAME ON BOTH FLANGES. FLANGE WELD DOES NOT REQUIRE MAGNETIC PARTICLE TESTING.
7. FILL BOLT SLOT OPENINGS IN POST SHIMS AND PLATE NO. 2 AND CAULK AROUND PERIMETER OF PLATE NO. 2 WITH NON-STAINING GRAY NON-BITUMINOUS JOINT SEALER. STEEL POST SHIMS MAY BE USED UNDER POSTS WHERE REQ'D. FOR ALIGNMENT.
8. POST BASE PLATES SHALL BE FLAT WITH ALL SURFACES SMOOTH AND FREE FROM WARP AND ALL EDGES SMOOTH, STRAIGHT AND VERTICAL. ALL PLATE CUTS SHALL BE MACHINE OR MACHINE FLAME CUT.
9. ALL MATERIAL SHALL BE GALVANIZED AFTER FABRICATION. PRIOR TO GALVANIZING, ALL STEEL RAILING POSTS & STEEL TUBING SHALL BE GIVEN A NO. 6 BLAST CLEANING BY SSPC SPECIFICATIONS.

8

8

NO.	DATE	REVISION	BY

STATE OF WISCONSIN
DEPARTMENT OF TRANSPORTATION

STRUCTURE B-56-256

DRAWN BY BAS | PLANS CK'D JFK

TUBULAR STEEL RAILING TYPE 'M'

SCALE =

THIS SHEET WAS CREATED BY THE WISDOT BUREAU OF STRUCTURES STANDARD BRIDGE DESIGN TOOL VERSION 1.1.0.0

DIVISION 1 - DAVID DRIVE

STATION	REAL STATION	DISTANCE	AREA (SF)		INCREMENTAL VOL (CY) (UNADJUSTED)		CUMULATIVE VOL (CY)		
			CUT	FILL	CUT NOTE 1	FILL NOTE 3	CUT 1.00 NOTE 1	EXPANDED FILL 1.25	MASS ORDINATE NOTE 8
0+55.28	55.28	0.00	47.20	4.74	0	0	0	0	0
0+70.00	70.00	14.72	51.54	25.58	27	8	27	10	17
1+00.00	100.00	30.00	18.90	35.16	39	34	66	53	14
1+04.03	104.03	4.03	17.33	45.11	3	6	69	60	9

DIVISION 1 - DAVID DRIVE

STATION	REAL STATION	DISTANCE	AREA (SF)		INCREMENTAL VOL (CY) (UNADJUSTED)		CUMULATIVE VOL (CY)		
			CUT	FILL	CUT NOTE 1	FILL NOTE 3	CUT 1.00 NOTE 1	EXPANDED FILL 1.25	MASS ORDINATE NOTE 8
1+47.26	147.26	0.00	17.80	36.92	0	0	0	0	0
1+50.00	150.00	2.74	19.69	29.36	2	3	2	4	-2
1+70.00	170.00	20.00	29.86	7.32	18	14	20	21	-1
1+95.28	195.28	25.28	38.09	1.32	32	4	52	26	26

DIVISION 1 - TEMP ROAD

STATION	REAL STATION	DISTANCE	AREA (SF)		INCREMENTAL VOL (CY) (UNADJUSTED)		CUMULATIVE VOL (CY)		
			CUT	FILL	CUT NOTE 1	FILL NOTE 3	CUT 1.00 NOTE 1	EXPANDED FILL 1.25	MASS ORDINATE NOTE 8
10+75.00	1075.00	0.00	0.00	23.01	0	0	0	0	0
11+00.00	1100.00	25.00	0.00	28.19	0	24	0	30	-30
11+25.00	1125.00	25.00	0.00	24.57	0	24	0	60	-60

DIVISION 1 - TEMP ROAD

STATION	REAL STATION	DISTANCE	AREA (SF)		INCREMENTAL VOL (CY) (UNADJUSTED)		CUMULATIVE VOL (CY)		
			CUT	FILL	CUT NOTE 1	FILL NOTE 3	CUT 1.00 NOTE 1	EXPANDED FILL 1.25	MASS ORDINATE NOTE 8
11+75.00	1175.00	0.00	0.00	50.02	0	0	0	0	0
12+00.00	1200.00	25.00	0.00	12.76	0	29	0	36	-36
12+25.00	1225.00	25.00	0.00	23.30	0	17	0	58	-58

NOTES:	
1 - CUT	CUT INCLUDES SALVAGED/UNUSABLE PAVEMENT MATERIAL
3 - FILL	DOES NOT INCLUDE UNUSABLE PAVEMENT EXC VOLUME
8 - MASS ORDINATE	IF MARSH AND EBS TO BE BACKFILLED WITH GRANULAR: [CUT - SALVAGED PAVT - ((FILL - EXPANDED ROCK) * FILL FACTOR)]

9

9

PROJECT NO: 5738-00-74	HWY: DAVID DRIVE	COUNTY: SAUK	CROSS SECTIONS: TEMP ROAD	SHEET 45	E

FILE NAME : T:\PROJECTS\2024\24-2053-1 T WOODLAND, DAVID DRIVE, P-56-0933, ID 5738-00-04\DRAWINGS\57380004_MODEL.DWG
LAYOUT NAME - Temp Road XS 1
PLOT DATE : 3/11/2026 10:31 AM PLOT BY : TYLER BUCHANAN PLOT NAME : **PLOT SCALE :** 1 IN:10 FT HORZ. / 1 IN:10 FT VERT.

END TEMPORARY BYPASS
STA 12+97.07
MATCH EXISTING

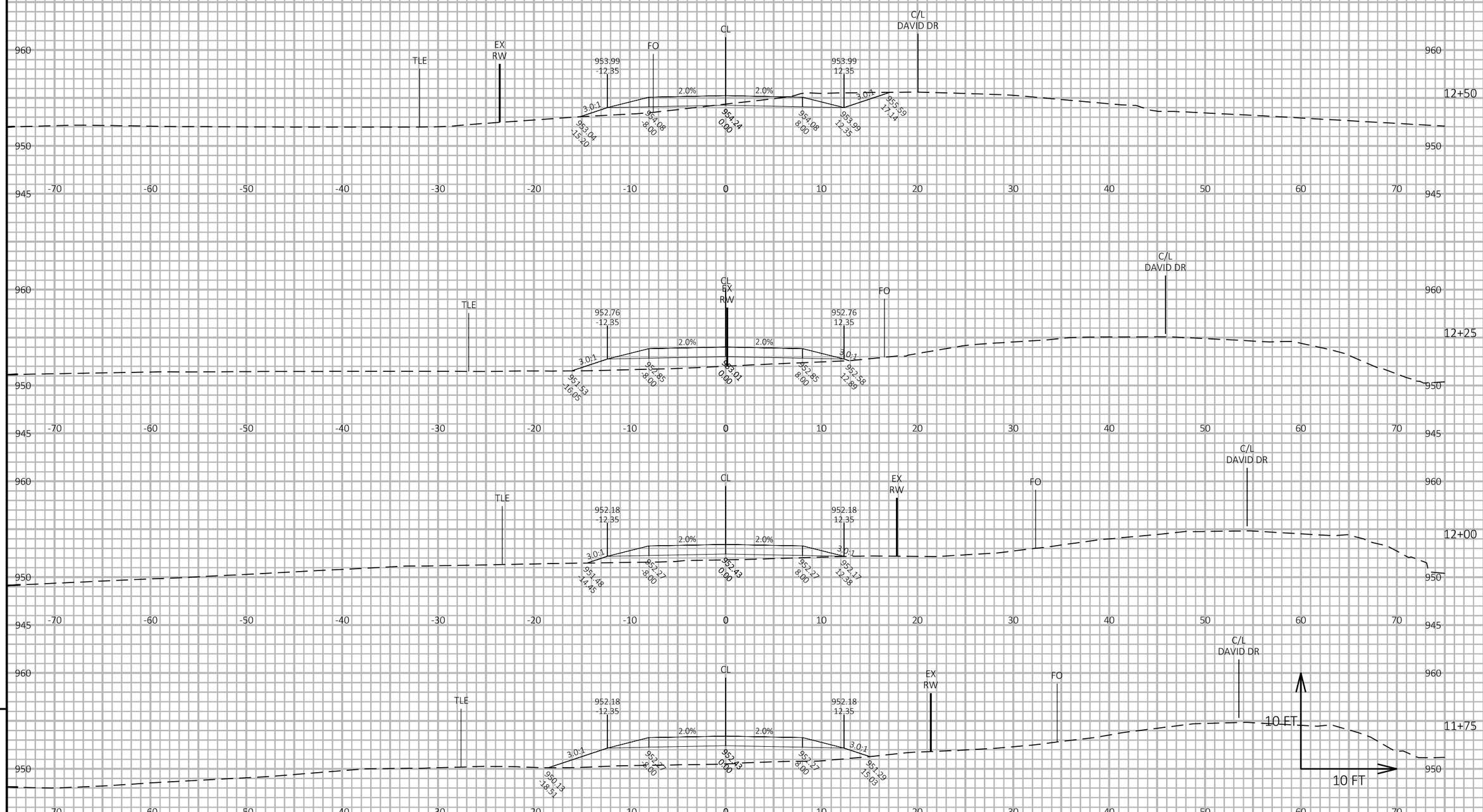

9

9

PROJECT NO: 5738-00-74	HWY: DAVID DRIVE	COUNTY: SAUK	CROSS SECTIONS: TEMP ROAD	SHEET 46	E

FILE NAME : T:\PROJECTS\2024\24-2053-1 T WOODLAND, DAVID DRIVE, P-56-0933, ID 5738-00-04\DRAWINGS\57380004_MODEL.DWG
LAYOUT NAME - Temp Road XS 2
PLOT DATE : 3/11/2026 10:31 AM
PLOT BY : TYLER BUCHANAN
PLOT NAME :
PLOT SCALE : 1 IN:10 FT HORZ. / 1 IN:10 FT VERT.
WISDOT/CADDS SHEET 49

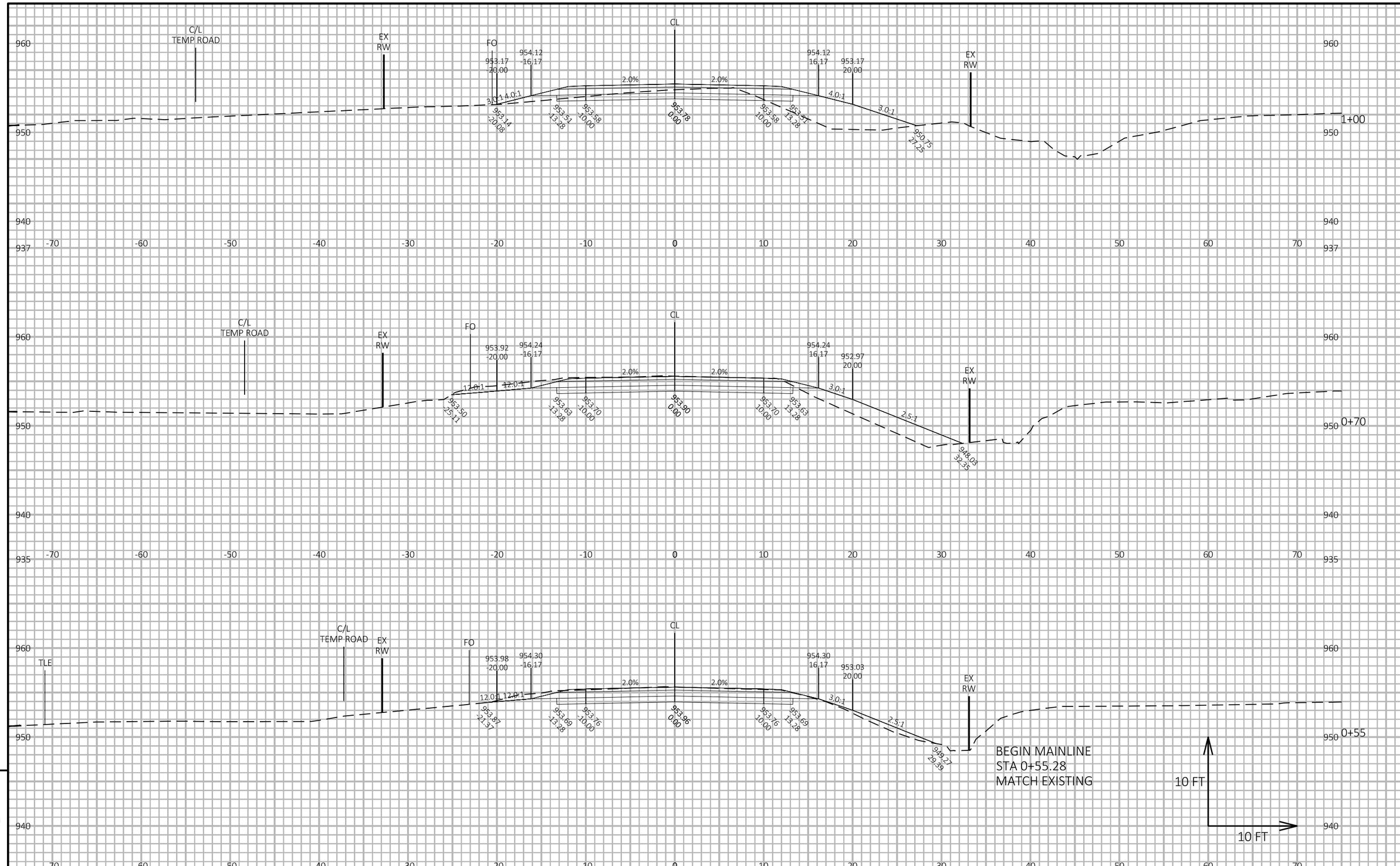

9

9

PROJECT NO: 5738-00-74	HWY: DAVID DRIVE	COUNTY: SAUK	CROSS SECTIONS: DAVID DRIVE	SHEET 47	E

FILE NAME : T:\PROJECTS\2024\24-2053-1 T WOODLAND, DAVID DRIVE, P-56-0933, ID 5738-00-04\DRAWINGS\57380004_MODEL.DWG
LAYOUT NAME - DD XS 1

PLOT DATE : 3/11/2026 10:31 AM PLOT BY : TYLER BUCHANAN PLOT NAME : **PLOT SCALE :** 1 IN:10 FT HORZ. / 1 IN:10 FT VERT.

WISDOT/CADDS SHEET 49

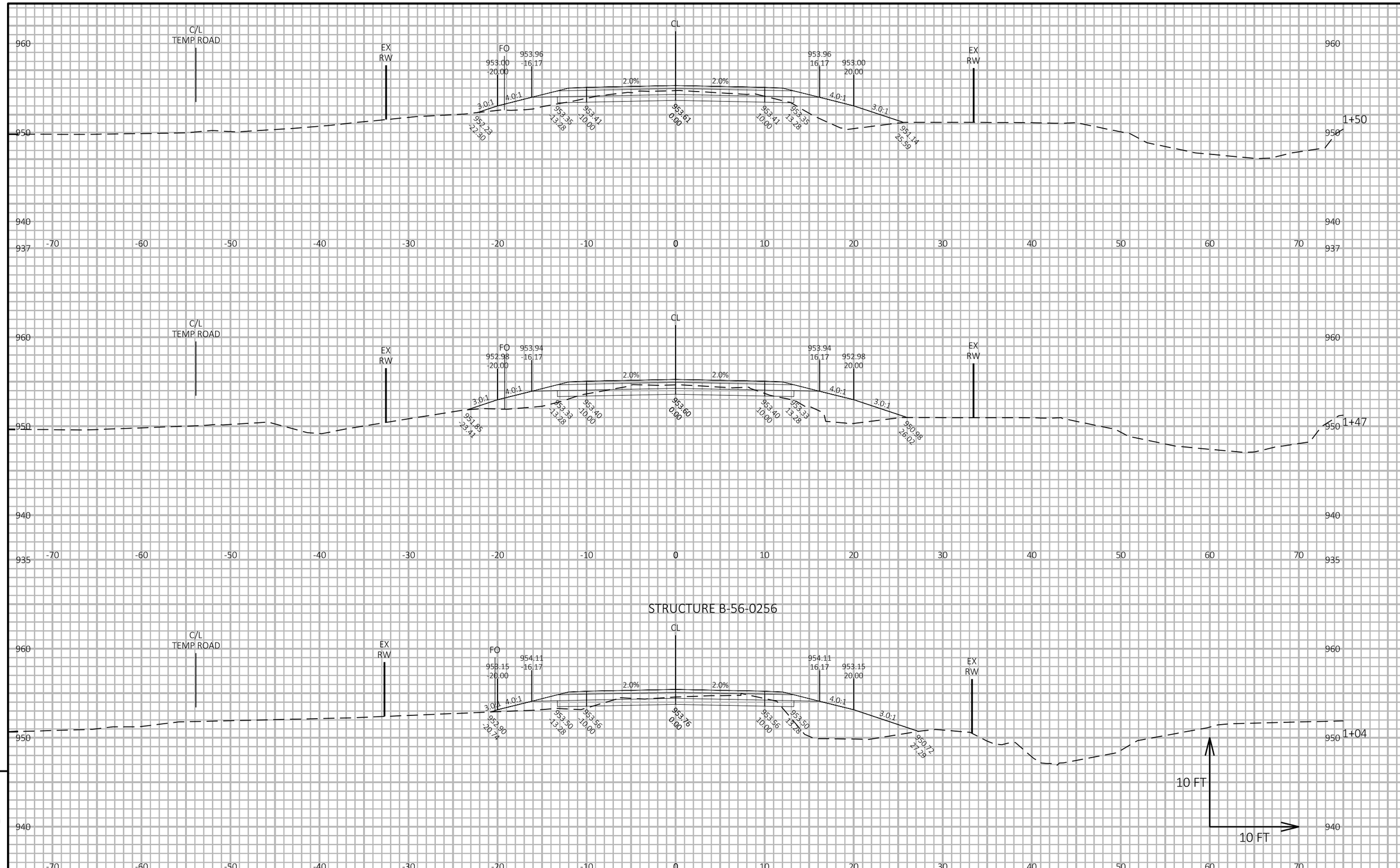

9

9

PROJECT NO: 5738-00-74	HWY: DAVID DRIVE	COUNTY: SAUK	CROSS SECTIONS: DAVID DRIVE	SHEET 48	E

FILE NAME : T:\PROJECTS\2024\24-2053-1 T WOODLAND, DAVID DRIVE, P-56-0933, ID 5738-00-04\DRAWINGS\57380004_MODEL.DWG
LAYOUT NAME - DD XS 2

PLOT DATE : 3/11/2026 10:31 AM PLOT BY : TYLER BUCHANAN PLOT NAME : **PLOT SCALE :** 1 IN:10 FT HORZ. / 1 IN:10 FT VERT.

WISDOT/CADDS SHEET 49

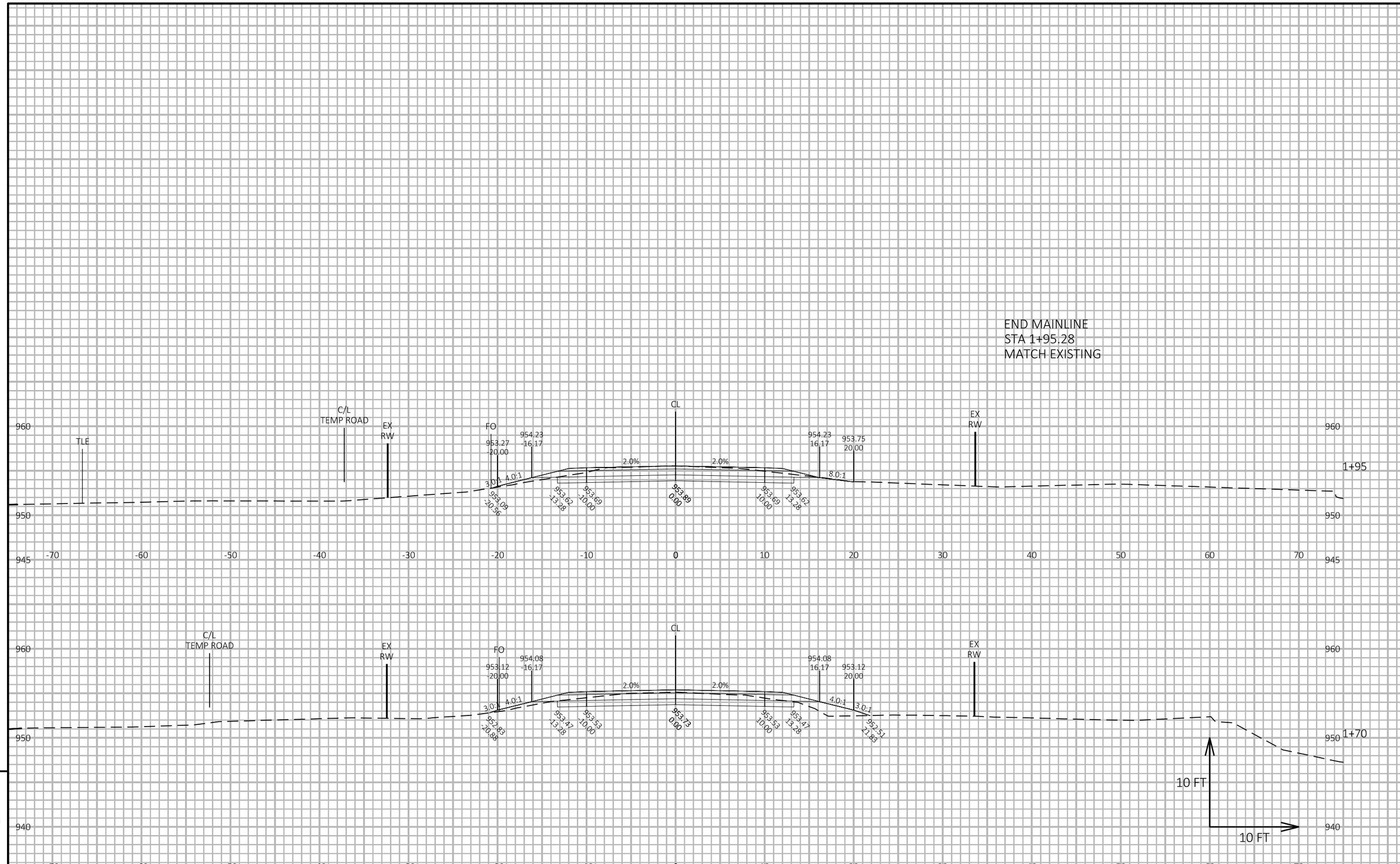

PROJECT NO: 5738-00-74	HWY: DAVID DRIVE	COUNTY: SAUK	CROSS SECTIONS: DAVID DRIVE	SHEET 49	E

FILE NAME : T:\PROJECTS\2024\24-2053-1 T WOODLAND, DAVID DRIVE, P-56-0933, ID 5738-00-04\DRAWINGS\57380004_MODEL.DWG
LAYOUT NAME - DD XS 3
PLOT DATE : 3/11/2026 10:31 AM
PLOT BY : TYLER BUCHANAN
PLOT NAME :
PLOT SCALE : 1 IN:10 FT HORZ. / 1 IN:10 FT VERT.
WISDOT/CADDS SHEET 49

Wisconsin Department of Transportation

Dedicated people creating transportation solutions through innovation and exceptional service.

http://www.dot.wisconsin.gov

MAD SEPTEMBER 2026

PROJECT ID: 5738-00-75
WITH: 5738-00-74

COUNTY: SAUK

ORDER OF SHEETS

Section No.	1	Title
Section No.	2	Typical Sections and Details
Section No.	3	Estimate of Quantities
Section No.	3	Miscellaneous Quantities
~~Section No.~~	~~4~~	~~Right of Way Plat~~
Section No.	5	Plan and Profile
Section No.	6	Standard Detail Drawings
Section No.	7	Sign Plates
Section No.	8	Structure Plans
Section No.	9	Computer Earthwork Data
Section No.	9	Cross Sections

TOTAL SHEETS = 44

01

N

DESIGN DESIGNATION

A.A.D.T.	2026	=	<100
A.A.D.T.	2046	=	<100
D.H.V.		=	28
D.D.		=	60/40
T.		=	4%
DESIGN SPEED		=	25 MPH
ESALS		=	7,300

CONVENTIONAL SYMBOLS

PLAN

CORPORATE LIMITS
PROPERTY LINE
LOT LINE
LIMITED HIGHWAY EASEMENT
EXISTING RIGHT OF WAY
PROPOSED OR NEW R/W LINE
SLOPE INTERCEPT
REFERENCE LINE (300'FB')
EXISTING CULVERT
PROPOSED CULVERT (Box or Pipe)
COMBUSTIBLE FLUIDS (CAUTION)
MARSH AREA
WOODED OR SHRUB AREA

PROFILE

GRADE LINE
ORIGINAL GROUND
MARSH OR ROCK PROFILE (To be noted as such) (ROCK)
SPECIAL DITCH (LABEL)
GRADE ELEVATION (95.36)
CULVERT (Profile View)

UTILITIES

ELECTRIC — E
FIBER OPTIC — FO
GAS — G
SANITARY SEWER — SAN
STORM SEWER — SS
TELEPHONE — T
WATER — W
UTILITY PEDESTAL
POWER POLE
TELEPHONE POLE

STATE OF WISCONSIN
DEPARTMENT OF TRANSPORTATION

PLAN OF PROPOSED IMPROVEMENT

T WOODLAND, ROTT ROAD

LITTLE BARABOO RIVER, BRIDGE B-56-0257

LOC STR
SAUK COUNTY

STATE PROJECT NUMBER
5738-00-75

STATE PROJECT	FEDERAL PROJECT	
	PROJECT	CONTRACT
5738-00-75	WISC 2026415	1

R-2-W ◄ ► R-3-W

END PROJECT
STA 4+00.00

STRUCTURE B-56-0257
STA 2+62.45 - STA 3+10.45

BEGIN PROJECT
STA 1+54
X= 517,065.203
Y= 276,418.149

T-13-N
T-12-N

LAYOUT

SCALE 0 — 1.0 MI

TOTAL NET LENGTH OF CENTERLINE = 0.046 MI

HORIZONTAL POSITIONS SHOWN ON THIS PLAN ARE WISCONSIN COORDINATE REFERENCE SYSTEM (WISCRS), SAUK COUNTY, NAD83 (2011), IN U.S. SURVEY FEET. POSITIONS SHOWN ARE GRID COORDINATES, GRID BEARINGS, AND GRID DISTANCES. GRID DISTANCES ARE THE SAME AS GROUND DISTANCES.

ELEVATIONS ARE REFERENCED TO NAVD 88 (2012). GPS DERIVED ELEVATIONS ARE BASED ON GEOID 12A.

ACCEPTED FOR

TOWN OF WOODLAND

Edwin J. Woodrey
Date 3-10-26 Chairman
(Signature and Title of Official)

ORIGINAL PLANS PREPARED BY

TEAM ENGINEERING

WISCONSIN PROFESSIONAL ENGINEER
JEREMY F. KRACHEY
E-37258
WAUZEKA
WIS.

Digitally signed by JEREMY F KRACHEY, PE
DN: C=US, E=JKRACHEY@TEAMENGINC.COM, O=TEAM ENGINEERING, INC., CN=JEREMY F KRACHEY, PE
Date: 2026.03.12 10:21:03-05'00'

DATE: _____ (Professional Engineer Signature)

STATE OF WISCONSIN
DEPARTMENT OF TRANSPORTATION

PREPARED BY

Surveyor	TEAM ENGINEERING INC
Designer	TEAM ENGINEERING INC
Project Manager	DELLA KOENIG, P.E.
Regional Examiner	SW REGION
Regional Supervisor	KYLE HEMP, P.E.

APPROVED FOR THE DEPARTMENT

DATE: _____ (Signature and Title of Official)

Digitally signed by Della Koenig P.E.
Date: 2026.04.23 16:46:11-05'00'

E

2

LIST OF STANDARD ABBREVATIONS

ABUT.	Abutment
AC	Acre
AGG.	Aggregate
AH	Ahead
<	Angle
ASPH	Asphaltic
AVG.	Average
A.D.T.	Average Daily Traffic
BAD	Base Aggregate Dense
BK.	Back
BF	Back Fence
B.M	Bench Mark
BR.	Bridge
C/L	Center Line
CC	Center to Center
CTH	County Truck Highway
CR.	Creek
CY OR CU YD	Cubic Yard
CP	Culvert Pipe
C & G	Curb and Gutter
D	Degree of Curve
DHV	Design Hour Volume
DIA	Diameter
E	East
X	East Grid Coordinate
ELEC	Electric
EL OR ELEV	Elevation
ESALS	Equivalent Single Axle Loads
EBS	Excavation Below Subgrade
FF	Face to Face
FE	Field Entrance
F	Fill
FG	Finished Grade
FL OR F/L	Flow Line
FT	Foot
FTG	Footing
GN	Grid North
HT	Height
CWT	Hundredweight
HYD	Hydrant
INL	Inlet
ID	Inside Diameter
INV	Invert
IP	Iron Pipe or Pin
IRS	Iron Rod Set
JT	Joint
JCT	Junction
LHF	Left-Hand Forward
L	Length of Curve
LIN FT OR LF	Linear Foot
LC	Long Chord of Curve
MH	Manhole
MB	Mailbox
ML OR M/L	Match Line
N	North
Y	North Grid Coordinate
OAL	Overall Length
OD	Outside Diameter
PLE	Permanent Limited Easement
PT	Point
PC	Point of Curvature
PI	Point of Intersection
PRC	Point of Reverse Curvature
PT	Point of Tangency
POC	Point on Curve
POT	Point on Tangent
PVC	Polyvinyl Chloride
PCC	Portland Cement Concrete
LB	Pound
PSI	Pounds Per Square Inch
PE	Private Entrance
R	Radius
RR	Railroad
RL OR R/L	Reference Line
RP	Reference Point
RCCP	Reinforced Concrete Culvert Pipe
REQD	Required
RES	Residence or Residential
RW	Retaining Wall
RT	Right
RHF	Right-Hand Forward
R/W	Right-of-Way
R	River
RD	Road
RDWY	Roadway
SALV	Salvaged
SAN S	Sanitary Sewer
SEC	Section
SHLDR	Shoulder
SHR	Shrinkage
SW	Sidewalk
S	South
SQ	Square
SF OR SQ FT	Square Feet
SY OR SQ YD	Square Yard
STD	Standard
SDD	Standard Detail Drawings
STH	State Trunk Highways
STA	Station
SS	Storm Sewer
SG	Subgrade
SE	Superelevation
SL OR S/L	Survey Line
SV	Septic Vent
T	Tangent
TEL	Telephone
TEMP	Temporary
TI	Temporary Interest
TLE	Temporary Limited Easement
t	Ton
T OR TN	Town
TRANS	Transition
TL OR T/L	Transit Line
T	Trucks (percent of)
TYP	Typical
UNCL	Unclassified
UG	Underground Cable
USH	United States Highway
VAR	Variable
V	Velocity or Design Speed
VERT	Vertical
VC	Vertical Curve
VOL	Volume
WM	Water Main
WV	Water Valve
W	West
WB	Westbound
YD	Yard

UTILITIES

LAVALLE TELEPHONE COOPERATIVE
COMLN
JOSH LIEN
S1421 STATE HWY 33, P.O. BOX 28
LAVALLE, WI 53941
PHONE: 608-434-2796
EMAIL: joshl@rgtc.coop
EMAIL: johnb@rgtc.coop

VERNON ELECTRIC COOPERATIVE
ELCTY
COLE CARY
110 SAUGSTAD RD.
WESTBY, WI 54667
PHONE: 608-634-7472
EMAIL: ccary@vernonelectric.org

DIGGERS HOTLINE
Dial 811 or (800)242-8511
www.DiggersHotline.com

DESIGNER

TEAM ENGINEERING, INC.
210 GUARD STREET
WAUZEKA, WI 53826
ATTN: JEREMY KRACHEY, P.E.
PH: (608) 875-5075
jkrachey@teamenginc.com

DNR CONTACT

DEPARTMENT OF NATURAL RESOURCES
101 S. WEBSTER STREET
MADISON, WI 53703-7921
ATTN: ANDY BARTA
ENVIRONMENTAL ANALYSIS & REVIEW SPECIALIST
PH: (608) 235-2955
andrew.barta@wisconsin.gov

WISDOT CONTACT

ATTENTION: DELLA KOENIG, P.E.
LOCAL PROGRAM PROJECT MANAGER
WISDOT - SW REGION
2101 WRIGHT ST.
MADISON, WI 53704
WORK: (608) 246-7963
EMAIL: della.koenig@dot.wi.gov

GENERAL NOTES

THE LOCATIONS OF EXISTING AND PROPOSED UTILITY INSTALLATIONS AS SHOWN ON THE PLAN ARE APPROXIMATE. THERE MAY BE OTHER UTILITY INSTALLATIONS WITHIN THE PROJECT AREA THAT ARE NOT SHOWN.

4-INCH ASPHALTIC SURFACE SHALL BE PLACED WITH A 2 1/4-INCH LOWER LAYER AND A 1 3/4-INCH UPPER LAYER.

2

RUNOFF COEFFICIENT TABLE

	HYDROLOGIC SOIL GROUP											
	A			B			C			D		
	SLOPE RANGE (PERCENT)			SLOPE RANGE (PERCENT)			SLOPE RANGE (PERCENT)			SLOPE RANGE (PERCENT)		
LAND USE:	0-2	2-6	6 & OVER	0-2	2-6	6 & OVER	0-2	2-6	6 & OVER	0-2	2-6	6 & OVER
ROW CROPS:	.08	.16	.22	.12	.20	.27	.15	.24	.33	.19	.28	.38
	.22	.30	.38	.26	.34	.44	.30	.37	.50	.34	.41	.56
MEDIAN STRIPTURF:	.19	.20	.24	.19	.22	.26	.20	.23	.30	.20	.25	.30
	.24	.26	.30	.25	.28	.33	.26	.30	.37	.27	.32	.40
SIDE SLOPETURF:			.25			.27			.28			.30
			.32			.34			.36			.38
PAVEMENT:												
ASPHALT:	.70 - .95											
CONCRETE:	.80 - .95											
BRICK:	.70 - .80											
DRIVES, WALKS:	.75 - .85											
ROOFS:	.75 - .95											
GRAVEL ROADS, SHOULDERS:	.40 - .60											

TOTAL PROJECT AREA = 1.0 ACRES
TOTAL AREA EXPECTED TO BE DISTURBED BY CONSTRUCTION ACTIVITIES = 1.0 ACRES

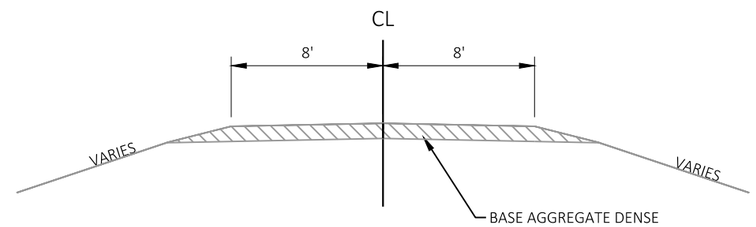

EXISTING TYPICAL SECTION

STA 1+54.00 - 2+61.17
STA 3+11.71 - 4+00.00

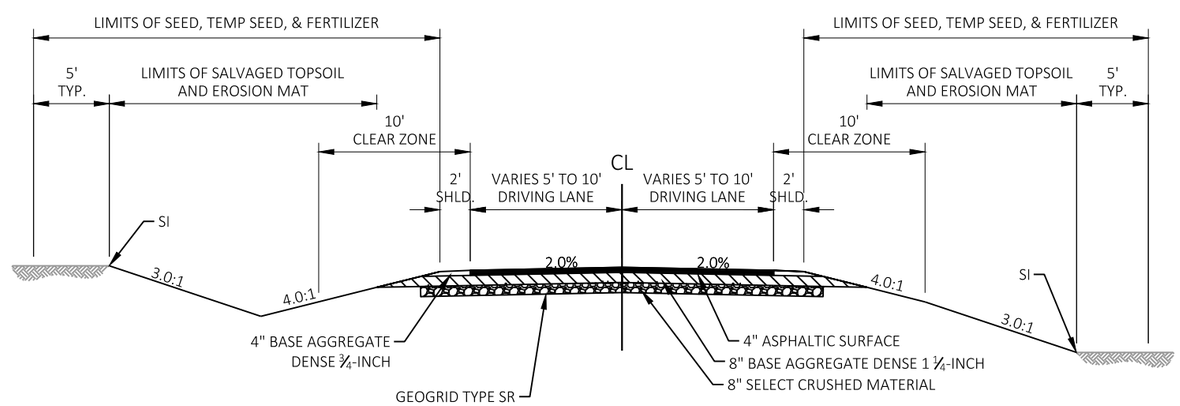

IN CUT

FINISHED TYPICAL SECTION

STA 1+54.00 - 2+61.17
STA 3+11.71 - 4+00.00

IN FILL

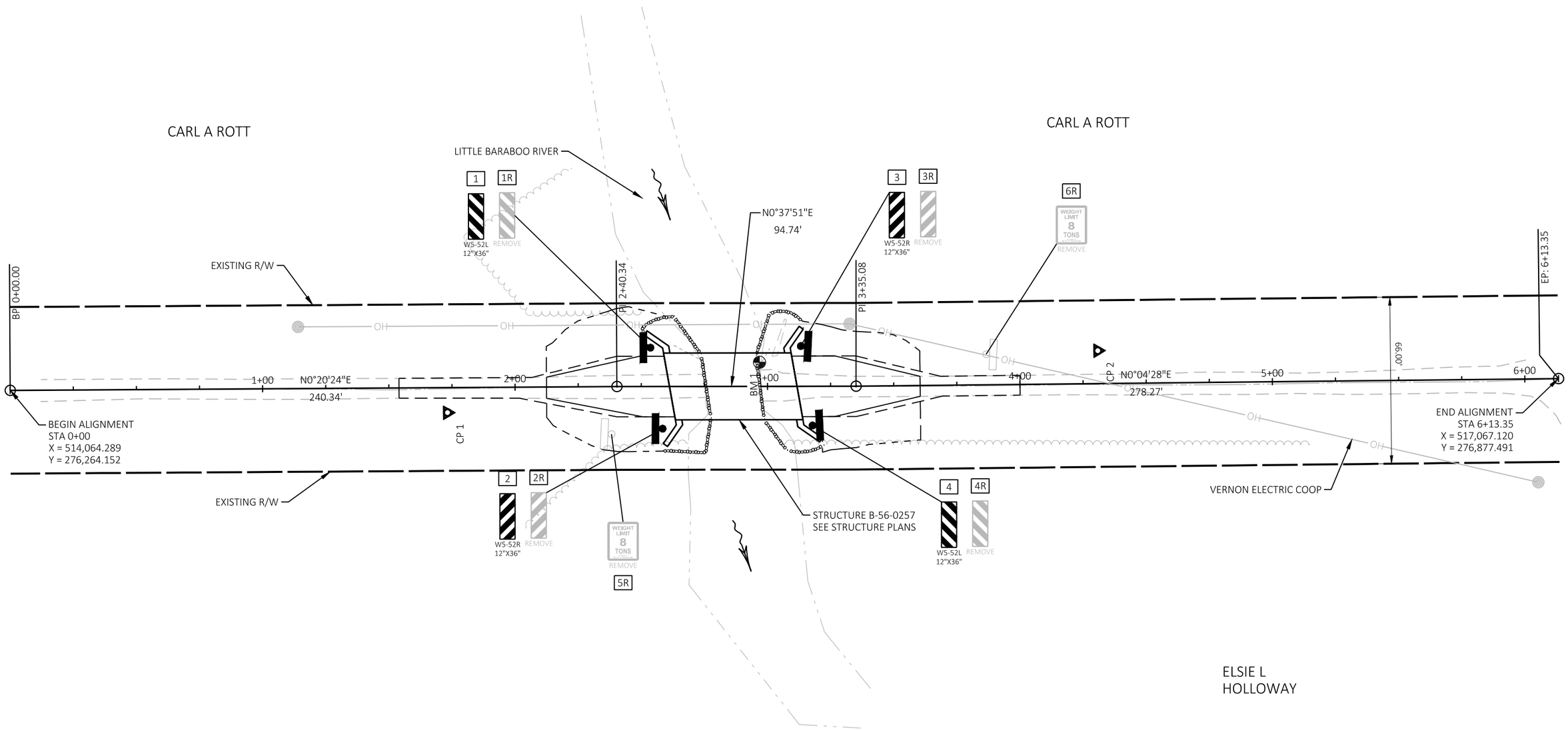

CONTROL POINTS						
POINT	POINT DESCRIPTION	STATION	OFFSET	Y COORDS	X COORDS	ELEVATION
CP 1	3/4" REBAR	1+73.12	9.93 RT	276437.209	517075.246	971.13
CP 2	3/4" REBAR	4+30.95	13.06 LT	276695.104	517053.824	970.57

2

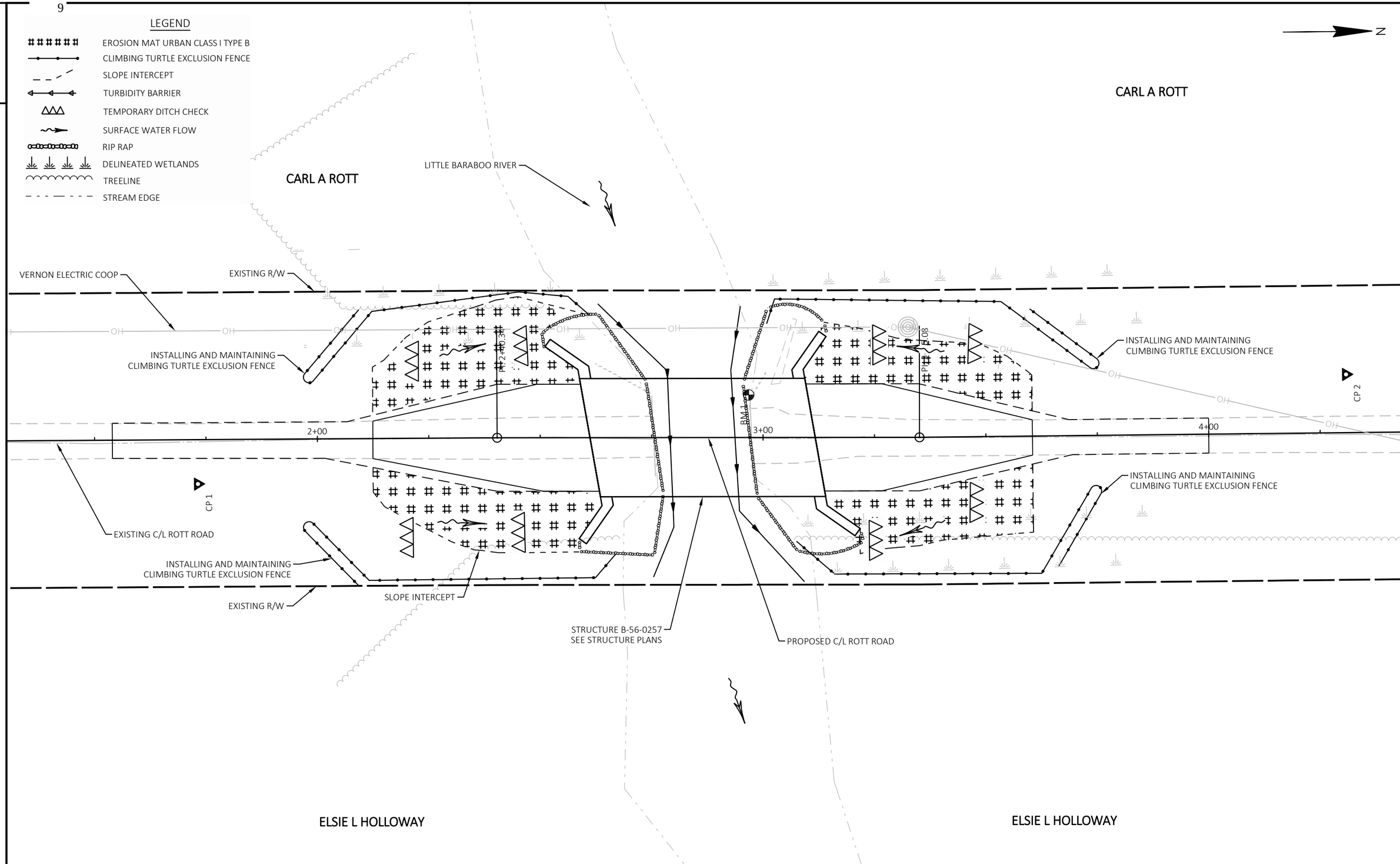

2

PROJECT NO: 5738-00-75	HWY: ROTT ROAD	COUNTY: SAUK	PLAN DETAILS - EROSION CONTROL	SHEET 5	E

FILE NAME : T:\PROJECTS\2024\24-2054-1 T WOODLAND, ROTT ROAD, P-56-0948, ID 5738-00-05\DRAWINGS\57380005_PROPOSED LINEWORK.DWG
LAYOUT NAME - Plan 1
PLOT DATE : 7/30/2026 9:44 AM PLOT BY : JEREMY PLOT NAME : PLOT SCALE : 1 IN:20 FT

5738-00-75

Line	Item	Item Description	Unit	Total	Qty
0002	201.0105	Clearing	STA	2.000	2.000
0004	201.0205	Grubbing	STA	2.000	2.000
0008	203.0260	Removing Structure Over Waterway Minimal Debris (structure) 02. P-56-0948	EACH	1.000	1.000
0010	205.0100	Excavation Common	CY	56.000	56.000
0014	206.1001	Excavation for Structures Bridges (structure) 02. B-56-0257	EACH	1.000	1.000
0018	210.1500	Backfill Structure Type A	TON	290.000	290.000
0022	213.0100	Finishing Roadway (project) 02. 5738-00-75	EACH	1.000	1.000
0024	305.0110	Base Aggregate Dense 3/4-Inch	TON	50.000	50.000
0026	305.0120	Base Aggregate Dense 1 1/4-Inch	TON	160.000	160.000
0028	312.0110	Select Crushed Material	TON	140.000	140.000
0030	455.0605	Tack Coat	GAL	20.000	20.000
0032	465.0105	Asphaltic Surface	TON	60.000	60.000
0034	502.0100	Concrete Masonry Bridges	CY	155.000	155.000
0036	502.3200	Protective Surface Treatment	SY	209.000	209.000
0038	505.0400	Bar Steel Reinforcement HS Structures	LB	4,020.000	4,020.000
0040	505.0600	Bar Steel Reinforcement HS Coated Structures	LB	25,530.000	25,530.000
0042	513.4061	Railing Tubular Type M	LF	106.000	106.000
0044	516.0500	Rubberized Membrane Waterproofing	SY	10.000	10.000
0050	550.1100	Piling Steel HP 10-Inch x 42 Lb	LF	231.000	231.000
0052	606.0300	Riprap Heavy	CY	110.000	110.000
0054	612.0406	Pipe Underdrain Wrapped 6-Inch	LF	140.000	140.000
0058	618.0100	Maintenance and Repair of Haul Roads (project) 02. 5738-00-75	EACH	1.000	1.000
0060	619.1000	Mobilization	EACH	0.500	0.500
0062	624.0100	Water	MGAL	4.000	4.000
0064	625.0500	Salvaged Topsoil	SY	320.000	320.000
0066	627.0200	Mulching	SY	100.000	100.000
0072	628.1905	Mobilizations Erosion Control	EACH	3.000	3.000
0074	628.1910	Mobilizations Emergency Erosion Control	EACH	3.000	3.000
0076	628.2008	Erosion Mat Urban Class I Type B	SY	320.000	320.000
0078	628.6005	Turbidity Barriers	SY	250.000	250.000
0080	628.7504	Temporary Ditch Checks	LF	100.000	100.000
0082	629.0210	Fertilizer Type B	CWT	0.500	0.500
0084	630.0120	Seeding Mixture No. 20	LB	25.000	25.000
0086	630.0200	Seeding Temporary	LB	15.000	15.000
0090	630.0500	Seed Water	MGAL	10.000	10.000
0094	634.0614	Posts Wood 4x6-Inch x 14-FT	EACH	4.000	4.000
0096	637.2230	Signs Type II Reflective F	SF	12.000	12.000
0098	638.2602	Removing Signs Type II	EACH	6.000	6.000
0100	638.3000	Removing Small Sign Supports	EACH	6.000	6.000
0102	642.5001	Field Office Type B	EACH	0.500	0.500
0104	643.0300	Traffic Control Drums	DAY	600.000	600.000
0106	643.0420	Traffic Control Barricades Type III	DAY	480.000	480.000
0108	643.0705	Traffic Control Warning Lights Type A	DAY	600.000	600.000
0112	643.0900	Traffic Control Signs	DAY	600.000	600.000
0114	643.5000	Traffic Control	EACH	0.500	0.500
0116	645.0111	Geotextile Type DF Schedule A	SY	94.000	94.000
0118	645.0120	Geotextile Type HR	SY	224.000	224.000
0122	645.0220	Geogrid Type SR	SY	310.000	310.000
0124	650.4500	Construction Staking Subgrade	LF	98.000	98.000

5738-00-75

Line	Item	Item Description	Unit	Total	Qty
0126	650.5000	Construction Staking Base	LF	98.000	98.000
0130	650.6501	Construction Staking Structure Layout (structure) 02. B-56-0257	EACH	1.000	1.000
0134	650.9911	Construction Staking Supplemental Control (project) 02. 5738-00-75	EACH	1.000	1.000
0136	650.9920	Construction Staking Slope Stakes	LF	98.000	98.000
0140	715.0502	Incentive Strength Concrete Structures	DOL	930.000	930.000
0142	999.2100.S	Installing and Maintaining Climbing Turtle Exclusion Fence	LF	350.000	350.000
0144	ASP.1T0A	On-the-Job Training Apprentice at $5.00/HR	HRS	1,200.000	1,200.000
0146	ASP.1T0G	On-the-Job Training Graduate at $5.00/HR	HRS	600.000	600.000

3

DIVISION	FROM/TO STATION	LOCATION	205.0100 COMMON EXCAVATION (1) CUT (2)	AVAILABLE MATERIAL (5)	UNEXPANDED FILL	EXPANDED FILL (13) FACTOR 1.25	MASS ORDINATE +/- (14)	WASTE	208.0100 BORROW	COMMENT
DIVISION 1										
ROTT ROAD SOUTH	2+12.45/2+50.00		28	28	22	28	1			
ROTT ROAD NORTH	3+25.00/3+60.00		28	28	18	23	6			
DIVISION 1 SUBTOTAL			56	56	40	50	6	6	0	
GRAND TOTAL			56	56	40	50	6	6	0	

NOTES:

(1) COMMON EXCAVATION IS THE SUM OF THE CUT AND EBS EXCAVATION COLUMNS. ITEM NUMBER 205.0100

(2) SALVAGED/UNSUABLE PAVEMENT MATERIAL IS INCLUDED IN CUT.

(5) AVAILABLE MATERIAL = CUT - SALVAGED/UNUSUABLE PAVEMENT MATERIAL

(13) EXPANDED FILL FACTOR = 1.25

DEPENDING ON SELECTIONS:

(14) THE MASS ORDINATE + OR - QTY CALCULATED FOR THE DIVISION. PLUS QUANTITY INDICATES AN EXCESS OF MATERIAL WITHIN THE DIVISION. MINUS INDICATES A SHORTAGE OF MATERIAL WITHIN THE DIVISION.

(15) FACTORS USED TO COMPUTE ANTICIPATED WASTE AND THE COMPUTED WASTE VOLUME IDENTIFIED ARE FOR GENERAL INFORMATION ONLY.

3

CLEARING ITEMS

CATEGORY	STATION	TO	STATION	LOCATION	201.0105 CLEARING STA	201.0205 GRUBBING STA
0010	2+12.45	-	3+60.45	ROTT ROAD, LT & RT	2	2
0010						
				TOTAL 0010	2	2

BASE AGGREGATE ITEMS

CATEGORY	STATION	TO	STATION	LOCATION	305.0110 BASE AGGREGATE DENSE 3/4-INCH TON	305.0120 BASE AGGREGATE DENSE 1 1/4-INCH TON	312.0110 SELECT CRUSHED MATERIAL TON	624.0100 WATER MGAL	645.0220 GEOGRID TYPE SR SY	650.4500 CONSTRUCTION STAKING SUBGRADE LF	650.5000 CONSTRUCTION STAKING BASE LF	650.9920 CONSTRUCTION STAKING SLOPE STAKES LF
0010	2+12.45	-	2+61.17	ROTT ROAD	20	75	65	2	155	49	49	49
0010	3+11.71	-	3+60.45	ROTT ROAD	20	75	65	2	155	49	49	49
0010		-		UNDISTRIBUTED	10	10	10	-	-	-	-	-
				TOTAL 0010	50	160	140	4	310	98	98	98

ASPHALT ITEMS

CATEGORY	STATION	TO	STATION	LOCATION	455.0605 TACK COAT GAL	465.0105 ASPHALTIC SURFACE TON
0010	2+12.45	-	2+61.17	ROTT ROAD	8	25
0010	3+11.71	-	3+60.45	ROTT ROAD	8	25
0010		-		UNDISTRIBUTED	4	10
				TOTAL 0010	20	60

3

EROSION CONTROL ITEMS

CATEGORY	STATION	TO	STATION	LOCATION	999.2100.S INSTALLING AND MAINTAINING CLIMBING TURTLE EXCLUSION FENCE LF	628.1905 MOBILIZATIONS EROSION CONTROL EACH	628.1910 MOBILIZATIONS EMERGENCY EROSION CONTROL EACH	628.6005 TURBIDITY BARRIERS SY	628.7504 TEMPORARY DITCH CHECKS LF
0010	2+12.45	-	2+61.17	ROTT ROAD	155	-	-	125	40
0010	3+11.71	-	3+60.45	ROTT ROAD	170	-	-	115	40
0010		-		UNDISTRIBUTED	25	3	3	10	20
				TOTAL 0010	350	3	3	250	100

3

LANDSCAPING ITEMS

CATEGORY	STATION	TO	STATION	LOCATION	625.0500 SALVAGED TOPSOIL SY	627.0200 MULCHING SY	628.2008 EROSION MAT URBAN CLASS I TYPE B SY	629.0210 FERTILIZER TYPE B CWT	630.0120 SEEDING MIXTURE NO. 20 LB	630.0200 SEEDING TEMPORARY LB	630.0500 SEED WATER MGAL
0010	2+12.45	-	2+61.17	ROTT ROAD	155	-	155	0.2	10	6	5
0010	3+11.71	-	3+60.45	ROTT ROAD	139	-	139	0.2	10	6	5
0010				UNDISTRIBUTED	26	100	26	0.1	5	3	-
				TOTAL 0010	320	100	320	0.5	25	15	10

SIGN ITEMS

CATEGORY	STATION	LOCATION	SIGN CODE	SIZE	SIGN NO	634.0614 POSTS WOOD 4X6-INCH X 14-FT EACH	637.2230 SIGNS TYPE II REFLECTIVE F SF	638.2602 REMOVING SIGNS TYPE II EACH	638.3000 REMOVING SMALL SIGN SUPPORTS EACH	REMARKS
0010	2+50	RT	-	-	5R	-	-	1	1	WEIGHT LIMIT SIGN
0010	2+55	LT	W5-52L	12" x 36"	1/1R	1	3	1	1	
0010	2+58	RT	W5-52R	12" x 36"	2/2R	1	3	1	1	
0010	3+12	LT	W5-52L	12" x 36"	3/3R	1	3	1	1	
0010	3+17	RT	W5-52R	12" x 36"	4/4R	1	3	1	1	
0010	3+80	LT	-	-	6R	-	-	1	1	WEIGHT LIMIT SIGN
				TOTAL 0010		4	12	6	6	

TRAFFIC CONTROL

CATEGORY	DESCRIPTION	NO. OF DAYS	643.0300 TRAFFIC CONTROL DRUMS NO.	DAY	643.0420 TRAFFIC CONTROL BARRICADES TYPE III NO.	DAY	643.0705 TRAFFIC CONTROL WARNING LIGHTS TYPE A NO.	DAY	643.0900 TRAFFIC CONTROL SIGNS NO.	DAY
0010	CLOSURE OF ROTT ROAD	60	10	600	8	480	10	600	10	600
0010										
		TOTAL 0010		600		480		600		600

BENCH MARKS			
NO.	STATION	ELEV.	DESCRIPTION
BM 1	2+96.78	973.58	CHISELED X ON STRUCTURE
BM 2	1+73.12	971.13	3/4" REBAR
BM 3	4+30.95	970.57	3/4" REBAR

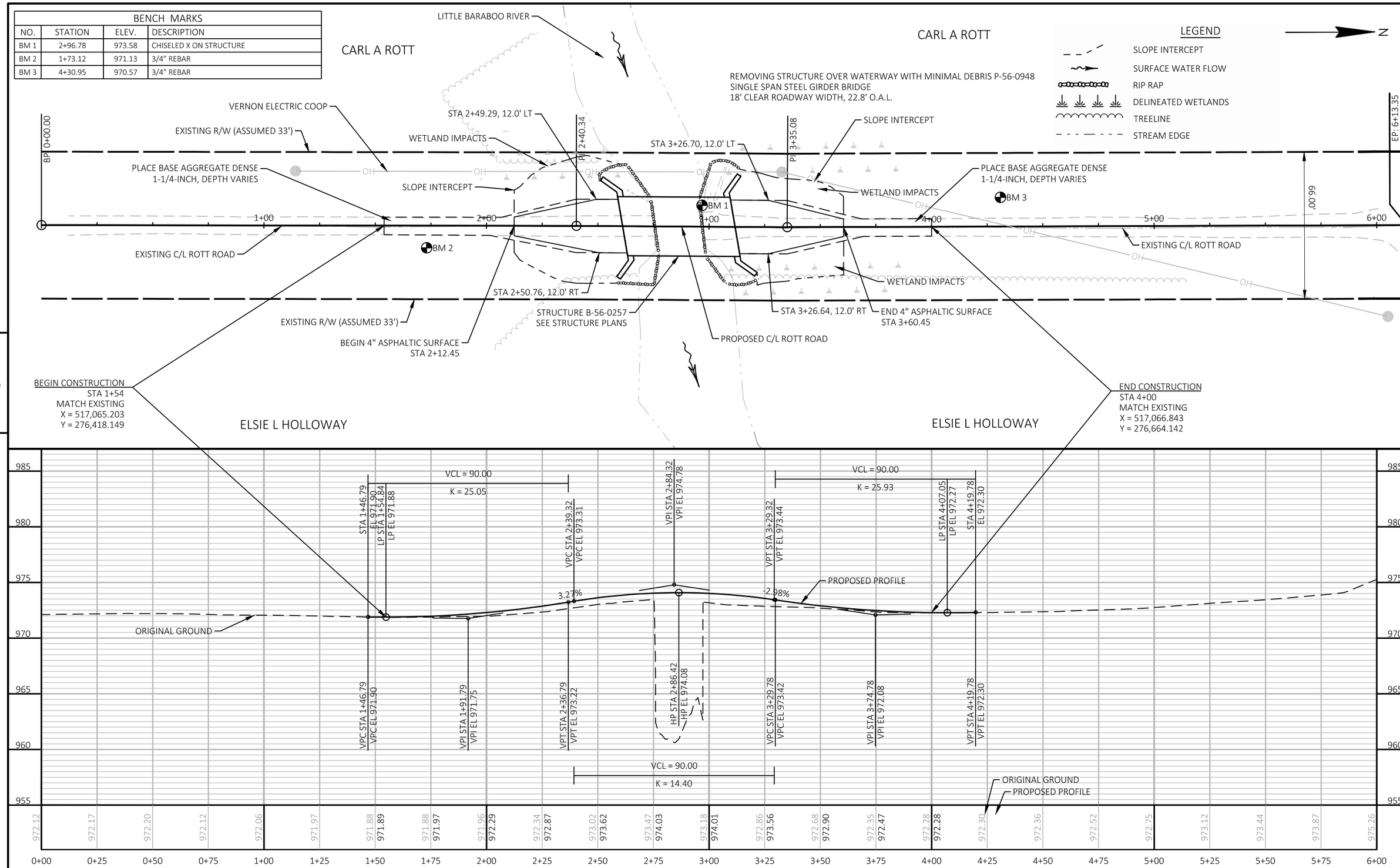

PROJECT NO: 5738-00-75	HWY: ROTT ROAD	COUNTY: SAUK	PLAN AND PROFILE: ROTT ROAD	SHEET 11	E

FILE NAME : T:\PROJECTS\2024\24-2054-1 T WOODLAND, ROTT ROAD, P-56-0948, ID 5738-00-05\DRAWINGS\57380005_PROPOSED LINEWORK.DWG
LAYOUT NAME - P&P 1
PLOT DATE : 3/11/2026 10:33 AM PLOT BY : TYLER BUCHANAN PLOT NAME : PLOT SCALE : 1 IN:40 FT
WISDOT/CADDS SHEET 44

Standard Detail Drawing List

08E08-03	TYPICAL INSTALLATIONS OF EROSION BALES / TEMPORARY DITCH CHECKS
08E09-06	SILT FENCE
08E11-02	TURBIDITY BARRIER
12A03-10	NAME PLATE (STRUCTURES)
13C19-03	HMA LONGITUDINAL JOINTS
14D01-01	TURTLE EXCLUSION FENCE CLIMBING TURTLE
15C02-10A	BARRICADES AND SIGNS FOR MAINLINE CLOSURES
15C02-10B	BARRICADES AND SIGNS FOR VARIOUS CLOSURES
15C06-12	SIGNING & MARKING FOR TWO LANE BRIDGES
15C11-11B	CHANNELIZING DEVICES DRUMS, CONES, BARRICADES AND VERTICAL PANELS

6

6

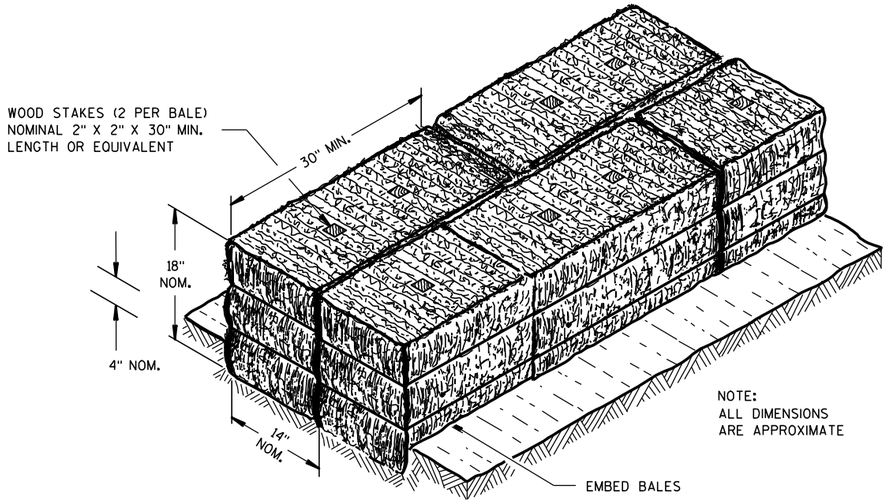

SECTION A-A

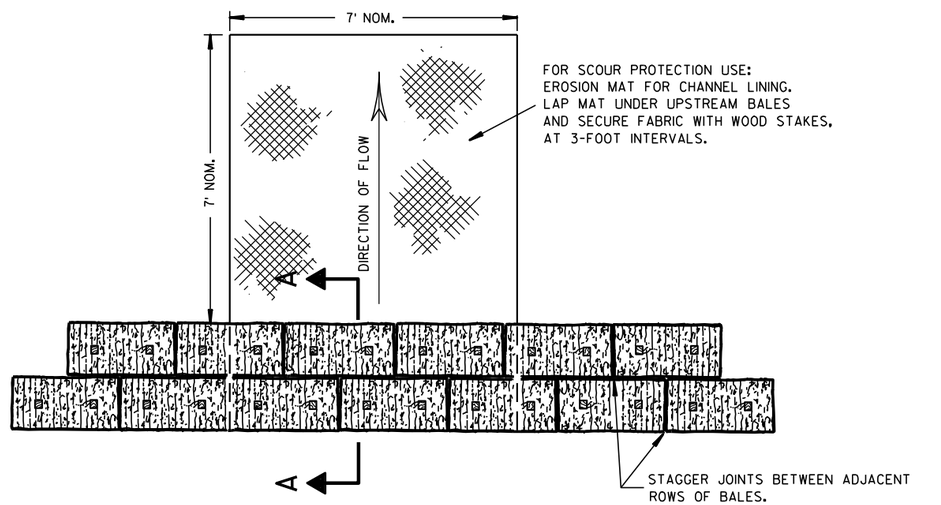

PLAN VIEW

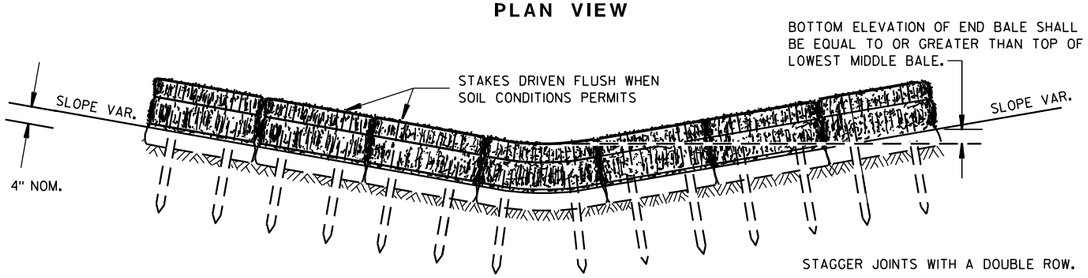

FRONT ELEVATION

TEMPORARY DITCH CHECK USING EROSION BALES ①

GENERAL NOTES

DETAILS OF CONSTRUCTION, MATERIALS AND WORKMANSHIP NOT SHOWN ON THIS DRAWING SHALL CONFORM TO THE PERTINENT REQUIREMENTS OF THE STANDARD SPECIFICATIONS AND THE APPLICABLE SPECIAL PROVISIONS.

① TEMPORARY DITCH CHECKS EITHER EROSION BALES OR MANUFACTURED SHALL BE PAID FOR UNDER THE BID ITEM OF TEMPORARY DITCH CHECK. THE DEPARTMENT WILL NOT PAY FOR TEMPORARY DITCH CHECKS CONSTRUCTED OF A SINGLE ROW OF EROSION BALES.

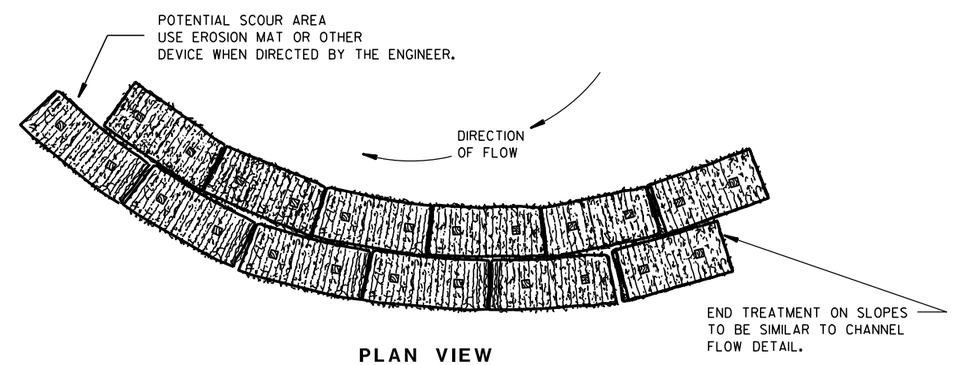

PLAN VIEW

WHEN ALTERING THE DIRECTION OF FLOW

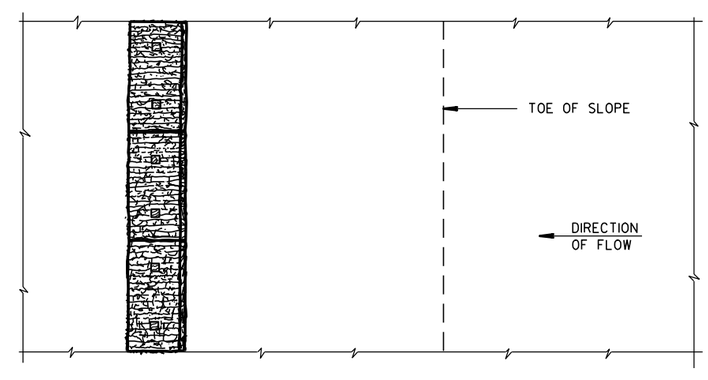

PLAN VIEW

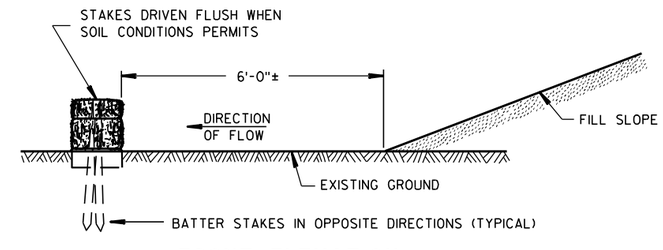

FRONT ELEVATION

WHEN EXISTING GROUND SLOPES AWAY FROM FILL SLOPE

EROSION BALES FOR SHEET FLOW

TYPICAL INSTALLATIONS OF EROSION BALES / TEMPORARY DITCH CHECKS

STATE OF WISCONSIN
DEPARTMENT OF TRANSPORTATION

APPROVED

6/04/02 — DATE

/S/ Beth Cann — CHIEF ROADWAY DEVELOPMENT ENGINEER

FHWA

6

6

S.D.D. 8 E 8-3

S.D.D. 8 E 8-3

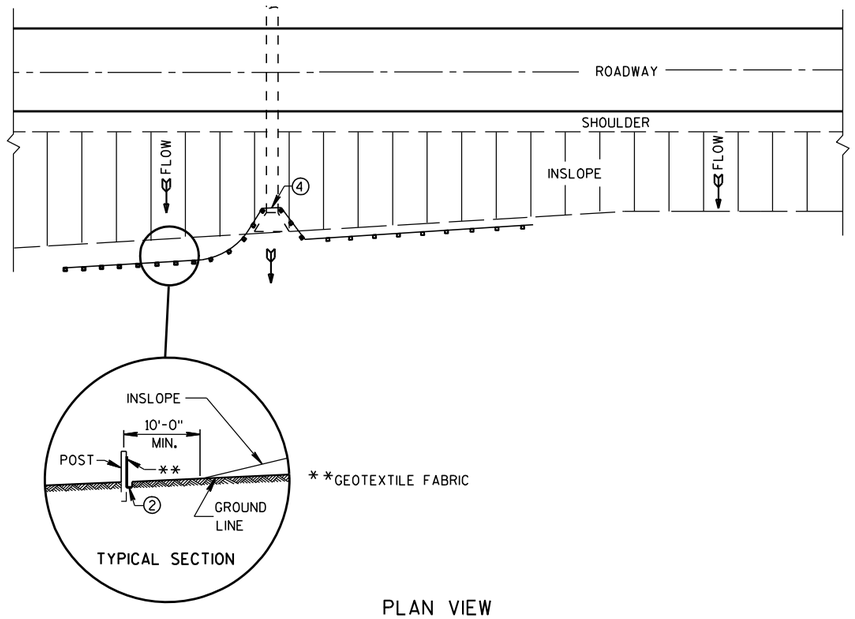

PLAN VIEW

TYPICAL APPLICATION OF SILT FENCE

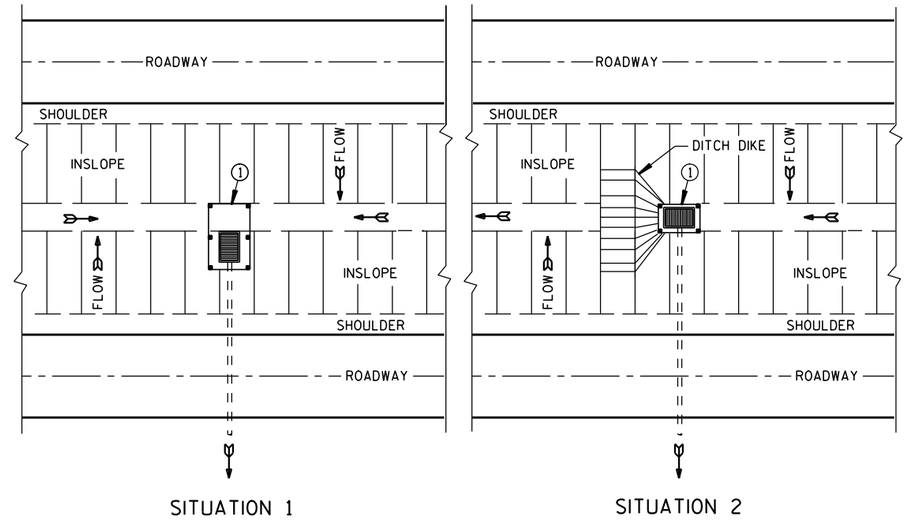

PLAN VIEW

SILT FENCE AT MEDIAN SURFACE DRAINS

GENERAL NOTES

DETAILS OF CONSTRUCTION NOT SHOWN ON THIS DRAWING SHALL CONFORM TO THE PERTINENT REQUIREMENTS OF THE STANDARD SPECIFICATIONS AND APPLICABLE SPECIAL PROVISIONS.

① HORIZONTAL BRACE REQUIRED WITH 2" X 4" WOODEN FRAME OR EQUIVALENT AT TOP OF POSTS.

② FOR MANUAL INSTALLATIONS THE TRENCH SHALL BE A MINIMUM OF 4" WIDE & 6" DEEP TO BURY AND ANCHOR THE GEOTEXTILE FABRIC. FOLD MATERIAL TO FIT TRENCH AND BACKFILL & COMPACT TRENCH WITH EXCAVATED SOIL.

③ WOOD POSTS SHALL BE A MINIMUM SIZE OF 1⅛" X 1⅛" OF OAK OR HICKORY.

④ SILT FENCE TO EXTEND ACROSS THE TOP OF THE PIPE.

⑤ CONSTRUCT SILT FENCE FROM A CONTINUOUS ROLL IF POSSIBLE BY CUTTING LENGTHS TO AVOID JOINTS. IF A JOINT IS NECESSARY USE ONE OF THE FOLLOWING TWO METHODS; A) OVERLAP THE END POSTS AND TWIST, OR ROTATE, AT LEAST 180 DEGREES. B) HOOK THE END OF EACH SILT FENCE LENGTH.

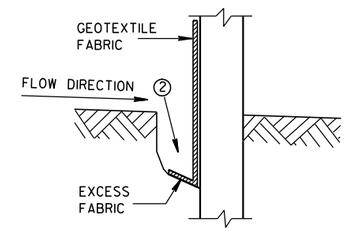

TRENCH DETAIL

NOTE: ADDITIONAL POST DEPTH OR TIE BACKS MAY BE REQUIRED IN UNSTABLE SOILS

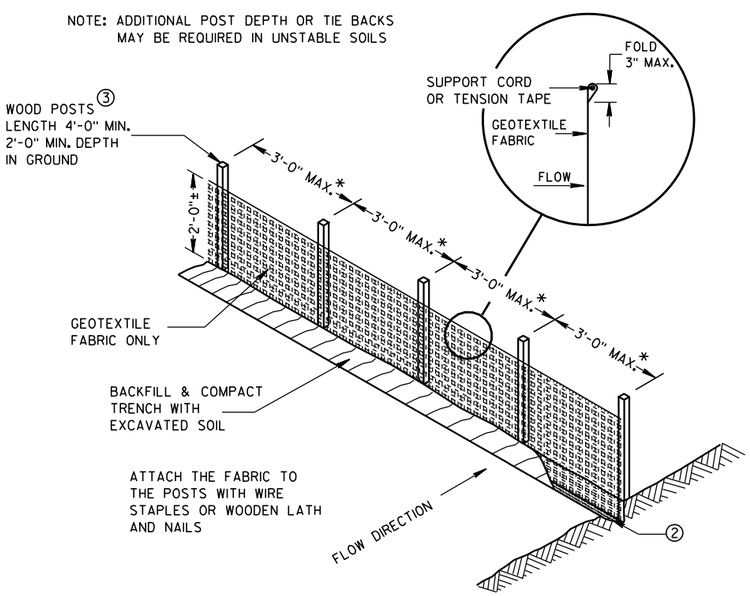

*NOTE: 8'-0" POST SPACING ALLOWED IF A WOVEN GEOTEXTILE FABRIC IS USED.

SILT FENCE

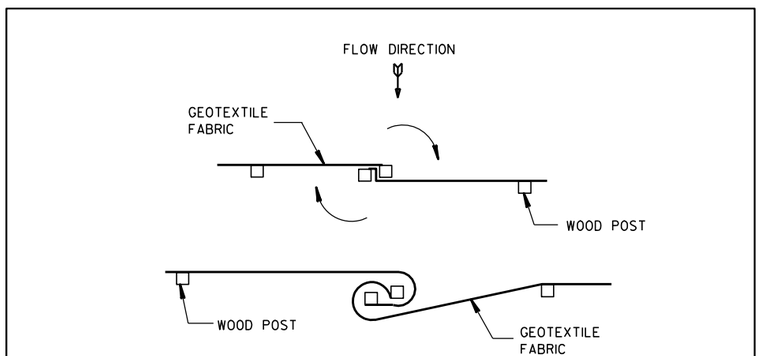

TWIST METHOD

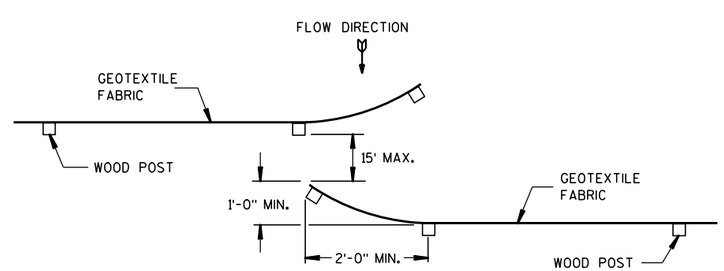

HOOK METHOD

JOINING TWO LENGTHS OF SILT FENCE ⑤

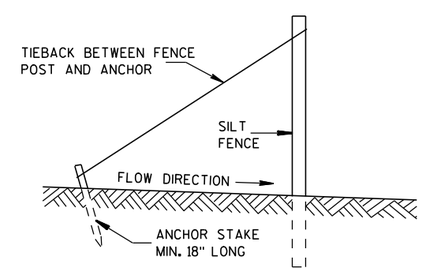

SILT FENCE TIE BACK

(WHEN REQUIRED BY THE ENGINEER)

SILT FENCE	
STATE OF WISCONSIN DEPARTMENT OF TRANSPORTATION	
APPROVED 4-29-05 DATE	/S/ Beth Cann----- CHIEF ROADWAY DEVELOP ... GINEER
FHWA	

6

6

S.D.D. 8 E 9-6

S.D.D. 8 E 9-6

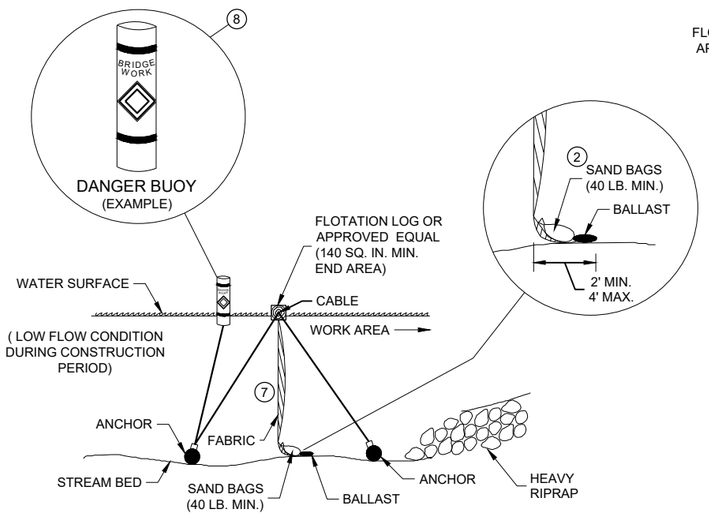

SECTION B - B

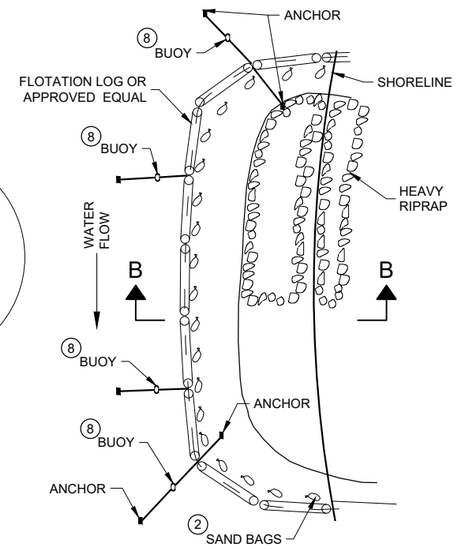

PLAN VIEW

TURBIDITY BARRIER - FLOAT ALTERNATIVE
CAUTION - SEE NOTE 6

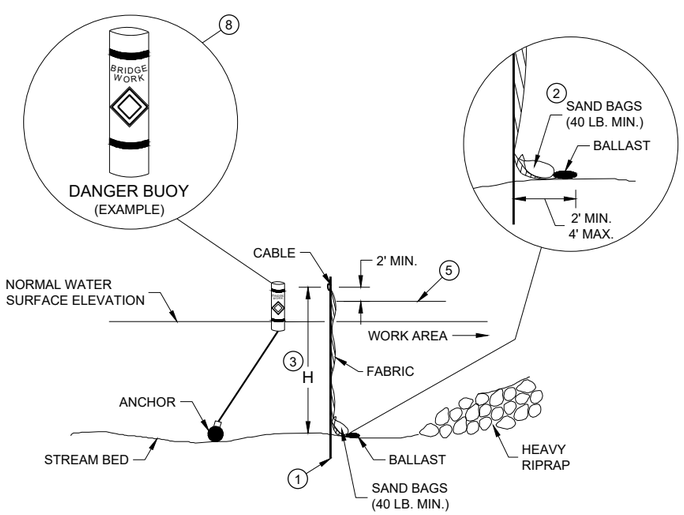

SECTION A - A

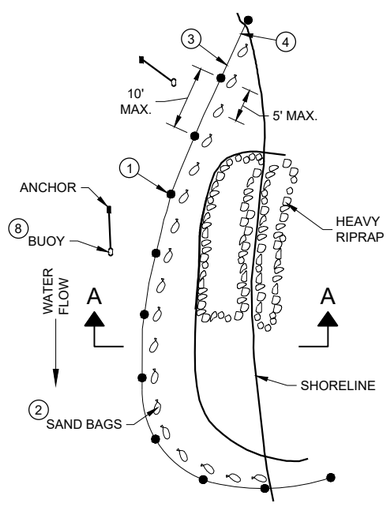

PLAN VIEW

TURBIDITY BARRIER - STANDARD POST INSTALLATION

TURBIDITY BARRIER PLACEMENT DETAILS

GENERAL NOTES

DETAILS OF CONSTRUCTION, MATERIALS AND WORKMANSHIP NOT SHOWN ON THIS DRAWING SHALL CONFORM TO THE PERTINENT REQUIREMENTS OF THE STANDARD SPECIFICATIONS AND THE APPLICABLE SPECIAL PROVISIONS.

TURBIDITY BARRIER MAY BE REMOVED AT THE ENGINEERS DISCRETION, WHEN PERMANENT EROSION CONTROL MEASURES HAVE BEEN ESTABLISHED.

1. DRIVEN STEEL POSTS, PIPES, OR CHANNELS. LENGTH SHALL BE SUFFICIENT TO SECURELY SUPPORT BARRIER AT HIGH WATER ELEVATIONS.
2. SAND BAGS TO BE USED AS ADDITIONAL BALLAST WHEN ORDERED BY THE ENGINEER TO MEET ADVERSE FIELD CONDITIONS. SPACE AS APPROPRIATE FOR SITE CONDITIONS.
3. WHEN BARRIER HEIGHT "H" EXCEEDS 8 FEET, POST SPACING MAY NEED TO BE DECREASED.
4. IN WATERWAYS SUBJECT TO FLUCTUATING WATER ELEVATIONS, PROVISIONS SHOULD BE MADE TO ALLOW THE WATER TO EQUALIZE ON EACH SIDE OF THE BARRIER. THIS MAY BE ACCOMPLISHED BY LEAVING A PORTION OF THE BARRIER OPEN ON THE UPSTREAM END.
5. ESTIMATED HIGH WATER ELEVATION DURING CONSTRUCTION PERIOD. MINIMUM BARRIER HEIGHT SHALL BE 2' GREATER THAN EITHER THE Q2 ELEVATION OR THE ESTIMATED HIGH WATER ELEVATION DURING CONSTRUCTION, WHICHEVER IS GREATER.
6. FLOAT ALTERNATIVE WILL ONLY BE ALLOWED WITH WRITTEN APPROVAL OF THE ENGINEER, AND IS MEANT FOR LOCATIONS WHERE BEDROCK PREVENTS THE INSTALLATION OF POSTS.
7. ALLOW SUFFICIENT SLACK VERTICALLY AND HORIZONTALLY SO THAT SEDIMENT BUILD UP WILL NOT SEPARATE OR LOWER THE TURBIDITY BARRIER.
8. USE AS DIRECTED BY COAST GUARD OR DNR PERMIT WHEN WORKING IN NAVIGABLE WATERWAYS.

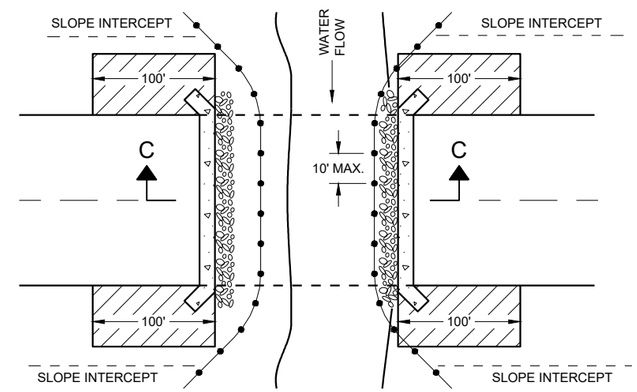

PLAN VIEW

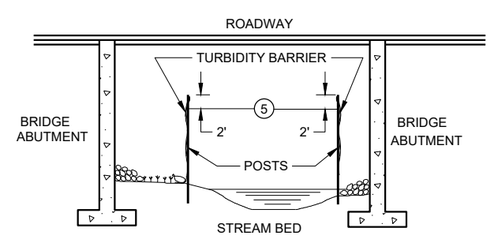

SECTION C - C

TURBIDITY BARRIER DETAIL SHOWING TYPICAL PLACEMENT AT STRUCTURES

TURBIDITY BARRIER

STATE OF WISCONSIN
DEPARTMENT OF TRANSPORTATION

APPROVED
6/4/02 — DATE
/S/ Beth Cannestra — CHIEF ROADWAY DEVELOPMENT ENGINEER
FHWA

6

SDD 08E11 - 02

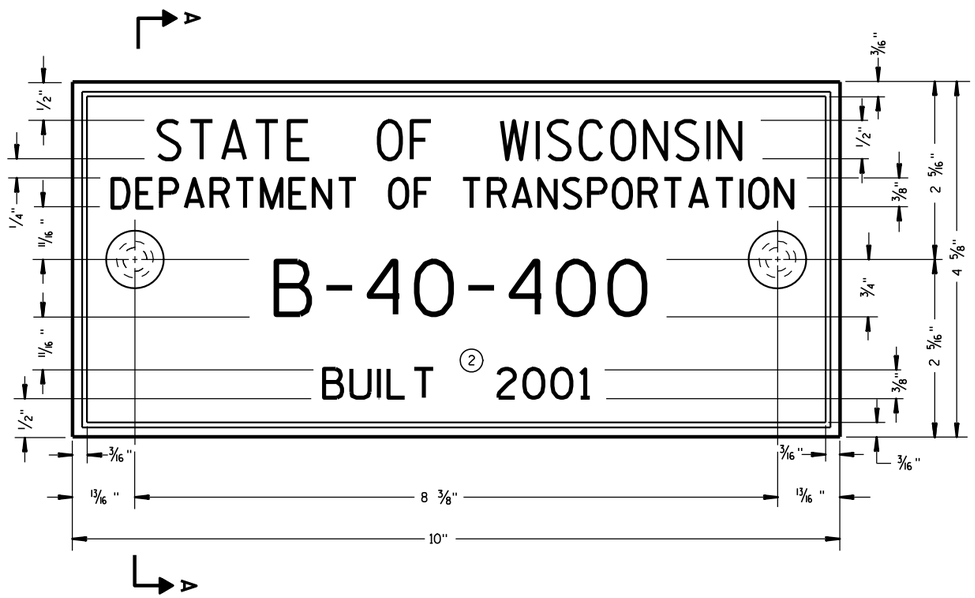

TYPICAL NAME PLATE

(BRIDGES, CULVERTS, AND RETAINING WALLS)

GENERAL NOTES

NAME PLATES TO BE INSTALLED ON BRIDGES, CULVERTS, AND RETAINING WALLS SHALL CONFORM TO THE REQUIREMENTS OF SECTION 502.3.11 OF THE STANDARD SPECIFICATIONS.

THE BRIDGE NUMBER AND YEAR BUILT SHOWN ON THIS DRAWING ARE EXAMPLES ONLY. SEE CONSTRUCTION PLANS FOR INDIVIDUAL NUMBERING AND YEAR BUILT.

① EPOXY RESIN SHALL BE FROM AN APPROVED MANUFACTURER AND USED IN ACCORDANCE WITH MANUFACTURER'S RECOMMENDATIONS.

② REHABILITATION OF AN EXISTING STRUCTURE SHOULD USE THE DATE OF ORIGINAL STRUCTURE CONSTRUCTION.

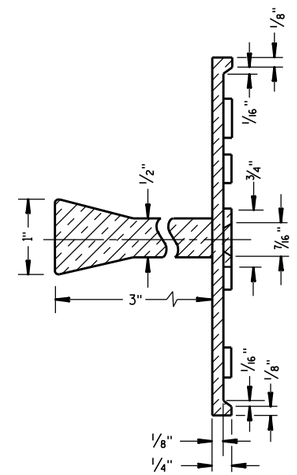

SECTION A-A

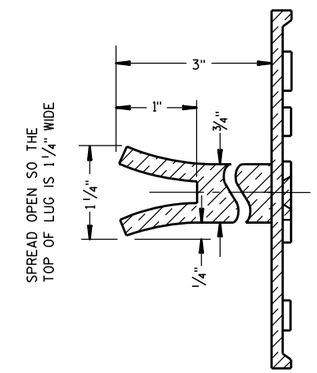

ALTERNATE LUG

6

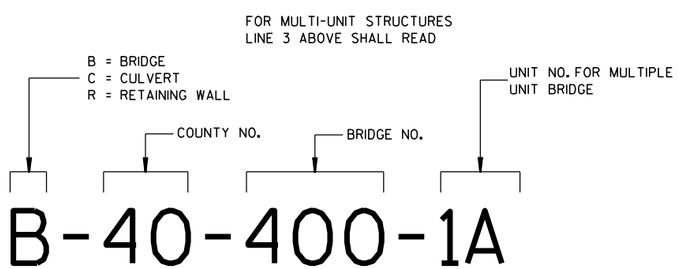

NUMBERING DESIGNATION
MULTI-UNIT STRUCTURES

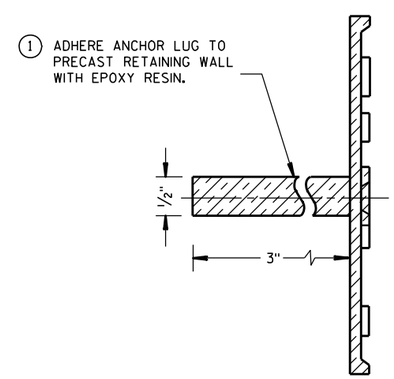

ALTERNATE LUG

(FOR ATTACHMENT TO PRECAST STRUCTURES)

NAME PLATE (STRUCTURES)		
STATE OF WISCONSIN DEPARTMENT OF TRANSPORTATION		
APPROVED		
3/26/10 DATE	/S/ Scot Beck-- CHIEF STRUCTURAL DEVELOP	ENGINEER
FHWA		

S.D.D. 12 A 3-10

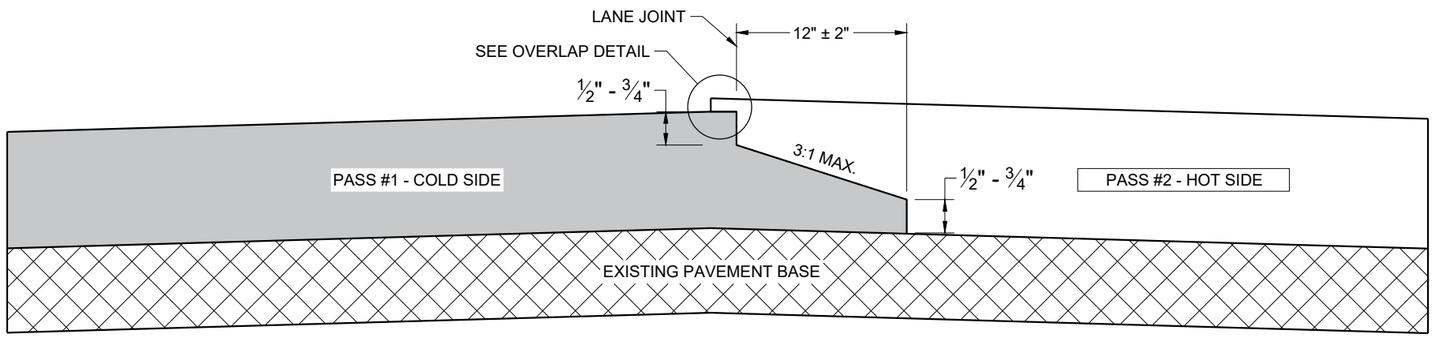

TYPICAL PAVEMENT CROSS SECTION
NOTCHED WEDGE JOINT

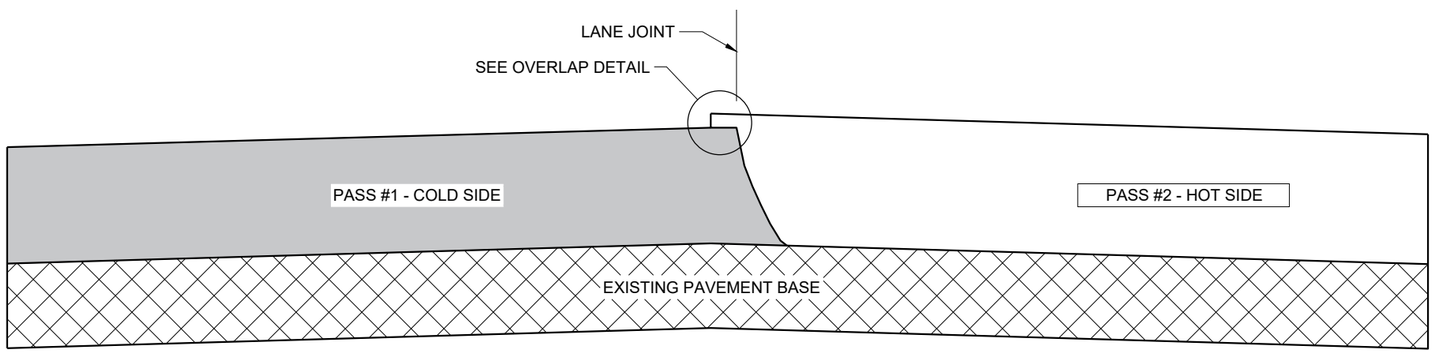

TYPICAL PAVEMENT CROSS SECTION
VERTICAL JOINT

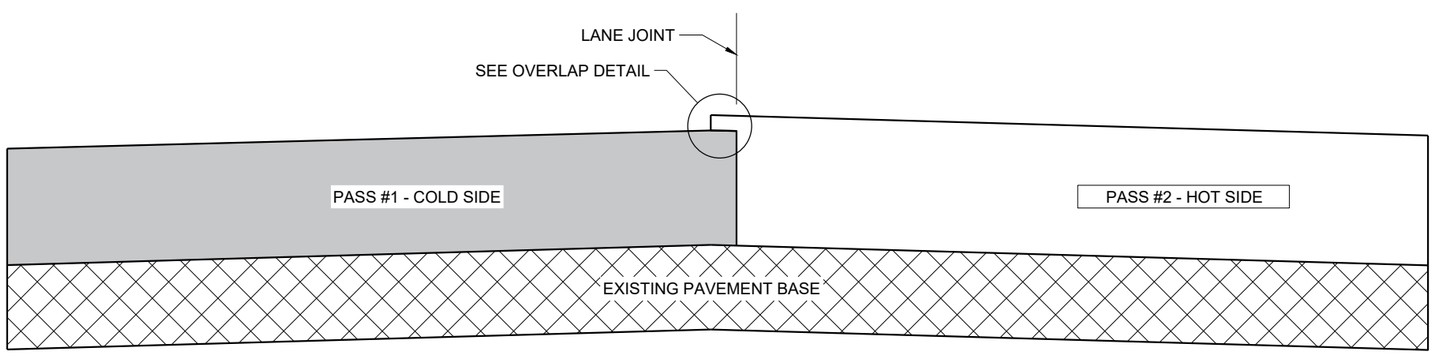

TYPICAL PAVEMENT CROSS SECTION
VERTICAL JOINT (MILLED)

GENERAL NOTES

IN ADDITION TO THE DETAILS PROVIDED IN THIS DRAWING, CONFORM TO STANDARD SPECIFICATION 450.3.2.8 FOR WHEN A NOTCHED WEDGE JOINT IS REQUIRED AND FOR GENERAL JOINT CONSTRUCTION REQUIREMENTS.

FOR ALL LONGITUDINAL JOINTS, ENSURE THE PAVER SCREED OVERLAPS THE PREVIOUSLY PLACED PAVEMENT BY 1" ± 0.5" AND THE HOT SIDE OF THE JOINT REMAINS HIGHER THAN THE COLD SIDE BY APPROXIMATELY 0.1" AFTER FINAL COMPACTION. (IT WILL BE FLUSH WHEN PAVING IN ECHELON.)

ONLY REMOVE THE LONGITUDINAL NOTCHED WEDGE JOINT FOR SMA PAVEMENT OR AS DIRECTED BY THE ENGINEER TO ADDRESS SPECIFIC LENGTHS OF JOINT DAMAGED BY TRAFFIC.

WHEN MILLING BACK OR REMOVING ANY LONGITUDINAL JOINT, LIMIT THE MATERIAL REMOVED TO 2" FROM THE TOP NOTCH OR FROM THE VERTICAL JOINT EDGE ON THE COLD SIDE OF THE JOINT.

USE LONGITUDINAL MILLED JOINT AS PLANS SHOW OR THE AS THE ENGINEER DIRECTS.

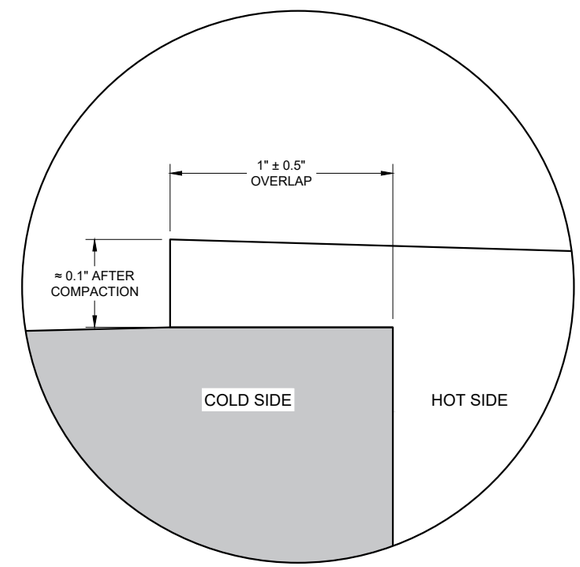

OVERLAP DETAIL (TYPICAL)

6

6

SDD 13C19 - 03

SDD 13C19 - 03

HMA LONGITUDINAL JOINTS

STATE OF WISCONSIN
DEPARTMENT OF TRANSPORTATION

APPROVED
November 2020 /S/ Steven Hefel
DATE HMA PAVEMENT ENGIN

FHWA

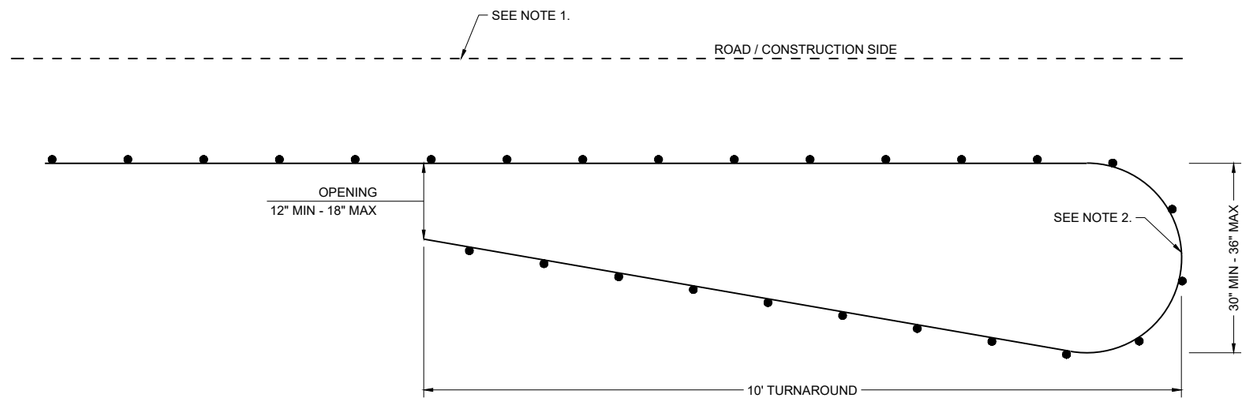

PLAN VIEW

CLIMBING TURTLE EXCLUSION FENCE DETAIL

GENERAL NOTES:

1. WHERE SILT FENCE IS REQUIRED, IT SHALL BE PLACED ON THE CONSTRUCTION SIDE OF THE EXCLUSION FENCING, OR COMBINED WITH THE EXCLUSION FENCING AS ALLOWED IN THE SPECIFICATIONS. STAKES ON THIS DETAIL ARE OPPOSITE OF STANDARD SILT FENCE FOR SEDIMENT CONTROL.
2. PLACE TURNAROUNDS AT ALL TERMINI ENDS OF THE EXCLUSION FENCING.
3. IF TEMPORARY ACCESS POINTS ARE NEEDED DURING CONSTRUCTION THAT REQUIRE OPENINGS IN THE EXCLUSION FENCING, ACCESS OPENINGS SHOULD BE TIGHTLY SECURED WITH BALES OF HAY OR STRAW WHENEVER CONSTRUCTION RELATED ACTIVITIES ARE NOT OCCURRING. REINSTALL EXCLUSION FENCING WHEN THE WORK REQUIRING THE TEMPORARY ACCESS OPENING IS COMPLETED.
4. THE FENCE CAP MAY BE A 6" UNDER DRAIN PIPE, SLIT DOWN THE CENTER AND PLACED OVER THE FENCE. COMMERCIALLY AVAILABLE SAFETY CAPS WITH A LIP MAY BE USED. OTHER DNR APPROVED METHODS TO PREVENT TURTLES FROM PASSING OVER THE TOP OF THE FENCE MAY BE USED.

   SECURELY FASTEN THE CAP TO PREVENT IT FROM BEING DISLODGED.

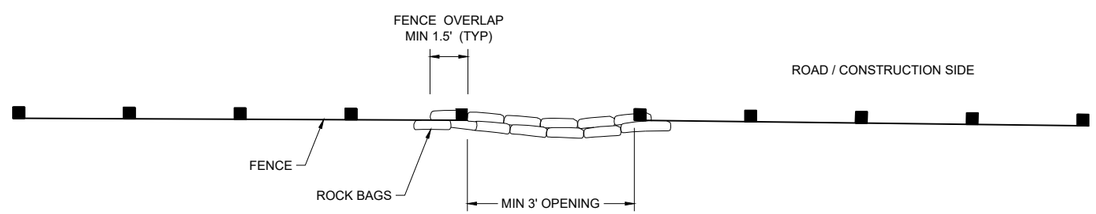

PLAN VIEW

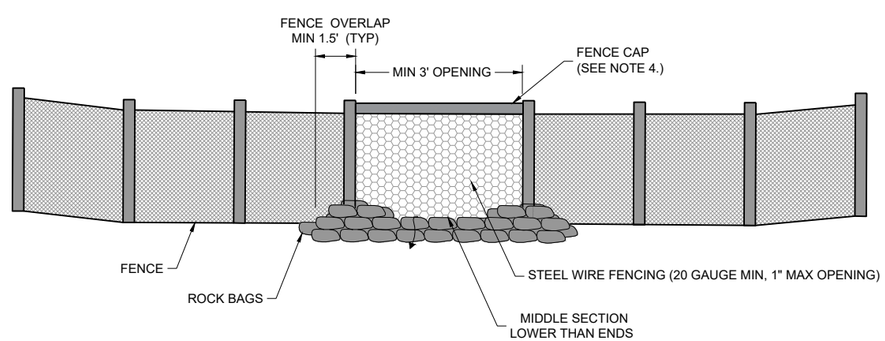

FRONT VIEW

CLIMBING TURTLE FENCE RELIEF DETAIL

TURTLE EXCLUSION FENCE
CLIMBING TURTLE

STATE OF WISCONSIN
DEPARTMENT OF TRANSPORTATION

APPROVED
AUGUST 2025 — DATE
/S/ ALYSSA BARRETTE
CHIEF STATEWIDE ENVIRONMENTAL SERVICES
BUREAU OF TECHNICAL SER

FHWA

6
SDD 14D01-01

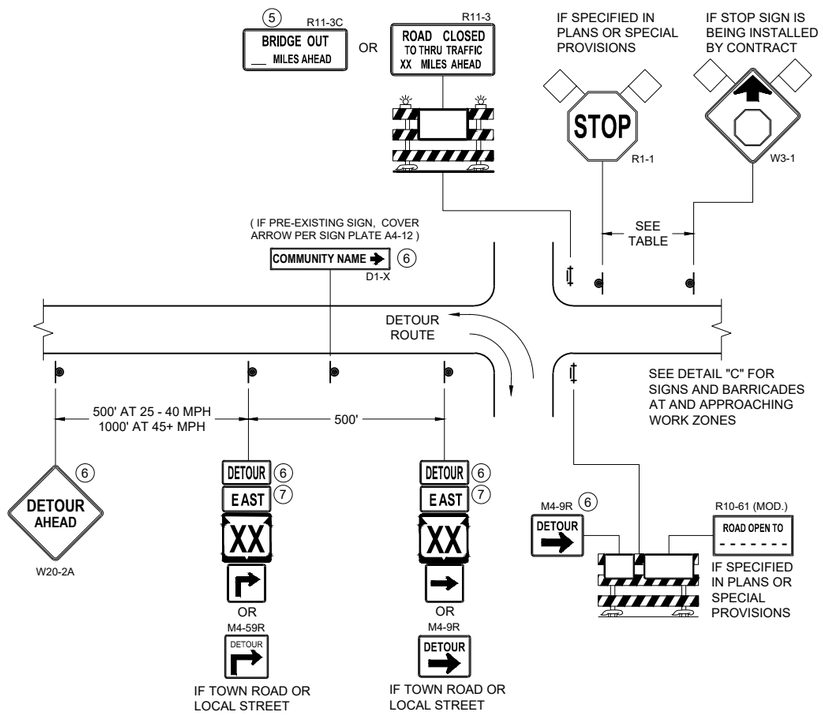

DETAIL A

MAINLINE CLOSURE WITH POSTED DETOUR

WORK ZONE GREATER THAN OR EQUAL TO ½ MILE FROM DETOUR ROUTE (1000 FEET IF URBAN)

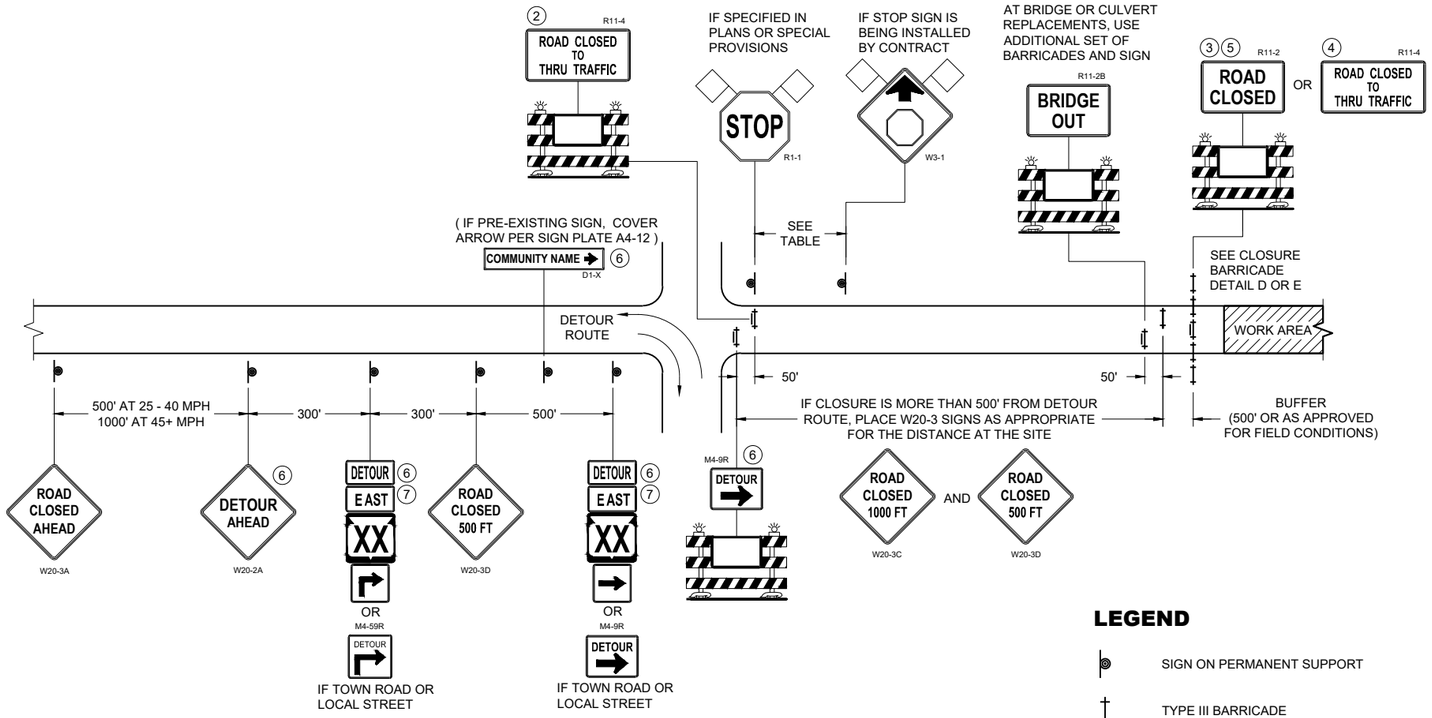

DETAIL B

MAINLINE CLOSURE WITH POSTED DETOUR

WORK ZONE LESS THAN ½ MILE FROM DETOUR ROUTE (1000 FEET IF URBAN)

LEGEND

- SIGN ON PERMANENT SUPPORT
- TYPE III BARRICADE
- TYPE III BARRICADE WITH ATTACHED SIGN
- TYPE "A" WARNING LIGHT (FLASHING)
- WORK AREA
- FLAGS, 16" X 16" MIN. (ORANGE)
- DETOUR — M4 - 8
- EAST — M3 - X
- XX — M1 - 4 OR XX — M1 - 6 OR COUNTY X — M1 - 5A
- M05 - 1 OR M06 - 1

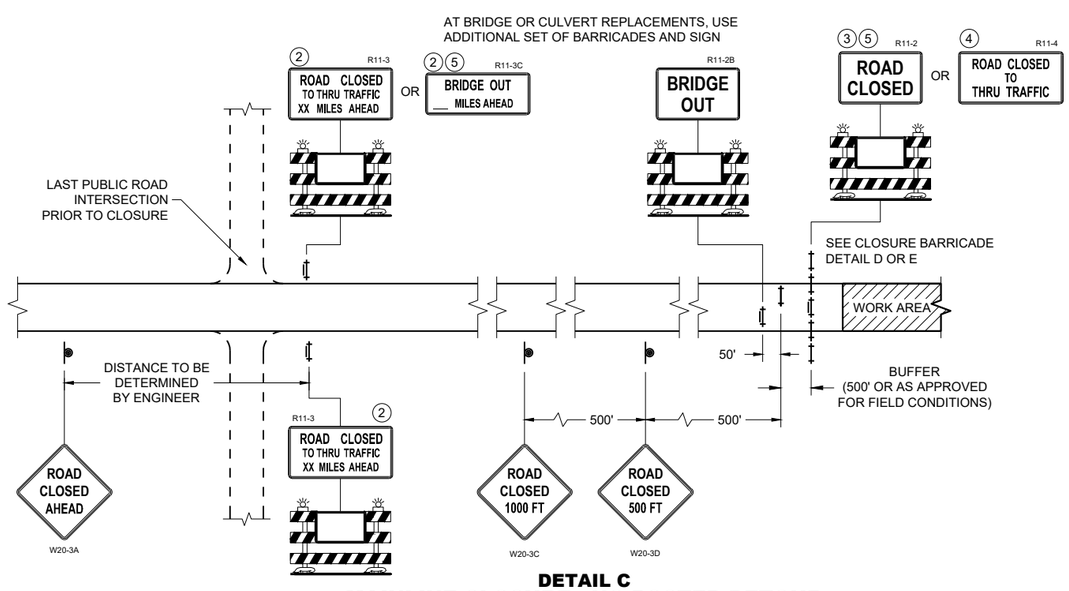

DETAIL C

MAINLINE CLOSURE, NO POSTED DETOUR

SPEED LIMIT (MPH)	"STOP AHEAD" ADVANCE WARNING DISTANCE (FT)
25	200
30	200
35	350
40	350
45	500
50	550
55	750

SEE SDD 15C2-SHEET "b" FOR GENERAL NOTES AND FOOTNOTES 1 THROUGH 7

BARRICADES AND SIGNS FOR MAINLINE CLOSURES

STATE OF WISCONSIN
DEPARTMENT OF TRANSPORTATION

APPROVED
November 2025 — DATE
/S/ Andrew Heidtke — WORK ZONE ENGINEER

FHWA

6

SDD 15C02-10a

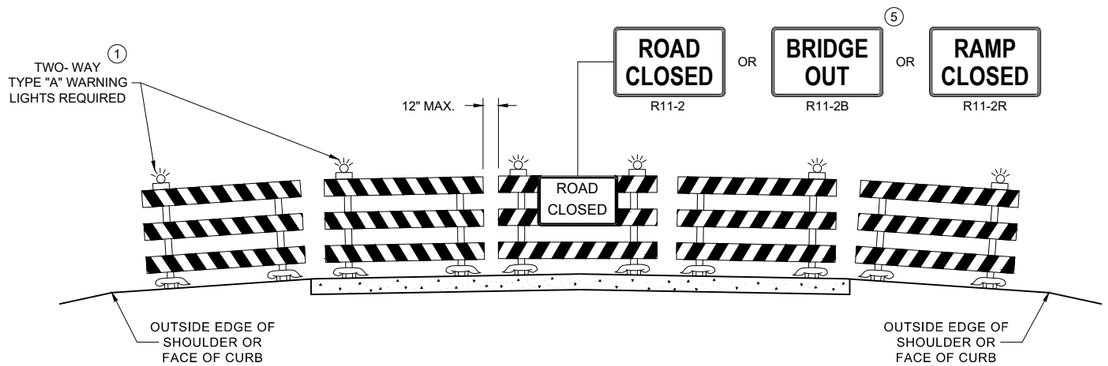

DETAIL D

ROAD CLOSURE BARRICADE DETAIL

APPROACH VIEW

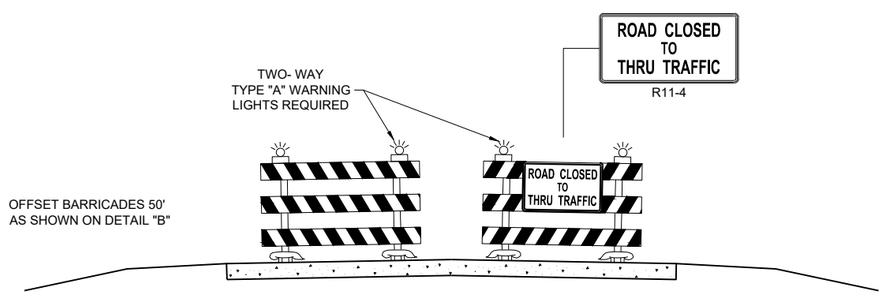

DETAIL E

LANE CLOSURE BARRICADE DETAIL

APPROACH VIEW

SEE SDD 15C2 - SHEET "a" FOR LEGEND

GENERAL NOTES

THE EXACT NUMBER, LOCATION, AND SPACING OF ALL SIGNS AND BARRICADES SHALL BE ADJUSTED TO FIT FIELD CONDITIONS AS APPROVED BY THE ENGINEER.

ANY SIGNS TEMPORARY OR EXISTING, WHICH CONFLICT WITH TRAFFIC CONTROL "IN USE", SHALL BE REMOVED OR COVERED AS NEEDED AND AS APPROVED BY THE ENGINEER.

THE SPACING BETWEEN TRAFFIC CONTROL SIGNS SHOULD BE ADJUSTED TO NOT CONFLICT WITH AND SHOULD PROVIDE A DESIRABLE MINIMUM OF 200 FEET CLEARANCE TO EXISTING SIGNS THAT WILL REMAIN IN PLACE.

BARRICADES THAT MUST BE MOVED FOR A WORK OPERATION SHALL BE IMMEDIATELY RE-ESTABLISHED UPON COMPLETION OF THE OPERATION, OR FOR CONTINUING OPERATIONS, AT THE END OF EACH WORKING DAY.

SIGNS THAT WILL BE IN PLACE LESS THAN 7 CONTINUOUS DAYS AND NIGHTS MAY BE MOUNTED ON PORTABLE SUPPORTS.

ALL TYPE III BARRICADES SHALL HAVE RAILS REFLECTORIZED ON BOTH FACES. STRIPES SHALL BE PROPERLY SLOPED DOWN TOWARD THE TRAFFIC SIDE OR AS SHOWN IN THE ROAD CLOSURE BARRICADE DETAIL "D" FOR FULL ROAD CLOSURES.

TYPE "A" LOW - INTENSITY FLASHING WARNING LIGHTS SHALL BE VISIBLE ON BOTH SIDES OF THE BARRICADE.

PARTIAL NUMBERS ON SIGNS SHALL BE DISPLAYED AS A WHOLE NUMBER(AS NEEDED) FOLLOWED BY A FRACTION. SIGNS SHALL NOT DISPLAY NUMBERS IN DECIMAL FORM.

"WO" AND "MO" SIGNS ARE THE SAME AS "W" AND "M" SIGNS EXCEPT THE BACKGROUND IS ORANGE.

ALL SIGNS SHALL BE 48" X 48" UNLESS OTHERWISE NOTED BELOW:

R11 - 2 SHALL BE 48" X 30"
R11 - 3 SHALL, R11 - 4 AND R10 - 61 SHALL BE 60 " X 30"
M4 - 9 SHALL BE 30" X 24"
M3 - X SHALL BE 24" X 12" (36" X 18" IF NEEDED TO MATCH EXISTING SIGNS)
M4 - 8 SHALL BE 24" X 12" (36" X 18" IF NEEDED TO MATCH EXISTING SIGNS)
M1 - 4, M1 - 5A AND M1 - 6 SHALL BE 24" X 24" (36" X 36" IF NEEDED TO MATCH EXISTING SIGNS)
MO5 - 1 AND MO6 - 1 SHALL BE 21" X 21" (30" X 30" IF NEEDED TO MATCH EXISTING SIGNS)
D1 - X SHALL BE AS SHOWN ON SPECIFIC PROJECT SIGNING DETAIL SHEETS.
R1 - 1 SHALL BE 36" X 36"

SIGNS PLACED ON TYPE III BARRICADES THAT ARE SIZES OTHER THAN 48"X30" SHALL HAVE A CORRUGATED POLYPROPYLENE OR POLYETHYLENE PLASTIC SIGN BASE.

1. TWO WARNING LIGHTS SHALL BE PROVIDED ON THE CENTER BARRICADE AND A MINIMUM OF ONE WARNING LIGHT SHALL BE PROVIDED ON EACH OF THE OTHER BARRICADES WITHIN THE ROADWAY LIMITS. SPACING OF THE WARNING LIGHTS SHALL BE UNIFORM TO THE EDGE OF ROADWAY AS SHOWN (APPROX. 8 FOOT LIGHT SPACING.
2. THESE SIGNS AND BARRICADES ARE NOT REQUIRED IF ROAD CLOSURE BEGINS AT AN INTERSECTION.
3. FOR ROAD CLOSURE WITHOUT LOCAL ACCESS TO PROJECT, SEE ROAD CLOSURE BARRICADE DETAIL "D".
4. FOR ROAD CLOSURE WITH LOCAL ACCESS TO PROJECT, SEE ROAD CLOSURE BARRICADE DETAIL "E".
5. FOR BRIDGE OR CULVERT REPLACEMENTS, SUBSTITUTE "BRIDGE OUT" INSTEAD OF "ROAD CLOSED" ON R11 - 2 AND R11 - 3 SIGNS.
6. INSTALL DETOUR AND COMMUNITY GUIDE SIGNS AND ARROWS ONLY IF SPECIFIED IN THE CONTRACT. IF THERE ARE EXISTING ROUTE MARKER ASSEMBLIES THAT WILL REMAIN IN PLACE, ADJUST THE LOCATION OF THE DETOUR ROUTE SIGNS TO CORRESPOND WITH THE EXISTING ASSEMBLIES. MODIFY EXISTING SIGNS WHERE POSSIBLE. SEE SPECIFIC PROJECT DETOUR SIGNING DETAIL SHEETS. IF DETOUR SIGNS ARE BEING INSTALLED BY OTHERS, PLACE THE CONTRACTED TRAFFIC CONTROL SIGNS TO ALLOW FOR PLACEMENT OF ALL WARNING, DETOUR AND GUIDE SIGNS AS SHOWN.
7. "EAST" CARDINAL DIRECTION MARKERS AND RIGHT TURN ARROWS ARE SHOWN. USE OTHER CARDINAL DIRECTIONS AND ARROWS AS APPROPRIATE.

BARRICADES AND SIGNS FOR VARIOUS CLOSURES

STATE OF WISCONSIN
DEPARTMENT OF TRANSPORTATION

APPROVED
November 2025 — DATE
/S/ Andrew Heidtke — WORK ZONE ENGINEER
FHWA

6
SDD 15C02-10b

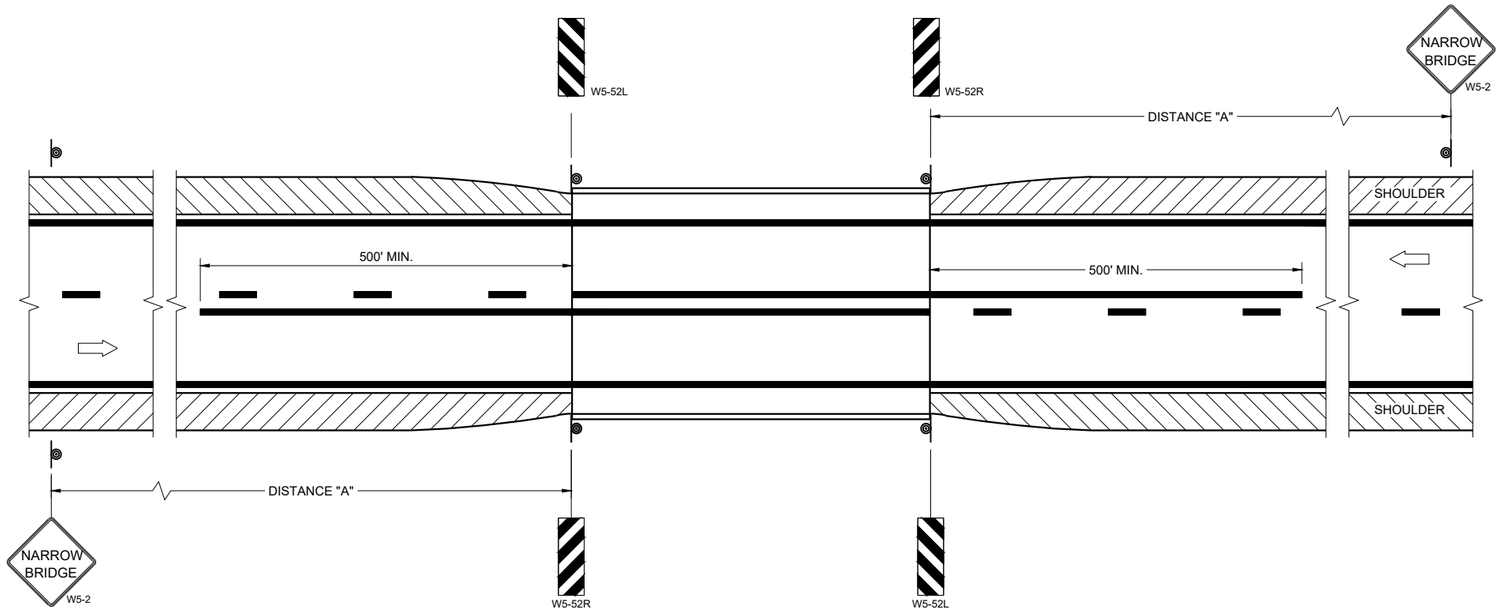

SITUATION 1

WARRANTING CRITERIA:
BRIDGE WIDTH IS AT LEAST 16 FEET BUT LESS THAN 24 FEET.

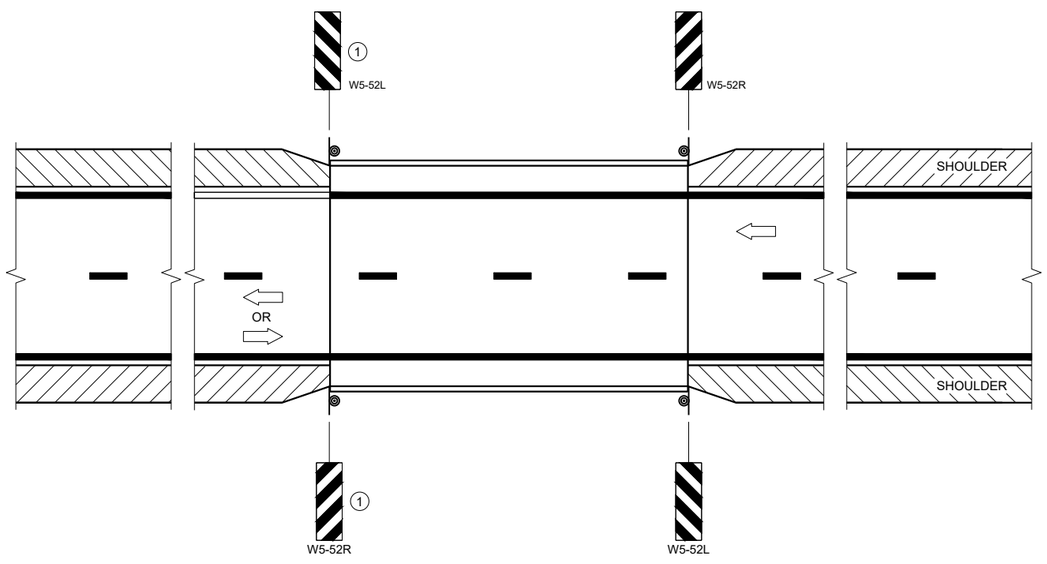

SITUATION 2

WARRANTING CRITERIA:
1. BRIDGE WIDTH IS AT LEAST 24 FEET AND
2. BRIDGE SHOULDER WIDTH IS LESS THAN 6 FEET

GENERAL NOTES

DETAILS OF TRAFFIC CONTROL DEVICES AND INSTALLATION NOT SHOWN ON THE DRAWING SHALL CONFORM TO THE PERTINENT REQUIREMENTS OF THE STANDARD SPECIFICATIONS, THE SPECIAL PROVISIONS, AND THE MANUAL ON UNIFORM TRAFFIC CONTROL DEVICES.

LOCATE W5-52 SIGN POST(S) BEHIND GUARDRAIL WHEN PRESENT.

PLACE THE EDGE OF THE W5-52 SIGN IN LINE WITH FACE OF CURB OR PARAPET.

ON BRIDGE ONLY PROJECTS, PLACE 300 FEET OF EDGELINE.

OMIT EDGELINES ON ROADWAYS WITHOUT EXISTING EDGELINES.

(1) OMIT ON ONE-WAY TRAVELED WAYS.

LEGEND

SIGN ON PERMANENT SUPPORT

DIRECTION OF TRAFFIC

DISTANCE TABLE

POSTED OR 85TH PERCENTILE SPEED	DISTANCE "A"
25	150'
30	200'
35	250'
40	300'
45	400'
50	550'
55	700'

SIGNING AND MARKING FOR TWO LANE BRIDGES

STATE OF WISCONSIN
DEPARTMENT OF TRANSPORTATION

APPROVED
May 2023 — DATE
/S/ Jeannie Silver — Statewide Pavement Marking Engineer
FHWA

6

SDD 15C06-12

GENERAL NOTES

1. REFLECTIVE SHEETING SHALL FOLLOW THE REQUIREMENTS IN THE APPROVED PRODUCTS LISTING FOR SIGN SHEETING.
2. LOCATION OF WARNING LIGHTS WHEN SHOWN ON THE PLAN.

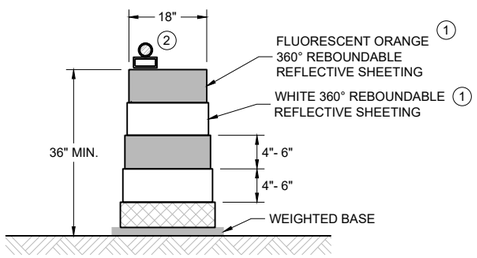

DRUM

BALLAST WIDTHS
RANGE FROM 24"-36"

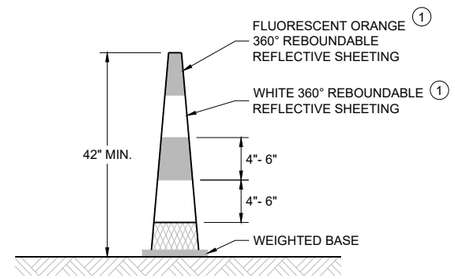

42" CONE

DO NOT USE IN TAPERS
½ SPACING OF DRUMS

BALLAST WIDTHS
RANGE FROM 14"-20"

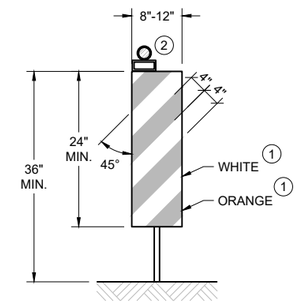

VERTICAL PANEL

THE STRIPES SHALL SLOPE DOWNWARD TO
THE TRAFFIC SIDE FOR CHANNELIZATION.

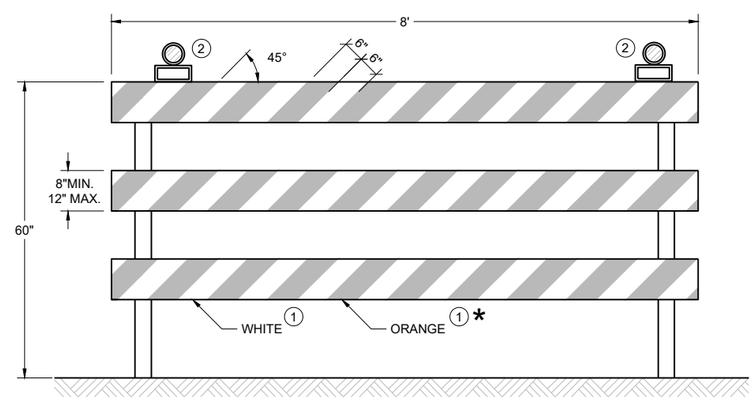

TYPE III BARRICADE

IF SIGN MOUNTED, DO NOT COVER MORE THAN 50% OF THE TOP
TWO RAILS OR 33% OF THE TOTAL AREA OF THE THREE RAILS.

* IF USED FOR A PERMANENT APPLICATION USE RED SHEETING.

CHANNELIZING DEVICES
DRUMS, CONES, BARRICADES
AND VERTICAL PANELS

STATE OF WISCONSIN
DEPARTMENT OF TRANSPORTATION

APPROVED
February 2026 — DATE
/S/ Andrew Heidtke — WORK ZONE ENGINEER

FHWA

6
SDD 15C11-11b

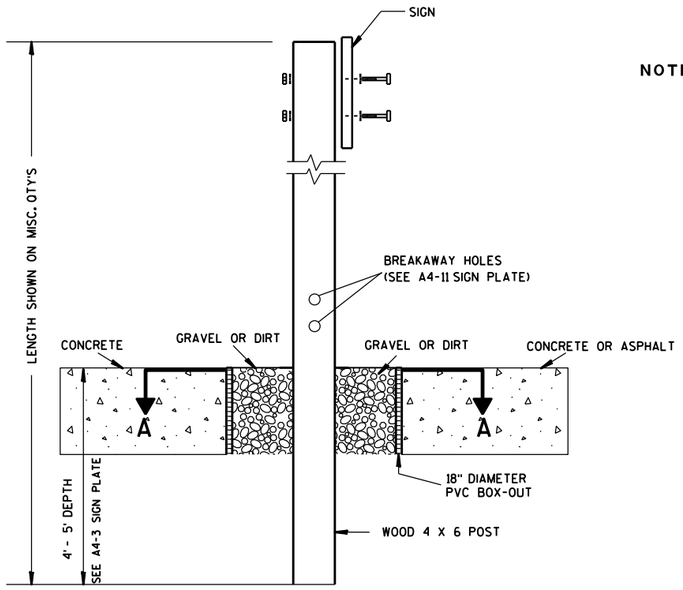

ELEVATION VIEW

DETAIL OF WOOD 4 X 6 SIGN POST IN BOX-OUT

NOTES:
1. ALL MATERIAL TO BE APPROVED BY ENGINEER PRIOR TO INSTALLATION
2. SEE SIGN PLATE A4-8 FOR SIGN HARDWARE REQUIREMENTS
3. 18 INCH X 18 INCH SQUARE BOX-OUTS MAY BE USED FOR INSTALLATIONS IN EXISTING CONCRETE OR ASPHALT LOCATIONS.

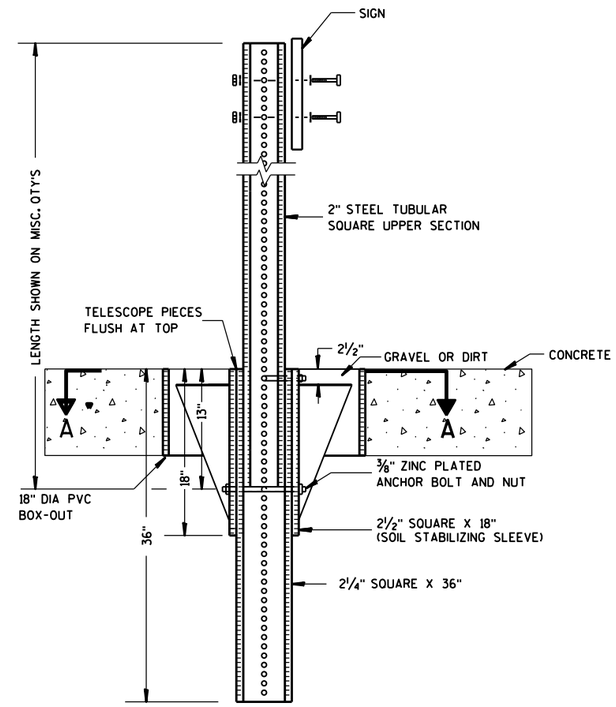

ELEVATION VIEW

DETAIL OF STEEL 2 X 2 SIGN POST IN BOX-OUT

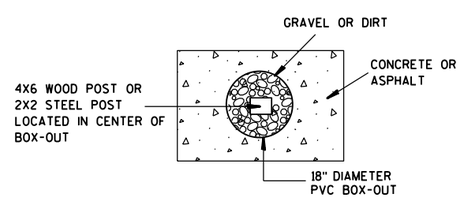

PLAN VIEW

FOR NEW CONCRETE/ASPHALT INSTALLATIONS

SIGN POST
BOX-OUTS
A4-3B

WISCONSIN DEPT OF TRANSPORTATION

APPROVED Matthew R Rauch
for State Traffic Engineer

DATE 1/27/14 PLATE NO. A4-3B.1

PROJECT NO:	HWY:	COUNTY:		SHEET NO:	E

URBAN AREA

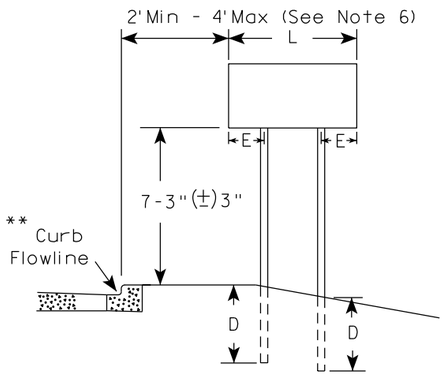

RURAL AREA (See Note 3)

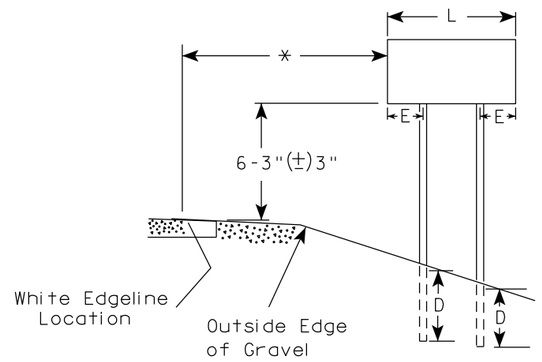

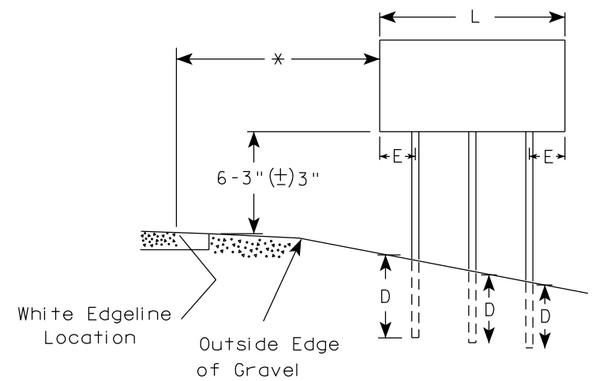

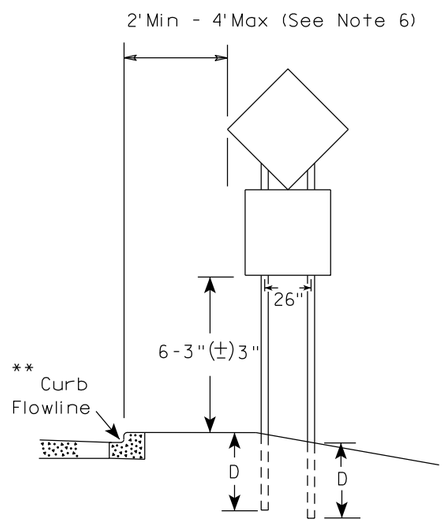

48" DIAMOND WARNING SIGN

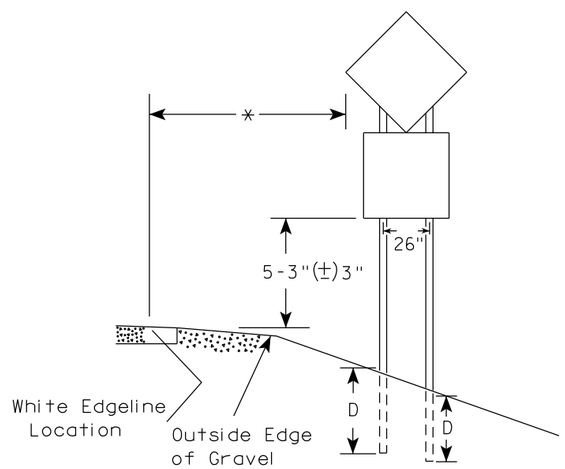

48" DIAMOND WARNING SIGN

GENERAL NOTES

1. For 3 or 4 post installations, individual post spacing shall be greater than 3'-6".
2. See tables below for required number of posts.
3. For expressways and freeways, mounting height is 7'-3" (±) 3" or 6'-3" (±) 3" depending upon existence of sub-sign.
4. The (±) tolerance for mounting height is 3 inches.
5. J-Assemblies are considered to be one sign for mounting height.
6. Offset distance shall be consistent with existing signs or consistent throughout length of project.
7. Folding signs shall be mounted at a height of 5'-3" (±) 3" or as directed by the engineer.
8. The Double Arrow sign (W12-1) shall be mounted at a height of 2'-3" (±) 3". The Chevron sign (W1-8), Roundabout Chevron panel (R6-4B), Clearance Markers (W5-52), Mile Markers (D10 series), In Road Object Markers (W5-54) & End of Road Markers (W5-56) shall be mounted at a height of 4"-3" (±) 3".

* 6 feet from edge of a paved shoulder or 12 feet from the edge of pavement (edge line location) or 2 feet from outside edge of gravel, whichever is greater unless directed by project engineer.

** The existence of curb and gutter does not in itself mandate the vertical clearance illustrated. That height is typically measured where there is sidewalk adjacent to the roadway or parking is permitted. In the absence of sidewalk vertical clearance is measured from the top of the curb. Offset of signs is measured from the flow line.

*** See A4-3 sign plate for signs 4' or less in width and less than 20 S.F. in area.

SIGN SHAPE OTHER THAN DIAMOND (TWO POSTS REQUIRED)	
L	E
*** Greater than 48" Less than 60"	12"
60" to 108"	L/5

SIGN SHAPE OTHER THAN DIAMOND (THREE POSTS REQUIRED)	
L	E
Greater than 108" to 144"	12"

POST EMBEDMENT DEPTH

Area of Sign Installation (Sq. Ft.)	D (Min)
20 or Less	4'
Greater than 20	5'

TYPICAL INSTALLATION OF TYPE II SIGNS ON MULTIPLE POSTS

WISCONSIN DEPT OF TRANSPORTATION

APPROVED Matthew R Rauch
for State Traffic Engineer

DATE 12/6/23 PLATE NO. A4-4.16

PROJECT NO:	HWY:	COUNTY:		SHEET NO: 24	E

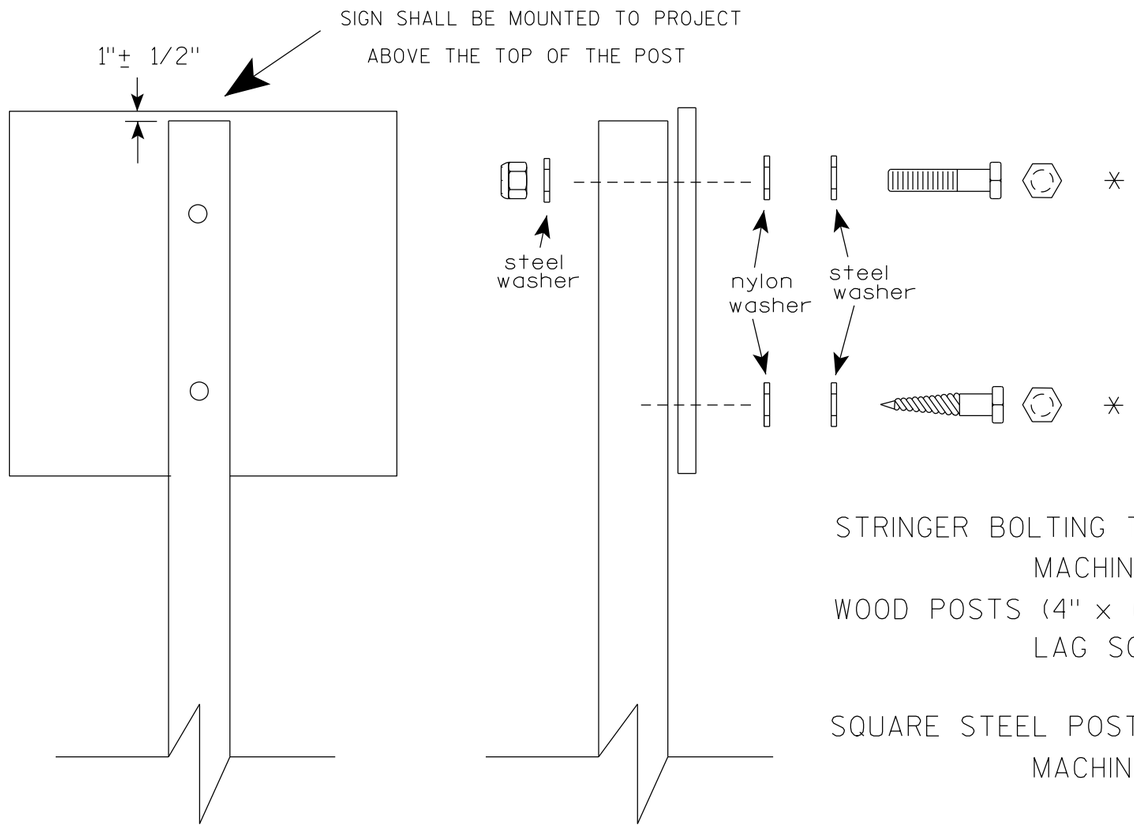

Nuts, bolts and lags used for mounting signs shall have hexagonal heads and shall be either :

a. Hot dip galvanized in accordance with ASTM Designation: A 153, Class D, or SC 3

b. Electro-galvanized in accordance with ASTM Designation : B 633, TYPE III, SC 3.

Threads on bolts and nuts shall be manufactured with sufficient allowance for the cadmium plate or galvanized coating to permit the nuts to run freely on the bolts.

STRINGER BOLTING TO ALUMINUM SIGNS (SEE SIGN PLATE A4-18)

MACHINE BOLTS - 5/16" X 1-3/4" Length w/ lock nuts

WOOD POSTS (4" x 6")

LAG SCREWS - 3/8" X 3" (NO STRINGERS ON BACK OF SIGN)
3/8" X 4" (STRINGERS ON BACK OF SIGN)

SQUARE STEEL POSTS (2" x 2")

MACHINE BOLTS - 3/8" X 3-1/4" Length w/ nuts (NO STRINGER ON BACK OF SIGN)
3/8" X 5" Length w/ nuts (STRINGERS ON BACK OF SIGN)

RIVETS - 9/32 " (6605-9-6) BULB-TITE, TRI-FOLD, ALUMINUM BODY/MANDREL
O.D. FLANGE .720-.765 INCH, GRIP RANGE .042-.375 INCH

WASHERS (ALL POSTS) -

1-1/4" O.D. X 3/8" I.D. X 1/16" STEEL
1-1/4" O.D. X 3/8" I.D. X .080 NYLON

* Two different fastening systems are shown for illustration purposes. On any individual sign, either one or the other system shall be used. Actual number of fasteners per sign varies with the sign area, but normally there are two. For a single post installation, all signs greater than 9 sq. ft. require the use of 3 fasteners.

ATTACHMENT OF SIGNS TO POSTS

WISCONSIN DEPT OF TRANSPORTATION

APPROVED Matthew R Rauch
for State Traffic Engineer

DATE 4/1/2020 PLATE NO. A4-8.9

TELESCOPIC TUBING ANCHORS
TWO PIECE SYSTEM

2 1/4" SQUARE
12 GAUGE
PERFORATED
GALVANIZED FINISH

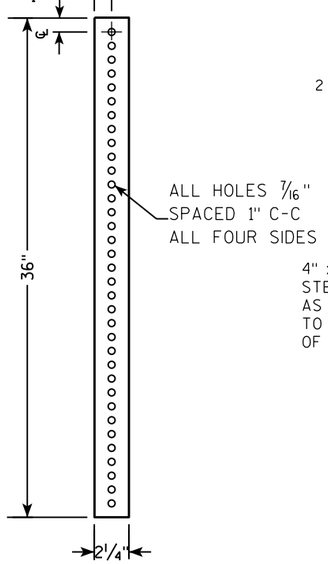

2 1/2" SQUARE
12 GAUGE
OMNI-DIRECTIONAL
PERFORATED
SOIL STABILIZING SLEEVE
GALVANIZED FINISH

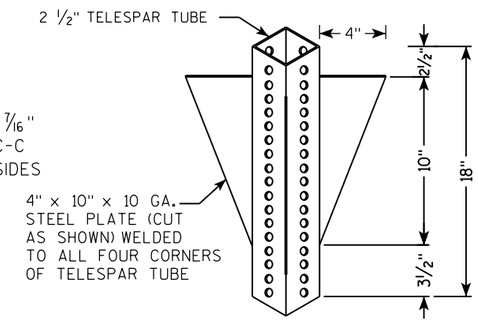

DETAIL OF TUBULAR STEEL SIGN POST
(IN POURED CONCRETE OR ASPHALT)

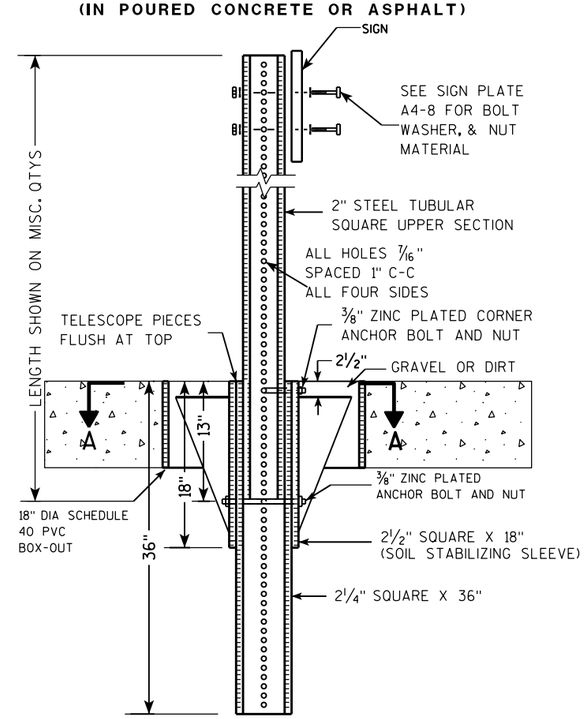

DETAIL OF TUBULAR STEEL SIGN POST
(IN LOCATIONS OTHER THAN POURED CONCRETE OR ASPHALT)

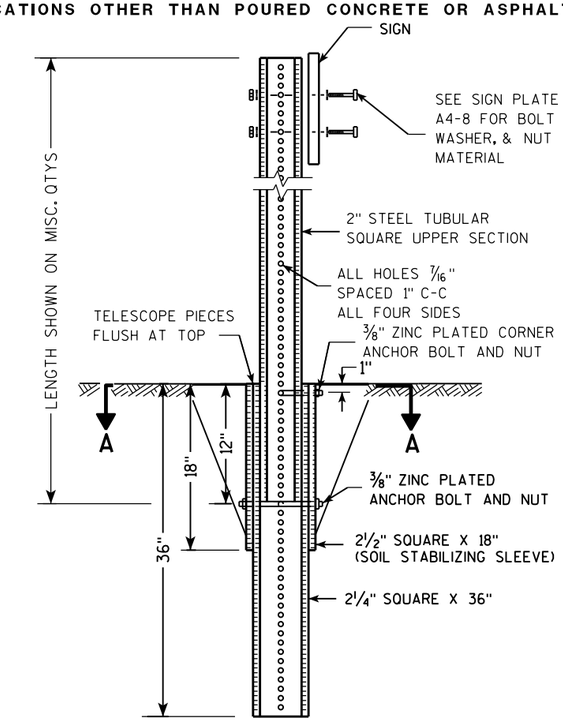

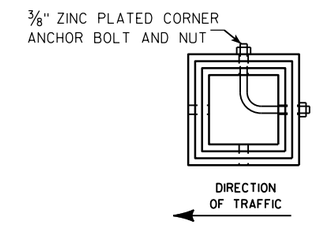

SECTION A-A

Area of Sign Installation (Sq. Ft.)	Number of Required Posts
9 or less	1
Greater than 9 less than or equal to 18	2
Greater than 18 less than or equal to 27	3

Signs wider than 3 feet or larger than 9 sq. ft shall be mounted on multiple posts (see above table).

TUBULAR STEEL
SIGN POST
A4-9

WISCONSIN DEPT OF TRANSPORTATION

APPROVED *Matthew R Rauch*
for State Traffic Engineer

DATE 2/05/15 PLATE A4-9.9

7 7

PROJECT NO:	HWY:	COUNTY:		SHEET NO:	E

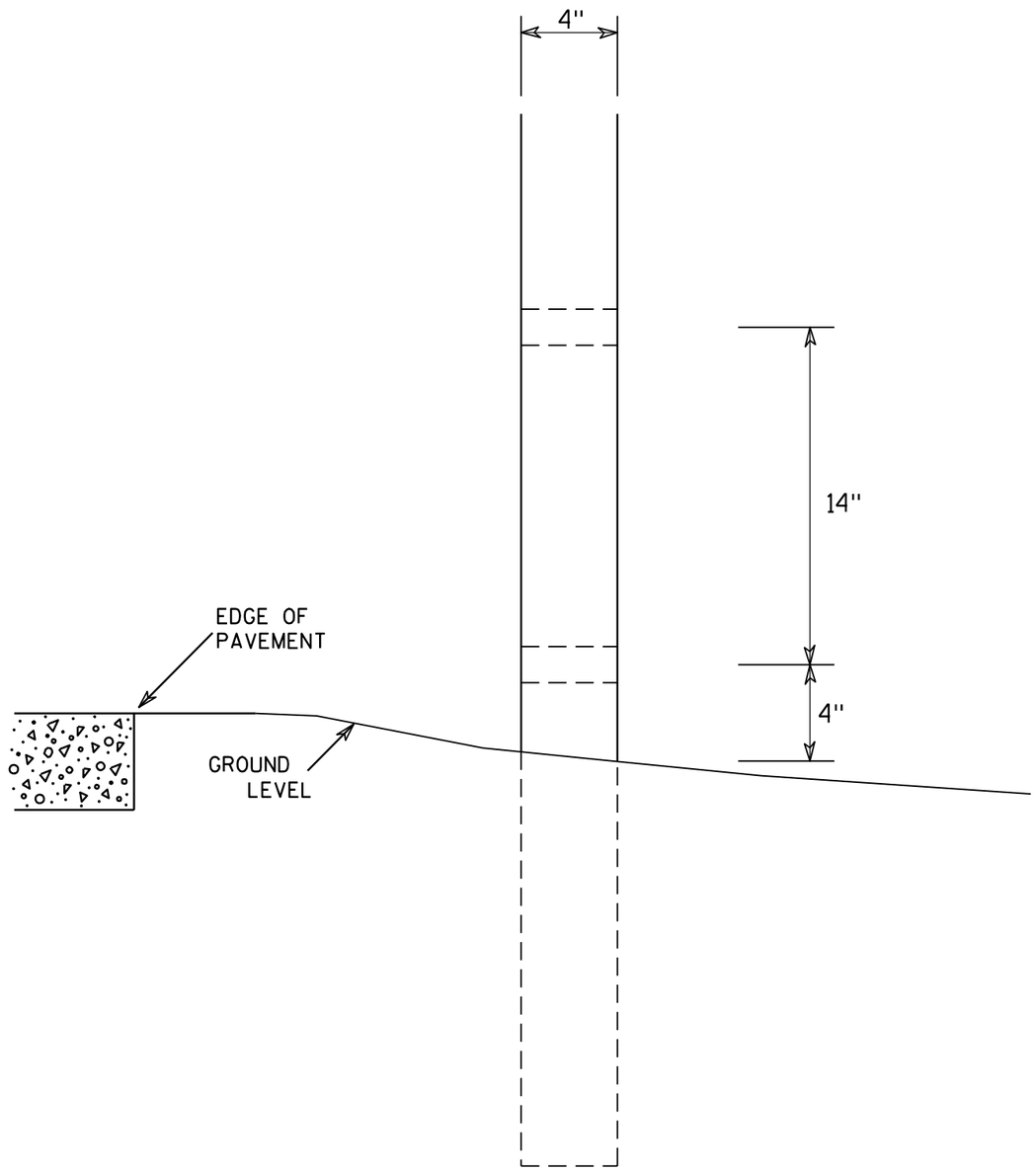

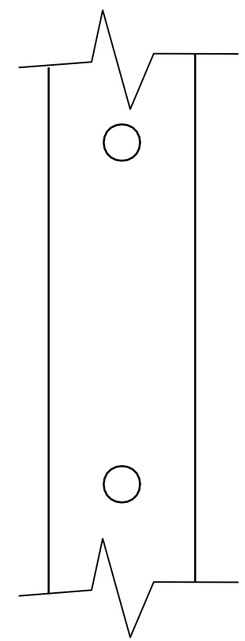

SIDE VIEW

GENERAL NOTES

1. All 4 x 6 Wood Posts shall be modified by having two 1½" diameter holes drilled perpendicular to the roadway centerline.

7

7

4 X 6 WOOD POST MODIFICATIONS

WISCONSIN DEPT OF TRANSPORTATION

APPROVED Chester J Spang for State Traffic Engineer

DATE 3/27/97 PLATE NO. A4-11.2

PROJECT NO:	HWY:	COUNTY:		SHEET NO: 27	E

BANDING

SINGLE SIGN

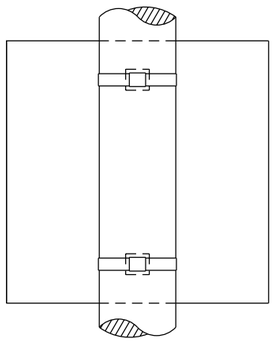

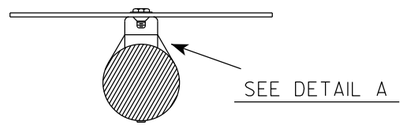

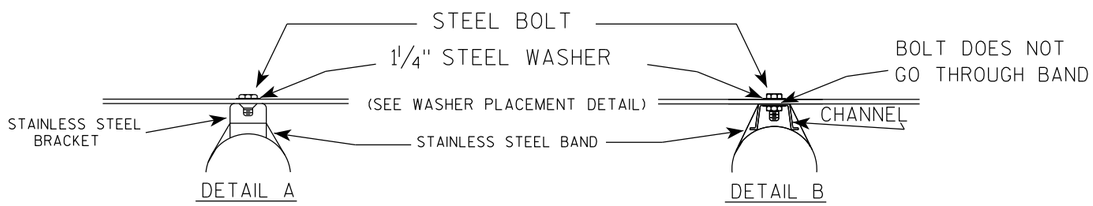

WASHER PLACEMENT

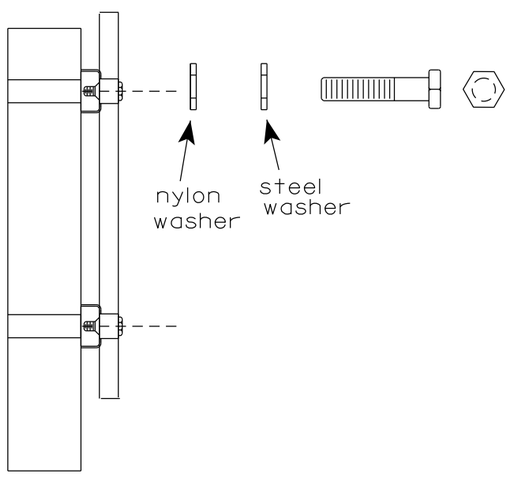

WASHERS (ALL POSTS) -
1-1/4" O.D. X 3/8" I.D. X 1/16" STEEL
1-1/4" O.D. X 3/8" I.D. X .080 NYLON
FOR ALL TYPE H SIGNS

GENERAL NOTES

1. Any sign over 3 feet in width shall use the V-Block banding method. See A5-10 standard plate.
2. Signs 3 feet or greater in height shall have three bracket bands installed. Signs less than 3 feet in height shall have two bracket bands installed.
3. Banding and assembly bracket shall be stainless steel. All bands shall be ¾" in width and 0.025" thickness.
4. ALL SIGN MOUNTING BOLTS AND WASHERS SHALL BE EITHER:
   a. Hot dip or mechanically galvanized in accordance with ASTM Designation: A 153, Class D
   b. Electro-galvanized in accordance with ASTM designation: B 633, Type III, SC 3

"J" ASSEMBLY

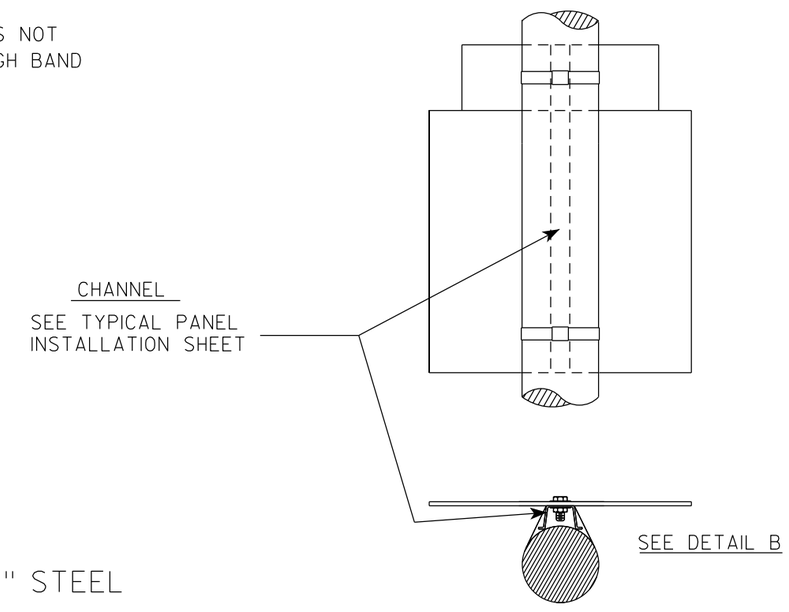

STANDARD SIGN
SIGN BANDING DETAILS

WISCONSIN DEPT OF TRANSPORTATION

APPROVED Matthew R Rauch
for State Traffic Engineer

DATE 6/10/19 PLATE NO. A5-9.4

PROJECT NO:	HWY:	COUNTY:		SHEET NO: 28	E

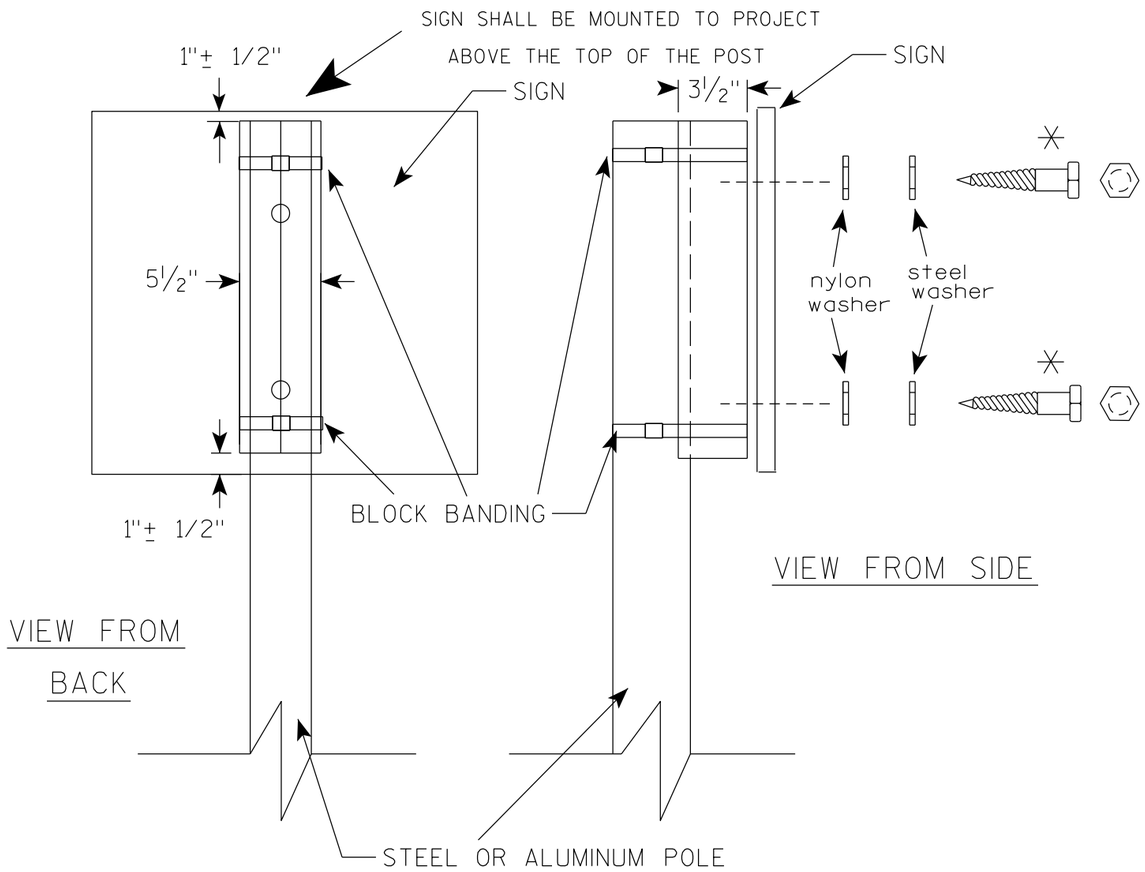

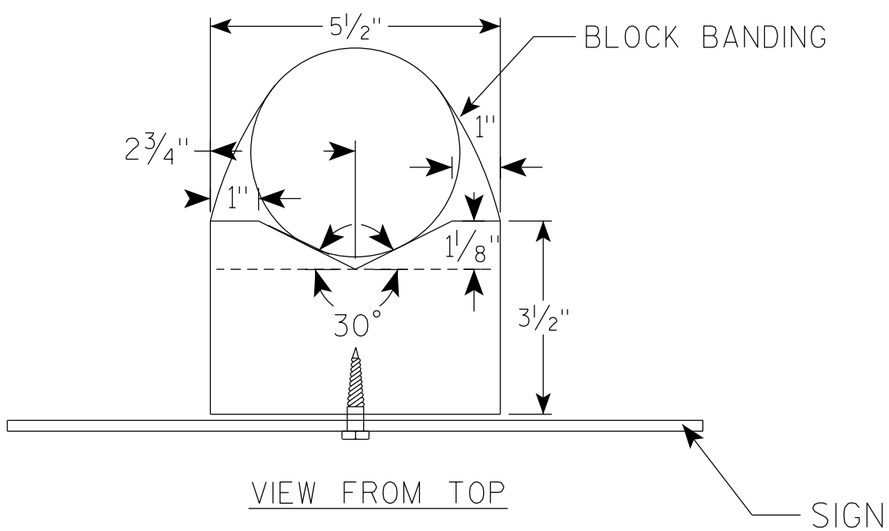

GENERAL NOTES

1. WOOD 4"X6" POST MATERIAL SHALL CONFORM TO 507.2.2 OF THE WisDOT STANDARD SPECIFICATIONS
2. BLOCK BANDING AND CLIPS SHALL BE STAINLESS STEEL, 3/4" WIDTH AND 0.025" THICKNESS
3. SIGNS 3' OR GREATER IN HEIGHT SHALL UTILIZE 3 BLOCK BANDS. SIGNS UNDER 3' IN HEIGHT SHALL UTILIZE 2 BLOCK BANDS
4. ACTUAL NUMBER OF FASTENERS PER SIGN VARIES WITH THE SIGN AREA, BUT NORNALLY THERE ARE TWO. FOR SIGNS GREATER THAN 9 S.F. 3 FASTENERS SHALL BE USED.
5. ALL SIGN MOUNTING BOLTS AND WASHERS SHALL BE EITHER:
   a. Hot dip or mechanically galvanized in accordance with ASTM Designation: A 153, Class D
   b. Electro-galvanized in accordance with ASTM Designation : B 633, TYPE III, SC 3
6. ALL BOLTS SHALL HAVE HEXAGONAL HEADS.
7. STEEL WASHERS SHALL BE 1 1/4" O.D. X 3/8" I.D. X 1/16"
8. NYLON WASHERS SHALL BE 1 1/4" O.D. X 3/8" I.D. X .080 FOR TYPE H OR TYPE F FACE SIGN

✳ LAG BOLTS SHALL BE 3/8" X 2 1/2"

7

7

BLOCK BANDING DETAIL
(V-BLOCK OPTION)

WISCONSIN DEPT OF TRANSPORTATION

APPROVED Matthew R Rauch
for State Traffic Engineer

DATE 4/19/2022 PLATE NO. A5-10.3

PROJECT NO:				SHEET NO: 29	E

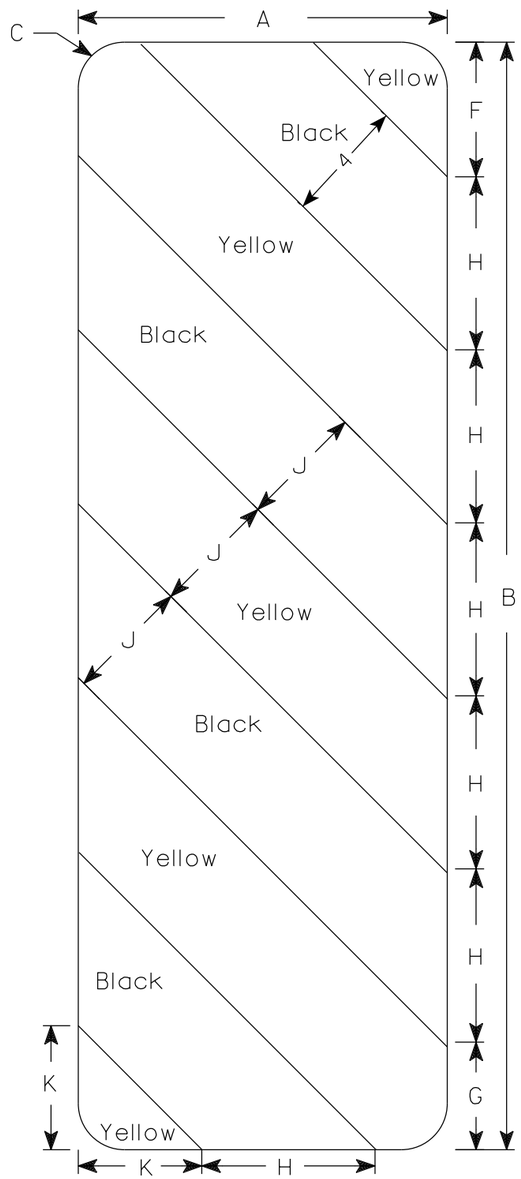

W5-52L

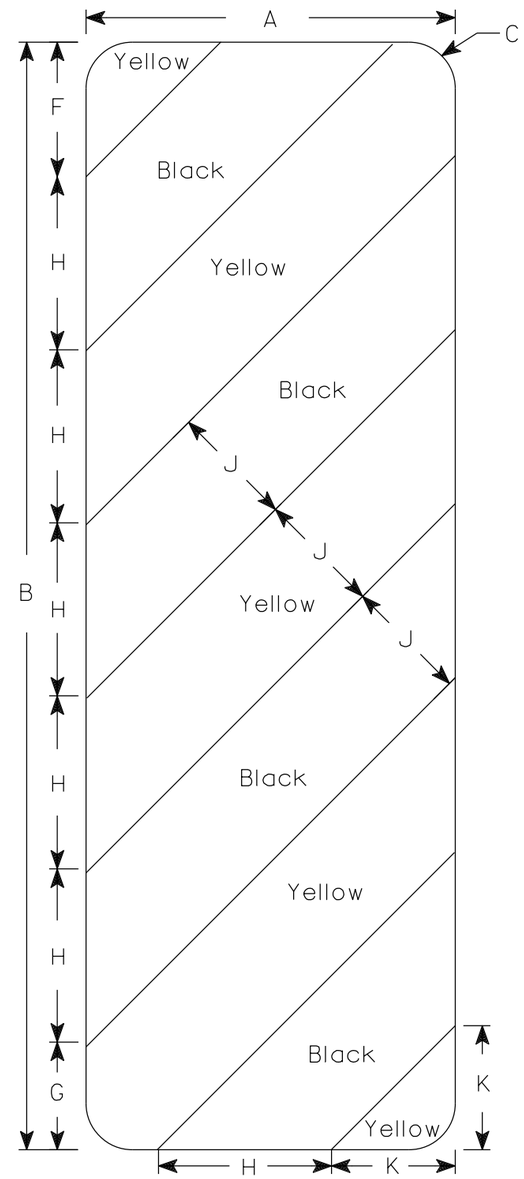

W5-52R

NOTES

1. Sign is Type II - Type F Reflective
2. Color:
   Background - Yellow
   Message - Black
3. Alternate colors of stripes as shown.

SIZE	A	B	C	D	E	F	G	H	I	J	K	L	M	N	O	P	Q	R	S	T	U	V	W	X	Y	Z	Area sq. ft.
1																											
2S	12	36	1 1/2			4 3/8	3 1/2	5 5/8	45°	4	4																3.0
2M	12	36	1 1/2			4 3/8	3 1/2	5 5/8	45°	4	4																3.0
3	18	54	1 1/2			6	5 1/2	8 1/2	45°	6	6 9/16																6.75
4																											
5																											

STANDARD SIGN
W5-52L & W5-52R

WISCONSIN DEPT OF TRANSPORTATION

APPROVED Matthew R Rauch
For State Traffic Engineer

DATE 3/4/2024 PLATE NO. W5-52.10

PROJECT NO: | HWY: | COUNTY: | SHEET NO: 30 | E

STATE PROJECT NUMBER

5738-00-75

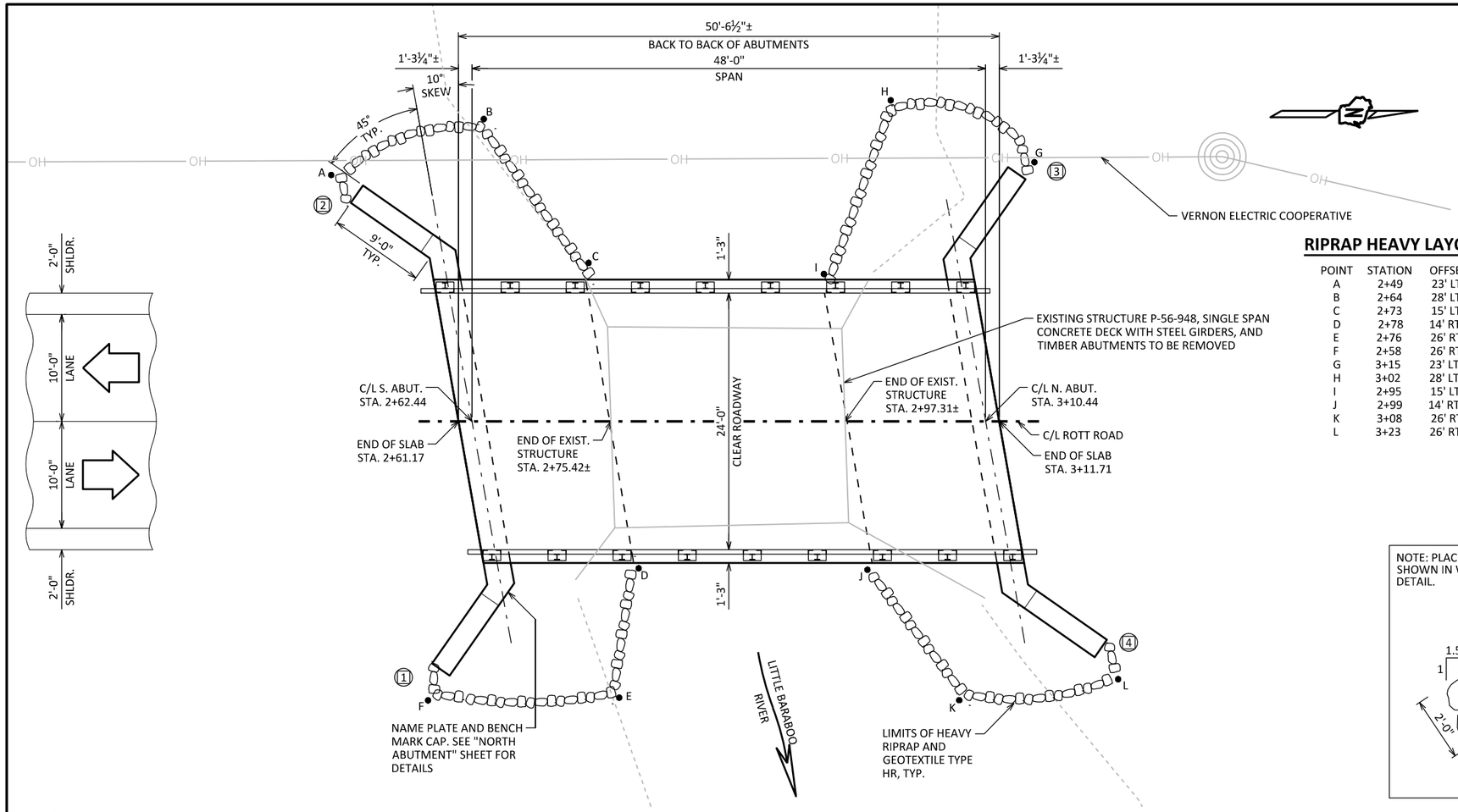

INDICATES WING NUMBER

PLAN

SINGLE SPAN FLAT SLAB

RIPRAP HEAVY LAYOUT

POINT	STATION	OFFSET
A	2+49	23' LT
B	2+64	28' LT
C	2+73	15' LT
D	2+78	14' RT
E	2+76	26' RT
F	2+58	26' RT
G	3+15	23' LT
H	3+02	28' LT
I	2+95	15' LT
J	2+99	14' RT
K	3+08	26' RT
L	3+23	26' RT

DESIGN DATA

LIVE LOAD:

DESIGN LOADING: HL-93
INVENTORY RATING FACTOR: RF = 1.10
OPERATING RATING FACTOR: RF = 1.42
WISCONSIN STANDARD PERMIT VEHICLE (WIS.-SPV): 250 (KIPS)

STRUCTURE IS DESIGNED FOR A FUTURE WEARING SURFACE OF 20 POUNDS PER SQUARE FOOT.

MATERIAL PROPERTIES:

CONCRETE MASONRY:
SUPERSTRUCTURE — f'c = 4,000 P.S.I.
ALL OTHER — f'c = 3,500 P.S.I.

BAR STEEL REINFORCEMENT:
GRADE 60 — fy = 60,000 P.S.I.

FOUNDATION DATA

ABUTMENTS TO BE SUPPORTED ON HP 10 X 42 PILING DRIVEN TO A REQUIRED DRIVING RESISTANCE OF 180 TONS ** PER PILE AS DETERMINED BY THE MODIFIED GATES DYNAMIC FORMULA.
ESTIMATED 16 FEET LONG FOR SOUTH ABUTMENT AND 17 FEET LONG FOR NORTH ABUTMENT.

**THE FACTORED AXIAL RESISTANCE OF PILES IN COMPRESSION USED FOR DESIGN IS THE REQUIRED DRIVING RESISTANCE MULTIPLIED BY A RESISTANCE FACTOR OF 0.5 USING MODIFIED GATES TO DETERMINE PILE CAPACITY.

TRAFFIC VOLUME

ROTT ROAD
ADT = <100 (2046)
R.D.S = 25 M.P.H.

HYDRAULIC DATA

100-YEAR FREQUENCY:

Q_{100}= 3540 C.F.S.
Q_{BRIDGE} = 2526 C.F.S.
$Q_{ROADWAY}$ = 1014 C.F.S.
V_{100}= 7.5 F.P.S.
HW_{100}= EL. 973.17
WATERWAY AREA = 338 SQ. FT.
DRAINAGE AREA = 13.1 SQ. MI.
SCOUR CRITICAL CODE = 5

ROADWAY OVERTOPPING

FREQUENCY = 20 YEARS
Q = 1885 C.F.S.
HW. = EL. 971.65

2-YEAR FREQUENCY:

Q_2= 425 C.F.S.
V_2= 2.1 F.P.S.
HW_2= EL. 968.58

NOTE: PLACE HEAVY RIPRAP AS SHOWN IN WING ELEVATION DETAIL.

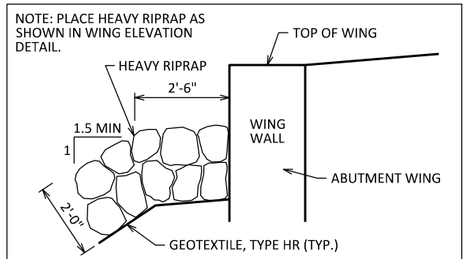

TYPICAL FILL SECTION AT WING

LIST OF DRAWINGS

1. GENERAL PLAN
2. CROSS SECTION & QUANTITIES
3. SUBSURFACE EXPLORATION
4. SOUTH ABUTMENT
5. SOUTH ABUTMENT DETAILS
6. NORTH ABUTMENT
7. NORTH ABUTMENT DETAILS
8. SUPERSTRUCTURE
9. SUPERSTRUCTURE DETAILS
10. TUBULAR STEEL RAILING TYPE 'M'

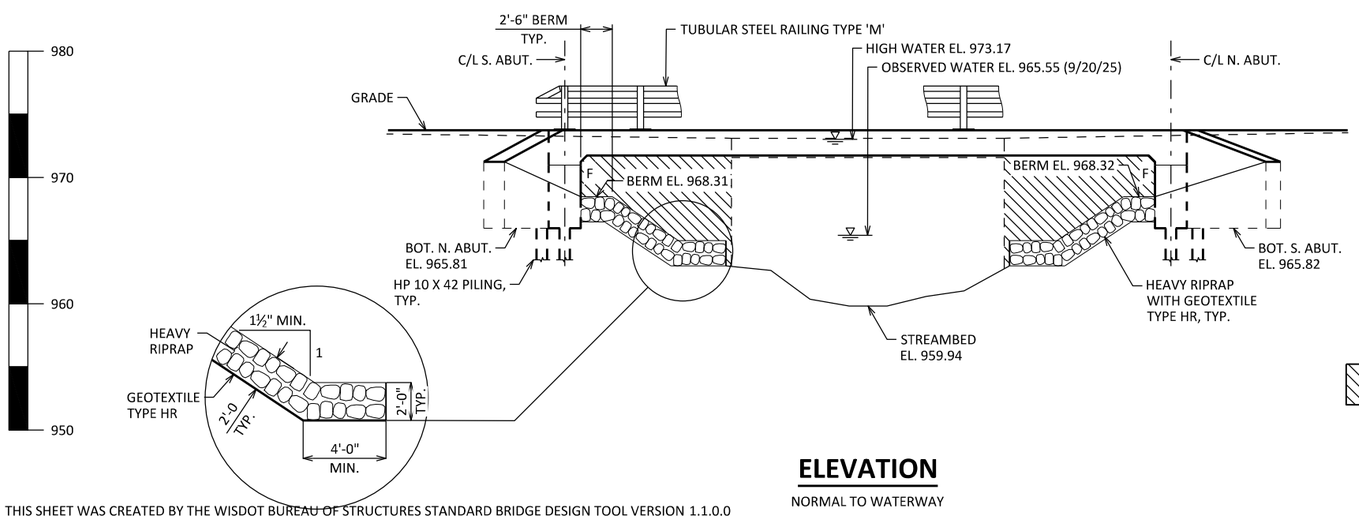

ELEVATION

NORMAL TO WATERWAY

EXCAVATION AS INDICATED IN THE HATCH AREAS, TO BE INCLUDED IN THE BID ITEM "EXCAVATION FOR STRUCTURES BRIDGES B-56-256".

STRUCTURE DESIGN CONTACTS:

JEREMY KRACHEY 608-988-7059
AARON BONK 608-261-0261

THESE PLANS ARE BASED UPON STANDARD BRIDGE PLANS DEVELOPED AND MAINTAINED BY THE WISCONSIN DEPARTMENT OF TRANSPORTATION THROUGH THE USE OF THE WISDOT STANDARD BRIDGE DESIGN TOOL. THE UNDERSIGNED DESIGNER CERTIFIES THE ACCURACY OF THE BRIDGE TYPE, SIZE AND LOCATION, HYDRAULICS AND FOUNDATION SUPPORT, AND INFORMATION IN THE PLANS THAT IS NOT PART OF THE STANDARD PLANS SUPPLIED BY THE DEPARTMENT. THE DESIGNER FURTHER CERTIFIES THAT USE OF THE STANDARD BRIDGE DESIGN TOOL FOR DEVELOPMENT OF THIS PLAN IS CONSISTENT WITH THE GUIDANCE PROVIDED IN THE WISDOT BRIDGE MANUAL.

WISCONSIN PROFESSIONAL ENGINEER
JEREMY F. KRACHEY
E-37258
WAUZEKA
WIS.

Digitally signed by JEREMY F KRACHEY, PE
DN: C=US, E=KRACHEY@TEAMENGINC.COM, O="TEAM ENGINEERING, INC.", CN="JEREMY F KRACHEY, PE"
Date: 2026.04.23 15:03:30-05'00'

NO.	DATE	REVISION	BY

ORIGINAL PLANS PREPARED BY: TEAM ENGINEERING

STATE OF WISCONSIN
DEPARTMENT OF TRANSPORATION

ACCEPTED JLR 05/11/26
CHIEF STRUCTURES DESIGN ENGINEER DATE

STRUCTURE B-56-257

ROTT ROAD OVER LITTLE BARABOO RIVER

COUNTY	TOWN
SAUK	WOODLAND

DESIGN SPEC.
AASHTO LRFD BRIDGE DESIGN SPECIFICATION

DESIGNED BY	DESIGNED CK'D	DRAWN BY	PLANS CK'D
JFK	JLB	BAS	RDG

GENERAL PLAN

SHEET 1 OF 10
31

8

8

SCALE = SCALE

THIS SHEET WAS CREATED BY THE WISDOT BUREAU OF STRUCTURES STANDARD BRIDGE DESIGN TOOL VERSION 1.1.0.0

I.D. DATE:

STATE PROJECT NUMBER

5738-00-75

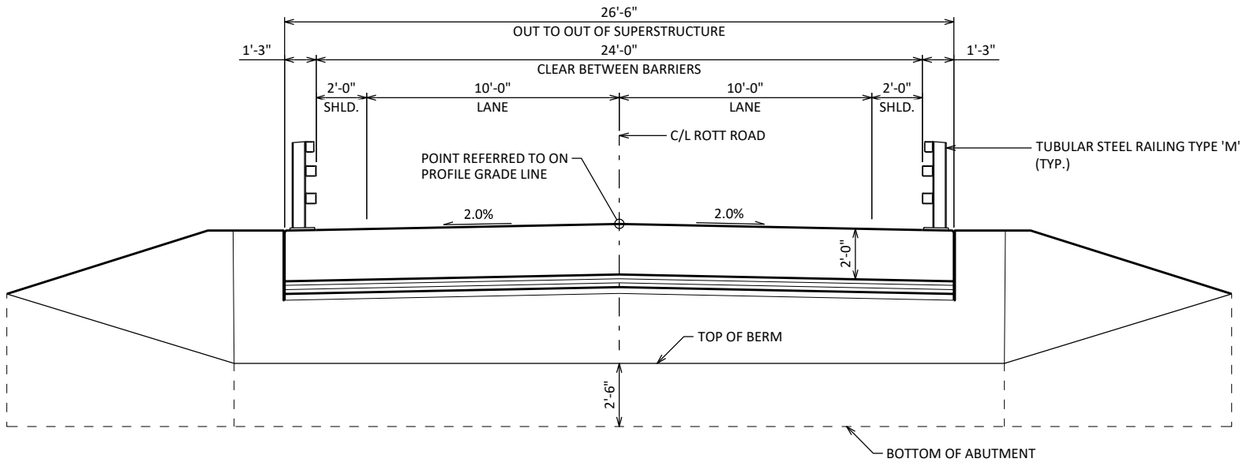

CROSS SECTION THRU ROADWAY

LOOKING UPSTATION
(PILING NOT SHOWN FOR CLARITY)

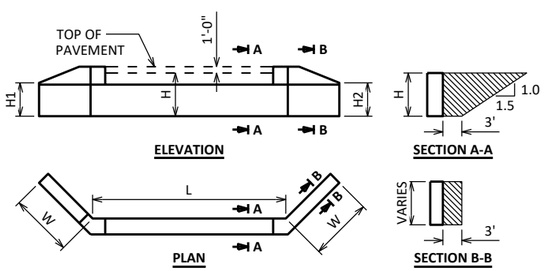

ABUTMENT BACKFILL DIAGRAM

L = ABUTMENT BODY LENGTH AT BACKFACE (FT)
H = AVERAGE ABUTMENT FILL HEIGHT (FT)
H1 = WING 1 HEIGHT AT TIP (FT)
H2 = WING 2 HEIGHT AT TIP (FT)
W = WING LENGTH (FT)
EF = EXPANSION FACTOR (1.20 FOR CY BID ITEMS AND 1.00 FOR TON BID ITEMS)
V_{CF} = (L)(3.0')(H) + (L)(0.5)(1.5H)(H) + (3')(0.5)(H1+H2+H+H)(W)
V_{CY} = V_{CF}(EF)/27
V_{TON} = V_{CY}(2.0)

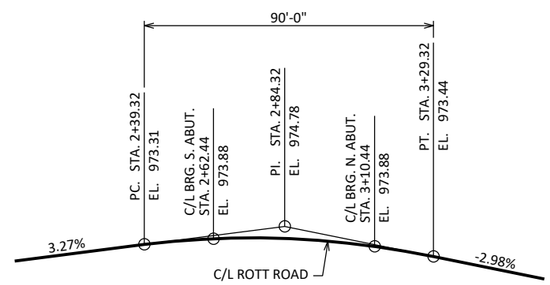

PROFILE GRADE LINE

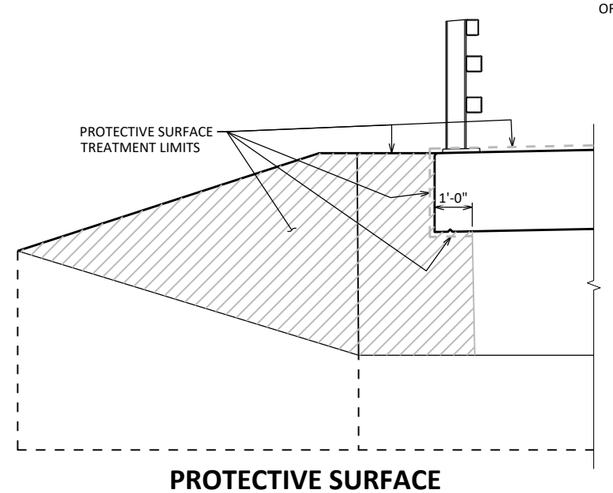

PROTECTIVE SURFACE TREATMENT DETAILS

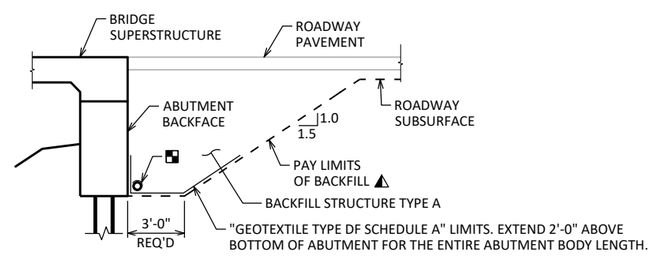

TYPICAL SECTION THRU ABUTMENT

▲ BACKFILL PAY LIMITS. BACKFILL BEYOND PAY LIMITS SHALL BE INCIDENTAL TO EXCAVATION FOR STRUCTURES. LIMITS OF EXCAVATION SHALL BE DETERMINED BY THE CONTRACTOR.

▪ PIPE UNDERDRAIN WRAPPED (6-INCH). SLOPE 0.5% MIN. TO SUITABLE DRAINAGE. ATTACH RODENT SHIELD AT ENDS OF PIPE UNDERDRAIN.

GENERAL NOTES

DRAWINGS SHALL NOT BE SCALED.

BAR STEEL REINFORCEMENT SHALL BE EMBEDDED 2" CLEAR UNLESS OTHERWISE SHOWN OR NOTED.

THE FIRST OR FIRST TWO DIGITS OF THE BAR MARK SIGNIFIES THE BAR SIZE.

BEVEL EXPOSED EDGES OF CONCRETE ¾" UNLESS OTHERWISE NOTED.

THE UPPER LIMITS OF "EXCAVATION FOR STRUCTURES B-56-257 " SHALL BE THE EXISTING GROUNDLINE.

AT THE BACK FACE OF ABUTMENT ALL VOLUME WHICH CANNOT BE PLACED BEFORE ABUTMENT CONSTRUCTION AND IS NOT OCCUPIED BY THE NEW STRUCTURE SHALL BE BACKFILLED WITH STRUCTURE BACKFILL TYPE A.

EXCAVATION BELOW THE ABUTMENT AND ABUTMENT BEDDING MATERIALS REQUIRES ENGINEER APPROVAL. GEOTEXTILE SHALL BE SET AT THE BOTTOM OF EXCAVATION AND EXTEND 2'-0" ABOVE BOTTOM OF ABUTMENT.

THE QUANTITY FOR BACKFILL STRUCTURE IS CALCULATED BASED ON THE DETAIL SHOWN IN THE PLANS.

THE SLOPE OF THE FILL IN FRONT OF THE ABUTMENTS SHALL BE COVERED WITH HEAVY RIPRAP AND GEOTEXTILE TYPE HR TO THE EXTENT SHOWN ON SHEET 1 AND THE ABUTMENT DETAILS.

AT ABUTMENTS, CONCRETE POURED UNDER WATER WILL BE ALLOWED AND SHALL BE DONE IN ACCORDANCE WITH SECTION 502.3.5.3 OF THE STANDARD SPECIFICATIONS.

SLAB FALSEWORK SHALL BE SUPPORTED ON PILES OR THE SUBSTRUCTURE UNLESS AN ALTERNATE METHOD IS APPROVED BY THE ENGINEER.

PROTECTIVE SURFACE TREATMENT TO BE APPLIED TO ENTIRE EXPOSED TOP OF SLAB, INCLUDING THE SLAB EDGE AND 1'-0" UNDER THE SLAB, THE TOP AND EXTERIOR EXPOSED FACE OF WINGS AND FRONT FACE OF ABUTMENT TO 1'-0" PAST THE EDGE OF SLAB.

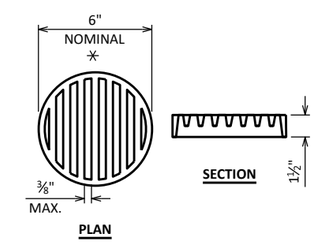

RODENT SHIELD DETAIL

✳ DIMENSIONS ARE APPROXIMATE. THE GRATE IS SIZED TO FIT INTO A PIPE COUPLING. ORIENT SO SLOTS ARE VERTICAL.

THE RODENT SHIELD, PIPE COUPLING AND SCREWS SHALL BE CONSIDERED INCIDENTAL TO THE BID ITEM "PIPE UNDERDRAIN WRAPPED 6-INCH".

THE RODENT SHIELD SHALL BE A PVC GRATE SIMILAR TO THIS DETAIL. THE GRATE IS COMMERCIALLY AVAILABLE AS A FLOOR STRAINER. A PIPE COUPLING IS REQUIRED FOR THE ATTACHMENT OF THIS SHIELD TO THE EXPOSED END OF THE PIPE UNDERDRAIN. THE SHIELD SHALL BE FASTENED TO THE PIPE COUPLING WITH TWO OR MORE NO. 10 X 1-INCH STAINLESS STEEL SHEET METAL SCREWS.

TOTAL ESTIMATED QUANTITIES

BID ITEM NUMBER	BID ITEMS	UNIT	SUPER	SOUTH ABUT.	NORTH ABUT.	TOTALS
203.0260	REMOVING STRUCTURE OVER WATERWAY WITH MINIMAL DEBRIS P-56-948	EACH	---	---	---	1
206.1001	EXCAVATION FOR STRUCTURES BRIDGES (B-56-257)	EACH	---	---	---	1
210.1500	BACKFILL STRUCTURE TYPE A	TON	---	145	145	290
502.0100	CONCRETE MASONRY BRIDGES	CY	103	26	26	155
502.3200	PROTECTIVE SURFACE TREATMENT	SY	179	15	15	209
505.0400	BAR STEEL REINFORCEMENT HS STRUCTURES	LB	---	2,010	2,010	4,020
505.0600	BAR STEEL REINFORCEMENT HS COATED STRUCTURES	LB	22,510	1,510	1,510	25,530
513.4061	RAILING TUBULAR TYPE M	LF	106	---	---	106
516.0500	RUBBERIZED MEMBRANE WATERPROOFING	SY	---	5	5	10
550.1100	PILING STEEL HP 10-INCH X 42 LB	LF	---	112	119	231
606.0300	RIPRAP HEAVY	CY	---	55	55	110
612.0406	PIPE UNDERDRAIN WRAPPED 6-INCH	LF	---	70	70	140
645.0111	GEOTEXTILE TYPE DF SCHEDULE A	SY	---	47	47	94
645.0120	GEOTEXTILE TYPE HR	SY	---	112	112	224
	NON-BID ITEMS					
	FILLER	SIZE	---	---	---	½", ¾"

THIS SHEET WAS CREATED BY THE WISDOT BUREAU OF STRUCTURES STANDARD BRIDGE DESIGN TOOL VERSION 1.1.0.0

8

8

NO.	DATE	REVISION	BY

STATE OF WISCONSIN
DEPARTMENT OF TRANSPORTATION

STRUCTURE B-56-257

DRAWN BY BAS | PLANS CK'D JFK

CROSS SECTION & QUANTITIES

SHEET 2 OF 10
32

SCALE = 6.0

BORING #	DATE COMPLETED	NORTHING (Y)	EASTING (X)
1	9/27/2024	276527.97	517066.20
2	9/27/2024	276576.04	517066.37
BORINGS COMPLETED BY: GEOTEST, INC.			
REPORT COMPLETED BY: GEOTEST, INC.			
ALL COORDINATES REFERENCED TO WCCS NAD 83(91)		SAUK COUNTY	

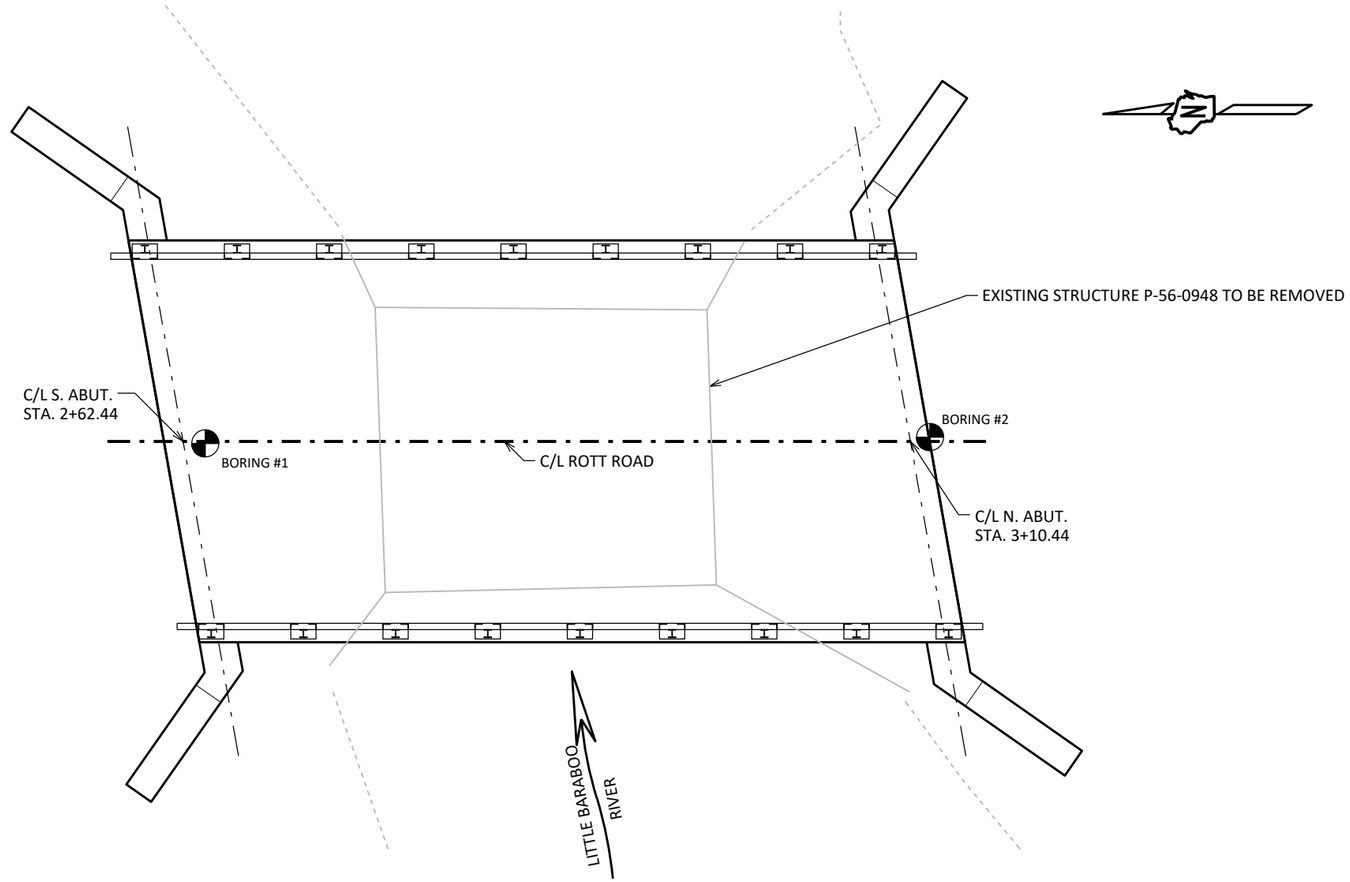

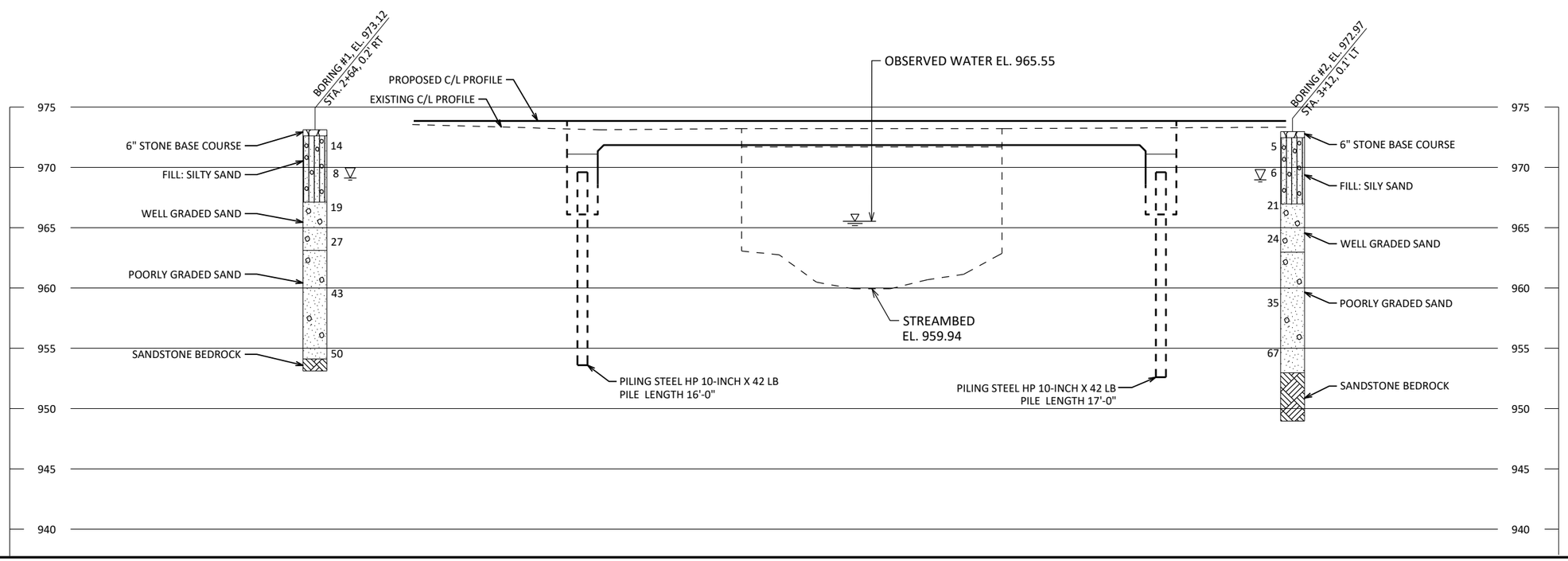

STATE PROJECT NUMBER

5738-00-75

MATERIAL SYMBOLS

ASPHALT, TOPSOIL, PEAT, CONCRETE, FILL, GRAVEL, SAND, CLAY, SILT, BOULDERS OR COBBLES, LIMESTONE, BEDROCK (UNKNOWN), SHALE, SANDSTONE, IGNEOUS/ META

LEGEND OF BORING

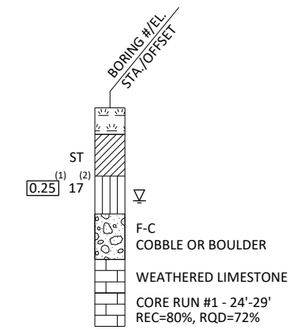

(1) UNCONFINED STRENGTH, AS DETERMINED BY A POCKET PENETROMETER (TSF)

(2) UNLESS OTHERWISE, SPECIFIED THE SPT 'N' VALUE IS BASED ON AASHTO T-206, STANDARD PENETRATION TEST. THE SPT 'N' VALUE PRESENTED HAS NOT BEEN CORRECTED FOR OVERBURDEN PRESSURE OR HAMMER EFFICIENCY.

GROUND WATER ELEVATION

AT TIME OF DRILLING
END OF DRILLING
AFTER DRILLING

ABBREVIATIONS

F-FINE M-MEDIUM C-COARSE ST-SHELBY TUBE

SUBSURFACE EXPLORATION FOR FOUNDATION DESIGN AND BIDDERS INFORMATION

BORINGS WERE COMPLETED AT POINTS APPROXIMATELY AS INDICATED ON THIS DRAWING TO OBTAIN INFORMATION CONCERNING THE CHARACTER OF SUBSURFACE MATERIALS FOUND AT THE SITE. BECAUSE THE INVESTIGATED DEPTHS ARE LIMITED AND THE AREA OF THE BORINGS IS VERY SMALL IN RELATION TO THE ENTIRE SITE, THE WISCONSIN DEPARTMENT OF TRANSPORTATION DOES NOT WARRANT SIMILAR SUBSURFACE CONDITIONS BELOW, BETWEEN, OR BEYOND THESE BORINGS. VARIATIONS IN SOIL CONDITIONS SHOULD BE EXPECTED AND FLUCTUATIONS IN GROUNDWATER LEVELS MAY OCCUR.

NO.	DATE	REVISION	BY

STATE OF WISCONSIN
DEPARTMENT OF TRANSPORTATION
STRUCTURES DESIGN SECTION

STRUCTURE B-56-257

DRAWN BY BAS PLANS CK'D

SUBSURFACE EXPLORATION

8

8

STATE PROJECT NUMBER

5738-00-75

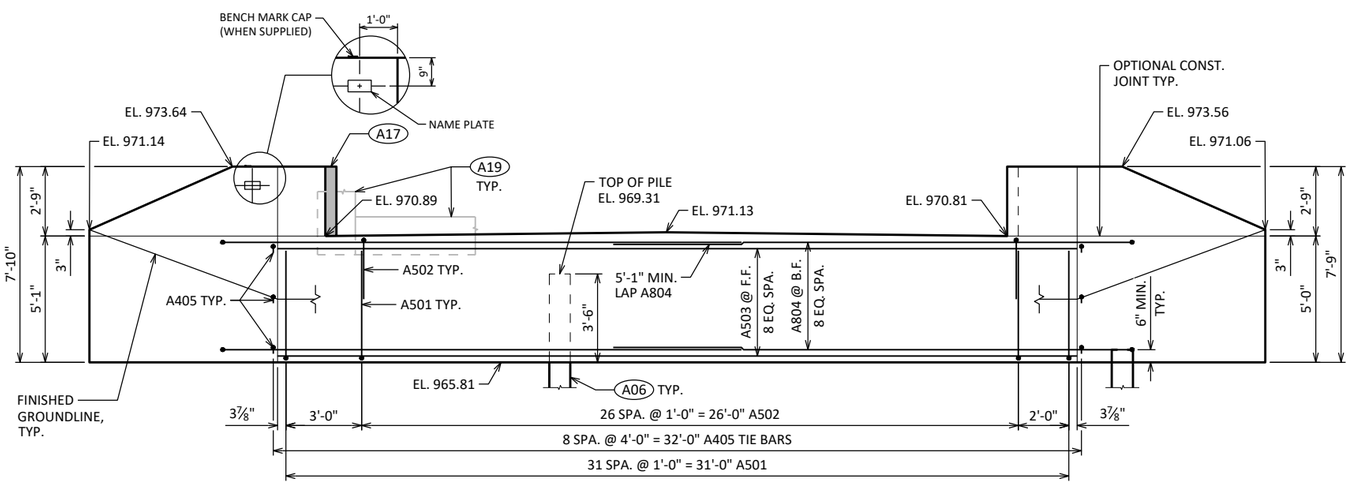

ELEVATION

LOOKING DOWNSTATION

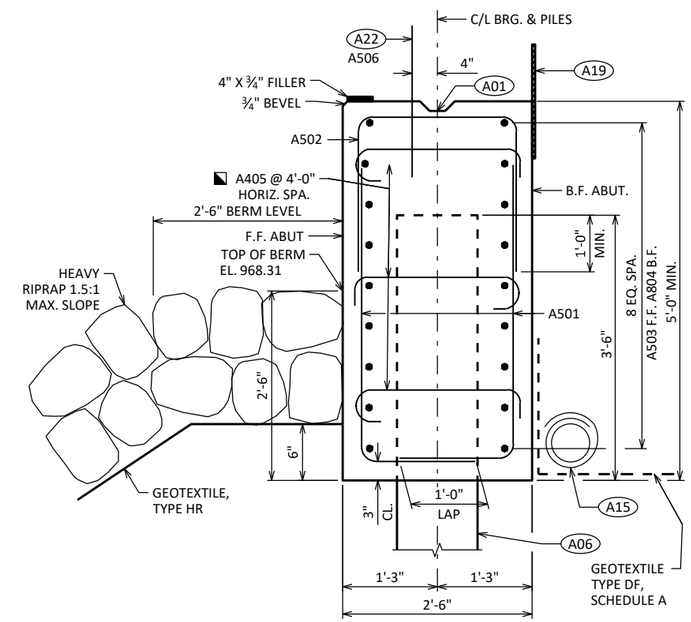

SECTION THRU BODY

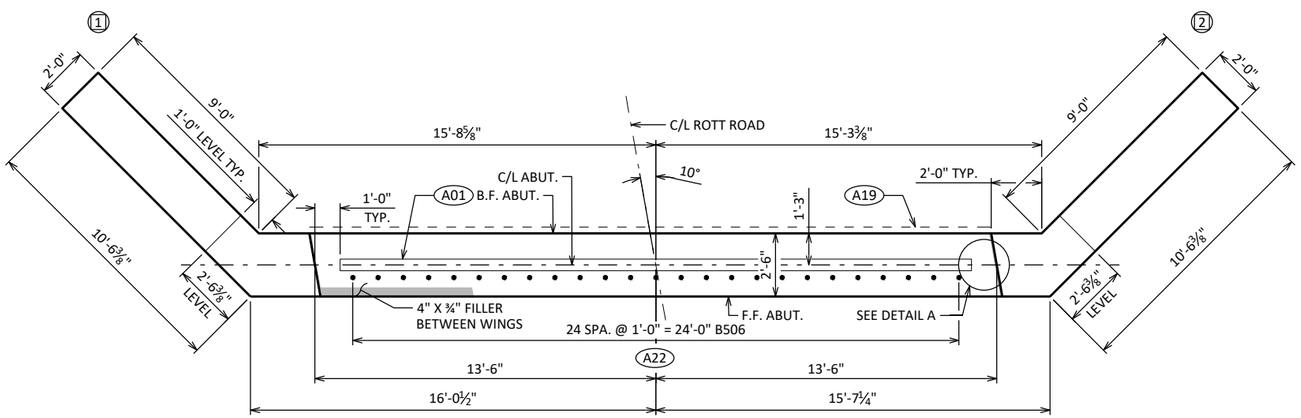

PLAN

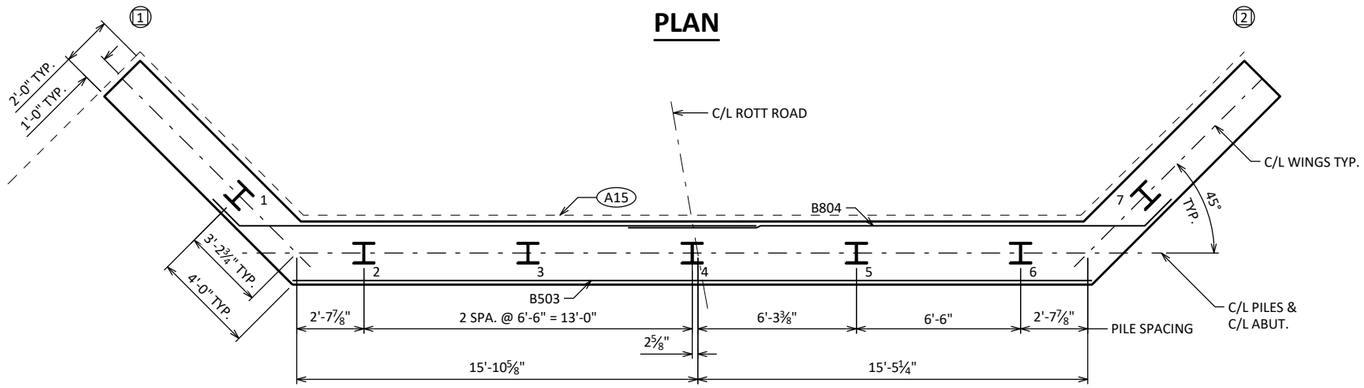

PILE PLAN

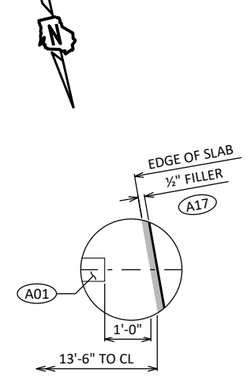

DETAIL A

A01 CONST. JOINT: KEYWAY FORMED BY A BEVELED 2X6.

A06 SUPPORT ABUTMENT ON HP 10 x 42 PILING, ESTIMATED 16 FT LONG WITH A REQUIRED DRIVING RESISTANCE OF 180TONS PER PILE.

A15 PIPE UNDERDRAIN WRAPPED (6-INCH). SLOPE 0.5% MIN. TO SUITABLE DRAINAGE. RODENT SHIELD REQUIRED.

A17 ½" FILLER: SEAL ALL EXPOSED HORIZ. & VERT. SURFACES OF ½" FILLER WITH NON-STAINING GRAY NON-BITUMINOUS JOINT SEALER. (1" DEEP AND HOLD ⅛" BELOW SURFACE OF CONCRETE). EXTEND SEALER 3" BELOW GUTTER LINE AT INSIDE FACE.

A19 18" RUBBERIZED MEMBRANE WATERPROOFING. SEAL ALL HORIZ. & VERT. JOINTS AT BACKFACE.

A22 A506 BARS SPACED @ 1'-0" CNTRS. MAY BE PLACED AFTER CONCRETE IS POURED BUT BEFORE INITIAL SET HAS TAKEN PLACE. (EMBED 1'-0" INTO CONC.)

◪ ALTERNATE THE POSITION OF THE 90° AND 180° HOOKS AT EACH VERTICAL LAYER OF TIES.

NO.	DATE	REVISION	BY

STATE OF WISCONSIN
DEPARTMENT OF TRANSPORTATION

STRUCTURE B-56-257

DRAWN BY BAS | PLANS CK'D JFK

SOUTH ABUTMENT

SHEET 4 OF 10

34

SCALE =

8

8

THIS SHEET WAS CREATED BY THE WISDOT BUREAU OF STRUCTURES STANDARD BRIDGE DESIGN TOOL VERSION 1.1.0.0

STATE PROJECT NUMBER

5738-00-75

BILL OF BARS

NOTE: THE FIRST OR FIRST TWO DIGITS OF THE BAR MARK SIGNIFIES THE BAR SIZE.

BAR MARK	COAT	NO. REQ'D.	LENGTH	BENT	BAR SERIES	LOCATION
A501		64	6'-0"	X		ABUT BODY STIRRUPS
A502		27	7'-5"	X		ABUT BODY STIRRUPS - TOP U-BAR
A503		9	31'-8"			ABUT BODY HORIZ. - F.F.
A804		18	21'-9"	X		ABUT BODY HORIZ. - B.F.
A405		27	3'-0"	X		ABUT BODY TIE BARS
A506	X	25	2'-0"			ABUT BODY DOWEL BARS
A407	X	56	10'-10"	X		WING STIRRUPS
A508	X	5	11'-7"	X		WING CORNER STIRRUPS
A509	X	18	11'-9"	X		WING LOWER HORIZ - F.F.
A810	X	18	13'-3"	X		WING LOWER HORIZ. - B.F.
A411	X	4	10'-2"			WING UPPER HORIZ.
A412	X	4	7'-7"			WING UPPER HORIZ.
A413	X	4	5'-0"			WING UPPER HORIZ.
A414	X	4	9'-9"	X		WING TOP HORIZ.
A415	X	4	7'-11"	X		WING 1 UPPER HORIZ. CORNER
A416	X	4	8'-11"	X		WING 2 UPPER HORIZ. CORNER

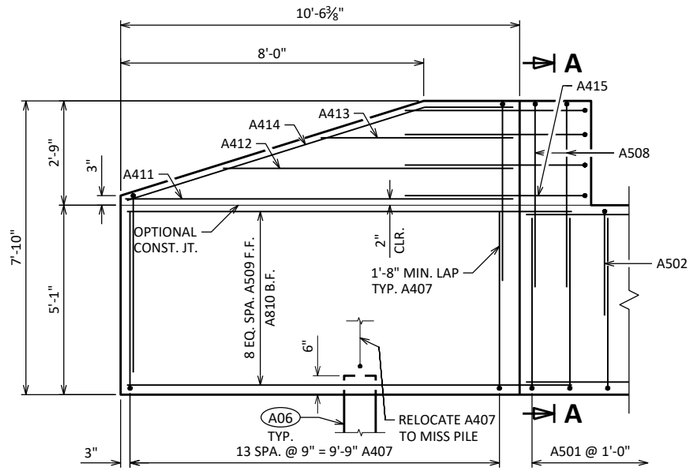

WING 1 ELEVATION

SHOWING F.F. WING

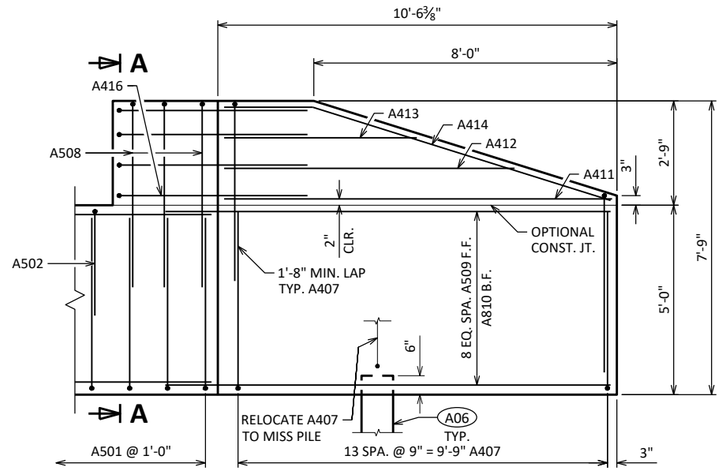

WING 2 ELEVATION

SHOWING F.F. WING

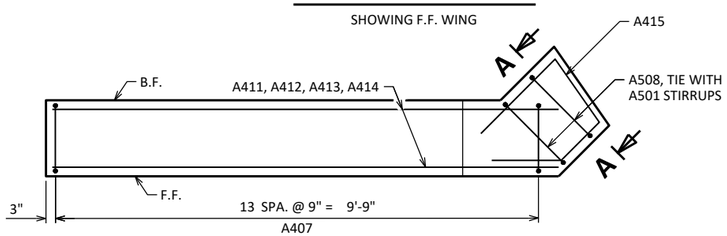

WING 1 PLAN

SHOWING UPPER WING REINFORCEMENT

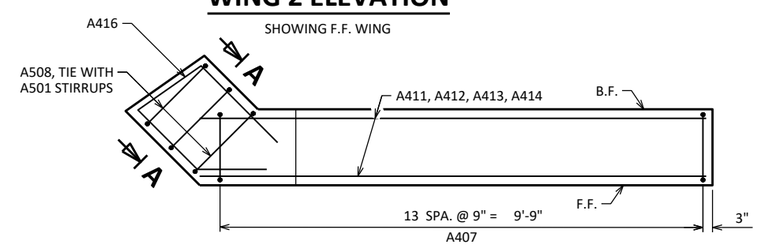

WING 2 PLAN

SHOWING UPPER WING REINFORCEMENT

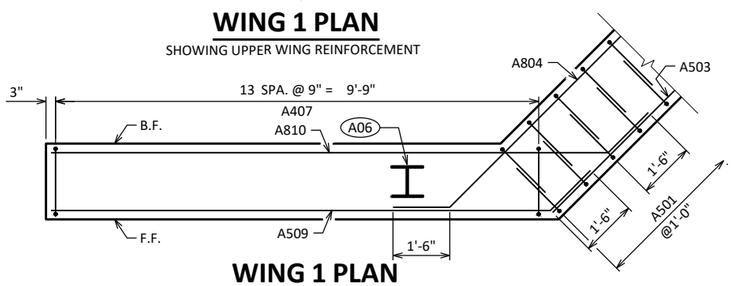

WING 1 PLAN

SHOWING LOWER WING REINFORCEMENT
WING 2 SIMILAR

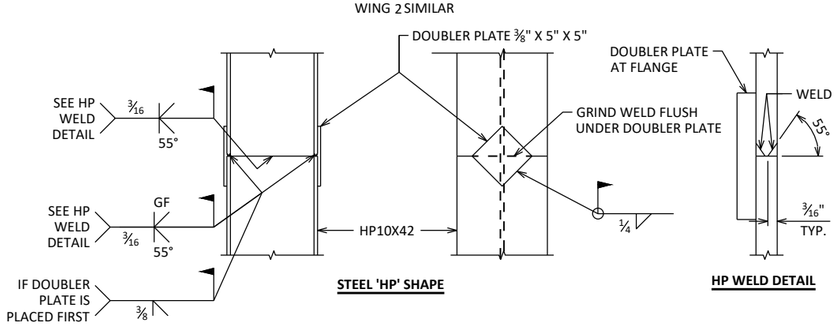

'HP' PILE DETAILS

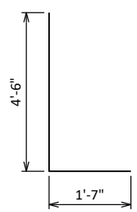

A501

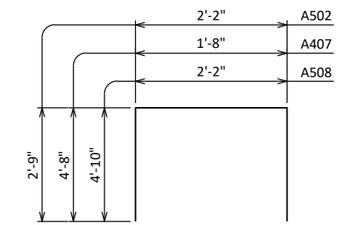

A502, A407, A508

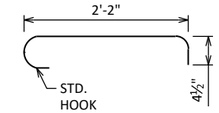

A405

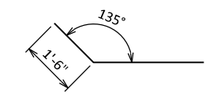

A804, A509, A810

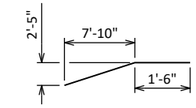

A414

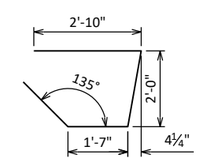

A415

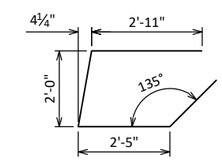

A416

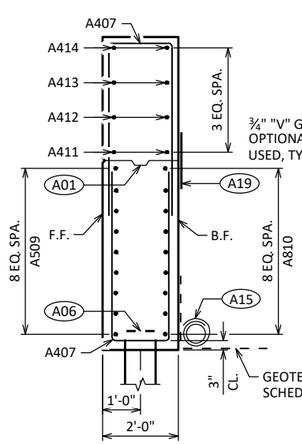

SECTION THRU WING 1

TYPICAL BOTH WINGS

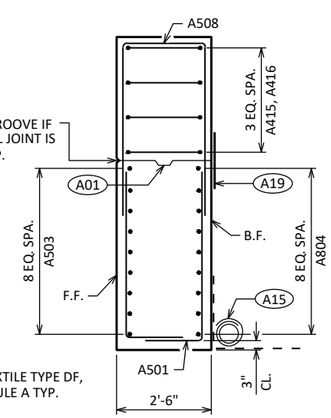

SECTION A-A

(A01) OPTIONAL CONST. JOINT: KEYWAY FORMED BY A BEVELED 2X6. PROVIDE ¾" "V" GROOVE ON F.F. OF WINGWALL IF JOINT IS USED.

(A06) SUPPORT ABUTMENT ON HP 10 x 42 PILING, ESTIMATED 16 FT LONG WITH A REQUIRED DRIVING RESISTANCE OF 180TONS PER PILE.

(A15) PIPE UNDERDRAIN WRAPPED (6-INCH). SLOPE 0.5% MIN. TO SUITABLE DRAINAGE. RODENT SHIELD REQUIRED.

(A19) 18" RUBBERIZED MEMBRANE WATERPROOFING, ONLY IF OPTIONAL CONSTRUCTION JOINT IS USED. COST INCIDENTAL TO BID ITEM "CONCRETE MASONRY STRUCTURES".

NO.	DATE	REVISION	BY

STATE OF WISCONSIN
DEPARTMENT OF TRANSPORTATION

STRUCTURE B-56-257

DRAWN BY BAS | PLANS CK'D JFK

SOUTH ABUTMENT DETAILS

SHEET 5
35

SCALE =

8

8

THIS SHEET WAS CREATED BY THE WISDOT BUREAU OF STRUCTURES STANDARD BRIDGE DESIGN TOOL VERSION 1.1.0.0

STATE PROJECT NUMBER

5738-00-75

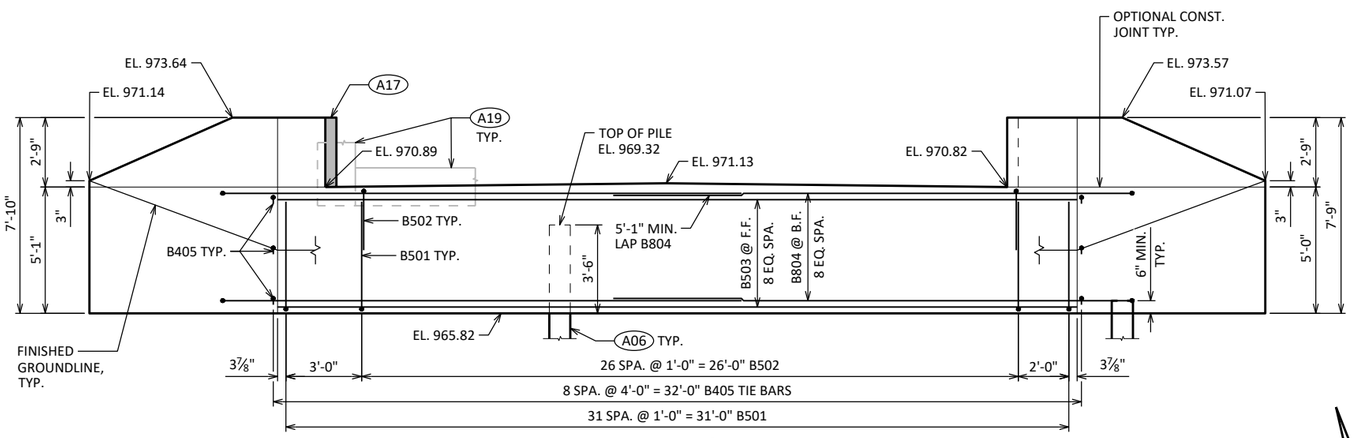

ELEVATION

LOOKING UPSTATION

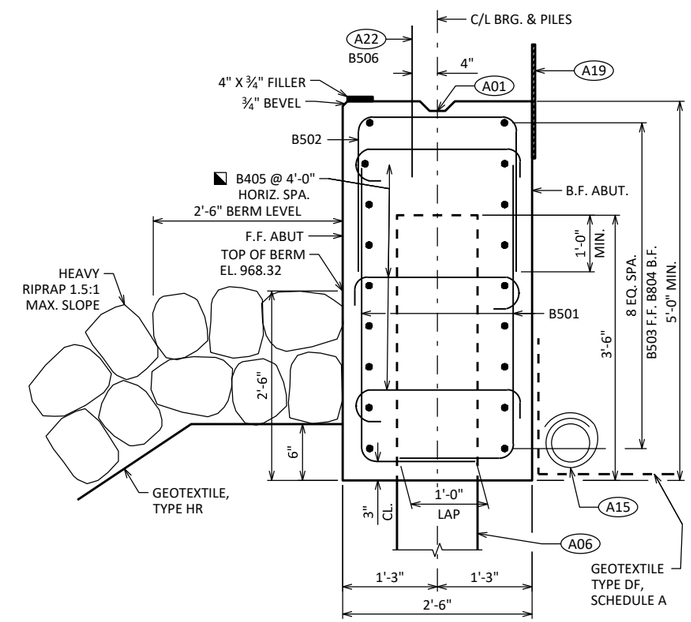

SECTION THRU BODY

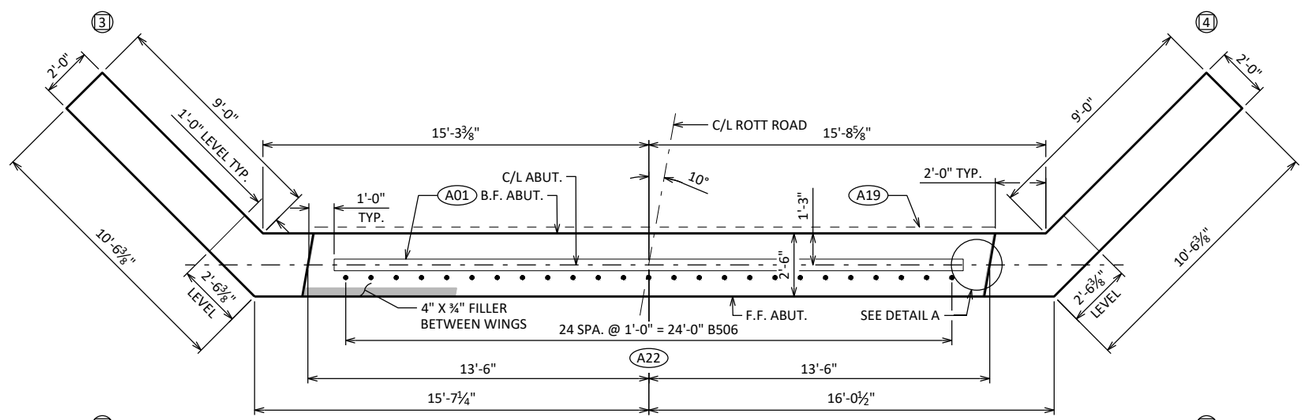

PLAN

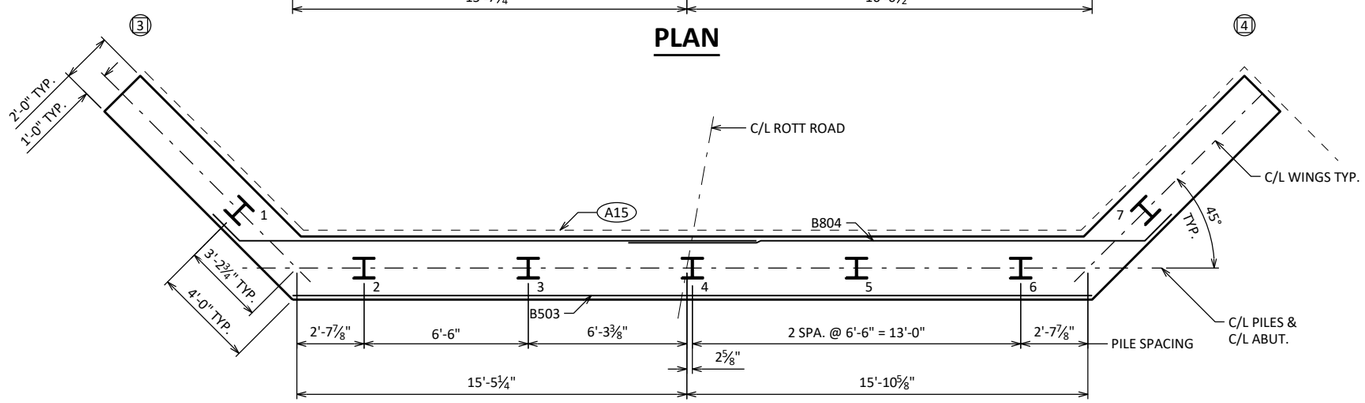

PILE PLAN

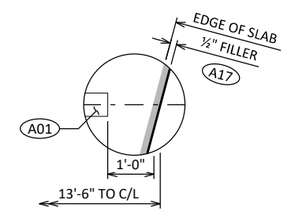

DETAIL A

A01 CONST. JOINT: KEYWAY FORMED BY A BEVELED 2X6.

A06 SUPPORT ABUTMENT ON HP 10 x 42 PILING, ESTIMATED 17 FT LONG WITH A REQUIRED DRIVING RESISTANCE OF 180TONS PER PILE.

A15 PIPE UNDERDRAIN WRAPPED (6-INCH). SLOPE 0.5% MIN. TO SUITABLE DRAINAGE. RODENT SHIELD REQUIRED.

A17 ½" FILLER: SEAL ALL EXPOSED HORIZ. & VERT. SURFACES OF ½" FILLER WITH NON-STAINING GRAY NON-BITUMINOUS JOINT SEALER. (1" DEEP AND HOLD ⅛" BELOW SURFACE OF CONCRETE). EXTEND SEALER 3" BELOW GUTTER LINE AT INSIDE FACE.

A19 18" RUBBERIZED MEMBRANE WATERPROOFING. SEAL ALL HORIZ. & VERT. JOINTS AT BACKFACE.

A22 B506 BARS SPACED @ 1'-0" CNTRS. MAY BE PLACED AFTER CONCRETE IS POURED BUT BEFORE INITIAL SET HAS TAKEN PLACE. (EMBED 1'-0" INTO CONC.)

◪ ALTERNATE THE POSITION OF THE 90° AND 180° HOOKS AT EACH VERTICAL LAYER OF TIES.

NO.	DATE	REVISION	BY

STATE OF WISCONSIN
DEPARTMENT OF TRANSPORTATION

STRUCTURE B-56-257

DRAWN BY BAS | PLANS CK'D JFK

NORTH ABUTMENT

SHEET 6 — 36

SCALE =

8

8

THIS SHEET WAS CREATED BY THE WISDOT BUREAU OF STRUCTURES STANDARD BRIDGE DESIGN TOOL VERSION 1.1.0.0

STATE PROJECT NUMBER

5738-00-75

BILL OF BARS

NOTE: THE FIRST OR FIRST TWO DIGITS OF THE BAR MARK SIGNIFIES THE BAR SIZE.

BAR MARK	COAT	NO. REQ'D.	LENGTH	BENT	BAR SERIES	LOCATION
B501		64	6'-0"	X		ABUT BODY STIRRUPS
B502		27	7'-5"	X		ABUT BODY STIRRUPS - TOP U-BAR
B503		9	31'-8"			ABUT BODY HORIZ. - F.F.
B804		18	21'-9"	X		ABUT BODY HORIZ. - B.F.
B405		27	3'-0"	X		ABUT BODY TIE BARS
B506	X	25	2'-0"			ABUT BODY DOWEL BARS
B407	X	56	10'-10"	X		WING STIRRUPS
B508	X	5	11'-7"	X		WING CORNER STIRRUPS
B509	X	18	11'-9"	X		WING LOWER HORIZ - F.F.
B810	X	18	13'-3"	X		WING LOWER HORIZ. - B.F.
B411	X	4	10'-2"			WING UPPER HORIZ.
B412	X	4	7'-7"			WING UPPER HORIZ.
B413	X	4	5'-0"			WING UPPER HORIZ.
B414	X	4	9'-9"	X		WING TOP HORIZ.
B415	X	4	7'-11"	X		WING 3 UPPER HORIZ. CORNER
B416	X	4	8'-11"	X		WING 4 UPPER HORIZ. CORNER

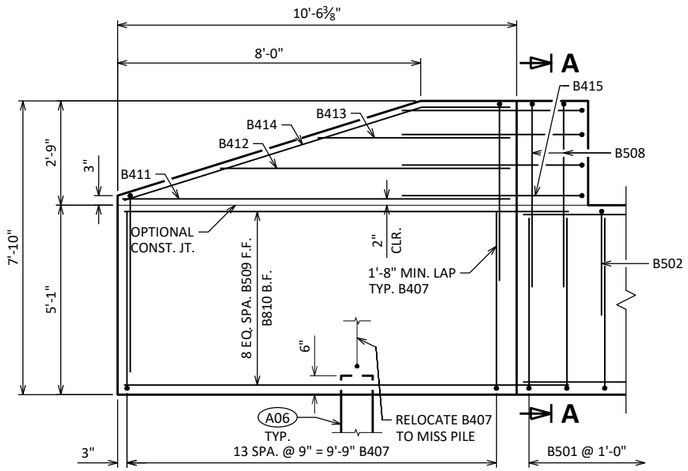

WING 3 ELEVATION

SHOWING F.F. WING

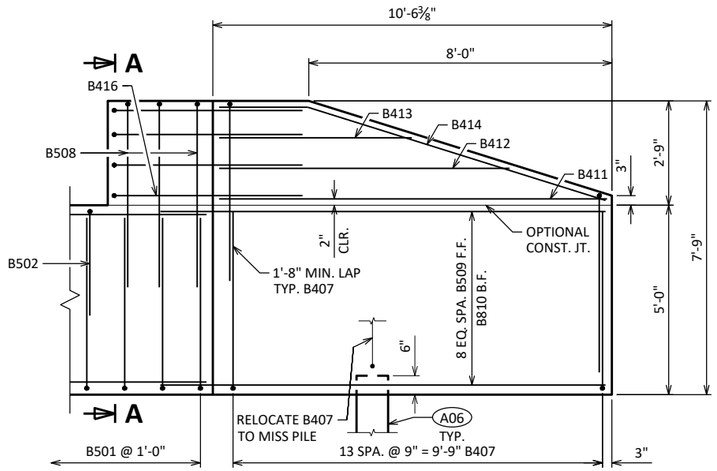

WING 4 ELEVATION

SHOWING F.F. WING

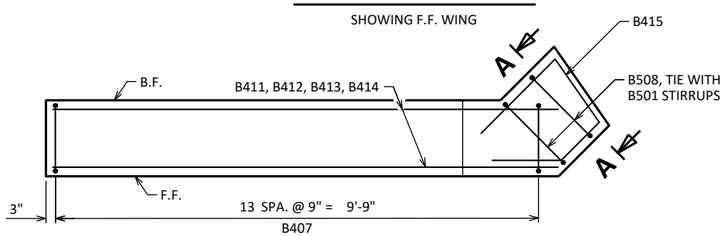

WING 3 PLAN

SHOWING UPPER WING REINFORCEMENT

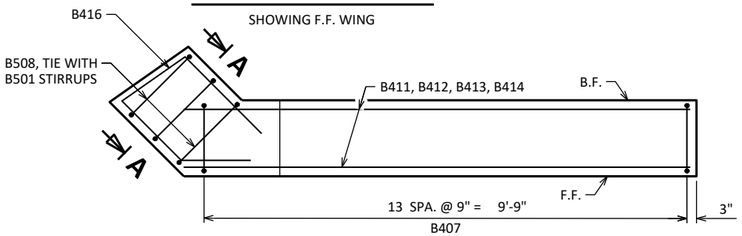

WING 4 PLAN

SHOWING UPPER WING REINFORCEMENT

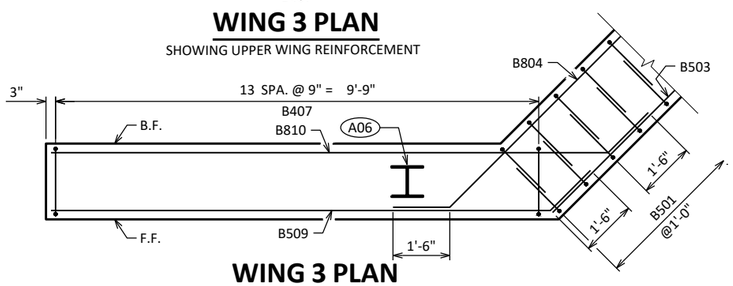

WING 3 PLAN

SHOWING LOWER WING REINFORCEMENT
WING 4 SIMILAR

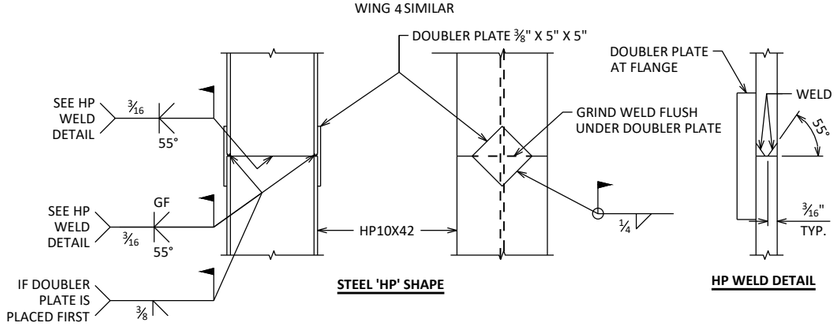

'HP' PILE DETAILS

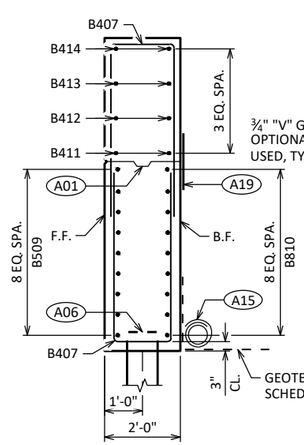

SECTION THRU WING 3

TYPICAL BOTH WINGS

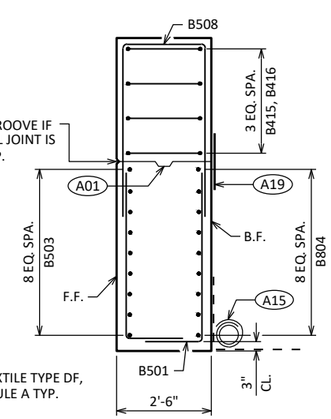

SECTION A-A

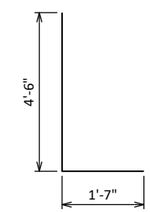

B501

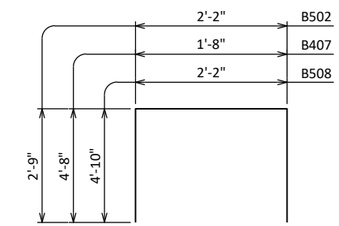

B502, B407, B508

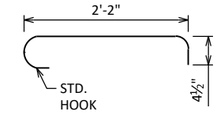

B405

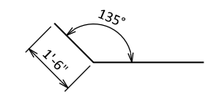

B804, B509, B810

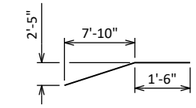

B414

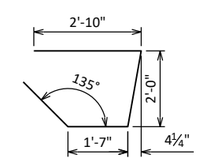

B415

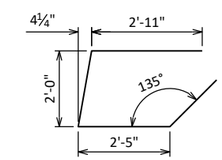

B416

A01 OPTIONAL CONST. JOINT: KEYWAY FORMED BY A BEVELED 2X6. PROVIDE ¾" "V" GROOVE ON F.F. OF WINGWALL IF JOINT IS USED.

A06 SUPPORT ABUTMENT ON HP 10 x 42 PILING, ESTIMATED 17 FT LONG WITH A REQUIRED DRIVING RESISTANCE OF 180TONS PER PILE.

A15 PIPE UNDERDRAIN WRAPPED (6-INCH). SLOPE 0.5% MIN. TO SUITABLE DRAINAGE. RODENT SHIELD REQUIRED.

A19 18" RUBBERIZED MEMBRANE WATERPROOFING, ONLY IF OPTIONAL CONSTRUCTION JOINT IS USED. COST INCIDENTAL TO BID ITEM "CONCRETE MASONRY STRUCTURES".

NO.	DATE	REVISION	BY

STATE OF WISCONSIN
DEPARTMENT OF TRANSPORTATION

STRUCTURE B-56-257

DRAWN BY BAS | PLANS CK'D JFK

NORTH ABUTMENT DETAILS

SHEET 7
37

SCALE =

8

8

THIS SHEET WAS CREATED BY THE WISDOT BUREAU OF STRUCTURES STANDARD BRIDGE DESIGN TOOL VERSION 1.1.0.0

STATE PROJECT NUMBER
5738-00-75

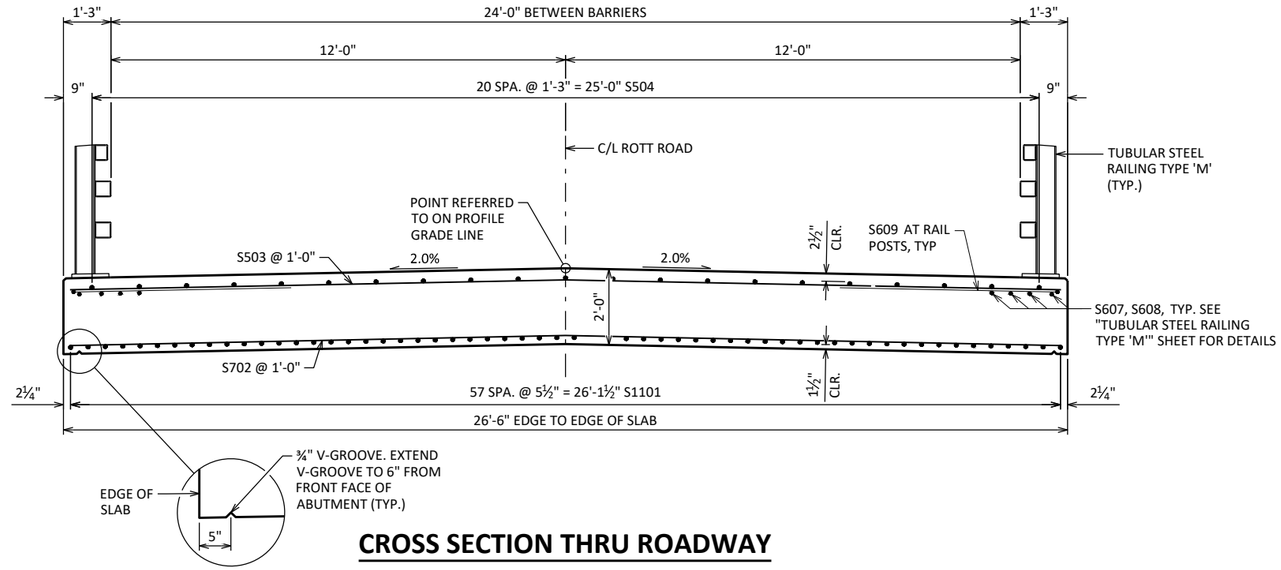

CROSS SECTION THRU ROADWAY

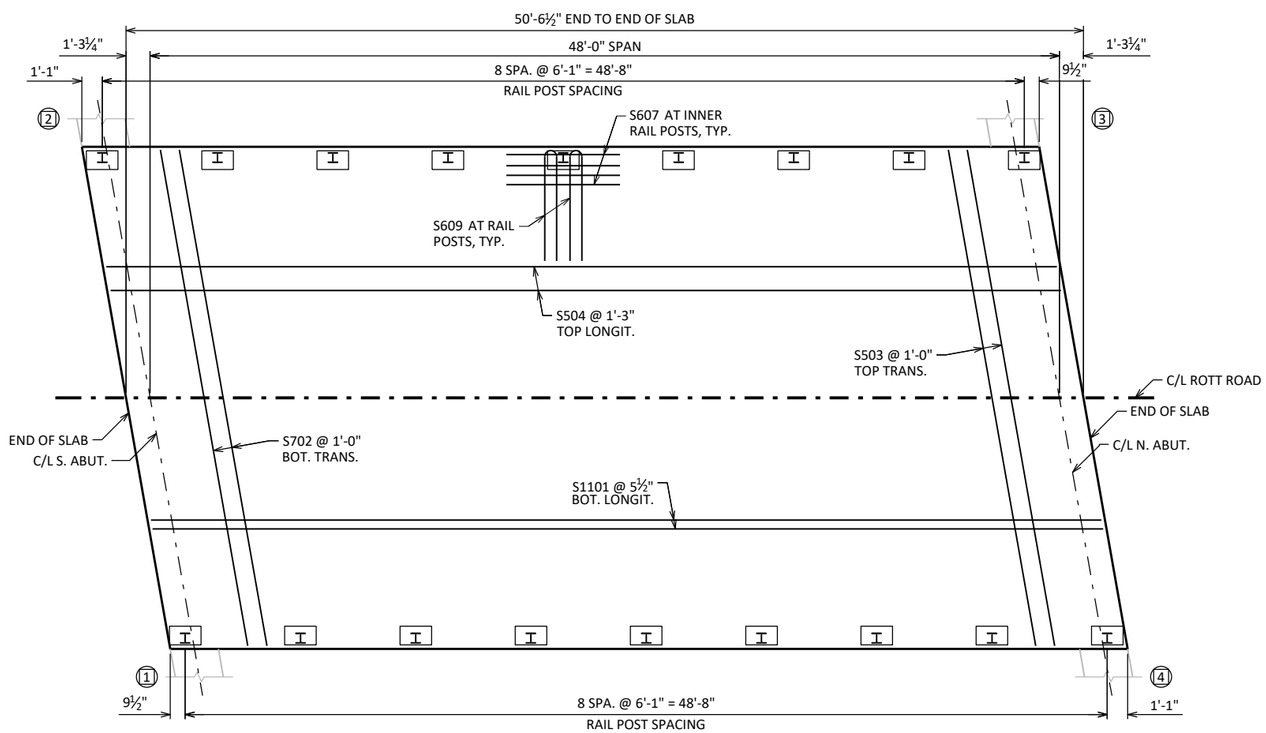

PLAN

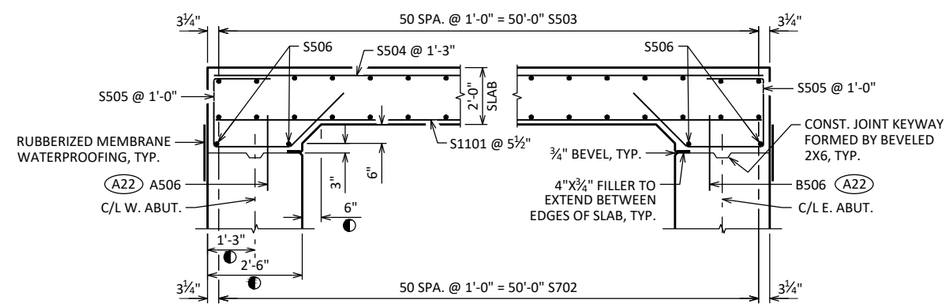

LONGITUDINAL SECTION

DIMENSIONS ARE GIVEN PARALLEL TO ℄ ROADWAY UNLESS OTHERWISE NOTED.

◐ MEASURED NORMAL TO THE ℄ OF ABUTMENT. DIMENSIONS ARE TYPICAL FOR BOTH ABUTMENTS.

(A22) A506, B506 BARS SPACED @ 1'-0" CNTRS. MAY BE PLACED AFTER CONCRETE IS POURED BUT BEFORE INITIAL SET HAS TAKEN PLACE. (EMBED 1'-0" INTO CONC.)

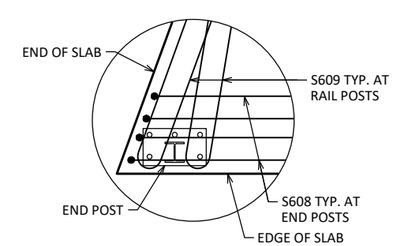

END POST DETAILS

NO.	DATE	REVISION	BY

STATE OF WISCONSIN
DEPARTMENT OF TRANSPORTATION

STRUCTURE B-56-257

DRAWN BY BAS | PLANS CK'D JFK

SUPERSTRUCTURE

SHEET 8 OF 10

38

SCALE =

8

8

THIS SHEET WAS CREATED BY THE WISDOT BUREAU OF STRUCTURES STANDARD BRIDGE DESIGN TOOL VERSION 1.1.0.0

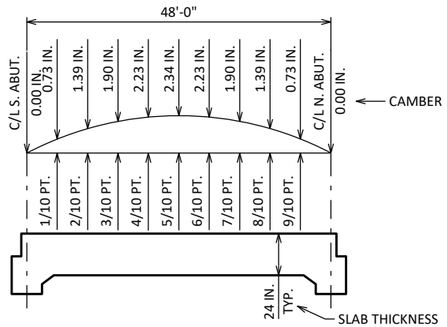

CAMBER AND SLAB THICKNESS DIAGRAM

CAMBER SHOWN IS BASED ON 3 TIMES DEAD LOAD DEFLECTIONS. CAMBER SPANS AS SHOWN TO PROVIDE FOR DEAD LOAD DEFLECTION AND FUTURE CREEP. CAMBER DOES NOT INCLUDE ALLOWANCE FOR FORM SETTLEMENT. PARAPETS PLACED ON TOP OF THE SLAB SHALL BE POURED AFTER FALSEWORK HAS BEEN RELEASED, EXCEPT FOR STAGED CONSTRUCTION.

TO DETERMINE FALSEWORK ELEVATION AT EDGE OF SLAB, CROWN OR REFERENCE LINE FOLLOW THIS PROCEDURE:

	TOP OF SLAB ELEVATION AT FINAL GRADE
LESS	SLAB THICKNESS
PLUS	CAMBER
PLUS	FORM SETTLEMENT/DEFLECTION DUE TO PLACEMENT OF SLAB CONCRETE (TO BE COMPUTED BY THE CONTRACTOR)
EQUALS	TOP OF SLAB FALSEWORK ELEVATION

TOP OF SLAB ELEVATIONS

LOCATION	C/L BRG. S. ABUT.	1/10 PT.	2/10 PT.	3/10 PT.	4/10 PT.	5/10 PT.	6/10 PT.	7/10 PT.	8/10 PT.	9/10 PT.	C/L BRG. N. ABUT.
W. EDGE OF DECK	973.57	973.65	973.71	973.76	973.79	973.81	973.81	973.79	973.76	973.71	973.64
CROWN OR R/L	973.88	973.95	974.01	974.05	974.07	974.08	974.07	974.05	974.01	973.95	973.88
E. EDGE OF DECK	973.65	973.71	973.76	973.79	973.81	973.81	973.79	973.76	973.71	973.65	973.57

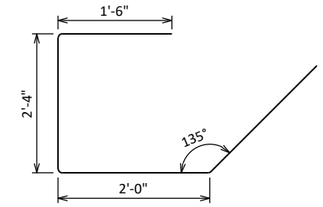

S505

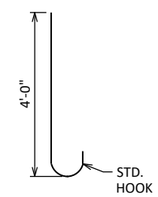

S608

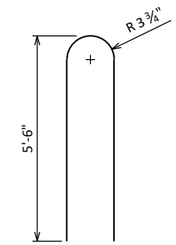

S609

BILL OF BARS

NOTE: THE FIRST OR FIRST TWO DIGITS OF THE BAR MARK SIGNIFIES THE BAR SIZE.

BAR MARK	COAT	NO. REQ'D.	LENGTH	BENT	BAR SERIES	LOCATION
S1101	X	58	50'-2"			SLAB BOTTOM LONGITUDINAL
S702	X	51	26'-7"			SLAB BOTTOM TRANSVERSE
S503	X	51	26'-7"			SLAB TOP TRANSVERSE
S504	X	21	50'-2"			SLAB TOP LONGITUDINAL
S505	X	54	7'-7"	X		ABUTMENT DIAPHRAGM STIRRUPS
S506	X	4	26'-7"			ABUTMENT DIAPHRAGM LONGITUDINAL
S607	X	56	6'-0"			SLAB TOP LONGIT. UNDER RAIL POSTS
S608	X	16	4'-8"	X		SLAB TOP LONGIT. UNDER RAIL END POSTS
S609	X	36	11'-3"	X		SLAB TOP HOOKS UNDER RAIL POSTS

SURVEY TOP OF SLAB ELEVATIONS

LOCATION	ABUTMENT	5/10 PT.	ABUTMENT
W. GUTTER			
CROWN OR R/L			
E. GUTTER			

PRIOR TO RELEASING SLAB FALSEWORK, TAKE TOP OF SLAB ELEVATIONS AT THE C/L OF ABUTMENTS, THE C/L OF PIERS AND AT 5/10 PTS. TO VERIFY CAMBER. TAKE ELEVATIONS ALONG GUTTER LINES AND CROWN OR R/L. RECORD THE ELEVATIONS IN THE ABOVE TABLE FOR THE "AS BUILT" PLANS.

NOTES

FILL IN THE TABLE OF "SURVEY TOP OF SLAB ELEVATIONS" FOR EACH SPAN ON AS BUILT PLANS.

TOP TRANSVERSE BARS IN SLAB SHALL BE SUPPORTED BY INDIVIDUAL BAR CHAIRS AT APPROXIMATELY 3'-0" CENTERS EACH WAY. BOTTOM LONGITUDINAL BARS SHALL BE SUPPORTED BY CONTINUOUS BAR CHAIRS AT APPROXIMATELY 4'-0" CENTERS.

ALL SLAB THICKNESS DIMENSIONS ARE MINIMUM. ANY TOLERANCES NECESSARY TO CORRECT CONSTRUCTION DISCREPANCIES ARE TO BE PLUS (+).

NO.	DATE	REVISION	BY

STATE OF WISCONSIN
DEPARTMENT OF TRANSPORTATION

STRUCTURE B-56-257

DRAWN BY BAS PLANS CK'D JFK

SUPERSTRUCTURE DETAILS

SCALE =

8

8

THIS SHEET WAS CREATED BY THE WISDOT BUREAU OF STRUCTURES STANDARD BRIDGE DESIGN TOOL VERSION 1.1.0.0

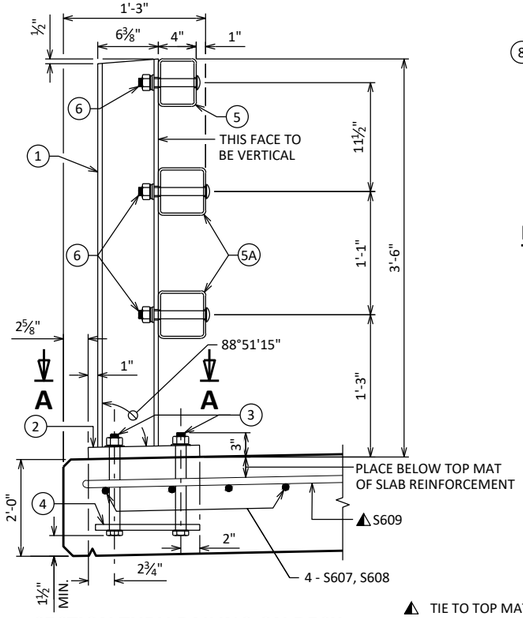

TIE TO TOP MAT OF STEEL.

SECTION THRU RAILING ON DECK

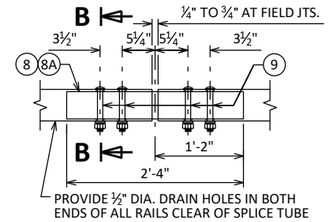

FIELD ERECTION JOINT DETAIL

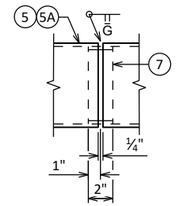

SHOP RAIL SPLICE DETAIL

LOCATION MUST BE SHOWN ON SHOP DRAWINGS

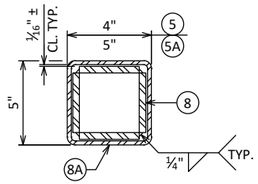

SECTION B-B

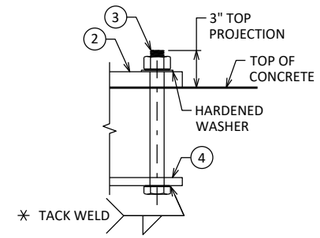

ANCHOR BOLTS

✳ ANCHOR BOLT ASSEMBLY MAY BE TACK WELDED, EITHER IN THE SHOP, OR IN THE FIELD AFTER THE ANCHOR PLATE IS PLACED.

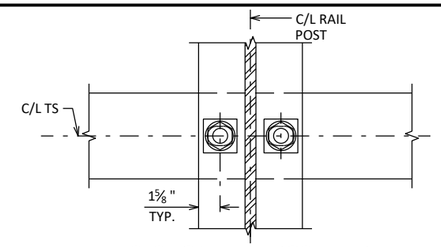

SECTION THRU POST WEB

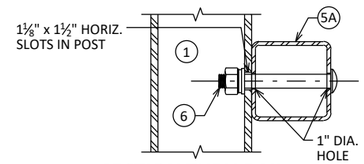

SECTION THRU RAIL

NOTE: CONNECTIONS AT LOWER RAILS SHOWN. CONNECTIONS AT TOP RAIL SIMILAR.

TYPICAL RAIL TO POST CONNECTIONS

LEGEND

1. W6 x 25 WITH 1⅛ " X 1½ " HORIZ. SLOTS ON EACH SIDE OF POST FOR BOLT NO. 6. CUT BOTTOM OF POST TO MATCH CROSS SLOPE OF ROADWAY. PLACE POST VERTICAL. PLACE POSTS NORMAL TO GRADE LINE.
2. PLATE 1 ¼" x 11 ¾" x 1'-8" WITH 1 7⁄16" OVERSIZED HOLES FOR ANCHOR BOLTS NO. 3. WELD TO NO. 1 AS SHOWN.
3. ASTM A449 - 1 ⅛" DIA. ANCHOR BOLTS WITH NUT AND HARDENED WASHER (ALL GALVANIZED). 5 REQ'D. PER POST. THREAD 3" AND PLACE NORMAL TO PLATE NO. 2. CHAMFER TOP OF BOLTS BEFORE THREADING. USE 1'-9" LONG IN ABUTMENT WINGS. AT POSTS ON CONCRETE SLAB SUPERSTRUCTURES WHERE THE SLAB THICKNESS IS > 16" USE 1'-3" LONG. USE 10 ¾" LONG AT ALL OTHER LOCATIONS. (AN EQUIVALENT THREADED ROD WITH NUTS AND HARDENED WASHERS MAY BE SUBSTITUTED FOR ANCHOR BOLTS IN WINGS IF REQ'D. FOR CONSTRUCTIBILITY.)
4. ⅝" x 11" x 1'-8" ANCHOR PLATE (GALVANIZED) WITH 1 3⁄16" DIA. HOLES FOR ANCHOR BOLTS NO. 3.
5. TS 5 x 4 x 0.25 STRUCTURAL TUBING. ATTACH TO NO. 1 WITH NO. 6.
5A. TS 5 x 5 x 0.25 STRUCTURAL TUBING. ATTACH TO NO. 1 WITH NO. 6.
6. ⅞" DIA. A325 SLOTTED ROUND HEAD BOLT WITH NUT, 3⁄16" X 1 ⅝" X 1 ⅝" MIN. WASHER, AND LOCK WASHER (2 REQ'D. AT EACH RAIL TO POST LOCATION).
7. SPLICE SLEEVE FABRICATED FROM ¼" PLATE. PROVIDE "SLIDING FIT".
8. ⅜" X 3 ⅝" X 2'-4" PLATE. 2 PER RAIL. USED IN NO. 5 & 5A.
8A. ⅜" X 2 ⅝" X 2'-4" PLATE USED IN NO. 5, ⅜" X 3 ⅝" X 2'-4" PLATE USED IN NO. 5A. 2 PER RAIL.
9. ⅞" DIA. A325 ROUND HEAD BOLT WITH NUT, WASHER, AND LOCK WASHER. USE 15⁄16" x 1 ¼" LONGIT. SLOTTED HOLES IN PLATE NO. 10A AT FIELD JOINTS AND 15⁄16" X 2 ¼" MIN. LONGIT. SLOTTED HOLES AT EXP. JOINTS IN PLATE NO. 8A. PROVIDE 15⁄16" DIA. ROUND HOLES IN TUBES NO. 5 AND NO. 5A.

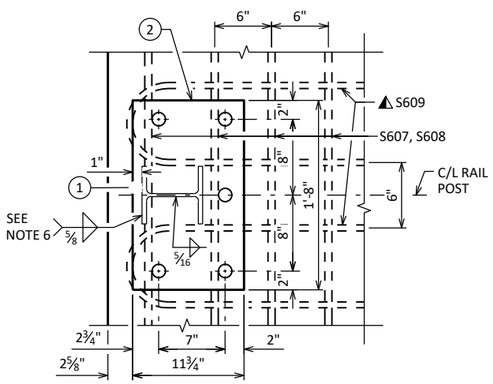

SECTION A-A

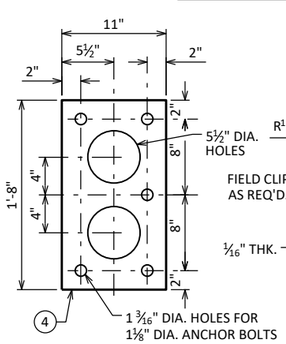

ANCHOR PLATE

AT RAIL TO DECK CONNECTION

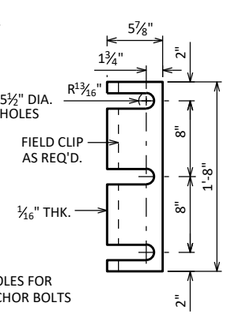

POST SHIM DETAIL

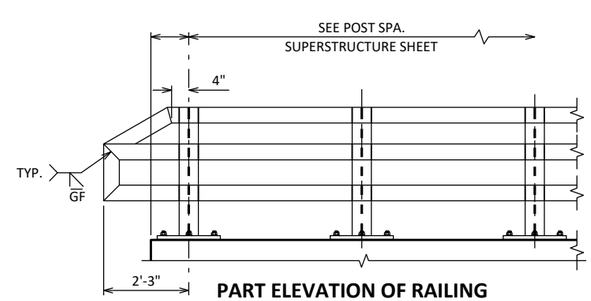

PART ELEVATION OF RAILING

GENERAL NOTES

1. BID ITEM SHALL BE "RAILING TUBULAR TYPE M" WHICH INCLUDES ALL ITEMS SHOWN.
2. RAIL POST AND BASE PLATES SHALL CONFORM TO THE REQUIREMENTS OF ASTM A709 GRADE 50. HOLLOW RAILING STRUCTURAL TUBING SHALL CONFORM TO THE REQUIREMENTS OF ASTM A500 GRADE B OR C WITH A CERTIFIED FY = 50 KSI. ANCHOR PLATES, AND SPLICE TUBE PLATES SHALL CONFORM TO THE REQUIREMENTS OF ASTM A709 GRADE 36.
3. THE NUT SECURING THE POST BASE PLATE TO THE CONCRETE SHALL BE TIGHTENED TO A SNUG FIT AND GIVEN AN ADDITIONAL ⅛ TURN.
4. RAILS SHALL BE CONTINUOUS OVER A MINIMUM OF THREE (3) POSTS WITHOUT SPLICES WHERE POSSIBLE.
5. ENDS OF TUBE SECTIONS SHALL BE SAWED. GRIND SMOOTH EXPOSED EDGES. ALL CUT ENDS SHALL BE TRUE AND SMOOTH.
6. WELD IS THE SAME ON BOTH FLANGES. FLANGE WELD DOES NOT REQUIRE MAGNETIC PARTICLE TESTING.
7. FILL BOLT SLOT OPENINGS IN POST SHIMS AND PLATE NO. 2 AND CAULK AROUND PERIMETER OF PLATE NO. 2 WITH NON-STAINING GRAY NON-BITUMINOUS JOINT SEALER. STEEL POST SHIMS MAY BE USED UNDER POSTS WHERE REQ'D. FOR ALIGNMENT.
8. POST BASE PLATES SHALL BE FLAT WITH ALL SURFACES SMOOTH AND FREE FROM WARP AND ALL EDGES SMOOTH, STRAIGHT AND VERTICAL. ALL PLATE CUTS SHALL BE MACHINE OR MACHINE FLAME CUT.
9. ALL MATERIAL SHALL BE GALVANIZED AFTER FABRICATION. PRIOR TO GALVANIZING, ALL STEEL RAILING POSTS & STEEL TUBING SHALL BE GIVEN A NO. 6 BLAST CLEANING BY SSPC SPECIFICATIONS.

NO.	DATE	REVISION	BY

STATE OF WISCONSIN
DEPARTMENT OF TRANSPORTATION

STRUCTURE B-56-257

DRAWN BY BAS | PLANS CK'D JFK

TUBULAR STEEL RAILING TYPE 'M'

SHEET 10 / 40

SCALE =

8

8

THIS SHEET WAS CREATED BY THE WISDOT BUREAU OF STRUCTURES STANDARD BRIDGE DESIGN TOOL VERSION 1.1.0.0

DIVISION 1 - ROTT ROAD

STATION	REAL STATION	DISTANCE	AREA (SF)		INCREMENTAL VOL (CY) (UNADJUSTED)		CUMULATIVE VOL (CY)		
			CUT	FILL	CUT	FILL	CUT	EXPANDED FILL	MASS ORDINATE
							1.00	1.25	
					NOTE 1	NOTE 3	NOTE 1		NOTE 8
2+12.45	212.45	0.00	21.67	3.82	0	0	0	0	0
2+25.00	225.00	12.55	20.55	10.09	10	3	10	4	6
2+50.00	250.00	25.00	17.47	31.36	18	19	28	28	1

DIVISION 1 - ROTT ROAD

STATION	REAL STATION	DISTANCE	AREA (SF)		INCREMENTAL VOL (CY) (UNADJUSTED)		CUMULATIVE VOL (CY)		
			CUT	FILL	CUT	FILL	CUT	EXPANDED FILL	MASS ORDINATE
							1.00	1.25	
					NOTE 1	NOTE 3	NOTE 1		NOTE 8
3+25.00	325.00	0.00	20.95	24.72	0	0	0	0	0
3+50.00	350.00	25.00	20.15	9.15	19	16	19	20	-1
3+60.00	360.00	10.00	28.30	0.91	9	2	28	23	6

NOTES:	
1 - CUT	CUT INCLUDES SALVAGED/UNUSABLE PAVEMENT MATERIAL
2 - SALVAGED/UNUSABLE PAVEMENT MATERIAL	THIS DOES NOT SHOW UP IN CROSS SECTIONS
3 - FILL	DOES NOT INCLUDE UNUSABLE PAVEMENT EXC VOLUME
8 - MASS ORDINATE	IF MARSH AND EBS TO BE BACKFILLED WITH GRANULAR: [CUT - SALVAGED PAVT - ((FILL - EXPANDED ROCK) * FILL FACTOR)]

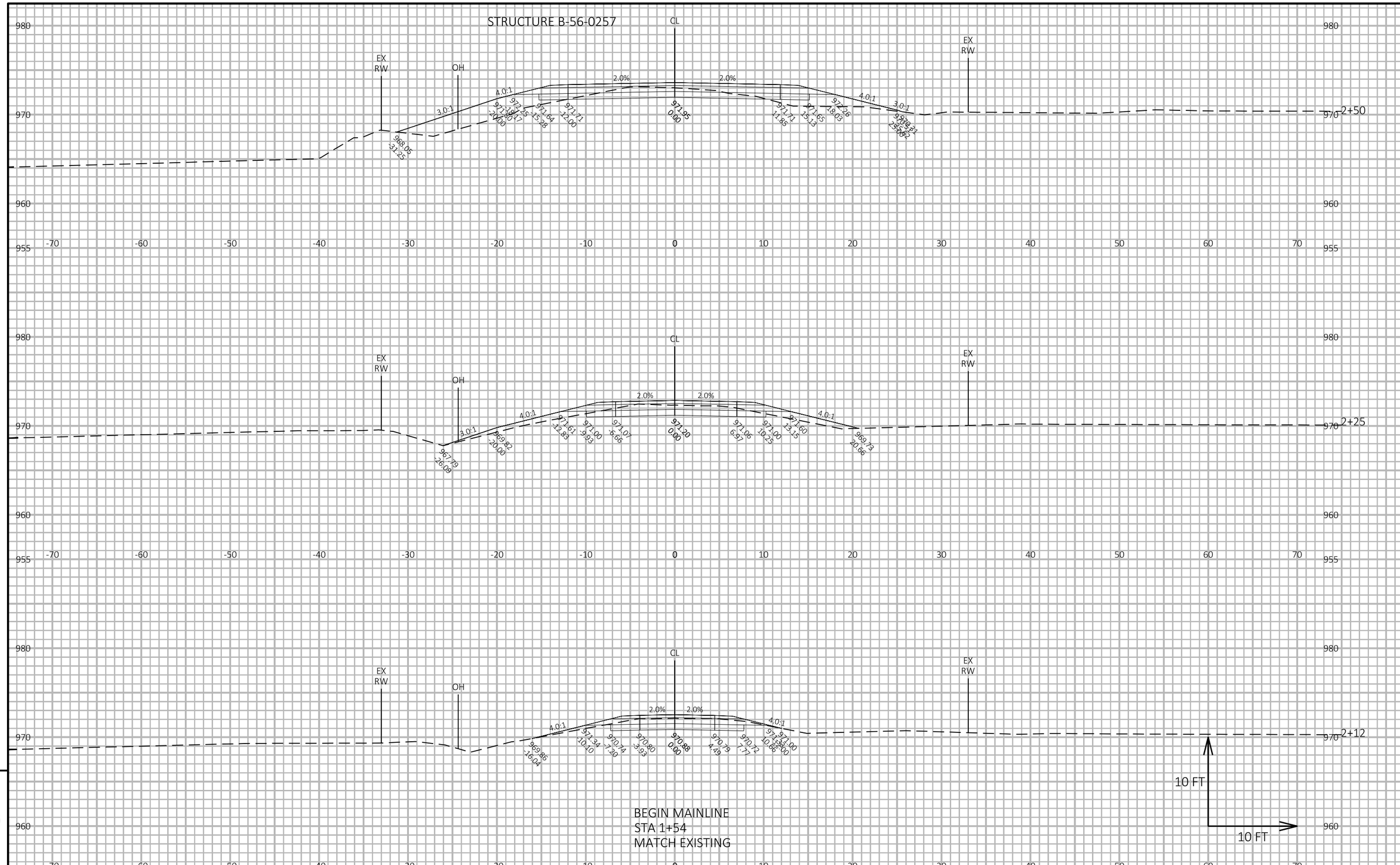

PROJECT NO: 5738-00-75	HWY: ROTT ROAD	COUNTY: SAUK	CROSS SECTIONS: ROTT ROAD	SHEET 42	E

FILE NAME : T:\PROJECTS\2024\24-2054-1 T WOODLAND, ROTT ROAD, P-56-0948, ID 5738-00-05\DRAWINGS\57380005_MODEL.DWG
LAYOUT NAME - XS 1
PLOT DATE : 3/11/2026 10:33 AM PLOT BY : TYLER BUCHANAN PLOT NAME : PLOT SCALE : 1 IN:10 FT HORZ. / 1 IN:10 FT VERT.

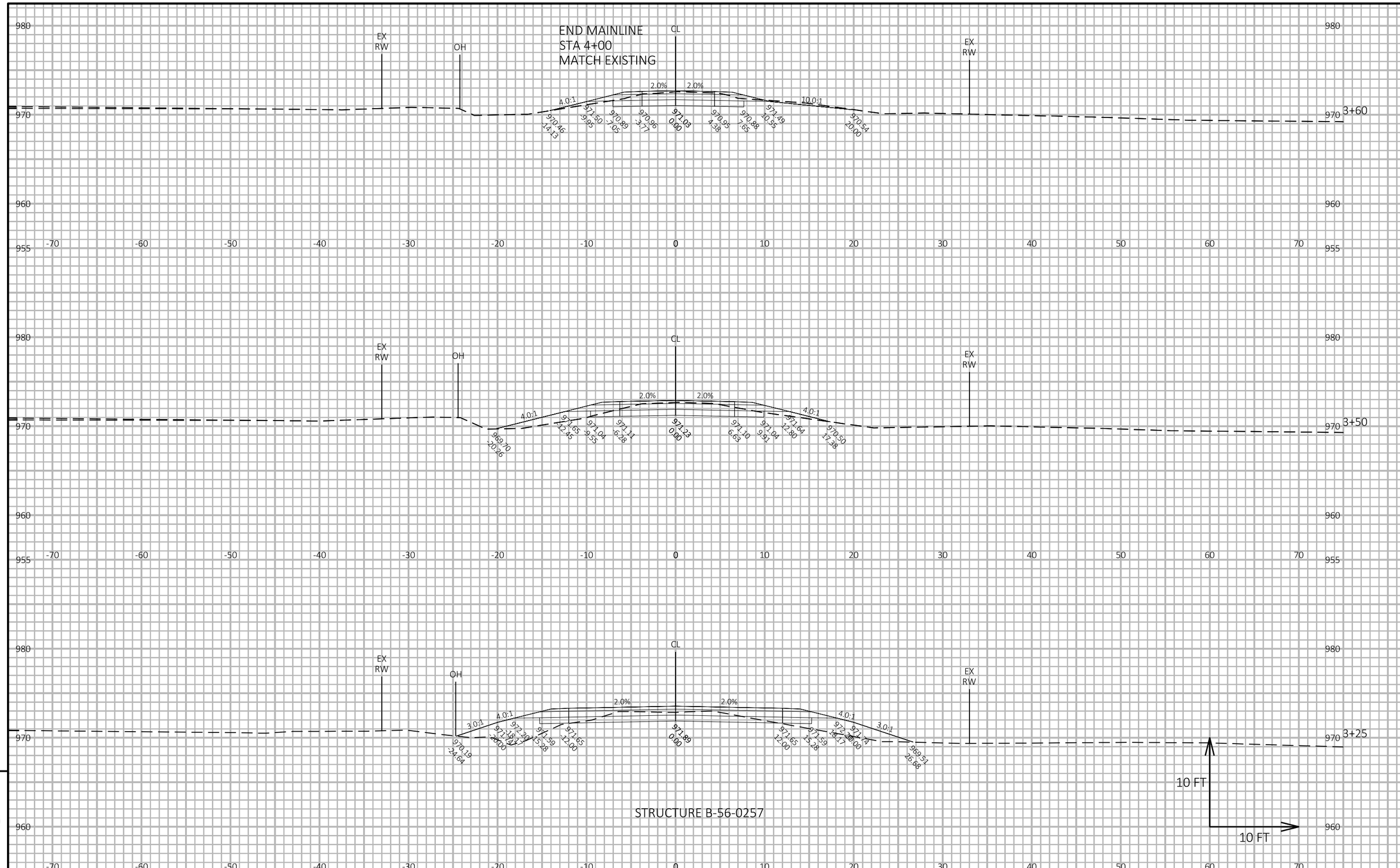

9

9

PROJECT NO: 5738-00-75	HWY: ROTT ROAD	COUNTY: SAUK	CROSS SECTIONS: ROTT ROAD	SHEET 43	E

FILE NAME : T:\PROJECTS\2024\24-2054-1 T WOODLAND, ROTT ROAD, P-56-0948, ID 5738-00-05\DRAWINGS\57380005_MODEL.DWG
LAYOUT NAME - XS 2

PLOT DATE : 3/11/2026 10:33 AM PLOT BY : TYLER BUCHANAN PLOT NAME : **PLOT SCALE :** 1 IN:10 FT HORZ. / 1 IN:10 FT VERT.

WISDOT/CADDS SHEET 49

Wisconsin Department of Transportation

Dedicated people creating transportation solutions through innovation and exceptional service.

http://www.dot.wisconsin.gov