WKE

PROJECT ID: 3390-08-70

WITH:

COUNTY: WALWORTH

SEPTEMBER 2026

ORDER OF SHEETS

Section No.	1	Title
Section No.	2	Typical Sections and Details
Section No.	3	Estimate of Quantities
Section No.	3	Miscellaneous Quantities
Section No.	4	Right of Way Plat
~~Section No.~~	~~5~~	~~Plan and Profile~~
Section No.	6	Standard Detail Drawings
Section No.	7	Sign Plates
~~Section No.~~	~~8~~	~~Structure Plans~~
~~Section No.~~	~~9~~	~~Computer Earthwork Data~~
Section No.	9	Cross Sections

TOTAL SHEETS = 226

STATE PROJECT	FEDERAL PROJECT	
	PROJECT	CONTRACT
3390-08-70	—	—

STATE OF WISCONSIN
DEPARTMENT OF TRANSPORTATION

PLAN OF PROPOSED IMPROVEMENT

RICHMOND - WHITEWATER

STH 11 TO CTH A

STH 89
WALWORTH COUNTY

STATE PROJECT NUMBER
3390-08-70

DESIGN DESIGNATION 3390-08-70

A.A.D.T.	2026	=	3,210
A.A.D.T.	2046	=	3,700
D.H.V.		=	425
D.D.		=	60/40
T.		=	11.5%
DESIGN SPEED		=	60 MPH
ESALS		=	850,000

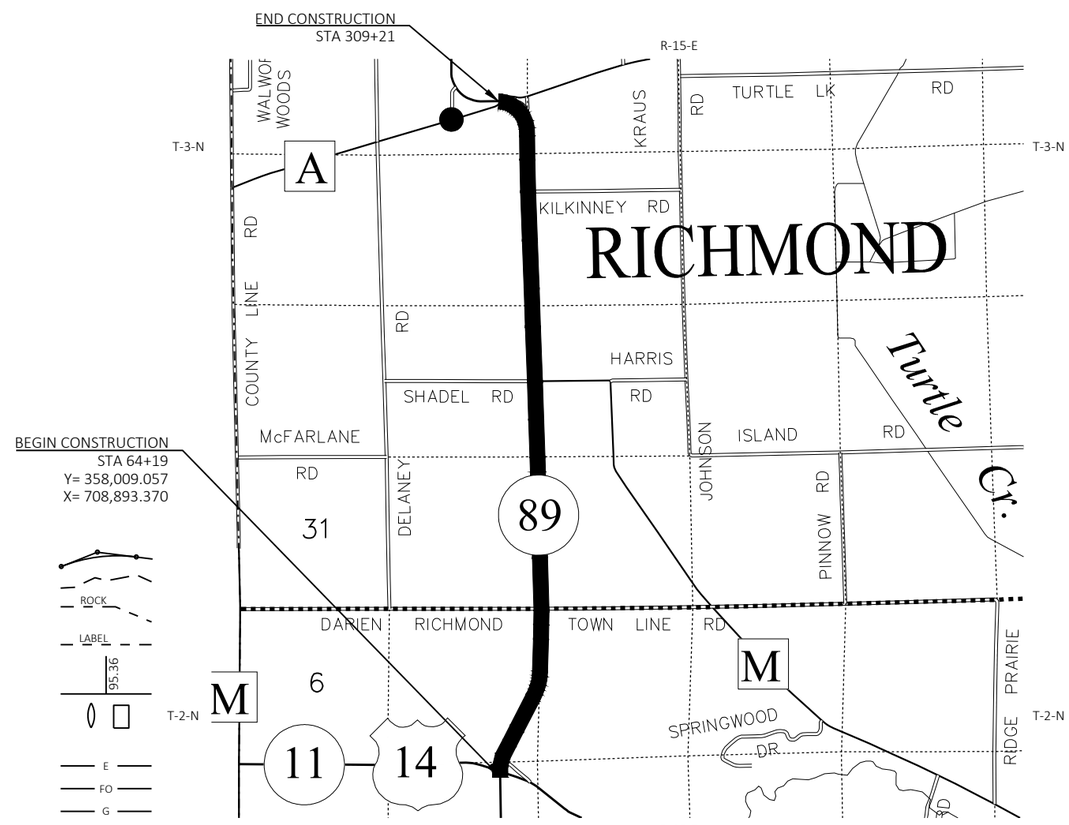

LAYOUT

SCALE 0 1 MI

TOTAL NET LENGTH OF CENTERLINE = 4.641 MI

HORIZONTAL POSITIONS SHOWN ON THIS PLAN ARE WISCONSIN COORDINATE REFERENCE SYSTEM (WISCRS), WALWORTH COUNTY, NAD83 (2011), IN U.S. SURVEY FEET. POSITIONS SHOWN ARE GRID COORDINATES, GRID BEARINGS, AND GRID DISTANCES. GRID DISTANCES ARE THE SAME AS GROUND DISTANCES.

ELEVATIONS ARE REFERENCED TO NAVD 88 (2012). GPS DERIVED ELEVATIONS ARE BASED ON GEOID G12-A

CONVENTIONAL SYMBOLS

PLAN

- CORPORATE LIMITS
- PROPERTY LINE
- LOT LINE
- LIMITED HIGHWAY EASEMENT
- EXISTING RIGHT OF WAY
- PROPOSED OR NEW R/W LINE
- SLOPE INTERCEPT
- REFERENCE LINE (300'EB')
- EXISTING CULVERT
- PROPOSED CULVERT (Box or Pipe)
- COMBUSTIBLE FLUIDS (CAUTION)
- MARSH AREA
- WOODED OR SHRUB AREA

PROFILE

- GRADE LINE
- ORIGINAL GROUND
- MARSH OR ROCK PROFILE (To be noted as such) (ROCK)
- SPECIAL DITCH (LABEL)
- GRADE ELEVATION (95.36)
- CULVERT (Profile View)

UTILITIES

- ELECTRIC (E)
- FIBER OPTIC (FO)
- GAS (G)
- SANITARY SEWER (SAN)
- STORM SEWER (SS)
- TELEPHONE (T)
- WATER (W)
- UTILITY PEDESTAL
- POWER POLE
- TELEPHONE POLE

STATE OF WISCONSIN
DEPARTMENT OF TRANSPORTATION

PREPARED BY

Surveyor	GRAEF
Designer	WISDOT
Project Manager	JONATHAN GILL
Regional Examiner	REGIONAL EXAMINER
Regional Supervisor	JANET CANNON

APPROVED FOR THE DEPARTMENT

DATE: 1/29/2026 (Signature)

E

UTILITIES CONTACTS

AT&T WISCONSIN
COMMUNICATION LINE
NATHAN GILBERT
411 7TH STREET
RACINE, WI 53403
PHONE: 262-720-8235
EMAIL: NG952W@ATT.COM

ALLIANT ENERGY
ELECTRICITY
WP&L ROAD PLANS
4902 NORTH BILTMORE LANE
MADISON, WI 53718
PHONE: 608-458-3162
EMAIL: WPLROADPLANS@ALLIANTENERGY.COM

ENBRIDGE ENERGY
GAS/PETROLEUM
KELLY DALY
1600 2ND AVE SW, SUITE 16
MINOT, ND 58701
PHONE: 701-857-0813
EMAIL: MWRCROSSINGS@ENBRIDGE.COM

FRONTIER COMMUNICATIONS OF WI LLC
COMMUNICATION LINE
CHRIS POLLACK
421 4TH ST
WAUSAU, WI 54403
PHONE: 715-847-1240
EMAIL: CHRISTOPHER.POLLACK@FTR.COM

SPECTRUM
COMMUNICATION LINE
JUSTIN MONROE-JIMENEZ
2701 DANIELS ST
MADISON, WI 53718
PHONE: 608-288-6843
EMAIL: CHTR_WI_CONST@CHARTER.COM

WE ENERGIES
ELECTRCITY
WE ENERGIES UTILTY COORDINATOR
500 S 116TH ST
WEST ALLIS, WI 53214
PHONE: 414-944-5738
EMAIL: WE-UTILITY-RELOCATIONS@WE-ENERGIES.COM

WE ENERGIES
GAS/PETOLEUM
WE ENERGIES UTILTY COORDINATOR
500 S 116TH ST
WEST ALLIS, WI 53214
PHONE: 414-944-5738
EMAIL: WE-UTILITY-RELOCATIONS@WE-ENERGIES.COM

ORDER OF SECTION 2 DETAIL SHEETS

GENERAL NOTES
PROJECT OVERVIEW
TYPICAL SECTIONS
CONSTRUCTION DETAILS
PLAN DETAILS
EROSION CONTROL
CULVERT PLAN
PERMANENT SIGNING
FLASHER REMOVAL
PAVEMENT MARKING
TRAFFIC CONTROL
DETOUR
ALIGNMENT

WISCONSIN DNR LIAISON

CRAIG WEBSTER
DNR SOUTHEAST REGION
141 NEW BARSTOW ST, ROOM 180
WAUKESHA, WI 53188
PHONE: 262-574-2141
EMAIL: CRAIG.WEBSTER@WI.GOV

REGION SURVEY COORDINATOR

TOM LIPSKY
WISDOT SOUTHEAST REGION
141 NW BARSTOW ST
WAUKESHA, WI 53188
PHONE: 262-548-6737
EMAIL: THOMAS.LIPSKY@DOT.WI.GOV

DESIGN PROJECT MANAGER

JONATHAN GILL, P.E.
WISDOT SE REGION
141 NW BARSTOW ST
WAUKESHA, WI 53188
PHONE: 262-548-8812
EMAIL: JONATHAN.GILL@DOT.WI.GOV

DESIGN PROJECT LEADER

PETER THAO, P.E.
WISDOT SE REGION
141 NW BARSTOW ST
WAUKESHA, WI 53188
PHONE: 262-548-5845
EMAIL: PETER.THAO@DOT.WI.GOV

GENERAL NOTES

THE LOCATIONS OF EXISTING AND PROPOSED UTILITY INSTALLATIONS AS SHOWN ON THE PLANS ARE APPROXIMATE. THERE MAY BE OTHER UTILITY INSTALLATIONS WITHIN THE PROJECT AREA THAT ARE NOT SHOWN.

CONTRACTOR WILL BE RESPONSIBLE FOR RESHAPING AND SEEDING ANY PREVIOUSLY GRASSED AREAS WHICH ARE DISTURBED BY OPERATIONS, OUTSIDE OF THE NORMAL CONSTRUCTION LIMITS.

NO TREES OR SHRUBS ARE TO BE REMOVED WITHOUT THE APPROVAL OF THE ENGINEER.

RIGHT OF WAY INFORMATION SHOWN ON THE PLANS IS APPROXIMATE.

THE CONTRACTOR IS TO WORK WITH UTMOST CARE AND PROTECT ALL SURVEY MARKERS. REMOVAL OF ANY SURVEY MARKER IS TO BE WITH THE APPROVAL OF THE ENGINEER.

WHEN THE QUANTITY OF THE ITEMS OF BASE AGGREGATE, SUBBASE OR HMA PAVEMENT IS MEASURED FOR PAYMENT BY THE TON OR CUBIC YARD, THE DEPTH OR THICKNESS OF THE LAYERS SHOWN ON THE PLAN IS APPROXIMATE AND THE ACTUAL THICKNESS WILL DEPEND ON THE DISTRIBUTION OF THE MATERIAL AS DIRECTED BY THE ENGINEER.

EROSION CONTROL FEATURES AS SHOWN IN THE PLANS ARE AT APPROXIMATE LOCATIONS. EXACT LOCATIONS WILL BE DETERMINED BY THE CONTRACTOR'S EROSION CONTROL IMPLEMENTATION PLAN (ECIP) AND APPROVED BY THE ENGINEER. MAINTAIN EROSION CONTROL MEASURES UNTIL SUCH A TIME AS THE ENGINEER DETERMINES THE MEASURE IS NO LONGER NECESSARY.

PAVEMENT REMOVAL WILL BE TO THE NEAREST JOINT OR A SAWED EDGE WILL BE REQUIRED AS DIRECTED BY THE ENGINEER.

PRIOR TO PLACING THE NEW BASE AGGREGATE DENSE COURSE OR PAVED SHOULDERS EXISTING UNCOMPACTED SHOULDER MATERIAL SHALL BE REMOVED OR DEPOSITED ON THE OUTER PORTION OF THE EXISTING SHOULDER OR AS DIRECTED BY THE ENGINEER.

THE EXACT LOCATION AND WIDTH OF DRIVEWAYS SHALL BE DETERMINED BY THE ENGINEER IN THE FIELD. DRIVEWAYS SHALL BE REPLACED IN KIND. COMMERCIAL DRIVEWAYS SHALL BE A MINIMUM OF 30 FEET WIDE UNLESS SHOWN OTHERWISE IN THE PLANS. ALL RESIDENTIAL DRIVEWAYS SHALL BE A MAXIMUM OF 35 FEET WIDE.

PIPE AND INLET ELEVATIONS AS SHOWN ON THE PLANS MAY BE ADJUSTED BY THE ENGINEER TO FIT EXISTING FIELD CONDITIONS

PIPE ELEVATIONS, LENGTHS AND LOCATIONS AS SHOWN ON THE PLANS, MAY BE ADJUSTED TO FIT EXISTING FIELD CONDITIONS AS DIRECTED BY THE ENGINEER.

THE CONTRACTOR'S PAVING OPERATION SHALL BE CONSISTENT WITH THE TYPICAL SECTIONS AND CONSTRUCTED TO PREVENT LONGITUDINAL JOINTS FROM BEING LOCATED WITHIN A DRIVING, TURNING, PASSING, OR PARKING LANE.

SAWCUTS, AS SHOWN ON THE PLANS, ARE SUGGESTED LOCATIONS AND MAY BE ADJUSTED AT THE DISCRETION OF THE ENGINEER TO BETTER SUIT FIELD CONDITIONS.

PRIOR TO PLACEMENT OF BEAM GUARD THE SHOULDERS SHALL BE IN PLACE, SHAPED AND COMPACTED.

CONTRACTOR SHALL MAINTAIN ACCESS TO ALL DRIVEWAYS AT ALL TIMES EXCEPT WHEN PAVING OR PIPE LAYING OPERATIONS REQUIRE THE DRIVEWAY TO BE CLOSED. ACCESS TO DRIVEWAYS SHALL BE RE-ESTABLISHED IMMEDIATELY AFTER OPERATIONS ARE COMPLETED. ACCESS SHALL BE PROVIDED DURING ALL NON-WORKING HOURS.

TRAFFIC CONTROL DEVICES SHALL BE ADJUSTED TO FIT FIELD CONDITIONS AS DIRECTED BY THE ENGINEER.

PRIOR TO ORDERING DRAINAGE PIPES, THE CONTRACTOR SHALL FIELD VERIFY RELATED DRAINAGE INFORMATION IN THE PLAN WITH THE ENGINEER.

DO NOT DRIVE OR STORE EQUIPMENT, OR STORE CONSTRUCTION MATERIALS IN ENVIRONMENTALLY SENSITIVE AREAS, WETLANDS OR WATERWAYS.

ALL GRADED OR DISTURBED AREAS THAT WILL NOT BE PERMANENTLY RESORTED WITHIN 14-DAYS TO RECEIVE TEMPORARY SEED AND MULCH WITHIN 5-DAYS OF DISTURBANCE

STH 89 STA 64+19 TO 71+00		
LAYER	THICKNESS	TYPE
UPPER	1 3/4-INCHES	4 LT 58-28 S
LOWER	1 3/4-INCHES	4 LT 58-28 S

STH 89 STA 71+00 TO 309+21		
LAYER	THICKNESS	TYPE
UPPER	1 3/4-INCHES	4 LT 58 - 28 S
LOWER	2 1/4-INCHES	3 LT 58-28 S

STH 11		
LAYER	THICKNESS	TYPE
UPPER	1 3/4-INCHES	4 LT 58-28 S
LOWER	1 3/4-INCHES	4 LT 58-28 S

SIDE ROADS		
LAYER	THICKNESS	TYPE
UPPER	1 3/4-INCHES	4 LT 58 - 28 S
LOWER	2 1/4-INCHES	3 LT 58-28 S

DIGGERS HOTLINE
Dial 811 or (800)242-8511
www.DiggersHotline.com

2

STANDARD ABBREVIATIONS

ABUT	ABUTMENT
AC	ACRE
AGG	AGGREGATE
AH	AHEAD
∠	ANGLE
AADT	ANNUAL AVERAGE DAILY TRAFFIC
AEW	APRON ENDWALL
ASPH	ASPHALTIC
BK	BACK
BC	BACK OF CURB
BAD	BASE AGGREGATE DENSE
BL OR B/L	BASE LINE
BM	BENCH MARK
CB	CATCH BASIN
CL OR C/L	CENTER LINE
Δ	CENTRAL ANGLE OR DELTA
CE	COMMERCIAL ENTRANCE
CONC	CONCRETE
CSW	CONCRETE SIDEWALK
CONST	CONSTRUCTION
CP	CONTROL POINT
CO	COUNTY
CTH	COUNTY TRUCK HIGHWAY
CY	CUBIC YARD
CP	CULVERT PIPE
CPCA	CULVERT PIPE CORRUGATED ALUMINUM
CPCPE	CULVERT PIPE CORRUGATED POLYETHYLENE
CPCPP	CULVERT PIPE CORRUGATED POLYPROPYLENE
CPCS	CULVERT PIPE CORRUGATED STEEL
CPCSAC	CULVERT PIPE CORRUGATED STEEL ALUMINUM COATED
CPCSPC	CULVERT PIPE CORRUGATED STEEL POLYMER COATED
CPRC	CULVERT PIPE REINFORCED CONCRETE
CPRCHE	CULVERT PIPE REINFORCED CONCRETE HORIZONTAL ELLIPTICAL
CPS	CULVERT PIPE SALVAGED
CPT	CULVERT PIPE TEMPORARY
C & G	CURB AND GUTTER
D	DEGREE OF CURVE
DHV	DESIGN HOUR VOLUME
DIA	DIAMETER
DD	DIRECTIONAL DISTRIBUTION
DE	DRAINAGE EASEMENT
DWY	DRIVEWAY
EA	EACH
EB	EASTBOUND
EL OR ELEV	ELEVATION
EMB	EMBANKMENT
EW	ENDWALL
EAT	ENERGY ABSORBING TERMINAL
ESALS	EQUIVALENT SINGLE AXLE LOADS
EXC	EXCAVATION
EBS	EXCAVATION BELOW SUBGRADE
EXIST	EXISTING
FERT	FERTILIZER
FE	FIELD ENTRANCE
FL OR F/L	FLOW LINE
FT	FOOT
FTMS	FREE TRAFFIC MANAGEMENT SYSTEM
HES	HIGH EARLY STRENGTH
HE	HIGHWAY EASEMENT
CWT	HUNDRED WEIGHT
IN DIA	INCH DIAMETER
INL	INLET
ID	INSIDE DIAMETER
INTERS	INTERSECTION
IH	INTERSTATE HIGHWAY
INV	INVERT
JT	JOINT
LT	LEFT
LHF	LEFT HAND FORWARD
L	LENGTH OF CURVE
LF	LINEAR FOOT
LC	LONG CHORD OF CURVE
LS	LUMP SUM
MGAL	ONE THOUSAND GALLONS
MH	MANHOLE
ML OR M/L	MATCH LINE
NOM	NOMINAL
NC	NORMAL CROWN
NB	NORTHBOUND
NO	NUMBER
OD	OUTSIDE DIAMETER
PAVT	PAVEMENT
PLE	PERMANENT LIMITED EASEMENT
PC	POINT OF CURVATURE
PI	POINT OF INTERSECTION
PT	POINT OF TANGENCY
PCC	PORTLAND CEMENT CONCRETE
LB	POUND
PSI	POUNDS PER SQUARE INCH
PE	PRIVATE ENTRANCE
PROJ	PROJECT
PL	PROPERTY LINE
PRW	PROPOSED RIGHT OF WAY
R	RADIUS
RL OR R/L	REFERENCE LINE
REQD	REQUIRED
RT	RIGHT
RHF	RIGHT HAND FORWARD
R/W	RIGHT OF WAY
RD	ROAD
RDWY	ROADWAY
SHLDR	SHOULDER
SW	SIDEWALK
SB	SOUTHBOUND
SPECS	SPECIFICATIONS
SF	SQUARE FEET
SY	SQUARE YARD
SDD	STANDARD DETAIL DRAWINGS
STH	STATE TRUNK HIGHWAY
STA	STATION
SSPC	STORM SEWER PIPE COMPOSITE
SSCPE	STORM SEWER PIPE CORRUGATED POLYETHYLENE
SSCPP	STORM SEWER PIPE CORRUGATED POLYPROPYLENE
SSPNRC	STORM SEWER PIPE NON-REINFORCED CONCRETE
SSPRC	STORM SEWER PIPE REINFORCED CONCRETE
SSPRC	STORM SEWER PIPE REINFORCED CONCRETE
SSPRCHE	STORM SEWER PIPE REINFORCED CONCRETE HORIZONTAL ELLIPTICAL
SE	SUPERELEVATION
SL OR S/L	SURVEY LINE
TEMP	TEMPORARY
TI	TEMPORARY INTEREST
TLE	TEMPORARY LIMITED EASEMENT
TC	TOP OF CURB
TL OR T/L	TRANSIT LINE
T	TRUCKS (PERCENT OF)
TYP	TYPICAL
USH	UNITED STATES HIGHWAY
VAR	VARIABLE
VC	VERTICAL CURVE
VPC	VERTICAL POINT OF CURVATURE
VPI	VERTICAL POINT OF INTERSECTION
VPT	VERTICAL POINT OF TANGENCY
W	WEST
WB	WESTBOUND

OTHER CONTACTS

SOUTHEAST WISCONSIN REGIONAL PLANNING COMMISION
ROB MERRY
SEWRPC (CHIEF SURVEYOR)
W239 N1812 ROCKWOOD DRIVE
P.O. BOX 1607
WAUKESHA, WI 53187
PHONE: 262-953-4289
EMAIL: RMERRY@SEWRPC.ORG

ANDY TRAEGER
SEWRPC (CONSTRUCTION COODINATOR)
W239 N1812 ROCKWOOD DRIVE
P.O. BOX 1607
WAUKESHA, WI 53187
PHONE: 262-953-4296
EMAIL:ATRAEGER@SEWRPC.ORG

WALWORTH COUNTY SHERIFF
DAVE GERBER
WALWORTH COUNTY SHERIFF
1770 COUNTY ROAD NN
ELKHORN, WI 53121
PHONE: 262-741-4410
EMAIL: DGERBER@CO.WALWORTH.WI.US

WALWORTH COUNTY DIRECTOR OF EMERGENCY GOVERNMENT
JASON ROWLAND
1770 COUNTY ROAD NN
ELKHORN, WI 53121
PHONE: 262-741-4616
EMAIL: JROWLAND@CO.WALWORTH.WI.US

WALWORTH COUNTY DIRECTOR OF PUBLIC WORKS
RICHARD HOUGH
W4097 COUNTY ROAD NN
BUILDING B
ELKHORN, WI 53121
PHONE: 262-741-3114
EMAIL: RHOUGH@CO.WALWORTH.WI.US

WISCONSIN STATE PATROL
CAPTAIN BRAD OCAIN, COMMANDER
21115 EAST MORELAND BOULEVARD
WAUKESHA, WI 53186
PHONE: 262-785-4700

LAKE GENEVA POLICE DEPARTMENT
EDWARD GRITZNER, CHIEF OF POLICE
626 GENEVA STREET
LAKE GENEVA, WI 53147
PHONE: 262-248-4455
EMAIL: LGPD@CITYOFLAKEGENEVA.GOV

WALWORTH COUNTY
ROAD FACILITY
RICHARD HOUGH
W4097 COUNTY RD NN
ELKHORN, WI 53121
PHONE: 262-741-3104
EMAIL: RHOUGH@CO.WALWORTH.WI.US

WISCONSN DEPARTMENT OF TRANSPORTATION
WISCONSIN SIGNALS
JARRETT GATES
141 NW BARSTOW STREET P.O. BOX 798
WAUKESHA, WI 53188
PHONE: 262-548-5894
EMAIL: JARRETT.GATES@DOT.WI.GOV

2

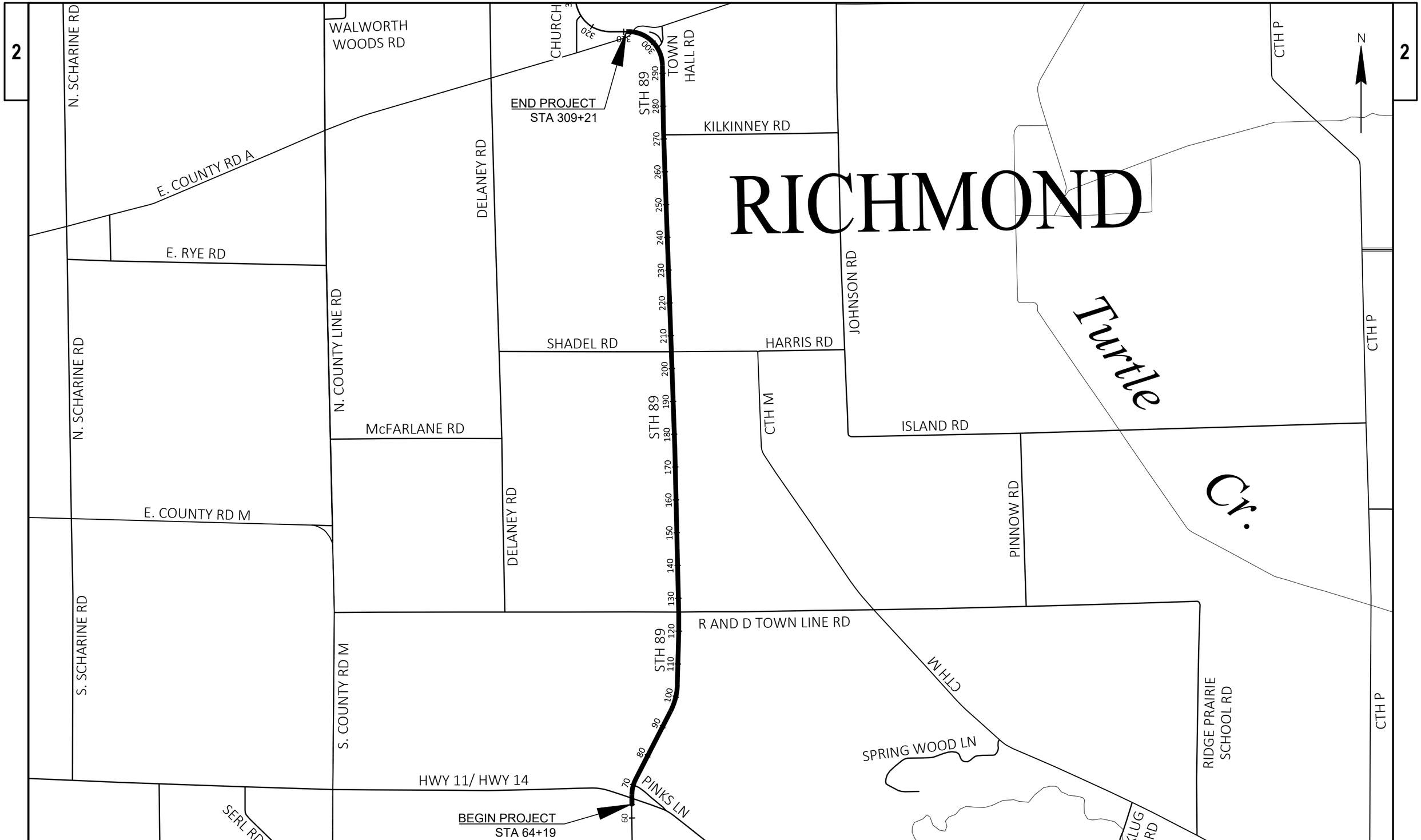

PROJECT NO: 3390-08-70	HWY: STH 89	COUNTY: WALWORTH	PROJECT OVERVIEW	SHEET 4	E

FILE NAME : N:\PDS\C3D\33900800\SHEETSPLAN\020201-PO.DWG
LAYOUT NAME - 020201-PO
PLOT DATE : 10/21/2025 3:10 PM
PLOT BY : THAO, PETER N
PLOT NAME :
PLOT SCALE : 1 IN:0.5 MI
WISDOT/CADDS SHEET 42

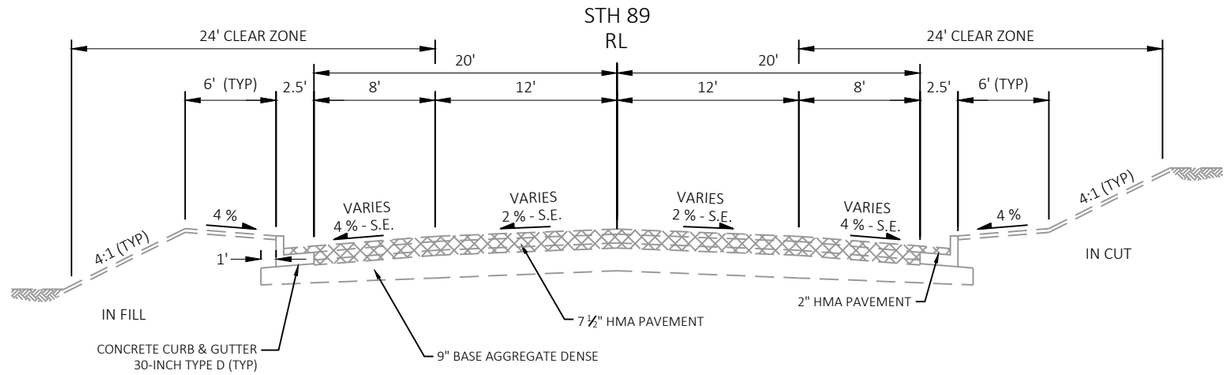

EXISTING TYPICAL SECTION STH 89

STA 64+19 TO STA 71+00

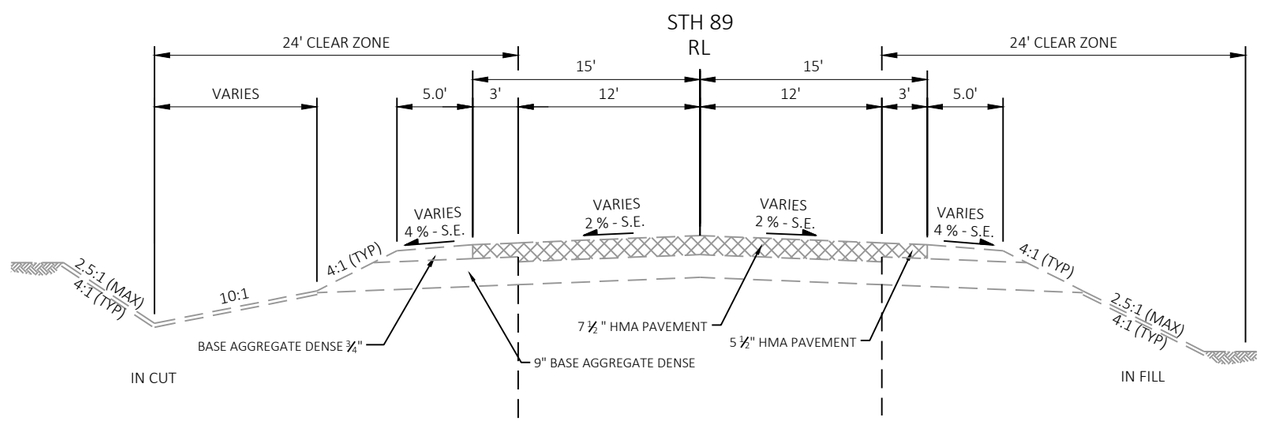

EXISTING TYPICAL SECTION STH 89

STA 71+00 TO STA 76+00
STA 95+00 TO STA 106+00
STA 155+00 TO STA 166+00
STA 243+00 TO STA 309+21

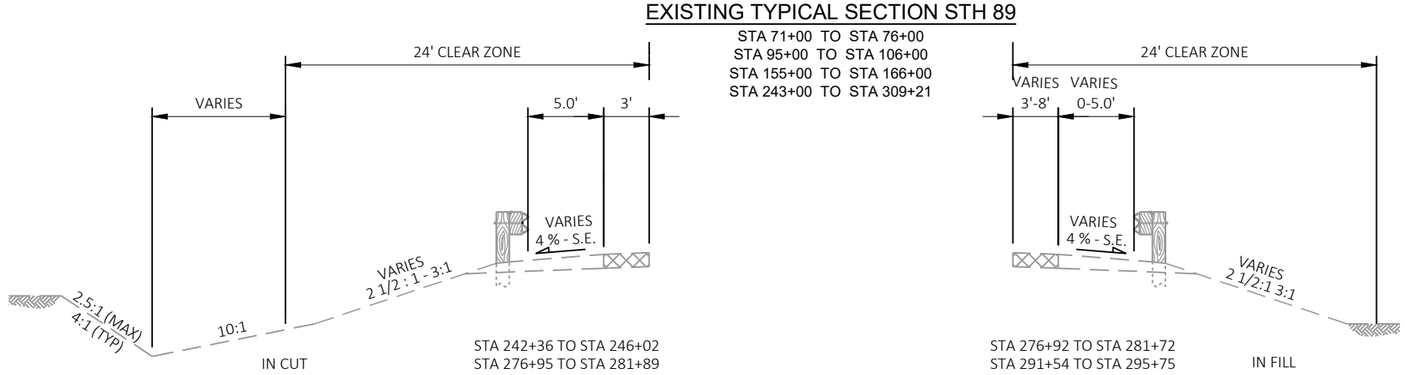

STA 242+36 TO STA 246+02
STA 276+95 TO STA 281+89
STA 291+97 TO STA 296+35

STA 276+92 TO STA 281+72
STA 291+54 TO STA 295+75

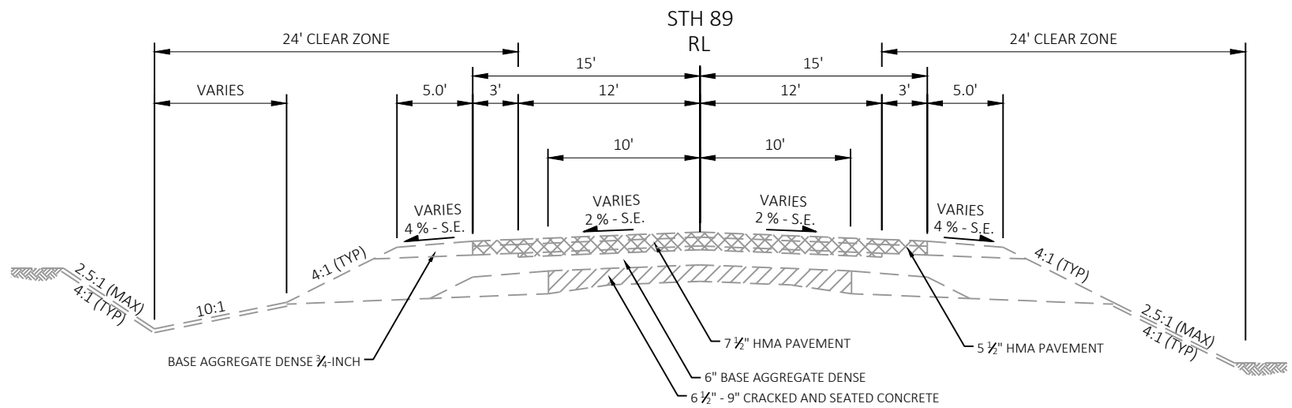

EXISTING TYPICAL SECTION STH 89

STA 76+00 TO STA 95+00
STA 106+00 TO STA 155+00
STA 166+00 TO STA 243+00

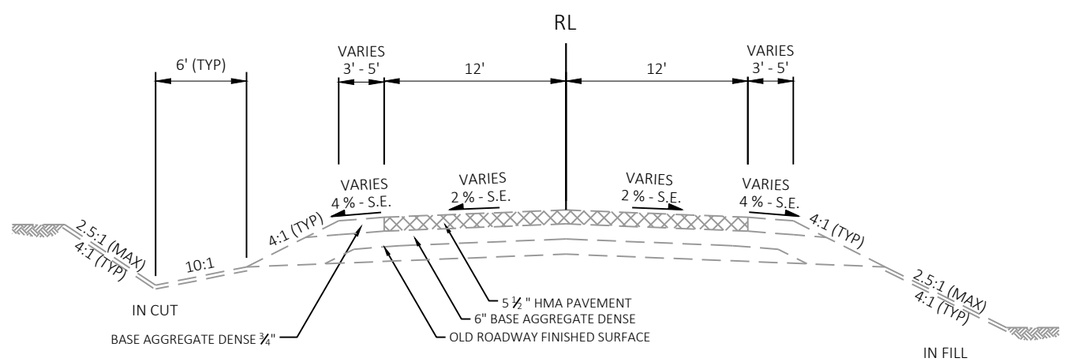

EXISTING TYPICAL SECTION SIDE ROADS

PINKS LANE
R AND D TOWN LINE ROAD
SHADEL ROAD
CTH M
KILKENNY ROAD
TOWN HALL ROAD

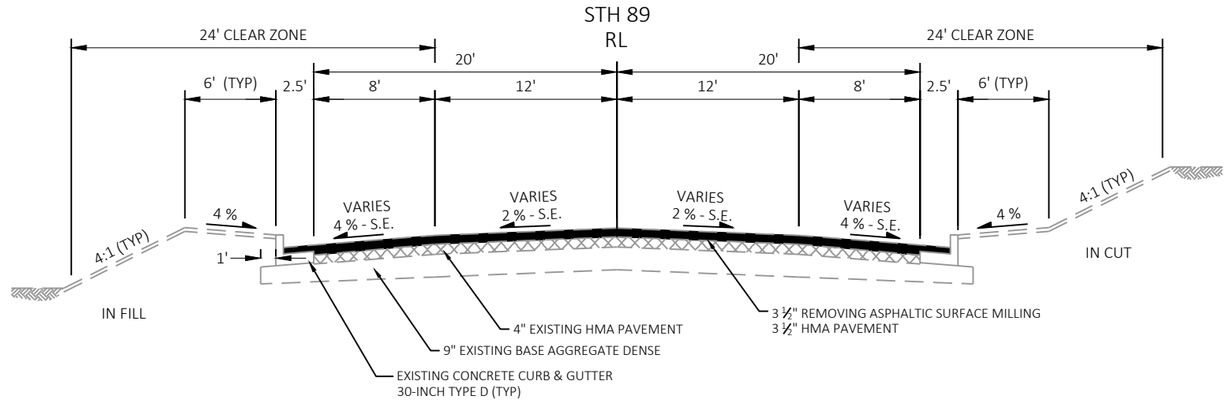

TYPICAL FINISHED SECTION STH 89

STA 64+19 TO STA 71+00

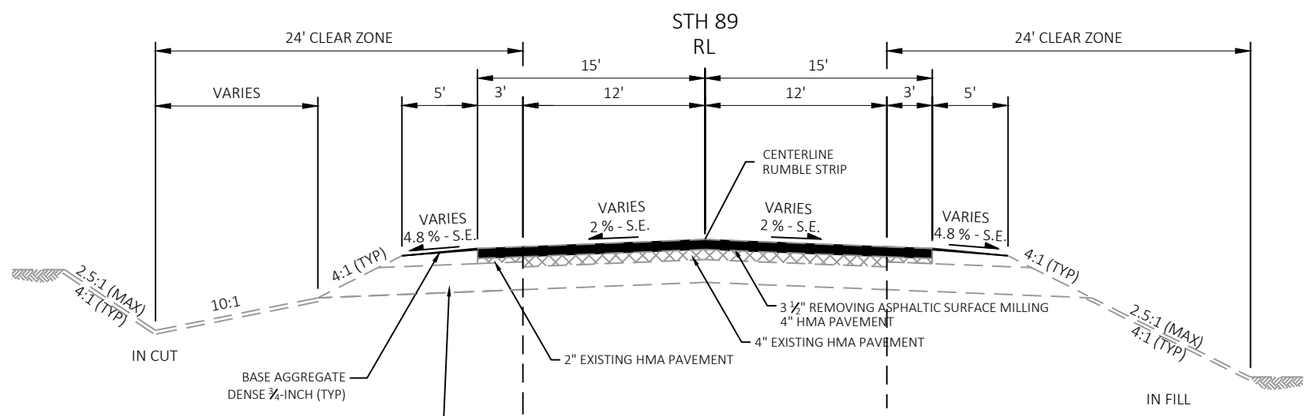

TYPICAL FINISHED SECTION STH 89

STA 71+00 TO STA 76+00
STA 95+00 TO STA 106+00
STA 155+00 TO STA 166+00
STA 243+00 TO STA 309+21

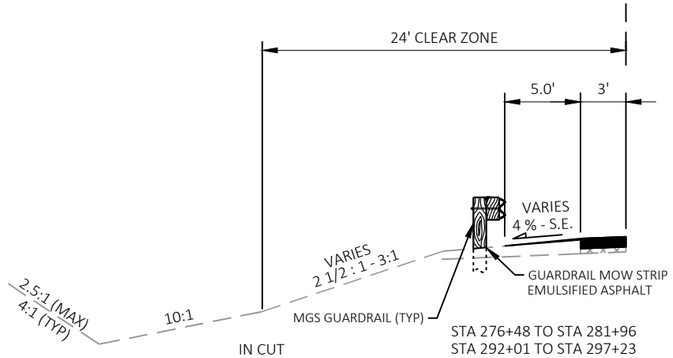

STA 276+48 TO STA 281+96
STA 292+01 TO STA 297+23

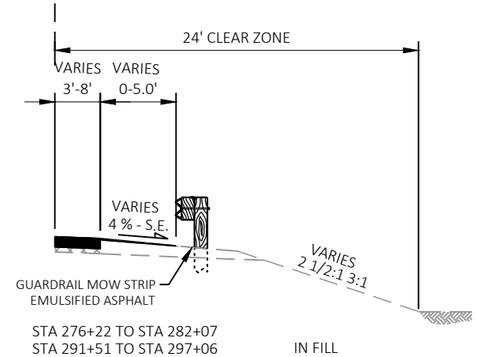

STA 276+22 TO STA 282+07
STA 291+51 TO STA 297+06

PROJECT NO: 3390-08-70	HWY: STH 89	COUNTY: WALWORTH	TYPICAL SECTIONS	SHEET 7	E

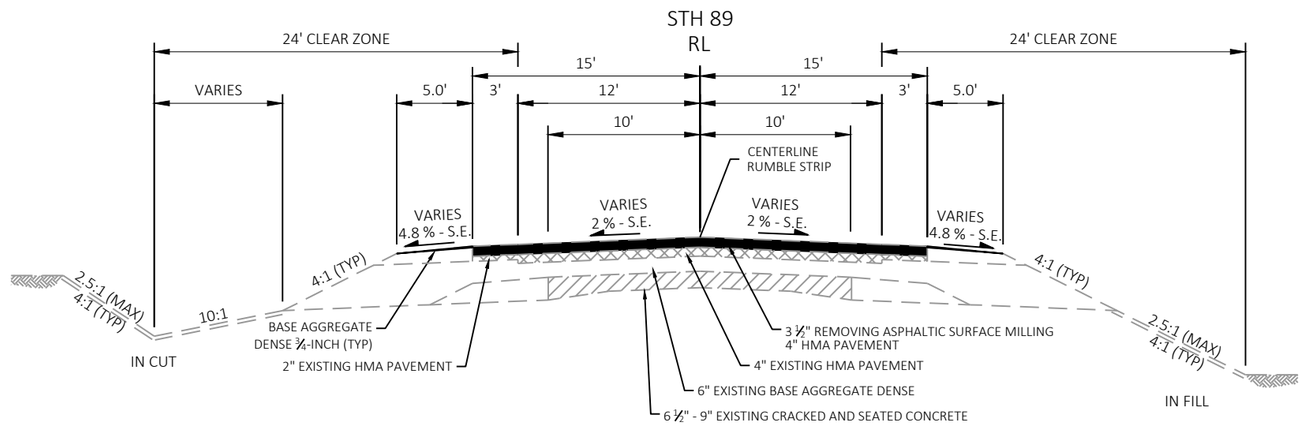

TYPICAL FINISHED SECTION STH 89

STA 76+00 TO STA 95+00
STA 106+00 TO STA 155+00
STA 166+00 TO STA 243+00

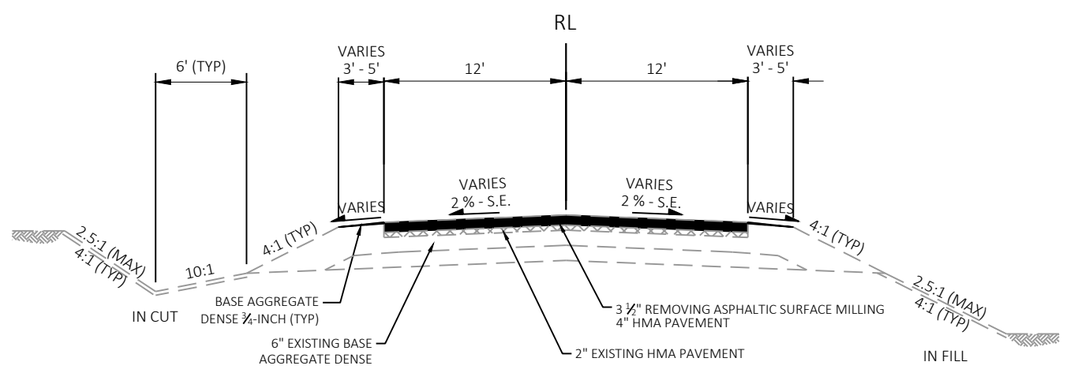

TYPICAL FINISHED SECTION SIDE ROADS

PINKS LANE
R AND D TOWN LINE ROAD
SHADEL ROAD
CTH M
KILKENNY ROAD
TOWN HALL ROAD

2

CONSTRUCTION NOTES

1. TRANSITION CUT IS PAID AS EXCAVATION COMMON
2. TRANSITION CUT WIDTH IS FROM SUBGRADE SHOULDER POINT TO SUBGRADE SHOULDER POINT
3. BACKFILL THE TRANSITION CUT AREAS WITH FOUNDATION AND TRENCH BACKFILL AS SPECIFIED IN STANDARD SPEC 520. PAYMENT FOR BACKFILLING TRANSITION CUT IS INCIDENTAL.
4. PAYMENT FOR TRENCH EXCAVATION IS INCIDENTAL TO THE CULVERT PIPE BID ITEMS.

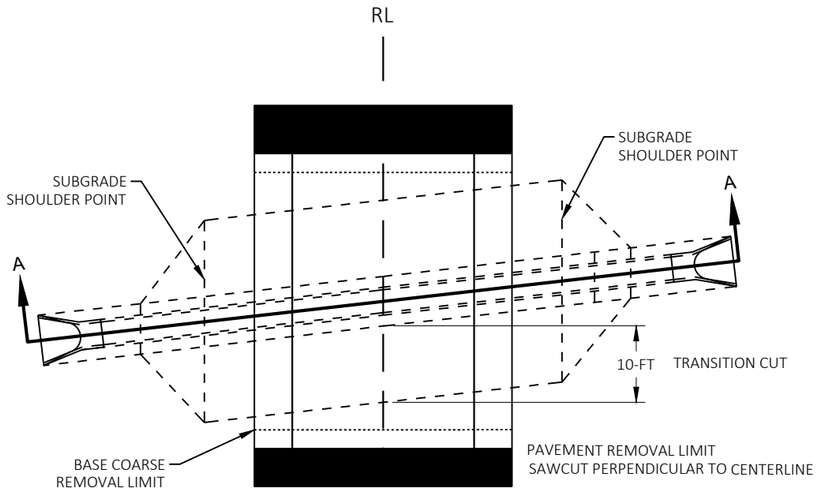

PLAN VIEW

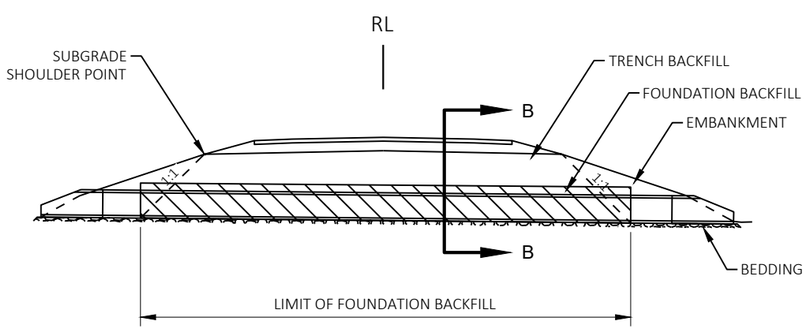

SECTION A-A

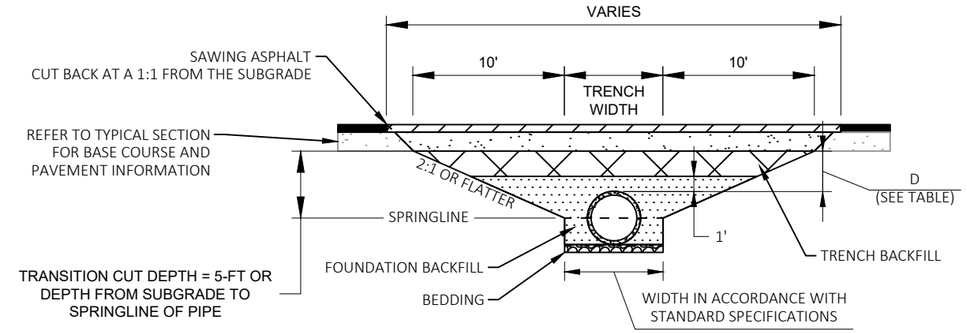

SECTION B-B
(D < 6 FT)

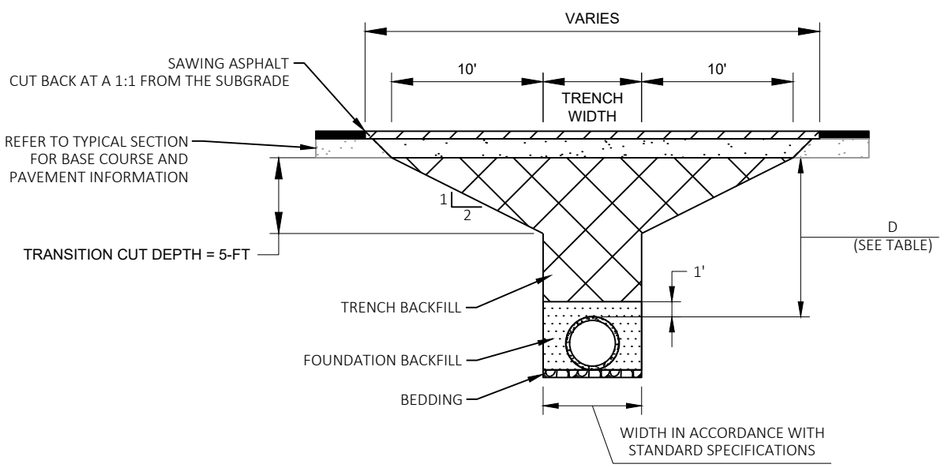

SECTION B-B
(D ≥ 6 FT)

CULVERT PIPE TRANSITIONS				
ROUTE	STA	DEPTH D (FT)	PIE DIA (IN)	REMARKS
STH 89	82+78	1	24	
STH 89	158+50	2	42	
STH 89	294+44	14	42	
STH 89	302+95	5	36	

CULVERT REPLACEMENT - HMA PAVEMENT

LEGEND

ASPHALTIC REPAIR

SSSSSS VERTICAL MILLED EDGE
SAW CUTTING AT THE CONTRACTORS DISCRETION

tttttttt TACK COAT

GENERAL NOTES

1. EXACT LOCATION, DEPTH AND SIZE OF REPAIR TO BE DETERMINED BY THE ENGINEER IN THE FIELD.
2. MILL PAVEMENT PER PLAN PRIOR TO MAKING ASPHALTIC REPAIR.
3. LOCATE LONGITUDINAL REPAIR JOINTS OUTSIDE OF WHEEL PATH. 12-INCH MINIMUM (24-INCH RECOMMENDED) FROM THE CENTER OF THE WHEEL PATH.
4. ASPHALTIC REPAIR PAVING TO BE DONE ON THE SAME DAY AS REMOVAL.

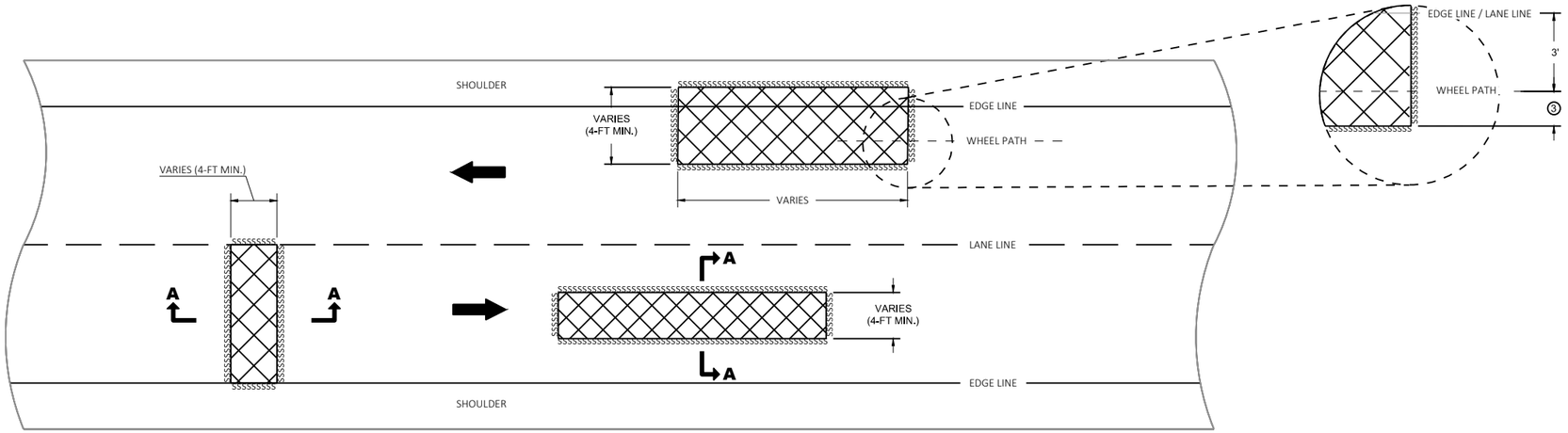

PLAN VIEW

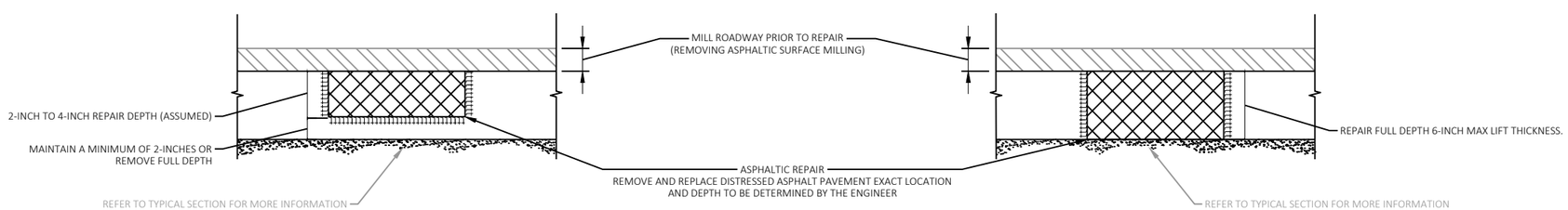

PARTIAL DEPTH **FULL DEPTH**

SECTION A-A

ASPHALTIC REPAIR

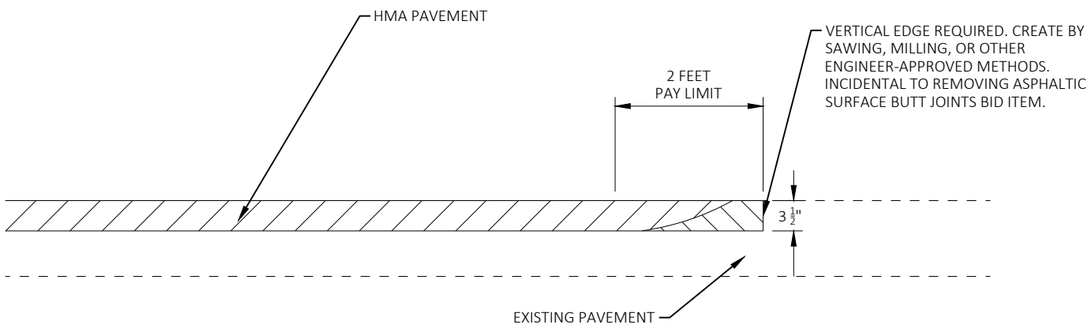

REMOVE MATERIAL UNDER ITEM 'REMOVING ASPHALTIC SURFACE BUTT JOINT'

REMOVING ASPHALTIC SURFACE MILLING

BUTT JOINT - NO CHANGE IN PROFILE

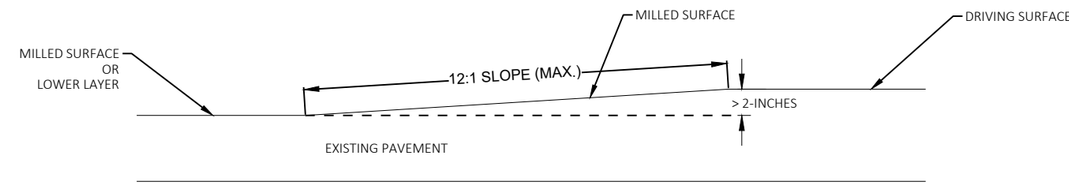

MILLED RAMP

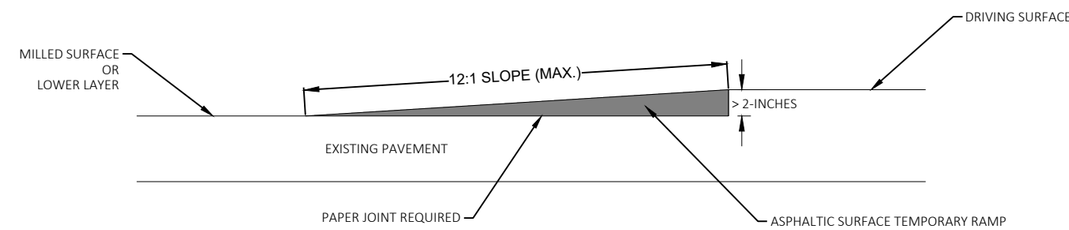

ASPHALTIC SURFACE TEMPORARY RAMP

NOTES:
- THESE CONSTRUCTION DETAILS AND THE SPECIAL PROVISIONS SUPPLEMENT THE REQUIREMENTS FOR PROVIDING DROP-OFF PROTECTION AS STATED IN STANDARD SPECIFICATION 104.6.1.2.3.
- MILLING RAMP PAID AS 'REMOVING ASPHALTIC SURFACE BUTT JOINTS' OR 'REMOVING PAVEMENT BUTT JOINTS'.
- PAVING OF ASPHALTIC SURFACE TEMPORARY RAMP PAID AS 'ASPHALTIC SURFACE TEMPORARY'
- REMOVAL OF RAMPS PAID AS 'REMOVING ASPHALTIC SURFACE BUTT JOINTS' OR 'REMOVING PAVEMENT BUTT JOINTS'.

2

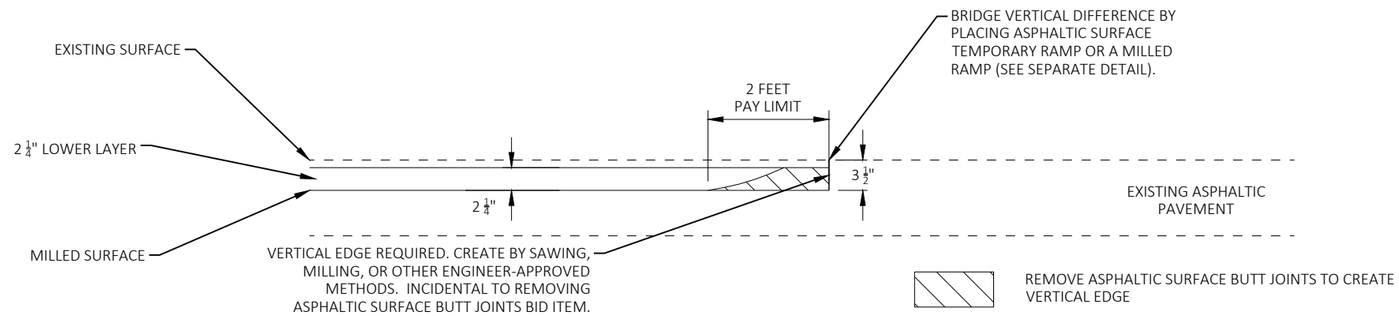

MILLING AND PAVING LOWER LAYER

OPERATIONS

- REMOVING ASPHALTIC SURFACE MILLING 3 ½-INCHES AND REMOVING ASPHALTIC SURFACE BUTT JOINT.
- PAVE LOWER LAYER, PAVE TEMPORARY RAMP.

- REMOVING ASPHALTIC SURFACE BUTT JOINT, REMOVE TEMPORARY RAMP.
- PAVE UPPER LAYER.

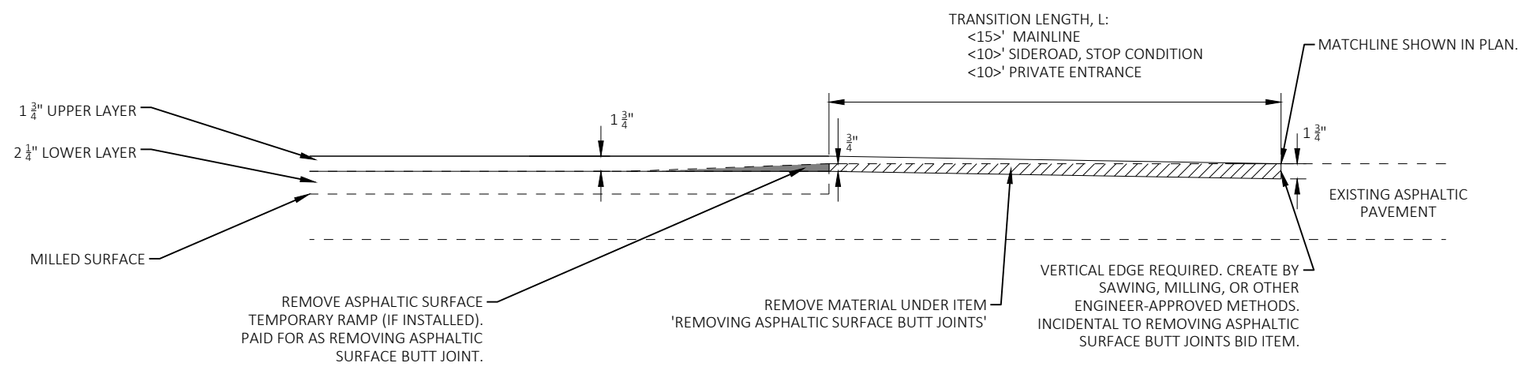

MILLING BUTT JOINT AND PAVING UPPER LAYER

BUTT JOINT - CHANGE IN PROFILE (MILL 3.5", PAVE 4")

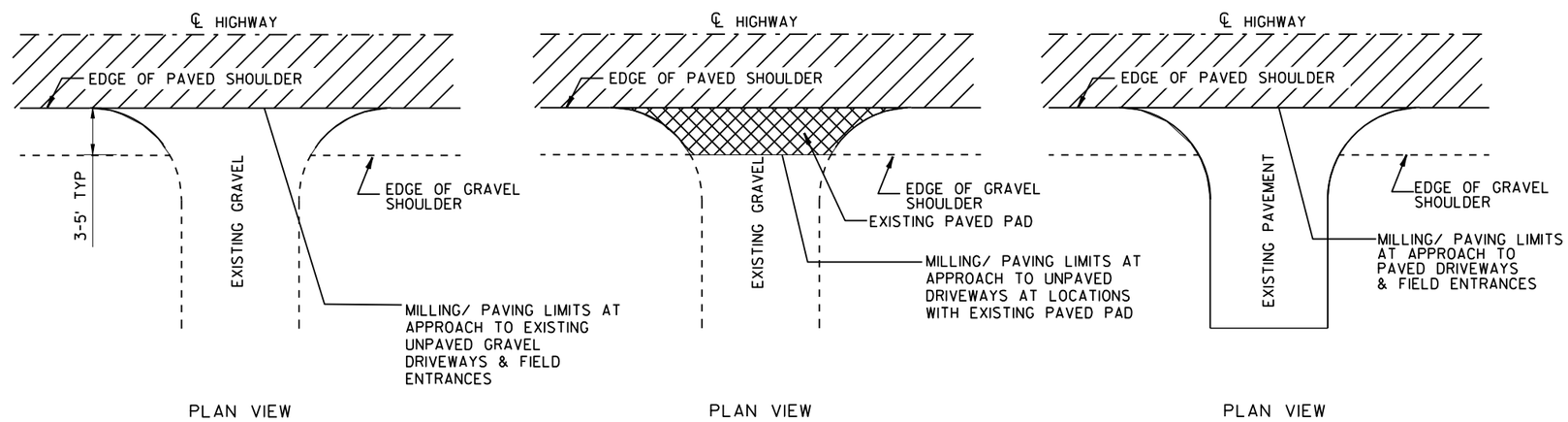

RURAL DRIVEWAY DETAIL

HMA PAVEMENT

ASPHALTIC SURFACE DRIVEWAYS

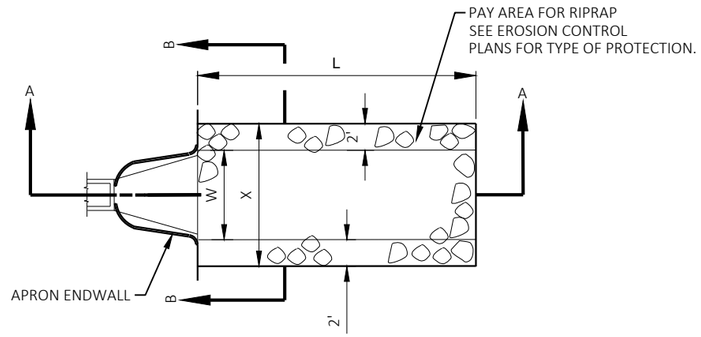

PLAN VIEW

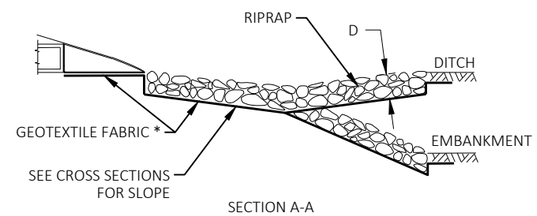

SECTION A-A

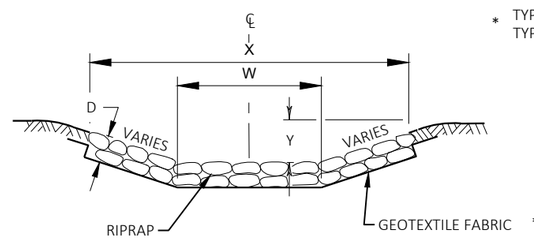

SECTION B-B

L = 3 x W (NOR) OR 10' MIN
OR AS INDICATED IN THE PLANS
OR AS DIRECTED BY THE ENGINEER

D = 12" FOR RIPRAP LIGHT
18" FOR RIPRAP MEDIUM
24" FOR RIPRAP HEAVY

X = W+4' FOR TYPICAL CULVERT
DISCHARGE INTO DITCH
W+6' FOR CULVERT DISCHARGE
DOWN EMBANKMENT SLOPE

Y = 0' FOR TYPICAL CULVERT
DISCHARGE INTO DITCH
6" FOR CULVERT DISCHARGE
DOWN EMBANKMENT SLOPE

* TYPE R (FOR RIPRAP LIGHT ONLY)
TYPE HR (FOR RIPRAP HEAVY AND MEDIUM ONLY)

CONSTRUCTION NOTES:

1. GEOTEXTILE FABRIC SHALL EXTEND BENEATH THE ENTIRE LENGTH OF THE APRON ENDWALL SECTION. INSTALL ON PREPAVED FOUNDATION. GRADE PRIOR TO END WALL INSTALLATION.
2. COMPLETE GEOTEXTILE FABRIC AND RIPRAP SECTION INSTALLATION PRIOR TO STORM WATER FLOW.

RIPRAP AND GEOTEXTILE FABRIC DETAIL AT APRON ENDWALLS

SER (20180101)

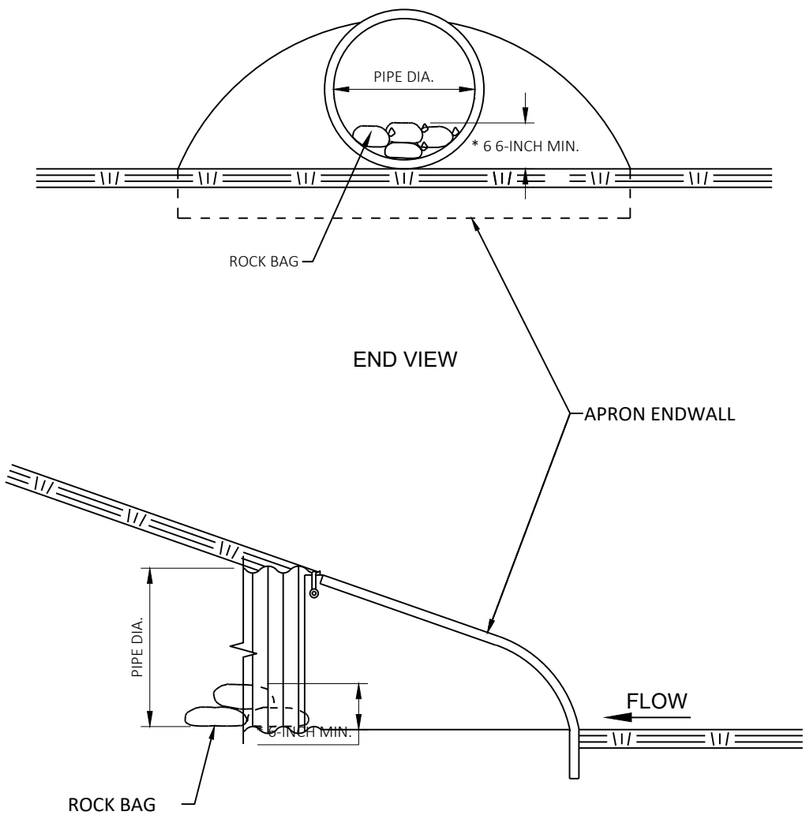

*OR AS DIRECTED BY THE ENGINEER

ESTIMATED BAG SIZE 18" X 12" X 6"	
PIPE SIZE	ESTIMATED NUMBER OF BAGS
12"	1
15"	2
18"	2
24"	3
30"	5
36"	7
42"	7
48"	10
54"	10
60"	13
66"	14
72"	16
17"X13"	2
30"X19"	5
38"X24"	7
45"X29"	10
53"X34"	10
60"X38"	13
76"X48"	18
27' WIDE BOX CULVERT	36

CULVERT PIPE CHECKS

SER (20180101)

2

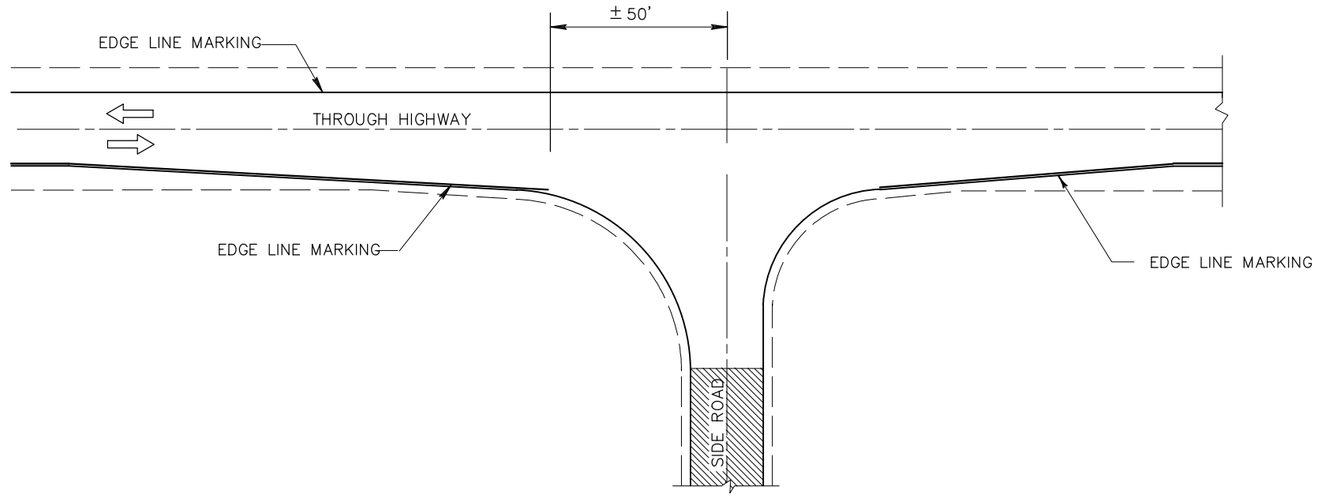

MINOR INTERSECTION WITHOUT CURBS

(TYPICAL MARKING)

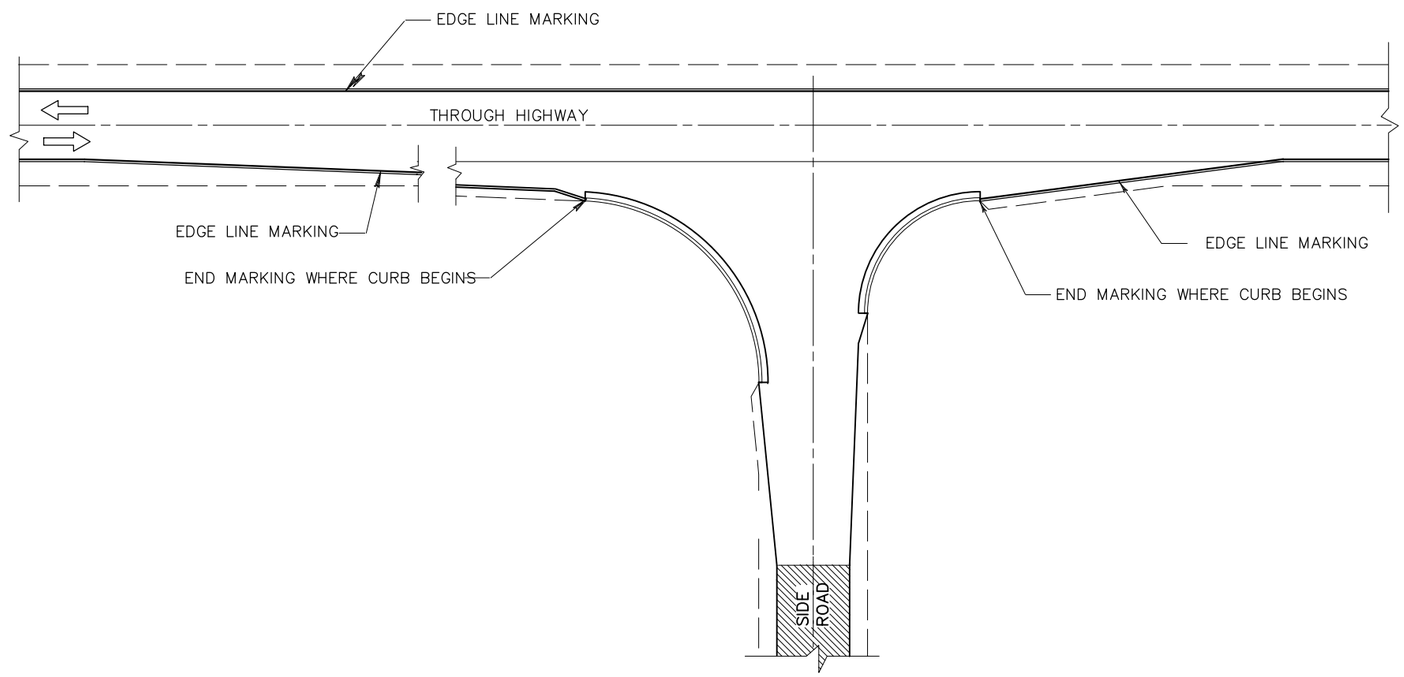

MINOR INTERSECTION WITH CURBS

(TYPICAL MARKING)

2

PROJECT NO:3390-08-70	HWY:STH 89	COUNTY:WALWORTH	CONSTRUCTION DETAILS	SHEET 16	E

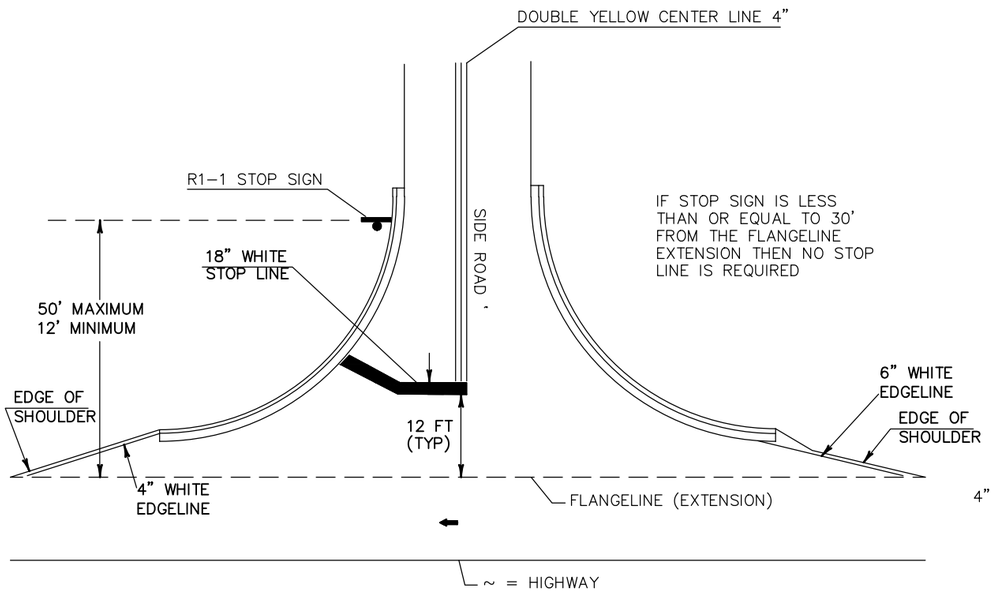

TYPICAL PAVEMENT MARKING FOR SIDEROADS

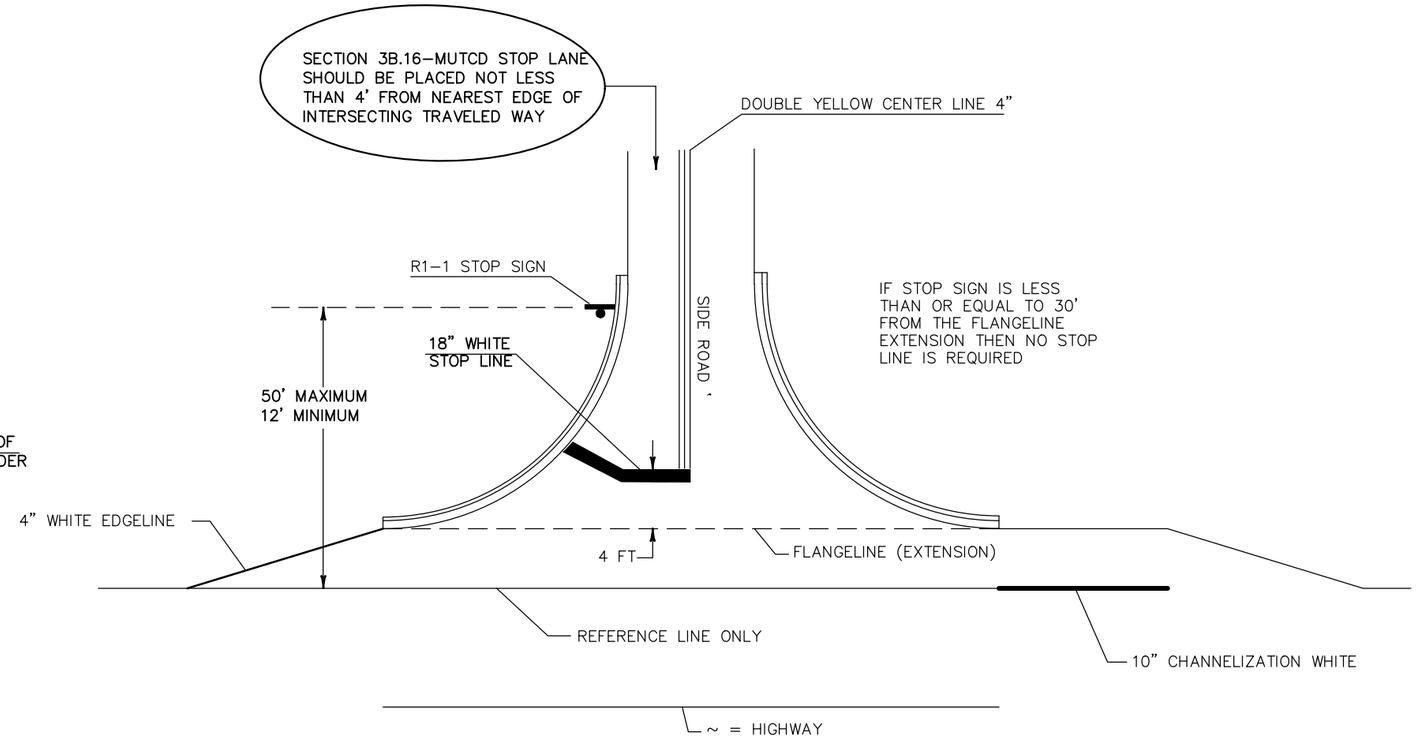

TYPICAL PAVEMENT MARKING FOR SIDEROADS WITH RIGHT TURN LANE

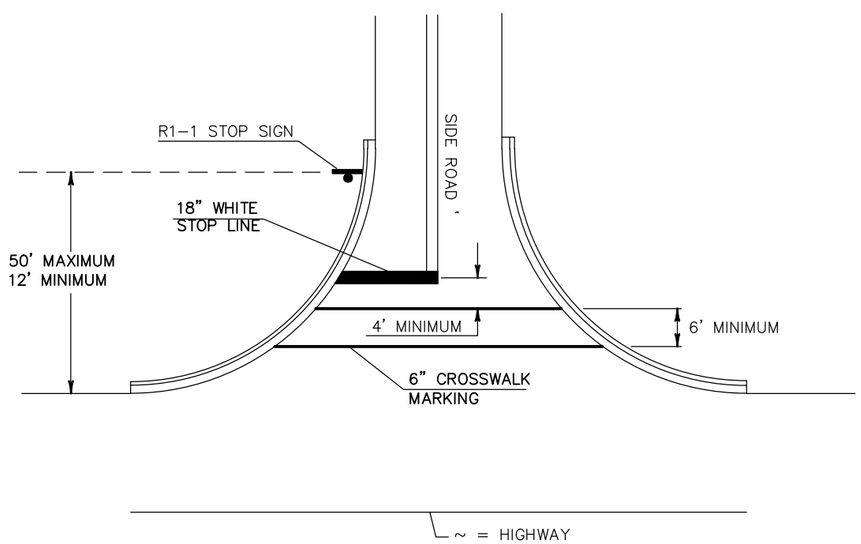

TYPICAL PAVEMENT MARKING FOR SIDEROADS WITH CROSSWALK MARKING

NOTES:
18-INCH STOP LINES MAY BE DELETED OR ADDED BY THE PROJECT ENGINEER BASED ON VISIBILITY AND SIGHT LINES.

STOP LINES REQUIRED WHERE:

- CROSSWALK MARKINGS EXIST OR BEING PROVIDED
- LARGE RADII
- OFFSET LEFT TURNS WHERE STOP BAR FOR LEFT TURN IS SET BACK FROM THRU MOVEMENT.

BEGIN CONSTRUCTION
STA 17+98

BJT

EXISTING ISLAND TO BE LEFT IN PLACE

STH 11

PC: 67+07.82

PI: 65+97.78

BEGIN PROJECT
STA 64+19

PI: 20+00.00

STH 89

BJT

PI: 65+67.78

STH 11 RL

3 ½" REMOVING ASPHALTIC SURFACE MILLING
3 ½" HMA PAVEMENT

PINKS LANE

PT: 71+71.87

AS

EXISTING R/W

STH 89 RL

AS

AS

STA 71+00 BEGIN
3 ½" REMOVING ASPHALTIC SURFACE MILLING
4" HMA PAVEMENT

EXISTING R/W

AS

BEGIN
ASPHALTIC RUMBLE STRIPS,
CENTERLINE
STA 77+00

64 68 70 72 74 76 78 22

N

LEGEND

BAD	BASE AGGREGATE DENSE 3/4-INCH	BG02	MGS GUARDRAIL 3
BJT	REMOVING ASPHALTIC SURFACE BUTT JOINTS		
BGSF	BARRIER SYSTEM GRADING, SHAPING AND FINISHING	- - -	SLOPE INTERCEPT
BG01	MGS GUARDRAIL TERMINAL EAT		
AS	ASPHALTIC SURFACE DRIVEWAYS AND FIELD ENTRANCES		

NOTE: SEE SDD "CENTERLINE RUMBLE STRIPS - INTERSECTIONS, DRIVEWAYS, BRIDGES, RAIL ROADS" FOR SPACING OF GAPS OF CENTERLINE RUMBLE STRIPS

N

3 ½" REMOVING ASPHALTIC SURFACE MILLING
4" HMA PAVEMENT

EXISTING R/W

STH 89 RL

78 80 82 84 86 88 90 92

STH 89

AS

AS

REMOVE AND REPLACE CULVERT
SEE CULVERT DETAILS SHEETS
STA 82+78

ASPHALTIC RUMBLE
STRIPS, CENTERLINE
STA 77+00 TO STA 305+25

EXISTING R/W

PROJECT NO: 3390-08-70	HWY: STH 89	COUNTY: WALWORTH	PLAN DETAILS	SHEET 18	E

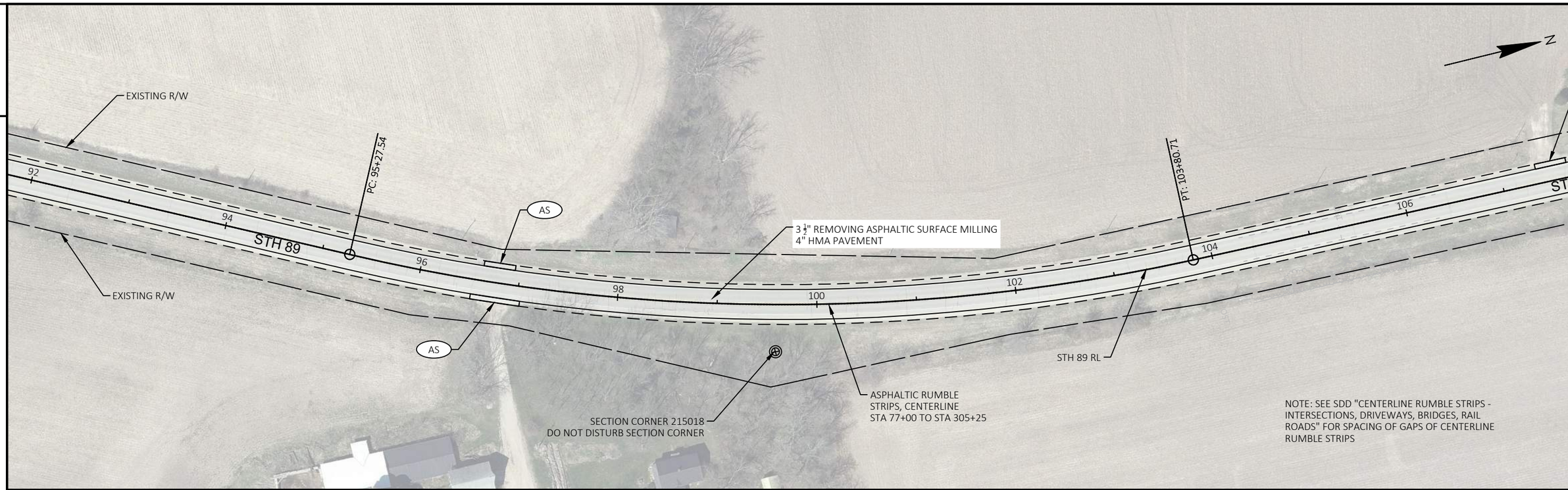

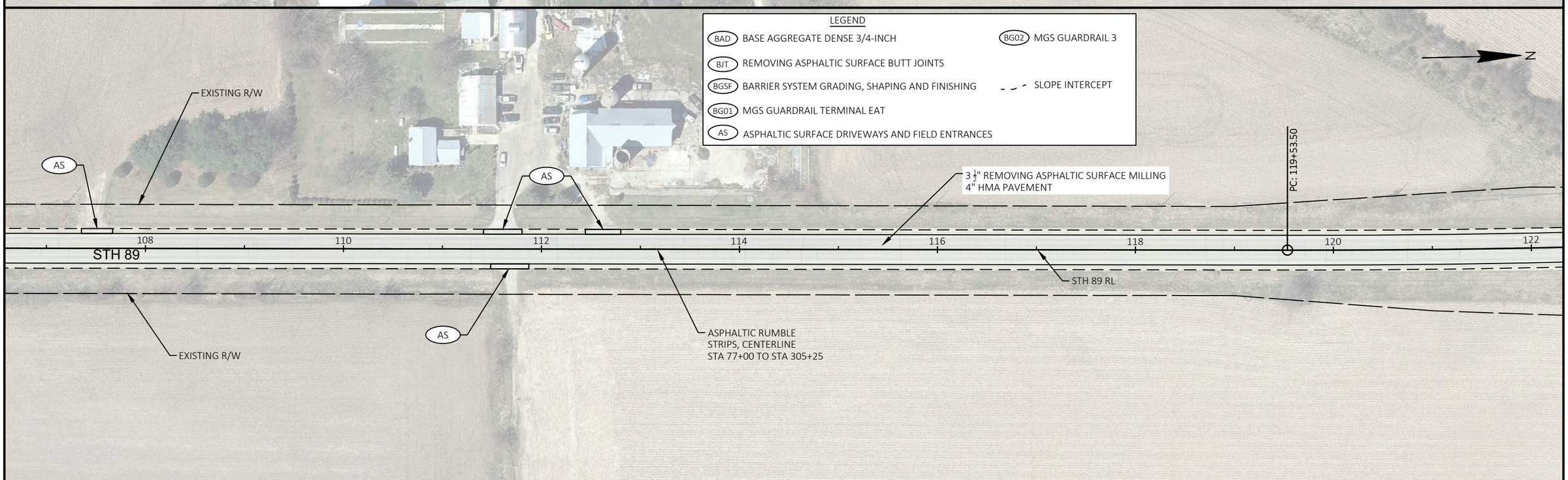

PROJECT NO: 3390-08-70	HWY: STH 89	COUNTY: WALWORTH	PLAN DETAILS	SHEET 19	E

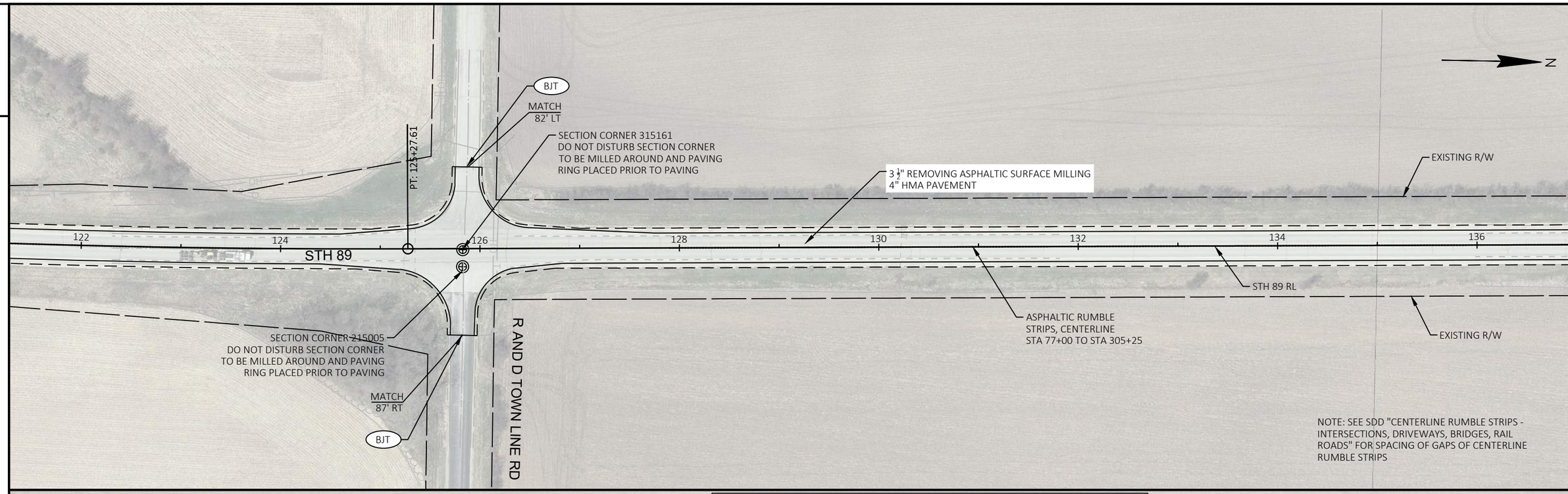

LEGEND

BAD	BASE AGGREGATE DENSE 3/4-INCH	BG02	MGS GUARDRAIL 3
BJT	REMOVING ASPHALTIC SURFACE BUTT JOINTS		
BGSF	BARRIER SYSTEM GRADING, SHAPING AND FINISHING	- - -	SLOPE INTERCEPT
BG01	MGS GUARDRAIL TERMINAL EAT		
AS	ASPHALTIC SURFACE DRIVEWAYS AND FIELD ENTRANCES		

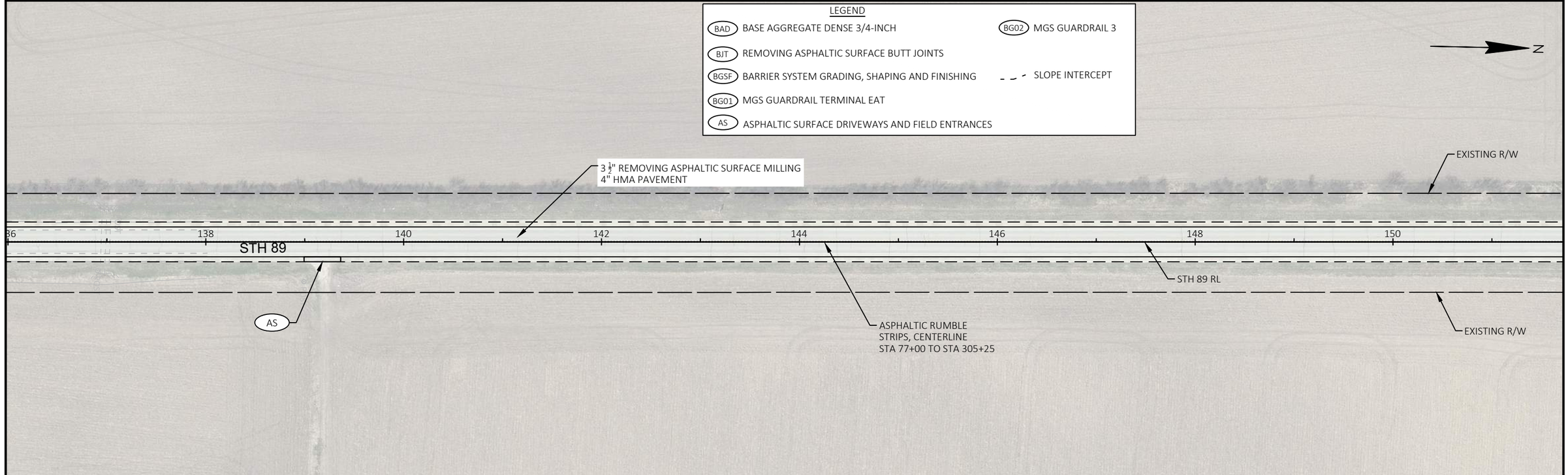

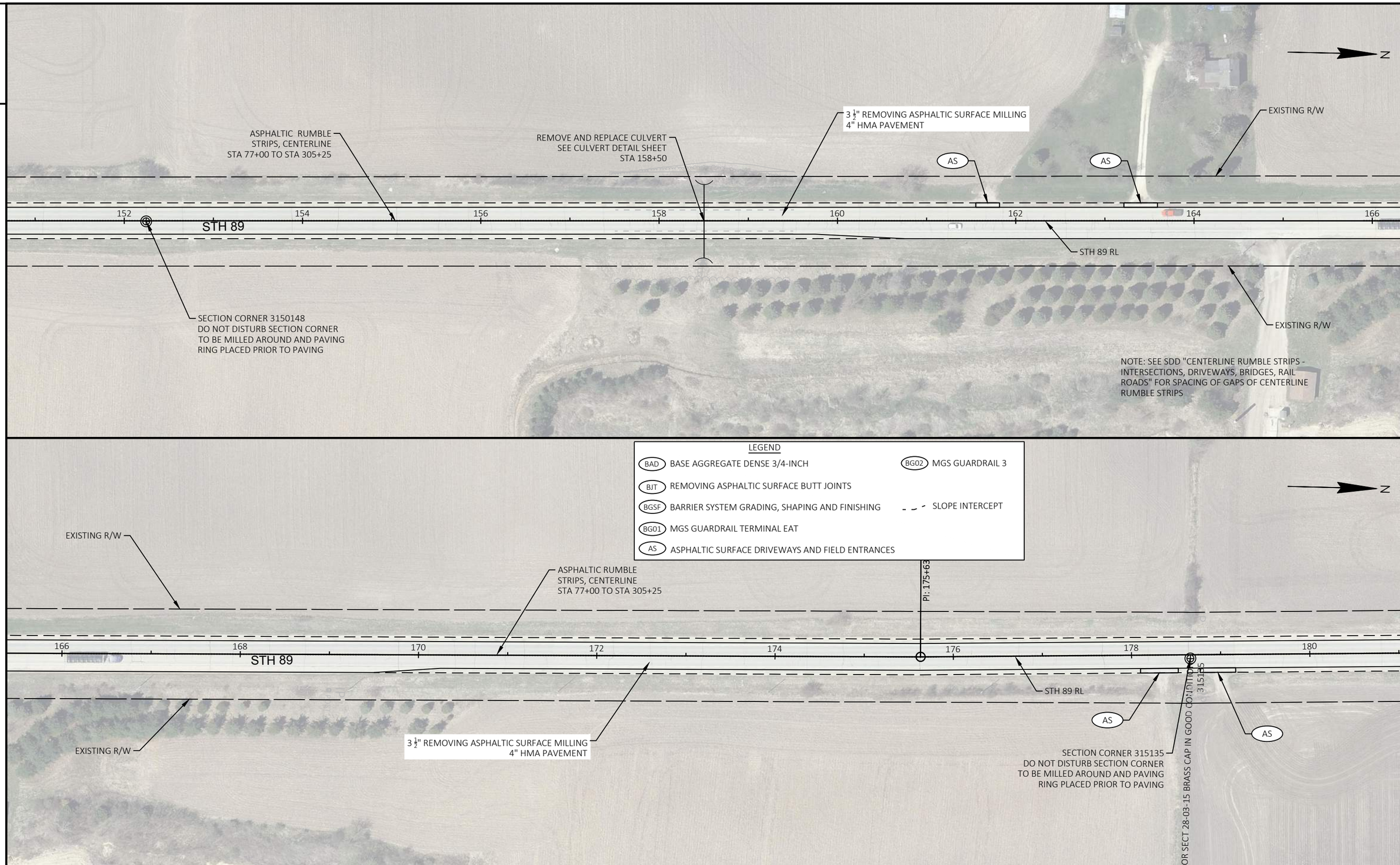

PROJECT NO: 3390-08-70	HWY: STH 89	COUNTY: WALWORTH	PLAN DETAILS	SHEET 21	E

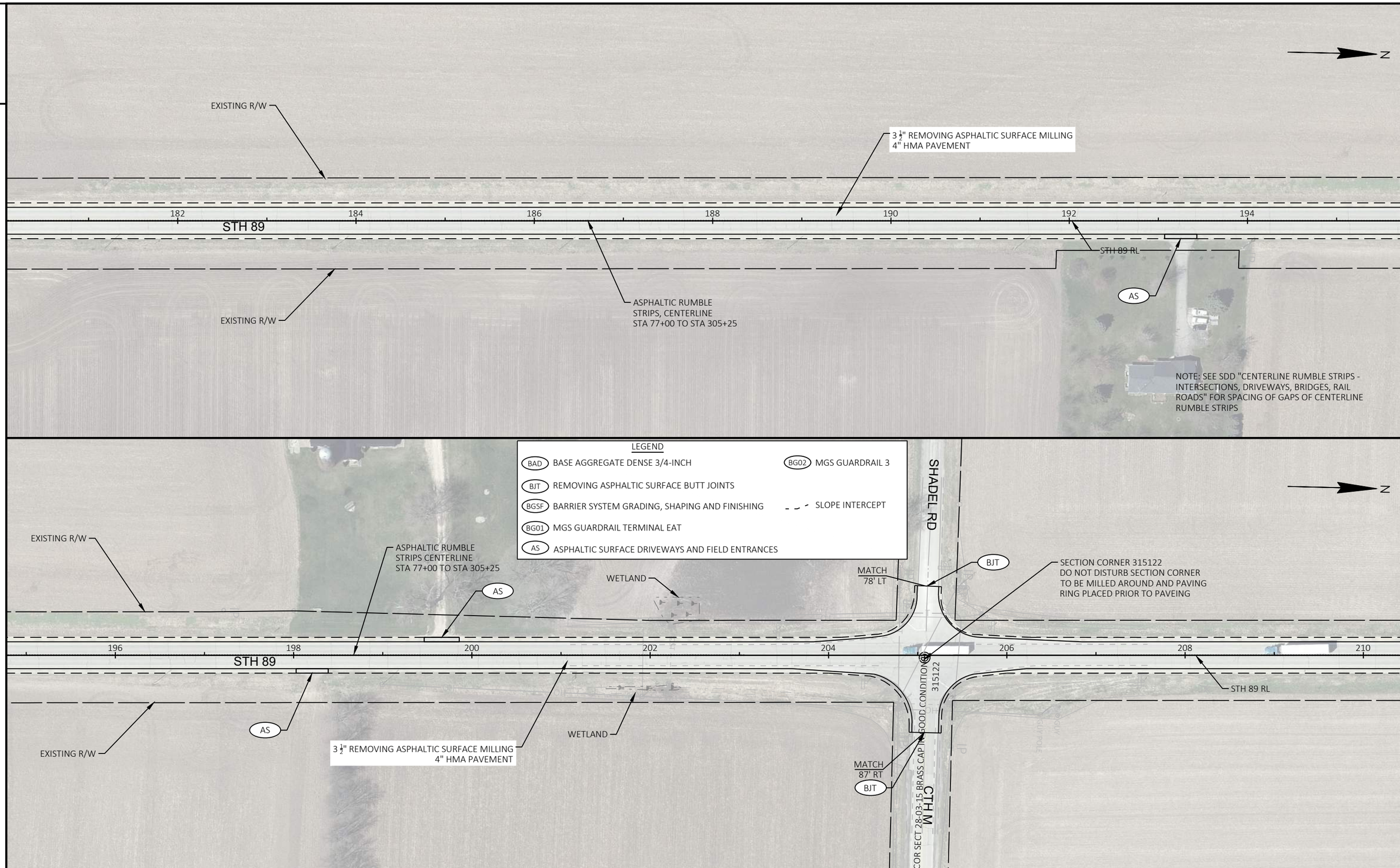

PROJECT NO: 3390-08-70	HWY: STH 89	COUNTY: WALWORTH	PLAN DETAILS	SHEET 22	E

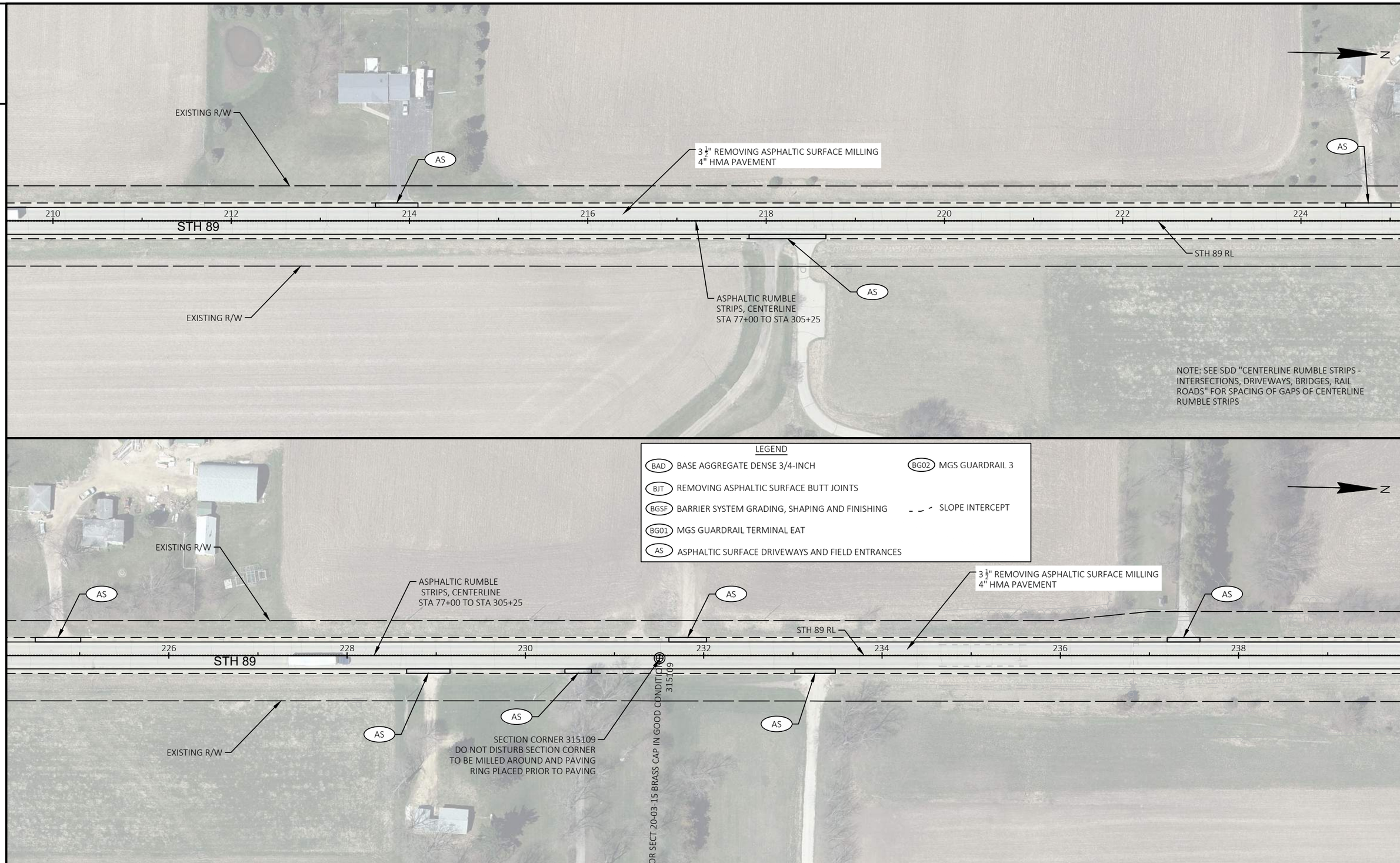

PROJECT NO: 3390-08-70	HWY: STH 89	COUNTY: WALWORTH	PLAN DETAILS	SHEET 23	E

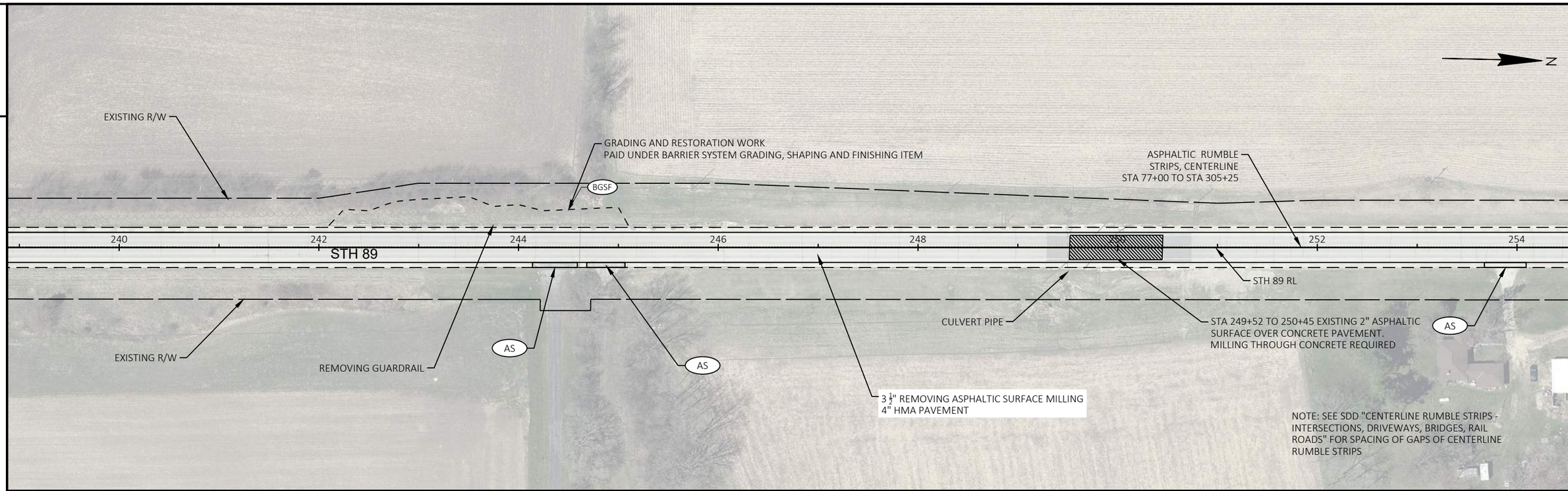

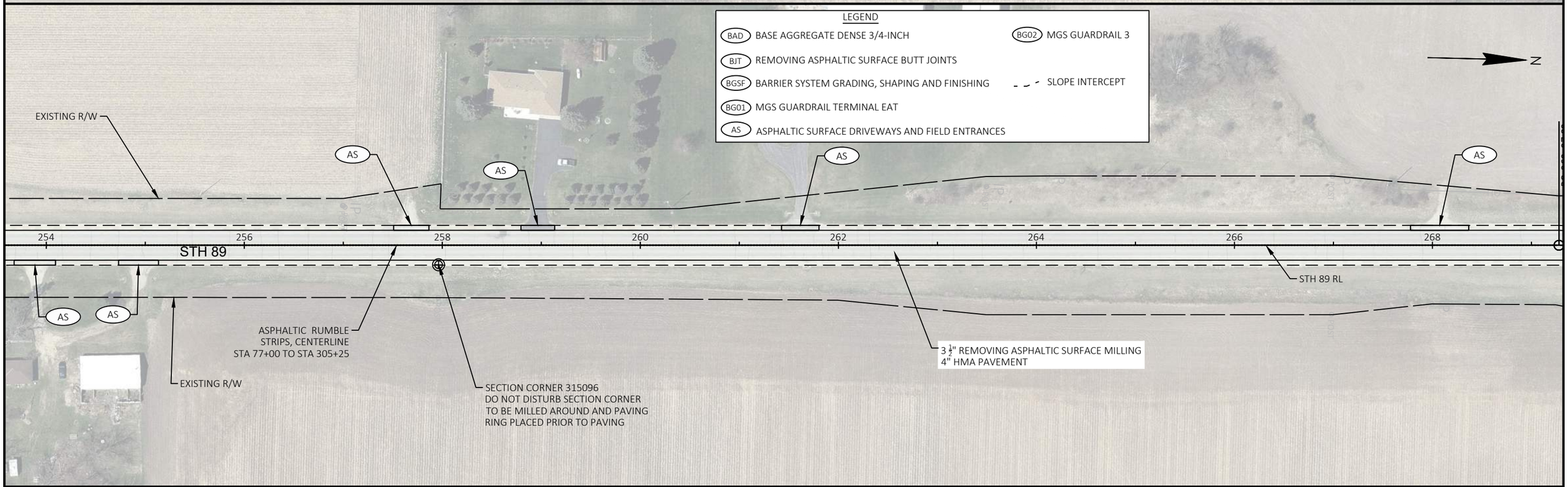

PROJECT NO: 3390-08-70	HWY: STH 89	COUNTY: WALWORTH	PLAN DETAILS	SHEET 24	E

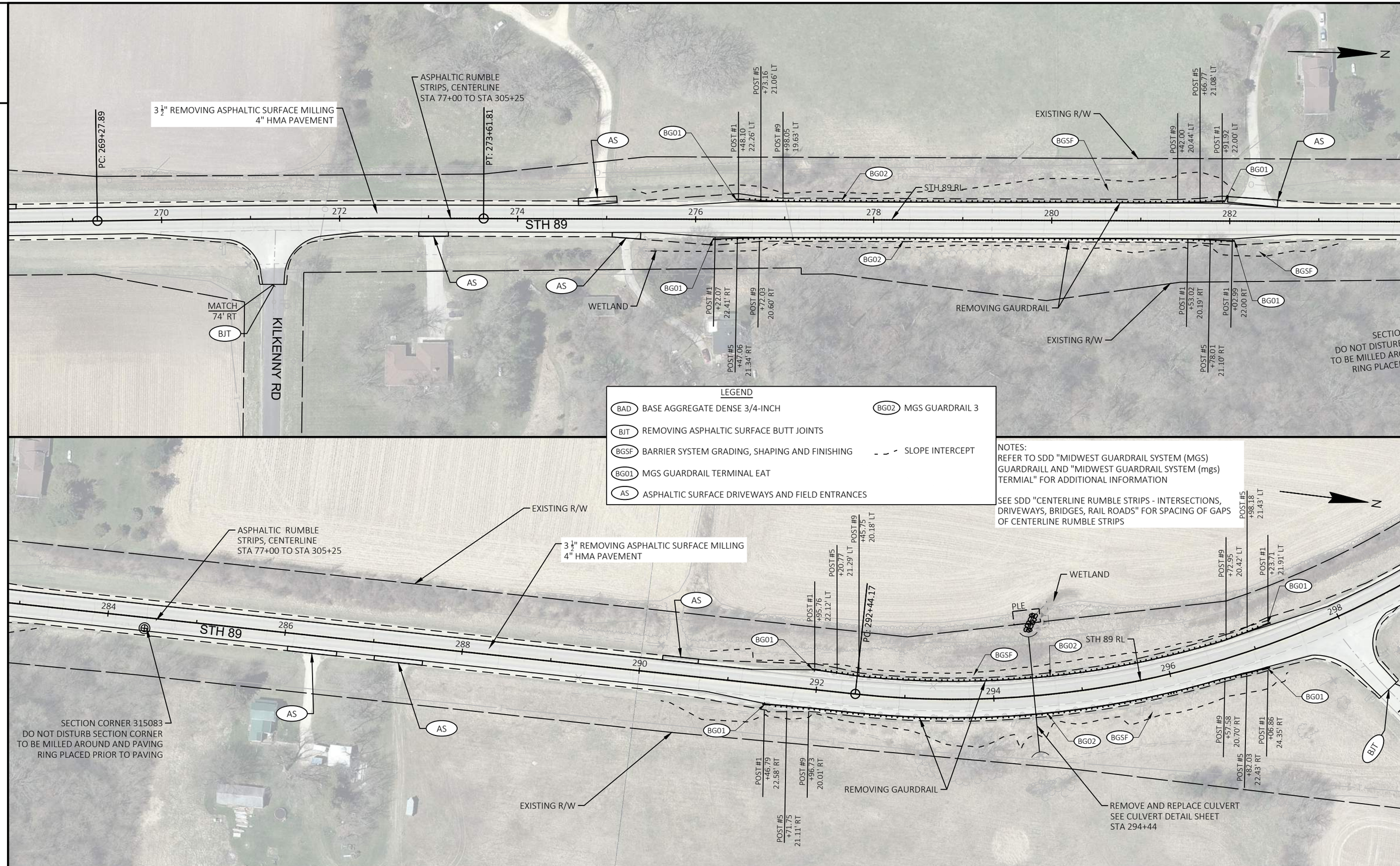

PROJECT NO: 3390-08-70	HWY: STH 89	COUNTY: WALWORTH	PLAN DETAILS	SHEET 25	E

FILE NAME : N:\PDS\C3D\33900800\SHEETSPLAN\021201-PD.DWG
LAYOUT NAME - 021208-PD
PLOT DATE : 7/23/2026 11:04 AM
PLOT BY : THAO, PETER N
PLOT NAME :
PLOT SCALE : 1 IN:100 FT

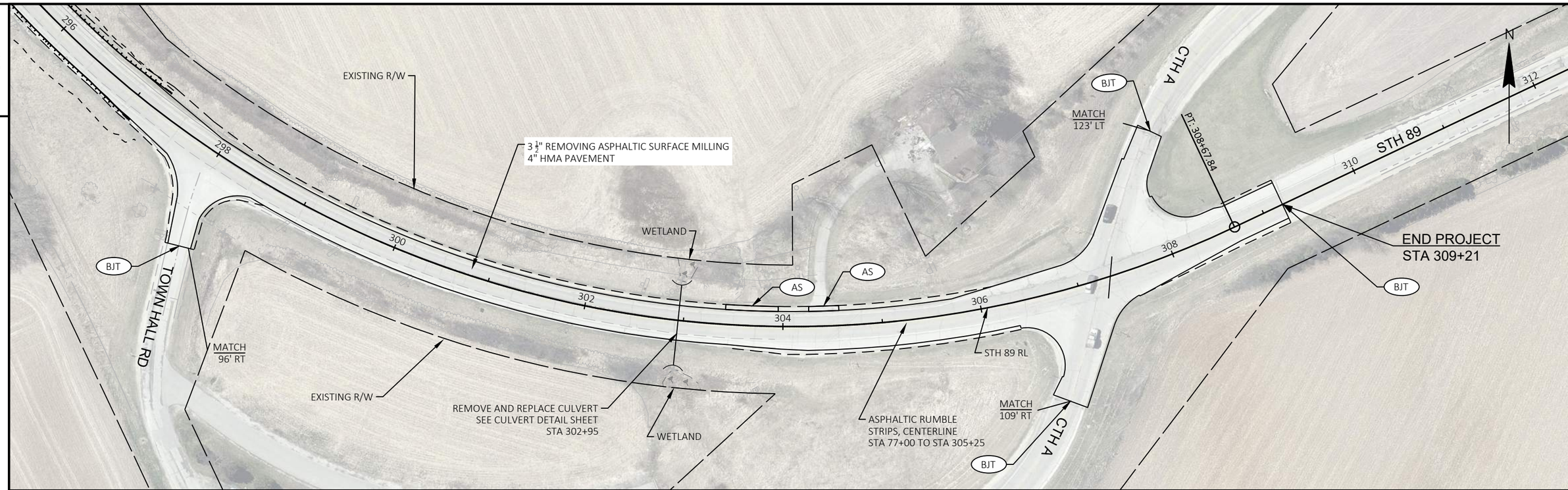

LEGEND

BAD	BASE AGGREGATE DENSE 3/4-INCH	BG02	MGS GUARDRAIL 3
BJT	REMOVING ASPHALTIC SURFACE BUTT JOINTS		
BGSF	BARRIER SYSTEM GRADING, SHAPING AND FINISHING	- - -	SLOPE INTERCEPT
BG01	MGS GUARDRAIL TERMINAL EAT		
AS	ASPHALTIC SURFACE DRIVEWAYS AND FIELD ENTRANCES		

NOTE: SEE SDD "CENTERLINE RUMBLE STRIPS - INTERSECTIONS, DRIVEWAYS, BRIDGES, RAIL ROADS" FOR SPACING OF GAPS OF CENTERLINE RUMBLE STRIPS

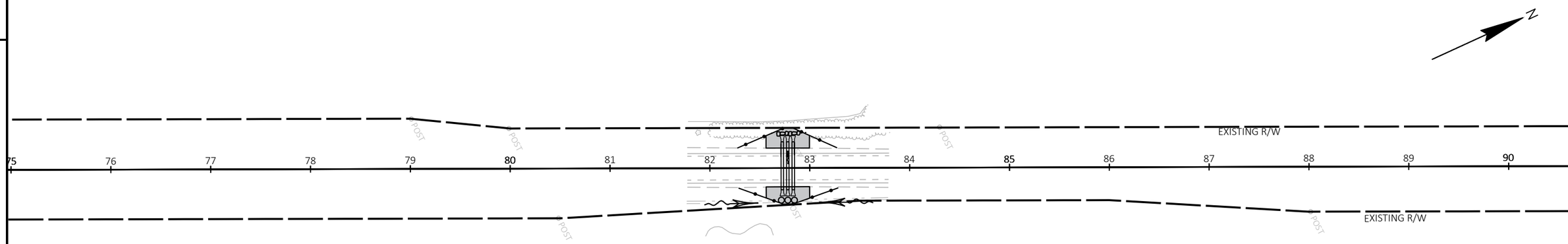

NOTES:

- EROSION CONTROL BMP'S SHOWN ON THE PLANS ARE AT SUGGESTED LOCATIONS. THE EXACT LOCATIONS WILL BE DETERMINED BY THE CONTRACTOR'S ECIP AND BY THE ENGINEER. EROSION CONTROL BMP'S SHALL BE MAINTAINED UNTIL PERMANENT VEGETATION IS ESTABLISHED OR THE ENGINEER DETERMINES THAT THE BMP IS NO LONGER NEEDED.
- EROSION CONTROL DEVICES SHALL BE PLACED IN SEQUENCE WITH CONSTRUCTION OPERATIONS AS DETERMINED BY THE ENGINEER.
- ALL AREAS OF EROSION MAT SHALL ALSO HAVE SALVAGED TOPSOIL, FERTILIZER TYPE B AND SEED.
- DO NOT STORE MATERIAL OR OPERATE EQUIPMENT IN SENSITIVE ENVIRONMENTAL AREAS OUTSIDE THE SLOPE INTERCEPT.

LEGEND

- EROSION MAT CLASS I, TYPE B
- SEEDING
- SILT FENCE
- SLOPE INTERCEPT
- SURFACE WATER FLOW
- CULVERT PIPE CHECK
- RIPRAP MEDIUM

N

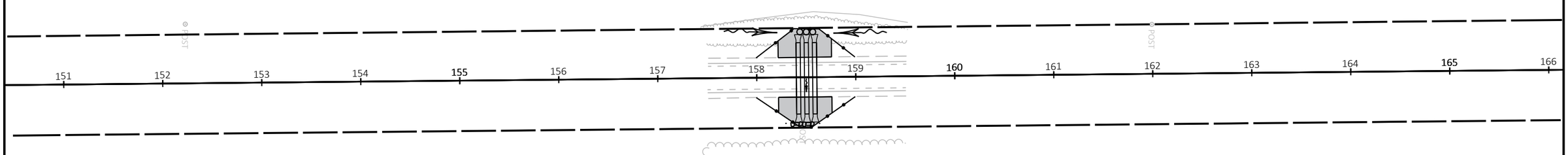

PROJECT NO: 3390-08-70	HWY: STH 89	COUNTY: WALWORTH	EROSION CONTROL	SHEET 27	E

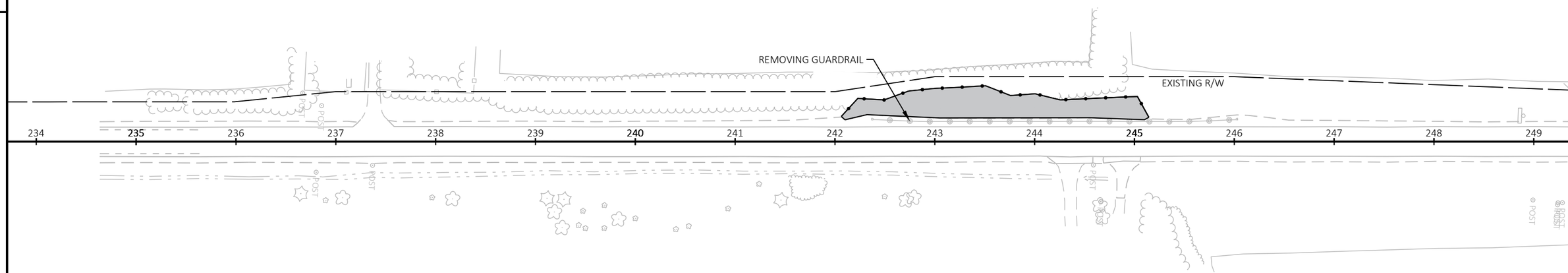

NOTES:

- EROSION CONTROL BMP'S SHOWN ON THE PLANS ARE AT SUGGESTED LOCATIONS. THE EXACT LOCATIONS WILL BE DETERMINED BY THE CONTRACTOR'S ECIP AND BY THE ENGINEER. EROSION CONTROL BMP'S SHALL BE MAINTAINED UNTIL PERMANENT VEGETATION IS ESTABLISHED OR THE ENGINEER DETERMINES THAT THE BMP IS NO LONGER NEEDED.
- EROSION CONTROL DEVICES SHALL BE PLACED IN SEQUENCE WITH CONSTRUCTION OPERATIONS AS DETERMINED BY THE ENGINEER.
- ALL AREAS OF EROSION MAT SHALL ALSO HAVE SALVAGED TOPSOIL, FERTILIZER TYPE B AND SEED.
- DO NOT STORE MATERIAL OR OPERATE EQUIPMENT IN SENSITIVE ENVIRONMENTAL AREAS OUTSIDE THE SLOPE INTERCEPT.

LEGEND

- EROSION MAT CLASS I, TYPE B
- SEEDING
- SILT FENCE
- SLOPE INTERCEPT
- SURFACE WATER FLOW
- CULVERT PIPE CHECK
- RIPRAP MEDIUM

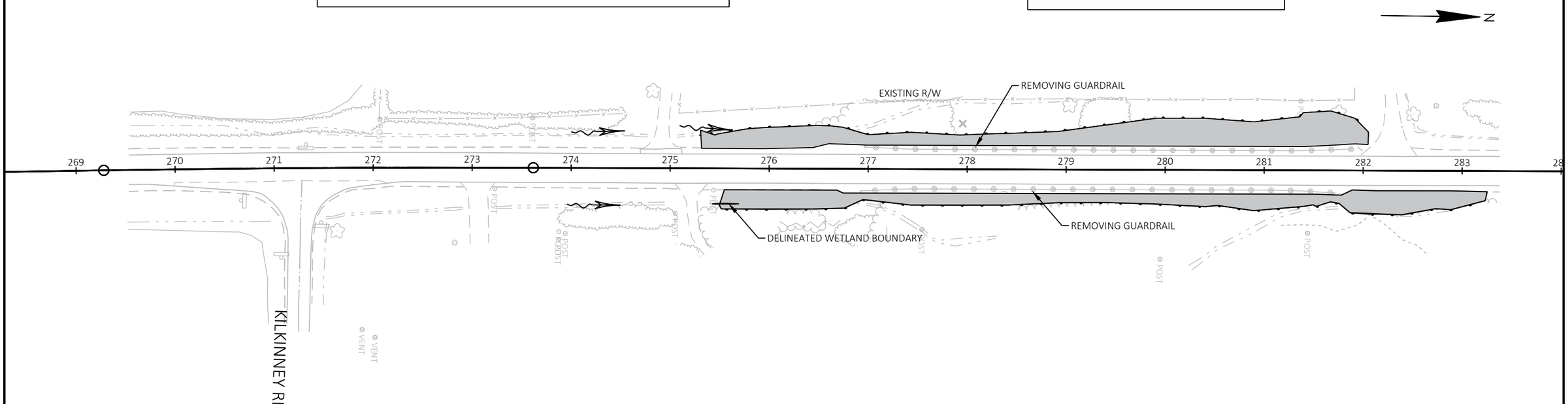

PROJECT NO: 3390-08-70	HWY: STH 89	COUNTY: WALWORTH	EROSION CONTROL	SHEET 28	E

2

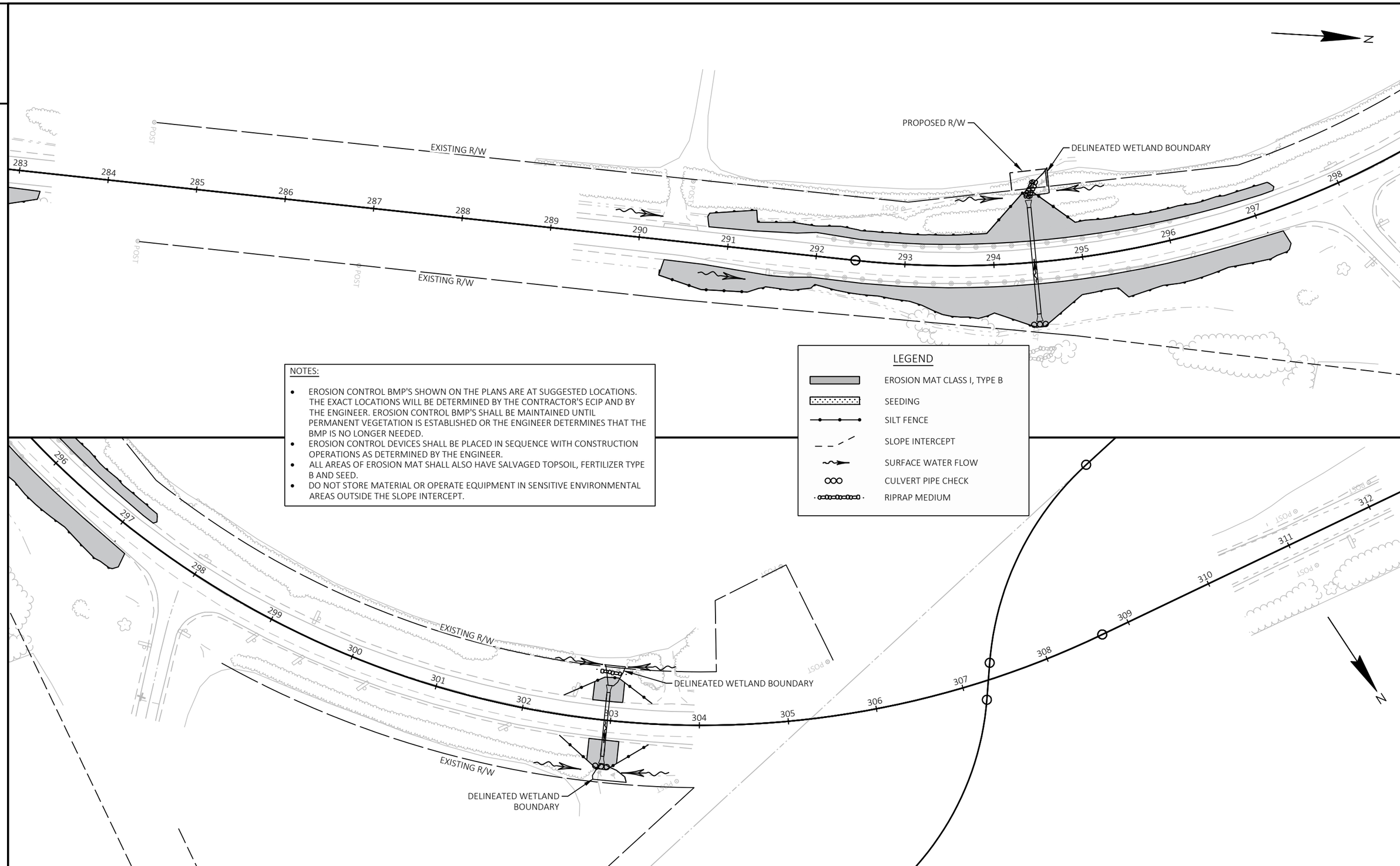

NOTES:

- EROSION CONTROL BMP'S SHOWN ON THE PLANS ARE AT SUGGESTED LOCATIONS. THE EXACT LOCATIONS WILL BE DETERMINED BY THE CONTRACTOR'S ECIP AND BY THE ENGINEER. EROSION CONTROL BMP'S SHALL BE MAINTAINED UNTIL PERMANENT VEGETATION IS ESTABLISHED OR THE ENGINEER DETERMINES THAT THE BMP IS NO LONGER NEEDED.
- EROSION CONTROL DEVICES SHALL BE PLACED IN SEQUENCE WITH CONSTRUCTION OPERATIONS AS DETERMINED BY THE ENGINEER.
- ALL AREAS OF EROSION MAT SHALL ALSO HAVE SALVAGED TOPSOIL, FERTILIZER TYPE B AND SEED.
- DO NOT STORE MATERIAL OR OPERATE EQUIPMENT IN SENSITIVE ENVIRONMENTAL AREAS OUTSIDE THE SLOPE INTERCEPT.

LEGEND

- EROSION MAT CLASS I, TYPE B
- SEEDING
- SILT FENCE
- SLOPE INTERCEPT
- SURFACE WATER FLOW
- CULVERT PIPE CHECK
- RIPRAP MEDIUM

PROJECT NO: 3390-08-70	HWY: STH 89	COUNTY: WALWORTH	EROSION CONTROL	SHEET 29	E

2

CULVERT LEGEND

XXX SAWING ASPHALT

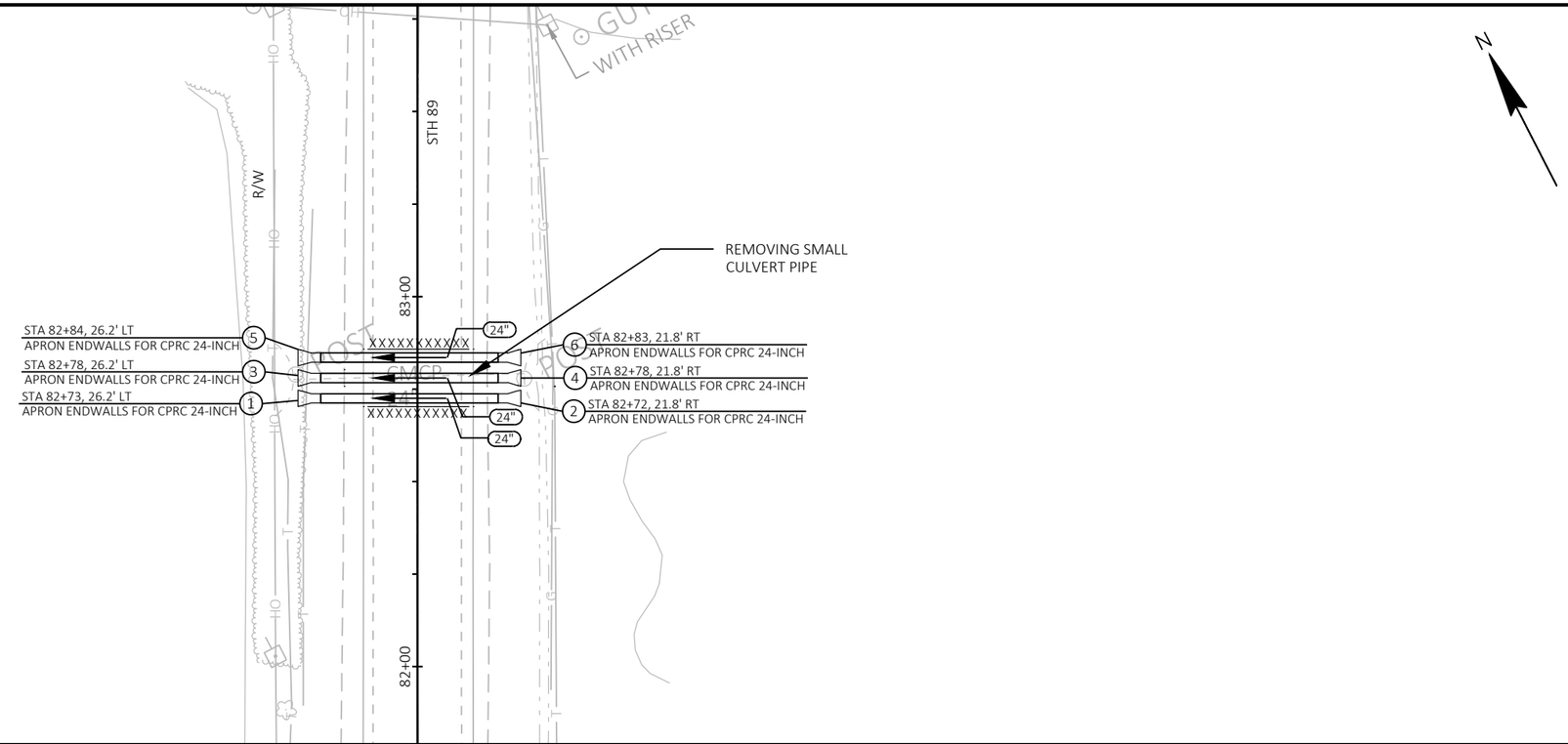

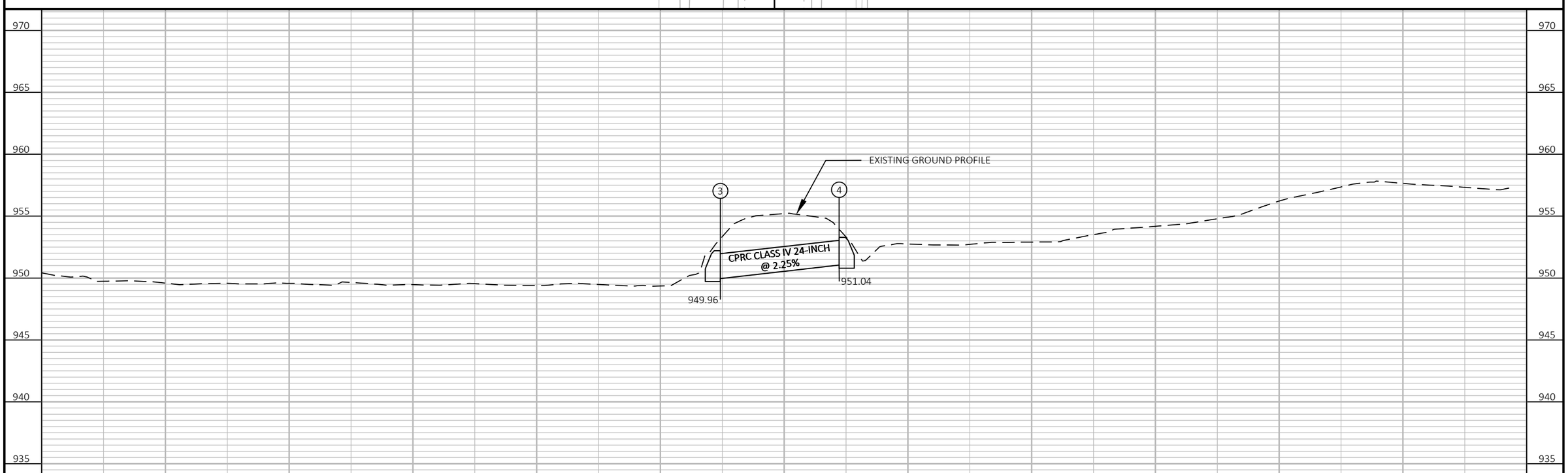

PROJECT NO: 3390-08-70	HWY: STH 89	COUNTY: WALWORTH	PLAN AND PROFILE: CULVERT PIPE - STA 82+78	SHEET 30	E

2

CULVERT LEGEND

XXX SAWING ASPHALT

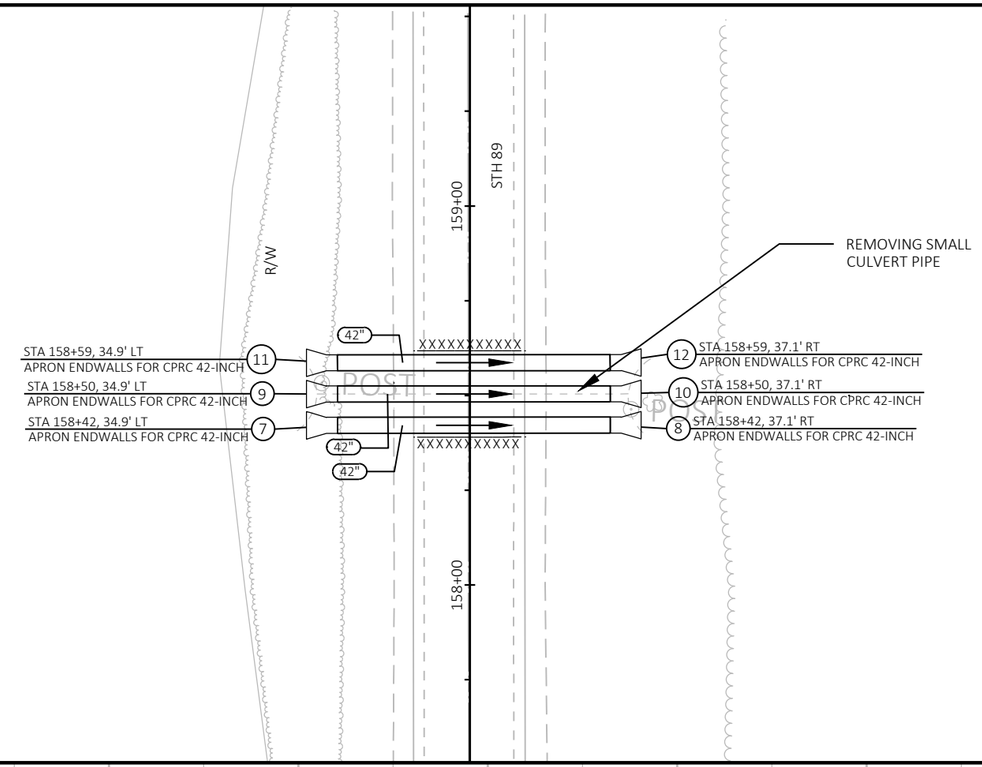

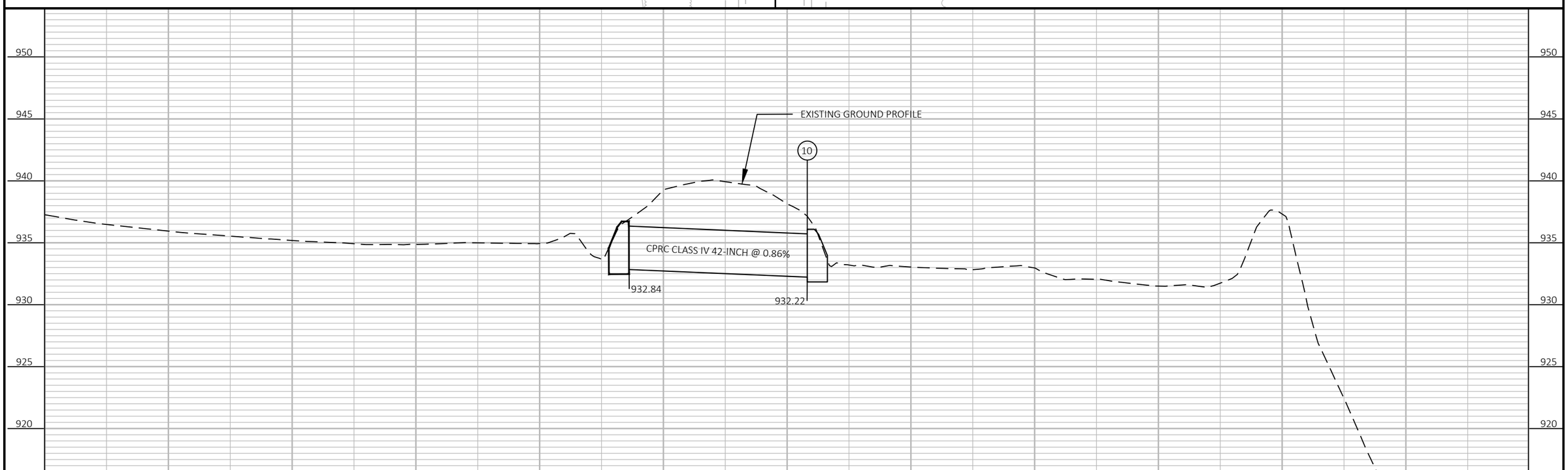

PROJECT NO: 3390-08-70	HWY: STH 89	COUNTY: WALWORTH	PLAN AND PROFILE: CULVERT PIPE - STA 158+50	SHEET 31	E

2

CULVERT LEGEND

XXX SAWING ASPHALT

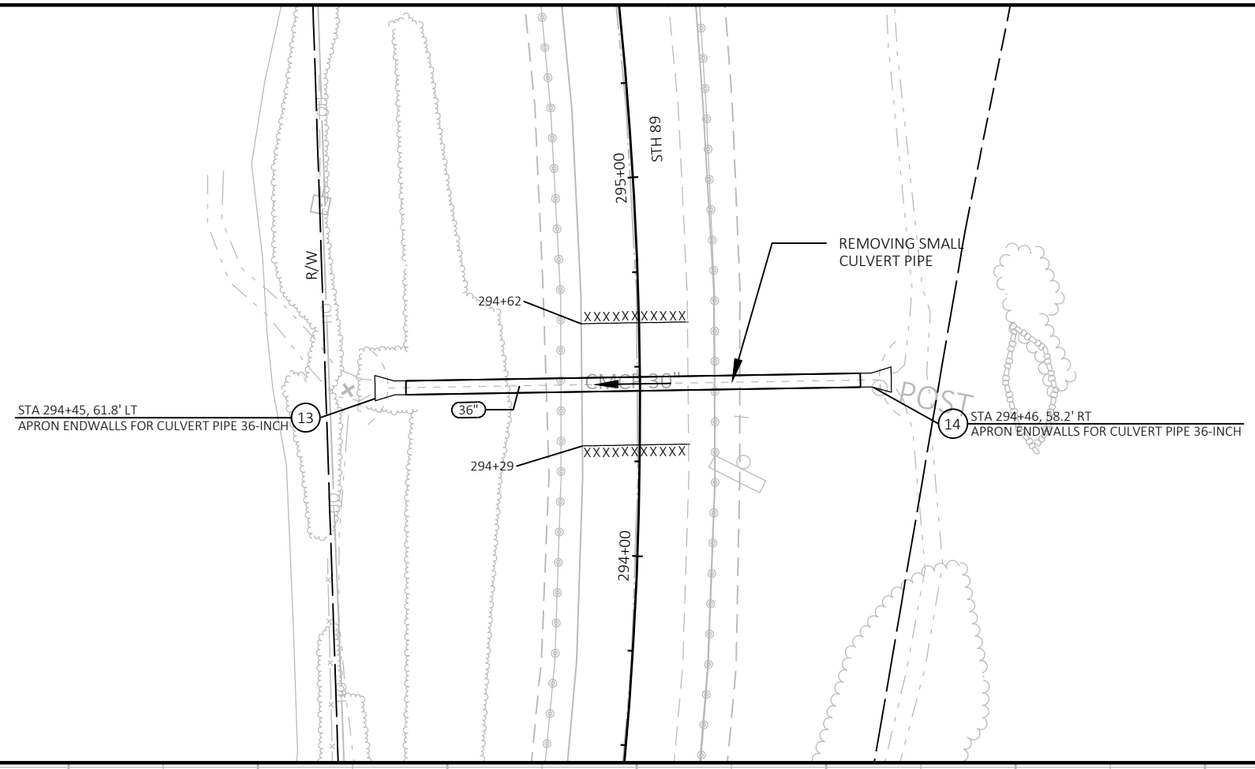

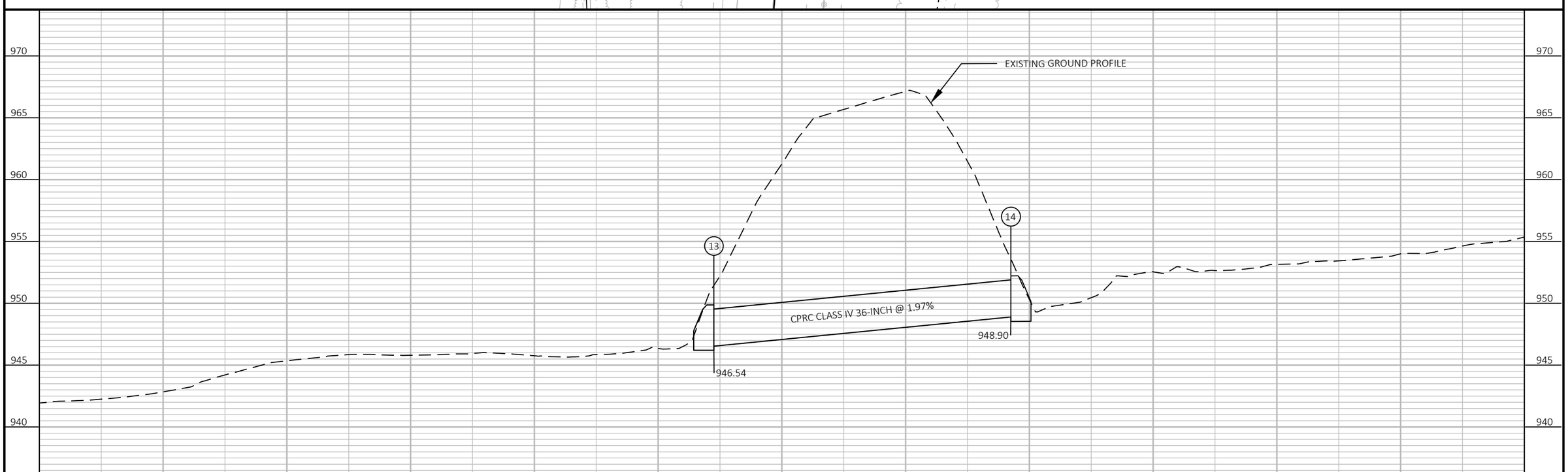

2

PROJECT NO: 3390-08-70	HWY: STH 89	COUNTY: WALWORTH	PLAN AND PROFILE: CULVERT PIPE - STA 294+44	SHEET 32	E

2

CULVERT LEGEND

XXX SAWING ASPHALT

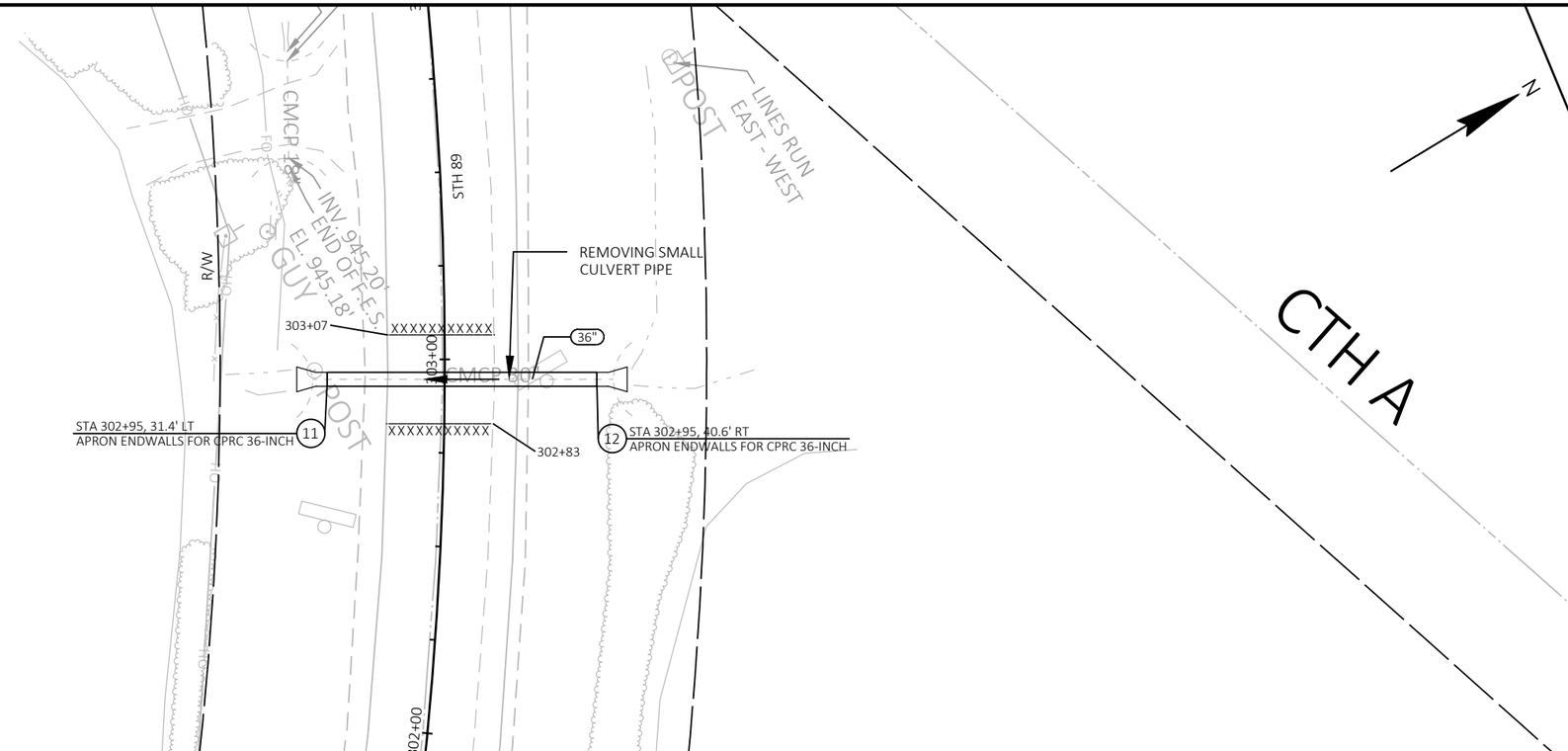

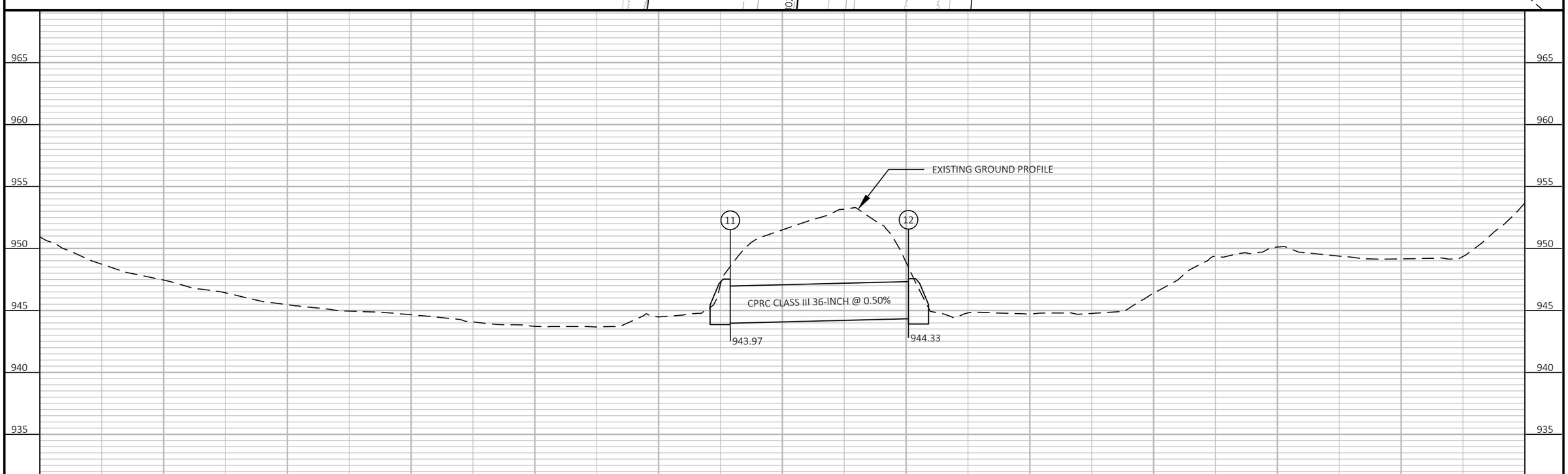

PROJECT NO: 3390-08-70	HWY: STH 89	COUNTY: WALWORTH	PLAN AND PROFILE: CULVERT PIPE - STA 302+95	SHEET 33	E

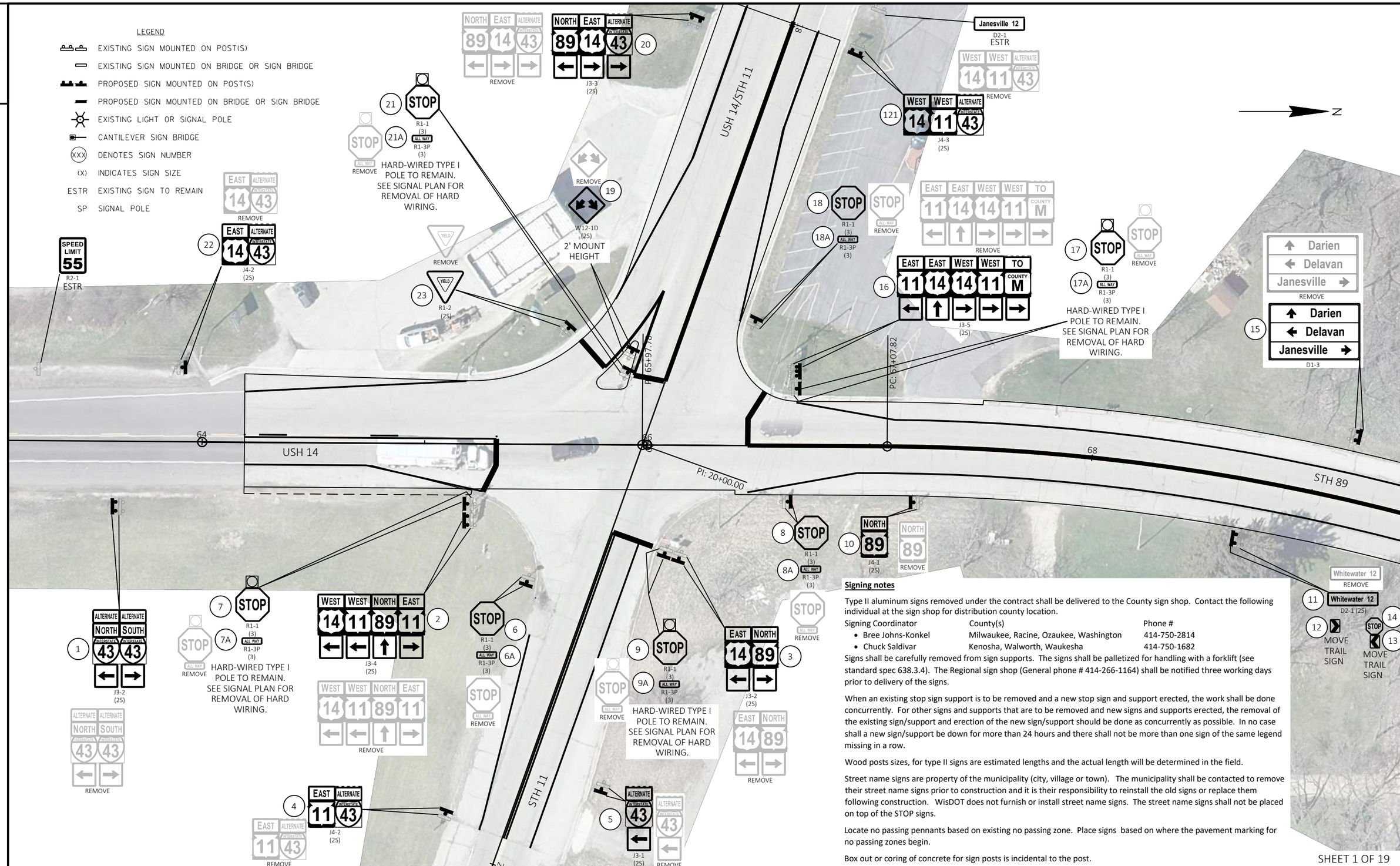

Signing notes

Type II aluminum signs removed under the contract shall be delivered to the County sign shop. Contact the following individual at the sign shop for distribution county location.

Signing Coordinator	County(s)	Phone #
• Bree Johns-Konkel	Milwaukee, Racine, Ozaukee, Washington	414-750-2814
• Chuck Saldivar	Kenosha, Walworth, Waukesha	414-750-1682

Signs shall be carefully removed from sign supports. The signs shall be palletized for handling with a forklift (see standard spec 638.3.4). The Regional sign shop (General phone # 414-266-1164) shall be notified three working days prior to delivery of the signs.

When an existing stop sign support is to be removed and a new stop sign and support erected, the work shall be done concurrently. For other signs and supports that are to be removed and new signs and supports erected, the removal of the existing sign/support and erection of the new sign/support should be done as concurrently as possible. In no case shall a new sign/support be down for more than 24 hours and there shall not be more than one sign of the same legend missing in a row.

Wood posts sizes, for type II signs are estimated lengths and the actual length will be determined in the field.

Street name signs are property of the municipality (city, village or town). The municipality shall be contacted to remove their street name signs prior to construction and it is their responsibility to reinstall the old signs or replace them following construction. WisDOT does not furnish or install street name signs. The street name signs shall not be placed on top of the STOP signs.

Locate no passing pennants based on existing no passing zone. Place signs based on where the pavement marking for no passing zones begin.

Box out or coring of concrete for sign posts is incidental to the post.

SHEET 1 OF 19

LEGEND

- EXISTING SIGN MOUNTED ON POST(S)
- EXISTING SIGN MOUNTED ON BRIDGE OR SIGN BRIDGE
- PROPOSED SIGN MOUNTED ON POST(S)
- PROPOSED SIGN MOUNTED ON BRIDGE OR SIGN BRIDGE
- EXISTING LIGHT OR SIGNAL POLE
- CANTILEVER SIGN BRIDGE
- (XXX) DENOTES SIGN NUMBER
- (X) INDICATES SIGN SIZE
- ESTR EXISTING SIGN TO REMAIN
- SP SIGNAL POLE

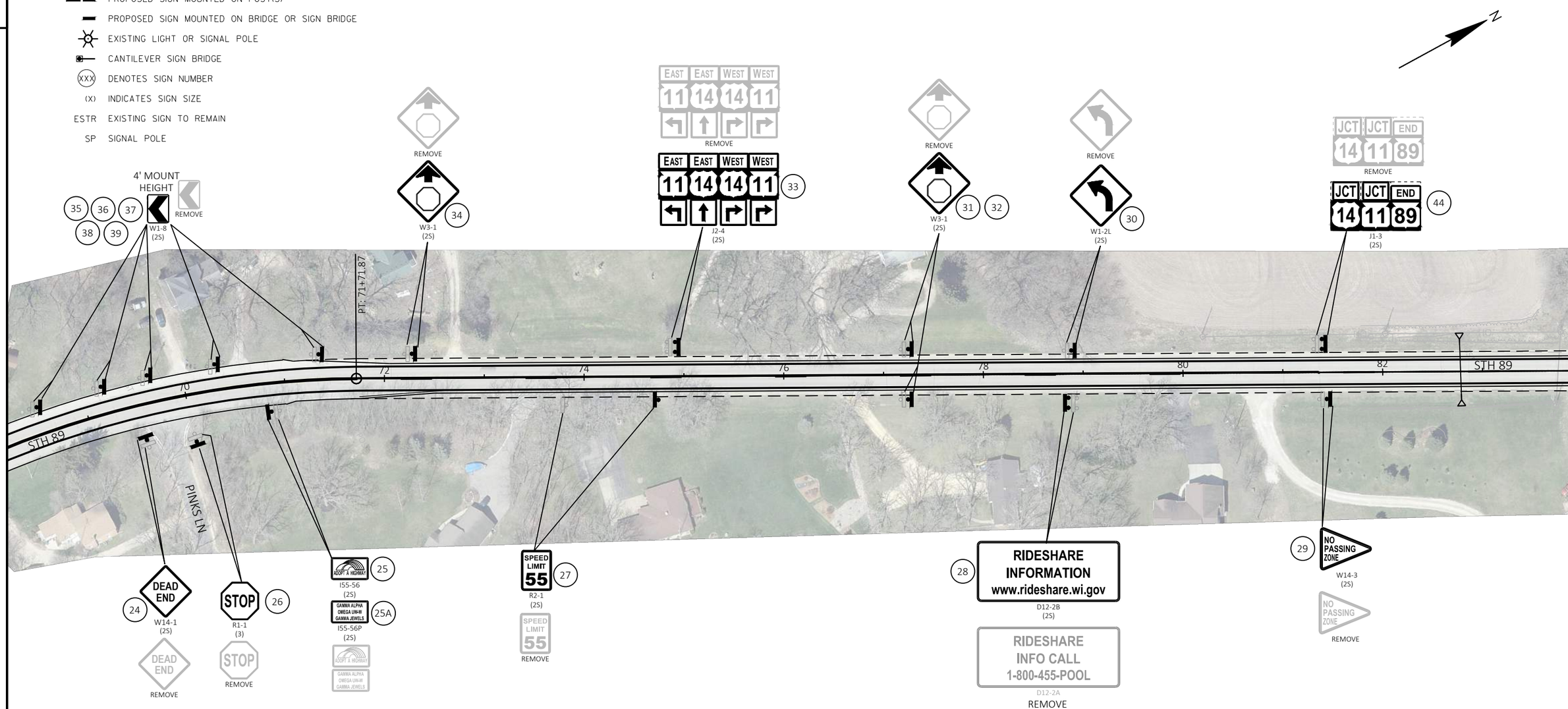

SHEET 2 OF 19

PROJECT NO: 3390-08-70	HWY: STH 89	COUNTY: WALWORTH	PERMANENT SIGNING PLAN	SHEET 35	E

2

LEGEND

- EXISTING SIGN MOUNTED ON POST(S)
- EXISTING SIGN MOUNTED ON BRIDGE OR SIGN BRIDGE
- PROPOSED SIGN MOUNTED ON POST(S)
- PROPOSED SIGN MOUNTED ON BRIDGE OR SIGN BRIDGE
- EXISTING LIGHT OR SIGNAL POLE
- CANTILEVER SIGN BRIDGE
- (XXX) DENOTES SIGN NUMBER
- (X) INDICATES SIGN SIZE
- ESTR EXISTING SIGN TO REMAIN
- SP SIGNAL POLE

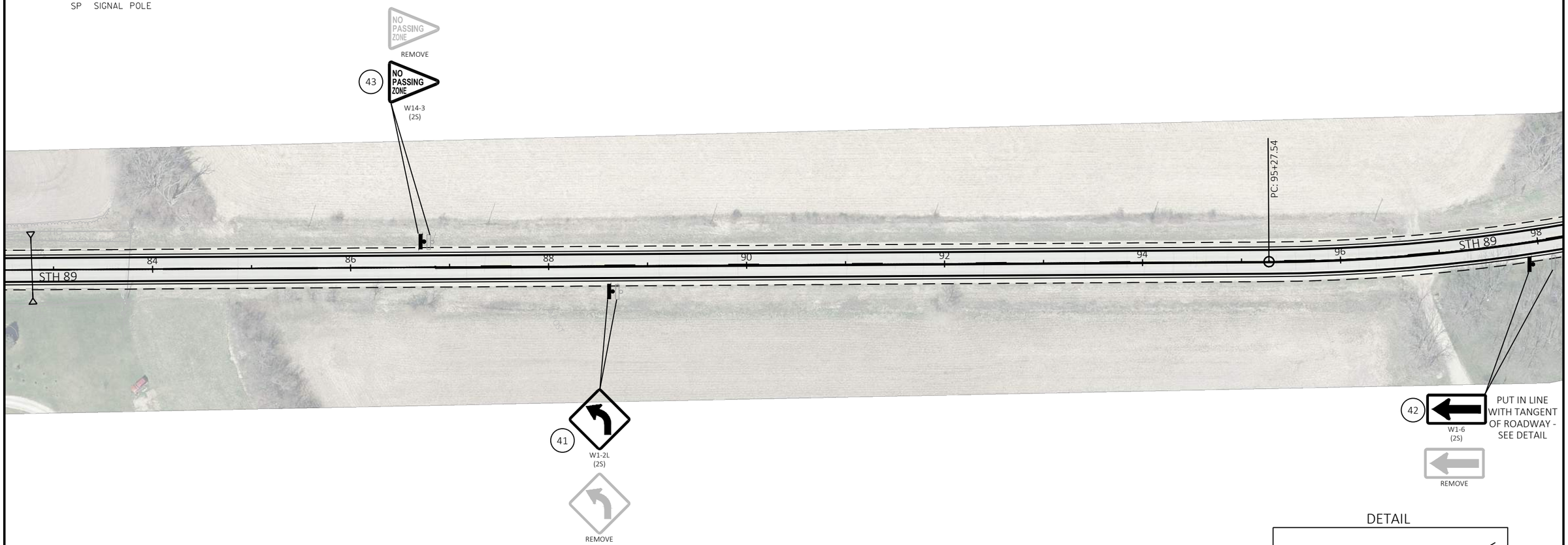

DETAIL

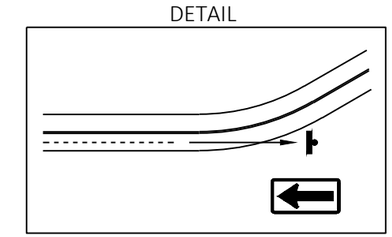

SHEET 3 OF 19

PROJECT NO: 3390-08-70	HWY: STH 89	COUNTY: WALWORTH	PERMANENT SIGNING PLAN	SHEET 36	E

FILE NAME : N:\PDS\C3D\CAD\33900800\SIGN\023201_PS.DWG
LAYOUT NAME - 03
PLOT DATE : 11/20/2025 3:55 PM
PLOT BY : MARTENS, KAREN L
PLOT NAME :
PLOT SCALE : 1 IN:100 FT
WISDOT/CADDS SHEET 42

2

LEGEND

- EXISTING SIGN MOUNTED ON POST(S)
- EXISTING SIGN MOUNTED ON BRIDGE OR SIGN BRIDGE
- PROPOSED SIGN MOUNTED ON POST(S)
- PROPOSED SIGN MOUNTED ON BRIDGE OR SIGN BRIDGE
- EXISTING LIGHT OR SIGNAL POLE
- CANTILEVER SIGN BRIDGE
- (XXX) DENOTES SIGN NUMBER
- (X) INDICATES SIGN SIZE
- ESTR EXISTING SIGN TO REMAIN
- SP SIGNAL POLE

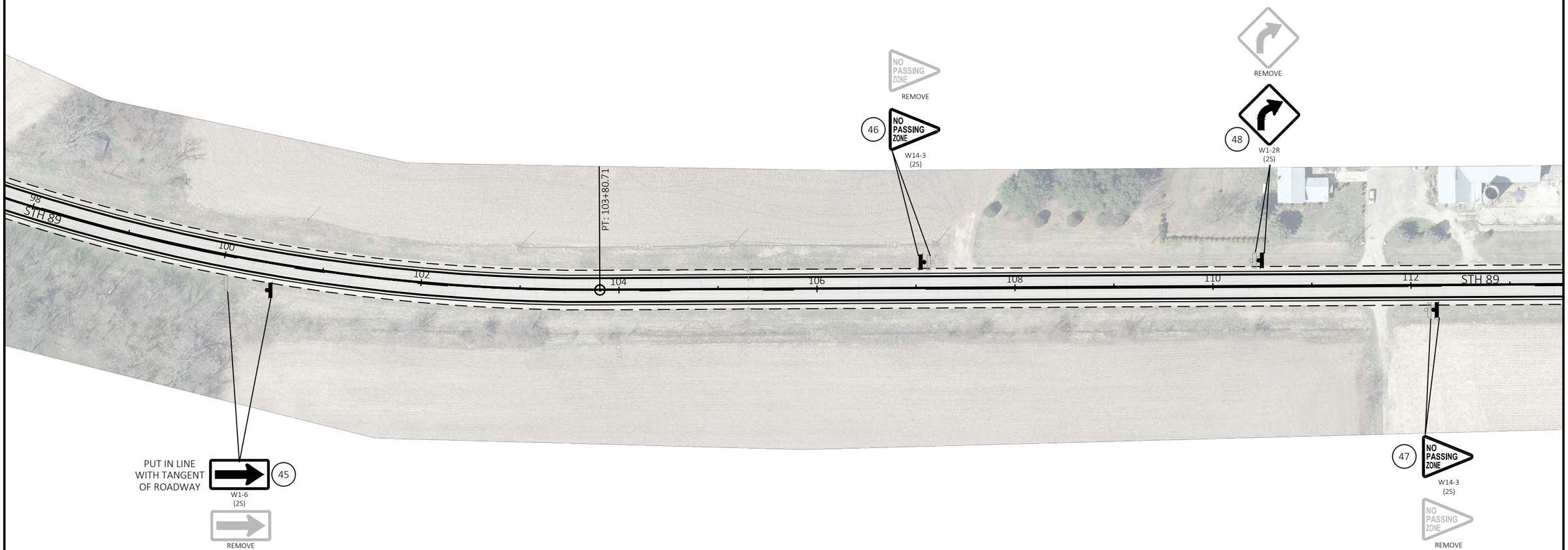

SHEET 4 OF 19

PROJECT NO: 3390-08-70	HWY: STH 89	COUNTY: WALWORTH	PERMANENT SIGNING PLAN	SHEET 37	E

FILE NAME : N:\PDS\C3D\CAD\33900800\SIGN\023201_PS.DWG
LAYOUT NAME - 04
PLOT DATE : 11/20/2025 3:55 PM PLOT BY : MARTENS, KAREN L PLOT NAME : PLOT SCALE : 1 IN:100 FT

2

LEGEND

- EXISTING SIGN MOUNTED ON POST(S)
- EXISTING SIGN MOUNTED ON BRIDGE OR SIGN BRIDGE
- PROPOSED SIGN MOUNTED ON POST(S)
- PROPOSED SIGN MOUNTED ON BRIDGE OR SIGN BRIDGE
- EXISTING LIGHT OR SIGNAL POLE
- CANTILEVER SIGN BRIDGE
- XXX DENOTES SIGN NUMBER
- (X) INDICATES SIGN SIZE
- ESTR EXISTING SIGN TO REMAIN
- SP SIGNAL POLE

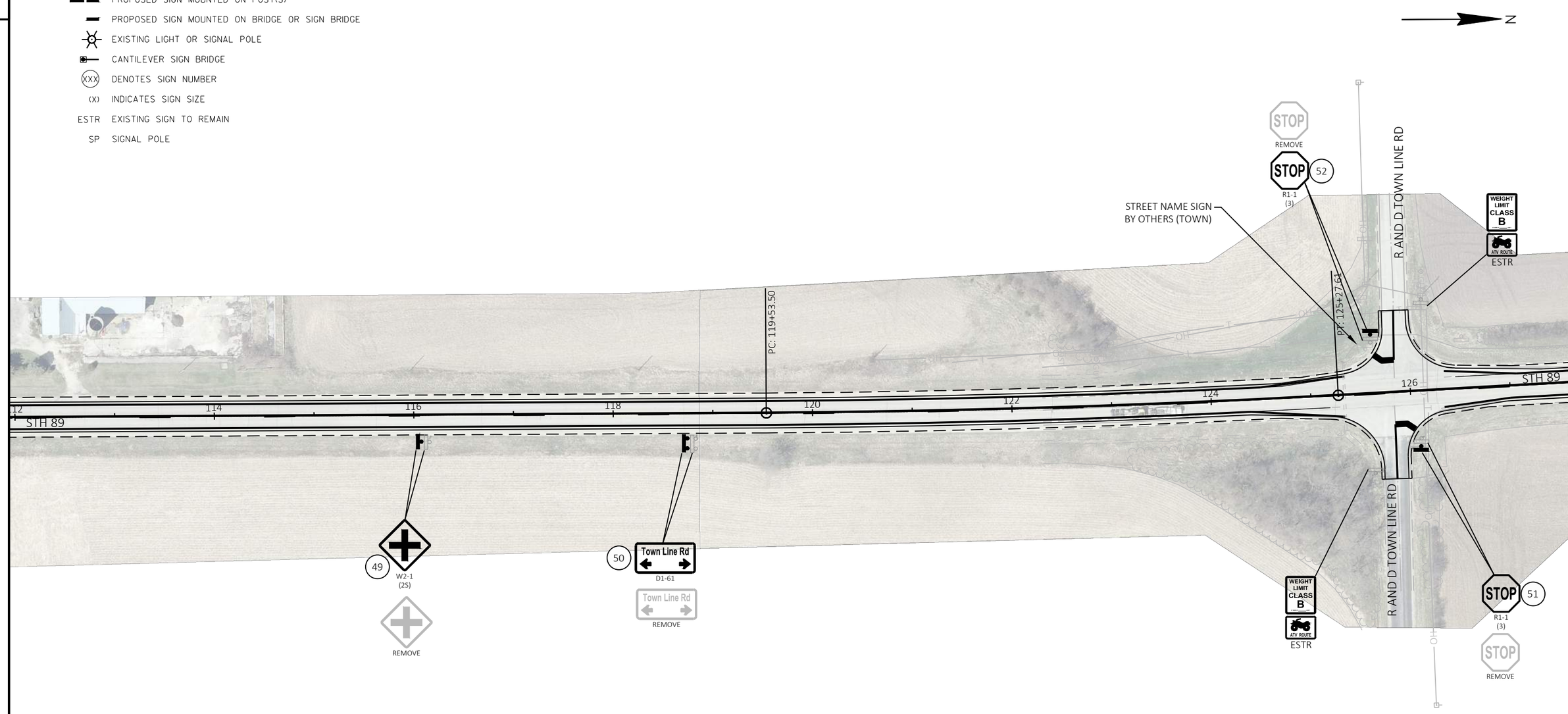

SHEET 5 OF 19

PROJECT NO: 3390-08-70	HWY: STH 89	COUNTY: WALWORTH	PERMANENT SIGNING PLAN	SHEET 38	E

FILE NAME : N:\PDS\C3D\CAD\33900800\SIGN\023201_PS.DWG
LAYOUT NAME - 05
PLOT DATE : 11/20/2025 3:55 PM PLOT BY : MARTENS, KAREN L PLOT NAME : PLOT SCALE : 1 IN:100 FT

2

LEGEND

- EXISTING SIGN MOUNTED ON POST(S)
- EXISTING SIGN MOUNTED ON BRIDGE OR SIGN BRIDGE
- PROPOSED SIGN MOUNTED ON POST(S)
- PROPOSED SIGN MOUNTED ON BRIDGE OR SIGN BRIDGE
- EXISTING LIGHT OR SIGNAL POLE
- CANTILEVER SIGN BRIDGE
- (XXX) DENOTES SIGN NUMBER
- (X) INDICATES SIGN SIZE
- ESTR EXISTING SIGN TO REMAIN
- SP SIGNAL POLE

SHEET 6 OF 19

PROJECT NO: 3390-08-70	HWY: STH 89	COUNTY: WALWORTH	PERMANENT SIGNING PLAN	SHEET 39	E

FILE NAME : N:\PDS\C3D\CAD\33900800\SIGN\023201_PS.DWG
LAYOUT NAME - 06
PLOT DATE : 11/20/2025 3:55 PM PLOT BY : MARTENS, KAREN L PLOT NAME : PLOT SCALE : 1 IN:100 FT

WISDOT/CADDS SHEET 42

2

LEGEND

- EXISTING SIGN MOUNTED ON POST(S)
- EXISTING SIGN MOUNTED ON BRIDGE OR SIGN BRIDGE
- PROPOSED SIGN MOUNTED ON POST(S)
- PROPOSED SIGN MOUNTED ON BRIDGE OR SIGN BRIDGE
- EXISTING LIGHT OR SIGNAL POLE
- CANTILEVER SIGN BRIDGE
- XXX DENOTES SIGN NUMBER
- (X) INDICATES SIGN SIZE
- ESTR EXISTING SIGN TO REMAIN
- SP SIGNAL POLE

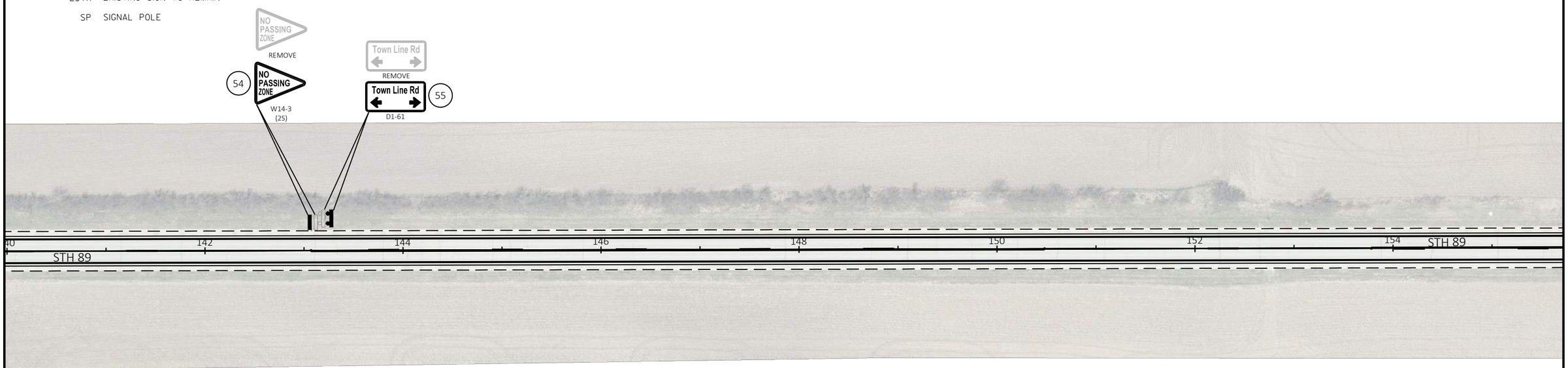

SHEET 7 OF 19

PROJECT NO: 3390-08-70	HWY: STH 89	COUNTY: WALWORTH	PERMANENT SIGNING PLAN	SHEET 40	E

FILE NAME : N:\PDS\C3D\CAD\33900800\SIGN\023201_PS.DWG
LAYOUT NAME - 07
PLOT DATE : 11/20/2025 3:55 PM
PLOT BY : MARTENS, KAREN L
PLOT NAME :
PLOT SCALE : 1 IN:100 FT

2

LEGEND

- EXISTING SIGN MOUNTED ON POST(S)
- EXISTING SIGN MOUNTED ON BRIDGE OR SIGN BRIDGE
- PROPOSED SIGN MOUNTED ON POST(S)
- PROPOSED SIGN MOUNTED ON BRIDGE OR SIGN BRIDGE
- EXISTING LIGHT OR SIGNAL POLE
- CANTILEVER SIGN BRIDGE
- (XXX) DENOTES SIGN NUMBER
- (X) INDICATES SIGN SIZE
- ESTR EXISTING SIGN TO REMAIN
- SP SIGNAL POLE

N

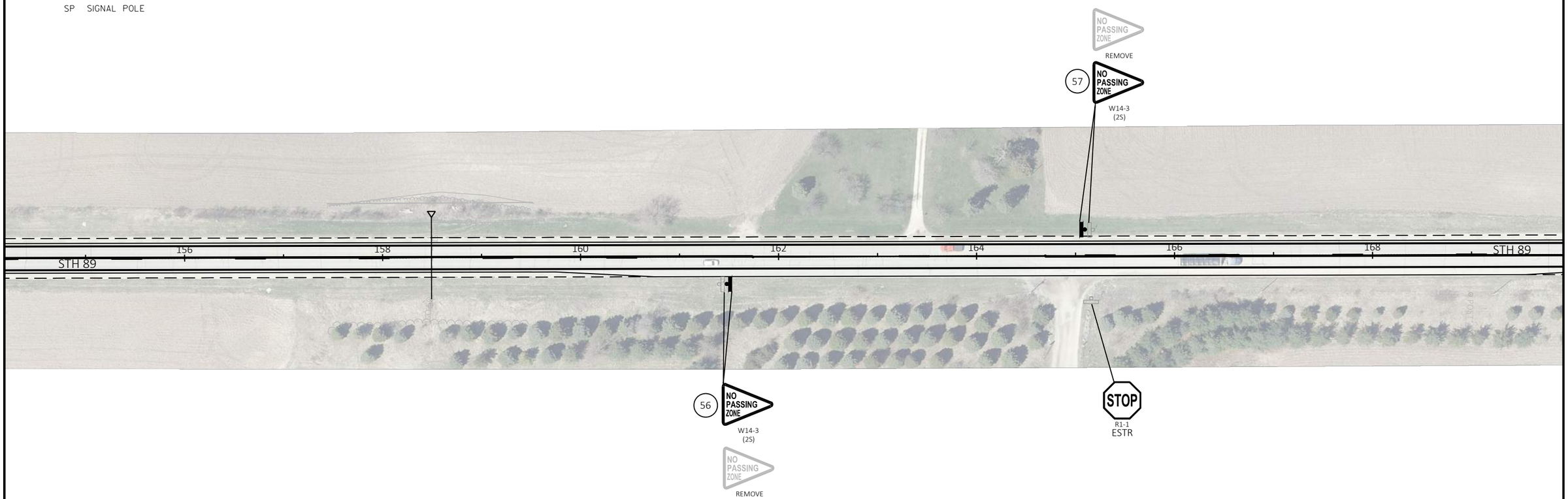

SHEET 8 OF 19

PROJECT NO: 3390-08-70	HWY: STH 89	COUNTY: WALWORTH	PERMANENT SIGNING PLAN	SHEET 41	E

FILE NAME : N:\PDS\C3D\CAD\33900800\SIGN\023201_PS.DWG
LAYOUT NAME - 08
PLOT DATE : 11/20/2025 3:55 PM
PLOT BY : MARTENS, KAREN L
PLOT NAME :
PLOT SCALE : 1 IN:100 FT

2

LEGEND

- EXISTING SIGN MOUNTED ON POST(S)
- EXISTING SIGN MOUNTED ON BRIDGE OR SIGN BRIDGE
- PROPOSED SIGN MOUNTED ON POST(S)
- PROPOSED SIGN MOUNTED ON BRIDGE OR SIGN BRIDGE
- EXISTING LIGHT OR SIGNAL POLE
- CANTILEVER SIGN BRIDGE
- (XXX) DENOTES SIGN NUMBER
- (X) INDICATES SIGN SIZE
- ESTR EXISTING SIGN TO REMAIN
- SP SIGNAL POLE

N

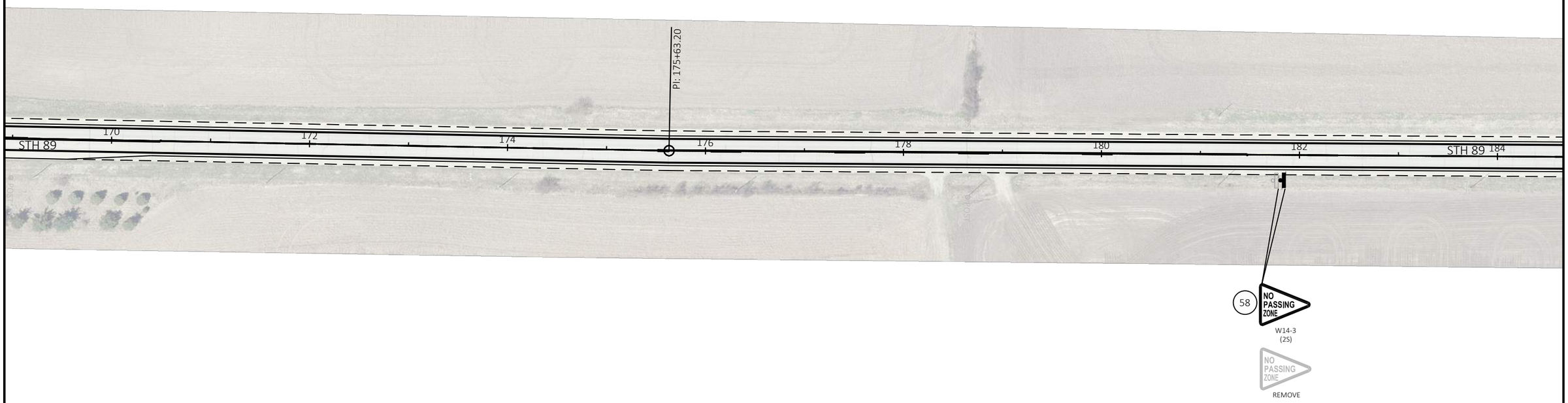

SHEET 9 OF 19

PROJECT NO: 3390-08-70	HWY: STH 89	COUNTY: WALWORTH	PERMANENT SIGNING PLAN	SHEET 42	E

FILE NAME : N:\PDS\C3D\CAD\33900800\SIGN\023201_PS.DWG
LAYOUT NAME - 09
PLOT DATE : 11/20/2025 3:55 PM
PLOT BY : MARTENS, KAREN L
PLOT NAME :
PLOT SCALE : 1 IN:100 FT

2

LEGEND

- EXISTING SIGN MOUNTED ON POST(S)
- EXISTING SIGN MOUNTED ON BRIDGE OR SIGN BRIDGE
- PROPOSED SIGN MOUNTED ON POST(S)
- PROPOSED SIGN MOUNTED ON BRIDGE OR SIGN BRIDGE
- EXISTING LIGHT OR SIGNAL POLE
- CANTILEVER SIGN BRIDGE
- (XXX) DENOTES SIGN NUMBER
- (X) INDICATES SIGN SIZE
- ESTR EXISTING SIGN TO REMAIN
- SP SIGNAL POLE

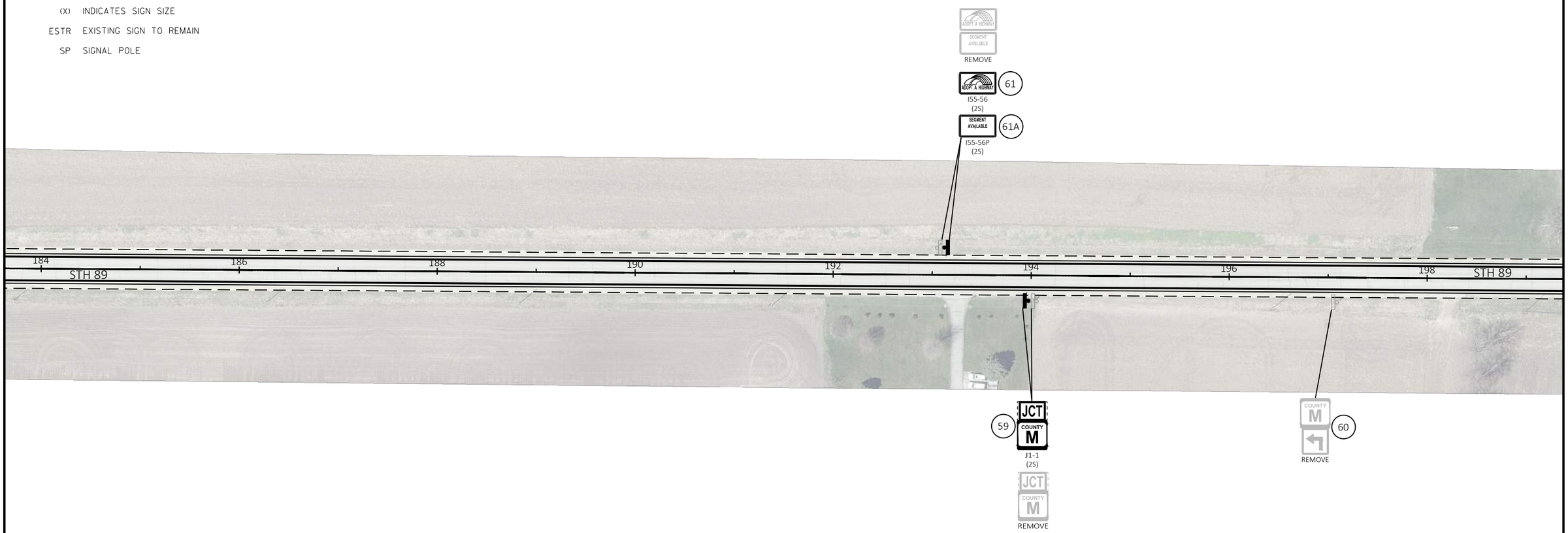

SHEET 10 OF 19

PROJECT NO: 3390-08-70	HWY: STH 89	COUNTY: WALWORTH	PERMANENT SIGNING PLAN	SHEET 43	E

2

LEGEND

- EXISTING SIGN MOUNTED ON POST(S)
- EXISTING SIGN MOUNTED ON BRIDGE OR SIGN BRIDGE
- PROPOSED SIGN MOUNTED ON POST(S)
- PROPOSED SIGN MOUNTED ON BRIDGE OR SIGN BRIDGE
- EXISTING LIGHT OR SIGNAL POLE
- CANTILEVER SIGN BRIDGE
- (XXX) DENOTES SIGN NUMBER
- (X) INDICATES SIGN SIZE
- ESTR EXISTING SIGN TO REMAIN
- SP SIGNAL POLE

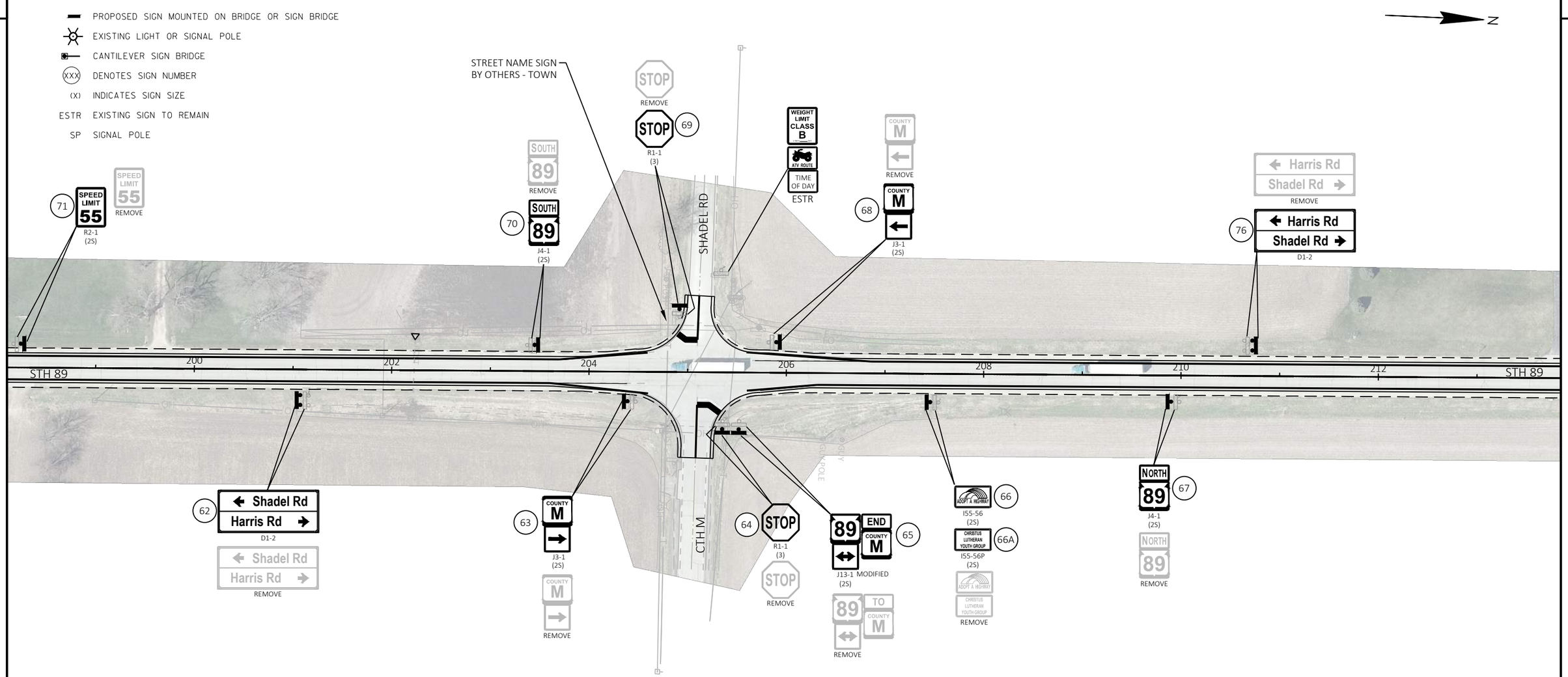

SHEET 11 OF 19

PROJECT NO: 3390-08-70	HWY: STH 89	COUNTY: WALWORTH	PERMANENT SIGNING PLAN	SHEET 44	E

FILE NAME : N:\PDS\C3D\CAD\33900800\SIGN\023201_PS.DWG
LAYOUT NAME - 11
PLOT DATE : 11/20/2025 3:55 PM
PLOT BY : MARTENS, KAREN L
PLOT NAME :
PLOT SCALE : 1 IN:100 FT

LEGEND

- EXISTING SIGN MOUNTED ON POST(S)
- EXISTING SIGN MOUNTED ON BRIDGE OR SIGN BRIDGE
- PROPOSED SIGN MOUNTED ON POST(S)
- PROPOSED SIGN MOUNTED ON BRIDGE OR SIGN BRIDGE
- EXISTING LIGHT OR SIGNAL POLE
- CANTILEVER SIGN BRIDGE
- (XXX) DENOTES SIGN NUMBER
- (X) INDICATES SIGN SIZE
- ESTR EXISTING SIGN TO REMAIN
- SP SIGNAL POLE

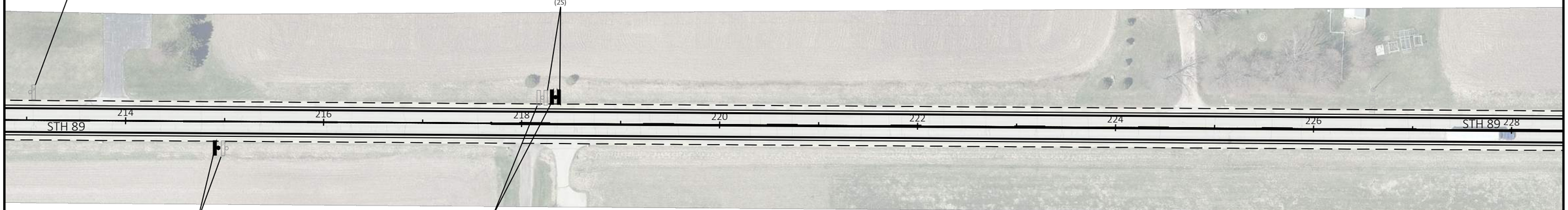

SHEET 12 OF 19

PROJECT NO: 3390-08-70	HWY: STH 89	COUNTY: WALWORTH	PERMANENT SIGNING PLAN	SHEET 45	E

2

LEGEND

- EXISTING SIGN MOUNTED ON POST(S)
- EXISTING SIGN MOUNTED ON BRIDGE OR SIGN BRIDGE
- PROPOSED SIGN MOUNTED ON POST(S)
- PROPOSED SIGN MOUNTED ON BRIDGE OR SIGN BRIDGE
- EXISTING LIGHT OR SIGNAL POLE
- CANTILEVER SIGN BRIDGE
- (XXX) DENOTES SIGN NUMBER
- (X) INDICATES SIGN SIZE
- ESTR EXISTING SIGN TO REMAIN
- SP SIGNAL POLE

N

NO SIGNS
THIS SHEET

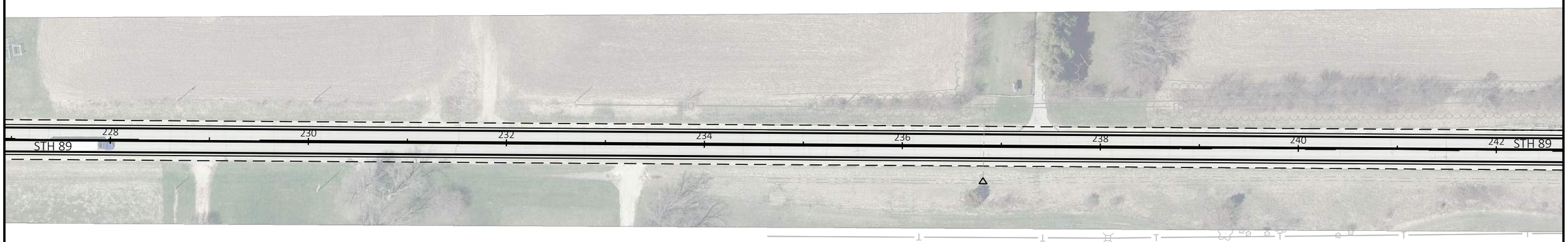

SHEET 13 OF 19

PROJECT NO: 3390-08-70	HWY: STH 89	COUNTY: WALWORTH	PERMANENT SIGNING PLAN	SHEET 46	E

FILE NAME : N:\PDS\C3D\CAD\33900800\SIGN\023201_PS.DWG
LAYOUT NAME - 13
PLOT DATE : 11/20/2025 3:56 PM
PLOT BY : MARTENS, KAREN L
PLOT NAME :
PLOT SCALE : 1 IN:100 FT

2

LEGEND

- EXISTING SIGN MOUNTED ON POST(S)
- EXISTING SIGN MOUNTED ON BRIDGE OR SIGN BRIDGE
- PROPOSED SIGN MOUNTED ON POST(S)
- PROPOSED SIGN MOUNTED ON BRIDGE OR SIGN BRIDGE
- EXISTING LIGHT OR SIGNAL POLE
- CANTILEVER SIGN BRIDGE
- (XXX) DENOTES SIGN NUMBER
- (X) INDICATES SIGN SIZE
- ESTR EXISTING SIGN TO REMAIN
- SP SIGNAL POLE

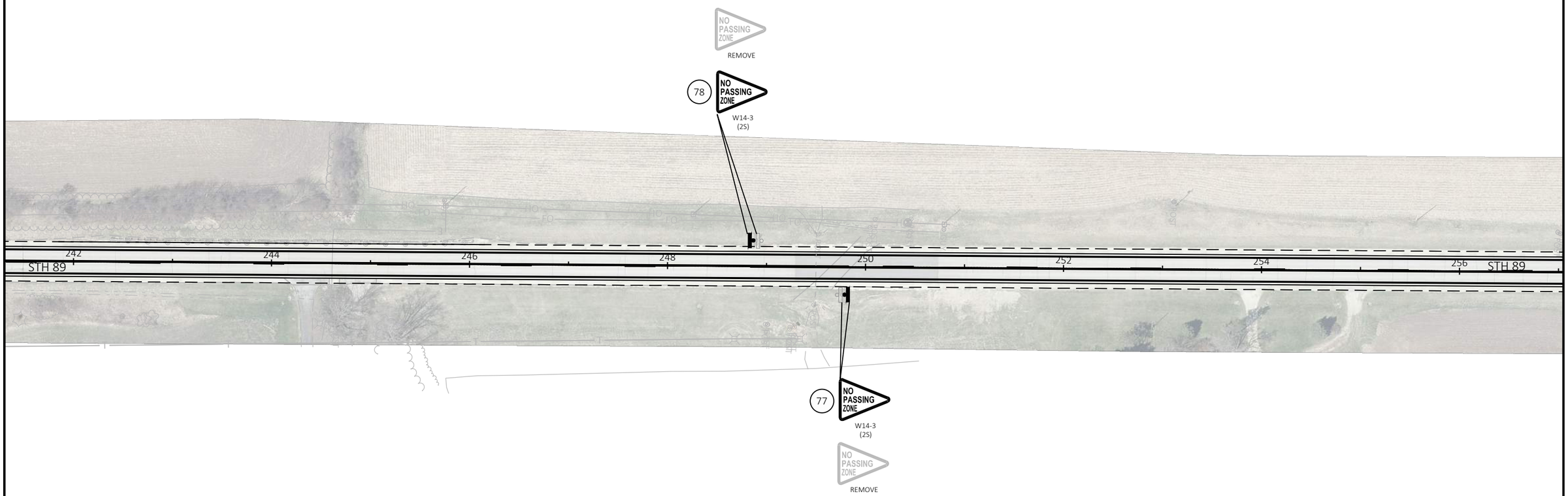

SHEET 14 OF 19

PROJECT NO: 3390-08-70	HWY: STH 89	COUNTY: WALWORTH	PERMANENT SIGNING PLAN	SHEET 47	E

FILE NAME : N:\PDS\C3D\CAD\33900800\SIGN\023201_PS.DWG
LAYOUT NAME - 14
PLOT DATE : 11/20/2025 3:56 PM
PLOT BY : MARTENS, KAREN L
PLOT NAME :
PLOT SCALE : 1 IN:100 FT
WISDOT/CADDS SHEET 42

2

LEGEND

- EXISTING SIGN MOUNTED ON POST(S)
- EXISTING SIGN MOUNTED ON BRIDGE OR SIGN BRIDGE
- PROPOSED SIGN MOUNTED ON POST(S)
- PROPOSED SIGN MOUNTED ON BRIDGE OR SIGN BRIDGE
- EXISTING LIGHT OR SIGNAL POLE
- CANTILEVER SIGN BRIDGE
- (XXX) DENOTES SIGN NUMBER
- (X) INDICATES SIGN SIZE
- ESTR EXISTING SIGN TO REMAIN
- SP SIGNAL POLE

SHEET 15 OF 19

PROJECT NO: 3390-08-70	HWY: STH 89	COUNTY: WALWORTH	PERMANENT SIGNING PLAN	SHEET 48	E

FILE NAME : N:\PDS\C3D\CAD\33900800\SIGN\023201_PS.DWG
LAYOUT NAME - 15
PLOT DATE : 11/20/2025 3:56 PM
PLOT BY : MARTENS, KAREN L
PLOT NAME :
PLOT SCALE : 1 IN:100 FT

2

LEGEND

- EXISTING SIGN MOUNTED ON POST(S)
- EXISTING SIGN MOUNTED ON BRIDGE OR SIGN BRIDGE
- PROPOSED SIGN MOUNTED ON POST(S)
- PROPOSED SIGN MOUNTED ON BRIDGE OR SIGN BRIDGE
- EXISTING LIGHT OR SIGNAL POLE
- CANTILEVER SIGN BRIDGE
- (XXX) DENOTES SIGN NUMBER
- (X) INDICATES SIGN SIZE
- ESTR EXISTING SIGN TO REMAIN
- SP SIGNAL POLE

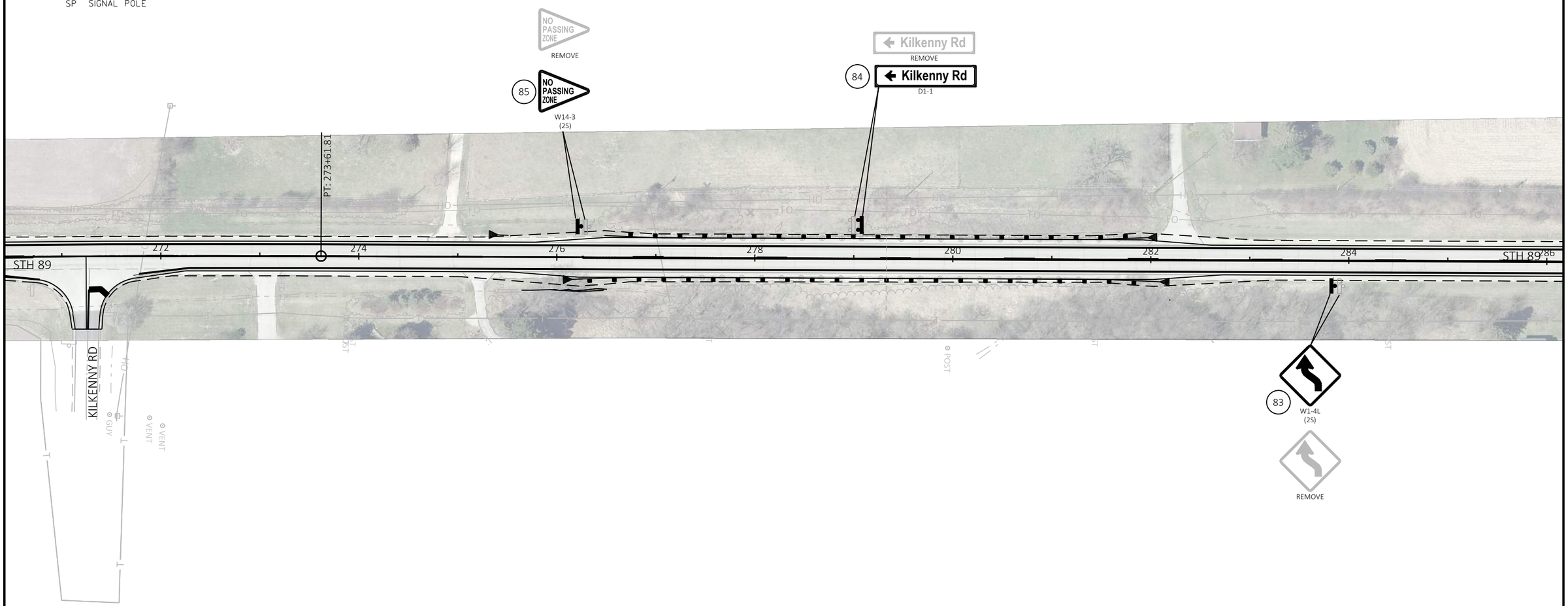

SHEET 16 OF 19

PROJECT NO: 3390-08-70	HWY: STH 89	COUNTY: WALWORTH	PERMANENT SIGNING PLAN	SHEET 49	E

FILE NAME : N:\PDS\C3D\CAD\33900800\SIGN\023201_PS.DWG
LAYOUT NAME - 16
PLOT DATE : 11/20/2025 3:56 PM
PLOT BY : MARTENS, KAREN L
PLOT NAME :
PLOT SCALE : 1 IN:100 FT

2

LEGEND

- EXISTING SIGN MOUNTED ON POST(S)
- EXISTING SIGN MOUNTED ON BRIDGE OR SIGN BRIDGE
- PROPOSED SIGN MOUNTED ON POST(S)
- PROPOSED SIGN MOUNTED ON BRIDGE OR SIGN BRIDGE
- EXISTING LIGHT OR SIGNAL POLE
- CANTILEVER SIGN BRIDGE
- (XXX) DENOTES SIGN NUMBER
- (X) INDICATES SIGN SIZE
- ESTR EXISTING SIGN TO REMAIN
- SP SIGNAL POLE

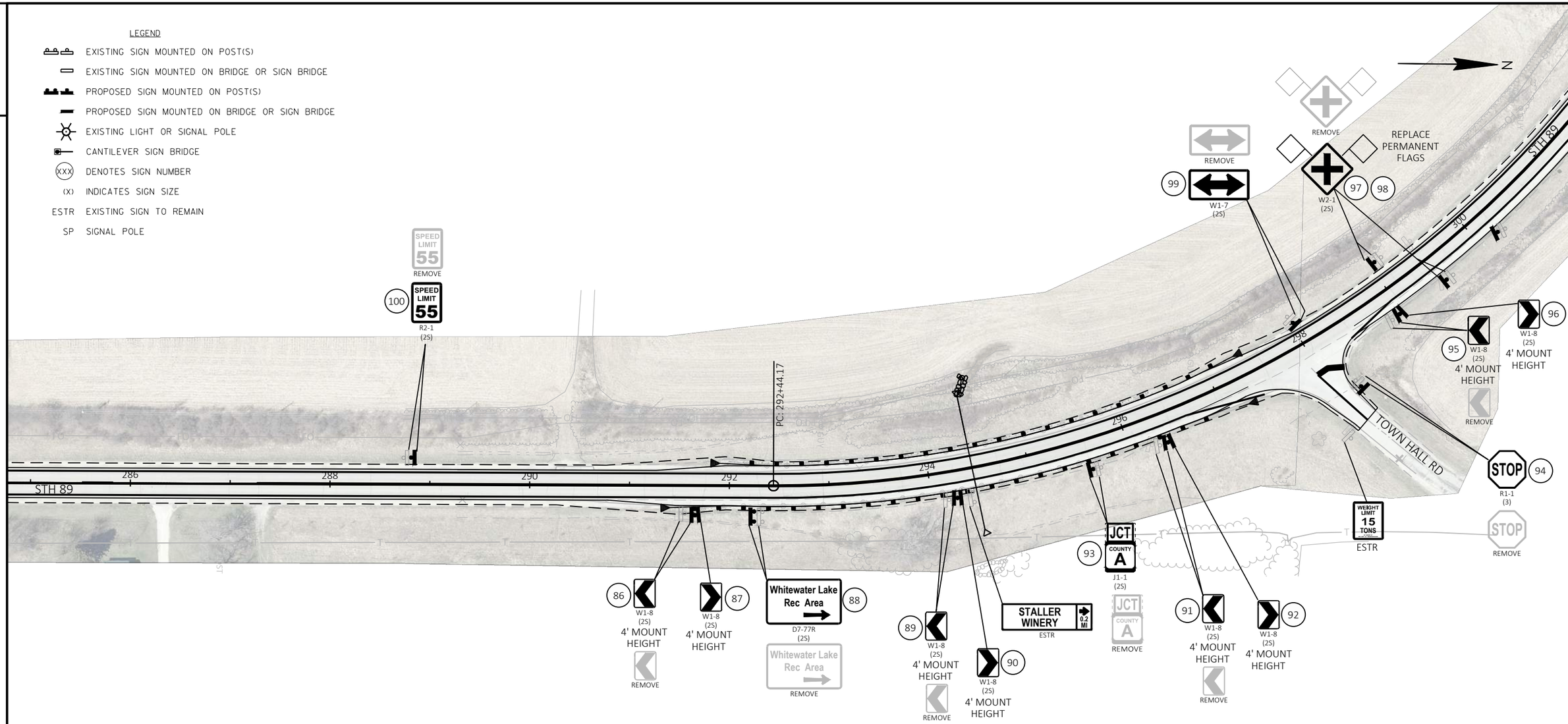

SHEET 17 OF 19

PROJECT NO: 3390-08-70	HWY: STH 89	COUNTY: WALWORTH	PERMANENT SIGNING PLAN	SHEET 50	E

FILE NAME : N:\PDS\C3D\CAD\33900800\SIGN\023201_PS.DWG
LAYOUT NAME - 17
PLOT DATE : 11/20/2025 3:56 PM
PLOT BY : MARTENS, KAREN L
PLOT NAME :
PLOT SCALE : 1 IN:100 FT
WISDOT/CADDS SHEET 42

LEGEND

- EXISTING SIGN MOUNTED ON POST(S)
- EXISTING SIGN MOUNTED ON BRIDGE OR SIGN BRIDGE
- PROPOSED SIGN MOUNTED ON POST(S)
- PROPOSED SIGN MOUNTED ON BRIDGE OR SIGN BRIDGE
- EXISTING LIGHT OR SIGNAL POLE
- CANTILEVER SIGN BRIDGE
- (XXX) DENOTES SIGN NUMBER
- (X) INDICATES SIGN SIZE
- ESTR EXISTING SIGN TO REMAIN
- SP SIGNAL POLE

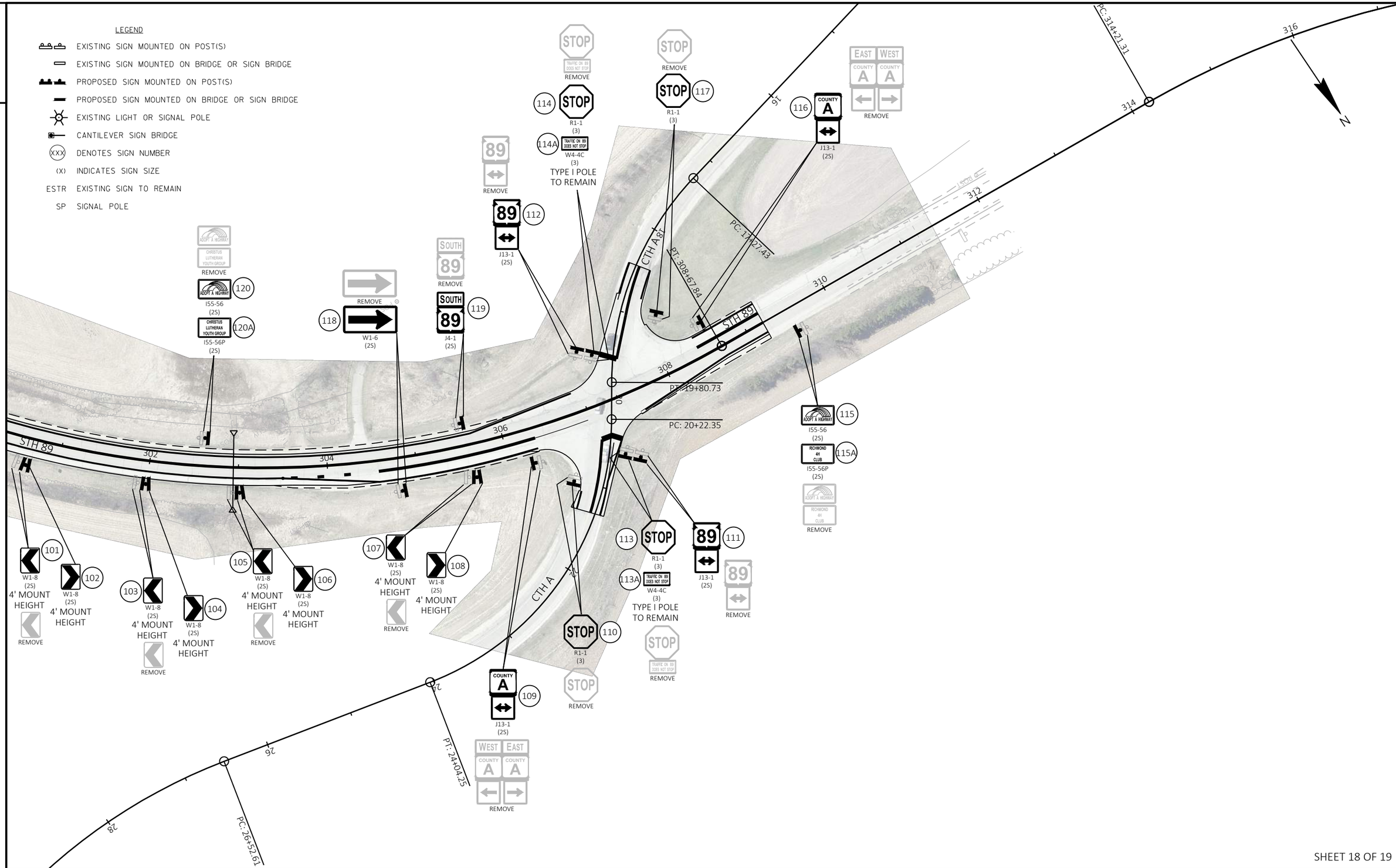

SHEET 18 OF 19

2

LEGEND

- EXISTING SIGN MOUNTED ON POST(S)
- EXISTING SIGN MOUNTED ON BRIDGE OR SIGN BRIDGE
- PROPOSED SIGN MOUNTED ON POST(S)
- PROPOSED SIGN MOUNTED ON BRIDGE OR SIGN BRIDGE
- EXISTING LIGHT OR SIGNAL POLE
- CANTILEVER SIGN BRIDGE
- (XXX) DENOTES SIGN NUMBER
- (X) INDICATES SIGN SIZE
- ESTR EXISTING SIGN TO REMAIN
- SP SIGNAL POLE

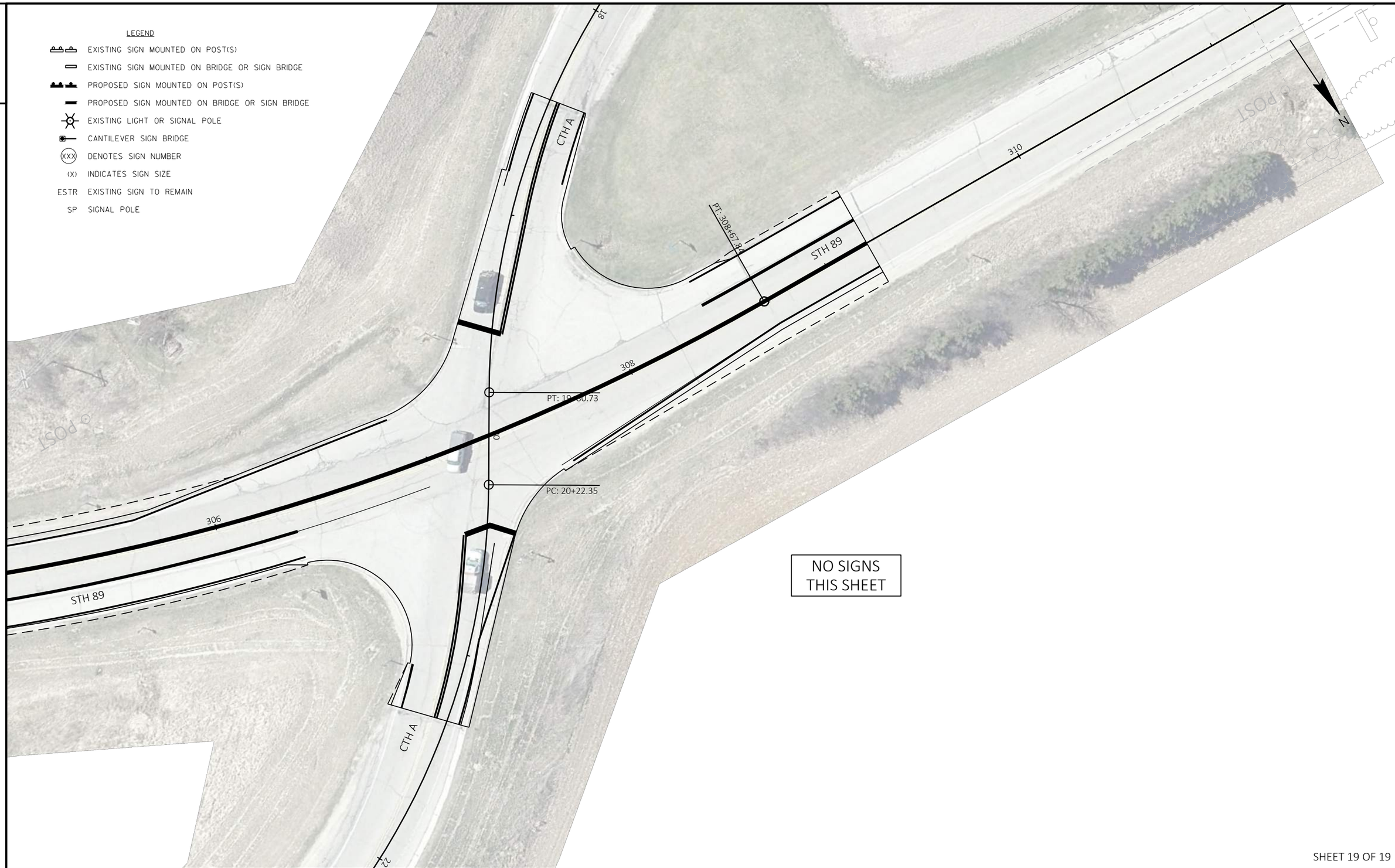

NO SIGNS
THIS SHEET

SHEET 19 OF 19

2

PROJECT NO: 3390-08-70	HWY: STH 89	COUNTY: WALWORTH	PERMANENT SIGNING PLAN	SHEET 52	E

FILE NAME : N:\PDS\C3D\CAD\33900800\SIGN\023201_PS.DWG
LAYOUT NAME - 19
PLOT DATE : 11/20/2025 3:56 PM PLOT BY : MARTENS, KAREN L PLOT NAME : PLOT SCALE : 1 IN:40 FT

WISDOT/CADDS SHEET 42

2

RADAR DETECTION UNIT & CONTROL BOX

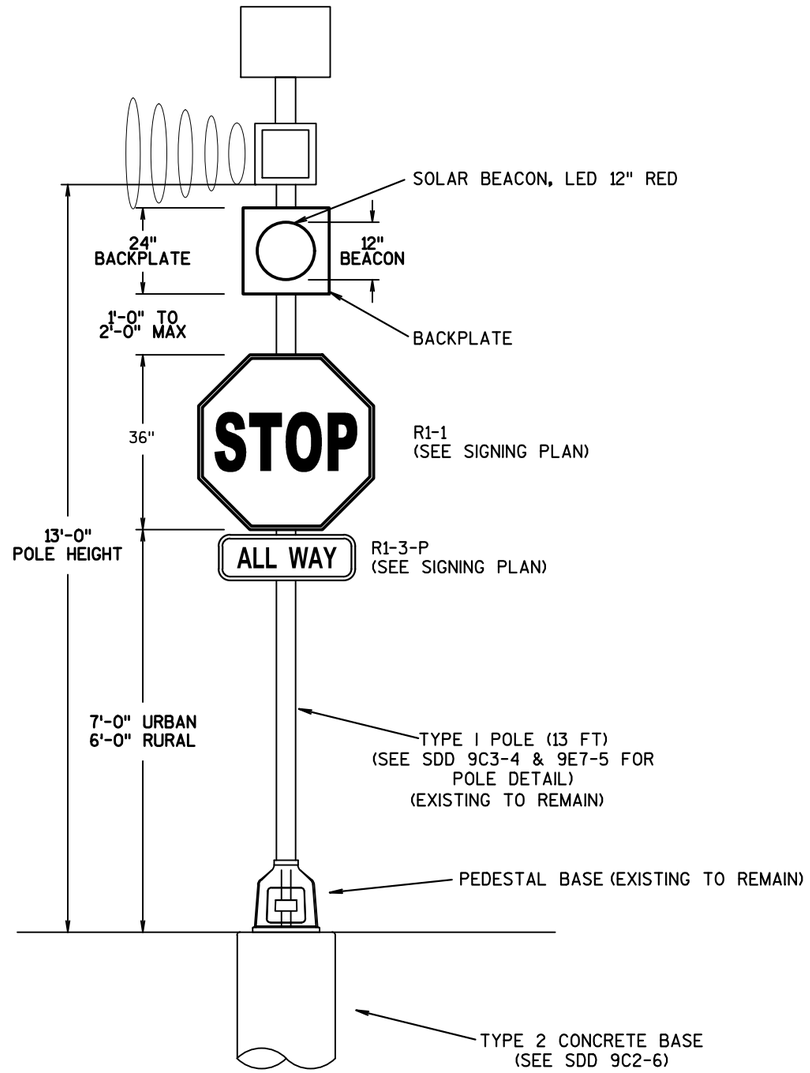

NOTE:
REMOVE EXISTING HARDWIRED BEACON.
SEE ELECTRICAL PLAN FOR REMOVAL OF ELECTRICAL WIRING SERVICE.

13' SOLAR BEACON ASSEMBLY
(STOP SIGN APPLICATION)

2

PROJECT NO:3390-08-70	HWY: STH 89	COUNTY: WALWORTH	SOLAR BEACON ASSEMBLY - STOP	SHEET 53	E

2

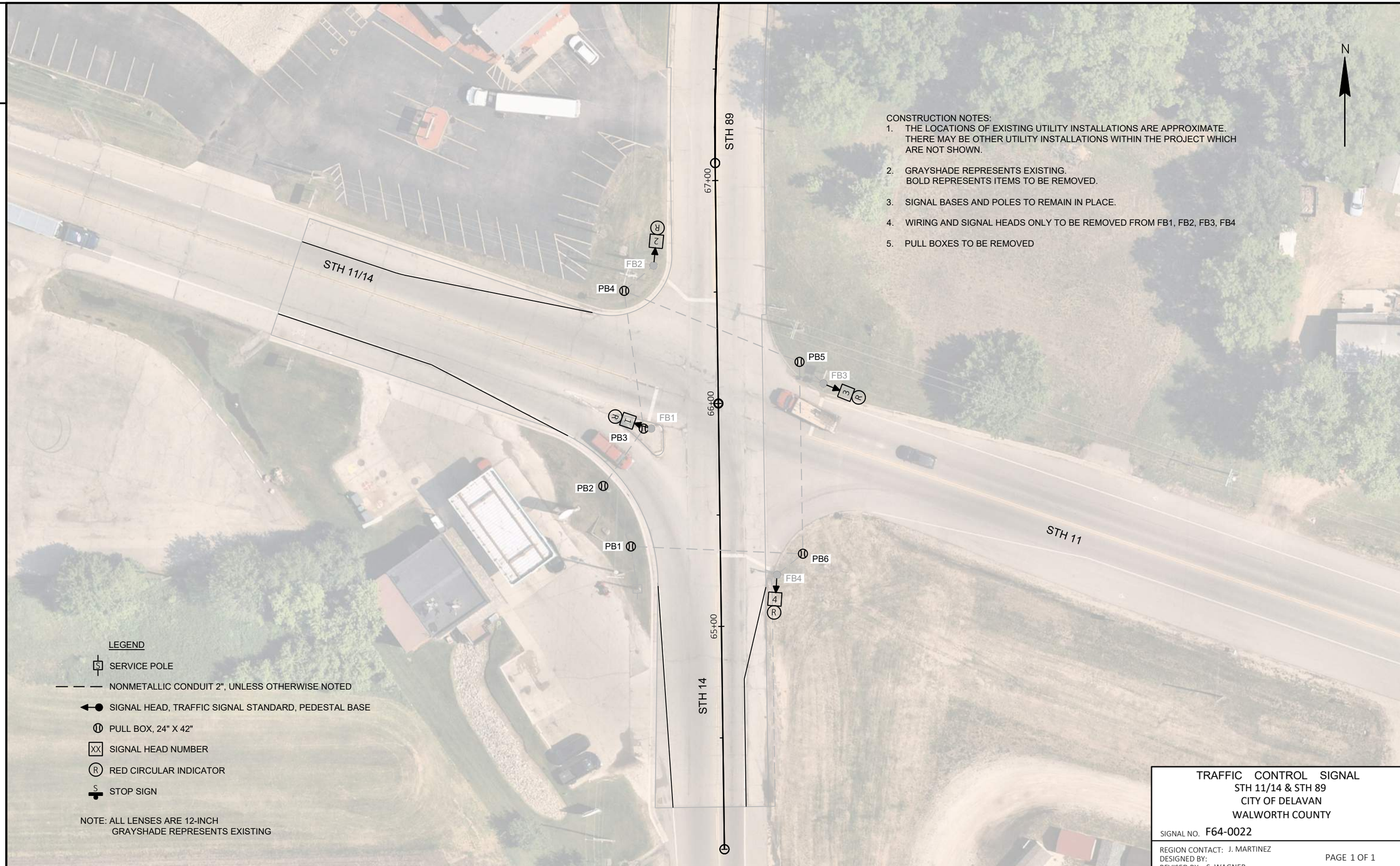

CONSTRUCTION NOTES:

1. THE LOCATIONS OF EXISTING UTILITY INSTALLATIONS ARE APPROXIMATE. THERE MAY BE OTHER UTILITY INSTALLATIONS WITHIN THE PROJECT WHICH ARE NOT SHOWN.
2. GRAYSHADE REPRESENTS EXISTING. BOLD REPRESENTS ITEMS TO BE REMOVED.
3. SIGNAL BASES AND POLES TO REMAIN IN PLACE.
4. WIRING AND SIGNAL HEADS ONLY TO BE REMOVED FROM FB1, FB2, FB3, FB4
5. PULL BOXES TO BE REMOVED

TRAFFIC CONTROL SIGNAL
STH 11/14 & STH 89
CITY OF DELAVAN
WALWORTH COUNTY

SIGNAL NO. F64-0022

REGION CONTACT: J. MARTINEZ
DESIGNED BY:
REVISED BY: S. WAGNER

PAGE 1 OF 1

2

PROJECT NO: 3390-08-70	HWY: STH 89	COUNTY: WALWORTH	FLASHER REMOVAL PLAN	SHEET 54	E

FILE NAME : N:\PDS\C3D\CAD\33900800\SIG\F64-0022\F64-0022_REM.DWG
LAYOUT NAME - F64-0022_rem_pg1
PLOT DATE : 1/7/2026 9:24 AM PLOT BY : WAGNER, SCOTT H PLOT NAME : PLOT SCALE : 1 IN:40 FT

NOTES:

- CONTRACTOR SHALL NOTE EXISTING NO-PASSING ZONE LOCATIONS & MATCH THEM, PRIOR TO REMOVAL.
- SEE SDD 15C33-04 FOR EXACT LOCATION OF STOP BAR. SEE TYPICAL PAVEMENT MARKING DETAILS FOR ADDITIONAL INFORMATION.

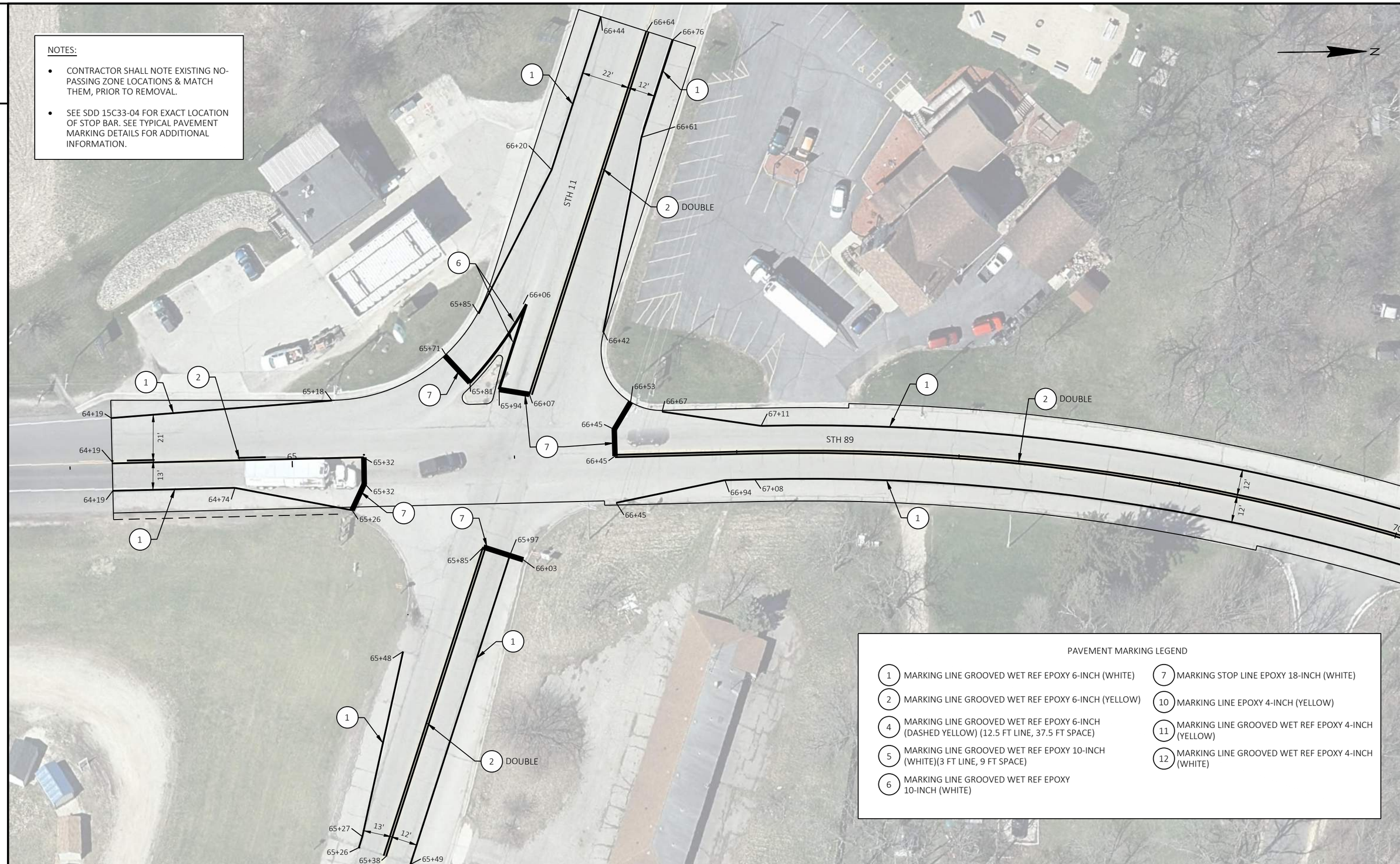

PAVEMENT MARKING LEGEND

1 MARKING LINE GROOVED WET REF EPOXY 6-INCH (WHITE)	7 MARKING STOP LINE EPOXY 18-INCH (WHITE)
2 MARKING LINE GROOVED WET REF EPOXY 6-INCH (YELLOW)	10 MARKING LINE EPOXY 4-INCH (YELLOW)
4 MARKING LINE GROOVED WET REF EPOXY 6-INCH (DASHED YELLOW) (12.5 FT LINE, 37.5 FT SPACE)	11 MARKING LINE GROOVED WET REF EPOXY 4-INCH (YELLOW)
5 MARKING LINE GROOVED WET REF EPOXY 10-INCH (WHITE)(3 FT LINE, 9 FT SPACE)	12 MARKING LINE GROOVED WET REF EPOXY 4-INCH (WHITE)
6 MARKING LINE GROOVED WET REF EPOXY 10-INCH (WHITE)	

PROJECT NO: 3390-08-70	HWY: STH 89	COUNTY: WALWORTH	PAVEMENT MARKING	SHEET 55	E

NOTES:

- CONTRACTOR SHALL NOTE EXISTING NO-PASSING ZONE LOCATIONS & MATCH THEM, PRIOR TO REMOVAL.
- SEE SDD 15C33-04 FOR EXACT LOCATION OF STOP BAR. SEE TYPICAL PAVEMENT MARKING DETAILS FOR ADDITIONAL INFORMATION.

PAVEMENT MARKING LEGEND

1 MARKING LINE GROOVED WET REF EPOXY 6-INCH (WHITE)

2 MARKING LINE GROOVED WET REF EPOXY 6-INCH (YELLOW)

4 MARKING LINE GROOVED WET REF EPOXY 6-INCH (DASHED YELLOW) (12.5 FT LINE, 37.5 FT SPACE)

5 MARKING LINE GROOVED WET REF EPOXY 10-INCH (WHITE)(3 FT LINE, 9 FT SPACE)

6 MARKING LINE GROOVED WET REF EPOXY 10-INCH (WHITE)

7 MARKING STOP LINE EPOXY 18-INCH (WHITE)

10 MARKING LINE EPOXY 4-INCH (YELLOW)

11 MARKING LINE GROOVED WET REF EPOXY 4-INCH (YELLOW)

12 MARKING LINE GROOVED WET REF EPOXY 4-INCH (WHITE)

PROJECT NO: 3390-08-70	HWY: STH 89	COUNTY: WALWORTH	PAVEMENT MARKING	SHEET 56	E

NOTES:

- CONTRACTOR SHALL NOTE EXISTING NO-PASSING ZONE LOCATIONS & MATCH THEM, PRIOR TO REMOVAL.
- SEE SDD 15C33-04 FOR EXACT LOCATION OF STOP BAR. SEE TYPICAL PAVEMENT MARKING DETAILS FOR ADDITIONAL INFORMATION.

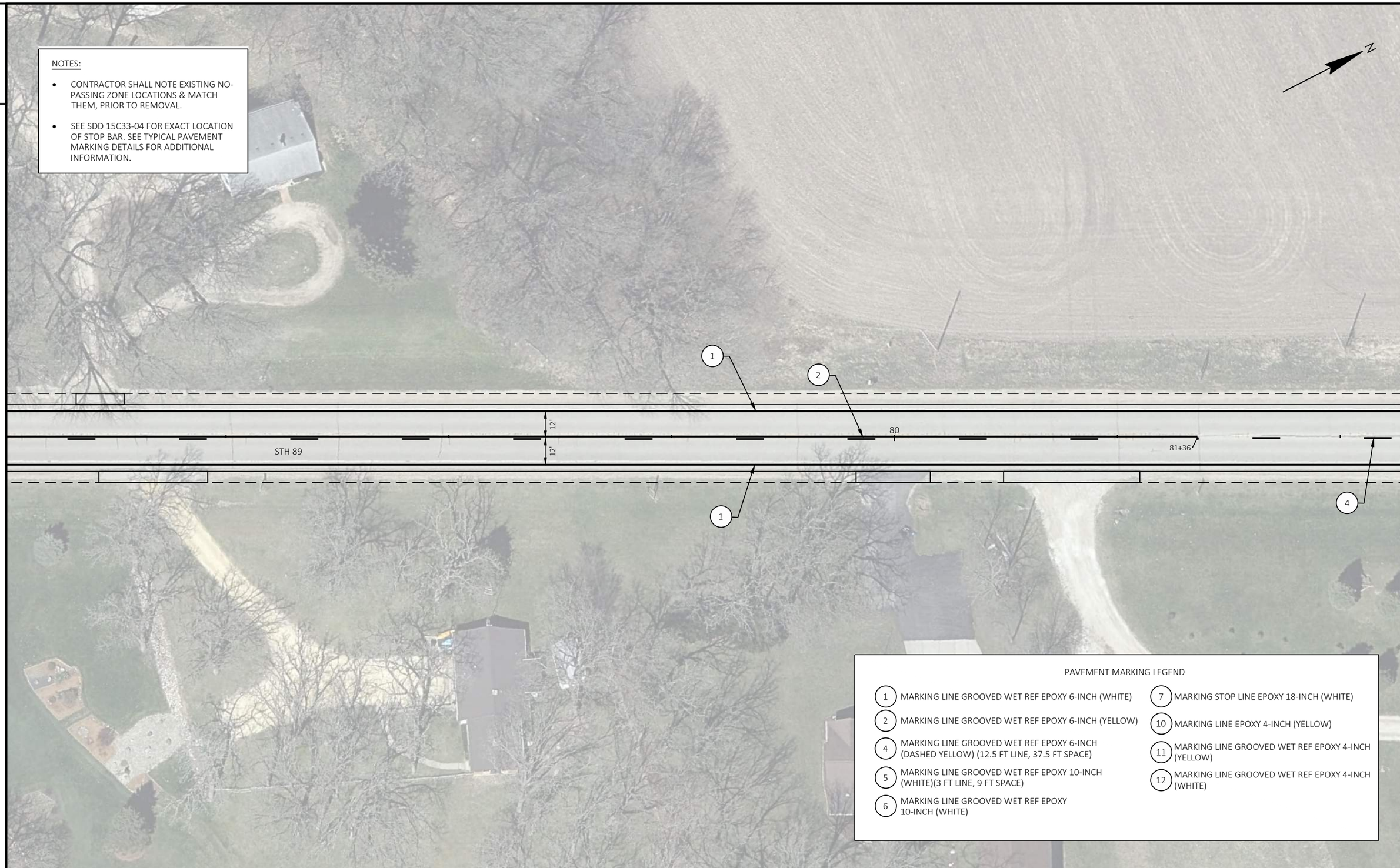

PAVEMENT MARKING LEGEND

1. MARKING LINE GROOVED WET REF EPOXY 6-INCH (WHITE)
2. MARKING LINE GROOVED WET REF EPOXY 6-INCH (YELLOW)
4. MARKING LINE GROOVED WET REF EPOXY 6-INCH (DASHED YELLOW) (12.5 FT LINE, 37.5 FT SPACE)
5. MARKING LINE GROOVED WET REF EPOXY 10-INCH (WHITE)(3 FT LINE, 9 FT SPACE)
6. MARKING LINE GROOVED WET REF EPOXY 10-INCH (WHITE)
7. MARKING STOP LINE EPOXY 18-INCH (WHITE)
10. MARKING LINE EPOXY 4-INCH (YELLOW)
11. MARKING LINE GROOVED WET REF EPOXY 4-INCH (YELLOW)
12. MARKING LINE GROOVED WET REF EPOXY 4-INCH (WHITE)

2

NOTES:

- CONTRACTOR SHALL NOTE EXISTING NO-PASSING ZONE LOCATIONS & MATCH THEM, PRIOR TO REMOVAL.
- SEE SDD 15C33-04 FOR EXACT LOCATION OF STOP BAR. SEE TYPICAL PAVEMENT MARKING DETAILS FOR ADDITIONAL INFORMATION.

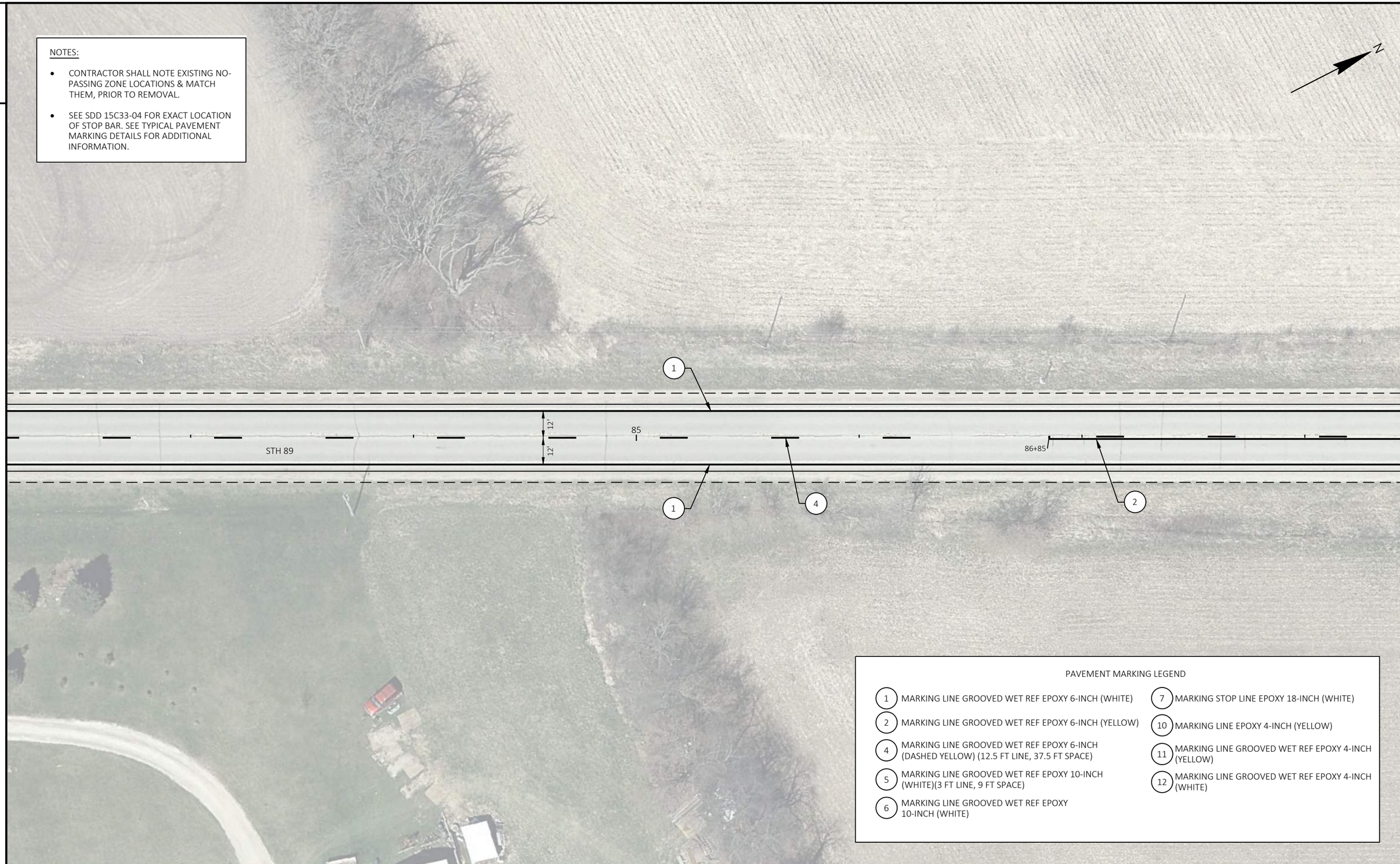

PAVEMENT MARKING LEGEND

1 MARKING LINE GROOVED WET REF EPOXY 6-INCH (WHITE)	7 MARKING STOP LINE EPOXY 18-INCH (WHITE)
2 MARKING LINE GROOVED WET REF EPOXY 6-INCH (YELLOW)	10 MARKING LINE EPOXY 4-INCH (YELLOW)
4 MARKING LINE GROOVED WET REF EPOXY 6-INCH (DASHED YELLOW) (12.5 FT LINE, 37.5 FT SPACE)	11 MARKING LINE GROOVED WET REF EPOXY 4-INCH (YELLOW)
5 MARKING LINE GROOVED WET REF EPOXY 10-INCH (WHITE)(3 FT LINE, 9 FT SPACE)	12 MARKING LINE GROOVED WET REF EPOXY 4-INCH (WHITE)
6 MARKING LINE GROOVED WET REF EPOXY 10-INCH (WHITE)	

PROJECT NO: 3390-08-70	HWY: STH 89	COUNTY: WALWORTH	PAVEMENT MARKING	SHEET 58	E

2

NOTES:

- CONTRACTOR SHALL NOTE EXISTING NO-PASSING ZONE LOCATIONS & MATCH THEM, PRIOR TO REMOVAL.
- SEE SDD 15C33-04 FOR EXACT LOCATION OF STOP BAR. SEE TYPICAL PAVEMENT MARKING DETAILS FOR ADDITIONAL INFORMATION.

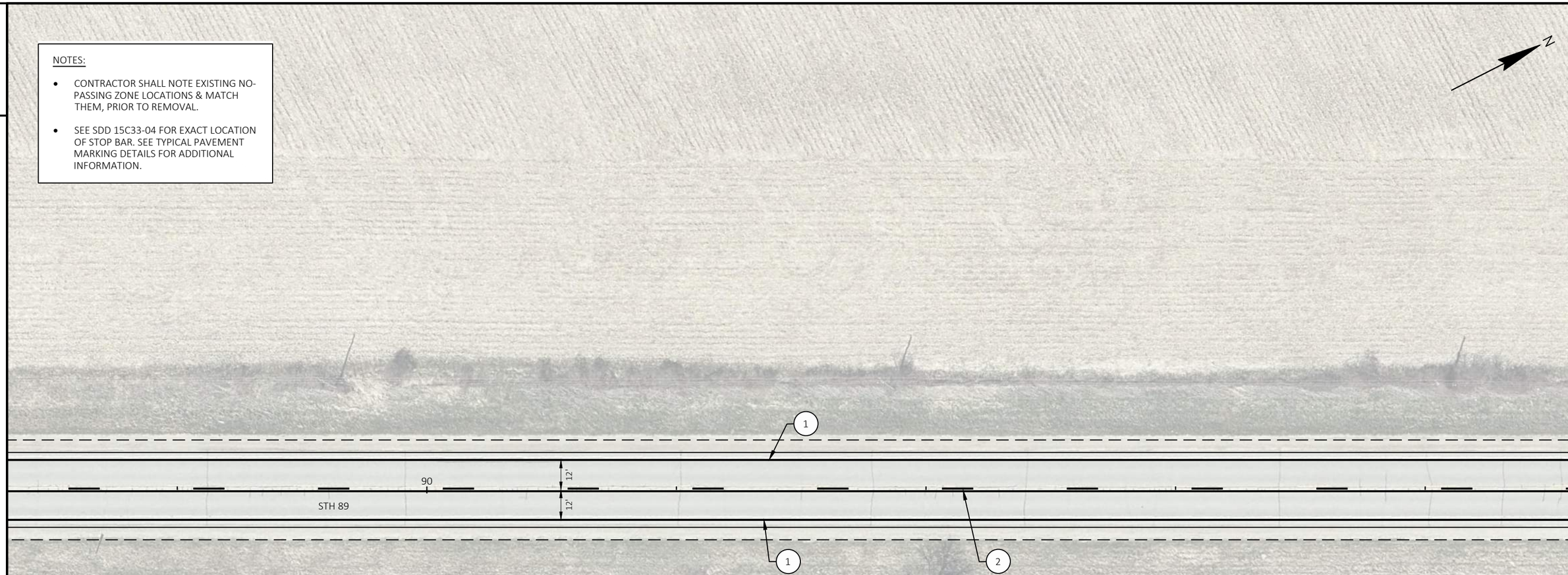

PAVEMENT MARKING LEGEND

1 MARKING LINE GROOVED WET REF EPOXY 6-INCH (WHITE)	7 MARKING STOP LINE EPOXY 18-INCH (WHITE)
2 MARKING LINE GROOVED WET REF EPOXY 6-INCH (YELLOW)	10 MARKING LINE EPOXY 4-INCH (YELLOW)
4 MARKING LINE GROOVED WET REF EPOXY 6-INCH (DASHED YELLOW) (12.5 FT LINE, 37.5 FT SPACE)	11 MARKING LINE GROOVED WET REF EPOXY 4-INCH (YELLOW)
5 MARKING LINE GROOVED WET REF EPOXY 10-INCH (WHITE)(3 FT LINE, 9 FT SPACE)	12 MARKING LINE GROOVED WET REF EPOXY 4-INCH (WHITE)
6 MARKING LINE GROOVED WET REF EPOXY 10-INCH (WHITE)	

NOTES:

- CONTRACTOR SHALL NOTE EXISTING NO-PASSING ZONE LOCATIONS & MATCH THEM, PRIOR TO REMOVAL.
- SEE SDD 15C33-04 FOR EXACT LOCATION OF STOP BAR. SEE TYPICAL PAVEMENT MARKING DETAILS FOR ADDITIONAL INFORMATION.

PAVEMENT MARKING LEGEND

1 MARKING LINE GROOVED WET REF EPOXY 6-INCH (WHITE)	7 MARKING STOP LINE EPOXY 18-INCH (WHITE)
2 MARKING LINE GROOVED WET REF EPOXY 6-INCH (YELLOW)	10 MARKING LINE EPOXY 4-INCH (YELLOW)
4 MARKING LINE GROOVED WET REF EPOXY 6-INCH (DASHED YELLOW) (12.5 FT LINE, 37.5 FT SPACE)	11 MARKING LINE GROOVED WET REF EPOXY 4-INCH (YELLOW)
5 MARKING LINE GROOVED WET REF EPOXY 10-INCH (WHITE)(3 FT LINE, 9 FT SPACE)	12 MARKING LINE GROOVED WET REF EPOXY 4-INCH (WHITE)
6 MARKING LINE GROOVED WET REF EPOXY 10-INCH (WHITE)	

2

NOTES:

- CONTRACTOR SHALL NOTE EXISTING NO-PASSING ZONE LOCATIONS & MATCH THEM, PRIOR TO REMOVAL.
- SEE SDD 15C33-04 FOR EXACT LOCATION OF STOP BAR. SEE TYPICAL PAVEMENT MARKING DETAILS FOR ADDITIONAL INFORMATION.

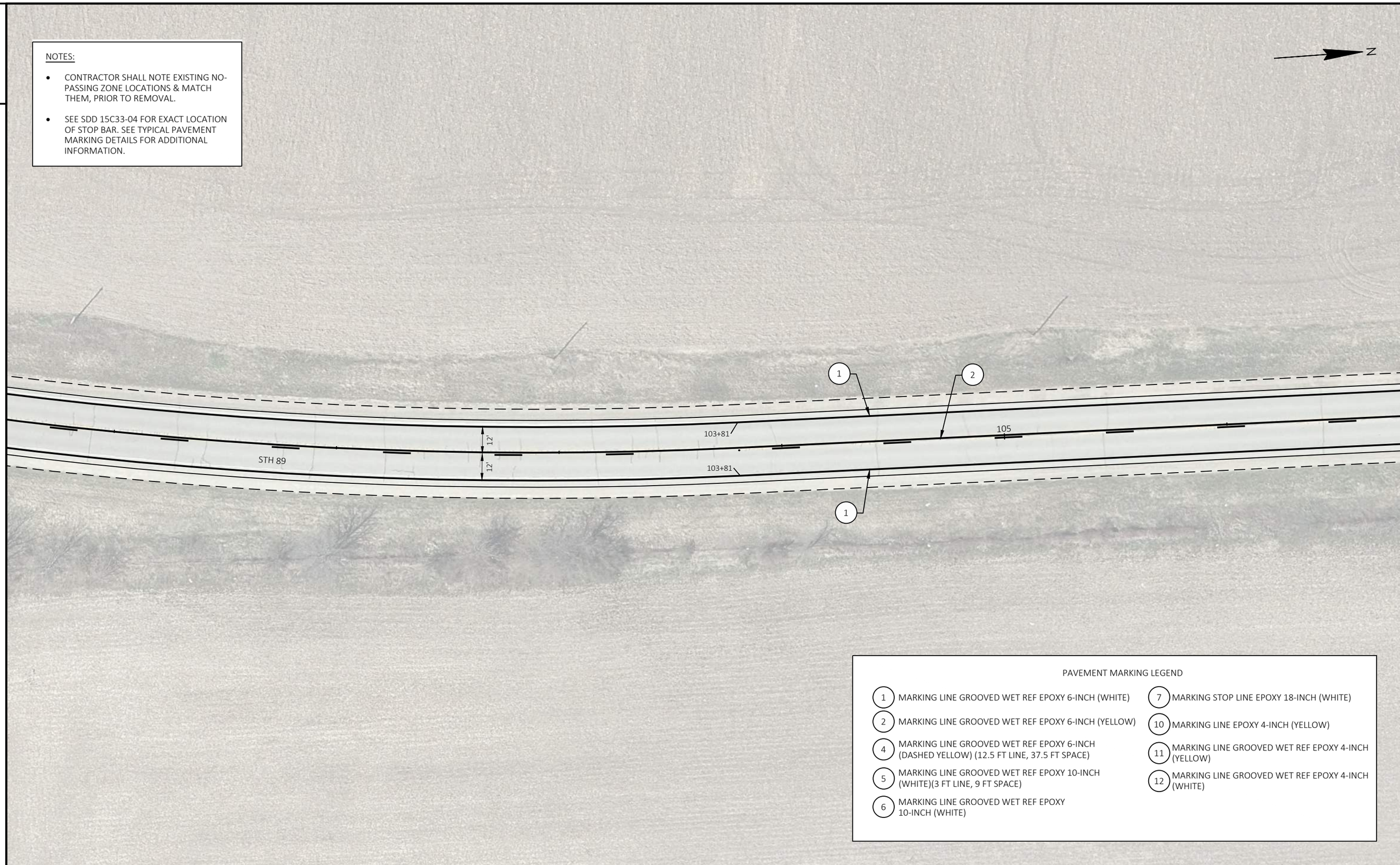

PAVEMENT MARKING LEGEND

1 MARKING LINE GROOVED WET REF EPOXY 6-INCH (WHITE)	7 MARKING STOP LINE EPOXY 18-INCH (WHITE)
2 MARKING LINE GROOVED WET REF EPOXY 6-INCH (YELLOW)	10 MARKING LINE EPOXY 4-INCH (YELLOW)
4 MARKING LINE GROOVED WET REF EPOXY 6-INCH (DASHED YELLOW) (12.5 FT LINE, 37.5 FT SPACE)	11 MARKING LINE GROOVED WET REF EPOXY 4-INCH (YELLOW)
5 MARKING LINE GROOVED WET REF EPOXY 10-INCH (WHITE)(3 FT LINE, 9 FT SPACE)	12 MARKING LINE GROOVED WET REF EPOXY 4-INCH (WHITE)
6 MARKING LINE GROOVED WET REF EPOXY 10-INCH (WHITE)	

2

NOTES:

- CONTRACTOR SHALL NOTE EXISTING NO-PASSING ZONE LOCATIONS & MATCH THEM, PRIOR TO REMOVAL.
- SEE SDD 15C33-04 FOR EXACT LOCATION OF STOP BAR. SEE TYPICAL PAVEMENT MARKING DETAILS FOR ADDITIONAL INFORMATION.

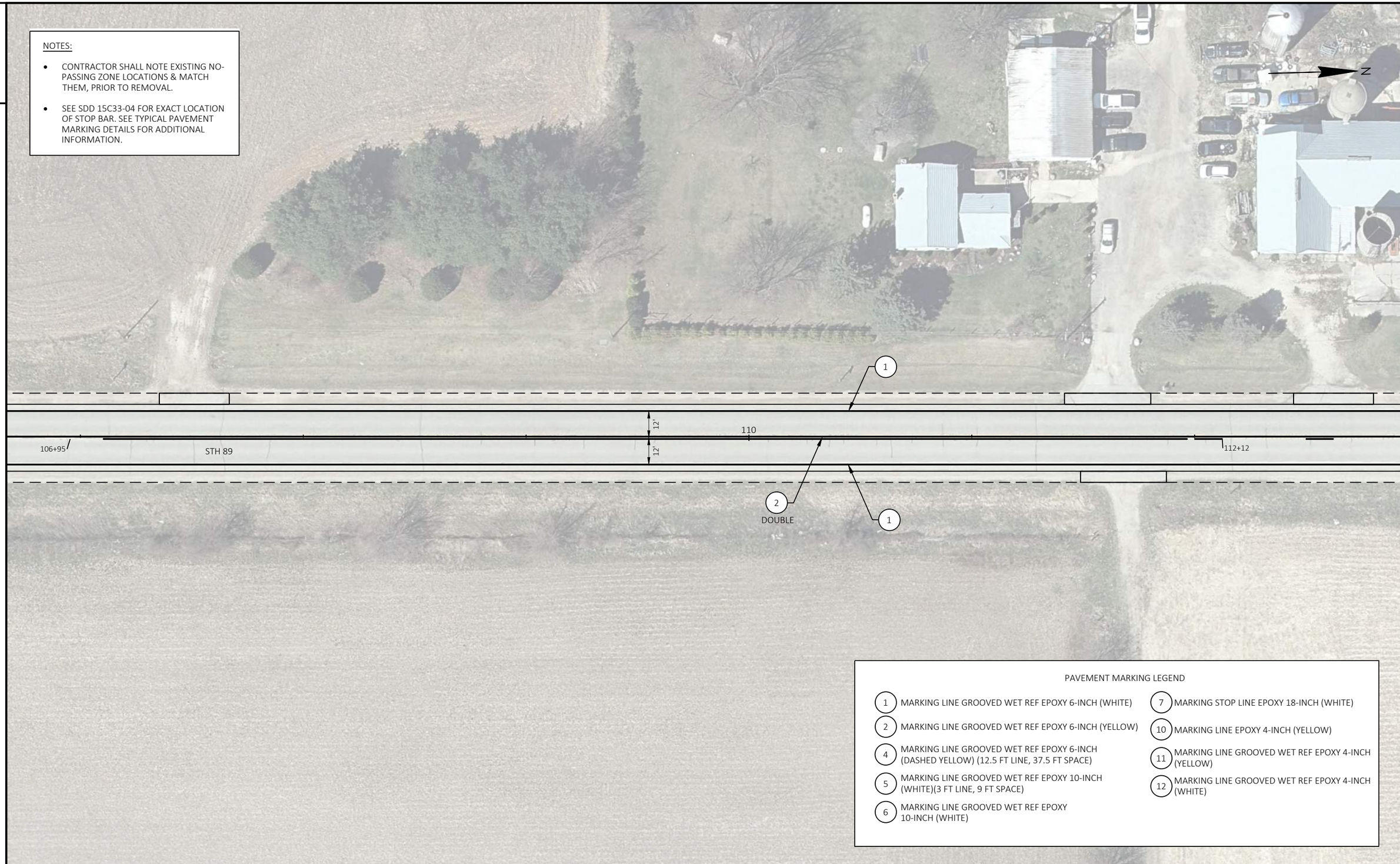

PAVEMENT MARKING LEGEND

1 MARKING LINE GROOVED WET REF EPOXY 6-INCH (WHITE)

2 MARKING LINE GROOVED WET REF EPOXY 6-INCH (YELLOW)

4 MARKING LINE GROOVED WET REF EPOXY 6-INCH (DASHED YELLOW) (12.5 FT LINE, 37.5 FT SPACE)

5 MARKING LINE GROOVED WET REF EPOXY 10-INCH (WHITE)(3 FT LINE, 9 FT SPACE)

6 MARKING LINE GROOVED WET REF EPOXY 10-INCH (WHITE)

7 MARKING STOP LINE EPOXY 18-INCH (WHITE)

10 MARKING LINE EPOXY 4-INCH (YELLOW)

11 MARKING LINE GROOVED WET REF EPOXY 4-INCH (YELLOW)

12 MARKING LINE GROOVED WET REF EPOXY 4-INCH (WHITE)

PROJECT NO: 3390-08-70	HWY: STH 89	COUNTY: WALWORTH	PAVEMENT MARKING	SHEET 62	E

2

NOTES:

- CONTRACTOR SHALL NOTE EXISTING NO-PASSING ZONE LOCATIONS & MATCH THEM, PRIOR TO REMOVAL.
- SEE SDD 15C33-04 FOR EXACT LOCATION OF STOP BAR. SEE TYPICAL PAVEMENT MARKING DETAILS FOR ADDITIONAL INFORMATION.

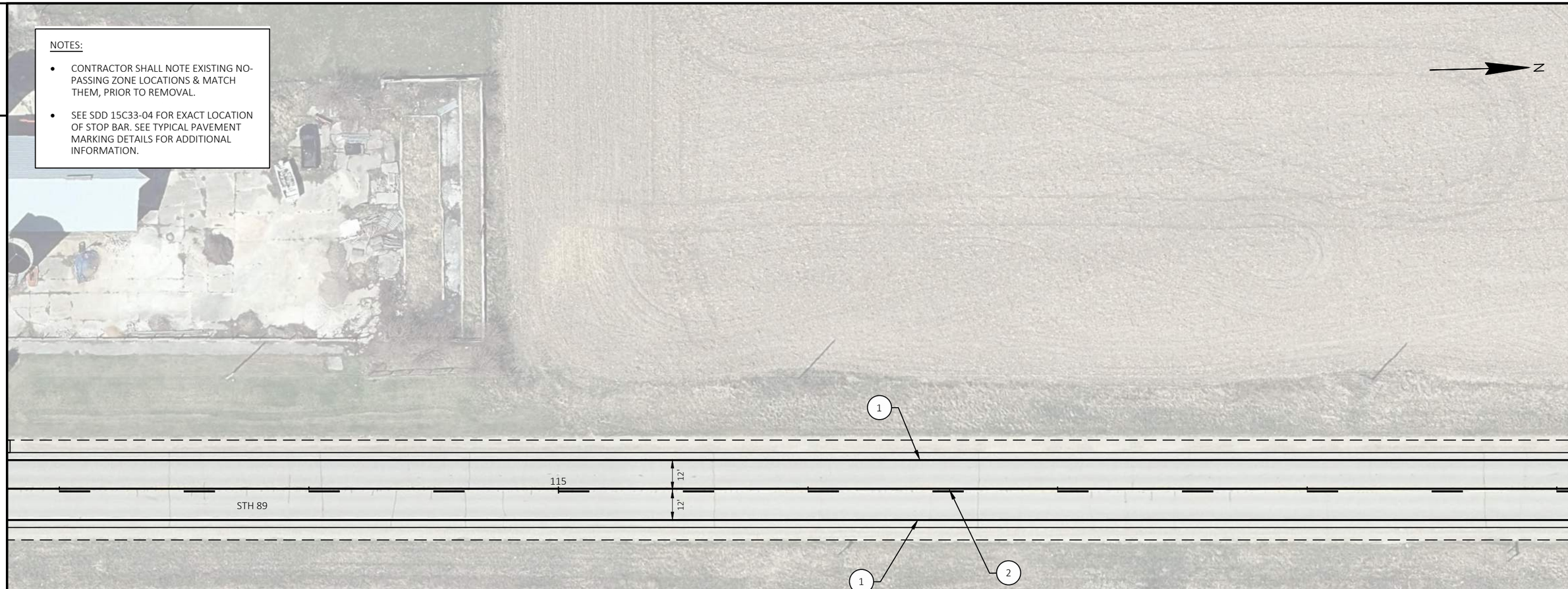

PAVEMENT MARKING LEGEND

1	MARKING LINE GROOVED WET REF EPOXY 6-INCH (WHITE)	7	MARKING STOP LINE EPOXY 18-INCH (WHITE)
2	MARKING LINE GROOVED WET REF EPOXY 6-INCH (YELLOW)	10	MARKING LINE EPOXY 4-INCH (YELLOW)
4	MARKING LINE GROOVED WET REF EPOXY 6-INCH (DASHED YELLOW) (12.5 FT LINE, 37.5 FT SPACE)	11	MARKING LINE GROOVED WET REF EPOXY 4-INCH (YELLOW)
5	MARKING LINE GROOVED WET REF EPOXY 10-INCH (WHITE)(3 FT LINE, 9 FT SPACE)	12	MARKING LINE GROOVED WET REF EPOXY 4-INCH (WHITE)
6	MARKING LINE GROOVED WET REF EPOXY 10-INCH (WHITE)		

NOTES:

- CONTRACTOR SHALL NOTE EXISTING NO-PASSING ZONE LOCATIONS & MATCH THEM, PRIOR TO REMOVAL.
- SEE SDD 15C33-04 FOR EXACT LOCATION OF STOP BAR. SEE TYPICAL PAVEMENT MARKING DETAILS FOR ADDITIONAL INFORMATION.

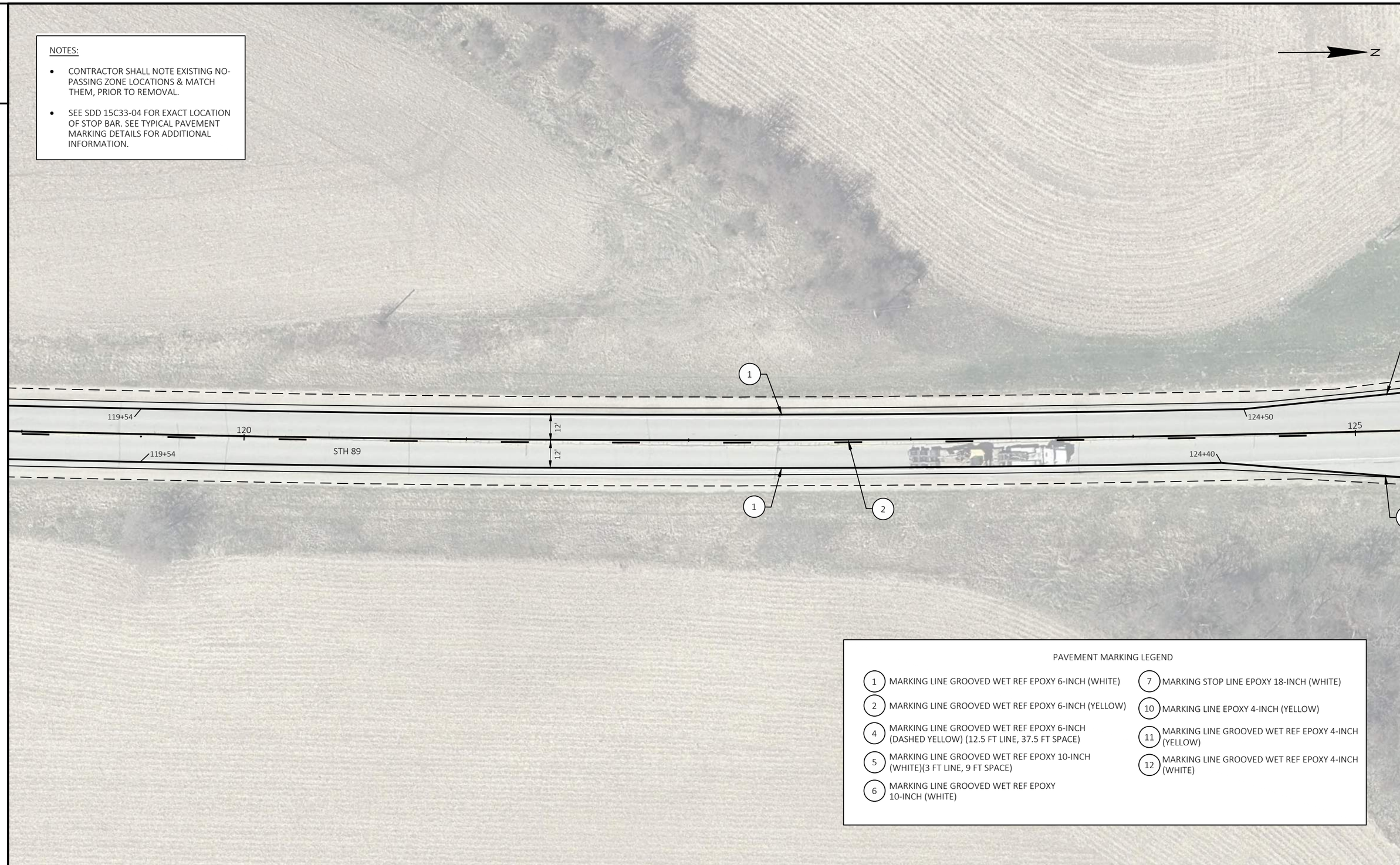

PAVEMENT MARKING LEGEND

1	MARKING LINE GROOVED WET REF EPOXY 6-INCH (WHITE)
2	MARKING LINE GROOVED WET REF EPOXY 6-INCH (YELLOW)
4	MARKING LINE GROOVED WET REF EPOXY 6-INCH (DASHED YELLOW) (12.5 FT LINE, 37.5 FT SPACE)
5	MARKING LINE GROOVED WET REF EPOXY 10-INCH (WHITE)(3 FT LINE, 9 FT SPACE)
6	MARKING LINE GROOVED WET REF EPOXY 10-INCH (WHITE)
7	MARKING STOP LINE EPOXY 18-INCH (WHITE)
10	MARKING LINE EPOXY 4-INCH (YELLOW)
11	MARKING LINE GROOVED WET REF EPOXY 4-INCH (YELLOW)
12	MARKING LINE GROOVED WET REF EPOXY 4-INCH (WHITE)

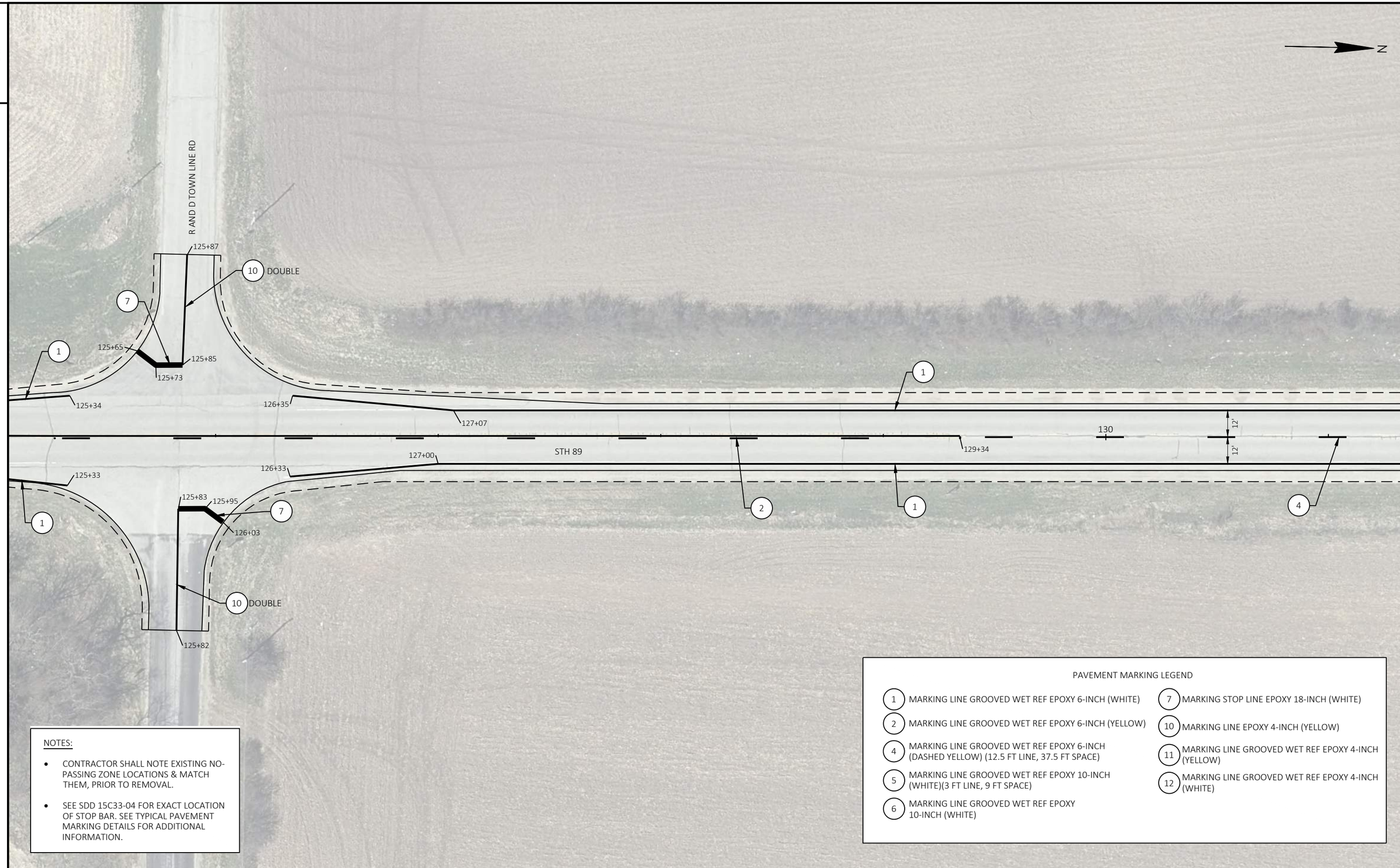

NOTES:

- CONTRACTOR SHALL NOTE EXISTING NO-PASSING ZONE LOCATIONS & MATCH THEM, PRIOR TO REMOVAL.
- SEE SDD 15C33-04 FOR EXACT LOCATION OF STOP BAR. SEE TYPICAL PAVEMENT MARKING DETAILS FOR ADDITIONAL INFORMATION.

PAVEMENT MARKING LEGEND

1 MARKING LINE GROOVED WET REF EPOXY 6-INCH (WHITE)	7 MARKING STOP LINE EPOXY 18-INCH (WHITE)
2 MARKING LINE GROOVED WET REF EPOXY 6-INCH (YELLOW)	10 MARKING LINE EPOXY 4-INCH (YELLOW)
4 MARKING LINE GROOVED WET REF EPOXY 6-INCH (DASHED YELLOW) (12.5 FT LINE, 37.5 FT SPACE)	11 MARKING LINE GROOVED WET REF EPOXY 4-INCH (YELLOW)
5 MARKING LINE GROOVED WET REF EPOXY 10-INCH (WHITE)(3 FT LINE, 9 FT SPACE)	12 MARKING LINE GROOVED WET REF EPOXY 4-INCH (WHITE)
6 MARKING LINE GROOVED WET REF EPOXY 10-INCH (WHITE)	

2

NOTES:

- CONTRACTOR SHALL NOTE EXISTING NO-PASSING ZONE LOCATIONS & MATCH THEM, PRIOR TO REMOVAL.
- SEE SDD 15C33-04 FOR EXACT LOCATION OF STOP BAR. SEE TYPICAL PAVEMENT MARKING DETAILS FOR ADDITIONAL INFORMATION.

PAVEMENT MARKING LEGEND

1 MARKING LINE GROOVED WET REF EPOXY 6-INCH (WHITE)	7 MARKING STOP LINE EPOXY 18-INCH (WHITE)
2 MARKING LINE GROOVED WET REF EPOXY 6-INCH (YELLOW)	10 MARKING LINE EPOXY 4-INCH (YELLOW)
4 MARKING LINE GROOVED WET REF EPOXY 6-INCH (DASHED YELLOW) (12.5 FT LINE, 37.5 FT SPACE)	11 MARKING LINE GROOVED WET REF EPOXY 4-INCH (YELLOW)
5 MARKING LINE GROOVED WET REF EPOXY 10-INCH (WHITE)(3 FT LINE, 9 FT SPACE)	12 MARKING LINE GROOVED WET REF EPOXY 4-INCH (WHITE)
6 MARKING LINE GROOVED WET REF EPOXY 10-INCH (WHITE)	

NOTES:

- CONTRACTOR SHALL NOTE EXISTING NO-PASSING ZONE LOCATIONS & MATCH THEM, PRIOR TO REMOVAL.
- SEE SDD 15C33-04 FOR EXACT LOCATION OF STOP BAR. SEE TYPICAL PAVEMENT MARKING DETAILS FOR ADDITIONAL INFORMATION.

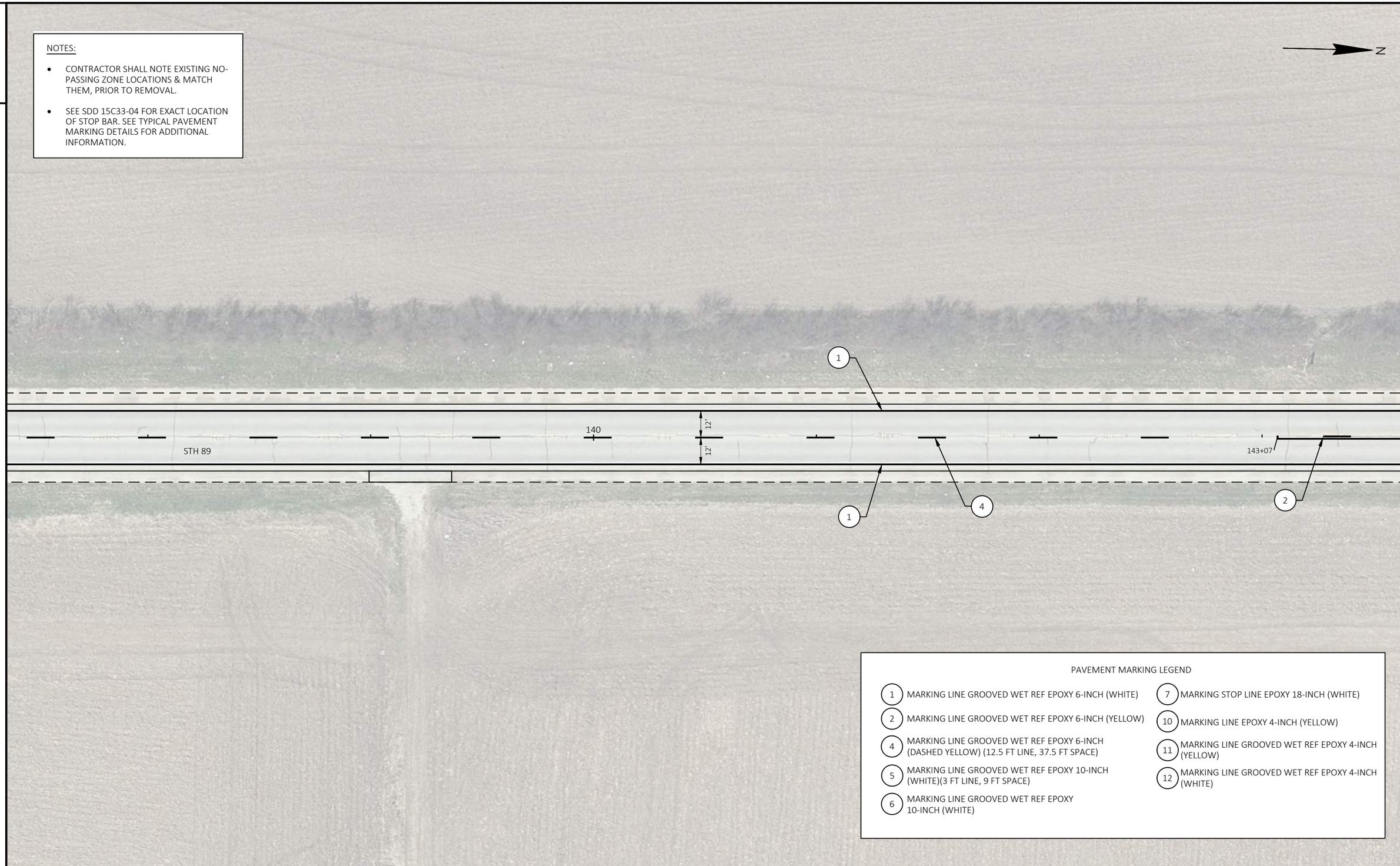

PAVEMENT MARKING LEGEND

1. MARKING LINE GROOVED WET REF EPOXY 6-INCH (WHITE)
2. MARKING LINE GROOVED WET REF EPOXY 6-INCH (YELLOW)
4. MARKING LINE GROOVED WET REF EPOXY 6-INCH (DASHED YELLOW) (12.5 FT LINE, 37.5 FT SPACE)
5. MARKING LINE GROOVED WET REF EPOXY 10-INCH (WHITE)(3 FT LINE, 9 FT SPACE)
6. MARKING LINE GROOVED WET REF EPOXY 10-INCH (WHITE)
7. MARKING STOP LINE EPOXY 18-INCH (WHITE)
10. MARKING LINE EPOXY 4-INCH (YELLOW)
11. MARKING LINE GROOVED WET REF EPOXY 4-INCH (YELLOW)
12. MARKING LINE GROOVED WET REF EPOXY 4-INCH (WHITE)

PROJECT NO: 3390-08-70	HWY: STH 89	COUNTY: WALWORTH	PAVEMENT MARKING	SHEET 67	E

2

NOTES:

- CONTRACTOR SHALL NOTE EXISTING NO-PASSING ZONE LOCATIONS & MATCH THEM, PRIOR TO REMOVAL.
- SEE SDD 15C33-04 FOR EXACT LOCATION OF STOP BAR. SEE TYPICAL PAVEMENT MARKING DETAILS FOR ADDITIONAL INFORMATION.

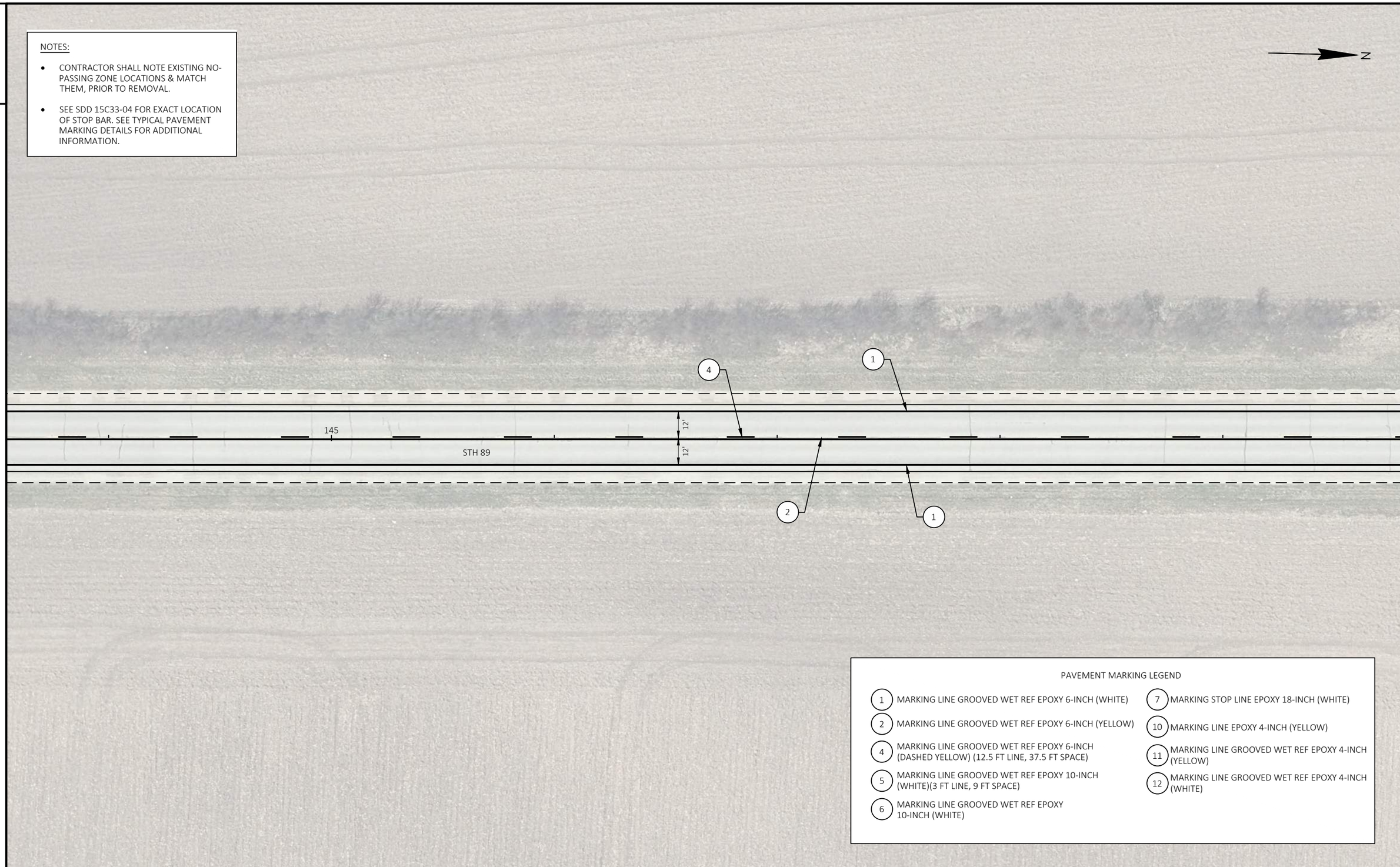

PAVEMENT MARKING LEGEND

1 MARKING LINE GROOVED WET REF EPOXY 6-INCH (WHITE)	7 MARKING STOP LINE EPOXY 18-INCH (WHITE)
2 MARKING LINE GROOVED WET REF EPOXY 6-INCH (YELLOW)	10 MARKING LINE EPOXY 4-INCH (YELLOW)
4 MARKING LINE GROOVED WET REF EPOXY 6-INCH (DASHED YELLOW) (12.5 FT LINE, 37.5 FT SPACE)	11 MARKING LINE GROOVED WET REF EPOXY 4-INCH (YELLOW)
5 MARKING LINE GROOVED WET REF EPOXY 10-INCH (WHITE)(3 FT LINE, 9 FT SPACE)	12 MARKING LINE GROOVED WET REF EPOXY 4-INCH (WHITE)
6 MARKING LINE GROOVED WET REF EPOXY 10-INCH (WHITE)	

2

NOTES:

- CONTRACTOR SHALL NOTE EXISTING NO-PASSING ZONE LOCATIONS & MATCH THEM, PRIOR TO REMOVAL.
- SEE SDD 15C33-04 FOR EXACT LOCATION OF STOP BAR. SEE TYPICAL PAVEMENT MARKING DETAILS FOR ADDITIONAL INFORMATION.

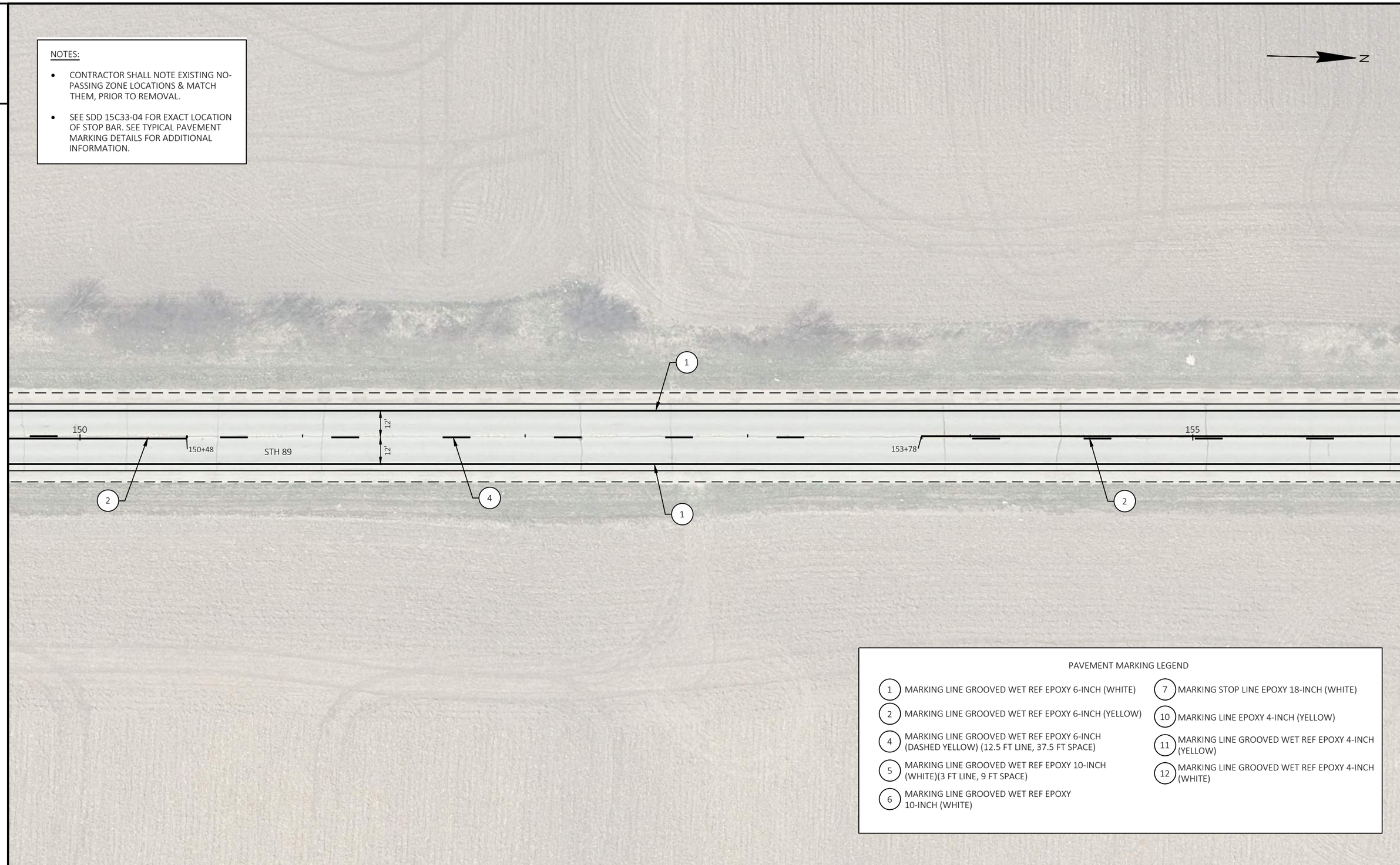

PAVEMENT MARKING LEGEND

1 MARKING LINE GROOVED WET REF EPOXY 6-INCH (WHITE)

2 MARKING LINE GROOVED WET REF EPOXY 6-INCH (YELLOW)

4 MARKING LINE GROOVED WET REF EPOXY 6-INCH (DASHED YELLOW) (12.5 FT LINE, 37.5 FT SPACE)

5 MARKING LINE GROOVED WET REF EPOXY 10-INCH (WHITE)(3 FT LINE, 9 FT SPACE)

6 MARKING LINE GROOVED WET REF EPOXY 10-INCH (WHITE)

7 MARKING STOP LINE EPOXY 18-INCH (WHITE)

10 MARKING LINE EPOXY 4-INCH (YELLOW)

11 MARKING LINE GROOVED WET REF EPOXY 4-INCH (YELLOW)

12 MARKING LINE GROOVED WET REF EPOXY 4-INCH (WHITE)

2

NOTES:

- CONTRACTOR SHALL NOTE EXISTING NO-PASSING ZONE LOCATIONS & MATCH THEM, PRIOR TO REMOVAL.
- SEE SDD 15C33-04 FOR EXACT LOCATION OF STOP BAR. SEE TYPICAL PAVEMENT MARKING DETAILS FOR ADDITIONAL INFORMATION.

PAVEMENT MARKING LEGEND

1. MARKING LINE GROOVED WET REF EPOXY 6-INCH (WHITE)
2. MARKING LINE GROOVED WET REF EPOXY 6-INCH (YELLOW)
4. MARKING LINE GROOVED WET REF EPOXY 6-INCH (DASHED YELLOW) (12.5 FT LINE, 37.5 FT SPACE)
5. MARKING LINE GROOVED WET REF EPOXY 10-INCH (WHITE)(3 FT LINE, 9 FT SPACE)
6. MARKING LINE GROOVED WET REF EPOXY 10-INCH (WHITE)
7. MARKING STOP LINE EPOXY 18-INCH (WHITE)
10. MARKING LINE EPOXY 4-INCH (YELLOW)
11. MARKING LINE GROOVED WET REF EPOXY 4-INCH (YELLOW)
12. MARKING LINE GROOVED WET REF EPOXY 4-INCH (WHITE)

PROJECT NO: 3390-08-70	HWY: STH 89	COUNTY: WALWORTH	PAVEMENT MARKING	SHEET 70	E

NOTES:

- CONTRACTOR SHALL NOTE EXISTING NO-PASSING ZONE LOCATIONS & MATCH THEM, PRIOR TO REMOVAL.
- SEE SDD 15C33-04 FOR EXACT LOCATION OF STOP BAR. SEE TYPICAL PAVEMENT MARKING DETAILS FOR ADDITIONAL INFORMATION.

PAVEMENT MARKING LEGEND

1. MARKING LINE GROOVED WET REF EPOXY 6-INCH (WHITE)
2. MARKING LINE GROOVED WET REF EPOXY 6-INCH (YELLOW)
4. MARKING LINE GROOVED WET REF EPOXY 6-INCH (DASHED YELLOW) (12.5 FT LINE, 37.5 FT SPACE)
5. MARKING LINE GROOVED WET REF EPOXY 10-INCH (WHITE)(3 FT LINE, 9 FT SPACE)
6. MARKING LINE GROOVED WET REF EPOXY 10-INCH (WHITE)
7. MARKING STOP LINE EPOXY 18-INCH (WHITE)
10. MARKING LINE EPOXY 4-INCH (YELLOW)
11. MARKING LINE GROOVED WET REF EPOXY 4-INCH (YELLOW)
12. MARKING LINE GROOVED WET REF EPOXY 4-INCH (WHITE)

PROJECT NO: 3390-08-70	HWY: STH 89	COUNTY: WALWORTH	PAVEMENT MARKING	SHEET 71	E

2

NOTES:

- CONTRACTOR SHALL NOTE EXISTING NO-PASSING ZONE LOCATIONS & MATCH THEM, PRIOR TO REMOVAL.
- SEE SDD 15C33-04 FOR EXACT LOCATION OF STOP BAR. SEE TYPICAL PAVEMENT MARKING DETAILS FOR ADDITIONAL INFORMATION.

PAVEMENT MARKING LEGEND

1. MARKING LINE GROOVED WET REF EPOXY 6-INCH (WHITE)
2. MARKING LINE GROOVED WET REF EPOXY 6-INCH (YELLOW)
4. MARKING LINE GROOVED WET REF EPOXY 6-INCH (DASHED YELLOW) (12.5 FT LINE, 37.5 FT SPACE)
5. MARKING LINE GROOVED WET REF EPOXY 10-INCH (WHITE)(3 FT LINE, 9 FT SPACE)
6. MARKING LINE GROOVED WET REF EPOXY 10-INCH (WHITE)
7. MARKING STOP LINE EPOXY 18-INCH (WHITE)
10. MARKING LINE EPOXY 4-INCH (YELLOW)
11. MARKING LINE GROOVED WET REF EPOXY 4-INCH (YELLOW)
12. MARKING LINE GROOVED WET REF EPOXY 4-INCH (WHITE)

PROJECT NO: 3390-08-70	HWY: STH 89	COUNTY: WALWORTH	PAVEMENT MARKING	SHEET 72	E

NOTES:

- CONTRACTOR SHALL NOTE EXISTING NO-PASSING ZONE LOCATIONS & MATCH THEM, PRIOR TO REMOVAL.
- SEE SDD 15C33-04 FOR EXACT LOCATION OF STOP BAR. SEE TYPICAL PAVEMENT MARKING DETAILS FOR ADDITIONAL INFORMATION.

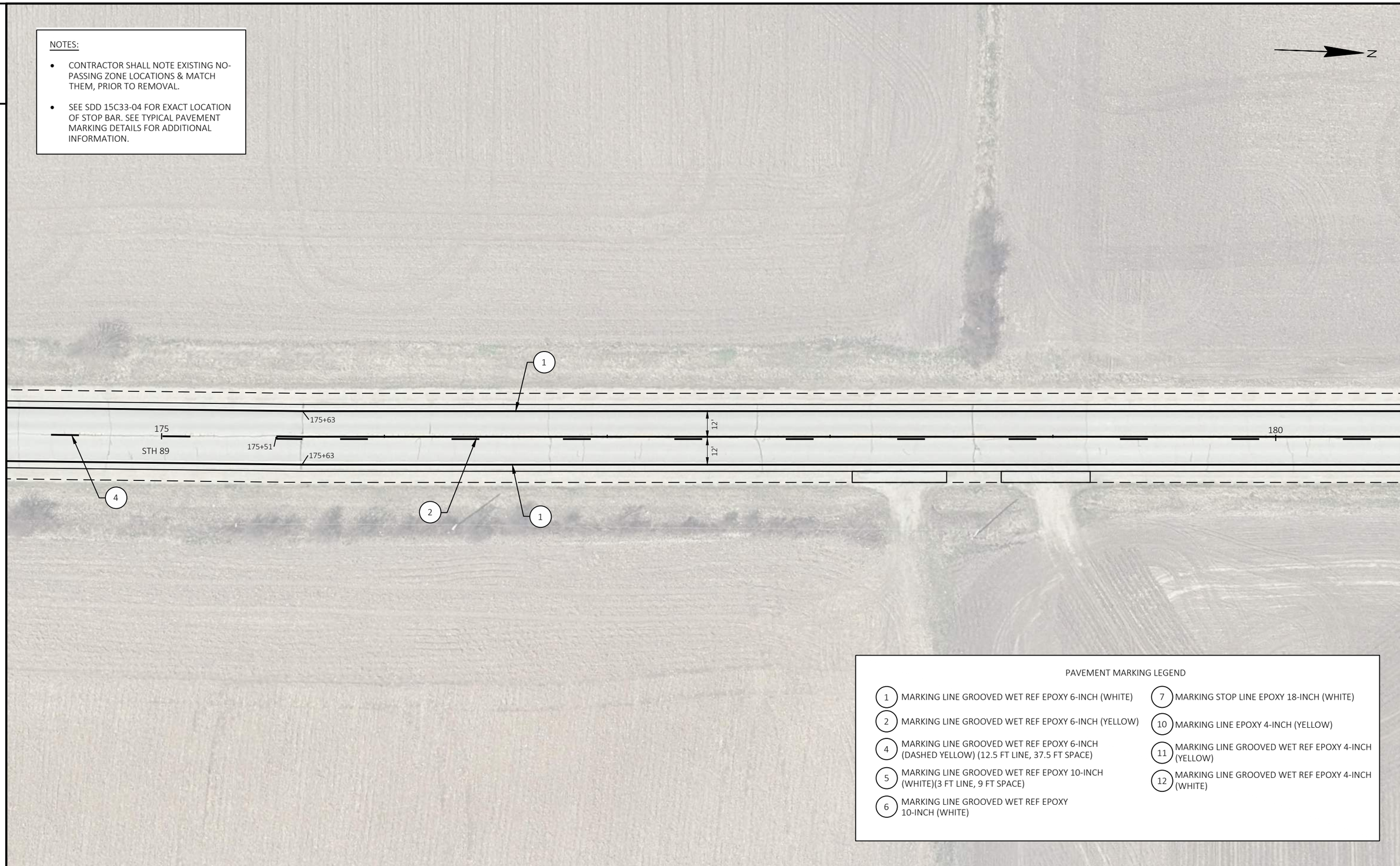

PAVEMENT MARKING LEGEND

1 MARKING LINE GROOVED WET REF EPOXY 6-INCH (WHITE)	7 MARKING STOP LINE EPOXY 18-INCH (WHITE)
2 MARKING LINE GROOVED WET REF EPOXY 6-INCH (YELLOW)	10 MARKING LINE EPOXY 4-INCH (YELLOW)
4 MARKING LINE GROOVED WET REF EPOXY 6-INCH (DASHED YELLOW) (12.5 FT LINE, 37.5 FT SPACE)	11 MARKING LINE GROOVED WET REF EPOXY 4-INCH (YELLOW)
5 MARKING LINE GROOVED WET REF EPOXY 10-INCH (WHITE)(3 FT LINE, 9 FT SPACE)	12 MARKING LINE GROOVED WET REF EPOXY 4-INCH (WHITE)
6 MARKING LINE GROOVED WET REF EPOXY 10-INCH (WHITE)	

2

NOTES:

- CONTRACTOR SHALL NOTE EXISTING NO-PASSING ZONE LOCATIONS & MATCH THEM, PRIOR TO REMOVAL.
- SEE SDD 15C33-04 FOR EXACT LOCATION OF STOP BAR. SEE TYPICAL PAVEMENT MARKING DETAILS FOR ADDITIONAL INFORMATION.

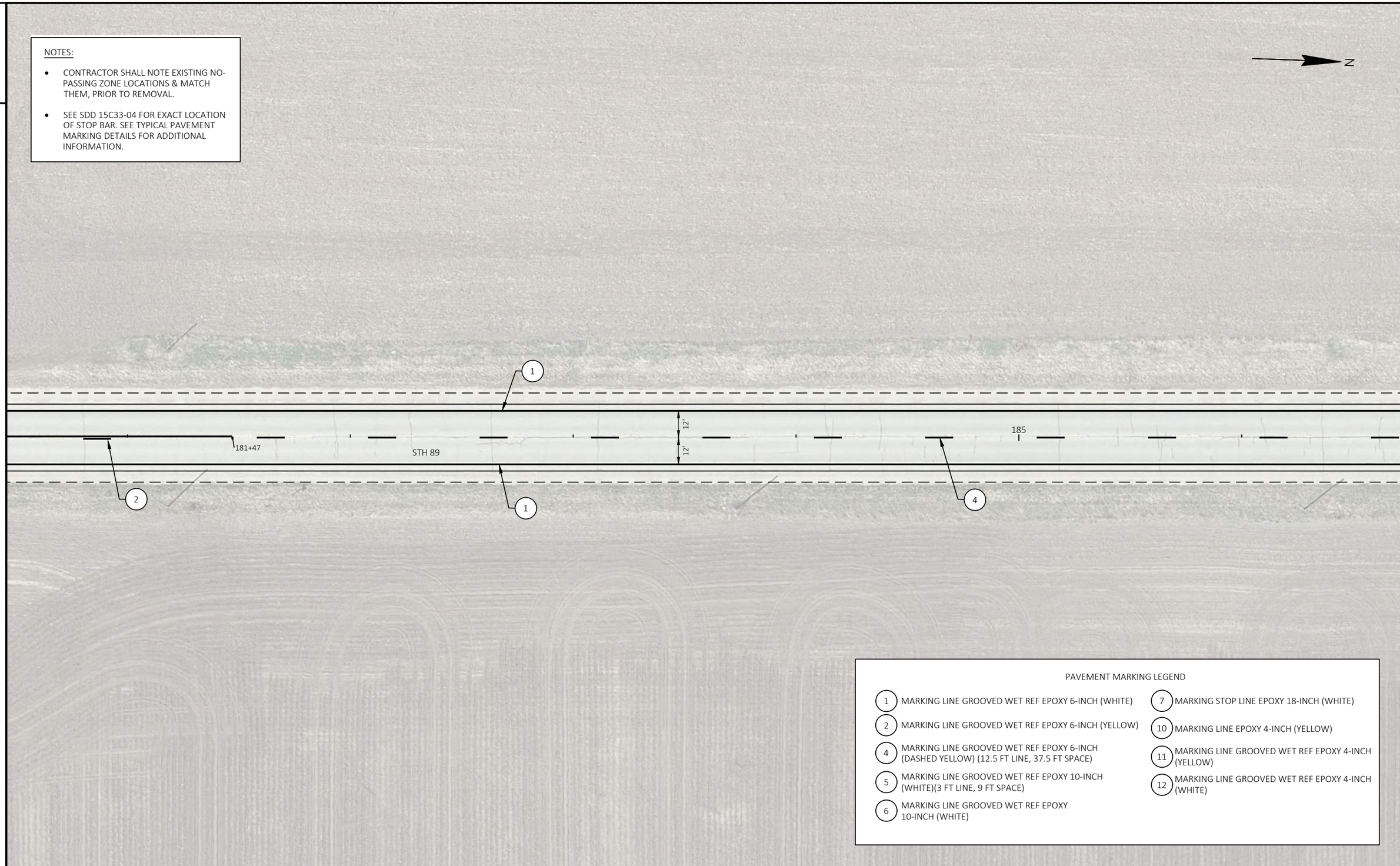

PAVEMENT MARKING LEGEND

1	MARKING LINE GROOVED WET REF EPOXY 6-INCH (WHITE)
2	MARKING LINE GROOVED WET REF EPOXY 6-INCH (YELLOW)
4	MARKING LINE GROOVED WET REF EPOXY 6-INCH (DASHED YELLOW) (12.5 FT LINE, 37.5 FT SPACE)
5	MARKING LINE GROOVED WET REF EPOXY 10-INCH (WHITE)(3 FT LINE, 9 FT SPACE)
6	MARKING LINE GROOVED WET REF EPOXY 10-INCH (WHITE)
7	MARKING STOP LINE EPOXY 18-INCH (WHITE)
10	MARKING LINE EPOXY 4-INCH (YELLOW)
11	MARKING LINE GROOVED WET REF EPOXY 4-INCH (YELLOW)
12	MARKING LINE GROOVED WET REF EPOXY 4-INCH (WHITE)

2

NOTES:

- CONTRACTOR SHALL NOTE EXISTING NO-PASSING ZONE LOCATIONS & MATCH THEM, PRIOR TO REMOVAL.
- SEE SDD 15C33-04 FOR EXACT LOCATION OF STOP BAR. SEE TYPICAL PAVEMENT MARKING DETAILS FOR ADDITIONAL INFORMATION.

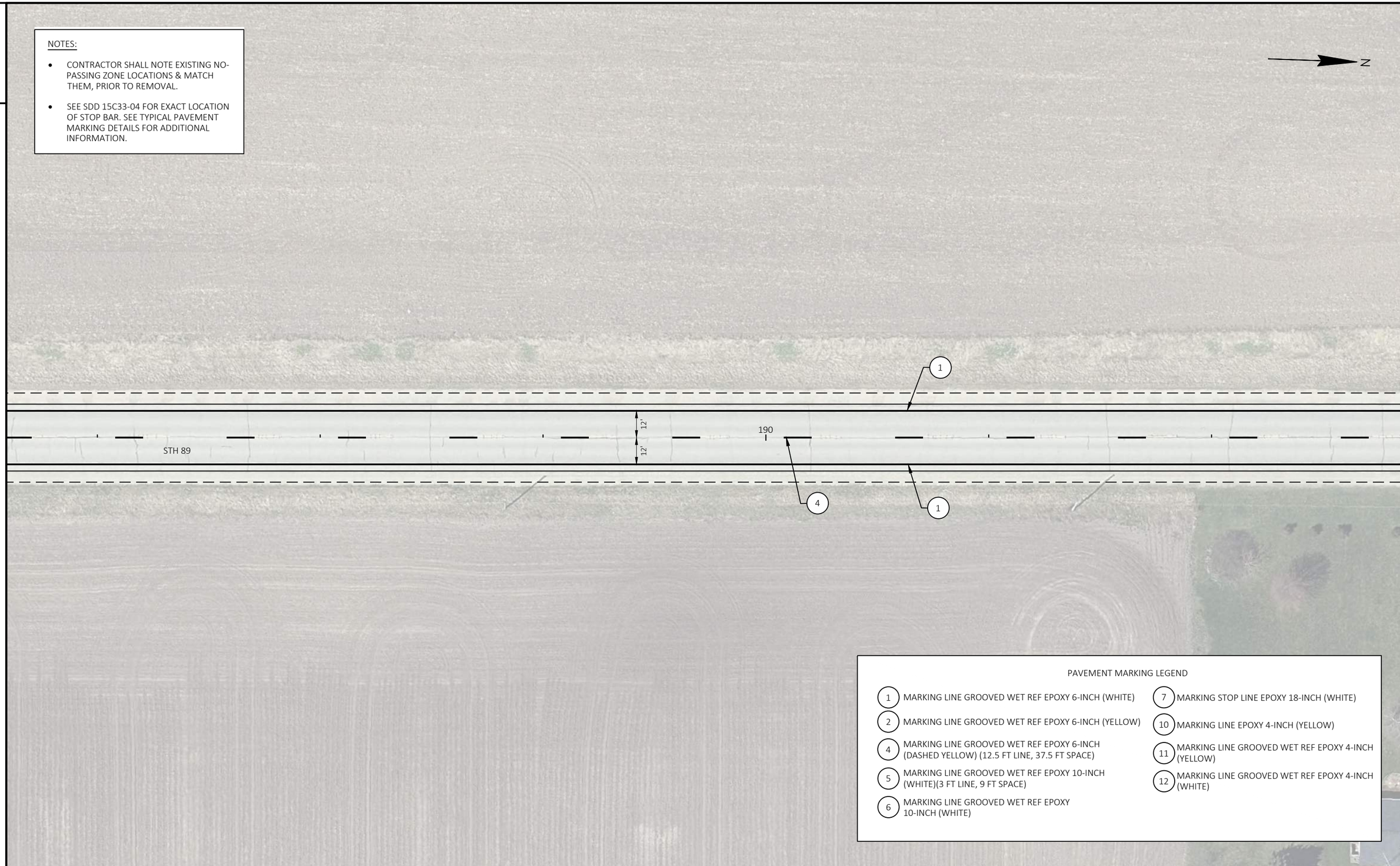

PAVEMENT MARKING LEGEND

1	MARKING LINE GROOVED WET REF EPOXY 6-INCH (WHITE)
2	MARKING LINE GROOVED WET REF EPOXY 6-INCH (YELLOW)
4	MARKING LINE GROOVED WET REF EPOXY 6-INCH (DASHED YELLOW) (12.5 FT LINE, 37.5 FT SPACE)
5	MARKING LINE GROOVED WET REF EPOXY 10-INCH (WHITE)(3 FT LINE, 9 FT SPACE)
6	MARKING LINE GROOVED WET REF EPOXY 10-INCH (WHITE)
7	MARKING STOP LINE EPOXY 18-INCH (WHITE)
10	MARKING LINE EPOXY 4-INCH (YELLOW)
11	MARKING LINE GROOVED WET REF EPOXY 4-INCH (YELLOW)
12	MARKING LINE GROOVED WET REF EPOXY 4-INCH (WHITE)

2

NOTES:

- CONTRACTOR SHALL NOTE EXISTING NO-PASSING ZONE LOCATIONS & MATCH THEM, PRIOR TO REMOVAL.
- SEE SDD 15C33-04 FOR EXACT LOCATION OF STOP BAR. SEE TYPICAL PAVEMENT MARKING DETAILS FOR ADDITIONAL INFORMATION.

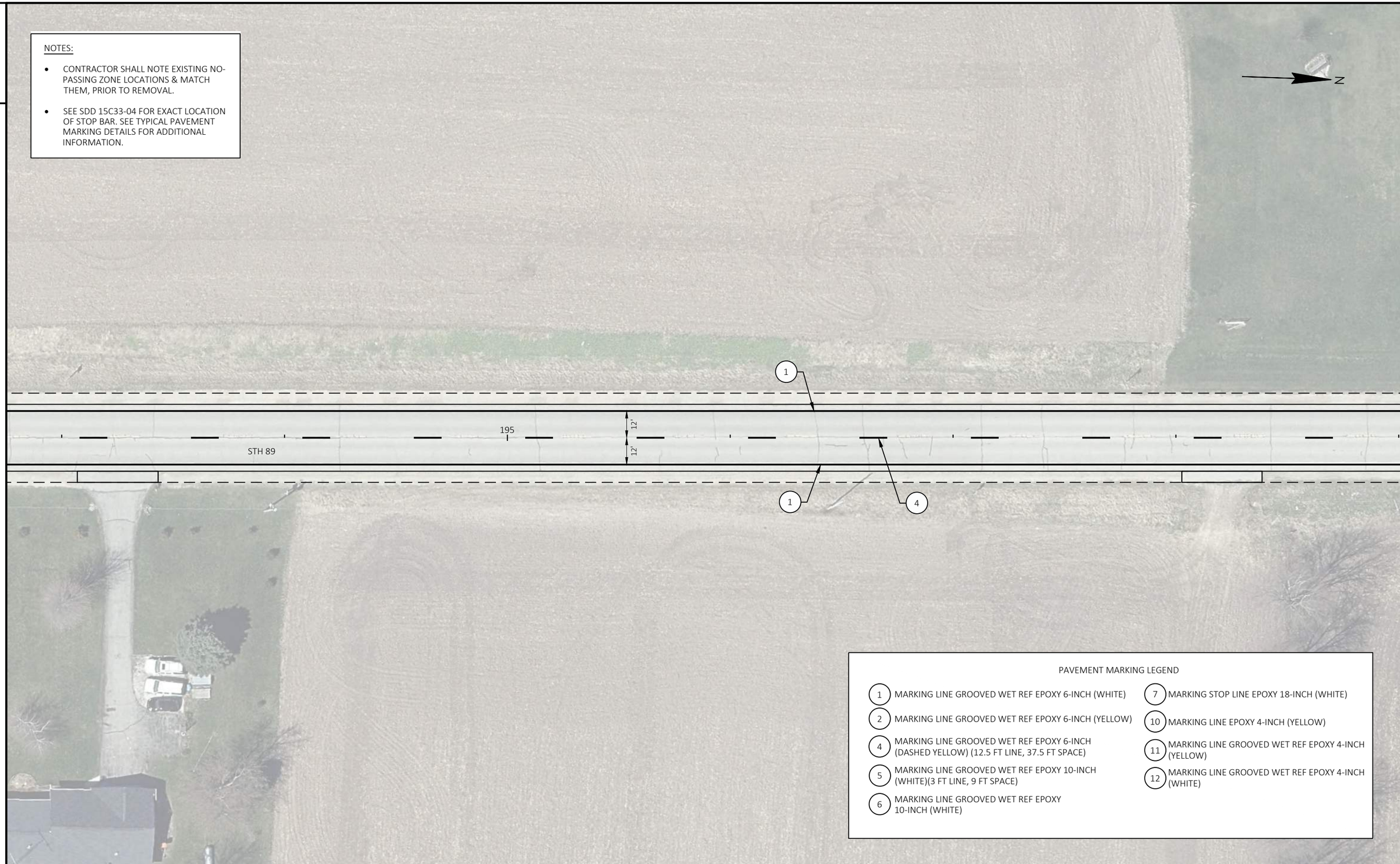

PAVEMENT MARKING LEGEND

1	MARKING LINE GROOVED WET REF EPOXY 6-INCH (WHITE)
2	MARKING LINE GROOVED WET REF EPOXY 6-INCH (YELLOW)
4	MARKING LINE GROOVED WET REF EPOXY 6-INCH (DASHED YELLOW) (12.5 FT LINE, 37.5 FT SPACE)
5	MARKING LINE GROOVED WET REF EPOXY 10-INCH (WHITE)(3 FT LINE, 9 FT SPACE)
6	MARKING LINE GROOVED WET REF EPOXY 10-INCH (WHITE)
7	MARKING STOP LINE EPOXY 18-INCH (WHITE)
10	MARKING LINE EPOXY 4-INCH (YELLOW)
11	MARKING LINE GROOVED WET REF EPOXY 4-INCH (YELLOW)
12	MARKING LINE GROOVED WET REF EPOXY 4-INCH (WHITE)

2

PROJECT NO: 3390-08-70	HWY: STH 89	COUNTY: WALWORTH	PAVEMENT MARKING	SHEET 76	E

NOTES:

- CONTRACTOR SHALL NOTE EXISTING NO-PASSING ZONE LOCATIONS & MATCH THEM, PRIOR TO REMOVAL.
- SEE SDD 15C33-04 FOR EXACT LOCATION OF STOP BAR. SEE TYPICAL PAVEMENT MARKING DETAILS FOR ADDITIONAL INFORMATION.

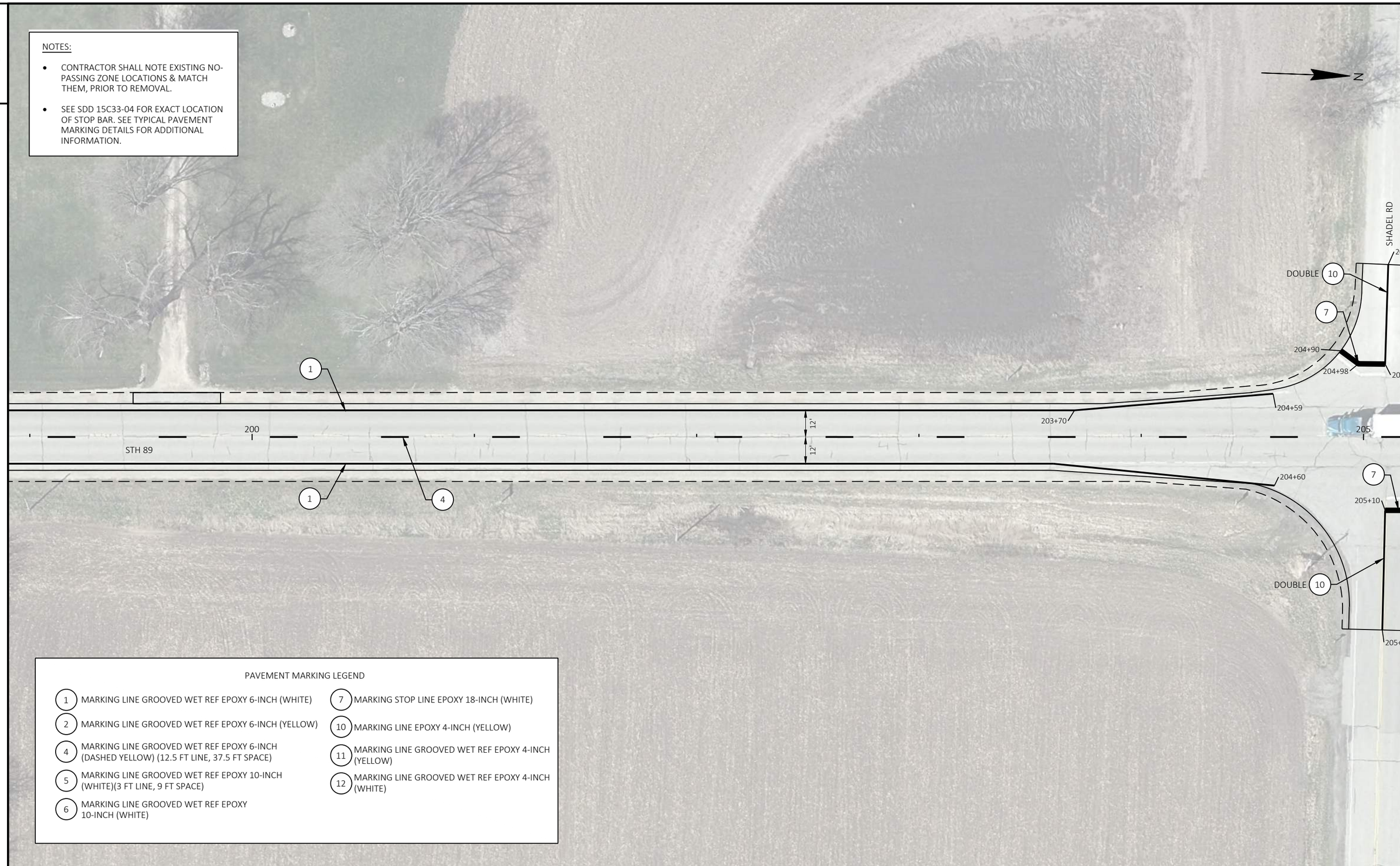

PAVEMENT MARKING LEGEND

1. MARKING LINE GROOVED WET REF EPOXY 6-INCH (WHITE)
2. MARKING LINE GROOVED WET REF EPOXY 6-INCH (YELLOW)
4. MARKING LINE GROOVED WET REF EPOXY 6-INCH (DASHED YELLOW) (12.5 FT LINE, 37.5 FT SPACE)
5. MARKING LINE GROOVED WET REF EPOXY 10-INCH (WHITE)(3 FT LINE, 9 FT SPACE)
6. MARKING LINE GROOVED WET REF EPOXY 10-INCH (WHITE)
7. MARKING STOP LINE EPOXY 18-INCH (WHITE)
10. MARKING LINE EPOXY 4-INCH (YELLOW)
11. MARKING LINE GROOVED WET REF EPOXY 4-INCH (YELLOW)
12. MARKING LINE GROOVED WET REF EPOXY 4-INCH (WHITE)

PROJECT NO: 3390-08-70	HWY: STH 89	COUNTY: WALWORTH	PAVEMENT MARKING	SHEET 77	E

NOTES:

- CONTRACTOR SHALL NOTE EXISTING NO-PASSING ZONE LOCATIONS & MATCH THEM, PRIOR TO REMOVAL.
- SEE SDD 15C33-04 FOR EXACT LOCATION OF STOP BAR. SEE TYPICAL PAVEMENT MARKING DETAILS FOR ADDITIONAL INFORMATION.

PAVEMENT MARKING LEGEND

1. MARKING LINE GROOVED WET REF EPOXY 6-INCH (WHITE)
2. MARKING LINE GROOVED WET REF EPOXY 6-INCH (YELLOW)
4. MARKING LINE GROOVED WET REF EPOXY 6-INCH (DASHED YELLOW) (12.5 FT LINE, 37.5 FT SPACE)
5. MARKING LINE GROOVED WET REF EPOXY 10-INCH (WHITE)(3 FT LINE, 9 FT SPACE)
6. MARKING LINE GROOVED WET REF EPOXY 10-INCH (WHITE)
7. MARKING STOP LINE EPOXY 18-INCH (WHITE)
10. MARKING LINE EPOXY 4-INCH (YELLOW)
11. MARKING LINE GROOVED WET REF EPOXY 4-INCH (YELLOW)
12. MARKING LINE GROOVED WET REF EPOXY 4-INCH (WHITE)

PROJECT NO: 3390-08-70	HWY: STH 89	COUNTY: WALWORTH	PAVEMENT MARKING	SHEET 78	E

2

NOTES:

- CONTRACTOR SHALL NOTE EXISTING NO-PASSING ZONE LOCATIONS & MATCH THEM, PRIOR TO REMOVAL.
- SEE SDD 15C33-04 FOR EXACT LOCATION OF STOP BAR. SEE TYPICAL PAVEMENT MARKING DETAILS FOR ADDITIONAL INFORMATION.

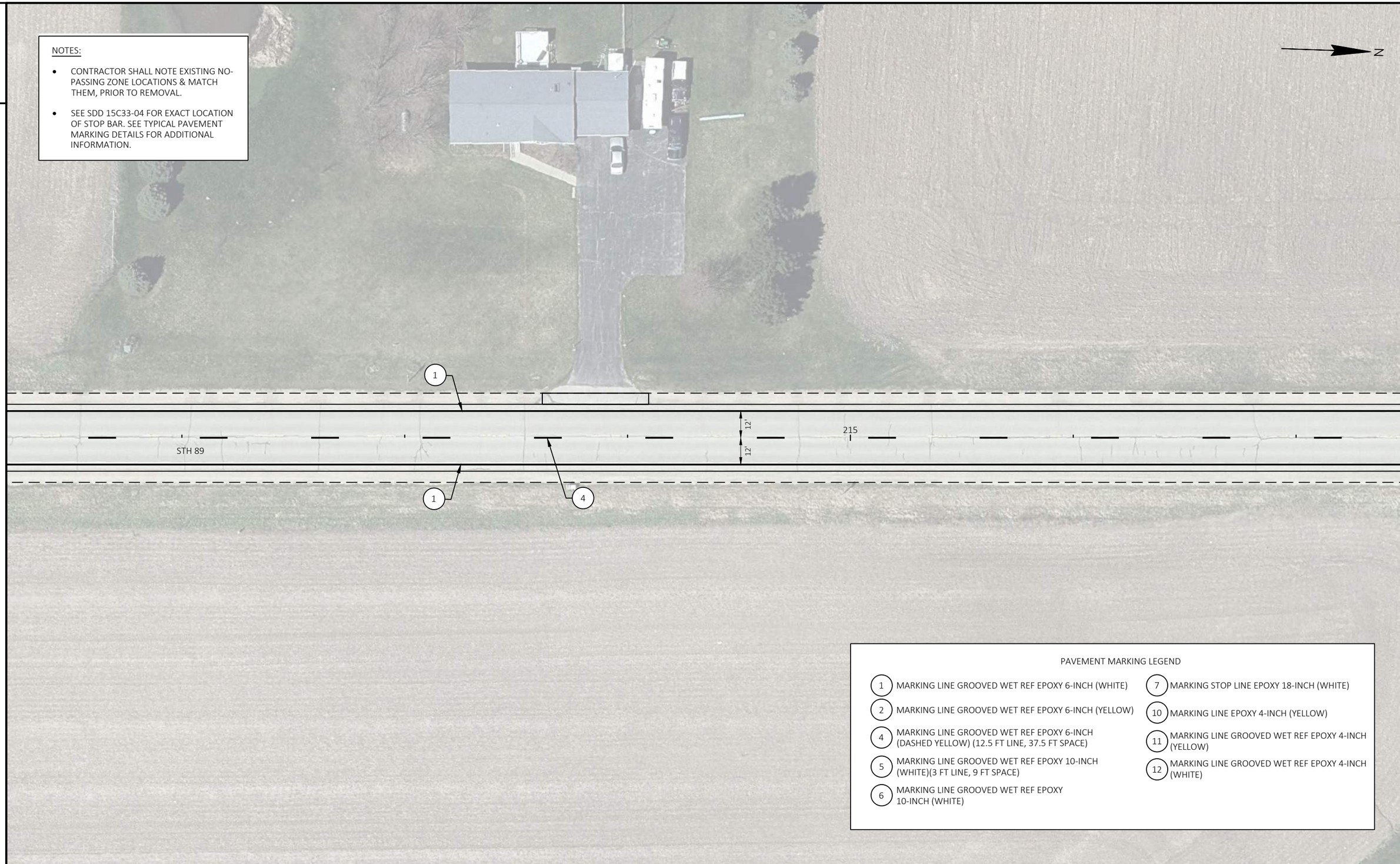

PAVEMENT MARKING LEGEND

1 MARKING LINE GROOVED WET REF EPOXY 6-INCH (WHITE)	7 MARKING STOP LINE EPOXY 18-INCH (WHITE)
2 MARKING LINE GROOVED WET REF EPOXY 6-INCH (YELLOW)	10 MARKING LINE EPOXY 4-INCH (YELLOW)
4 MARKING LINE GROOVED WET REF EPOXY 6-INCH (DASHED YELLOW) (12.5 FT LINE, 37.5 FT SPACE)	11 MARKING LINE GROOVED WET REF EPOXY 4-INCH (YELLOW)
5 MARKING LINE GROOVED WET REF EPOXY 10-INCH (WHITE)(3 FT LINE, 9 FT SPACE)	12 MARKING LINE GROOVED WET REF EPOXY 4-INCH (WHITE)
6 MARKING LINE GROOVED WET REF EPOXY 10-INCH (WHITE)	

NOTES:

- CONTRACTOR SHALL NOTE EXISTING NO-PASSING ZONE LOCATIONS & MATCH THEM, PRIOR TO REMOVAL.
- SEE SDD 15C33-04 FOR EXACT LOCATION OF STOP BAR. SEE TYPICAL PAVEMENT MARKING DETAILS FOR ADDITIONAL INFORMATION.

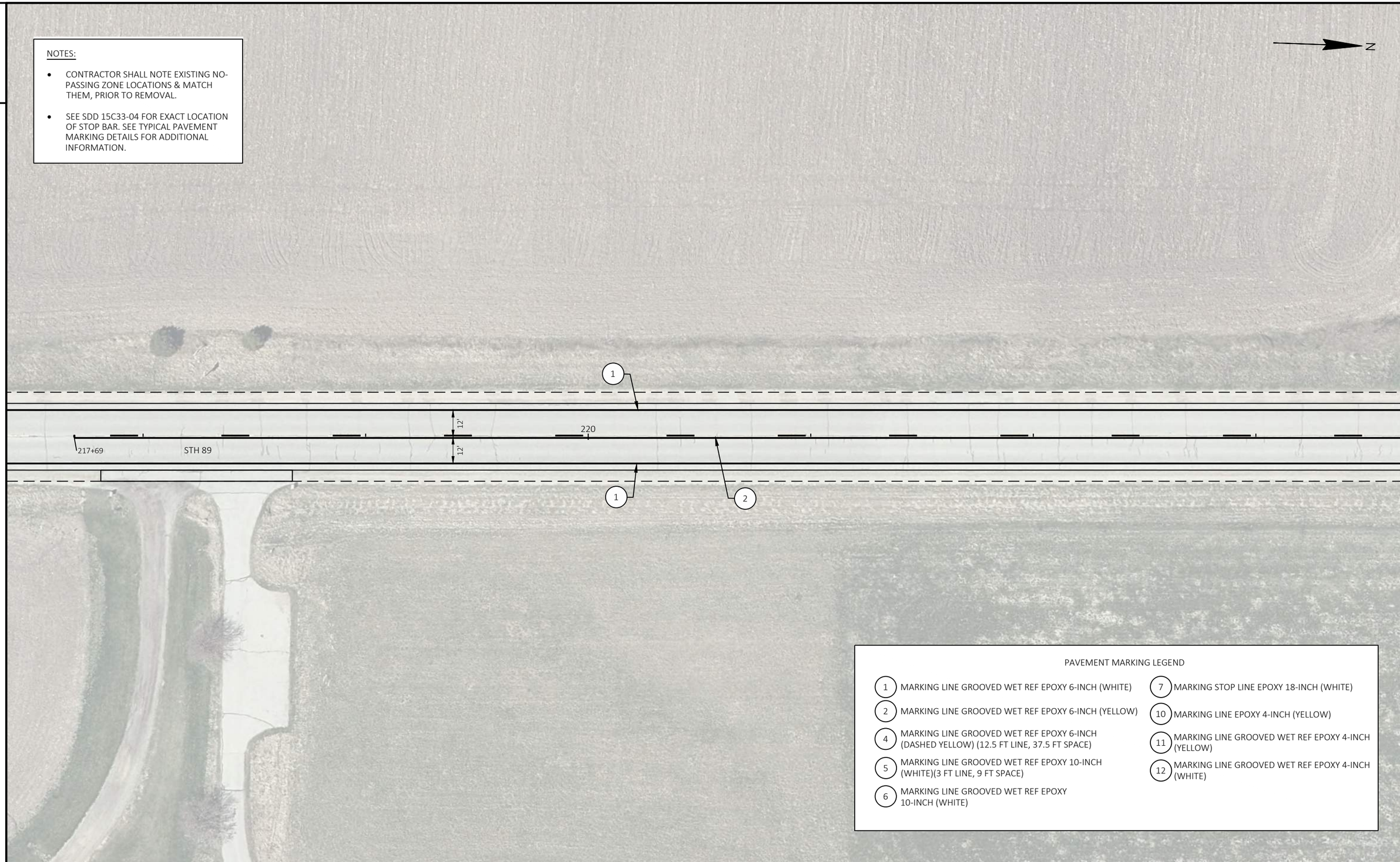

PAVEMENT MARKING LEGEND

1. MARKING LINE GROOVED WET REF EPOXY 6-INCH (WHITE)
2. MARKING LINE GROOVED WET REF EPOXY 6-INCH (YELLOW)
4. MARKING LINE GROOVED WET REF EPOXY 6-INCH (DASHED YELLOW) (12.5 FT LINE, 37.5 FT SPACE)
5. MARKING LINE GROOVED WET REF EPOXY 10-INCH (WHITE)(3 FT LINE, 9 FT SPACE)
6. MARKING LINE GROOVED WET REF EPOXY 10-INCH (WHITE)
7. MARKING STOP LINE EPOXY 18-INCH (WHITE)
10. MARKING LINE EPOXY 4-INCH (YELLOW)
11. MARKING LINE GROOVED WET REF EPOXY 4-INCH (YELLOW)
12. MARKING LINE GROOVED WET REF EPOXY 4-INCH (WHITE)

PROJECT NO: 3390-08-70	HWY: STH 89	COUNTY: WALWORTH	PAVEMENT MARKING	SHEET 80	E

NOTES:

- CONTRACTOR SHALL NOTE EXISTING NO-PASSING ZONE LOCATIONS & MATCH THEM, PRIOR TO REMOVAL.
- SEE SDD 15C33-04 FOR EXACT LOCATION OF STOP BAR. SEE TYPICAL PAVEMENT MARKING DETAILS FOR ADDITIONAL INFORMATION.

PAVEMENT MARKING LEGEND

1. MARKING LINE GROOVED WET REF EPOXY 6-INCH (WHITE)
2. MARKING LINE GROOVED WET REF EPOXY 6-INCH (YELLOW)
4. MARKING LINE GROOVED WET REF EPOXY 6-INCH (DASHED YELLOW) (12.5 FT LINE, 37.5 FT SPACE)
5. MARKING LINE GROOVED WET REF EPOXY 10-INCH (WHITE)(3 FT LINE, 9 FT SPACE)
6. MARKING LINE GROOVED WET REF EPOXY 10-INCH (WHITE)
7. MARKING STOP LINE EPOXY 18-INCH (WHITE)
10. MARKING LINE EPOXY 4-INCH (YELLOW)
11. MARKING LINE GROOVED WET REF EPOXY 4-INCH (YELLOW)
12. MARKING LINE GROOVED WET REF EPOXY 4-INCH (WHITE)

PROJECT NO: 3390-08-70	HWY: STH 89	COUNTY: WALWORTH	PAVEMENT MARKING	SHEET 81	E

NOTES:

- CONTRACTOR SHALL NOTE EXISTING NO-PASSING ZONE LOCATIONS & MATCH THEM, PRIOR TO REMOVAL.
- SEE SDD 15C33-04 FOR EXACT LOCATION OF STOP BAR. SEE TYPICAL PAVEMENT MARKING DETAILS FOR ADDITIONAL INFORMATION.

PAVEMENT MARKING LEGEND

1. MARKING LINE GROOVED WET REF EPOXY 6-INCH (WHITE)
2. MARKING LINE GROOVED WET REF EPOXY 6-INCH (YELLOW)
4. MARKING LINE GROOVED WET REF EPOXY 6-INCH (DASHED YELLOW) (12.5 FT LINE, 37.5 FT SPACE)
5. MARKING LINE GROOVED WET REF EPOXY 10-INCH (WHITE)(3 FT LINE, 9 FT SPACE)
6. MARKING LINE GROOVED WET REF EPOXY 10-INCH (WHITE)
7. MARKING STOP LINE EPOXY 18-INCH (WHITE)
10. MARKING LINE EPOXY 4-INCH (YELLOW)
11. MARKING LINE GROOVED WET REF EPOXY 4-INCH (YELLOW)
12. MARKING LINE GROOVED WET REF EPOXY 4-INCH (WHITE)

PROJECT NO: 3390-08-70	HWY: STH 89	COUNTY: WALWORTH	PAVEMENT MARKING	SHEET 82	E

NOTES:

- CONTRACTOR SHALL NOTE EXISTING NO-PASSING ZONE LOCATIONS & MATCH THEM, PRIOR TO REMOVAL.
- SEE SDD 15C33-04 FOR EXACT LOCATION OF STOP BAR. SEE TYPICAL PAVEMENT MARKING DETAILS FOR ADDITIONAL INFORMATION.

PAVEMENT MARKING LEGEND

1 MARKING LINE GROOVED WET REF EPOXY 6-INCH (WHITE)

2 MARKING LINE GROOVED WET REF EPOXY 6-INCH (YELLOW)

4 MARKING LINE GROOVED WET REF EPOXY 6-INCH (DASHED YELLOW) (12.5 FT LINE, 37.5 FT SPACE)

5 MARKING LINE GROOVED WET REF EPOXY 10-INCH (WHITE)(3 FT LINE, 9 FT SPACE)

6 MARKING LINE GROOVED WET REF EPOXY 10-INCH (WHITE)

7 MARKING STOP LINE EPOXY 18-INCH (WHITE)

10 MARKING LINE EPOXY 4-INCH (YELLOW)

11 MARKING LINE GROOVED WET REF EPOXY 4-INCH (YELLOW)

12 MARKING LINE GROOVED WET REF EPOXY 4-INCH (WHITE)

2

NOTES:

- CONTRACTOR SHALL NOTE EXISTING NO-PASSING ZONE LOCATIONS & MATCH THEM, PRIOR TO REMOVAL.
- SEE SDD 15C33-04 FOR EXACT LOCATION OF STOP BAR. SEE TYPICAL PAVEMENT MARKING DETAILS FOR ADDITIONAL INFORMATION.

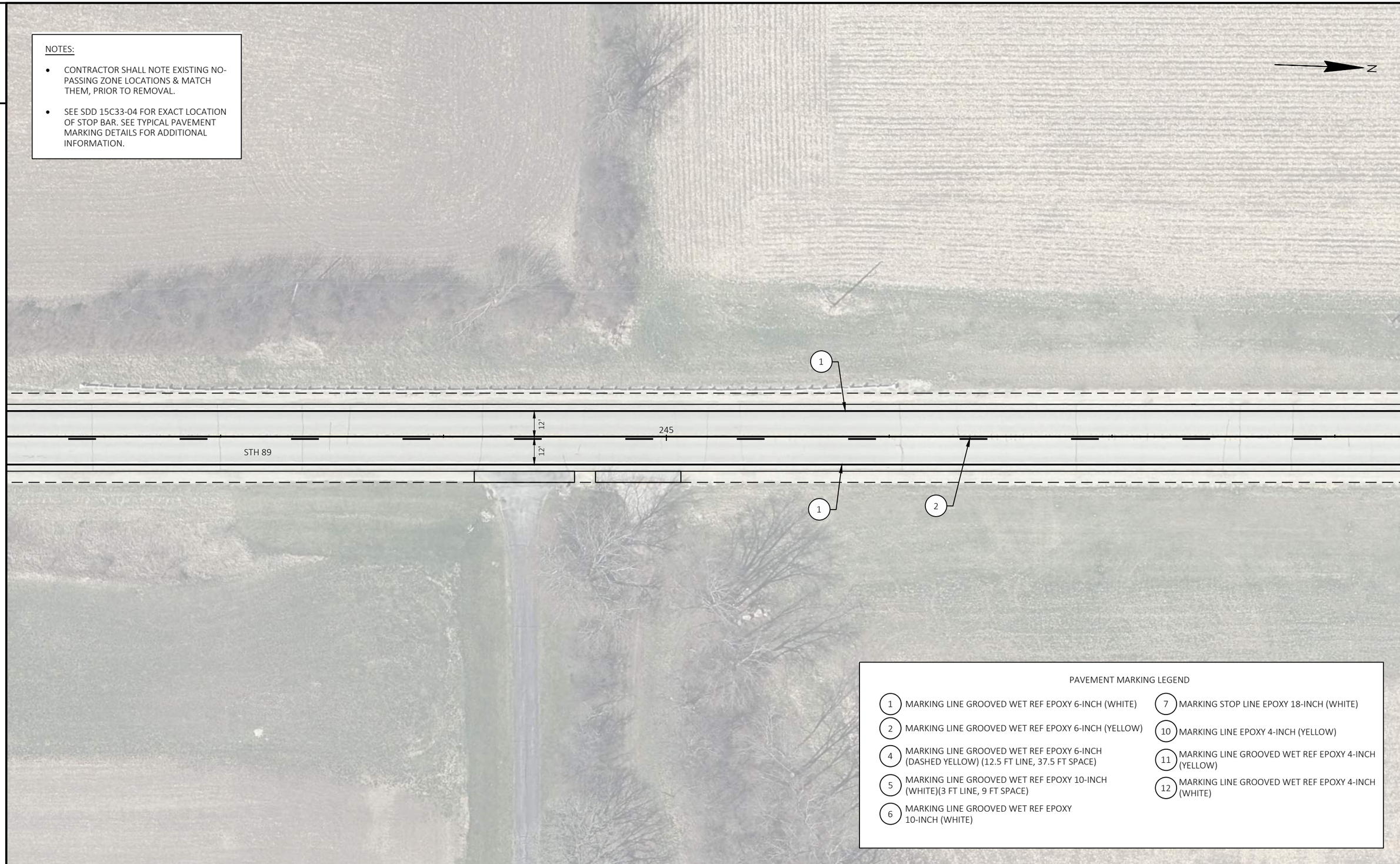

PAVEMENT MARKING LEGEND

1. MARKING LINE GROOVED WET REF EPOXY 6-INCH (WHITE)
2. MARKING LINE GROOVED WET REF EPOXY 6-INCH (YELLOW)
4. MARKING LINE GROOVED WET REF EPOXY 6-INCH (DASHED YELLOW) (12.5 FT LINE, 37.5 FT SPACE)
5. MARKING LINE GROOVED WET REF EPOXY 10-INCH (WHITE)(3 FT LINE, 9 FT SPACE)
6. MARKING LINE GROOVED WET REF EPOXY 10-INCH (WHITE)
7. MARKING STOP LINE EPOXY 18-INCH (WHITE)
10. MARKING LINE EPOXY 4-INCH (YELLOW)
11. MARKING LINE GROOVED WET REF EPOXY 4-INCH (YELLOW)
12. MARKING LINE GROOVED WET REF EPOXY 4-INCH (WHITE)

PROJECT NO: 3390-08-70	HWY: STH 89	COUNTY: WALWORTH	PAVEMENT MARKING	SHEET 84	E

2

NOTES:

- CONTRACTOR SHALL NOTE EXISTING NO-PASSING ZONE LOCATIONS & MATCH THEM, PRIOR TO REMOVAL.
- SEE SDD 15C33-04 FOR EXACT LOCATION OF STOP BAR. SEE TYPICAL PAVEMENT MARKING DETAILS FOR ADDITIONAL INFORMATION.

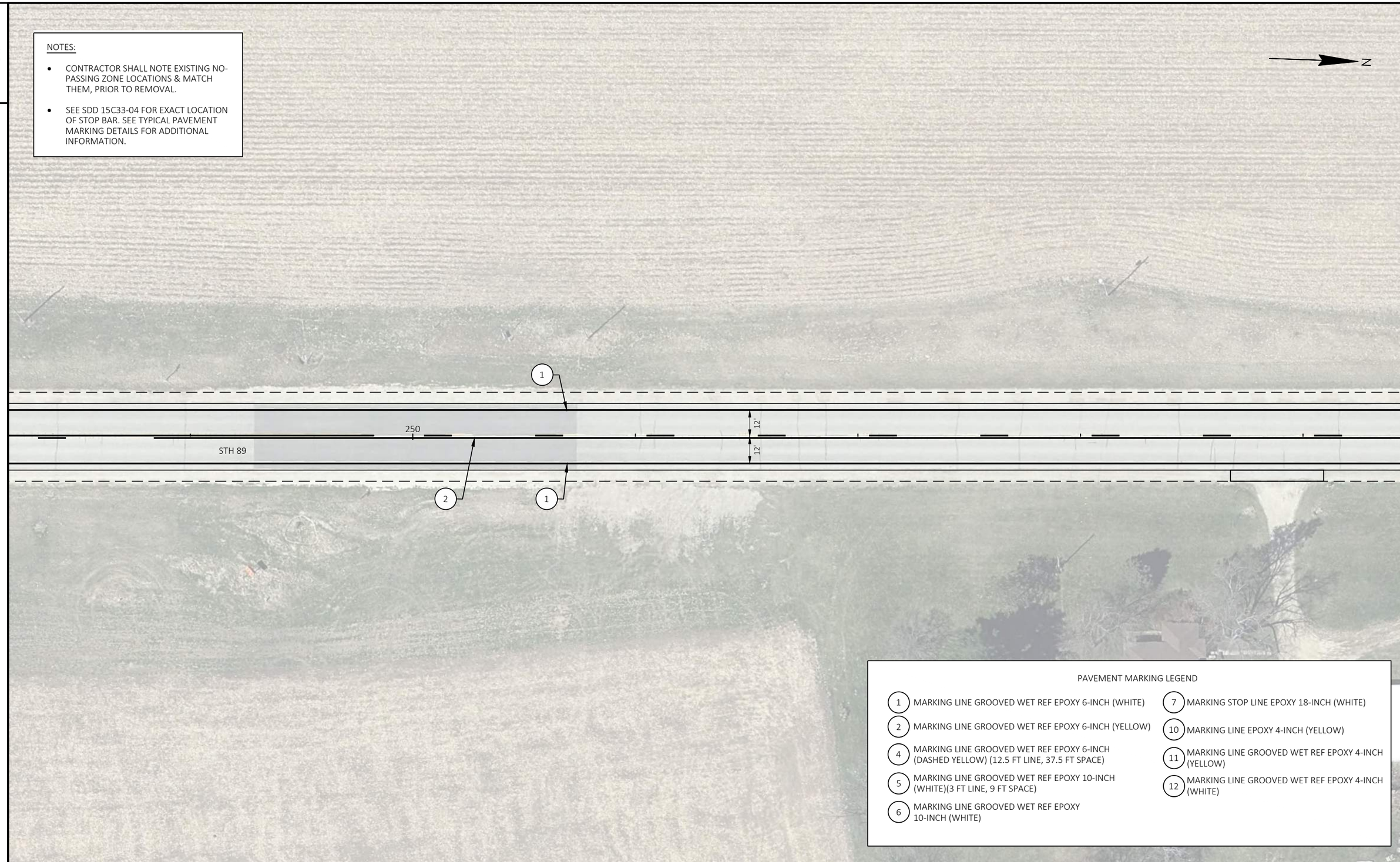

PAVEMENT MARKING LEGEND

1. MARKING LINE GROOVED WET REF EPOXY 6-INCH (WHITE)
2. MARKING LINE GROOVED WET REF EPOXY 6-INCH (YELLOW)
4. MARKING LINE GROOVED WET REF EPOXY 6-INCH (DASHED YELLOW) (12.5 FT LINE, 37.5 FT SPACE)
5. MARKING LINE GROOVED WET REF EPOXY 10-INCH (WHITE)(3 FT LINE, 9 FT SPACE)
6. MARKING LINE GROOVED WET REF EPOXY 10-INCH (WHITE)
7. MARKING STOP LINE EPOXY 18-INCH (WHITE)
10. MARKING LINE EPOXY 4-INCH (YELLOW)
11. MARKING LINE GROOVED WET REF EPOXY 4-INCH (YELLOW)
12. MARKING LINE GROOVED WET REF EPOXY 4-INCH (WHITE)

PROJECT NO: 3390-08-70	HWY: STH 89	COUNTY: WALWORTH	PAVEMENT MARKING	SHEET 85	E

NOTES:

- CONTRACTOR SHALL NOTE EXISTING NO-PASSING ZONE LOCATIONS & MATCH THEM, PRIOR TO REMOVAL.
- SEE SDD 15C33-04 FOR EXACT LOCATION OF STOP BAR. SEE TYPICAL PAVEMENT MARKING DETAILS FOR ADDITIONAL INFORMATION.

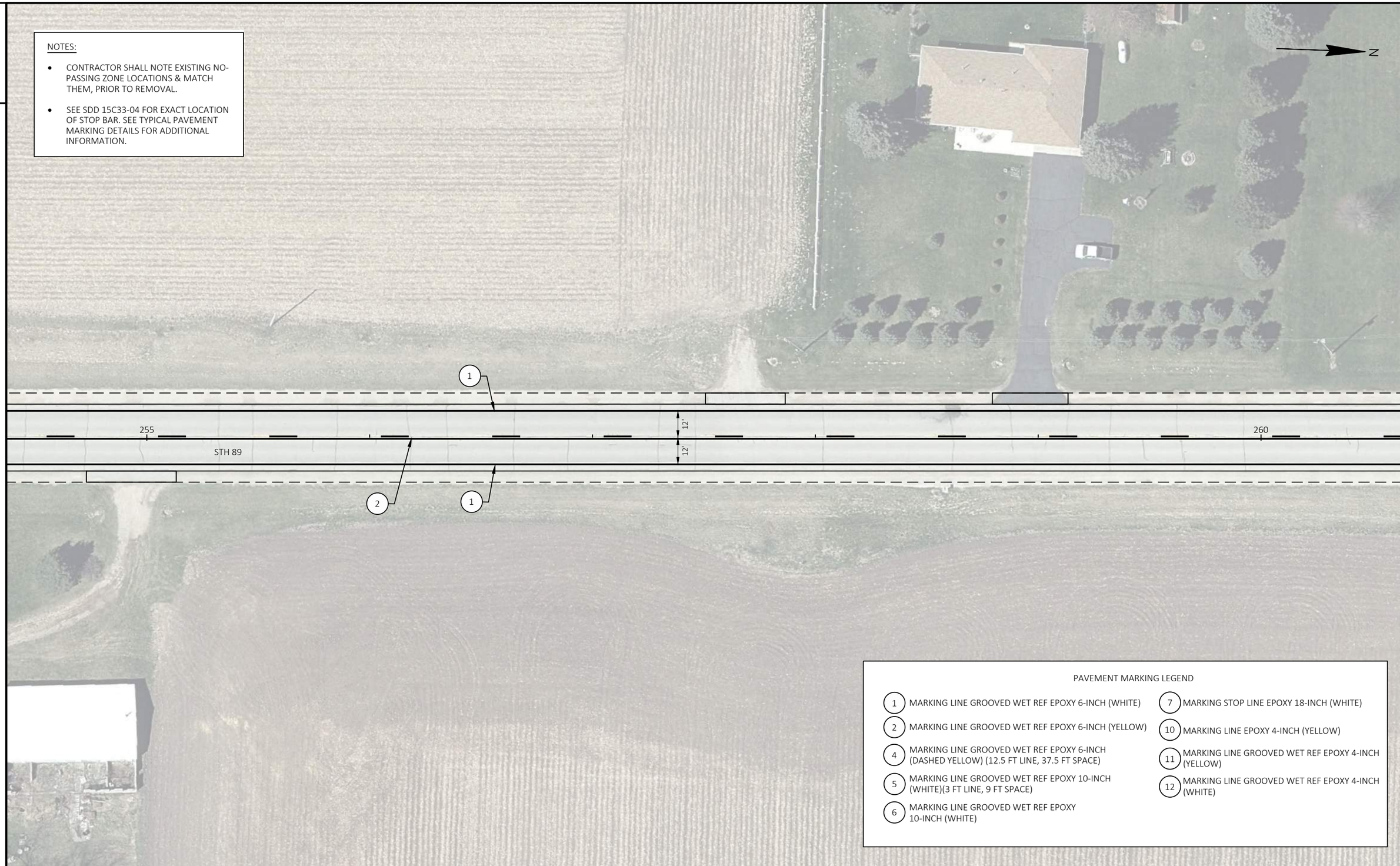

PAVEMENT MARKING LEGEND

1. MARKING LINE GROOVED WET REF EPOXY 6-INCH (WHITE)
2. MARKING LINE GROOVED WET REF EPOXY 6-INCH (YELLOW)
4. MARKING LINE GROOVED WET REF EPOXY 6-INCH (DASHED YELLOW) (12.5 FT LINE, 37.5 FT SPACE)
5. MARKING LINE GROOVED WET REF EPOXY 10-INCH (WHITE)(3 FT LINE, 9 FT SPACE)
6. MARKING LINE GROOVED WET REF EPOXY 10-INCH (WHITE)
7. MARKING STOP LINE EPOXY 18-INCH (WHITE)
10. MARKING LINE EPOXY 4-INCH (YELLOW)
11. MARKING LINE GROOVED WET REF EPOXY 4-INCH (YELLOW)
12. MARKING LINE GROOVED WET REF EPOXY 4-INCH (WHITE)

PROJECT NO: 3390-08-70	HWY: STH 89	COUNTY: WALWORTH	PAVEMENT MARKING	SHEET 86	E

2

NOTES:

- CONTRACTOR SHALL NOTE EXISTING NO-PASSING ZONE LOCATIONS & MATCH THEM, PRIOR TO REMOVAL.
- SEE SDD 15C33-04 FOR EXACT LOCATION OF STOP BAR. SEE TYPICAL PAVEMENT MARKING DETAILS FOR ADDITIONAL INFORMATION.

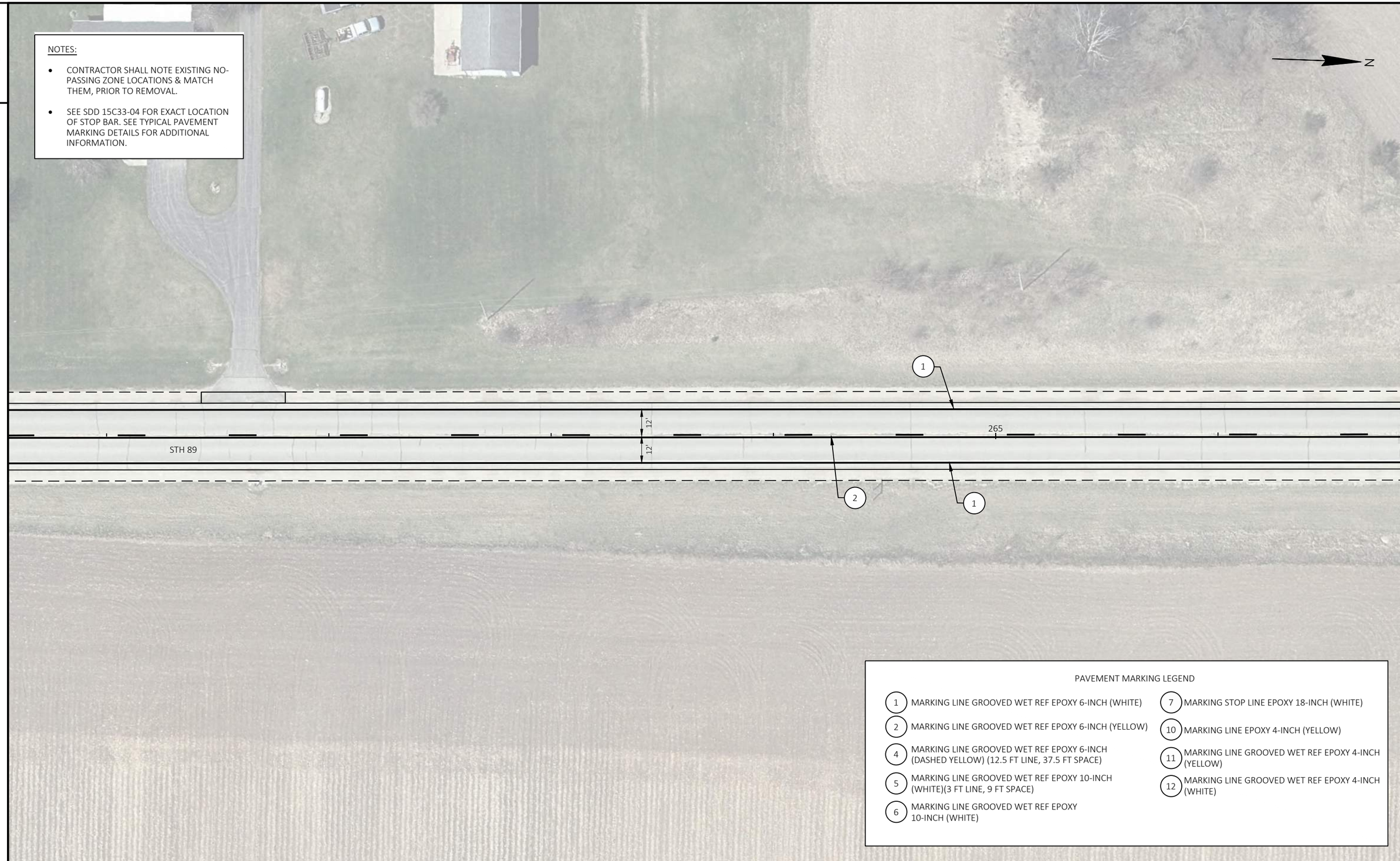

PAVEMENT MARKING LEGEND

1 MARKING LINE GROOVED WET REF EPOXY 6-INCH (WHITE)

2 MARKING LINE GROOVED WET REF EPOXY 6-INCH (YELLOW)

4 MARKING LINE GROOVED WET REF EPOXY 6-INCH (DASHED YELLOW) (12.5 FT LINE, 37.5 FT SPACE)

5 MARKING LINE GROOVED WET REF EPOXY 10-INCH (WHITE)(3 FT LINE, 9 FT SPACE)

6 MARKING LINE GROOVED WET REF EPOXY 10-INCH (WHITE)

7 MARKING STOP LINE EPOXY 18-INCH (WHITE)

10 MARKING LINE EPOXY 4-INCH (YELLOW)

11 MARKING LINE GROOVED WET REF EPOXY 4-INCH (YELLOW)

12 MARKING LINE GROOVED WET REF EPOXY 4-INCH (WHITE)

NOTES:

- CONTRACTOR SHALL NOTE EXISTING NO-PASSING ZONE LOCATIONS & MATCH THEM, PRIOR TO REMOVAL.
- SEE SDD 15C33-04 FOR EXACT LOCATION OF STOP BAR. SEE TYPICAL PAVEMENT MARKING DETAILS FOR ADDITIONAL INFORMATION.

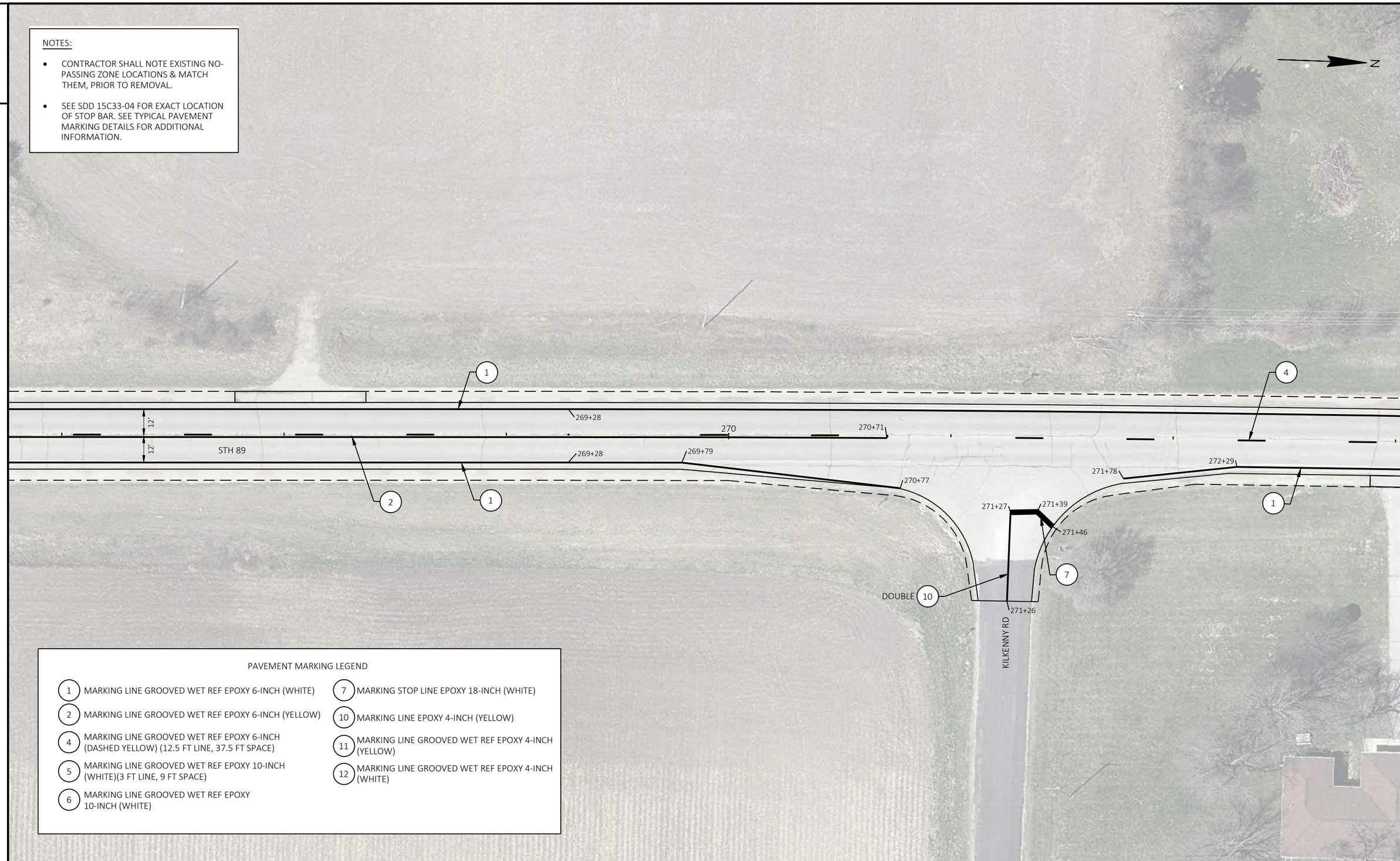

PAVEMENT MARKING LEGEND

1. MARKING LINE GROOVED WET REF EPOXY 6-INCH (WHITE)
2. MARKING LINE GROOVED WET REF EPOXY 6-INCH (YELLOW)
4. MARKING LINE GROOVED WET REF EPOXY 6-INCH (DASHED YELLOW) (12.5 FT LINE, 37.5 FT SPACE)
5. MARKING LINE GROOVED WET REF EPOXY 10-INCH (WHITE)(3 FT LINE, 9 FT SPACE)
6. MARKING LINE GROOVED WET REF EPOXY 10-INCH (WHITE)
7. MARKING STOP LINE EPOXY 18-INCH (WHITE)
10. MARKING LINE EPOXY 4-INCH (YELLOW)
11. MARKING LINE GROOVED WET REF EPOXY 4-INCH (YELLOW)
12. MARKING LINE GROOVED WET REF EPOXY 4-INCH (WHITE)

PROJECT NO: 3390-08-70	HWY: STH 89	COUNTY: WALWORTH	PAVEMENT MARKING	SHEET 88	E

NOTES:

- CONTRACTOR SHALL NOTE EXISTING NO-PASSING ZONE LOCATIONS & MATCH THEM, PRIOR TO REMOVAL.
- SEE SDD 15C33-04 FOR EXACT LOCATION OF STOP BAR. SEE TYPICAL PAVEMENT MARKING DETAILS FOR ADDITIONAL INFORMATION.

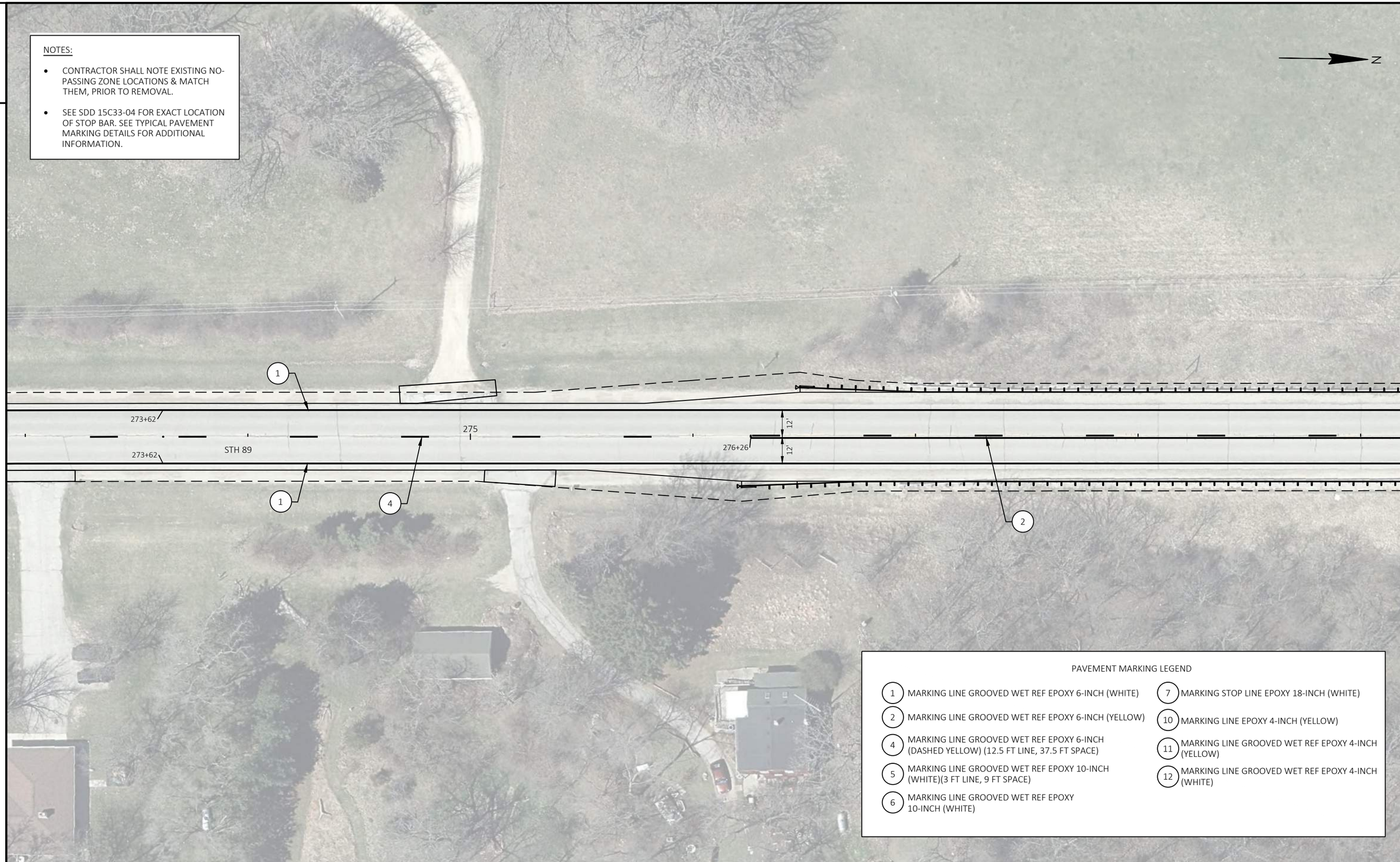

PAVEMENT MARKING LEGEND

1. MARKING LINE GROOVED WET REF EPOXY 6-INCH (WHITE)
2. MARKING LINE GROOVED WET REF EPOXY 6-INCH (YELLOW)
4. MARKING LINE GROOVED WET REF EPOXY 6-INCH (DASHED YELLOW) (12.5 FT LINE, 37.5 FT SPACE)
5. MARKING LINE GROOVED WET REF EPOXY 10-INCH (WHITE)(3 FT LINE, 9 FT SPACE)
6. MARKING LINE GROOVED WET REF EPOXY 10-INCH (WHITE)
7. MARKING STOP LINE EPOXY 18-INCH (WHITE)
10. MARKING LINE EPOXY 4-INCH (YELLOW)
11. MARKING LINE GROOVED WET REF EPOXY 4-INCH (YELLOW)
12. MARKING LINE GROOVED WET REF EPOXY 4-INCH (WHITE)

2

NOTES:

- CONTRACTOR SHALL NOTE EXISTING NO-PASSING ZONE LOCATIONS & MATCH THEM, PRIOR TO REMOVAL.
- SEE SDD 15C33-04 FOR EXACT LOCATION OF STOP BAR. SEE TYPICAL PAVEMENT MARKING DETAILS FOR ADDITIONAL INFORMATION.

PAVEMENT MARKING LEGEND

1 MARKING LINE GROOVED WET REF EPOXY 6-INCH (WHITE)

2 MARKING LINE GROOVED WET REF EPOXY 6-INCH (YELLOW)

4 MARKING LINE GROOVED WET REF EPOXY 6-INCH (DASHED YELLOW) (12.5 FT LINE, 37.5 FT SPACE)

5 MARKING LINE GROOVED WET REF EPOXY 10-INCH (WHITE)(3 FT LINE, 9 FT SPACE)

6 MARKING LINE GROOVED WET REF EPOXY 10-INCH (WHITE)

7 MARKING STOP LINE EPOXY 18-INCH (WHITE)

10 MARKING LINE EPOXY 4-INCH (YELLOW)

11 MARKING LINE GROOVED WET REF EPOXY 4-INCH (YELLOW)

12 MARKING LINE GROOVED WET REF EPOXY 4-INCH (WHITE)

PROJECT NO: 3390-08-70	HWY: STH 89	COUNTY: WALWORTH	PAVEMENT MARKING	SHEET 90	E

NOTES:

- CONTRACTOR SHALL NOTE EXISTING NO-PASSING ZONE LOCATIONS & MATCH THEM, PRIOR TO REMOVAL.
- SEE SDD 15C33-04 FOR EXACT LOCATION OF STOP BAR. SEE TYPICAL PAVEMENT MARKING DETAILS FOR ADDITIONAL INFORMATION.

PAVEMENT MARKING LEGEND

1	MARKING LINE GROOVED WET REF EPOXY 6-INCH (WHITE)
2	MARKING LINE GROOVED WET REF EPOXY 6-INCH (YELLOW)
4	MARKING LINE GROOVED WET REF EPOXY 6-INCH (DASHED YELLOW) (12.5 FT LINE, 37.5 FT SPACE)
5	MARKING LINE GROOVED WET REF EPOXY 10-INCH (WHITE)(3 FT LINE, 9 FT SPACE)
6	MARKING LINE GROOVED WET REF EPOXY 10-INCH (WHITE)
7	MARKING STOP LINE EPOXY 18-INCH (WHITE)
10	MARKING LINE EPOXY 4-INCH (YELLOW)
11	MARKING LINE GROOVED WET REF EPOXY 4-INCH (YELLOW)
12	MARKING LINE GROOVED WET REF EPOXY 4-INCH (WHITE)

PROJECT NO: 3390-08-70	HWY: STH 89	COUNTY: WALWORTH	PAVEMENT MARKING	SHEET 91	E

NOTES:

- CONTRACTOR SHALL NOTE EXISTING NO-PASSING ZONE LOCATIONS & MATCH THEM, PRIOR TO REMOVAL.
- SEE SDD 15C33-04 FOR EXACT LOCATION OF STOP BAR. SEE TYPICAL PAVEMENT MARKING DETAILS FOR ADDITIONAL INFORMATION.

PAVEMENT MARKING LEGEND

1. MARKING LINE GROOVED WET REF EPOXY 6-INCH (WHITE)
2. MARKING LINE GROOVED WET REF EPOXY 6-INCH (YELLOW)
4. MARKING LINE GROOVED WET REF EPOXY 6-INCH (DASHED YELLOW) (12.5 FT LINE, 37.5 FT SPACE)
5. MARKING LINE GROOVED WET REF EPOXY 10-INCH (WHITE)(3 FT LINE, 9 FT SPACE)
6. MARKING LINE GROOVED WET REF EPOXY 10-INCH (WHITE)
7. MARKING STOP LINE EPOXY 18-INCH (WHITE)
10. MARKING LINE EPOXY 4-INCH (YELLOW)
11. MARKING LINE GROOVED WET REF EPOXY 4-INCH (YELLOW)
12. MARKING LINE GROOVED WET REF EPOXY 4-INCH (WHITE)

PROJECT NO: 3390-08-70	HWY: STH 89	COUNTY: WALWORTH	PAVEMENT MARKING	SHEET 92	E

NOTES:

- CONTRACTOR SHALL NOTE EXISTING NO-PASSING ZONE LOCATIONS & MATCH THEM, PRIOR TO REMOVAL.
- SEE SDD 15C33-04 FOR EXACT LOCATION OF STOP BAR. SEE TYPICAL PAVEMENT MARKING DETAILS FOR ADDITIONAL INFORMATION.

PAVEMENT MARKING LEGEND

1 MARKING LINE GROOVED WET REF EPOXY 6-INCH (WHITE)	7 MARKING STOP LINE EPOXY 18-INCH (WHITE)
2 MARKING LINE GROOVED WET REF EPOXY 6-INCH (YELLOW)	10 MARKING LINE EPOXY 4-INCH (YELLOW)
4 MARKING LINE GROOVED WET REF EPOXY 6-INCH (DASHED YELLOW) (12.5 FT LINE, 37.5 FT SPACE)	11 MARKING LINE GROOVED WET REF EPOXY 4-INCH (YELLOW)
5 MARKING LINE GROOVED WET REF EPOXY 10-INCH (WHITE)(3 FT LINE, 9 FT SPACE)	12 MARKING LINE GROOVED WET REF EPOXY 4-INCH (WHITE)
6 MARKING LINE GROOVED WET REF EPOXY 10-INCH (WHITE)	

PROJECT NO: 3390-08-70	HWY: STH 89	COUNTY: WALWORTH	PAVEMENT MARKING	SHEET 93	E

NOTES:

- CONTRACTOR SHALL NOTE EXISTING NO-PASSING ZONE LOCATIONS & MATCH THEM, PRIOR TO REMOVAL.
- SEE SDD 15C33-04 FOR EXACT LOCATION OF STOP BAR. SEE TYPICAL PAVEMENT MARKING DETAILS FOR ADDITIONAL INFORMATION.

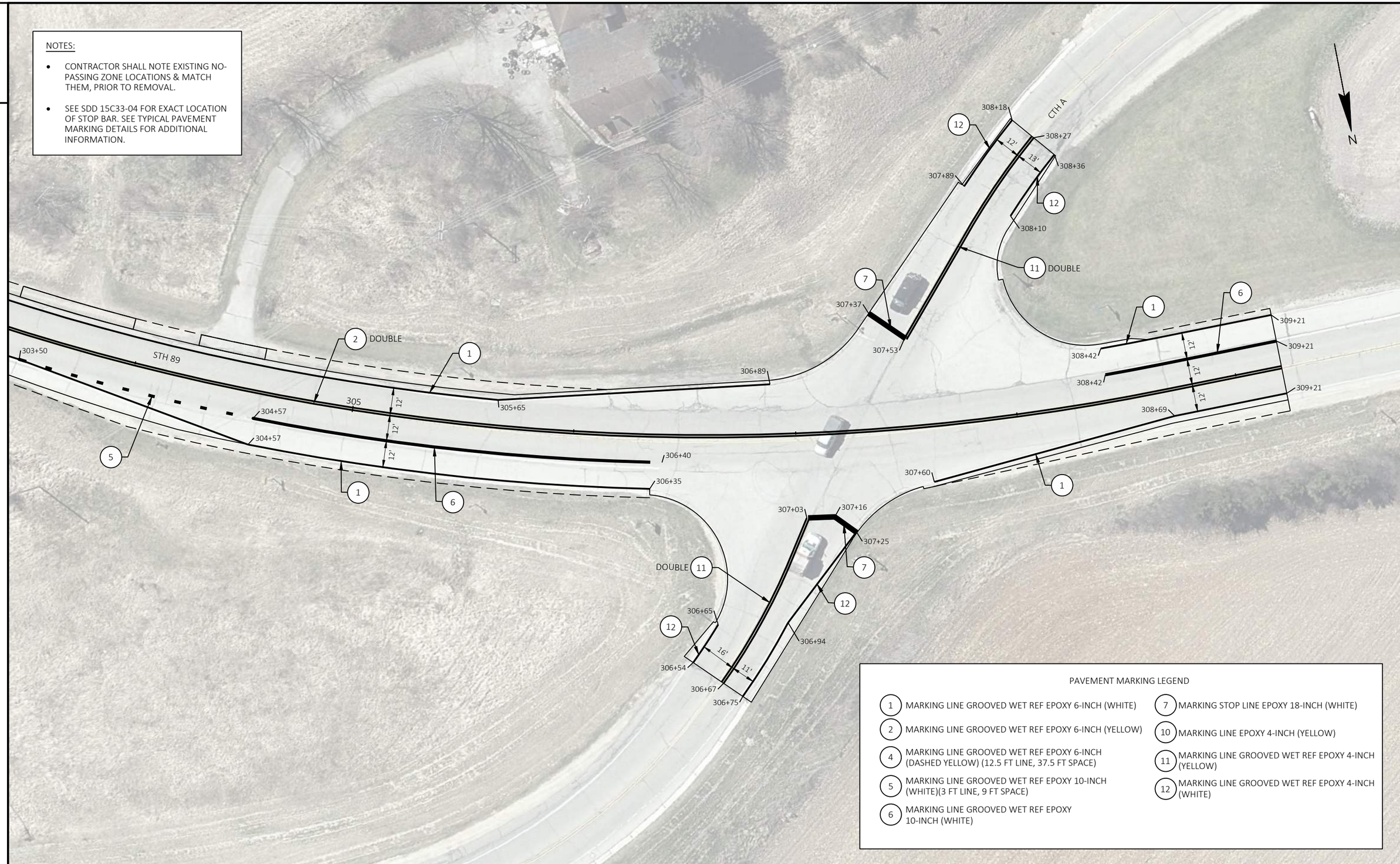

PAVEMENT MARKING LEGEND

1 MARKING LINE GROOVED WET REF EPOXY 6-INCH (WHITE)	7 MARKING STOP LINE EPOXY 18-INCH (WHITE)
2 MARKING LINE GROOVED WET REF EPOXY 6-INCH (YELLOW)	10 MARKING LINE EPOXY 4-INCH (YELLOW)
4 MARKING LINE GROOVED WET REF EPOXY 6-INCH (DASHED YELLOW) (12.5 FT LINE, 37.5 FT SPACE)	11 MARKING LINE GROOVED WET REF EPOXY 4-INCH (YELLOW)
5 MARKING LINE GROOVED WET REF EPOXY 10-INCH (WHITE)(3 FT LINE, 9 FT SPACE)	12 MARKING LINE GROOVED WET REF EPOXY 4-INCH (WHITE)
6 MARKING LINE GROOVED WET REF EPOXY 10-INCH (WHITE)	

PROJECT NO: 3390-08-70	HWY: STH 89	COUNTY: WALWORTH	PAVEMENT MARKING	SHEET 94	E

LEGEND

- BE — MAINLINE CLOSURE DETAIL B FROM SDD BARRICADES AND SIGNS FOR MAINLINE CLOSURES, WITH BARRICADE DETAIL E FROM SDD BARRICADES AND SIGNS FOR VARIOUS CLOSURES
- S3 — SIDE ROAD CLOSURE DETAIL 3 FROM SDD BARRICADES AND SIGNS FOR SIDEROAD CLOSURES
- S4 — SIDE ROAD CLOSURE DETAIL 4 FROM SDD BARRICADES AND SIGNS FOR SIDEROAD CLOSURES
- WORK ZONE
- MB — PORTABLE CHANGEABLE MESSAGE BOARD
- CULVERT REPLACEMENT LOCATION

NOTES:
1. MAINTAIN CROSS TRAFFIC ON R & D TOWNLINE ROAD FOR THE DURATION OF THE PROJECT.
2. MAINTAIN CROSS TRAFFIC ON SHADEL RD/ CTH M FOR THE DURATION OF THE PROJECT.
3. CHANGEABLE MESSAGE BOARDS ARE TO BE DISPLAYED 7 DAYS IN ADVANCED OF CLOSURES AND REMOVED 3 DAYS AFTER CLOSURES BEGINS

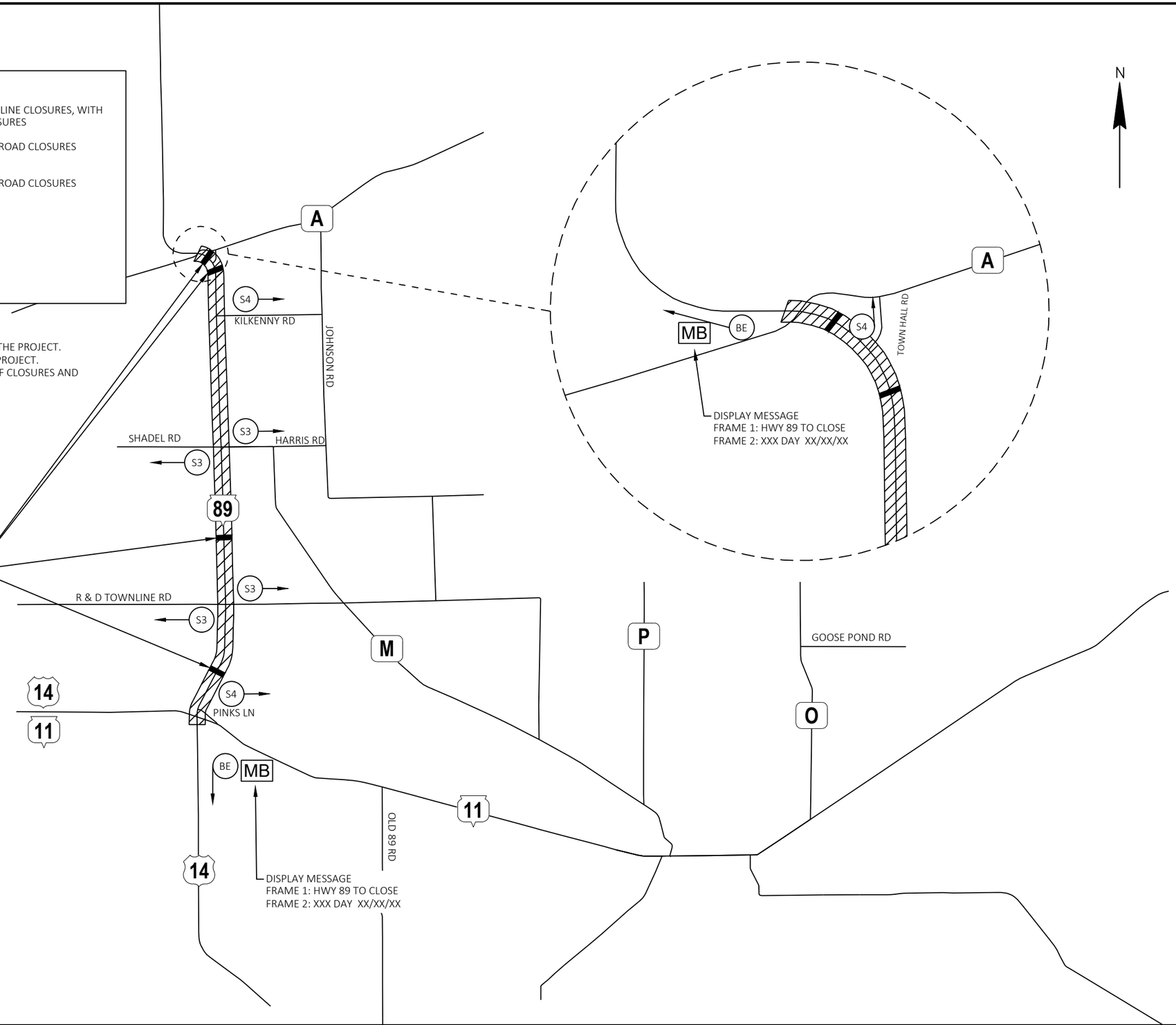

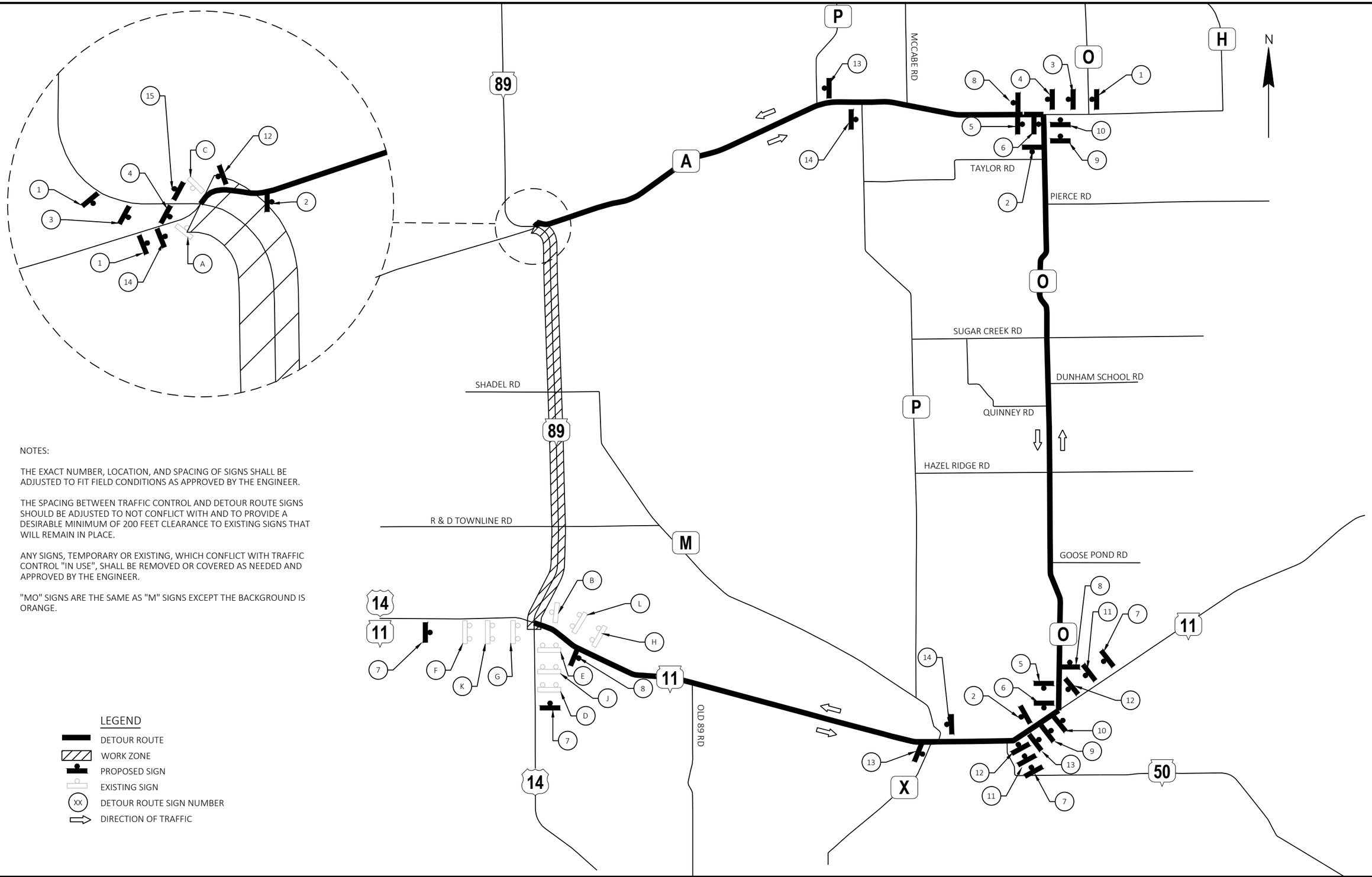

NOTES:

THE EXACT NUMBER, LOCATION, AND SPACING OF SIGNS SHALL BE ADJUSTED TO FIT FIELD CONDITIONS AS APPROVED BY THE ENGINEER.

THE SPACING BETWEEN TRAFFIC CONTROL AND DETOUR ROUTE SIGNS SHOULD BE ADJUSTED TO NOT CONFLICT WITH AND TO PROVIDE A DESIRABLE MINIMUM OF 200 FEET CLEARANCE TO EXISTING SIGNS THAT WILL REMAIN IN PLACE.

ANY SIGNS, TEMPORARY OR EXISTING, WHICH CONFLICT WITH TRAFFIC CONTROL "IN USE", SHALL BE REMOVED OR COVERED AS NEEDED AND APPROVED BY THE ENGINEER.

"MO" SIGNS ARE THE SAME AS "M" SIGNS EXCEPT THE BACKGROUND IS ORANGE.

LEGEND

- DETOUR ROUTE
- WORK ZONE
- PROPOSED SIGN
- EXISTING SIGN
- XX DETOUR ROUTE SIGN NUMBER
- DIRECTION OF TRAFFIC

PROJECT NO: 3390-08-70	HWY: STH 89	COUNTY: WALWORTH	DETOUR PLAN	SHEET 96	E

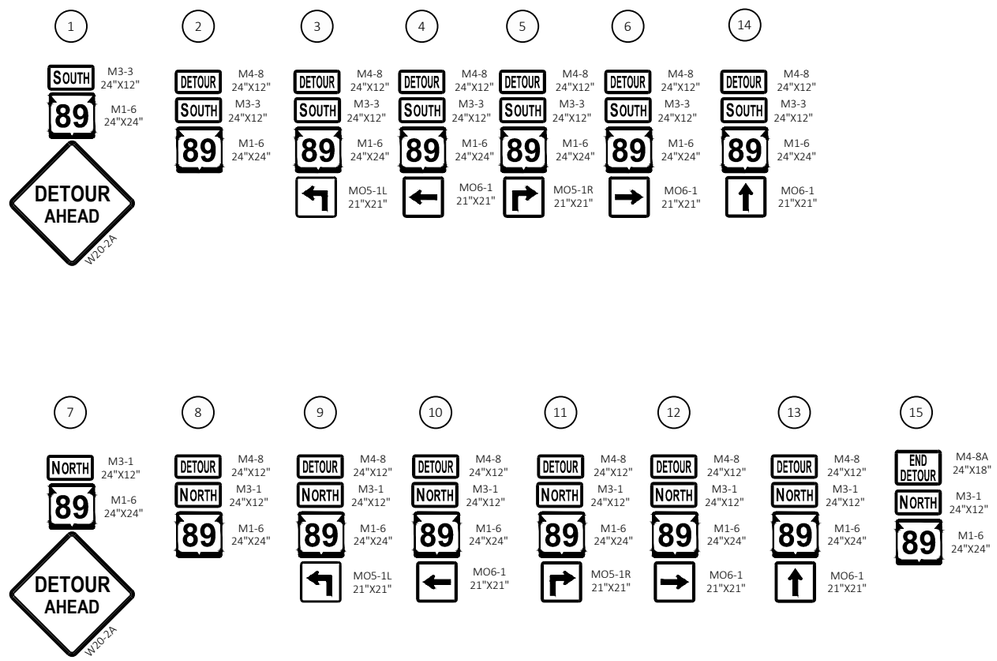

LEGEND

XX DETOUR ROUTE SIGN NUMBER

COVER EXISTING SIGN

NOTE: ALL SIGNS ARE 48"X48" UNLESS OTHERWISE NOTED

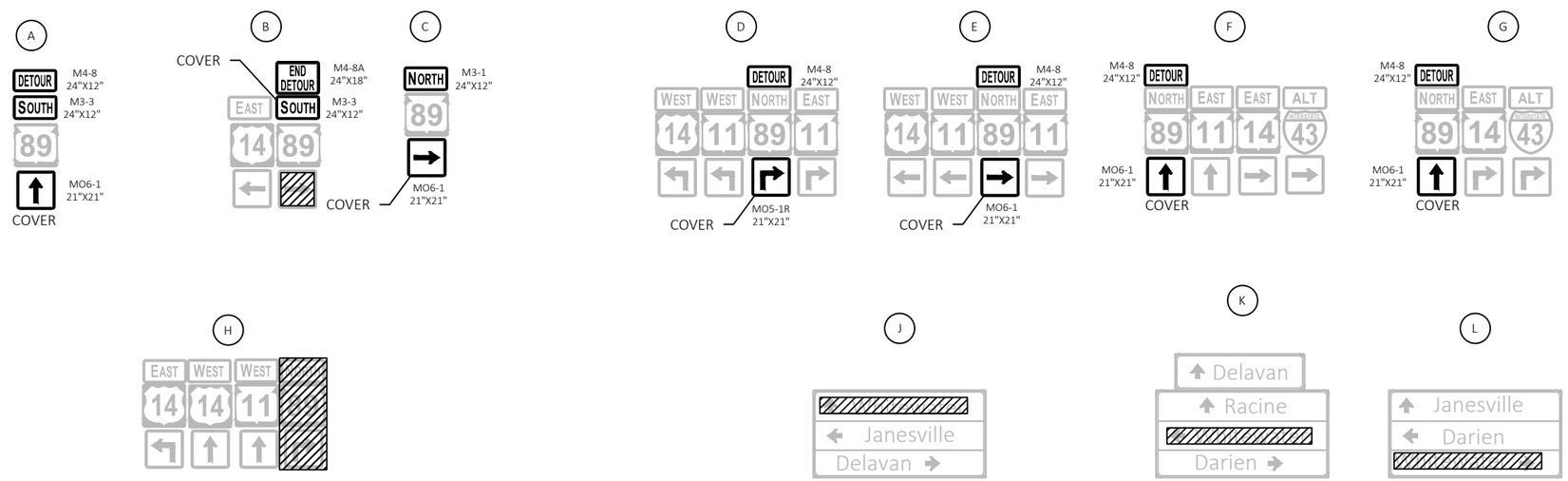

PROJECT NO: 3390-08-70	HWY: STH 89	COUNTY: WALWORTH	DETOUR PLAN	SHEET 97	E

CURVE 1	CURVE 2	CURVE 3
PI STA = 69+44.54	PI STA = 99+61.37	PI STA = 122+40.62
Y = 358534.551	Y = 361228.101	Y = 363521.037
X = 708886.296	X = 710265.708	X = 710326.401
DELTA = 27°54'05" RT	DELTA = 25°36'05" LT	DELTA = 2°52'12" LT
D = 6°00'45"	D = 3°00'03"	D = 0°30'00"
T = 236.72'	T = 433.83'	T = 287.12'
L = 464.05'	L = 853.17'	L = 574.11'
R = 952.93'	R = 1909.38'	R = 11461.72'
PC STA = 67+07.82	PC STA = 95+27.54	PC STA = 119+53.50
Y = 358297.851	Y = 360841.964	Y = 363234.022
X = 708889.534	X = 710067.961	X = 710318.804
PT STA = 71+71.87	PT STA = 103+80.71	PT STA = 125+27.61
Y = 358745.250	Y = 361661.776	Y = 363808.072
X = 708994.199	X = 710277.187	X = 710319.618
DB = N00°47'01"W	DB = N27°07'04"E	DB = N01°30'58"E
DA = N27°07'04"E	DA = N01°30'58"E	DA = N01°21'13"W

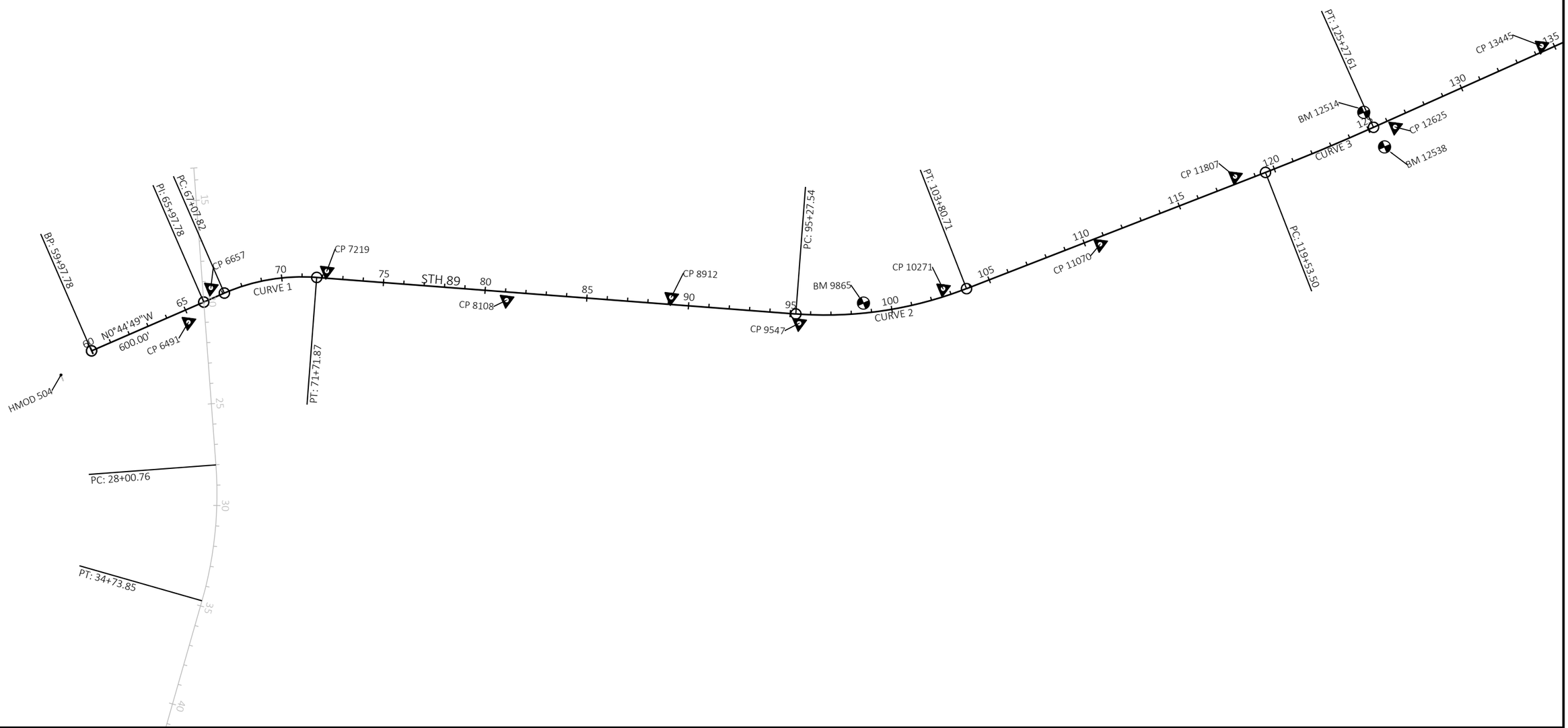

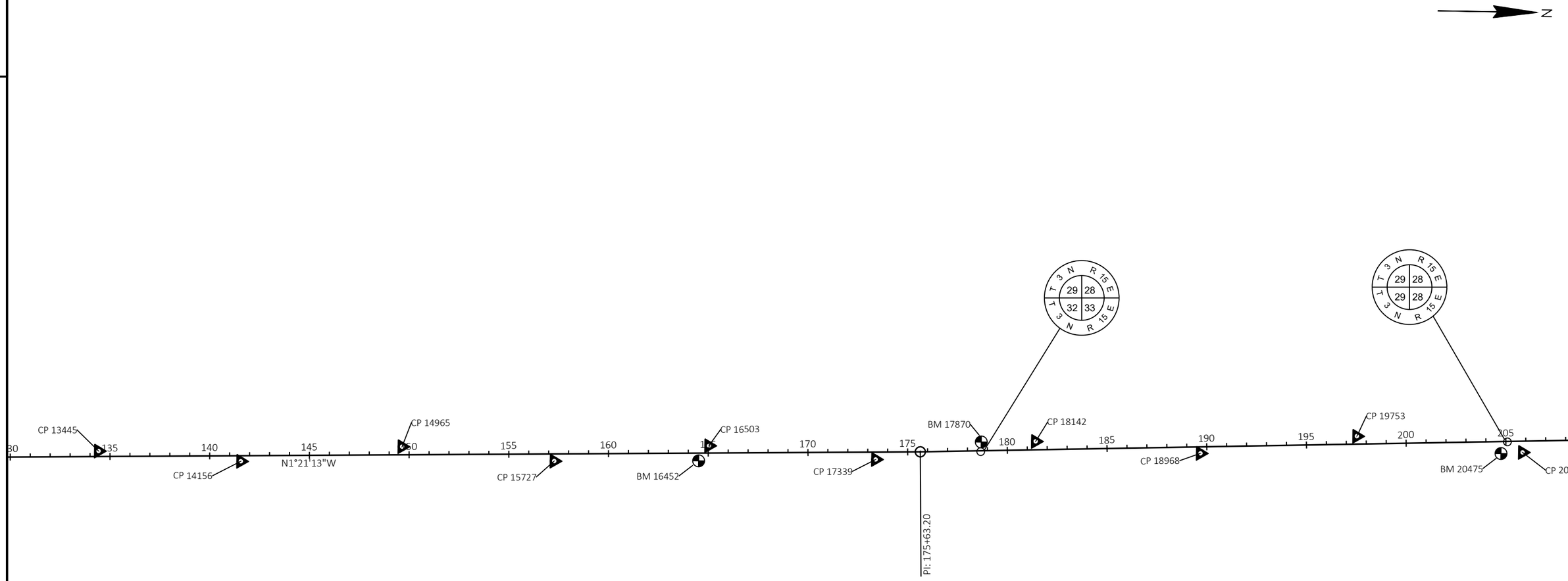
N
CP 13445
CP 14156
N1°21'13"W
CP 14965
CP 15727
BM 16452
CP 16503
CP 17339
PI: 175+63.20
BM 17870
CP 18142
CP 18968
CP 19753
BM 20475
T 3 N R 15 E
29 28
32 33
29 28
29 28

2

CURVE 4

PI STA = 271+44.85
Y = 378417.783
X = 709858.232
DELTA = 1°05'02" RT
D = 0°14'59"
T = 216.97'
L = 433.92'
R = 22936.40'
PC STA = 269+27.89
Y = 378200.955
X = 709865.986
PT STA = 273+61.81
Y = 378634.719
X = 709854.581
DB = N02°02'53"W
DA = N00°57'51"W

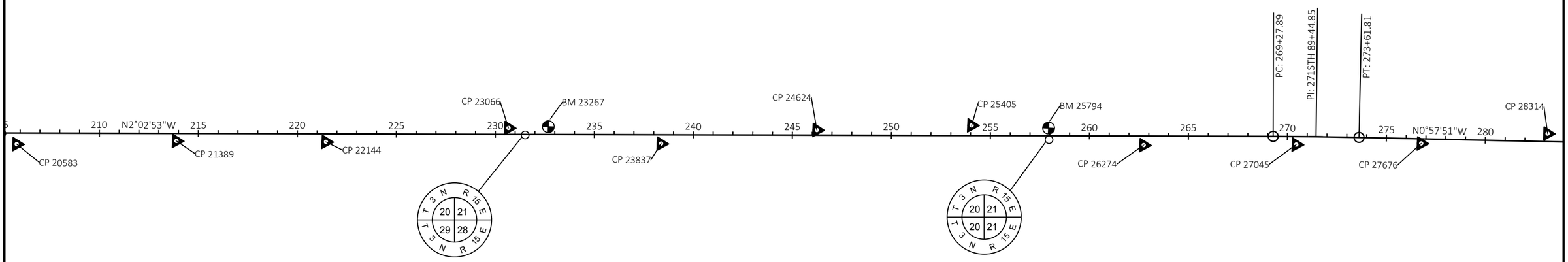

2

PROJECT NO: 3390-08-70	HWY: STH 89	COUNTY: WALWORTH	ALIGNMENT LAYOUT	SHEET 100	E

FILE NAME : N:\PDS\C3D\33900800\SHEETSPLAN\027201-AD.DWG
LAYOUT NAME - 027203-AD
PLOT DATE : 10/9/2025 1:12 PM
PLOT BY : DE JESUS ORTIZ, N
PLOT NAME :
PLOT SCALE : 1 IN:500 FT

2

CURVE 5

PI STA = 302+73.29
Y = 381545.787
X = 709805.592
DELTA = 89°18'05" LT
D = 5°30'00"
T = 1029.12'
L = 1623.67'
R = 1041.75'
PC STA = 292+44.17
Y = 380516.812
X = 709822.908
PT STA = 308+67.84
Y = 381541.020
X = 708776.482
DB = N00°57'51"W
DA = S89°44'05"W

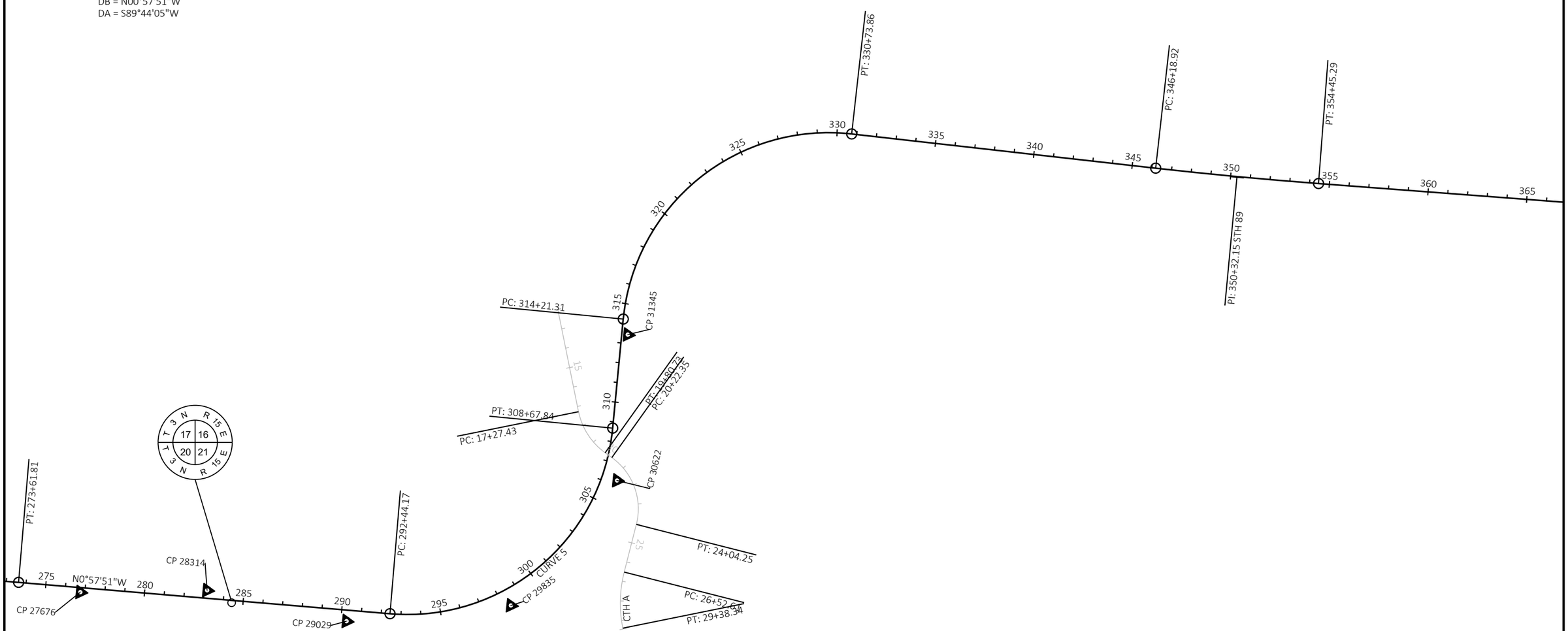

PROJECT NO: 3390-08-70	HWY: STH 89	COUNTY: WALWORTH	ALIGNMENT LAYOUT	SHEET 101	E

FILE NAME : N:\PDS\C3D\33900800\SHEETSPLAN\027201-AD.DWG
LAYOUT NAME - 027204-AD
PLOT DATE : 10/9/2025 1:12 PM
PLOT BY : DE JESUS ORTIZ, N
PLOT NAME :
PLOT SCALE : 1 IN:500 FT
WISDOT/CADDS SHEET 42

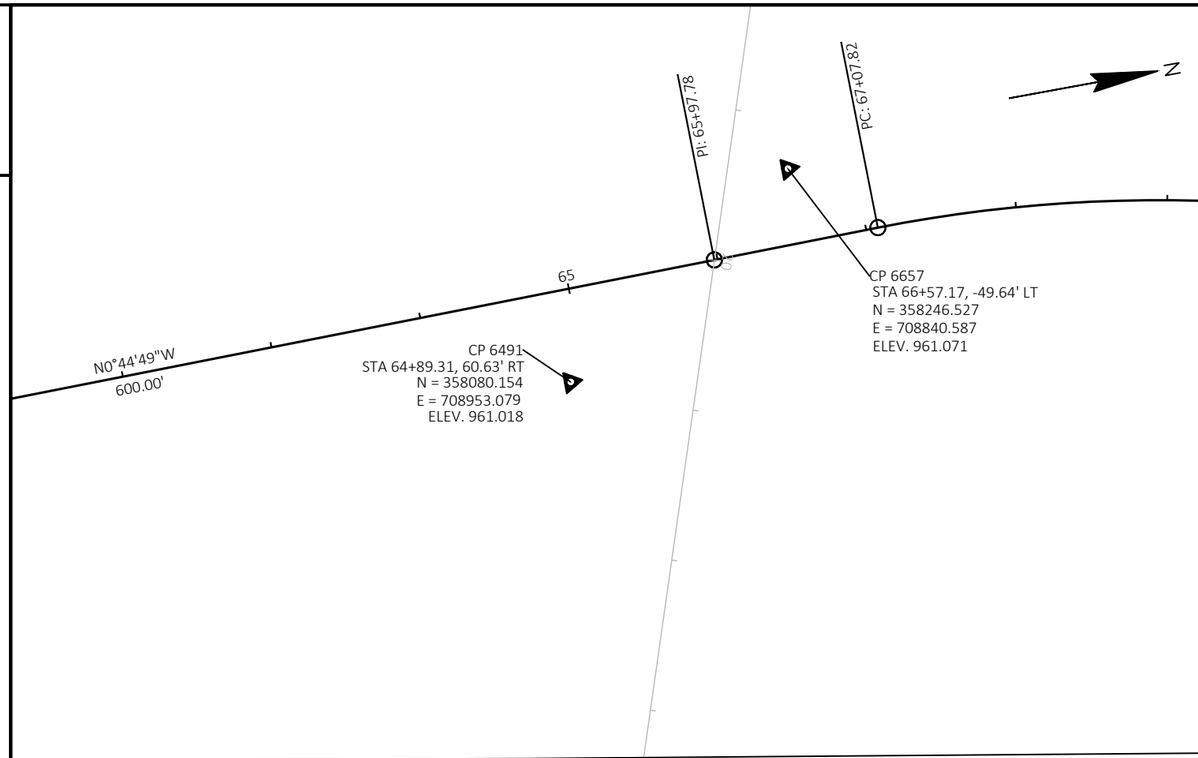
N
PI: 65+97.78
PC: 67+07.82
65
N0°44'49"W
600.00'
CP 6491
STA 64+89.31, 60.63' RT
N = 358080.154
E = 708953.079
ELEV. 961.018
CP 6657
STA 66+57.17, -49.64' LT
N = 358246.527
E = 708840.587
ELEV. 961.071

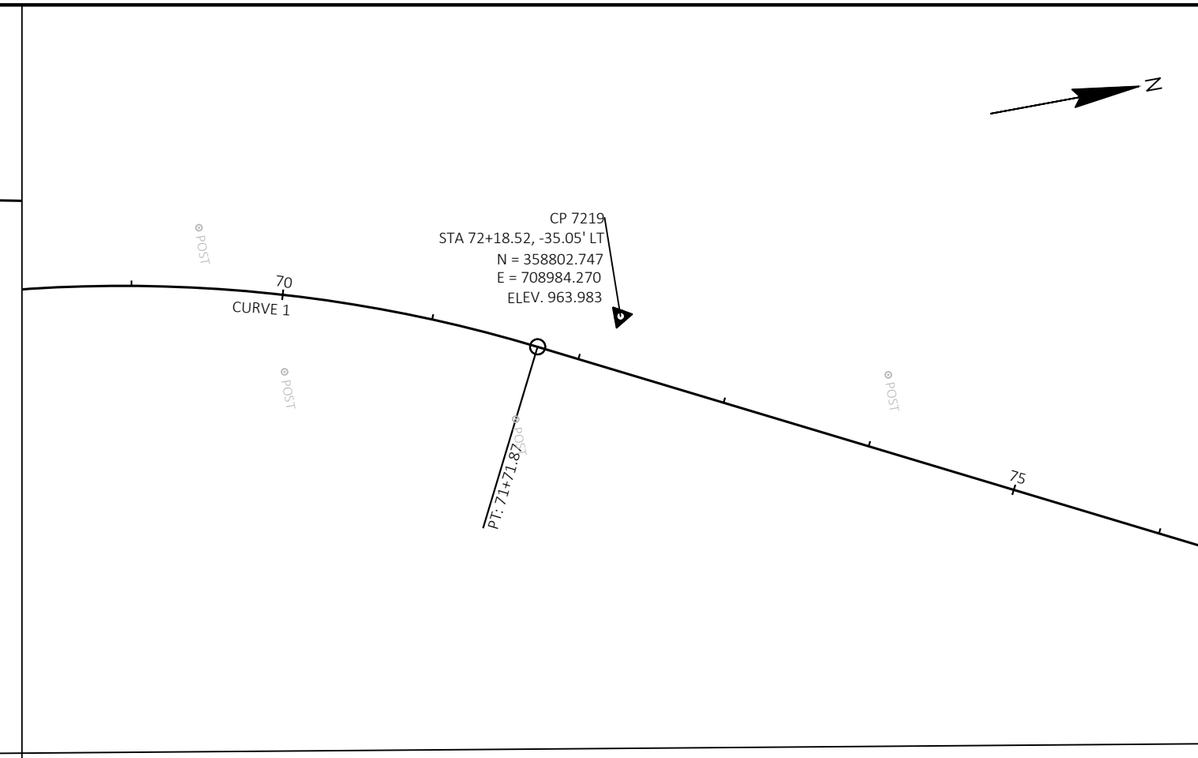
N
CP 7219
STA 72+18.52, -35.05' LT
N = 358802.747
E = 708984.270
ELEV. 963.983
70
CURVE 1
PT: 71+71.87
75

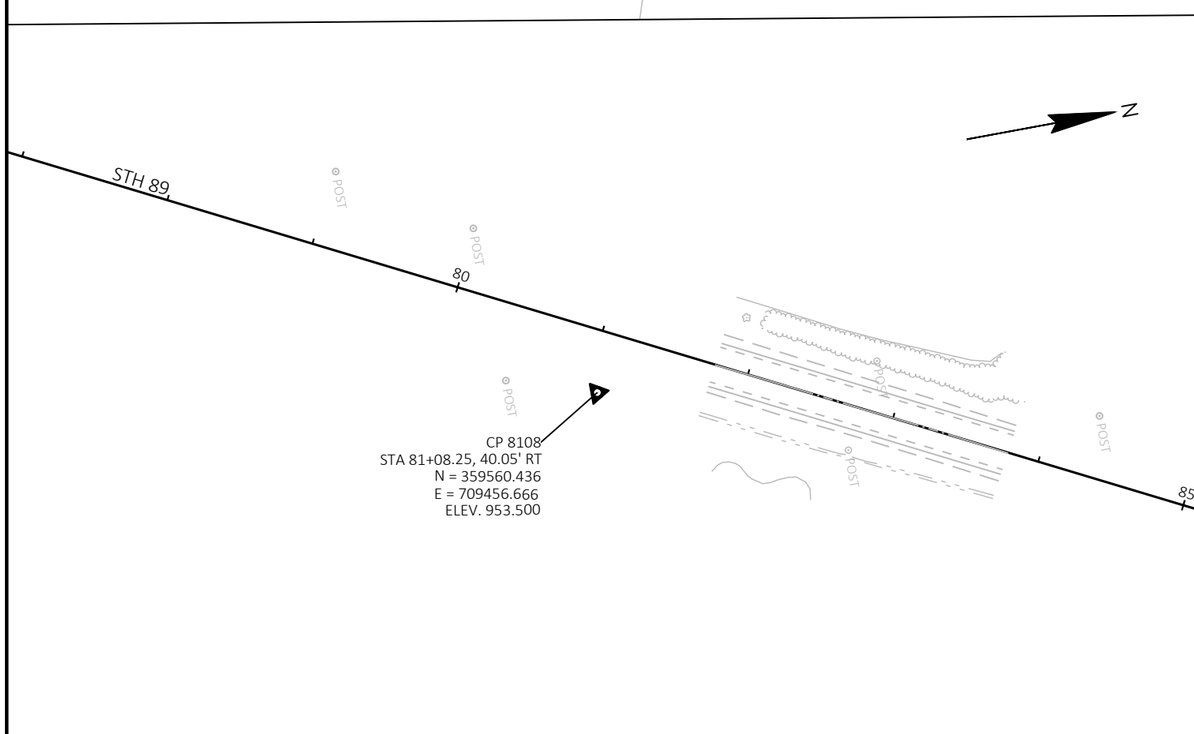
N
STH 89
80
CP 8108
STA 81+08.25, 40.05' RT
N = 359560.436
E = 709456.666
ELEV. 953.500
85

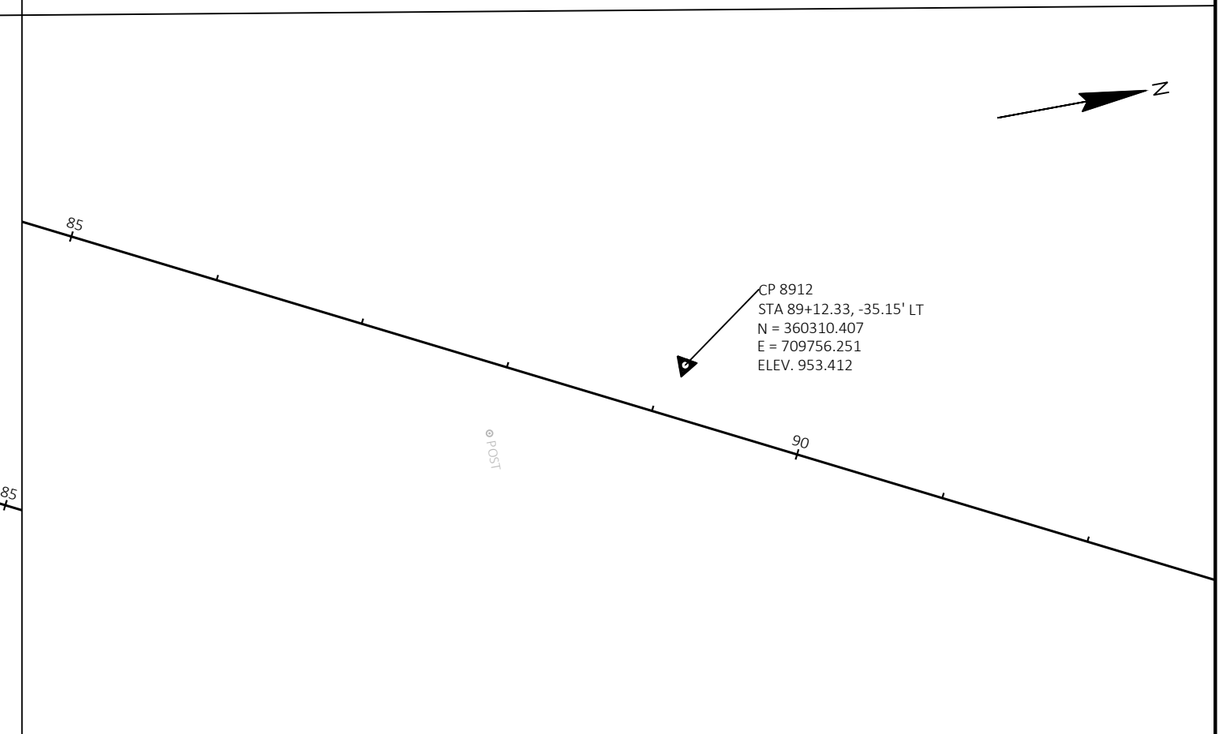
N
85
CP 8912
STA 89+12.33, -35.15' LT
N = 360310.407
E = 709756.251
ELEV. 953.412
90

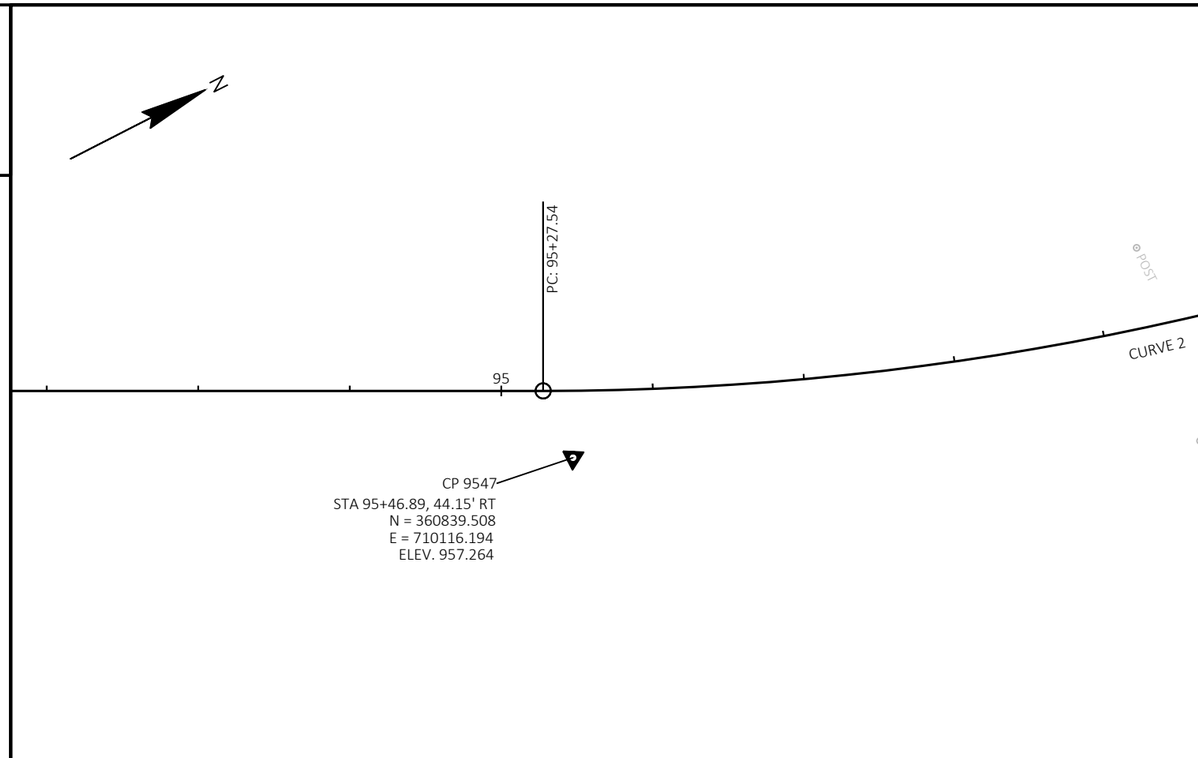
N
PC: 95+27.54
95
CURVE 2
CP 9547
STA 95+46.89, 44.15' RT
N = 360839.508
E = 710116.194
ELEV. 957.264

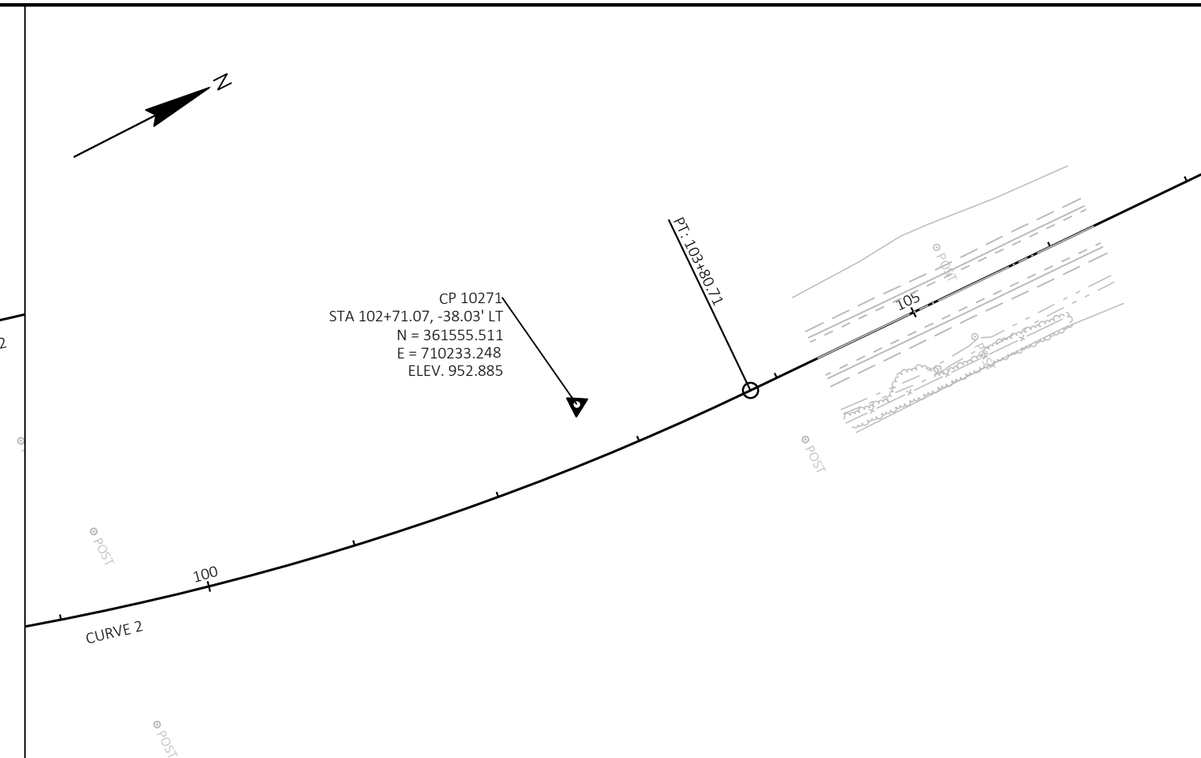
N
CP 10271
STA 102+71.07, -38.03' LT
N = 361555.511
E = 710233.248
ELEV. 952.885
PT: 103+80.71
105
100
CURVE 2

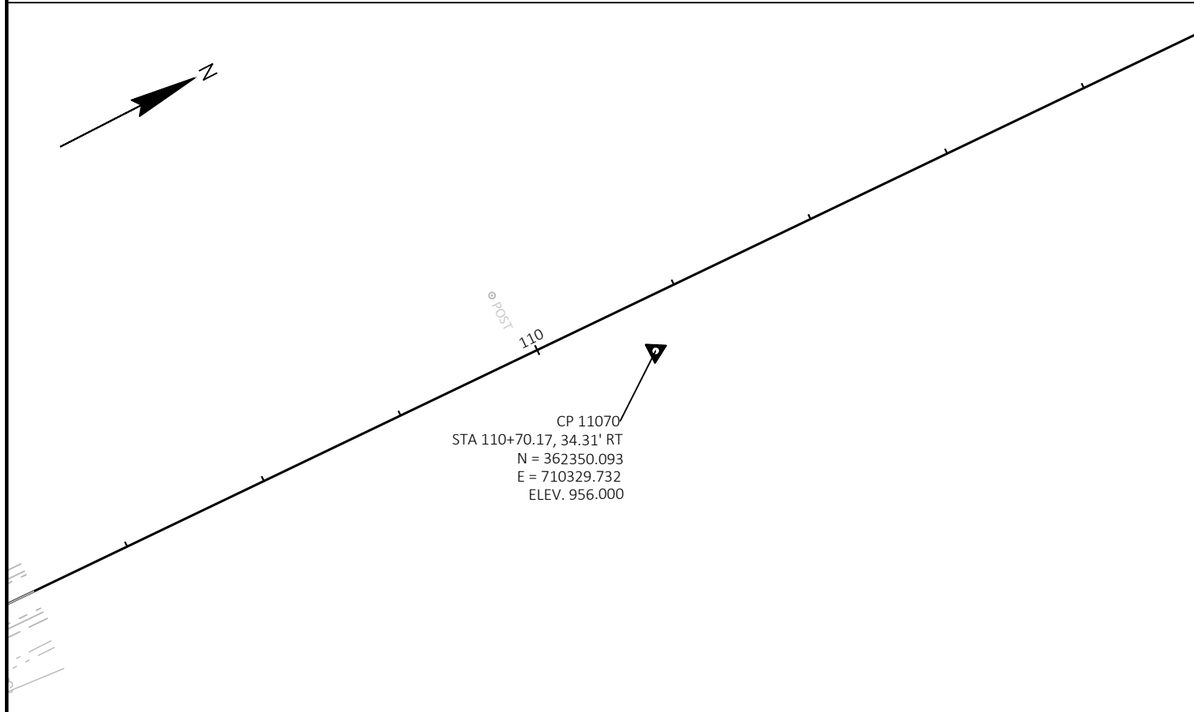
N
110
CP 11070
STA 110+70.17, 34.31' RT
N = 362350.093
E = 710329.732
ELEV. 956.000

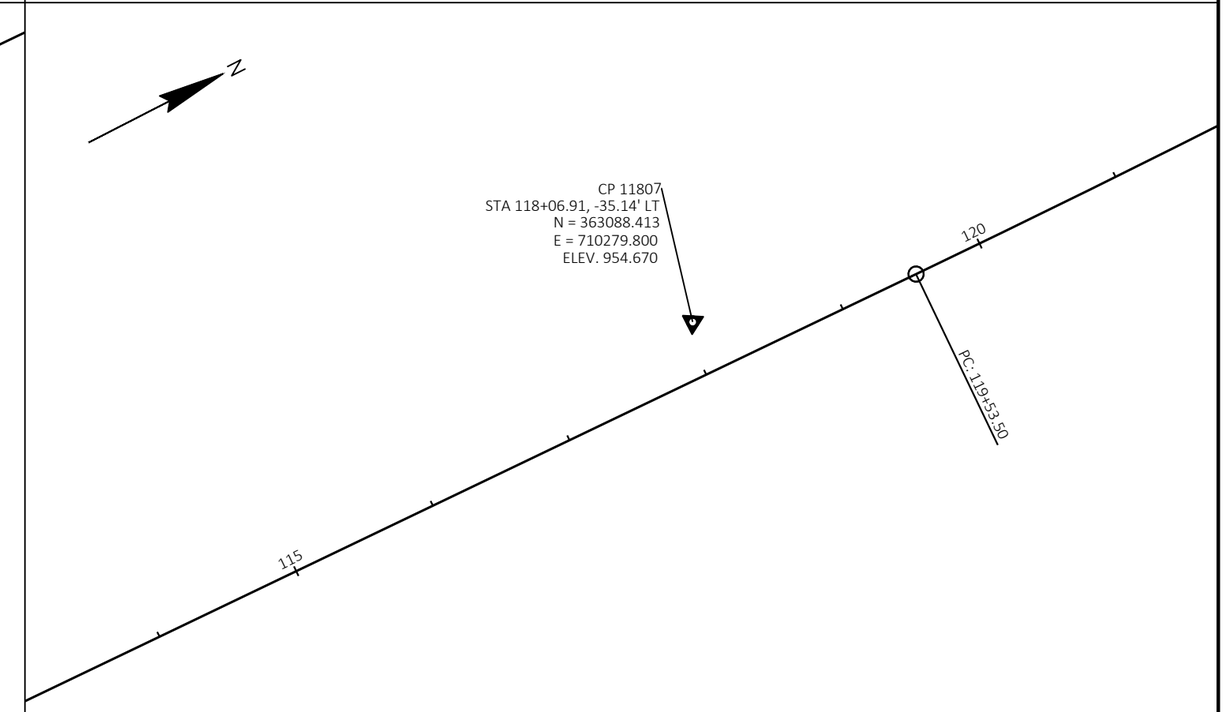
N
CP 11807
STA 118+06.91, -35.14' LT
N = 363088.413
E = 710279.800
ELEV. 954.670
120
PC: 119+53.50
115

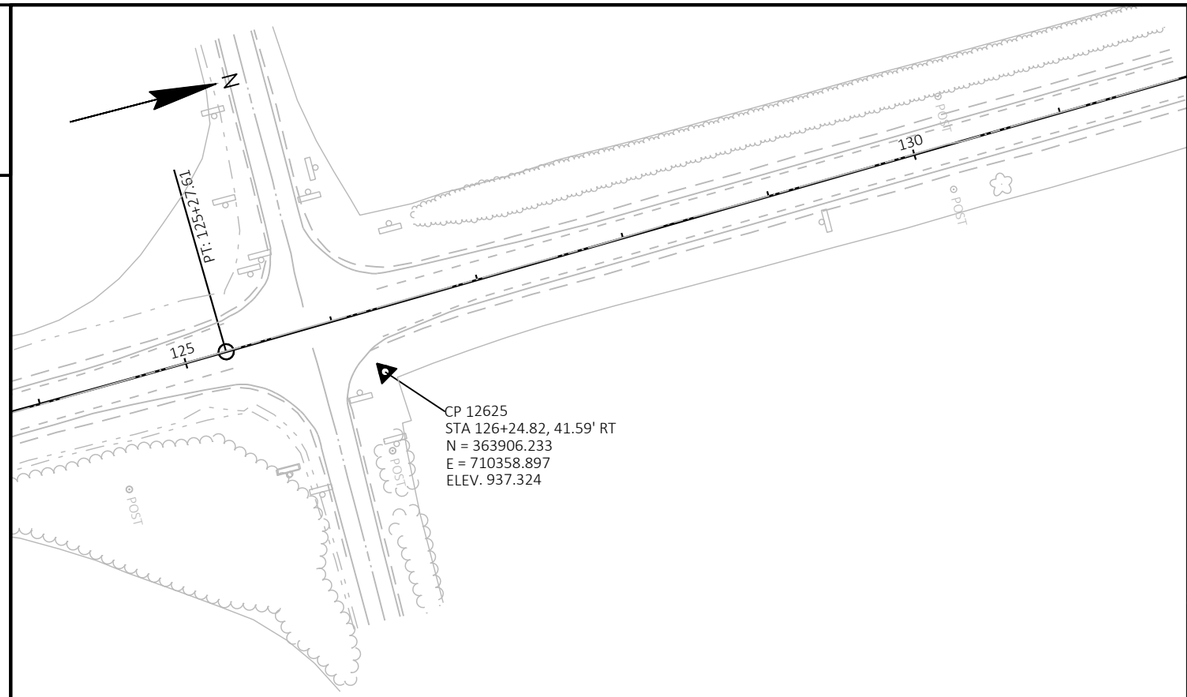
N
PI 125+27.61
125
130
POST
POST
POST
CP 12625
STA 126+24.82, 41.59' RT
N = 363906.233
E = 710358.897
ELEV. 937.324

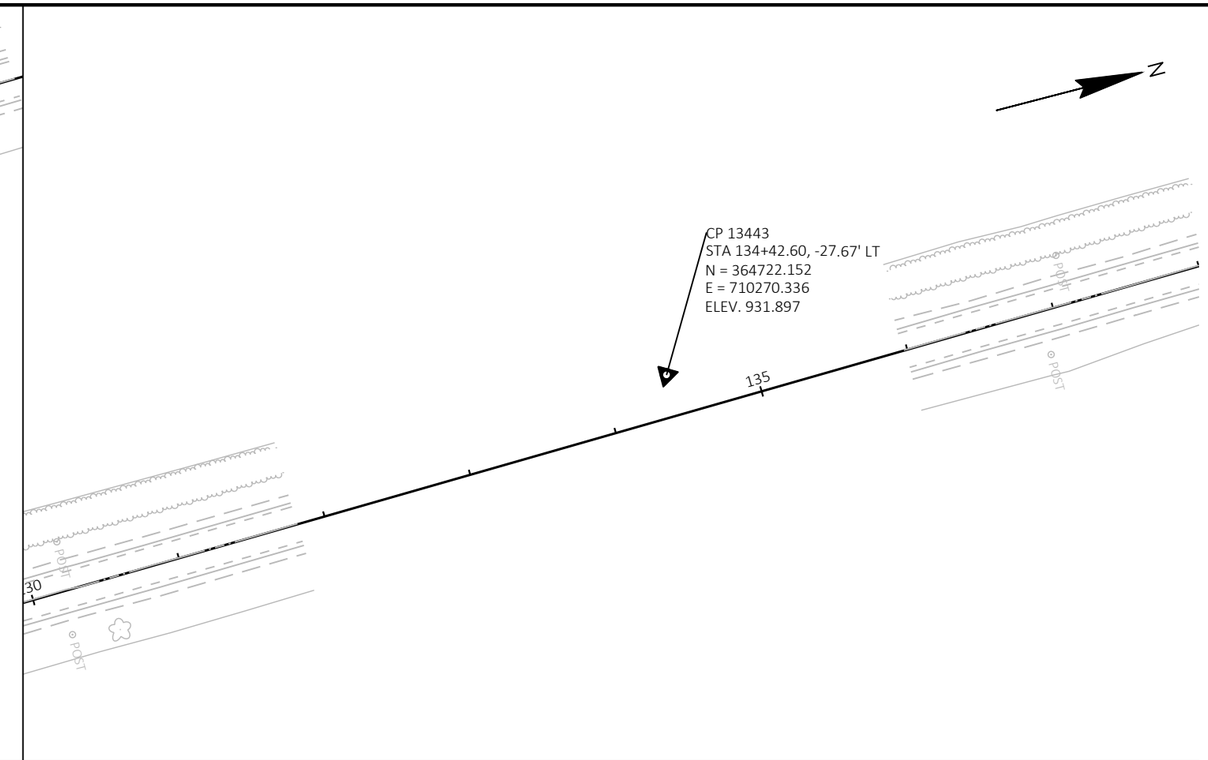
N
CP 13443
STA 134+42.60, -27.67' LT
N = 364722.152
E = 710270.336
ELEV. 931.897
135
130
POST
POST
POST

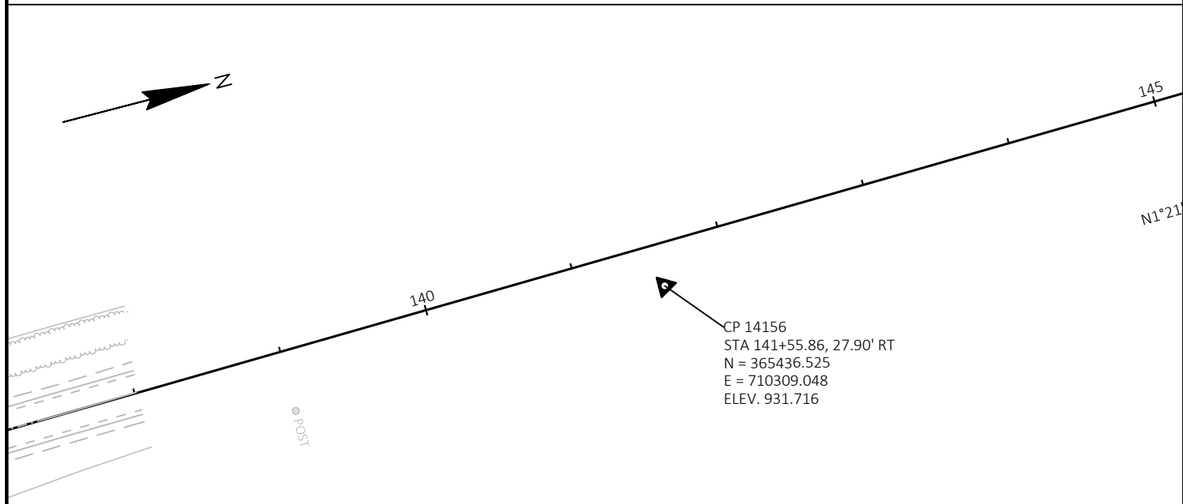
N
145
N1°21'
140
CP 14156
STA 141+55.86, 27.90' RT
N = 365436.525
E = 710309.048
ELEV. 931.716
POST

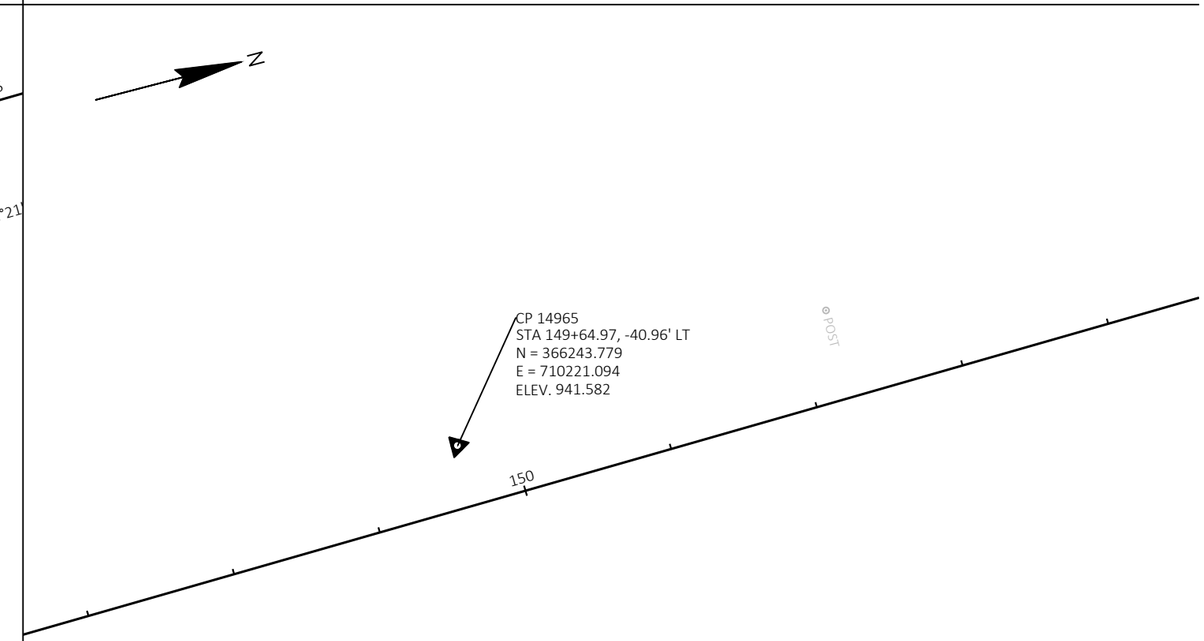
N
CP 14965
STA 149+64.97, -40.96' LT
N = 366243.779
E = 710221.094
ELEV. 941.582
POST
150

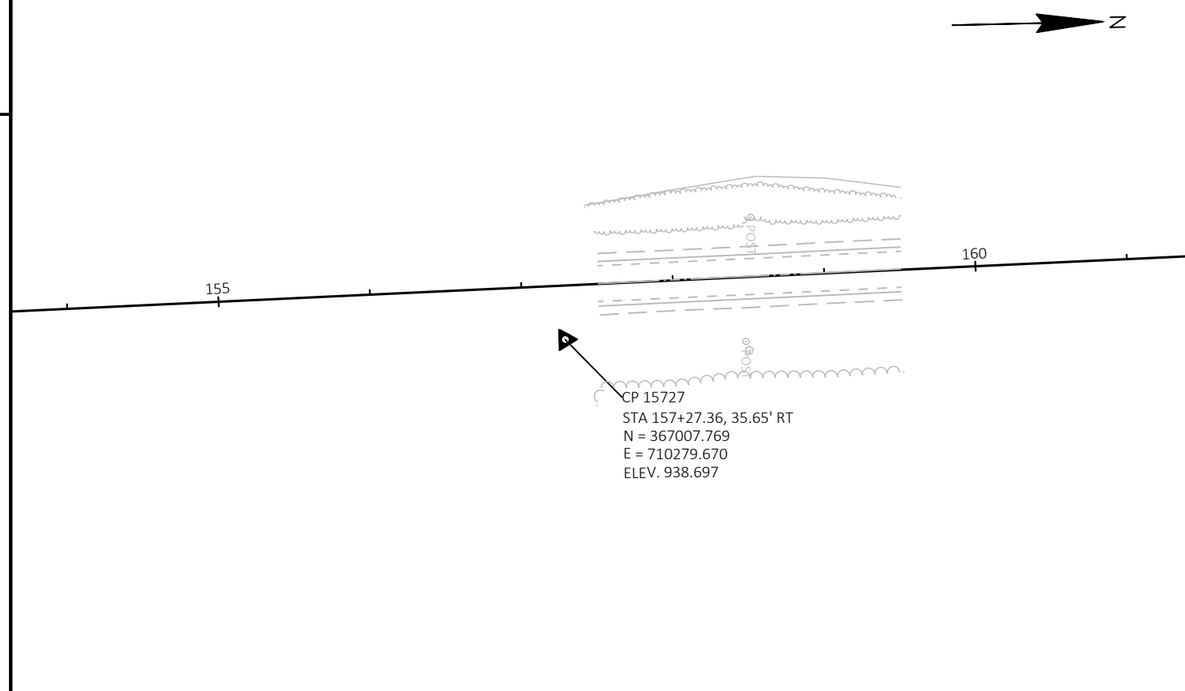
N
155
160
CP 15727
STA 157+27.36, 35.65' RT
N = 367007.769
E = 710279.670
ELEV. 938.697

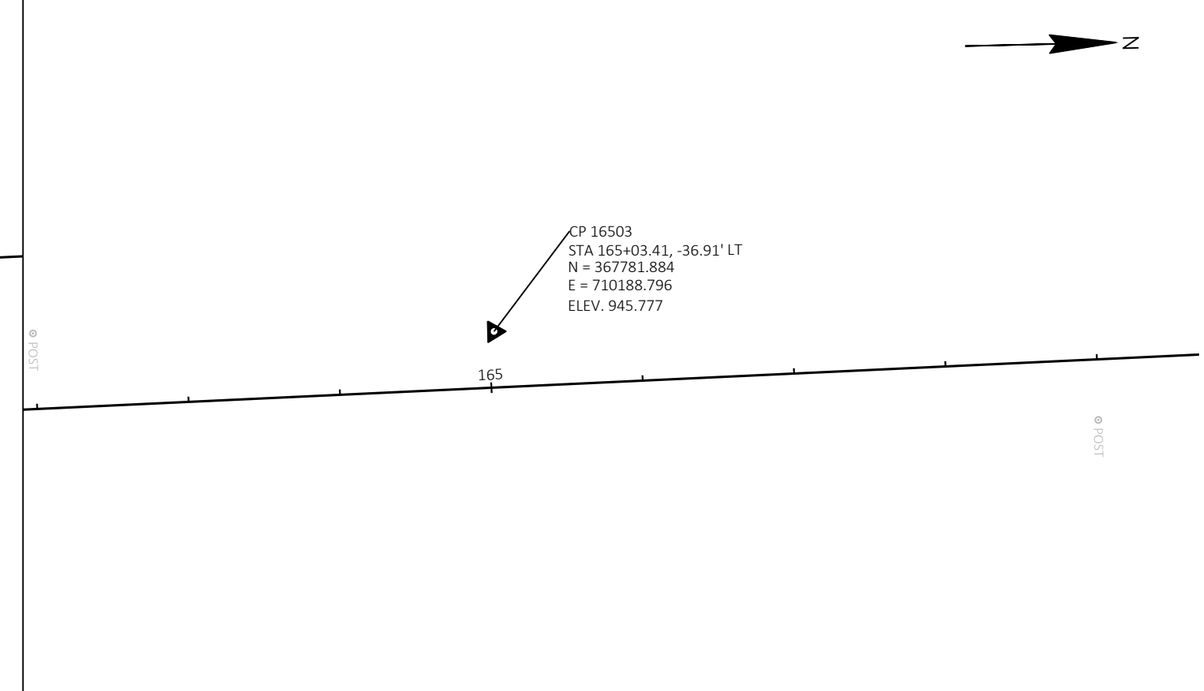
N
CP 16503
STA 165+03.41, -36.91' LT
N = 367781.884
E = 710188.796
ELEV. 945.777
165

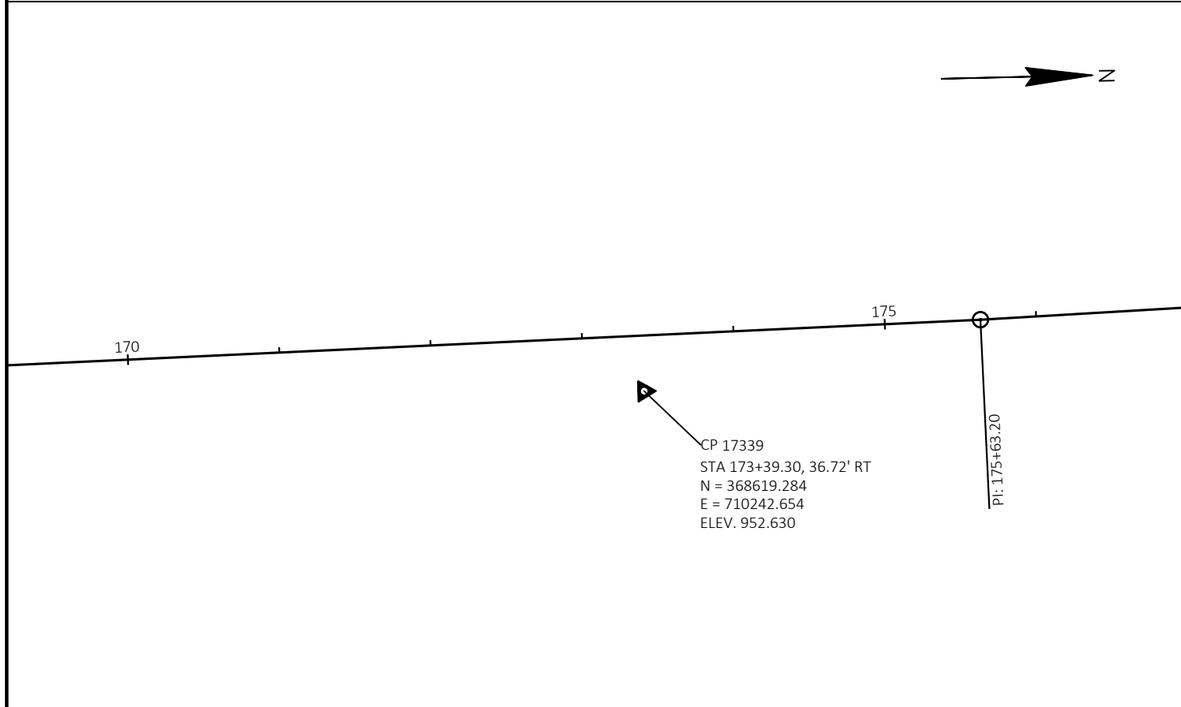
N
170
175
CP 17339
STA 173+39.30, 36.72' RT
N = 368619.284
E = 710242.654
ELEV. 952.630
PI: 175+63.20

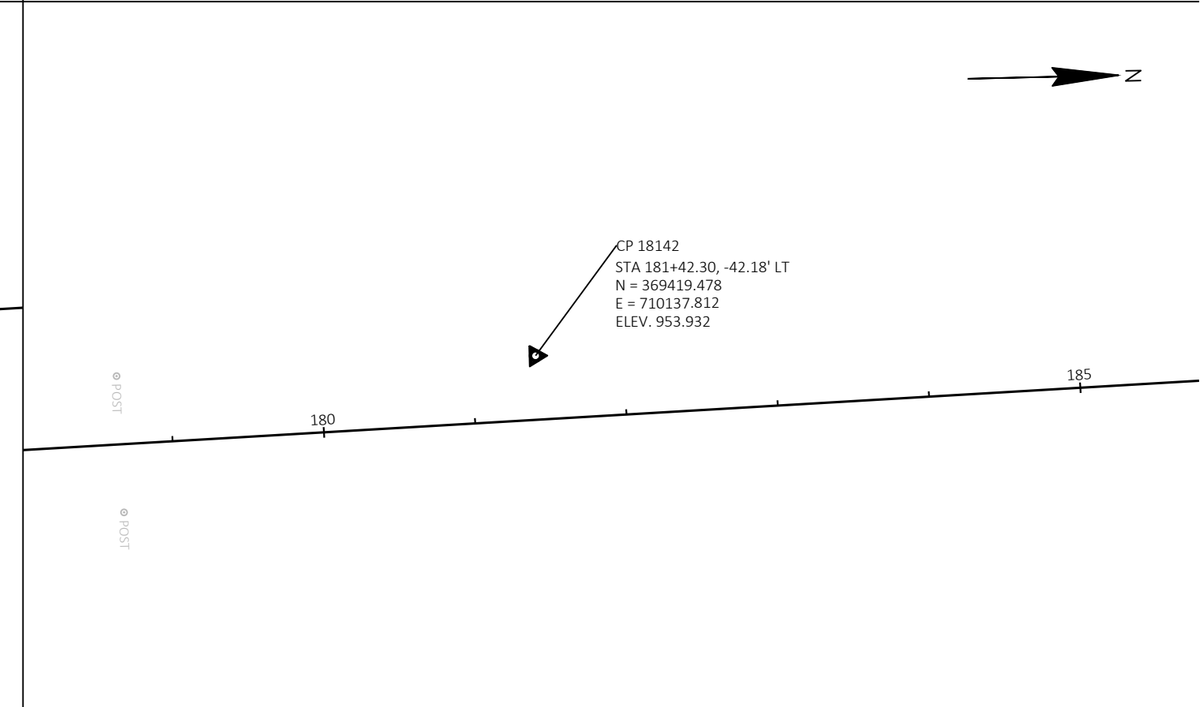
N
CP 18142
STA 181+42.30, -42.18' LT
N = 369419.478
E = 710137.812
ELEV. 953.932
180
185

2

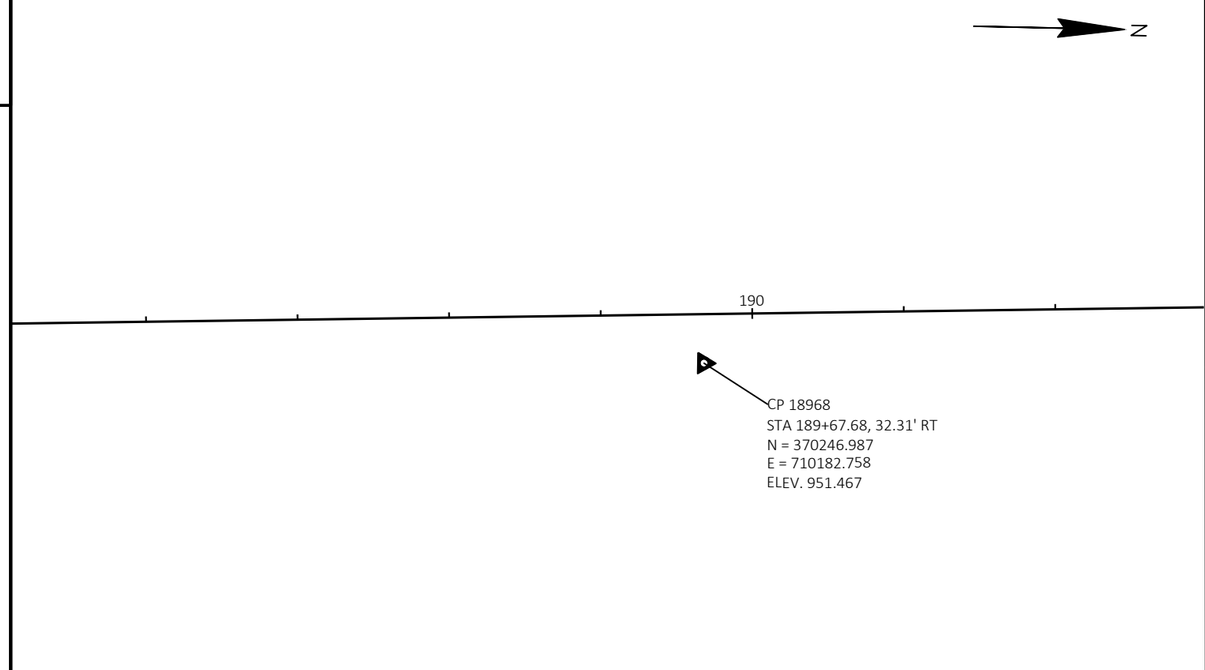

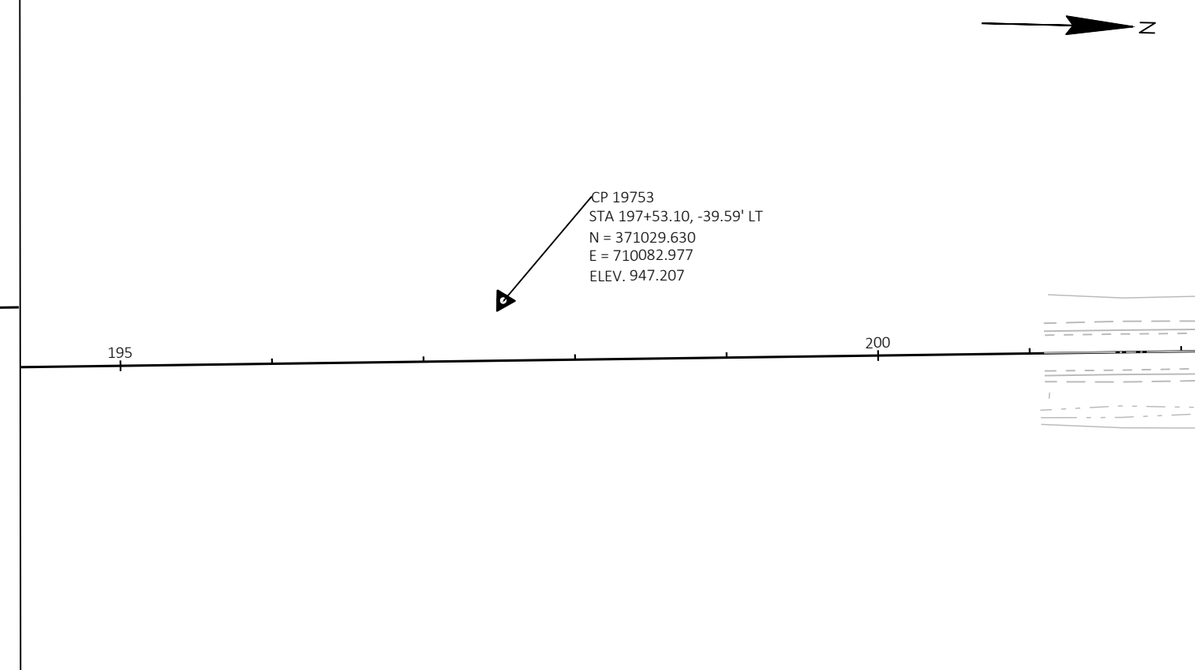

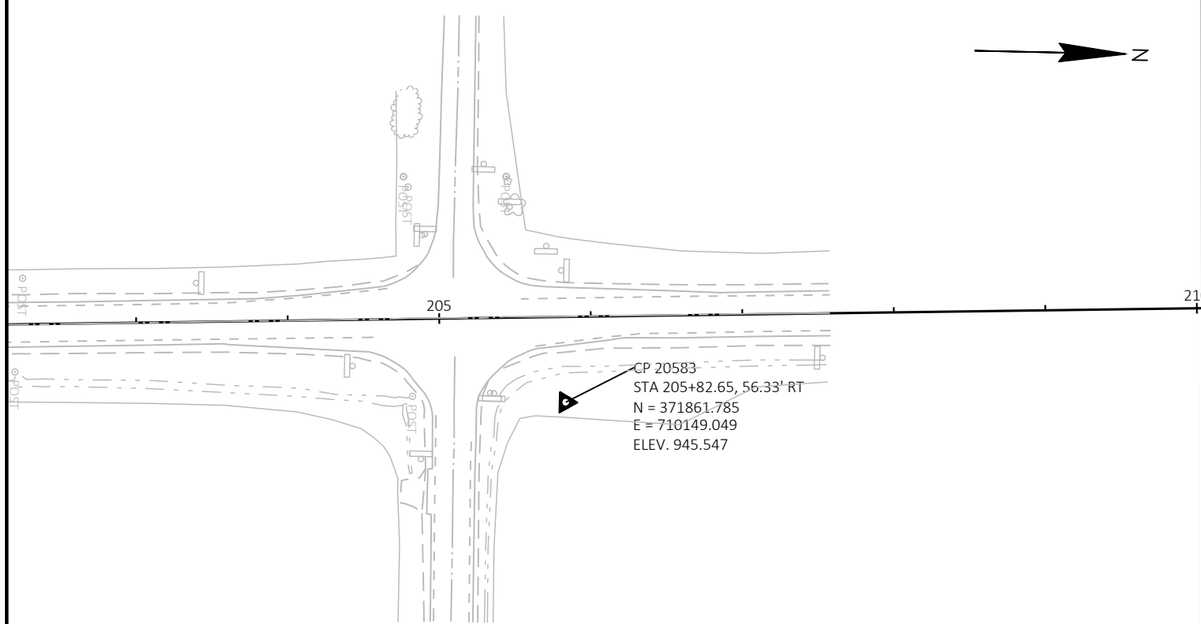

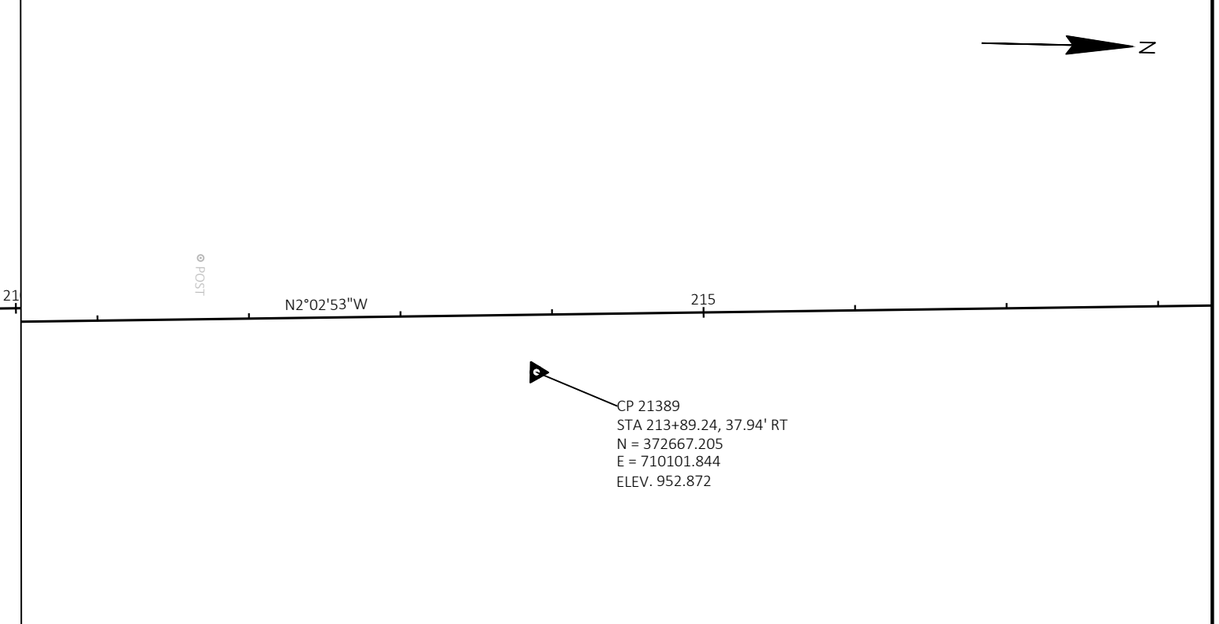

2

PROJECT NO: 3390-08-70	HWY: STH 89	COUNTY: WALWORTH	ALIGNMENT LAYOUT - SURVEY CONTROL	SHEET 106	E

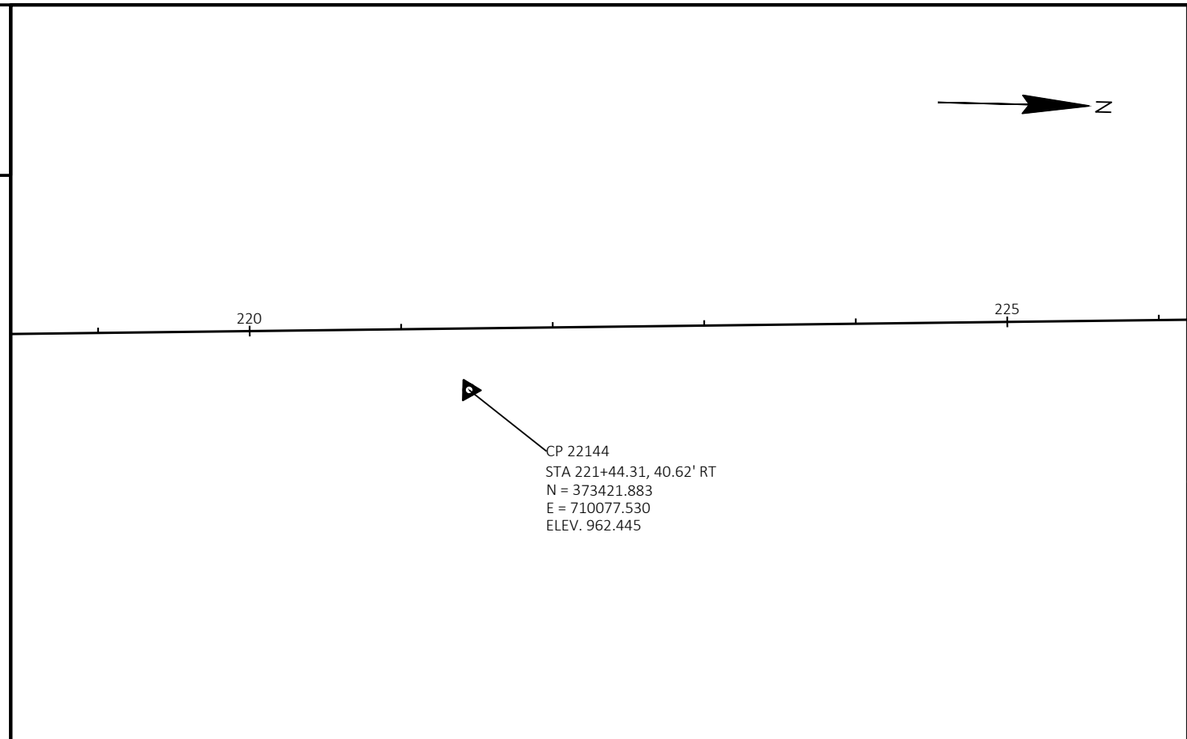
N
220
225
CP 22144
STA 221+44.31, 40.62' RT
N = 373421.883
E = 710077.530
ELEV. 962.445

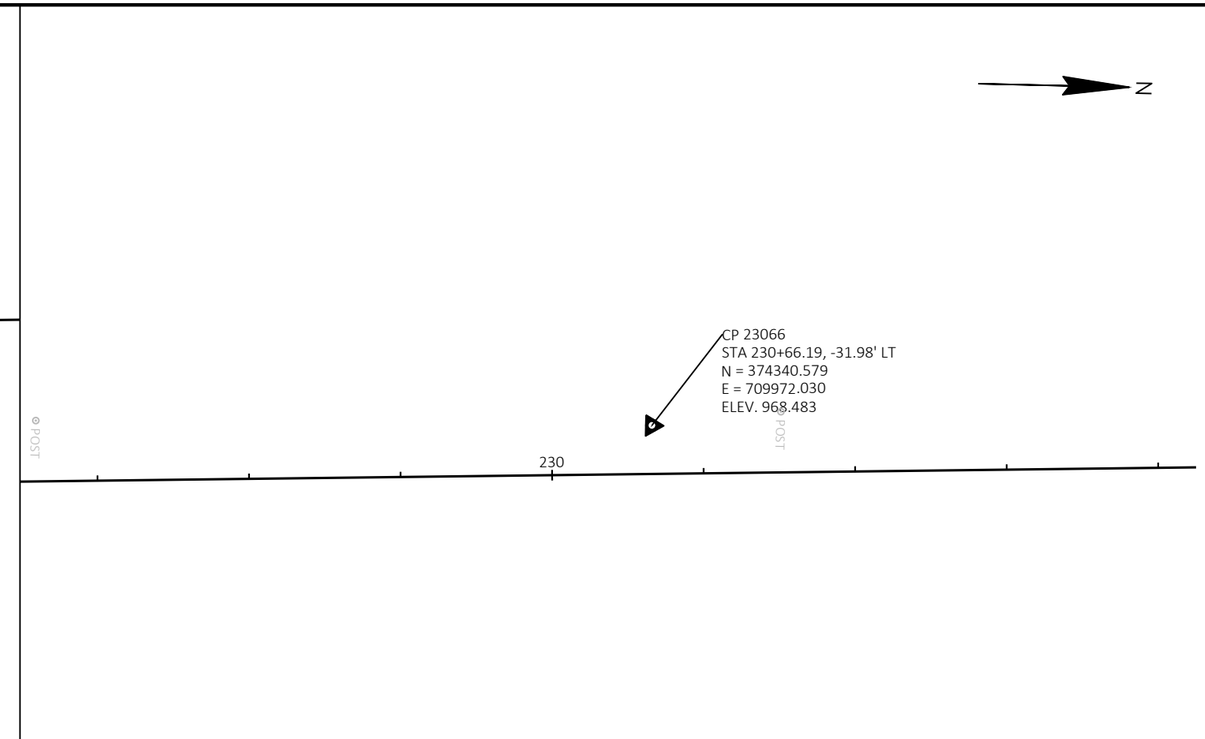
N
CP 23066
STA 230+66.19, -31.98' LT
N = 374340.579
E = 709972.030
ELEV. 968.483
230

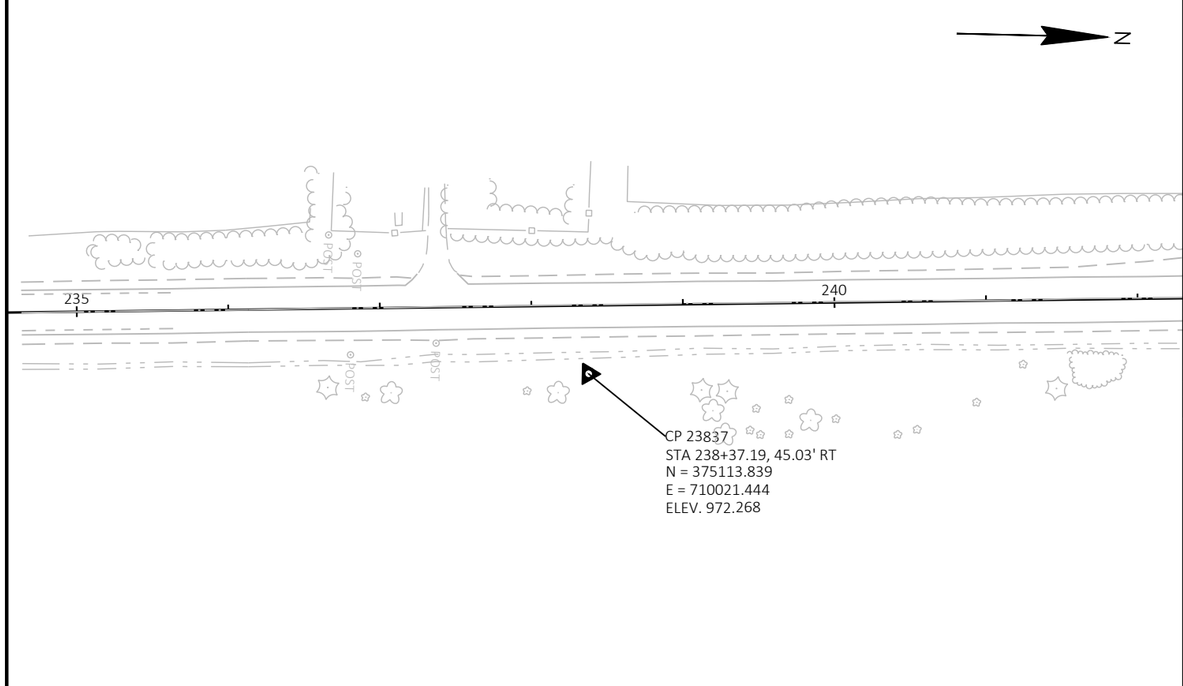
N
235
240
CP 23837
STA 238+37.19, 45.03' RT
N = 375113.839
E = 710021.444
ELEV. 972.268

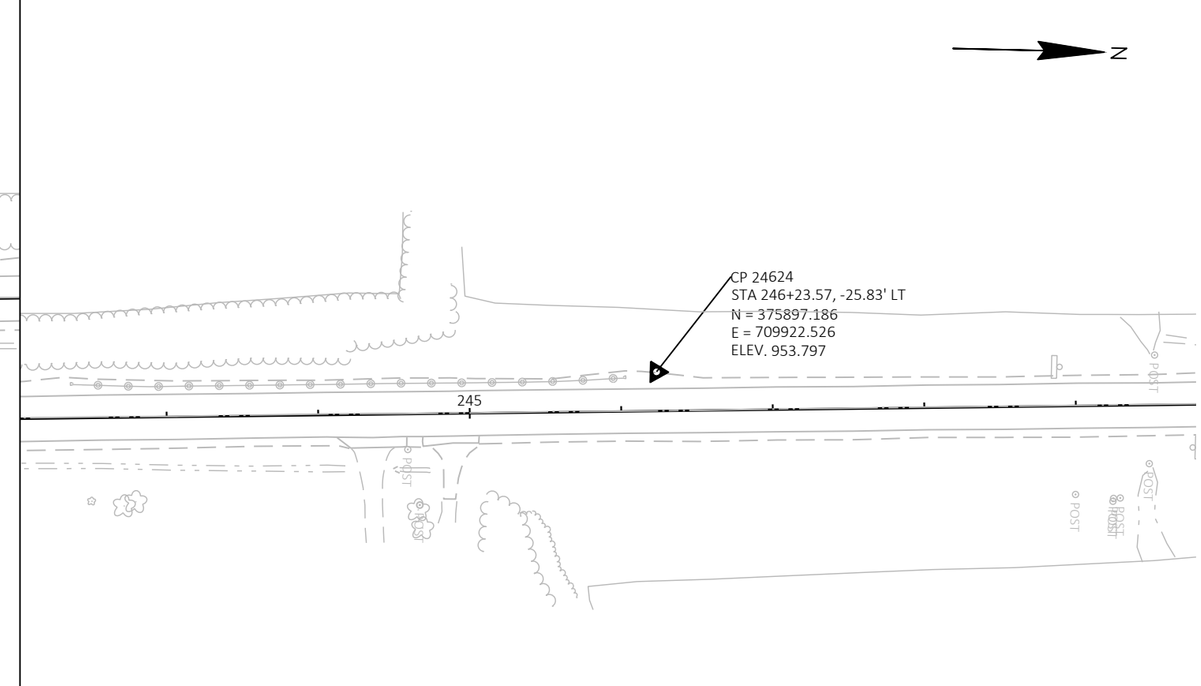
N
CP 24624
STA 246+23.57, -25.83' LT
N = 375897.186
E = 709922.526
ELEV. 953.797
245

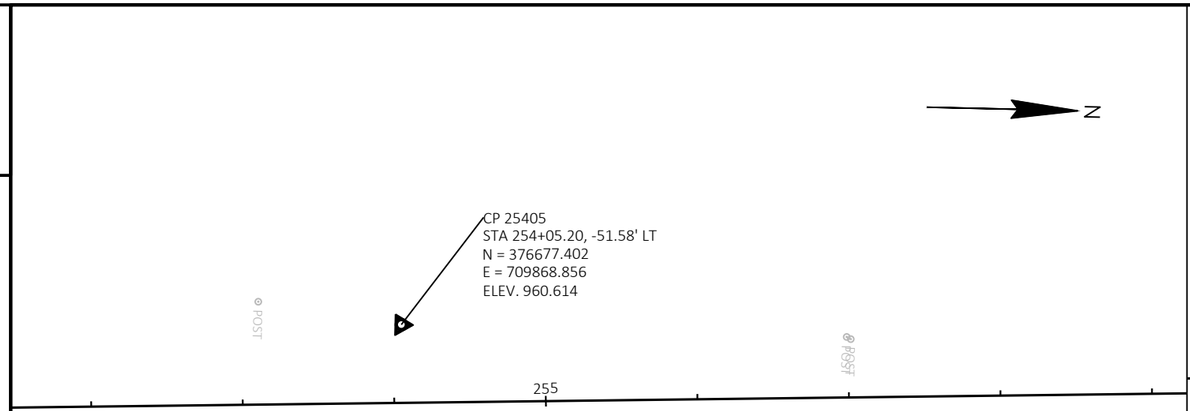
N
CP 25405
STA 254+05.20, -51.58' LT
N = 376677.402
E = 709868.856
ELEV. 960.614
255
POST

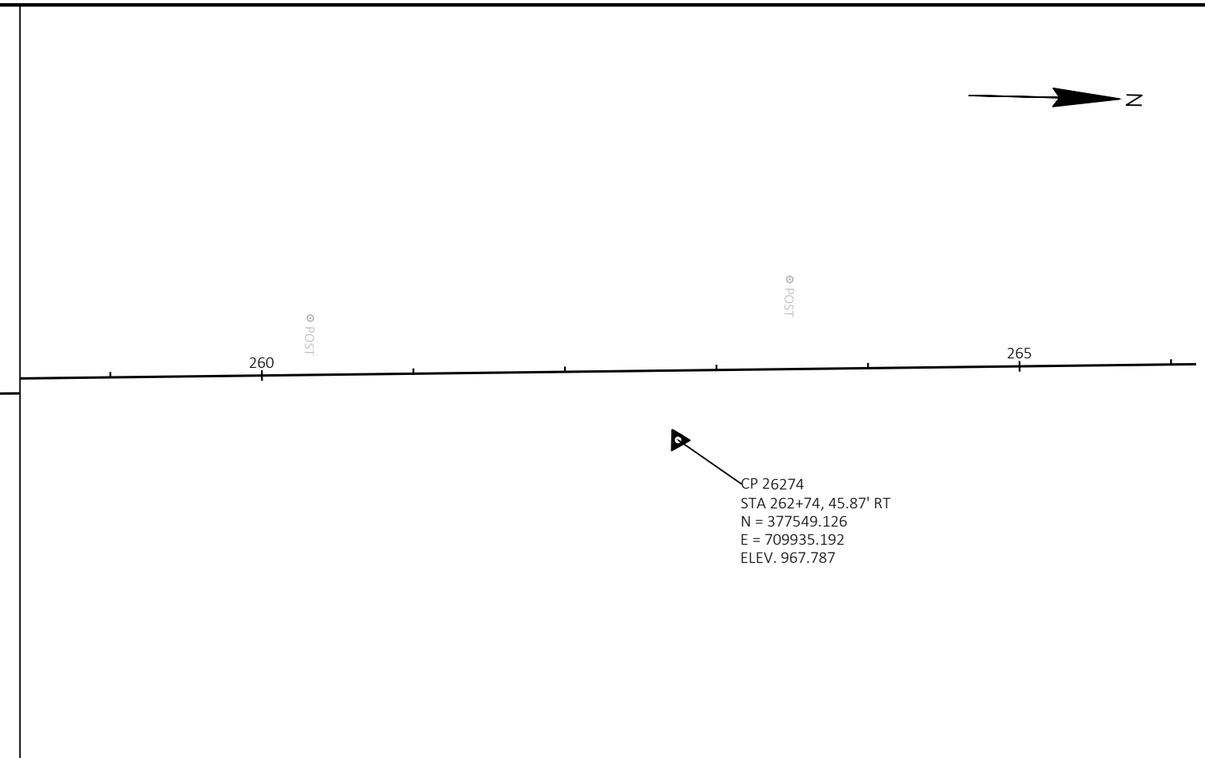
N
260
265
POST
CP 26274
STA 262+74, 45.87' RT
N = 377549.126
E = 709935.192
ELEV. 967.787

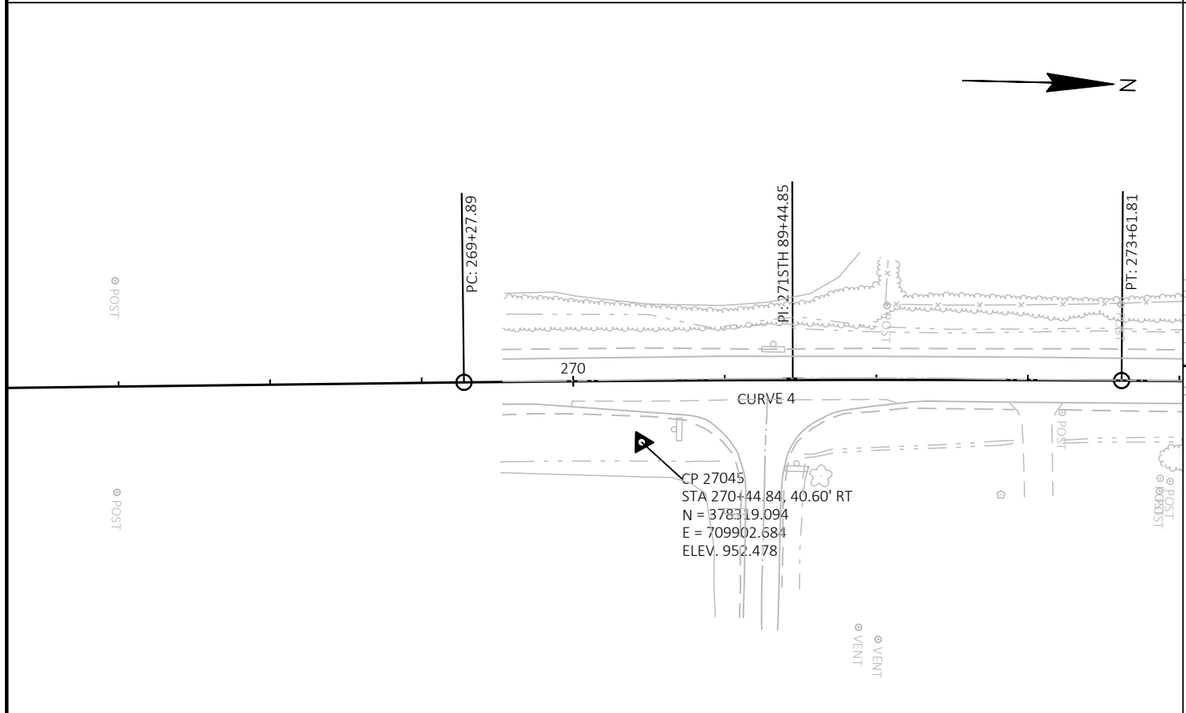
N
PC: 269+27.89
PI: 271STH 89+44.85
PT: 273+61.81
270
CURVE 4
POST
VENT
CP 27045
STA 270+44.84, 40.60' RT
N = 378319.094
E = 709902.684
ELEV. 952.478

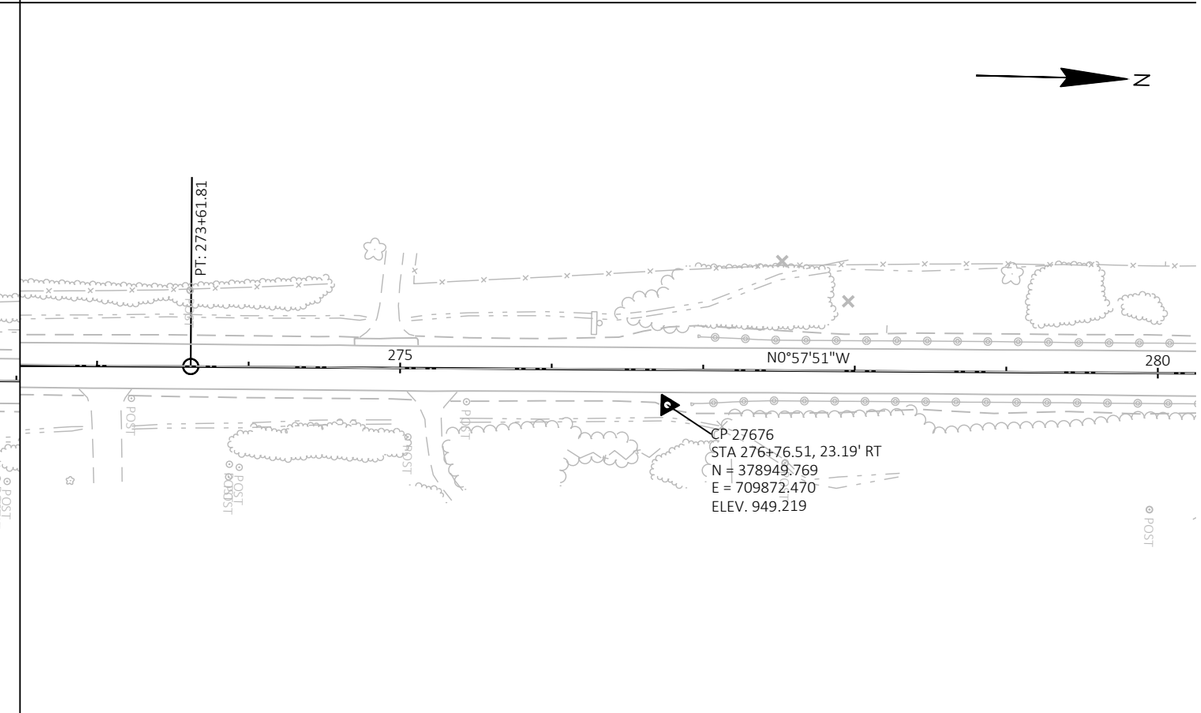
N
PT: 273+61.81
275
N0°57'51"W
280
POST
CP 27676
STA 276+76.51, 23.19' RT
N = 378949.769
E = 709872.470
ELEV. 949.219

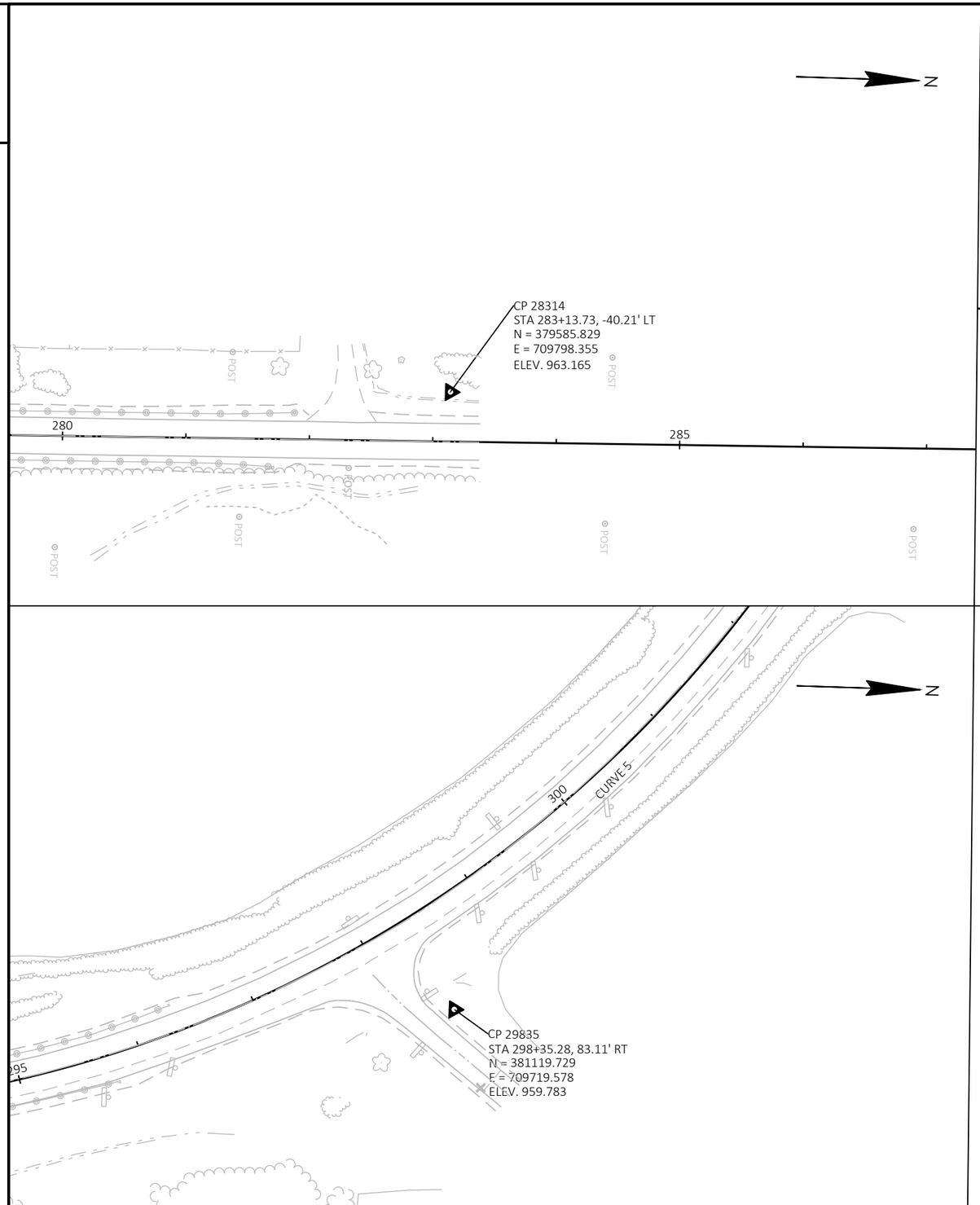

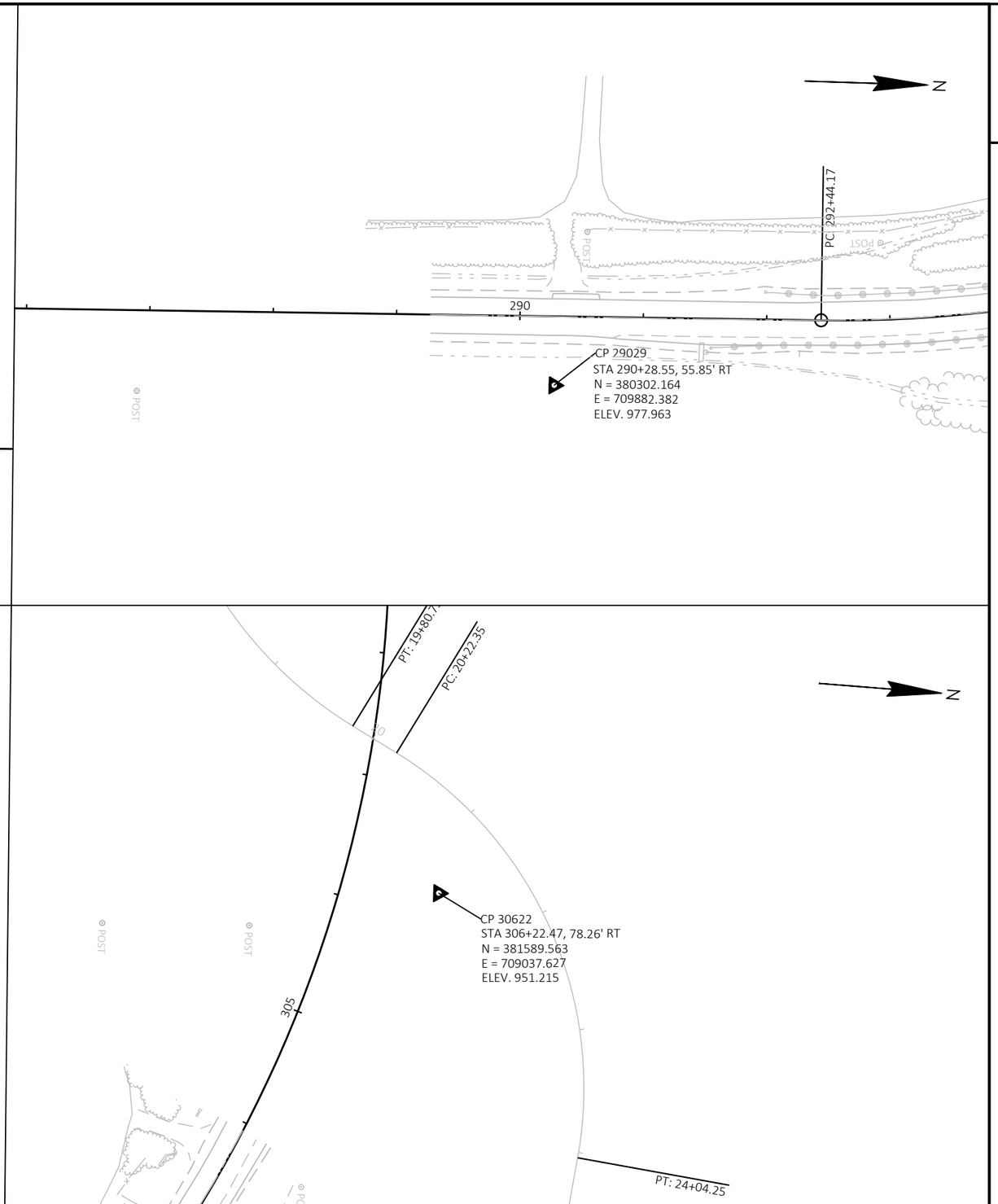

PROJECT NO: 3390-08-70	HWY: STH 89	COUNTY: WALWORTH	ALIGNMENT LAYOUT - SURVEY CONTROL	SHEET 109	E

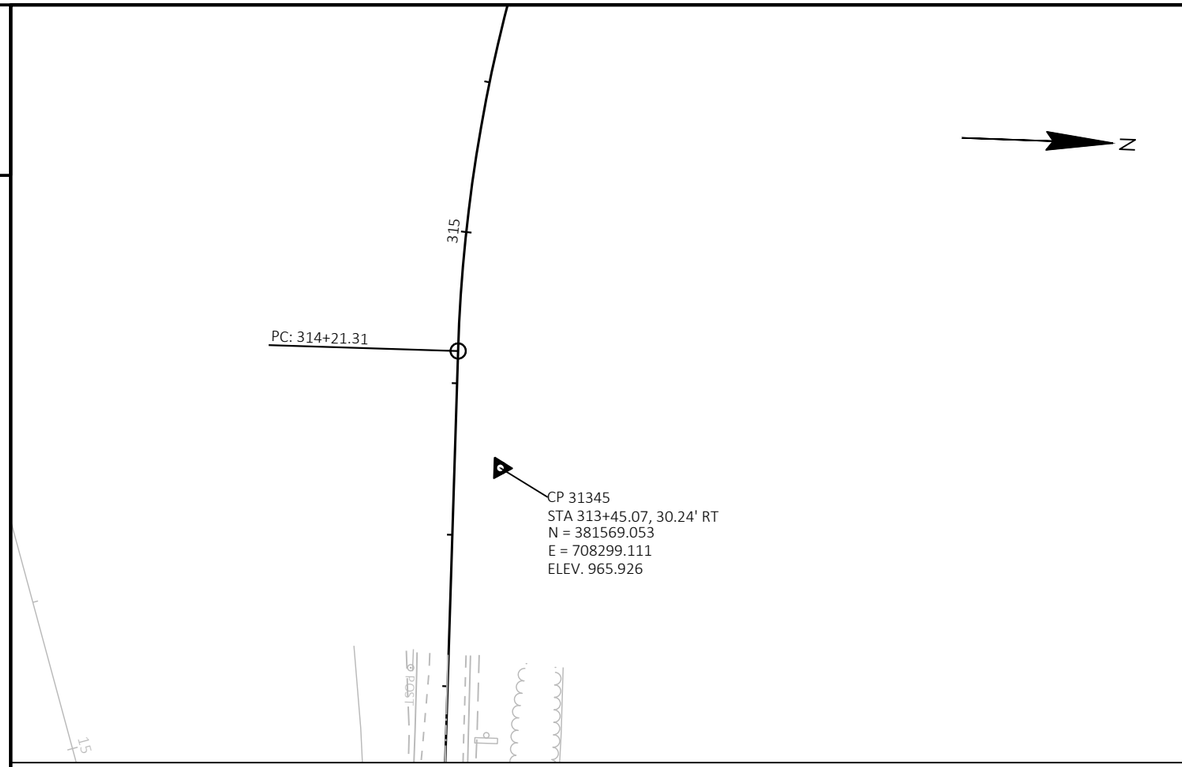

2

PROJECT NO: 3390-08-70	HWY: STH 89	COUNTY: WALWORTH	ALIGNMENT LAYOUT - SURVEY CONTROL	SHEET 110	E

Estimate Of Quantities

3390-08-70

Line	Item	Item Description	Unit	Total	Qty
0002	203.0100	Removing Small Pipe Culverts	EACH	4.000	4.000
0004	204.0115	Removing Asphaltic Surface Butt Joints	SY	427.000	427.000
0006	204.0125	Removing Asphaltic Surface Milling	TON	18,673.000	18,673.000
0008	204.0165	Removing Guardrail	LF	2,198.000	2,198.000
0010	204.9060.S	Removing (item description) 01. Partial Traffic Signal Removal (STH 11/14 & STH 89)	EACH	4.000	4.000
0012	213.0100	Finishing Roadway (project) 01. 3390-08-70	EACH	1.000	1.000
0014	305.0110	Base Aggregate Dense 3/4-Inch	TON	3,150.000	3,150.000
0016	305.0120	Base Aggregate Dense 1 1/4-Inch	TON	154.000	154.000
0018	305.0500	Shaping Shoulders	STA	476.000	476.000
0020	455.0605	Tack Coat	GAL	12,660.000	12,660.000
0022	460.0105.S	HMA Percent Within Limits (PWL) Test Strip Volumetrics	EACH	2.000	2.000
0024	460.5223	HMA Pavement 3 LT 58-28 S	TON	12,664.000	12,664.000
0026	460.5224	HMA Pavement 4 LT 58-28 S	TON	9,875.000	9,875.000
0028	465.0120	Asphaltic Surface Driveways and Field Entrances	TON	194.000	194.000
0030	465.0125	Asphaltic Surface Temporary	TON	50.000	50.000
0032	465.0560	Asphaltic Rumble Strips, Centerline	LF	22,825.000	22,825.000
0034	522.0136	Culvert Pipe Reinforced Concrete Class III 36-Inch	LF	72.000	72.000
0036	522.0424	Culvert Pipe Reinforced Concrete Class IV 24-Inch	LF	144.000	144.000
0038	522.0436	Culvert Pipe Reinforced Concrete Class IV 36-Inch	LF	120.000	120.000
0040	522.0442	Culvert Pipe Reinforced Concrete Class IV 42-Inch	LF	216.000	216.000
0042	522.1024	Apron Endwalls for Culvert Pipe Reinforced Concrete 24-Inch	EACH	6.000	6.000
0044	522.1036	Apron Endwalls for Culvert Pipe Reinforced Concrete 36-Inch	EACH	4.000	4.000
0046	522.1042	Apron Endwalls for Culvert Pipe Reinforced Concrete 42-Inch	EACH	6.000	6.000
0048	606.0200	Riprap Medium	CY	20.000	20.000
0050	614.0010	Barrier System Grading Shaping Finishing	EACH	8.000	8.000
0052	614.0397	Guardrail Mow Strip Emulsified Asphalt	SY	787.000	787.000
0054	614.2300	MGS Guardrail 3	LF	1,600.000	1,600.000
0056	614.2610	MGS Guardrail Terminal EAT	EACH	8.000	8.000
0058	618.0100	Maintenance and Repair of Haul Roads (project) 01. 3390-08-70	EACH	1.000	1.000
0060	619.1000	Mobilization	EACH	1.000	1.000
0062	625.0100	Topsoil	SY	250.000	250.000
0064	625.0500	Salvaged Topsoil	SY	989.000	989.000
0066	628.1504	Silt Fence	LF	3,935.000	3,935.000
0068	628.1520	Silt Fence Maintenance	LF	3,935.000	3,935.000
0070	628.1905	Mobilizations Erosion Control	EACH	1.000	1.000
0072	628.1910	Mobilizations Emergency Erosion Control	EACH	2.000	2.000
0074	628.2004	Erosion Mat Class I Type B	SY	989.000	989.000
0076	628.7555	Culvert Pipe Checks	EACH	44.000	44.000
0078	629.0210	Fertilizer Type B	CWT	2.000	2.000
0080	630.0175	Seeding Mixture No. 75	LB	20.000	20.000
0082	630.0500	Seed Water	MGAL	100.000	100.000
0084	633.5200	Markers Culvert End	EACH	8.000	8.000
0086	634.0618	Posts Wood 4x6-Inch x 18-FT	EACH	118.000	118.000
0088	634.0814	Posts Tubular Steel 2x2-Inch x 14-FT	EACH	5.000	5.000
0090	637.0620	Sign Flags Permanent Type II	EACH	4.000	4.000
0092	637.2210	Signs Type II Reflective H	SF	691.410	691.410
0094	637.2230	Signs Type II Reflective F	SF	279.100	279.100
0096	638.2102	Moving Signs Type II	EACH	7.000	7.000
0098	638.2602	Removing Signs Type II	EACH	115.000	115.000

Estimate Of Quantities

3390-08-70

Line	Item	Item Description	Unit	Total	Qty
0100	638.3000	Removing Small Sign Supports	EACH	121.000	121.000
0102	643.0300	Traffic Control Drums	DAY	5,000.000	5,000.000
0104	643.0420	Traffic Control Barricades Type III	DAY	4,006.000	4,006.000
0106	643.0705	Traffic Control Warning Lights Type A	DAY	7,052.000	7,052.000
0108	643.0715	Traffic Control Warning Lights Type C	DAY	5,000.000	5,000.000
0110	643.0900	Traffic Control Signs	DAY	20,196.000	20,196.000
0112	643.0920	Traffic Control Covering Signs Type II	EACH	5.000	5.000
0114	643.1050	Traffic Control Signs PCMS	DAY	14.000	14.000
0116	643.5000	Traffic Control	EACH	1.000	1.000
0118	645.0120	Geotextile Type HR	SY	15.000	15.000
0120	646.1020	Marking Line Epoxy 4-Inch	LF	620.000	620.000
0122	646.1040	Marking Line Grooved Wet Ref Epoxy 4-Inch	LF	563.000	563.000
0124	646.2040	Marking Line Grooved Wet Ref Epoxy 6-Inch	LF	79,141.000	79,141.000
0126	646.4040	Marking Line Grooved Wet Ref Epoxy 10-Inch	LF	84.000	84.000
0128	646.6120	Marking Stop Line Epoxy 18-Inch	LF	289.000	289.000
0130	648.0100	Locating No-Passing Zones	MI	4.000	4.000
0132	650.6000	Construction Staking Pipe Culverts	EACH	8.000	8.000
0134	650.8000	Construction Staking Resurfacing Reference	LF	24,502.000	24,502.000
0136	650.9911	Construction Staking Supplemental Control (project) 01. 3390-08-70	EACH	1.000	1.000
0138	650.9920	Construction Staking Slope Stakes	LF	3,100.000	3,100.000
0140	653.0905	Removing Pull Boxes	EACH	6.000	6.000
0142	680.0100	Public Land Survey Monument Verify and Reset	EACH	8.000	8.000
0144	690.0150	Sawing Asphalt	LF	240.000	240.000
0146	740.0440	Incentive IRI Ride	DOL	18,564.000	18,564.000
0148	SPV.0055	Special .01 HMA Pavement PWL QMP, Core Only Project; Incentive Density PWL HMA Pavement	DOL	14,430.000	14,430.000
0150	SPV.0055	Special .02 HMA Pavement PWL QMP, Core Only Project; Incentive Air Voids HMA Pavement	DOL	31,539.000	31,539.000
0152	SPV.0055	Special .03 HMA Pavement Longitudinal Joint Density, Core Only Project; Incentive Densit	DOL	4,910.000	4,910.000
0154	SPV.0060	Special .01 Stop Sign Traffic Flashing Beacon System, Solar STH 89 SB at STH 11	EACH	1.000	1.000
0156	SPV.0060	Special .02 Stop Sign Traffic Flashing Beacon System, Solar USH 14 NB at STH 89	EACH	1.000	1.000
0158	SPV.0060	Special .03 Stop Sign Traffic Flashing Beacon System, Solar STH 11 WB at STH 89	EACH	1.000	1.000
0160	SPV.0060	Special .04 Stop Sign Traffic Flashing Beacon System, Solar STH 11 EB at STH 89	EACH	1.000	1.000
0162	SPV.0060	Special .05 Field Office Type T	EACH	1.000	1.000
0164	SPV.0195	Special .01 Asphaltic Repair	TON	167.000	167.000

REMOVALS

STATION	TO	STATION	OFFSET	LOCATION	203.0100 REMOVING SMALL PIPE CULVERTS EACH	204.0115 REMOVING ASPHALTIC SURFACE BUTT JOINTS SY	204.0125 REMOVING ASPHALTIC SURFACE MILLING TON	204.0165 REMOVING GUARDRAIL LF
64+19	-	64+21	-	STH 89	-	11	-	-
64+19	-	71+00	-		-	-	943	-
69+45	-	70+10	RT		-	12	-	-
71+00	-	126+50	-		-	-	3,935	-
82+78	-	-	-		1	-	-	-
125+70	-	125+94	RT		-	27	-	-
125+75	-	125+99	LT		-	27	-	-
126+50	-	205+68	-		-	-	5,733	-
158+50	-	-	-		1	-	-	-
204+93	-	205+24	RT		-	33	-	-
204+99	-	205+24	LT		-	27	-	-
205+68	-	272+25	-		-	-	4,669	-
242+37	-	246+03	LT		-	-	-	367
271+11	-	271+38	RT		-	28	-	-
272+25	-	309+27	-		-	-	3,393	-
276+92	-	281+72	RT		-	-	-	480
276+96	-	281+89	LT		-	-	-	492
291+54	-	295+78	RT		-	-	-	430
291+98	-	296+35	LT		-	-	-	429
294+45	-	-	-		1	-	-	-
298+03	-	298+27	RT		-	27	-	-
302+95	-	-	-		1	-	-	-
306+51	-	306+83	RT		-	40	-	-
308+09	-	308+37	LT		-	30	-	-
309+06	-	309+21	-		-	65	-	-
				UNDISTRIBUTED - TEMPORARY RAMPS	-	100	-	-
				PROJECT TOTALS	4	427	18,673	2,198

ALL ITEMS CATEGORY 0010 THIS SHEET

3

3

BASE AGGREGATE DENSE

STATION	TO	STATION	LOCATION	305.0110 BASE AGGREGATE DENSE 3/4-INCH TON	305.0500 SHAPING SHOULDERS STA
71+00	-	126+50	STH 89	-	111
71+00	-	76+00		65	-
76+00	-	95+00		246	-
95+00	-	106+00		143	-
106+00	-	155+00		635	-
126+50	-	205+68		-	158
155+00	-	166+00		143	-
166+00	-	243+00		998	-
205+68	-	272+25		-	133
243+00	-	309+21		858	-
272+25	-	309+21		-	74
-	-	-	R AND D TOWN LINE ROAD	21	-
-	-	-	SHADEL ROAD	10	-
-	-	-	CTH M	10	-
-	-	-	KILKENNY ROAD	10	-
-	-	-	TOWN HALL ROAD	10	-
			PROJECT TOTALS	3,150	476

ALL ITEMS CATEGORY 0010 THIS SHEET

3

HMA ITEMS

STATION	TO	STATION	LOCATION	455.0605 TACK COAT GAL	460.5223 HMA PAVEMENT 3 LT 58-28 S TON	460.5224 HMA PAVEMENT 4 LT 58-28 S TON	465.0125 ASPHALTIC SURFACE TEMPORARY TON	465.0560 ASPHALTIC RUMBLE STRIPS, CENTERLINE LF	740.0440 INCENTIVE IRI RIDE DOL	SPV.0195.01 SPECIAL (01. ASPHALTIC REPAIR) TON
64+19	-	71+00	STH 89	639	-	1,010	-	-	-	-
71+00	-	126+50		2,668	2,811	1,968	-	-	-	-
77+00	-	305+25		-	-	-	-	22,825	-	-
126+50	-	205+68		3,887	4,095	2,866	-	-	-	-
205+68	-	272+25		3,165	3,335	2,334	-	-	-	-
272+25	-	309+21		2,300	2,423	1,696	-	-	-	-
			UNDISTRIBUTED	-	-	-	50	-	18,564	167
			PROJECT TOTALS	12,660	12,664	9,875	50	22,825	18,564	167

ALL ITEMS CATEGORY 0010 THIS SHEET

3

ASPHALTIC SURFACE DRIVEWAYS AND FIELD ENTRANCES

STATION	OFFSET	465.0120 ASPHALTIC SURFACE DRIVEWAYS AND FIELD ENTRANCES TON
72+72	LT	3
73+36	RT	4
74+15	RT	4
76+44	LT	2
76+68	RT	5
80+00	RT	3
80+80	RT	6
96+79	RT	5
96+79	LT	3
107+51	LT	3
111+61	LT	4
111+68	RT	4
112+62	LT	4
139+18	RT	4
161+69	LT	3
163+40	LT	4
178+31	RT	4
178+97	RT	4
193+25	RT	4
198+21	RT	4

ASPHALTIC SURFACE DRIVEWAYS AND FIELD ENTRANCES, CONT'D

STATION	OFFSET	465.0120 ASPHALTIC SURFACE DRIVEWAYS AND FIELD ENTRANCES TON
199+66	LT	4
213+86	LT	5
218+24	RT	8
224+76	LT	5
228+91	RT	5
230+59	RT	3
231+82	LT	4
233+25	RT	4
237+39	LT	4
244+37	RT	4
244+88	RT	4
253+88	RT	4
254+93	RT	4
257+69	LT	4
258+96	LT	3
261+62	LT	4
268+08	LT	6
273+06	RT	3
274+90	LT	7
275+22	RT	4
282+26	LT	8
286+32	RT	5
287+30	RT	5
290+45	LT	4
303+69	LT	5
304+42	LT	3
	PROJECT TOTAL	194

ALL ITEMS CATEGORY 0010 THIS SHEET

3

CULVERT ITEMS

STATION	OFFSET	TO	STATION	OFFSET	LOCATION	305.0120 BASE AGGREGATE DENSE 1 1/4-INCH TON	522.0136 CULVERT PIPE REINFORCED CONCRETE CLASS III 36-INCH LF	522.0424 CULVERT PIPE REINFORCED CONCRETE CLASS IV 24-INCH LF	522.0436 CULVERT PIPE REINFORCED CONCRETE CLASS IV 36-INCH LF	522.0442 CULVERT PIPE REINFORCED CONCRETE CLASS IV 42-INCH LF	522.1024 APRON ENDWALLS FOR CULVERT PIPE REINFORCED CONCRETE 24-INCH EACH	522.1036 APRON ENDWALLS FOR CULVERT PIPE REINFORCED CONCRETE 36-INCH EACH	522.1042 APRON ENDWALLS FOR CULVERT PIPE REINFORCED CONCRETE 42-INCH EACH	633.5200 MARKERS CULVERT END EACH	690.0150 SAWING ASPHALT LF
82+73	26.2' LT	-	82+72	21.8' RT	STH 89	-	-	48	-	-	2	-	-	2	-
72+78	26.2' LT	-	82+78	21.8' RT		49	-	48	-	-	2	-	-	-	60
82+84	26.2' LT	-	82+83	21.8' RT		-	-	48	-	-	2	-	-	-	-
						-	-	-	-	-	-	-	-	-	-
158+42	34.9' LT	-	158+42	37.1' RT		-	-	-	-	72	-	-	2	2	-
158+50	34.9' LT	-	158+50	37.1' RT		60	-	-	-	72	-	-	2	-	60
158+59	34.9' LT	-	158+59	37.1' RT		-	-	-	-	72	-	-	2	-	-
						-	-	-	-	-	-	-	-	-	-
294+45	61.8' LT	-	294+46	58.2' RT		23	-	-	120	-	-	2	-	2	60
302+95	31.4' LT	-	302+95	40.6' RT		22	72	-	-	-	-	2	-	2	60
					PROJECT TOTALS	154	72	144	120	216	6	4	6	8	240

EROSION CONTROL / RESTORATION

STATION	TO	STATION	LOCATION	606.0200 RIPRAP MEDIUM CY	625.0100 TOPSOIL SY	625.0500 SALVAGED TOPSOIL SY	628.1504 SILT FENCE LF	628.1520 SILT FENCE MAINTENANCE LF	628.1905 MOBILIZATIONS EROSION CONTROL EACH	628.1910 MOBILIZATIONS EMERGENCY EROSION CONTROL EACH	628.2004 EROSION MAT CLASS I TYPE B SY	628.7555 CULVERT PIPE CHECKS EACH	629.0210 FERTILIZER TYPE B CWT	630.0130 SEEDING MIXTURE NO. 30 LB	630.0500 SEED WATER MGAL	645.0120 GEOTEXTILE TYPE HR SY
64+19	-	309+21	STH 89	20	250	989	3,935	3,935	1	2	989	44	2	20	100	15
			PROJECT TOTALS	20	250	989	3,935	3,935	1	2	989	44	2	20	100	15

ALL ITEMS CATEGORY 0010 THIS SHEET

3

BEAMGUARD

STATION	TO	STATION	OFFSET	LOCATION	614.0010 BARRIER SYSTEM GRADING SHAPING FINISHING EACH	614.0397 GUARDRAIL MOW STRIP EMULSIFIED ASPHALT SY	614.2300 MGS GUARDRAIL 3 LF	614.2610 MGS GUARDRAIL TERMINAL EAT EACH
276+21	-	282+02	RT	STH 89	2	226	475	2
276+48	-	281+04	LT		2	177	350	2
291+42	-	296+48	RT		2	197	400	2
291+94	-	296+75	LT		2	187	375	2
				PROJECT TOTALS	8	787	1,600	8

BARRIER SYSTEM GRADING SHAPING FINISHING, ITEM 614.0010 - ITEM DETAIL

LOCATION STATION	TO	STATION	OFFSET	*CUT CY	*FILL CY	*BURROW CY	*Salvage Topsoil SY	*FERTLIZER CWT	*SEEDING MIXTURE NO. 30 LB	*EROSION MAT CLASS I TYPE B SY
241+10	-	245+10	LT/RT	60	32	0	760	1		760
276+21	-	282+02	LT/RT	5	200	195	2709	1		2709
291+42	-	296+48	LT/RT	56	170	114	2675	1		2675
			PROJECT TOTAI	61	370	309	5384	3	0	5384

*ITEMS AND QUANTITIES LISTED FOR BID INFORMATIONONLY

ALL ITEMS CATEGORY 0010 THIS SHEET

3

TRAFFIC CONTROL

WORK	FOR INFORMATION ONLY DAYS	643.0300 TRAFFIC CONTROL DRUMS DAY	643.0420 TRAFFIC CONTROL BARRICADES TYPE III * EACH	643.0420 DAY	643.0705 TRAFFIC CONTROL WARNING LIGHTS TYPE A * EACH	643.0705 DAY	643.0715 TRAFFIC CONTROL WARNING LIGHTS TYPE C * EACH	643.0715 DAY	643.0900 TRAFFIC CONTROL SIGNS * EACH	643.0900 DAY	643.1050 TRAFFIC CONTROL SIGNS PCMS * EACH	643.1050 DAY	643.5000 TRAFFIC CONTROL EACH	648.0100 LOCATING NO-PASSING ZONES MI
STH 89		-	74	4,006	148	7,052	-	-	54	5,346	2	14	1	-
DETOUR	120	-	-	-	-	-	-	-	150	14,850	-	-	-	-
UNDISTRIBUTED	100	5,000	-	-	-	-	-	5,000	-	-	-	-	-	4
	PROJECT TOTALS	5,000		4,006		7,052		5,000		20,196		14	1	4

FINISHING ROADWAY

PROJECT	213.0100.01 FINISHING ROADWAY (PROJECT) (01. 3390-08-70) EACH
3390-08-70	1
PROJECT TOTAL	1

MOBILIZATION

PROJECT	619.1000 MOBILIZATION EACH
3390-08-70	1
PROJECT TOTAL	1

643.092

TRAFFIC CONTROL COVERING SIGNS TYPE II

LOCATION	EACH	NUMBER OF CYCLES	NUMBER OF SIGNS
DETOUR	5	1	5
PROJECT TOTALS	5		

ALL ITEMS CATEGORY 0010 THIS SHEET

3

PAVEMENT MARKING

STATION	TO	STATION	LOCATION	646.1020 MARKING LINE EPOXY 4-INCH WHITE LF	646.1020 MARKING LINE EPOXY 4-INCH YELLOW LF	646.1040 MARKING LINE GROOVED WET REF EPOXY 4-INCH WHITE LF	646.1040 MARKING LINE GROOVED WET REF EPOXY 4-INCH YELLOW LF	646.2040 MARKING LINE GROOVED WET REF EPOXY 6-INCH WHITE LF	646.2040 MARKING LINE GROOVED WET REF EPOXY 6-INCH YELLOW LF	646.4040 MARKING LINE GROOVED WET REF EPOXY 10-INCH LF	646.6120 MARKING STOP LINE EPOXY 18-INCH LF
64+19	-	125+34	STH 89	-	-	-	-	11,967	7,384	-	-
125+34	-	204+60		-	-'	-	-	15,653	6,337	-	-
204+60	-	270+77		-	-	-	-	13,036	8,303	-	-
270+77	-	297+43		-	-	-	-	5,232	4,225	-	-
297+43	-	309+21		-	-	-	-	1,981	3,871	-	-
-	-	-	STH 11	-	-	-	-	517	635	84	101
-	-	-	R AND D TOWNLINE RD	-	208	-	-	-	-	-	45
-	-	-	SHADEL RD	-	198	-	-	-	-	-	48
-	-	-	KILKENNY RD	-	80	-	-	-	-	-	22
-	-	-	TOWN HALL RD	-	134	-	-	-	-	-	29
-	-	-	CTH A	-	-	181	382	-	-	-	44
			SUBTOTALS	-	620	181	382	48,386	30,755	-	-
			PROJECT TOTALS	620		563		79,141		84	289

ALL ITEMS CATEGORY 0010 THIS SHEET

3

3

CONSTRUCTION STAKING

STATION	TO	STATION	LOCATION	650.6000 CONSTRUCTION STAKING PIPE CULVERTS EACH	650.8000 CONSTRUCTION STAKING RESURFACING REFERENCE LF	650.9911.01 CONSTRUCTION STAKING SUPPLEMENTAL CONTROL (3390-08-00) (01. STH 89) EACH	650.9920 CONSTRUCTION STAKING SLOPE STAKES LF
64+19	-	309+21	STH 89	8	24,502	1	3,100
			PROJECT TOTAL	8	24,502	1	3,100

PUBLIC LAND SURVEY MONUMENT VERIFY AND RESET

STATION	OFFSET	680.0100 PUBLIC LAND REFERENCE MONUMENT VERIFY AND RESET EACH
125+82	18' RT	1
125+83	1' RT	1
152+24	1' RT	1
178+66	4' RT	1
205+08	2' RT	1
231+50	3' RT	1
257+96	20' RT	1
284+42	12' RT	1
	PROJECT TOTAL	8

FIELD OFFICE

LOCATION	SPV.0060.05 SPECIAL (05. FIELD OFFICE TYPE T) EACH
3390-08-70	1
PROJECT TOTAL	1

ALL ITEMS CATEGORY 0010 THIS SHEET

3

PWL MIXTURE TABLE

DESCRIPTION	STATION	MIX	UNDERLYING SURFACE	BID ITEMS	TONS	THICKNESS	QMP TO USE	
							MIX ACCEPTANCE	DENSITY ACCEPTANCE
12' LANE	64+19 TO 71+00	3LT 58-28S	MILLED EXISTING HMA SURFACE	HMA PAVEMENT 3LT 58-28S	188	1.75	PWL INCENTIVE AIR VOIDS HMA PAVEMENT (CORE ONLY PROJECT) SPV.0055.02	INCENTIVE DENSITY PWL HMA PAVEMENT (CORE ONLY PROJECT) SPV.0055.01
12' LANE	64+19 TO 71+01	4LT 58-28S	3LT 58-28S	HMA PAVEMENT 4LT 58-28S	188	1.75	PWL INCENTIVE AIR VOIDS HMA PAVEMENT (CORE ONLY PROJECT) SPV.0055.02	INCENTIVE DENSITY PWL HMA PAVEMENT (CORE ONLY PROJECT) SPV.0055.01
8' SHOULDER	64+19 TO 71+00	3LT 58-28S	MILLED EXISTING HMA SURFACE	HMA PAVEMENT 3LT 58-28S	32	1.75	PWL INCENTIVE AIR VOIDS HMA PAVEMENT (CORE ONLY PROJECT) SPV.0055.02	ACCEPTANCE TESTING BY THE DEPARTMENT; NOT ELIGIBLE FOR INCENTIVE
8' SHOULDER	64+19 TO 71+01	4LT 58-28S	3LT 58-28S	HMA PAVEMENT 4LT 58-28S	32	1.75	PWL INCENTIVE AIR VOIDS HMA PAVEMENT (CORE ONLY PROJECT) SPV.0055.02	ACCEPTANCE TESTING BY THE DEPARTMENT; NOT ELIGIBLE FOR INCENTIVE
12' LANE	71+00 TO 309+21	3LT 58-28S	MILLED EXISTING HMA SURFACE	HMA PAVEMENT 3LT 58-28S	8620	2.25	PWL INCENTIVE AIR VOIDS HMA PAVEMENT (CORE ONLY PROJECT) SPV.0055.02	INCENTIVE DENSITY PWL HMA PAVEMENT (CORE ONLY PROJECT) SPV.0055.01
12' LANE	71+00 TO 309+21	4LT 58-28S	3LT 58-28S	HMA PAVEMENT 4LT 58-28S	6747	1.75	PWL INCENTIVE AIR VOIDS HMA PAVEMENT (CORE ONLY PROJECT) SPV.0055.02	INCENTIVE DENSITY PWL HMA PAVEMENT (CORE ONLY PROJECT) SPV.0055.01
3' SHOULDER	71+00 TO 309+21	3LT 58-28S	MILLED EXISTING HMA SURFACE	HMA PAVEMENT 3LT 58-28S	2138	2.25	PWL INCENTIVE AIR VOIDS HMA PAVEMENT (CORE ONLY PROJECT) SPV.0055.02	ACCEPTANCE TESTING BY THE DEPARTMENT; NOT ELIGIBLE FOR INCENTIVE
3' SHOULDER	71+00 TO 309+21	4LT 58-28S	3LT 58-28S	HMA PAVEMENT 4LT 58-28S	1670	1.75	PWL INCENTIVE AIR VOIDS HMA PAVEMENT (CORE ONLY PROJECT) SPV.0055.02	ACCEPTANCE TESTING BY THE DEPARTMENT; NOT ELIGIBLE FOR INCENTIVE

NOTE: ACTUAL QUANTITIES ELEGIBLE FOR INCENTIVE WILL BE DETERMINDED BY THE ENGINEER

3

460-PWL

STATION	TO	STATION	LOCATION	460.0105.S HMA PERCENT WITHIN LIMITS (PWL) TEST STRIP VOLUMETRICS EACH	SPV.0055.01 SPECIAL (01. HMA Pavement Percent Within Limits (PWL) QMP, Core Only Project; Incentive Density PWL HMA Pavement) DOL	SPV.0055.02 SPECIAL (02. HMA PAVEMENT PERCENT WITHIN LIMITS (PWL) QMP, CORE ONLY PROJECT; INCENTIVE AIR VOIDS HMA PAVEMENT) DOL	SPV.0055.03 SPECIAL (03. HMA PAVEMENT LONGITUDINAL JOINT DENSITY, CORE ONLY PROJECT; INCENTIVE DENSITY HMA PAVEMENT LONGITUDINAL JOINTS) DOL
64+19	-	309+21		2	14,430	31,539	4,910
			TOTAL 0010	2	14,430	31,539	4,910

ALL ITEMS CATEGORY 0010 THIS SHEET

STH 11/14 & STH 89
WALWORTH COUNTY
CATEGORY 0010
F64-0022

3

3

PARTIAL TRAFFIC SIGNAL REMOVAL

LOCATION	204.9060.S.01 PARTIAL TRAFFIC SIGNAL REMOVAL EACH
STH 11/14 & STH 89	4
TOTAL	4

REMOVING PULL BOXES

PULL BOX NO.	653.0905 REMOVING PULL BOXES EACH
PB1	1
PB2	1
PB3	1
PB4	1
PB5	1
PB6	1
TOTAL	6

TYPE II PERMANENT SIGNING 3390-08-70 sth 89

SIGN NO.		SIGN MESSAGE	SIGN SIZE W [IN.]	x x	H [IN.]	637.2210 SIGNS TYPE II REFLECTIVE H [SF]	637.2230 SIGNS TYPE II RELFECTIVE F [SF]	637.2215 SIGNS TYPE II REFLECTIVE H FOLDING (SF)	638.2102 MOVING SIGNS TYPE II [EA]	638.2602 REMOVING SIGNS TYPE II (EA)	638.3000 REM SMALL SIGN SUP [EA]	634.0618 POSTS WOOD 4" X 6" X 18' [EA]	634.0814 POSTS TUBULAR STEEL 2 X 2 INCH X 14 FT (EA)	637.0620 SIGNS FLAGS PERMANENT TYPE II EACH	MOUNT ON SAME POST AS SIGN #	REMARKS / NEW SIGN LOCATION
1	J3-2(2S)		48	x	69	23				1	2	2				
	MB4-1		24	x	12											
	MB3-3		24	x	12											
	M1-1	IH 43	24	x	24											
	MB6-1		21	x	21											
	MB4-1		24	x	12											
	MB3-1		24	x	12											
	M1-1	IH 43	24	x	24											
	MB6-1		21	x	21											
2	J3-4(2S)		96	x	57	38.000				1	3	3				
	M3-4		24	x	12											
	M1-4	USH 14	24	x	24											
	M6-1		21	x	21											
	M3-4		24	x	12											
	M1-6	STH 11	24	x	24											
	M6-1		21	x	21											
	M3-1		24	x	12											
	M1-6	STH 89	24	x	24											
	M6-1		21	x	21											
	M3-2		24	x	12											
	M1-6	STH 11	24	x	24											
	M6-1		21	x	21											
3	J3-2(2S)		48	x	57	19.000				1	1	1				
	M3-2		24	x	12											
	M1-4	USH 14	24	x	24											
	M6-1		21	x	21											
	M3-1		24	x	12											
	M1-6	STH 89	24	x	24											
	M6-1		21	x	21											
4	J4-1(2S)		48	x	36	12.000				1	1	1				
	M3-2		24	x	12											
	M1-4	USH 14	24	x	24											
	MB4-1		24	x	12											
	M1-1	IH 43	24	x	24											
5	J3-1(2S)		24	x	57	9.500				1	1	1				
	MB4-1		24	x	12											
	M1-1	IH 43	24	x	24											
	MB6-1		21	x	21											
6	R1-1(3)		36	x	36	7.460				1	1	1				
6A	R1-3P(3)		24	x	9	1.500									6	REMOVAL PART OF # 6
7	R1-1(3)		36	x	36	7.460				1						MOUNT ON EXISTING TYPE I POLE
																SEE SOLAR BEACON PLAN AND QTYS FOR NEW SOLAR BEACON
																SEE ELECTRICAL REMOVAL PLAN FOR REMOVING HARD WIRED BEACON
7A	R1-3P(3)		24	x	9	1.500				1					7	
8	R1-1(3)		36	x	36	7.460				1	1	1				
8A	R1-3P(3)		24	x	9	1.500									8	REMOVAL PART OF # 8
9	R1-1(3)		36	x	36	7.460				1						MOUNT ON EXISTING TYPE I POLE
																SEE SOLAR BEACON PLAN AND QTYS FOR NEW SOLAR BEACON
																SEE ELECTRICAL REMOVAL PLAN FOR REMOVING HARD WIRED BEACON
9A	R1-3P(3)		24	x	9	1.500				1					9	
10	J4-1(2S)		24	x	36	6.000				1	1	1				
	M3-1		24	x	12											
	M1-6	STH 89	24	x	24											
11	D2-1(2S)	WHITEWATER 12	84	x	15	8.750				1	2	2				
12	W1-8								1						11	
13	W1-8								1						11	
14	R1-1								1						11	
15	D1-3	DARIEN (ARROW AHEAD)	72	x	42	21.000				1	2	2				
		DELAVAN (ARROW LEFT)														
		JANESVILLE (ARROW RIGHT)														

SHEET: 1 OF 5

TYPE II PERMANENT SIGNING 3390-08-70 sth 89

SIGN NO.		SIGN MESSAGE	SIGN SIZE W [IN.]	x	H [IN.]	637.2210 SIGNS TYPE II REFLECTIVE H [SF]	637.2230 SIGNS TYPE II RELFECTIVE F [SF]	637.2215 SIGNS TYPE II REFLECTIVE H FOLDING (SF)	638.2102 MOVING SIGNS TYPE II [EA]	638.2602 REMOVING SIGNS TYPE II (EA)	638.3000 REM SMALL SIGN SUP [EA]	634.0618 POSTS WOOD 4" X 6" X 18' [EA]	634.0814 POSTS TUBULAR STEEL 2 X 2 INCH X 14 FT (EA)	637.0620 SIGNS FLAGS PERMANENT TYPE II EACH	MOUNT ON SAME POST AS SIGN #	REMARKS / NEW SIGN LOCATION
16	J3-5(2S)		120	X	57	47.500				1	3	3				
	M3-2		24	X	12											
	M1-6	STH 11	24	X	24											
	M6-1		21	X	21											
	M3-2		24	X	12											
	M1-4	USH 14	24	X	24											
	M1-6		21	X	21											
	M3-4		24	X	12											
	M1-4	USH 14	24	X	24											
	M6-1		21	X	21											
	M3-4	STH 11	24	X	24											
	M6-1		21	X	21											
	M4-5		24	X	12											
	M1-5A	CTH M	24	X	24											
	M6-1		21	X	21											
17	R1-1(3)		36	X	36	7.460				1						MOUNT ON EXISTING TYPE I POLE. SEE ELECTRICAL QTYS FOR REMOVAL OF HARDWIRE. BECOMES SOLOR. SEE QTYS FOR SOLAR BEACONS
17A	R1-3P(3)		24	X	9	1.500				1					17	
18	R1-1(3)		36	X	36	7.460				1	1	1				
18A	R1-3P(3)		24	X	9	1.500									18	REMOVAL PART OF # 18
19	W12-1D(2S)		24	X	24		4.000			1	1	1				2 FOOT MOUNTING HEIGHT
20	J3-3(2S		72	X	57	28.500				1	2	2				
	M3-1		24	X	12											
	M1-6	STH 89	24	X	24											
	M6-1		21	X	21											
	M3-2		24	X	12											
	M1-4	USH 14	24	X	24											
	M6-1		21	X	21											
	MB4-1		24	X	12											
	M1-1	IH 43	24	X	24											
	MB6-1		21	X	21											
21	R1-1(3)		36	X	36	7.460				1						MOUNT ON EXISTING TYPE I POLE. SEE ELECTRICAL QTYS FOR REMOVAL OF HARDWIRE. BECOMES SOLOR. SEE QTYS FOR SOLAR BEACONS
21A	R1-3P(3)		24	X	8	1.500				1					21	
22	J4-2(2S)		48	X	36	12.000				1	1	1				
	M3-2		24	X	12											
	M1-4	USH 14	24	X	24											
	MB4-1		24	X	12											
	M1-1	IH 43	24	X	24											
23	R1-2(2S)		36	X	31	3.880				1	1	1				
24	W14-1(2S)		30	X	30		6.250			1	1		1			
25	I55-56(2S)		30	X	18	3.750				1	1	1				
25A	I55-56P(2S)	GAMMA ALPHA OMEGA UW-W GAMMA JEWELS	30	X	18	3.750									25	REMOVAL PART OF # 25
26	R1-1(3)		36	X	36	7.460				1	1	1				
27	R2-1(2S)	SPEED LIMIT 55	24	X	30	5.000				1	1	1				
28	D12-2B(2S)		84	X	36	21.000				1	2	2				
29	W14-3(2S)		48	X	36		5.560			1	1	1				
30	W1-2L(2S)		30	X	30		6.250			1	1	1				

SHEET: 2 OF 5

TYPE II PERMANENT SIGNING 3390-08-70 sth 89

SIGN NO.		SIGN MESSAGE	SIGN SIZE W [IN.]	x	H [IN.]	637.2210 SIGNS TYPE II REFLECTIVE H [SF]	637.2230 SIGNS TYPE II RELFECTIVE F [SF]	637.2215 SIGNS TYPE II REFLECTIVE H FOLDING (SF)	638.2102 MOVING SIGNS TYPE II [EA]	638.2602 REMOVING SIGNS TYPE II (EA)	638.3000 REM SMALL SIGN SUP [EA]	634.0618 POSTS WOOD 4" X 6" X 18' [EA]	634.0814 POSTS TUBULAR STEEL 2 X 2 INCH X 14 FT (EA)	637.0620 SIGNS FLAGS PERMANENT TYPE II EACH	MOUNT ON SAME POST AS SIGN #	REMARKS / NEW SIGN LOCATION
31	W3-1(2S)		36	X	36		9.000			1	1	1				
32	W3-1(2S)		36	X	36		9.000			1	1	1				
33	J2-4(2S)		96	X	57	38.000				1	3	3				
	M3-2		24	X	12											
	M1-6	STH 11	24	X	24											
	M5-1L		21	X	21											
	M3-2		24	X	12											
	M1-4	USH 14	24	X	24											
	M6-1		21	X	21											
	M3-4		24	X	12											
	M1-4	USH 14	24	X	24											
	M5-1R		21	X	21											
	M3-4		24	X	12											
	M1-6	STH 11	24	X	24											
	M5-1R		21	X	21											
34	W3-1(2S)		36	X	36		9.000			1	1	1				
35	W1-8(2S)		18	X	24		3.000			1	1	1				4 FOOT MOUNTING HEIGHT
36	W1-8(2S)		18	X	24		3.000			1	1	1				4 FOOT MOUNTING HEIGHT
37	W1-8(2S)		18	X	24		3.000			1	1	1				4 FOOT MOUNTING HEIGHT
38	W1-8(2S)		18	X	24		3.000			1	1	1				4 FOOT MOUNTING HEIGHT
39	W1-8(2S)		18	X	24		3.000			1	1	1				4 FOOT MOUNTING HEIGHT
40	NOT USED															
41	W1-2L(2S)		30	X	30		6.250			1	1	1				
42	W1-6(2S)		48	X	24		12.000			1	1	1				
43	W14-3(2S)		48	X	36		6.000			1	1	1				
44	J1-3(2S)		72	X	39	19.500				1	2	2				
	M2-1		21	X	15											
	M1-4	USH 14	24	X	24											
	M2-1		21	X	15											
	M1-6	STH 11	24	X	24											
	M4-6		24	X	12											
	M1-6	STH 89	24	X	24											
45	W1-6(2S)		48	X	24		12.000			1	1	1				
46	W14-3(2S)		48	X	36		5.560			1	1	1				
47	W14-3(2S)		48	X	36		5.560			1	1	1				
48	W1-2R(2S)		30	X	30		6.250			1	1	1				
49	W2-1(2S)		30	X	30		6.250			1	1	1				
50	D1-61	TOWN LINE RD	66	X	24	11.000				1	2	2				
		ARROW RIGHT AND LEFT														
51	R1-1(3)		36	X	36	7.460				1	1	1				
52	R1-1(3)		36	X	36	7.460				1	1	1				
53	W14-3(2S)		48	X	36		5.560			1	1	1				
54	W14-3(2S)		48	X	36		5.560			1	1	1				
55	D1-61	TOWN LINE RD	66	X	24	11.000				1	2	2				
		ARROW RIGHT AND LEFT														
56	W14-3(2S)		48	X	36		6.000			1	1	1				
57	W14-3(2S)		48	X	36		6.000			1	1	1				
58	W14-3(2S)		48	X	36		6.000			1	1	1				
59	J1-1(2S)		24	X	39	6.500				1	1	1				
	M2-1		21	X	15											
	M1-5A	CTH M	24	X	24											
60	J2-1									1	1					

SHEET: 3 OF 5

TYPE II PERMANENT SIGNING 3390-08-70 sth 89

SIGN NO.		SIGN MESSAGE	SIGN SIZE W [IN.]	x	H [IN.]	637.2210 SIGNS TYPE II REFLECTIVE H [SF]	637.2230 SIGNS TYPE II RELFECTIVE F [SF]	637.2215 SIGNS TYPE II REFLECTIVE H FOLDING (SF)	638.2102 MOVING SIGNS TYPE II [EA]	638.2602 REMOVING SIGNS TYPE II (EA)	638.3000 REM SMALL SIGN SUP [EA]	634.0618 POSTS WOOD 4" X 6" X 18' [EA]	634.0814 POSTS TUBULAR STEEL 2 X 2 INCH X 14 FT (EA)	637.0620 SIGNS FLAGS PERMANENT TYPE II EACH	MOUNT ON SAME POST AS SIGN #	REMARKS / NEW SIGN LOCATION
61	I55-56(2S)		30	X	18	3.750				1	1	1				
61A	I55-56P(2S)	SEGMENT AVAILABLE	30	X	18	3.750									61	REMOVAL PART OF # 61
62	D1-2	SHADEL RD (ARROW LEFT)	72	X	30	15.000				1	2	2				
		HARRIS RD (ARROW RIGHT)														
63	J3-1(2S)		24	X	45	7.500				1	1	1				
	M1-5A	CTH M	24	X	24											
	M6-1		21	X	21											
64	R1-1(3)		36	X	36	7.460				1	1	1				
65	J13-1(2S)		48	X	45	15.000				1	1	1				
	MODIFIED															
	M1-6	STH 89	24	X	24											
	M6-4		21	X	21											
	M4-6		24	X	12											
	M1-5A	CTH M	24	X	24											
66	I55-56(2S)		30	X	18	3.750				1	1	1				
66A	I55-56P(2S)	CHRISTUS LUTHERAN YOUTH GROUP	30	X	18	3.750									66	REMOVAL PART OF # 66
67	J4-1(2S)		24	X	36	6.000				1	1	1				
	M3-1		24	X	12											
	M1-6	STH 89	24	X	24											
68	J3-1(2S)		24	X	45	7.500				1	1	1				
	M1-5A	CTH M	24	X	24											
	M6-1		21	X	21											
69	R1-1(3)		36	X	36	7.460				1	1	1				
70	J4-1(2S)		24	X	36	6.000				1	1	1				
	M3-3		24	X	12											
	M1-6	STH 89	24	X	24											
71	R2-1(2S)	SPEED LIMIT 55	24	X	30	5.000				1	1	1				
72	R2-1(2S)	SPEED LIMIT 55	24	X	30	5.000				1	1	1				
73	W14-3(2S)		48	X	36		5.560			1	1	1				
74	J1-1(2S)		24	X	39	6.500				1	1	1				
	M2-1		21	X	15											
	M1-5A	CTH M	24	X	24											
75	J2-1									1	1					
76	D1-2	HARRIS RD (ARROW LEFT)	72	X	30	15.000				1	2	2				
		SHADEL RD (ARROW RIGHT)														
77	W14-3(2S)		48	X	36		5.560			1	1	1				
78	W14-3(2S)		48	X	36		5.560			1	1	1				
79	D1-1	KILKENNY RD(ARROW RIGHT)	84	X	15	8.750				1	2	2				
80	W14-3(2S)		48	X	36		5.560			1	1	1				
81	R1-1(3)		36	X	36	7.460				1	1	1				
82	W1-7(2S)		48	X	24		8.000			1	1	1				
83	W1-4L(2S)		30	X	30		6.250			1	1	1				
84	D1-1	KILKENNY RD (ARROW LEFT)	84	X	15	8.750				1	2	2				
85	W14-3(2S)		48	X	36		5.560			1	1	1				
86	W1-8(2S)		18	X	24		3.000			1	1	1				4 FOOT MOUNTING HEIGHT
87	W1-8(2S)		18	X	24		3.000								86	
88	D7-77R(2S)	WHITEWATER LAKE	78	X	36	19.500				1	2	2				BROWN SIGN
		REC AREA														
		ARROW RIGHT														
89	W1-8(2S)		18	X	24		3.000			1	1	1				4 FOOT MOUNTING HEIGHT
90	W1-8(2S)		18	X	24		3.000								89	

SHEET: 4 OF 5

TYPE II PERMANENT SIGNING 3390-08-70 sth 89

SIGN NO.		SIGN MESSAGE	SIGN SIZE W [IN.]	x	H [IN.]	637.2210 SIGNS TYPE II REFLECTIVE H [SF]	637.2230 SIGNS TYPE II RELFECTIVE F [SF]	637.2215 SIGNS TYPE II REFLECTIVE H FOLDING (SF)	638.2102 MOVING SIGNS TYPE II [EA]	638.2602 REMOVING SIGNS TYPE II (EA)	638.3000 REM SMALL SIGN SUP [EA]	634.0618 POSTS WOOD 4" X 6" X 18' [EA]	634.0814 POSTS TUBULAR STEEL 2 X 2 INCH X 14 FT (EA)	637.0620 SIGNS FLAGS PERMANENT TYPE II EACH	MOUNT ON SAME POST AS SIGN #	REMARKS / NEW SIGN LOCATION
91	W1-8(2S)		18	x	24		3.000			1	1	1				4 FOOT MOUNTING HEIGHT
92	W1-8(2S)		18	x	24		3.000								91	
93	J1-1(2S)		24	x	39	6.500				1	1	1				
	M2-1		21	x	15											
	M1-5A	CTH A	24	x	24											
94	R1-1(3)		36	x	36	7.460				1	1	1				
95	W1-8(2S)		18	x	24		3.000			1	1	1				4 FOOT MOUNTING HEIGHT
96	W1-8(2S)		18	x	24		3.000								95	
97	W2-1(2S)		30	x	30		6.250			1	1	1		2		REPLACE PERMANENT FLAGS
																REMOVAL OF FLAGS INCLUDED WITH # 97
98	W2-1(2S)		30	x	30		6.250			1	1	1		2		REMOVAL OF FLAGS INCLUDED WITH # 98
99	W1-7(2S)		48	x	24		8.000			1	1	1				
100	R2-1(2S)	SPEED LIMIT 55	24	x	30	5.000				1	1	1				
101	W1-8(2S)		18	x	24		3.000			1	1	1				4 FOOT MOUNTING HEIGHT
102	W1-8(2S)		18	x	24		3.000								101	
103	W1-8(2S)		18	x	24		3.000			1	1	1				4 FOOT MOUNTING HEIGHT
104	W1-8(2S)		18	x	24		3.000								103	
105	W1-8(2S)		18	x	24		3.000			1	1	1				4 FOOT MOUNTING HEIGHT
106	W1-8(2S)		18	x	24		3.000								105	
107	W1-8(2S)		18	x	24		3.000			1	1	1				4 FOOT MOUNTING HEIGHT
108	W1-8(2S)		18	x	24		3.000								107	
109	J3-2(2S)		24	x	45	7.500				1	1	1				
	M1-5A	CTH A	24	x	24											
	M6-4		21	x	21											
110	R1-1(3)		36	x	36	7.46				1	1	1				
111	J13-1(2S)		24	x	45	7.500				1	1	1				
	M1-6	STH 89	24	x	24											
	M6-4		21	x	21											
112	J13-1(2S)		24	x	45	7.500				1	1	1				
	M1-6	STH 89	24	x	24											
	M6-4		21	x	21											
113	R1-1(3)		36	x	36	7.460				1						MOUNT ON EXISTING TYPE I POLE
113A	W4-4C(3)	TRAFFIC ON 89 DOES NOT STOP	36	x	15		3.750			1						MOUNT ON EXISTING TYPE I POLE
114	R1-1(3)		36	x	36	7.460				1						MOUNT ON EXISTING TYPE I POLE
114A	W4-4C(3)	TRAFFIC ON 89 DOES NOT STOP	36	x	15		3.750			1						MOUNT ON EXISTING TYPE I POLE
115	I55-56(2S)		30	x	18	3.750				1	1	1				
115A	I55-56P(2S)	RICHMOND 4H CLUB	30	x	18	3.750									115	REMOVAL PART OF # 115
116	J3-2(2S)		24	x	45	7.500				1	1	1				
	M1-5A	CTH A	24	x	24											
	M6-4		21	x	21											
117	R1-1(3)		36	x	36	7.460				1	1	1				
118	W1-6(2S)		48	x	24		8.000			1	1	1				
119	J4-1(2S)		24	x	36	6.000				1	1	1				
	M3-3		24	x	12											
	M1-6	STH 89	24	x	24											
120	I55-56(2S)		30	x	18	3.750				1	1	1				
120A	I55-56P(2S)	CHRISTUS LUTHERAN YOUTH GROUP	30	x	18	3.750									120	REMOVAL PART OF # 120
121	J4-3(2S)		72	x	36	18.000				1	2	2				
	M3-4		24	x	12											
	M1-4	USH 14	24	x	24											
	M3-4		24	x	12											
	M1-6	STH 11	24	x	24											
	MB4-1		24	x	12											
	M1-1	IH 43	24	x	24											
UNDISTRIBUTED									4				4			
						691.410	279.100	0.000	7	115	121	118	5	4	--	--

SHEET: 5 OF 5

PROJECT NO: 3390-08-70	HWY: STH 89	COUNTY: WALWORTH	MISCELLANEOUS QUANTITIES – PERMANENT SIGNING	SHEET: 129	E

3

STOP SIGN BEACONS MISC QUANTITIES				3390-08-70		
LOCATION		Stop Sign	Stop Sign	Stop Sign	Stop Sign	
		Traffic Flashing Beacon System, Solar	Traffic Flashing Beacon System, Solar	Traffic Flashing Beacon System, Solar	Traffic Flashing Beacon System, Solar	
		STH 89 SB at STH 11	USH 14 NB at STH 89	STH 11 WB at STH 89	STH 11 EB at STH 89	
		Each	Each	Each	Each	
		SPV.0060.01	SPV.0060.02	SPV.0060.03	SPV.0060.04	
STH 89 SB at STH 11		1				
USH 14 NB at STH 89			1			
STH 11 WB at STH 89				1		
STH 11 EB at STH 89					1	
TOTAL		1	1	1	1	

3

SHEET 1 OF 1

PROJECT NO: 3390-08-70	HWY: STH 89	COUNTY: WALWORTH	MISCELLANEOUS QUANTITIES – STOP SIGN SOLAR BEACONS	SHEET:	E

R/W PROJECT NUMBER: 3390-08-20	EXHIBIT NUMBER: 4.01

PLE ACQUISITION EXHIBIT
RICHMOND - WHITEWATER
STH11 TO CTH A

STH 89 — WALWORTH COUNTY

THAT PART OF THE SOUTHEAST 1/4 OF THE SOUTHEAST 1/4 OF SECTION 17 TOWN 3 NORTH RANGE 15 EAST IN THE TOWN OF RICHMOND, WALWORTH COUNTY, WISOCNSIN

NOTES:
THIS EXHIBIT IS A GRAPHIC REPRESENTATION AND IS FOR REFERENCE PURPOSES ONLY.
REFER TO THE CONVEYANCE DOCUMENT FOR PARCEL RELATED DETAILS.

POSITIONS SHOWN ON THIS PLAT ARE WISCONSIN COUNTY COORDINATE REFERENCE SYSTEM COORDINATES (WISCRS) WALWORTH COUNTY, NAD83 (2011) IN SURVEY FEET. VALUES SHOWN ARE GRID COORDINATES, GRID BEARINGS, AND GRID DISTANCES. GRID DISTANCES MAY BE USED AS GROUND DISTANCES ON THIS EXHIBIT.

ROAD NAME	BASISIS OF R/W	YEAR	WIDTH
STH 89	TOWN ROAD RECORD V1 P19	1925	66'
STH 89	3390-00-22	1978	VARIES

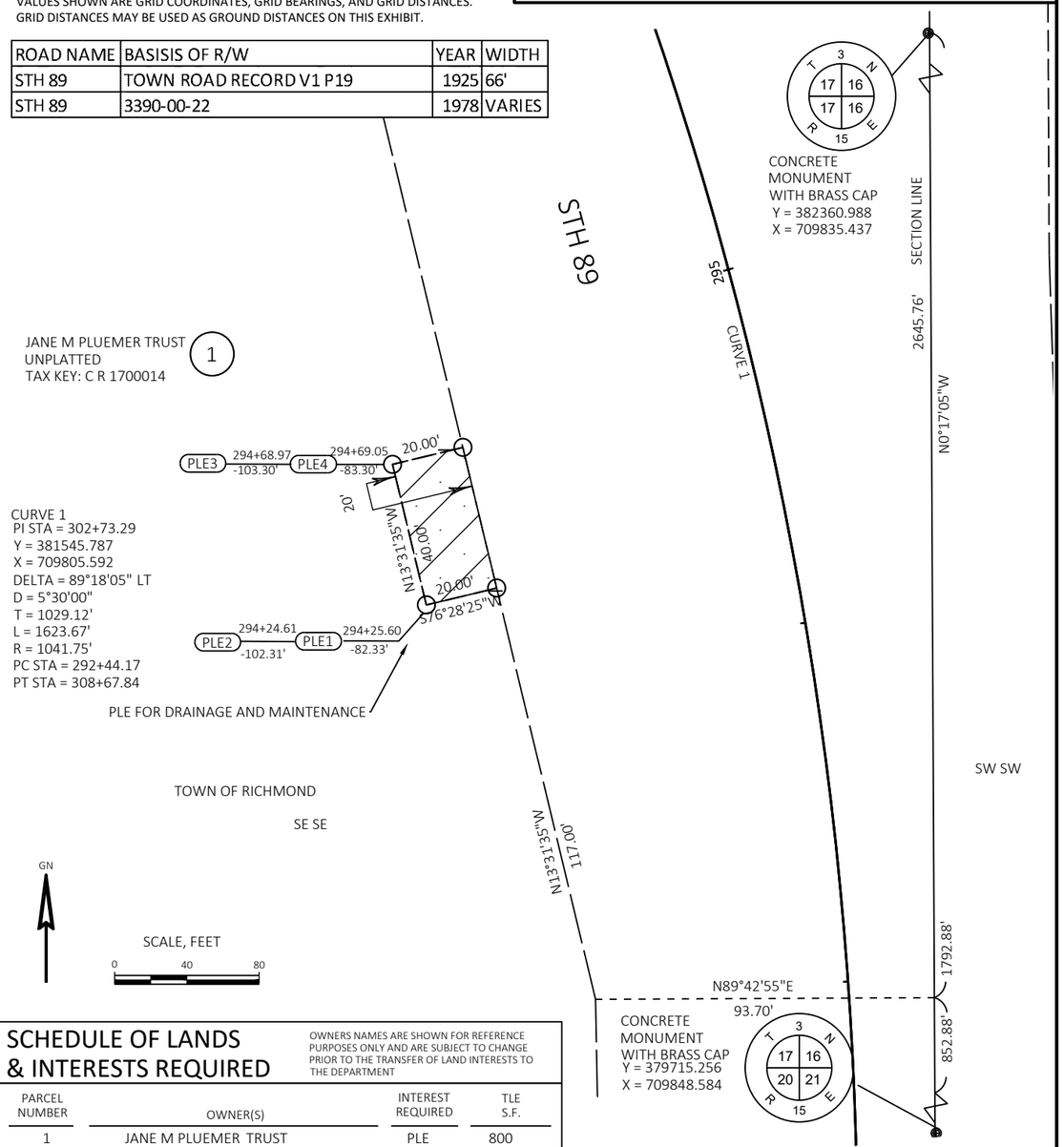

SCHEDULE OF LANDS & INTERESTS REQUIRED

OWNERS NAMES ARE SHOWN FOR REFERENCE PURPOSES ONLY AND ARE SUBJECT TO CHANGE PRIOR TO THE TRANSFER OF LAND INTERESTS TO THE DEPARTMENT

PARCEL NUMBER	OWNER(S)	INTEREST REQUIRED	TLE S.F.
1	JANE M PLUEMER TRUST	PLE	800

UTILITY INTERESTS REQUIRED

UTILITY NUMBER	UTILITY OWNER(S)	INTEREST REQUIRED

THIS MAP IS APPROVED FOR THE DEPARTMENT OF TRANSPORTATION
REGION AND CITY REGION OFFICE

SIGNATURE: Robert L Duffick DATE: 8/30/2024

PRINT NAME:

FILE NAME : PLE_EXHIBIT.DWG PLOT DATE : 8/30/2024 8:48 AM R/W PROJECT: R/W PROJ NO

4

R/W PROJECT NUMBER: 3390-08-20	EXHIBIT NUMBER: 4.02

TLE ACQUISITION EXHIBIT
RICHMOND - WHITEWATER
STH11 TO CTH A

STH 89 — WALWORTH COUNTY

THIS PAGE IS INTENTIONALLY BLANK

SCHEDULE OF LANDS & INTERESTS REQUIRED

OWNERS NAMES ARE SHOWN FOR REFERENCE PURPOSES ONLY AND ARE SUBJECT TO CHANGE PRIOR TO THE TRANSFER OF LAND INTERESTS TO THE DEPARTMENT

PARCEL NUMBER	OWNER(S)	INTEREST REQUIRED	TLE S.F.

UTILITY INTERESTS REQUIRED

UTILITY NUMBER	UTILITY OWNER(S)	INTEREST REQUIRED

THIS MAP IS APPROVED FOR THE DEPARTMENT OF TRANSPORTATION
REGION AND CITY REGION OFFICE

SIGNATURE: DATE:

PRINT NAME:

4

FILE NAME : PLE_EXHIBIT.DWG PLOT DATE : 8/30/2024 8:48 AM R/W PROJECT: R/W PROJ NO

Standard Detail Drawing List

08E09-06	SILT FENCE
08E15-01	CULVERT PIPE CHECK
08F01-11	APRON ENDWALLS FOR CULVERT PIPE
08F02-01	APRON ENDWALLS FOR PIPE ARCH AND ELLIPTICAL PIPE
08F04-08	JOINT TIES FOR CONCRETE PIPE AND CONCRETE COLLAR DETAIL
09C02-09	CONCRETE BASES, TYPES 1, 2, 5, & 6
13A11-04A	CENTERLINE RUMBLE STRIPS - ASPHALT
13A11-04D	CENTERLINE RUMBLE STRIPS - INTERSECTIONS, DRIVEWAYS, BRIDGES, RAILROADS
14B28-04A	GUARDRAIL MOW STRIP
14B29-01	SAFETY EDGE
14B42-07A	MIDWEST GUARDRAIL SYSTEM (MGS) GUARDRAIL
14B42-07B	MIDWEST GUARDRAIL SYSTEM (MGS) GUARDRAIL
14B42-07C	MIDWEST GUARDRAIL SYSTEM (MGS) GUARDRAIL
14B42-07D	MIDWEST GUARDRAIL SYSTEM (MGS) GUARDRAIL
14B44-04A	MIDWEST GUARDRAIL SYSTEM ENERGY ABSORBING TERMINAL (MGS)
14B44-04B	MIDWEST GUARDRAIL SYSTEM ENERGY ABSORBING TERMINAL (MGS)
14B44-04C	MIDWEST GUARDRAIL SYSTEM ENERGY ABSORBING TERMINAL (MGS)
15A03-02A	FLEXIBLE MARKER POST FOR CULVERT END
15A03-02B	FLEXIBLE MARKER POST FOR CULVERT END
15C02-10A	BARRICADES AND SIGNS FOR MAINLINE CLOSURES
15C02-10B	BARRICADES AND SIGNS FOR VARIOUS CLOSURES
15C03-05	BARRICADES AND SIGNS FOR SIDEROAD CLOSURES
15C08-24A	PERMANENT LONGITUDINAL PAVEMENT MARKINGS
15C11-11B	CHANNELIZING DEVICES DRUMS, CONES, BARRICADES AND VERTICAL PANELS
15C12-09A	TRAFFIC CONTROL FOR LANE CLOSURE WITH FLAGGING OPERATION
15C12-09B	TRAFFIC CONTROL, LANE CLOSURE WITH AUTOMATED FLAGGER ASSISTANCE DEVICE
15C19-11A	MOVING PAVEMENT MARKING OPERATION TWO-LANE TWO-WAY ROADWAY
15C33-05	STOP LINE AND CROSSWALK PAVEMENT MARKING
15D39-03	TRAFFIC CONTROL, DROP-OFF SIGNING

6

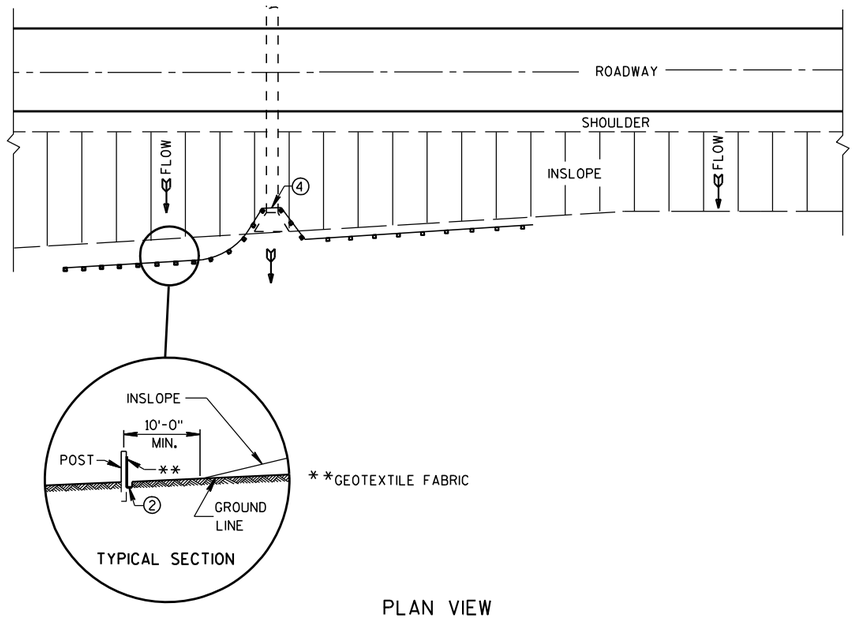

PLAN VIEW

TYPICAL APPLICATION OF SILT FENCE

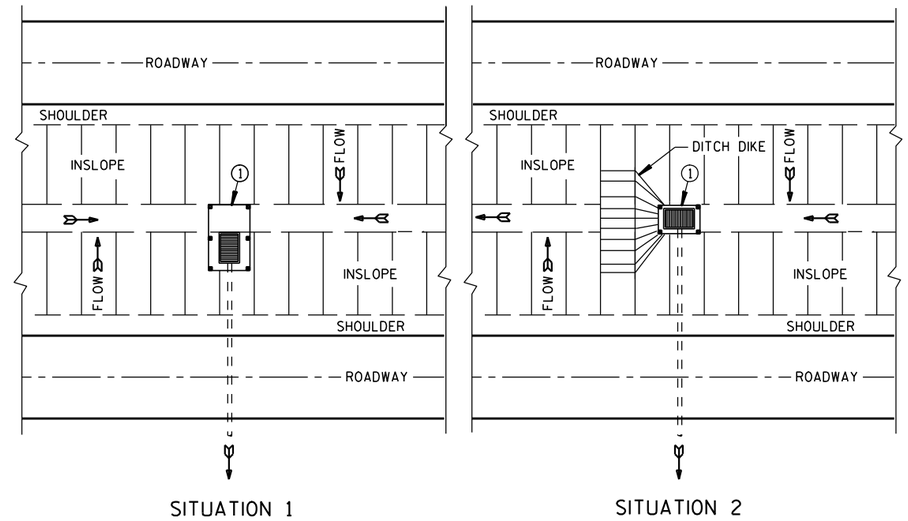

PLAN VIEW

SILT FENCE AT MEDIAN SURFACE DRAINS

GENERAL NOTES

DETAILS OF CONSTRUCTION NOT SHOWN ON THIS DRAWING SHALL CONFORM TO THE PERTINENT REQUIREMENTS OF THE STANDARD SPECIFICATIONS AND APPLICABLE SPECIAL PROVISIONS.

① HORIZONTAL BRACE REQUIRED WITH 2" X 4" WOODEN FRAME OR EQUIVALENT AT TOP OF POSTS.

② FOR MANUAL INSTALLATIONS THE TRENCH SHALL BE A MINIMUM OF 4" WIDE & 6" DEEP TO BURY AND ANCHOR THE GEOTEXTILE FABRIC. FOLD MATERIAL TO FIT TRENCH AND BACKFILL & COMPACT TRENCH WITH EXCAVATED SOIL.

③ WOOD POSTS SHALL BE A MINIMUM SIZE OF 1⅛" X 1⅛" OF OAK OR HICKORY.

④ SILT FENCE TO EXTEND ACROSS THE TOP OF THE PIPE.

⑤ CONSTRUCT SILT FENCE FROM A CONTINUOUS ROLL IF POSSIBLE BY CUTTING LENGTHS TO AVOID JOINTS. IF A JOINT IS NECESSARY USE ONE OF THE FOLLOWING TWO METHODS; A) OVERLAP THE END POSTS AND TWIST, OR ROTATE, AT LEAST 180 DEGREES. B) HOOK THE END OF EACH SILT FENCE LENGTH.

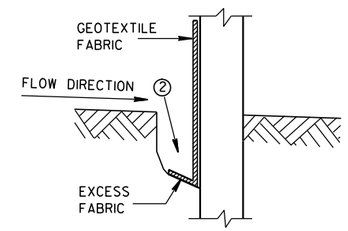

TRENCH DETAIL

NOTE: ADDITIONAL POST DEPTH OR TIE BACKS MAY BE REQUIRED IN UNSTABLE SOILS

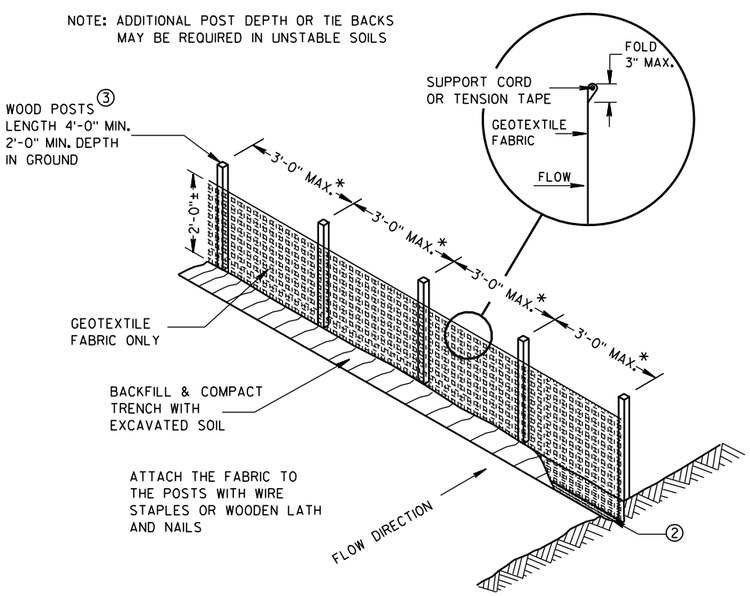

*NOTE: 8'-0" POST SPACING ALLOWED IF A WOVEN GEOTEXTILE FABRIC IS USED.

SILT FENCE

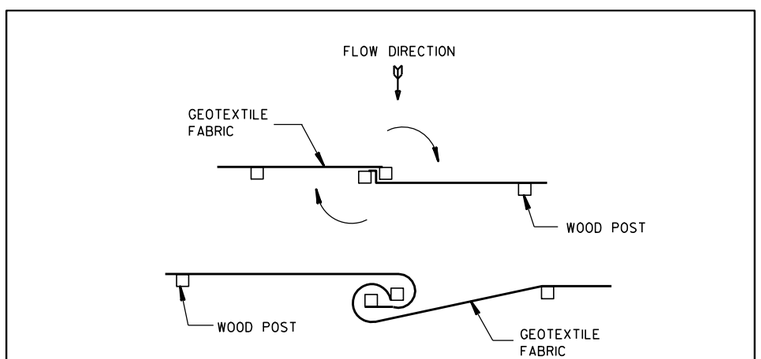

TWIST METHOD

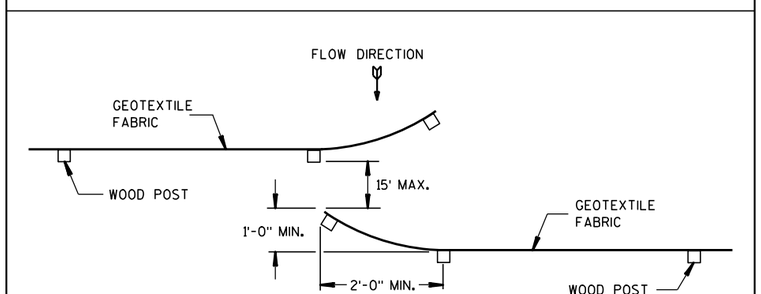

HOOK METHOD

JOINING TWO LENGTHS OF SILT FENCE ⑤

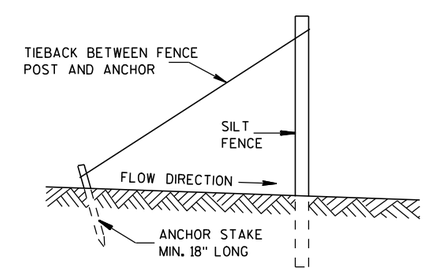

SILT FENCE TIE BACK

(WHEN REQUIRED BY THE ENGINEER)

SILT FENCE
STATE OF WISCONSIN DEPARTMENT OF TRANSPORTATION
APPROVED 4-29-05 DATE — /S/ Beth Cann-- CHIEF ROADWAY DEVELOP ENGINEER FHWA

6

6

S.D.D. 8 E 9-6

S.D.D. 8 E 9-6

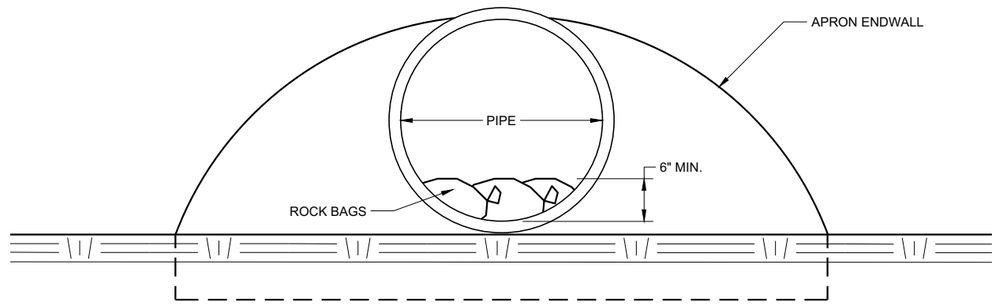

END VIEW

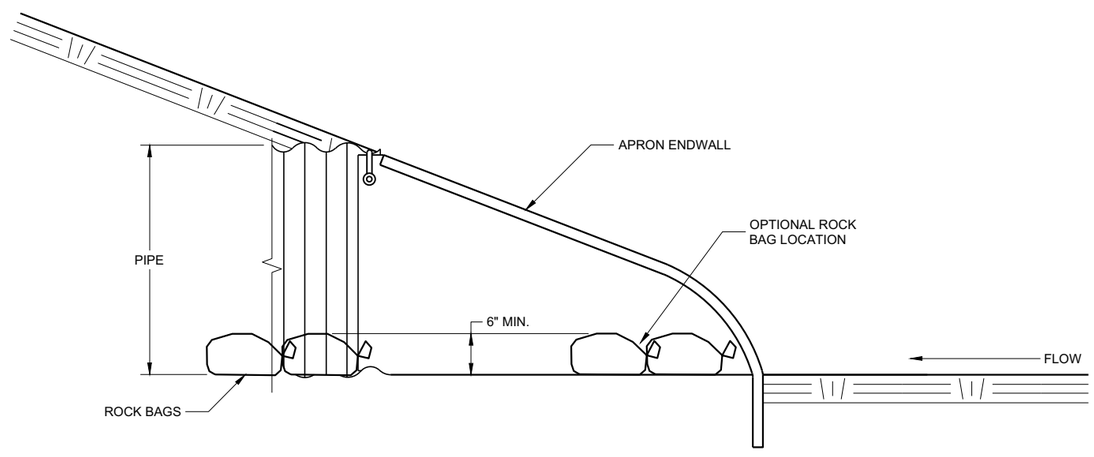

SIDE VIEW

CULVERT PIPE CHECK

(INSTALL ON INLET END ONLY)

CULVERT PIPE CHECK

STATE OF WISCONSIN
DEPARTMENT OF TRANSPORTATION

APPROVED
May 2019 — DATE
/S/ Daniel Schave — EROSION CONTROL ENGI
FHWA

6

6

SDD 08E15 - 01

SDD 08E15 - 01

METAL APRON ENDWALLS

PIPE DIA. (IN.)	MIN. THICK. (Inches) STEEL	MIN. THICK. (Inches) ALUM.	DIMENSIONS (Inches) A (±1")	B (MAX.)	H (±1")	L (±1 1/2")	L1 ①	L2 ①	W (±2")	APPROX. SLOPE	BODY
12	.064	.060	6	6	6	21	12	17 1/2	24	2 1/2 to 1	1 Pc.
15	.064	.060	7	8	6	26	14	21 3/4	30	2 1/2 to 1	1 Pc.
18	.064	.060	8	10	6	31	15	28 1/4	36	2 1/2 to 1	1 Pc.
21	.064	.060	9	12	6	36	18	29 5/8	42	2 1/2 to 1	1 Pc.
24	.064	.075	10	13	6	41	18	37 1/4	48	2 1/2 to 1	1 Pc.
30	.079	.075	12	16	8	51	18	52 1/4	60	2 1/2 to 1	1 Pc.
36	.079	.105	14	19	9	60	24	59 3/4	72	2 1/2 to 1	2 Pc.
42	.109	.105	16	22	11	69	24	75 5/8	84	2 1/2 to 1	2 Pc.
48	.109	.105	18	27	12	78	24	81	90	2 1/4 to 1	3 Pc.
54	.109	.105	18	30	12	84	30	85 1/2	102	2 1/4 to 1	3 Pc.
60	.109×	.105×	18	33	12	87	—	—	114	2 to 1	3 Pc.
66	.109×	.105×	18	36	12	87	—	—	120	2 to 1	3 Pc.
72	.109×	.105×	18	39	12	87	—	—	126	2 to 1	3 Pc.
78	.109×	.105×	18	42	12	87	—	—	132	1 1/2 to 1	3 Pc.
84	.109×	.105×	18	45	12	87	—	—	138	1 1/2 to 1	3 Pc.
90	.109×	.105×	18	37	12	87	—	—	144	1 1/2 to 1	3 Pc.
96	.109×	.105×	18	35	12	87	—	—	150	1 1/2 to 1	3 Pc.

× EXCEPT CENTER PANEL
SEE GENERAL NOTES

REINFORCED CONCRETE APRON ENDWALLS

PIPE DIA. (IN.)	DIMENSIONS (Inches) T	A	B	C	D	E	G	APPROX. SLOPE
12	2	4	24	48 7/8	72 7/8	24	2	3 to 1
15	2 1/4	6	27	46	73	30	2 1/4	3 to 1
18	2 1/2	9	27	46	73	36	2 1/2	3 to 1
21	2 3/4	9	36	37 1/2	73 1/2	42	2 3/4	3 to 1
24	3	9 1/2	43 1/2	30	73 1/2	48	3	3 to 1
27	3 1/4	10 1/2	49 1/2	24	73 1/2	54	3 1/4	3 to 1
30	3 1/2	12	54	19 3/4	73 1/2	60	3 1/2	3 to 1
36	4	15	63	34 3/4	97 3/4	72	4	3 to 1
42	4 1/2	21	63	35	98	78	4 1/2	3 to 1
48	5	24	72	26	98	84	5	3 to 1
54	5 1/2	27	65	*33 1/4-**35	*98 1/4-**100	90	5 1/2	2 2/5 to 1
60	6	*30-**35	60	39	99	96	5	2 to 1
66	6 1/2	*24-**30	*72-**78	*21-**27	99	102	5 1/2	2 to 1
72	7	*24-**36	78	21	99	108	6	2 to 1
78	7 1/2	*24-**36	78	21	99	114	6 1/2	2 to 1
84	8	36	90 1/2	21	111 1/2	120	6 1/2	1 1/2 to 1
90	8 1/2	41	87 1/2	24	111 1/2	132	6 1/2	1 1/2 to 1

*MINIMUM
**MAXIMUM

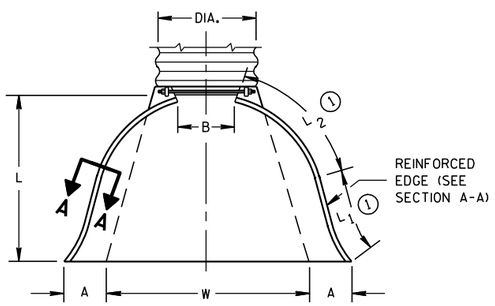

PLAN VIEW

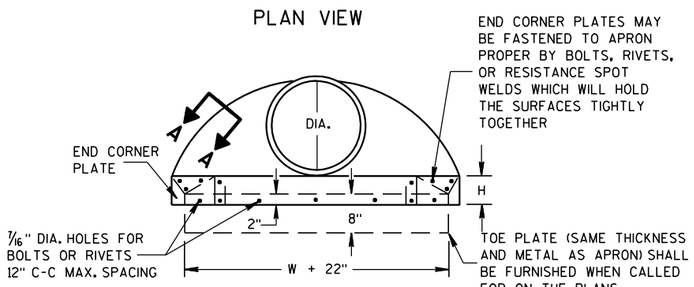

END VIEW

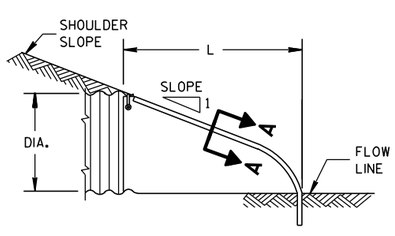

SIDE ELEVATION

METAL ENDWALLS

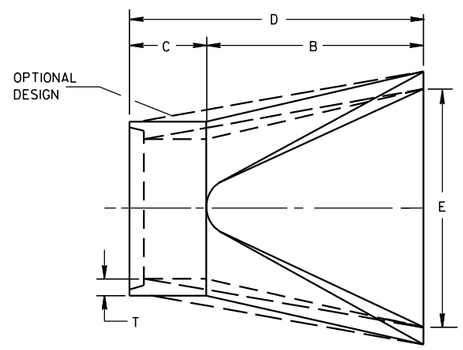

PLAN

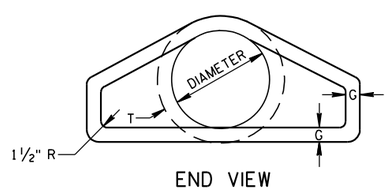

END VIEW

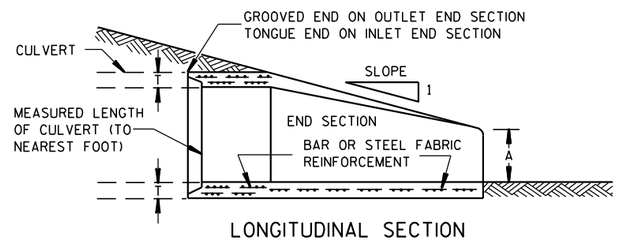

LONGITUDINAL SECTION

CONCRETE ENDWALLS

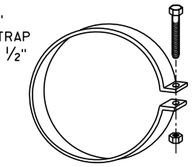

ALTERNATE FOR TYPE 1 CONNECTION

END SECTION CONNECTOR STRAP

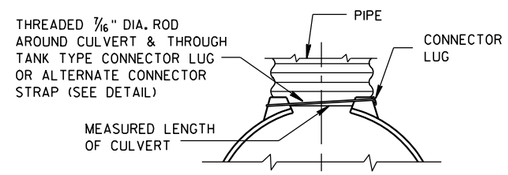

TYPE 1
FOR 12" THRU 24" CORR. PIPE

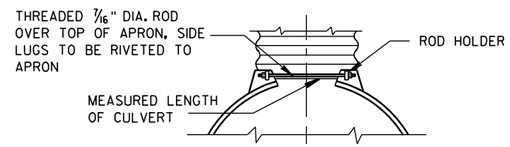

TYPE 2
FOR 30" THRU 96" CORR. PIPE

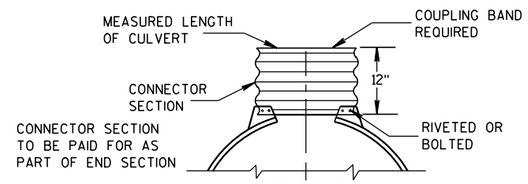

TYPE 3
FOR 42" THRU 96" CORR. PIPE

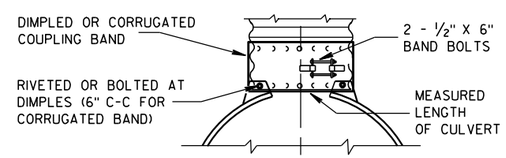

TYPE 5
ALTERNATE FOR:
ALL SIZES CORRUGATED CIRCULAR PIPE

NOTE: DIMPLED BAND FITS OVER OUTSIDE OF ENDWALL, AND CORRUGATED BAND FITS INSIDE ENDWALL. DIMPLED BAND MAY BE USED WITH HELICALLY CORRUGATED PIPE.

FOR CIRCUMFERENTIALLY CORRUGATED PIPE USE ENDWALL CONNECTION DETAILS 1, 2, 3 OR 5 AS APPLICABLE.

FOR HELICALLY CORRUGATED PIPE USE ENDWALL CONNECTION DETAILS 1, 2 OR 5.

FOR HELICALLY CORRUGATED PIPES WITH TWO CIRCUMFERENTIAL CORRUGATIONS AT EACH END USE ENDWALL CONNECTION DETAILS 1, 2 OR 3.

CONNECTION DETAILS

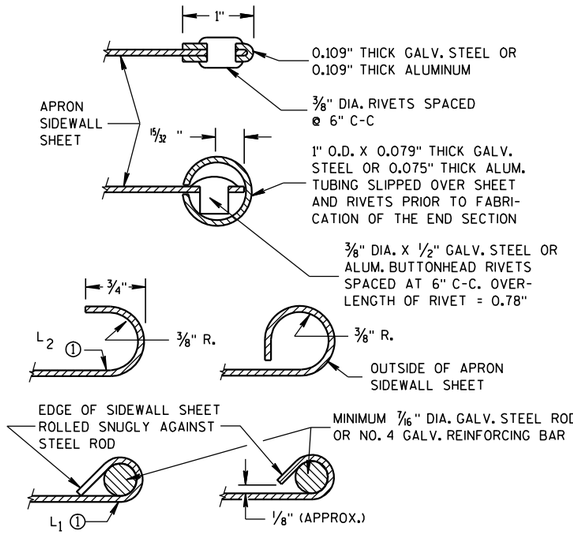

SECTION A-A

GENERAL NOTES

DETAILS OF CONSTRUCTION, MATERIALS AND WORKMANSHIP NOT SHOWN ON THIS DRAWING SHALL CONFORM TO THE PERTINENT REQUIREMENTS OF THE STANDARD SPECIFICATIONS AND THE APPLICABLE SPECIAL PROVISIONS.

CONCRETE CULVERT ENDWALLS MAY NOT BE USED WITH GALVANIZED STEEL OR ALUMINUM CULVERT PIPE OR VISE VERSA. GALVANIZED STEEL OR ALUMINUM ENDWALLS SHALL NORMALLY BE INSTALLED ON CULVERT PIPE OF THE SAME METAL.

ALL THREE PIECE STEEL APRON ENDWALLS FOR 60" DIAMETER PIPE AND LARGER SHALL HAVE 0.109" SIDES AND 0.138" CENTER PANELS. ALL THREE PIECE ALUMINUM APRON ENDWALLS FOR 60" DIAMETER PIPE AND LARGER SHALL HAVE 0.105" SIDES AND 0.134" CENTER PANELS. THE WIDTH OF CENTER PANELS SHALL BE GREATER THAN 20 PERCENT OF THE PIPE PERIMETER.

LAP SEAMS SHALL BE TIGHTLY JOINED BY GALVANIZED RIVETS OR BOLTS FOR STEEL UNITS AND ALUMINUM RIVETS AND BOLTS FOR ALUMINUM UNITS. FOR THE 60" THROUGH 96" DIAMETER APRON ENDWALL SIZES, THE REINFORCED EDGES AND CENTER PANEL SEAMS SHALL BE FURTHER REINFORCED WITH GALVANIZED STEEL OR ALUMINUM STIFFENER ANGLES. THE ANGLES SHALL BE ATTACHED BY GALVANIZED NUTS AND BOLTS FOR STEEL UNITS AND ALUMINUM NUTS AND BOLTS FOR ALUMINUM UNITS.

WHERE TWO OR MORE PIPES WITH APRON ENDWALLS ARE LAID ADJACENT TO EACH OTHER, THEY SHALL BE SEPARATED BY A DISTANCE SUFFICIENT TO PROVIDE A MINIMUM CLEARANCE OF 6 INCHES BETWEEN APRON ENDWALLS.

① FOR PIPE SIZES UP TO 60" DIAMETER, A 180° ROLLED EDGE MAY BE USED INSTEAD OF STEEL ROD REINFORCEMENT. SEE SECTION A-A.

APRON ENDWALLS FOR CULVERT PIPE

STATE OF WISCONSIN
DEPARTMENT OF TRANSPORTATION

APPROVED
11/30/94 — DATE
/S/ Rory L. Rhinesmith — CHIEF ROADWAY DEVELOPMENT ENGINEER
FHWA

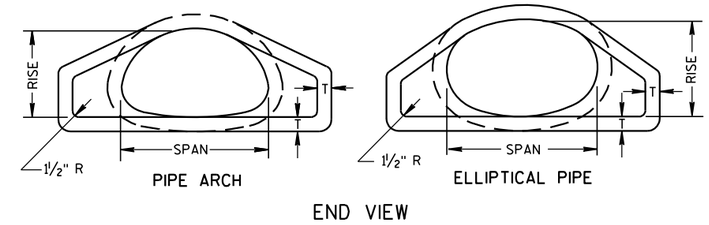

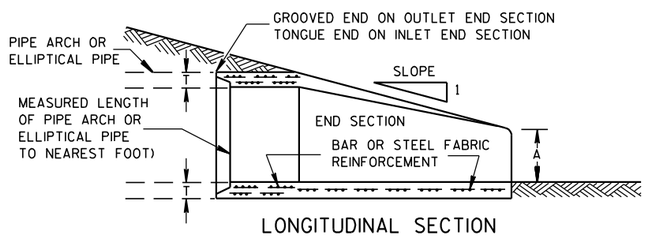

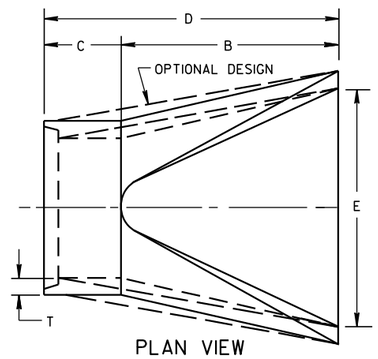

CONCRETE ENDWALLS

2- ⅔" X ½" CORRUGATIONS														
EQUIV. DIA. (Inches)	(Inches)		MIN. THICK. (Inches)		DIMENSIONS (Inches)							APPROX. SLOPE	BODY
	SPAN	RISE	STEEL	ALUM.	A (±1")	B (MAX.)	H (±1")	L (±1½")	L1 ①	L2 ①	W (±2")		
15	17	13	.064	.060	7	9	6	19	14	16	30	2½ to 1	1 Pc.
18	21	15	.064	.060	7	10	6	23	14	19⅜	36	2½ to 1	1 Pc.
21	24	18	.064	.060	8	12	6	28	18	21¾	42	2½ to 1	1 Pc.
24	28	20	.064	.060	9	14	6	32	18	27½	48	2½ to 1	1 Pc.
30	35	24	.079	.075	10	16	6	39	18	37⅝	60	2½ to 1	1 Pc.
36	42	29	.079	.075	12	18	8	46	24	45⅜	75	2½ to 1	1 Pc.
42	49	33	.109	.105	13	21	9	53	24	54¾	85	2½ to 1	2 Pc.
48	57	38	.109	.105	18	26	12	63	24	68	90	2½ to 1	3 Pc.
54	64	43	.109	.105	18	30	12	70	24	72¾	102	2¼ to 1	3 Pc.
60	71	47	.109*	.105*	18	33	12	77	30	82¼	114	2¼ to 1	3 Pc.
66	77	52	.109*	.105*	18	36	12	77	—	—	126	2 to 1	3 Pc.
72	83	57	.109*	.105*	18	39	12	77	—	—	138	2 to 1	3 Pc.

3" X 1" CORRUGATIONS														
EQUIV. DIA. (Inches)	(Inches)		MIN. THICK. (Inches)		DIMENSIONS (Inches)							APPROX. SLOPE	BODY
	SPAN	RISE	STEEL	ALUM.	A (±1")	B (MAX.)	H (±1")	L (±1½")	L1 ①	L2 ①	W (±2")		
48	53	41	.109	.105	18	26	12	63	24	72¾	90	2½ to 1	2 Pc.
54	60	46	.109	.105	18	30	12	70	30	82¼	102	2 to 1	2 Pc.
60	66	51	.109*	.105*	18	33	12	77	—	—	114	1½ to 1	3 Pc.
66	73	55	.109*	.105*	18	36	12	77	—	—	126	1½ to 1	3 Pc.
72	81	59	.109*	.105*	18	39	12	77	—	—	138	2 to 1	3 Pc.
78	87	63	.109*	.105*	22	38	12	77	—	—	148	1½ to 1	3 Pc.
84	95	67	.109*	.105*	22	34	12	77	—	—	162	1½ to 1	3 Pc.
90	103	71	.109*	.105*	22	38	12	77	—	—	174	1½ to 1	3 Pc.
96	112	75	.109*	.105*	24	40	12	77	—	—	174	1½ to 1	3 Pc.

NOTE: ALL SPLICES TO BE LAP RIVETED OR BOLTED.

* EXCEPT CENTER PANEL SEE GENERAL NOTES

REINFORCED CONCRETE PIPE ARCH									
EQUIV. DIA. (Inches)	DIMENSIONS (Inches)								APPROX. SLOPE
	** SPAN	** RISE	T	A	B	C	D	E	
24	29	18	3	8½	39	33	72	48	3 to 1
30	36	22	3½	9½	50	46	96	60	3 to 1
36	44	27	4	11⅛	60	36	96	72	3 to 1
42	51	31	4½	15 13/16	60	36	96	78	3 to 1
48	58	36	5	21	60	36	96	84	3 to 1
54	65	40	5½	25½	60	36	96	90	3 to 1
60	73	45	6	31	60	36	96	96	3 to 1
72	88	54	7	31	60	39	99	120	2 to 1
84	102	62	8	28½	83	19	102	144	2 to 1

REINFORCED CONCRETE ELLIPTICAL PIPE									
EQUIV. DIA. (Inches)	DIMENSIONS (Inches)								APPROX. SLOPE
	** SPAN	** RISE	T	A	B	C	D	E	
24	30	19	3¼	8½	39	33	72	48	3 to 1
30	38	24	3¾	9½	54	18	72	60	3 to 1
36	45	29	4½	11⅛	60	24	84	72	2½ to 1
42	53	34	5	15¾	60	36	96	78	2½ to 1
48	60	38	5½	21	60	36	96	84	2½ to 1
54	68	43	6	25½	60	36	96	90	2½ to 1
60	76	48	6½	30	60	36	96	96	2½ to 1

**NOMINAL SIZE

GENERAL NOTES

DETAILS OF CONSTRUCTION, MATERIALS AND WORKMANSHIP NOT SHOWN ON THIS DRAWING SHALL CONFORM TO THE PERTINENT REQUIREMENTS OF THE STANDARD SPECIFICATIONS AND THE APPLICABLE SPECIAL PROVISIONS.

CONCRETE APRON ENDWALLS MAY NOT BE USED WITH GALVANIZED STEEL OR ALUMINUM CULVERT PIPE OR VISE VERSA. GALVANIZED STEEL OR ALUMINUM APRON ENDWALLS SHALL NORMALLY BE INSTALLED ON CULVERT PIPE OF THE SAME METAL.

ALL THREE PIECE STEEL APRON ENDWALLS FOR 66" X 51" PIPE ARCH AND LARGER SHALL HAVE 0.109" SIDES AND 0.138" CENTER PANELS. ALL THREE PIECE ALUMINUM APRON ENDWALLS FOR 66" X 51" PIPE ARCH AND LARGER SHALL HAVE 0.105" SIDES AND 0.134" CENTER PANELS. THE WIDTH OF CENTER PANELS SHALL BE GREATER THAN 20 PERCENT OF THE PIPE ARCH PERIMETER.

LAP SEAMS SHALL BE TIGHTLY JOINED BY GALVANIZED RIVETS OR BOLTS FOR STEEL UNITS AND ALUMINUM RIVETS AND BOLTS FOR ALUMINUM UNITS. FOR THE 77" X 52" THROUGH 112" X 75" APRON ENDWALL SIZES, THE REINFORCED EDGES AND CENTER PANEL SEAMS SHALL BE FURTHER REINFORCED WITH GALVANIZED STEEL OR ALUMINUM STIFFENER ANGLES. THE ANGLES SHALL BE ATTACHED BY GALVANIZED NUTS AND BOLTS FOR STEEL UNITS AND ALUMINUM NUTS AND BOLTS FOR ALUMINUM UNITS.

WHERE TWO OR MORE PIPES WITH APRON ENDWALLS ARE LAID ADJACENT TO EACH OTHER, THEY SHALL BE SEPARATED BY A DISTANCE SUFFICIENT TO PROVIDE A MINIMUM CLEARANCE OF 6 INCHES BETWEEN APRON ENDWALLS.

① FOR PIPE ARCH SIZES UP TO 73" X 55" A 180° ROLLED EDGE MAY BE USED INSTEAD OF STEEL ROD REINFORCEMENT. SEE SECTION A-A.

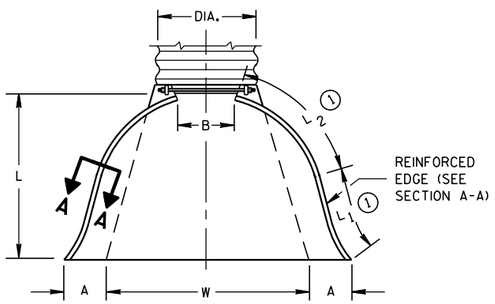

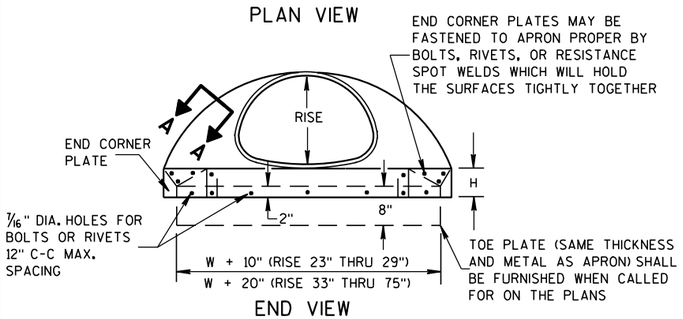

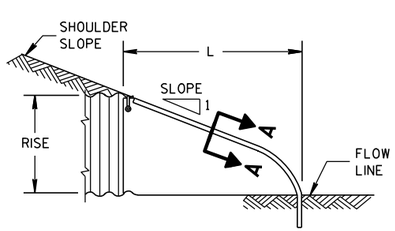

SIDE ELEVATION

METAL ENDWALLS

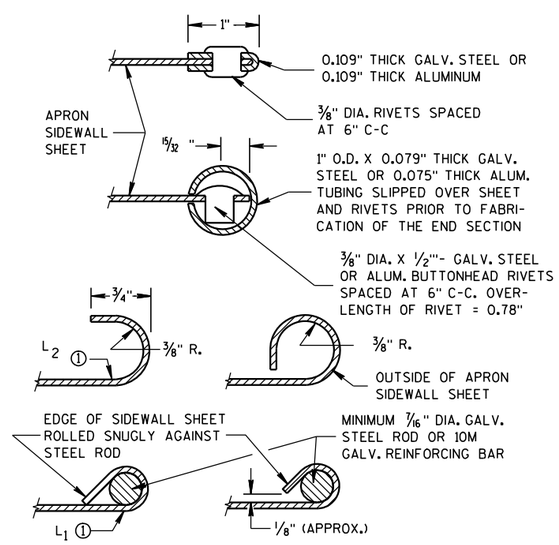

SECTION A-A

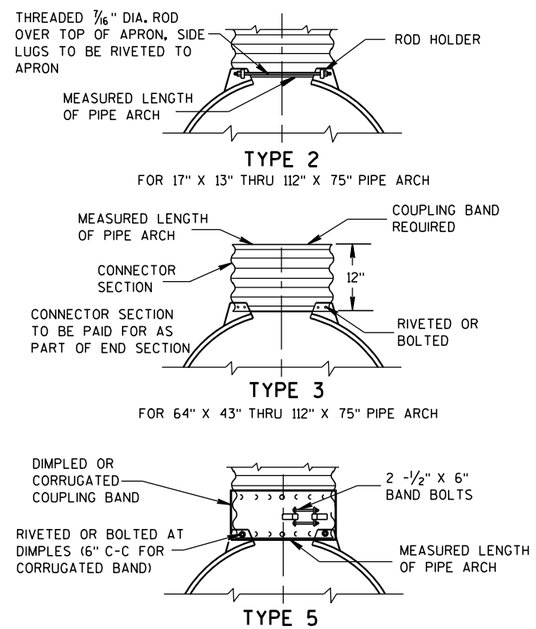

NOTE: DIMPLED BAND FITS OVER OUTSIDE OF ENDWALL, AND CORRUGATED BAND FITS INSIDE ENDWALL.

CONNECTION DETAILS

APRON ENDWALLS FOR PIPE ARCH AND ELLIPTICAL PIPE

STATE OF WISCONSIN
DEPARTMENT OF TRANSPORTATION

APPROVED
11/30/94 — DATE
/S/ Rory L. Rhinesmith — CHIEF ROADWAY DEVELOPMENT ENGINEER
FHWA

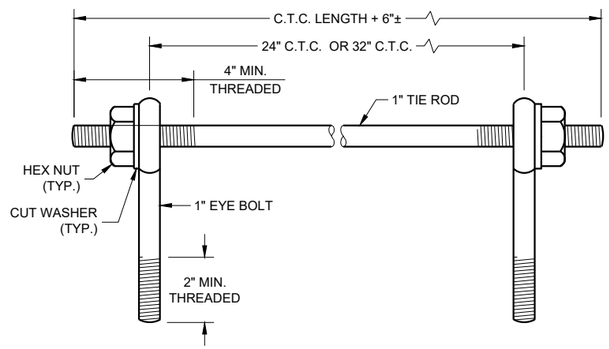

EYE BOLTS AND TIE ROD

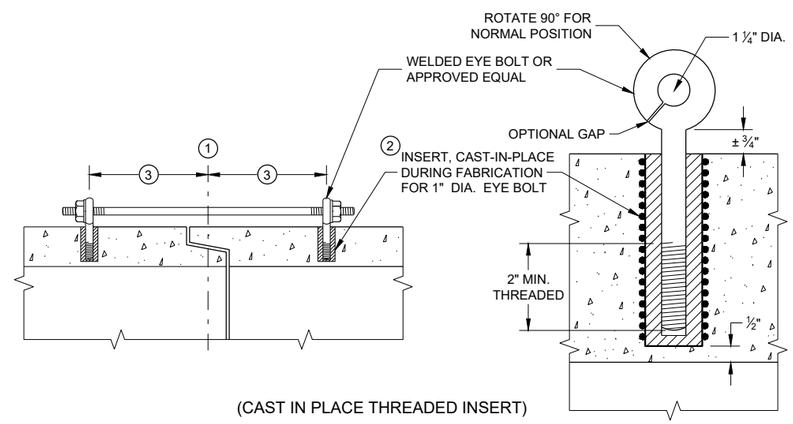

(CAST IN PLACE THREADED INSERT)

LONGITUDINAL SECTIONS

EYE BOLT AND TIE ROD ASSEMBLY (ALTERNATE NO. 1)

GENERAL NOTES

DETAILS OF CONSTRUCTION, MATERIALS, AND WORKMANSHIP NOT SHOWN ON THIS DRAWING SHALL CONFORM TO THE PERTINENT REQUIREMENTS OF THE STANDARD SPECIFICATIONS AND APPLICABLE SPECIAL PROVISIONS.

CONCRETE CULVERT AND STORM SEWER PIPE SHALL BE TIED TOGETHER IN THE MANNER ILLUSTRATED BY THIS DETAIL AT LOCATIONS DESIGNATED IN THE STANDARD SPECIFICATIONS AND THE PLAN. THE CONTRACTOR MAY USE EITHER ALTERNATE 1, 2 OR 3 FOR DRAINAGE STRUCTURES. ONLY ALTERNATE 1 AND 3 MAY BE USED FOR CATTLE PASSES, UNLESS OTHERWISE STATED IN THE CONTRACT. THE MATERIALS, FABRICATION AND WORK NECESSARY TO TIE THE PIPE BY THIS DETAIL WILL BE CONSIDERED INCIDENTAL TO THE PIPE AND APRON ENDWALLS IF REQUIRED.

DETAILED DRAWINGS FOR PROPOSED ALTERNATE DESIGNS FOR JOINT TIES SHALL BE SUBMITTED TO THE ENGINEER FOR APPROVAL.

JOINT TIES TO BE HOT-DIP GALVANIZED PER ASTM A 153.

1. CENTER LINE OF TONGUE AND GROOVE OR BELL AND SPIGOT JOINTS.
2. THE INSIDE OF THE THREADED INSERTS SHALL BE CLEAN TO ALLOW THE INSERTION OF THREADED EYE BOLTS.
3. HOLES SHALL BE CAST-IN-PLACE OR DRILLED PER THE APPLICABLE DETAIL, AND EQUAL DISTANCE FROM THE CENTERLINE OF THE JOINT.
4. BOLT PROJECTION INSIDE OF PIPE SHALL NOT EXCEED 2 INCHES.
5. OPENING TO BE ROD DIAMETER PLUS 1 INCH.
6. LENGTH ADEQUATE TO EXTEND TO WITHIN ½ INCH OF THE INNER SURFACE OF THE PIPE.
7. EYE BOLT LENGTH DETERMINED BY WALL THICKNESS, BELL THICKNESS AND BOLT PROJECTION INSIDE PIPE.

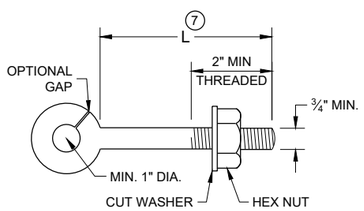

EYE BOLT 7

NOTE: TWO EYE BOLTS MAY BE USED WITH A 30" OR 38" LONG THREADED ROD IN LIEU OF THE 90° BENT TIE ROD.

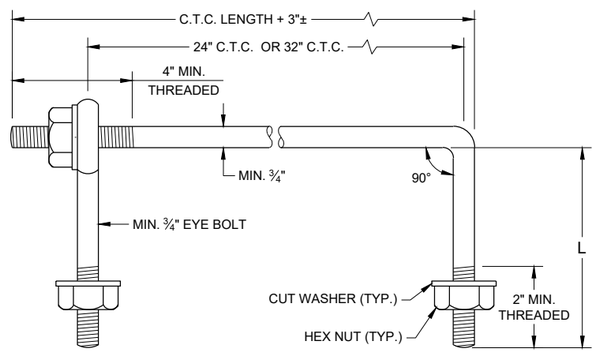

EYE BOLT AND TIE ROD

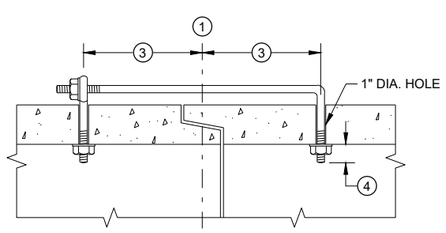

(TONGUE AND GROOVE PIPE)

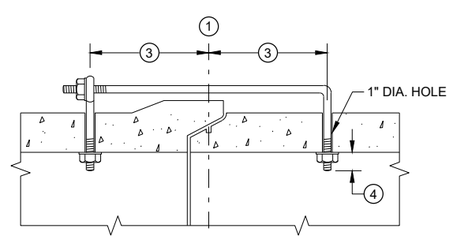

(MODIFIED BELL PIPE)

LONGITUDINAL SECTION

(JOINT TIES FOR 18" TO 66" DIA. CONCRETE PIPE)

EYE BOLT AND TIE ROD ASSEMBLY (ALTERNATE NO. 2)

ADJUSTABLE TIE ROD TABLE

PIPE DIAMETER	TIE ROD DIAMETER	D	L_1	N
12 - 60	⅝	⅝	5	½
66 - 84	¾	¾	5	½
90 - 144	1	1	7	1 7/16

DIMENSIONS SHOWN ARE IN INCHES

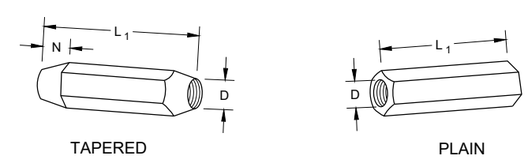

RIGHT AND LEFT THREADS

SLEEVE NUTS

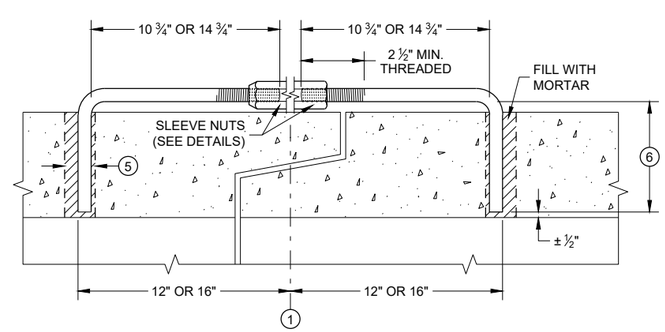

LONGITUDINAL SECTION

ADJUSTABLE TIE ROD (ALTERNATE NO. 3)

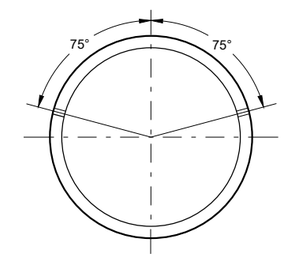

PLACEMENT OF (2) CAST-IN-PLACE INSERTS OR HOLES DURING FABRICATION FOR PIPE SECTIONS REQUIRING TIE RODS

TRANSVERSE SECTION

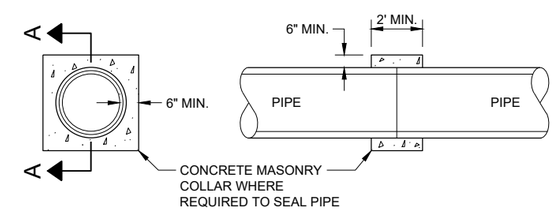

SECTION A - A

CONCRETE COLLAR DETAIL

JOINT TIES FOR CONCRETE PIPE AND CONCRETE COLLAR DETAIL

STATE OF WISCONSIN
DEPARTMENT OF TRANSPORTATION

APPROVED
November 2021 — DATE
/S/ Rodney Taylor — ROADWAY STANDARDS DEVE ENGINEER
FHWA

6

SDD 08F04 - 08

FORM DEPTH SHALL BE NO MORE THAN 6" BELOW GRADE ON THE LOWER SIDE OF BASE

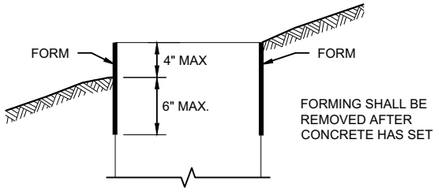

FORMING DETAIL

QUANTITY REQUIREMENTS	CONCRETE BASE TYPE		
	1	2	5 & 6
APPROX. CUBIC YARDS OF CONCRETE	0.40	0.57	0.40
LBS. OF HOOP BAR STEEL	NONE	23	16
LBS. OF VERTICAL BAR STEEL	NONE	60	18

GENERAL NOTES

DETAILS OF CONSTRUCTION, MATERIALS AND WORKMANSHIP NOT SHOWN ON THIS DRAWINGSHALL CONFORM TO THE PERTINENT REQUIREMENTS OF THE CONTRACT.

BASES SHALL BE EXCAVATED BY USE OF A CIRCULAR AUGER.

TOP SURFACES OF CONCRETE BASES SHALL BE TROWEL FINISHED SMOOTH AND LEVEL.

CONDUIT SIZES AND LOCATIONS SHALL BE SHOWN ON THE PLANS

THE FINAL OR TERMINATING CONCRETE BASE IN A CONDUIT RUN SHALL HAVE A 6" EXIT STUB INSTALLED FOR FUTURE CABLING USE. THE EXIT STUB SHALL BE SIZED AS USED THROUGHOUT THE CONDUIT RUN AS SHOWN A THE ENTRANCE OF THE BASE.

ENDS OF CONDUIT INSTALLED BELOW GRADE FRO FUTURE USE SHALL BE CAPPED IF METALLIC OR PLUGGED IF NON-METALLIC.

MINIMUM BENDING RADIUS OF CONDUIT IS EQUAL TO 6X THE DIAMETER.

CONDUIT HEIGHT ABOVE CONCRETE BASES SHALL BE 1 INCH. ALL METALLIC CONDUIT ENDS SHALL BE REAMED AND THREADED.

ALL CONDUIT ENDS AT THE TOP OF CONCRETE BASES SHALL BE CAPPED IF METALLIC OR PLUGGED IF NON-METALLIC IMMEDIATELY AFTER PLACEMENT AND BEFORE CONCRETE IS POURED. CONDUITS IN WHICH WIRE OR CABLE IS NOT INSTALLED SHALL REMAIN CAPPED OR PLUGGED.

BELL ENDS SHALL BE INSTALLED ON ALL PVC CONDUIT EXPOSED AT THE TOP OF CONCRETE BASES BEFORE INSTALLATION.

WHEN REQUIRED TO CONNECT NON-METALLIC CONDUIT TO METALLIC CONDUIT, ONLY ADAPTER FITTINGS, U.L. LISTED FOR ELECTRICAL USE, SHALL BE USED.

IF A BASE REQUIRES A DEEP FORM BECAUSE OF LOOSE DIRT OR FILL, THE FORM SHALL BE REMOVED BEFORE BACKFILLING AROUND THE BASE. BACKFILL SHALL BE TAMPED TIGHT AGAINST THE BARE CONCRETE BASE IN LAYERS OF 1 FOOT OR LESS.

A NO. 4 AWG STRANDED COPPER EQUIPMENT GROUNDING CONDUCTOR SHALL BE EXOTHERMICALLY WELDED TO THE EQUIPMENT GROUNDING ELECTRODE (GROUND ROD) FOR TYPE 2, TYPE 5 AND TYPE 6 BASES.

THE EQUIPMENT GROUNDING CONDUCTOR SHALL BE FURNISHED AND INSTALLED TO ENTER ALL BASE TYPES THROUGH A 1 INCH CONDUIT INSTALLED FOR GROUNDING PURPOSES, LEAVING A 4 FOOT COIL OF WIRE ABOVE THE CONCRETE BASE. THE EQUIPMENT GROUNDING CONDUCTOR SHALL BE NEATLY COILED AND THE COILS TIED TOGETHER.

ANCHOR RODS SHALL BE THREADED 12" IN LENGTH ON EACH END OF THE ROD. ANCHOR RODS SHALL BE MANUFACTURED IN ACCORDANCE WITH SECTION 654.2.1 OF THE STANDARD SPECIFICATIONS.

WASHERS AND LOCK WASHERS ARE REQUIRED ON ALL ANCHOR RODS.

WHEN ANCHOR RODS USING THE ALTERNATE "L" BEND ARE FURNISHED, THE 4 INCH"L" BEND SHALL BE IN ADDITION TO THE SPECIFIED ANCHOR ROD BAR LENGTH. THE "L" BEND SHALL NOT BE THREADED.

ANCHOR RODS SHALL BE INSTALLED WITH MISALIGNMENTS OF LESS THAN 1:40 FROM VERTICAL.

WELDING OF THE ANCHOR RODS TO THE CAGE IS UNACCEPTABLE. TIE WIRES SHALL BE USED.

BAR STEEL REINFORCEMENT SHALL BE COATED WITH POWDERED EPOXY RESIN IN ACCORDANCE WITH SECTION 505 OF THE STANDARD SPECIFICATIONS (LATEST EDITION).

(1) THE MINIMUM DEPTH OF CONDUIT EXITING THE CONCRETE BASE AND INSTALLED BELOW THE TRAVELED WAY SHALL BE 24 INCHES. THE MINIMUM DEPTH OF CONDUIT EXITING THE CONCRETE BASE THAT IS NOT INSTALLED BELOW THE TRAVELED WAY SHALL BE 18 INCHES. THE MAXIMUM DEPTH OF ALL CONDUIT SHALL BE 36 INCHES EXCEPT WITH WRITTEN APPROVAL OF THE ENGINEER.

(2) (4) 1" DIA. X 3' - 6" ANCHOR RODS.

(3) (4) 1" DIA. X 5' - 0" ANCHOR RODS.

(4) (6) NO. 6 X 6' - 8" BAR STEEL REINFORCEMENT.

(5) (7) NO. 4 X 5' - 1" BAR STEEL REINFORCEMENT @ 1' - 0" C - C.

(6) (4) 1" DIA. X 3' - 6" ANCHOR RODS.

(7) (6) NO. 4 X 4' - 8" BAR STEEL REINFORCEMENT.

(8) (5) NO. 4 X 5' - 1" BAR STELL REINFORCEMENT @ 1' - 0" C -C.

(9) EXOTHERMIC CONNECTION TO EUIPMENT GROUNDING CONDUCTOR

(10) ⅝" DIA. X 8' -0" COPPERCLAD EQUIPMENT GROUNDING ELECTRODE REQUIRED

(11) ANY ANCHOR ROD PROJECTION SHORTER THAN 2 ¾" OR LONGER THAN 3 ¼" SHALL REQUIRE THE BASE TO BE REMOVED AND REPLACED AT THE CONTRACTORS EXPENSE.

(12) FOR NON - BREAKAWAY INSTALLATIONS, 4 ½" ± ANCHOR ROD PROJECTION WITH THE USE OF LEVELING NUTS. RODENT SCREEN REQUIRED.

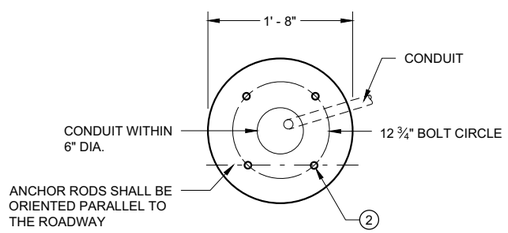

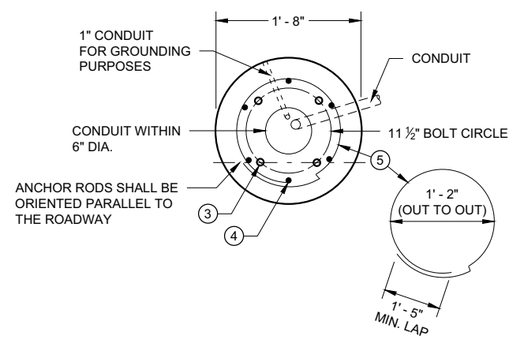

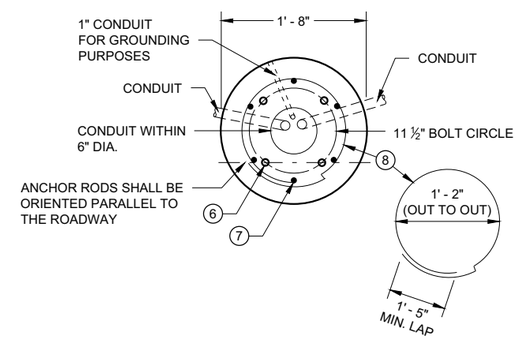

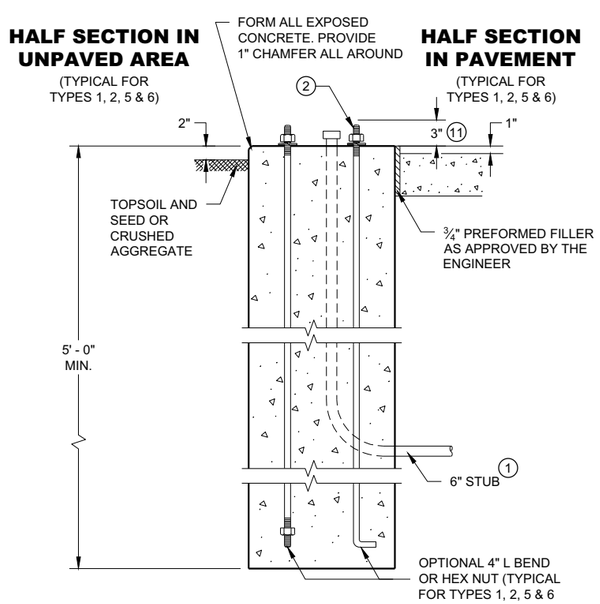

TYPE 1

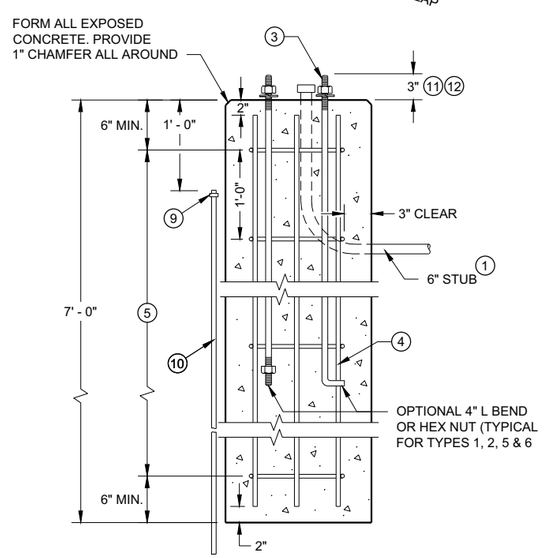

TYPE 2

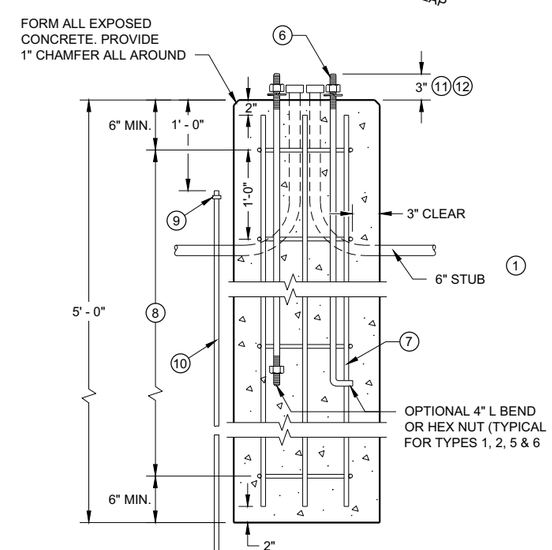

TYPE 5 & 6

CONCRETE BASES

CONCRETE BASES
TYPES 1, 2, 5, & 6

STATE OF WISCONSIN
DEPARTMENT OF TRANSPORTATION

APPROVED
May 2019 — DATE
/S/ Ahmet Demirbilek — STATE ELECTRICAL ENGI
FHWA

6

SDD 09C02 - 09

GENERAL NOTES

DO NOT MILL SHOULDER GROOVES THROUGH INTERSECTIONS, MARKED CROSSWALKS, NON-MOTORIZED PATH CROSSINGS, ETC. REFER TO SDD 13A11 SHEETS "d" AND "e".

CENTERLINE GROOVES MAY BE OMITTED IN AREAS WITH HIGH CONCENTRATIONS OF DRIVEWAYS WHEN DIRECTED BY THE ENGINEER.

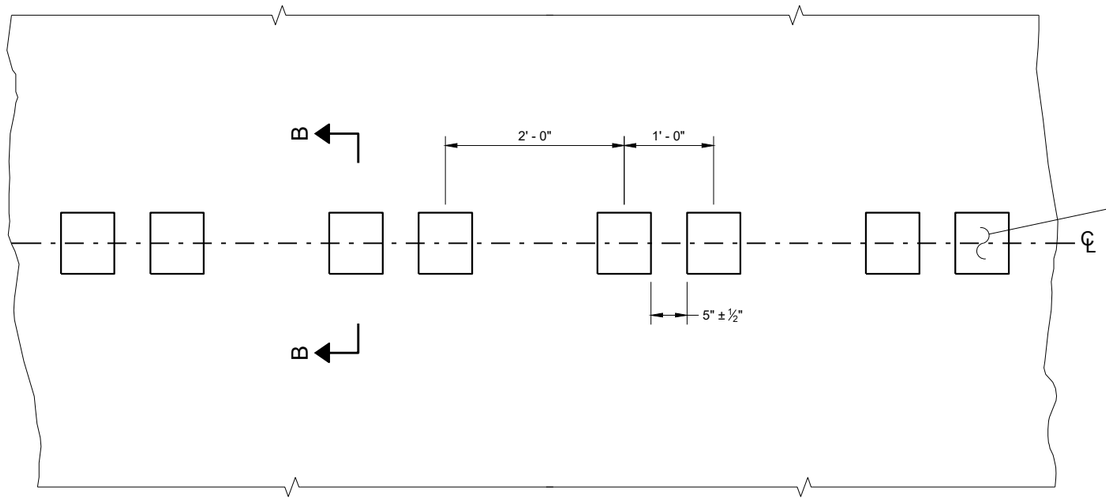

PLAN DETAIL VIEW

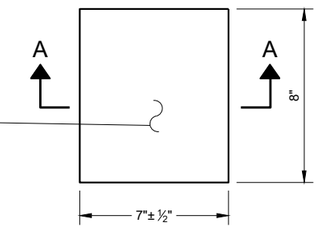

PLAN VIEW
(SINGLE GROOVE)

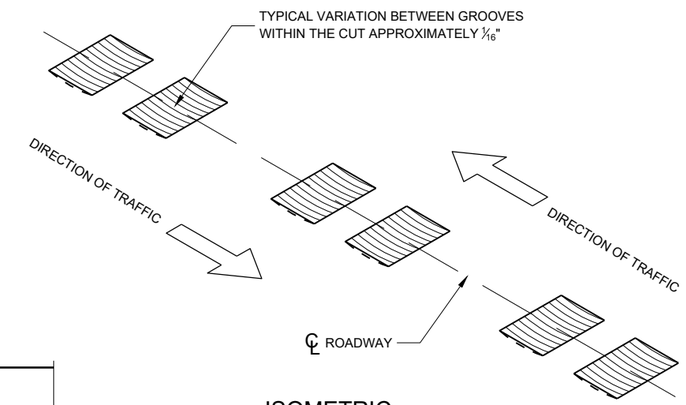

ISOMETRIC

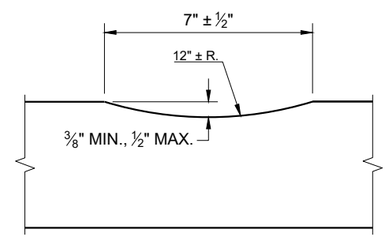

SECTION A - A

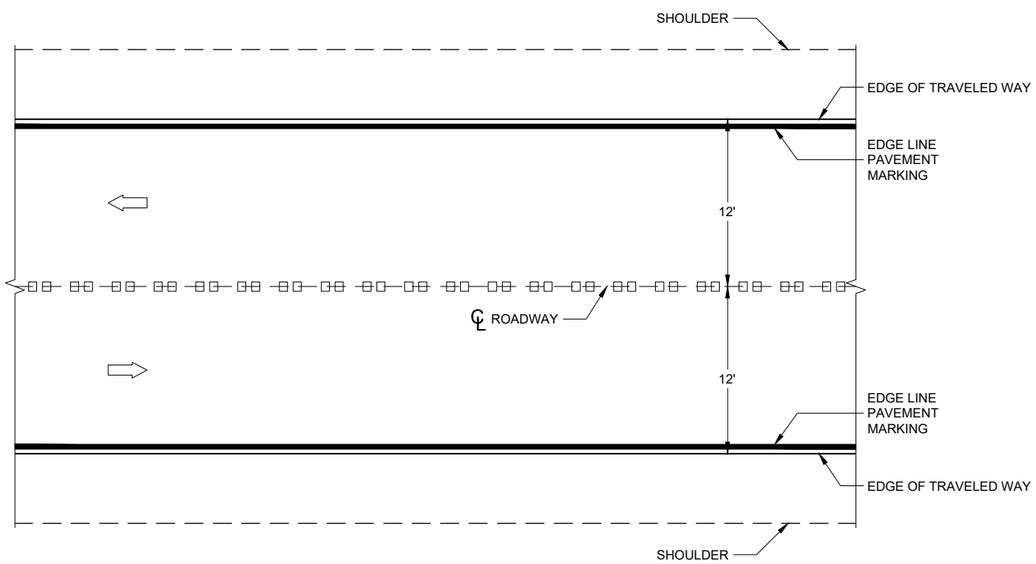

PLAN VIEW

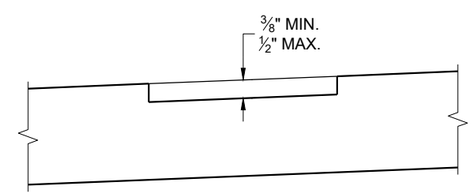

SECTION B - B
SUPERELEVATED ROADWAY

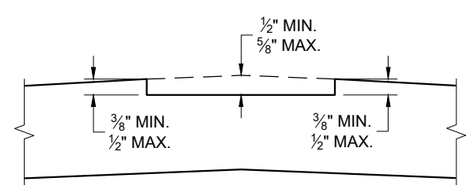

SECTION B - B
CROWNED ROADWAY

CENTERLINE RUMBLE STRIPS - ASPHALT

6

SDD 13A11 - 04a

CENTERLINE RUMBLE STRIPS - ASPHALT

STATE OF WISCONSIN
DEPARTMENT OF TRANSPORTAT

6

SDD 13A11 - 04a

GENERAL NOTES

1. CENTERLINE GROOVES MAY BE OMITTED IN AREAS WITH HIGH CONCENTRATIONS OF DRIVEWAYS WHEN DIRECTED BY THE ENGINEER.

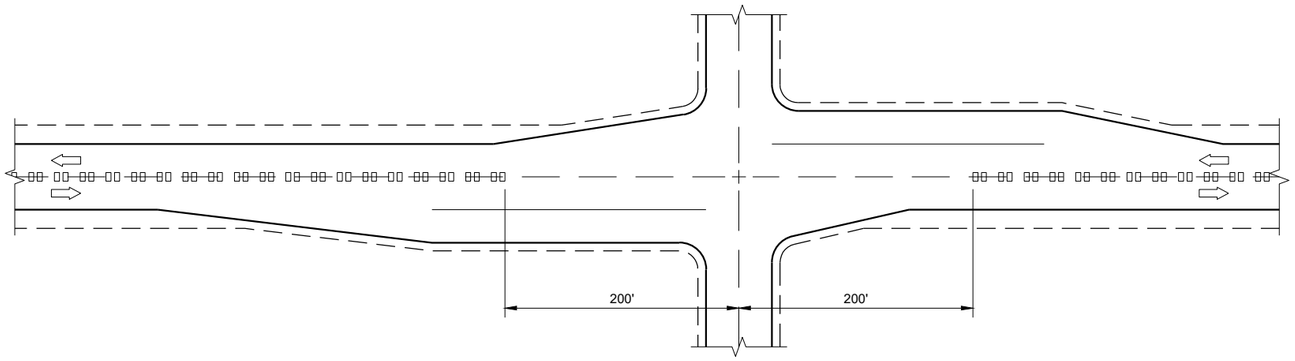

CENTERLINE GROOVES AT INTERSECTIONS

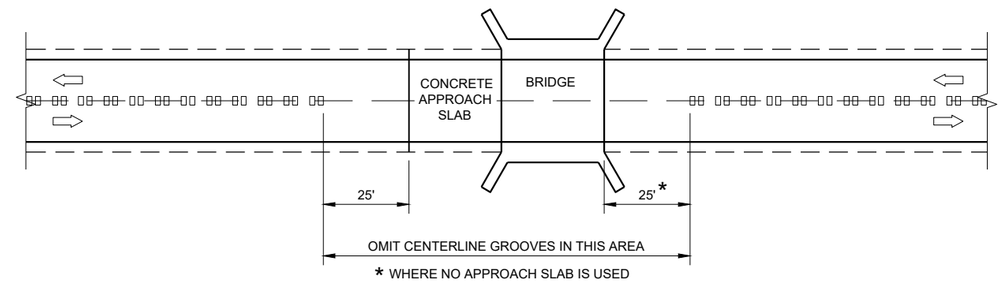

CENTERLINE GROOVES AT BRIDGES

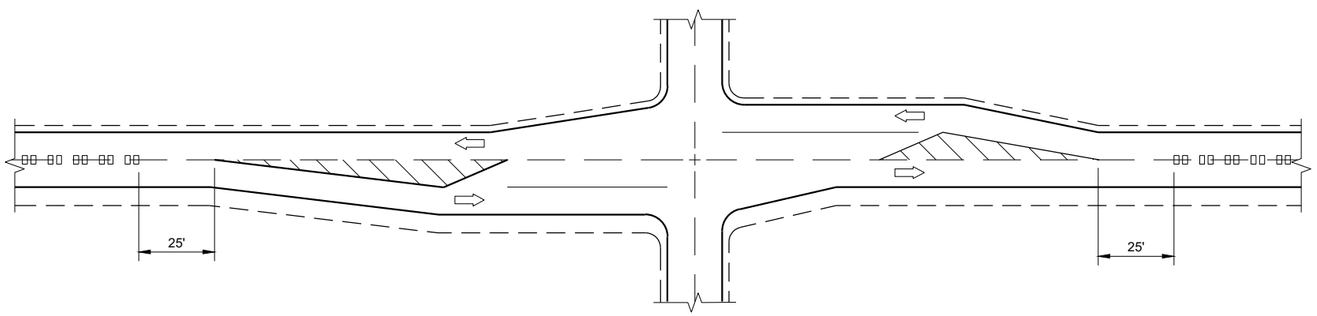

CENTERLINE GROOVES AT INTERSECTIONS (WITH LEFT TURN LANES)

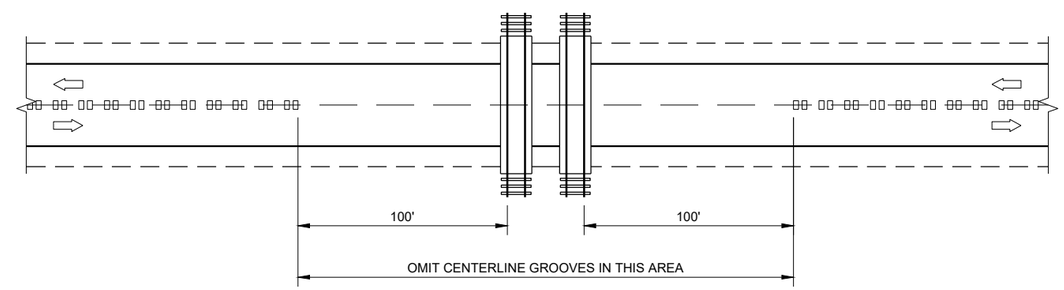

CENTERLINE GROOVES AT RAILROADS

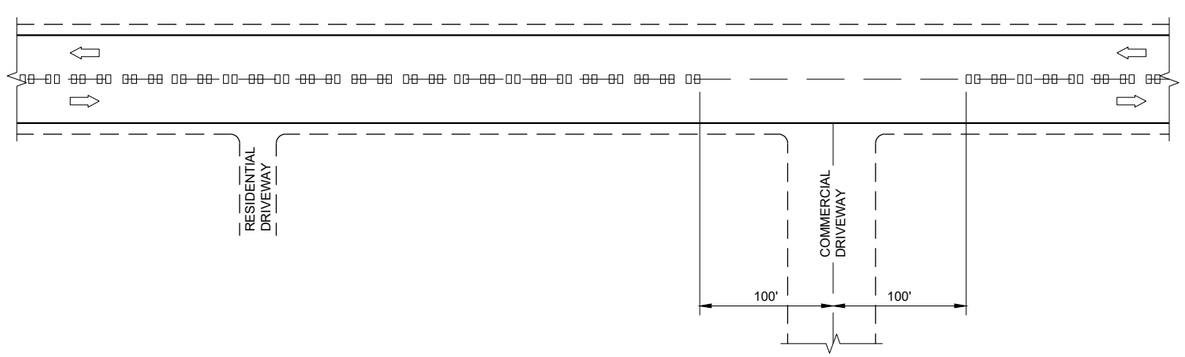

CENTERLINE GROOVES AT DRIVEWAYS (1)

CENTER LINE RUMBLE STRIPS - INTERSECTIONS, DRIVEWAYS, BRIDGES, RAIL ROADS

STATE OF WISCONSIN
DEPARTMENT OF TRANSPORTATION

APPROVED
May 2023 — DATE
/S/ John Jenkins — ROADWAY STANDARDS DEVE ENGINEER

FHWA

6

SDD 13A11 - 04d

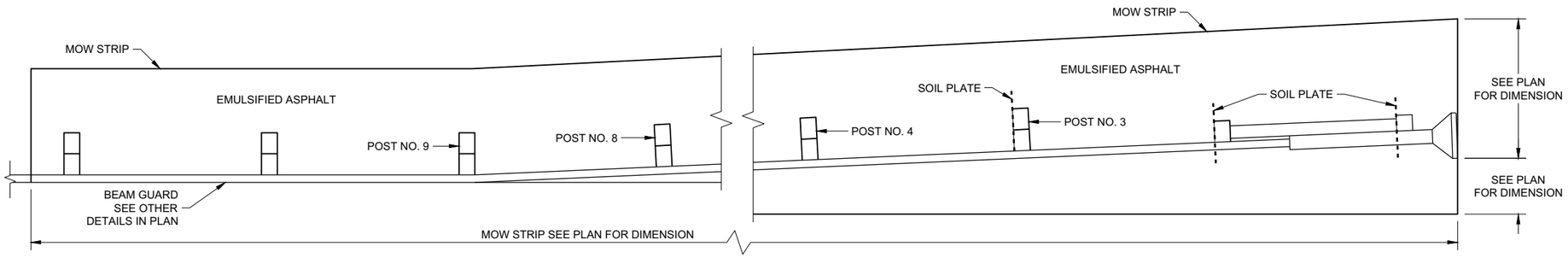

PLAN VIEW
MOW STRIP LAYOUT FOR ENERGY ABSORBING TERMINAL

GENERAL NOTES

ONLY USE STEEL POSTS IN CONCRETE AND ASPHALT MOW STRIPS.

1. CONTROLLED LOW-STRENGTH BACKFILL OR EMULSIFIED ASPHALT.
2. DEPTH OF MOW STRIP:
   ASPHALT - 4"
   CONCRETE - 4"
   EMULSIFIED ASPHALT - 1" OR LESS
3. FOR EMULSIFIED ASPHALT, MOW STRIP STRIP LEAVE OUTS NOT REQUIRED. (TYPICAL FOR ALL POSTS)

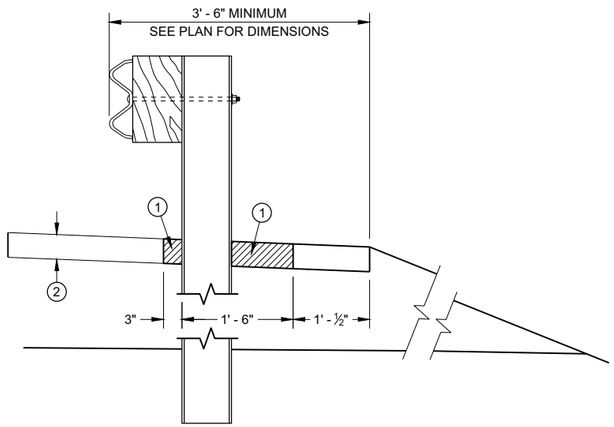

SECTION A - A

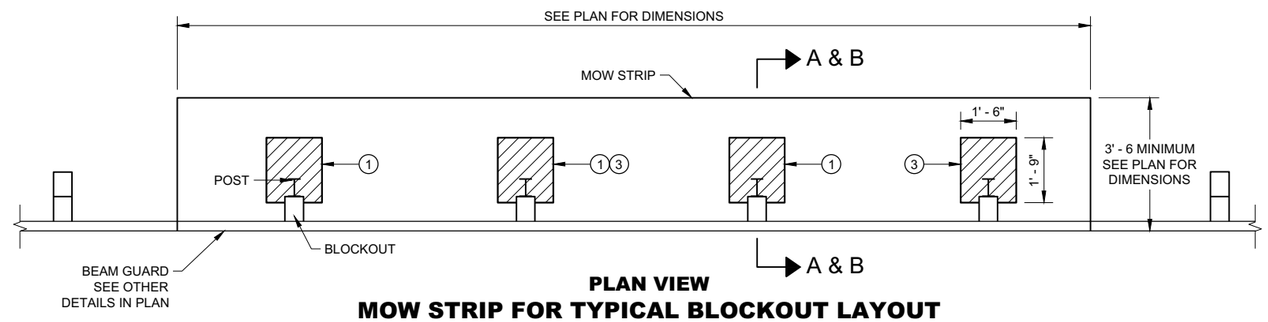

PLAN VIEW
MOW STRIP FOR TYPICAL BLOCKOUT LAYOUT

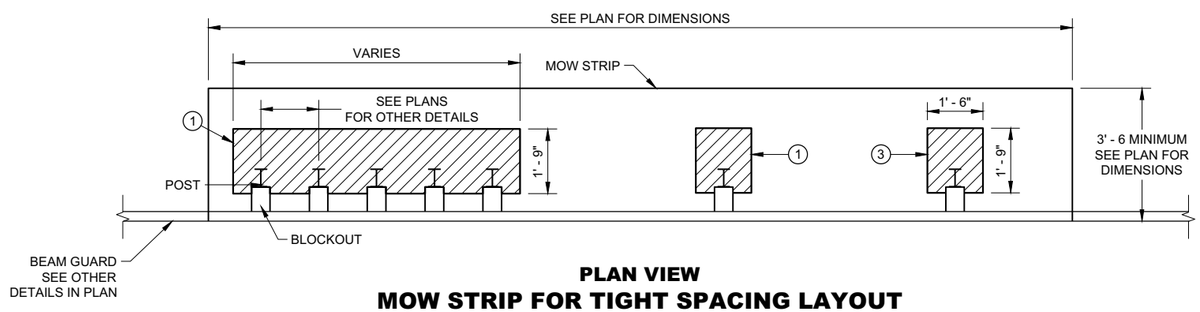

PLAN VIEW
MOW STRIP FOR TIGHT SPACING LAYOUT

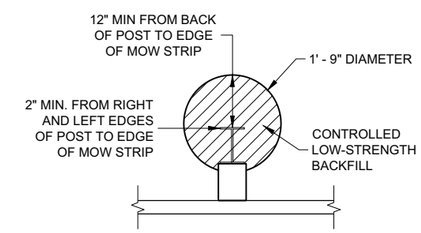

ALTERNATIVE HMA
MOW STRIP DESIGN

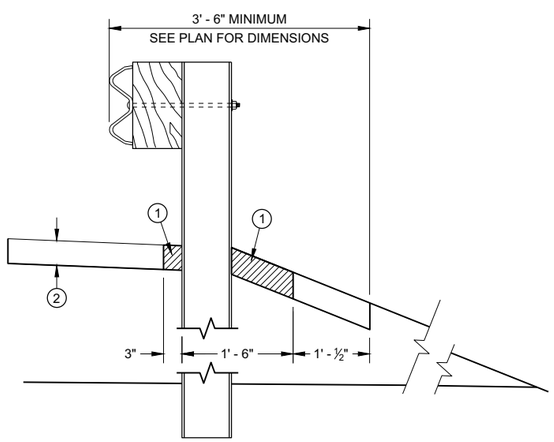

SECTION B - B

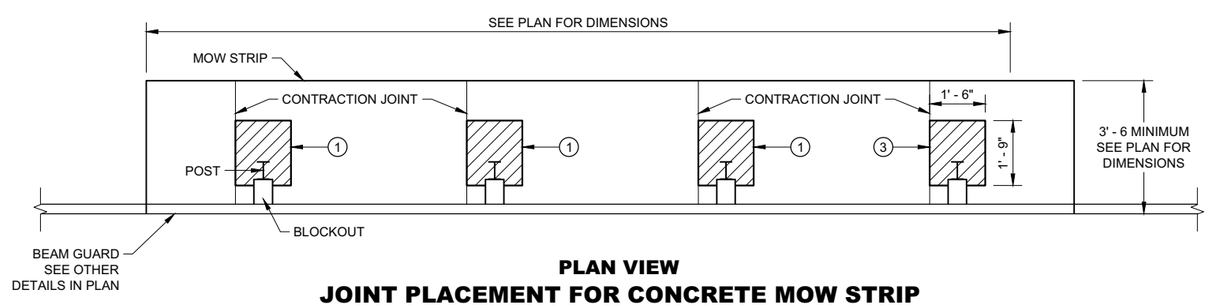

PLAN VIEW
JOINT PLACEMENT FOR CONCRETE MOW STRIP

GUARDRAIL MOW STRIP

STATE OF WISCONSIN
DEPARTMENT OF TRANSPORTA

6

6

SDD 14B28 - 04a

SDD 14B28 - 04a

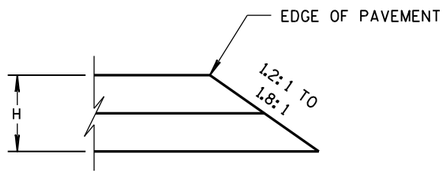

CONSTRUCTED WITH FINAL TWO LAYERS

FOR H 5" OR LESS

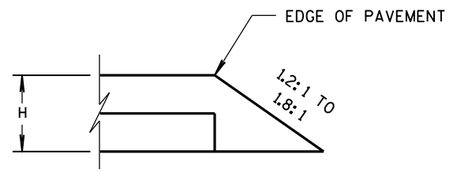

CONSTRUCTED WITH FINAL LAYER

FOR H 5" OR LESS

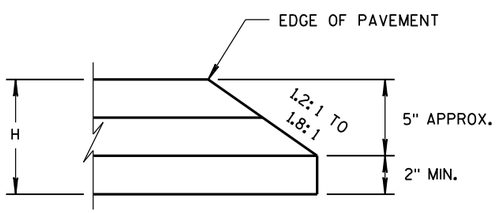

CONSTRUCTED WITH FINAL TWO LAYERS

FOR H GREATER THAN 5"

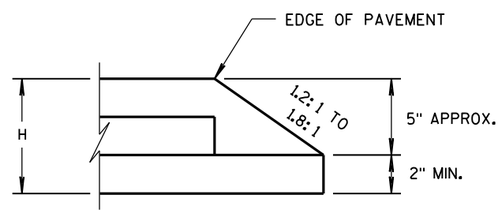

CONSTRUCTED WITH FINAL LAYER

FOR H GREATER THAN 5"

HMA PAVEMENT AND HMA OVERLAYS

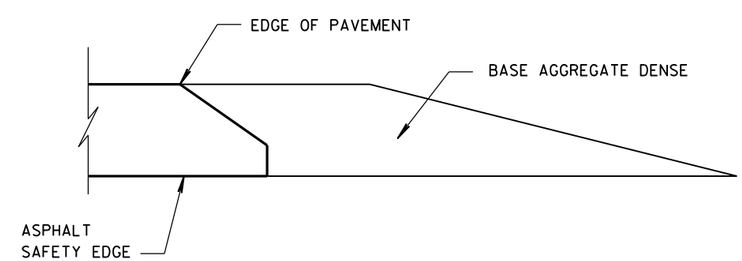

FINISHED SHOULDER AGGREGATE PLACEMENT

6

6

S.D.D. 14 B 29-1

S.D.D. 14 B 29-1

SAFETY EDGE SM

STATE OF WISCONSIN
DEPARTMENT OF TRANSPORTATION

APPROVED

11/30/2012
DATE

/S/ Jerry H. Zogg
ROADWAY STANDARDS DEVELOPMENT ENGINEER

FHWA

1. WOOD OR STEEL POSTS (w6X9 OR w6X8.5) MAY BE USED. DO NOT INTERMIX WOOD AND STEEL POSTS. INSTALL STEEL POSTS WITH HOLES ON APPROACHING TRAFFIC SIDE.
2. USE WOOD OR APPROVED PLASTIC BLOCKOUTS. WOOD BLOCKOUTS MAY BE CONSTRUCTED OUT OF TWO OR MORE WOOD BLOCKOUTS. SEE ALTERNATE WOOD BLOCKOUT DETAIL. DIMENSIONS OF APPROVED PLASTIC BLOCKOUTS MAY VARY.
3. IF ROCK IS ENCOUNTERED DURING EXCAVATION, PROVIDE A HOLE 12 INCHES IN DIAMETER EXTENDING 20 INCHES DEEP INTO THE ROCK. PLACE APPROXIMATELY 2 1/2" INCHES OF GRANULAR MATERIAL IN THE BOTTOM OF THE HOLE. CUT THE POSTS THE TO LENGTH AMD INSTALL. BACKFILL WITH EXCAVATED MATERIAL AND COMPACT. BACKFILL IS TO BE FREE OF LARGE ROCKS.
4. WHEN THE DISTANCE FROM BACK OF POST TO SHOULDER HINGE POINT IS LESS THAN 2 FEET INSTALL LONGER POST AT HALF POST SPACING (K).
5. FOR NEW MGS INSTALLATION TOP OF W-BEAM RAIL TOLERANCE IS ±1". FOR EXISTING MGS INSTALLATION TOP OF W-BEAM IS BETWEEN 27 ¾" TO 32".
6. WHEN USING STEEL POST AND WOOD BLOCKOUTS INSTALL FOUR 16D GALVANIZED NAILS. INSTALL NAILS AT THE BACK CORNERS OF THE BLOCK AND BEND THE NAILS OVER THE FLANGE OF THE STEEL POST.
7. TOTAL POST LENGTH FOR TYPE K IS 7' - 0". TOTAL POST LENGTH FOR OTHER MGS TYPES IS 6' - 0".

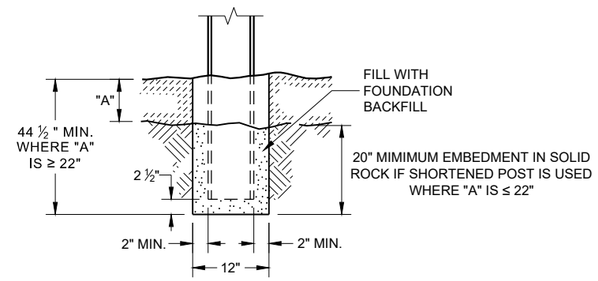

END VIEW
SETTING STEEL OR WOOD POST IN ROCK (3)

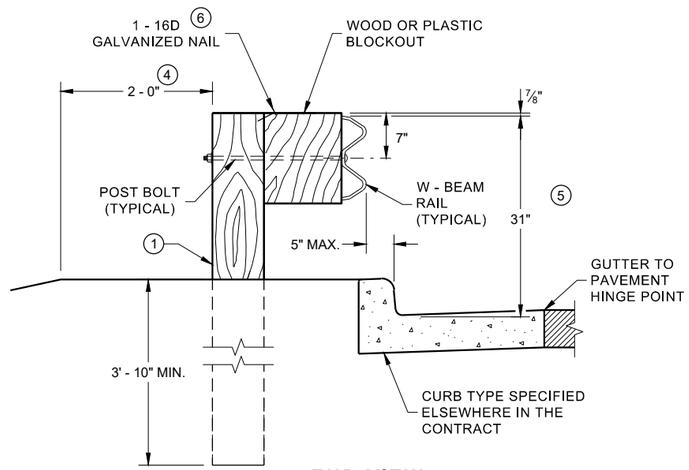

END VIEW
LOCATED ALONG A CURBED ROADWAY

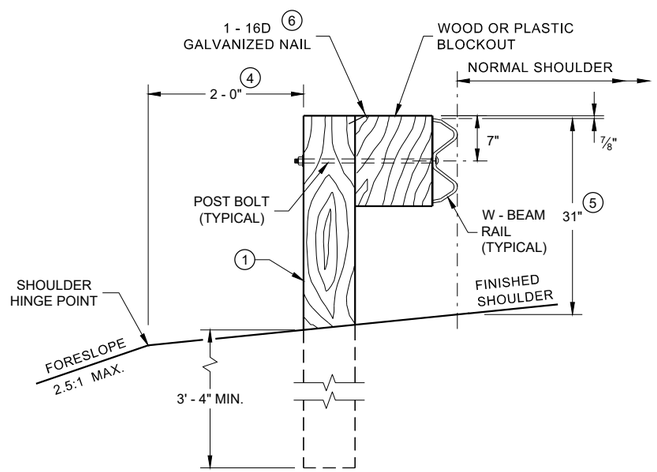

END VIEW
LOCATED ALONG A ROADWAY SHOULDER STANDARD INSTALLATION

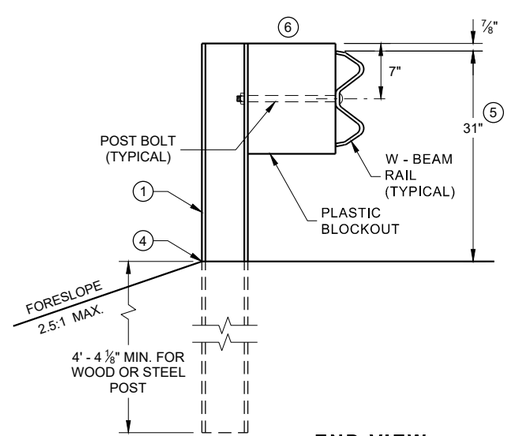

END VIEW
MGS LONGER POST AT HALFPOST SPACING W BEAM (K)

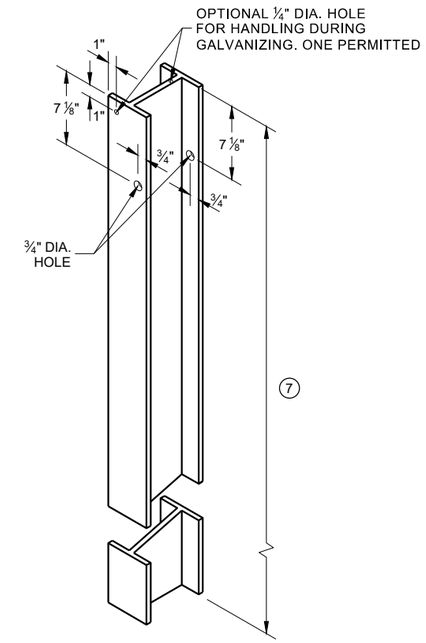

STEEL POST & HOLE PUNCHING DETAIL (W 6 X 9) (1)

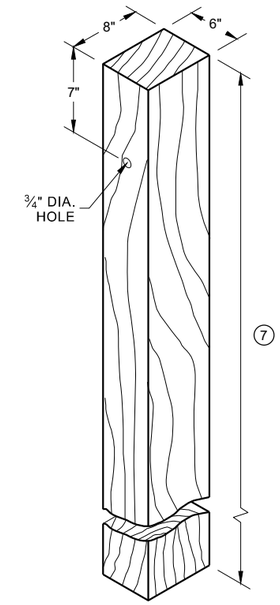

WOOD POST (6" X 8") NOMINAL (1)

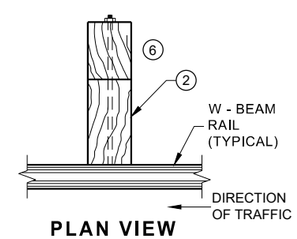

PLAN VIEW WOOD POST, BLOCKOUT & BEAM

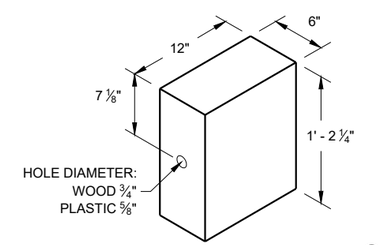

WOOD OR PLASTIC BLOCKOUT (2)

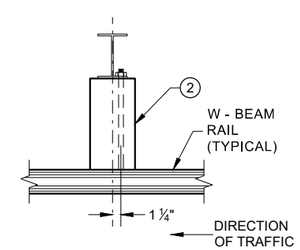

PLAN VIEW STEEL POST, PLASTIC BLOCKOUT & BEAM

MIDWEST GUARDRAIL SYSTEM (MGS) GUARDRAIL

STATE OF WISCONSIN
DEPARTMENT OF TRANSPORTA

6

SDD 14B42 - 07a

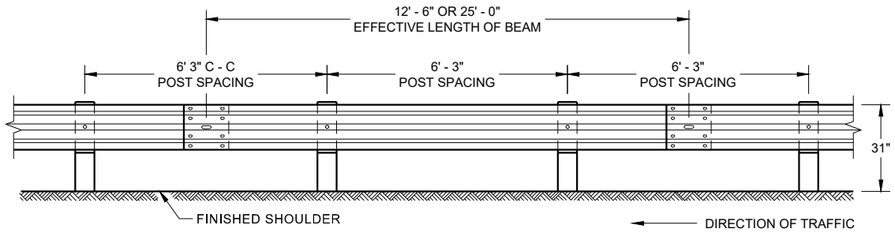

FRONT VIEW
POST SPACING STANDARD INSTALLATION

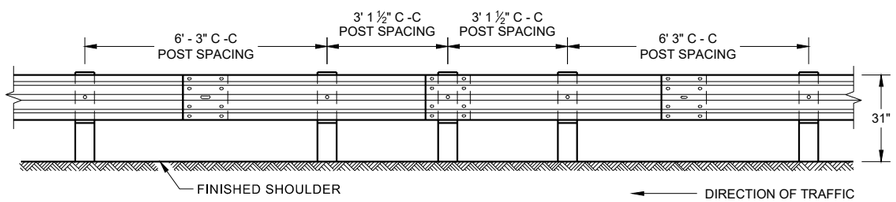

FRONT VIEW
HALF POST SPACING (HS) AND HALF POST SPACING WITH LONGER POSTS (K)

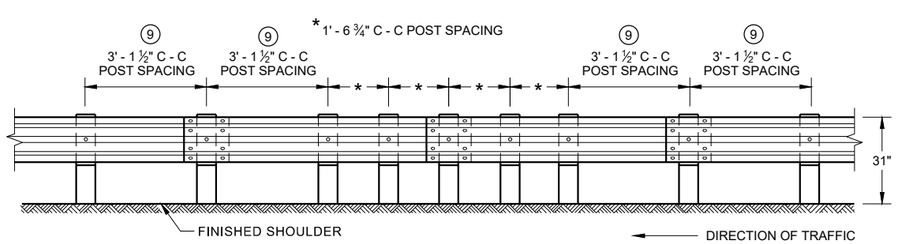

FRONT VIEW
QUARTER POST SPACING (QS)

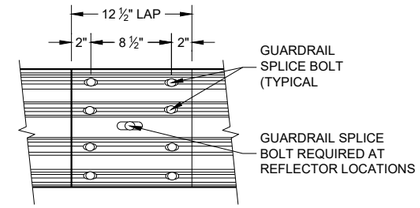

FRONT VIEW
MID-SPAN BEAM SPLICE

GENERAL NOTES

(8) DO NOT INSTALL REFLECTORS ON THE FIRST 50 FEET OF THE APPROACH END OF THE ENERGY ABSORBING TERMINAL.

(9) 25 FEET OF HALF POST SPACING IS REQUIRED ON APPROACH AND DEPARTURE ENDS OF QUARTER POST SPACING.

POST BOLTS ARE A ⅝" DIAMETER ASTM A307 GUARDRAIL BOLT. A POST BOLT REQUIRES ⅝" DIAMETER A563A DOUBLE RECESSED (DR) HEAVY HEX NUT AND ⅝" DIAMETER F844 FLAT WASHER. POST BOLTS MAY BE LONGER IF MULTIPLE BLOCKOUTS ARE BEING USED.

GUARD RAIL SPLICE BOLTS ARE A ⅝" DIAMETER ASTM A307 GUARDRAIL HEAD BOLT. A GUARDRAIL SPLICE BOLT REQUIRES ⅝" DIAMETER A563A DOUBLE RECESSED (DR) HEAVY HEX NUT.

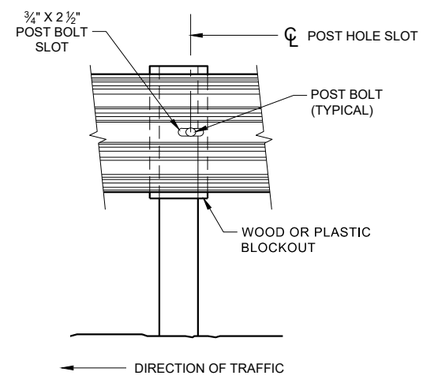

FRONT VIEW AT STEEL POST

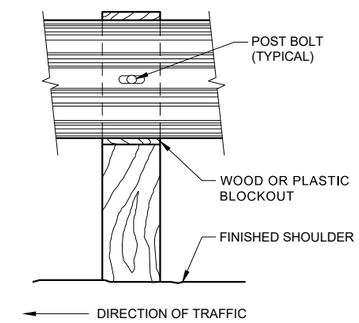

FRONT VIEW AT WOOD POST

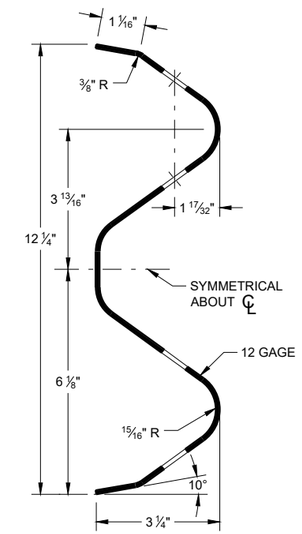

SECTION THRU W-BEAM RAIL

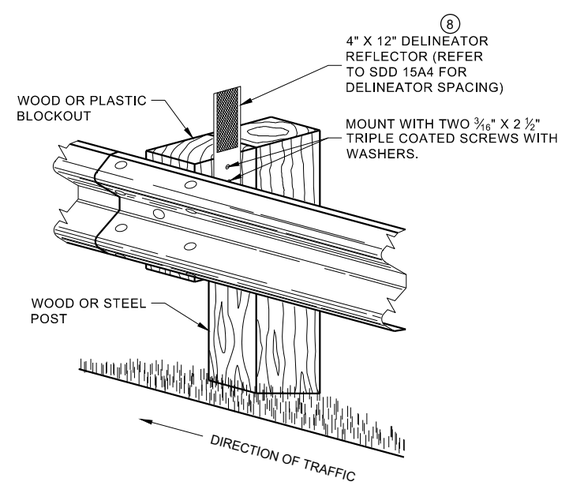

ONE SIDED REFLECTOR DETAIL AND TYPICAL INSTALLATION

MIDWEST GUARDRAIL SYSTEM (MGS) GUARDRAIL

STATE OF WISCONSIN
DEPARTMENT OF TRANSPORTAT

6

6

SDD 14B42 - 07b

SDD 14B42 - 07b

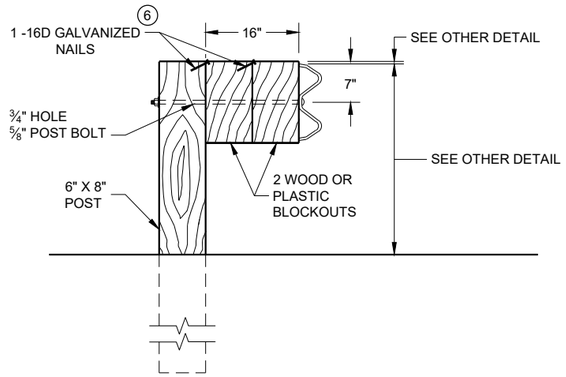

DETAIL FOR 16" BLOCKOUT DEPTH

IT IS ACCEPTABLE TO USE BLOCKOUTS UP TO 16" DEEP TO INCREASE THE POST OFFSET TO AVOID UNDERGROUND OBSTACLES. THERE IS NO LIMIT TO THE NUMBER OF POSTS THAT CAN HAVE ADDITIONAL BLOCKOUTS UP TO 16" DEEP.

NOTE:

1. ALL FILLETS SHALL HAVE A MINIMUM RADIUS OF 3/16".
2. IF THE BOLT EXTENDS MORE THAN ¼" FROM THE NUT THE BOLT SHOULD BE TRIMMED BACK.

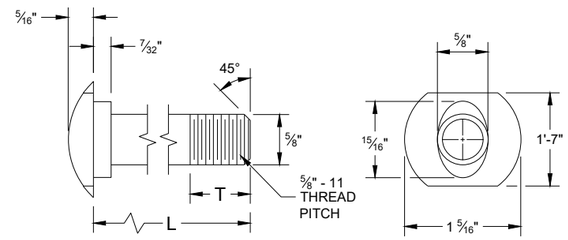

POST BOLT TABLE

L	T (MIN.)
1 ¼"	1 ⅛"
2"	1 ¾"
10"	4"
14"	4 1/16"
18"	4"
21"	4 1/16"
25"	4"

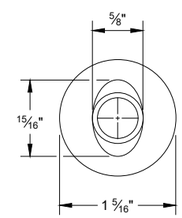

ALTERNATE BOLT HEAD

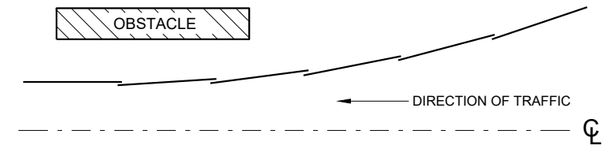

PLAN VIEW
BEAM LAPPING DETAIL

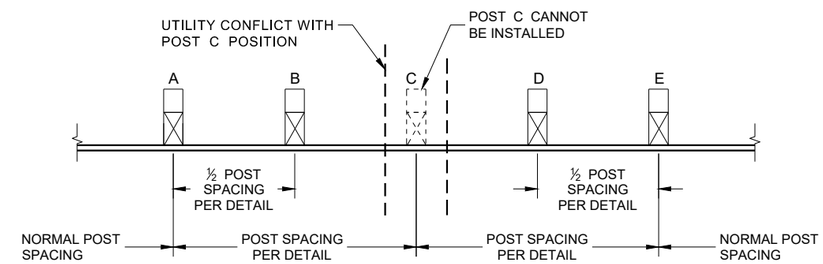

POST DRIVING FOR CONTINUOUS UNDERGROUND OBSTRUCTION

6

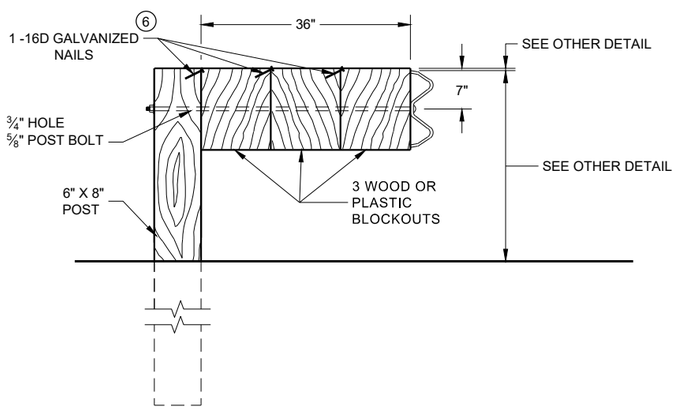

DETAIL FOR 36" BLOCKOUT DEPTH

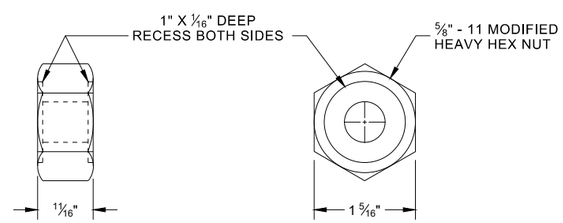

POST BOLT, SPLICE BOLT AND RECESS NUT

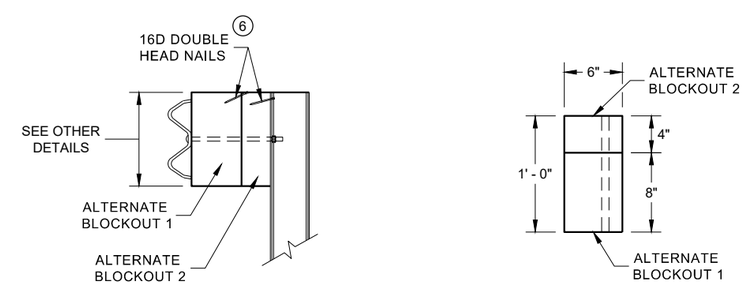

SIDE VIEW

PLAN VIEW

ALTERNATE WOOD BLOCKOUT DETAIL

NOTES: UNDER SPECIAL CIRCUMSTANCES, SUCH AS AVOIDING OBSTACLES THAT ARE NOT RELOCATED, IT IS ACCEPTABLE TO INSTALL ADDITIONAL BLOCKOUTS TO OBTAIN UP TO 36" DEPTH FOR ONE OR TWO POSTS IN A SECTION OF GUARDRAIL.

DO NOT USE 16" OR 36" BLOCKOUTS IF IT CAUSES THE POST TO BE DRIVEN BEYOND SHOULDER HINGE POINT OR CAUSES A FIXED OBJECT TO BE WITHIN THE DEFLECTION DISTANCE OF THE BARRIER.

(6) WHEN USING STEEL POST AD WOOD BLOCKOUTS, INSTALL FOUR 16D GALVANIZED NAILS. INSTALL NAILS AT THE BACK CORNERS OF THE BLOCK AND BEND THE NAILS OVER THE FLANGE OF THE STEEL POST.

MIDWEST GUARDRAIL SYSTEM (MGS) GUARDRAIL

STATE OF WISCONSIN
DEPARTMENT OF TRANSPORTA

SDD 14B42 - 07c

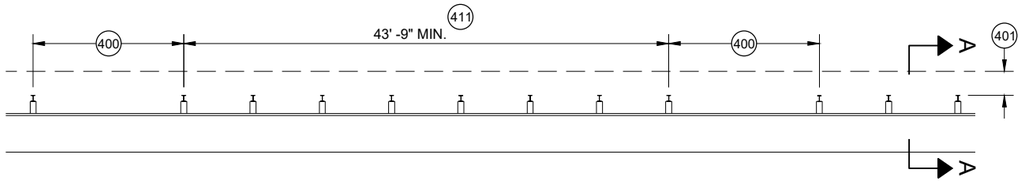

MISSING POST IN MGS GUARDRAIL

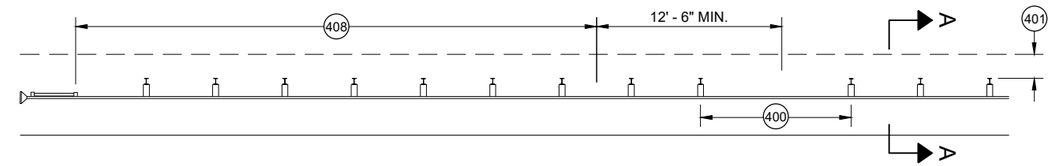

MISSING POST IN MGS GUARDRAIL NEAR EAT

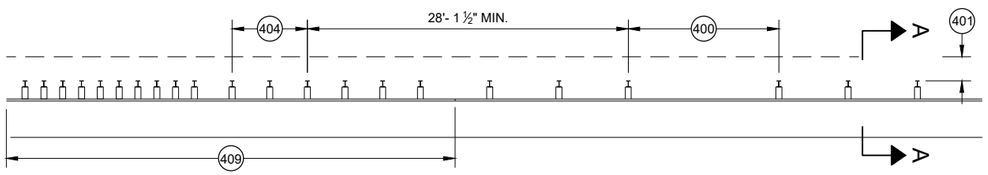

MISSING POST IN MGS GUARDRAIL NEAR AN APPROACH TRANSITION

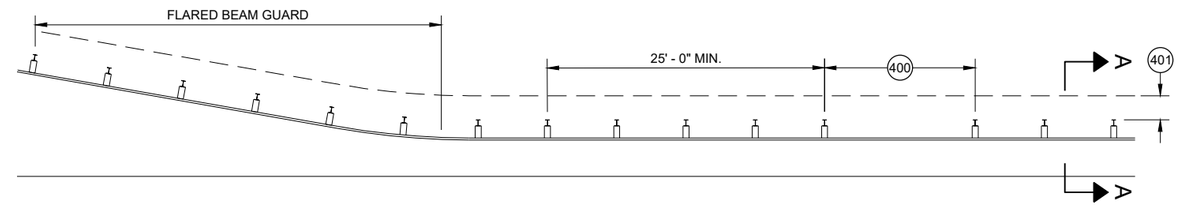

MISSING POST IN MGS GUARDRAIL NEAR FLARED BEAM GUARD

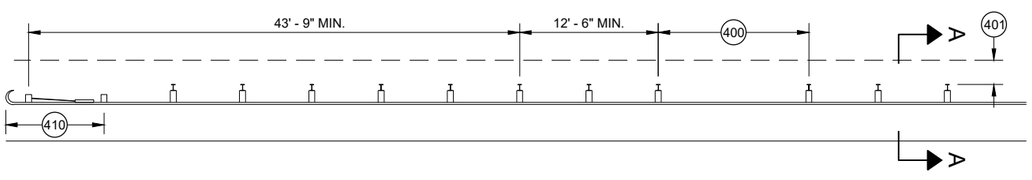

MISSING POST IN MGS GUARDRAIL NEAR A TYPE 2 END TERMINAL

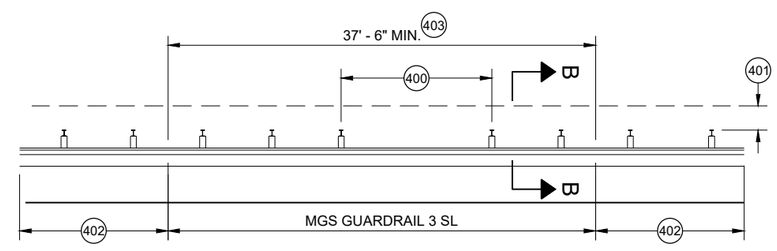

MISSING POST IN SHORT SPAN MGS GUARDRAIL NEAR CURB (SL) 407

400 MAX SPAN 12' - 6"
401 2' MIN.
402 MGS GUARDRAIL 3
403 NESTING BEAM GUARD
404 ASYMMETRIC TRANSITION
405 SOIL WELL DRAINED AND COMPACTED
406 SEE OTHER DRAWINGS IN THIS SDD
407 SEE OTHER DRAWINGS FOR MIN. SPACING BETWEEN SPANS
408 SEE SDD 14B44
409 SEE SDD 14B45
410 SEE SDD 14B47
411 MINIMUM DISTANCE BETWEEN MISSING POST SPANS.

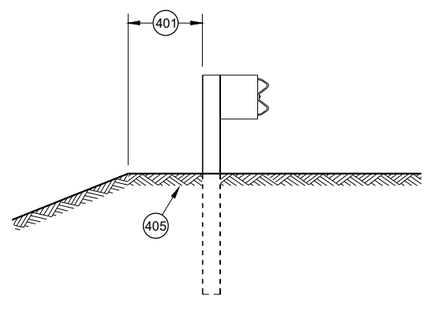

SECTION A - A 406

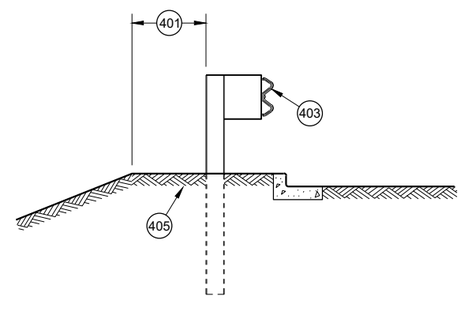

SECTION B - B 406

MIDWEST GUARDRAIL SYSTEM (MGS) GUARDRAIL

STATE OF WISCONSIN
DEPARTMENT OF TRANSPORTATION

APPROVED
May 2021 — DATE
/S/ Rodney Taylor — ROADWAY STANDARDS DEVE UNIT SUPERVISOR
FHWA

6

SDD 14B42 - 07d

GENERAL NOTES

(A) THE SLOPE IN THE AREA BOUNDED BY THE GRADELINE, THE HINGE POINT LINE (HPL) AND THE CLEAR ZONE LIMITS (CZL) SHALL BE 4:1 OR FLATTER.

(B) AFTER FINAL ASSEMBLY, RECHECK CABLE TO BE SURE IT IS TAUT AND HAS NOT RELAXED

(C) DIFFERENT MANUFACTURERS REQUIRE DIFFERENT PERFORATED W - BEAM RAIL END PANELS. SEE MANUFACTURER'S INFORMATION.

(D) ATTACH ALUMINUM SHEET TO E.A.T. HEAD USING 4 STAINLESS STEEL SELF - TAPPING SCREWS. ONE SCREW PER CORNER.

(E) HARDWARE MAY VARY BETWEEN MANUFACTURER. SEE MANUFACTURER'S DRAWING FOR INFORMATION.

DIMENSIONS MAY VARY, MANUFACTURER'S INFORMATION.

SEE SDD 14B42 FOR MORE INFORMATION.

* DO NOT ATTACH BLOCKOUTS TO POST 1 AND 2.

DO NOT INSTALL REFLECTORS ON THE FIRST 50 FEET OF THE APPROACH END OF THE ENERGY ABSORBING TERMINAL.

SEE MANUFACTURER'S DRAWING FOR SPLICE LOCATION, HARDWARE DIMENSIONS AND INSTALLATION INSTRUCTIONS.

THE CENTER OF THE UPPER 3 ½" DIAMETER HOLE ON POST NUMBER 3 THROUGH POST 9 IS TO BE FLUSH WITH THE GROUND LINE UP TO A MAXIMUM OF 2" ABOVE GROUND LINE. WOOD BLOCKS ON POSTS NUMBERED 3 THROUGH 9 MAY BE ADJUSTED UP TO 3" ABOVE THE TOP OF POST.

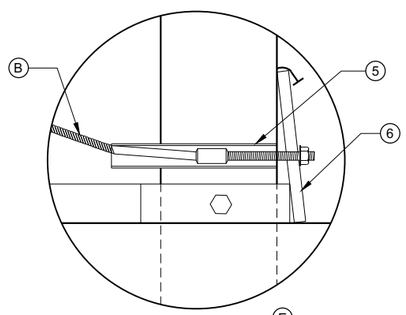

DETAIL "A" (E)

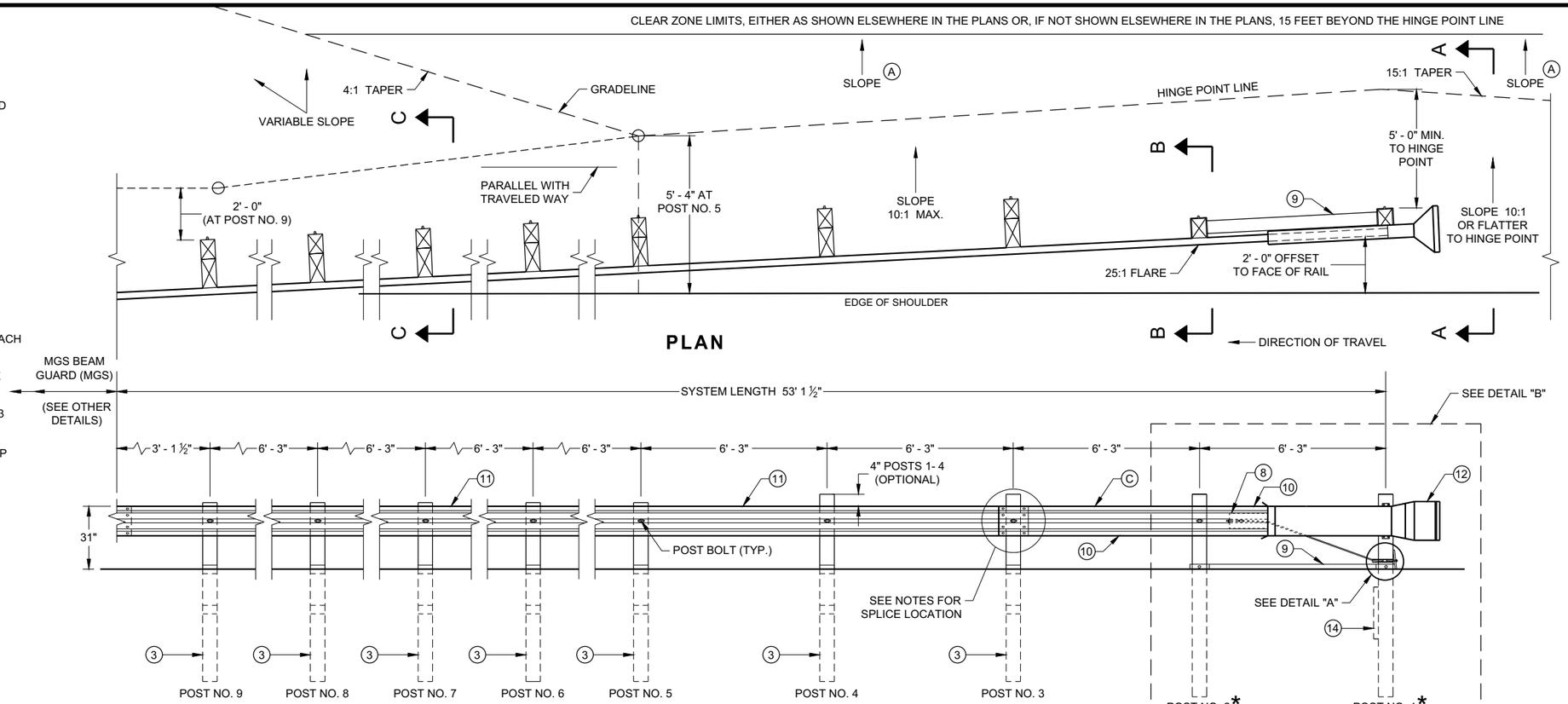

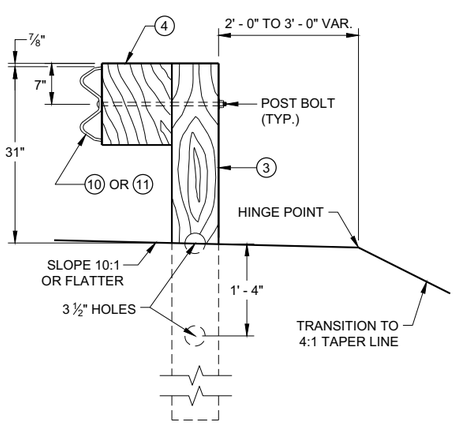

SECTION C - C
TYPICAL AT POST NOS. 3 - 9

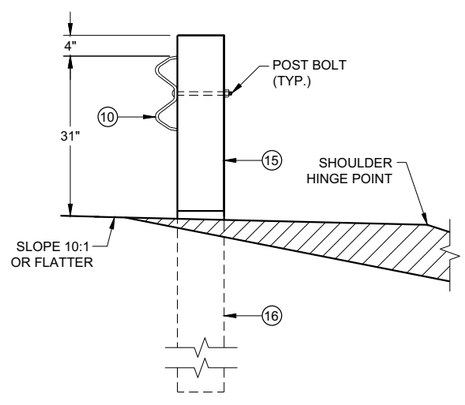

SECTION B - B
TYPICAL AT POST NO. 2*

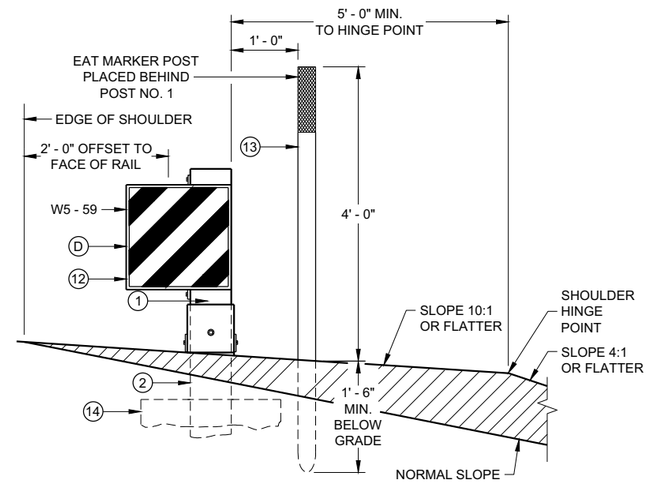

SECTION A - A
TYPICAL AT POST NO. 1*

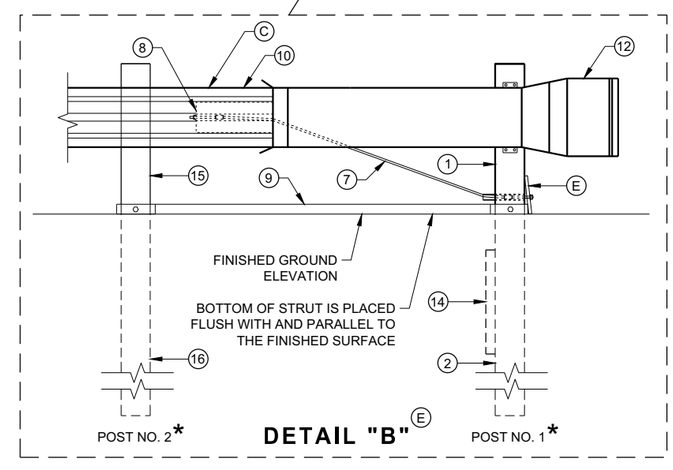

DETAIL "B" (E)

MIDWEST GUARDRAIL SYSTEM ENERGY ABSORBING TERMINAL (MGS)

STATE OF WISCONSIN
DEPARTMENT OF TRANSPORTATION

6

6

SDD 14B44 - 04a

SDD 14B44 - 04a

BILL OF MATERIALS

PART NO.	DESCRIPTION MATERIALS PROVIDED BY MGS EAT MANUFACTURER. SEE MANUGACTURER'S DETAILS FOR MORE INFORMATION.
1	UPPER POST NO. 1 6" X 6" TUBE
2	LOWER POST NO. 1
3	WOOD CRT
4	WOOD BLOCKOUT
5	PIPE SLEEVE
6	BEARING PLATE
7	BCT CABLE ASSEMBLY
8	ANCHOR CABLE BOX
9	GROUND STRUT
10	PERFORATED W-BEAM RAIL END PANEL, 12'-6" LONG.
11	STANDARD W-BEAM RAIL. MULTIPLE SECTIONS REQUIRED. SECTIONS VARY IN LENGTH.
12	IMPACT HEAD
13	EAT MARKER POST - YELLOW (SEE APPROVED PRODUCTS LIST)
14	SOIL PLATE
15	UPPER POST NO. 2
16	LOWER POST NO. 2

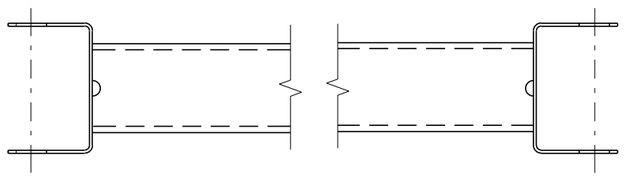

GENERIC GROUND STRUT 9 E

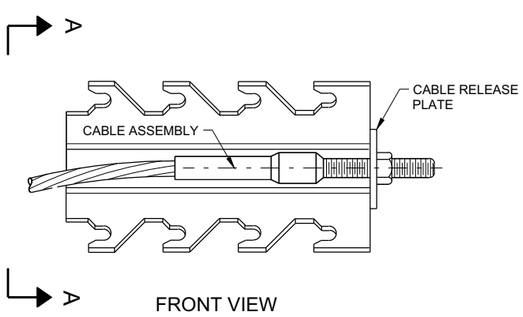

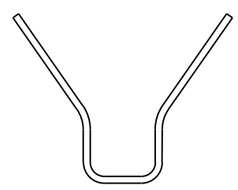

SECTION A - A

GENERIC ANCHOR CABLE BOX 9 E

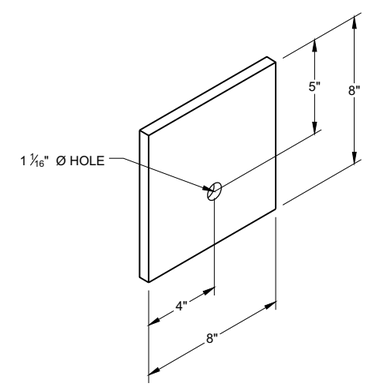

BEARING PLATE 6 E

6

6

SDD 14B44 - 04b

SDD 14B44 - 04b

MIDWEST GUARDRAIL SYSTEM ENERGY ABSORBING TERMINAL (MGS)

STATE OF WISCONSIN
DEPARTMENT OF TRANSPORTAT

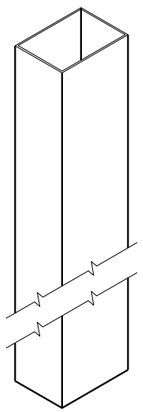

UPPER POST NO. 1 (1) (E)

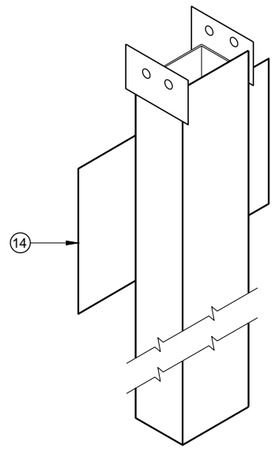

LOWER POST NO. 1 (2) (E)

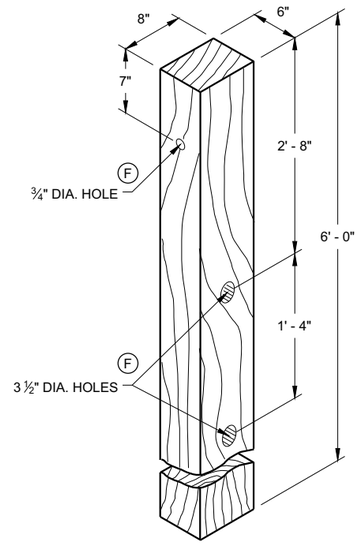

WOOD CRT POST (3) (E)

POSTS NUMBER 3-9

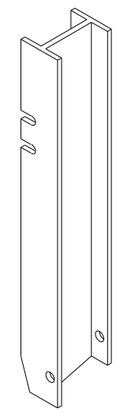

UPPER POST NO. 2 (15) (E)

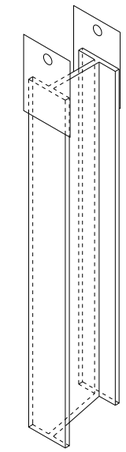

LOWER POST NO. 2 (16) (E)

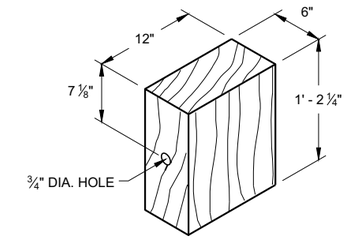

WOOD BLOCKOUT (4)

REQ'D. AT ALL POSTS EXCEPT POST NO'S 1 & 2

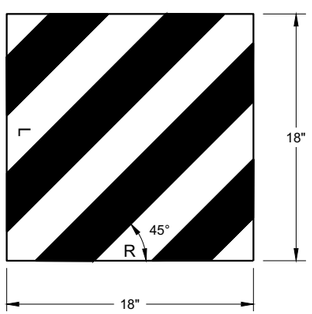

W5 - 59

REFLECTIVE SHEETING DETAIL (E)

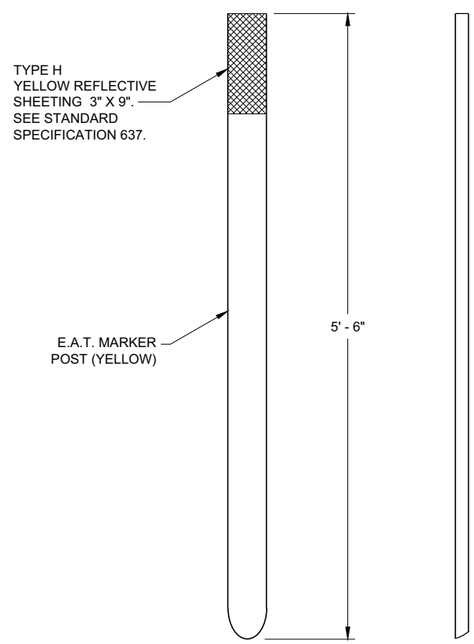

FRONT VIEW SIDE VIEW

E.A.T. MARKER POST (13)

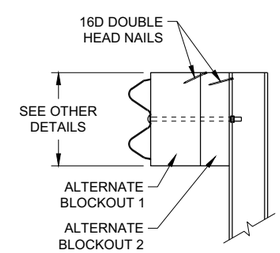

SIDE VIEW

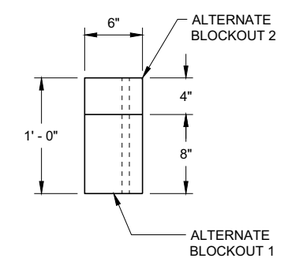

TOP VIEW

ALTERNATE WOOD BLOCKOUT DETAIL

MIDWEST GUARDRAIL SYSTEM ENERGY ABSORBING TERMINAL (MGS)

STATE OF WISCONSIN
DEPARTMENT OF TRANSPORTATION

APPROVED
7/2018 — DATE
/S/ Rodney Taylor — ROADWAY STANDARDS DEVE UNIT SUPERVISOR
FHWA

6

6

SDD 14B44 - 04c

SDD 14B44 - 04c

GENERAL NOTES

DETAILS OF CONSTRUCTION, MATERIALS AND WORKMANSHIP NOT SHOWN ON THIS DRAWING SHALL CONFORM TO THE PERTINENT REQUIREMENTS OF THE STANDARD SPECIFICATIONS AND THE APPLICABLE SPECIAL PROVISIONS.

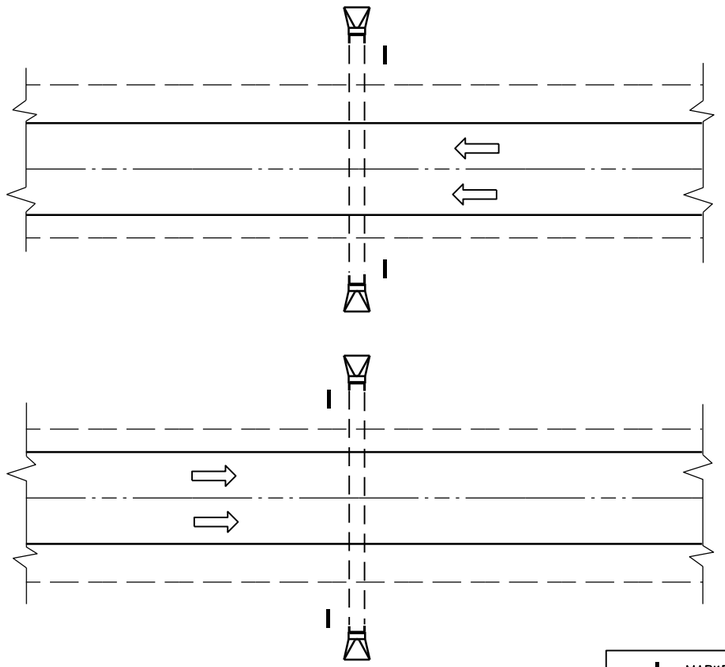

PLAN VIEW

DIVIDED HIGHWAY

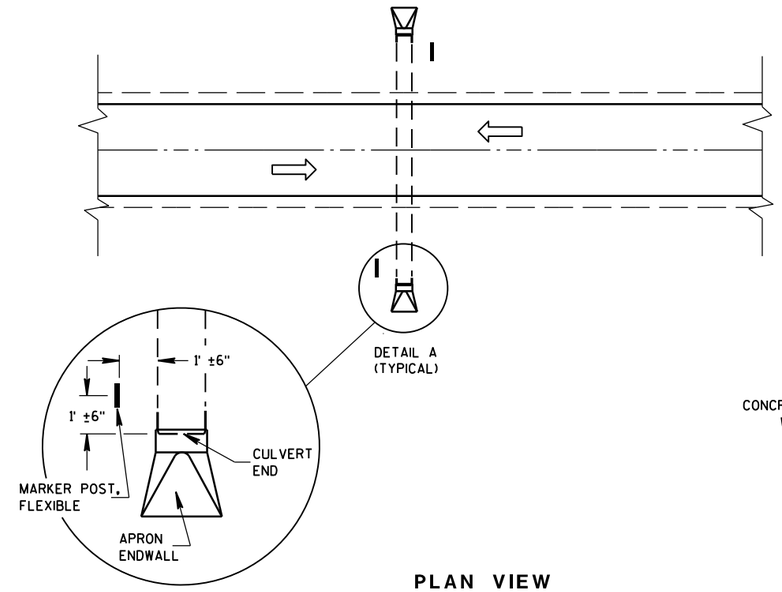

DETAIL A
(TYPICAL)

PLAN VIEW

UNDIVIDED HIGHWAY

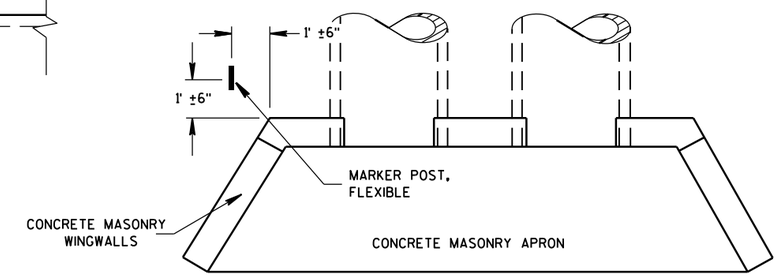

PLAN VIEW

CONCRETE MASONRY ENDWALLS FOR CULVERT PIPE AND PIPE ARCH

MARKER POST, FLEXIBLE

DIRECTION OF TRAFFIC FLOW

FLEXIBLE MARKER POST LOCATION

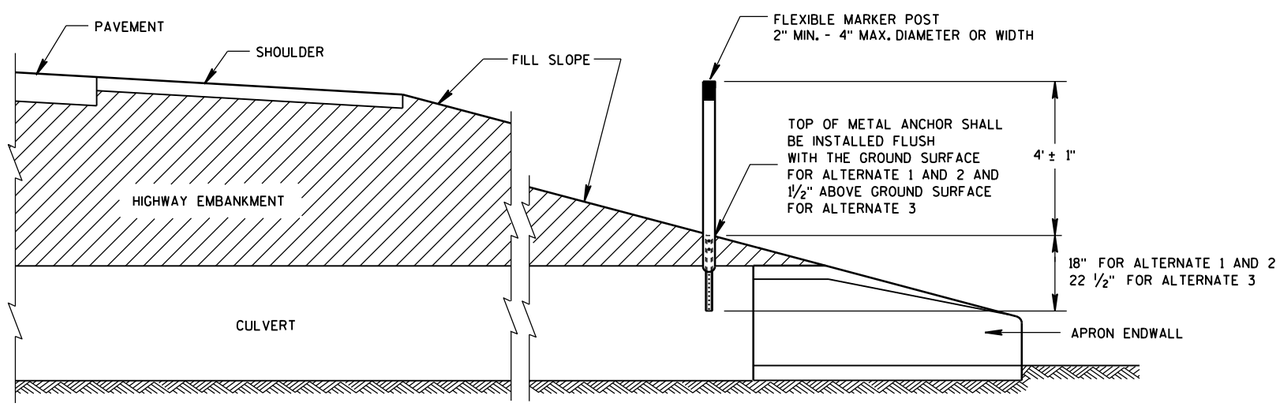

CROSS SECTION

FLEXIBLE MARKER POST

FLEXIBLE MARKER POST FOR CULVERT END

STATE OF WISCONSIN
DEPARTMENT OF TRANSPOR

6

6

S.D.D. 15 A 3-2a

S.D.D. 15 A 3-2a

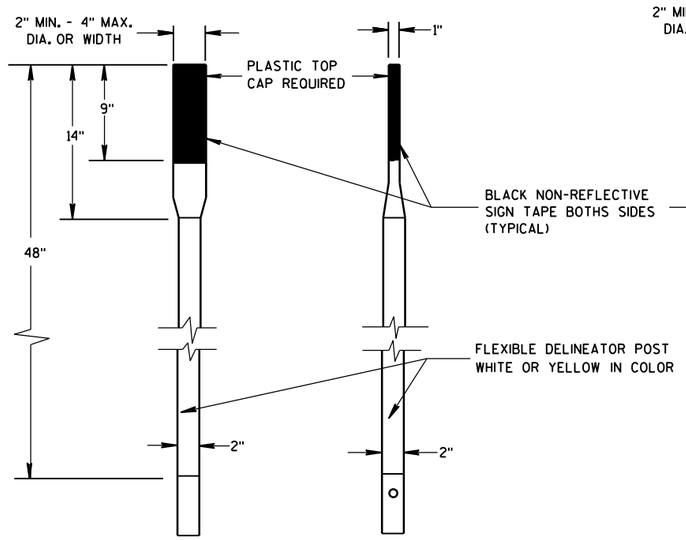

FRONT VIEW SIDE VIEW

ALTERNATE 1

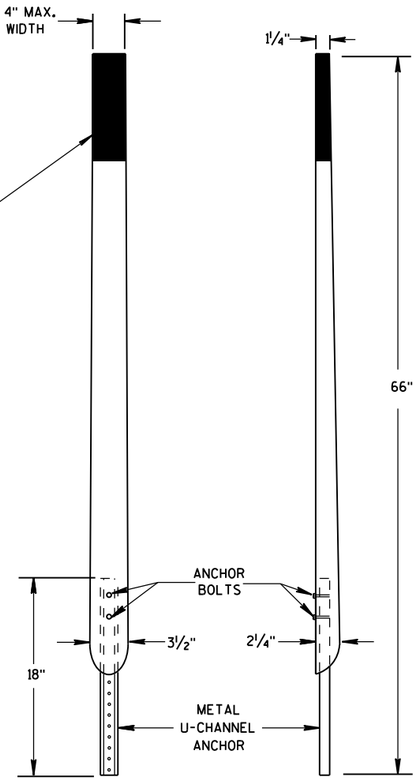

FRONT VIEW SIDE VIEW

ALTERNATE 2

FLEXIBLE MARKER POSTS

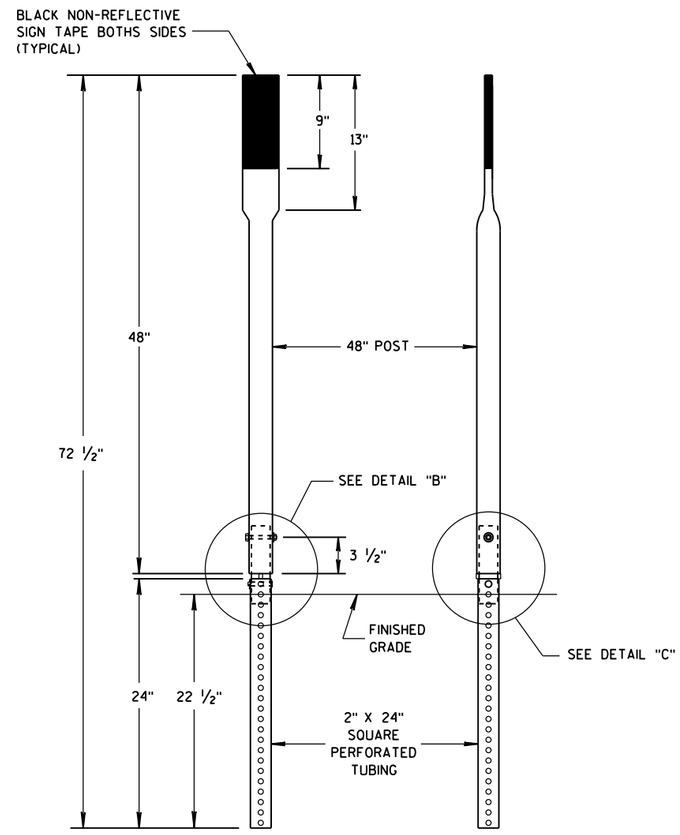

FRONT VIEW SIDE VIEW

ALTERNATE 3

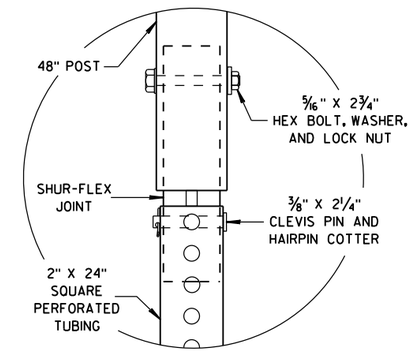

DETAIL B

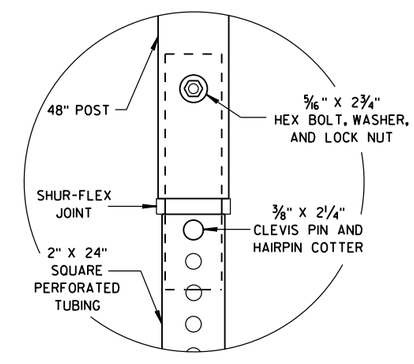

DETAIL C

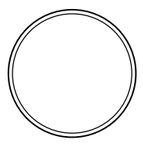

SECTION A-A

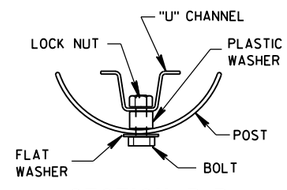

SECTION B-B

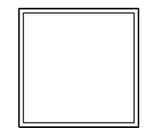

SECTION C-C

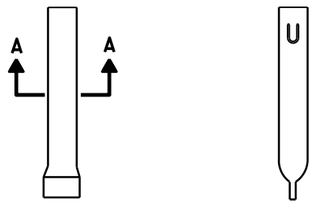

FRONT VIEW SIDE VIEW

ALTERNATE 1

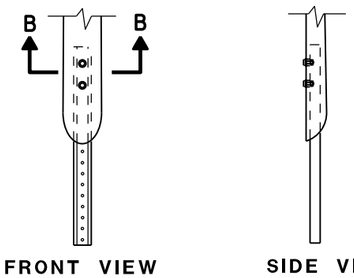

FRONT VIEW SIDE VIEW

ALTERNATE 2

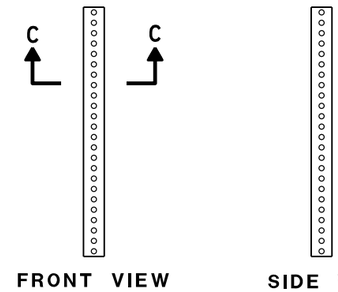

FRONT VIEW SIDE VIEW

ALTERNATE 3

FLEXIBLE MARKER POST ANCHORS

FLEXIBLE MARKER POST
FOR CULVERT END

STATE OF WISCONSIN
DEPARTMENT OF TRANSPORTATION

APPROVED
10/1/2012 /S/ Travis Feltes
DATE STATE TRAFFIC ENGINEER
FHWA

6

6

S.D.D. 15 A 3-2b

S.D.D. 15 A 3-2b

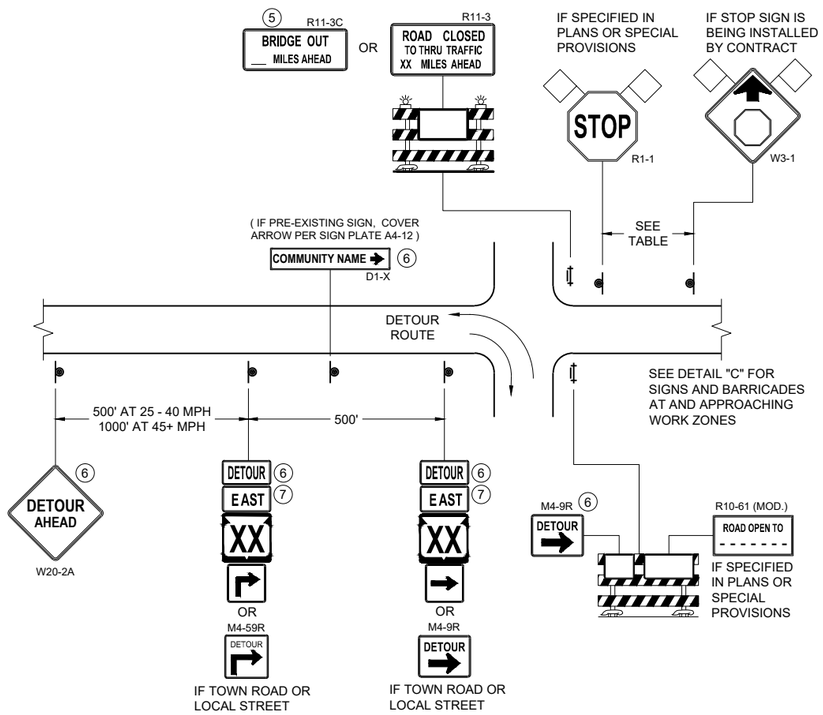

DETAIL A

MAINLINE CLOSURE WITH POSTED DETOUR

WORK ZONE GREATER THAN OR EQUAL TO ½ MILE FROM DETOUR ROUTE (1000 FEET IF URBAN)

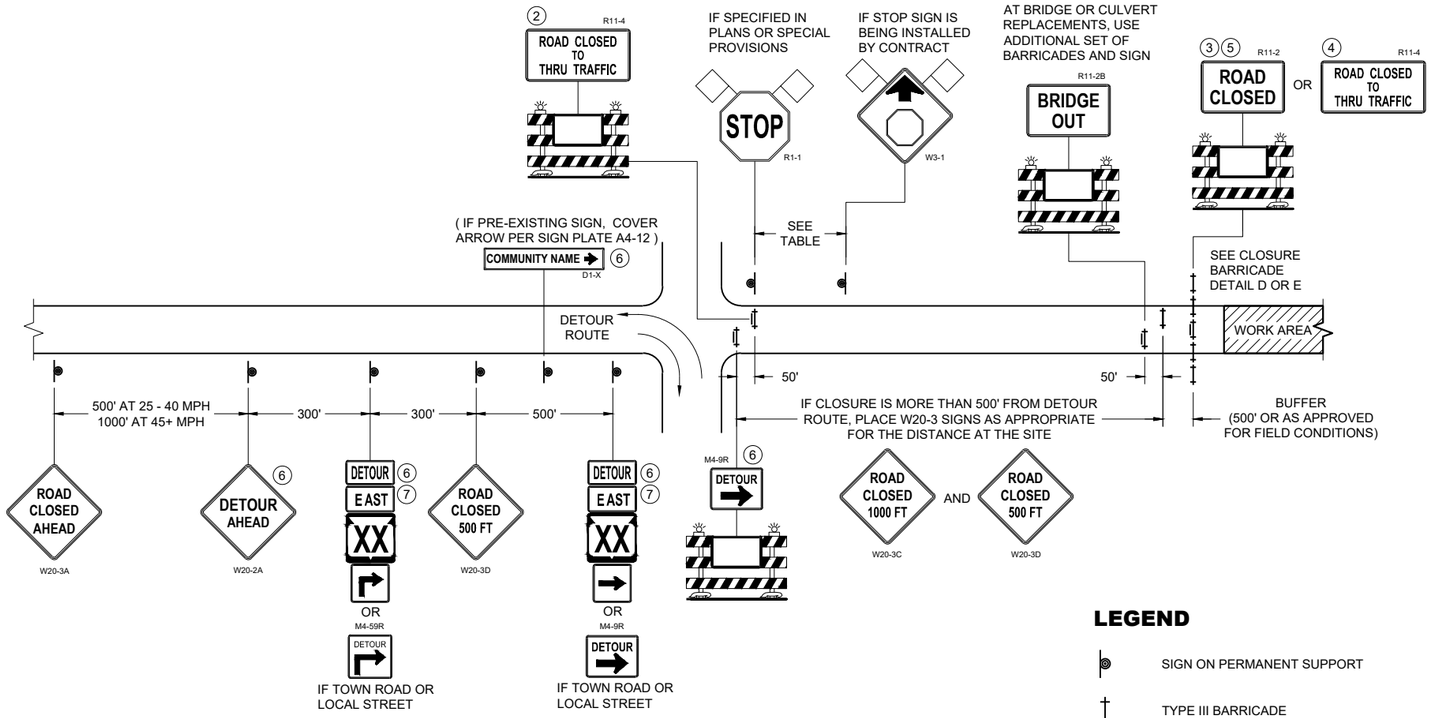

DETAIL B

MAINLINE CLOSURE WITH POSTED DETOUR

WORK ZONE LESS THAN ½ MILE FROM DETOUR ROUTE (1000 FEET IF URBAN)

LEGEND

- SIGN ON PERMANENT SUPPORT
- TYPE III BARRICADE
- TYPE III BARRICADE WITH ATTACHED SIGN
- TYPE "A" WARNING LIGHT (FLASHING)
- WORK AREA
- FLAGS, 16" X 16" MIN. (ORANGE)
- DETOUR M4 - 8
- EAST M3 - X
- XX M1 - 4 OR XX M1 - 6 OR COUNTY X M1 - 5A
- M05 - 1 OR M06 - 1

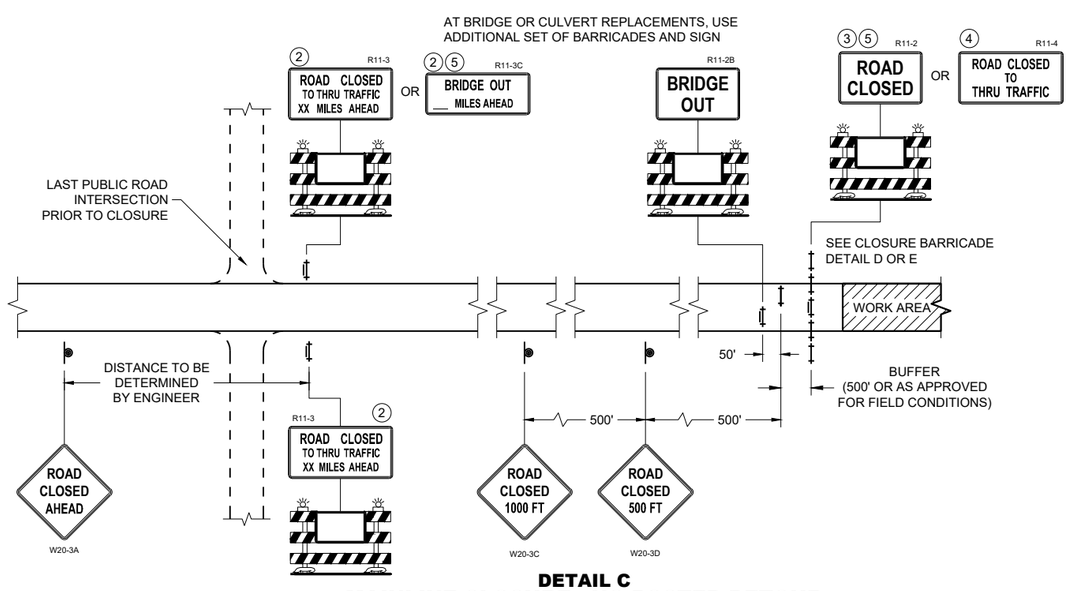

DETAIL C

MAINLINE CLOSURE, NO POSTED DETOUR

SPEED LIMIT (MPH)	"STOP AHEAD" ADVANCE WARNING DISTANCE (FT)
25	200
30	200
35	350
40	350
45	500
50	550
55	750

SEE SDD 15C2-SHEET "b" FOR GENERAL NOTES AND FOOTNOTES 1 THROUGH 7

BARRICADES AND SIGNS FOR MAINLINE CLOSURES

STATE OF WISCONSIN
DEPARTMENT OF TRANSPORTATION

APPROVED
November 2025 — DATE
/S/ Andrew Heidtke — WORK ZONE ENGINEER

FHWA

6

SDD 15C02-10a

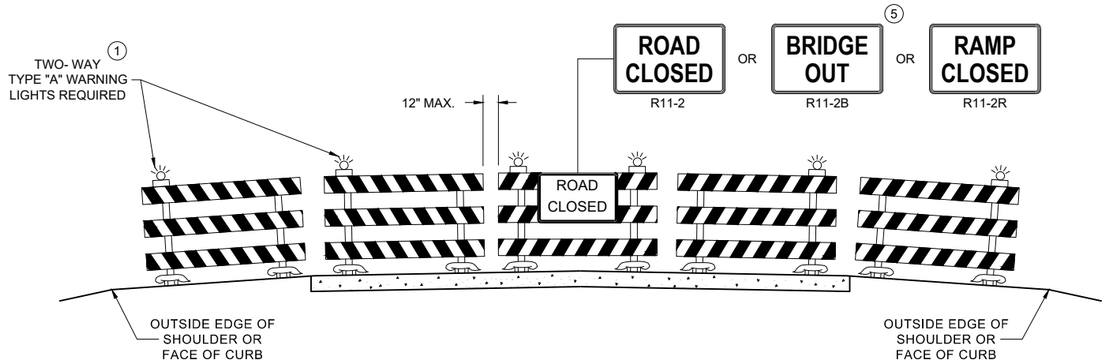

DETAIL D

ROAD CLOSURE BARRICADE DETAIL

APPROACH VIEW

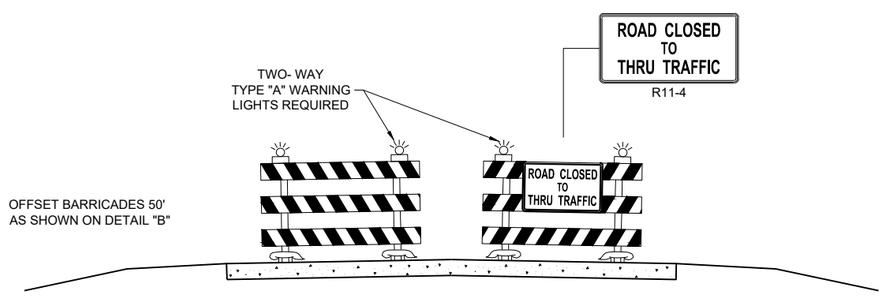

DETAIL E

LANE CLOSURE BARRICADE DETAIL

APPROACH VIEW

SEE SDD 15C2 - SHEET "a" FOR LEGEND

GENERAL NOTES

THE EXACT NUMBER, LOCATION, AND SPACING OF ALL SIGNS AND BARRICADES SHALL BE ADJUSTED TO FIT FIELD CONDITIONS AS APPROVED BY THE ENGINEER.

ANY SIGNS TEMPORARY OR EXISTING, WHICH CONFLICT WITH TRAFFIC CONTROL "IN USE", SHALL BE REMOVED OR COVERED AS NEEDED AND AS APPROVED BY THE ENGINEER.

THE SPACING BETWEEN TRAFFIC CONTROL SIGNS SHOULD BE ADJUSTED TO NOT CONFLICT WITH AND SHOULD PROVIDE A DESIRABLE MINIMUM OF 200 FEET CLEARANCE TO EXISTING SIGNS THAT WILL REMAIN IN PLACE.

BARRICADES THAT MUST BE MOVED FOR A WORK OPERATION SHALL BE IMMEDIATELY RE-ESTABLISHED UPON COMPLETION OF THE OPERATION, OR FOR CONTINUING OPERATIONS, AT THE END OF EACH WORKING DAY.

SIGNS THAT WILL BE IN PLACE LESS THAN 7 CONTINUOUS DAYS AND NIGHTS MAY BE MOUNTED ON PORTABLE SUPPORTS.

ALL TYPE III BARRICADES SHALL HAVE RAILS REFLECTORIZED ON BOTH FACES. STRIPES SHALL BE PROPERLY SLOPED DOWN TOWARD THE TRAFFIC SIDE OR AS SHOWN IN THE ROAD CLOSURE BARRICADE DETAIL "D" FOR FULL ROAD CLOSURES.

TYPE "A" LOW - INTENSITY FLASHING WARNING LIGHTS SHALL BE VISIBLE ON BOTH SIDES OF THE BARRICADE.

PARTIAL NUMBERS ON SIGNS SHALL BE DISPLAYED AS A WHOLE NUMBER(AS NEEDED) FOLLOWED BY A FRACTION. SIGNS SHALL NOT DISPLAY NUMBERS IN DECIMAL FORM.

"WO" AND "MO" SIGNS ARE THE SAME AS "W" AND "M" SIGNS EXCEPT THE BACKGROUND IS ORANGE.

ALL SIGNS SHALL BE 48" X 48" UNLESS OTHERWISE NOTED BELOW:

- R11 - 2 SHALL BE 48" X 30"
- R11 - 3 SHALL, R11 - 4 AND R10 - 61 SHALL BE 60 " X 30"
- M4 - 9 SHALL BE 30" X 24"
- M3 - X SHALL BE 24" X 12" (36" X 18" IF NEEDED TO MATCH EXISTING SIGNS)
- M4 - 8 SHALL BE 24" X 12" (36" X 18" IF NEEDED TO MATCH EXISTING SIGNS)
- M1 - 4, M1 - 5A AND M1 - 6 SHALL BE 24" X 24" (36" X 36" IF NEEDED TO MATCH EXISTING SIGNS)
- MO5 - 1 AND MO6 - 1 SHALL BE 21" X 21" (30" X 30" IF NEEDED TO MATCH EXISTING SIGNS)
- D1 - X SHALL BE AS SHOWN ON SPECIFIC PROJECT SIGNING DETAIL SHEETS.
- R1 - 1 SHALL BE 36" X 36"

SIGNS PLACED ON TYPE III BARRICADES THAT ARE SIZES OTHER THAN 48"X30" SHALL HAVE A CORRUGATED POLYPROPYLENE OR POLYETHYLENE PLASTIC SIGN BASE.

1. TWO WARNING LIGHTS SHALL BE PROVIDED ON THE CENTER BARRICADE AND A MINIMUM OF ONE WARNING LIGHT SHALL BE PROVIDED ON EACH OF THE OTHER BARRICADES WITHIN THE ROADWAY LIMITS. SPACING OF THE WARNING LIGHTS SHALL BE UNIFORM TO THE EDGE OF ROADWAY AS SHOWN (APPROX. 8 FOOT LIGHT SPACING.
2. THESE SIGNS AND BARRICADES ARE NOT REQUIRED IF ROAD CLOSURE BEGINS AT AN INTERSECTION.
3. FOR ROAD CLOSURE WITHOUT LOCAL ACCESS TO PROJECT, SEE ROAD CLOSURE BARRICADE DETAIL "D".
4. FOR ROAD CLOSURE WITH LOCAL ACCESS TO PROJECT, SEE ROAD CLOSURE BARRICADE DETAIL "E".
5. FOR BRIDGE OR CULVERT REPLACEMENTS, SUBSTITUTE "BRIDGE OUT" INSTEAD OF "ROAD CLOSED" ON R11 - 2 AND R11 - 3 SIGNS.
6. INSTALL DETOUR AND COMMUNITY GUIDE SIGNS AND ARROWS ONLY IF SPECIFIED IN THE CONTRACT. IF THERE ARE EXISTING ROUTE MARKER ASSEMBLIES THAT WILL REMAIN IN PLACE, ADJUST THE LOCATION OF THE DETOUR ROUTE SIGNS TO CORRESPOND WITH THE EXISTING ASSEMBLIES. MODIFY EXISTING SIGNS WHERE POSSIBLE. SEE SPECIFIC PROJECT DETOUR SIGNING DETAIL SHEETS. IF DETOUR SIGNS ARE BEING INSTALLED BY OTHERS, PLACE THE CONTRACTED TRAFFIC CONTROL SIGNS TO ALLOW FOR PLACEMENT OF ALL WARNING, DETOUR AND GUIDE SIGNS AS SHOWN.
7. "EAST" CARDINAL DIRECTION MARKERS AND RIGHT TURN ARROWS ARE SHOWN. USE OTHER CARDINAL DIRECTIONS AND ARROWS AS APPROPRIATE.

BARRICADES AND SIGNS FOR VARIOUS CLOSURES

STATE OF WISCONSIN
DEPARTMENT OF TRANSPORTATION

APPROVED
November 2025 — DATE
/S/ Andrew Heidtke — WORK ZONE ENGINEER
FHWA

6

SDD 15C02-10b

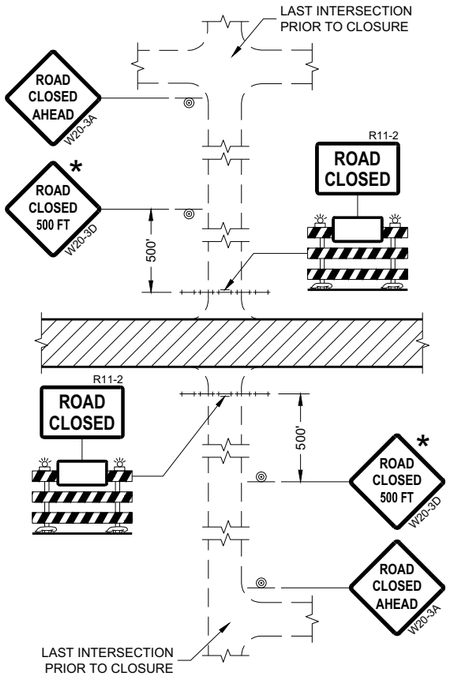

DETAIL 1
(NO ACCESS TO PROJECT)

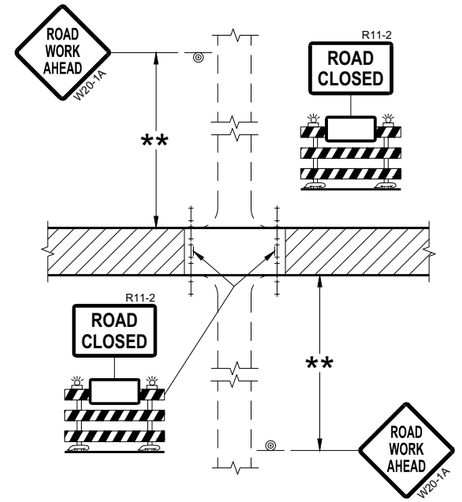

DETAIL 2
(PUBLIC CROSS-TRAFFIC MAINTAINED.
NO ACCESS TO PROJECT)

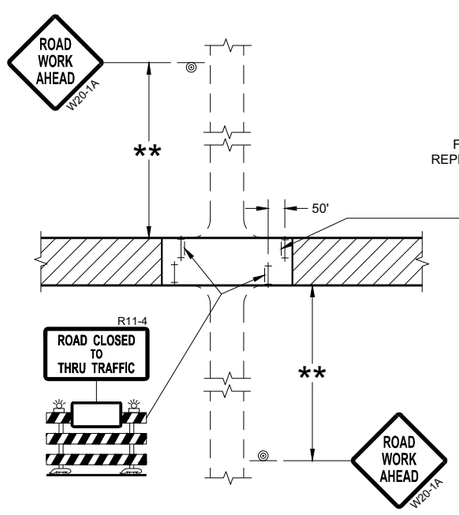

DETAIL 3
(PUBLIC CROSS-TRAFFIC MAINTAINED.
CONTRACTOR, LOCAL BUSINESS AND
RESIDENT ACCESS TO PROJECT)

FOR BRIDGE OR CULVERT
REPLACEMENT, USE ADDITIONAL
SIGN ON BARRICADE

BRIDGE OUT
XX MILES AHEAD
R11-3C

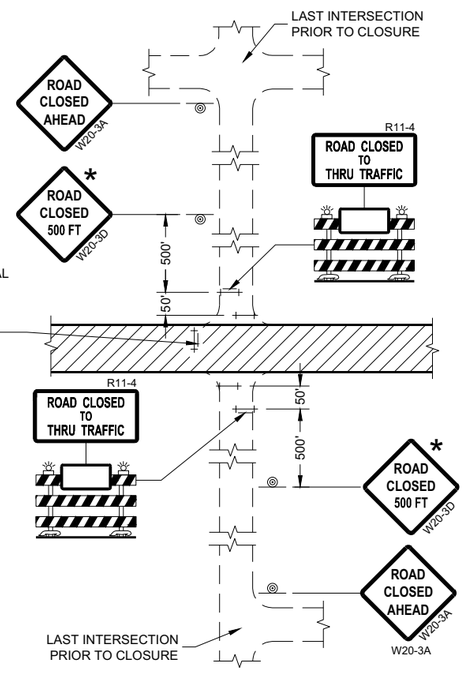

DETAIL 4
(CONTRACTOR, LOCAL BUSINESS AND
RESIDENT ACCESS TO PROJECT)

GENERAL NOTES

THE EXACT NUMBER, LOCATION, AND SPACING OF ALL SIGNS AND BARRICADES SHALL BE ADJUSTED TO FIT FIELD CONDITIONS AS APPROVED BY THE ENGINEER.

ANY SIGNS TEMPORARY OR EXISTING, WHICH CONFLICT WITH TRAFFIC CONTROL "IN USE" SHALL BE REMOVED OR COVERED AS NEEDED AND AS APPROVED BY THE ENGINEER.

THE SPACING BETWEEN TRAFFIC CONTROL SIGNS SHOULD BE ADJUSTED TO NOT CONFLICT WITH AND SHOULD PROVIDE A DESIRABLE MINIMUM OF 200 FEET CLEARANCE (500 FEET DESIRABLE) TO EXISTING SIGNS THAT WILL REMAIN IN PLACE.

IF A "STOP" SIGN MUST BE REMOVED FOR A WORK OPERATION, A TEMPORARY "STOP" SIGN SHALL BE PLACED PRIOR TO THE SIGN REMOVAL, OR A FLAGGER SHALL BE PROVIDED UNTIL THE SIGN IS REESTABLISHED.

BARRICADES THAT MUST BE MOVED FOR A WORK OPERATION SHALL BE IMMEDIATELY REESTABLISHED UPON COMPLETION OF THE OPERATION OR FOR CONTINUING OPERATIONS, AT THE END OF EACH WORKING DAY.

SIGNS THAT WILL BE IN PLACE LESS THAN SEVEN CONTINUOUS DAYS AND NIGHTS MAY BE MOUNTED ON PORTABLE SUPPORTS.

ALL TYPE III BARRICADES SHALL HAVE RAILS REFLECTORIZED ON BOTH FACES. STRIPES SHALL BE PROPERLY SLOPED DOWN TOWARD THE TRAFFIC SIDE OR AS SHOWN IN THE ROAD CLOSURE BARRICADE DETAIL "D" FOR FULL ROAD CLOSURES.

TYPE "A" LOW-INTENSITY FLASHING WARNING LIGHTS SHALL BE VISIBLE ON BOTH SIDES OF THE BARRICADE.

THE R11-2, R11-3, AND R11-4 SIGNS PLACED ON BARRICADES SHALL COVER NO MORE THAN THE TOP RAIL. THE SIGNS SHALL NOT COVER ANY PORTION OF THE MIDDLE OR BOTTOM RAILS.

ALL SIGNS SHALL BE 48" X 48" UNLESS OTHERWISE NOTED BELOW:
R11-2 SHALL BE 48" X 30".
R11-4 AND R11-3 SHALL BE 60" X 30".

* OMIT THE "ROAD CLOSED 500 FT." SIGN IF THE LAST INTERSECTION IS 500 FEET OR LESS FROM THE WORK ZONE.

** 500' MAX. OR AT LAST INTERSECTION, WHICHEVER IS CLOSEST.

LEGEND

- SIGN ON PERMANENT SUPPORT
- TYPE III BARRICADE
- TYPE III BARRICADE WITH ATTACHED SIGN
- TYPE "A" WARNING LIGHT (FLASHING)
- WORK AREA

BARRICADES AND SIGNS FOR SIDEROAD CLOSURES

STATE OF WISCONSIN
DEPARTMENT OF TRANSPORTATION

APPROVED
July 2018 — DATE
/S/ Andrew Heidtke — WORK ZONE ENGINEE
FHWA

6

SDD 15C03 - 05

*CONFIRM MARKING LINE WIDTH WITH THE MISCELLANEOUS QUANTITIES

GENERAL NOTES

DETAILS OF CONSTRUCTION NOT SHOWN ON THIS DRAWING SHALL CONFORM TO STANDARD SPECIFICATIONS AND SPECIAL PROVISIONS.

1. LOCATE THE NO PASSING ZONE W14-3 SIGN WITHIN 50 FEET OF THE "T" MARKING
2. MEASURE FROM EDGE OF MARKING TO JOINT LINE. THIS DOES NOT INCLUDE SPACE NEEDED FOR GROOVING OPERATIONS.

LEGEND

"T" MARKING

SIGN ON PERMANENT SUPPORT

DIRECTION OF TRAFFIC

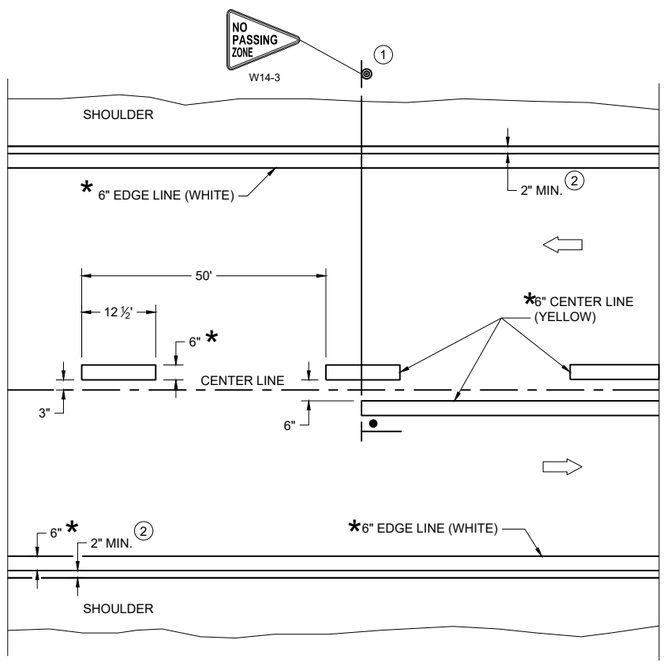

TWO WAY TRAFFIC

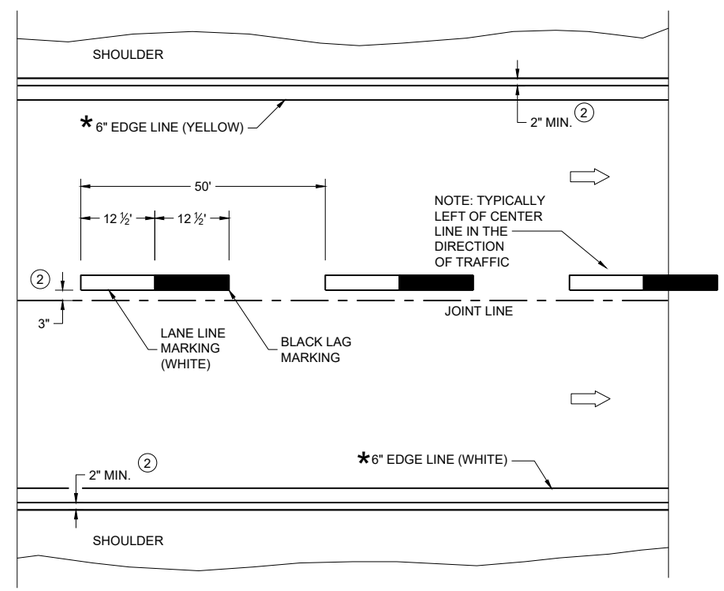

ONE WAY TRAFFIC

PERMANENT PAVEMENT MARKING

6

6

SDD 15C08-24a

SDD 15C08-24a

PERMANENT LONGITUDINAL PAVEMENT MARKINGS

STATE OF WISCONSIN
DEPARTMENT OF TRANSPORTATION

APPROVED
December 2024 — DATE
/S/ Jeannie Silver — Statewide Pavement Marking Engineer
FHWA

GENERAL NOTES

1. REFLECTIVE SHEETING SHALL FOLLOW THE REQUIREMENTS IN THE APPROVED PRODUCTS LISTING FOR SIGN SHEETING.
2. LOCATION OF WARNING LIGHTS WHEN SHOWN ON THE PLAN.

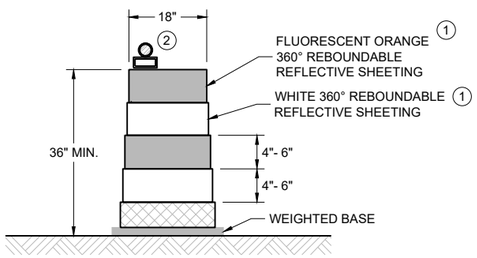

DRUM

BALLAST WIDTHS
RANGE FROM 24"-36"

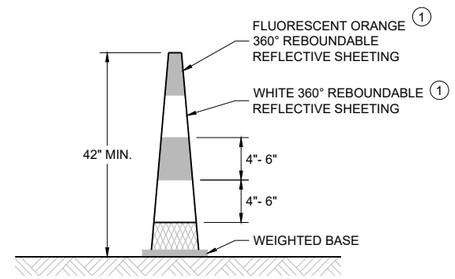

42" CONE

DO NOT USE IN TAPERS
½ SPACING OF DRUMS

BALLAST WIDTHS
RANGE FROM 14"-20"

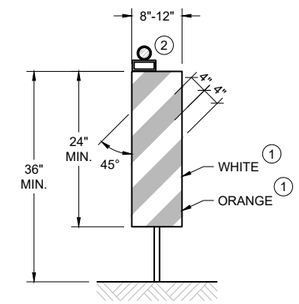

VERTICAL PANEL

THE STRIPES SHALL SLOPE DOWNWARD TO
THE TRAFFIC SIDE FOR CHANNELIZATION.

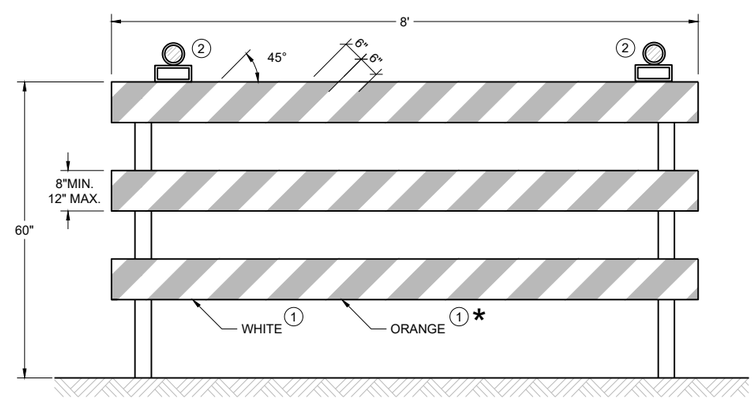

TYPE III BARRICADE

IF SIGN MOUNTED, DO NOT COVER MORE THAN 50% OF THE TOP
TWO RAILS OR 33% OF THE TOTAL AREA OF THE THREE RAILS.

* IF USED FOR A PERMANENT APPLICATION USE RED SHEETING.

CHANNELIZING DEVICES
DRUMS, CONES, BARRICADES
AND VERTICAL PANELS

STATE OF WISCONSIN
DEPARTMENT OF TRANSPORTATION

APPROVED
February 2026 — DATE
/S/ Andrew Heidtke — WORK ZONE ENGINEER

FHWA

6

SDD 15C11-11b

LEGEND

SIGN ON PORTABLE OR PERMANENT SUPPORT

TEMPORARY PORTABLE RUMBLE STRIP ARRAY

DIRECTION OF TRAFFIC

WORK AREA

FLAGGER, EQUIPPED WITH STOP/SLOW PADDLE FASTENED ON SUPPORT STAFF

GENERAL NOTES

DETAILS OF TRAFFIC CONTROL DEVICES AND INSTALLATION NOT SHOWN ON THIS DRAWING SHALL CONFORM TO THE PERTINENT REQUIREMENTS OF THE STANDARD SPECIFICATIONS, THE SPECIAL PROVISIONS, AND THE MANUAL ON UNIFORM TRAFFIC CONTROL DEVICES.

ALL SIGNS ARE 48" X 48" UNLESS OTHERWISE NOTED.

"WO" SIGNS ARE THE SAME AS "W" SIGNS EXCEPT THE BACKGROUND IS ORANGE.

THE EXACT NUMBER, LOCATION AND SPACING OF ALL SIGNS, DEVICES, AND LOCATION OF ALL FLAGGERS SHALL BE ADJUSTED TO FIT FIELD CONDITIONS AS APPROVED BY THE ENGINEER.

THE FIRST ADVANCE WARNING SIGN SHOULD TYPICALLY BE LOCATED IN ADVANCE OF THE ANTICIPATED TRAFFIC BACKUP OR QUEUE.

WHEN A SIDE ROAD OR RAMP INTERSECTS THE FACILITY ON WHICH THE WORK IS BEING PERFORMED, ADDITIONAL TRAFFIC CONTROLS SHALL BE PROVIDED AS SPECIFIED IN THE PLANS AND/OR THE SPECIAL PROVISIONS OR AS APPROVED BY THE ENGINEER.

FLAGGING

FLAGGERS SHALL BE IN SIGHT OF EACH OTHER OR IN DIRECT COMMUNICATION AT ALL TIMES. THEY SHALL BE EQUIPPED WITH STOP/SLOW PADDLES FASTENED ON SUPPORT STAFFS. WHEN THE FLAGGING OPERATION IS NOT IN EFFECT REMOVE TEMPORARY PORTABLE RUMBLE STRIPS PRIOR TO COVERING OR REMOVING ALL ADVANCE SIGNING.

(1) FOR MOVING WORK OPERATIONS, POST ADDITIONAL W20-7A FLAGGER SIGNS AT APPROXIMATELY 3,500' INTERVALS IN THE MOVING WORK OPERATION OR AS APPROVED BY THE ENGINEER.

(2) SIGN NOT REQUIRED IF FLAGGING OPERATION OCCURS WITHIN A SIGNED ROAD WORK ZONE AREA.

WHEN THE DISTANCE BETWEEN FLAGGERS EXCEEDS 2 MILES, A PILOT CAR IS REQUIRED. WHEN CURVES REDUCE SIGHT DISTANCE BELOW 400', A PILOT CAR IS REQUIRED.

TEMPORARY PORTABLE RUMBLE STRIPS

UTILIZE TEMPORARY PORTABLE RUMBLE STRIPS ON ALL FLAGGING OPERATIONS.

(3) EACH TEMPORARY PORTABLE RUMBLE STRIP ARRAY CONSISTS OF THREE RUMBLE STRIPS PLACED TRANSVERSE ACROSS THE LANE AT THE LOCATIONS SHOWN. WITHIN EACH ARRAY, SPACING BETWEEN RUMBLE STRIPS SHALL BE 15 FEET ON CENTER

ONLY USE TEMPORARY PORTABLE RUMBLE STRIPS FROM THE APPROVED PRODUCTS LIST.

INSTALL TEMPORARY RUMBLE STRIPS PER MANUFACTURER'S RECOMMENDATIONS.

PLACE ADVANCE SIGNING PRIOR TO INSTALLING TEMPORARY RUMBLE STRIPS.

DO NOT INSTALL TEMPORARY PORTABLE RUMBLE STRIPS ON GRAVEL, MILLED SURFACES, OR ASPHALT THAT HAS BEEN PAVED LESS THAN 12 HOURS.

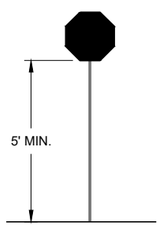

STOP/SLOW PADDLE ON SUPPORT STAFF

SIGN AND TEMPORARY RUMBLE STRIP ARRAY SPACING TABLE

SPEED LIMIT	SPACING "A"
25-30 MPH	200'
35-40 MPH	350'
45-55 MPH	500'

USE OF WO3-4 SIGN IS OPTIONAL. WHEN USED, THIS SIGN SHALL BE LOCATED BETWEEN THE W20-7A AND W20-4A SIGNS, USING SPACING "A".

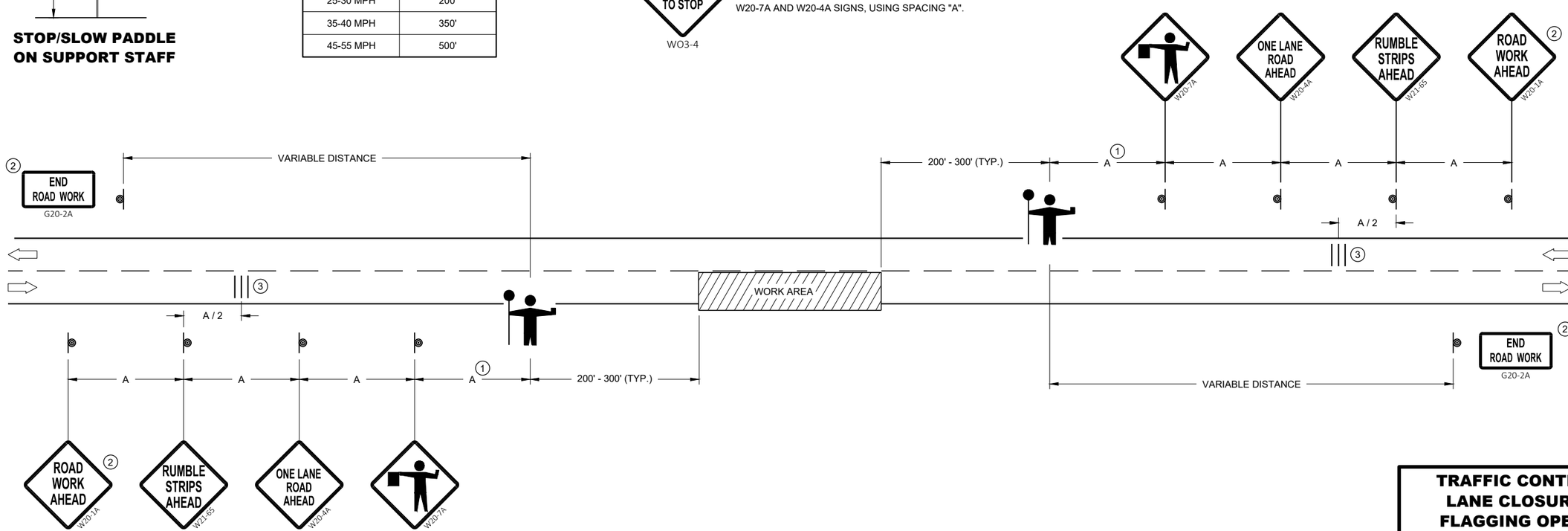

TRAFFIC CONTROL FOR LANE CLOSURE WITH FLAGGING OPERATION

STATE OF WISCONSIN
DEPARTMENT OF TRANSPORTATION

APPROVED
May 2022 — DATE
/S/ Andrew Heidtke — WORK ZONE ENGINEE
FHWA

6

SDD 15C12 - 09a

GENERAL NOTES

- SIGN ON PERMANENT SUPPORT
- TRAFFIC CONTROL CONE 42-INCH
- TRAFFIC CONTROL DRUM
- TEMPORARY PORTABLE RUMBLE STRIP ARRAY
- DIRECTION OF TRAFFIC
- WORK AREA
- AFAD — AUTOMATED FLAGGER ASSISTANCE DEVICE (AFAD)

GENERAL NOTES

DETAILS OF TRAFFIC CONTROL DEVICES AND INSTALLATION NOT SHOWN ON THIS DRAWING SHALL CONFORM TO THE PERTINENT REQUIREMENTS OF THE STANDARD SPECIFICATIONS, THE SPECIAL PROVISIONS, AND THE MANUAL ON UNIFORM TRAFFIC CONTROL DEVICES.

ALL SIGNS ARE 48" X 48" UNLESS OTHERWISE NOTED.

"WO" SIGNS ARE THE SAME AS "W" SIGNS EXCEPT THE BACKGROUND IS ORANGE.

THE EXACT NUMBER, LOCATION AND SPACING OF ALL SIGNS, DEVICES, AND LOCATION OF ALL FLAGGERS SHALL BE ADJUSTED TO FIT FIELD CONDITIONS AS APPROVED BY THE ENGINEER.

THE FIRST ADVANCE WARNING SIGN SHOULD TYPICALLY BE LOCATED IN ADVANCE OF THE ANTICIPATED TRAFFIC BACKUP OR QUEUE.

WHEN A SIDE ROAD OR RAMP INTERSECTS THE FACILITY ON WHICH THE WORK IS BEING PERFORMED, ADDITIONAL TRAFFIC CONTROLS SHALL BE PROVIDED AS SPECIFIED IN THE PLANS AND/OR THE SPECIAL PROVISIONS OR AS APPROVED BY THE ENGINEER.

FLAGGING

IF THE AUTOMATED FLAGGER ASSISTANCE DEVICE (AFAD) STOPS WORKING, FLAGGERS SHALL BE IN SIGHT OF EACH OTHER OR IN DIRECT COMMUNICATION AT ALL TIMES. THEY SHALL BE EQUIPPED WITH STOP/SLOW PADDLES FASTENED ON SUPPORT STAFFS. WHEN THE FLAGGING OPERATION IS NOT IN EFFECT REMOVE TEMPORARY PORTABLE RUMBLE STRIPS PRIOR TO COVERING OR REMOVING ALL ADVANCE SIGNING.

WHEN THE DISTANCE BETWEEN FLAGGERS EXCEEDS 2 MILES, A PILOT CAR IS REQUIRED. WHEN CURVES REDUCE SIGHT DISTANCE BELOW 400', A PILOT CAR IS REQUIRED.

(1) SIGN NOT REQUIRED IF FLAGGING OPERATION OCCURS WITHIN A SIGNED ROAD WORK ZONE AREA.

(2) IF FLAGGERS ARE PHYSICALLY NEEDED TO FLAG, REPLACE WO3-4 SIGNS WITH W20-7A SIGNS.

TEMPORARY PORTABLE RUMBLE STRIPS

UTILIZE TEMPORARY PORTABLE RUMBLE STRIPS ON ALL FLAGGING OPERATIONS.

ONLY USE TEMPORARY PORTABLE RUMBLE STRIPS FROM THE APPROVED PRODUCTS LIST.

PLACE ADVANCE SIGNING PRIOR TO INSTALLING TEMPORARY RUMBLE STRIPS.

DO NOT INSTALL TEMPORARY PORTABLE RUMBLE STRIPS ON GRAVEL, MILLED SURFACES, OR ASPHALT THAT HAS BEEN PAVED LESS THAN 12 HOURS.

(3) EACH TEMPORARY PORTABLE RUMBLE STRIP ARRAY CONSISTS OF THREE RUMBLE STRIPS PLACED TRANSVERSELY AT THE LOCATIONS SHOWN. WITHIN EACH ARRAY, SPACING BETWEEN RUMBLE STRIPS SHALL BE 15 FEET ON CENTER.

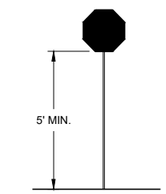

STOP/SLOW PADDLE ON SUPPORT STAFF

SIGN AND TEMPORARY RUMBLE STRIP ARRAY SPACING TABLE

SPEED LIMIT	SPACING "A"
25-30 MPH	200'
35-40 MPH	350'
45-55 MPH	500'

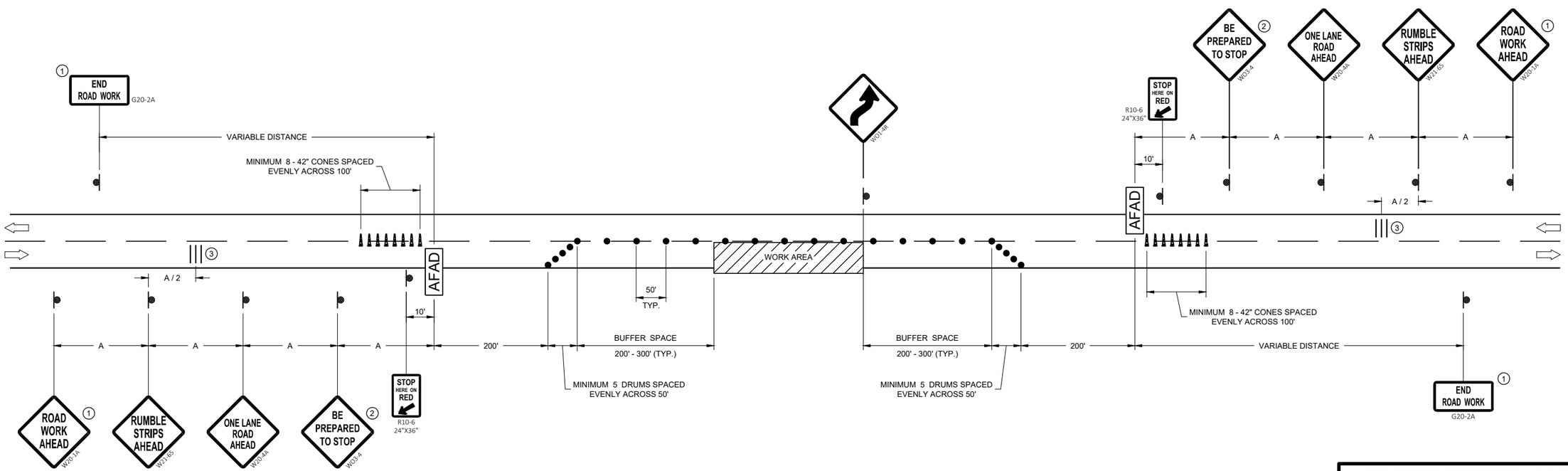

TRAFFIC CONTROL, LANE CLOSURE WITH AUTOMATED FLAGGER ASSISTANCE DEVICE

STATE OF WISCONSIN
DEPARTMENT OF TRANSPORTATION

APPROVED
May 2022 — DATE
/S/ Andrew Heidtke — WORK ZONE ENGINEER
FHWA

6

SDD 15C12 - 09b

LEGEND

V1 LEAD VEHICLE

V2 MARKING VEHICLE

V3 SHADOW VEHICLE

TRUCK MOUNTED ATTENUATOR (TMA)

SIGN ON TEMPORARY SUPPORT

DIRECTION OF TRAFFIC

GENERAL NOTES

ALL VEHICLES SHALL BE EQUIPPED WITH TWO 360 DEGREE HIGH INTENSITY YELLOW FLASHING LIGHTS OR STROBE LIGHTS AND OPERATED WITH HEADLIGHTS TURNED ON.

ALL VEHICLES SHALL BE EQUIPPED WITH REAR FACING TYPE B OR C FLASHING ARROW PANEL OPERATING IN CAUTION MODE. SIGNS PLACED ON VEHICLES MUST NOT OBSCURE THE ARROW PANEL.

ALL SIGNS ARE 48" X 48" UNLESS OTHERWISE SPECIFIED.

DISTANCE BETWEEN VEHICLES MAY VARY ACCORDING TO TERRAIN, SIGHT DISTANCE, PAINT DRYING TIME, AND OTHER FACTORS. WHENEVER ADEQUATE STOPPING SIGHT DISTANCE EXISTS TO THE REAR, SHADOW VEHICLES SHOULD MAINTAIN THE MINIMUM DISTANCE FROM THE WORK VEHICLE AND PROCEED AT THE SAME SPEED AS THE WORK VEHICLE. SHADOW VEHICLES SHOULD SLOW DOWN IN ADVANCE OF VERTICAL AND HORIZONTAL CURVES THAT RESTRICT SIGHT DISTANCE.

THE WORK AND SHADOW VEHICLES SHOULD PULL OVER PERIODICALLY TO ALLOW TRAFFIC TO PASS.

WHEN NO WORK ACTIVITY IS TAKING PLACE, REMOVE OR LAY STATIONARY SIGNS AND SUPPORTS FLAT ON THE GRADE WITH UPRIGHTS ORIENTED PARALLEL TO AND DOWNSTREAM FROM TRAFFIC.

WORKERS SHALL NOT PERFORM WORK FROM ANY SHADOW OR PROTECTION VEHICLES.

CONES SHOULD BE USED BETWEEN THE MARKING AND SHADOW VEHICLE AT 100 FOOT SPACING. CONES MAY BE OMITTED ON PAINTED LINE IF APPROVED BY THE ENGINEER. CONSIDER PAVEMENT MARKING DRY OR CURE TIMES AND TRAFFIC VOLUME.

CONES SHALL BE A MINIMUM OF 28" FOR WET PAVEMENT MARKING .

(1) SIGNS SHALL BE REPEATED APPROXIMATELY EVERY THREE MILES AND AFTER EVERY MAJOR INTERSECTION.

(2) IF CONSTRUCTION WORK ZONE SIGNS ARE IN PLACE, W20-1A OR W21-63 ARE NOT REQUIRED.

(3) V1 AND V2 CAN BE SWITCHED SO THAT THE MARKER IS THE LEAD VEHICLE.

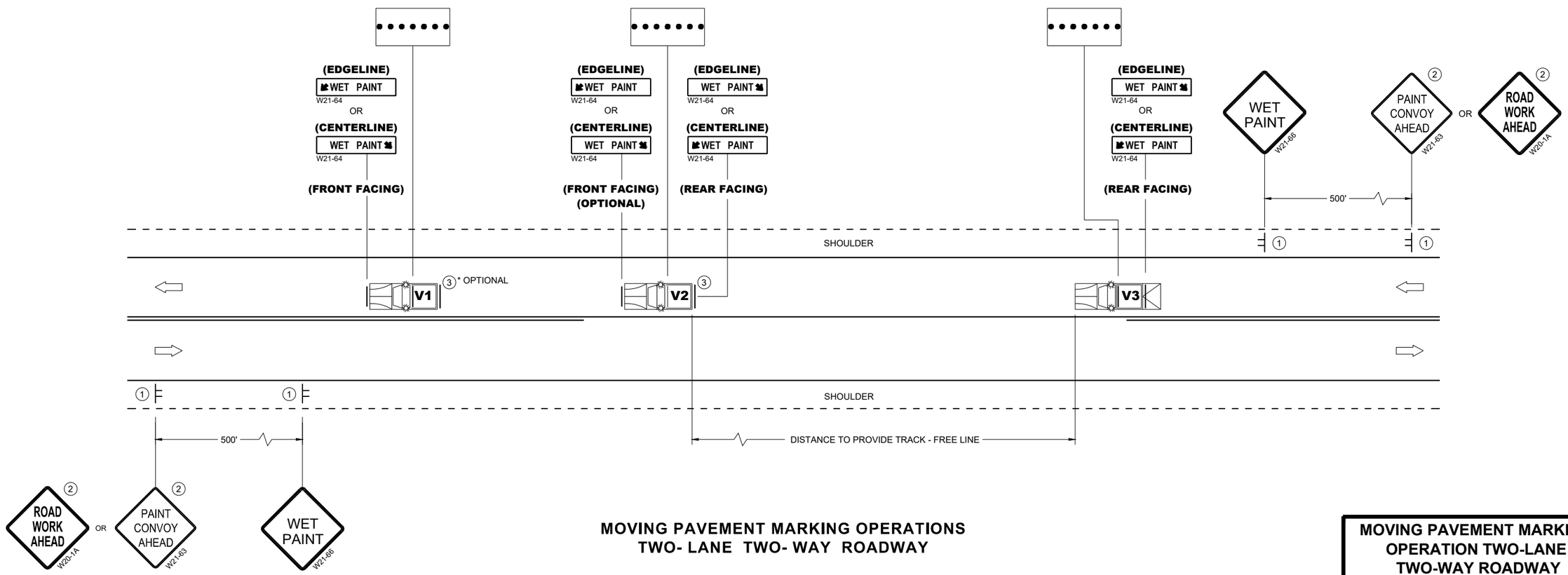

MOVING PAVEMENT MARKING OPERATIONS
TWO- LANE TWO- WAY ROADWAY

MOVING PAVEMENT MARKING OPERATION TWO-LANE TWO-WAY ROADWAY

STATE OF WISCONSIN
DEPARTMENT OF TRANSPORTATION

APPROVED
November 2025 — DATE
/S/ Andrew Heidtke — STATE ELECTRICAL ENGINEER

FHWA

6
SDD 15C19-11a

GENERAL NOTES

STOP SIGN SHALL BE PLACED A MINIMUM OF 6 FEET TO A MAXIMUM OF 50 FEET FROM THE EDGELINE LOCATION.

1. 18-INCH STOP LINES MAY BE DELETED OR ADDED BY THE REGION MARKING ENGINEER BASED ON VISIBILITY AND SIGHT LINES.
2. NO STOP LINE IS REQUIRED IF STOP SIGN IS LESS THAN OR EQUAL TO 40 FEET FROM THE EDGELINE.
3. NO STOP LINE IS REQUIRED IF STOP SIGN IS LESS THAN OR EQUAL TO 30 FEET FROM THE FLANGE LINE EXTENSION.
4. MOVE CLOSER TO THE EDGE OF TRAVEL LINE AS NEEDED FOR VISIBILITY AND SIGHT LINES (NO CLOSER THAN 4 FEET).
5. LADDER BAR CROSSWALKS SHOULD ONLY BE USED FOR MID BLOCK CROSSINGS. USE 2 - 6" TRANSVERSE LINES.
6. POSTED SPEED LIMITS OF 40 MPH OR GREATER USE A MINIMUM WIDTH OF 8' FOR MIDBLOCK CROSSWALKS

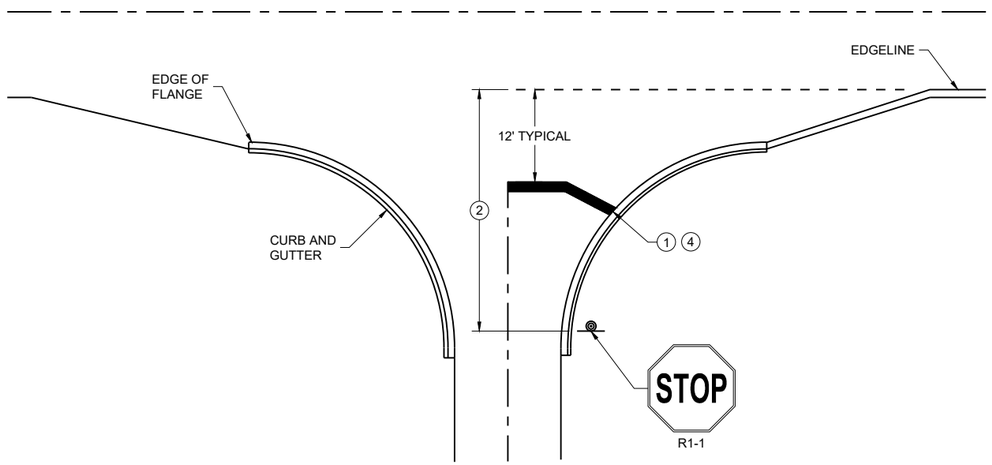

TYPICAL STOP LINE PAVEMENT MARKING WITH CURB AND GUTTER

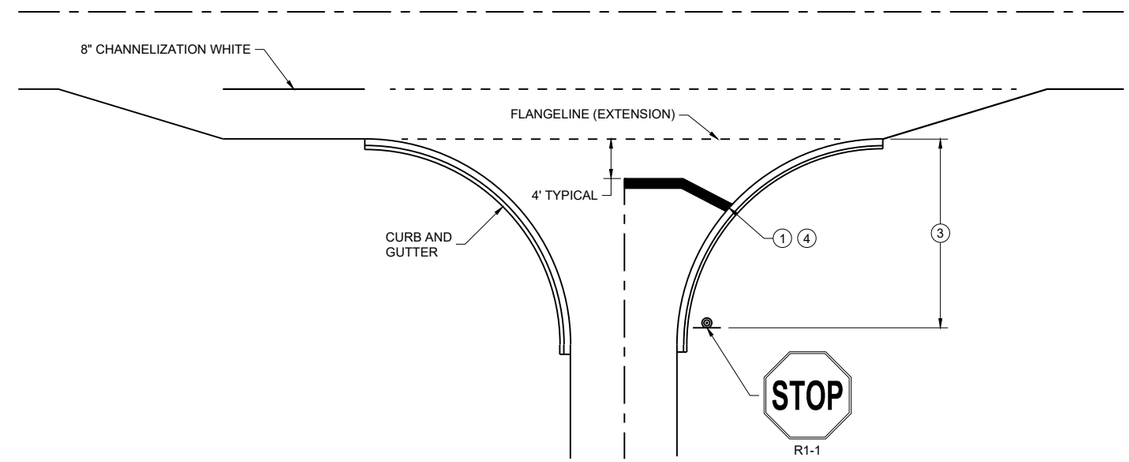

TYPICAL STOP LINE PAVEMENT MARKING FOR SIDE ROADS WITH RIGHT TURN LANE

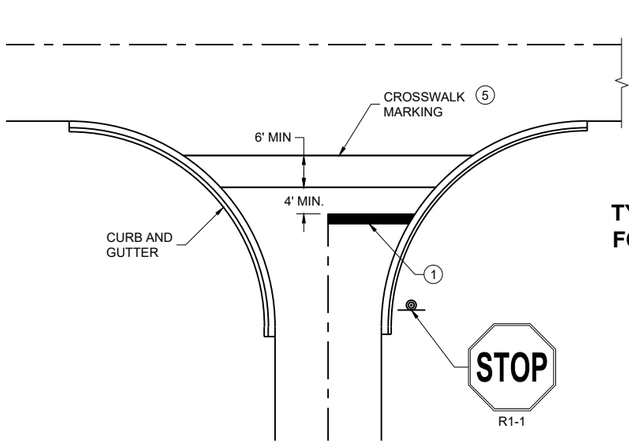

TYPICAL STOP LINE PAVEMENT MARKING FOR SIDE ROADS WITH CROSSWALK MARKING

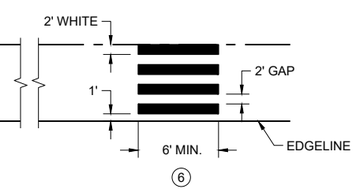

TYPICAL PAVEMENT MARKING FOR MID-BLOCK CROSSWALK 5

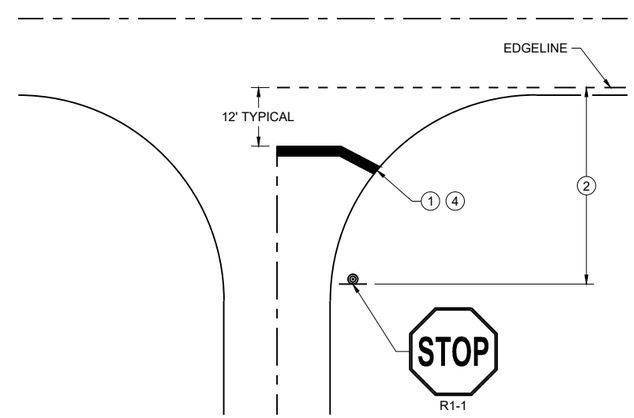

TYPICAL STOP LINE PAVEMENT MARKING WITHOUT CURB AND GUTTER

STOP LINE AND CROSSWALK PAVEMENT MARKING

STATE OF WISCONSIN
DEPARTMENT OF TRANSPORTATION

APPROVED
March 2024 — DATE
/S/ Matthew Rauch — STATE SIGNING AND MARKING ENGINEER

FHWA

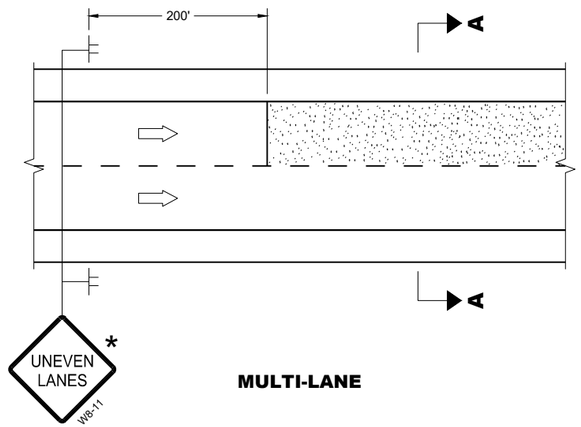

MULTI-LANE

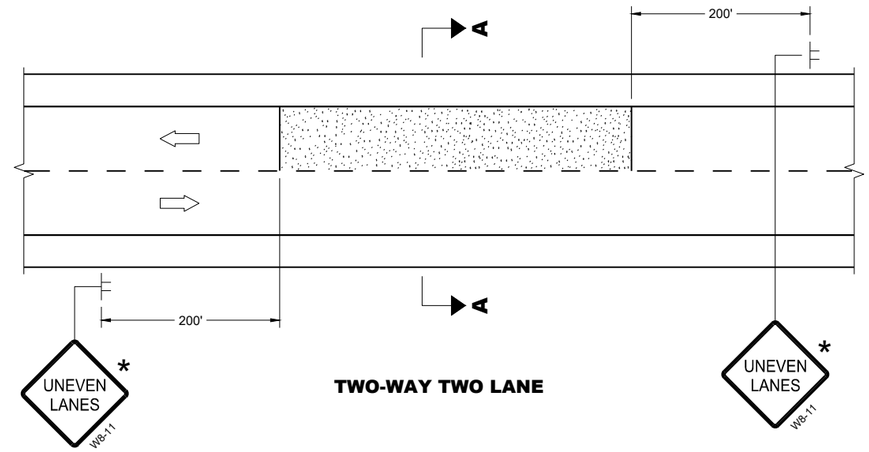

TWO-WAY TWO LANE

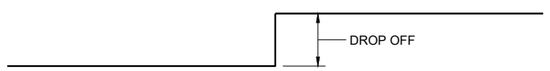

SECTION A - A

OR

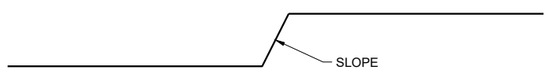

SECTION A - A

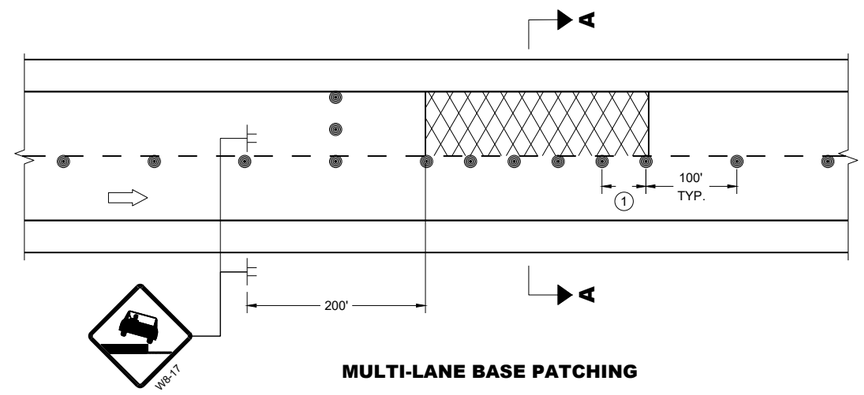

MULTI-LANE BASE PATCHING

ADJACENT LANE DROP-OFFS

GENERAL NOTES

FOR SPOT LOCATIONS USE ENGINEERING JUDGEMENT WHEN PLACING ADDITIONAL SIGNS.

ALL SIGNS ARE 48" X 48" UNLESS OTHERWISE NOTED.

"WO" SIGNS ARE THE SAME AS "W" SIGNS EXCEPT THE BACKGROUND IS ORANGE.

WARNING LIGHTS ARE NOT REQUIRED IF THE LANE CLOSURE IS A DAYTIME ONLY OPERATION.

* IF THE DROP-OFF IS CONTINUOUS ALONG THE PROJECT, PLACE ADDITIONAL SIGNS EVERY 1 MILE AND AFTER EVERY ENTRANCE RAMP.

(1) USE CLOSER SPACING WHEN DELINEATING DROP-OFF.

LEGEND

- SIGN ON TEMPORARY SUPPORT
- TRAFFIC CONTROL DRUM
- TYPE III BARRICADE WITH ATTACHED SIGN
- TYPE "A" WARNING LIGHT (FLASHING)
- DIRECTION OF TRAFFIC
- WORK AREA WITH DROP-OFF
- MILLED SURFACE

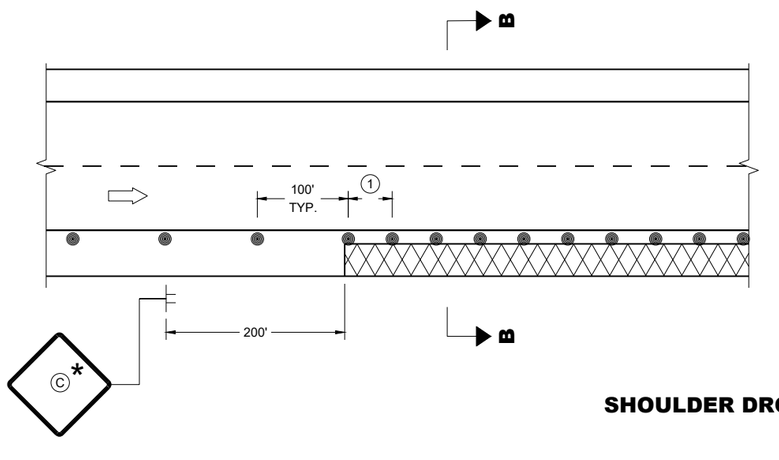

SHOULDER DROP-OFFS

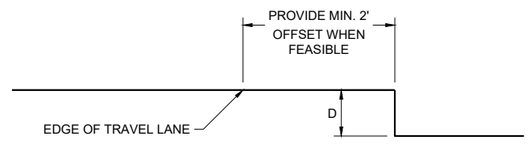

SECTION B - B

D	SIGN (C)
< 2" WITH A SLOPE STEEPER THAN 3:1	LOW SHOULDER WO8-9
2" < 6" WITH A SLOPE STEEPER THAN 3:1	SHOULDER DROP - OFF W8-9A
	PROVIDE A 3:1 OR FLATTER SLOPE OF MATERIAL ADJACENT TO THE PAVEMENT

TRAFFIC CONTROL, DROP-OFF SIGNING

STATE OF WISCONSIN
DEPARTMENT OF TRANSPORTATION

APPROVED
February 2025 — DATE
/S/ Andrew Heidtke — WORK ZONE ENGINEER
FHWA

6
SDD 15D39-03

TYPICAL ASSEMBLIES

J1-1

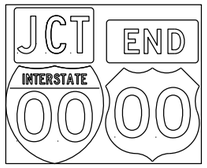

J1-2

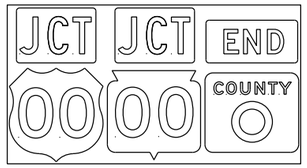

J1-3

JR1-1

J2-1

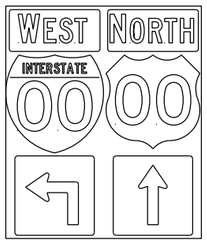

J2-2

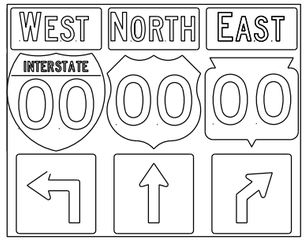

J2-3

JV

(Typical Vertical J-Assembly
See Note 10 and 11)

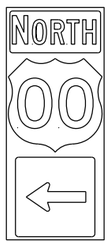

J3-1

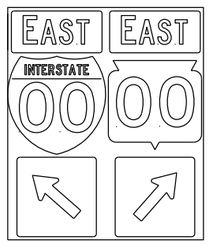

J3-2

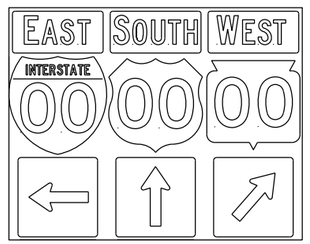

J3-3

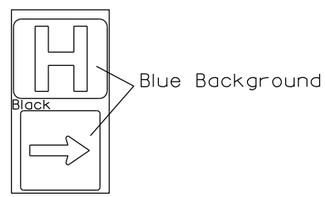

JH-1

J4-1

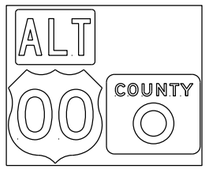

J4-2

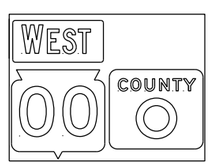

J4-2

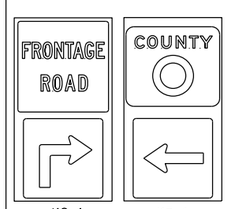

J12-1 J13-1

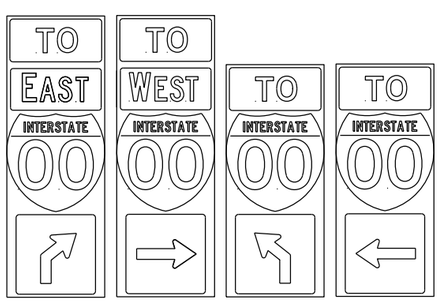

J32-1 J33-1 J22-1 J23-1 JR13-1 JR23-1 JR99-1

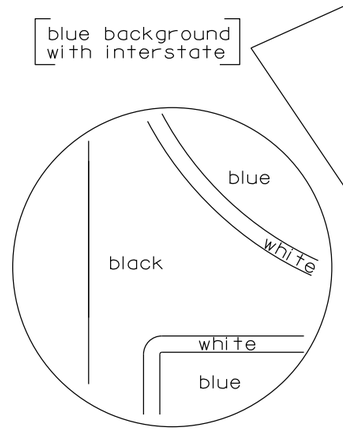

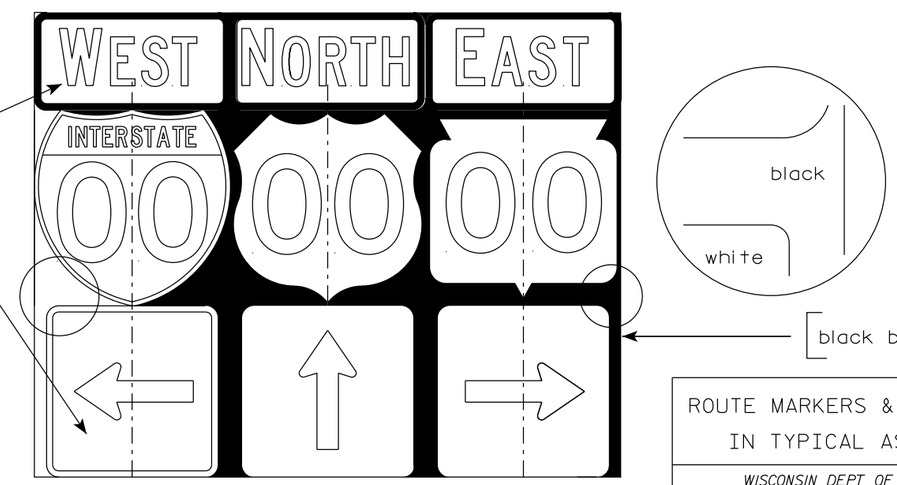

NOTES

1. Signs are Type II - Type H Reflective
2. Color:
   Background - Black Non-reflective
   Message - see Note 4
3. Message Series - See Note 4
4. The colors and message spacing on each marker shall be according to the applicable route marker panel specifications.
5. Certain marker heads require the component pieces to be the same color. As an example, all the components used with an M1-1 Interstate marker shall be blue.
6. Single panel j-assemblies shall only be used with route marker shields that are same size. If the route marker shields are different size use multiple piece component.
7. Route assemblies that have 24 inch route shields and have dimensions greater than 48 inches (both vertical and horizontal) shall have one horizontal splice between the arrows and route shields. Vertical splices shall not be used on route assemblies with a horizontal dimension of 144 inches or less. The contractor shall not use more than one vertical joint per sign and the joint shall be between route shields.
8. Route assemblies that have 36 inch shields and have dimensions greater than 48 inchs (both vertical and horizontal) shall have two horizontal splices. One horizontal splice shall be between the cardinal direction and route shields and the other horizontal splice shall be between the arrows and route shields. Vertical splices shall not be used on route assemblies with a horizontal dimension of 144 or less. The contractor shall not use more than one vertical joint per sign and the joint shall be between route shields.
9. All Vertical J Assemblies are given a Sign Code of JV
10. For JV Assemblies that have a mixture of Interstate and Non-Interstate shields, arrows and cardinals shall be white on blue.
11. For JV Assemblies that have a mixture of Non-Interstate and Auto-Tour shields, arrows and cardinals shall be black on white.

ROUTE MARKERS & COMPONENTS
IN TYPICAL ASSEMBLIES

WISCONSIN DEPT OF TRANSPORTATION

APPROVED Matthew R Rauch
for State Traffic Engineer

DATE 6/7/23 PLATE NO. A2-1S.10

PROJECT NO:

SHEET NO: 162 E

URBAN AREA

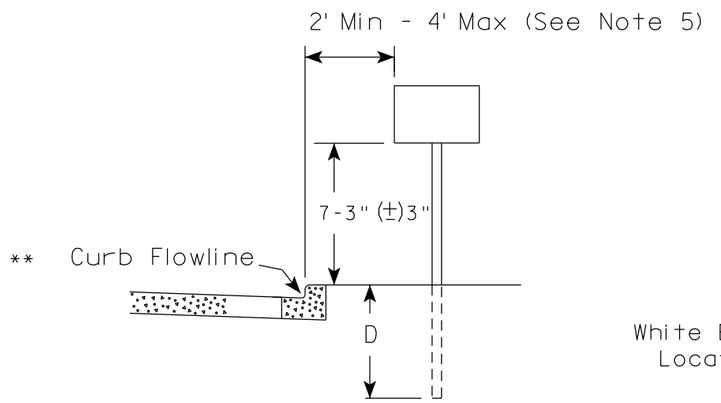

RURAL AREA (See Note 2)

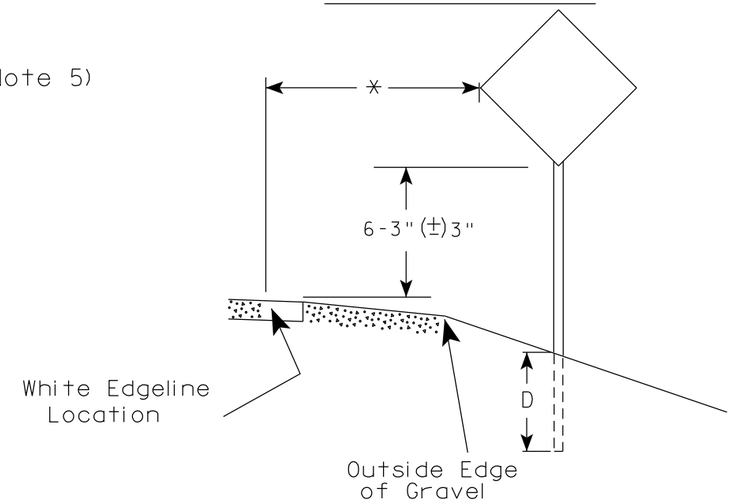

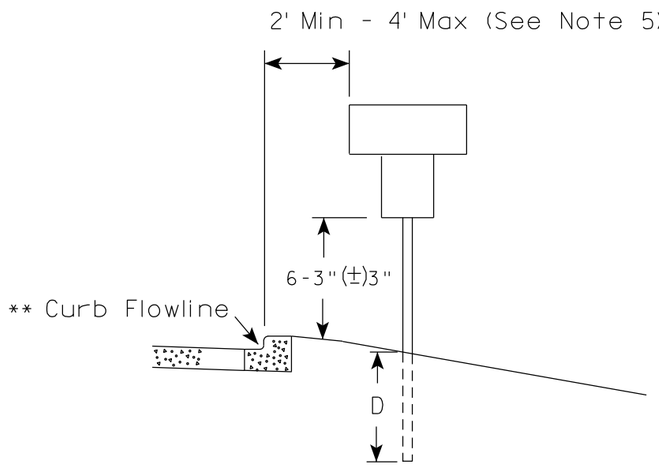

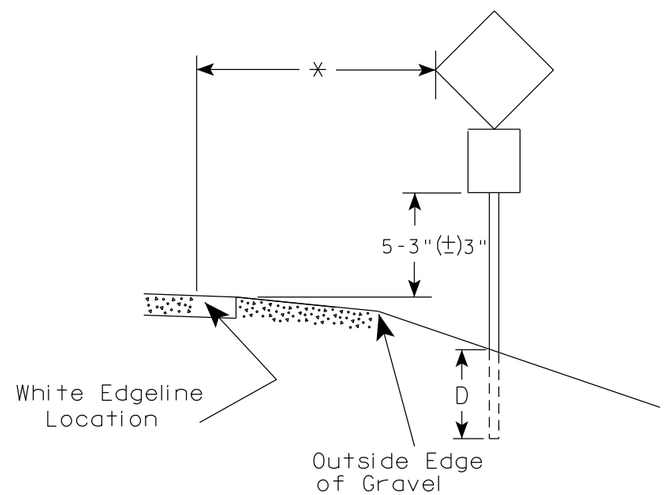

** The existence of curb and gutter does not in itself mandate the vertical clearance illustrated. That height is typically measured where there is sidewalk adjacent to the roadway or parking is permitted. In the absence of sidewalk vertical clearance is measured from the top of the curb. Offset of signs is measured from the flow line.

* 6 feet from edge of a paved shoulder or 12 feet from the edge of pavement (edge line location) or 2 feet from outside edge of gravel, whichever is greater unless directed by project engineer.

GENERAL NOTES

1. Signs wider than 4 feet or 20 sq.ft or larger, shall be mounted on multiple posts. Refer to plate A4-4.
2. If signs are mounted on or behind barrier wall, see A4-10 sign plate.
   The Double Arrow sign (W12-1D) shall be mounted at a height of 2'-3" (±) 3". The Chevron sign (W1-8), Roundabout Chevron panel (R6-4B), Enhanced Reference Markers, Clearance Markers (W5-52), Mile Markers (D10 series), In Road Object Markers (W5-54) & End of Road Markers (W5-56) shall be mounted at a height of 4'-3" (±) 3".
3. For expressways and freeways, mounting height is 7'- 3" (±) 3" or 6'-3" (±) 3" depending upon existence of a sub-sign.
4. Minimum mounting height for signs mounted on traffic signal poles is 5'- 3" (±) 3".
5. Offset distance shall be consistent with existing signs or consistent throughout length of project.
6. Folding signs shall be mounted at a height of 5'-3" (±) 3" or as directd by the Engineer.

POST EMBEDMENT DEPTH

Area of Sign Installation (Sq. Ft.)	D (Min)
20 or Less	4'
Greater than 20	5'

TYPICAL INSTALLATION OF PERMANENT TYPE II SIGNS ON SINGLE POSTS

WISCONSIN DEPT OF TRANSPORTATION

APPROVED Matthew R Rauch
for State Traffic Engineer

DATE 12/6/23 PLATE NO. A4-3.23

7 7

PROJECT NO:	HWY:	COUNTY:		SHEET NO: 163	E

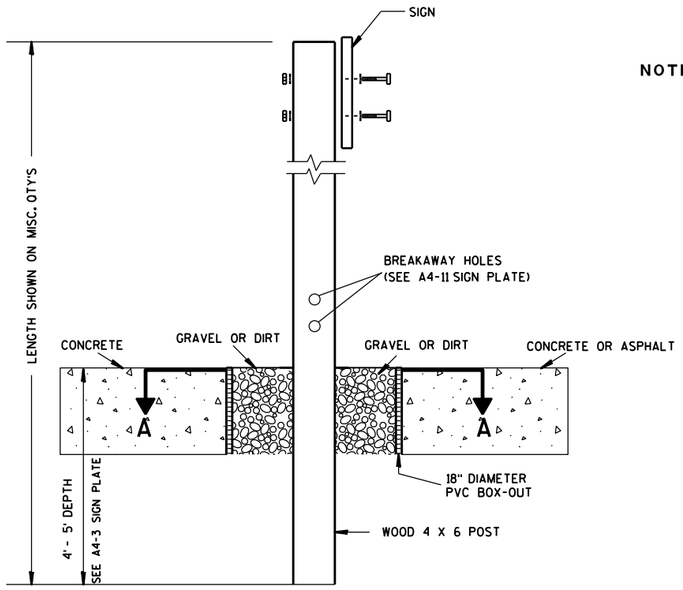

ELEVATION VIEW

DETAIL OF WOOD 4 X 6 SIGN POST IN BOX-OUT

NOTES:
1. ALL MATERIAL TO BE APPROVED BY ENGINEER PRIOR TO INSTALLATION
2. SEE SIGN PLATE A4-8 FOR SIGN HARDWARE REQUIREMENTS
3. 18 INCH X 18 INCH SQUARE BOX-OUTS MAY BE USED FOR INSTALLATIONS IN EXISTING CONCRETE OR ASPHALT LOCATIONS.

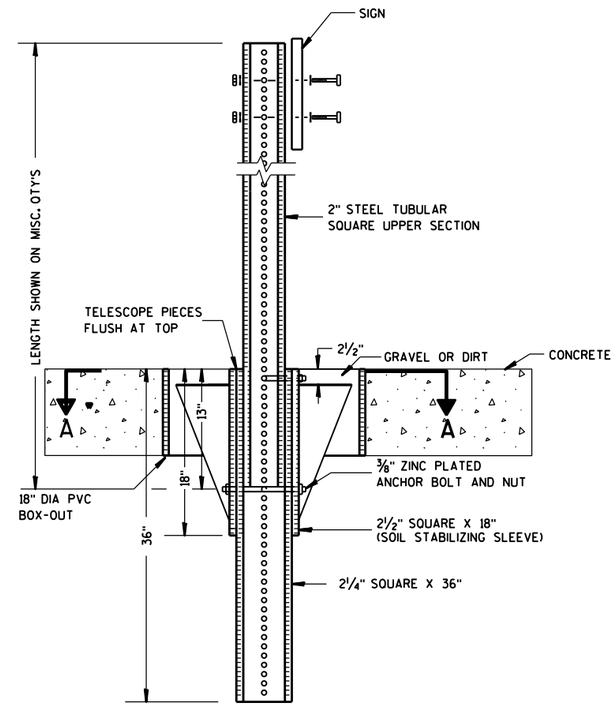

ELEVATION VIEW

DETAIL OF STEEL 2 X 2 SIGN POST IN BOX-OUT

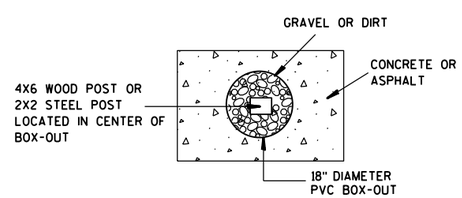

PLAN VIEW

FOR NEW CONCRETE/ASPHALT INSTALLATIONS

SIGN POST
BOX-OUTS
A4-3B

WISCONSIN DEPT OF TRANSPORTATION

APPROVED Matthew R Rauch
for State Traffic Engineer

DATE 1/27/14 PLATE NO. A4-3B.1

PROJECT NO:	HWY:	COUNTY:		SHEET NO:	E

URBAN AREA

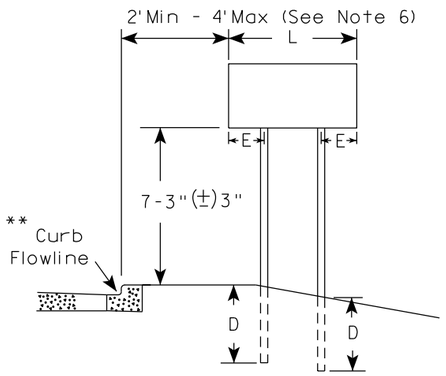

RURAL AREA (See Note 3)

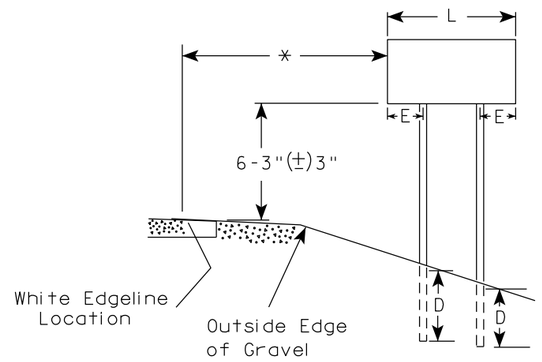

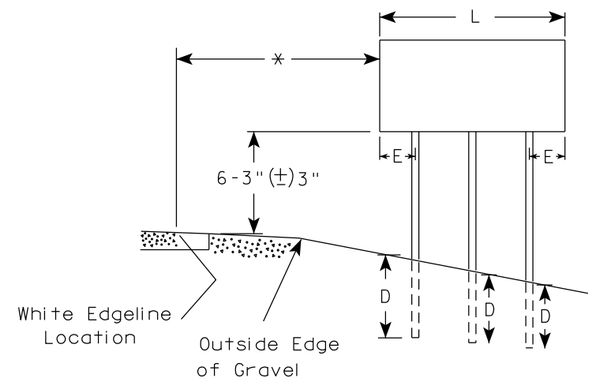

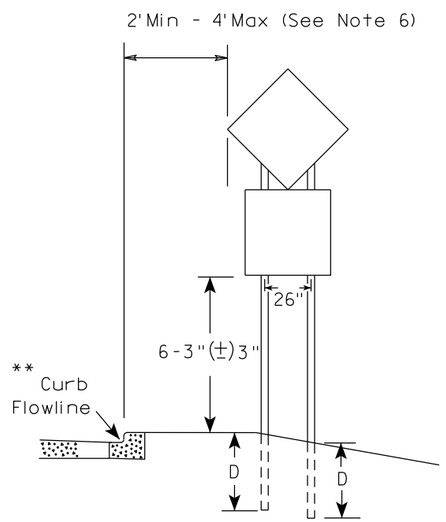

48" DIAMOND WARNING SIGN

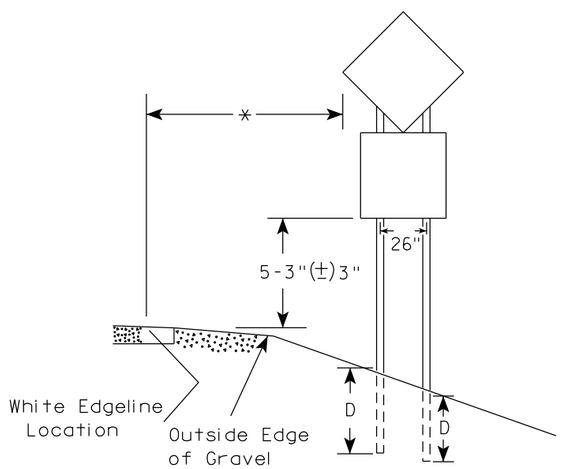

48" DIAMOND WARNING SIGN

GENERAL NOTES

1. For 3 or 4 post installations, individual post spacing shall be greater than 3'-6".
2. See tables below for required number of posts.
3. For expressways and freeways, mounting height is 7'-3" (±) 3" or 6'-3" (±) 3" depending upon existence of sub-sign.
4. The (±) tolerance for mounting height is 3 inches.
5. J-Assemblies are considered to be one sign for mounting height.
6. Offset distance shall be consistent with existing signs or consistent throughout length of project.
7. Folding signs shall be mounted at a height of 5'-3" (±) 3" or as directed by the engineer.
8. The Double Arrow sign (W12-1) shall be mounted at a height of 2'-3" (±) 3". The Chevron sign (W1-8), Roundabout Chevron panel (R6-4B), Clearance Markers (W5-52), Mile Markers (D10 series), In Road Object Markers (W5-54) & End of Road Markers (W5-56) shall be mounted at a height of 4"-3" (±) 3".

* 6 feet from edge of a paved shoulder or 12 feet from the edge of pavement (edge line location) or 2 feet from outside edge of gravel, whichever is greater unless directed by project engineer.

** The existence of curb and gutter does not in itself mandate the vertical clearance illustrated. That height is typically measured where there is sidewalk adjacent to the roadway or parking is permitted. In the absence of sidewalk vertical clearance is measured from the top of the curb. Offset of signs is measured from the flow line.

*** See A4-3 sign plate for signs 4' or less in width and less than 20 S.F. in area.

SIGN SHAPE OTHER THAN DIAMOND (TWO POSTS REQUIRED)	
L	E
*** Greater than 48" Less than 60"	12"
60" to 108"	L/5

SIGN SHAPE OTHER THAN DIAMOND (THREE POSTS REQUIRED)	
L	E
Greater than 108" to 144"	12"

POST EMBEDMENT DEPTH

Area of Sign Installation (Sq. Ft.)	D (Min)
20 or Less	4'
Greater than 20	5'

TYPICAL INSTALLATION OF TYPE II SIGNS ON MULTIPLE POSTS

WISCONSIN DEPT OF TRANSPORTATION

APPROVED Matthew R Rauch
for State Traffic Engineer

DATE 12/6/23 PLATE NO. A4-4.16

PROJECT NO:	HWY:	COUNTY:		SHEET NO: 165	E

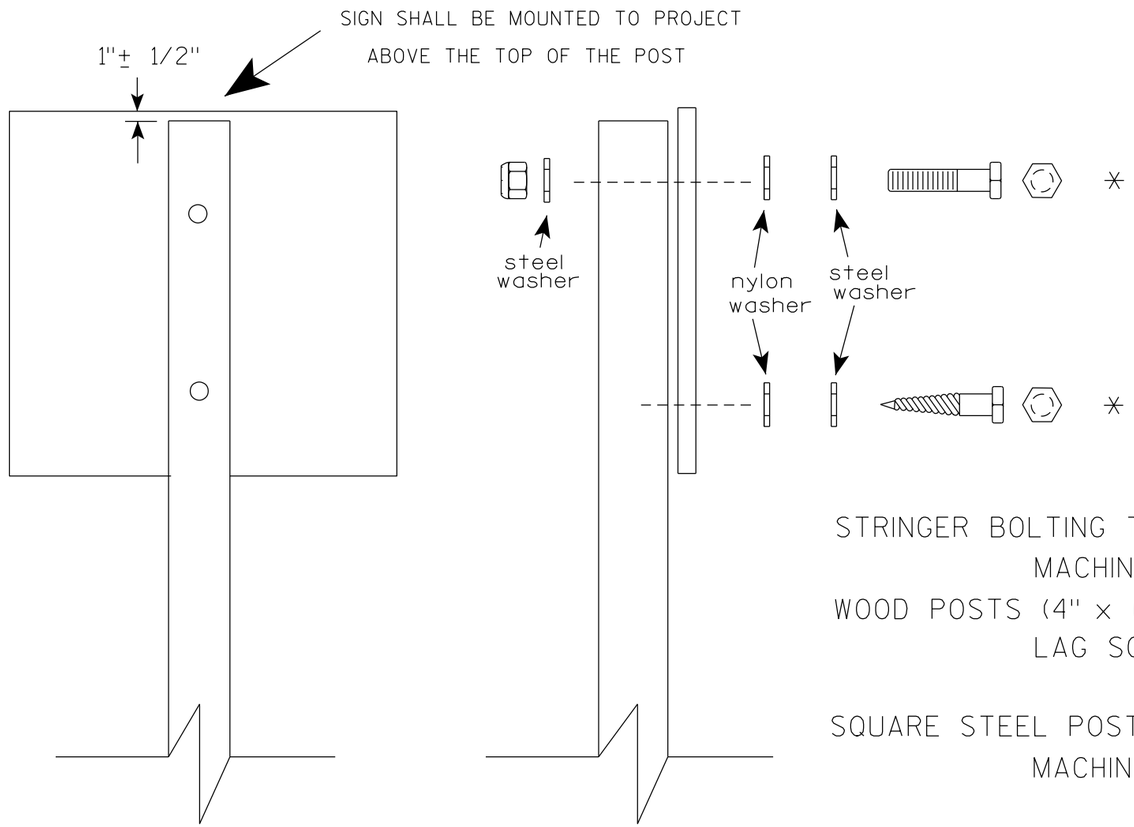

Nuts, bolts and lags used for mounting signs shall have hexagonal heads and shall be either :

a. Hot dip galvanized in accordance with ASTM Designation: A 153, Class D, or SC 3

b. Electro-galvanized in accordance with ASTM Designation : B 633, TYPE III, SC 3.

Threads on bolts and nuts shall be manufactured with sufficient allowance for the cadmium plate or galvanized coating to permit the nuts to run freely on the bolts.

STRINGER BOLTING TO ALUMINUM SIGNS (SEE SIGN PLATE A4-18)

MACHINE BOLTS - 5/16" X 1-3/4" Length w/ lock nuts

WOOD POSTS (4" x 6")

LAG SCREWS - 3/8" X 3" (NO STRINGERS ON BACK OF SIGN)
3/8" X 4" (STRINGERS ON BACK OF SIGN)

SQUARE STEEL POSTS (2" x 2")

MACHINE BOLTS - 3/8" X 3-1/4" Length w/ nuts (NO STRINGER ON BACK OF SIGN)
3/8" X 5" Length w/ nuts (STRINGERS ON BACK OF SIGN)

RIVETS - 9/32" (6605-9-6) BULB-TITE, TRI-FOLD, ALUMINUM BODY/MANDREL
O.D. FLANGE .720-.765 INCH, GRIP RANGE .042-.375 INCH

WASHERS (ALL POSTS) -

1-1/4" O.D. X 3/8" I.D. X 1/16" STEEL
1-1/4" O.D. X 3/8" I.D. X .080 NYLON

* Two different fastening systems are shown for illustration purposes. On any individual sign, either one or the other system shall be used. Actual number of fasteners per sign varies with the sign area, but normally there are two. For a single post installation, all signs greater than 9 sq. ft. require the use of 3 fasteners.

ATTACHMENT OF SIGNS TO POSTS

WISCONSIN DEPT OF TRANSPORTATION

APPROVED Matthew R Rauch
for State Traffic Engineer

DATE 4/1/2020 PLATE NO. A4-8.9

TELESCOPIC TUBING ANCHORS
TWO PIECE SYSTEM

2 1/4 " SQUARE
12 GAUGE
PERFORATED
GALVANIZED FINISH

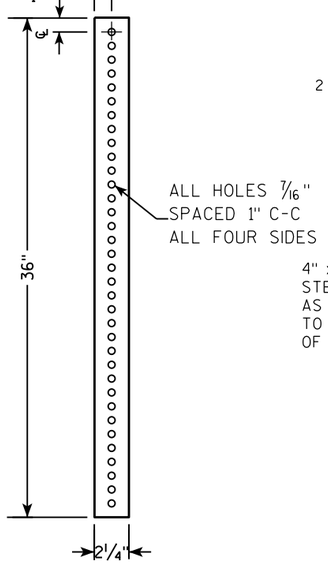

2 1/2 " SQUARE
12 GAUGE
OMNI-DIRECTIONAL
PERFORATED
SOIL STABILIZING SLEEVE
GALVANIZED FINISH

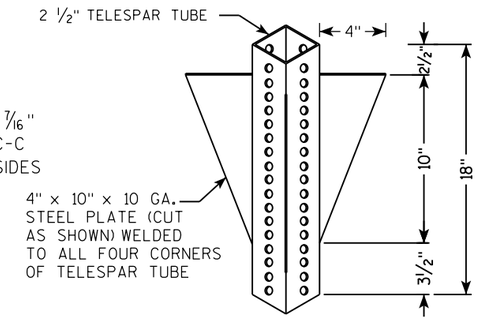

DETAIL OF TUBULAR STEEL SIGN POST
(IN POURED CONCRETE OR ASPHALT)

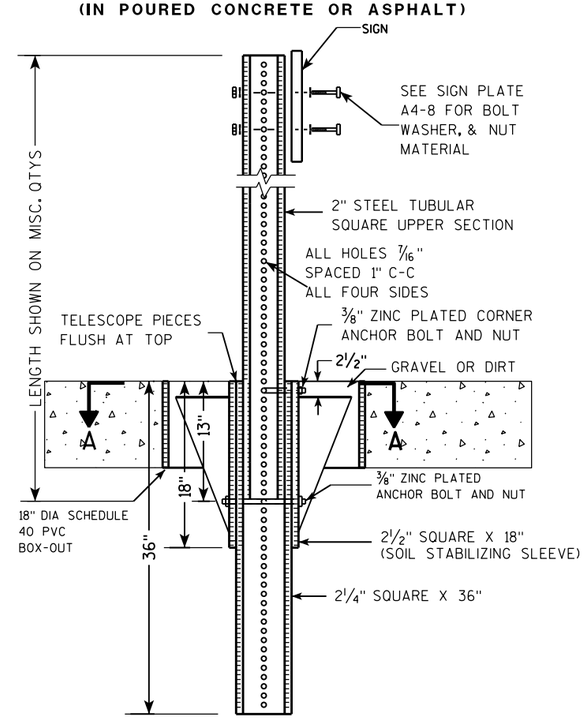

DETAIL OF TUBULAR STEEL SIGN POST
(IN LOCATIONS OTHER THAN POURED CONCRETE OR ASPHALT)

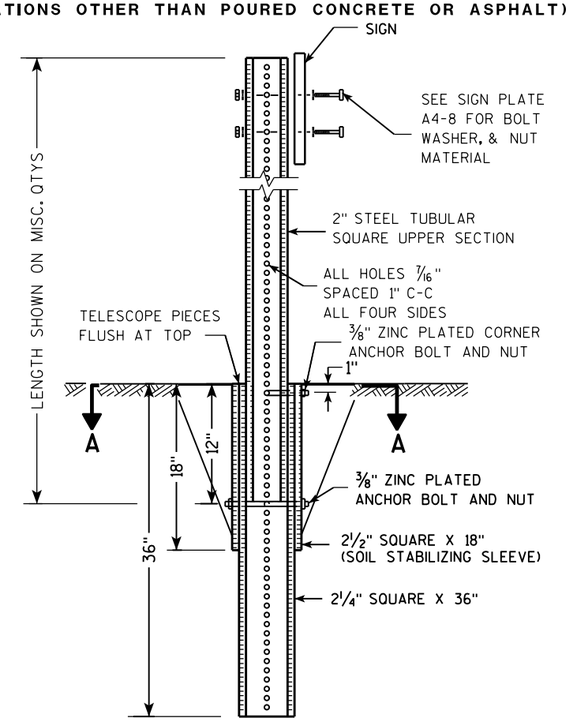

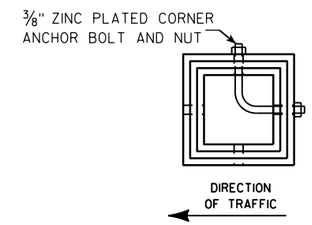

SECTION A-A

Area of Sign Installation (Sq. Ft.)	Number of Required Posts
9 or less	1
Greater than 9 less than or equal to 18	2
Greater than 18 less than or equal to 27	3

Signs wider than 3 feet or larger than 9 sq. ft shall be mounted on multiple posts (see above table).

TUBULAR STEEL
SIGN POST
A4-9

WISCONSIN DEPT OF TRANSPORTATION

APPROVED Matthew R Rauch
for State Traffic Engineer

DATE 2/05/15 PLATE A4-9.9

7 7

PROJECT NO:	HWY:	COUNTY:		SHEET NO:	E

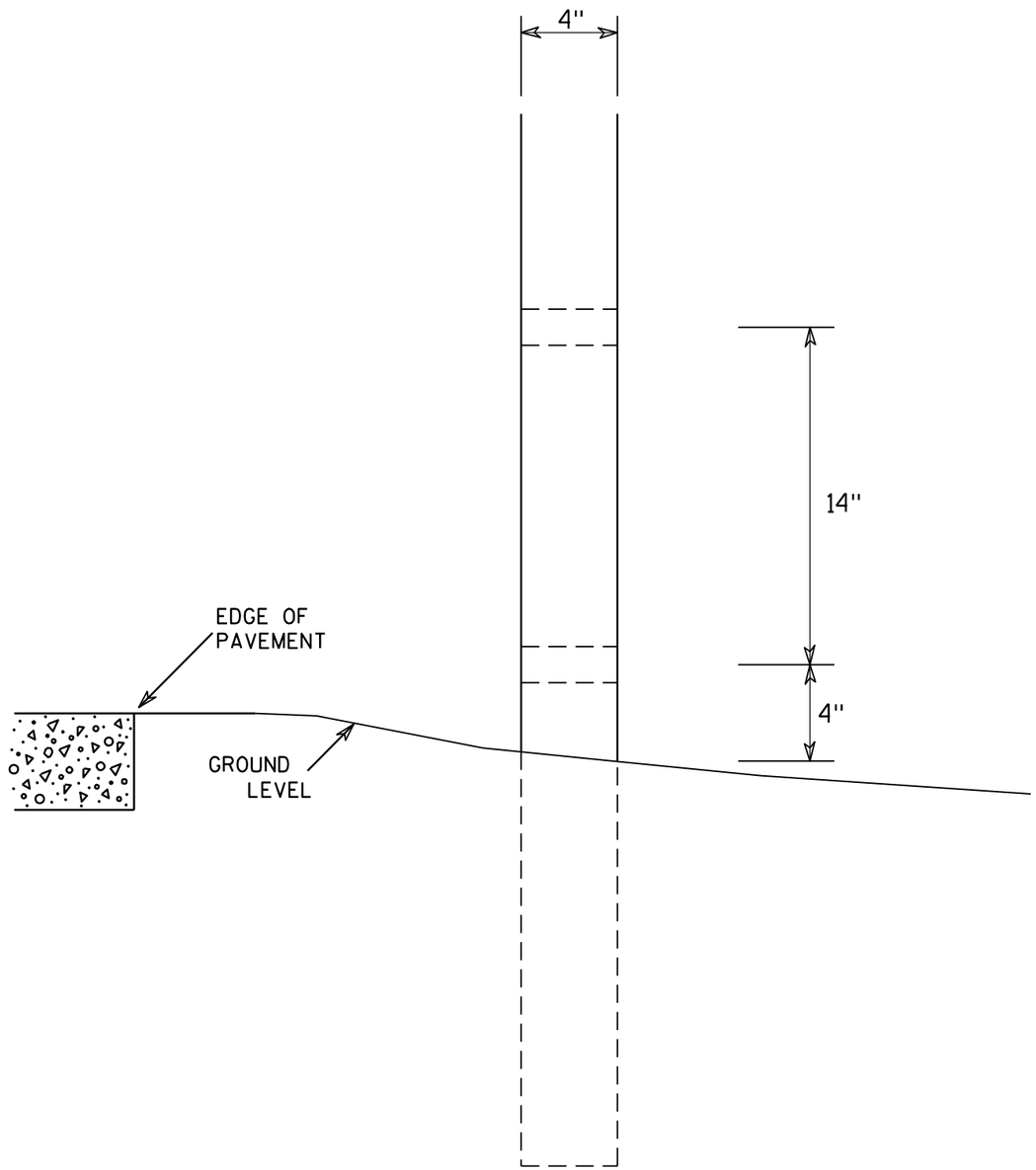

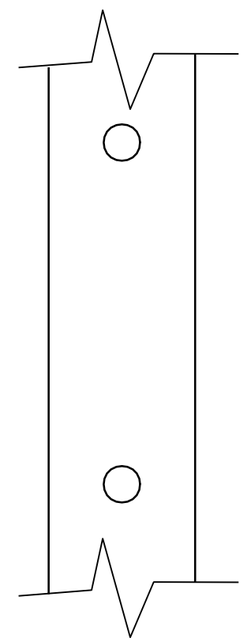

SIDE VIEW

GENERAL NOTES

1. All 4 x 6 Wood Posts shall be modified by having two 1½" diameter holes drilled perpendicular to the roadway centerline.

4 X 6 WOOD POST MODIFICATIONS

WISCONSIN DEPT OF TRANSPORTATION

APPROVED Chester J Spang for State Traffic Engineer

DATE 3/27/97 PLATE NO. A4-11.2

PROJECT NO:	HWY:	COUNTY:		SHEET NO: 168	E

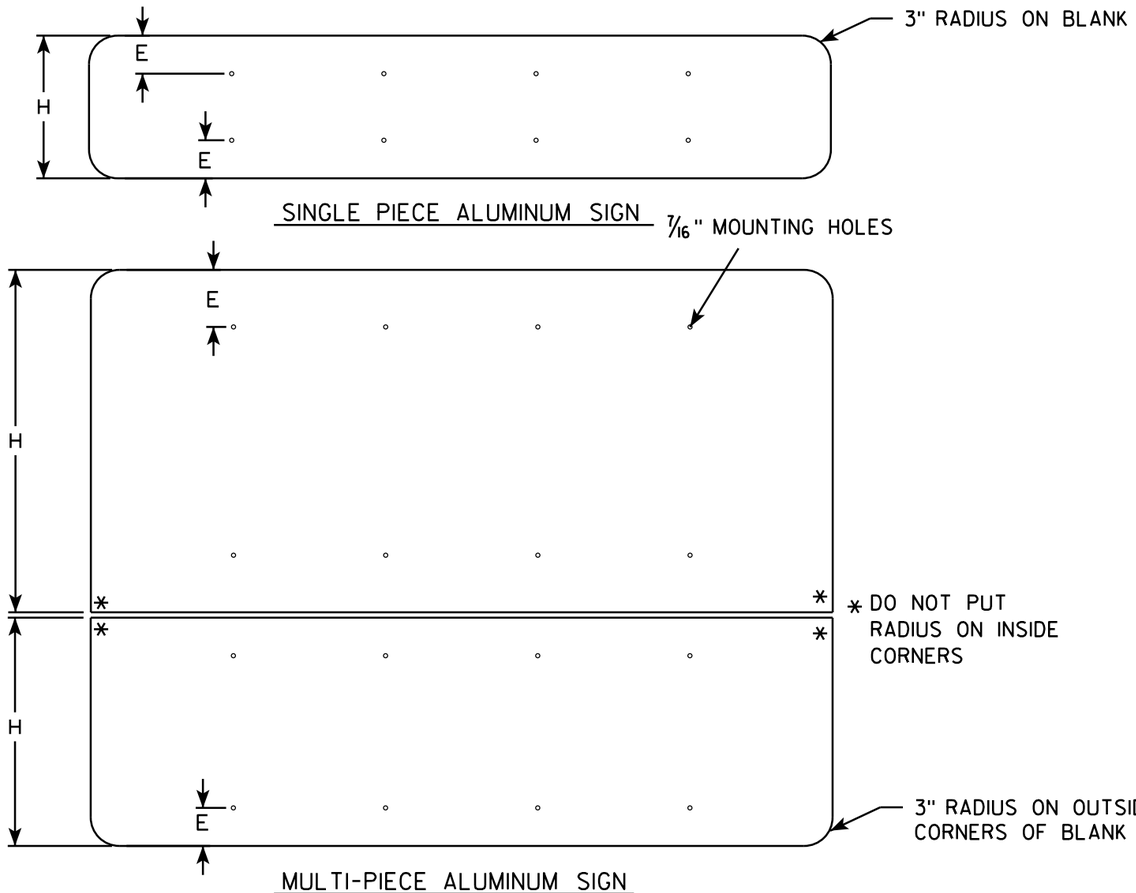

GENERAL NOTES

- ALL SIGNS OVER 60" IN WIDTH SHALL HAVE A 3" RADIUS ON THE OUTSIDE CORNERS OF THE ALUMINUM BLANK.
- MOUNTING HOLES SHALL BE 7/16" DIAMETER.
- SEE CHART FOR HOLE SPACING REQUIREMENTS
- FOR SIGN PANELS WITH DIMENSION (H) 36" AND OVER, DIMENSION E SHALL BE 6"
- FOR SIGN PANELS WITH DIMENSION (H) UNDER 36", DIMENSION E SHALL BE 4"
- SIGN STRINGER MATERIAL SHALL CONSIST OF STEEL CHANNEL POST SECTIONS, WEIGHING 1.12 LBS/FT IN ACCORDANCE WITH SECTION 633.2.1 OF THE STANDARD SPECIFICATIONS FOR HIGHWAY AND STRUCTURE CONSTRUCTION.
- SEE SIGN PLATE A4-8 FOR SIGN STRINGER BOLTING REQUIREMENTS.

SIGN WIDTH	STRINGER WIDTH	POSTS	HOLE SPACING	MOUNTING HOLES						
78"	72"	2	16"	15"	31"	47"	63"			
84"	72"	2	17"	16 1/2"	33 1/2"	50 1/2"	67 1/2"			
90"	72"	2	18"	18"	36"	54"	72"			
96"	90"	2	19"	19 1/2"	38 1/2"	57 1/2"	76 1/2"			
102"	90"	2	20"	21"	41"	61"	81"			
108"	90"	2	21"	22 1/2"	43 1/2"	64 1/2"	85 1/2"			
114"	108"	3	15"	12"	27"	42"	57"	72"	87"	102"
120"	108"	3	16"	12"	28"	44"	60"	76"	92"	108"
126"	108"	3	17"	12"	29"	46"	63"	80"	97"	114"
132"	126"	3	18"	12"	30"	48"	66"	84"	102"	120"
138"	126"	3	19"	12"	31"	50"	69"	88"	107"	126"
144"	126"	3	20"	12"	32"	52"	72"	92"	112"	132"

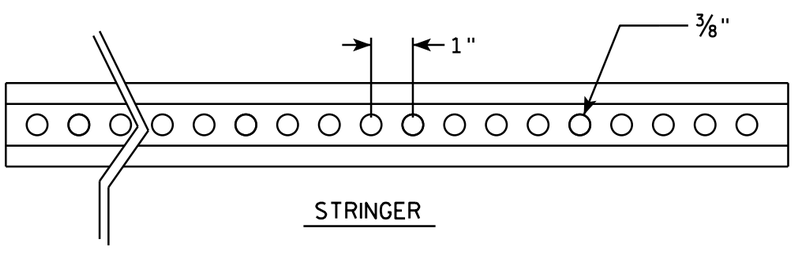

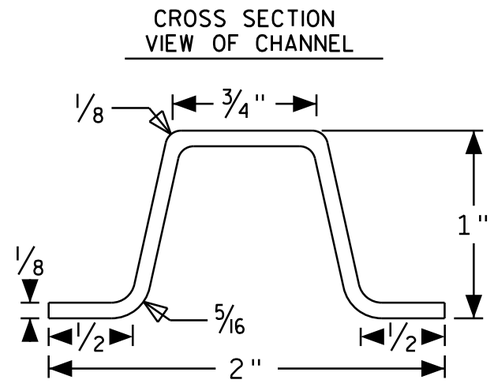

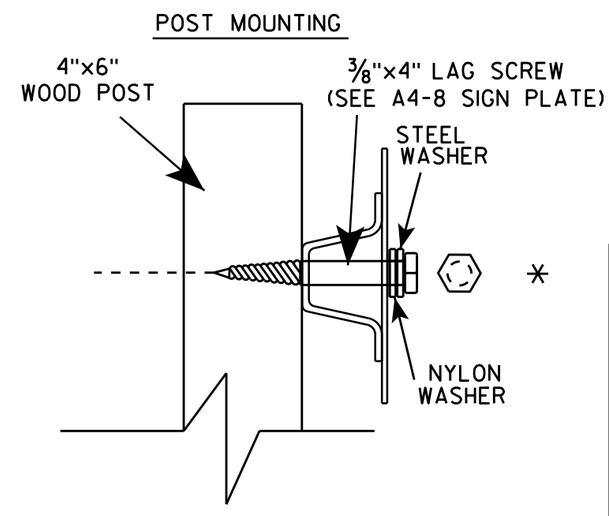

SIGN STRINGER MOUNTING REQUIREMENTS

WISCONSIN DEPT OF TRANSPORTATION

APPROVED Matthew R Rauch
for State Traffic Engineer

DATE 4/26/16 PLATE NO A4-18.1

PROJECT NO:	HWY:	COUNTY:		SHEET NO:	E

BANDING

SINGLE SIGN

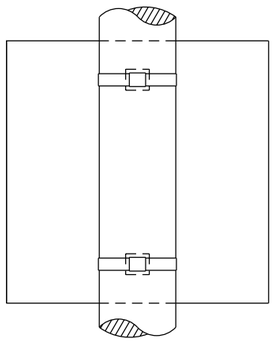

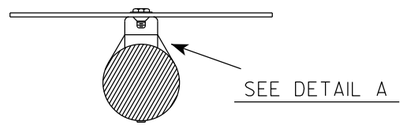

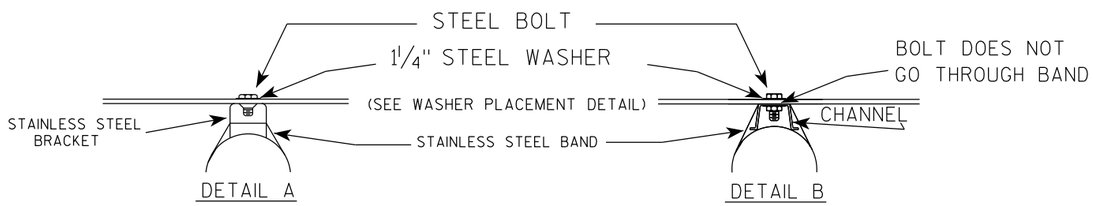

WASHER PLACEMENT

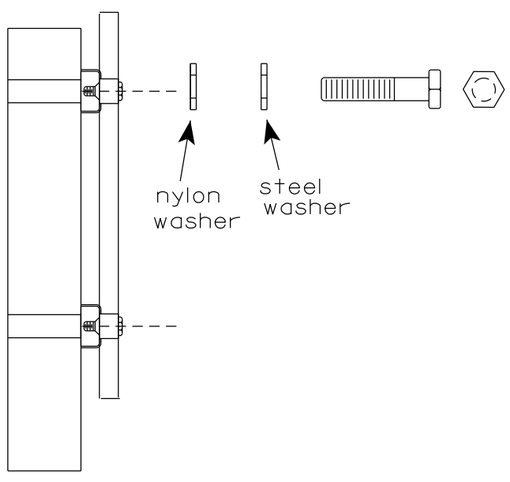

WASHERS (ALL POSTS) -
1-1/4" O.D. X 3/8" I.D. X 1/16" STEEL
1-1/4" O.D. X 3/8" I.D. X .080 NYLON
FOR ALL TYPE H SIGNS

GENERAL NOTES

1. Any sign over 3 feet in width shall use the V-Block banding method. See A5-10 standard plate.
2. Signs 3 feet or greater in height shall have three bracket bands installed. Signs less than 3 feet in height shall have two bracket bands installed.
3. Banding and assembly bracket shall be stainless steel. All bands shall be ¾" in width and 0.025" thickness.
4. ALL SIGN MOUNTING BOLTS AND WASHERS SHALL BE EITHER:
   a. Hot dip or mechanically galvanized in accordance with ASTM Designation: A 153, Class D
   b. Electro-galvanized in accordance with ASTM designation: B 633, Type III, SC 3

"J" ASSEMBLY

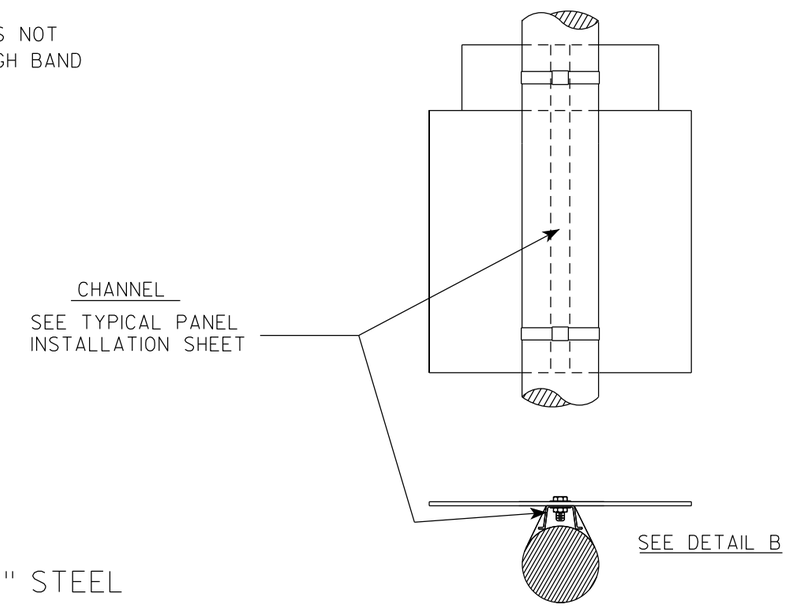

STANDARD SIGN
SIGN BANDING DETAILS

WISCONSIN DEPT OF TRANSPORTATION

APPROVED Matthew R Rauch for State Traffic Engineer

DATE 6/10/19 PLATE NO. A5-9.4

PROJECT NO:	HWY:	COUNTY:		SHEET NO: 170	E

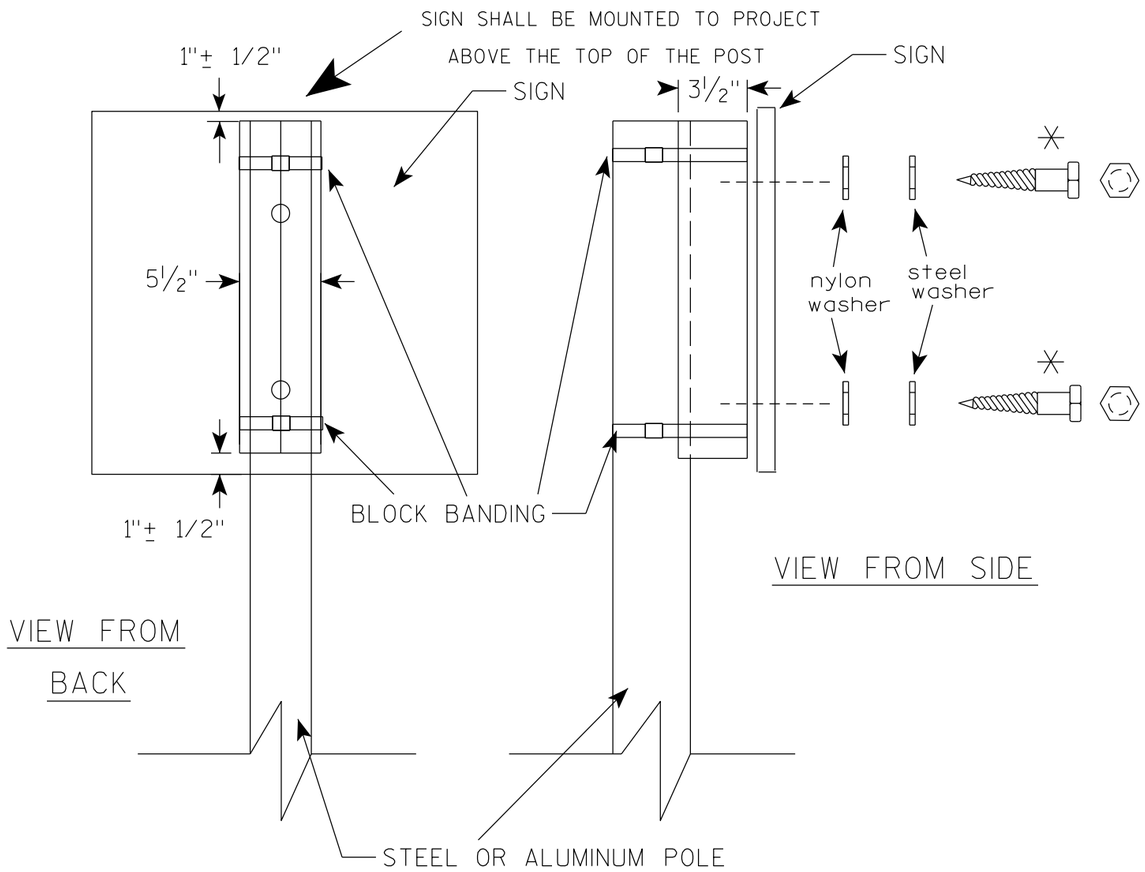

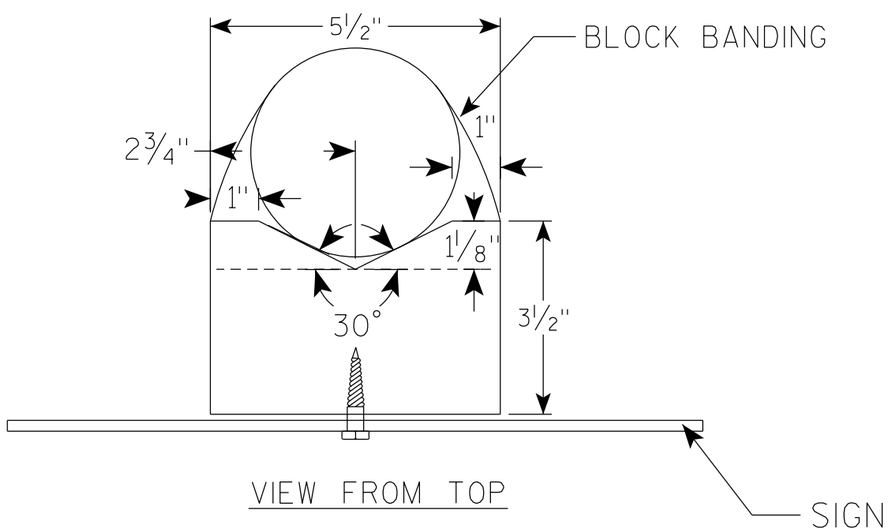

GENERAL NOTES

1. WOOD 4"X6" POST MATERIAL SHALL CONFORM TO 507.2.2 OF THE WisDOT STANDARD SPECIFICATIONS
2. BLOCK BANDING AND CLIPS SHALL BE STAINLESS STEEL, 3/4" WIDTH AND 0.025" THICKNESS
3. SIGNS 3' OR GREATER IN HEIGHT SHALL UTILIZE 3 BLOCK BANDS. SIGNS UNDER 3' IN HEIGHT SHALL UTILIZE 2 BLOCK BANDS
4. ACTUAL NUMBER OF FASTENERS PER SIGN VARIES WITH THE SIGN AREA, BUT NORNALLY THERE ARE TWO. FOR SIGNS GREATER THAN 9 S.F. 3 FASTENERS SHALL BE USED.
5. ALL SIGN MOUNTING BOLTS AND WASHERS SHALL BE EITHER:
   a. Hot dip or mechanically galvanized in accordance with ASTM Designation: A 153, Class D
   b. Electro-galvanized in accordance with ASTM Designation : B 633, TYPE III, SC 3
6. ALL BOLTS SHALL HAVE HEXAGONAL HEADS.
7. STEEL WASHERS SHALL BE 1 1/4" O.D. X 3/8" I.D. X 1/16"
8. NYLON WASHERS SHALL BE 1 1/4" O.D. X 3/8" I.D. X .080 FOR TYPE H OR TYPE F FACE SIGN

✳ LAG BOLTS SHALL BE 3/8" X 2 1/2"

7

7

BLOCK BANDING DETAIL
(V-BLOCK OPTION)

WISCONSIN DEPT OF TRANSPORTATION

APPROVED Matthew R Rauch
for State Traffic Engineer

DATE 4/19/2022 PLATE NO. A5-10.3

PROJECT NO:				SHEET NO: 171	E

NOTES

1. Sign is Type II - Type H Reflective
2. Color:
   Background - Blue
   Message - White
3. Message Series - Lines 1 & 2 are Series D and Line 3 is Series C

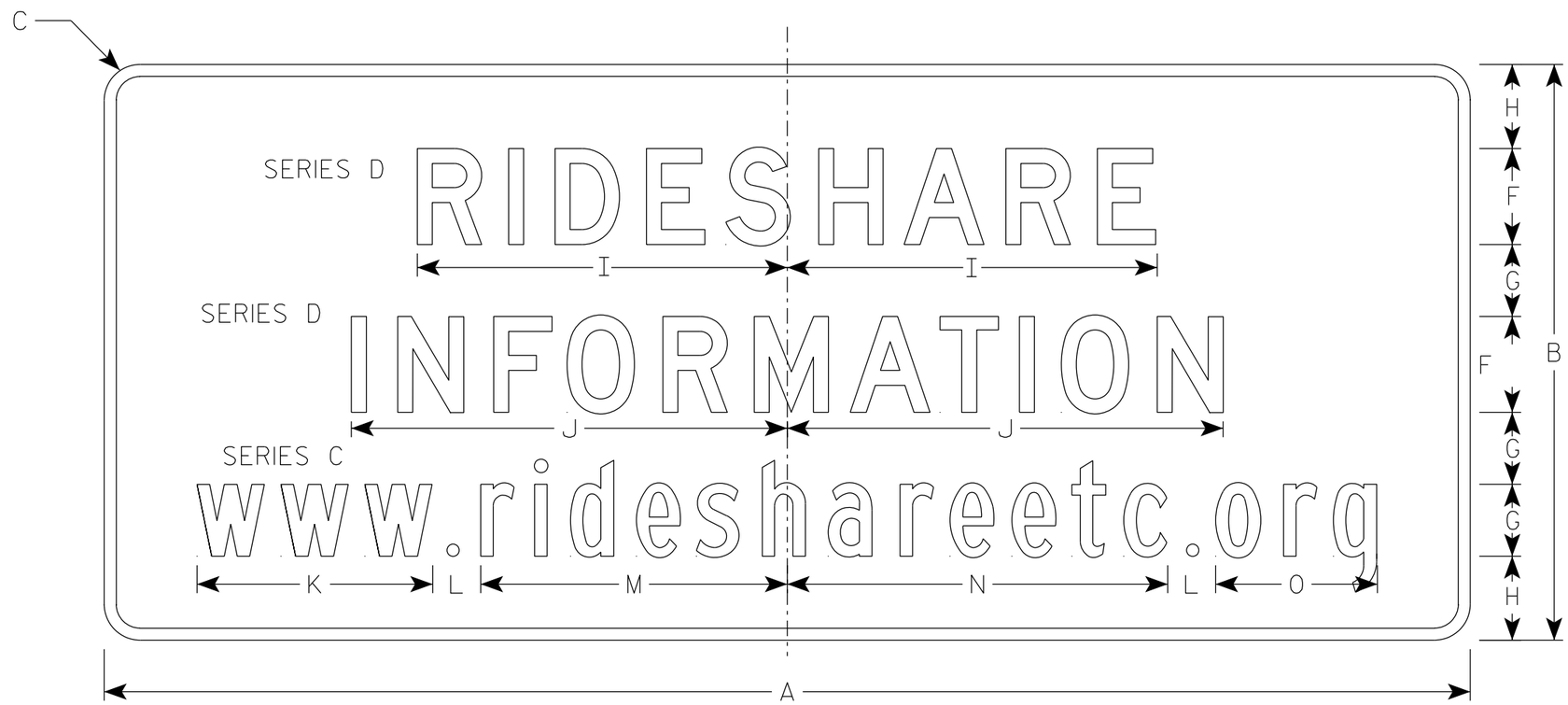

D12-2B

SIZE	A	B	C	D	E	F	G	H	I	J	K	L	M	N	O	P	Q	R	S	T	U	V	W	X	Y	Z	Area sq. ft.
1																											
2S	84	36	2 1/4		3/4	6	4 1/2	5 1/4	24 1/4	28 5/8	14 3/4	3	19 1/4	23 7/8	10 1/8												21.0
2M	84	36	2 1/4		3/4	6	4 1/2	5 1/4	24 1/4	28 5/8	14 3/4	3	19 1/4	23 7/8	10 1/8												21.0
3	84	36	2 1/4		3/4	6	4 1/2	5 1/4	24 1/4	28 5/8	14 3/4	3	19 1/4	23 7/8	10 1/8												21.0
4	114	48	3		1	8	6	7	30 7/8	36 3/8	19 3/4	4 1/4	25 5/8	31 3/4	13 1/2												38.0
5	114	48	3		1	8	6	7	30 7/8	36 3/8	19 3/4	4 1/4	25 5/8	31 3/4	13 1/2												38.0

STANDARD SIGN
D12-2B

WISCONSIN DEPT OF TRANSPORTATION

APPROVED Matthew R Rauch
For State Traffic Engineer

DATE 3/6/24 PLATE NO. D12-2B.4

PROJECT NO:

SHEET NO: 172 E

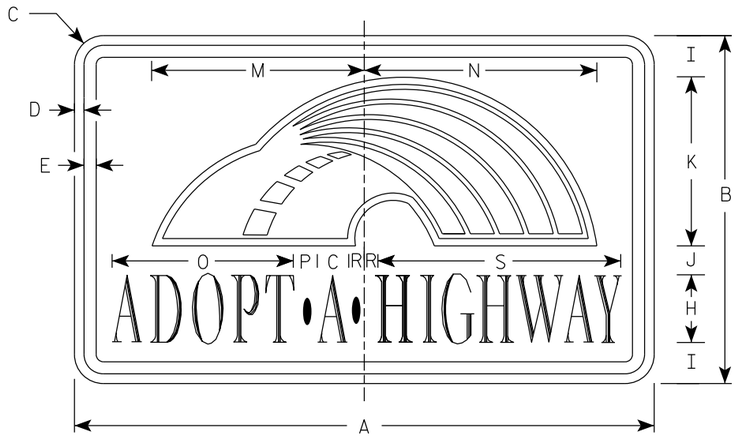

I55-56

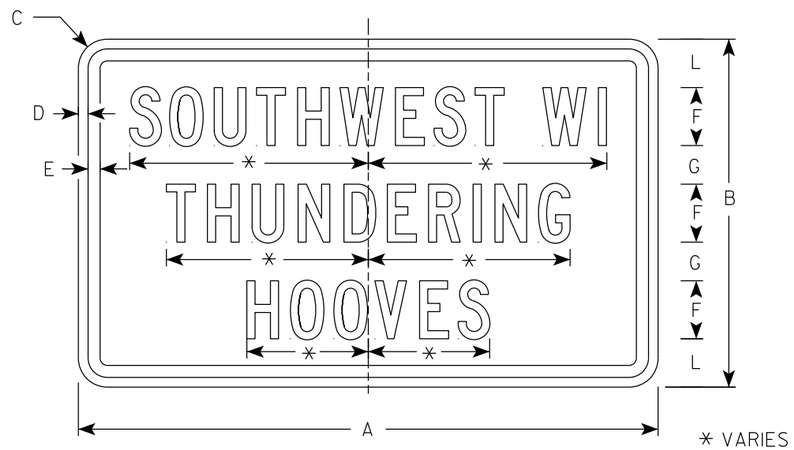

I55-56P

NOTES

1. Sign is Type II - Type H Reflective
2. Color:
   Background - Blue
   Message - White
   Rainbow detail - See Below
3. Message Series - Adopt a Highway - Dutch 8011L
   All other Text - Series C
4. Contractor shall provide and install a new post bracket in accordance with the I55-56B sign detail.

Background Colors of Symbol*

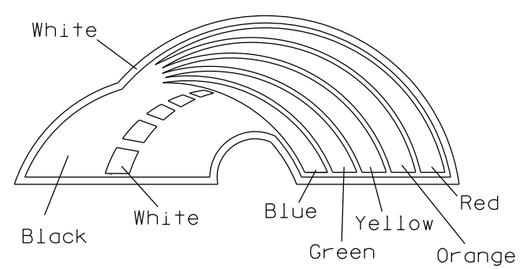

*1/4" Black Border between each color of rainbow and border of rainbow

*3/8" White Border surrounds the whole image of the rainbow

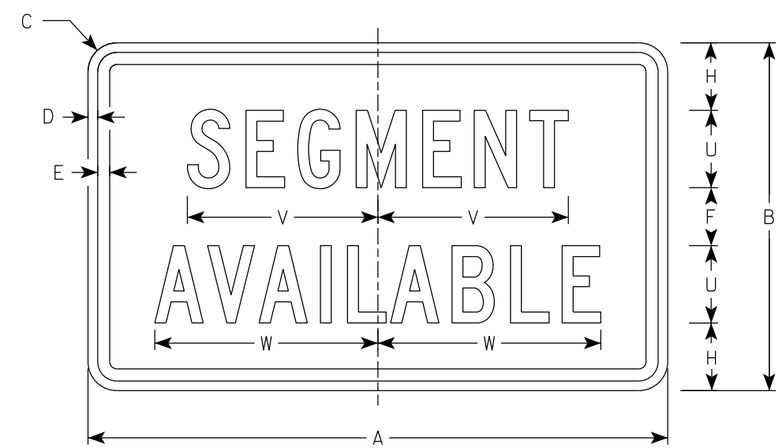

I55-56S

SIZE	A	B	C	D	E	F	G	H	I	J	K	L	M	N	O	P	Q	R	S	T	U	V	W	X	Y	Z	Area sq. ft.
1																											
2	30	18	1 1/2	1/2	5/8	3	2	3 1/2	2 1/4	1 1/2	8 1/2	2 1/2	11	12	9 3/8	1 1/4		3/4	12 5/8	7 1/2	4	9 7/8	11 1/2				3.75
3																											
4																											
5																											

STANDARD SIGN
I55-56

WISCONSIN DEPT OF TRANSPORTATION

APPROVED Matthew R Rauch
for State Traffic Engineer

DATE 3/13/2025 PLATE NO. 155-56.5

PROJECT NO: | HWY: | COUNTY: | SHEET NO: 173 | E

NOTES

1. Must be capable of permanent attachment to a wood or steel channel sign post utilizing the fastening hardware specified on the A4-8 sign plate.
2. Shall be entirely primed and painted with two coats of a black powder coated enamel paint.
3. Shall be made with 12 gauge steel, and incorporate no welds, no hinged components, no threaded lock-type components, and no parts which are loose or can be separated from the main body.
4. Shall have rounded edges with at least 1/8" radii.
5. Shall not have unrounded and uncoated metal edges which can contact the back surface of the roll-up sign.
6. Top of bracket shall be mounted 2' below the bottom of the I55-56 sign.
7. Cost of bracket and fastening hardware shall be incidental to the I55-56 sign.

ISOMETRIC VIEW

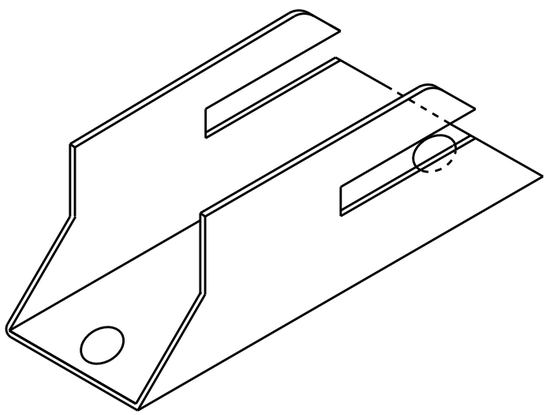

TOP VIEW

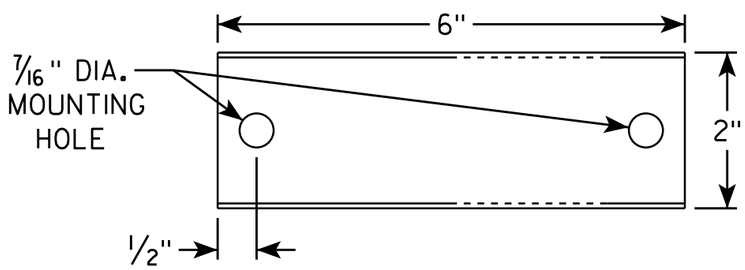

SIDE VIEW

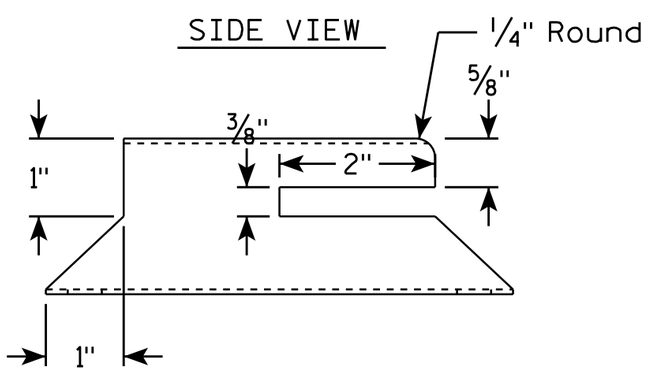

END VIEW

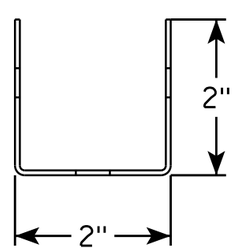

SIDE VIEW

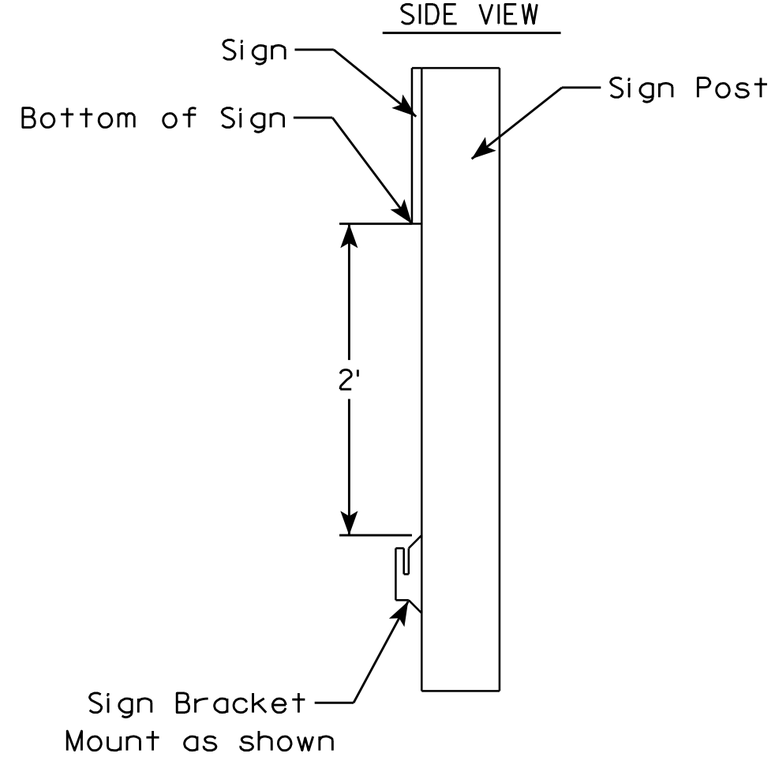

ROLLUP SIGN BRACKET
I55-56B

WISCONSIN DEPT OF TRANSPORTATION

APPROVED Matthew R Rauch
for State Traffic Engineer

DATE 4/26/16 PLATE I55-56B.2

PROJECT NO:	HWY:	COUNTY:		SHEET NO:	E

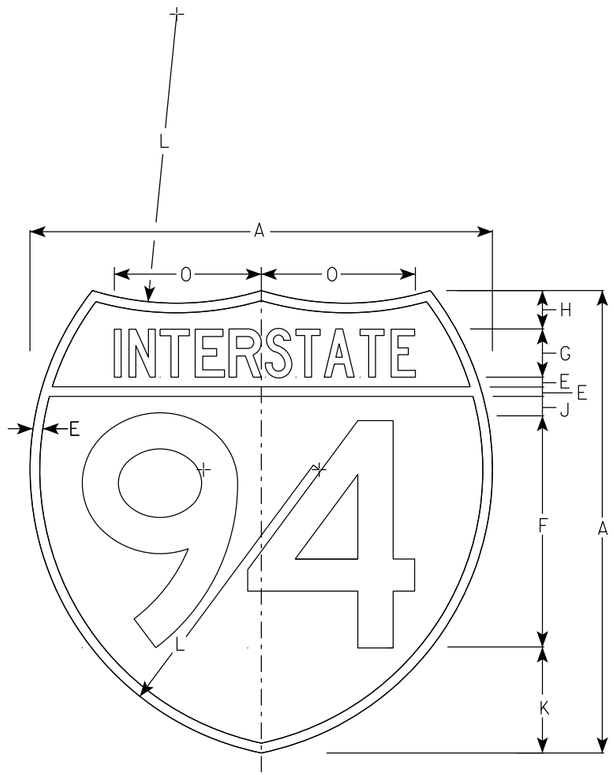

M1-1

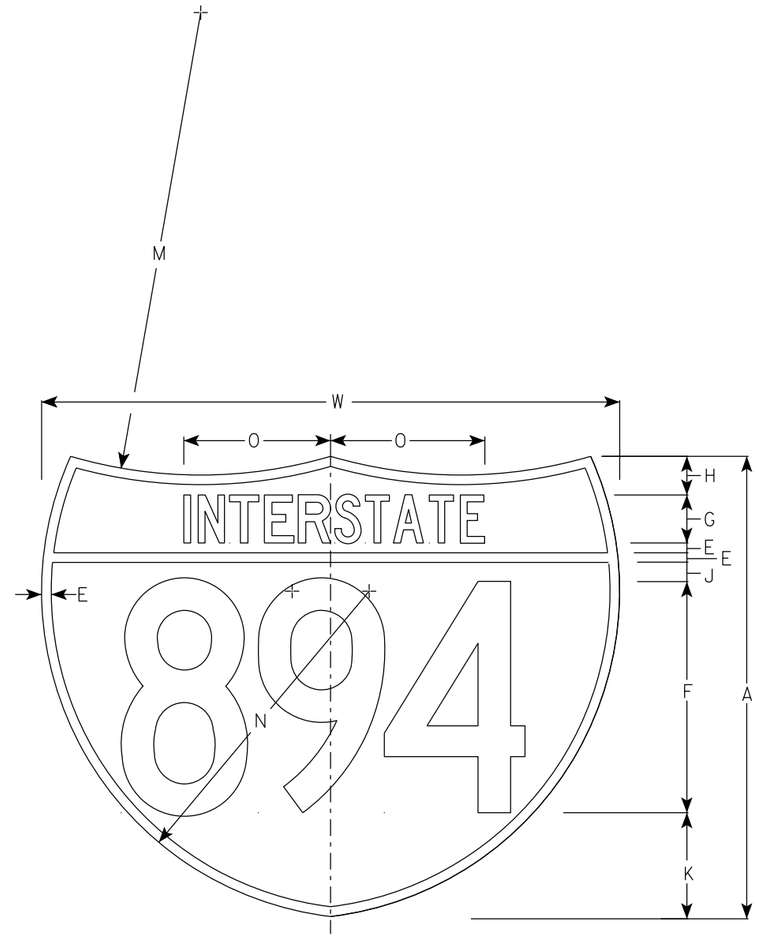

M1-1A

NOTES

1. Sign is Type II - Type H Reflective
2. Color:
   Background - Top Red - Bottom Blue
   Message - White
3. Message Series - See note 5
4. Substitute appropriate numerals & ajust spacing as per plate A10-1.
5. M1-1 - Numerals - D
   Interstate - C
   M1-1A - All copy - C

SIZE	A	B	C	D	E	F	G	H	I	J	K	L	M	N	O	P	Q	R	S	T	U	V	W	X	Y	M1-1 Area sq. ft.	M1-1A Area sq. ft.
1																											
2	24				½	12	2 ½	2		1	5 ½	15	24	17	7 ⅞								30			3.13	3.91
2M	24				½	12	2 ½	2		1	5 ½	15	24	17	7 ⅞								30			3.13	3.91
3	36				¾	18	3 ¾	3		1 ½	8 ¼	22 ½	36	25 ½	11 ¾								45			7.03	8.79
4	36				¾	18	3 ¾	3		1 ½	8 ¼	22 ½	36	25 ½	11 ¾								45			7.03	8.79
5	36				¾	18	3 ¾	3		1 ½	8 ¼	22 ½	36	25 ½	11 ¾								45			7.03	8.79

INTERSTATE ROUTE MARKER
M1-1 FOR ASSEMBLIES

WISCONSIN DEPT OF TRANSPORTATION

APPROVED Matthew R Rauch
for State Traffic Engineer

DATE 11/7/2022 PLATE NO. M1-1.9

PROJECT NO: | HWY: | COUNTY: | SHEET NO: 175 | E

NOTES

1. Sign is Type II - Type H Reflective
2. Color:
   Background - White
   Message - Black
3. Message Series - D except 3 number signs Series C

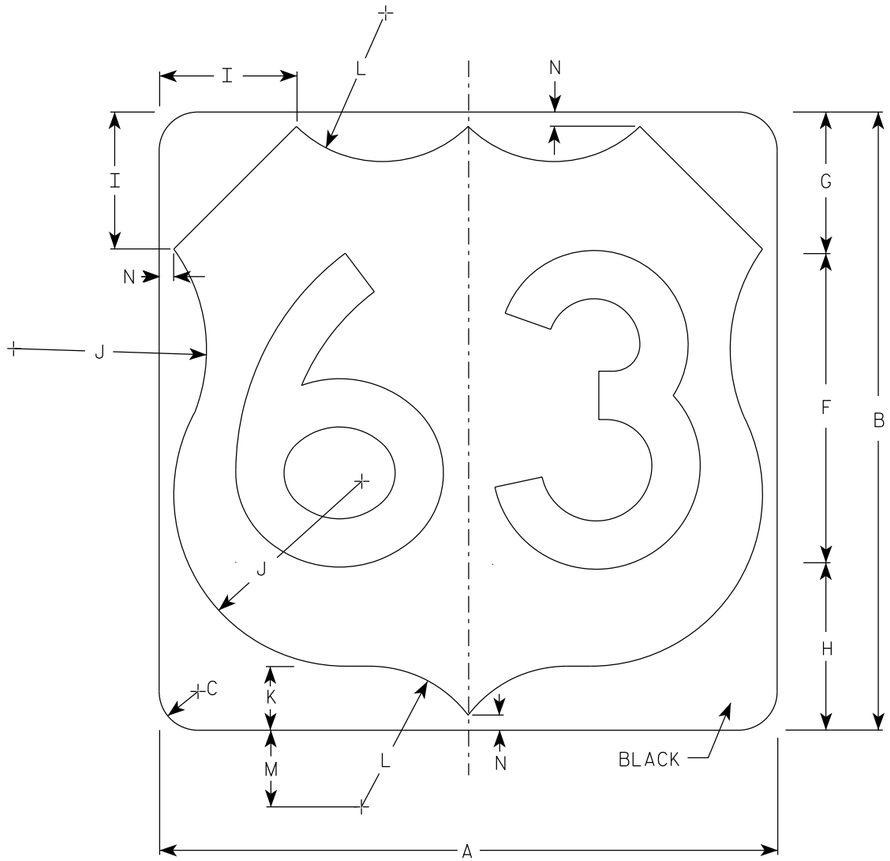

M1-4

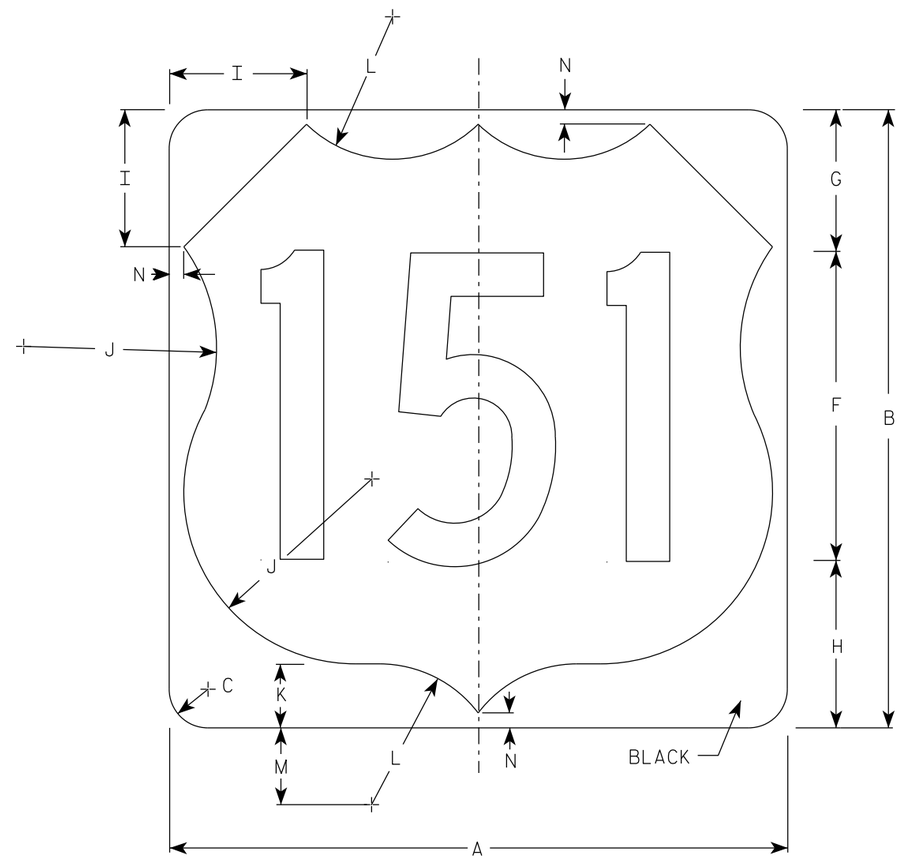

M1-4

SIZE	A	B	C	D	E	F	G	H	I	J	K	L	M	N	O	P	Q	R	S	T	U	V	W	X	Y	Z	Area sq. ft.
1																											
2	24	24	1 1/2			12	5 1/2	6 1/2	5	7 1/2	2 1/2	5 1/2	3	1/2													4.0
2M	24	24	1 1/2			12	5 1/2	6 1/2	5	7 1/2	2 1/2	5 1/2	3	1/2													4.0
3	36	36	2 1/4			18	8 1/4	9 1/4	7 1/4	11 1/4	3 3/4	8 1/4	4 1/2	3/4													9.0
4	36	36	2 1/4			18	8 1/4	9 1/4	7 1/4	11 1/4	3 3/4	8 1/4	4 1/2	3/4													9.0
5	36	36	2 1/4			18	8 1/4	9 1/4	7 1/4	11 1/4	3 3/4	8 1/4	4 1/2	3/4													9.0

USH MARKER
M1-4 FOR ASSEMBLIES

WISCONSIN DEPT OF TRANSPORTATION

APPROVED Matthew R Rauch
for State Traffic Engineer

DATE 12/20/22 PLATE NO. M1-4.11

PROJECT NO: | HWY: | COUNTY: | SHEET NO: 176 | E

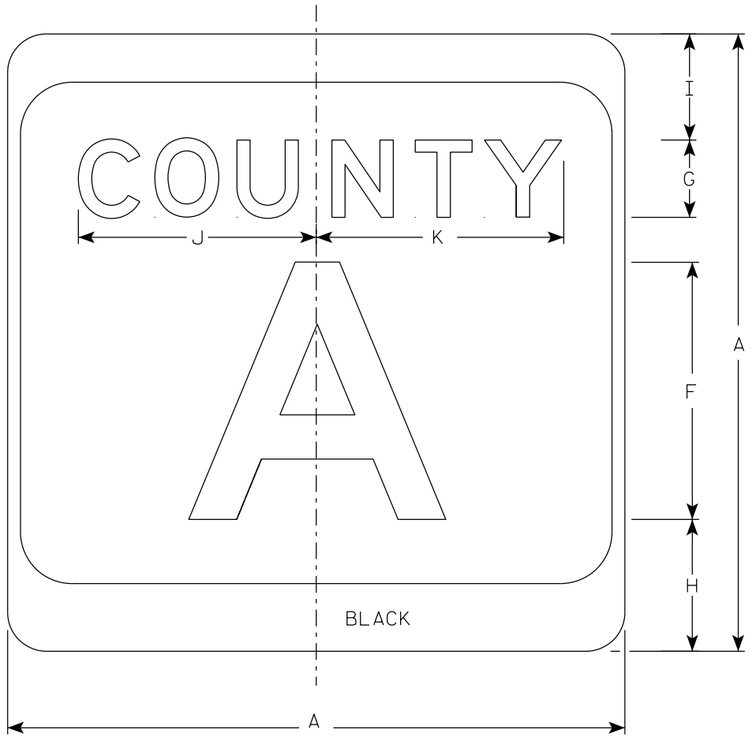

M1-5A

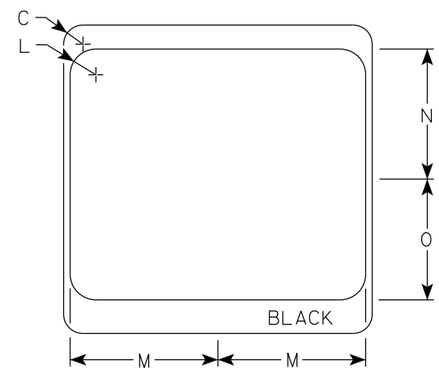

NOTES

1. Sign is Type II - Type H Reflective
2. Color:
   Background - White & Black
   Message - Black
3. Message Series - see Note 4
4. Message Series E for 1 letter.
   Message Series D for 2 letters unless message is too big then Series C.
   Message Series C for 3 letters unless message is too big then Series B.
5. Substitute appropriate letters & optically center to achieve proper balance.

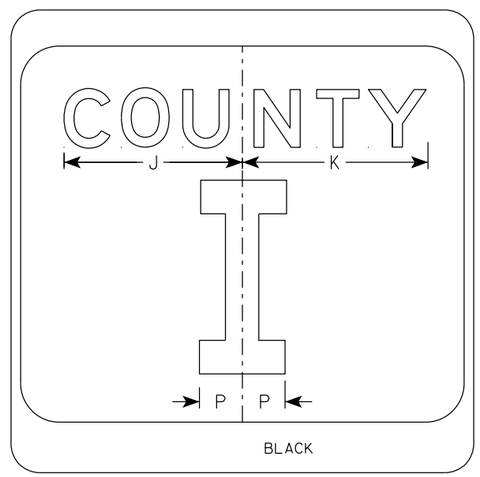

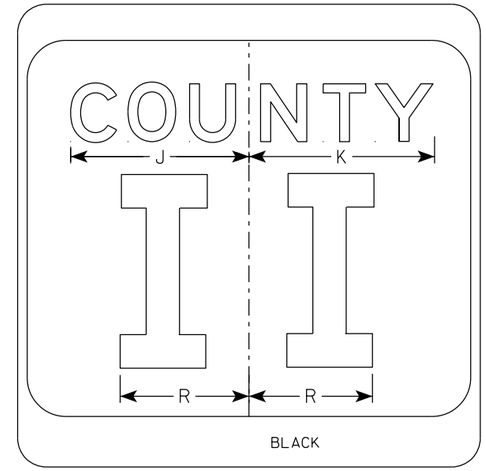

SIZE	A	B	C	D	E	F	G	H	I	J	K	L	M	N	O	P	Q	R	S	T	U	V	W	X	Y	Z	Area sq. ft.
1																											
2	24		1 1/2			10	3	5 1/8	4 1/8	9 1/4	9 5/8	2	11 1/2	10 1/8	9 3/8	2 1/4		6 5/8									4.0
2M	24		1 1/2			10	3	5 1/8	4 1/8	9 1/4	9 5/8	2	11 1/2	10 1/8	9 3/8	2 1/4		6 5/8									4.0
3	36		2 1/4			16	4	7 5/8	5 5/8	12 1/4	12 7/8	3	17 1/8	15 1/4	14	3 3/8		10									9.0
4	36		2 1/4			16	4	7 5/8	5 5/8	12 1/4	12 7/8	3	17 1/8	15 1/4	14	3 3/8		10									9.0
5	36		2 1/4			16	4	7 5/8	5 5/8	12 1/4	12 7/8	3	17 1/8	15 1/4	14	3 3/8		10									9.0

CTH MARKER
M1-5A FOR ASSEMBLIES

WISCONSIN DEPT OF TRANSPORTATION

APPROVED Matthew R Rauch
for State Traffic Engineer

DATE 11/8/2022 PLATE NO. M1-5A.9

PROJECT NO: | HWY: | COUNTY: | SHEET NO: E

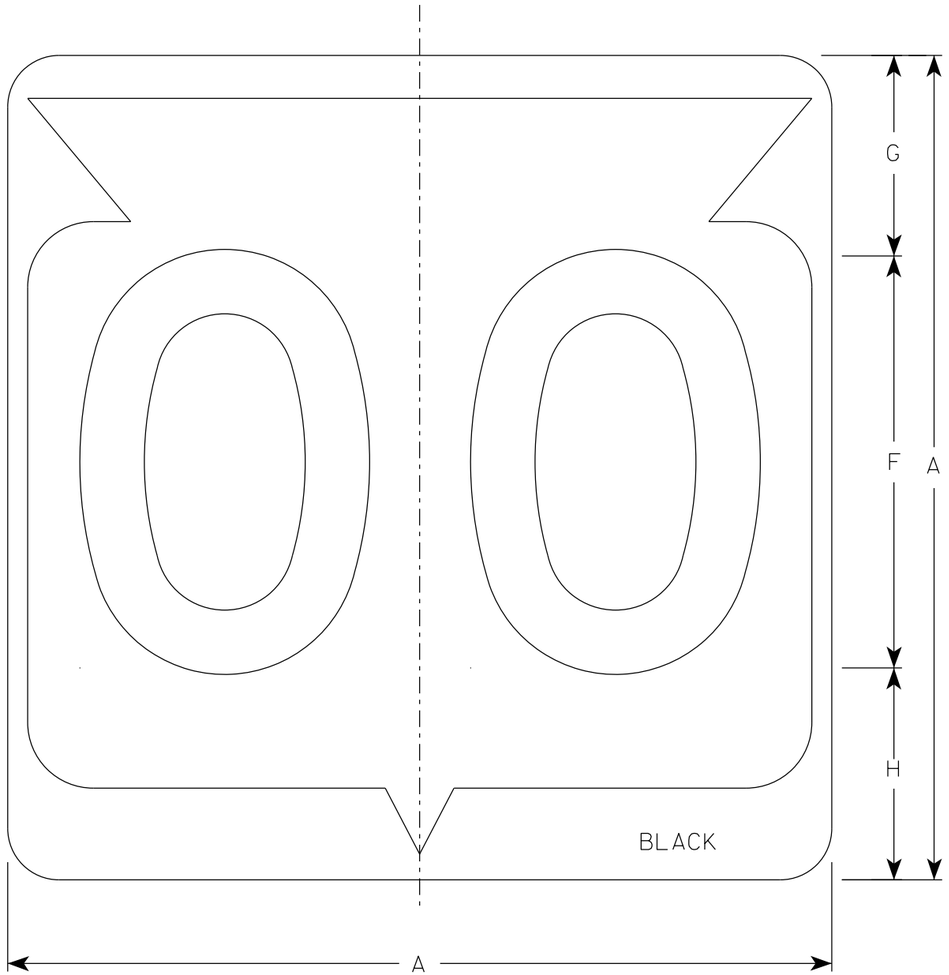

M1-6

NOTES

1. Sign is Type II - Type H Reflective
2. Color:
   Background - White
   Message - Black
3. Message Series - D except 3 number signs Series C

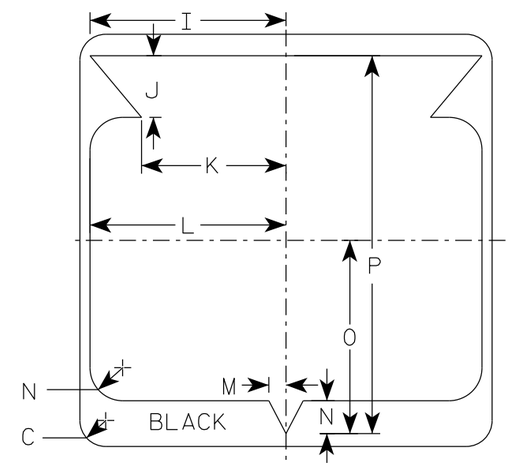

SIZE	A	B	C	D	E	F	G	H	I	J	K	L	M	N	O	P	Q	R	S	T	U	V	W	X	Y	Z	Area sq. ft.
1																											
2	24		1 1/2			12	5 1/2	6 1/2	10 1/4	2 1/2	8 7/8	11 1/2	1	1 7/8	11 1/4	21 7/8											4.0
2M	24		1 1/2			12	5 1/2	6 1/2	10 1/4	2 1/2	8 7/8	11 1/2	1	1 7/8	11 1/4	21 7/8											4.0
3	36		2 1/4			18	8 3/4	9 1/4	15 3/8	5 3/8	12 5/8	17 1/8	1 1/2	2 7/8	16 7/8	33											9.0
4	36		2 1/4			18	8 3/4	9 1/4	15 3/8	5 3/8	12 5/8	17 1/8	1 1/2	2 7/8	16 7/8	33											9.0
5	36		2 1/4			18	8 3/4	9 1/4	15 3/8	5 3/8	12 5/8	17 1/8	1 1/2	2 7/8	16 7/8	33											9.0

STATE ROUTE MARKER
M1-6 FOR ASSEMBLIES

WISCONSIN DEPT OF TRANSPORTATION

APPROVED Matthew R Rauch
for State Traffic Engineer

DATE 11/8/2022 PLATE NO. M1-6.11

PROJECT NO:	HWY:	COUNTY:		SHEET NO: 178	E

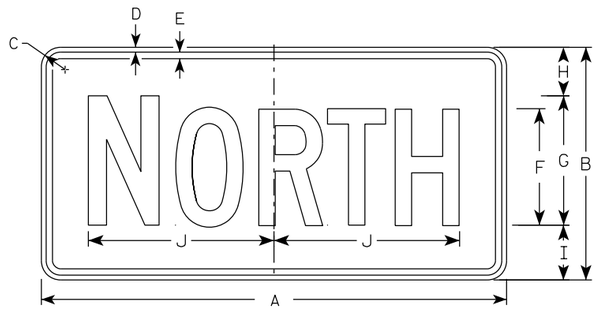

M3-1
MM3-1
MP3-1

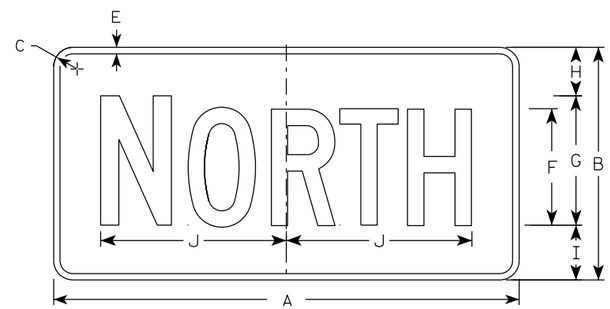

MB3-1
MK3-1
MN3-1

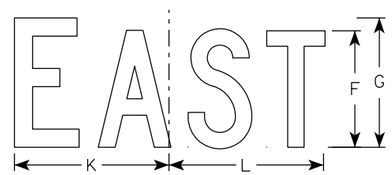

M3-2
MM3-2
MP3-2

MB3-2
MK3-2
MN3-2

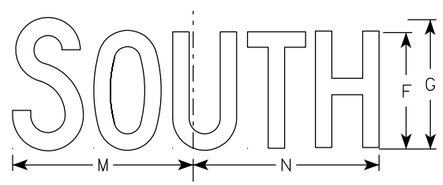

M3-3
MM3-3
MP3-3

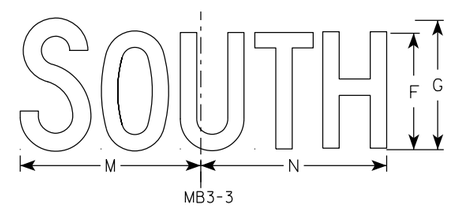

MB3-3
MK3-3
MN3-3

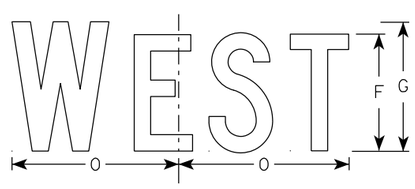

M3-4
MM3-4
MP3-4

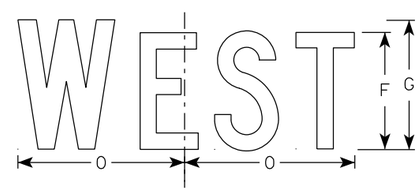

MB3-4
MK3-4
MN3-4

NOTES

1. All Signs Type II - Type H Reflective
2. Color:
   Background - See note 5
   Message - See note 5
3. Message Series - C
4. Corners may be square or rounded when base material is plywood but borders shall be rounded as shown. When base material is metal, the corners and borders shall be rounded.
5. M3-1 thru M3-4 Background - White
   Message - Black
   MB3-1 thru MB3-4 Background - Blue
   Message - White
   MK3-1 thru MK3-4 Background - Green
   Message - White
   MM3-1 thru MM3-4 Background - White
   Message - Green
   MN3-1 thru MN3-4 Background - Brown
   Message - White
   MP3-1 thru MP3-4 Background - White
   Message - Blue
6. Note the first letter of each direction is larger than the remainder of the message.

SIZE	A	B	C	D	E	F	G	H	I	J	K	L	M	N	O	P	Q	R	S	T	U	V	W	X	Y	Z	Area sq. ft.
1																											
2S	24	12	1 1/2	3/8	3/8	6	7	2 1/4	2 3/4	10 1/4	7 7/8	8 3/8	10 1/4	9 3/4	8 3/4												2.00
2M	24	12	1 1/2	3/8	3/8	6	7	2 1/4	2 3/4	10 1/4	7 7/8	8 3/8	10 1/4	9 3/4	8 3/4												2.00
3	36	18	1 1/2	3/8	1/2	9	10	3 3/4	4 1/4	14 3/8	12	12 1/8	14	14 1/8	13												4.5
4	36	18	1 1/2	3/8	1/2	9	10	3 3/4	4 1/4	14 3/8	12	12 1/8	14	14 1/8	13												4.5
5	36	18	1 1/2	3/8	1/2	9	10	3 3/4	4 1/4	14 3/8	12	12 1/8	14	14 1/8	13												4.5

STANDARD SIGNS
M3-1 THRU M3-4
SERIES

WISCONSIN DEPT OF TRANSPORTATION

APPROVED Matthew R Rauch
For State Traffic Engineer

DATE 2/8/2023 PLATE NO. M3-1.15

PROJECT NO: | HWY: | COUNTY: | SHEET NO: 179 | E

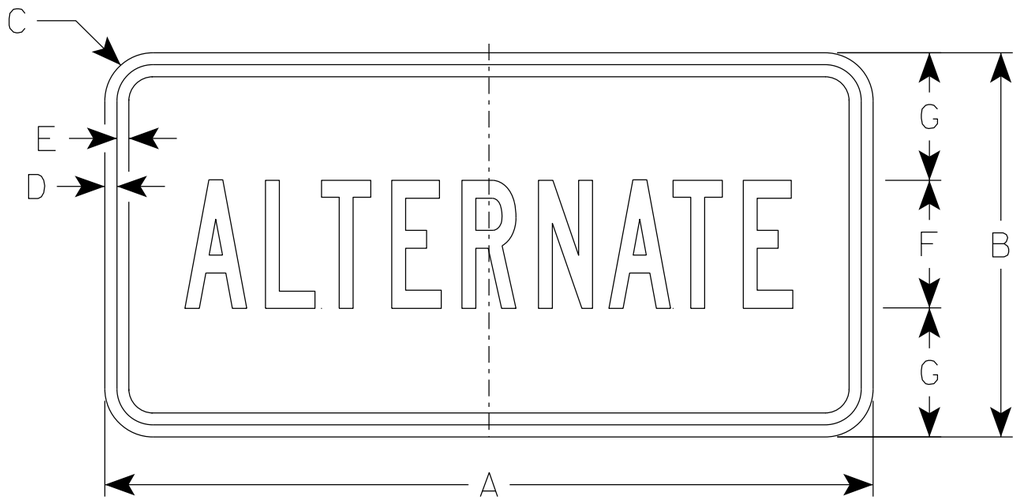

M4-1
M04-1

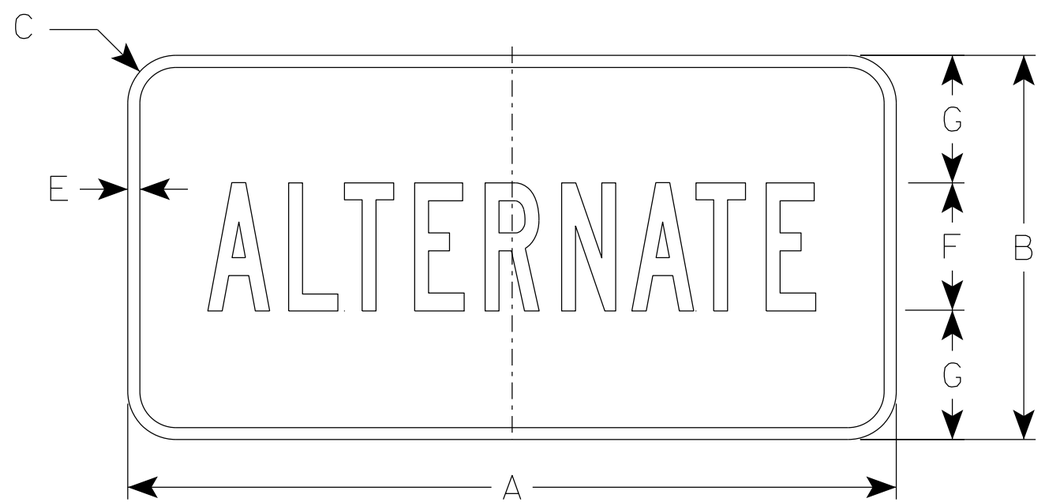

MB4-1

NOTES

1. Sign is Type II - Type H Reflective except as Shown
2. Color:
   Background - See Note 5
   Message - See note 5
3. Message Series - B
4. Corners may be square or rounded when base material is plywood but borders shall be rounded as shown. When base material is metal, the corners and borders shall be rounded.
5. M4-1 Background - White
   Message - Black

   MB4-1 Background - Blue
   Message - White

   M04-1 Background - Orange - Type F Reflective
   Message - Black

SIZE	A	B	C	D	E	F	G	H	I	J	K	L	M	N	O	P	Q	R	S	T	U	V	W	X	Y	Z	Area sq. ft.
1																											
2S	24	12	1 1/2	3/8	3/8	4	4	9 3/4	9 1/2																		2.00
2M	24	12	1 1/2	3/8	3/8	4	4	9 3/4	9 1/2																		2.00
3	36	18	1 1/2	3/8	1/2	7	5 1/2	16 3/8	16 1/2																		4.5
4	36	18	1 1/2	3/8	1/2	7	5 1/2	16 3/8	16 1/2																		4.5
5	36	18	1 1/2	3/8	1/2	7	5 1/2	16 3/8	16 1/2																		4.5

STANDARD SIGN
M4-1

WISCONSIN DEPT OF TRANSPORTATION

APPROVED Matthew R Rauch
for State Traffic Engineer

DATE 2/8/2023 PLATE NO. M4-1.10

PROJECT NO: | HWY: | COUNTY: | SHEET NO: 180 | E

NOTES

1. Sign is Type II - Type F Reflective
2. Color:
   Background - Orange
   Message - Black
3. Message Series - B
4. Corners may be square or rounded when base material is plywood but borders shall be rounded as shown. When base material is metal, the corners and borders shall be rounded.

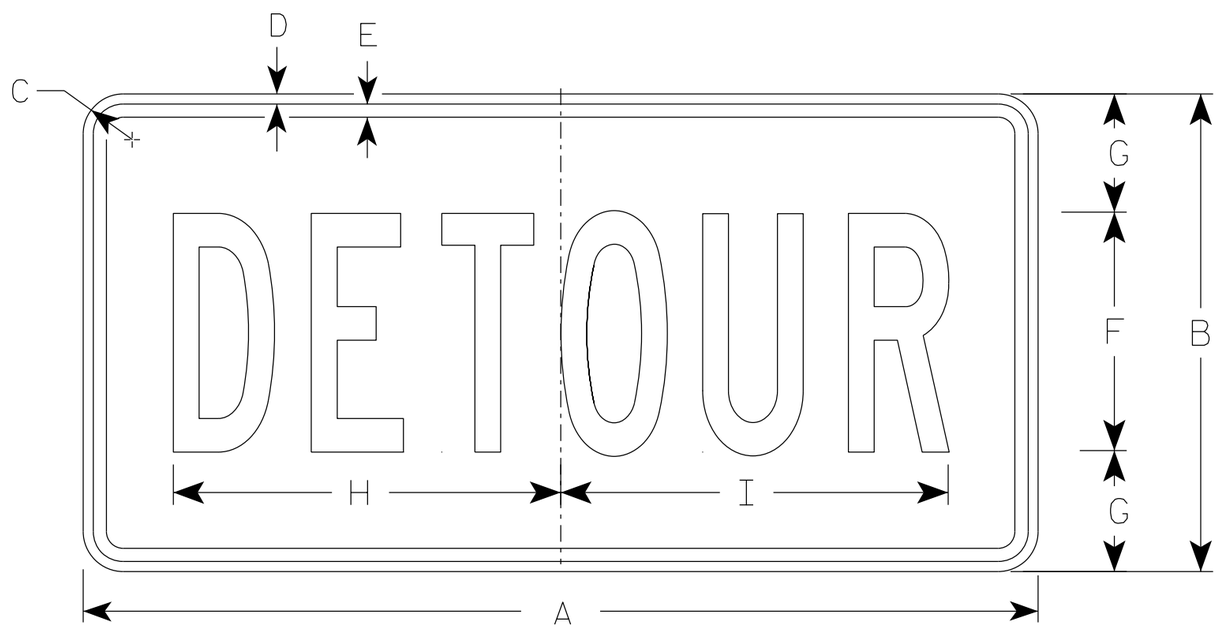

M4-8

SIZE	A	B	C	D	E	F	G	H	I	J	K	L	M	N	O	P	Q	R	S	T	U	V	W	X	Y	Z	Area sq. ft.
1																											
2	24	12	1 1/2	3/8	3/8	6	3	10	10 1/4																		2.0
2M	24	12	1 1/2	3/8	3/8	6	3	10	10 1/4																		2.0
3	36	18	1 1/2	3/8	1/2	9	4 1/2	14 5/8	14 1/2																		4.5
4	36	18	1 1/2	3/8	1/2	9	4 1/2	14 5/8	14 1/2																		4.5
5	36	18	1 1/2	3/8	1/2	9	4 1/2	14 5/8	14 1/2																		4.5

STANDARD SIGN
M4-8

WISCONSIN DEPT OF TRANSPORTATION

APPROVED Matthew R Rauch
for State Traffic Engineer

DATE 2/9/2023 PLATE NO. M4-8.4

PROJECT NO:	HWY:	COUNTY:		SHEET NO:	E

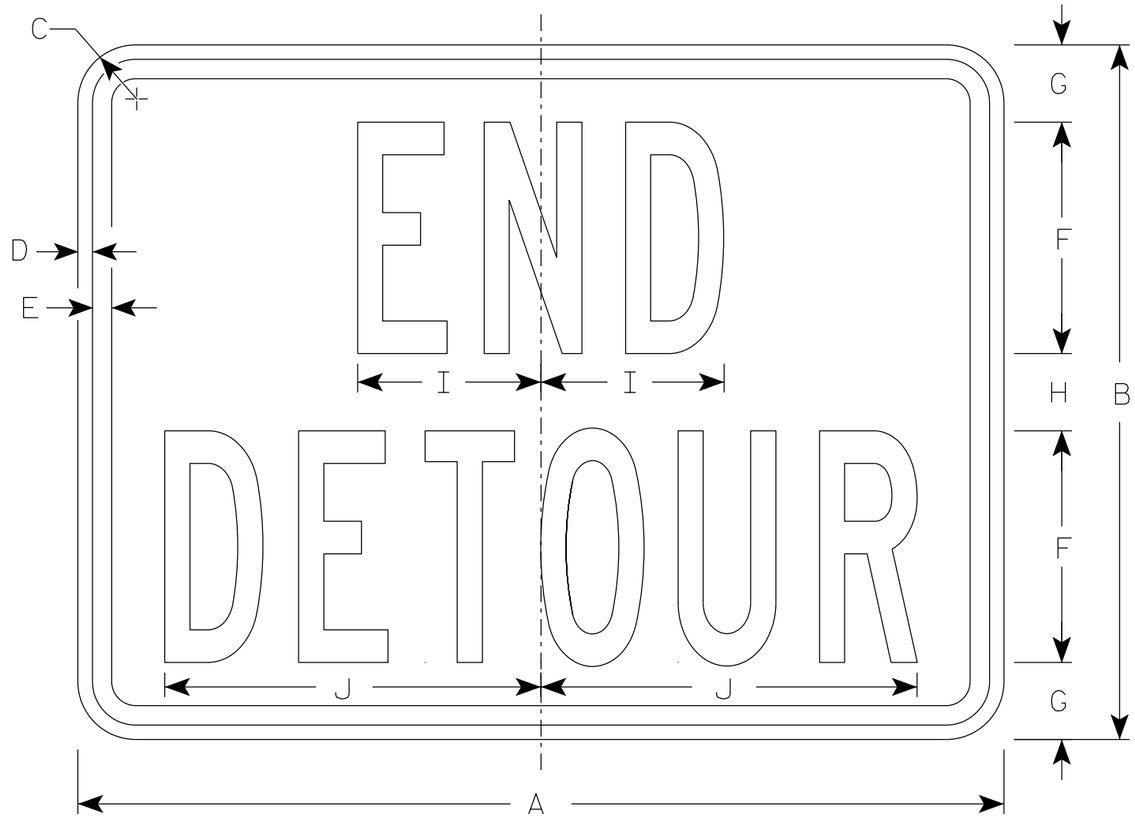

M4-8A

NOTES

1. Sign is Type II - Type F Reflective
2. Color:
   Background - Orange
   Message - Black
3. Message Series - B
4. Corners may be square or rounded when base material is plywood but borders shall be rounded as shown. When base material is metal, the corners and borders shall be rounded.

SIZE	A	B	C	D	E	F	G	H	I	J	K	L	M	N	O	P	Q	R	S	T	U	V	W	X	Y	Z	Area sq. ft.
1																											
2	24	18	1 1/2	3/8	1/2	6	2	2	4 3/4	9 3/4																	3.0
2M	24	18	1 1/2	3/8	1/2	6	2	2	4 3/4	9 3/4																	3.0
3	30	24	1 1/2	3/8	1/2	8	2 1/2	3	6 3/4	13																	5.0
4	30	24	1 1/2	3/8	1/2	8	2 1/2	3	6 3/4	13																	5.0
5	30	24	1 1/2	3/8	1/2	8	2 1/2	3	6 3/4	13																	5.0

STANDARD SIGN
M4-8A

WISCONSIN DEPT OF TRANSPORTATION

APPROVED Matthew R Rauch
for State Traffic Engineer

DATE 2/9/2023 PLATE NO. M4-8A.4

PROJECT NO: | HWY: | COUNTY: | SHEET NO: 182 | E

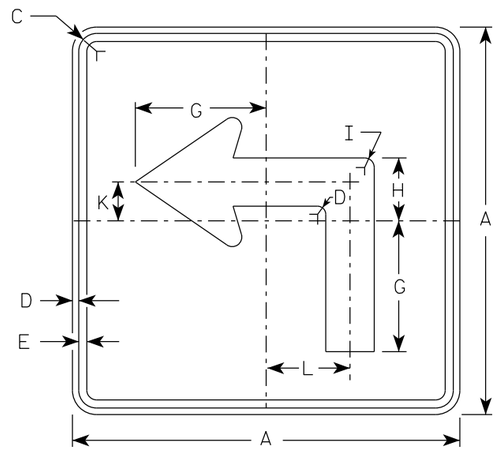

M5-1L
MM5-1L
MO5-1L
MP5-1L

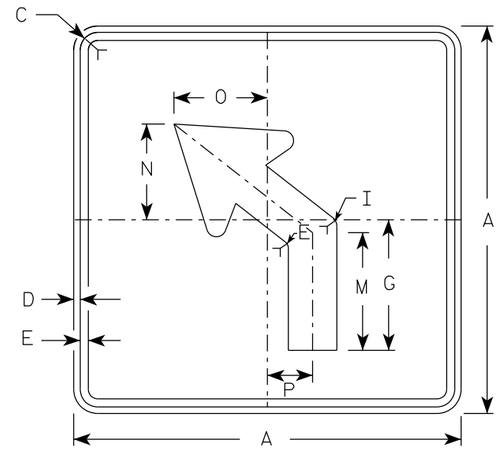

M5-2L
MM5-2L
MO5-2L
MP5-2L

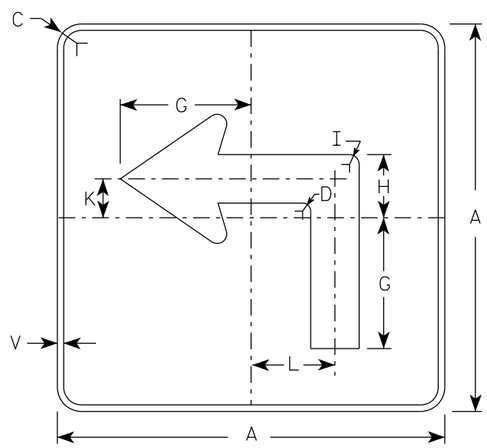

MB5-1L
MK5-1L
MN5-1L
MR5-1L

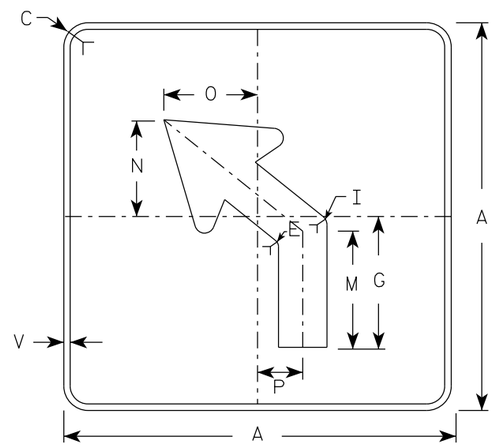

MB5-2L
MK5-2L
MN5-2L
MR5-2L

NOTES

1. Signs are Type II - Type H reflective except as shown
2. Color:
   Background - See note 4
   Message - See note 4
3. Corners may be square or rounded when base material is plywood but borders shall be rounded as shown. When base material is metal, the corners and borders shall be rounded.
4. M5-1 and M5-2 Background - White
   Message - Black
   MB5-1 and MB5-2 Background - Blue
   Message - White
   MK5-1 and MK5-2 Background - Green
   Message - White
   MM5-1 and MM5-2 Background - White
   Message - Green
   MN5-1 and MN5-2 Background - Brown
   Message - White
   MO5-1 and MO5-2 Background - Orange - Type F Reflective
   Message - Black
   MP5-1 and MP5-2 Background - White
   Message - Blue
   MR5-1 and MR5-2 Background - Brown
   Message - Yellow
5. M5-1R same as M5-1L except arrow points right.
6. M5-2R same as M5-2L except arrow tilts right.

ARROW DETAIL

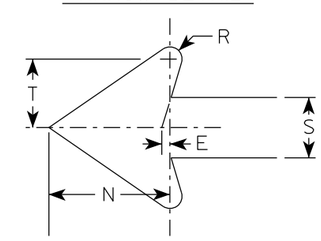

SIZE	A	B	C	D	E	F	G	H	I	J	K	L	M	N	O	P	Q	R	S	T	U	V	W	X	Y	Z	Area sq. ft.
1																											
2S	21		1 1/2	3/8	3/8		7	3 3/8	5/8		2 1/8	4 1/2	6 3/8	5 1/4	5	2 1/2		1/2	2 5/8	3		1/2					3.06
2M	21		1 1/2	3/8	3/8		7	3 3/8	5/8		2 1/8	4 1/2	6 3/8	5 1/4	5	2 1/2		1/2	2 5/8	3		1/2					3.06
3	30		1 7/8	1/2	5/8		10 1/8	4 7/8	7/8		3	6 1/2	9 1/8	7 1/2	7 1/4	3 1/2		3/4	3 3/4	4 1/4		1/2					6.25
4	30		1 7/8	1/2	5/8		10 1/8	4 7/8	7/8		3	6 1/2	9 1/8	7 1/2	7 1/4	3 1/2		3/4	3 3/4	4 1/4		1/2					6.25
5	30		1 7/8	1/2	5/8		10 1/8	4 7/8	7/8		3	6 1/2	9 1/8	7 1/2	7 1/4	3 1/2		3/4	3 3/4	4 1/4		1/2					6.25

STANDARD SIGN
M5-1 & M5-2

WISCONSIN DEPT OF TRANSPORTATION

APPROVED Matthew R Rauch
for State Traffic Engineer

DATE 2/13/2023 PLATE NO. M5-1.15

PROJECT NO: | HWY: | COUNTY: | SHEET NO: 183 | E

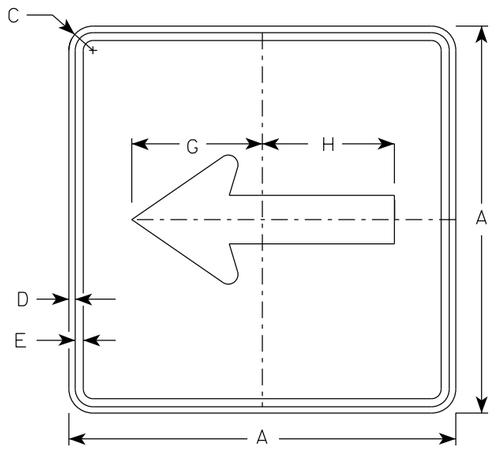

M6-1
MM6-1
MO6-1
MP6-1

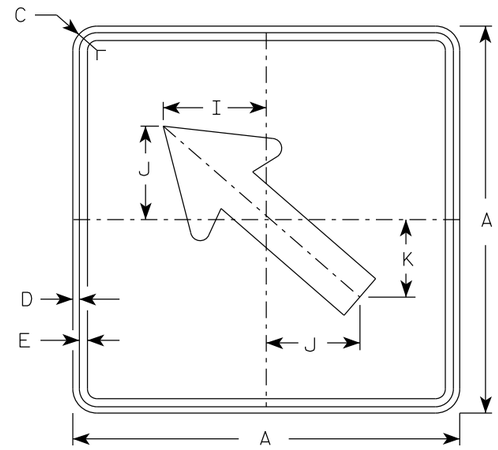

M6-2
MM6-2
MO6-2
MP6-2

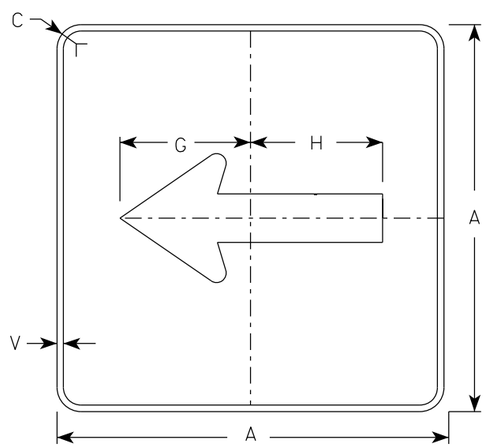

MB6-1
MK6-1
MN6-1
MR6-1

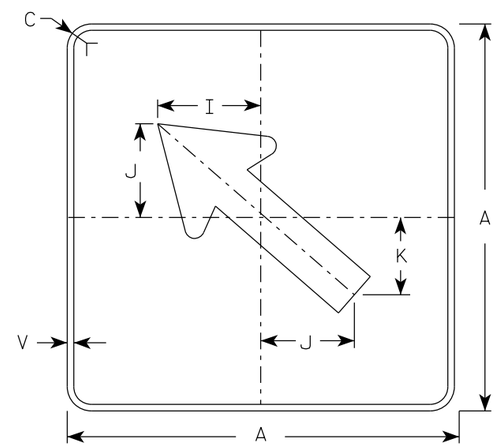

MB6-2
MK6-2
MN6-2
MR6-2

NOTES

1. Signs are Type II - Type H Reflective except as Shown
2. Color:
   Background - See note 4
   Message - See note 4
3. Corners may be square or rounded when base material is plywood but borders shall be rounded as shown. When base material is metal, the corners and borders shall be rounded.
4. M6-1 and M6-2 Background - White
   Message - Black
   MB6-1 and MB6-2 Background - Blue
   Message - White
   MK6-1 and MK6-2 Background - Green
   Message - White
   MM6-1 and MM6-2 Background - White
   Message - Green
   MN6-1 and MN6-2 Background - Brown
   Message - White
   MO6-1 and MO6-2 Background - Orange - Type F Reflective
   Message - Black
   MP6-1 and MP6-2 Background - White
   Message - Blue
   MR6-1 and MR6-2 Background - Brown
   Message - Yellow

ARROW DETAIL

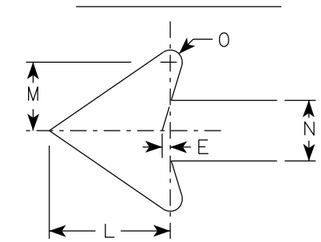

SIZE	A	B	C	D	E	F	G	H	I	J	K	L	M	N	O	P	Q	R	S	T	U	V	W	X	Y	Z	Area sq. ft.
1																											
2S	21		1 1/2	3/8	3/8		7 1/2	7 1/8	5 5/8	5	4 1/4	5 1/4	3	2 5/8	1/2							1/2					3.06
2M	21		1 1/2	3/8	3/8		7 1/2	7 1/8	5 5/8	5	4 1/4	5 1/4	3	2 5/8	1/2							1/2					3.06
3	30		1 7/8	1/2	5/8		10 3/4	10 1/4	8	7 1/4	6	7 1/2	4 1/4	3 3/4	3/4							1/2					6.25
4	30		1 7/8	1/2	5/8		10 3/4	10 1/4	8	7 1/4	6	7 1/2	4 1/4	3 3/4	3/4							1/2					6.25
5	30		1 7/8	1/2	5/8		10 3/4	10 1/4	8	7 1/4	6	7 1/2	4 1/4	3 3/4	3/4							1/2					6.25

STANDARD SIGN
M6-1 & M6-2
SERIES

WISCONSIN DEPT OF TRANSPORTATION

APPROVED Matthew R Rauch
for State Traffic Engineer

DATE 2/13/2023 PLATE NO. M6-1.16

PROJECT NO: | HWY: | COUNTY: | SHEET NO: 184 | E

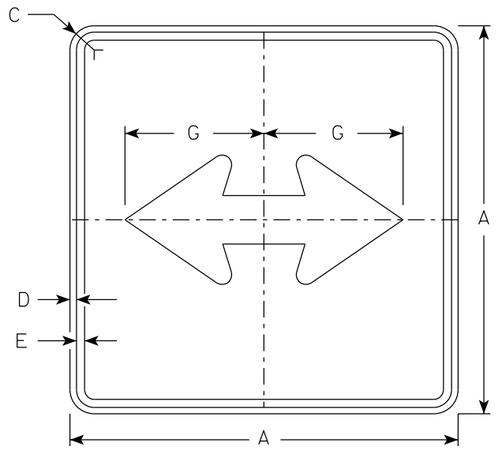

M6-4
MM6-4
MO6-4
MP6-4

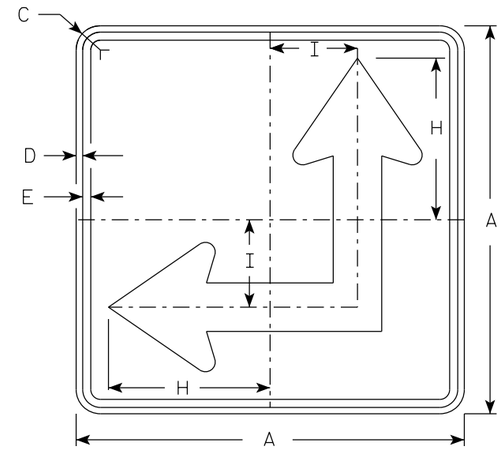

M6-6
MM6-6
MO6-6
MP6-6

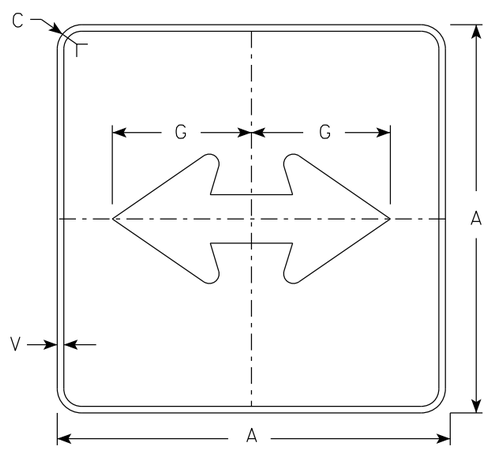

MB6-4
MK6-4
MN6-4
MR6-4

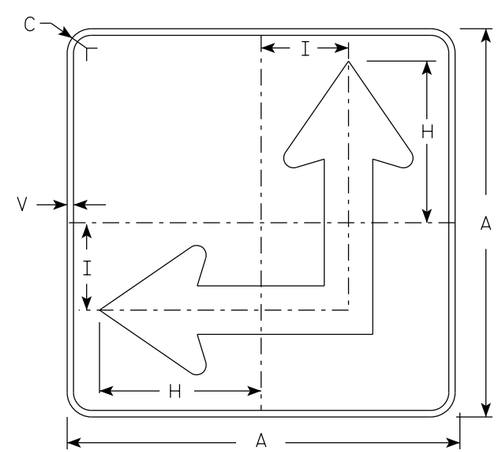

MB6-6
MK6-6
MN6-6
MR6-6

NOTES

1. Signs are Type II - Type H Reflective except as Shown
2. Color:
   Background - See Note 4
   Message - See Note 4
3. Corners may be square or rounded when base material is plywood but borders shall be rounded as shown. When base material is metal, the corners and borders shall be rounded.
4. M6-4 and M6-6 Background - White
   Message - Black
   MB6-4 and MB6-6 Background - Blue
   Message - White
   MK6-4 and MK6-6 Background - Green
   Message - White
   MM6-4 and MM6-6 Background - White
   Message - Green
   MN6-4 and MN6-6 Background - Brown
   Message - White
   MO6-4 and MO6-6 Background - Orange - Type F Reflective
   Message - Black
   MP6-4 and MP6-6 Background - White
   Message - Blue
   MR6-4 and MR6-6 Background - Brown
   Message - Yellow
5. M6-6R same as M6-6L except arrow points ahead and right.

ARROW DETAIL

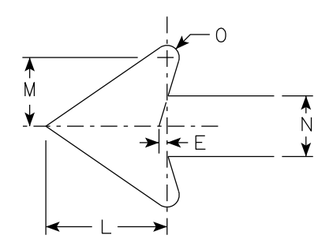

SIZE	A	B	C	D	E	F	G	H	I	J	K	L	M	N	O	P	Q	R	S	T	U	V	W	X	Y	Z	Area sq. ft.
1																											
2S	21		1 1/2	3/8	3/8		7 1/2	8 3/4	4 1/4			5 1/4	3	2 5/8	1/2							1/2					3.06
2M	21		1 1/2	3/8	3/8		7 1/2	8 3/4	4 1/4			5 1/4	3	2 5/8	1/2							1/2					3.06
3	30		1 7/8	1/2	5/8		10 3/4	12 1/2	6 3/4			7 1/2	4 1/4	3 3/4	3/4							1/2					6.25
4	30		1 7/8	1/2	5/8		10 3/4	12 1/2	6 3/4			7 1/2	4 1/4	3 3/4	3/4							1/2					6.25
5	30		1 7/8	1/2	5/8		10 3/4	12 1/2	6 3/4			7 1/2	4 1/4	3 3/4	3/4							1/2					6.25

STANDARD SIGN
M6-4 & M6-6
SERIES

WISCONSIN DEPT OF TRANSPORTATION

APPROVED Matthew R Rauch
for State Traffic Engineer

DATE 2/13/2023 PLATE NO. M6-4.11

PROJECT NO: | HWY: | COUNTY: | SHEET NO: 185 | E

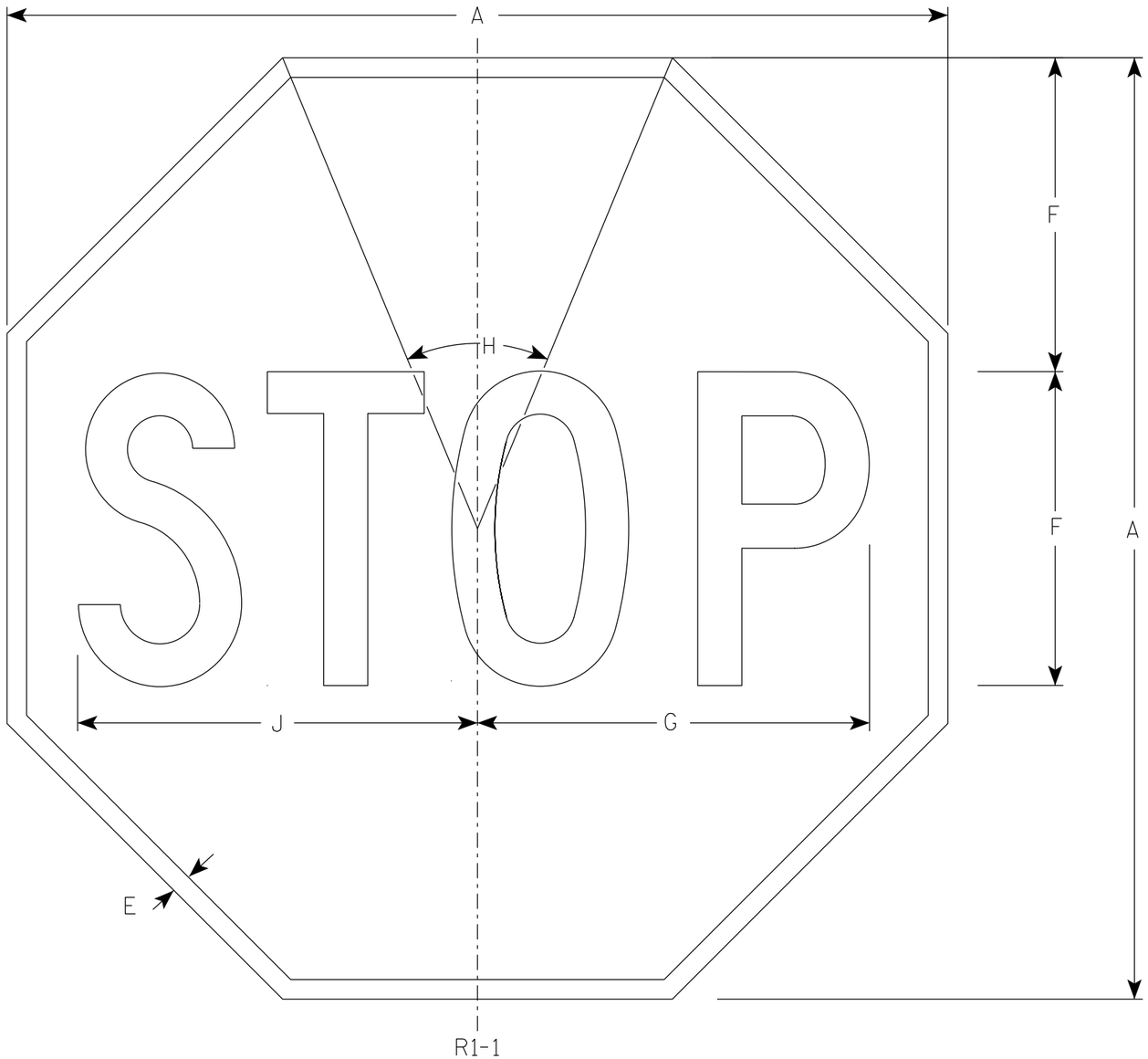

NOTES

1. Sign is Type II - Type H Reflective
2. Color:
   Background - Red
   Message - White
3. Message Series - C

SIZE	A	B	C	D	E	F	G	H	I	J	K	L	M	N	O	P	Q	R	S	T	U	V	W	X	Y	Z	Area sq. ft.
1	30				5/8	10	12 1/2	45°		12 3/4																	5.18
2S	30				5/8	10	12 1/2	45°		12 3/4																	5.18
2M	36				3/4	12	15	45°		15 3/8																	7.46
3	36				3/4	12	15	45°		15 3/8																	7.46
4	48				1	16	20	45°		20 1/2																	13.25
5	48				1	16	20	45°		20 1/2																	13.25
6	18				3/8	6	7 3/4	45°		7 3/4																	1.86

STANDARD SIGN

R1-1

WISCONSIN DEPT OF TRANSPORTATION

APPROVED Matthew R Rauch
for State Traffic Engineer

DATE 7/9/2025 PLATE NO. R1-1.14

PROJECT NO: | HWY: | COUNTY: | SHEET NO: 186 | E

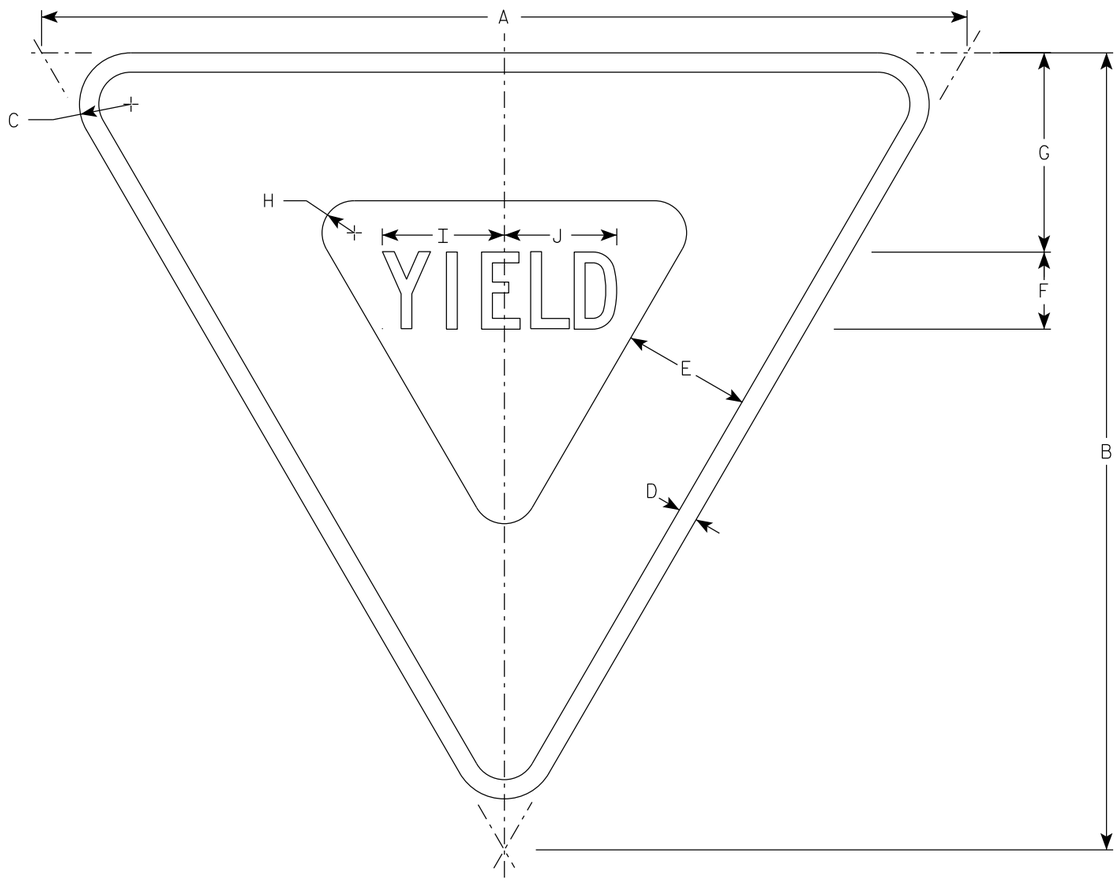

R1-2

NOTES

1. Sign is Type II - Type H Reflective
2. Color:
   Background - White
   Message - See note 4
3. Message Series - C
4. The border strip and word message are reflectorized red.

SIZE	A	B	C	D	E	F	G	H	I	J	K	L	M	N	O	P	Q	R	S	T	U	V	W	X	Y	Z	Area sq. ft.
1	30	26	2	5/8	4	2 1/2	6 3/8	7/8	4	3 5/8																	2.71
2S	36	31	2	3/4	5	3	7 3/4	1 1/4	4 3/4	4 3/8																	3.88
2M	48	42	3	1	6	4	9 3/4	2	6 1/4	5 7/8																	7.00
3	48	42	3	1	6	4	9 3/4	2	6 1/4	5 7/8																	7.00
4	48	42	3	1	6	4	9 3/4	2	6 1/4	5 7/8																	7.00
5	60	52	3	1 1/2	8	5	13	2 1/2	7 7/8	7 1/4																	10.83
6																											
7	18	15 1/2	1	3/8	2 1/2	1 1/2	3 7/8	5/8	2 3/8	2 1/4																	0.97

STANDARD SIGN
R1-2

WISCONSIN DEPT OF TRANSPORTATION

APPROVED Matthew R Rauch
for State Traffic Engineer

DATE 9/10/2024 PLATE NO. R1-2.13

PROJECT NO: | HWY: | COUNTY: | SHEET NO: 187 | E

NOTES

1. Sign is Type II - Type H Reflective
2. Color:
   Background - Red
   Message - White
3. Message Series - C
4. For 30"x30" R1-1 use 18"x6" R1-3P sign
   For 36"x36" R1-1 use 30"x12" R1-3P sign
   For 48"x48" R1-1 use 30"x12" R1-3P sign

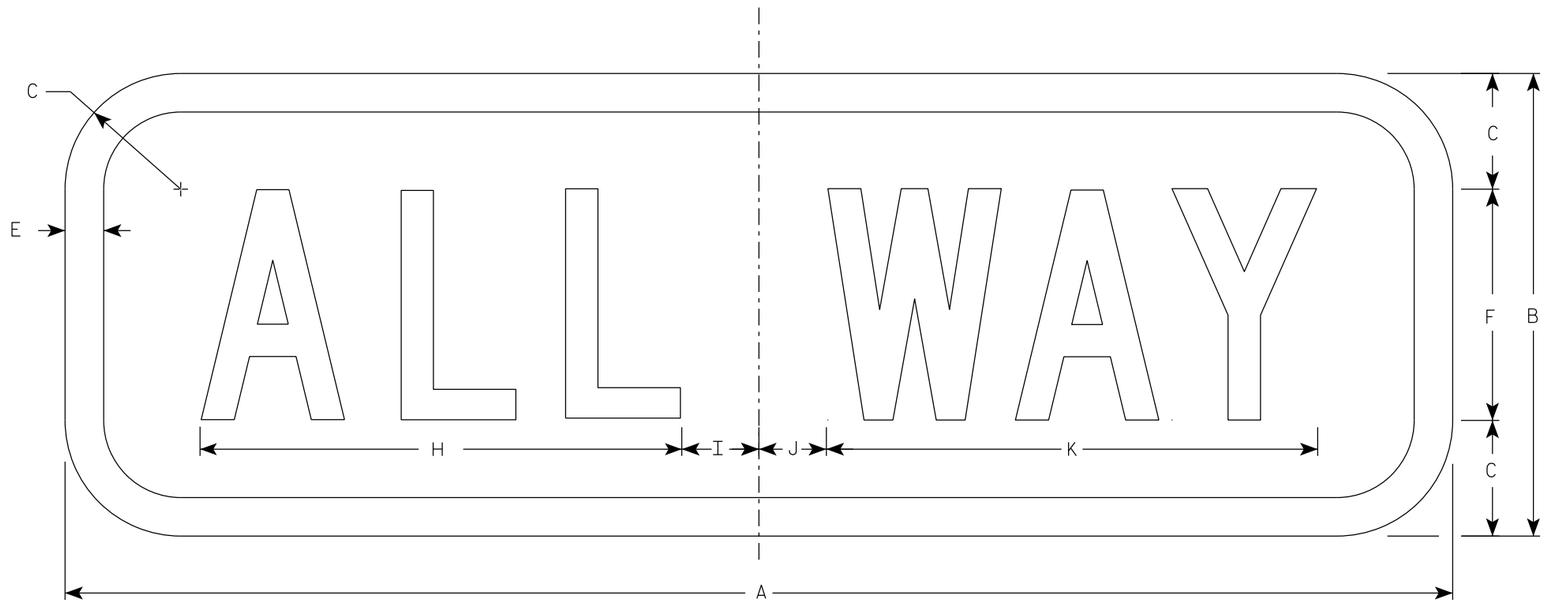

R1-3P

SIZE	A	B	C	D	E	F	G	H	I	J	K	L	M	N	O	P	Q	R	S	T	U	V	W	X	Y	Z	Area sq. ft.
1	18	6	1 1/2		1/2	3		6 1/4	1 1/4	7/8	6 3/8																0.75
2S	18	6	1 1/2		1/2	3		6 1/4	1 1/4	7/8	6 3/8																0.75
2M	30	12	1 1/2		5/8	6		11	2 1/4	1 1/2	11 3/4																2.5
3	30	12	1 1/2		5/8	6		11	2 1/4	1 1/2	11 3/4																2.5
4	30	12	1 1/2		5/8	6		11	2 1/4	1 1/2	11 3/4																2.5
5	30	12	1 1/2		5/8	6		11	2 1/4	1 1/2	11 3/4																2.5

STANDARD SIGN

R1-3P

WISCONSIN DEPT OF TRANSPORTATION

APPROVED Matthew R Rauch
for State Traffic Engineer

DATE 7/9/2025 PLATE NO. R1-3P.5

PROJECT NO: | HWY: | COUNTY: | SHEET NO: 188 | E

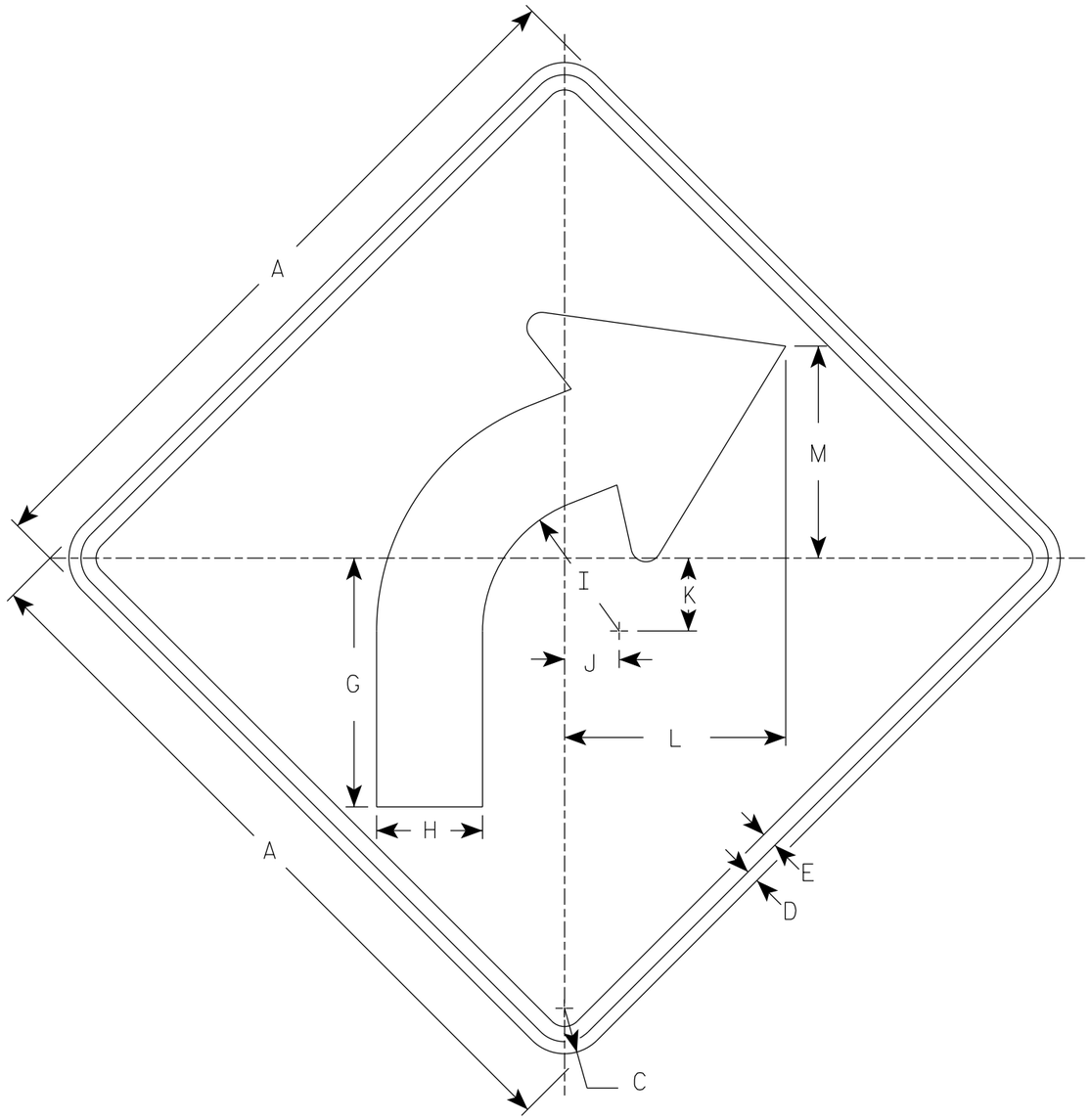

W1-2R

NOTES

1. Sign is Type II - Type F Reflective
2. Color:
   Background - Yellow
   Message - Black
3. W1-2L is the same as W1-2R except the arrow is reversed along the vertical centerline.

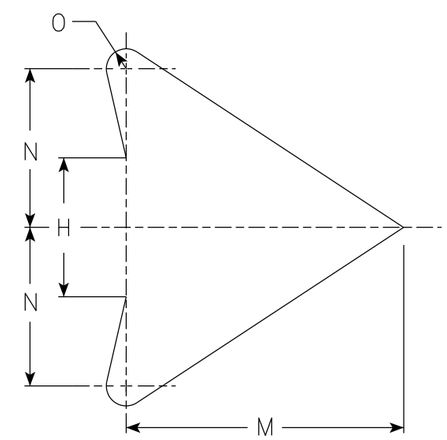

ARROW DETAIL

SIZE	A	B	C	D	E	F	G	H	I	J	K	L	M	N	O	P	Q	R	S	T	U	V	W	X	Y	Z	Area sq. ft.
1	24		1 1/2	3/8	1/2		8 1/4	3 1/2	4 1/2	1 3/4	2 3/8	7 1/4	7	4	1/2												4.0
2S	30		1 7/8	1/2	5/8		10 1/4	4 3/8	5 5/8	2 1/4	3	9 1/8	8 3/4	5	5/8												6.25
2M	36		2 1/4	5/8	3/4		12 3/8	5 1/4	6 3/4	2 5/8	3 1/2	10 7/8	10 1/2	6	3/4												9.0
3	36		2 1/4	5/8	3/4		12 3/8	5 1/4	6 3/4	2 5/8	3 1/2	10 7/8	10 1/2	6	3/4												9.0
4	36		2 1/4	5/8	3/4		12 3/8	5 1/4	6 3/4	2 5/8	3 1/2	10 7/8	10 1/2	6	3/4												9.0
5	48		3	3/4	1		16 1/2	7	9	3 1/2	4 5/8	14 1/2	14	8	1												16.0

STANDARD SIGN
W1-2

WISCONSIN DEPT OF TRANSPORTATION

APPROVED Matthew R Rauch
for State Traffic Engineer

DATE 3/23/2023 PLATE NO. W1-2.11

PROJECT NO:	HWY:	COUNTY:		SHEET NO: 189	E

NOTES

1. Sign is Type II - Type F Reflective
2. Color:
   Background - Yellow
   Message - Black

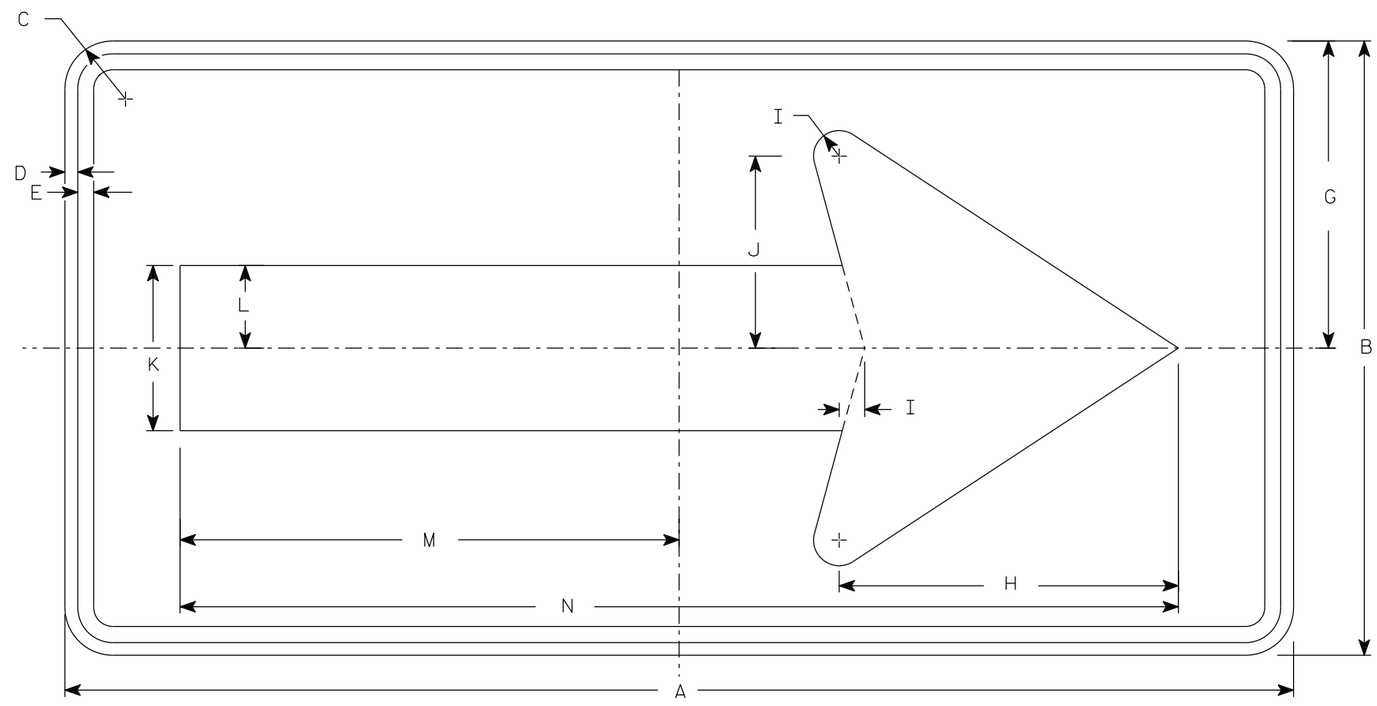

W1-6

SIZE	A	B	C	D	E	F	G	H	I	J	K	L	M	N	O	P	Q	R	S	T	U	V	W	X	Y	Z	Area sq. ft.
1	36	18	1 1/2	3/8	3/8		9	10	3/4	5 5/8	4 3/4	2 3/8	14 5/8	29 1/4													4.5
2S	48	24	1 7/8	1/2	5/8		12	13 1/4	1	7 1/2	6 1/2	3 1/4	19 1/2	39													8.0
2M	48	24	1 7/8	1/2	5/8		12	13 1/4	1	7 1/2	6 1/2	3 1/4	19 1/2	39													8.0
3	60	30	1 7/8	1/2	5/8		15	16 1/4	1 1/4	9 1/4	8	4	24 3/8	48 3/4													12.5
4	60	30	1 7/8	1/2	5/8		15	16 1/4	1 1/4	9 1/4	8	4	24 3/8	48 3/4													12.5
5	96	48	3	3/4	1		24	26 1/2	2	15	13	6 1/2	39	78													32.0

STANDARD SIGN

W1-6

WISCONSIN DEPT OF TRANSPORTATION

APPROVED Matthew R Rauch
for State Traffic Engineer

DATE 4/13/2023 PLATE NO. W1-6.9

PROJECT NO: | HWY: | COUNTY: | SHEET NO: | E

NOTES

1. Sign is Type II - Type F Reflective
2. Color:
   Background - Yellow
   Message - Black

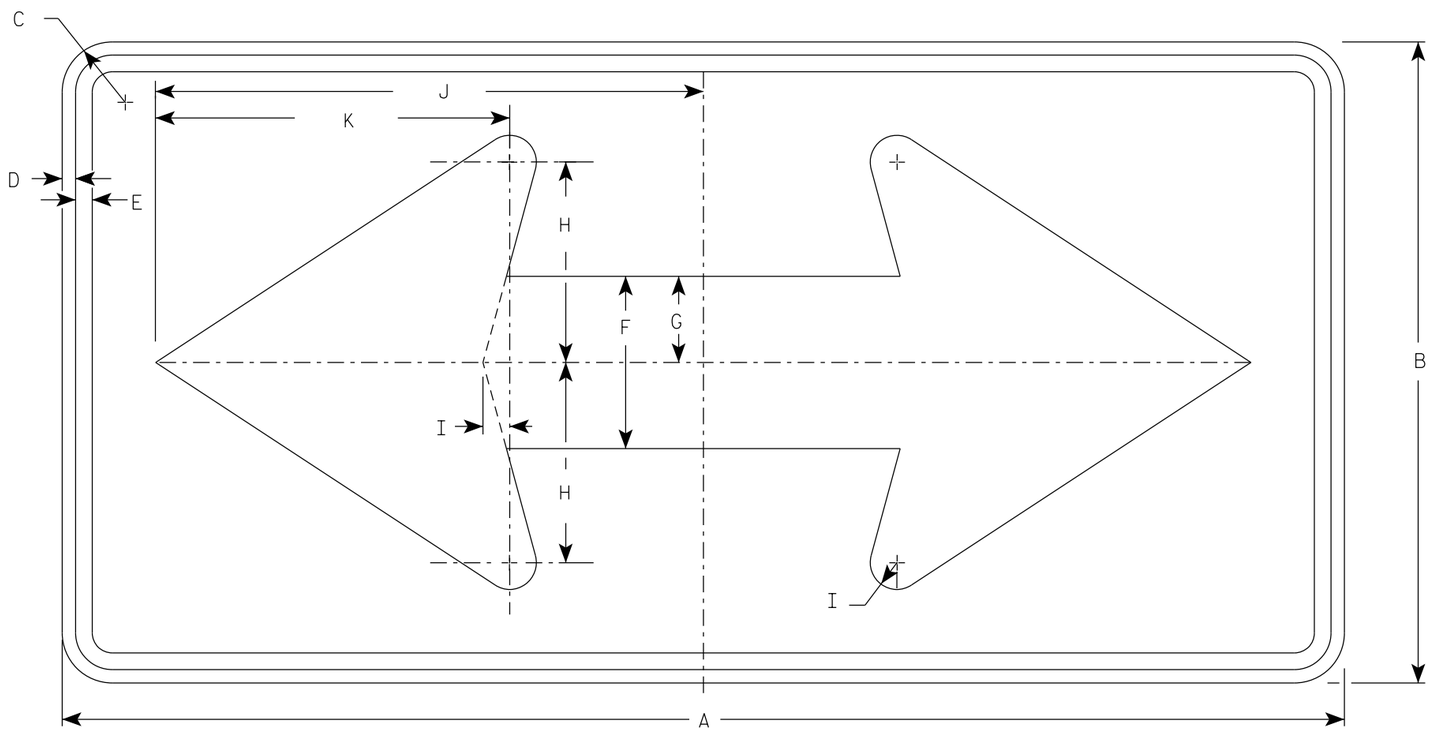

W1-7

SIZE	A	B	C	D	E	F	G	H	I	J	K	L	M	N	O	P	Q	R	S	T	U	V	W	X	Y	Z	Area sq. ft.
1	36	18	1 1/2	3/8	1/2	5	2 1/2	5 3/4	3/4	15 5/8	10 1/8																4.5
2S	48	24	1 7/8	1/2	5/8	6 1/2	3 1/4	7 1/2	1	20 1/2	13 1/4																8.0
2M	48	24	1 7/8	1/2	5/8	6 1/2	3 1/4	7 1/2	1	20 1/2	13 1/4																8.0
3	60	30	1 7/8	1/2	5/8	8	4	9 1/4	1 1/4	25 3/8	16 1/4																12.5
4	60	30	1 7/8	1/2	5/8	8	4	9 1/4	1 1/4	25 3/8	16 1/4																12.5
5	96	48	3	3/4	1	13	6 1/2	15	2	41	26 1/2																32.0

STANDARD SIGN
W1-7

WISCONSIN DEPT OF TRANSPORTATION

APPROVED Matthew R Rauch
for State Traffic Engineer

DATE 5/10/2023 PLATE NO. W1-7.8

PROJECT NO: | HWY: | COUNTY: | SHEET NO: 191 | E

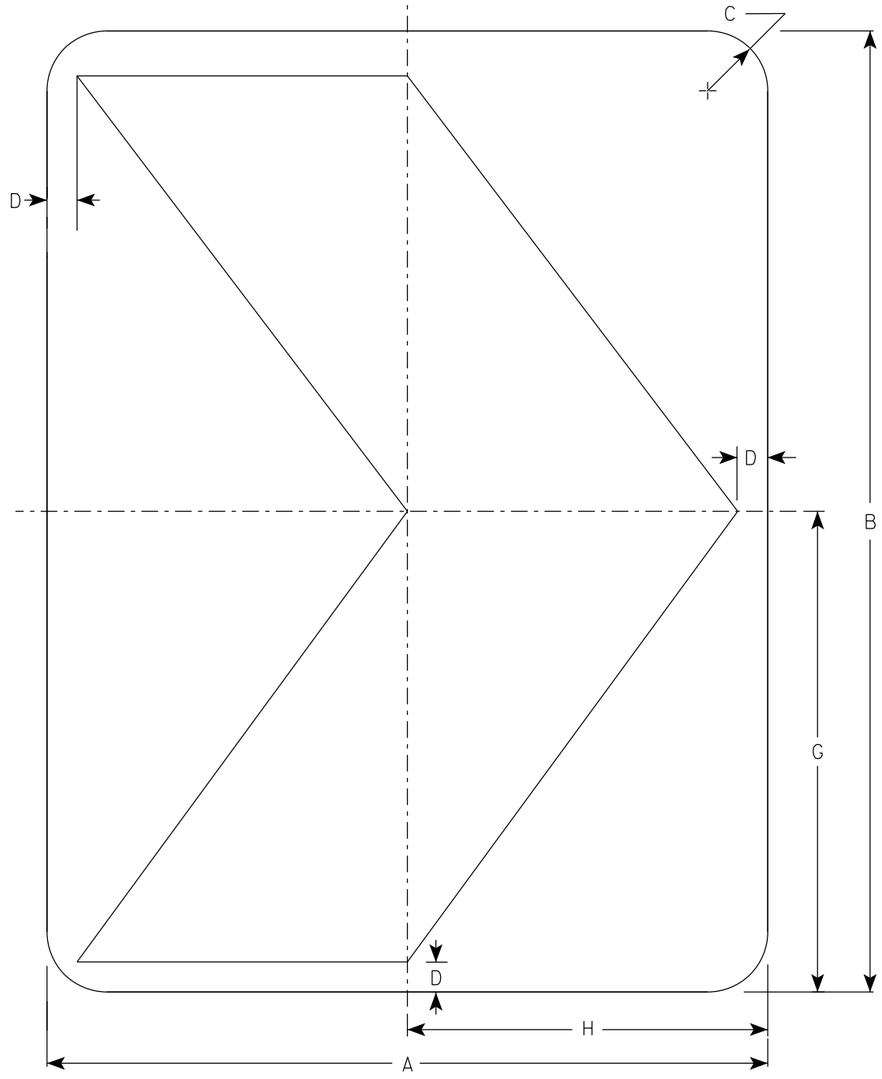

W1-8

NOTES

1. Sign is Type II - Type F Reflective
2. Color:
   Background - Yellow
   Message - Black

SIZE	A	B	C	D	E	F	G	H	I	J	K	L	M	N	O	P	Q	R	S	T	U	V	W	X	Y	Z	Area sq. ft.
1	12	18	1 1/2	1/2			9	6																			1.5
2S	18	24	1 1/2	3/4			12	9																			3.0
2M	18	24	1 1/2	3/4			12	9																			3.0
3	24	30	1 1/2	1			15	12																			5.0
4	30	36	1 7/8	1 1/4			18	15																			7.5
5	36	48	1 7/8	1 1/2			24	18																			12.0

STANDARD SIGN
W1-8

WISCONSIN DEPT OF TRANSPORTATION

APPROVED Matthew R Rauch
for State Traffic Engineer

DATE 5/11/2023 PLATE NO. W1-8.7

PROJECT NO:

SHEET NO: 192 E

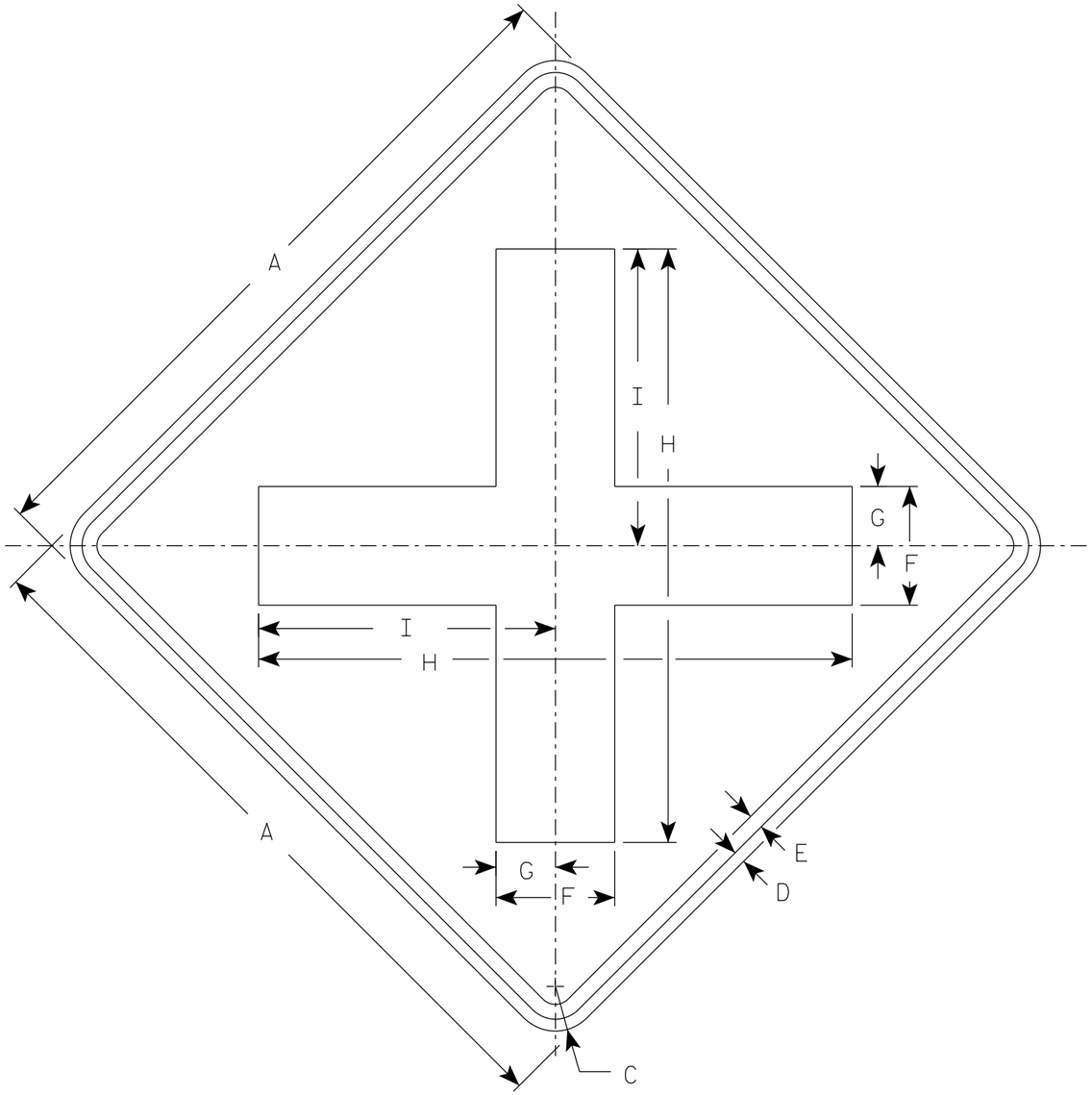

W2-1

NOTES

1. Sign is Type II - Type F Reflective
2. Color:
   Background - Yellow
   Message - Black

SIZE	A	B	C	D	E	F	G	H	I	J	K	L	M	N	O	P	Q	R	S	T	U	V	W	X	Y	Z	Area sq. ft.
1	24		1 1/2	3/8	1/2	4	2	20	10																		4.0
2S	30		1 7/8	1/2	5/8	5	2 1/2	25	12 1/2																		6.25
2M	30		1 7/8	1/2	5/8	5	2 1/2	25	12 1/2																		6.25
3	36		2 1/4	5/8	3/4	6	3	30	15																		9.0
4	48		3	3/4	1	8	4	40	20																		16.0
5																											

STANDARD SIGN

W2-1

WISCONSIN DEPT OF TRANSPORTATION

APPROVED Matthew R Rauch
for State Traffic Engineer

DATE 8/16/2023 PLATE NO. W2-1.10

PROJECT NO: | HWY: | COUNTY: | SHEET NO: 193 | E

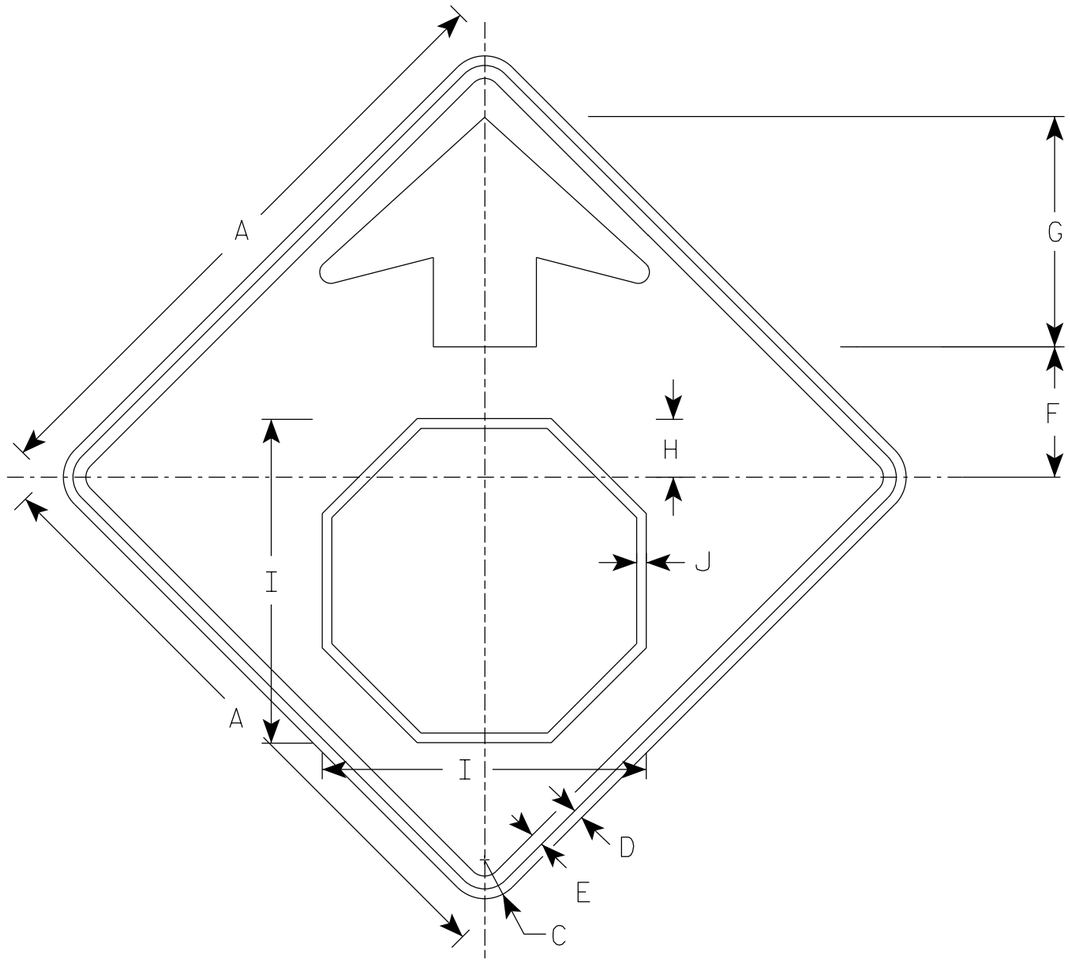

W3-1

NOTES

1. Sign is Type II - Type F Reflective
2. Color:
   Background - Yellow
   Arrow & Border - Black
   Stop Symbol - White Border on Red Background

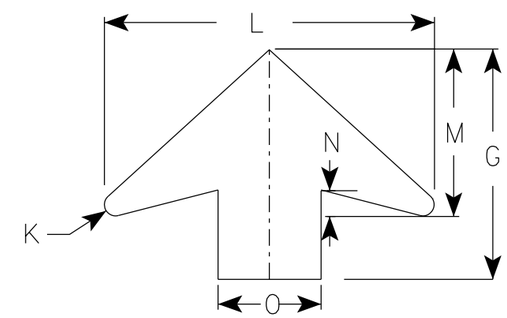

ARROW DETAIL

SIZE	A	B	C	D	E	F	G	H	I	J	K	L	M	N	O	P	Q	R	S	T	U	V	W	X	Y	Z	Area sq. ft.
1	30		1 7/8	1/2	5/8	6 1/4	11 1/4	2 7/8	15 3/4	1/2	1/2	16	8	1 1/4	5												6.25
2S	36		2 1/4	5/8	3/4	7 1/2	13 1/2	3 1/2	19	5/8	5/8	19 1/4	9 3/4	1 5/8	6												9.0
2M	36		2 1/4	5/8	3/4	7 1/2	13 1/2	3 1/2	19	5/8	5/8	19 1/4	9 3/4	1 5/8	6												9.0
3	36		2 1/4	5/8	3/4	7 1/2	13 1/2	3 1/2	19	5/8	5/8	19 1/4	9 3/4	1 5/8	6												9.0
4	48		3	3/4	1	10	17 7/8	4 1/2	25 1/8	3/4	7/8	25 5/8	13	2	8												16.0
5	48		3	3/4	1	10	17 7/8	4 1/2	25 1/8	3/4	7/8	25 5/8	13	2	8												16.0

STANDARD SIGN
W3-1

WISCONSIN DEPT OF TRANSPORTATION

APPROVED Matthew R Rauch
for State Traffic Engineer

DATE 8/17/2023 PLATE NO. W3-1.13

PROJECT NO:

SHEET NO: 194 E

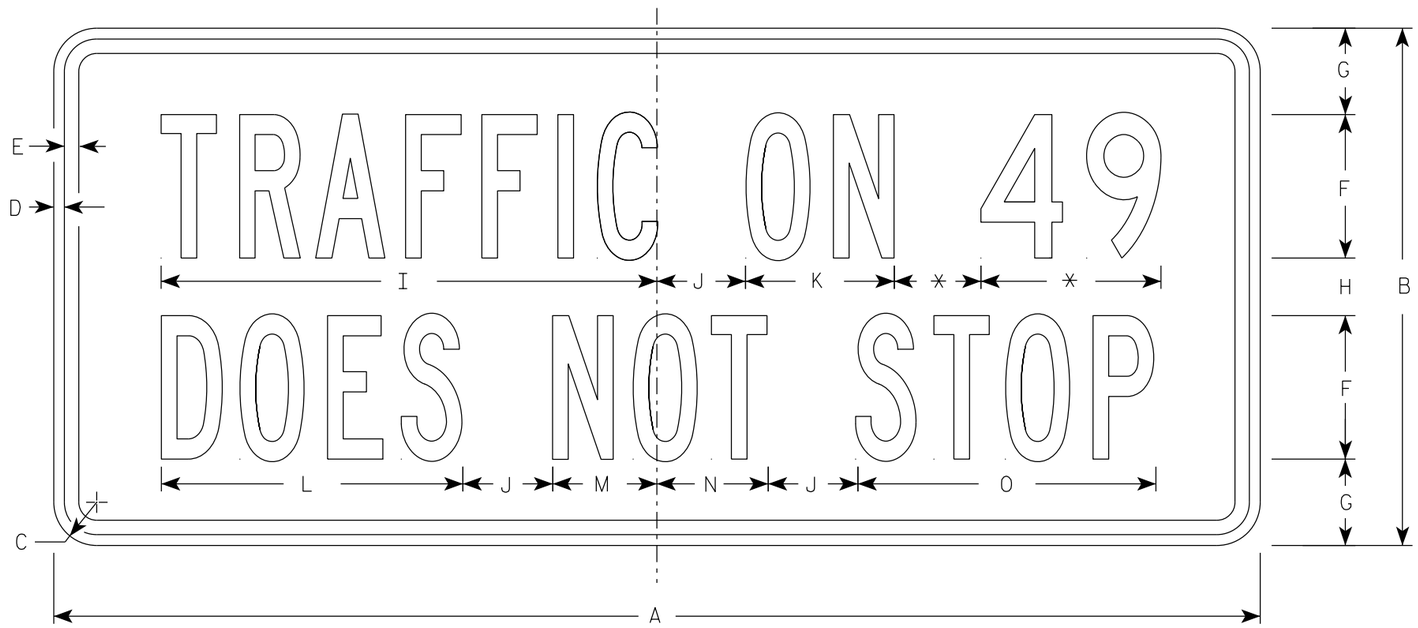

W4-4C

* VARIES

NOTES

1. Sign is Type II - Type F Reflective
2. Color:
   Background - Yellow
   Message - Black
3. Message Series - B (See note 4)
4. Highway Number usually Series D. Substitute appropriate numerals and optically adjust spacing to achieve proper balance.

SIZE	A	B	C	D	E	F	G	H	I	J	K	L	M	N	O	P	Q	R	S	T	U	V	W	X	Y	Z	Area sq. ft.
1																											
2S	24	12	1 1/2	3/8	3/8	3	2 1/4	1 1/2	10 3/8	1 1/2	3 1/8	6 1/4	2 1/4	2 1/4	6 1/4												2.0
2M	24	12	1 1/2	3/8	3/8	3	2 1/4	1 1/2	10 3/8	1 1/2	3 1/8	6 1/4	2 1/4	2 1/4	6 1/4												2.0
3	36	15	1 1/2	3/8	1/2	4	2 5/8	1 3/4	13 7/8	2 3/8	4 1/4	8 3/8	3 1/8	3 1/8	8 3/8												3.75
4	42	18	1 1/2	3/8	1/2	5	3	2	17 1/4	3 1/8	5 1/8	10 1/2	3 7/8	3 7/8	10 3/8												5.25
5																											

STANDARD SIGN
W4-4C

WISCONSIN DEPT OF TRANSPORTATION

APPROVED Matthew R Rauch
State Traffic Engineer

DATE 9/5/2023 PLATE NO. W4-4.3

PROJECT NO:	HWY:	COUNTY:		SHEET NO: 195	E

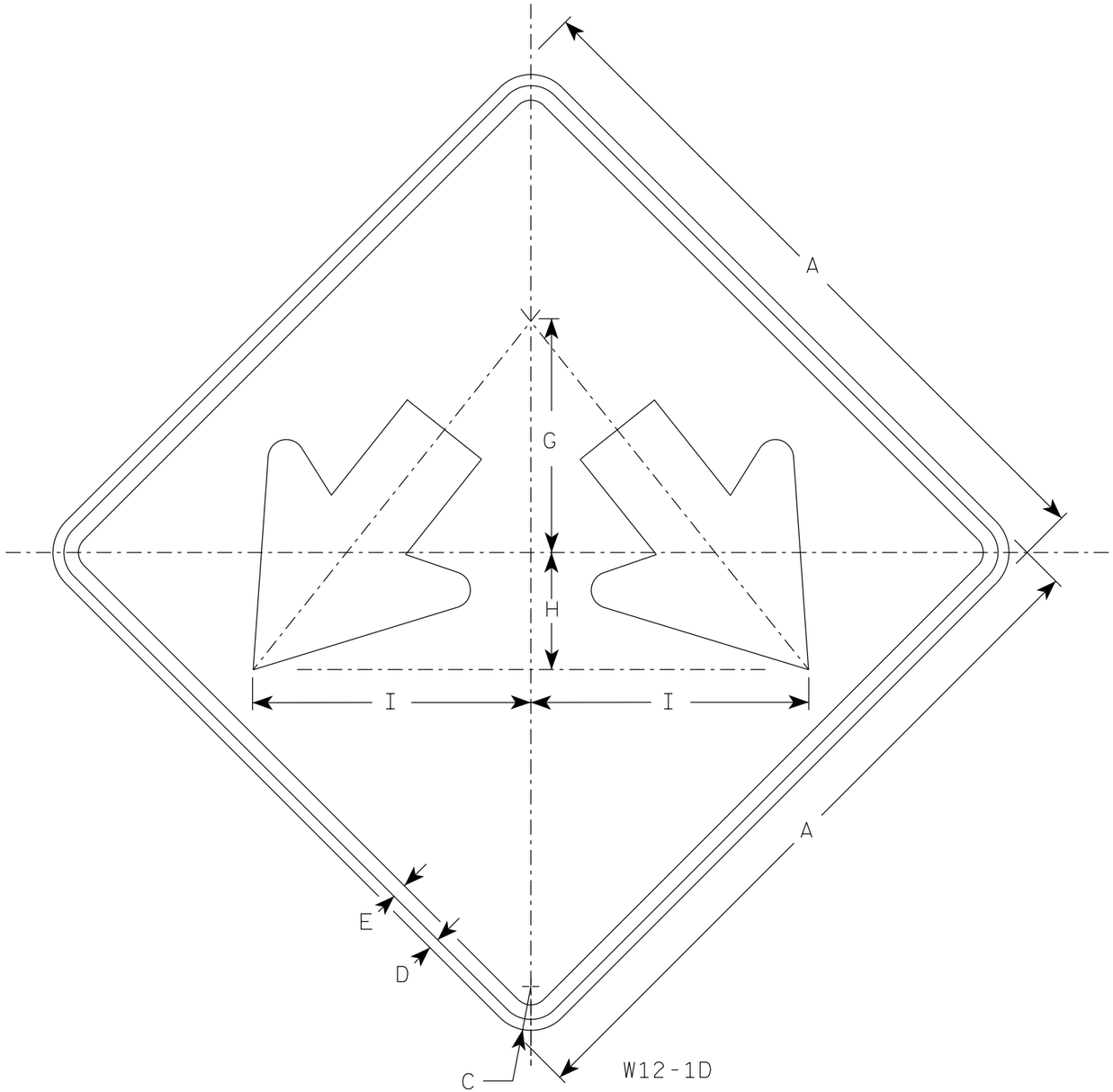

NOTES

1. Sign is Type II - Type F Reflective
2. Color:
   Background - Yellow
   Message - Black

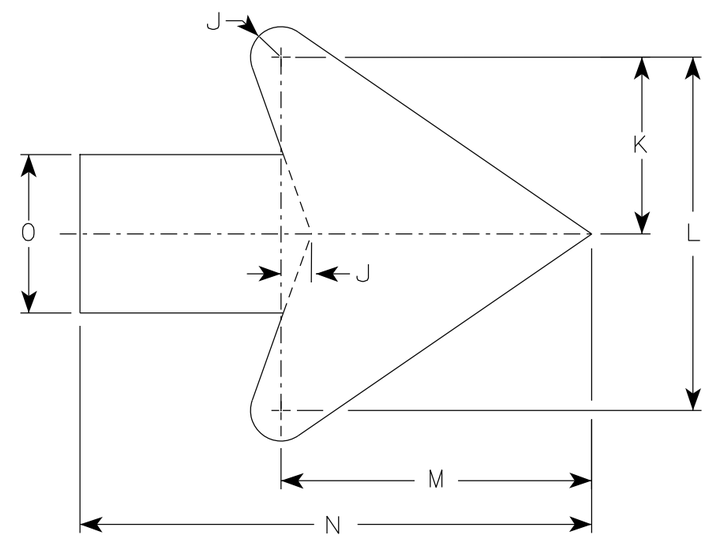

Arrow Detail

SIZE	A	B	C	D	E	F	G	H	I	J	K	L	M	N	O	P	Q	R	S	T	U	V	W	X	Y	Z	Area sq. ft.
1																											
2S	24		1 1/2	1/2	3/8		8	4	9 1/2	3/8	3 3/8	7 1/4	6 3/8	10 3/8	3 1/4												4.0
2M	24		1 1/2	1/2	3/8		8	4	9 1/2	3/8	3 3/8	7 1/4	6 3/8	10 3/8	3 1/4												4.0
3	30		1 7/8	1/2	5/8		10	5	11 7/8	3/4	4 1/2	9	7 7/8	13	4												6.25
4	36		2 1/4	1/2	5/8		12	6	14 1/4	1	5 1/2	10 7/8	9 5/8	15 3/4	4 3/4												9.0
5	48		3	3/4	1		16	8	19	1 1/4	7 1/4	14 1/2	12 3/4	21	6 1/4												16.0

STANDARD SIGN
W12-1D

WISCONSIN DEPT OF TRANSPORTATION

APPROVED Matthew R Rauch
for State Traffic Engineer

DATE 11/30/2023 PLATE NO. W12-1D.16

PROJECT NO: | HWY: | COUNTY: | SHEET NO: 196 | E

NOTES

1. Sign is Type II- Type F Reflective
2. Color:
   Background - Yellow
   Message - Black
3. Message Series - Lines 1 and 2 are Series D.
   Line 3 is series C.
4. Corners and borders shall be rounded on all base materials for this sign.

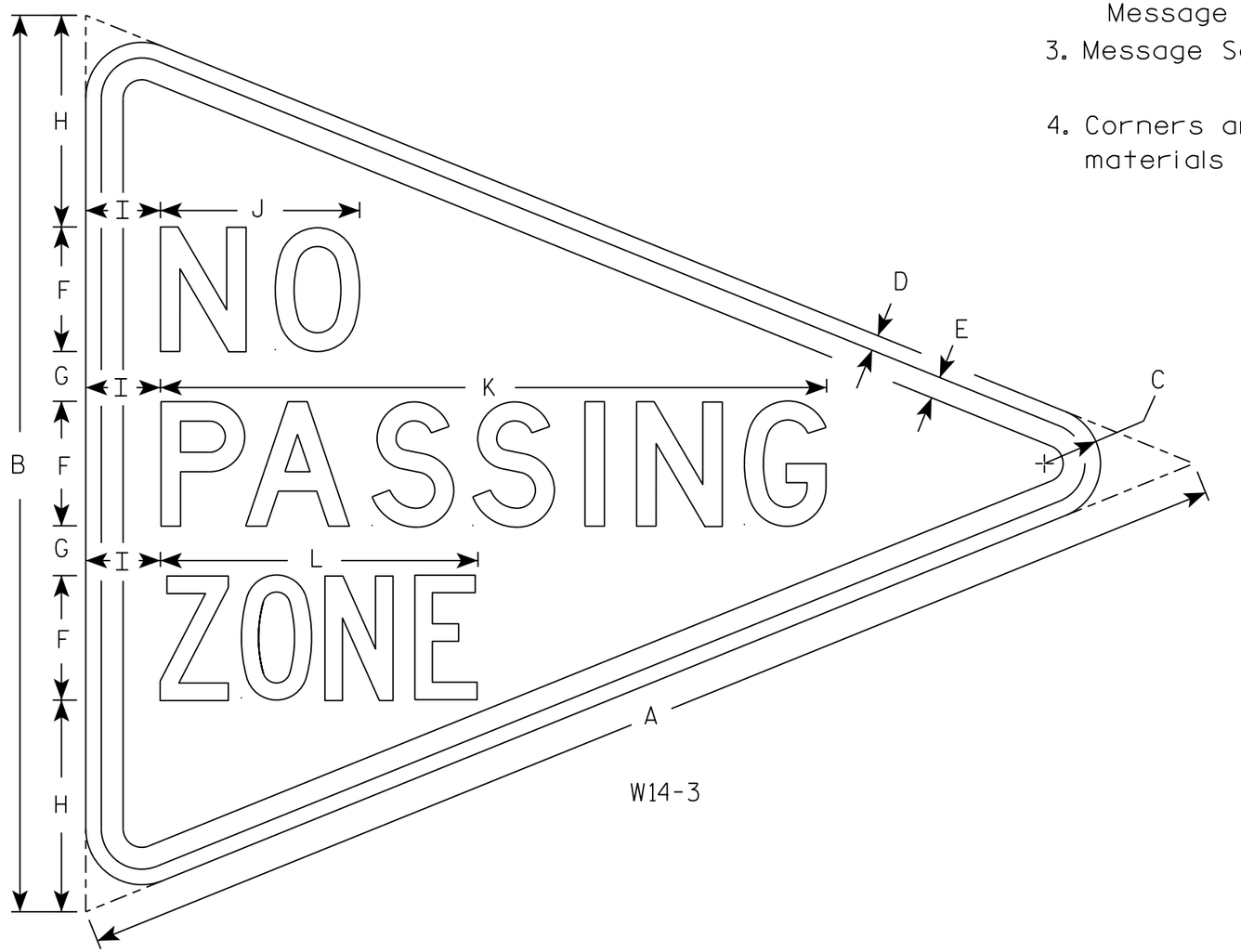

W14-3

SIZE	A	B	C	D	E	F	G	H	I	J	K	L	M	N	O	P	Q	R	S	T	U	V	W	X	Y	Z	Area sq. ft.
1																											
2S	48	36	2 1/4	5/8	7/8	5	2	8 1/2	3	8	26 3/4	12 3/4															5.56
2M																											
3																											
4																											
5																											

STANDARD SIGN
W14-3

WISCONSIN DEPT OF TRANSPORTATION

APPROVED Matthew R Rauch
for State Traffic Engineer
DATE 3/21/17 PLATE NO. W14-3.10

PROJECT NO: | HWY: | COUNTY: | SHEET NO: 197 | E

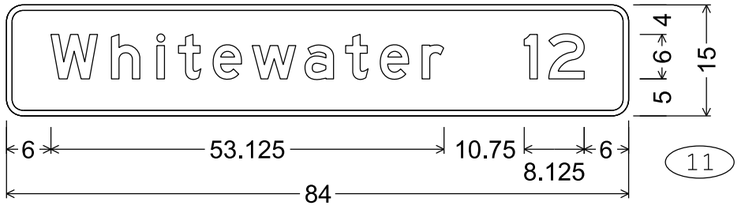

D2-1; 2.250" Radius, 0.750" Border

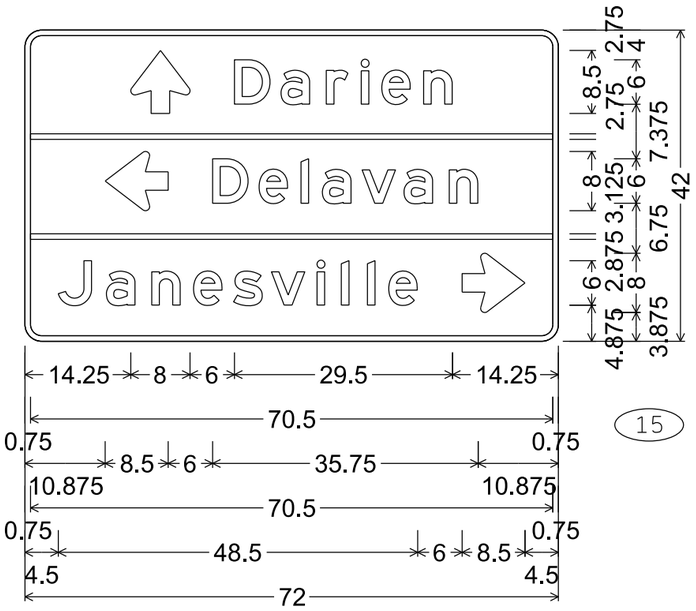

D1-3; 2.250" Radius, 0.750" Border

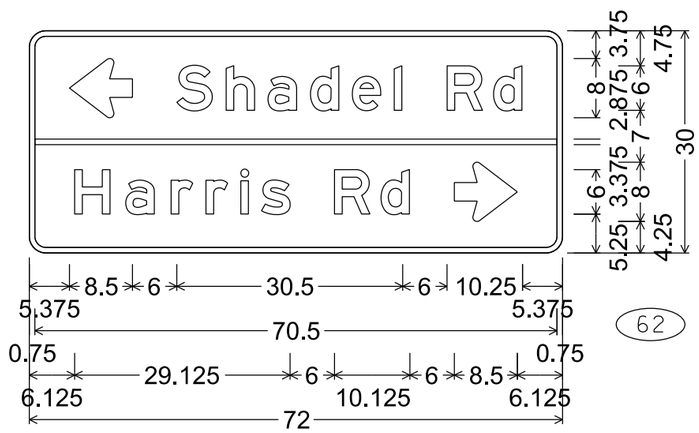

D1-2; 2.250" Radius, 0.750" Border

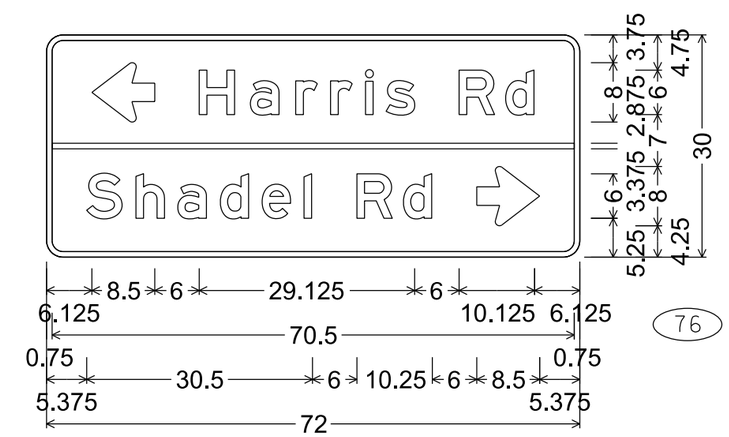

D1-2; 2.250" Radius, 0.750" Border

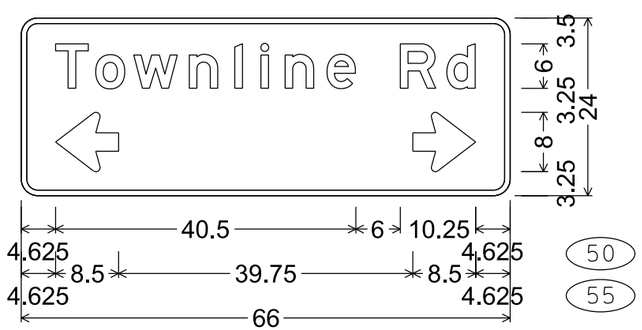

D1-61; 2.250" Radius, 0.750" Border

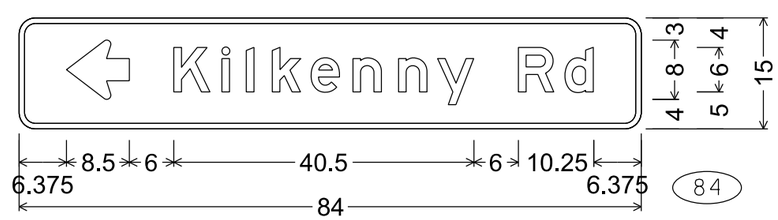

D1-1; 2.250" Radius, 0.750" Border

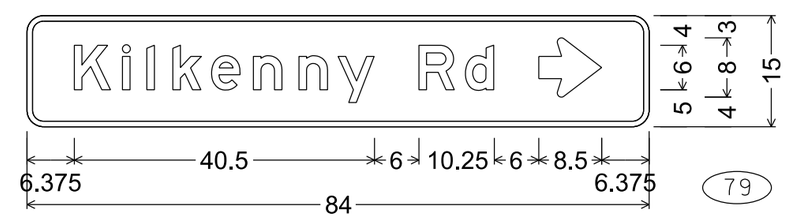

D1-1; 2.250" Radius, 0.750" Border

NOTES

1. Signs are Type II - Type H Reflective
2. Color:
   Background - Green
   Message - White
3. Message Series - E

7

7

NOTES

1. Sign is Type II - Type H Reflective
2. Color:
   Background - Brown
   Message - White
3. Message Series - D

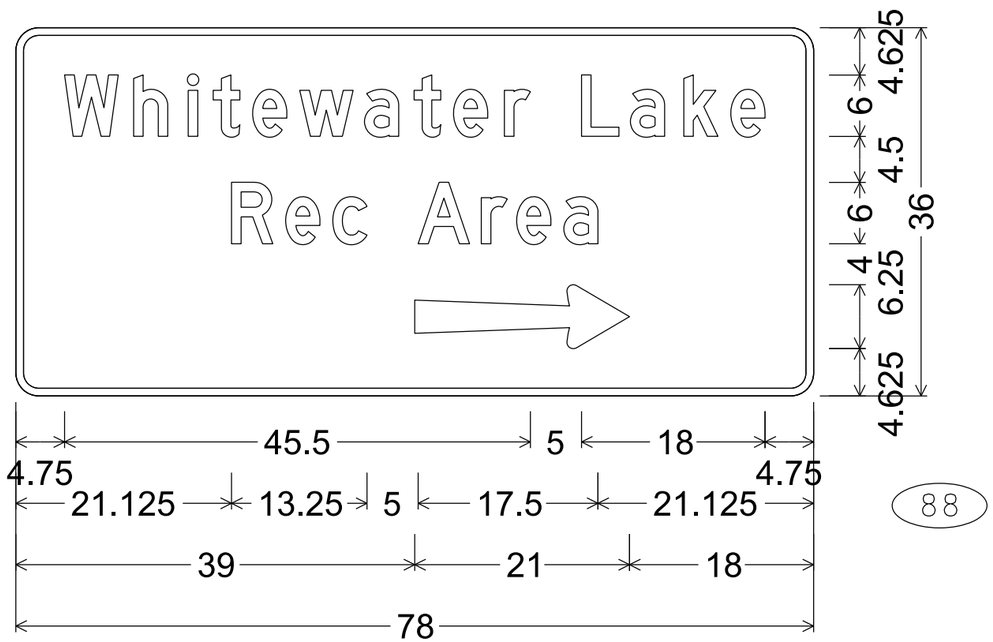

D5-66R; 2.250" Radius, 0.750" Border

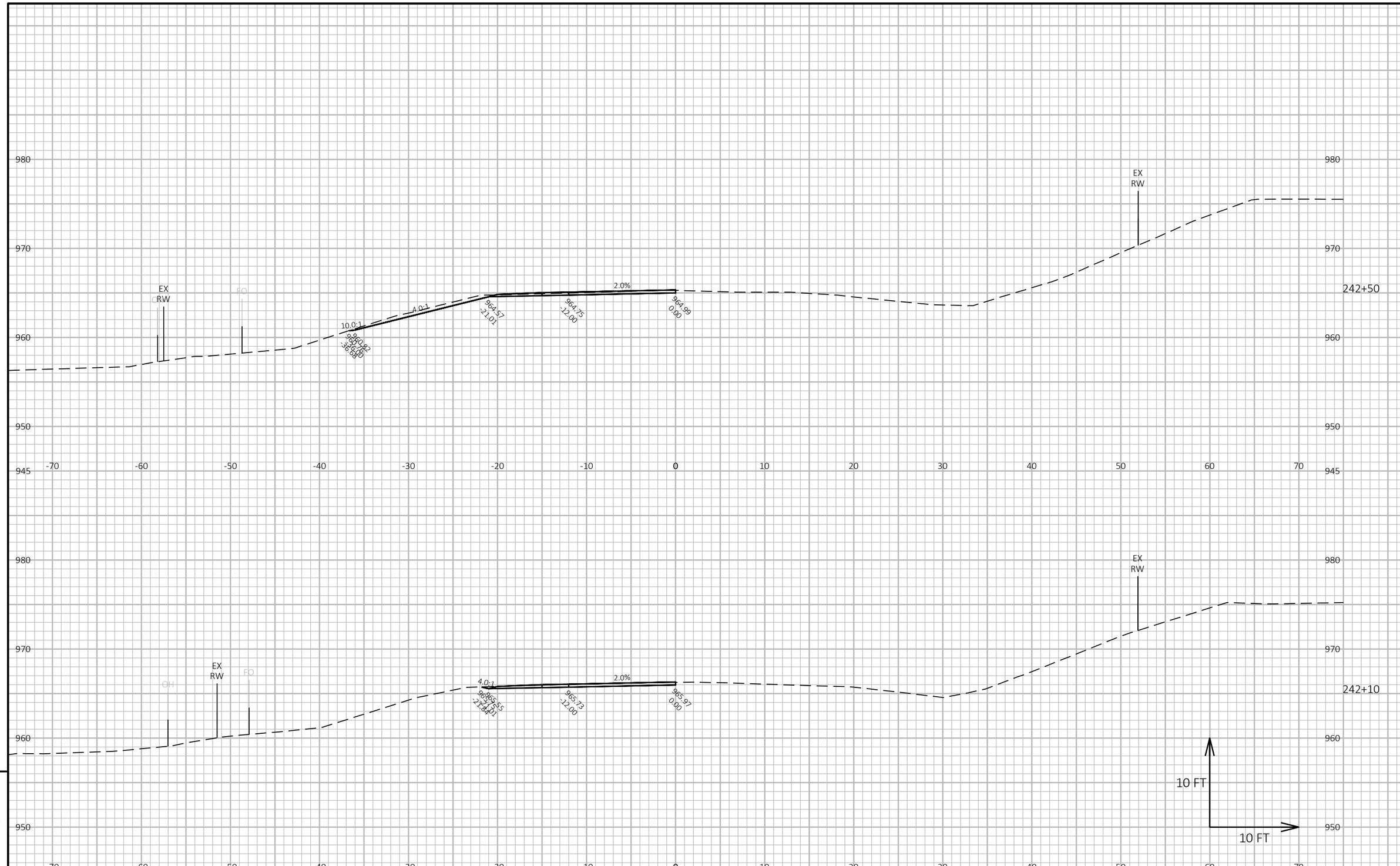

9

9

PROJECT NO: 3390-08-70	HWY: STH 89	COUNTY: WALWORTH	CROSS SECTIONS: BEAMGUARD REMOVAL	SHEET 200	E

FILE NAME : N:\PDS\C3D\33900800\SHEETSPLAN\BMGRD REMOVAL _XS.DWG
LAYOUT NAME - 15
PLOT DATE : 10/28/2025 12:50 PM
PLOT BY : THAO, PETER N
PLOT NAME :
PLOT SCALE : 1 IN:10 FT HORZ. / 1 IN:10 FT VERT.
WISDOT/CADDS SHEET 49

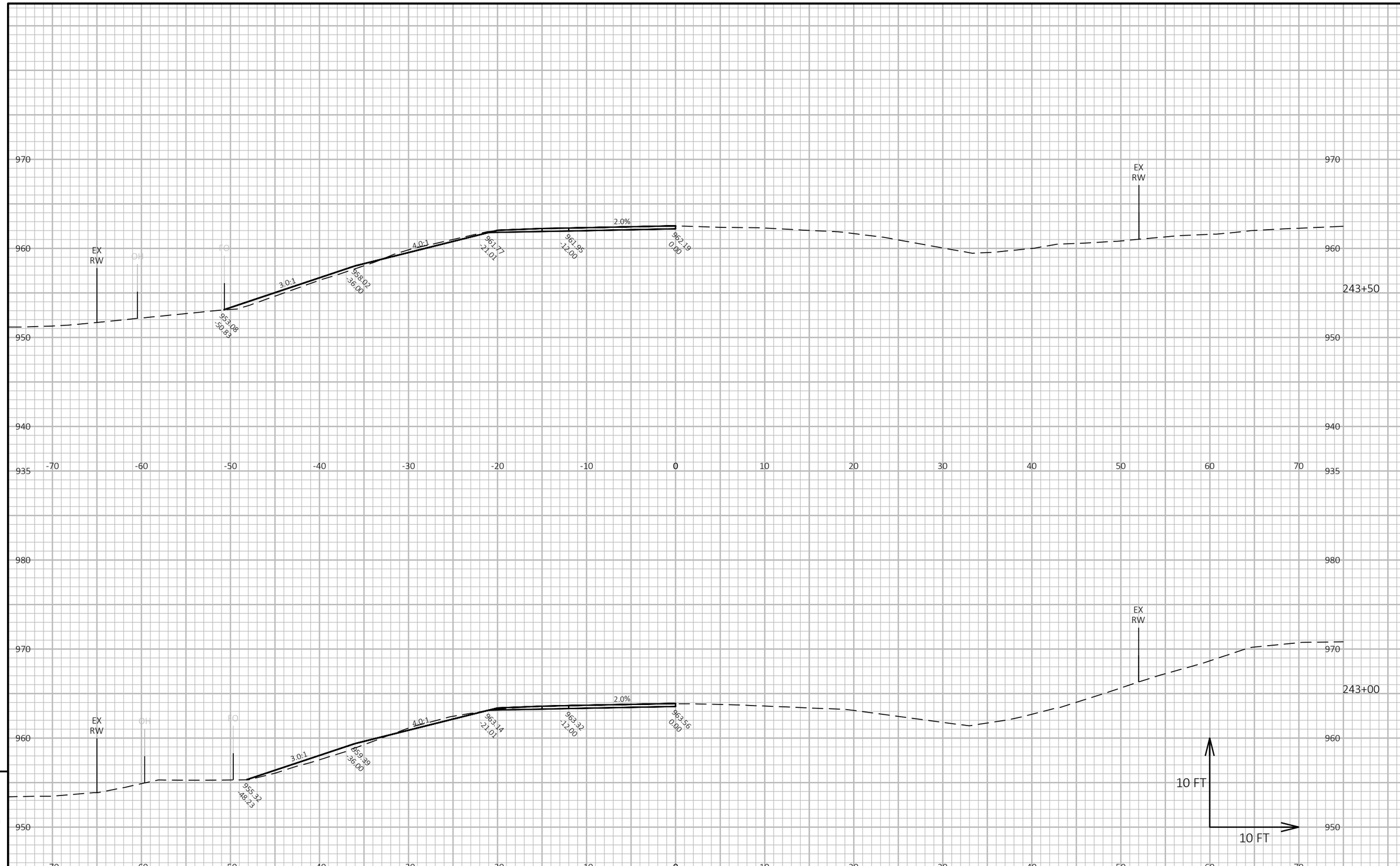

9

9

PROJECT NO: 3390-08-70	HWY: STH 89	COUNTY: WALWORTH	CROSS SECTIONS: BEAMGUARD REMOVAL	SHEET 201	E

FILE NAME : N:\PDS\C3D\33900800\SHEETSPLAN\BMGRD REMOVAL _XS.DWG
LAYOUT NAME - 16
PLOT DATE : 10/28/2025 12:51 PM
PLOT BY : THAO, PETER N
PLOT NAME :
PLOT SCALE : 1 IN:10 FT HORZ. / 1 IN:10 FT VERT.
WISDOT/CADDS SHEET 49

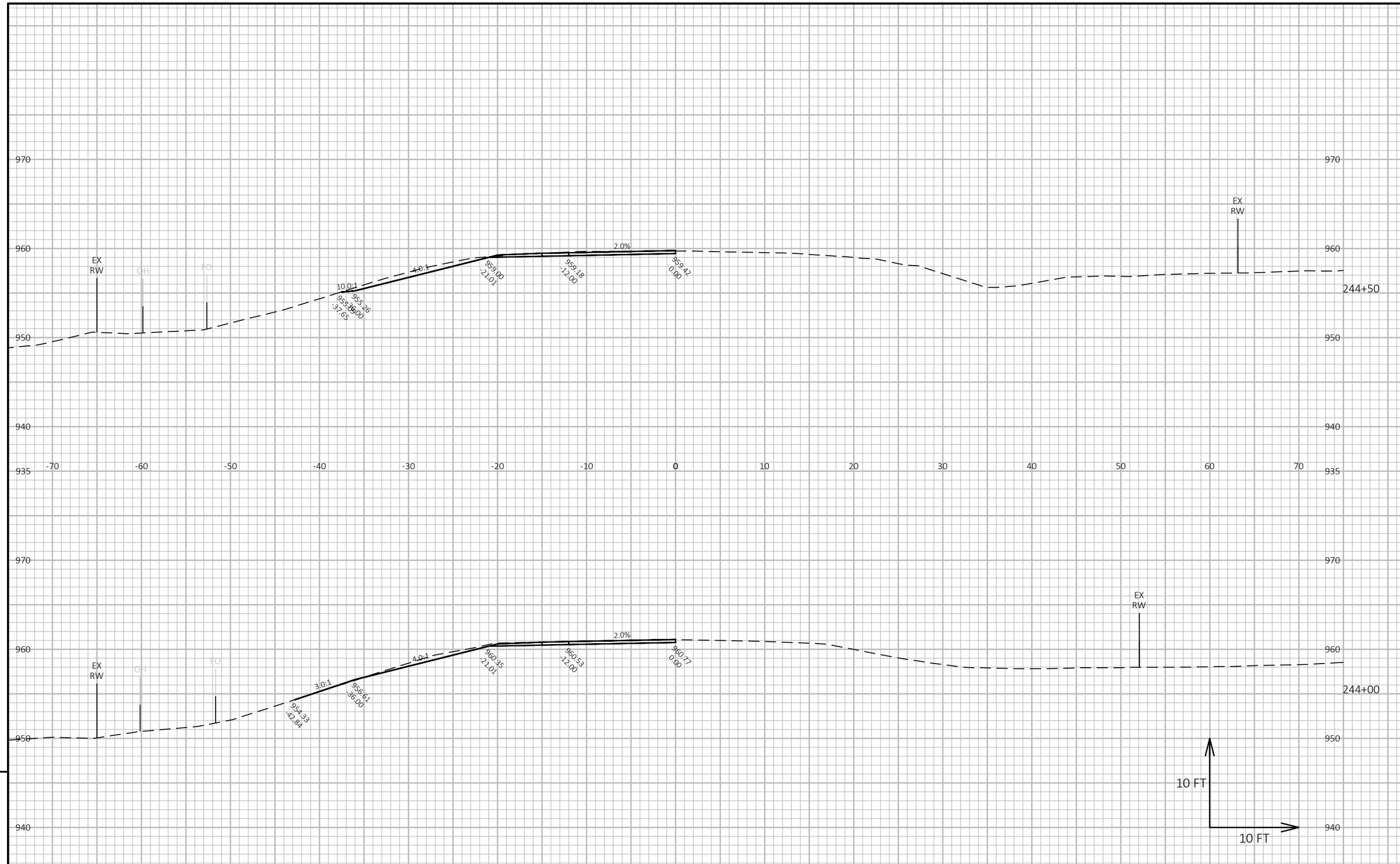

9

9

PROJECT NO: 3390-08-70	HWY: STH 89	COUNTY: WALWORTH	CROSS SECTIONS: BEAMGUARD REMOVAL	SHEET 202	E

FILE NAME : N:\PDS\C3D\33900800\SHEETSPLAN\BMGRD REMOVAL _XS.DWG
LAYOUT NAME - 17
PLOT DATE : 10/28/2025 12:51 PM
PLOT BY : THAO, PETER N
PLOT NAME :
PLOT SCALE : 1 IN:10 FT HORZ. / 1 IN:10 FT VERT.
WISDOT/CADDS SHEET 49

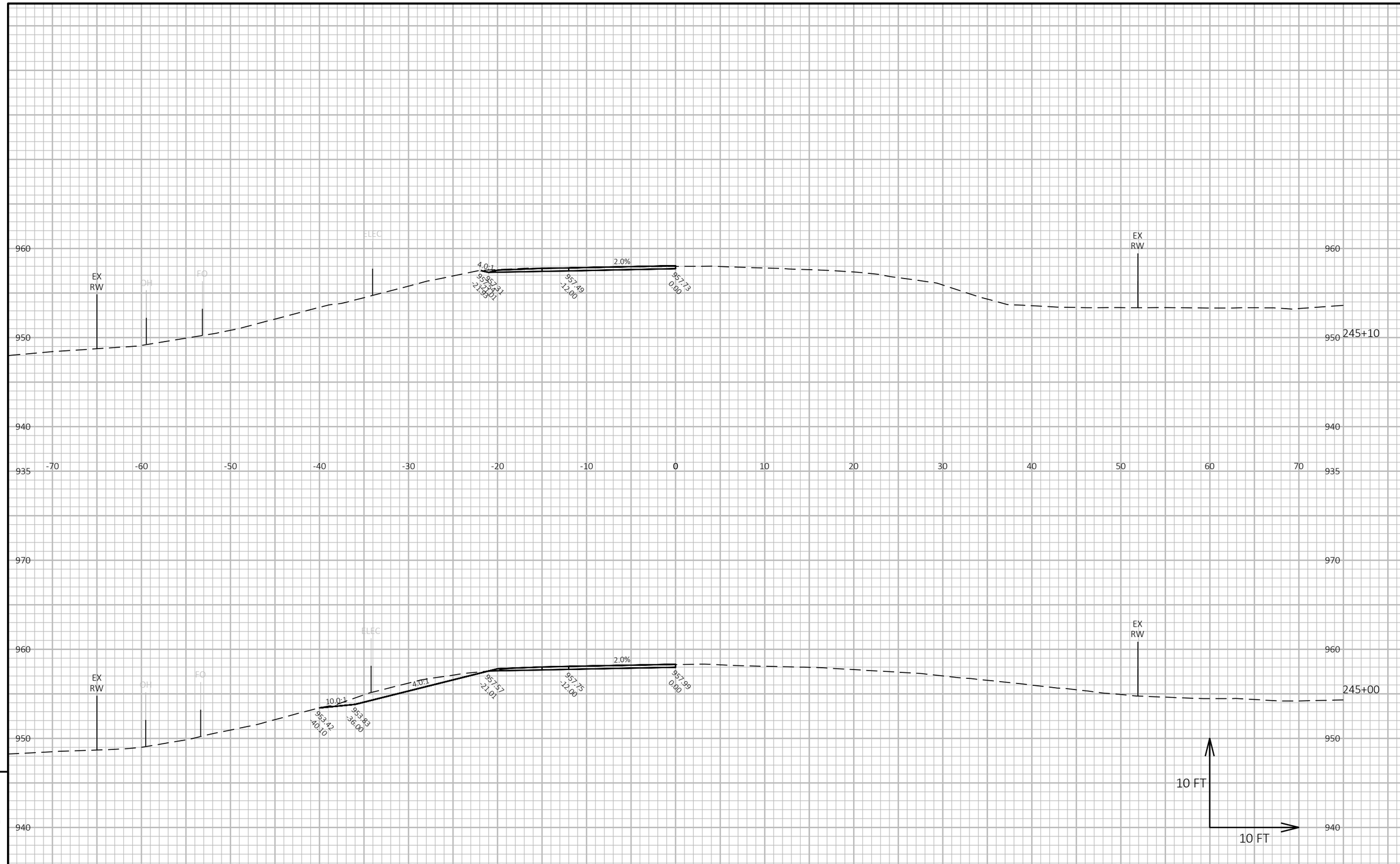

9

9

PROJECT NO: 3390-08-70	HWY: STH 89	COUNTY: WALWORTH	CROSS SECTIONS: BEAMGUARD REMOVAL	SHEET 203	E

FILE NAME : N:\PDS\C3D\33900800\SHEETSPLAN\BMGRD REMOVAL _XS.DWG
LAYOUT NAME - 18
PLOT DATE : 10/28/2025 12:51 PM
PLOT BY : THAO, PETER N
PLOT NAME :
PLOT SCALE : 1 IN:10 FT HORZ. / 1 IN:10 FT VERT.
WISDOT/CADDS SHEET 49

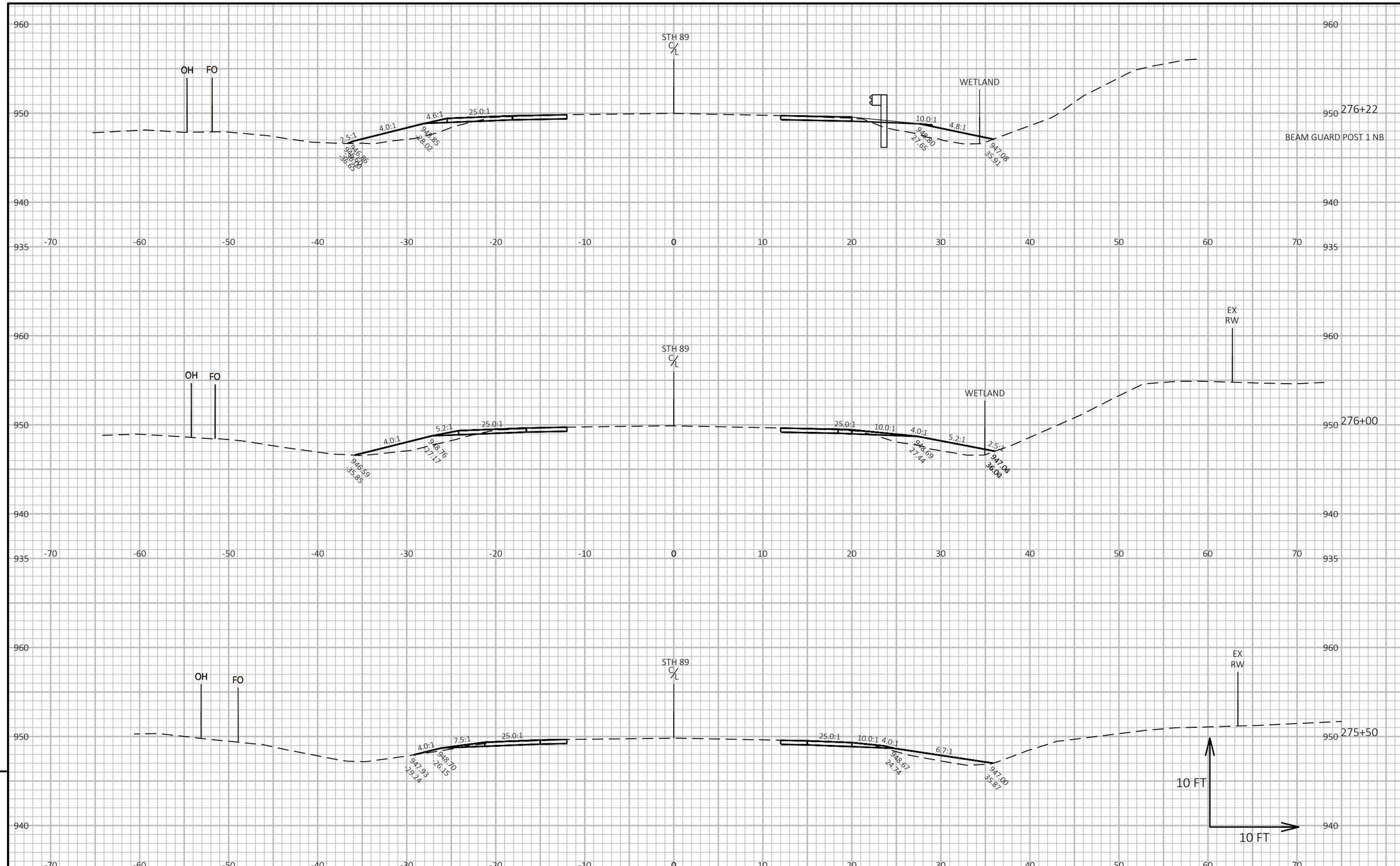

9

9

PROJECT NO: 3390-08-00	HWY: STH 89	COUNTY: WALWORTH	CROSS SECTIONS: STH 89	SHEET 204	E

FILE NAME : N:\PDS\C3D\33900800\SHEETSPLAN\090201-XS_BG.DWG
LAYOUT NAME - 52
PLOT DATE : 10/8/2025 10:35 AM
PLOT BY : BASS, ZORRIS L
PLOT NAME :
PLOT SCALE : 1 IN:10 FT HORZ. / 1 IN:10 FT VERT.
WISDOT/CADDS SHEET 49

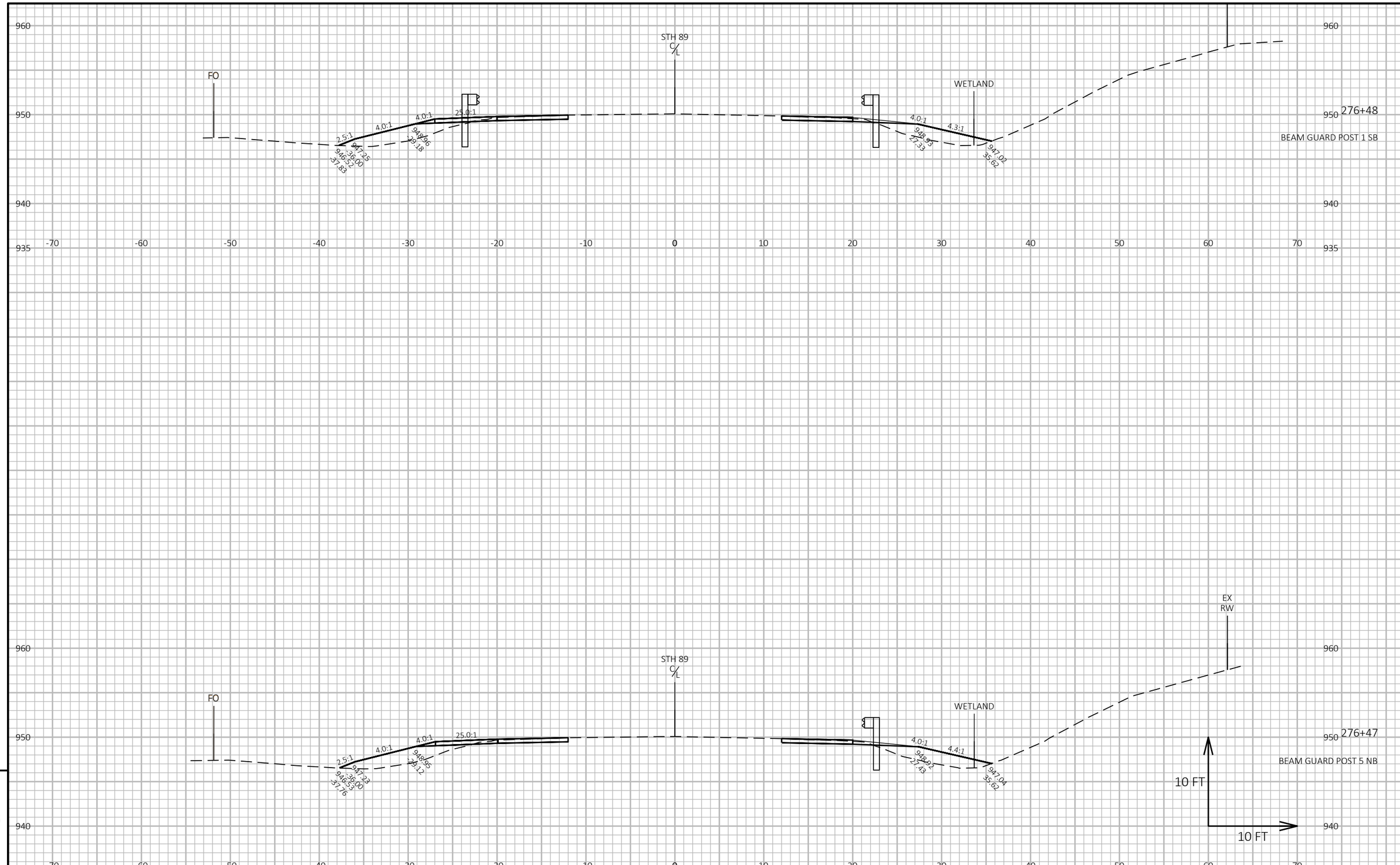

PROJECT NO: 3390-08-00	HWY: STH 89	COUNTY: WALWORTH	CROSS SECTIONS: STH 89	SHEET 205	E

FILE NAME : N:\PDS\C3D\33900800\SHEETSPLAN\090201-XS_BG.DWG
LAYOUT NAME - 53
PLOT DATE : 10/8/2025 10:35 AM
PLOT BY : BASS, ZORRIS L
PLOT NAME :
PLOT SCALE : 1 IN:10 FT HORZ. / 1 IN:10 FT VERT.
WISDOT/CADDS SHEET 49

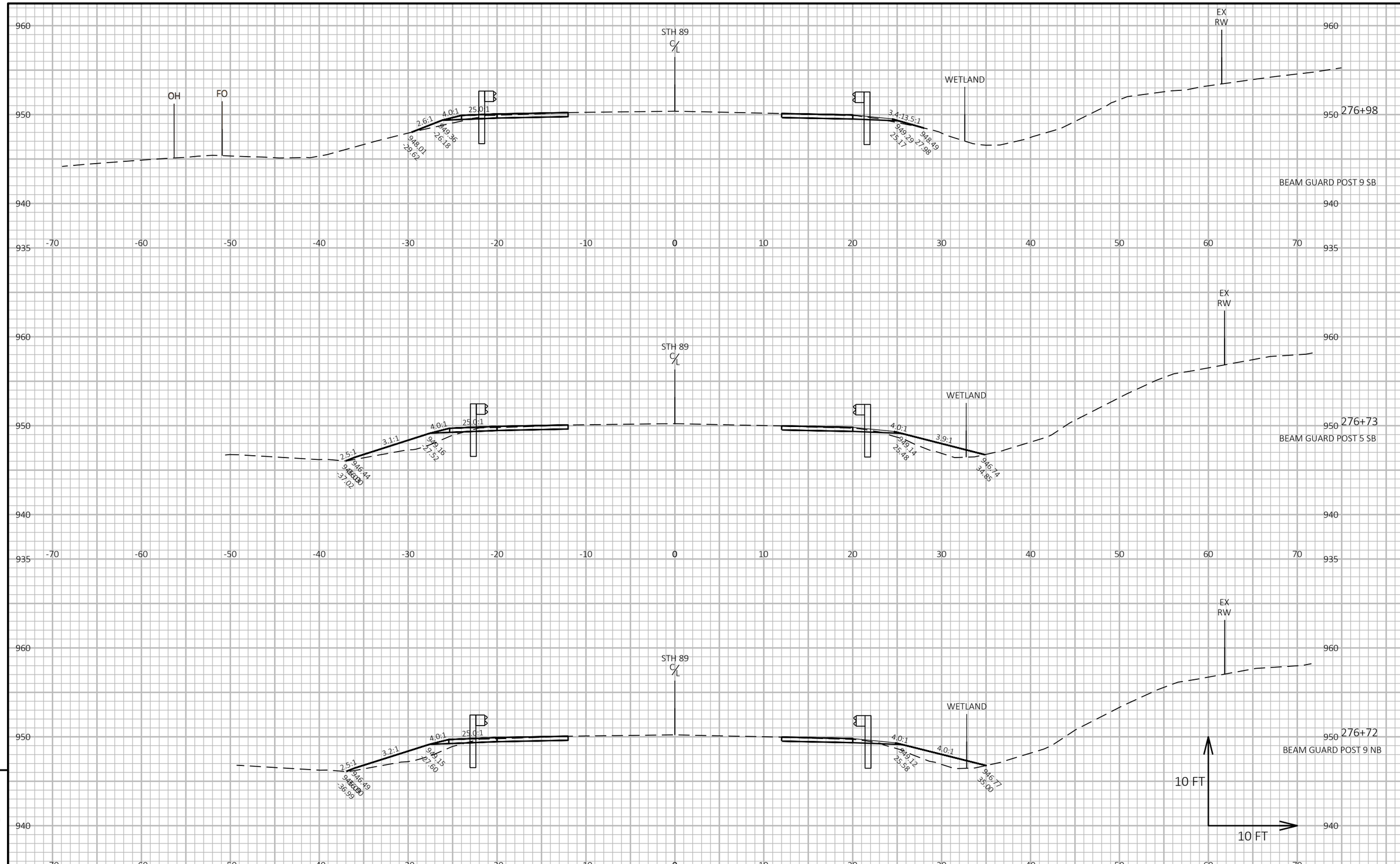

9

9

PROJECT NO: 3390-08-00	HWY: STH 89	COUNTY: WALWORTH	CROSS SECTIONS: STH 89	SHEET 206	E

FILE NAME : N:\PDS\C3D\33900800\SHEETSPLAN\090201-XS_BG.DWG
LAYOUT NAME - 54
PLOT DATE : 10/8/2025 10:36 AM
PLOT BY : BASS, ZORRIS L
PLOT NAME :
PLOT SCALE : 1 IN:10 FT HORZ. / 1 IN:10 FT VERT.
WISDOT/CADDS SHEET 49

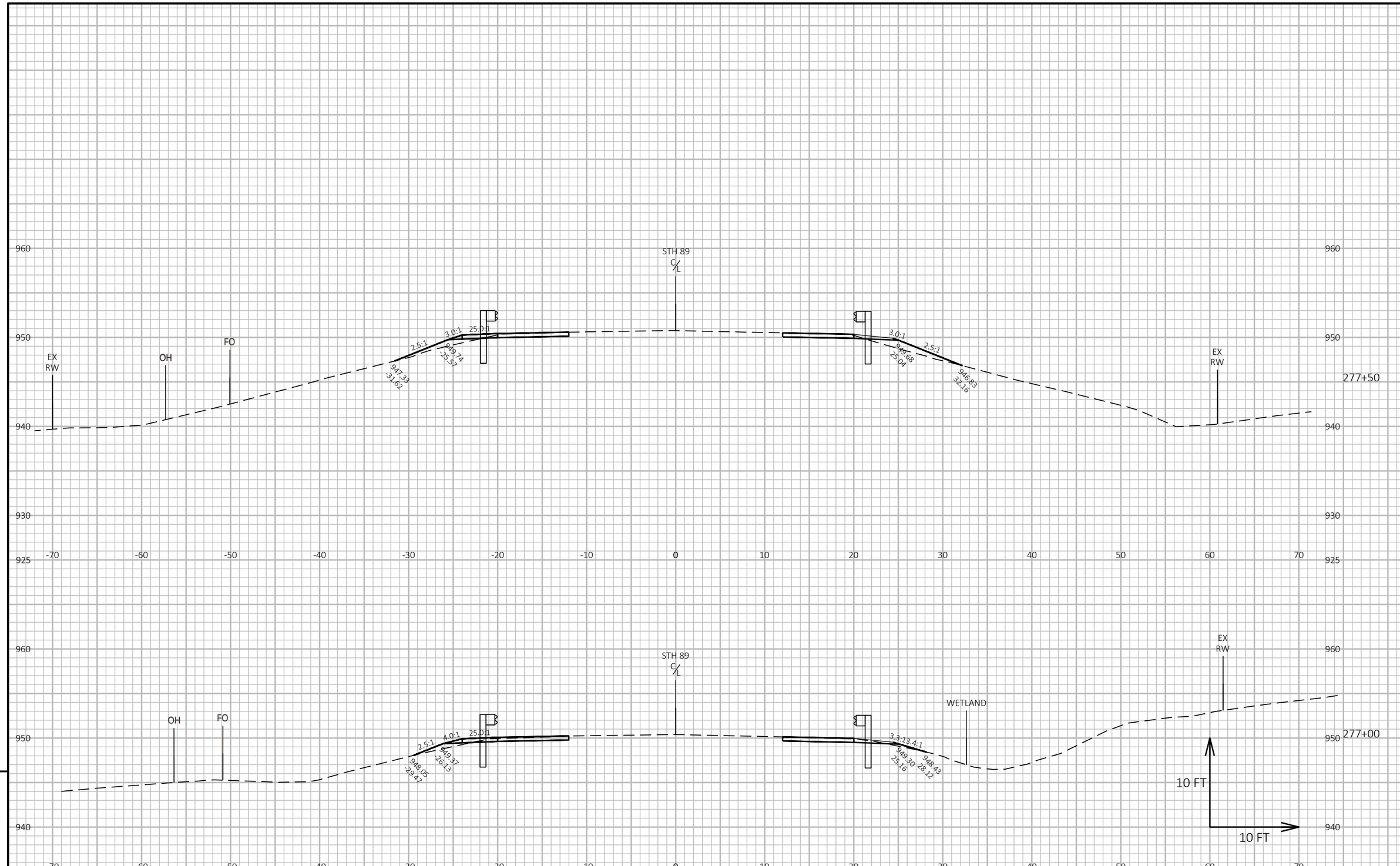

PROJECT NO: 3390-08-00	HWY: STH 89	COUNTY: WALWORTH	CROSS SECTIONS: STH 89	SHEET 207	E

FILE NAME : N:\PDS\C3D\33900800\SHEETSPLAN\090201-XS_BG.DWG
LAYOUT NAME - 55
PLOT DATE : 10/8/2025 10:36 AM
PLOT BY : BASS, ZORRIS L
PLOT NAME :
PLOT SCALE : 1 IN:10 FT HORZ. / 1 IN:10 FT VERT.
WISDOT/CADDS SHEET 49

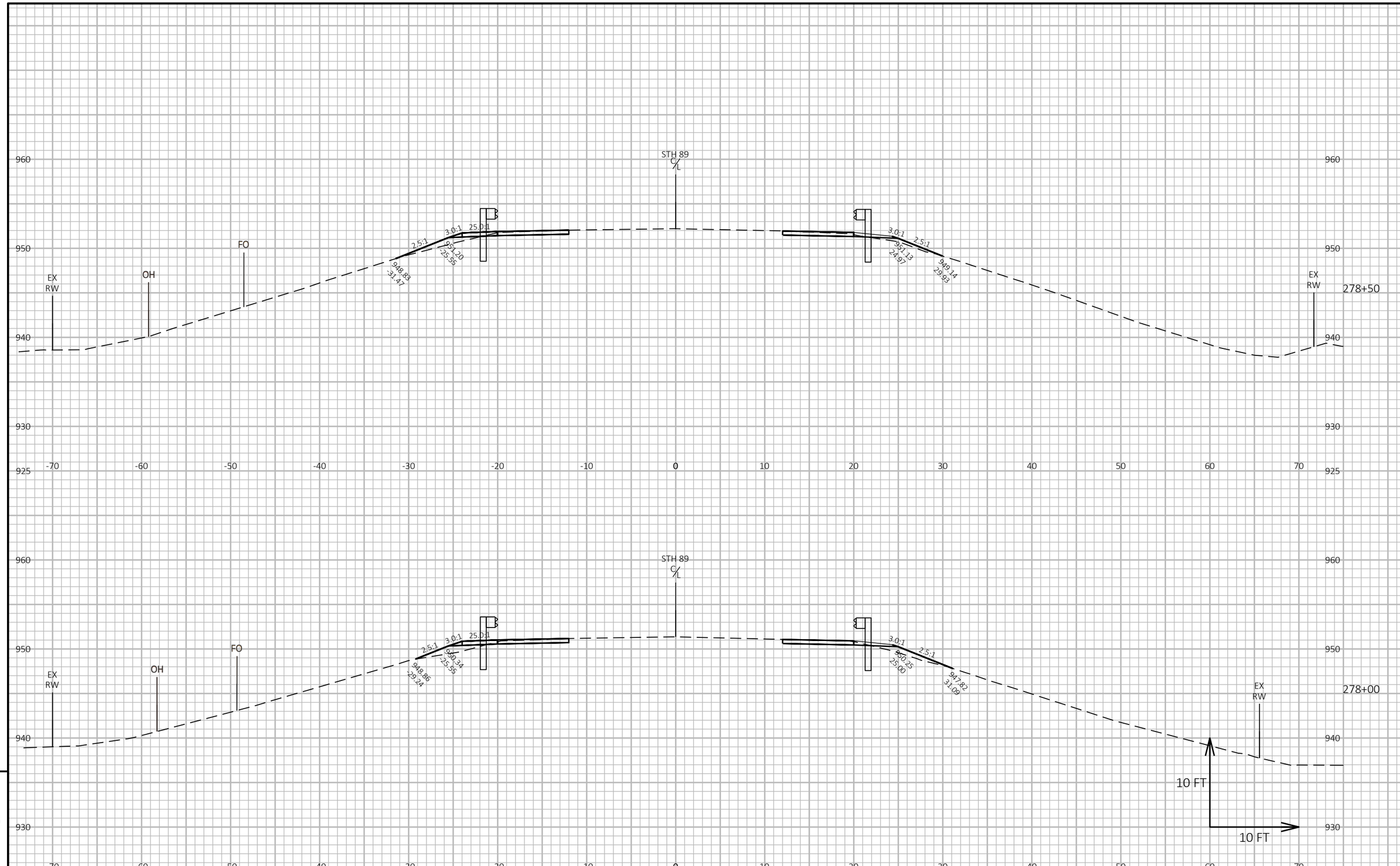

9

9

PROJECT NO: 3390-08-00	HWY: STH 89	COUNTY: WALWORTH	CROSS SECTIONS: STH 89	SHEET 208	E

FILE NAME : N:\PDS\C3D\33900800\SHEETSPLAN\090201-XS_BG.DWG
LAYOUT NAME - 56
PLOT DATE : 10/8/2025 10:36 AM
PLOT BY : BASS, ZORRIS L
PLOT NAME :
PLOT SCALE : 1 IN:10 FT HORZ. / 1 IN:10 FT VERT.
WISDOT/CADDS SHEET 49

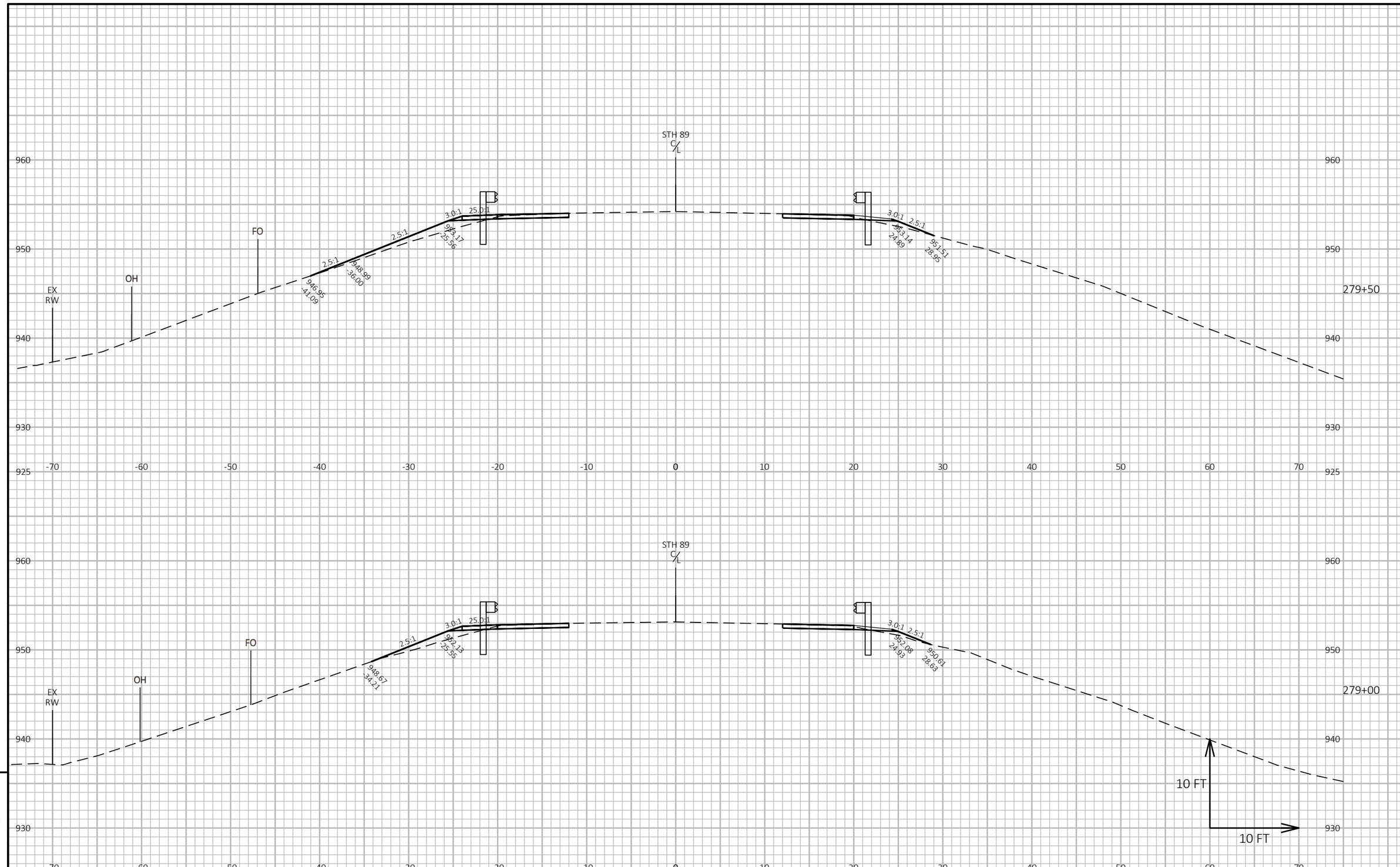

9

9

PROJECT NO: 3390-08-00	HWY: STH 89	COUNTY: WALWORTH	CROSS SECTIONS: STH 89	SHEET 209	E

FILE NAME : N:\PDS\C3D\33900800\SHEETSPLAN\090201-XS_BG.DWG
LAYOUT NAME - 57
PLOT DATE : 10/8/2025 10:36 AM
PLOT BY : BASS, ZORRIS L
PLOT NAME :
PLOT SCALE : 1 IN:10 FT HORZ. / 1 IN:10 FT VERT.
WISDOT/CADDS SHEET 49

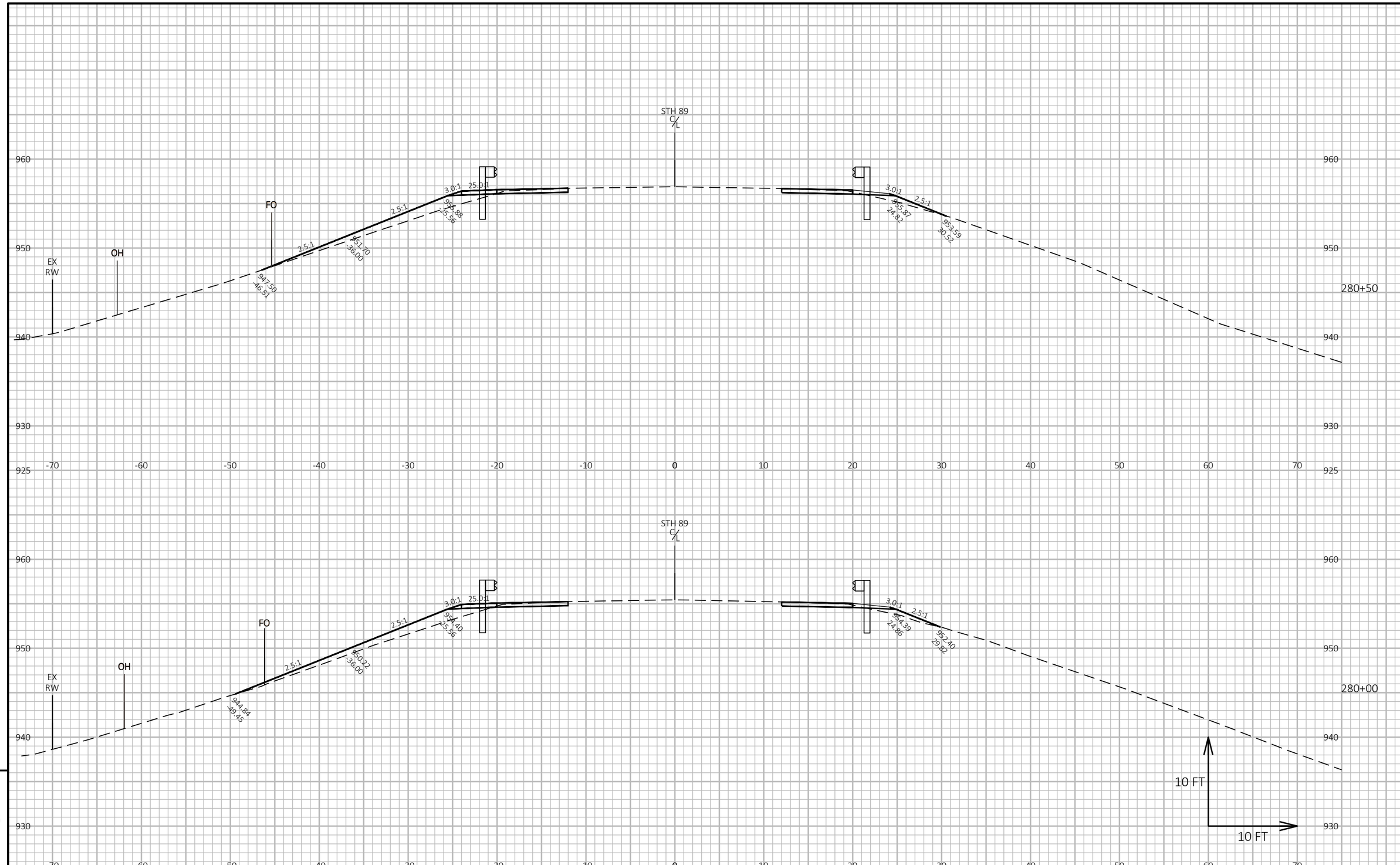

PROJECT NO: 3390-08-00	HWY: STH 89	COUNTY: WALWORTH	CROSS SECTIONS: STH 89	SHEET 210	E

FILE NAME : N:\PDS\C3D\33900800\SHEETSPLAN\090201-XS_BG.DWG
LAYOUT NAME - 58
PLOT DATE : 10/8/2025 10:36 AM
PLOT BY : BASS, ZORRIS L
PLOT NAME :
PLOT SCALE : 1 IN:10 FT HORZ. / 1 IN:10 FT VERT.
WISDOT/CADDS SHEET 49

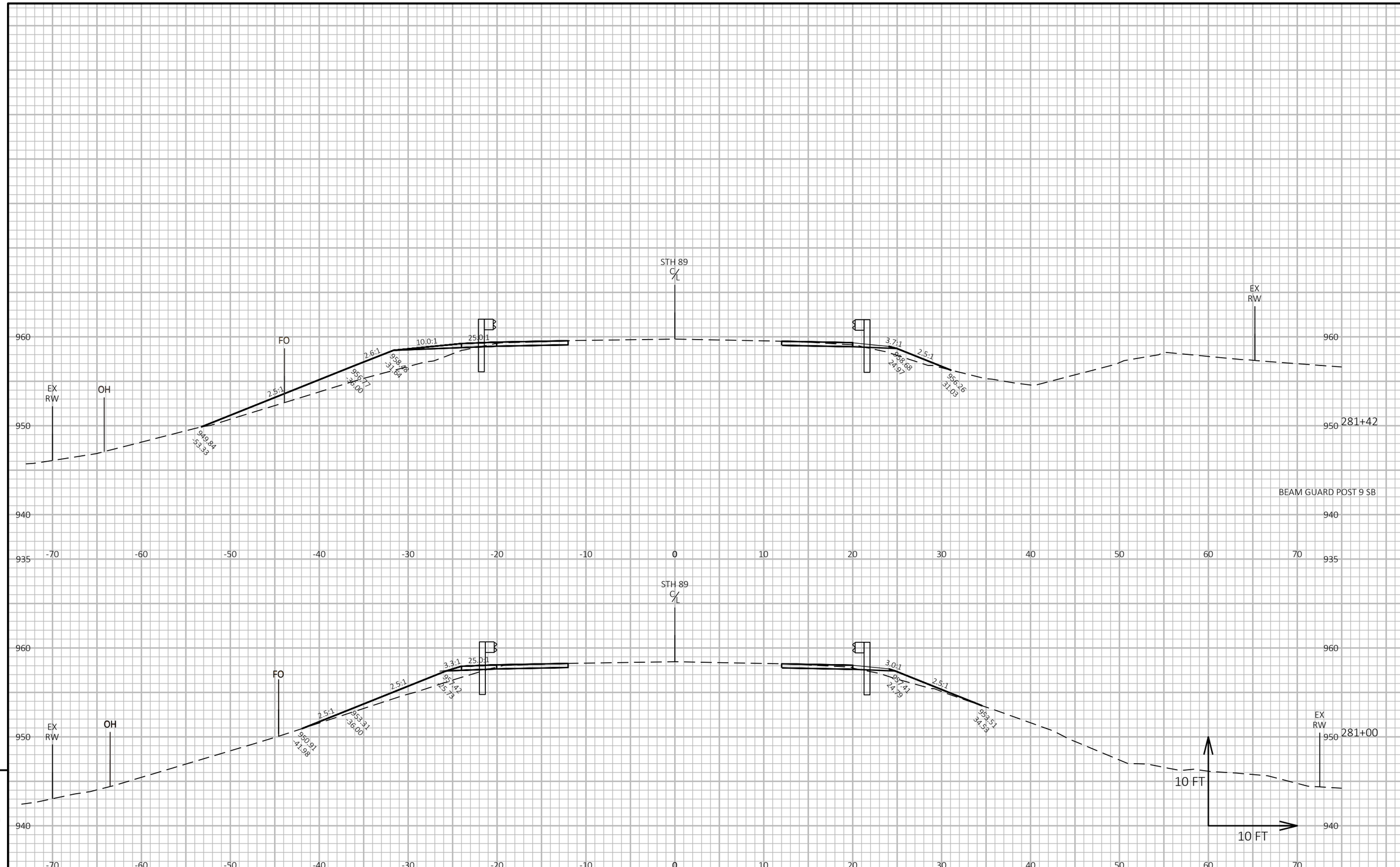

9

9

PROJECT NO: 3390-08-00	HWY: STH 89	COUNTY: WALWORTH	CROSS SECTIONS: STH 89	SHEET 211	E

FILE NAME : N:\PDS\C3D\33900800\SHEETSPLAN\090201-XS_BG.DWG
LAYOUT NAME - 59
PLOT DATE : 10/8/2025 10:36 AM
PLOT BY : BASS, ZORRIS L
PLOT NAME :
PLOT SCALE : 1 IN:10 FT HORZ. / 1 IN:10 FT VERT.
WISDOT/CADDS SHEET 49

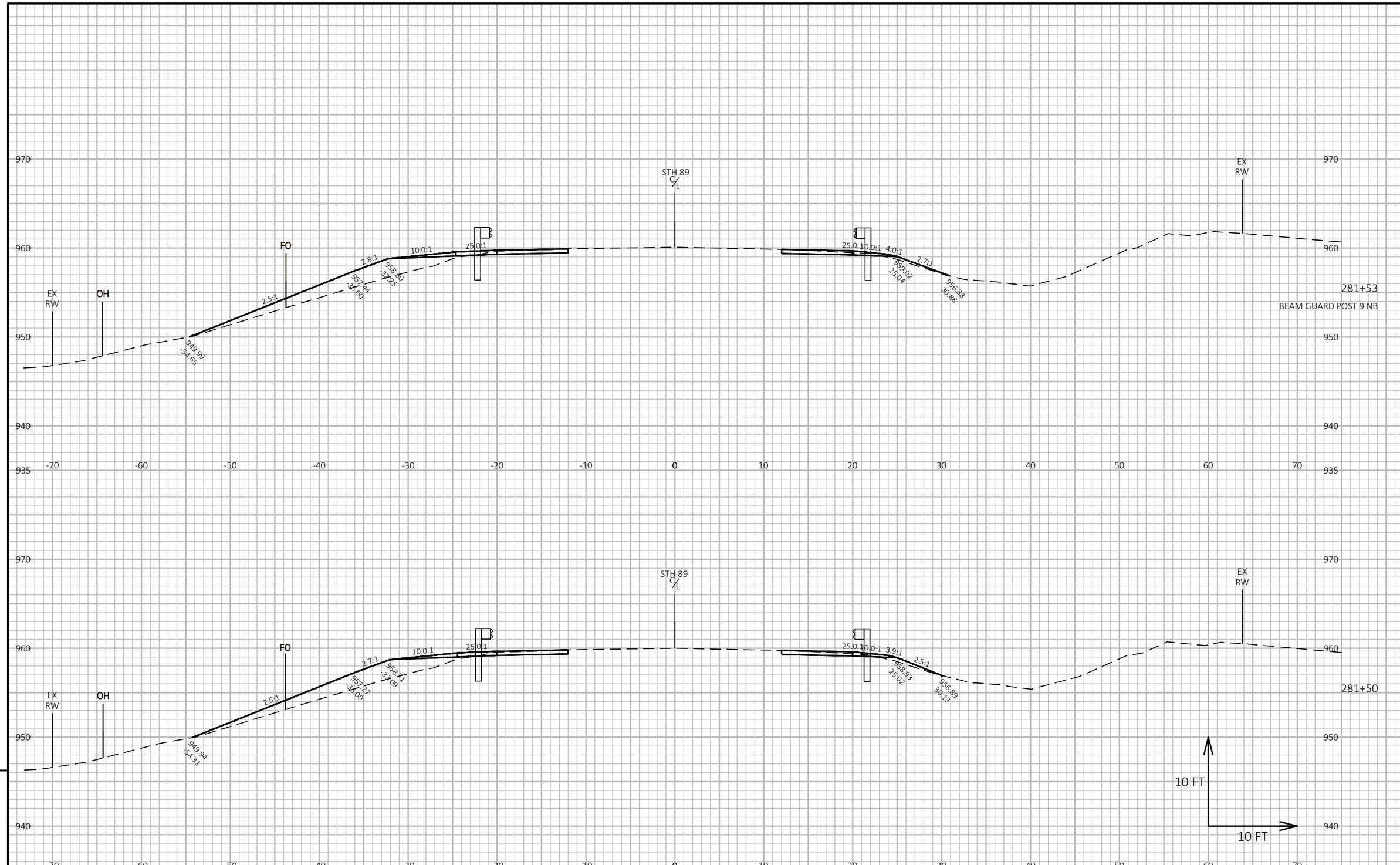

PROJECT NO: 3390-08-00	HWY: STH 89	COUNTY: WALWORTH	CROSS SECTIONS: STH 89	SHEET 212	E

FILE NAME : N:\PDS\C3D\33900800\SHEETSPLAN\090201-XS_BG.DWG
LAYOUT NAME - 60
PLOT DATE : 10/8/2025 10:36 AM
PLOT BY : BASS, ZORRIS L
PLOT NAME :
PLOT SCALE : 1 IN:10 FT HORZ. / 1 IN:10 FT VERT.
WISDOT/CADDS SHEET 49

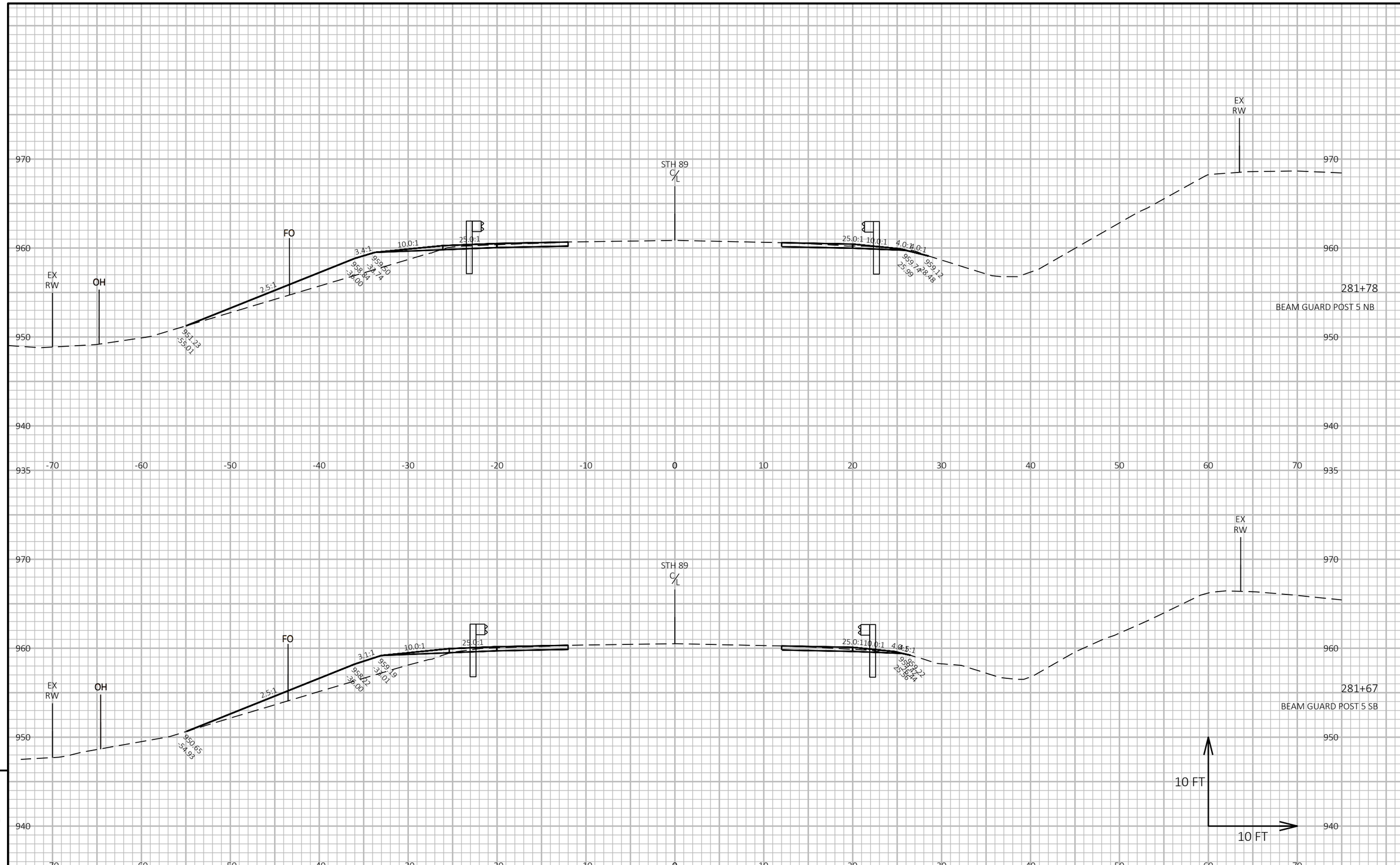

9

9

PROJECT NO: 3390-08-00	HWY: STH 89	COUNTY: WALWORTH	CROSS SECTIONS: STH 89	SHEET 213	E

FILE NAME : N:\PDS\C3D\33900800\SHEETSPLAN\090201-XS_BG.DWG
LAYOUT NAME - 61
PLOT DATE : 10/8/2025 10:36 AM
PLOT BY : BASS, ZORRIS L
PLOT NAME :
PLOT SCALE : 1 IN:10 FT HORZ. / 1 IN:10 FT VERT.
WISDOT/CADDS SHEET 49

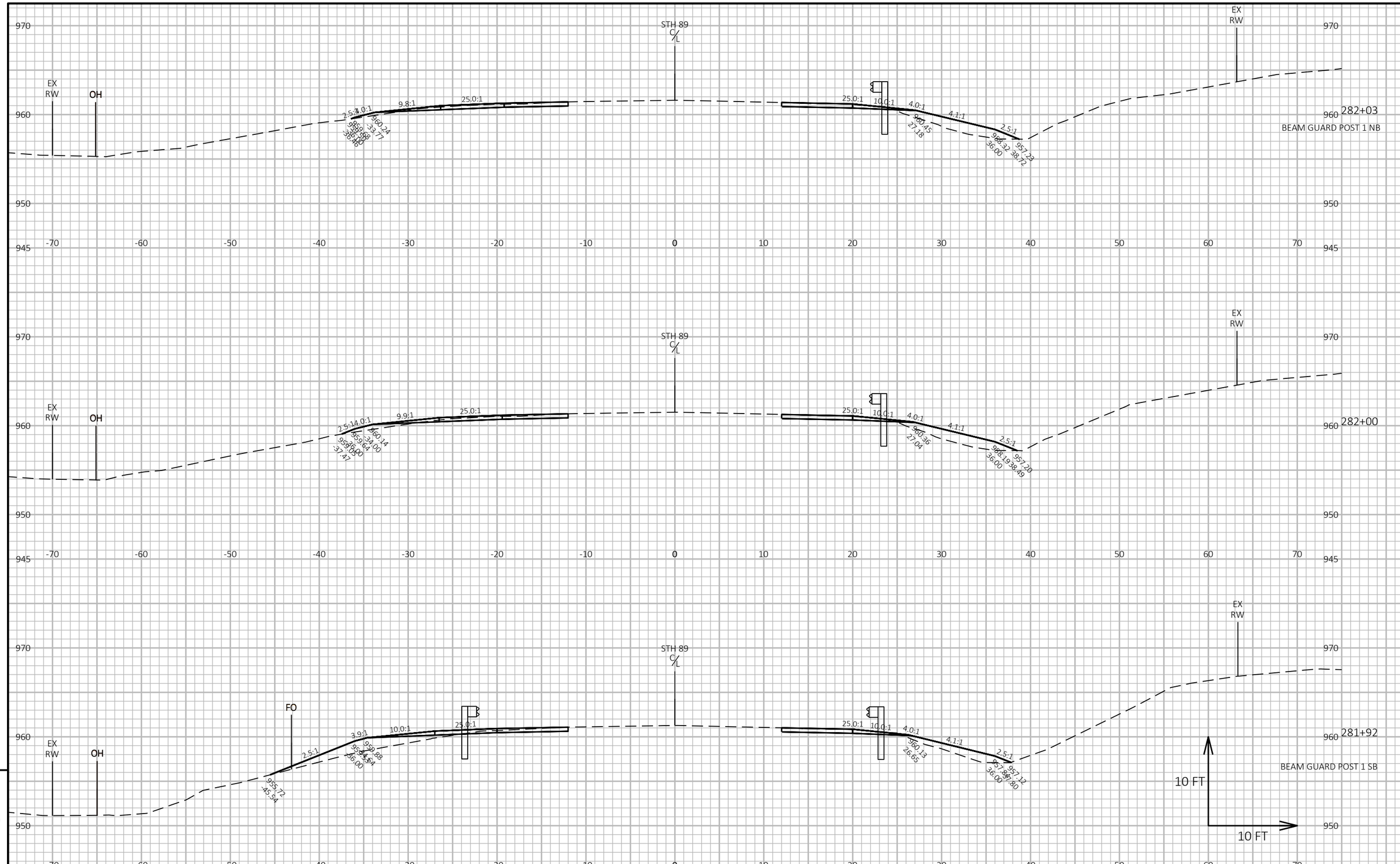

PROJECT NO: 3390-08-00	HWY: STH 89	COUNTY: WALWORTH	CROSS SECTIONS: STH 89	SHEET 214	E

FILE NAME : N:\PDS\C3D\33900800\SHEETSPLAN\090201-XS_BG.DWG
LAYOUT NAME - 62
PLOT DATE : 10/8/2025 10:36 AM
PLOT BY : BASS, ZORRIS L
PLOT NAME :
PLOT SCALE : 1 IN:10 FT HORZ. / 1 IN:10 FT VERT.
WISDOT/CADDS SHEET 49

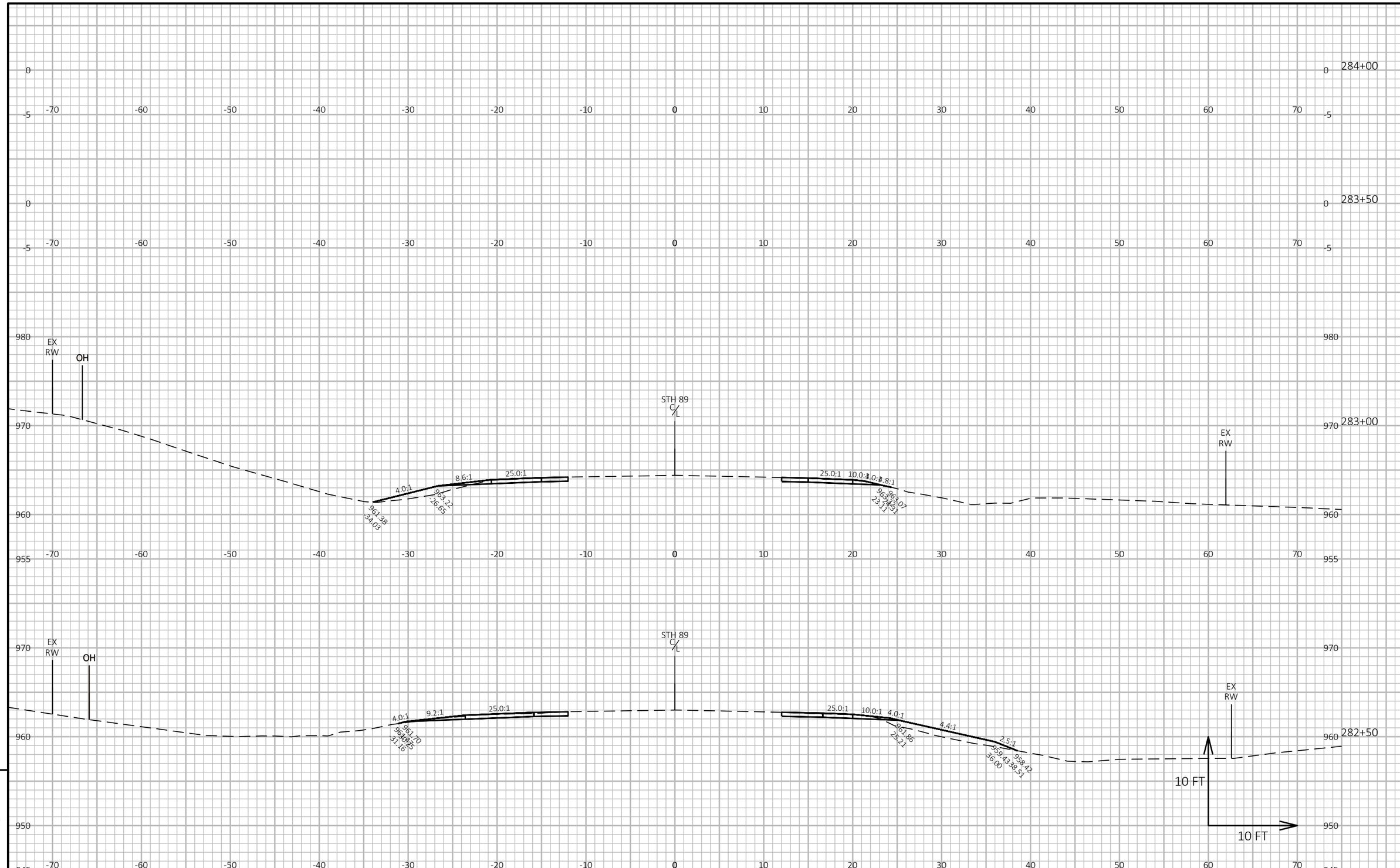

PROJECT NO: 3390-08-00	HWY: STH 89	COUNTY: WALWORTH	CROSS SECTIONS: STH 89	SHEET 215	E

FILE NAME : N:\PDS\C3D\33900800\SHEETSPLAN\090201-XS_BG.DWG
LAYOUT NAME - 63
PLOT DATE : 10/8/2025 10:36 AM
PLOT BY : BASS, ZORRIS L
PLOT NAME :
PLOT SCALE : 1 IN:10 FT HORZ. / 1 IN:10 FT VERT.
WISDOT/CADDS SHEET 49

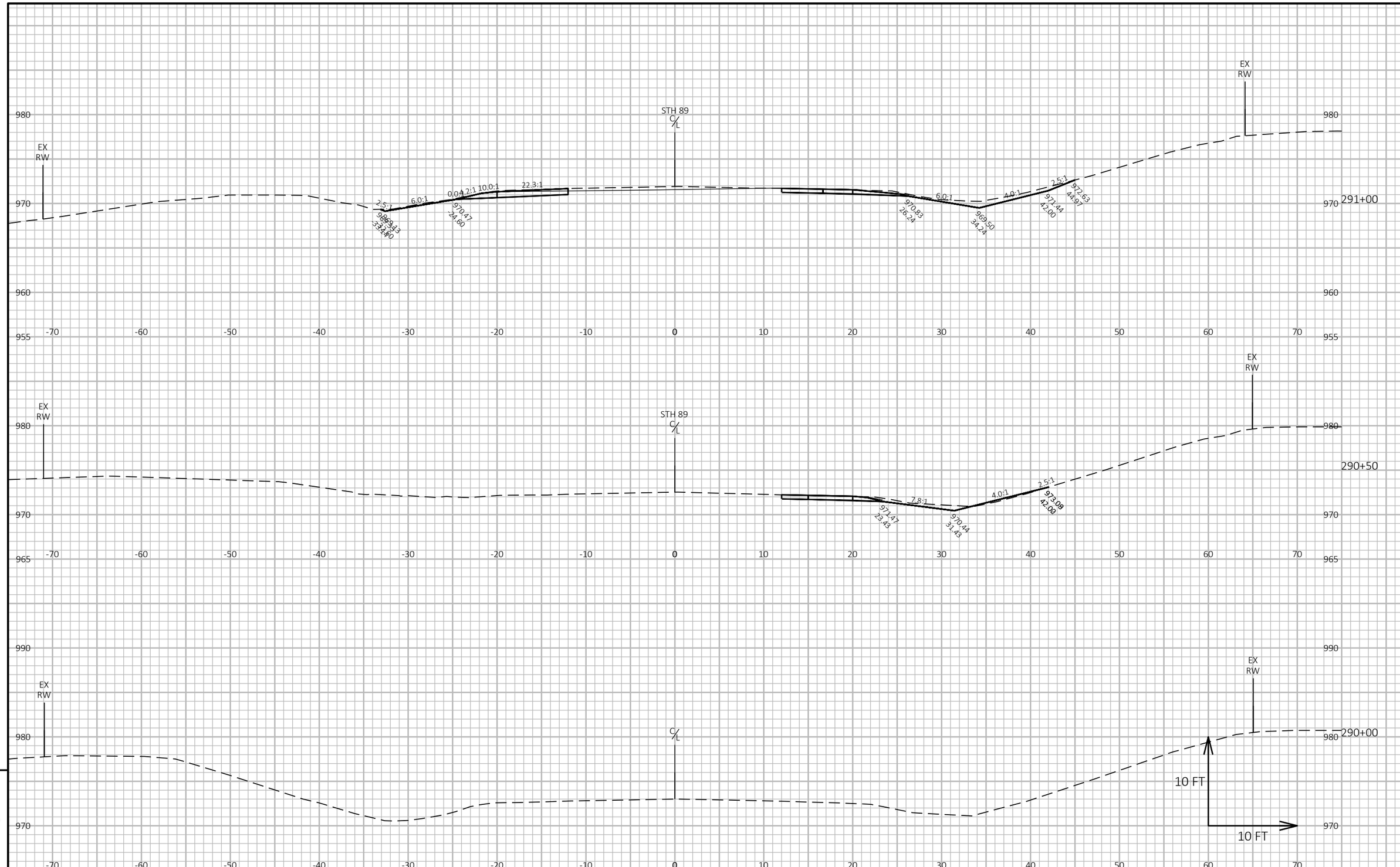

9

9

PROJECT NO: 3390-08-00	HWY: STH 89	COUNTY: WALWORTH	CROSS SECTIONS: STH 89	SHEET 216	E

FILE NAME : N:\PDS\C3D\33900800\SHEETSPLAN\090201-XS_BG.DWG
LAYOUT NAME - 66
PLOT DATE : 10/8/2025 10:36 AM
PLOT BY : BASS, ZORRIS L
PLOT NAME :
PLOT SCALE : 1 IN:10 FT HORZ. / 1 IN:10 FT VERT.
WISDOT/CADDS SHEET 49

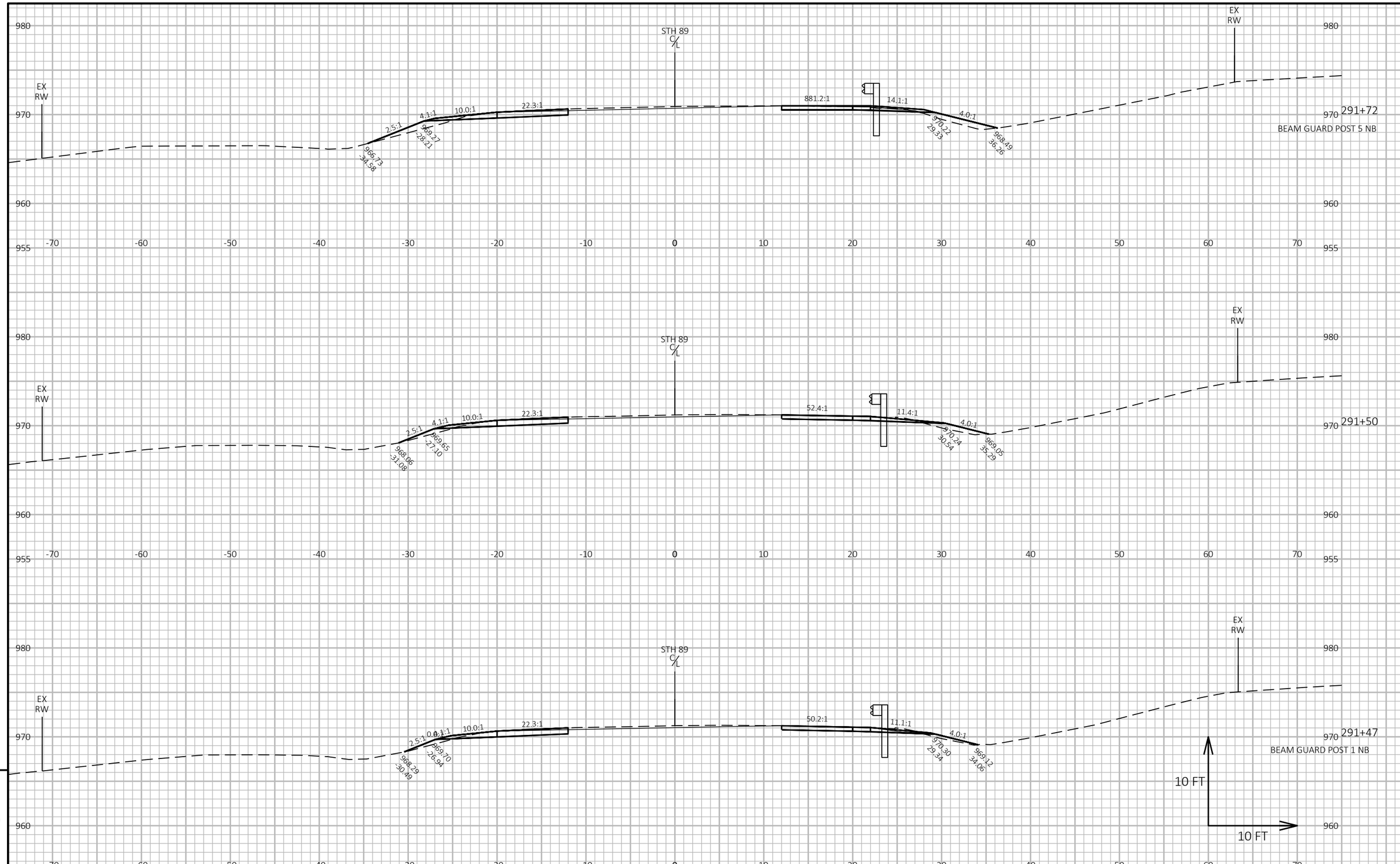

9

9

PROJECT NO: 3390-08-00	HWY: STH 89	COUNTY: WALWORTH	CROSS SECTIONS: STH 89	SHEET 217	E

FILE NAME : N:\PDS\C3D\33900800\SHEETSPLAN\090201-XS_BG.DWG
LAYOUT NAME - 67
PLOT DATE : 10/8/2025 10:36 AM
PLOT BY : BASS, ZORRIS L
PLOT NAME :
PLOT SCALE : 1 IN:10 FT HORZ. / 1 IN:10 FT VERT.
WISDOT/CADDS SHEET 49

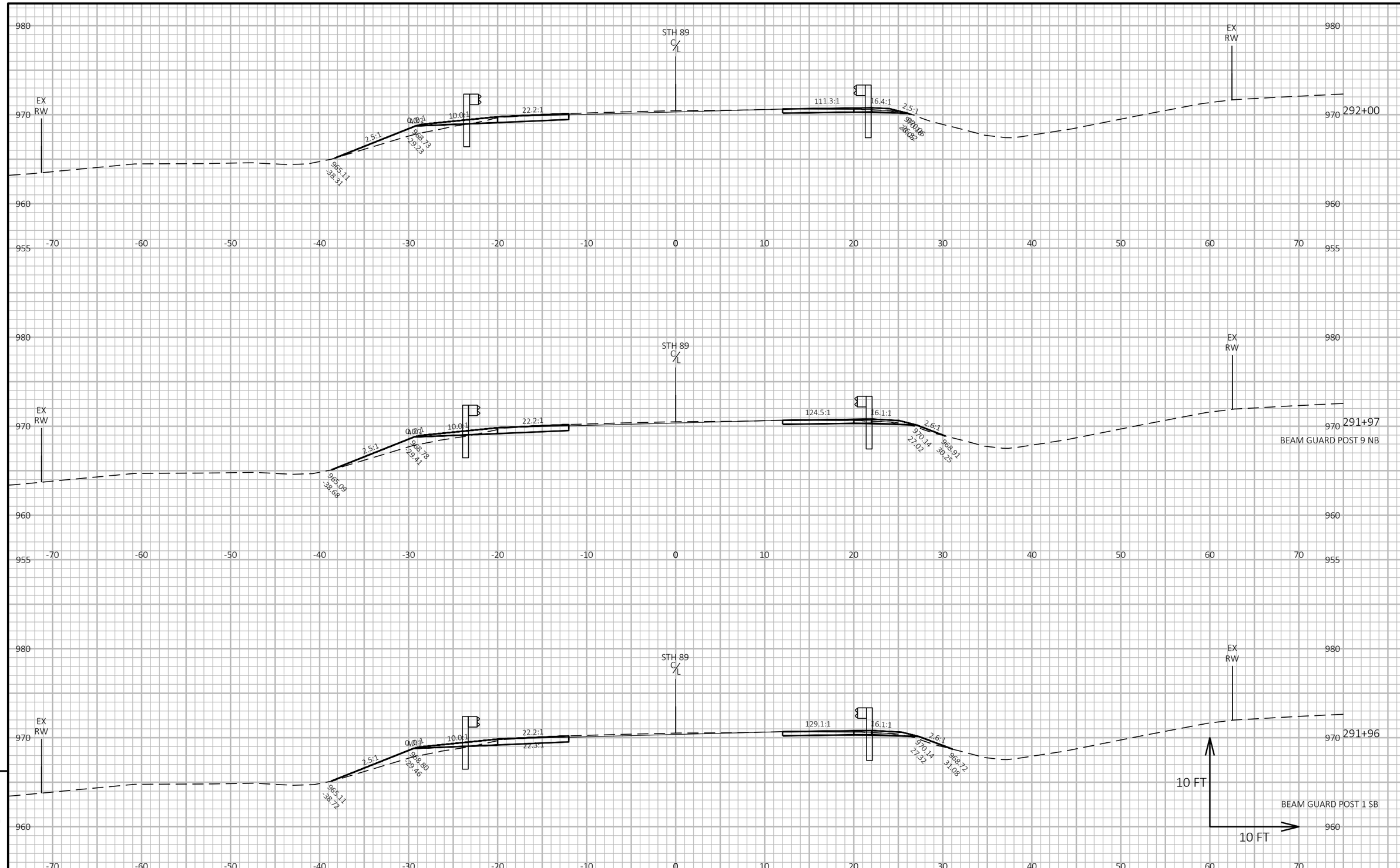

9

9

PROJECT NO: 3390-08-00	HWY: STH 89	COUNTY: WALWORTH	CROSS SECTIONS: STH 89	SHEET 218	E

FILE NAME : N:\PDS\C3D\33900800\SHEETSPLAN\090201-XS_BG.DWG
LAYOUT NAME - 68

PLOT DATE : 10/8/2025 10:36 AM PLOT BY : BASS, ZORRIS L PLOT NAME : **PLOT SCALE :** 1 IN:10 FT HORZ. / 1 IN:10 FT VERT.

WISDOT/CADDS SHEET 49

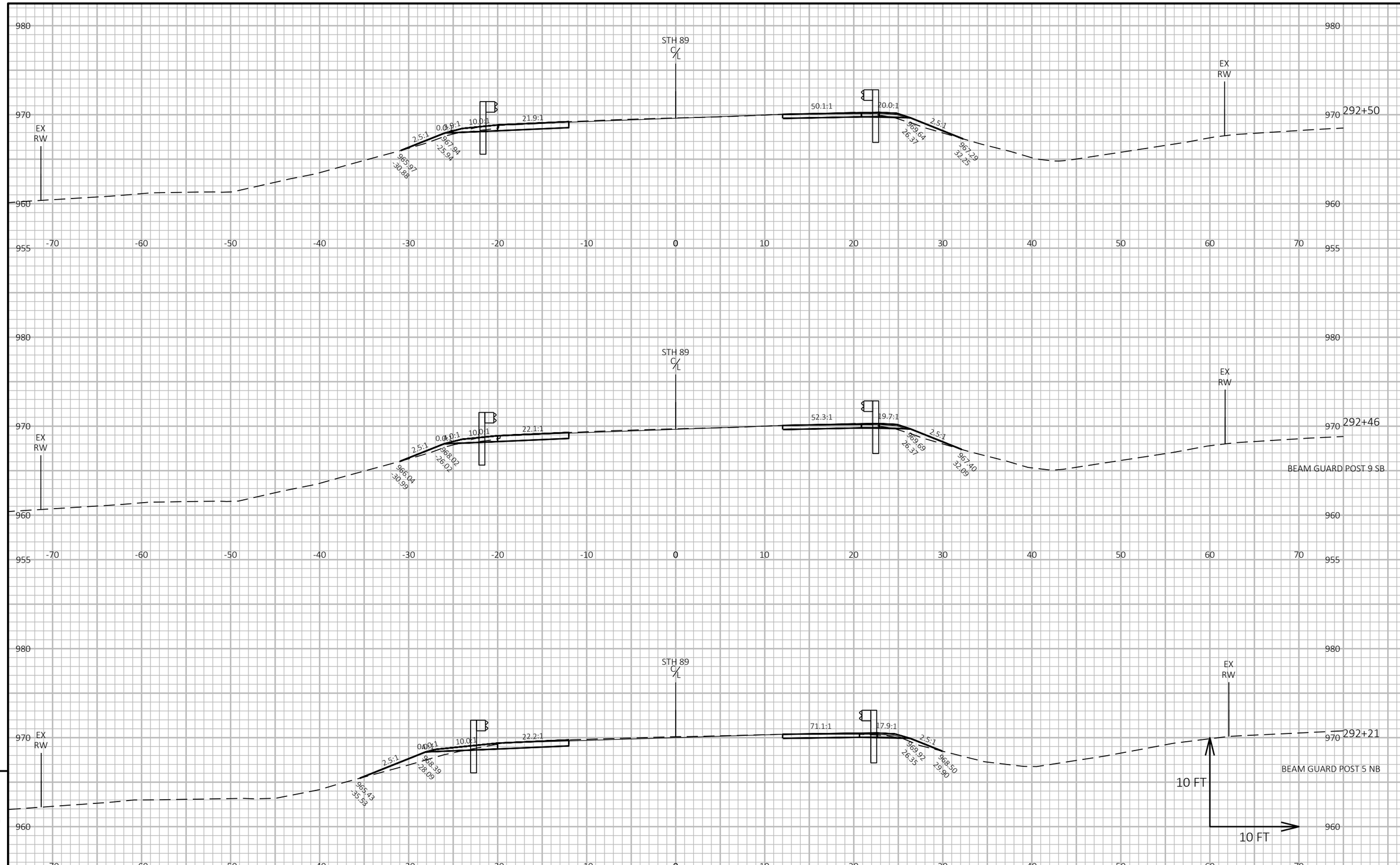

9

9

PROJECT NO: 3390-08-00	HWY: STH 89	COUNTY: WALWORTH	CROSS SECTIONS: STH 89	SHEET 219	E

FILE NAME : N:\PDS\C3D\33900800\SHEETSPLAN\090201-XS_BG.DWG
LAYOUT NAME - 69
PLOT DATE : 10/8/2025 10:36 AM
PLOT BY : BASS, ZORRIS L
PLOT NAME :
PLOT SCALE : 1 IN:10 FT HORZ. / 1 IN:10 FT VERT.
WISDOT/CADDS SHEET 49

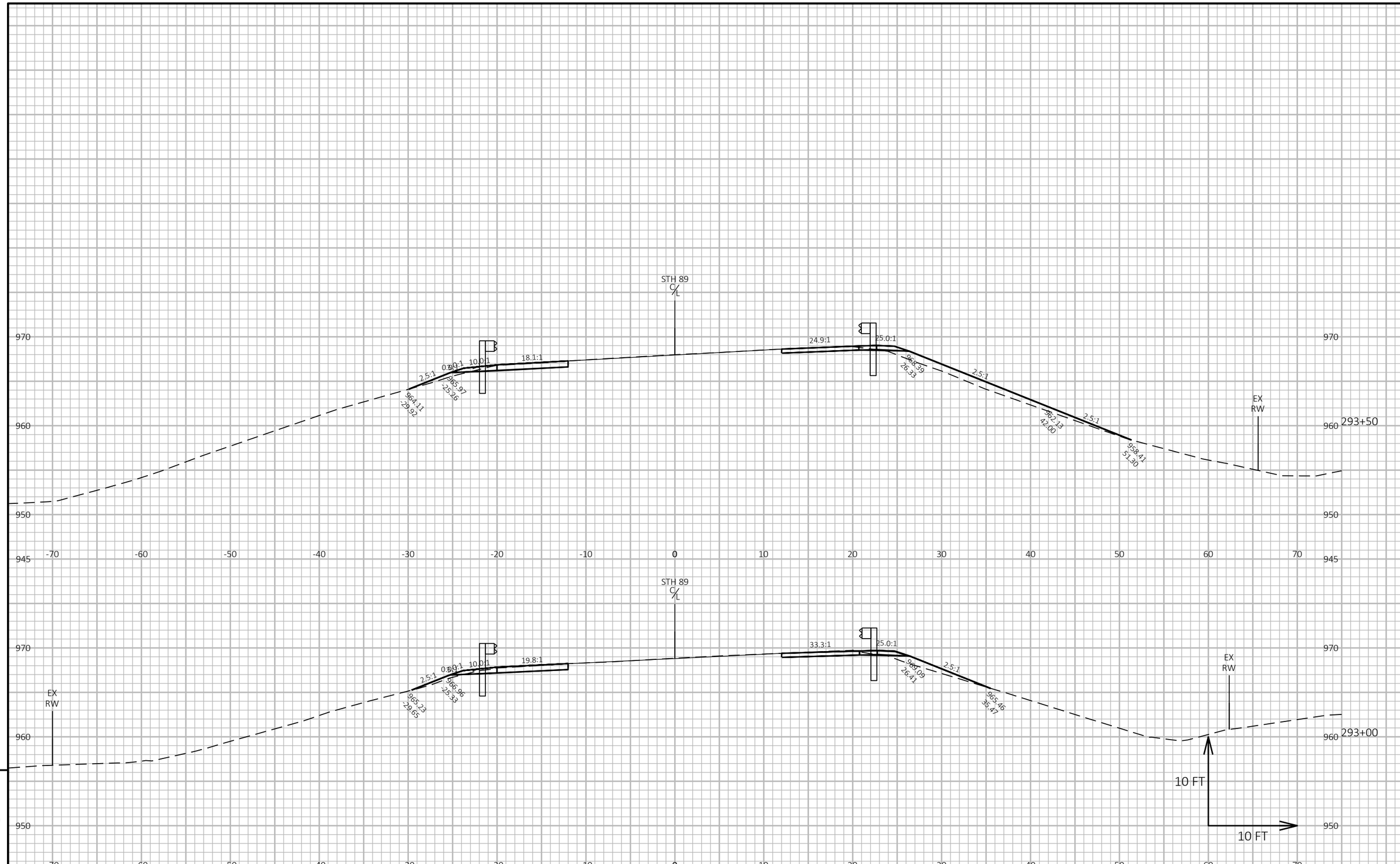

PROJECT NO: 3390-08-00	HWY: STH 89	COUNTY: WALWORTH	CROSS SECTIONS: STH 89	SHEET 220	E

FILE NAME : N:\PDS\C3D\33900800\SHEETSPLAN\090201-XS_BG.DWG
LAYOUT NAME - 70
PLOT DATE : 10/8/2025 10:36 AM
PLOT BY : BASS, ZORRIS L
PLOT NAME :
PLOT SCALE : 1 IN:10 FT HORZ. / 1 IN:10 FT VERT.
WISDOT/CADDS SHEET 49

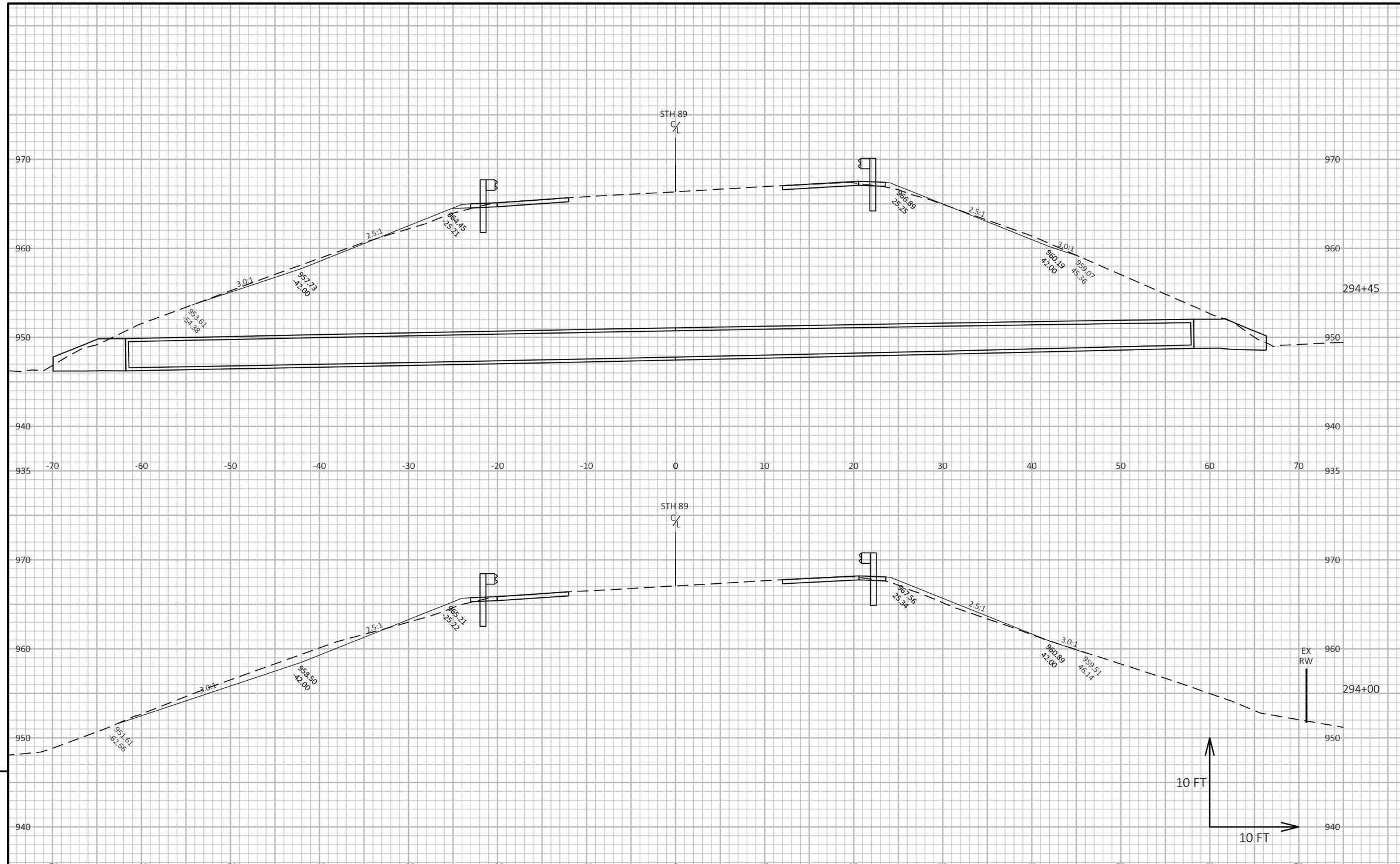

9

9

PROJECT NO: 3390-08-00	HWY: STH 89	COUNTY: WALWORTH	CROSS SECTIONS: STH 89	SHEET 221	E

FILE NAME : N:\PDS\C3D\33900800\SHEETSPLAN\090201-XS_BG_NORTH.DWG
LAYOUT NAME - 05
PLOT DATE : 5/8/2026 11:20 AM
PLOT BY : BASS, ZORRIS L
PLOT NAME :
PLOT SCALE : 1 IN:10 FT HORZ. / 1 IN:10 FT VERT.
WISDOT/CADDS SHEET 49

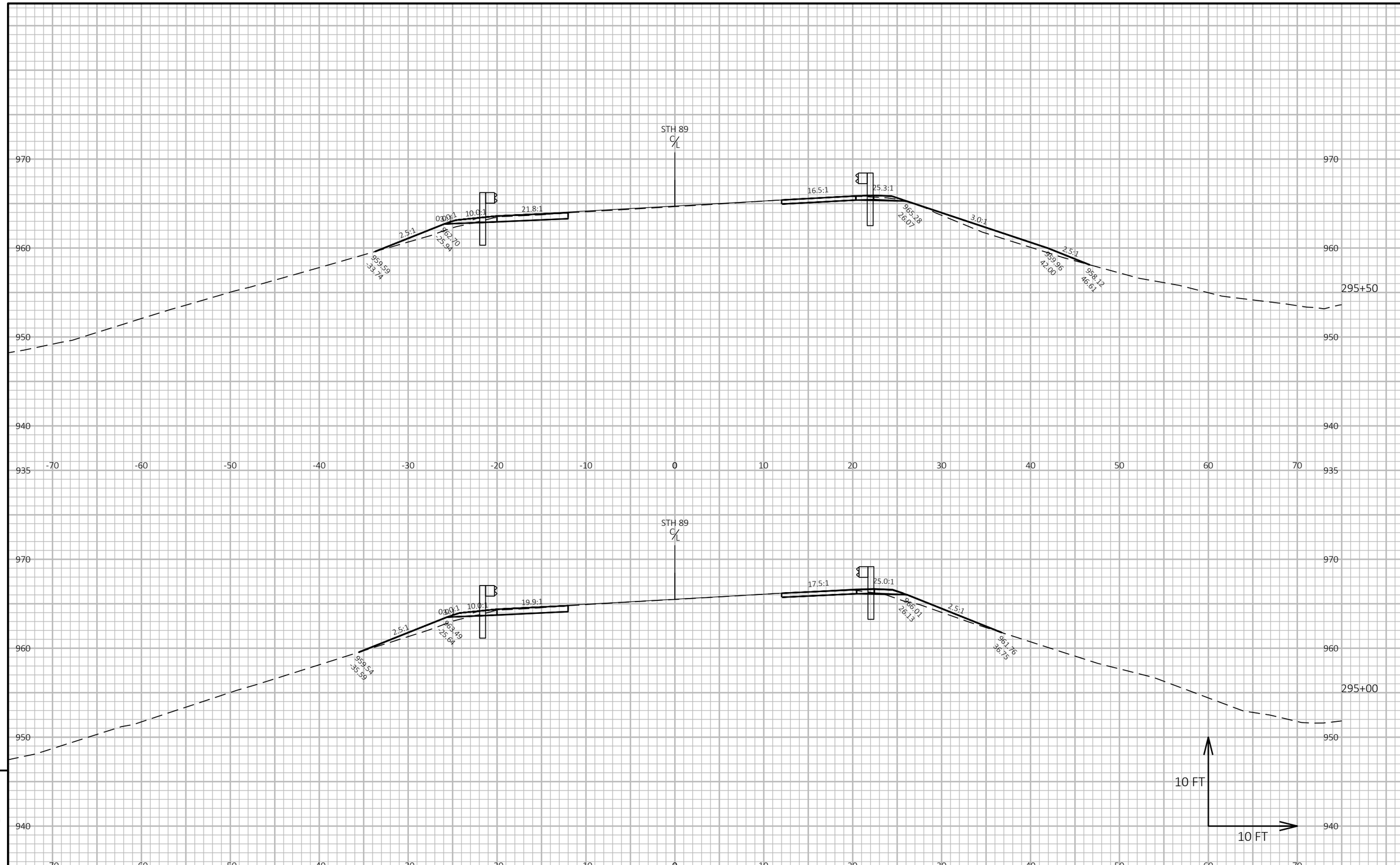

9

9

PROJECT NO: 3390-08-00	HWY: STH 89	COUNTY: WALWORTH	CROSS SECTIONS: STH 89	SHEET 222	E

FILE NAME : N:\PDS\C3D\33900800\SHEETSPLAN\090201-XS_BG.DWG
LAYOUT NAME - 72
PLOT DATE : 10/8/2025 10:36 AM
PLOT BY : BASS, ZORRIS L
PLOT NAME :
PLOT SCALE : 1 IN:10 FT HORZ. / 1 IN:10 FT VERT.
WISDOT/CADDS SHEET 49

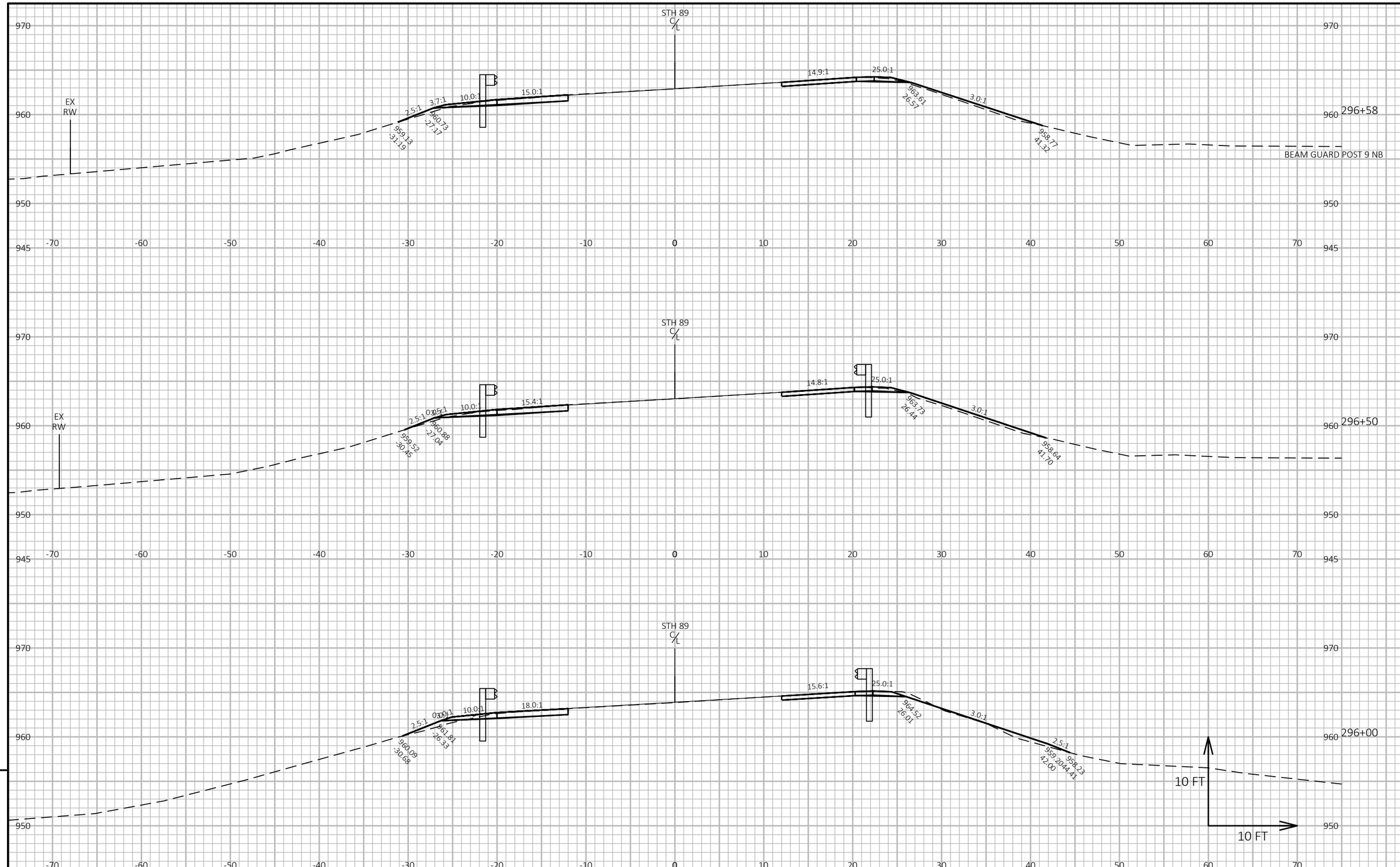

9

9

PROJECT NO: 3390-08-00	HWY: STH 89	COUNTY: WALWORTH	CROSS SECTIONS: STH 89	SHEET 223	E

FILE NAME : N:\PDS\C3D\33900800\SHEETSPLAN\090201-XS_BG.DWG
LAYOUT NAME - 73
PLOT DATE : 10/8/2025 10:36 AM
PLOT BY : BASS, ZORRIS L
PLOT NAME :
PLOT SCALE : 1 IN:10 FT HORZ. / 1 IN:10 FT VERT.
WISDOT/CADDS SHEET 49

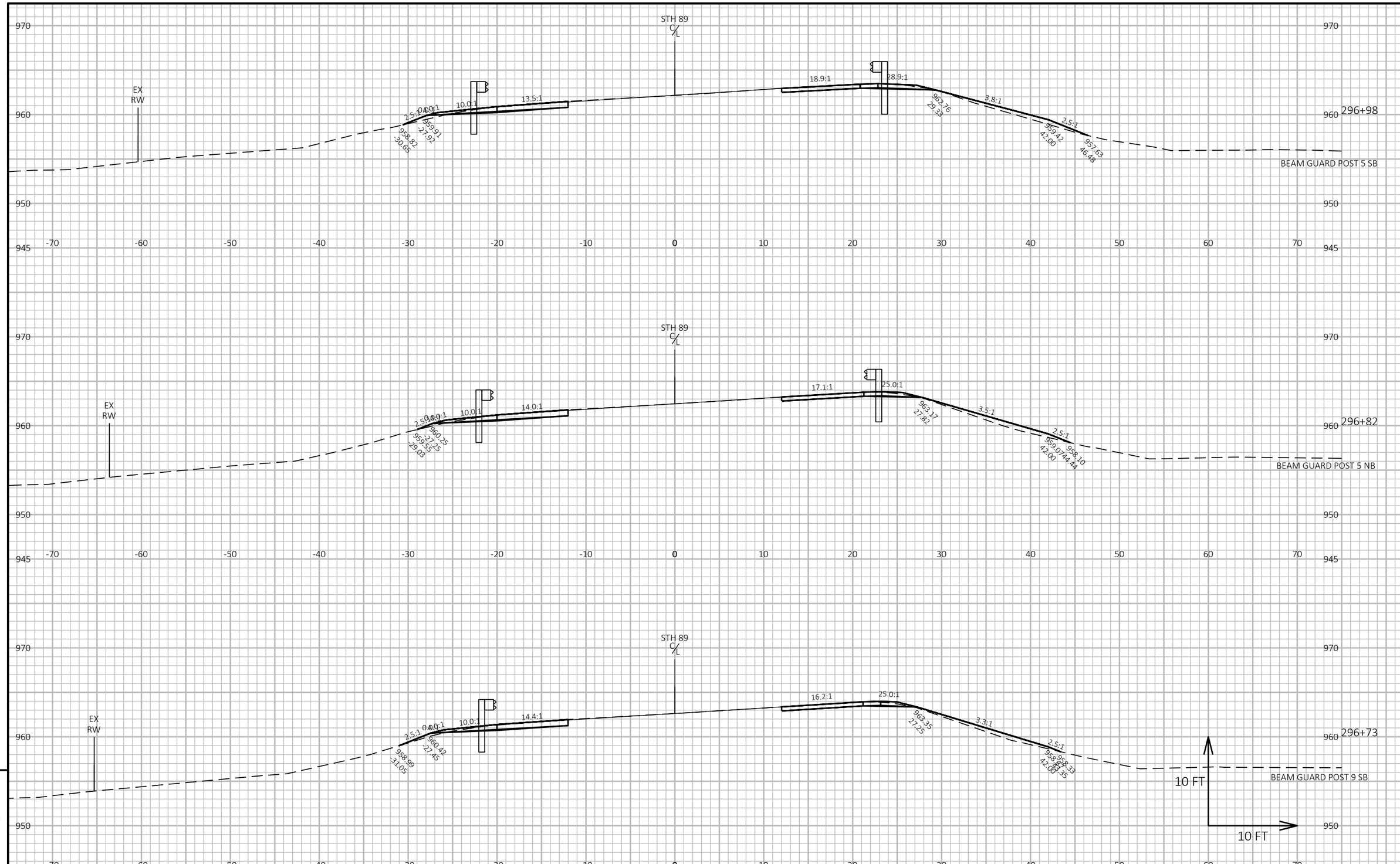

PROJECT NO: 3390-08-00	HWY: STH 89	COUNTY: WALWORTH	CROSS SECTIONS: STH 89	SHEET 224	E

FILE NAME : N:\PDS\C3D\33900800\SHEETSPLAN\090201-XS_BG.DWG
LAYOUT NAME - 74
PLOT DATE : 10/8/2025 10:36 AM
PLOT BY : BASS, ZORRIS L
PLOT NAME :
PLOT SCALE : 1 IN:10 FT HORZ. / 1 IN:10 FT VERT.
WISDOT/CADDS SHEET 49

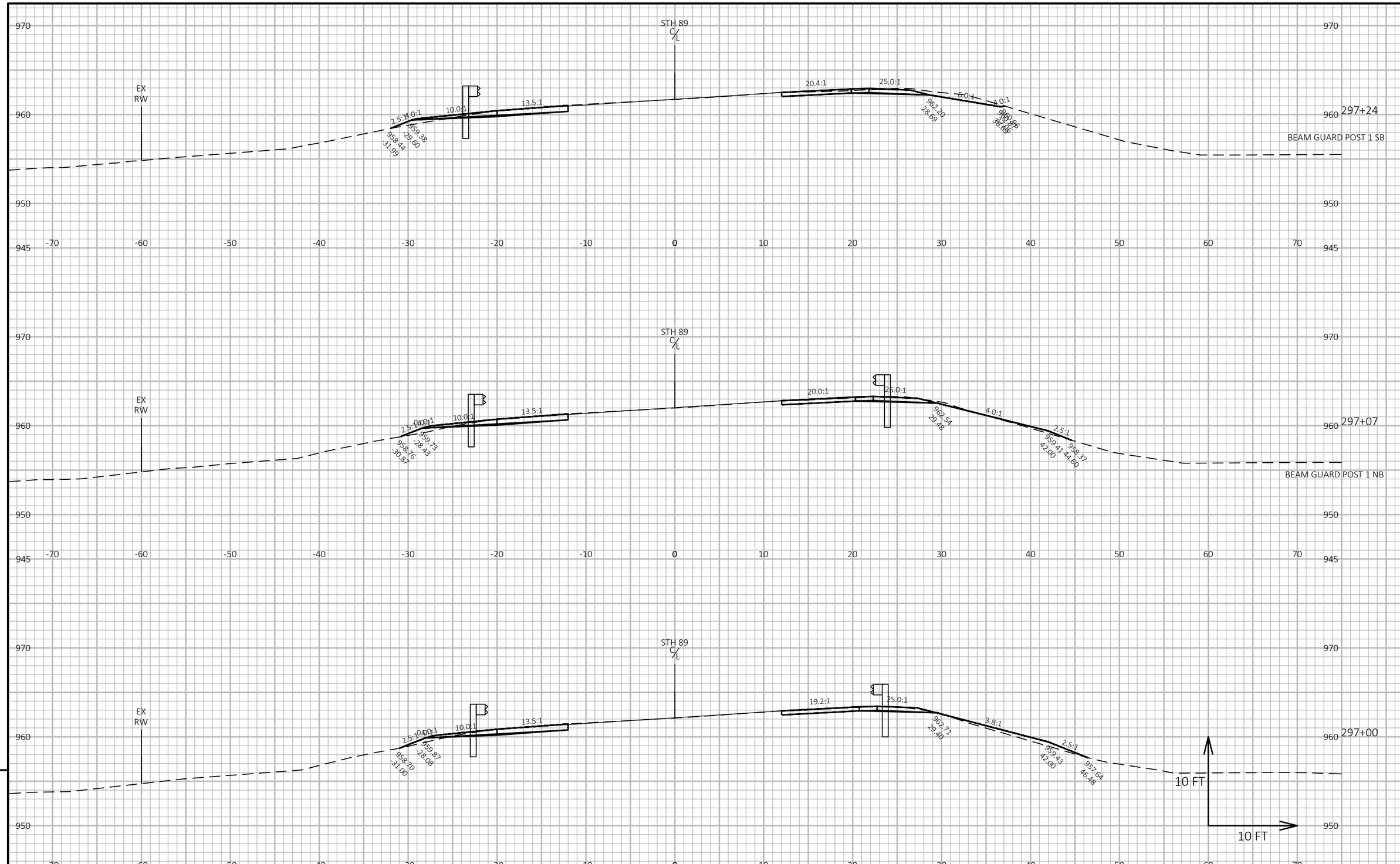

PROJECT NO: 3390-08-00	HWY: STH 89	COUNTY: WALWORTH	CROSS SECTIONS: STH 89	SHEET 225	E

FILE NAME : N:\PDS\C3D\33900800\SHEETSPLAN\090201-XS_BG.DWG
LAYOUT NAME - 75
PLOT DATE : 10/8/2025 10:36 AM
PLOT BY : BASS, ZORRIS L
PLOT NAME :
PLOT SCALE : 1 IN:10 FT HORZ. / 1 IN:10 FT VERT.
WISDOT/CADDS SHEET 49

Wisconsin Department of Transportation

Dedicated people creating transportation solutions through innovation and exceptional service.

http://www.dot.wisconsin.gov