EAU

OCTOBER 2026

PROJECT ID: 8010-01-80

WITH: N/A

COUNTY: POLK

ORDER OF SHEETS

Section No.	1	Title
Section No.	2	Typical Sections and Details (Includes Erosion Control)
Section No.	3	Estimate of Quantities
Section No.	3	Miscellaneous Quantities
Section No.	4	Right of Way Plat
Section No.	5	Plan and Profile
Section No.	6	Standard Detail Drawings
Section No.	7	Sign Plates
Section No.	8	Structure Plans
Section No.	9	Computer Earthwork Data
Section No.	9	Cross Sections

TOTAL SHEETS = 266

28

N

DESIGN DESIGNATION = 8010-01-10

A.A.D.T.	2027	=	6400
A.A.D.T.	2047	=	6910
D.H.V.	2047	=	926
D.D.		=	61/39
T.		=	8.9%
DESIGN SPEED		=	25 MPH - 55 MPH
ESALS		=	1,110,000

CONVENTIONAL SYMBOLS

PLAN

- CORPORATE LIMITS
- PROPERTY LINE
- LOT LINE
- LIMITED HIGHWAY EASEMENT
- EXISTING RIGHT OF WAY
- PROPOSED OR NEW R/W LINE
- SLOPE INTERCEPT
- REFERENCE LINE (300'EB')
- EXISTING CULVERT
- PROPOSED CULVERT (Box or Pipe)
- COMBUSTIBLE FLUIDS (CAUTION)
- MARSH AREA
- WOODED OR SHRUB AREA

PROFILE

- GRADE LINE
- ORIGINAL GROUND
- MARSH OR ROCK PROFILE (To be noted as such) (ROCK)
- SPECIAL DITCH (LABEL)
- GRADE ELEVATION (95.36)
- CULVERT (Profile View)

UTILITIES

- ELECTRIC (E)
- FIBER OPTIC (FO)
- GAS (G)
- SANITARY SEWER (SAN)
- STORM SEWER (SS)
- TELEPHONE (T)
- WATER (W)
- UTILITY PEDESTAL
- POWER POLE
- TELEPHONE POLE

STATE OF WISCONSIN
DEPARTMENT OF TRANSPORTATION

PLAN OF PROPOSED IMPROVEMENT

LUCK - SIREN

STH 48 E TO POLK STREET

STH 35

POLK COUNTY

STATE PROJECT	FEDERAL PROJECT	
	PROJECT	CONTRACT
8010-01-80		

STATE PROJECT NUMBER

8010-01-80

END PROJECT
STA 1118+61

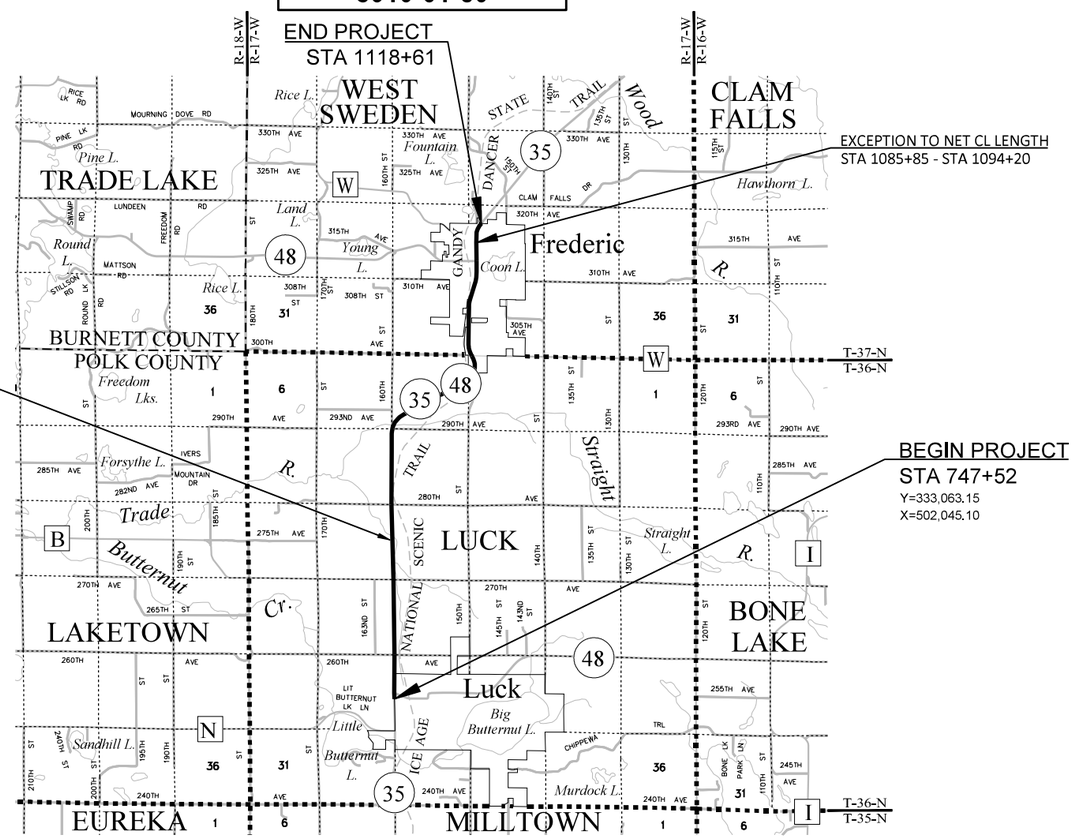

LAYOUT

SCALE 0 2 MI

TOTAL NET LENGTH OF CENTERLINE = 6.870 MI

HORIZONTAL POSITIONS SHOWN ON THIS PLAN ARE WISCONSIN COORDINATE REFERENCE SYSTEM (WISCRS), POLK COUNTY, NAD83 (2011), IN U.S. SURVEY FEET. POSITIONS SHOWN ARE GRID COORDINATES, GRID BEARINGS, AND GRID DISTANCES. GRID DISTANCES ARE THE SAME AS GROUND DISTANCES.

ELEVATIONS ARE REFERENCED TO NAVD 88 (2012). GPS DERIVED ELEVATIONS ARE BASED ON GEOID 12A.

emcs

327 N 17th Avenue, Suite 304
Wausau, WI 54401
Phone: 715-845-1081
Fax: 414-347-1347

WISCONSIN PROFESSIONAL ENGINEER
STEPHANIE G. CHRISTENSEN
E-35808
WAUSAU, WI

4/15/26 (Date)

(Signature)

STATE OF WISCONSIN
DEPARTMENT OF TRANSPORTATION

PREPARED BY

Surveyor	CBS2 & EMCS, INC.
Designer	EMCS, INC.
Project Manager	TOU YANG
Regional Examiner	WISDOT NW REGION
Regional Supervisor	TOU YANG

APPROVED FOR THE DEPARTMENT

DATE: Digitally signed by Tou X. Yang Date: 2026.04.16 06:45:56-05'00' (Signature)

E

GENERAL NOTES

THE LOCATIONS OF EXISTING AND PROPOSED UTILITY INSTALLATIONS AS SHOWN ON PLANS ARE APPROXIMATE.
THERE MAY BE OTHER UTILITY INSTALLATIONS WITHIN THE PROJECT AREA THAT ARE NOT SHOWN.

ORDER OF SECTION 2 SHEETS

PROJECT OVERVIEW
TYPICAL SECTIONS
CONSTRUCTION DETAILS
INTERSECTION DETAILS
CURB RAMP DETAILS
PERMANENT SIGNING AND MARKING
TRAFFIC CONTROL

UTILITIES

COMMUNICATIONS

BRIGHTSPEED OF NORTHWESTERN WISCONSIN, LLC
MICHAEL COUGHLIN
1409 JOHN AVE
SUPERIOR, WI 54880
PHONE: (980) 376-1865
MOBILE PHONE: (218) 264-9866
MICHAEL.COUGHLIN@BRIGHTSPEED.COM

LAKELAND TELECOM INC.
MARK MAYER
825 INNOVATION AVE
PO BOX 40 MILLTOWN, WI 54858
PHONE: (715) 825-5130
MOBILE PHONE: (715) 554-2201
MARKM@LAKELANDTEAM.COM

STARWIRE TECHNOLOGIES
JOE CREMIN
PO BOX 428
SIREN, WI 54872
PHONE: (877) 679-4242
JOE@STARWIRE.NET

ELECTRIC - DISTRIBUTION

NORTHWESTERN WISCONSIN ELECTRIC CO.
BILL COOPER
104 S. PINE ST
GRANTSBURG WI 54840
PHONE: (715) 463-1977
BILLCOOPER@NWECO.COM

POLK-BURNETT ELECTRIC COOPERATIVE
JASON EVENSON
1001 STATE ROAD 35
CENTURIA WI 54824
PHONE: (800) 421-0283 EXT 322
JEVENSON@POLKBURNETT.COM

XCEL ENERGY
JOHN KELSER
1400 WESTERN AVE
EAU CLAIRE, WI 54701
PHONE: (715) 737-6020
JOHN.KELSER@XCELENERGY.COM

GAS/PETROLEUM

WE ENERGIES
STEVEN CHAVERS
104 W. SOUTH ST.
RICE LAKE, WI 54868
PHONE: (715) 234-9605
MOBILE PHONE: (715) 213-4327
STEVEN.CHAVERS@WE-ENERGIES.COM

SANITARY SEWER

FREDERIC UTILITIES
BILL STRUCK
110 OAK STREET E
FREDERIC, WI 54837
PHONE (715) 327-8062
WATERDEPARMENT@FREDERICWI.COM

VILLAGE OF LUCK
SCOTT ANDERSON
401 MAIN STREET, PO BOX 315
LUCK, WI 54853-0315
PHONE: (715) 472-2221
MOBILE PHONE: (715) 491-3424
VOLPUBLICWORKS@LUCKWISCONSIN.COM

WATER

FREDERIC UTILITIES
BILL STRUCK
110 OAK STREET E
FREDERIC, WI 54837
PHONE: (715) 327-8062
WATERDEPARTMENT@FREDERICWI.COM

LUCK MUNICIPAL WATER UTILITY
SCOTT ANDERSON
401 MAJIN STREET, PO BOX 315
LUCK, WI 54853-0315
PHONE: (715) 472-2221
MOBILE PHONE: (715) 491-3424
VOLPUBLICWORKS@LUCKWISCONSIN.COM

RUNOFF COEFFICIENT TABLE

	HYDROLOGIC SOIL GROUP											
	A			B			C			D		
	SLOPE RANGE (PERCENT)			SLOPE RANGE (PERCENT)			SLOPE RANGE (PERCENT)			SLOPE RANGE (PERCENT)		
LAND USE:	0-2	2-6	6 & OVER	0-2	2-6	6 & OVER	0-2	2-6	6 & OVER	0-2	2-6	6 & OVER
ROW CROPS	.08 .22	.16 .30	.22 .38	.12 .26	.20 .34	.27 .44	.15 .30	.24 .37	.33 .50	.19 .34	.28 .41	.38 .56
MEDIAN STRIP- TURF	.19 .24	.20 .26	.24 .30	.19 .25	.22 .28	.26 .33	.20 .26	.23 .30	.30 .37	.20 .27	.25 .32	.30 .40
SIDE SLOPE- TURF			.25 .32			.27 .34			.28 .36			.30 .38
PAVEMENT:												
ASPHALT	.70 - .95											
CONCRETE	.80 - .95											
BRICK	.70 - .80											
DRIVES, WALKS	.75 - .85											
ROOFS	.75 - .95											
GRAVEL ROADS, SHOULDERS	.40 - .60											

TOTAL PROJECT AREA = 121 ACRES
TOTAL AREA EXPECTED TO BE DISTURBED BY CONSTRUCTION ACTIVITIES = 5.6 ACRES

DIGGERS HOTLINE
Dial 811 or (800)242-8511
www.DiggersHotline.com

OTHER CONTACTS

VILLAGE OF FREDERIC (STREET LIGHTING)

BILL STRUCK
110 OAK STREET E
FREDERIC, WI 54837
PHONE: (715) 327-8062
WATERDEPARTMENT@FREDERICWI.COM

DNR LIAISON

AMY CRONK
DNR NORTHERN REGION HEADQUARTERS
810 W. MAPLE STREET
SPOONER, WI 54801
PHONE: (715) 635-4229
CELL: (715) 520-3976
AMY.CRONK@WISCONSIN.GOV

DESIGNER CONTACT

EMCS, INC.
327 N 17TH AVE, SUITE 304
WAUSAU, WI 54401
PHONE: (715) 845-1081

WISDOT CONTACT

CAMERON SHIFFER
CORRE, INC.
1802 WARDEN STREET, EAU CLAIRE, WI54703
PHONE: (715) 495-2196
CSHIFFER@CORREINC.COM

2

BIG BUTTERNUT LAKE

N

TOWN OF LUCK

BEGIN PROJECT
STA 747+52

STH 35

760

780

260TH AVE

800

REPLACE CULVERT
STA 804+54

STH 35\48

820

REPLACE CULVERT
STA 828+34

REPLACE CULVERT
STA 833+31

CTH B

840

REPLACE CULVERT
STA 846+91

REPLACE CULVERT
STA 856+83

ST. PETERS CEMETERY
(DO NOT ENTER)

860

C-48-180
(SEE STRUCTURE PLANS)

REMOVE AND REPLACE GUARDRAIL

REPLACE CULVERT
STA 876+18
STA 876+27

SOUTH BRANCH TRADE RIVER

880

ROBERTSON RD

DUNCAN ST

260TH AVE

NORTH STAR CREEK

REPLACE CULVERT
STA 840+02

NORTH STAR CREEK

ICE AGE NATIONAL SCENIC TRAIL/
GANDY DANCER STATE TRAIL

270TH AVE

SOUTH BRANCH TRADE RIVER

VILLAGE OF LUCK

STH 48\W 1ST AVE

UNNAMED STREAM

EXTEND CULVERT
STA 8+91

C-48-181
(TO REMAIN)

160TH ST

940

TOWN OF
WEST SWEDEN

N

REPLACE CULVERT
STA 951+93

290TH AVE

REMOVE AND
REPLACE GUARDRAIL

960

STH 35\48

SOUTH BRANCH TRADE RIVER

UNNAMED STREAM

920

BROWN BROOK

VILLAGE OF
FREDERIC

280TH AVE

900

REPLACE CULVERT
STA 908+78

ICE AGE NATIONAL SCENIC TRAIL/
GANDY DANCER STATE TRAIL

REPLACE CULVERT
STA 969+85

REPLACE CULVERT
STA 977+00

980

880

REPLACE CULVERT
STA 884+53

280TH AVE

TOWN OF LUCK

300TH AVE

REPLACE CULVERT
STA 1036+30

1040

TRADE RIVER

ROADWAY SIDE SLOPE GRADING

1000

GANDY DANCER
STATE TRAIL

C-48-008
(TO REMAIN)

ICE AGE NATIONAL SCENIC TRAIL CONNECTING ROUTE
(CONTINUES SOUTH ON 150TH ST)

1020

CTH W

UNITED WAY E

TOWN OF
WEST SWEDEN

SOUTH BRANCH TRADE RIVER

150TH ST

VILLAGE OF
FREDERIC

PROJECT NO: 8010-01-80	HWY: STH 35	COUNTY: POLK	PROJECT OVERVIEW	SHEET 3	E

FILE NAME : P:\55XX\5508.DP.22.STH35-48.PLK\CADDS\80100180\SHEETS\020201-PO.DWG
LAYOUT NAME - 01

PLOT DATE : 4/20/2026 9:54 AM PLOT BY : PARKER TISCHAUSER PLOT NAME : PLOT SCALE : 1 IN:1000 FT

WISDOT/CADDS SHEET 44

2

N

TOWN OF WEST SWEDEN

TOWN OF WEST SWEDEN

TOWN OF WEST SWEDEN

VILLAGE OF FREDERIC

UNNAMED OPEN WATER

GANDY DANCER STATE TRAIL

NET EXCEPTION TO C/L LENGTH
STA 1085+85 - STA 1094+20

INDUSTRIAL WAY W

REPLACE CURB RAMPS
(SEE CURB RAMP DETAILS)

ASH ST W

LINDEN ST W

MAPLE ST W

STH 48

ELM ST W

HOPE RD W

BIRCH ST W

CEDAR ST W

WISCONSIN AVE N

POLK ST

STH 35\48

SERVICE RD

1060

1080

1100

1120

POLK AVE N

STH 35

END PROJECT
STA 1118+61

ELM ST E

HOPE RD E

BIRCH ST E

CEDAR ST E

INDUSTRIAL WAY E

REPLACE CURB & GUTTER
(SEE INTERSECTION DETAILS)

BROWN BROOK

LOCUST ST E

ASH ST E

LINDEN ST E

MAPLE ST E

OAK ST E

TOWN OF WEST SWEDEN

COON LAKE

PROJECT NO: 8010-01-80	HWY: STH 35	COUNTY: POLK	PROJECT OVERVIEW	SHEET 4	E

FILE NAME : P:\55XX\5508.DP.22.STH35-48.PLK\CADDS\80100180\SHEETS\020201-PO.DWG
LAYOUT NAME - 02

PLOT DATE : 4/20/2026 9:59 AM PLOT BY : PARKER TISCHAUSER PLOT NAME : PLOT SCALE : 1 IN:500 FT

WISDOT/CADDS SHEET 44

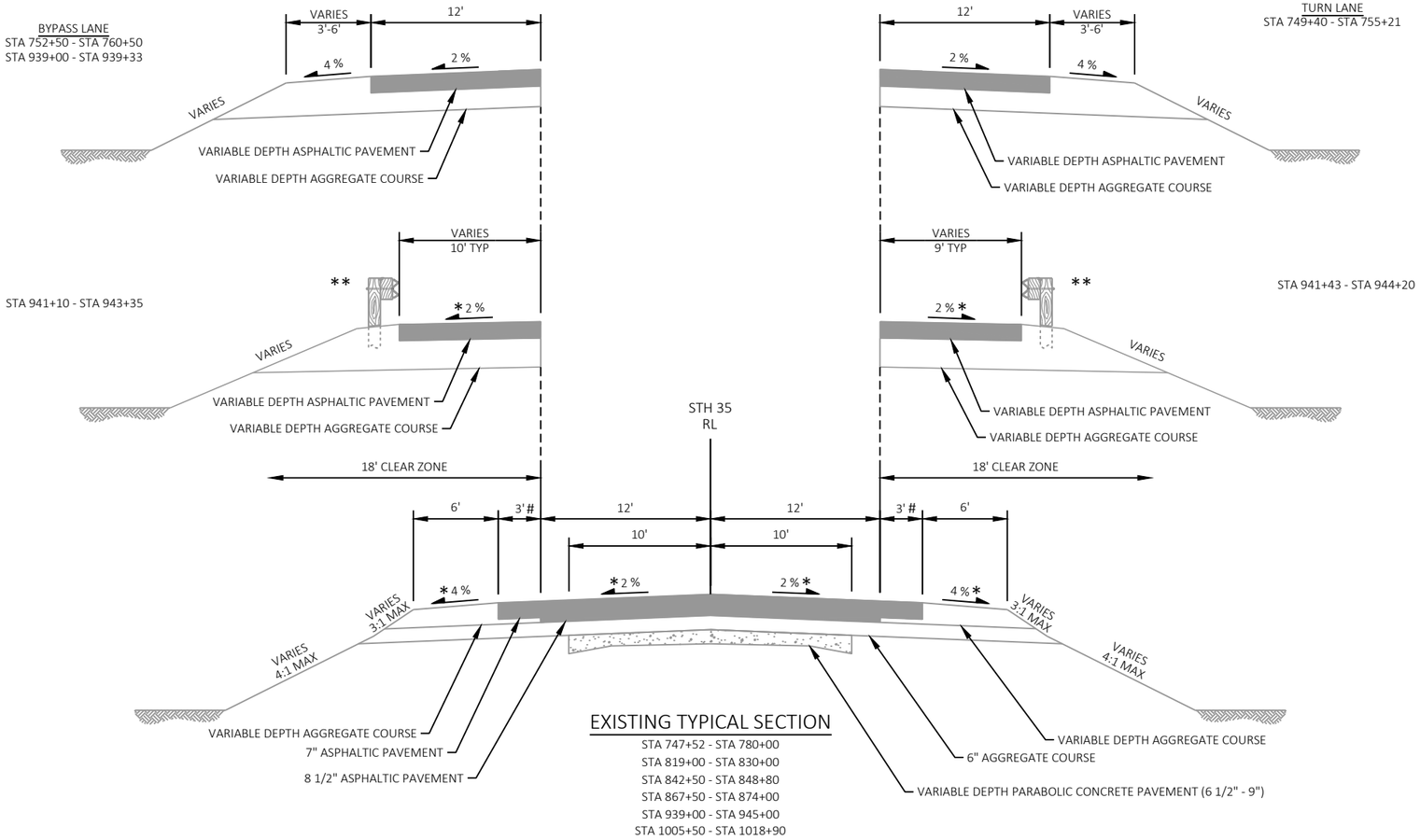

EXISTING TYPICAL SECTION

STA 747+52 - STA 780+00
STA 819+00 - STA 830+00
STA 842+50 - STA 848+80
STA 867+50 - STA 874+00
STA 939+00 - STA 945+00
STA 1005+50 - STA 1018+90

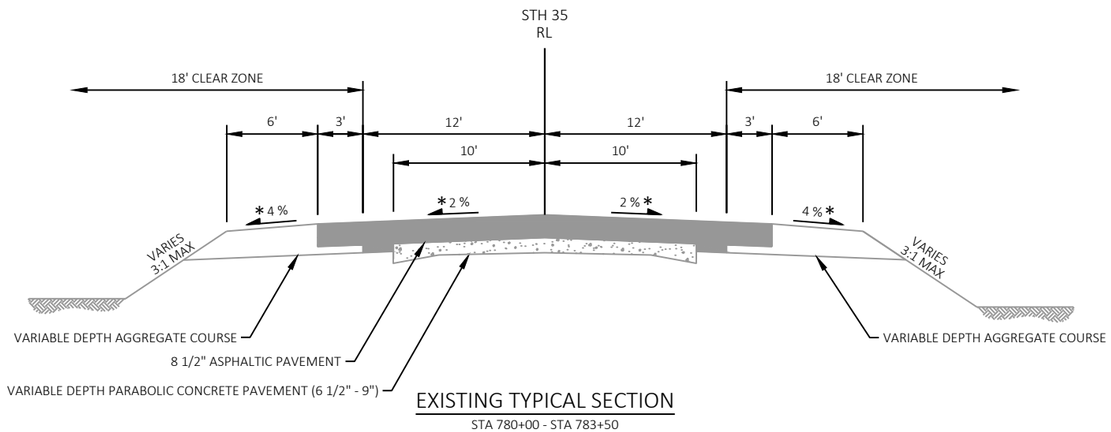

EXISTING TYPICAL SECTION

STA 780+00 - STA 783+50

NOTES

* CROSS SLOPE VARIES DUE TO SUPERELEVATION, SEE SECTION 5 SHEETS FOR FOR CURVE INFORMATION

** SEE SECTION 5 PLANS FOR LOCATION OF EXISTING GUARDRAIL

\# FROM STA 939+00 - STA 945+00, SHOULDER IS 6' PAVED AND 3' AGGREGATE

2

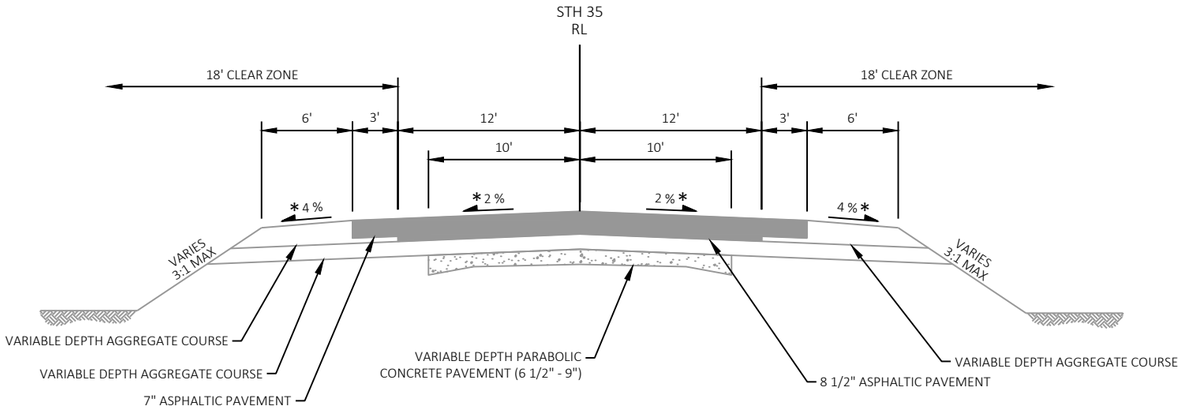

EXISTING TYPICAL SECTION

STA 783+50 - STA 788+50 #
STA 797+50 - STA 819+00 #
STA 840+00 - STA 842+50

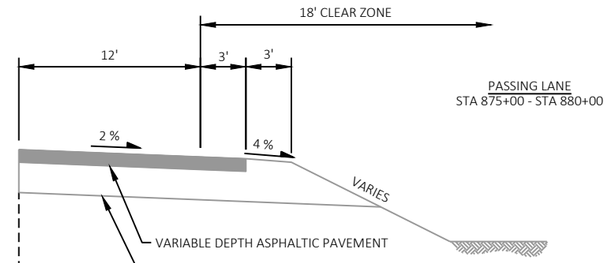

PASSING LANE
STA 875+00 - STA 880+00

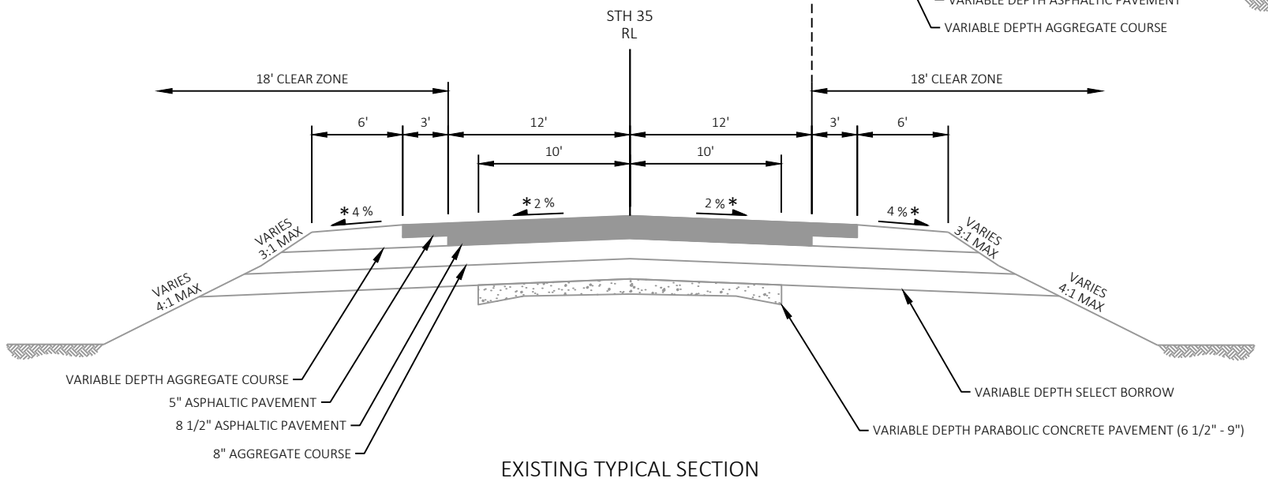

EXISTING TYPICAL SECTION

STA 788+50 - STA 797+50 #
STA 874+00 - STA 880+00

NOTES

* CROSS SLOPE VARIES DUE TO SUPERELEVATION, SEE SECTION 5 SHEETS FOR FOR CURVE INFORMATION

\# FROM STA 786+75 - STA 788+75 AND STA 813+20 - STA 816+75, 36' WIDE INSULATION POLY BOARD IS LOCATED DIRECTLY ON TOP OF THE EXISTING CONCRETE PAVEMENT

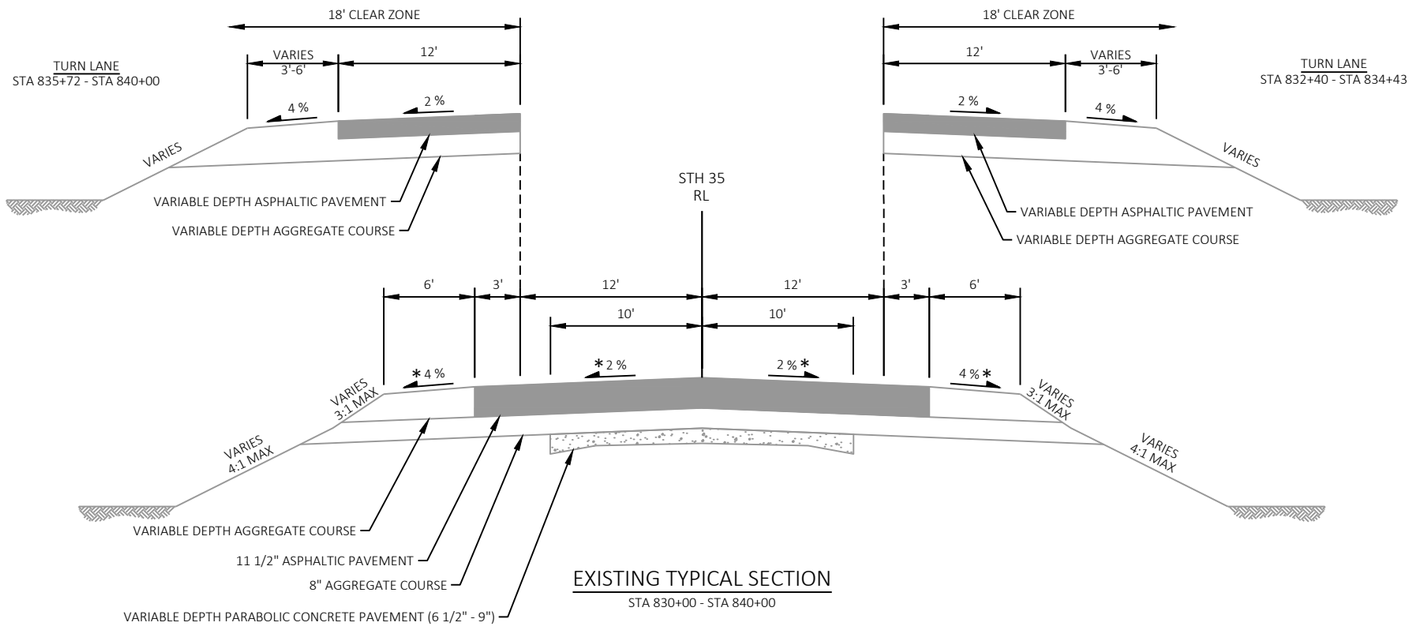

EXISTING TYPICAL SECTION

STA 830+00 - STA 840+00

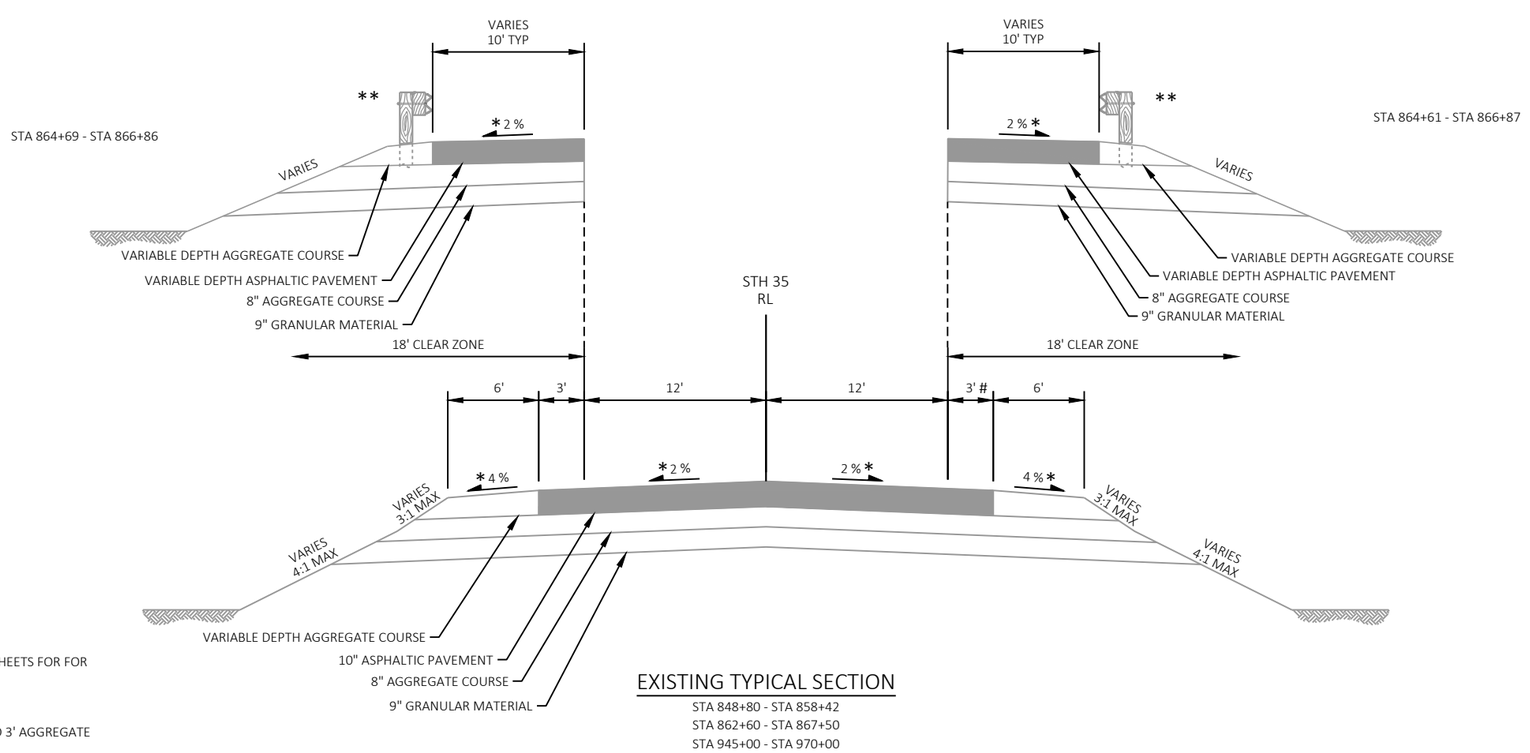

EXISTING TYPICAL SECTION

STA 848+80 - STA 858+42
STA 862+60 - STA 867+50
STA 945+00 - STA 970+00

NOTES

* CROSS SLOPE VARIES DUE TO SUPERELEVATION, SEE SECTION 5 SHEETS FOR FOR CURVE INFORMATION

** SEE SECTION 5 PLANS FOR LOCATION OF EXISTING GUARDRAIL

\# FROM STA 945+00 - STA 952+75, THE SHOULDER IS 6' PAVED AND 3' AGGREGATE

PROJECT NO: 8010-01-80	HWY: STH 35	COUNTY: POLK	TYPICAL SECTIONS	SHEET 7	E

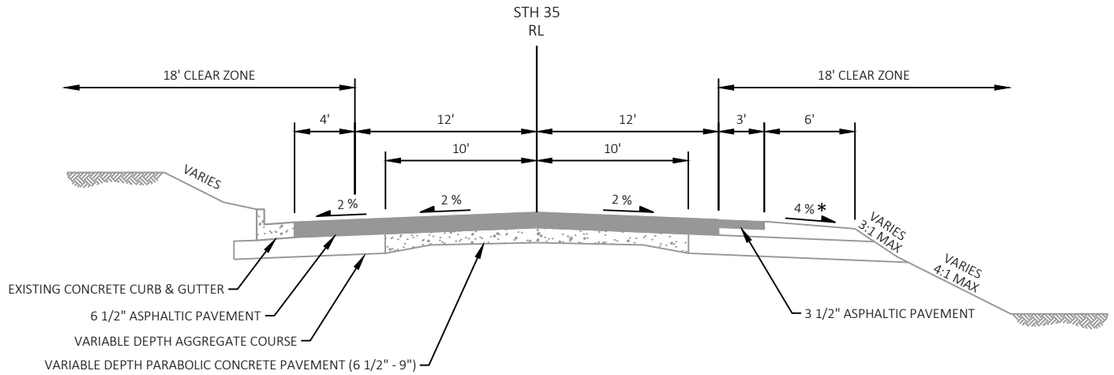

EXISTING TYPICAL SECTION

STA 858+42 - STA 862+60

PASSING LANE
STA 889+06 - STA 939+00

PASSING LANE
STA 880+00 - STA 914+75
STA 970+00 - STA 992+50

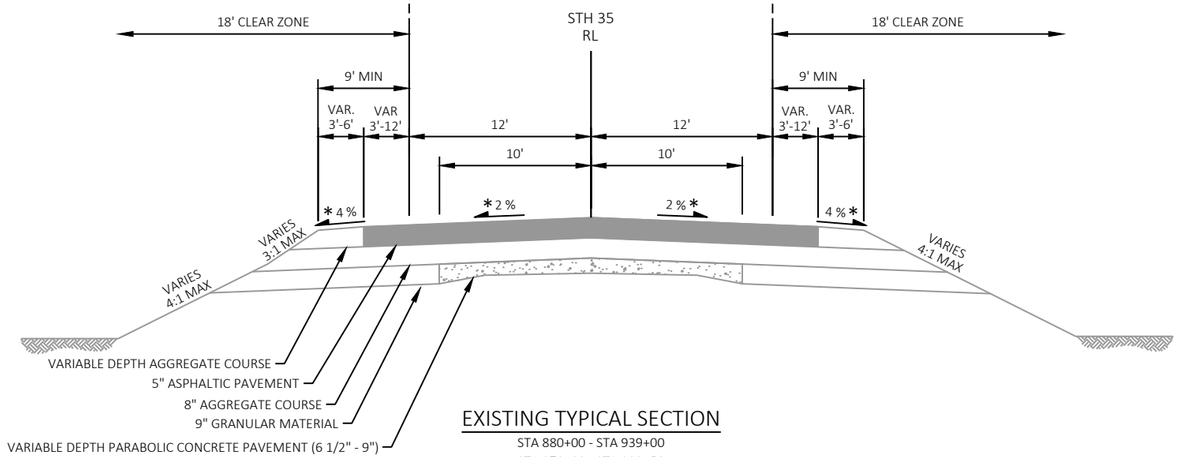

EXISTING TYPICAL SECTION

STA 880+00 - STA 939+00
STA 970+00 - STA 992+50
STA 1018+90 - STA 1035+00 **

NOTES

* CROSS SLOPE VARIES DUE TO SUPERELEVATION, SEE SECTION 5 SHEETS FOR FOR CURVE INFORMATION

** SEE MARKING SHEETS FOR ADDITIONAL INFORMATION REGARDING LANE LOCATIONS AND MEDIAN WIDTH WITHIN VARIABLE WIDTH AREAS FROM STA 1018+90 TO STA 1035+00

PROJECT NO: 8010-01-80	HWY: STH 35	COUNTY: POLK	TYPICAL SECTIONS	SHEET 8	E

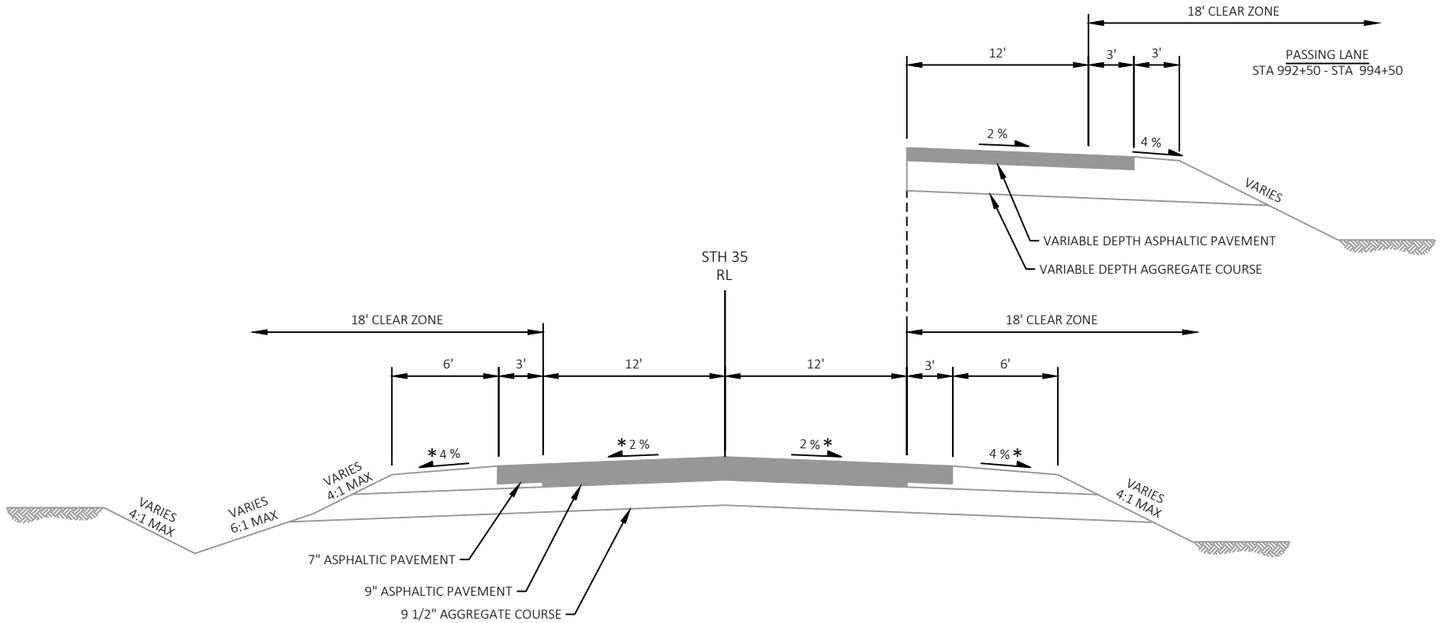

EXISTING TYPICAL SECTION

STA 992+50 - STA 1005+50

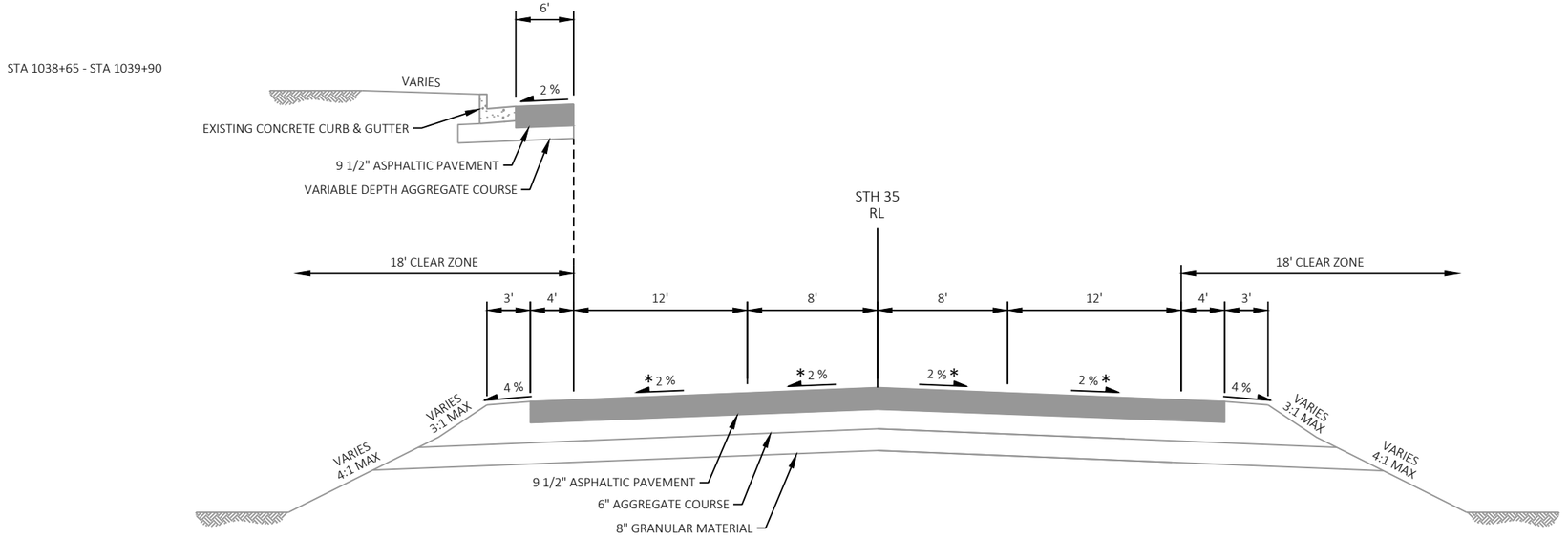

EXISTING TYPICAL SECTION

STA 1035+00 - STA 1065+60

NOTE

* CROSS SLOPE VARIES DUE TO SUPERELEVATION, SEE SECTION 5 SHEETS FOR FOR CURVE INFORMATION

PROJECT NO: 8010-01-80	HWY: STH 35	COUNTY: POLK	TYPICAL SECTIONS	SHEET 9	E

FILE NAME : P:\55XX\5508.DP.22.STH35-48.PLK\CADDS\80100180\SHEETS\020301-TS.DWG
LAYOUT NAME - 05

PLOT DATE : 4/20/2026 9:56 AM PLOT BY : PARKER TISCHAUSER PLOT NAME : PLOT SCALE : 1 IN:10 FT

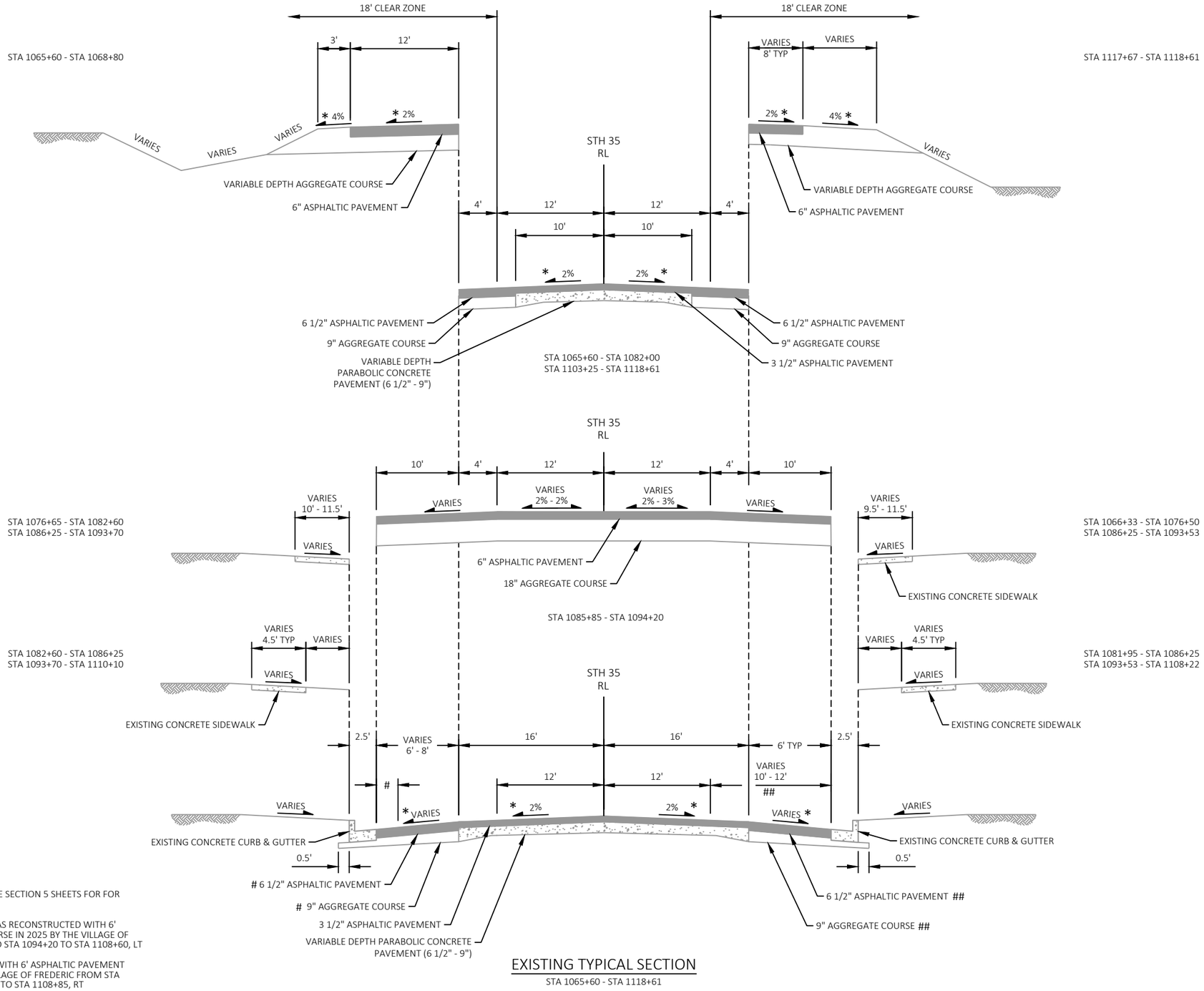

NOTES

* CROSS SLOPE VARIES DUE TO SUPERELEVATION, SEE SECTION 5 SHEETS FOR FOR CURVE INFORMATION

\# 2' PAVEMENT ADJACENT TO CURB AND GUTTER WAS RECONSTRUCTED WITH 6' ASPHALTIC PAVEMENT OVER 12" AGGREGATE COURSE IN 2025 BY THE VILLAGE OF FREDERIC FROM STA 1082+30 TO STA 1085+85 AND STA 1094+20 TO STA 1108+60, LT

\#\# PARKING LANE PAVEMENT WAS RECONSTRUCTED WITH 6' ASPHALTIC PAVEMENT OVER 18" AGGREGATE COURSE IN 2025 BY THE VILLAGE OF FREDERIC FROM STA 1082+30 TO STA 1085+85 AND FROM STA 1094+20 TO STA 1108+85, RT

EXISTING TYPICAL SECTION

STA 1065+60 - STA 1118+61

PROJECT NO: 8010-01-80	HWY: STH 35	COUNTY: POLK	TYPICAL SECTIONS	SHEET 10	E

2

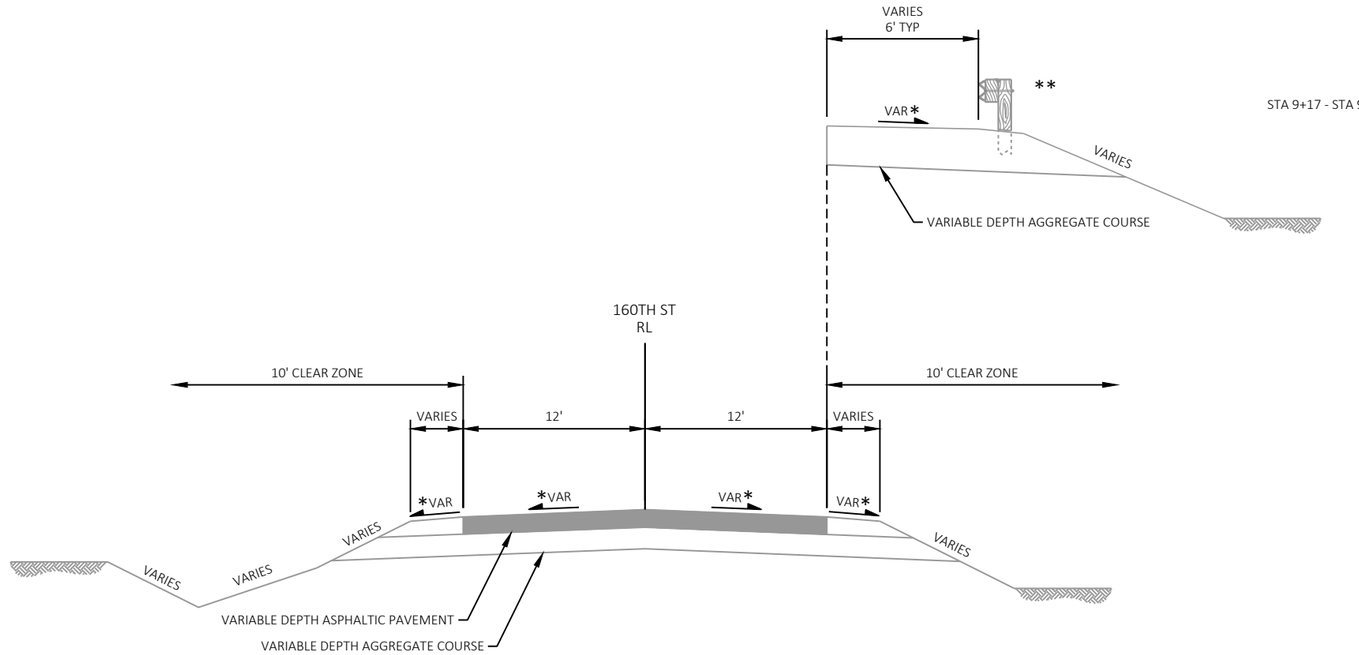

EXISTING TYPICAL SECTION

160TH ST
STA 6+91 - STA 9+42

NOTE

* CROSS SLOPE VARIES DUE TO SUPERELEVATION, SEE SECTION 5 SHEETS FOR FOR CURVE INFORMATION

2

BYPASS LANE
STA 752+50 - STA 760+50
STA 939+00 - STA 939+33

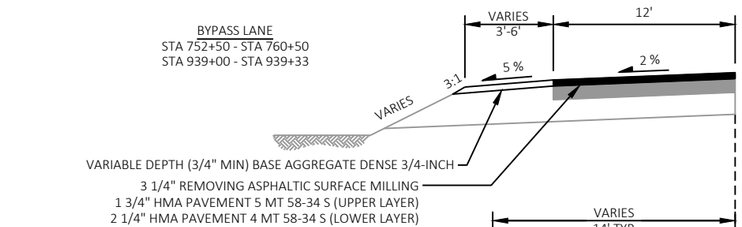

□ STA 867+50 - STA 868+19
○ STA 940+53 - STA 943+35

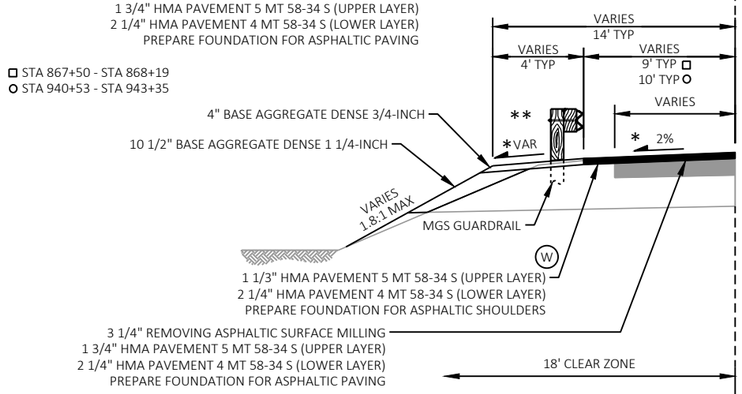

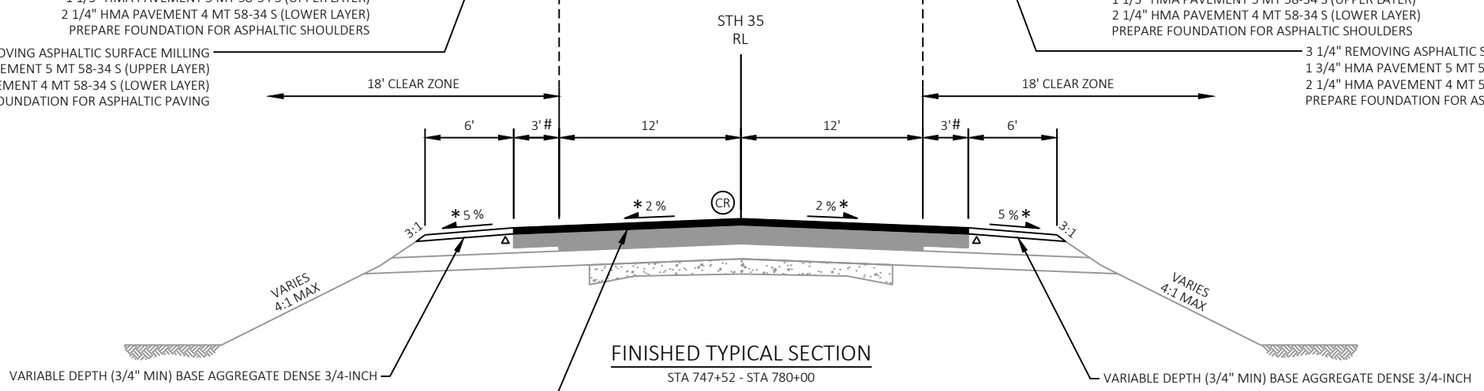

FINISHED TYPICAL SECTION

STA 747+52 - STA 780+00
STA 819+00 - STA 830+00
STA 842+50 - STA 848+80
STA 867+50 - STA 874+00
STA 939+00 - STA 945+00
STA 1005+50 - STA 1018+90

TURN LANE
STA 749+40 - STA 755+21

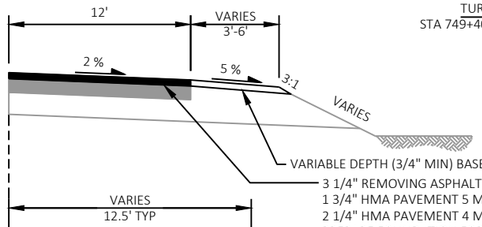

□ STA 867+50 - STA 867+83
○ STA 940+62 - STA 945+00

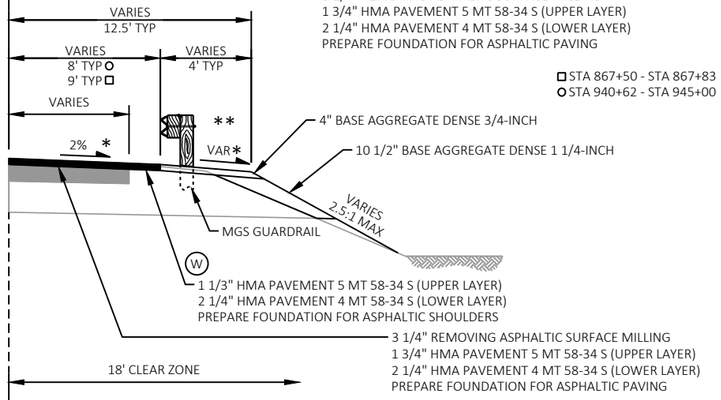

FINISHED TYPICAL SECTION

STA 780+00 - STA 783+50

NOTES

* CROSS SLOPE VARIES DUE TO SUPERELEVATION, SEE SECTION 5 SHEETS FOR FOR CURVE INFORMATION

** SEE CONSTRUCTION DETAILS - GUARDRAIL REPLACEMENTS AND SECTION 5 PLANS FOR LOCATION OF PROPOSED GUARDRAIL AND PAVED SHOULDERS

\# FROM STA 939+00 - STA 945+00, SHOULDER IS 6' PAVED AND 3' AGGREGATE

△ PAVEMENT SAFETY EDGE REQUIRED FOR PAVED SHOULDERS 3' OR LESS, SEE SDD "SAFETY EDGE"

(CR) ASPHALTIC RUMBLE STRIPS CENTERLINE. ONLY INSTALL RUMBLE STRIPS WHERE THE SPEED LIMIT IS GREATER THAN 50 MPH. SEE MISCELLANEOUS QUANTITIES FOR FINAL LOCATIONS. SEE SDD FOR "2-LANE RURAL CENTERLINE RUMBLE STRIP, MILLING" FOR ADDITIONAL INFORMATION

MILLING DEPTH REFERENCED AT ROADWAY CENTERLINE

(W) THESE ITEMS APPLY WHERE THE PROPOSED SHOULDER PAVING TO FACE OF GUARDRAIL AND WITHIN TAPERS IS WIDER THAN EXISTING PAVED SHOULDERS. SEE TABLE FOR LOCATIONS.

STATION	TO	STATION	OFFSET
867+50	-	867+78	LT
941+01	-	941+80	RT
941+36	-	941+75	LT
942+35	-	943+35	LT
944+31	-	944+70	RT

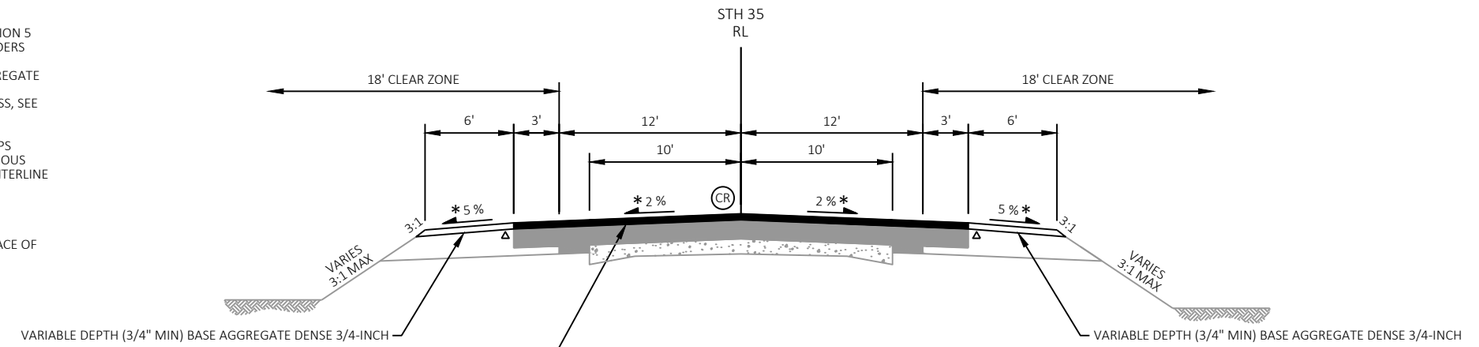

PROJECT NO: 8010-01-80	HWY: STH 35	COUNTY: POLK	TYPICAL SECTIONS	SHEET 12	E

2

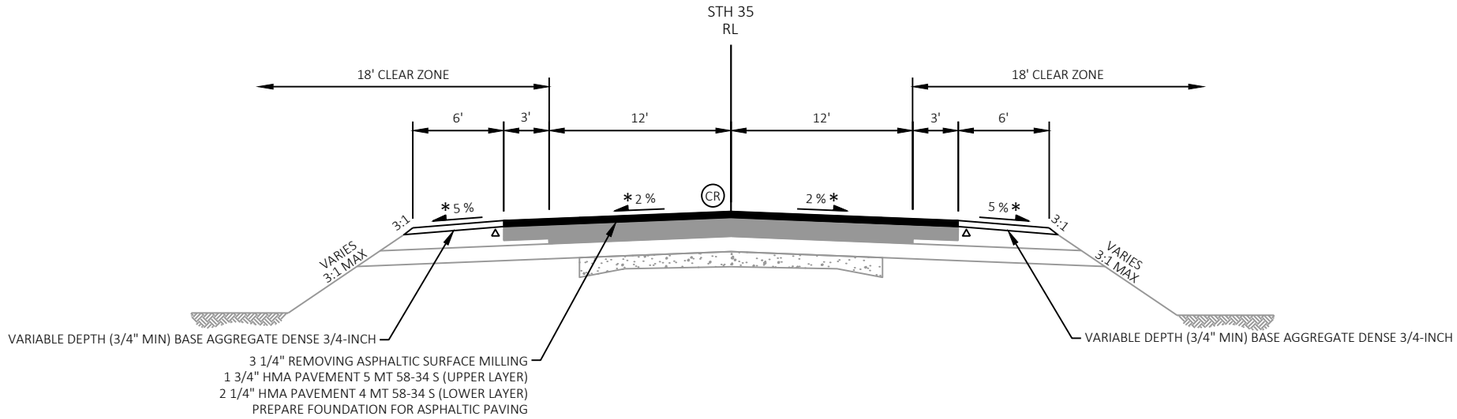

FINISHED TYPICAL SECTION

STA 783+50 - STA 788+50 #
STA 797+50 - STA 819+00 #
STA 840+00 - STA 842+50

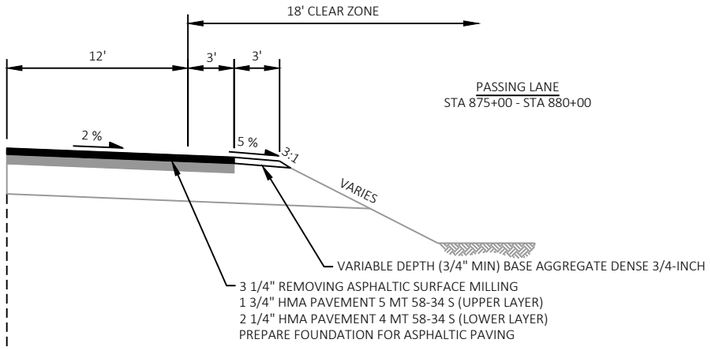

PASSING LANE
STA 875+00 - STA 880+00

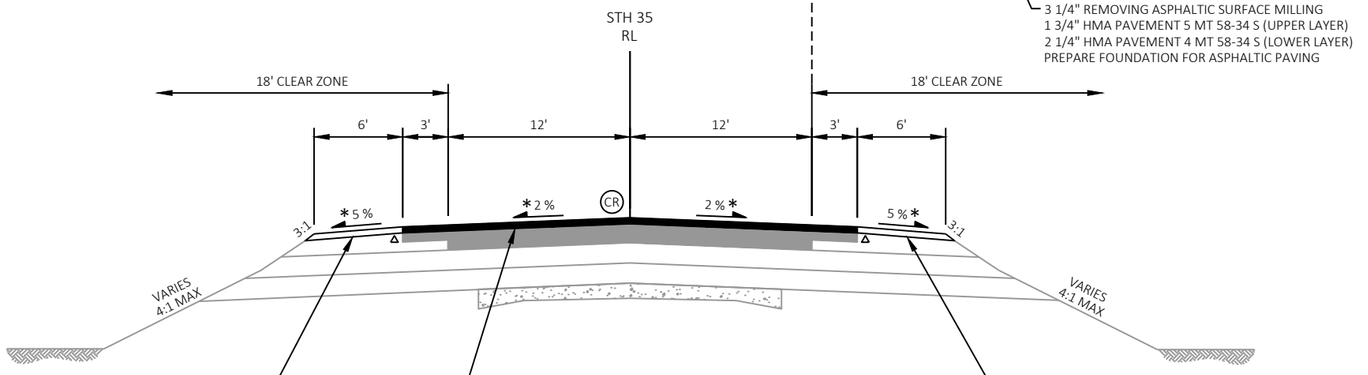

FINISHED TYPICAL SECTION

STA 788+50 - STA 797+50 #
STA 874+00 - STA 880+00

NOTES

* CROSS SLOPE VARIES DUE TO SUPERELEVATION, SEE SECTION 5 SHEETS FOR FOR CURVE INFORMATION

\# FROM STA 786+75 - STA 788+75 AND STA 813+20 - STA 816+75, 36' WIDE INSULATION POLY BOARD IS LOCATED DIRECTLY ON TOP OF THE EXISTING CONCRETE PAVEMENT

△ PAVEMENT SAFETY EDGE REQUIRED FOR PAVED SHOULDERS 3' OR LESS, SEE SDD "SAFETY EDGE"

(CR) ASPHALTIC RUMBLE STRIPS CENTERLINE. ONLY INSTALL RUMBLE STRIPS WHERE THE SPEED LIMIT IS GREATER THAN 50 MPH. SEE MISCELLANEOUS QUANTITIES FOR FINAL LOCATIONS. SEE SDD FOR "2-LANE RURAL CENTERLINE RUMBLE STRIP, MILLING" FOR ADDITIONAL INFORMATION

MILLING DEPTH REFERENCED AT ROADWAY CENTERLINE

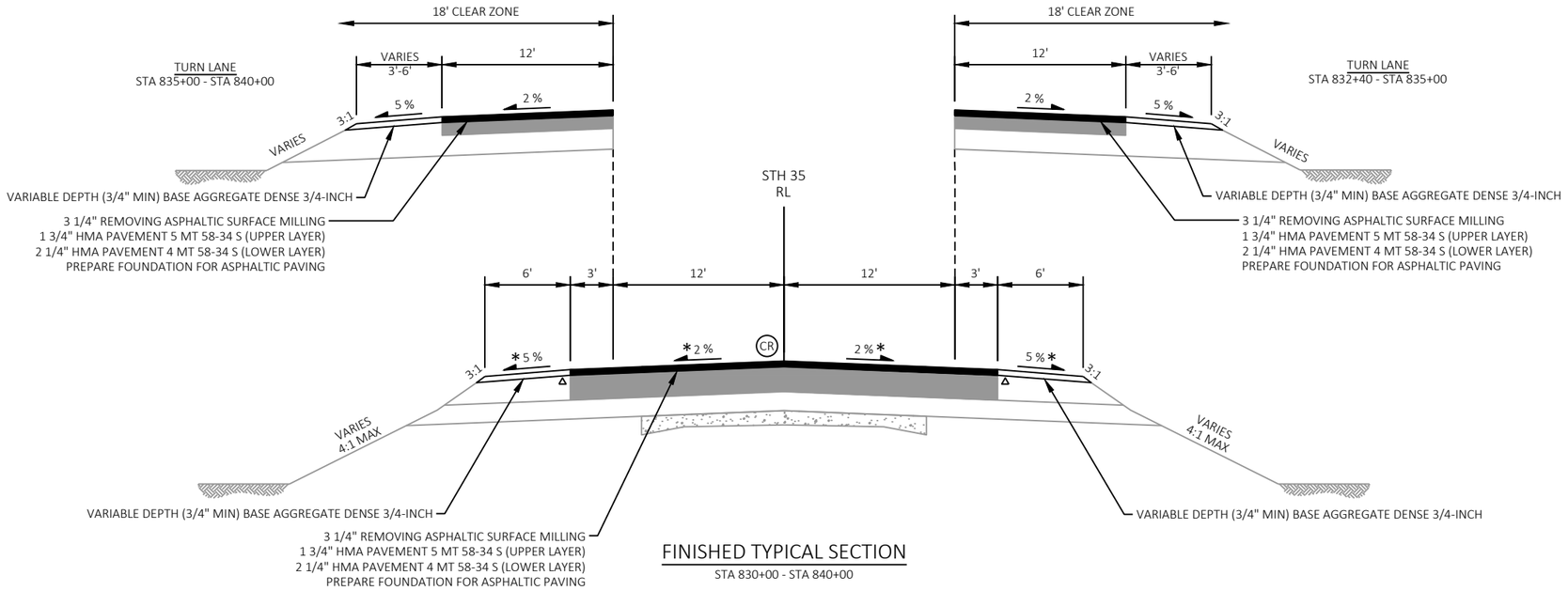

FINISHED TYPICAL SECTION

STA 830+00 - STA 840+00

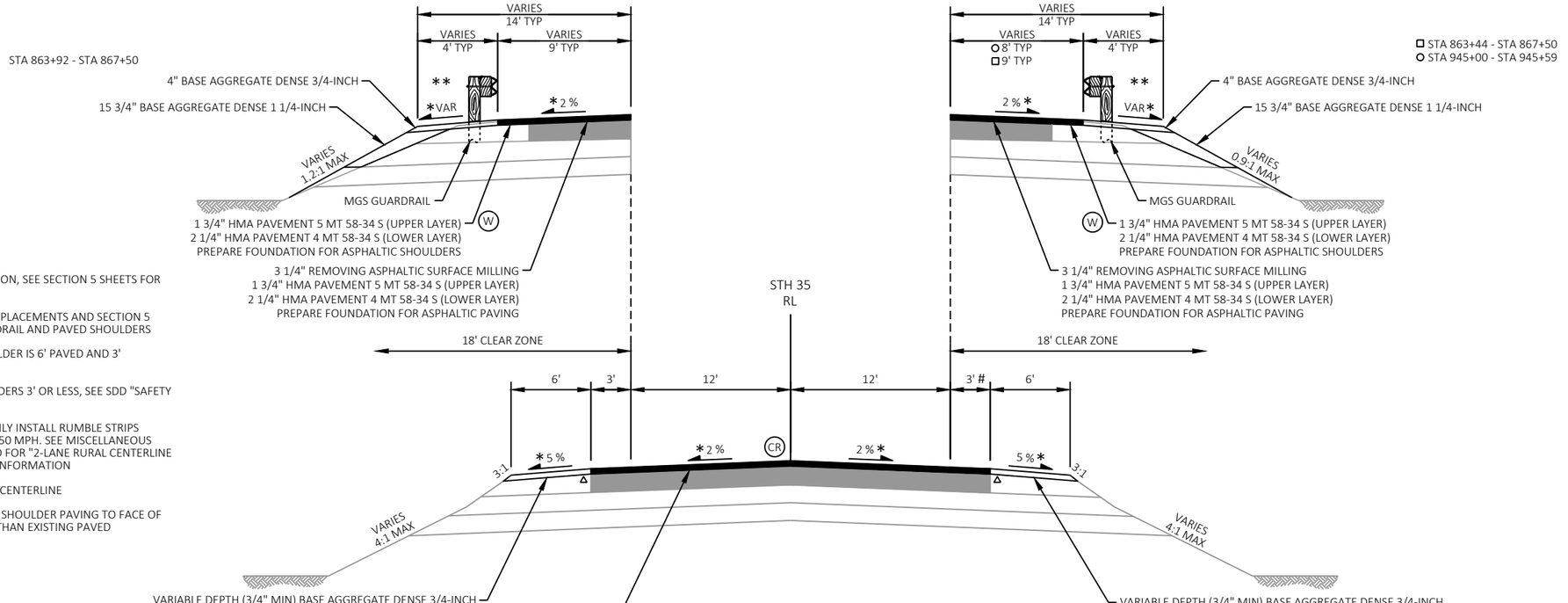

FINISHED TYPICAL SECTION

STA 848+80 - STA 858+42
STA 862+60 - STA 867+50
STA 945+00 - STA 970+00

NOTES

* CROSS SLOPE VARIES DUE TO SUPERELEVATION, SEE SECTION 5 SHEETS FOR FOR CURVE INFORMATION

** SEE CONSTRUCTION DETAILS GUARDRAIL REPLACEMENTS AND SECTION 5 PLANS FOR LOCATION OF PROPOSED GUARDRAIL AND PAVED SHOULDERS

\# FROM STA 945+00 - STA 952+75, THE SHOULDER IS 6' PAVED AND 3' AGGREGATE

△ SAFETY EDGE REQUIRED FOR PAVED SHOULDERS 3' OR LESS, SEE SDD "SAFETY EDGE"

(CR) ASPHALTIC RUMBLE STRIPS CENTERLINE. ONLY INSTALL RUMBLE STRIPS WHERE THE SPEED LIMIT IS GREATER THAN 50 MPH. SEE MISCELLANEOUS QUANTITIES FOR FINAL LOCATIONS. SEE SDD FOR "2-LANE RURAL CENTERLINE RUMBLE STRIP, MILLING" FOR ADDITIONAL INFORMATION

MILLING DEPTH REFERENCED AT ROADWAY CENTERLINE

(W) THESE ITEMS APPLY WHERE THE PROPOSED SHOULDER PAVING TO FACE OF GUARDRAIL AND WITHIN TAPERS IS WIDER THAN EXISTING PAVED SHOULDERS. SEE TABLE FOR LOCATIONS.

STATION	TO	STATION	OFFSET
863+78	-	864+90	RT
864+33	-	865+07	LT
866+59	-	867+49	RT
866+65	-	867+78	LT

PROJECT NO: 8010-01-80	HWY: STH 35	COUNTY: POLK	TYPICAL SECTIONS	SHEET 14	E

2

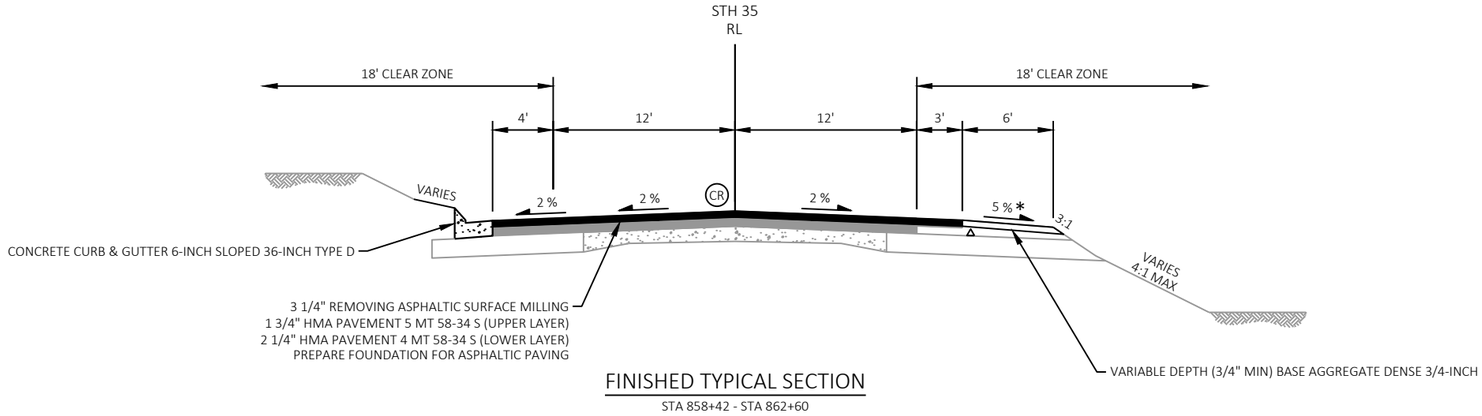

FINISHED TYPICAL SECTION

STA 858+42 - STA 862+60

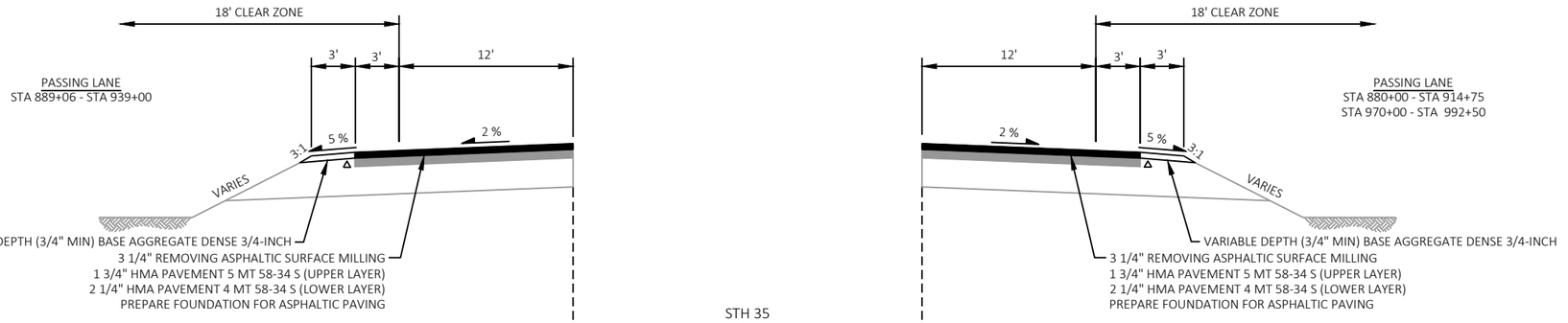

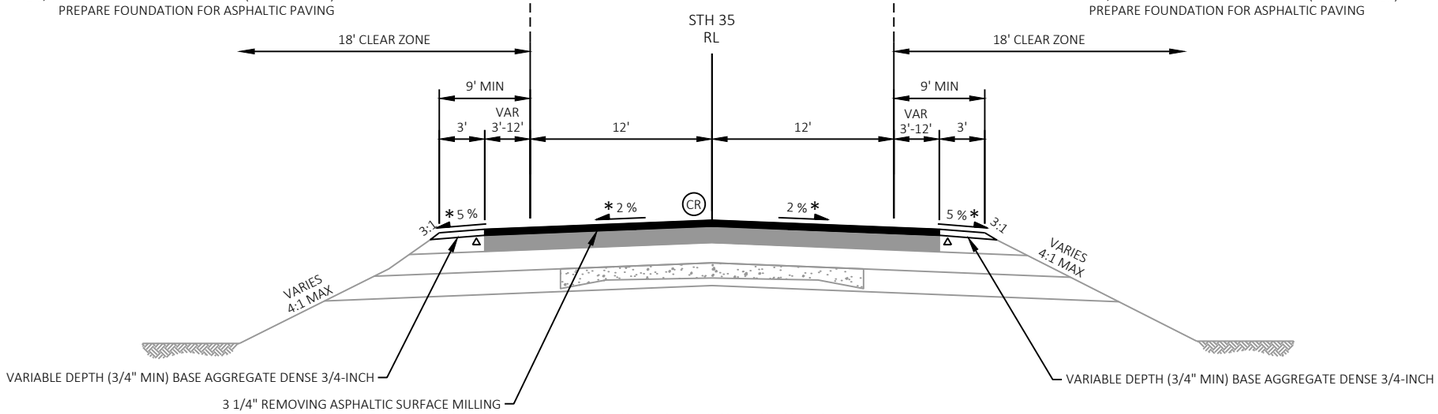

FINISHED TYPICAL SECTION

STA 880+00 - STA 939+00
STA 970+00 - STA 992+50
STA 1018+90 - STA 1035+00 **

NOTES

* CROSS SLOPE VARIES DUE TO SUPERELEVATION, SEE SECTION 5 SHEETS FOR FOR CURVE INFORMATION

** SEE MARKING SHEETS FOR ADDITIONAL INFORMATION REGARDING LANE LOCATIONS AND MEDIAN WIDTH WITHIN VARIABLE WIDTH AREAS FROM STA 1018+90 TO STA 1035+00

△ PAVEMENT SAFETY EDGE REQUIRED FOR PAVED SHOULDERS 3' OR LESS, SEE SDD "SAFETY EDGE"

(CR) ASPHALTIC RUMBLE STRIPS CENTERLINE. ONLY INSTALL RUMBLE STRIPS WHERE THE SPEED LIMIT IS GREATER THAN 50 MPH. SEE MISCELLANEOUS QUANTITIES FOR FINAL LOCATIONS. SEE SDD FOR "2-LANE RURAL CENTERLINE RUMBLE STRIP, MILLING" FOR ADDITIONAL INFORMATION

MILLING DEPTH REFERENCED AT ROADWAY CENTERLINE

PROJECT NO: 8010-01-80	HWY: STH 35	COUNTY: POLK	TYPICAL SECTIONS	SHEET 15	E

2

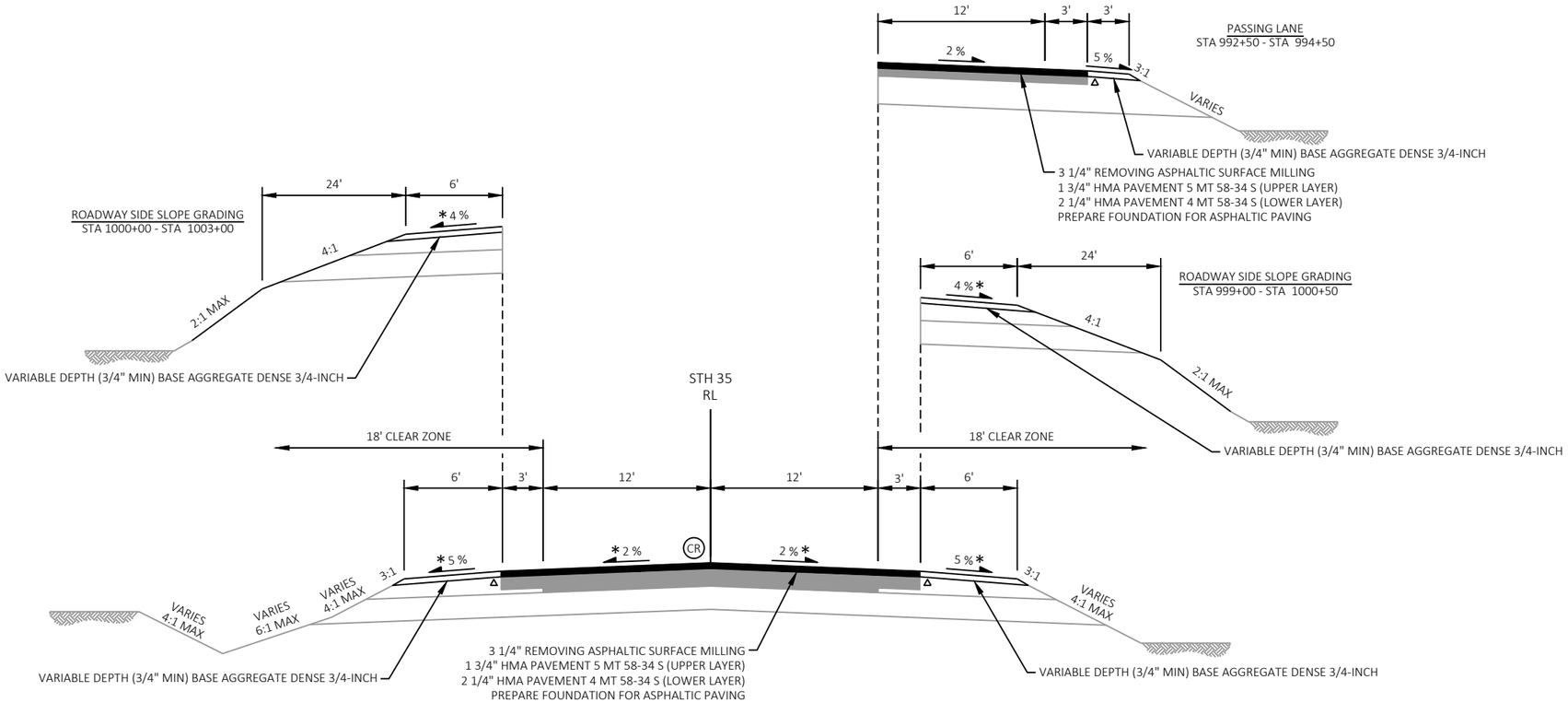

FINISHED TYPICAL SECTION

STA 992+50 - STA 1005+50

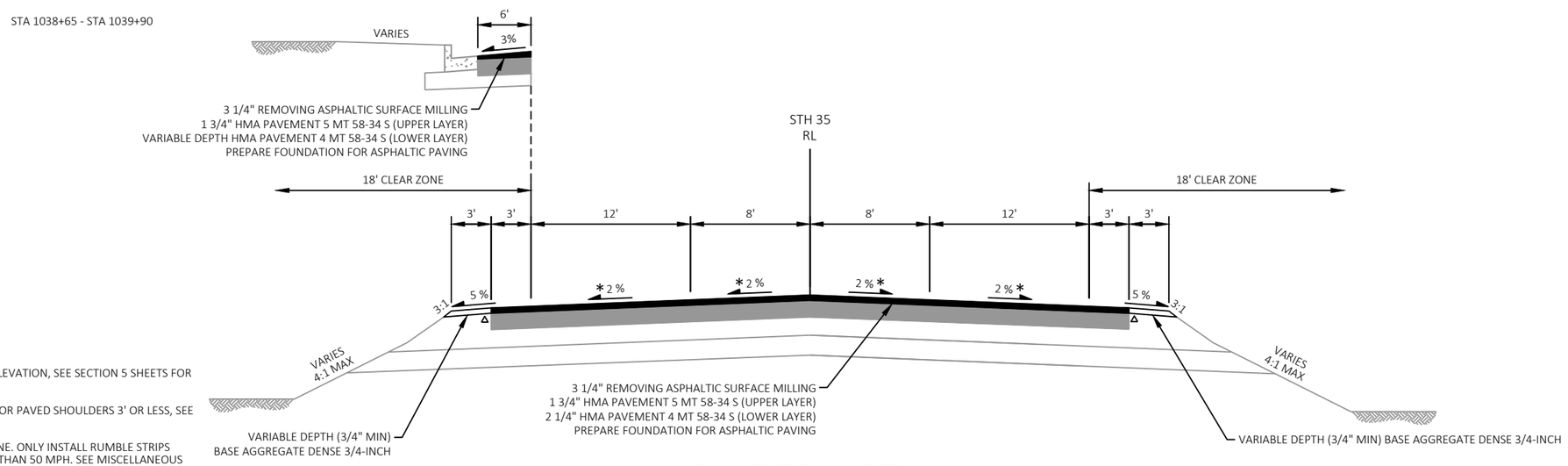

FINISHED TYPICAL SECTION

STA 1035+00 - STA 1065+60

NOTES

* CROSS SLOPE VARIES DUE TO SUPERELEVATION, SEE SECTION 5 SHEETS FOR FOR CURVE INFORMATION

△ PAVEMENT SAFETY EDGE REQUIRED FOR PAVED SHOULDERS 3' OR LESS, SEE SDD "SAFETY EDGE"

(CR) ASPHALTIC RUMBLE STRIPS CENTERLINE. ONLY INSTALL RUMBLE STRIPS WHERE THE SPEED LIMIT IS GREATER THAN 50 MPH. SEE MISCELLANEOUS QUANTITIES FOR FINAL LOCATIONS. SEE SDD FOR "2-LANE RURAL CENTERLINE RUMBLE STRIP, MILLING" FOR ADDITIONAL INFORMATION

MILLING DEPTH REFERENCED AT ROADWAY CENTERLINE

PROJECT NO: 8010-01-80	HWY: STH 35	COUNTY: POLK	TYPICAL SECTIONS	SHEET 16	E

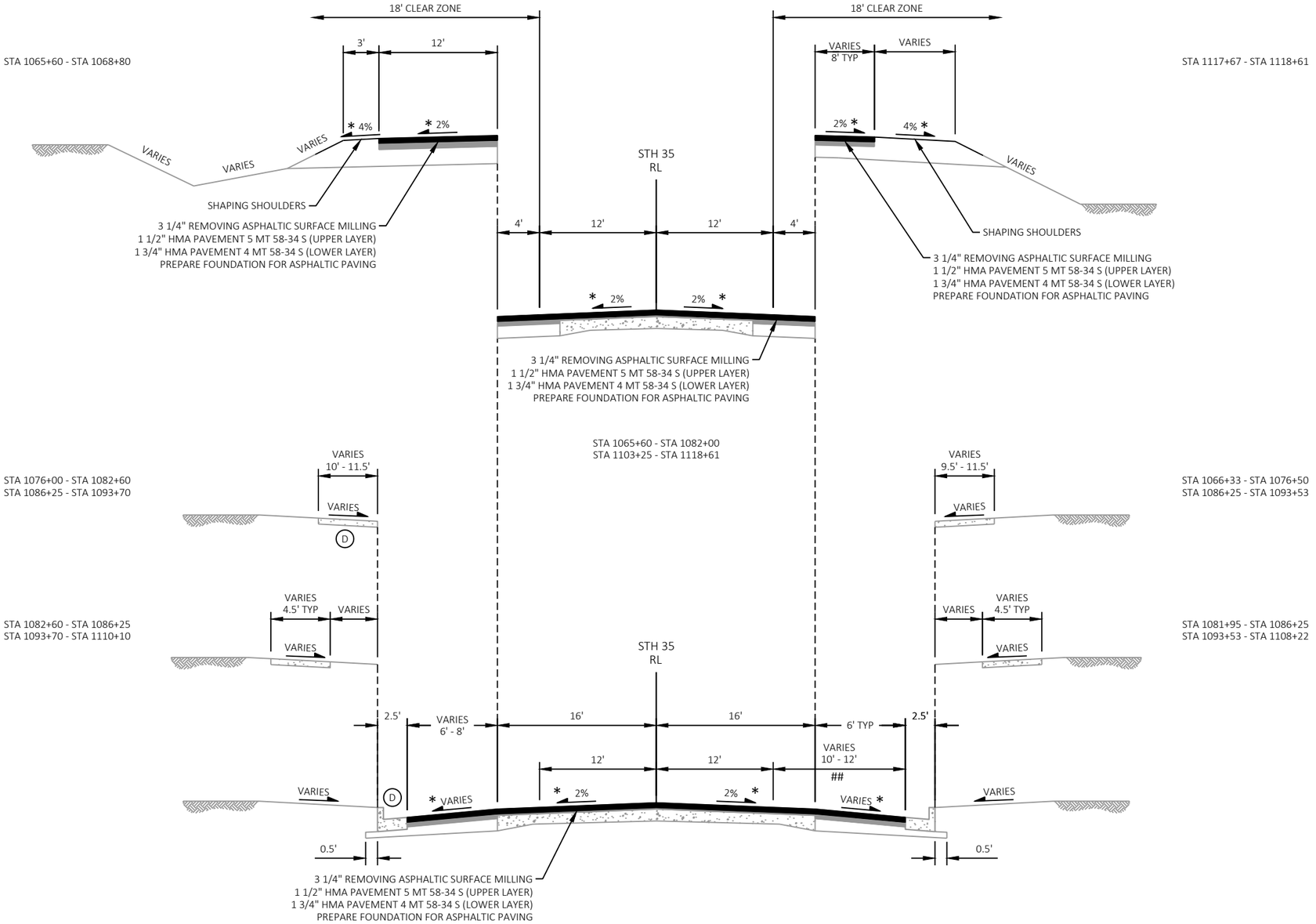

NOTES

* CROSS SLOPE VARIES DUE TO SUPERELEVATION, SEE SECTION 5 SHEETS FOR FOR CURVE INFORMATION

(D) SEE CURB RAMP DETAILS FOR SIDEWALK AND CURB & GUTTER REPLACEMENTS INCLUDED WITH PROJECT AT ASH STREET

MILLING DEPTH REFERENCED AT ROADWAY CENTERLINE

\## MILL THE TRAVEL LANE TO 12' RT ONLY FROM STA 1082+30 TO STA 1085+85 AND FROM STA 1094+20 TO STA 1108+85 (DO NOT MILL AND OVERLAY PARKING LANE)

FINISHED TYPICAL SECTION

STA 1065+60 - STA 1085+85
STA 1094+20 - STA 1118+61

PROJECT NO: 8010-01-80	HWY: STH 35	COUNTY: POLK	TYPICAL SECTIONS	SHEET 17	E

2

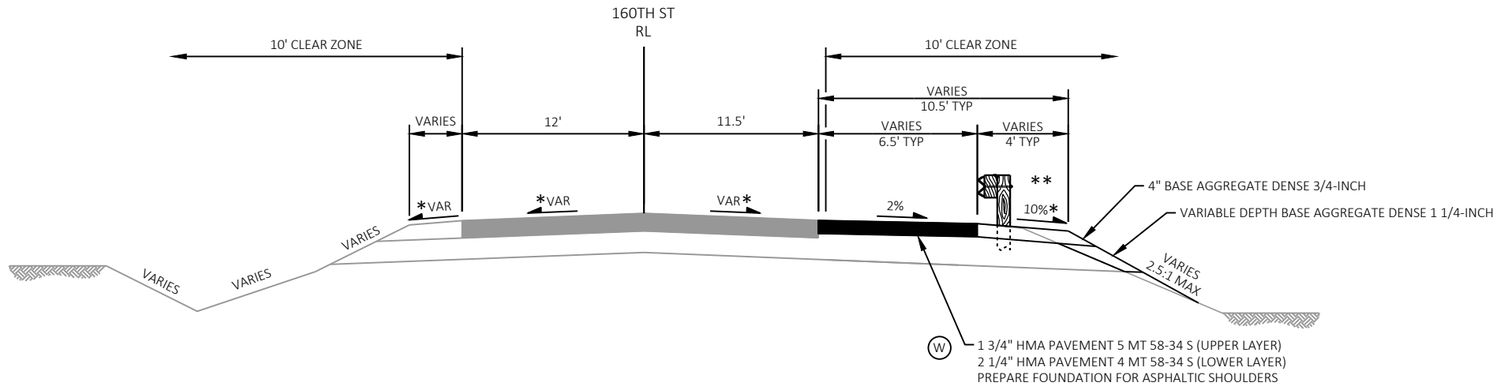

FINISHED TYPICAL SECTION

160TH ST
STA 6+91 - STA 9+42

NOTES

* CROSS SLOPE VARIES DUE TO SUPERELEVATION, SEE SECTION 5 SHEETS FOR FOR CURVE INFORMATION

** SEE CONSTRUCTION DETAILS GUARDRAIL REPLACEMENTS AND SECTION 5 PLANS FOR LOCATION OF PROPOSED GUARDRAIL AND PAVED SHOULDERS

(W) THESE ITEMS APPLY WHERE THE PROPOSED SHOULDER PAVING TO FACE OF GUARDRAIL AND WITHIN TAPERS IS WIDER THAN EXISTING PAVED SHOULDERS. SEE TABLE FOR LOCATIONS.

STATION	TO	STATION	OFFSET
7+91	-	9+42	RT

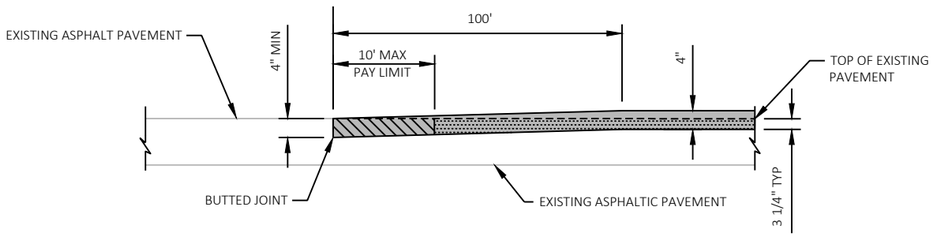

STH 35 BUTT JOINT AND PROFILE MATCH DETAIL

STA 747+52 (BEGIN PROJECT)

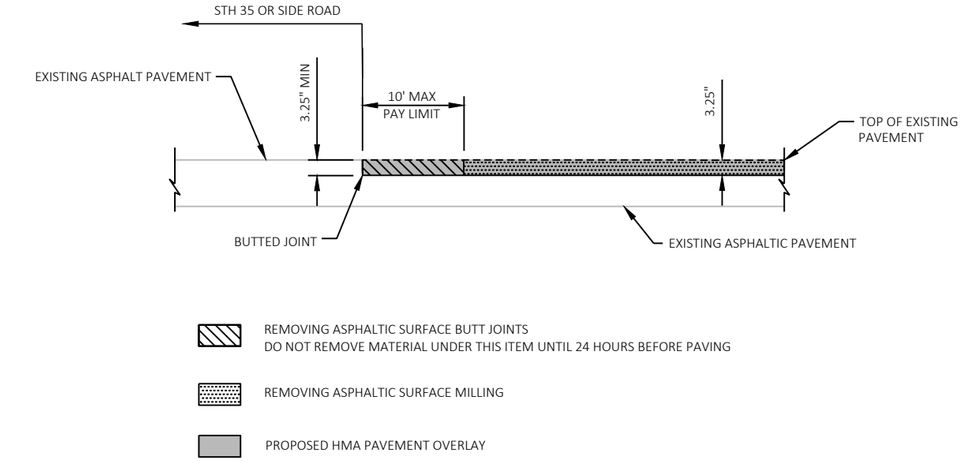

STH 35 AND SIDE ROAD BUTT JOINT DETAIL

STA 1069+75,LT (SERVICE RD)
STA 1070+03,RT (LOCUST ST E)
STA 1076+44,LT (ASH ST W)
STA 1076+67,RT (ASH ST E)
STA 1097+97,LT (HOPE RD W)
STA 1113+03,LT (WISCONSIN AVE N)
STA 1116+65,RT (POLK AVE N)
STA 1118+17,LT (POLK ST)
STA 1118+61 (END PROJECT)

NOTE
SEE SECTION 5 PLANS FOR SIDE ROAD LOCATIONS

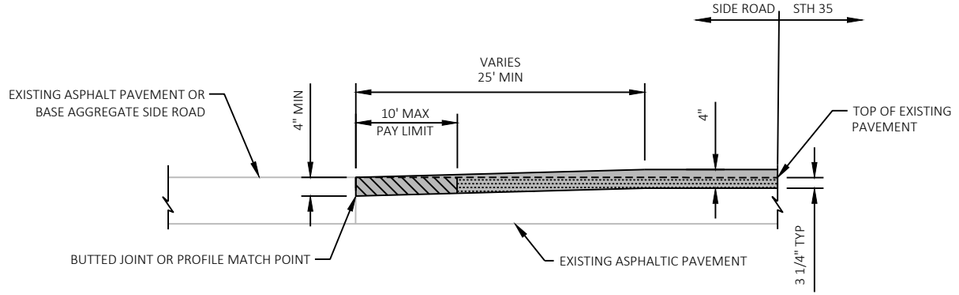

SIDE ROAD BUTT JOINT AND PROFILE MATCH DETAIL

STA 755+78,RT (STH 48)	STA 943+49,LT (160TH ST)
STA 782+59,RT (260TH AVE)	STA 1004+08,RT (150TH ST)
STA 782+72,LT (260TH AVE)	STA 1022+42,RT (CTH W)
STA 835+00,RT (270TH AVE)	STA 1025+39,LT (300TH AVE)
STA 835+10,LT (CTH B)	STA 1030+88,RT (UNITED WAY E)
STA 887+40,RT (280TH AVE)	∗STA 1060+17,LT (INDUSTRIAL WAY W)
STA 887+40,LT (280TH AVE)	STA 1060+50,RT (INDUSTRIAL WAY E)
∗ STA 940+32, RT (290TH AVE)	

NOTE
∗ TRANSITION PROFILE TO MATCH EXISTING BASE AGGREGATE SIDE ROADS WITH VARIABLE DEPTH MILLING AS SHOWN. PAYMENT FOR BUTT JOINTS WILL NOT BE PAID AT SIDE ROADS WITH BASE AGGREGATE SURFACE

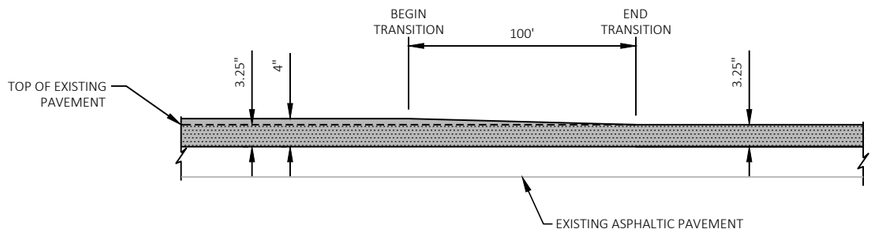

HMA DEPTH TRANSITION DETAIL

STA 862+25 - STA 863+25
STA 869+50 - STA 870+50
STA 939+50 - STA 940+50
STA 945+75 - STA 946+75
STA 1064+60 - STA 1065+60

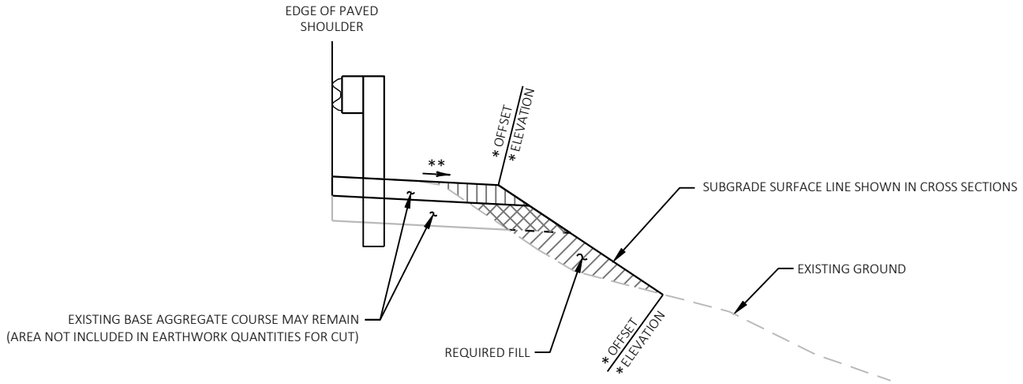

SHOULDER WIDENING EARTHWORK & BASE AGGREGATE FOR GUARDRAIL DETAIL

SEE SECTION 5 PLAN SHEETS, CROSS SECTIONS, AND TYPICAL SECTIONS FOR LOCATIONS

NOTES

BENCH FILL AS REQUIRED PER STANDARD SPECIFICATION 205.3.2(4)

*OFFSET AND ELEVATION PROVIDED TO THESE POINTS ON THE CROSS SECTIONS

**SHOULDER SLOPE PROVIDED ON CROSS SECTIONS

LEGEND

- NEW BASE AGGREGATE DENSE 3/4-INCH
- NEW BASE AGGREGATE DENSE 1 1/4-INCH
- FILL

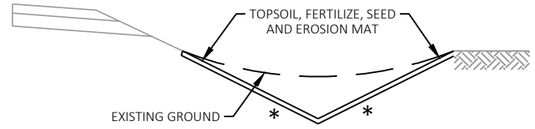

DITCH CLEANING

STA 782+93 - STA 784+13, RT
STA 886+16 - STA 887+02, RT
STA 1023+17 - STA 1023+67, RT
STA 1076+87 - STA 1077+18, LT
STA 1118+72 - STA 1119+12, LT

NOTE

* SLOPES VARY, 4:1 MAX

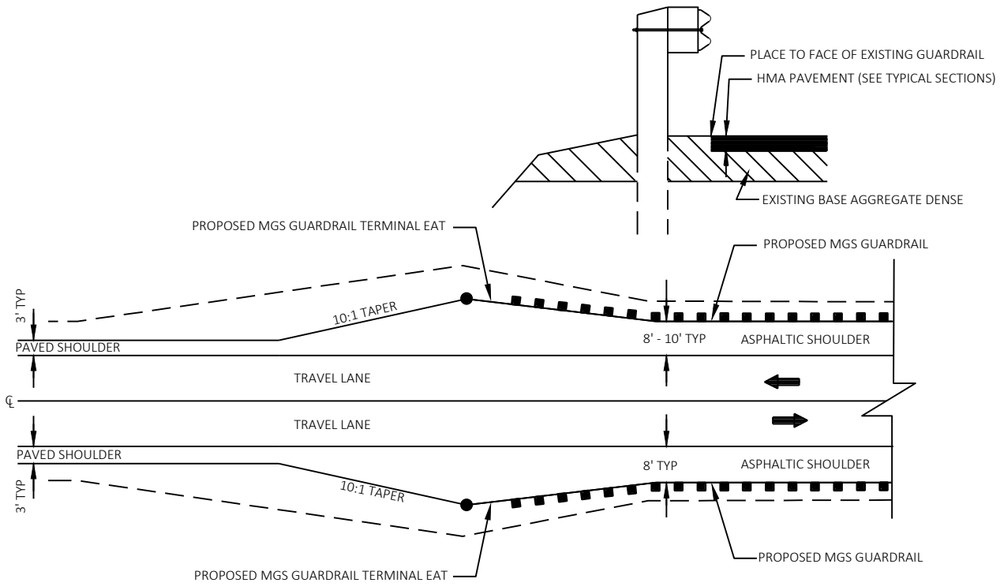

PAVED SHOULDER AT GUARDRAIL DETAIL

NOTE

SEE SECTION 5 PLANS AND SDD "MIDWEST GUARDRAIL SYSTEM (MGS) TERMINAL" FOR ADDITIONAL INFORMATION

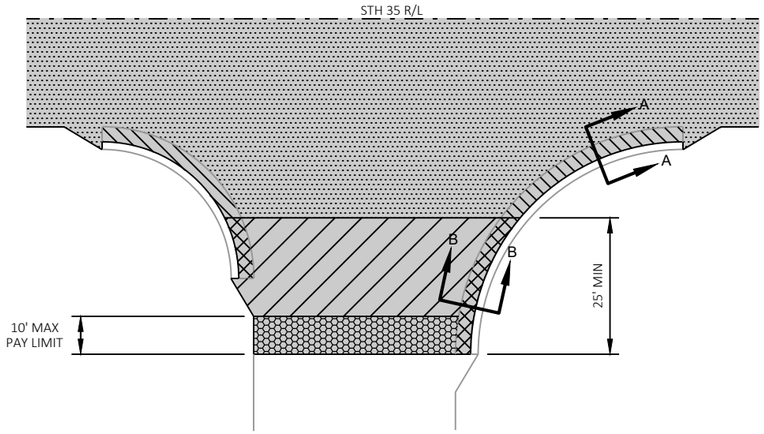

REMOVING ASPHALTIC SURFACE MILLING (3.25" MAX)

REMOVING ASPHALTIC SURFACE MILLING SIDE ROAD PROFILE MATCH (2.25"-4")

REMOVING ASPHALTIC SURFACE BUTT JOINTS
DO NOT REMOVE MATERIAL UNDER THIS ITEM UNTIL 24 HOURS BEFORE PAVING

PROPOSED HMA PAVEMENT OVERLAY

CURB AND GUTTER PAN OVERLAY (1.75" MIN, 3.25" MAX)

REMOVING CONCRETE SURFACE PARTIAL DEPTH (0"-1.75")
CURB AND GUTTER PAN OVERLAY

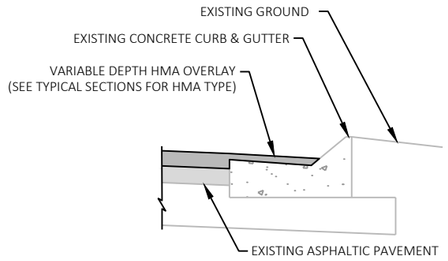

SECTION A-A

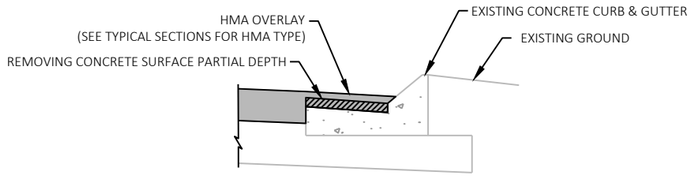

SECTION B-B

RURAL INTERSECTION CURB & GUTTER HMA OVERLAY DETAIL

UNITED WAY NE
UNITED WAY SE

NOTES
SEE TYPICAL SECTIONS FOR PAVEMENT STRUCTURE AND HMA TYPE.

OVERLAY CURB AND GUTTER SUCH THAT THE SHOULDER SLOPE IS NOT GREATER THAN 6%.

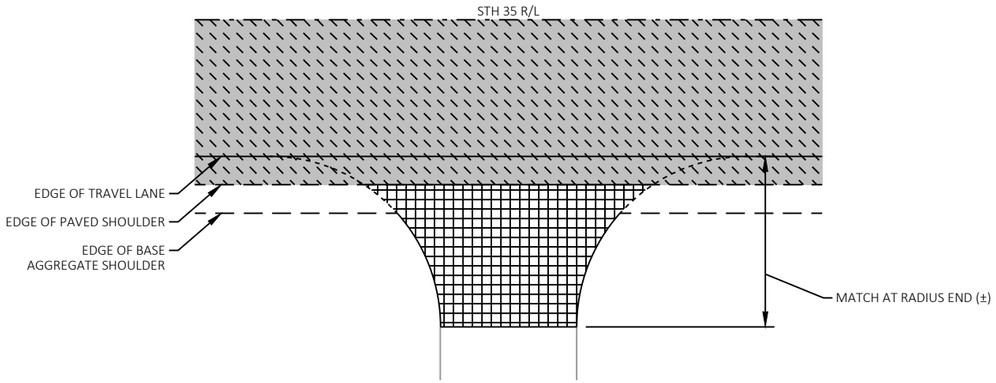

VARIABLE DEPTH BASE AGGREGATE DENSE 3/4-INCH

REMOVING ASPHALTIC SURFACE MILLING (SEE TYPICAL SECTIONS)

PROPOSED HMA PAVEMENT OVERLAY

UNPAVED SIDE ROAD AND DRIVEWAY DETAIL

STA 940+25, RT (290TH AVE)
DRIVEWAY LOCATIONS NOT SHOWN, MATCH EXISTING

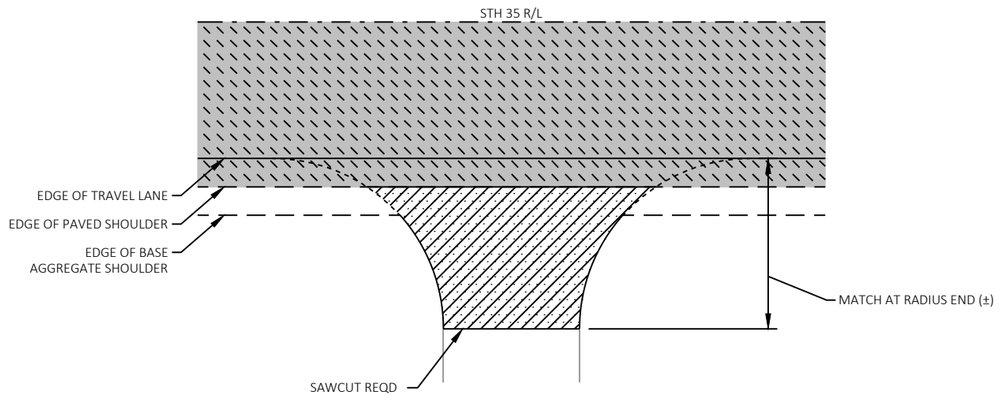

REMOVING ASPHALTIC SURFACE OR REMOVING CONCRETE PAVEMENT

REMOVING ASPHALTIC SURFACE MILLING (SEE TYPICAL SECTIONS)

PROPOSED HMA PAVEMENT OVERLAY

PROPOSED 3" ASPHALTIC SURFACE DRIVEWAYS AND FIELD ENTRANCES

PAVED DRIVEWAY DETAIL

DRIVEWAY LOCATIONS NOT SHOWN, MATCH EXISTING

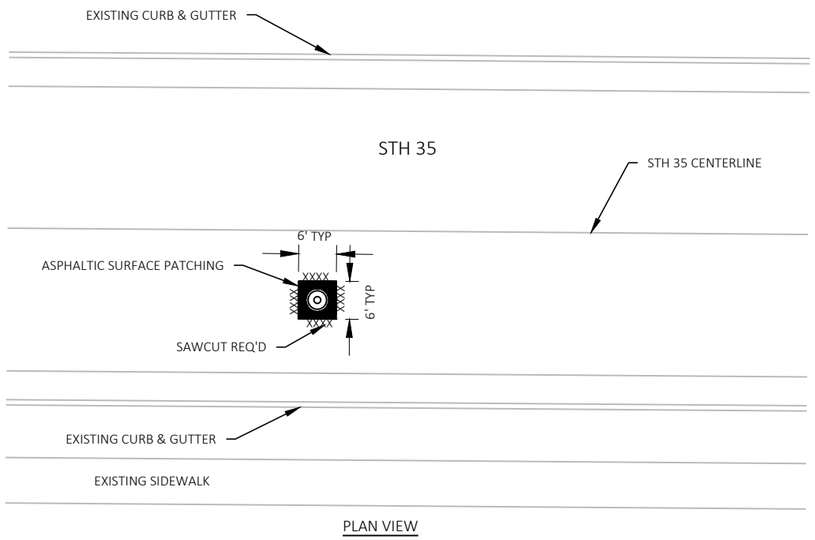

PLAN VIEW

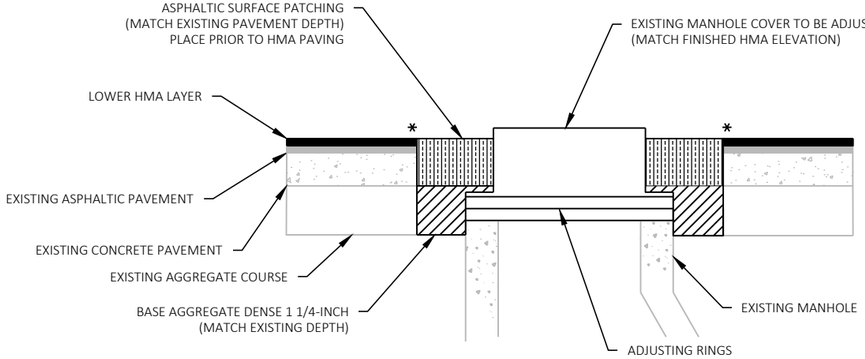

SECTION VIEW FOR MANHOLES IN CONCRETE PAVEMENT OVERLAID WITH ASPHALT

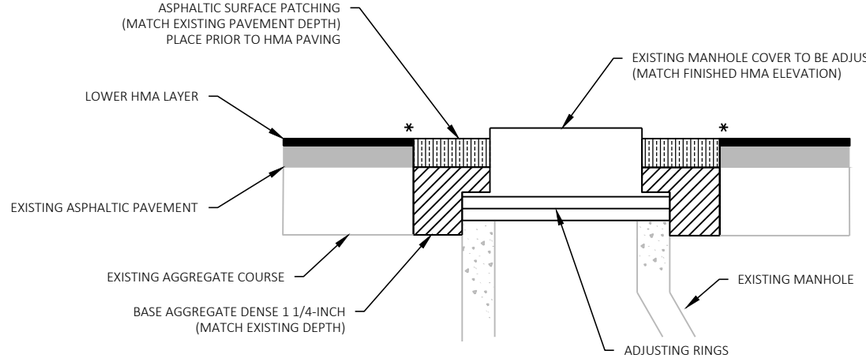

SECTION VIEW FOR MANHOLES IN ASPHALT

ADJUSTING MANHOLE COVERS, SANITARY MANHOLE COVERS, AND WATER VALVE BOXES DETAIL

NOTES

* SAWCUT REQ'D

THE PATCHING FOR WATER VALVES SHOULD FOLLOW A SIMILAR DETAIL EXCEPT THAT THE ANTICIPATED PAVEMENT REMOVAL AREA IS ESTIMATED AT 3' X 3'. ADJUST WATER VALVES DOWN AND COVER WITH AGGREGATE PRIOR TO MILLING. RAISE WATER VALVE TO FINISHED ELEVATION PRIOR TO PAVING UPPER HMA LAYER.

FOR MANHOLES IN THE DRIVING LANE OR MIDDLE OF INTERSECTIONS:

- SAW AROUND MANHOLE, REMOVE EXISTING PAVEMENT, STOCKPILE MANHOLE COVER AND PLACE TEMPORARY COVER PLATE
- MILL EXISTING ASPHALT AND PAVE LOWER HMA LAYER
- SAW AND REMOVE HMA, REINSTALL MANHOLE COVER WITH ADJUSTING RINGS TO FINISHED HMA ELEVATION, PLACE AGGREGATE AND ASPHALTIC SURFACE PATCHING TO TOP OF LOWER HMA LAYER
- PAVE UPPER HMA LAYER

EXISTING CONCRETE MAY BE PRESENT UNDER TRAVEL LANES, SEE TYPICAL SECTIONS FOR ANTICIPATED LIMITS OF EXISTING CONCRETE PAVEMENT. ACTUAL LOCATIONS OF EXISTING CONCRETE MAY VARY.

SEE MISCELLANEOUS QUANTITIES FOR LOCATIONS.

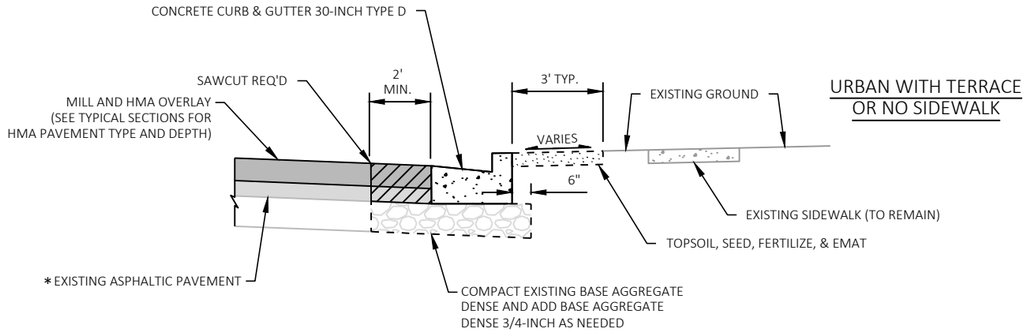

URBAN WITH TERRACE OR NO SIDEWALK

VARIABLE DEPTH ASPHALTIC SURFACE PATCHING (MATCH EXISTING PAVEMENT DEPTH)

DETAIL OF CURB & GUTTER REPLACEMENT

SEE CURB RAMP DETAILS AND CONSTRUCTION DETAILS FOR CURB & GUTTER REPLACEMENT LOCATIONS

NOTES

COMPLETE CURB & GUTTER REPLACEMENTS AND ASPHALTIC SURFACE PATCHING PRIOR TO THE MILL AND OVERLAY OF STH 35

FOR DETAILS NOT SHOWN, SEE SDD "CONCRETE CURB AND GUTTER"

SEE CURB RAMP DETAILS AND CONSTRUCTION DETAILS FOR CURB & GUTTER LOCATIONS, SIDEWALK AND CURB RAMP IMPROVEMENTS, AND FOR ADDITIONAL INFORMATION

* SEE TYPICAL SECTIONS FOR LOCATION OF EXISTING ASPHALTIC PAVEMENT OVER EXISTING CONCRETE PAVEMENT

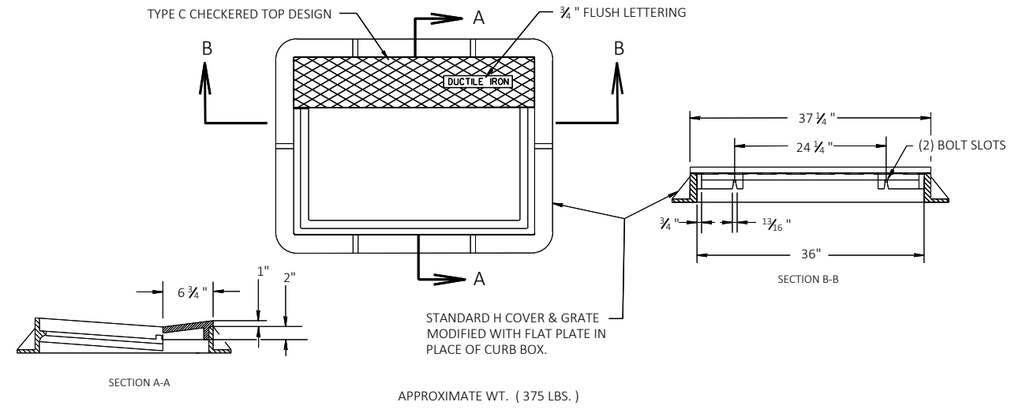

APPROXIMATE WT. (375 LBS.)

INLET COVER TYPE H-D

(WITH MOUNTABLE CURB PLATE)

STA 1076+65, LT

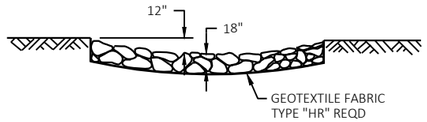

SECTION A-A

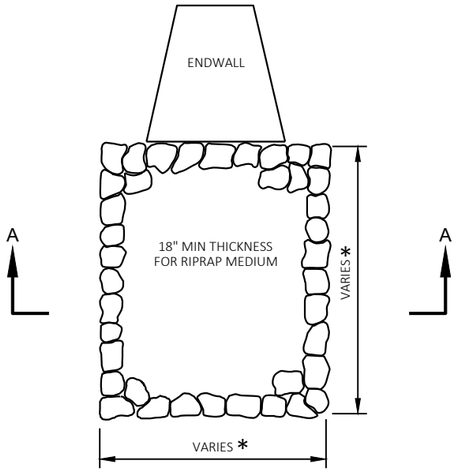

RIPRAP MEDIUM TREATMENT AT CULVERTS

NOTE

* SEE CONSTRUCTION DETAILS FOR LOCATIONS AND DIMENSIONS

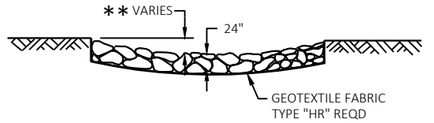

SECTION A-A

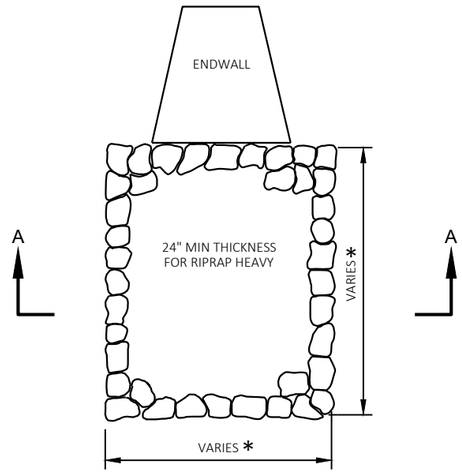

RIPRAP HEAVY TREATMENT AT C-48-181

NOTES

* FILL IN EXISTING SCOUR HOLE (24" MIN DEPTH); SEE CONSTRUCTION DETAILS FOR LOCATIONS AND DIMENSIONS OF ALL RIPRAP AREAS INCLUDING AT WINGWALLS AT C-48-181

** SHAPE RIPRAP TO MATCH EXISTING GROUND

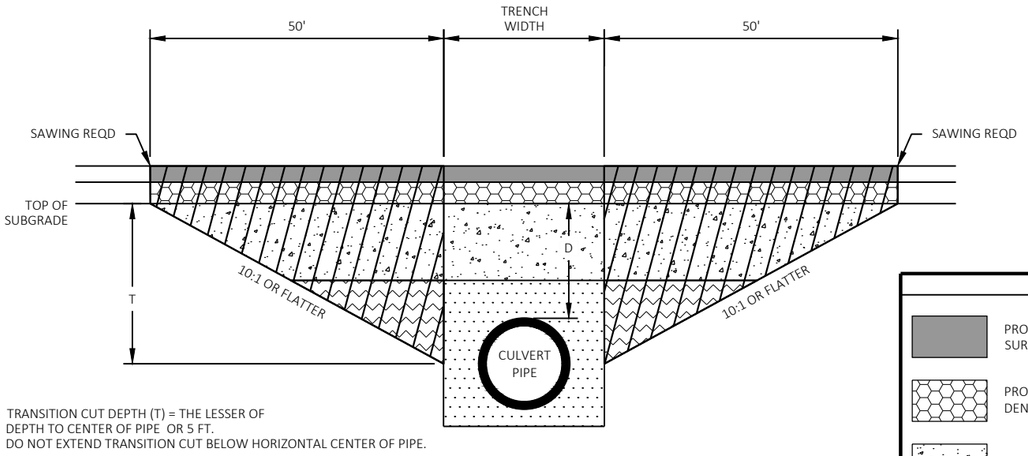

TRANSITION CUT DEPTH (T) = THE LESSER OF
DEPTH TO CENTER OF PIPE OR 5 FT.
DO NOT EXTEND TRANSITION CUT BELOW HORIZONTAL CENTER OF PIPE.

DEPTH D < 6 FT

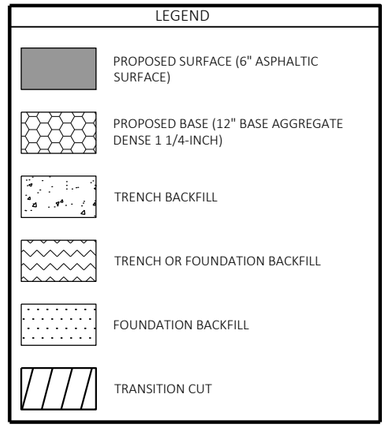

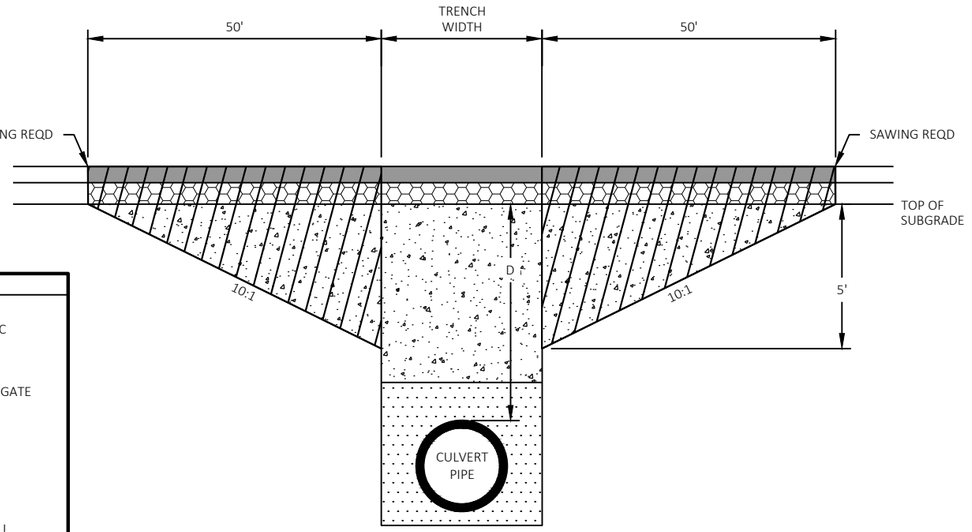

DEPTH D ≥ 6 FT

NOTES

TRANSITION CUT IS PAID AS EXCAVATION COMMON

TRANSITION CUT WIDTH IS FROM SUBGRADE SHOULDER POINT TO SUBGRADE SHOULDER POINT

BACKFILL THE TRANSITION CUT AREAS WITH FOUNDATION AND TRENCH BACKFILL AS SPECIFIED IN STANDARD SPEC 520

PERFORM CULVERT PIPE INSTALLATION AND PLACE ASPHALTIC SURFACE BEFORE THE MILLING AND OVERLAY OPERATIONS

* DEPTH IS MEASURED AT THE DEEPEST PORTION OF THE PIPE WITHIN THE SUBGRADE SHOULDER POINTS

** THIS TRANSITION CUT HAS UNDERLYING CONCRETE PAVEMENT

\# MULTIPLE PIPES ARE PART OF ONE TRANSITION CUT

ROUTE	STA (CL)	DEPTH D (FT)*	PIPE DIA (IN)
STH 35	804+54 **	4.1'	54"
STH 35	828+34 **	2.5'	30"
STH 35	833+31 **	1.4'	24"
STH 35	840+02 **	2.1'	30"
STH 35	846+91 **	4.0'	36"
STH 35	856+83	7.8'	30"
STH 35	876+18 **	5.8'	38"X60"#
STH 35	876+27 **	5.8'	38"X60"#
STH 35	884+53 **	4.2'	30"
STH 35	908+78 **	7.1'	36"
STH 35	951+93	9.8'	24"
STH 35	969+85	13.5'	24"
STH 35	977+00 **	3.5'	24"
STH 35	1036+30	10.6'	48"

CULVERT PIPE TRANSITION DETAIL

2

LEGEND

- EROSION MAT CLASS I TYPE B
- EROSION MAT CLASS II TYPE C
- SILT FENCE
- ESTIMATED SLOPE INTERCEPT
- DELINEATED WETLAND BOUNDARY
- RIPRAP MEDIUM (SEE CONSTRUCTION DETAILS)
- CULVERT PIPE CHECK
- TEMPORARY DITCH CHECK
- EROSION BALE REINFORCEMENT
- SURFACE WATER FLOW
- PERMITTED WETLAND/WATERWAY IMPACTS
- X CLEARING AND GRUBBING

NOTES

DISTURBED AREAS WITHIN THE RIGHT OF WAY, EXCEPT THE AREAS WITHIN THE FINISHED SHOULDER POINTS, SHALL BE FERTILIZED, SEEDED, TOPSOILED AND COVERED WITH EROSION MAT.

PLACE SILT FENCE WITHIN 1-FT TO 3-FT OF THE SLOPE INTERCEPT IN WETLAND AREAS.

N

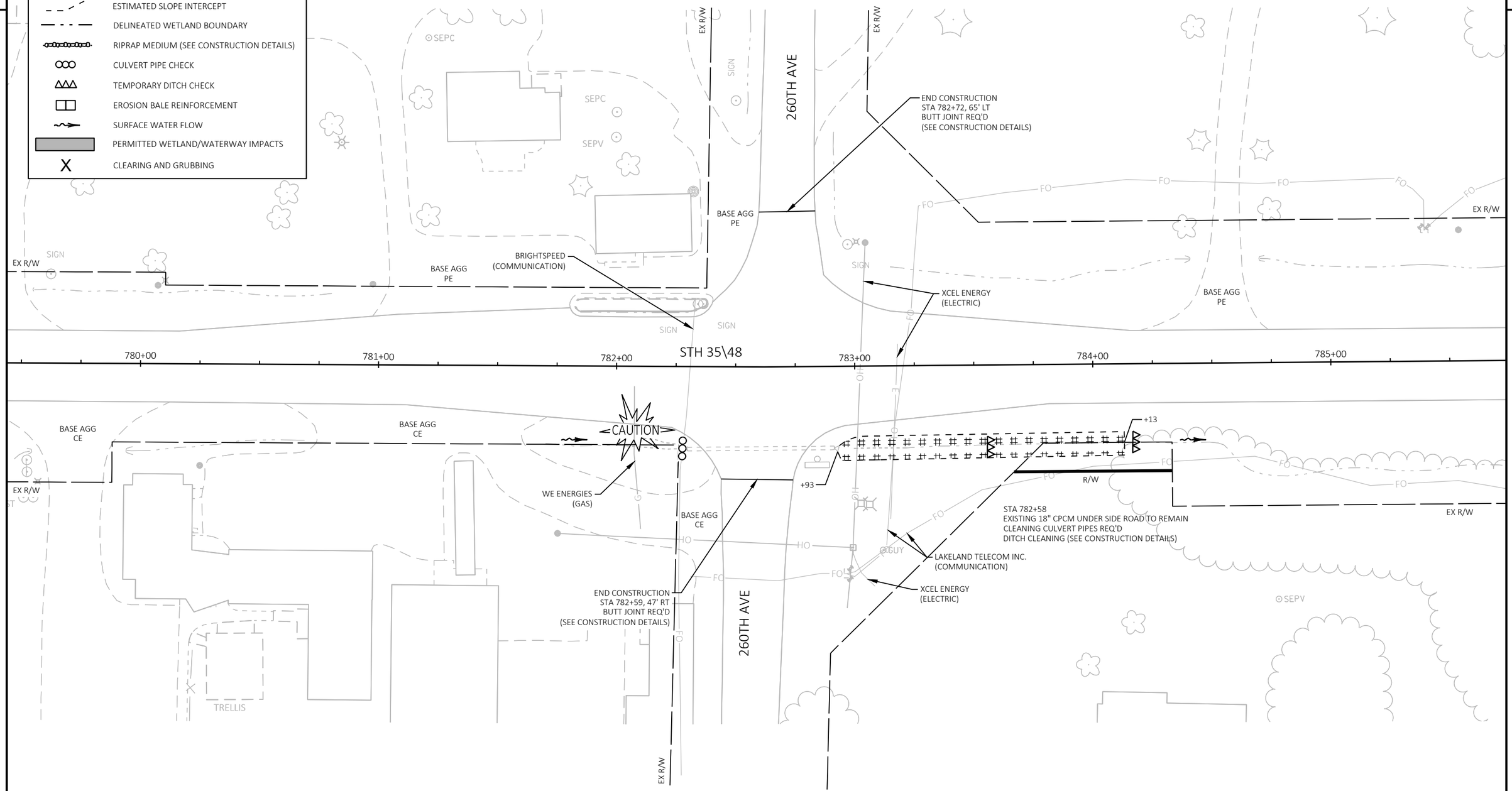

PROJECT NO: 8010-01-80	HWY: STH 35	COUNTY: POLK	CONSTRUCTION DETAILS - DITCH CLEANING	SHEET 26	E

FILE NAME : P:\55XX\5508.DP.22.STH35-48.PLK\CADDS\80100180\SHEETS\021002-CD.DWG
LAYOUT NAME - 01

PLOT DATE : 4/20/2026 10:01 AM PLOT BY : PARKER TISCHAUSER PLOT NAME : PLOT SCALE : 1 IN:40 FT

2

LEGEND

- EROSION MAT CLASS I TYPE B
- EROSION MAT CLASS II TYPE C
- SILT FENCE
- ESTIMATED SLOPE INTERCEPT
- DELINEATED WETLAND BOUNDARY
- RIPRAP MEDIUM (SEE CONSTRUCTION DETAILS)
- CULVERT PIPE CHECK
- TEMPORARY DITCH CHECK
- EROSION BALE REINFORCEMENT
- SURFACE WATER FLOW
- PERMITTED WETLAND/WATERWAY IMPACTS
- CLEARING AND GRUBBING

NOTES

DISTURBED AREAS WITHIN THE RIGHT OF WAY, EXCEPT THE AREAS WITHIN THE FINISHED SHOULDER POINTS, SHALL BE FERTILIZED, SEEDED, TOPSOILED AND COVERED WITH EROSION MAT.

PLACE SILT FENCE WITHIN 1-FT TO 3-FT OF THE SLOPE INTERCEPT IN WETLAND AREAS.

SEE "CULVERT PIPE TRANSITION" CONSTRUCTION DETAIL FOR ADDITIONAL INFORMATION.

N

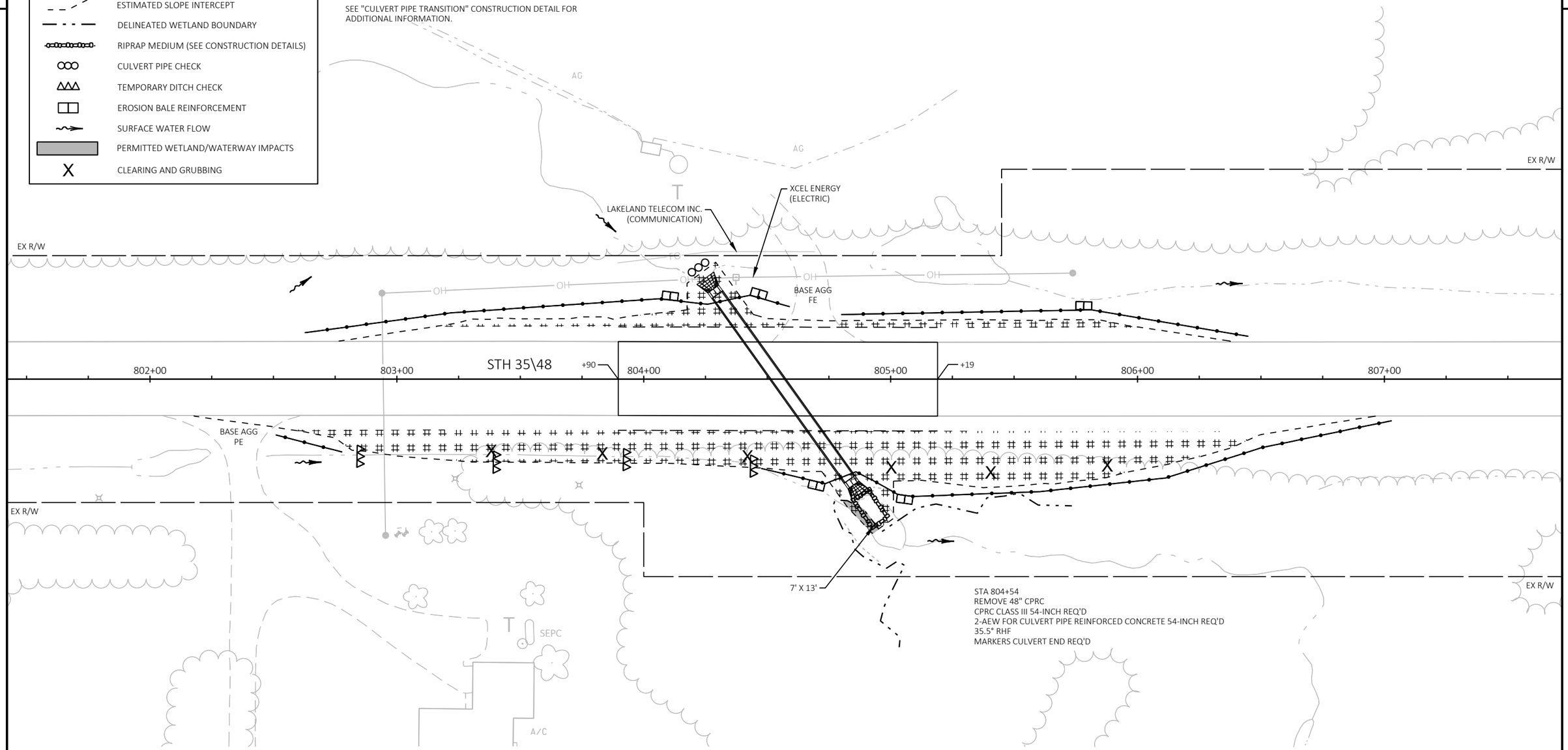

STA 804+54
REMOVE 48" CPRC
CPRC CLASS III 54-INCH REQ'D
2-AEW FOR CULVERT PIPE REINFORCED CONCRETE 54-INCH REQ'D
35.5° RHF
MARKERS CULVERT END REQ'D

2

PROJECT NO: 8010-01-80	HWY: STH 35	COUNTY: POLK	CONSTRUCTION DETAILS - CULVERT WORK	SHEET 27	E

2

LEGEND

- EROSION MAT CLASS I TYPE B
- EROSION MAT CLASS II TYPE C
- SILT FENCE
- ESTIMATED SLOPE INTERCEPT
- DELINEATED WETLAND BOUNDARY
- RIPRAP MEDIUM (SEE CONSTRUCTION DETAILS)
- CULVERT PIPE CHECK
- TEMPORARY DITCH CHECK
- EROSION BALE REINFORCEMENT
- SURFACE WATER FLOW
- PERMITTED WETLAND/WATERWAY IMPACTS
- X CLEARING AND GRUBBING

NOTES

DISTURBED AREAS WITHIN THE RIGHT OF WAY, EXCEPT THE AREAS WITHIN THE FINISHED SHOULDER POINTS, SHALL BE FERTILIZED, SEEDED, TOPSOILED AND COVERED WITH EROSION MAT.

PLACE SILT FENCE WITHIN 1-FT TO 3-FT OF THE SLOPE INTERCEPT IN WETLAND AREAS.

SEE "CULVERT PIPE TRANSITION" CONSTRUCTION DETAIL FOR ADDITIONAL INFORMATION.

N

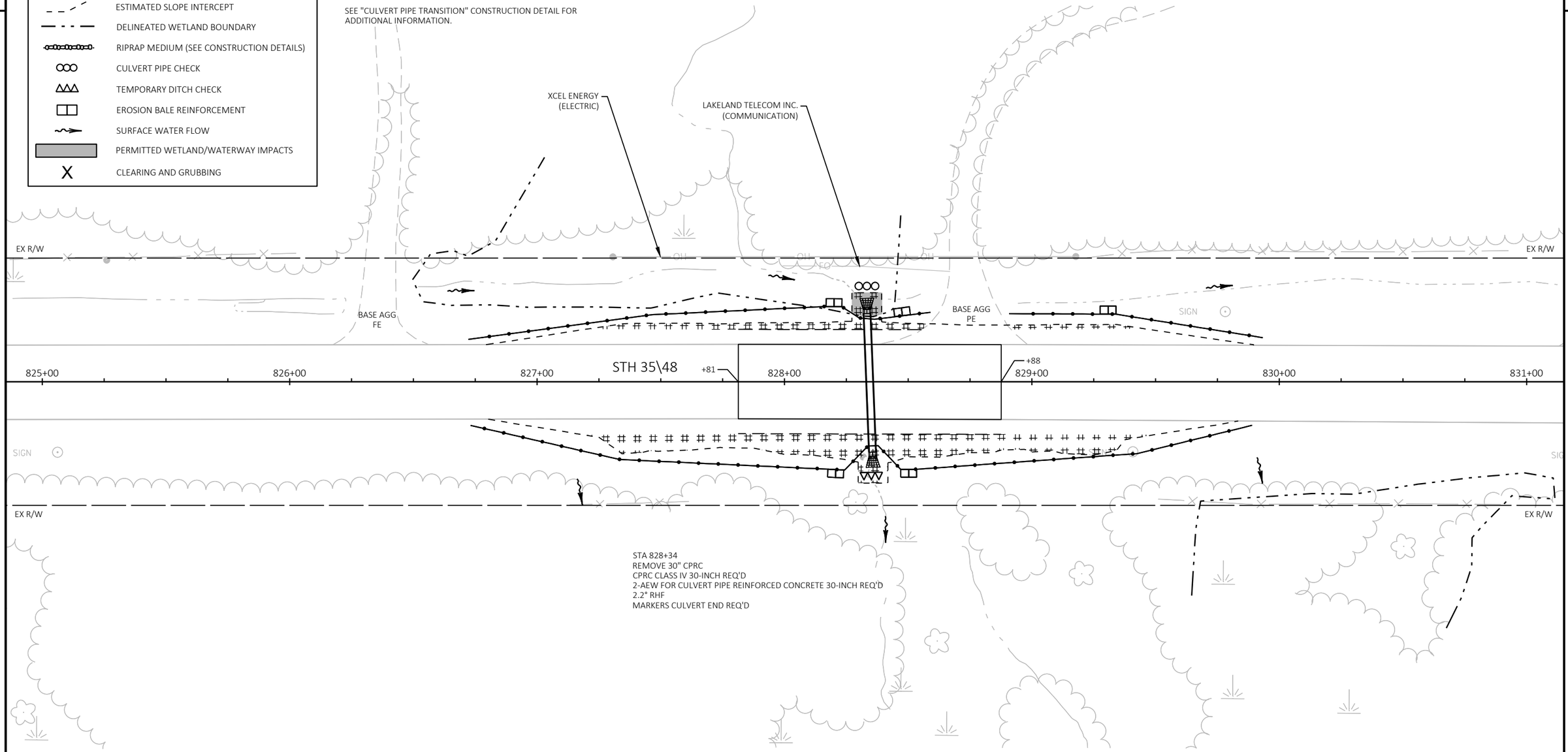

2

PROJECT NO: 8010-01-80	HWY: STH 35	COUNTY: POLK	CONSTRUCTION DETAILS - CULVERT WORK	SHEET 28	E

LEGEND

- EROSION MAT CLASS I TYPE B
- EROSION MAT CLASS II TYPE C
- SILT FENCE
- ESTIMATED SLOPE INTERCEPT
- DELINEATED WETLAND BOUNDARY
- RIPRAP MEDIUM (SEE CONSTRUCTION DETAILS)
- CULVERT PIPE CHECK
- TEMPORARY DITCH CHECK
- EROSION BALE REINFORCEMENT
- SURFACE WATER FLOW
- PERMITTED WETLAND/WATERWAY IMPACTS
- CLEARING AND GRUBBING

NOTES

DISTURBED AREAS WITHIN THE RIGHT OF WAY, EXCEPT THE AREAS WITHIN THE FINISHED SHOULDER POINTS, SHALL BE FERTILIZED, SEEDED, TOPSOILED AND COVERED WITH EROSION MAT.

PLACE SILT FENCE WITHIN 1-FT TO 3-FT OF THE SLOPE INTERCEPT IN WETLAND AREAS.

SEE "CULVERT PIPE TRANSITION" CONSTRUCTION DETAIL FOR ADDITIONAL INFORMATION.

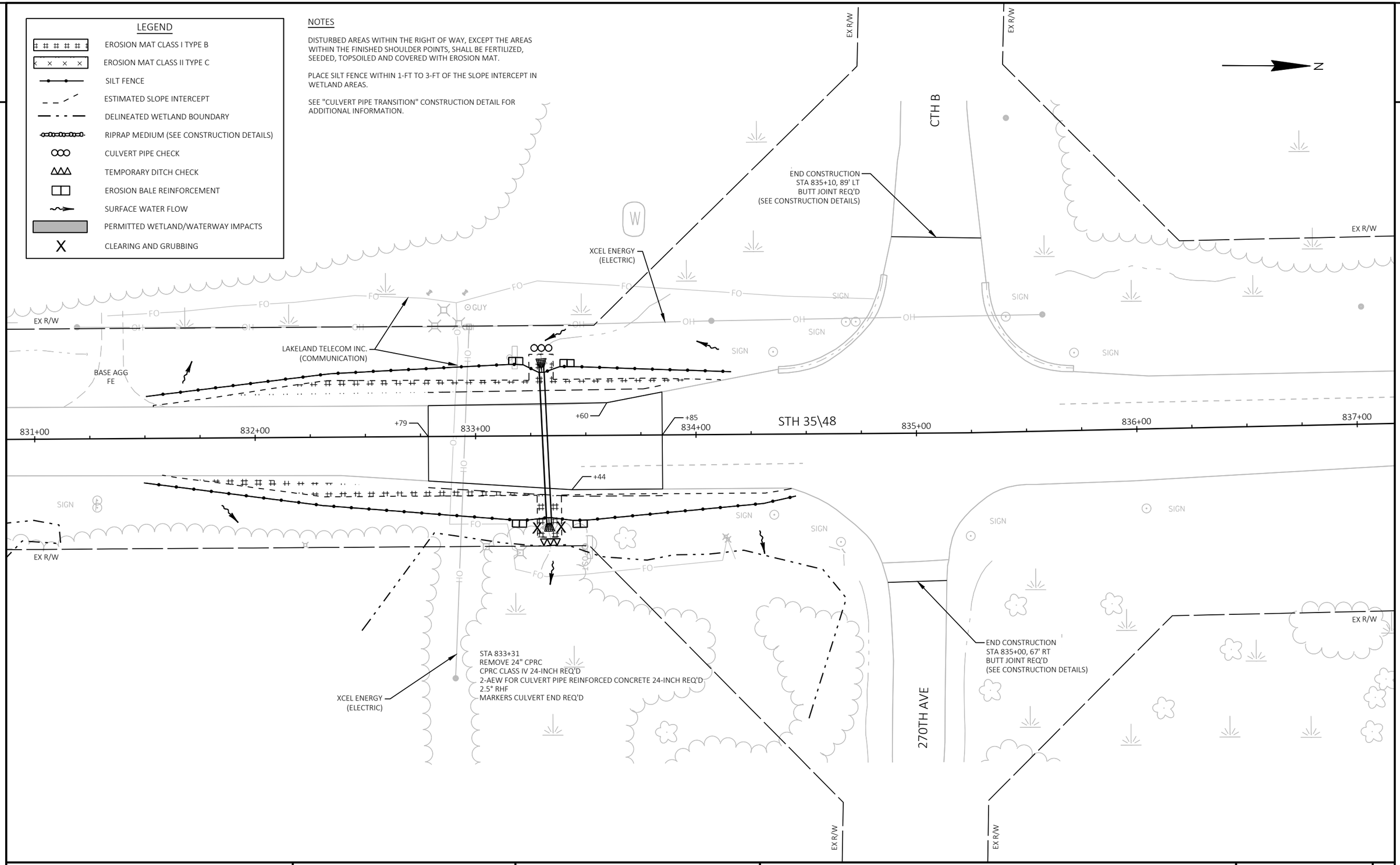

PROJECT NO: 8010-01-80	HWY: STH 35	COUNTY: POLK	CONSTRUCTION DETAILS - CULVERT WORK	SHEET 29	E

2

LEGEND

- EROSION MAT CLASS I TYPE B
- EROSION MAT CLASS II TYPE C
- SILT FENCE
- ESTIMATED SLOPE INTERCEPT
- DELINEATED WETLAND BOUNDARY
- RIPRAP MEDIUM (SEE CONSTRUCTION DETAILS)
- CULVERT PIPE CHECK
- TEMPORARY DITCH CHECK
- EROSION BALE REINFORCEMENT
- SURFACE WATER FLOW
- PERMITTED WETLAND/WATERWAY IMPACTS
- X CLEARING AND GRUBBING

NOTES

DISTURBED AREAS WITHIN THE RIGHT OF WAY, EXCEPT THE AREAS WITHIN THE FINISHED SHOULDER POINTS, SHALL BE FERTILIZED, SEEDED, TOPSOILED AND COVERED WITH EROSION MAT.

PLACE SILT FENCE WITHIN 1-FT TO 3-FT OF THE SLOPE INTERCEPT IN WETLAND AREAS.

SEE "CULVERT PIPE TRANSITION" CONSTRUCTION DETAIL FOR ADDITIONAL INFORMATION.

N

LAKELAND TELECOM INC. (COMMUNICATION)

XCEL ENERGY (ELECTRIC)

FO

OH

OH

OH

EX R/W

SIGN

SIGN

+76

+49

+55

837+00

838+00

839+00

840+00

841+00

842+00

843+00

STH 35\48

SIGN

SIGN

EX R/W

EX R/W

STA 840+02
REMOVE 30" CPRC
CPRC CLASS IV 30-INCH REQ'D
2-AEW FOR CULVERT PIPE REINFORCED CONCRETE 30-INCH REQ'D
1.8° RHF
MARKERS CULVERT END REQ'D

NO PASSING ZONE

MOVE

NORTH STAR CREEK

2

PROJECT NO: 8010-01-80	HWY: STH 35	COUNTY: POLK	CONSTRUCTION DETAILS - CULVERT WORK	SHEET 30	E

2

LEGEND

- EROSION MAT CLASS I TYPE B
- EROSION MAT CLASS II TYPE C
- SILT FENCE
- ESTIMATED SLOPE INTERCEPT
- DELINEATED WETLAND BOUNDARY
- RIPRAP MEDIUM (SEE CONSTRUCTION DETAILS)
- CULVERT PIPE CHECK
- TEMPORARY DITCH CHECK
- EROSION BALE REINFORCEMENT
- SURFACE WATER FLOW
- PERMITTED WETLAND/WATERWAY IMPACTS
- X CLEARING AND GRUBBING

NOTES

DISTURBED AREAS WITHIN THE RIGHT OF WAY, EXCEPT THE AREAS WITHIN THE FINISHED SHOULDER POINTS, SHALL BE FERTILIZED, SEEDED, TOPSOILED AND COVERED WITH EROSION MAT.

PLACE SILT FENCE WITHIN 1-FT TO 3-FT OF THE SLOPE INTERCEPT IN WETLAND AREAS.

SEE "CULVERT PIPE TRANSITION" CONSTRUCTION DETAIL FOR ADDITIONAL INFORMATION.

N

STA 846+91
REMOVE 36" CPRC
CP CLASS III-A NON-METAL 36-INCH REQ'D
2-AEW FOR CULVERT PIPE 36-INCH REQ'D
14° RHF
MARKERS CULVERT END REQ'D

JCT COUNTY B
MOVE

LAKELAND TELECOM INC.
(COMMUNICATION)

XCEL ENERGY
(ELECTRIC)

EX R/W

SIGN

TLE

OH

BASE AGG
PE

STH 35\48

843+00 844+00 845+00 846+00 +35 847+00 +48 848+00 849+00

BASE AGG
PE

EX R/W

NORTH STAR CREEK

5' X 10'

EX R/W

UNNAMED STREAM

PROJECT NO: 8010-01-80	HWY: STH 35	COUNTY: POLK	CONSTRUCTION DETAILS - CULVERT WORK	SHEET 31	E

2

LEGEND

- EROSION MAT CLASS I TYPE B
- EROSION MAT CLASS II TYPE C
- SILT FENCE
- ESTIMATED SLOPE INTERCEPT
- DELINEATED WETLAND BOUNDARY
- RIPRAP MEDIUM (SEE CONSTRUCTION DETAILS)
- CULVERT PIPE CHECK
- TEMPORARY DITCH CHECK
- EROSION BALE REINFORCEMENT
- SURFACE WATER FLOW
- PERMITTED WETLAND/WATERWAY IMPACTS
- X CLEARING AND GRUBBING

NOTES

DISTURBED AREAS WITHIN THE RIGHT OF WAY, EXCEPT THE AREAS WITHIN THE FINISHED SHOULDER POINTS, SHALL BE FERTILIZED, SEEDED, TOPSOILED AND COVERED WITH EROSION MAT.

PLACE SILT FENCE WITHIN 1-FT TO 3-FT OF THE SLOPE INTERCEPT IN WETLAND AREAS.

SEE "CULVERT PIPE TRANSITION" CONSTRUCTION DETAIL FOR ADDITIONAL INFORMATION.

SEE "CURB & GUTTER REPLACEMENT" CONSTRUCTION DETAIL FOR ADDITIONAL INFORMATION.

SEE SDD "CONCRETE CURB, TIES, AND CURB AND GUTTER APPLICATIONS" FOR ADDITIONAL INFORMATION.

SEE TRAFFIC CONTROL - OVERVIEW FOR CULVERT STAGING REQUIREMENT NEAR ST PETERS CEMETERY.

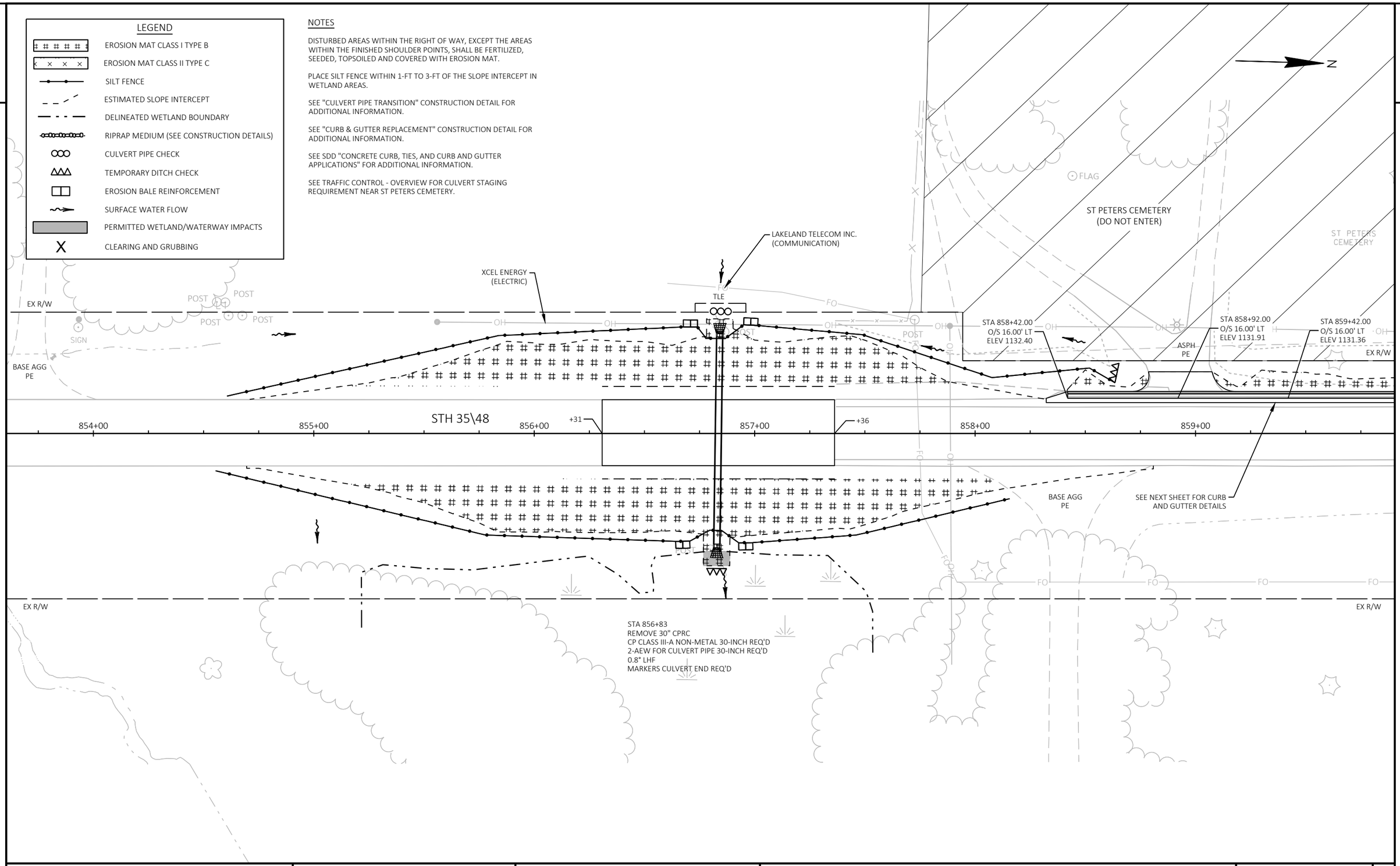

PROJECT NO: 8010-01-80	HWY: STH 35	COUNTY: POLK	CONSTRUCTION DETAILS - CULVERT WORK	SHEET 32	E

FILE NAME : P:\55XX\5508.DP.22.STH35-48.PLK\CADDS\80100180\SHEETS\021002-CD.DWG
LAYOUT NAME - 07

PLOT DATE : 4/20/2026 10:03 AM PLOT BY : PARKER TISCHAUSER PLOT NAME : PLOT SCALE : 1 IN:40 FT

WISDOT/CADDS SHEET 42

2

LEGEND

- EROSION MAT CLASS I TYPE B
- EROSION MAT CLASS II TYPE C
- SILT FENCE
- ESTIMATED SLOPE INTERCEPT
- DELINEATED WETLAND BOUNDARY
- RIPRAP MEDIUM (SEE CONSTRUCTION DETAILS)
- CULVERT PIPE CHECK
- TEMPORARY DITCH CHECK
- EROSION BALE REINFORCEMENT
- SURFACE WATER FLOW
- PERMITTED WETLAND/WATERWAY IMPACTS
- X CLEARING AND GRUBBING

NOTES

DISTURBED AREAS WITHIN THE RIGHT OF WAY, EXCEPT THE AREAS WITHIN THE FINISHED SHOULDER POINTS, SHALL BE FERTILIZED, SEEDED, TOPSOILED AND COVERED WITH EROSION MAT.

PLACE SILT FENCE WITHIN 1-FT TO 3-FT OF THE SLOPE INTERCEPT IN WETLAND AREAS.

SEE "CURB & GUTTER REPLACEMENT" CONSTRUCTION DETAIL FOR ADDITIONAL INFORMATION.

SEE SDD "CONCRETE CURB, TIES, AND CURB AND GUTTER APPLICATIONS" FOR ADDITIONAL INFORMATION.

SEE SDD "CONCRETE CURB, TIES, AND CURB AND GUTTER APPLICATIONS" FOR ADDITIONAL INFORMATION.

N

ST PETERS CEMETERY
(DO NOT ENTER)

ST PETERS CEMETERY

ASPHALTIC SURFACE DRIVEWAYS AND FIELD ENTRANCES

STA 858+42.00
O/S 16.00' LT
ELEV 1132.40
EX R/W

ASPH PE

STA 858+92.00
O/S 16.00' LT
ELEV 1131.91

STA 859+42.00
O/S 16.00' LT
ELEV 1131.36

CONCRETE CURB & GUTTER 6-INCH SLOPED 36-INCH TYPE D

STA 859+92.00
O/S 16.00' LT
ELEV 1130.77

STA 860+42.00
O/S 16.00' LT
ELEV 1130.18

STA 860+92.00
O/S 16.00' LT
ELEV 1129.40

STA 861+42.00
O/S 16.00' LT
ELEV 1128.56

STA 861+92.00
O/S 16.00' LT
ELEV 1127.70

XCEL ENERGY
(ELECTRIC)

STA 862+42.00
O/S 16.00' LT
ELEV 1126.83

STA 862+50.00
O/S 16.00' LT
ELEV 1126.69

EX R/W

BASE AGG PE

END SECTION REQUIRED

REMOVING CURB AND GUTTER

ASPHALTIC SURFACE PATCHING (SEE CONSTRUCTION DETAILS)

ASPHALTIC FLUMES

858+00 859+00 860+00 861+00 862+00 863+00 864+00

STH 35\48

BASE AGG PE

EX R/W

LAKELAND TELECOM INC.
(COMMUNICATION)

EX R/W

NORTH STAR CREEK

PROJECT NO: 8010-01-80	HWY: STH 35	COUNTY: POLK	CONSTRUCTION DETAILS - CURB AND GUTTER REPLACEMENT	SHEET 33	E

FILE NAME : P:\55XX\5508.DP.22.STH35-48.PLK\CADDS\80100180\SHEETS\021002-CD.DWG
LAYOUT NAME - 08

PLOT DATE : 4/20/2026 10:08 AM PLOT BY : PARKER TISCHAUSER PLOT NAME : PLOT SCALE : 1 IN:40 FT

WISDOT/CADDS SHEET 42

2

LEGEND

- EROSION MAT CLASS I TYPE B
- EROSION MAT CLASS II TYPE C
- SILT FENCE
- ESTIMATED SLOPE INTERCEPT
- DELINEATED WETLAND BOUNDARY
- RIPRAP MEDIUM (UNLESS OTHERWISE NOTED)
- CULVERT PIPE CHECK
- TEMPORARY DITCH CHECK
- EROSION BALE REINFORCEMENT
- SURFACE WATER FLOW
- PERMITTED WETLAND/WATERWAY IMPACTS
- CLEARING AND GRUBBING
- SAWING ASPHALT

NOTES

DISTURBED AREAS WITHIN THE RIGHT OF WAY, EXCEPT THE AREAS WITHIN THE FINISHED SHOULDER POINTS, SHALL BE FERTILIZED, SEEDED, TOPSOILED AND COVERED WITH EROSION MAT.

PLACE SILT FENCE WITHIN 1-FT TO 3-FT OF THE SLOPE INTERCEPT IN WETLAND AREAS.

N

STA 865+16 - STA 866+45, LT
REMOVING GUARDRAIL

STA 864+71 - STA 867+15, LT
MGS GUARDRAIL 3
MGS GUARDRAIL 3L (STA 865+24 - STA 866+36)
GUARDRAIL MOW STRIP EMULSIFIED ASPHALT
MGS GUARDRAIL TERMINAL EAT

C-48-180
BOX CULVERT JOINT REPAIR
(SEE STRUCTURE PLANS)

PLACE RIPRAP BEHIND WINGWALLS
(SEE STRUCTURE PLANS)

EX R/W

LAKELAND TELECOM INC.
(COMMUNICATION)

XCEL ENERGY
(ELECTRIC)

BASE AGG
PE

+71
34', LT

+96
34', LT

863+00 | 864+00 | 865+00 | STH 35\48 | 866+00 | 867+00 | 868+00

+71
32', RT

+96
32', RT

NO PASSING ZONE
MOVE

STA 864+97 - STA 866+50, RT
REMOVING GUARDRAIL

STA 864+46 - STA 866+90, RT
MGS GUARDRAIL 3
MGS GUARDRAIL 3L (STA 865+24 - STA 866+36)
MGS GUARDRAIL TERMINAL EAT
GUARDRAIL MOW STRIP EMULSIFIED ASPHALT

PLACE RIPRAP BEHIND WINGWALLS
(SEE STRUCTURE PLANS)

NORTH STAR CREEK

STATION & OFFSET TABLE (GUARDRAIL)			
POINT NUMBER	STATION	OFFSET	REMARKS
A	863+26.80	21.00' RT	AGG SHLDR TAPER
B	863+65.87	15.00' RT	PAVED SHLDR TAPER
C	864+45.87	23.00' RT	POST #1
D	864+98.96	21.00' RT	BEGIN EAT
E	866+36.46	21.00' RT	BEGIN EAT
F	866+89.54	23.00' RT	POST #1
G	867+69.54	15.00' RT	PAVED SHLDR TAPER
H	868+08.61	21.00' RT	AGG SHLDR TAPER

STATION & OFFSET TABLE (GUARDRAIL)			
POINT NUMBER	STATION	OFFSET	REMARKS
I	863+51.79	21.00' LT	AGG SHLDR TAPER
J	863+90.87	15.00' LT	PAVED SHLDR TAPER
K	864+70.87	23.00' LT	POST #1
L	865+23.95	21.00' LT	BEGIN EAT
M	866+61.08	21.00' LT	BEGIN EAT
N	867+14.54	23.00' LT	POST #1
O	867+94.54	15.00' LT	PAVED SHLDR TAPER
P	868+33.61	21.00' LT	AGG SHLDR TAPER

PROJECT NO: 8010-01-80	HWY: STH 35	COUNTY: POLK	CONSTRUCTION DETAILS - GUARDRAIL REPLACEMENTS	SHEET 34	E

FILE NAME : P:\55XX\5508.DP.22.STH35-48.PLK\CADDS\80100180\SHEETS\021002-CD.DWG
LAYOUT NAME - 09
PLOT DATE : 4/20/2026 10:00 AM PLOT BY : PARKER TISCHAUSER PLOT NAME : PLOT SCALE : 1 IN:40 FT
WISDOT/CADDS SHEET 42

2

LEGEND

- EROSION MAT CLASS I TYPE B
- EROSION MAT CLASS II TYPE C
- SILT FENCE
- ESTIMATED SLOPE INTERCEPT
- DELINEATED WETLAND BOUNDARY
- RIPRAP MEDIUM (SEE CONSTRUCTION DETAILS)
- CULVERT PIPE CHECK
- TEMPORARY DITCH CHECK
- EROSION BALE REINFORCEMENT
- SURFACE WATER FLOW
- PERMITTED WETLAND/WATERWAY IMPACTS
- X CLEARING AND GRUBBING

NOTES

DISTURBED AREAS WITHIN THE RIGHT OF WAY, EXCEPT THE AREAS WITHIN THE FINISHED SHOULDER POINTS, SHALL BE FERTILIZED, SEEDED, TOPSOILED AND COVERED WITH EROSION MAT.

PLACE SILT FENCE WITHIN 1-FT TO 3-FT OF THE SLOPE INTERCEPT IN WETLAND AREAS.

SEE "CULVERT PIPE TRANSITION" CONSTRUCTION DETAIL FOR ADDITIONAL INFORMATION.

FLOWING WATER OBSERVED DURING SURVEY

Q2= 63 CFS

SEE SPECIAL PROVISIONS FOR TEMPORARY WATER DIVERSION DUAL CULVERT STATION 876+25 FOR STAGING REQUIREMENTS. TEMPORARY SHORING IS ANTICIPATED FOR MANAGEMENT OF STREAM FLOW.

STAGE 1 - INSTALL DIVERSION MATERIALS AND TEMPORARY LANE SHIFT

STAGE 2A - REMOVE EXISTING MIDDLE AND SOUTH CULVERT (LT HALF), INSTALL PROPOSED SOUTH CULVERT (LT HALF)

STAGE 2B - REMOVE EXISTING MIDDLE AND SOUTH CULVERT (RT HALF), INSTALL PROPOSED SOUTH CULVERT (RT HALF)

STAGE 3A - INSTALL STAGE 3 DIVERSION MATERIALS, REMOVE EXISTING NORTH CULVERT (RT HALF), INSTALL PROPOSED NORTH CULVERT (RT HALF)

STAGE 3B - REMOVE EXISTING NORTH CULVERT (LT HALF), INSTALL PROPOSED NORTH CULVERT (LT HALF)

STAGE 4 - REMOVE TEMPORARY LANE SHIFT AND DIVERSION MATERIALS, RESTORE ROADWAY

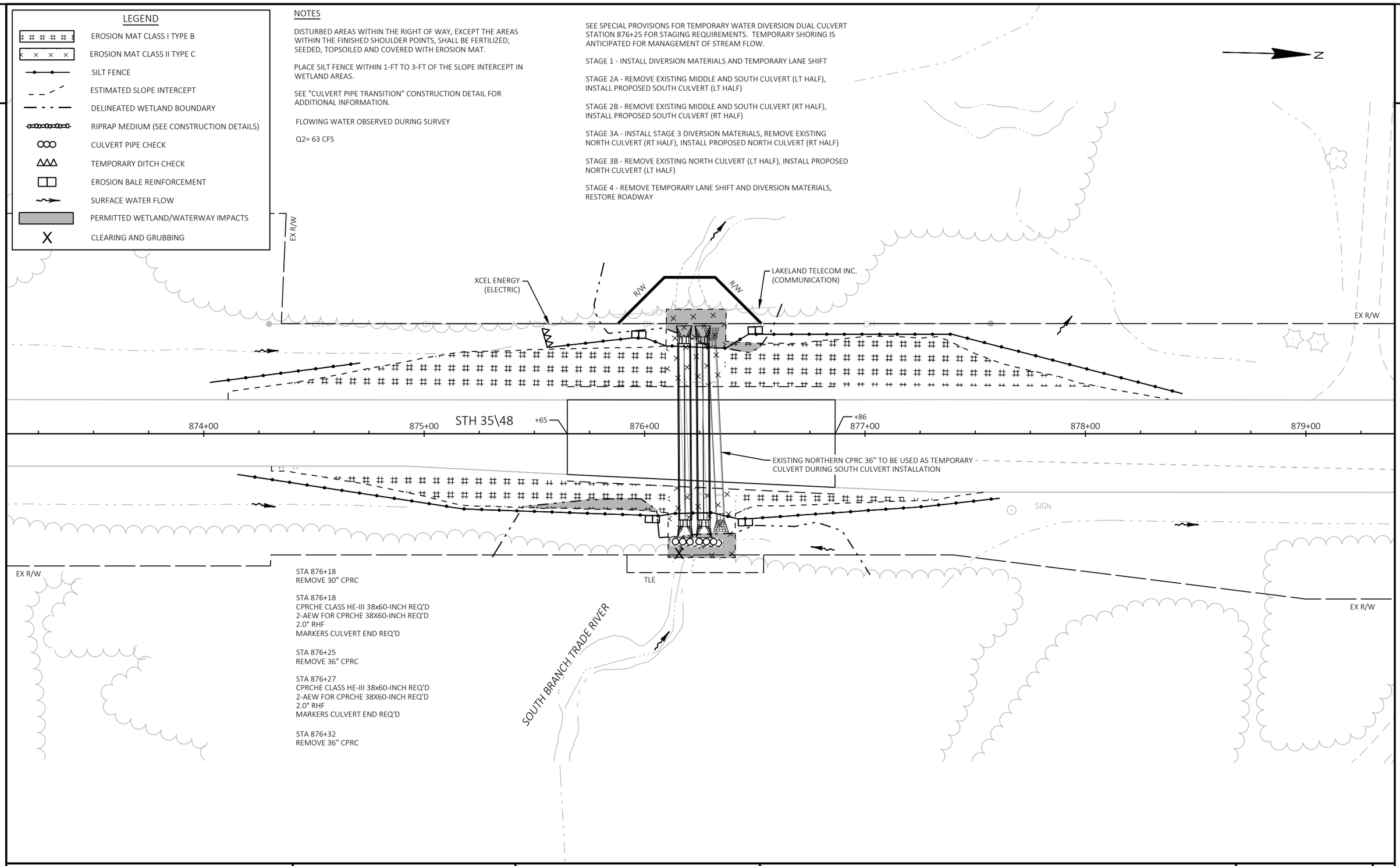

PROJECT NO: 8010-01-80	HWY: STH 35	COUNTY: POLK	CONSTRUCTION DETAILS - CULVERT WORK	SHEET 35	E

2

LEGEND

- EROSION MAT CLASS I TYPE B
- EROSION MAT CLASS II TYPE C
- SILT FENCE
- ESTIMATED SLOPE INTERCEPT
- DELINEATED WETLAND BOUNDARY
- RIPRAP MEDIUM (SEE CONSTRUCTION DETAILS)
- CULVERT PIPE CHECK
- TEMPORARY DITCH CHECK
- EROSION BALE REINFORCEMENT
- SURFACE WATER FLOW
- PERMITTED WETLAND/WATERWAY IMPACTS
- CLEARING AND GRUBBING

NOTES

DISTURBED AREAS WITHIN THE RIGHT OF WAY, EXCEPT THE AREAS WITHIN THE FINISHED SHOULDER POINTS, SHALL BE FERTILIZED, SEEDED, TOPSOILED AND COVERED WITH EROSION MAT.

PLACE SILT FENCE WITHIN 1-FT TO 3-FT OF THE SLOPE INTERCEPT IN WETLAND AREAS.

SEE "CULVERT PIPE TRANSITION" CONSTRUCTION DETAIL FOR ADDITIONAL INFORMATION.

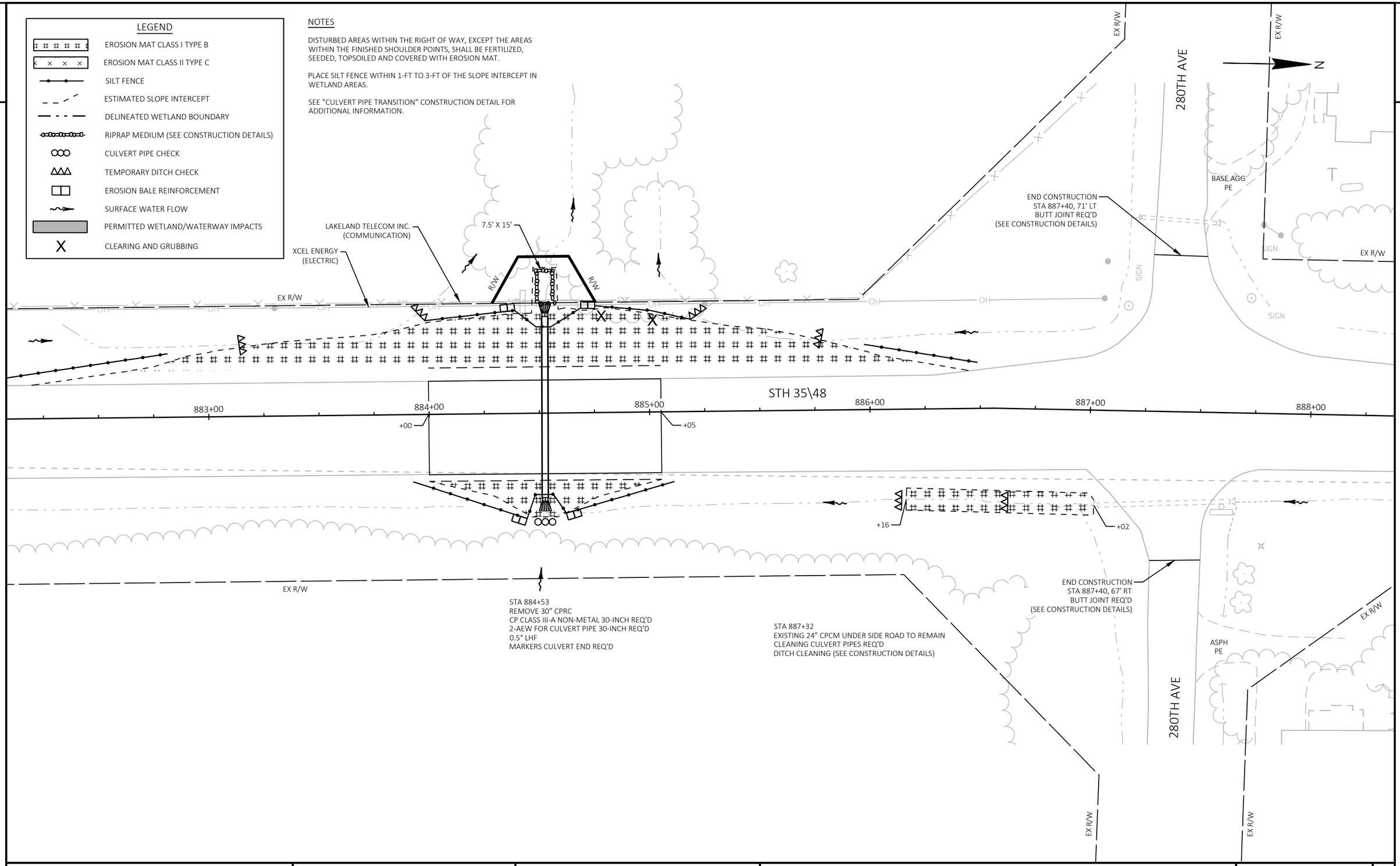

PROJECT NO: 8010-01-80	HWY: STH 35	COUNTY: POLK	CONSTRUCTION DETAILS - CULVERT WORK AND DITCH CLEANING	SHEET 36	E

2

LEGEND

- EROSION MAT CLASS I TYPE B
- EROSION MAT CLASS II TYPE C
- SILT FENCE
- ESTIMATED SLOPE INTERCEPT
- DELINEATED WETLAND BOUNDARY
- RIPRAP MEDIUM (SEE CONSTRUCTION DETAILS)
- CULVERT PIPE CHECK
- TEMPORARY DITCH CHECK
- EROSION BALE REINFORCEMENT
- SURFACE WATER FLOW
- PERMITTED WETLAND/WATERWAY IMPACTS
- X CLEARING AND GRUBBING

NOTES

DISTURBED AREAS WITHIN THE RIGHT OF WAY, EXCEPT THE AREAS WITHIN THE FINISHED SHOULDER POINTS, SHALL BE FERTILIZED, SEEDED, TOPSOILED AND COVERED WITH EROSION MAT.

PLACE SILT FENCE WITHIN 1-FT TO 3-FT OF THE SLOPE INTERCEPT IN WETLAND AREAS.

SEE "CULVERT PIPE TRANSITION" CONSTRUCTION DETAIL FOR ADDITIONAL INFORMATION.

FLOWING WATER OBSERVED DURING SURVEY

N

UNNAMED STREAM

5' X 10'

EX R/W

EX R/W

SIGN

906+00 907+00 STH 35\48 908+00 +24 909+00 +33 910+00 911+00

BASE AGG PE

OH OH OH OH OH OH OH OH OH OH OH OH OH

FO FO FO

POST

EX R/W

EX R/W

XCEL ENERGY (ELECTRIC)

LAKELAND TELECOM INC. (COMMUNICATION)

STA 908+78
REMOVE 36" CPRC
CP CLASS III-A NON-METAL 36-INCH REQ'D
2-AEW FOR CULVERT PIPE 36-INCH REQ'D
3.0° RHF
MARKERS CULVERT END REQ'D

PROJECT NO: 8010-01-80	HWY: STH 35	COUNTY: POLK	CONSTRUCTION DETAILS - CULVERT WORK	SHEET 37	E

FILE NAME : P:\55XX\5508.DP.22.STH35-48.PLK\CADDS\80100180\SHEETS\021002-CD.DWG
LAYOUT NAME - 12

PLOT DATE : 4/20/2026 9:59 AM PLOT BY : PARKER TISCHAUSER PLOT NAME : PLOT SCALE : 1 IN:40 FT

WISDOT/CADDS SHEET 42

LEGEND

- EROSION MAT CLASS I TYPE B
- EROSION MAT CLASS II TYPE C
- SILT FENCE
- ESTIMATED SLOPE INTERCEPT
- DELINEATED WETLAND BOUNDARY
- RIPRAP HEAVY
- CULVERT PIPE CHECK
- TEMPORARY DITCH CHECK
- EROSION BALE REINFORCEMENT
- SURFACE WATER FLOW
- PERMITTED WETLAND/WATERWAY IMPACTS
- X — CLEARING AND GRUBBING
- XXXXXXXX — SAWING ASPHALT

NOTES

DISTURBED AREAS WITHIN THE RIGHT OF WAY, EXCEPT THE AREAS WITHIN THE FINISHED SHOULDER POINTS, SHALL BE FERTILIZED, SEEDED, TOPSOILED AND COVERED WITH EROSION MAT.

PLACE SILT FENCE WITHIN 1-FT TO 3-FT OF THE SLOPE INTERCEPT IN WETLAND AREAS.

* CLEARING ONLY.

ADJUST SILT FENCE AS REQUIRED TO COMPLETE THE RIPRAP WORK AROUND C-48-181.

SEE SPECIAL PROVIONS FOR COMPLETING PRIPRAP HEAVY WORK IN THE TRADE RIVER.

STA 8+91
EXISTING 15" CULVERT PIPE TO REMAIN
CULVERT PIPE CORRUGATED STEEL 15-INCH
EXTENSION REQ'D
AEW FOR CULVERT PIPE 15-INCH REQ'D
17" RHF

MOVE

XCEL ENERGY
(ELECTRIC)

160TH ST

EX R/W

Y = 352,819.06
X = 501,855.25

S0°12'07"E

7+00

8+00

9+00

CURVE 7

PC: 7+93.06

PT: 9+16.01

CURVE NO. 7
PI STA = 8+61.15
Y = 352707.91
X = 501855.64
PC STA = 7+93.06
Y=352776.00
X=501855.40
PT STA = 9+16.01
Y=352675.38
X=501915.46
DELTA = 61°15'34"
D = 49°49'21"
T = 68.09'
L = 122.96'
R = 115.00'
MATCH EXISTING SUPERELEVATION

STOP
MOVE

RIPRAP HEAVY
12' X 10'

STA 941+87 - STA 943+33, LT
STA 9+82 - STA 9+82, RT (160TH ST)
REMOVING GUARDRAIL

STA 941+69 - STA 943+33, LT
STA 8+71 - STA 9+82, RT (160TH ST)
MGS GUARDRAIL 3
MGS GUARDRAIL SHORT RADIUS
MGS GUARDRAIL TERMINAL EAT
GUARDRAIL MOW STRIP EMULSIFIED ASPHALT

STA 942+94.88
O/S 62.00' LT

RIPRAP HEAVY
15' X 15'

RIPRAP HEAVY
10' X 10'

END CONSTRUCTION
STA 943+49, 59' LT
STA 9+42 (160TH ST)
BUTT JOINT REQ'D
(SEE CONSTRUCTION DETAILS)

SIGN

STA 943+47.39 =
STA 10+00.00
Y=352,635.25
X=501,989.24

S61°27'41"E

R40'

+85
35', LT

+09
39', LT

STH 35\48

941+00

942+00

943+00

944+00

945+00

940+00

+00
32', RT

+30
32', RT

RIPRAP HEAVY
5' X 6'

RIPRAP HEAVY
5' X 6'

C-48-181
(TO REMAIN)

TRADE RIVER

STA 942+40 - STA 943+72, RT
REMOVING GUARDRAIL

STA 941+72 - STA 944+54, RT
MGS GUARDRAIL 3L
MGS GUARDRAIL TERMINAL EAT
GUARDRAIL MOW STRIP EMULSIFIED ASPHALT

XCEL ENERGY
(ELECTRIC)

END CONSTRUCTION
STA 940+32, 52' RT
MATCH EXISTING BASE AGGREGATE SIDE ROAD
(SEE CONSTRUCTION DETAILS)

LAKELAND TELECOM INC.
(COMMUNICATION)

290TH AVE

STATION & OFFSET TABLE (GUARDRAIL)			
POINT NUMBER	STATION	OFFSET	REMARKS
AA	940+62.40	24.31' RT	AGG SHLDR TAPER
BB	940+88.28	19.11' RT	PAVED SHLDR TAPER
CC	941+17.63	22.00' RT	POST #1
DD	941+71.51	20.00' RT	BEGIN EAT
EE	943+99.46	20.00' RT	BEGIN EAT
FF	944+53.57	22.00' RT	POST #1
GG	944+94.14	18.00' RT	PAVED SHLDR TAPER
HH	945+59.13	21.00' RT	AGG SHLDR TAPER
Q	940+53.08	22.11' LT	AGG SHLDR TAPER

STATION & OFFSET TABLE (GUARDRAIL)			
POINT NUMBER	STATION	OFFSET	REMARKS
R	941+19.52	19.06' LT	PAVED SHLDR TAPER
S	941+68.77	24.03' LT	POST #1
T	942+21.01	22.00' LT	BEGIN EAT
U	942+94.88	22.00' LT	BEGIN SHORT RADIUS
V	9+42.07	18.00' RT	END SHORT RADIUS
W	9+17.07	18.00' RT	BEGIN EAT
X	8+71.28	20.00' RT	POST #1
Y	7+91.25	12.00' RT	PAVED SHLDR TAPER
Z	6+91.25	14.00' RT	AGG SHLDR TAPER

PROJECT NO: 8010-01-80	HWY: STH 35	COUNTY: POLK	CONSTRUCTION DETAILS - GUARDRAIL REPLACEMENTS	SHEET 38	E

FILE NAME : P:\55XX\5508.DP.22.STH35-48.PLK\CADDS\80100180\SHEETS\021002-CD.DWG
LAYOUT NAME - 13

PLOT DATE : 4/20/2026 10:10 AM PLOT BY : PARKER TISCHAUSER PLOT NAME : PLOT SCALE : 1 IN:40 FT

2

LEGEND

- EROSION MAT CLASS I TYPE B
- EROSION MAT CLASS II TYPE C
- SILT FENCE
- ESTIMATED SLOPE INTERCEPT
- DELINEATED WETLAND BOUNDARY
- RIPRAP MEDIUM (SEE CONSTRUCTION DETAILS)
- CULVERT PIPE CHECK
- TEMPORARY DITCH CHECK
- EROSION BALE REINFORCEMENT
- SURFACE WATER FLOW
- PERMITTED WETLAND/WATERWAY IMPACTS
- CLEARING AND GRUBBING

NOTES

DISTURBED AREAS WITHIN THE RIGHT OF WAY, EXCEPT THE AREAS WITHIN THE FINISHED SHOULDER POINTS, SHALL BE FERTILIZED, SEEDED, TOPSOILED AND COVERED WITH EROSION MAT.

PLACE SILT FENCE WITHIN 1-FT TO 3-FT OF THE SLOPE INTERCEPT IN WETLAND AREAS.

SEE "CULVERT PIPE TRANSITION" CONSTRUCTION DETAIL FOR ADDITIONAL INFORMATION.

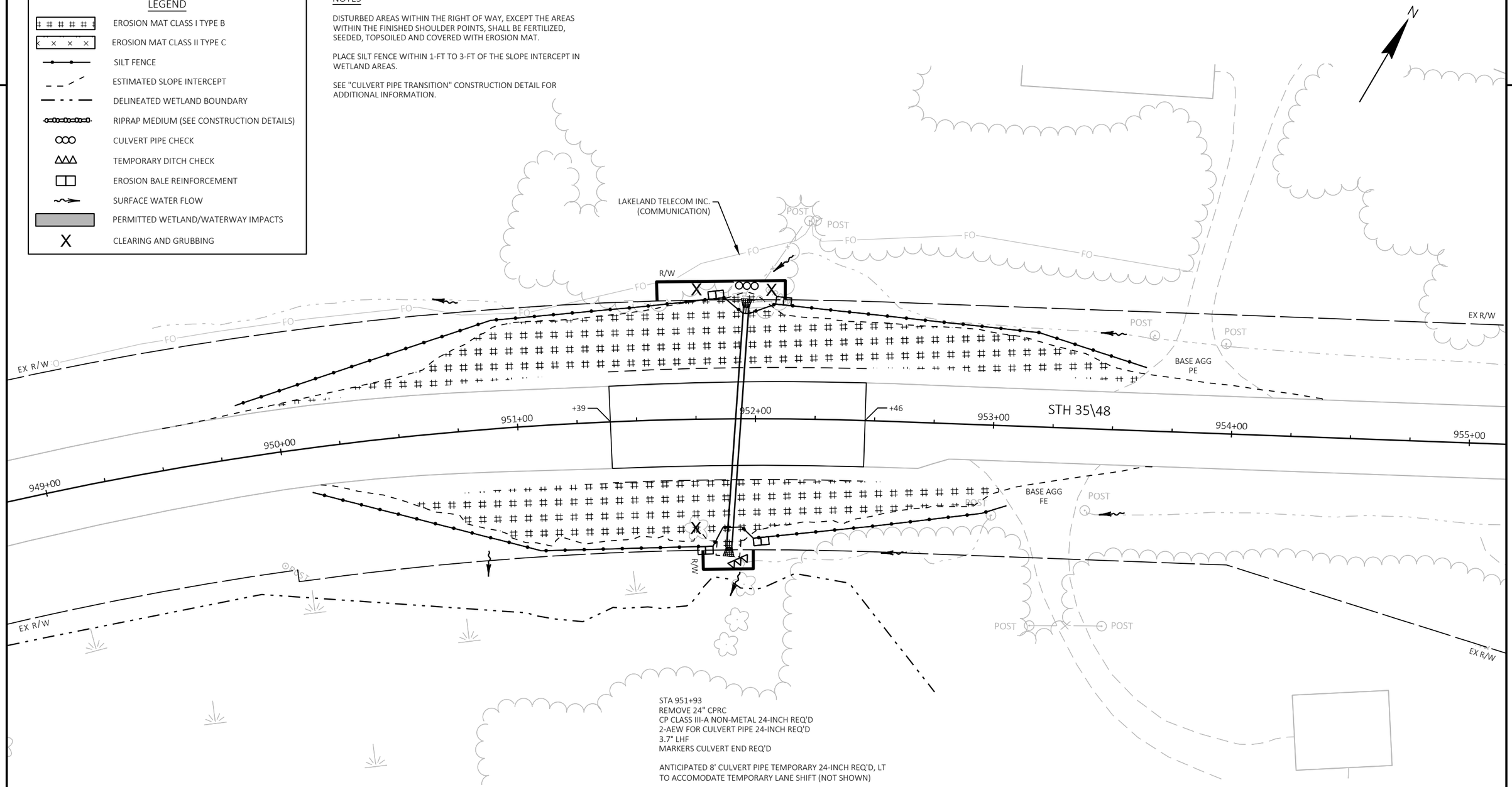

STA 951+93
REMOVE 24" CPRC
CP CLASS III-A NON-METAL 24-INCH REQ'D
2-AEW FOR CULVERT PIPE 24-INCH REQ'D
3.7° LHF
MARKERS CULVERT END REQ'D

ANTICIPATED 8' CULVERT PIPE TEMPORARY 24-INCH REQ'D, LT
TO ACCOMODATE TEMPORARY LANE SHIFT (NOT SHOWN)

PROJECT NO: 8010-01-80	HWY: STH 35	COUNTY: POLK	CONSTRUCTION DETAILS - CULVERT WORK	SHEET 39	E

2

LEGEND

- EROSION MAT CLASS I TYPE B
- EROSION MAT CLASS II TYPE C
- SILT FENCE
- ESTIMATED SLOPE INTERCEPT
- DELINEATED WETLAND BOUNDARY
- RIPRAP MEDIUM (SEE CONSTRUCTION DETAILS)
- CULVERT PIPE CHECK
- TEMPORARY DITCH CHECK
- EROSION BALE REINFORCEMENT
- SURFACE WATER FLOW
- PERMITTED WETLAND/WATERWAY IMPACTS
- X CLEARING AND GRUBBING

NOTES

DISTURBED AREAS WITHIN THE RIGHT OF WAY, EXCEPT THE AREAS WITHIN THE FINISHED SHOULDER POINTS, SHALL BE FERTILIZED, SEEDED, TOPSOILED AND COVERED WITH EROSION MAT.

PLACE SILT FENCE WITHIN 1-FT TO 3-FT OF THE SLOPE INTERCEPT IN WETLAND AREAS.

SEE "CULVERT PIPE TRANSITION" CONSTRUCTION DETAIL FOR ADDITIONAL INFORMATION.

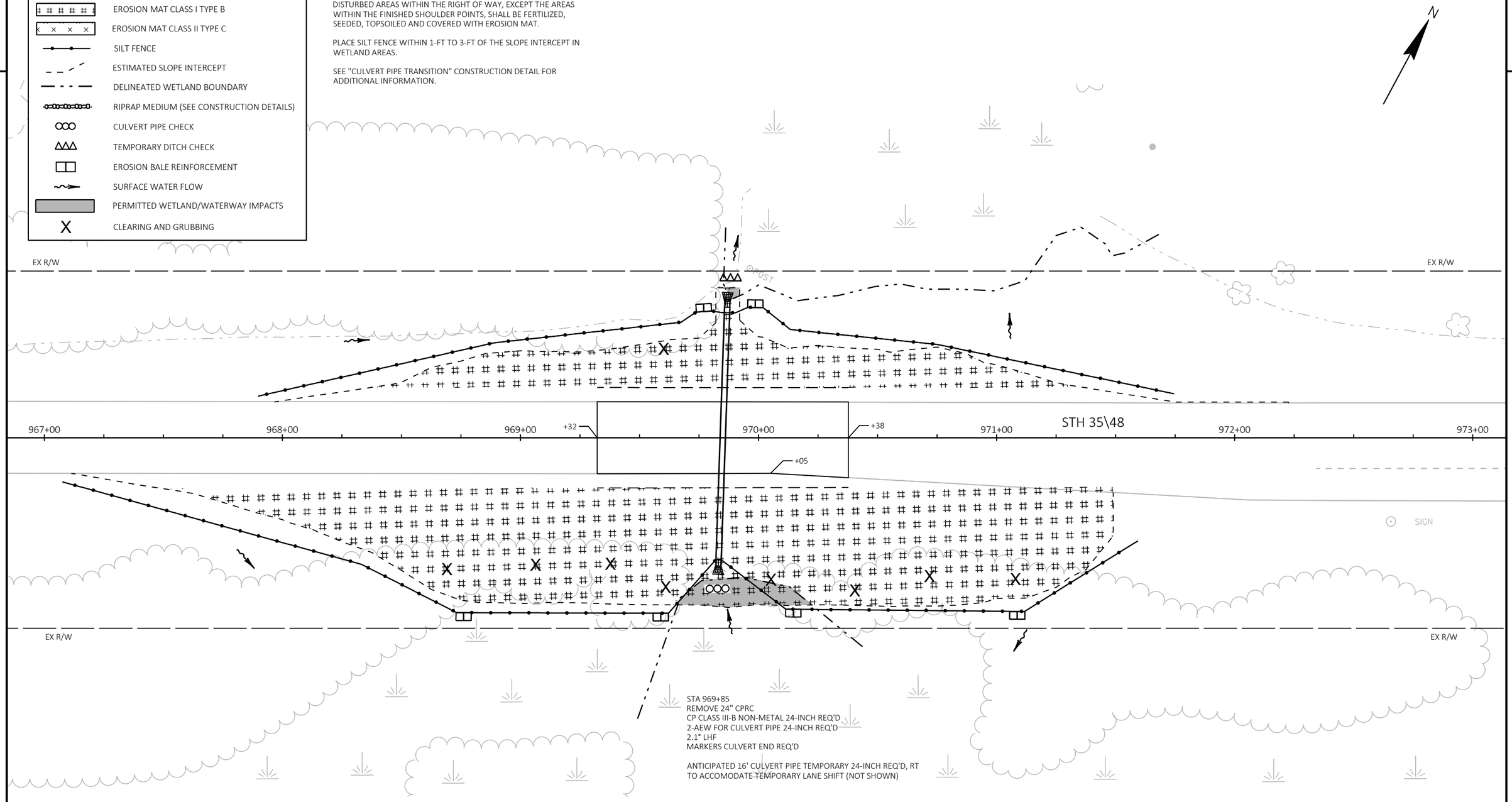

PROJECT NO: 8010-01-80	HWY: STH 35	COUNTY: POLK	CONSTRUCTION DETAILS - CULVERT WORK	SHEET 40	E

2

LEGEND

- EROSION MAT CLASS I TYPE B
- EROSION MAT CLASS II TYPE C
- SILT FENCE
- ESTIMATED SLOPE INTERCEPT
- DELINEATED WETLAND BOUNDARY
- RIPRAP MEDIUM (SEE CONSTRUCTION DETAILS)
- CULVERT PIPE CHECK
- TEMPORARY DITCH CHECK
- EROSION BALE REINFORCEMENT
- SURFACE WATER FLOW
- PERMITTED WETLAND/WATERWAY IMPACTS
- X CLEARING AND GRUBBING

NOTES

DISTURBED AREAS WITHIN THE RIGHT OF WAY, EXCEPT THE AREAS WITHIN THE FINISHED SHOULDER POINTS, SHALL BE FERTILIZED, SEEDED, TOPSOILED AND COVERED WITH EROSION MAT.

PLACE SILT FENCE WITHIN 1-FT TO 3-FT OF THE SLOPE INTERCEPT IN WETLAND AREAS.

SEE "CULVERT PIPE TRANSITION" CONSTRUCTION DETAIL FOR ADDITIONAL INFORMATION.

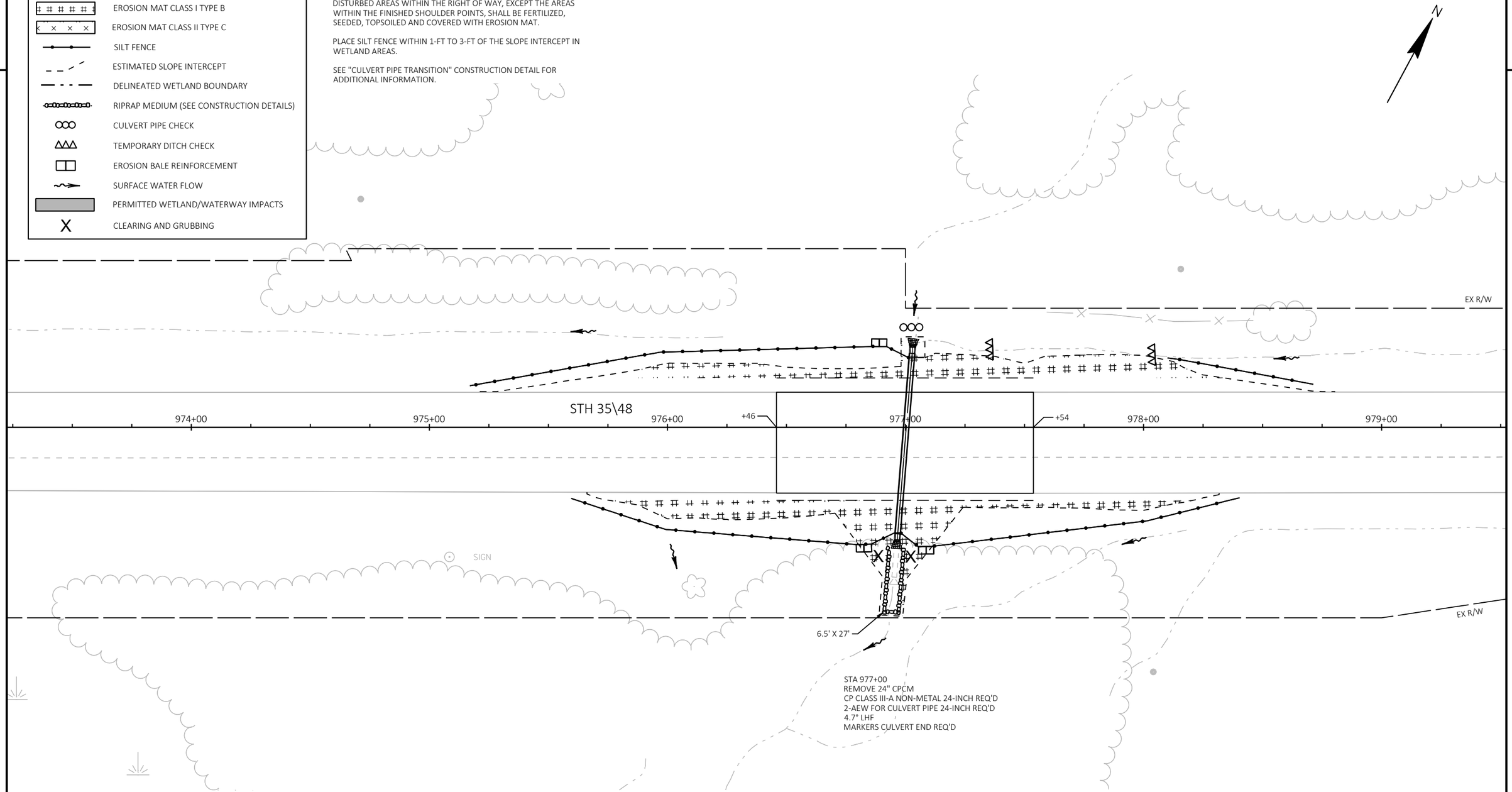

2

PROJECT NO: 8010-01-80	HWY: STH 35	COUNTY: POLK	CONSTRUCTION DETAILS - CULVERT WORK	SHEET 41	E

2

LEGEND

- EROSION MAT CLASS I TYPE B
- EROSION MAT CLASS II TYPE C
- SILT FENCE
- ESTIMATED SLOPE INTERCEPT
- DELINEATED WETLAND BOUNDARY
- RIPRAP MEDIUM (SEE CONSTRUCTION DETAILS)
- CULVERT PIPE CHECK
- TEMPORARY DITCH CHECK
- EROSION BALE REINFORCEMENT
- SURFACE WATER FLOW
- PERMITTED WETLAND/WATERWAY IMPACTS
- X CLEARING AND GRUBBING

NOTES

DISTURBED AREAS WITHIN THE RIGHT OF WAY, EXCEPT THE AREAS WITHIN THE FINISHED SHOULDER POINTS, SHALL BE FERTILIZED, SEEDED, TOPSOILED AND COVERED WITH EROSION MAT.

PLACE SILT FENCE WITHIN 1-FT TO 3-FT OF THE SLOPE INTERCEPT IN WETLAND AREAS.

SEE "CULVERT PIPE TRANSITION" CONSTRUCTION DETAIL FOR ADDITIONAL INFORMATION.

GANDY DANCER STATE TRAIL

LAKELAND TELECOM INC.
(COMMUNICATIONS)

POLK-BURNETT ELECTRIC COOPERATIVE
(ELECTRIC)

EX R/W

POST

STH 35\48

998+00 999+00 1000+00 1001+00 1002+00 1003+00 1004+00

C-48-008
(TO REMAIN)

ICE AGE NATIONAL SCENIC TRAIL CONNECTING ROUTE

BRIGHTSPEED
(COMMUNICATION)

SIGN

150TH ST

ICE AGE NATIONAL SCENIC TRAIL/
GANDY DANCER STATE TRAIL

PROJECT NO: 8010-01-80	HWY: STH 35	COUNTY: POLK	CONSTRUCTION DETAILS - GRADING AT GANDY DANCER TRAIL	SHEET 42	E

FILE NAME : P:\55XX\5508.DP.22.STH35-48.PLK\CADDS\80100180\SHEETS\021002-CD.DWG
LAYOUT NAME - 17
PLOT DATE : 4/20/2026 10:05 AM PLOT BY : PARKER TISCHAUSER PLOT NAME : PLOT SCALE : 1 IN:40 FT

2

LEGEND

- EROSION MAT CLASS I TYPE B
- EROSION MAT CLASS II TYPE C
- SILT FENCE
- ESTIMATED SLOPE INTERCEPT
- DELINEATED WETLAND BOUNDARY
- RIPRAP MEDIUM (SEE CONSTRUCTION DETAILS)
- CULVERT PIPE CHECK
- TEMPORARY DITCH CHECK
- EROSION BALE REINFORCEMENT
- SURFACE WATER FLOW
- PERMITTED WETLAND/WATERWAY IMPACTS
- X CLEARING AND GRUBBING

NOTES

DISTURBED AREAS WITHIN THE RIGHT OF WAY, EXCEPT THE AREAS WITHIN THE FINISHED SHOULDER POINTS, SHALL BE FERTILIZED, SEEDED, TOPSOILED AND COVERED WITH EROSION MAT.

PLACE SILT FENCE WITHIN 1-FT TO 3-FT OF THE SLOPE INTERCEPT IN WETLAND AREAS.

N

EX R/W

BRIGHTSPEED
(COMMUNICATION)

FO

SIGN

BASE AGG
PE

OHP

END CONSTRUCTION
STA 1025+39, 70' LT
BUTT JOINT REQ'D
(SEE CONSTRUCTION DETAILS)

300TH AVE

1020+00 1021+00 1022+00 STH 35\48 1023+00 1024+00 1025+00

POST

+67

+17

POLK-BURNETT ELECTRIC COOPERATIVE
(ELECTRIC)

ASPH
CE

STA 1022+53
EXISTING 24" CPCM UNDER SIDE ROAD TO REMAIN
CLEANING CULVERT PIPES REQ'D
DITCH CLEANING (SEE CONSTRUCTION DETAILS)

END CONSTRUCTION
STA 1022+42, 89' RT
BUTT JOINT REQ'D
(SEE CONSTRUCTION DETAILS)

CTH W

PROJECT NO: 8010-01-80	HWY: STH 35	COUNTY: POLK	CONSTRUCTION DETAILS - DITCH CLEANING	SHEET 43	E

FILE NAME : P:\55XX\5508.DP.22.STH35-48.PLK\CADDS\80100180\SHEETS\021002-CD.DWG
LAYOUT NAME - 18

PLOT DATE : 4/20/2026 10:04 AM PLOT BY : PARKER TISCHAUSER PLOT NAME : PLOT SCALE : 1 IN:40 FT

2

LEGEND

- EROSION MAT CLASS I TYPE B
- EROSION MAT CLASS II TYPE C
- SILT FENCE
- ESTIMATED SLOPE INTERCEPT
- DELINEATED WETLAND BOUNDARY
- RIPRAP MEDIUM (SEE CONSTRUCTION DETAILS)
- CULVERT PIPE CHECK
- TEMPORARY DITCH CHECK
- EROSION BALE REINFORCEMENT
- SURFACE WATER FLOW
- PERMITTED WETLAND/WATERWAY IMPACTS
- CLEARING AND GRUBBING

NOTES

DISTURBED AREAS WITHIN THE RIGHT OF WAY, EXCEPT THE AREAS WITHIN THE FINISHED SHOULDER POINTS, SHALL BE FERTILIZED, SEEDED, TOPSOILED AND COVERED WITH EROSION MAT.

PLACE SILT FENCE WITHIN 1-FT TO 3-FT OF THE SLOPE INTERCEPT IN WETLAND AREAS.

SEE "CULVERT PIPE TRANSITION" CONSTRUCTION DETAIL FOR ADDITIONAL INFORMATION.

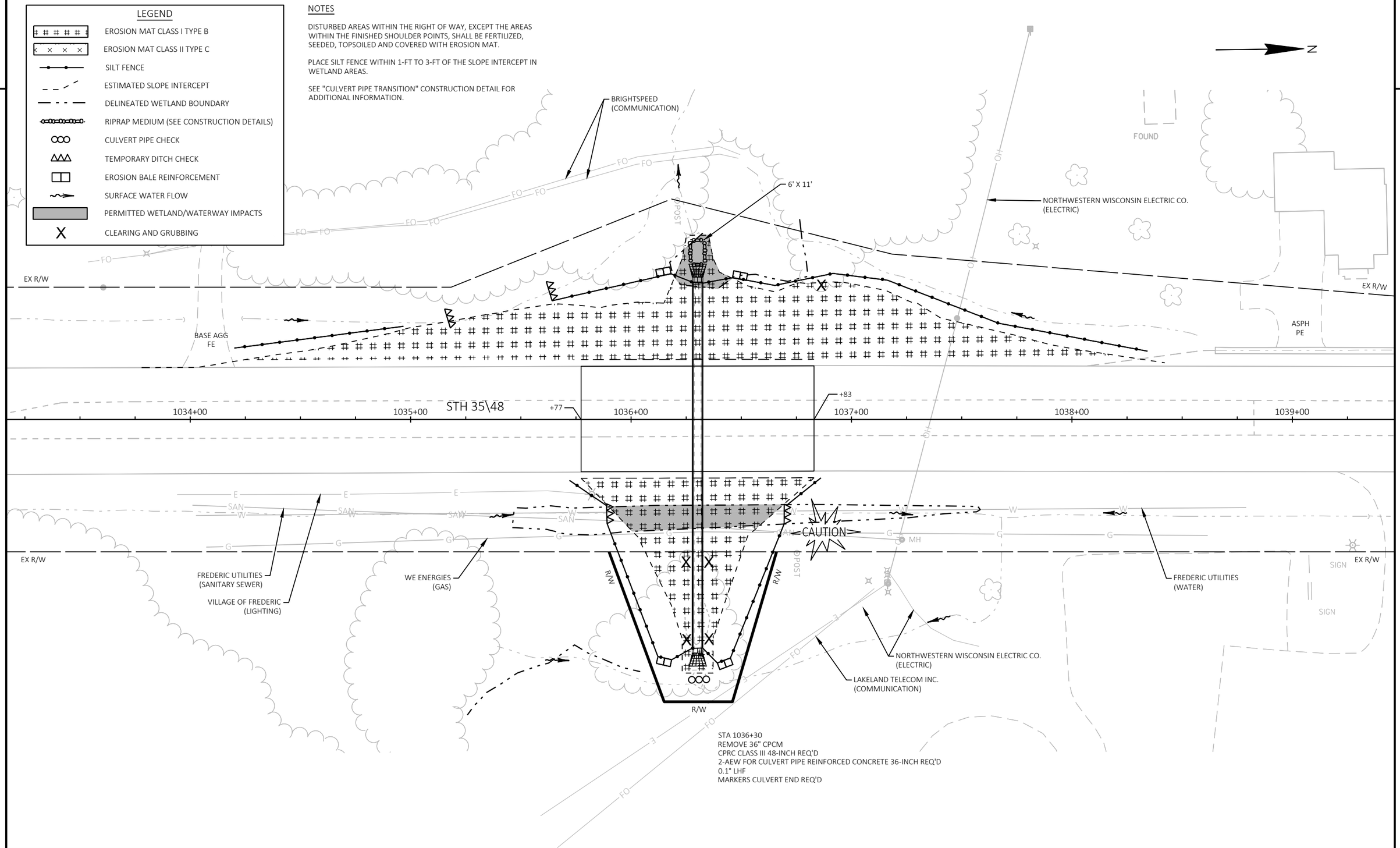

STA 1036+30
REMOVE 36" CPCM
CPRC CLASS III 48-INCH REQ'D
2-AEW FOR CULVERT PIPE REINFORCED CONCRETE 36-INCH REQ'D
0.1° LHF
MARKERS CULVERT END REQ'D

PROJECT NO: 8010-01-80	HWY: STH 35	COUNTY: POLK	CONSTRUCTION DETAILS - CULVERT WORK	SHEET 44	E

2

NOTES

SEE CURB RAMP DETAILS FORÜURB RAMP REPLACEMENTS

SEE "CURB & GUTTER REPLACEMENT" CONSTRUCTION DETAIL FOR ADDITIONAL INFORMATION.

N

ASH ST W

EX R/W

POST

ASPH CE

SERVICE RD

END CONSTRUCTION
STA 1076+44, 59' LT
BUTT JOINT REQ'D
(SEE CONSTRUCTION DETAILS)

NORTHWESTERN WISCONSIN ELECTRIC CO.
(ELECTRIC)

BRIGHTSPEED
(COMMUNICATION)

STA 1076+88
EXISTING 18" SSPRC UNDER SIDE ROAD TO REMAIN
CLEANING STORM SEWER REQ'D
DITCH CLEANING (SEE CONSTRUCTION DETAILS)

WE ENERGIES
(GAS)

STA 1079+11
EXISTING 21" HDPE TO REMAIN
AEW FOR CULVERT PIPE 21-INCH REQ'D

+87

+18

CAUTION

1075+00 1076+00 1077+00 STH 35\48 1078+00 1079+00 1080+00

ASPH CE

VILLAGE OF FREDERIC
(LIGHTING)

LAKELAND TELECOM INC.
(COMMUNICATION)

END CONSTRUCTION
STA 1076+67, 50' RT
BUTT JOINT REQ'D
(SEE CONSTRUCTION DETAILS)

ASH ST E

4' X 8'

LEGEND

- EROSION MAT CLASS I TYPE B
- EROSION MAT CLASS II TYPE C
- SILT FENCE
- ESTIMATED SLOPE INTERCEPT
- DELINEATED WETLAND BOUNDARY
- RIPRAP MEDIUM (SEE CONSTRUCTION DETAILS)
- CULVERT PIPE CHECK
- TEMPORARY DITCH CHECK
- EROSION BALE REINFORCEMENT
- SURFACE WATER FLOW
- PERMITTED WETLAND/WATERWAY IMPACTS
- X CLEARING AND GRUBBING

NOTES

DISTURBED AREAS WITHIN THE RIGHT OF WAY, EXCEPT THE AREAS WITHIN THE FINISHED SHOULDER POINTS, SHALL BE FERTILIZED, SEEDED, TOPSOILED AND COVERED WITH EROSION MAT.

PLACE SILT FENCE WITHIN 1-FT TO 3-FT OF THE SLOPE INTERCEPT IN WETLAND AREAS.

PROJECT NO: 8010-01-80	HWY: STH 35	COUNTY: POLK	CONSTRUCTION DETAILS - CULVERT WORK AND DITCH CLEANING	SHEET 45	E

FILE NAME : P:\55XX\5508.DP.22.STH35-48.PLK\CADDS\80100180\SHEETS\021002-CD.DWG
LAYOUT NAME - 20

PLOT DATE : 4/20/2026 10:10 AM PLOT BY : PARKER TISCHAUSER PLOT NAME : PLOT SCALE : 1 IN:40 FT

LEGEND

- EROSION MAT CLASS I TYPE B
- EROSION MAT CLASS II TYPE C
- SILT FENCE
- ESTIMATED SLOPE INTERCEPT
- DELINEATED WETLAND BOUNDARY
- RIPRAP MEDIUM (SEE CONSTRUCTION DETAILS)
- CULVERT PIPE CHECK
- TEMPORARY DITCH CHECK
- EROSION BALE REINFORCEMENT
- SURFACE WATER FLOW
- PERMITTED WETLAND/WATERWAY IMPACTS
- X CLEARING AND GRUBBING

NOTES

DISTURBED AREAS WITHIN THE RIGHT OF WAY, EXCEPT THE AREAS WITHIN THE FINISHED SHOULDER POINTS, SHALL BE FERTILIZED, SEEDED, TOPSOILED AND COVERED WITH EROSION MAT.

PLACE SILT FENCE WITHIN 1-FT TO 3-FT OF THE SLOPE INTERCEPT IN WETLAND AREAS.

SEE "CULVERT PIPE TRANSITION" CONSTRUCTION DETAIL FOR ADDITIONAL INFORMATION.

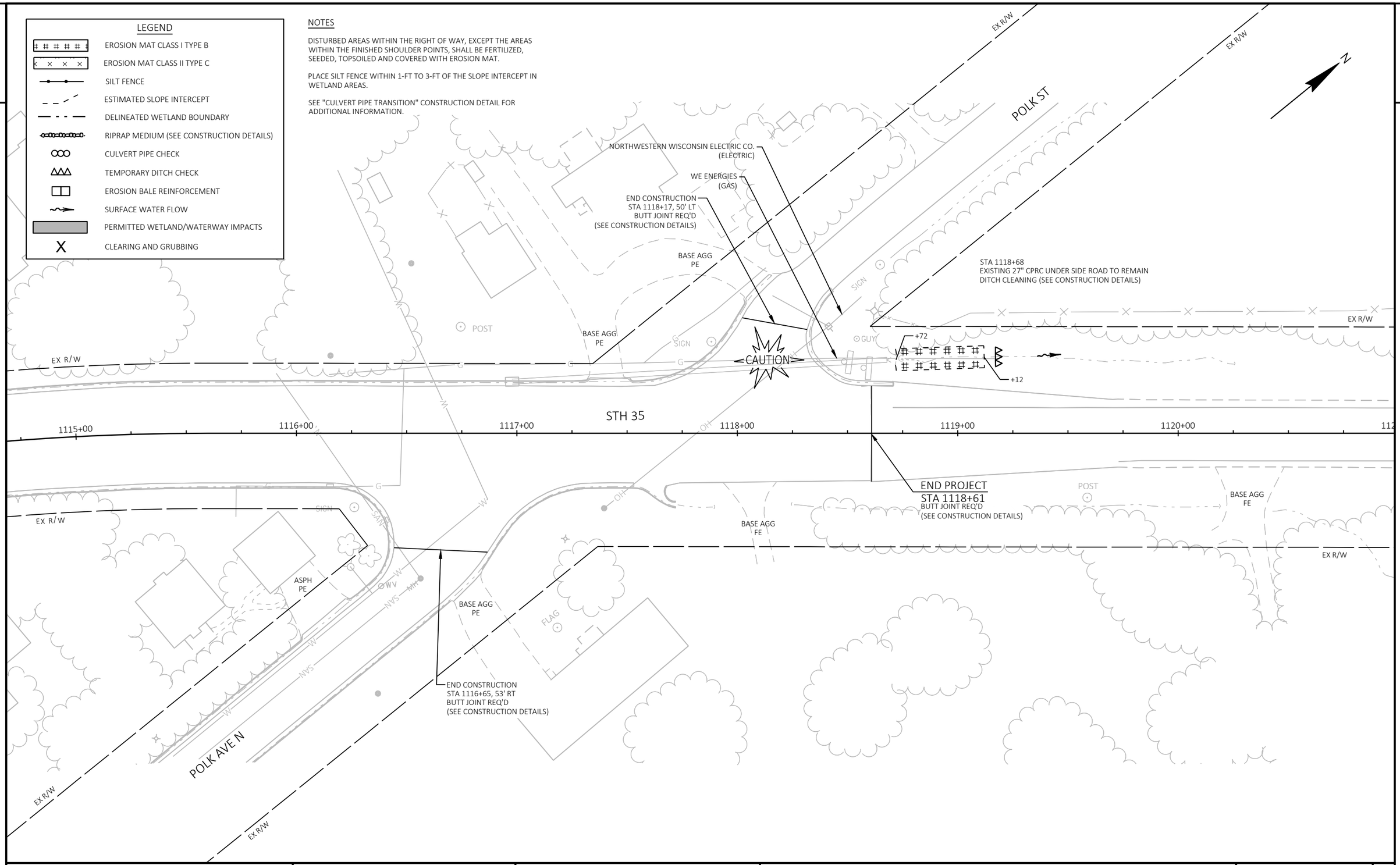

PROJECT NO: 8010-01-80	HWY: STH 35	COUNTY: POLK	CONSTRUCTION DETAILS - DITCH CLEANING	SHEET 46	E

2

LEGEND

- XXXXXXX SAWCUT
- ESTIMATED SLOPE INTERCEPT
- ASPHALTIC SURFACE PATCHING (SEE CONSTRUCTION DETAILS)
- EROSION MAT CLASS I TYPE B
- C1 CONCRETE CURB & GUTTER 6-INCH SLOPED 36-INCH TYPE D
- H1 REMOVING ASPHALTIC SURFACE MILLING AND HMA PAVEMENT (SEE TYPICAL SECTIONS)
- ** END SECTION REQUIRED (SEE SDD FOR C&G)
- * CURB AND GUTTER TRANSITION REQUIRED (6" MIN)
- SURFACE WATER FLOW
- SILT FENCE
- EROSION BALES

N

EX R/W

STH 35\48

H1

1059+00

1060+00

1061+00

1062+00

C1

+01
24', RT
1200.51

+85 *
34', RT
MATCH EXISTING ELEVATION

SPEED LIMIT 35

MOVE

EXISTING CONCRETE CURB & GUTTER 30-INCH TYPE D

C1

70'

* +11
33', RT
MATCH EXISTING ELEVATION

+81
25', RT
1200.58

SIGN

INDUSTRIAL WAY E

END CONSTRUCTION
STA 1060+50, 90' RT
BUTT JOINT REQ'D
(SEE CONSTRUCTION DETAILS)

EX R/W

EX R/W

EX R/W

EX R/W

PROJECT NO: 8010-01-80	HWY: STH 35	COUNTY: POLK	INTERSECTION DETAILS	SHEET 47	E

FILE NAME : P:\55XX\5508.DP.22.STH35-48.PLK\CADDS\80100180\SHEETS\021101-ID.DWG
LAYOUT NAME - 01

PLOT DATE : 4/20/2026 10:10 AM PLOT BY : PARKER TISCHAUSER PLOT NAME : PLOT SCALE : 1 IN:20 FT

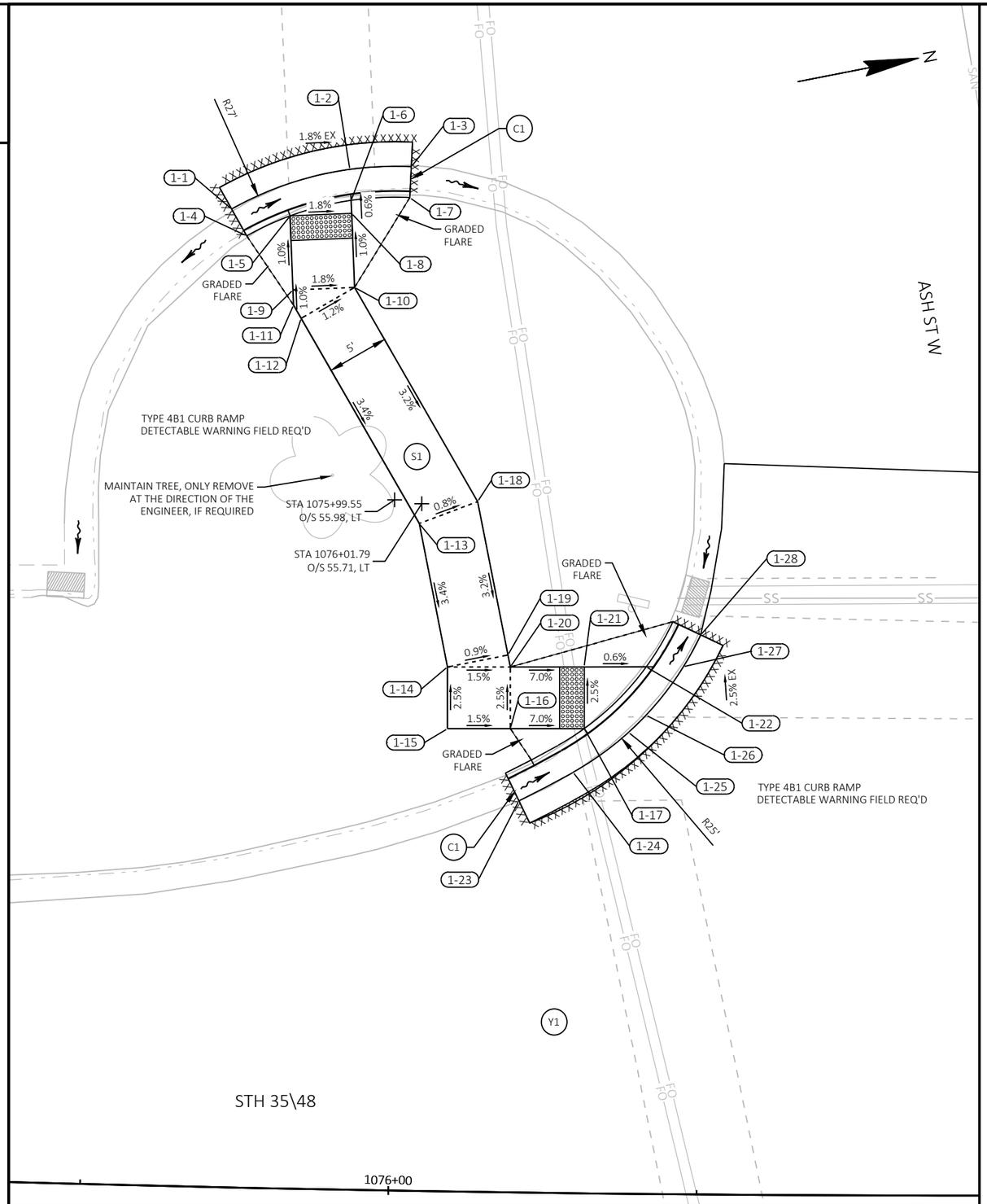

LEGEND

.XXXXXXX.	SAWCUT
	ASPHALTIC SURFACE PATCHING (SEE CONSTRUCTION DETAILS)
C1	CONCRETE CURB & GUTTER 30-INCH TYPE D
S1	4-INCH CONCRETE SIDEWALK
Y1	MILL AND OVERLAY (SEE TYPICAL SECTIONS FOR HMA TYPE AND DEPTH)
	CURB RAMP DETECTABLE WARNING FIELD
	INLET COVERS TYPE H-D (UNLESS OTHERWISE NOTED)
	EXISTING RIGHT-OF-WAY
MEF	MAXIMUM EXTENT FEASIBLE
	SURFACE WATER FLOW

NOTES

CONTRACTOR TO FIELD VERIFY ELEVATION, GRADES, SLOPES, LENGTHS AND MATCH POINTS PRIOR TO CURB RAMP AND SIDEWALK CONSTRUCTION

THE ENGINEER MAY ADJUST ELEVATIONS TO FIT FIELD CONSTRUCTION

DASHED LINES SHOWN FOR PROPOSED SIDEWALK ARE FOR INFORMATION ONLY AND DO NOT INDICATE JOINT LOCATIONS

SEE THE STANDARD DETAIL DRAWINGS FOR COMPLETE CURB RAMP REQUIREMENTS

ALL STATION AND OFFSET INFORMATION REFERENCE STH 35 R/L

SIDE ROAD MATCH INFORMATION SHOWN ON SECTION 5 PLANS AND OTHER DETAILS

ASH ST W - SW					
POINT NUMBER	STATION	OFFSET	ELEVATION	NORTHING	EASTING
1-1	1075+85.54	79.29' LT	1200.50	362618.50	507608.09
1-2	1075+95.34	82.69' LT	1200.35	362628.53	507606.77
1-3	1076+00.47	82.99' LT	1200.11	362633.46	507607.52
1-4	1075+86.84	77.13' LT	1200.92	362619.28	507610.46
1-5	1075+90.42	78.82' LT	1200.35	362623.04	507609.56
1-6	1075+95.49	80.18' LT	1200.25	362628.14	507609.26
1-7	1076+00.38	80.49' LT	1200.53	362632.86	507609.95
1-8	1075+95.55	79.12' LT	1200.26	362627.98	507610.31
1-9	1075+90.79	72.83' LT	1200.41	362622.13	507615.48
1-10	1075+95.92	73.13' LT	1200.32	362627.07	507616.24
1-11	1075+90.87	71.61' LT	1200.42	362621.94	507616.70
1-12	1075+91.52	70.55' LT	1200.38	362622.34	507617.86
1-13	1076+01.61	54.09' LT	1199.72	362628.55	507636.02
1-14	1076+04.14	42.51' LT	1199.32	362628.58	507647.87
1-15	1076+04.22	37.51' LT	1199.44	362627.63	507652.78
1-16	1076+09.38	37.59' LT	1199.37	362632.63	507653.75
1-17	1076+15.46	37.67' LT	1198.94	362638.52	507654.89
1-18	1076+06.42	55.94' LT	1199.68	362633.55	507635.19
1-19	1076+09.10	43.55' LT	1199.27	362633.58	507647.86
1-20	1076+09.31	42.59' LT	1199.24	362633.58	507648.84
1-21	1076+15.39	42.67' LT	1198.82	362639.47	507649.98
1-22	1076+20.49	42.73' LT	1198.79	362644.40	507650.94
1-23	1076+10.17	31.74' LT	1199.05	362632.19	507659.63
1-24	1076+14.58	34.11' LT	1199.03	362636.95	507658.20
1-25	1076+19.09	37.39' LT	1198.97	362641.97	507655.89
1-26	1076+20.53	38.81' LT	1198.93	362643.64	507654.78
1-27	1076+23.55	42.76' LT	1198.80	362647.36	507651.52
1-28	1076+24.96	45.35' LT	1198.78	362649.23	507649.25

2

LEGEND

.XXXXXXX. SAWCUT	CURB RAMP DETECTABLE WARNING FIELD
ASPHALTIC SURFACE PATCHING (SEE CONSTRUCTION DETAILS)	INLET COVERS TYPE H-D (UNLESS OTHERWISE NOTED)
C1 CONCRETE CURB & GUTTER 30-INCH TYPE D	EXISTING RIGHT-OF-WAY
S1 4-INCH CONCRETE SIDEWALK	MEF MAXIMUM EXTENT FEASIBLE
Y1 MILL AND OVERLAY (SEE TYPICAL SECTIONS FOR HMA TYPE AND DEPTH)	SURFACE WATER FLOW

NOTES

CONTRACTOR TO FIELD VERIFY ELEVATION, GRADES, SLOPES, LENGTHS AND MATCH POINTS PRIOR TO CURB RAMP AND SIDEWALK CONSTRUCTION

THE ENGINEER MAY ADJUST ELEVATIONS TO FIT FIELD CONSTRUCTION

DASHED LINES SHOWN FOR PROPOSED SIDEWALK ARE FOR INFORMATION ONLY AND DO NOT INDICATE JOINT LOCATIONS

SEE THE STANDARD DETAIL DRAWINGS FOR COMPLETE CURB RAMP REQUIREMENTS

ALL STATION AND OFFSET INFORMATION REFERENCE STH 35 R/L

SIDE ROAD MATCH INFORMATION SHOWN ON SECTION 5 PLANS AND OTHER DETAILS

ASH ST W - NW					
POINT NUMBER	STATION	OFFSET	ELEVATION	NORTHING	EASTING
2-1	1076+78.37	82.59' LT	1199.02	362707.58	507622.64
2-2	1076+72.94	78.72' LT	1199.06	362701.69	507625.48
2-3	1076+65.04	69.67' LT	1198.96	362692.46	507632.95
2-4	1076+62.14	56.79' LT	1198.57	362687.27	507645.08
2-5	1076+65.28	45.51' LT	1198.36	362688.20	507656.73
2-6	1076+69.83	39.46' LT	1198.42	362691.49	507663.51
2-7	1076+74.53	35.74' LT	1198.46	362695.37	507668.01
2-8	1076+78.37	33.58' LT	1198.47	362698.71	507670.84
2-9	1076+83.82	30.93' LT	1198.51	362703.53	507674.41
2-10	1076+89.12	28.80' LT	1198.55	362708.31	507677.44
2-11	1076+94.24	27.13' LT	1198.58	362713.00	507679.98
2-12	1076+99.90	25.70' LT	1198.62	362718.27	507682.37
2-13	1076+73.10	50.20' LT	1198.77	362696.63	507653.55
2-14	1076+67.28	47.14' LT	1198.77	362690.44	507655.50
2-15	1076+67.52	46.70' LT	1198.28	362690.58	507655.98
2-16	1076+71.54	41.31' LT	1198.32	362693.49	507662.01
2-17	1076+80.66	35.21' LT	1198.90	362701.22	507669.64
2-18	1077+00.44	28.14' LT	1199.04	362719.22	507680.06
2-19	1076+72.89	49.52' LT	1198.37	362696.30	507654.17
2-20	1076+76.26	45.86' LT	1198.54	362698.88	507658.38
2-21	1076+75.89	45.51' LT	1198.41	362698.47	507658.66
2-22	1076+83.69	40.98' LT	1198.99	362705.20	507664.50
2-23	1076+83.46	40.53' LT	1198.99	362704.90	507664.90
2-24	1077+01.56	33.20' LT	1199.12	362721.19	507675.27

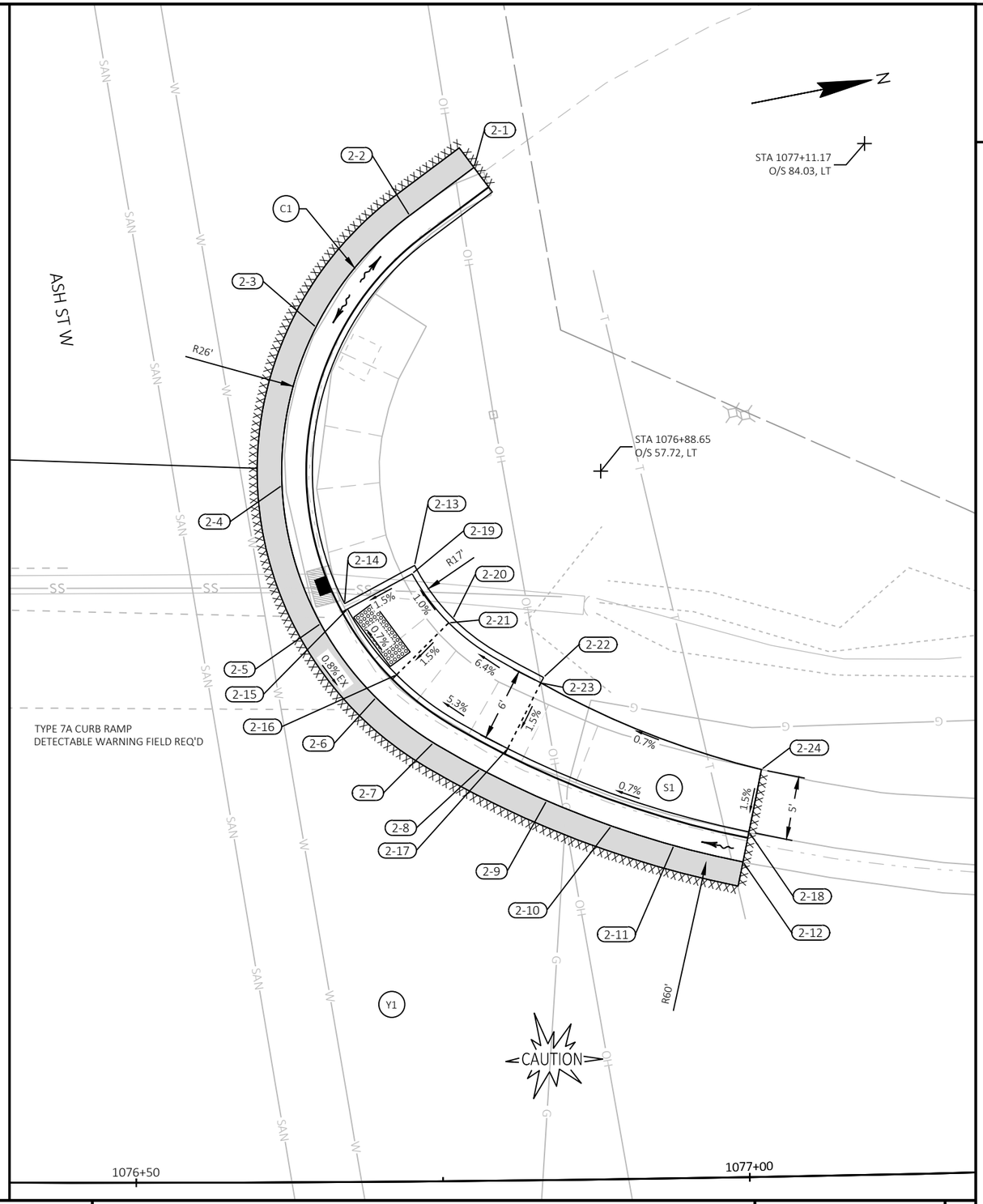

PROJECT NO: 8010-01-80	HWY: STH 35	COUNTY: POLK	CURB RAMP DETAILS	SHEET 49	E

2

2

N

MWE6
GWRE

MSYS6
GWRE

SAWCUT

+07
17', LT

+29
15', LT

+03
15', LT

+54

+03

889+00

890+00

891+00

892+00

893+00

894+00

12'

12'

12'

STH 35\48

SIGN

MSY6
GWRE

MSDY6
GWRE

MWE6
GWRE

MSWS6
GWRE

FOLLOW SDDS FOR MARKINGS
(SEE MISCELLANEOUS
QUANTITIES FOR ADDITIONAL
INFORMATION)

LEGEND

EXISTING MARKING	
EPOXY	EPOXY
GWRE	GROOVED WET REFLECTIVE EPOXY
GE	GROOVED EPOXY
ARRW2	MARKING ARROW TYPE 2 (WHITE)
WORD	MARKING WORD (WHITE)
MYIN	MARKING ISLAND NOSE (YELLOW)
SLW18	MARKING STOP LINE 18-INCH (WHITE)
CWW6	MARKING CROSSWALK TRANSVERSE LINE 6-INCH (WHITE)
MCY	MARKING CURB (YELLOW)
MWE6	MARKING LINE 6-INCH (WHITE EDGELINE)
MSY6	MARKING LINE 6-INCH (YELLOW)
MDY6	MARKING LINE 6-INCH (DOUBLE YELLOW)
MY6	MARKING LINE 6-INCH (YELLOW)
MSYS6	MARKING LINE 6-INCH (YELLOW SKIP) (12 1/2' LINE 37 1/2' GAP)
MSWS6	MARKING LINE 6-INCH (WHITE SKIP) (12 1/2' LINE 37 1/2' GAP)
MWC10	MARKING LINE 10-INCH (WHITE CHANNELIZING)
MYD12	MARKING DIAGONAL 12-INCH (YELLOW)(25' C-C AT 45°)
× × ×	MARKING REMOVAL LINE

NOTE
SAWCUT EXISTING SHOULDER TO ACCOMMODATE
NEW LANE DROP TAPER AND MARKING LAYOUT

N

MWE6
GWRE

SAWCUT

RIGHT
LANE
ENDS

MOVE FROM STA 907+09
TO STA 909+93

+03
27', LT

+03
24', LT

SIGN

895+00

896+00

897+00

898+00

STH 35\48

899+00

900+00

12'

12'

12'

12'

MSWS6
GWRE

MWE6
GWRE

MSDY6
GWRE

FOLLOW SDDS FOR MARKINGS
(SEE MISCELLANEOUS
QUANTITIES FOR ADDITIONAL
INFORMATION)

MOVE FROM STA 901+87 LT&RT
TO STA 904+98 NEW POST REQ'D

PROJECT NO: 8010-01-80	HWY: STH 35	COUNTY: POLK	PERMANENT SIGNING AND MARKING	SHEET 50	E

FILE NAME : P:\55XX\5508.DP.22.STH35-48.PLK\CADDS\80100180\SHEETS\024501-PM.DWG
LAYOUT NAME - 01

PLOT DATE : 4/27/2026 3:21 PM PLOT BY : PARKER TISCHAUSER PLOT NAME : PLOT SCALE : 1 IN:40 FT

WISDOT/CADDS SHEET 44

2

LEGEND

	EXISTING MARKING	MWE6	MARKING LINE 6-INCH (WHITE EDGELINE)
EPOXY	EPOXY	MSY6	MARKING LINE 6-INCH (YELLOW)
GWRE	GROOVED WET REFLECTIVE EPOXY	MDY6	MARKING LINE 6-INCH (DOUBLE YELLOW)
GE	GROOVED EPOXY	MY6	MARKING LINE 6-INCH (YELLOW)
ARRW2	MARKING ARROW TYPE 2 (WHITE)	MSYS6	MARKING LINE 6-INCH (YELLOW SKIP) (12 1/2' LINE 37 1/2' GAP)
WORD	MARKING WORD (WHITE)	MSWS6	MARKING LINE 6-INCH (WHITE SKIP) (12 1/2' LINE 37 1/2' GAP)
MYIN	MARKING ISLAND NOSE (YELLOW)	MWC10	MARKING LINE 10-INCH (WHITE CHANNELIZING)
SLW18	MARKING STOP LINE 18-INCH (WHITE)	MYD12	MARKING DIAGONAL 12-INCH (YELLOW)(25' C-C AT 45°)
CWW6	MARKING CROSSWALK TRANSVERSE LINE 6-INCH (WHITE)	× × ×	MARKING REMOVAL LINE
MCY	MARKING CURB (YELLOW)		

N

STH 35\48

1015+00 1016+00 1017+00 1018+00 1019+00 1020+00

12' 12'

FOLLOW SDDS FOR MARKINGS (SEE MISCELLANEOUS QUANTITIES FOR ADDITIONAL INFORMATION)

MDY6 GWRE

MWE6 GWRE

MWE6 GWRE

MDY6 GWRE

MYD12 EPOXY

12' 12' 12'

+91 +17 +37 +19

MWC10 GWRE

ARRW2 EPOXY

MDY6 GWRE

SIGN

SIGN

PROJECT NO: 8010-01-80	HWY: STH 35	COUNTY: POLK	PERMANENT SIGNING AND MARKING	SHEET 51	E

FILE NAME : P:\55XX\5508.DP.22.STH35-48.PLK\CADDS\80100180\SHEETS\024501-PM.DWG
LAYOUT NAME - 02

PLOT DATE : 4/27/2026 3:21 PM PLOT BY : PARKER TISCHAUSER PLOT NAME : PLOT SCALE : 1 IN:40 FT

2

LEGEND

	EXISTING MARKING	MWE6	MARKING LINE 6-INCH (WHITE EDGELINE)
EPOXY	EPOXY	MSY6	MARKING LINE 6-INCH (YELLOW)
GWRE	GROOVED WET REFLECTIVE EPOXY	MDY6	MARKING LINE 6-INCH (DOUBLE YELLOW)
GE	GROOVED EPOXY	MY6	MARKING LINE 6-INCH (YELLOW)
ARRW2	MARKING ARROW TYPE 2 (WHITE)	MSYS6	MARKING LINE 6-INCH (YELLOW SKIP) (12 1/2' LINE 37 1/2' GAP)
WORD	MARKING WORD (WHITE)	MSWS6	MARKING LINE 6-INCH (WHITE SKIP) (12 1/2' LINE 37 1/2' GAP)
MYIN	MARKING ISLAND NOSE (YELLOW)	MWC10	MARKING LINE 10-INCH (WHITE CHANNELIZING)
SLW18	MARKING STOP LINE 18-INCH (WHITE)	MYD12	MARKING DIAGONAL 12-INCH (YELLOW)(25' C-C AT 45°)
CWW6	MARKING CROSSWALK TRANSVERSE LINE 6-INCH (WHITE)	× × ×	MARKING REMOVAL LINE
MCY	MARKING CURB (YELLOW)		

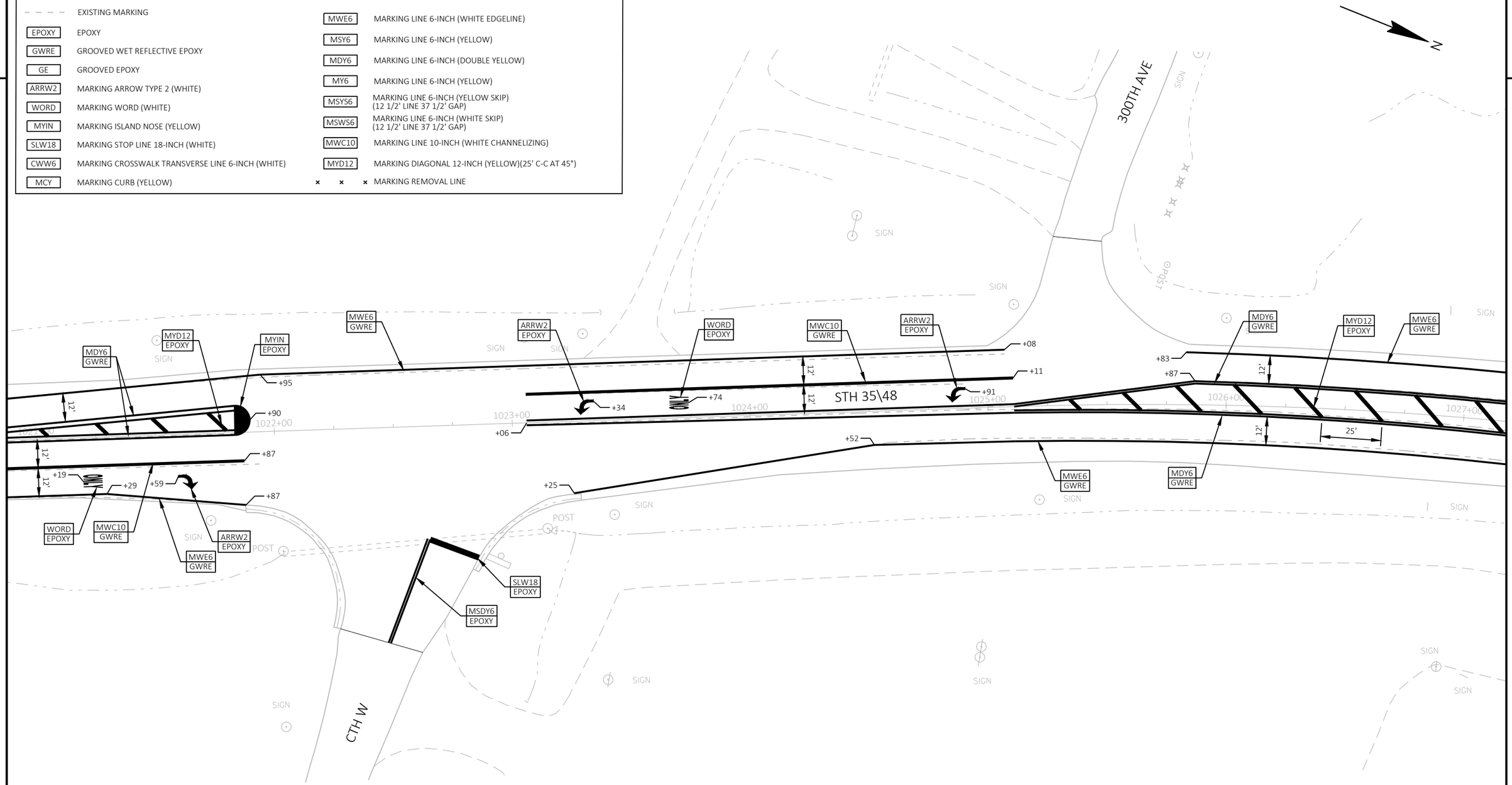

PROJECT NO: 8010-01-80	HWY: STH 35	COUNTY: POLK	PERMANENT SIGNING AND MARKING	SHEET 52	E

FILE NAME : P:\55XX\5508.DP.22.STH35-48.PLK\CADDS\80100180\SHEETS\024501-PM.DWG
LAYOUT NAME - 03

PLOT DATE : 4/27/2026 3:21 PM PLOT BY : PARKER TISCHAUSER PLOT NAME : PLOT SCALE : 1 IN:40 FT

WISDOT/CADDS SHEET 42

2

LEGEND

- - - -	EXISTING MARKING
EPOXY	EPOXY
GWRE	GROOVED WET REFLECTIVE EPOXY
GE	GROOVED EPOXY
ARRW2	MARKING ARROW TYPE 2 (WHITE)
WORD	MARKING WORD (WHITE)
MYIN	MARKING ISLAND NOSE (YELLOW)
SLW18	MARKING STOP LINE 18-INCH (WHITE)
CWW6	MARKING CROSSWALK TRANSVERSE LINE 6-INCH (WHITE)
MCY	MARKING CURB (YELLOW)
MWE6	MARKING LINE 6-INCH (WHITE EDGELINE)
MSY6	MARKING LINE 6-INCH (YELLOW)
MDY6	MARKING LINE 6-INCH (DOUBLE YELLOW)
MY6	MARKING LINE 6-INCH (YELLOW)
MSYS6	MARKING LINE 6-INCH (YELLOW SKIP) (12 1/2' LINE 37 1/2' GAP)
MSWS6	MARKING LINE 6-INCH (WHITE SKIP) (12 1/2' LINE 37 1/2' GAP)
MWC10	MARKING LINE 10-INCH (WHITE CHANNELIZING)
MYD12	MARKING DIAGONAL 12-INCH (YELLOW)(25' C-C AT 45°)
× × ×	MARKING REMOVAL LINE

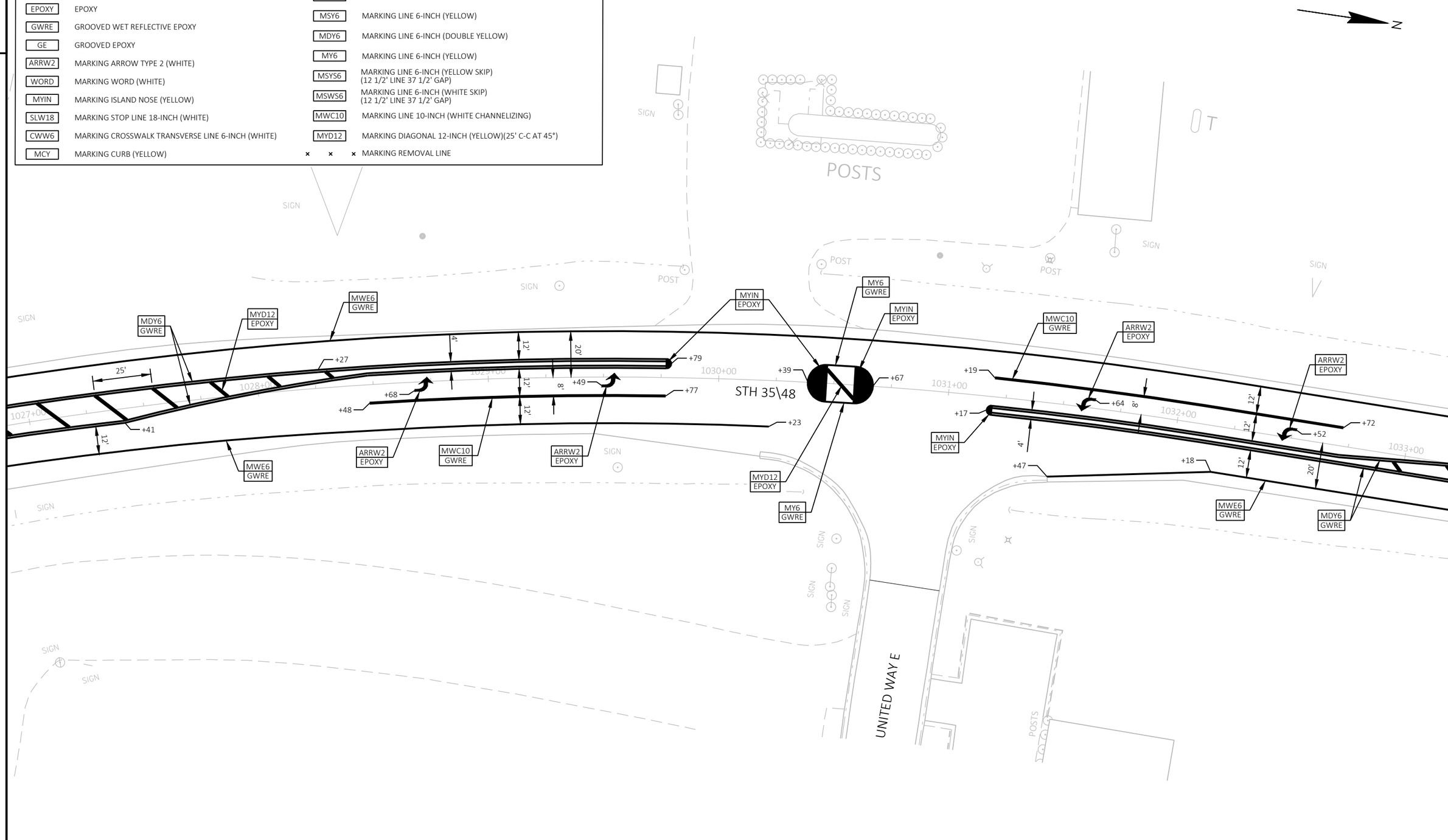

PROJECT NO: 8010-01-80	HWY: STH 35	COUNTY: POLK	PERMANENT SIGNING AND MARKING	SHEET 53	E

FILE NAME : P:\55XX\5508.DP.22.STH35-48.PLK\CADDS\80100180\SHEETS\024501-PM.DWG
LAYOUT NAME - 04
PLOT DATE : 4/27/2026 3:22 PM
PLOT BY : PARKER TISCHAUSER
PLOT NAME :
PLOT SCALE : 1 IN:40 FT
WISDOT/CADDS SHEET 42

2

LEGEND

	EXISTING MARKING	MWE6	MARKING LINE 6-INCH (WHITE EDGELINE)
EPOXY	EPOXY	MSY6	MARKING LINE 6-INCH (YELLOW)
GWRE	GROOVED WET REFLECTIVE EPOXY	MDY6	MARKING LINE 6-INCH (DOUBLE YELLOW)
GE	GROOVED EPOXY	MY6	MARKING LINE 6-INCH (YELLOW)
ARRW2	MARKING ARROW TYPE 2 (WHITE)	MSYS6	MARKING LINE 6-INCH (YELLOW SKIP) (12 1/2' LINE 37 1/2' GAP)
WORD	MARKING WORD (WHITE)	MSWS6	MARKING LINE 6-INCH (WHITE SKIP) (12 1/2' LINE 37 1/2' GAP)
MYIN	MARKING ISLAND NOSE (YELLOW)	MWC10	MARKING LINE 10-INCH (WHITE CHANNELIZING)
SLW18	MARKING STOP LINE 18-INCH (WHITE)	MYD12	MARKING DIAGONAL 12-INCH (YELLOW)(25' C-C AT 45°)
CWW6	MARKING CROSSWALK TRANSVERSE LINE 6-INCH (WHITE)	× × ×	MARKING REMOVAL LINE
MCY	MARKING CURB (YELLOW)		

N

FOUND

SIGN

GPOST

MWE6
GWRE

MDY6
GWRE

MYIN
EPOXY

+22

25'

STH 35\48

12'

8'

8'

12'

1033+00

1034+00

1035+00

1036+00

1037+00

1038+00

1039+00

+91

+83

MWE6
GWRE

MDY6
GWRE

MYD12
EPOXY

POST

SIGN

2

PROJECT NO: 8010-01-80	HWY: STH 35	COUNTY: POLK	PERMANENT SIGNING AND MARKING	SHEET 54	E

FILE NAME : P:\55XX\5508.DP.22.STH35-48.PLK\CADDS\80100180\SHEETS\024501-PM.DWG
LAYOUT NAME - 05

PLOT DATE : 4/27/2026 3:21 PM PLOT BY : PARKER TISCHAUSER PLOT NAME : PLOT SCALE : 1 IN:40 FT

LEGEND

- - - -	EXISTING MARKING
EPOXY	EPOXY
GWRE	GROOVED WET REFLECTIVE EPOXY
GE	GROOVED EPOXY
ARRW2	MARKING ARROW TYPE 2 (WHITE)
WORD	MARKING WORD (WHITE)
MYIN	MARKING ISLAND NOSE (YELLOW)
SLW18	MARKING STOP LINE 18-INCH (WHITE)
CWW6	MARKING CROSSWALK TRANSVERSE LINE 6-INCH (WHITE)
MCY	MARKING CURB (YELLOW)
MWE6	MARKING LINE 6-INCH (WHITE EDGELINE)
MSY6	MARKING LINE 6-INCH (YELLOW)
MDY6	MARKING LINE 6-INCH (DOUBLE YELLOW)
MY6	MARKING LINE 6-INCH (YELLOW)
MSYS6	MARKING LINE 6-INCH (YELLOW SKIP) (12 1/2' LINE 37 1/2' GAP)
MSWS6	MARKING LINE 6-INCH (WHITE SKIP) (12 1/2' LINE 37 1/2' GAP)
MWC10	MARKING LINE 10-INCH (WHITE CHANNELIZING)
MYD12	MARKING DIAGONAL 12-INCH (YELLOW)(25' C-C AT 45°)
× × ×	MARKING REMOVAL LINE

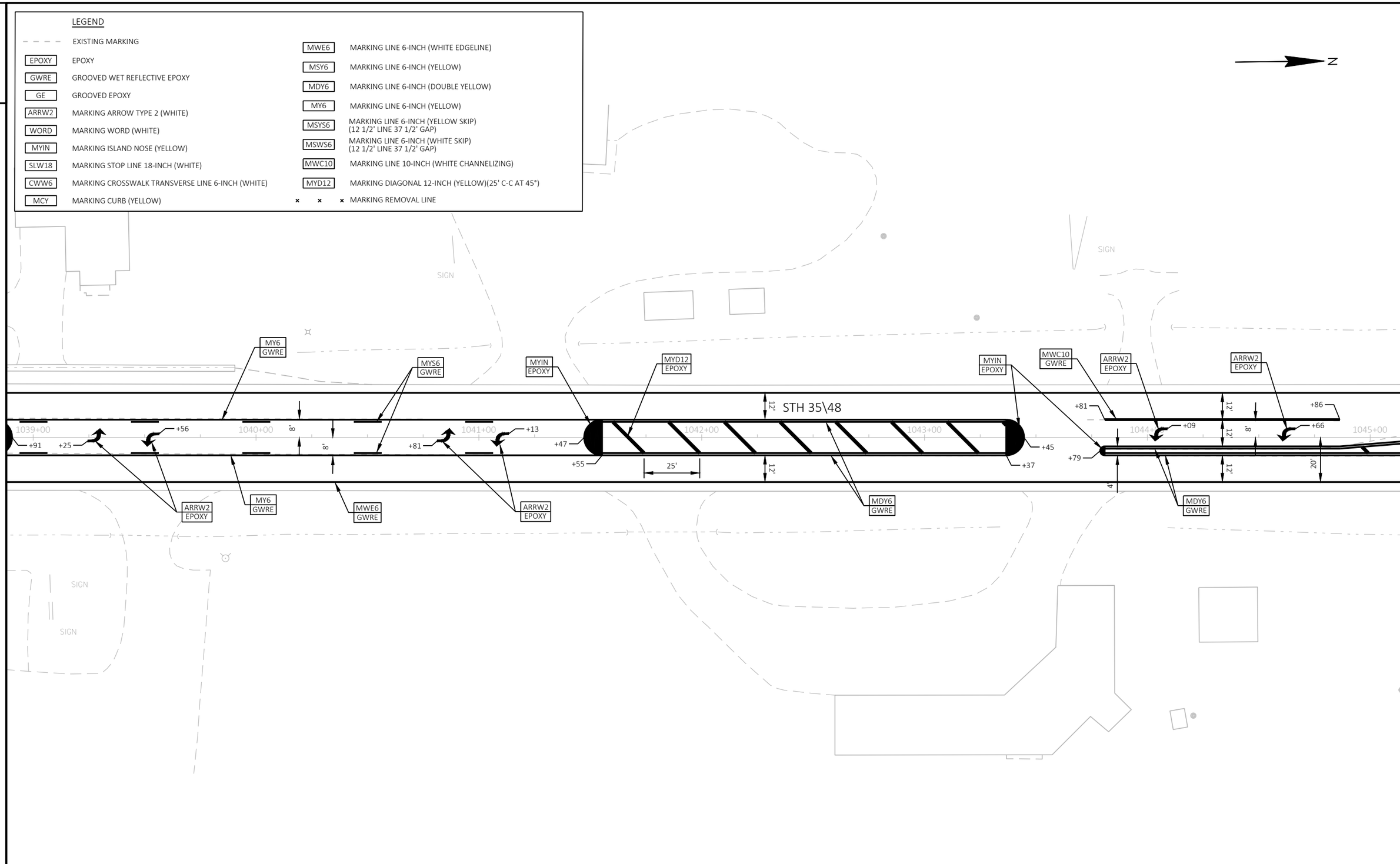

PROJECT NO: 8010-01-80	HWY: STH 35	COUNTY: POLK	PERMANENT SIGNING AND MARKING	SHEET 55	E

2

LEGEND

	EXISTING MARKING	MWE6	MARKING LINE 6-INCH (WHITE EDGELINE)
EPOXY	EPOXY	MSY6	MARKING LINE 6-INCH (YELLOW)
GWRE	GROOVED WET REFLECTIVE EPOXY	MDY6	MARKING LINE 6-INCH (DOUBLE YELLOW)
GE	GROOVED EPOXY	MY6	MARKING LINE 6-INCH (YELLOW)
ARRW2	MARKING ARROW TYPE 2 (WHITE)	MSYS6	MARKING LINE 6-INCH (YELLOW SKIP) (12 1/2' LINE 37 1/2' GAP)
WORD	MARKING WORD (WHITE)	MSWS6	MARKING LINE 6-INCH (WHITE SKIP) (12 1/2' LINE 37 1/2' GAP)
MYIN	MARKING ISLAND NOSE (YELLOW)	MWC10	MARKING LINE 10-INCH (WHITE CHANNELIZING)
SLW18	MARKING STOP LINE 18-INCH (WHITE)	MYD12	MARKING DIAGONAL 12-INCH (YELLOW)(25' C-C AT 45°)
CWW6	MARKING CROSSWALK TRANSVERSE LINE 6-INCH (WHITE)	× × ×	MARKING REMOVAL LINE
MCY	MARKING CURB (YELLOW)		

GANDY DANCER STATE TRAIL

N

STH 35\48

MYD12 EPOXY
MWE6 GWRE
MYIN EPOXY
MWC10 GWRE
ARRW2 EPOXY
MDY6 GWRE
MWE6 GWRE
MDY6 GWRE
MYD12 EPOXY

1045+00 1046+00 1047+00 1048+00 1049+00 1050+00 1051+00

+36 +34 +26 +65 +63 +47 +27

12' 8' 8' 12' 25' 20' 4' 12' 12'

POST

A/C

W

SIGN

LEGEND

- - - -	EXISTING MARKING
EPOXY	EPOXY
GWRE	GROOVED WET REFLECTIVE EPOXY
GE	GROOVED EPOXY
ARRW2	MARKING ARROW TYPE 2 (WHITE)
WORD	MARKING WORD (WHITE)
MYIN	MARKING ISLAND NOSE (YELLOW)
SLW18	MARKING STOP LINE 18-INCH (WHITE)
CWW6	MARKING CROSSWALK TRANSVERSE LINE 6-INCH (WHITE)
MCY	MARKING CURB (YELLOW)
MWE6	MARKING LINE 6-INCH (WHITE EDGELINE)
MSY6	MARKING LINE 6-INCH (YELLOW)
MDY6	MARKING LINE 6-INCH (DOUBLE YELLOW)
MY6	MARKING LINE 6-INCH (YELLOW)
MSYS6	MARKING LINE 6-INCH (YELLOW SKIP) (12 1/2' LINE 37 1/2' GAP)
MSWS6	MARKING LINE 6-INCH (WHITE SKIP) (12 1/2' LINE 37 1/2' GAP)
MWC10	MARKING LINE 10-INCH (WHITE CHANNELIZING)
MYD12	MARKING DIAGONAL 12-INCH (YELLOW)(25' C-C AT 45°)
× × ×	MARKING REMOVAL LINE

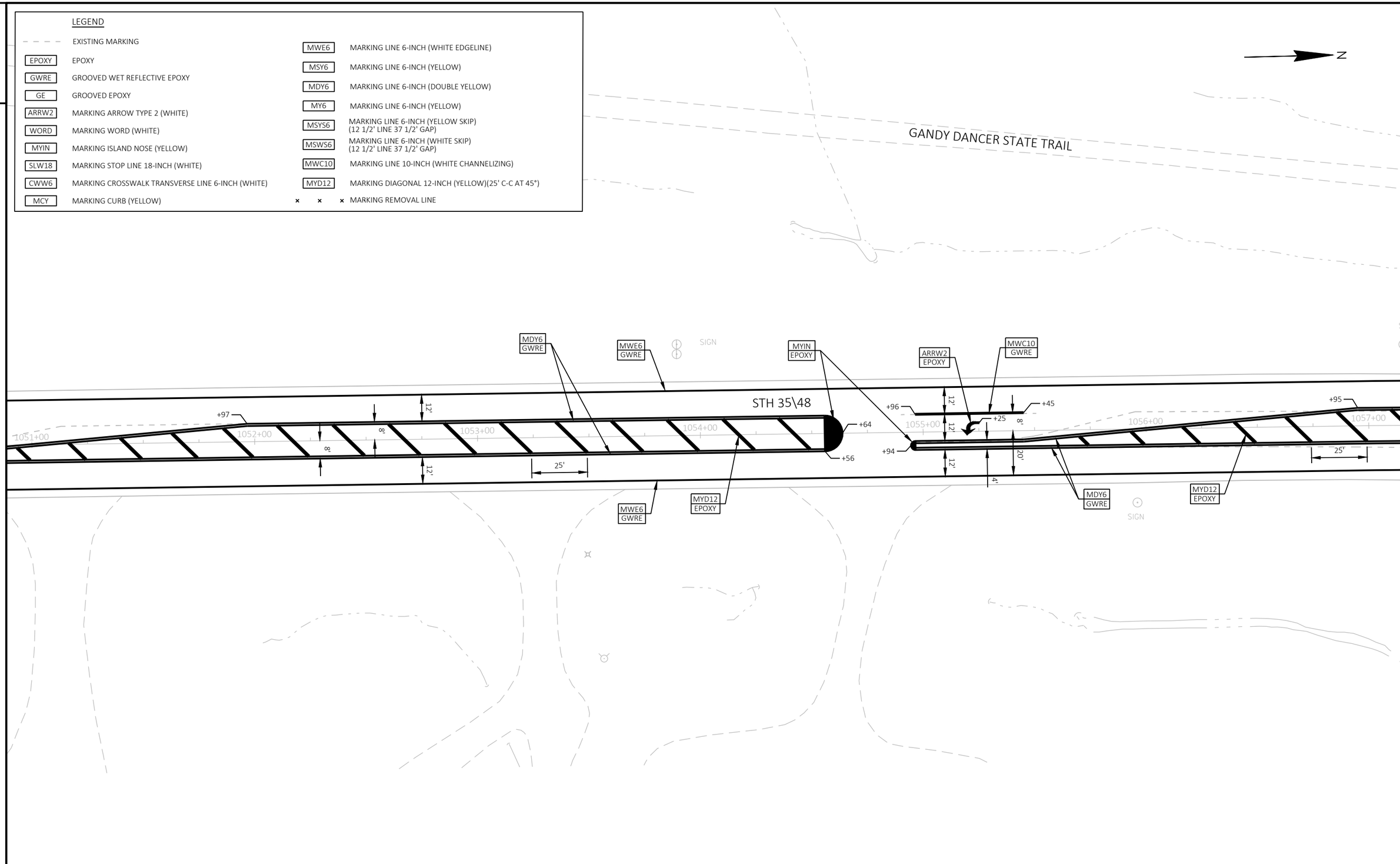

PROJECT NO: 8010-01-80	HWY: STH 35	COUNTY: POLK	PERMANENT SIGNING AND MARKING	SHEET 57	E

LEGEND

- - - -	EXISTING MARKING
EPOXY	EPOXY
GWRE	GROOVED WET REFLECTIVE EPOXY
GE	GROOVED EPOXY
ARRW2	MARKING ARROW TYPE 2 (WHITE)
WORD	MARKING WORD (WHITE)
MYIN	MARKING ISLAND NOSE (YELLOW)
SLW18	MARKING STOP LINE 18-INCH (WHITE)
CWW6	MARKING CROSSWALK TRANSVERSE LINE 6-INCH (WHITE)
MCY	MARKING CURB (YELLOW)
MWE6	MARKING LINE 6-INCH (WHITE EDGELINE)
MSY6	MARKING LINE 6-INCH (YELLOW)
MDY6	MARKING LINE 6-INCH (DOUBLE YELLOW)
MY6	MARKING LINE 6-INCH (YELLOW)
MSYS6	MARKING LINE 6-INCH (YELLOW SKIP) (12 1/2' LINE 37 1/2' GAP)
MSWS6	MARKING LINE 6-INCH (WHITE SKIP) (12 1/2' LINE 37 1/2' GAP)
MWC10	MARKING LINE 10-INCH (WHITE CHANNELIZING)
MYD12	MARKING DIAGONAL 12-INCH (YELLOW)(25' C-C AT 45°)
× × ×	MARKING REMOVAL LINE

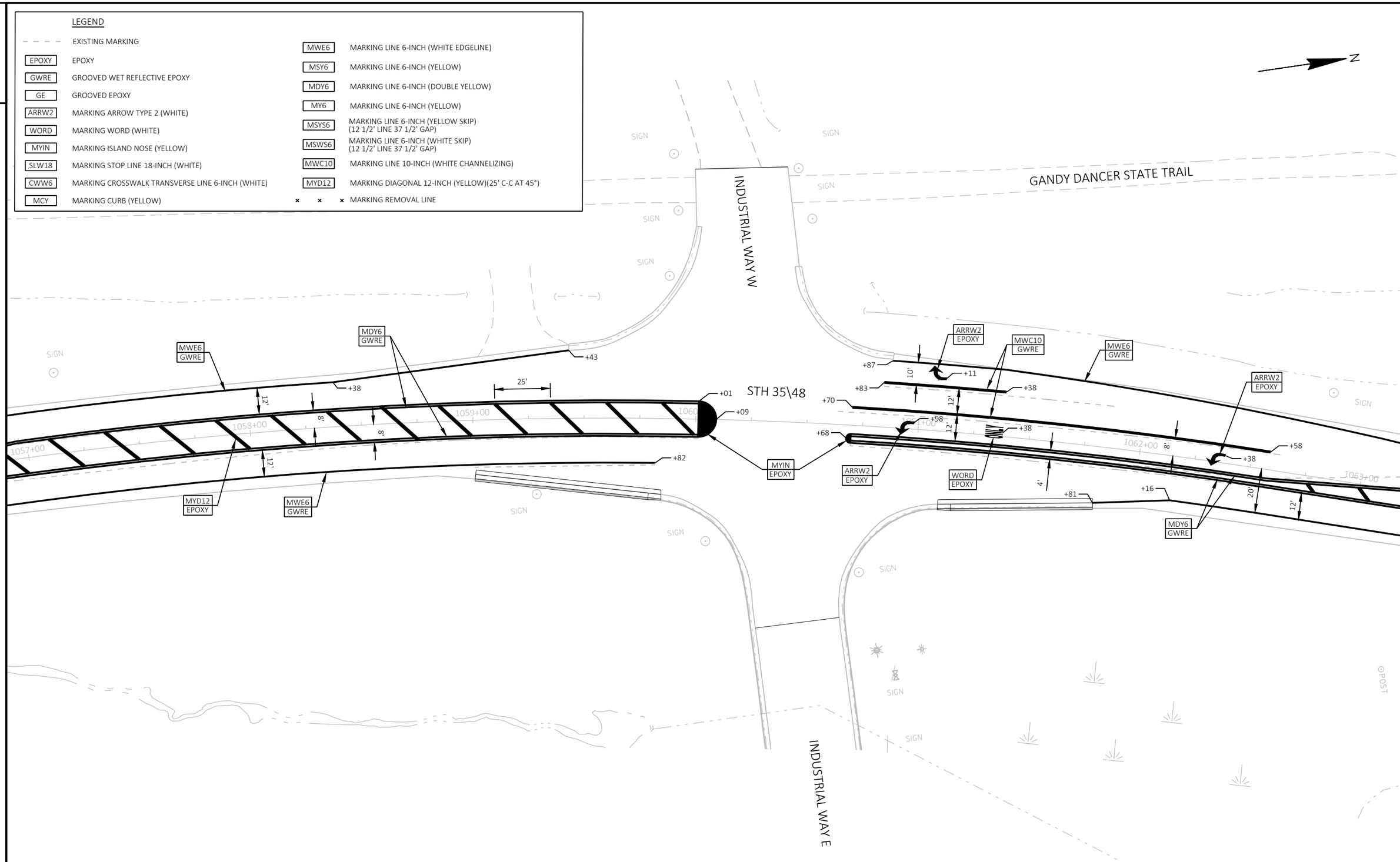

PROJECT NO: 8010-01-80	HWY: STH 35	COUNTY: POLK	PERMANENT SIGNING AND MARKING	SHEET 58	E

FILE NAME : P:\55XX\5508.DP.22.STH35-48.PLK\CADDS\80100180\SHEETS\024501-PM.DWG
LAYOUT NAME - 09
PLOT DATE : 4/27/2026 3:21 PM
PLOT BY : PARKER TISCHAUSER
PLOT NAME :
PLOT SCALE : 1 IN:40 FT
WISDOT/CADDS SHEET 42

2

LEGEND

	EXISTING MARKING	MWE6	MARKING LINE 6-INCH (WHITE EDGELINE)
EPOXY	EPOXY	MSY6	MARKING LINE 6-INCH (YELLOW)
GWRE	GROOVED WET REFLECTIVE EPOXY	MDY6	MARKING LINE 6-INCH (DOUBLE YELLOW)
GE	GROOVED EPOXY	MY6	MARKING LINE 6-INCH (YELLOW)
ARRW2	MARKING ARROW TYPE 2 (WHITE)	MSYS6	MARKING LINE 6-INCH (YELLOW SKIP) (12 1/2' LINE 37 1/2' GAP)
WORD	MARKING WORD (WHITE)	MSWS6	MARKING LINE 6-INCH (WHITE SKIP) (12 1/2' LINE 37 1/2' GAP)
MYIN	MARKING ISLAND NOSE (YELLOW)	MWC10	MARKING LINE 10-INCH (WHITE CHANNELIZING)
SLW18	MARKING STOP LINE 18-INCH (WHITE)	MYD12	MARKING DIAGONAL 12-INCH (YELLOW)(25' C-C AT 45°)
CWW6	MARKING CROSSWALK TRANSVERSE LINE 6-INCH (WHITE)	× × ×	MARKING REMOVAL LINE
MCY	MARKING CURB (YELLOW)		

N

WATER TOWER

SIGN

MYD12 EPLOXY

MDY6 GWRE

MWE6 GWRE

SIGN

SIGN

+80

25'

+08

STH 35\48

1063+00

1064+00

1065+00

1066+00

1068+00

1069+00

+88

+08

+08

12'

+88

MWE6 GWRE

SIGN

SIGN

POST

NO PARKING ANY TIME

R7-1D
18"X24"

NO PARKING ANY TIME

R7-1D
18"X24"
PLACE SIGN ON
EXISTING LIGHT POLE

NO PARKING ANY TIME

R7-1D
18"X24"
SIGN POST BOX OUT REQ'D
INCIDENTAL TO SIGN POST

PROJECT NO: 8010-01-80	HWY: STH 35	COUNTY: POLK	PERMANENT SIGNING AND MARKING	SHEET 59	E

FILE NAME : P:\55XX\5508.DP.22.STH35-48.PLK\CADDS\80100180\SHEETS\024501-PM.DWG
LAYOUT NAME - 10

PLOT DATE : 4/27/2026 3:21 PM PLOT BY : PARKER TISCHAUSER PLOT NAME : PLOT SCALE : 1 IN:40 FT

WISDOT/CADDS SHEET 42

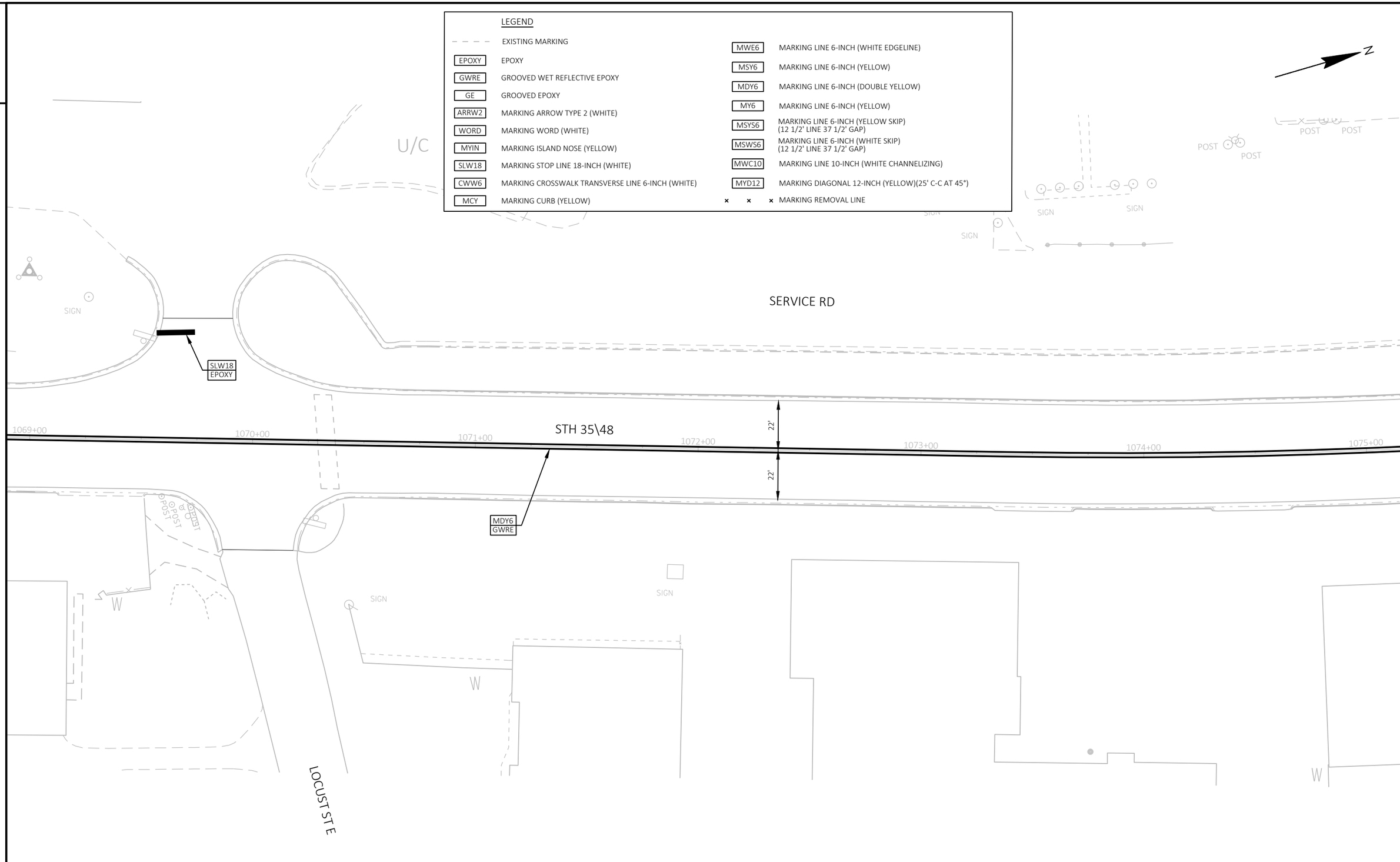

PROJECT NO: 8010-01-80	HWY: STH 35	COUNTY: POLK	PERMANENT SIGNING AND MARKING	SHEET 60	E

FILE NAME : P:\55XX\5508.DP.22.STH35-48.PLK\CADDS\80100180\SHEETS\024501-PM.DWG
LAYOUT NAME - 11
PLOT DATE : 4/27/2026 3:21 PM PLOT BY : PARKER TISCHAUSER PLOT NAME : PLOT SCALE : 1 IN:40 FT
WISDOT/CADDS SHEET 42

LEGEND

EXISTING MARKING	
EPOXY	EPOXY
GWRE	GROOVED WET REFLECTIVE EPOXY
GE	GROOVED EPOXY
ARRW2	MARKING ARROW TYPE 2 (WHITE)
WORD	MARKING WORD (WHITE)
MYIN	MARKING ISLAND NOSE (YELLOW)
SLW18	MARKING STOP LINE 18-INCH (WHITE)
CWW6	MARKING CROSSWALK TRANSVERSE LINE 6-INCH (WHITE)
MCY	MARKING CURB (YELLOW)
MWE6	MARKING LINE 6-INCH (WHITE EDGELINE)
MSY6	MARKING LINE 6-INCH (YELLOW)
MDY6	MARKING LINE 6-INCH (DOUBLE YELLOW)
MY6	MARKING LINE 6-INCH (YELLOW)
MSYS6	MARKING LINE 6-INCH (YELLOW SKIP) (12 1/2' LINE 37 1/2' GAP)
MSWS6	MARKING LINE 6-INCH (WHITE SKIP) (12 1/2' LINE 37 1/2' GAP)
MWC10	MARKING LINE 10-INCH (WHITE CHANNELIZING)
MYD12	MARKING DIAGONAL 12-INCH (YELLOW)(25' C-C AT 45°)
× × ×	MARKING REMOVAL LINE

ASH ST W

SERVICE RD

POST POST

SIGN

SLW18
EPOXY

CWW6
GE

MDY6
GWRE

STH 35\48

1075+00 1076+00 1077+00 1078+00 1079+00 1080+00 1081+00

22' 22' 22' 22'

SIGN

SIGN

ASH ST E

N

2

PROJECT NO: 8010-01-80	HWY: STH 35	COUNTY: POLK	PERMANENT SIGNING AND MARKING	SHEET 61	E

FILE NAME : P:\5SXX\5508.DP.22.STH35-48.PLK\CADDS\80100180\SHEETS\024501-PM.DWG
LAYOUT NAME - 12
PLOT DATE : 4/27/2026 3:21 PM PLOT BY : PARKER TISCHAUSER PLOT NAME : PLOT SCALE : 1 IN:40 FT
WISDOT/CADDS SHEET 42

2

LEGEND

EXISTING MARKING	
EPOXY	EPOXY
GWRE	GROOVED WET REFLECTIVE EPOXY
GE	GROOVED EPOXY
ARRW2	MARKING ARROW TYPE 2 (WHITE)
WORD	MARKING WORD (WHITE)
MYIN	MARKING ISLAND NOSE (YELLOW)
SLW18	MARKING STOP LINE 18-INCH (WHITE)
CWW6	MARKING CROSSWALK TRANSVERSE LINE 6-INCH (WHITE)
MCY	MARKING CURB (YELLOW)
MWE6	MARKING LINE 6-INCH (WHITE EDGELINE)
MSY6	MARKING LINE 6-INCH (YELLOW)
MDY6	MARKING LINE 6-INCH (DOUBLE YELLOW)
MY6	MARKING LINE 6-INCH (YELLOW)
MSYS6	MARKING LINE 6-INCH (YELLOW SKIP) (12 1/2' LINE 37 1/2' GAP)
MSWS6	MARKING LINE 6-INCH (WHITE SKIP) (12 1/2' LINE 37 1/2' GAP)
MWC10	MARKING LINE 10-INCH (WHITE CHANNELIZING)
MYD12	MARKING DIAGONAL 12-INCH (YELLOW)(25' C-C AT 45°)
× × ×	MARKING REMOVAL LINE

NOTES

ALL SPECIAL REMOVALS ARE NOT SHOWN (SEE MISCELLANEOUS QUANTITIES).

EXISTING PARKING STALL MARKING TO REMAIN.

N

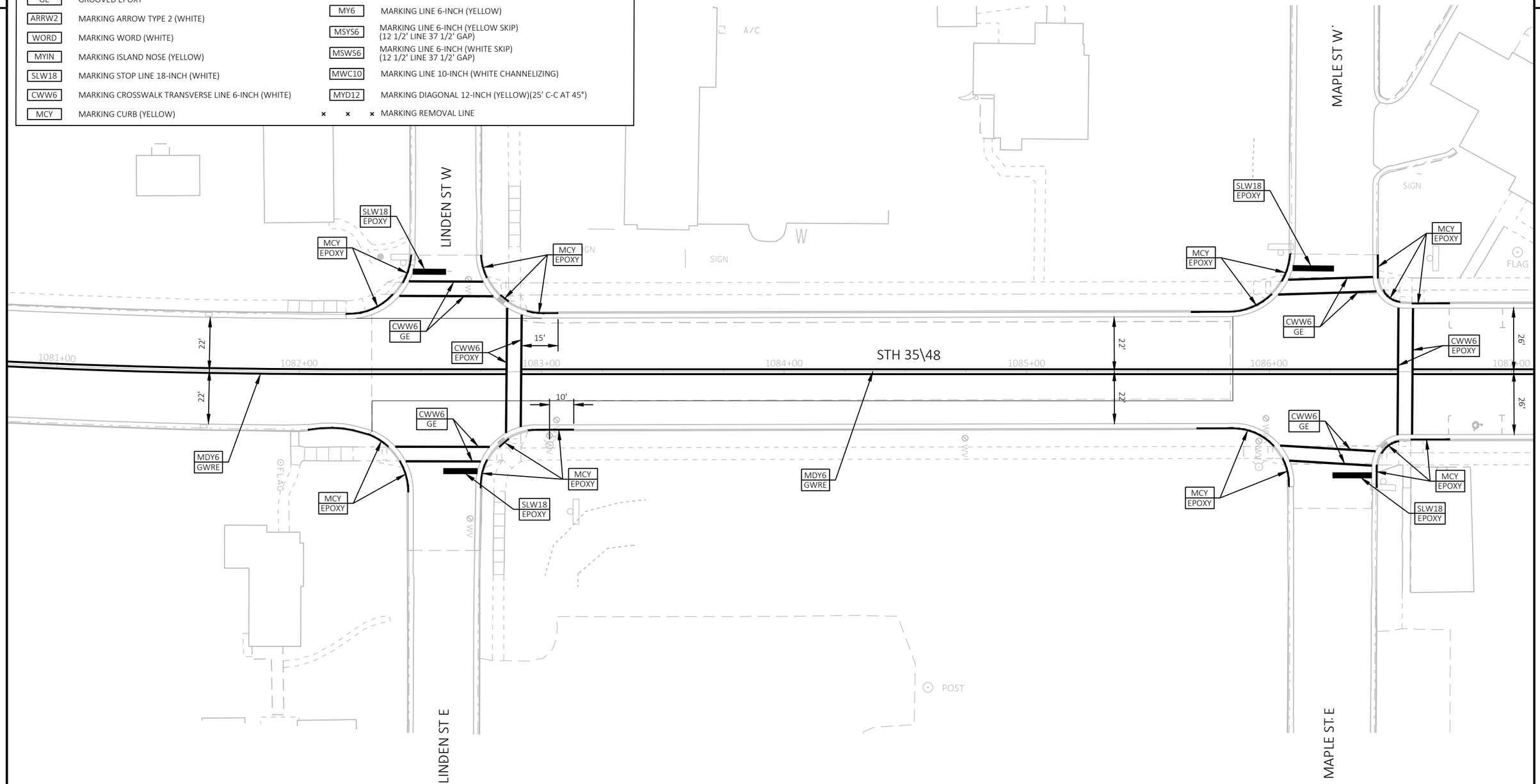

PROJECT NO: 8010-01-80	HWY: STH 35	COUNTY: POLK	PERMANENT SIGNING AND MARKING	SHEET 62	E

FILE NAME : P:\55XX\5508.DP.22.STH35-48.PLK\CADDS\80100180\SHEETS\024501-PM.DWG
LAYOUT NAME - 13

PLOT DATE : 4/27/2026 3:21 PM PLOT BY : PARKER TISCHAUSER PLOT NAME : PLOT SCALE : 1 IN:40 FT

WISDOT/CADDS SHEET 42

2

LEGEND

	EXISTING MARKING	MWE6	MARKING LINE 6-INCH (WHITE EDGELINE)
EPOXY	EPOXY	MSY6	MARKING LINE 6-INCH (YELLOW)
GWRE	GROOVED WET REFLECTIVE EPOXY	MDY6	MARKING LINE 6-INCH (DOUBLE YELLOW)
GE	GROOVED EPOXY	MY6	MARKING LINE 6-INCH (YELLOW)
ARRW2	MARKING ARROW TYPE 2 (WHITE)	MSYS6	MARKING LINE 6-INCH (YELLOW SKIP) (12 1/2' LINE 37 1/2' GAP)
WORD	MARKING WORD (WHITE)	MSWS6	MARKING LINE 6-INCH (WHITE SKIP) (12 1/2' LINE 37 1/2' GAP)
MYIN	MARKING ISLAND NOSE (YELLOW)	MWC10	MARKING LINE 10-INCH (WHITE CHANNELIZING)
SLW18	MARKING STOP LINE 18-INCH (WHITE)	MYD12	MARKING DIAGONAL 12-INCH (YELLOW)(25' C-C AT 45°)
CWW6	MARKING CROSSWALK TRANSVERSE LINE 6-INCH (WHITE)	× × ×	MARKING REMOVAL LINE
MCY	MARKING CURB (YELLOW)		

NOTES

ALL SPECIAL REMOVALS ARE NOT SHOWN (SEE MISCELLANEOUS QUANTITIES).

EXISTING PARKING STALL MARKING TO REMAIN.

N

STH 48

STH 35\48

OAK ST E

MCY EPOXY
SLW18 EPOXY
CWW6 EPOXY
MDY6 GWRE
CWW6 GE
MWC10
26'
+59
+40
1087+00
1088+00
1089+00
1090+00
1091+00
1092+00
1093+00
FLAG
SIGN
POST
W
A/C

2

PROJECT NO: 8010-01-80	HWY: STH 35	COUNTY: POLK	PERMANENT SIGNING AND MARKING	SHEET 63	E

FILE NAME : P:\55XX\5508.DP.22.STH35-48.PLK\CADDS\80100180\SHEETS\024501-PM.DWG
LAYOUT NAME - 14

PLOT DATE : 4/27/2026 3:21 PM PLOT BY : PARKER TISCHAUSER PLOT NAME : PLOT SCALE : 1 IN:40 FT

2

LEGEND

EXISTING MARKING	
EPOXY	EPOXY
GWRE	GROOVED WET REFLECTIVE EPOXY
GE	GROOVED EPOXY
ARRW2	MARKING ARROW TYPE 2 (WHITE)
WORD	MARKING WORD (WHITE)
MYIN	MARKING ISLAND NOSE (YELLOW)
SLW18	MARKING STOP LINE 18-INCH (WHITE)
CWW6	MARKING CROSSWALK TRANSVERSE LINE 6-INCH (WHITE)
MCY	MARKING CURB (YELLOW)
MWE6	MARKING LINE 6-INCH (WHITE EDGELINE)
MSY6	MARKING LINE 6-INCH (YELLOW)
MDY6	MARKING LINE 6-INCH (DOUBLE YELLOW)
MY6	MARKING LINE 6-INCH (YELLOW)
MSYS6	MARKING LINE 6-INCH (YELLOW SKIP) (12 1/2' LINE 37 1/2' GAP)
MSWS6	MARKING LINE 6-INCH (WHITE SKIP) (12 1/2' LINE 37 1/2' GAP)
MWC10	MARKING LINE 10-INCH (WHITE CHANNELIZING)
MYD12	MARKING DIAGONAL 12-INCH (YELLOW)(25' C-C AT 45°)
× × ×	MARKING REMOVAL LINE

NOTES

ALL SPECIAL REMOVALS ARE NOT SHOWN (SEE MISCELLANEOUS QUANTITIES).

EXISTING PARKING STALL MARKING TO REMAIN.

N

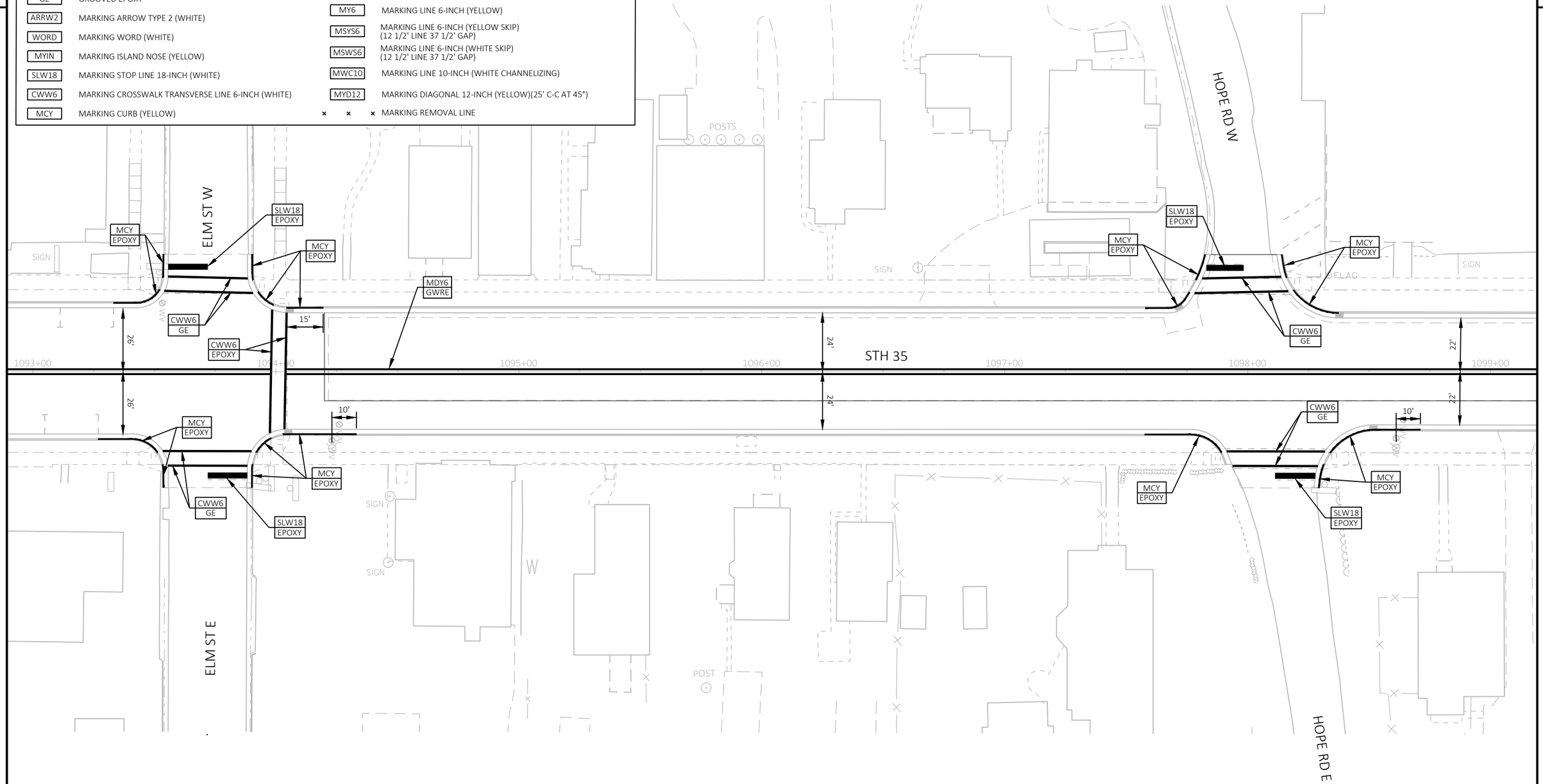

PROJECT NO: 8010-01-80	HWY: STH 35	COUNTY: POLK	PERMANENT SIGNING AND MARKING	SHEET 64	E

FILE NAME : P:\55XX\5508.DP.22.STH35-48.PLK\CADDS\80100180\SHEETS\024501-PM.DWG
LAYOUT NAME - 15

PLOT DATE : 4/27/2026 3:21 PM PLOT BY : PARKER TISCHAUSER PLOT NAME : PLOT SCALE : 1 IN:40 FT

2

LEGEND

EXISTING MARKING	
EPOXY	EPOXY
GWRE	GROOVED WET REFLECTIVE EPOXY
GE	GROOVED EPOXY
ARRW2	MARKING ARROW TYPE 2 (WHITE)
WORD	MARKING WORD (WHITE)
MYIN	MARKING ISLAND NOSE (YELLOW)
SLW18	MARKING STOP LINE 18-INCH (WHITE)
CWW6	MARKING CROSSWALK TRANSVERSE LINE 6-INCH (WHITE)
MCY	MARKING CURB (YELLOW)
MWE6	MARKING LINE 6-INCH (WHITE EDGELINE)
MSY6	MARKING LINE 6-INCH (YELLOW)
MDY6	MARKING LINE 6-INCH (DOUBLE YELLOW)
MY6	MARKING LINE 6-INCH (YELLOW)
MSYS6	MARKING LINE 6-INCH (YELLOW SKIP) (12 1/2' LINE 37 1/2' GAP)
MSWS6	MARKING LINE 6-INCH (WHITE SKIP) (12 1/2' LINE 37 1/2' GAP)
MWC10	MARKING LINE 10-INCH (WHITE CHANNELIZING)
MYD12	MARKING DIAGONAL 12-INCH (YELLOW)(25' C-C AT 45°)
× × ×	MARKING REMOVAL LINE

NOTES

ALL SPECIAL REMOVALS ARE NOT SHOWN (SEE MISCELLANEOUS QUANTITIES).

EXISTING PARKING STALL MARKING TO REMAIN.

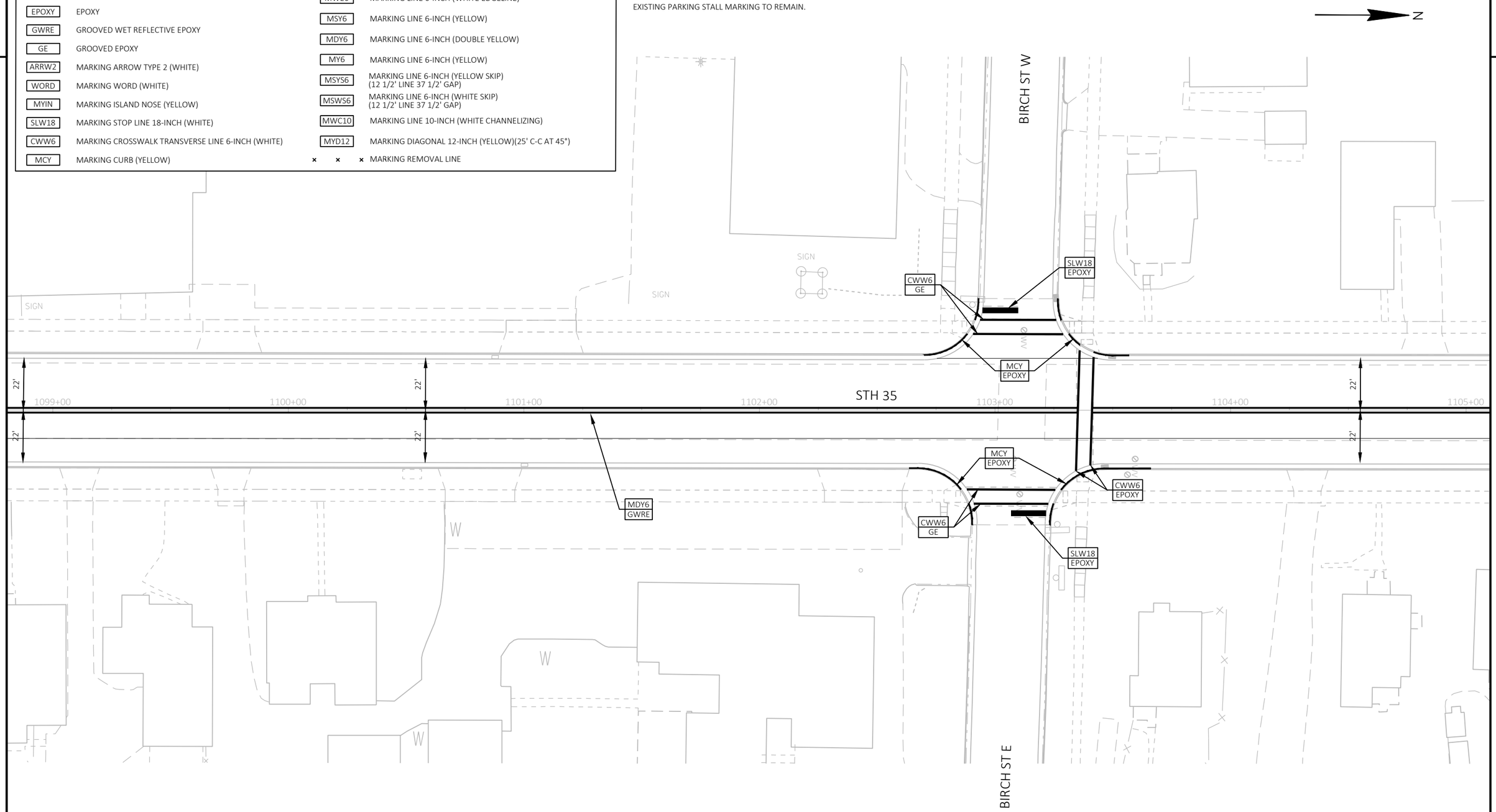

2

PROJECT NO: 8010-01-80	HWY: STH 35	COUNTY: POLK	PERMANENT SIGNING AND MARKING	SHEET 65	E

2

LEGEND

	EXISTING MARKING	MWE6	MARKING LINE 6-INCH (WHITE EDGELINE)
EPOXY	EPOXY	MSY6	MARKING LINE 6-INCH (YELLOW)
GWRE	GROOVED WET REFLECTIVE EPOXY	MDY6	MARKING LINE 6-INCH (DOUBLE YELLOW)
GE	GROOVED EPOXY	MY6	MARKING LINE 6-INCH (YELLOW)
ARRW2	MARKING ARROW TYPE 2 (WHITE)	MSYS6	MARKING LINE 6-INCH (YELLOW SKIP) (12 1/2' LINE 37 1/2' GAP)
WORD	MARKING WORD (WHITE)	MSWS6	MARKING LINE 6-INCH (WHITE SKIP) (12 1/2' LINE 37 1/2' GAP)
MYIN	MARKING ISLAND NOSE (YELLOW)	MWC10	MARKING LINE 10-INCH (WHITE CHANNELIZING)
SLW18	MARKING STOP LINE 18-INCH (WHITE)	MYD12	MARKING DIAGONAL 12-INCH (YELLOW)(25' C-C AT 45°)
CWW6	MARKING CROSSWALK TRANSVERSE LINE 6-INCH (WHITE)	× × ×	MARKING REMOVAL LINE
MCY	MARKING CURB (YELLOW)		

NOTES

ALL SPECIAL REMOVALS ARE NOT SHOWN (SEE MISCELLANEOUS QUANTITIES).

EXISTING PARKING STALL MARKING TO REMAIN.

N

CEDAR ST W

WISCONSIN AVE N

STH 35

CEDAR ST E

MCY EPOXY

MCY EPOXY

MCY EPOXY

MDY6 GWRE

CWW6 GE

CWW6 EPOXY

MDY6 GWRE

MCY EPOXY

MSDY6 GWRE

15'

22'

22'

22'

22'

1105+00

1106+00

1107+00

1108+00

1109+00

1110+00

1111+00

A/C

SIGN

SIGN

SIGN

FLAG

SIGN

SIGN

POST

POST

POST

W

W

W

W

FOLLOW SDDS FOR MARKINGS (SEE MISCELLANEOUS QUANTITIES FOR ADDITIONAL INFORMATION)

2

PROJECT NO: 8010-01-80	HWY: STH 35	COUNTY: POLK	PERMANENT SIGNING AND MARKING	SHEET 66	E

FILE NAME : P:\55XX\5508.DP.22.STH35-48.PLK\CADDS\80100180\SHEETS\024501-PM.DWG
LAYOUT NAME - 17

PLOT DATE : 4/27/2026 3:21 PM PLOT BY : PARKER TISCHAUSER PLOT NAME : PLOT SCALE : 1 IN:40 FT

WISDOT/CADDS SHEET 42

TRAFFIC CONTROL GENERAL NOTES

1. ALL SIGNS ARE 48" X 48" UNLESS OTHERWISE NOTED.

2. "WO" SIGNS ARE THE SAME AS "W" SIGNS EXCEPT THE BACKGROUND IS ORANGE.

3. SEE SDD "TRAFFIC CONTROL, SIGNING ON ROADWAYS WITH MILLED SURFACES" DURING PERIODS WHERE TRAFFIC IS USING MILLED PAVEMENT.

4. PLACE LOW SHOULDER AND UNEVEN LANE SIGNS DURING THE MILLING AND PAVING OPERATION. SEE SDD "TRAFFIC CONTROL DROP-OFF SIGNING" FOR ADDITIONAL INFORMATION.

5. DELINEATE PRIVATE ACCESS WITH TRAFFIC CONTROL DRUMS, WHERE REQUIRED.

6. POST NO PARKING AS REQUIRED TO PROHIBIT PARKING IN EXISTING PARKING ZONES.

7. SEE PEDESTRIAN STAGING SHEETS FOR ADDITIONAL INFORMATION.

BIG BUTTERNUT LAKE

HWY 35/48 ROAD WORK BEGINS XXX-XX
G20-57 96"X48"

ROAD WORK NEXT 7 MILES
G20-1 60"X24"

STH 35

BEGIN PROJECT
STA 747+52

DUNCAN ST

ROBERTSON RD

STH 48\W 1ST AVE

HWY 35/48 ROAD WORK BEGINS XXX-XX
G20-57 96"X48"

VILLAGE OF LUCK

760

260TH AVE

780

800

ROAD WORK NEXT 1 MILE
G20-1 60"X24"

STH 35\48

820

NORTH STAR CREEK

ICE AGE NATIONAL SCENIC TRAIL/
GANDY DANCER STATE TRAIL

TOWN OF LUCK

CTH B

270TH AVE

840

CONSTRUCT TEMPORARY LANE SHIFT WITH MINIMAL BUFFER TO WORK ZONE IN THE NORTHWEST QUADRANT TO AVOID TEMPORARY GRADING IMPACTS NEAR THE CEMETERY

ST PETERS CEMETERY (DO NOT ENTER)

860

880

SOUTH BRANCH TRADE RIVER

NORTH STAR CREEK

BOX CULVERT JOINT REPAIR C-48-180 (TO REMAIN)

ROAD WORK NEXT 5 MILES
G20-1 60"X24"

UNNAMED STREAM

SOUTH BRANCH TRADE RIVER

N

C-48-181 (TO REMAIN)

160TH ST

940

290TH AVE

ROAD WORK NEXT 3 MILES
G20-1 60"X24"

960

980

1000

C-48-8 (TO REMAIN)

150TH ST

GANDY DANCER STATE TRAIL

TRADE RIVER

TOWN OF WEST SWEDEN

BROWN BROOK

VILLAGE OF FREDERIC

300TH AVE

1020

1040

CTH W

UNITED WAY E

ROAD WORK NEXT 3 MILES
G20-1 60"X24"

900

920

880

280TH AVE

LEGEND

1. PLACE TRAFFIC CONTROL SIGNS PER SDD "TRAFFIC CONTROL, ADVANCE WARNING SIGNS 45 MPH OR GREATER TWO WAY UNDIVIDED ROAD OPEN TO TRAFFIC".
2. PLACE TRAFFIC CONTROL SIGNS PER "TYPICAL SIDEROAD APPROACH WARNING SIGN DETAIL" IN SDD "TRAFFIC CONTROL, ADVANCE WARNING SIGNS 45 MPH OR GREATER TWO WAY UNDIVIDED ROAD OPEN TO TRAFFIC".
3. PLACE TRAFFIC CONTROL SIGNS PER "TYPICAL SIDE ROAD APPROACH WARNING SIGN DETAIL" IN SDD "TRAFFIC CONTROL, ADVANCE WARNING SIGNS 40 MPH OR LESS TWO-WAY UNDIVIDED ROAD OPEN TO TRAFFIC".
4. PLACE TRAFFIC CONTROL SIGNS AND DRUMS PER SDD "TRAFFIC CONTROL, WORK ON SHOULDER OR PARKING LANE, UNDIVIDED ROADWAY" IN AREAS OF SHOULDER GRADING, CURB AND GUTTER, OR GUARDRAIL REPLACEMENTS.
5. PLACE TRAFFIC CONTROL SIGNS PER SDD "TRAFFIC CONTROL, ADVANCE WARNING SIGNS 40 MPH OR LESS TWO WAY TRAFFIC UNDIVIDED ROAD OPEN TO TRAFFIC".
6. PLACE TRAFFIC CONTROL SIGNS AND ACCOMMODATIONS PER SDD "TRAFFIC CONTROL, PEDESTRIAN ACCOMMODATION" AND ADDITIONAL TRAFFIC CONTROL DETAIL SHEETS.
7. PLACE TRAFFIC CONTROL PER SDD "TRAFFIC CONTROL, LANE SHIFT IN FLAGGING OPERATION".

PROJECT NO: 8010-01-80	HWY: STH 35	COUNTY: POLK	TRAFFIC CONTROL - OVERVIEW	SHEET 67	E

FILE NAME : P:\55XX\5508.DP.22.STH35-48.PLK\CADDS\80100180\SHEETS\025100-TC.DWG
LAYOUT NAME - 01
PLOT DATE : 8/19/2026 11:08 AM
PLOT BY : PARKER TISCHAUSER
PLOT NAME :
PLOT SCALE : 1 IN:1000 FT

2

N

TOWN OF WEST SWEDEN

TOWN OF WEST SWEDEN

TOWN OF WEST SWEDEN

VILLAGE OF FREDERIC

GANDY DANCER STATE TRAIL

HWY 35/48 ROAD WORK BEGINS XXX-XX
G20-57
96"X48"

ROAD WORK NEXT 7 MILES
G20-1
60"X24"

HWY 35 ROAD WORK BEGINS XXX-XX
G20-57
96"X48"

INDUSTRIAL WAY W

STH 35\48

SERVICE RD

ASH ST W

LINDEN ST W

MAPLE ST W

STH 48

ELM ST W

HOPE RD W

BIRCH ST W

CEDAR ST W

WISCONSIN AVE N

POLK ST

POLK AVE N

STH 35

1050 1060 1070 1080 1090 1100 1110 1120

END PROJECT
STA 1118+61

INDUSTRIAL WAY E

BROWN BROOK

LOCUST ST E

ASH ST E

LINDEN ST E

MAPLE ST E

OAK ST E

ELM ST E

HOPE RD E

BIRCH ST E

CEDAR ST E

TOWN OF WEST SWEDEN

ROAD WORK NEXT 1 MILE
G20-1
60"X24"

COON LAKE

LEGEND

1. PLACE TRAFFIC CONTROL SIGNS PER SDD "TRAFFIC CONTROL, ADVANCE WARNING SIGNS 45 MPH OR GREATER TWO WAY UNDIVIDED ROAD OPEN TO TRAFFIC".
2. PLACE TRAFFIC CONTROL SIGNS PER "TYPICAL SIDEROAD APPROACH WARNING SIGN DETAIL" IN SDD "TRAFFIC CONTROL, ADVANCE WARNING SIGNS 45 MPH OR GREATER TWO WAY UNDIVIDED ROAD OPEN TO TRAFFIC".
3. PLACE TRAFFIC CONTROL SIGNS PER "TYPICAL SIDE ROAD APPROACH WARNING SIGN DETAIL" IN SDD "TRAFFIC CONTROL, ADVANCE WARNING SIGNS 40 MPH OR LESS TWO-WAY UNDIVIDED ROAD OPEN TO TRAFFIC".
4. PLACE TRAFFIC CONTROL SIGNS AND DRUMS PER SDD "TRAFFIC CONTROL, WORK ON SHOULDER OR PARKING LANE, UNDIVIDED ROADWAY" IN AREAS OF CURB & GUTTER, CURB AND GUTTER, OR GUARDRAIL REPLACEMENTS.
5. PLACE TRAFFIC CONTROL SIGNS PER SDD "TRAFFIC CONTROL, ADVANCE WARNING SIGNS 40 MPH OR LESS TWO WAY TRAFFIC UNDIVIDED ROAD OPEN TO TRAFFIC".
6. PLACE TRAFFIC CONTROL SIGNS AND ACCOMMODATIONS PER SDD "TRAFFIC CONTROL, PEDESTRIAN ACCOMMODATION" AND ADDITIONAL TRAFFIC CONTROL DETAIL SHEETS.
7. PLACE TRAFFIC CONTROL PER SDD "TRAFFIC CONTROL, LANE SHIFT IN FLAGGING OPERATION".

TRAFFIC CONTROL GENERAL NOTES

1. ALL SIGNS ARE 48" X 48" UNLESS OTHERWISE NOTED.
2. "WO" SIGNS ARE THE SAME AS "W" SIGNS EXCEPT THE BACKGROUND IS ORANGE.
3. SEE SDD "TRAFFIC CONTROL, SIGNING ON ROADWAYS WITH MILLED SURFACES" DURING PERIODS WHERE TRAFFIC IS USING MILLED PAVEMENT.
4. PLACE LOW SHOULDER AND UNEVEN LANE SIGNS DURING THE MILLING AND PAVING OPERATION. SEE SDD "TRAFFIC CONTROL DROP-OFF SIGNING" FOR ADDITIONAL INFORMATION.
5. DELINEATE PRIVATE ACCESS WITH TRAFFIC CONTROL DRUMS, WHERE REQUIRED.
6. POST NO PARKING AS REQUIRED TO PROHIBIT PARKING IN EXISTING PARKING ZONES.
7. SEE PEDESTRIAN STAGING SHEETS FOR ADDITIONAL INFORMATION.

PROJECT NO: 8010-01-80	HWY: STH 35	COUNTY: POLK	TRAFFIC CONTROL - OVERVIEW	SHEET 68	E

FILE NAME : P:\55XX\5508.DP.22.STH35-48.PLK\CADDS\80100180\SHEETS\025100-TC.DWG
LAYOUT NAME - 02
PLOT DATE : 8/19/2026 11:08 AM
PLOT BY : PARKER TISCHAUSER
PLOT NAME :
PLOT SCALE : 1 IN:500 FT
WISDOT/CADDS SHEET 44

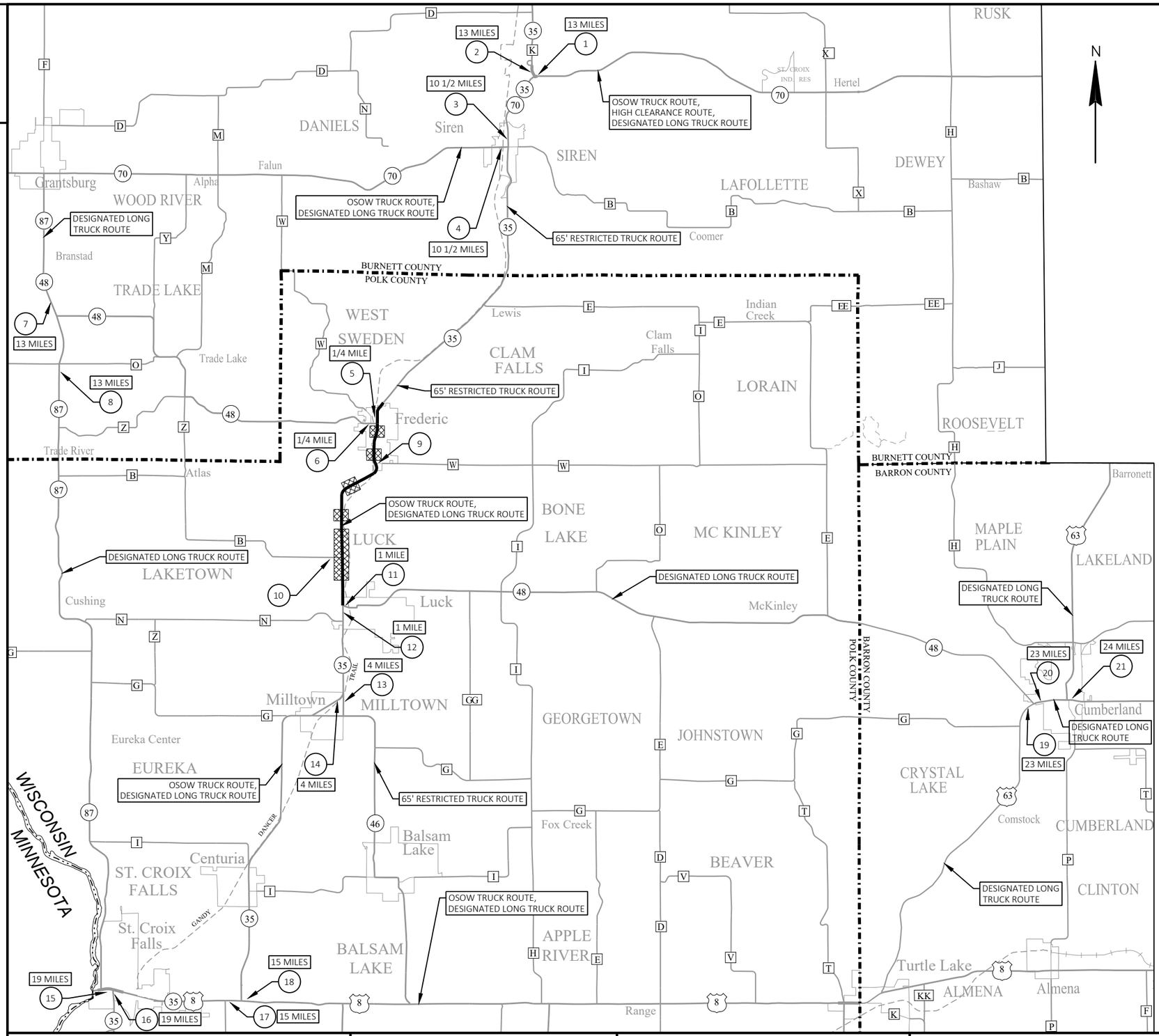

N

NOTES FOR WIDTH RESTRICTION SIGNING

ALL TRAFFIC CONTROL SIGNS ARE 48" X 48" UNLESS OTHERWISE NOTED.

SEE SDD "ADVANCED WIDTH RESTRICTION SIGNING" FOR W12-52 SIGNS ADJACENT TO WIDTH RESTRICTION LOCATIONS AND ADDITIONAL INFORMATION.

PLACE WIDTH RESTRICTION SIGNS AT ALL LOCATIONS DURING CULVERT REPLACEMENTS THAT REQUIRE AVAILABLE WIDTH OF LESS THAN 16' FOR A STH 35/STH 48 TRAVEL LANE

LEGEND

PROJECT LOCATION

WIDTH RESTRICTION LOCATIONS

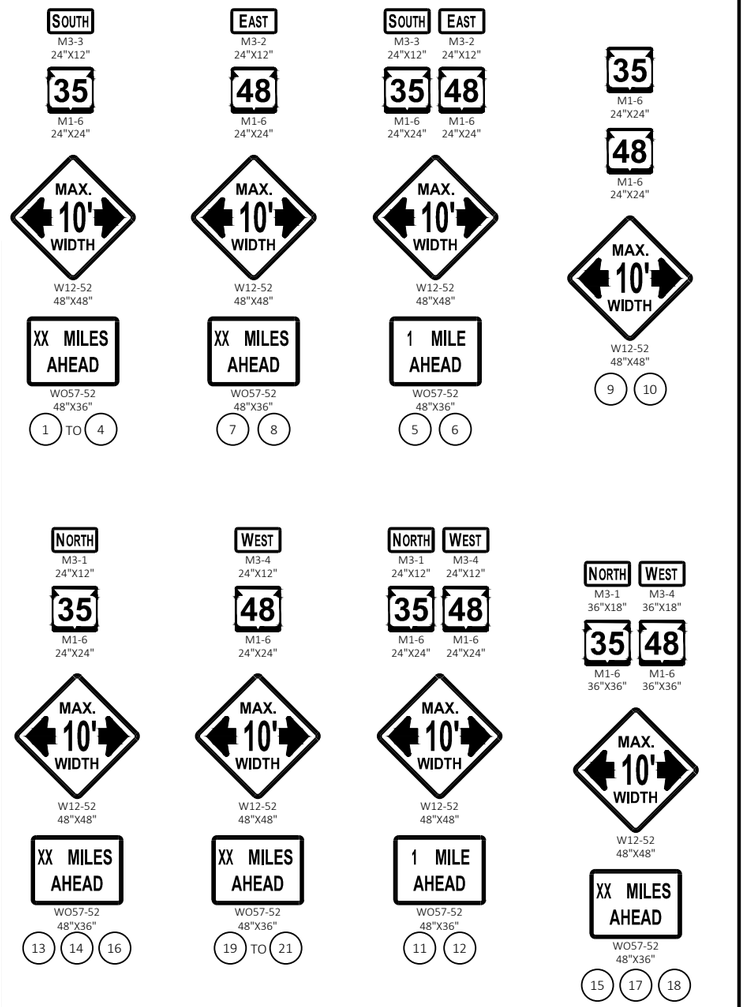

PROJECT NO: 8010-01-80	HWY: STH 35	COUNTY: POLK	TRAFFIC CONTROL - WIDTH RESTRICTIONS	SHEET 69	E

FILE NAME : P:\55XX\5508.DP.22.STH35-48.PLK\CADDS\80100180\SHEETS\025101-TC.DWG
LAYOUT NAME - 01
PLOT DATE : 4/20/2026 10:06 AM
PLOT BY : PARKER TISCHAUSER
PLOT NAME :
PLOT SCALE : 1 IN:3 MI
WISDOT/CADDS SHEET 42

2

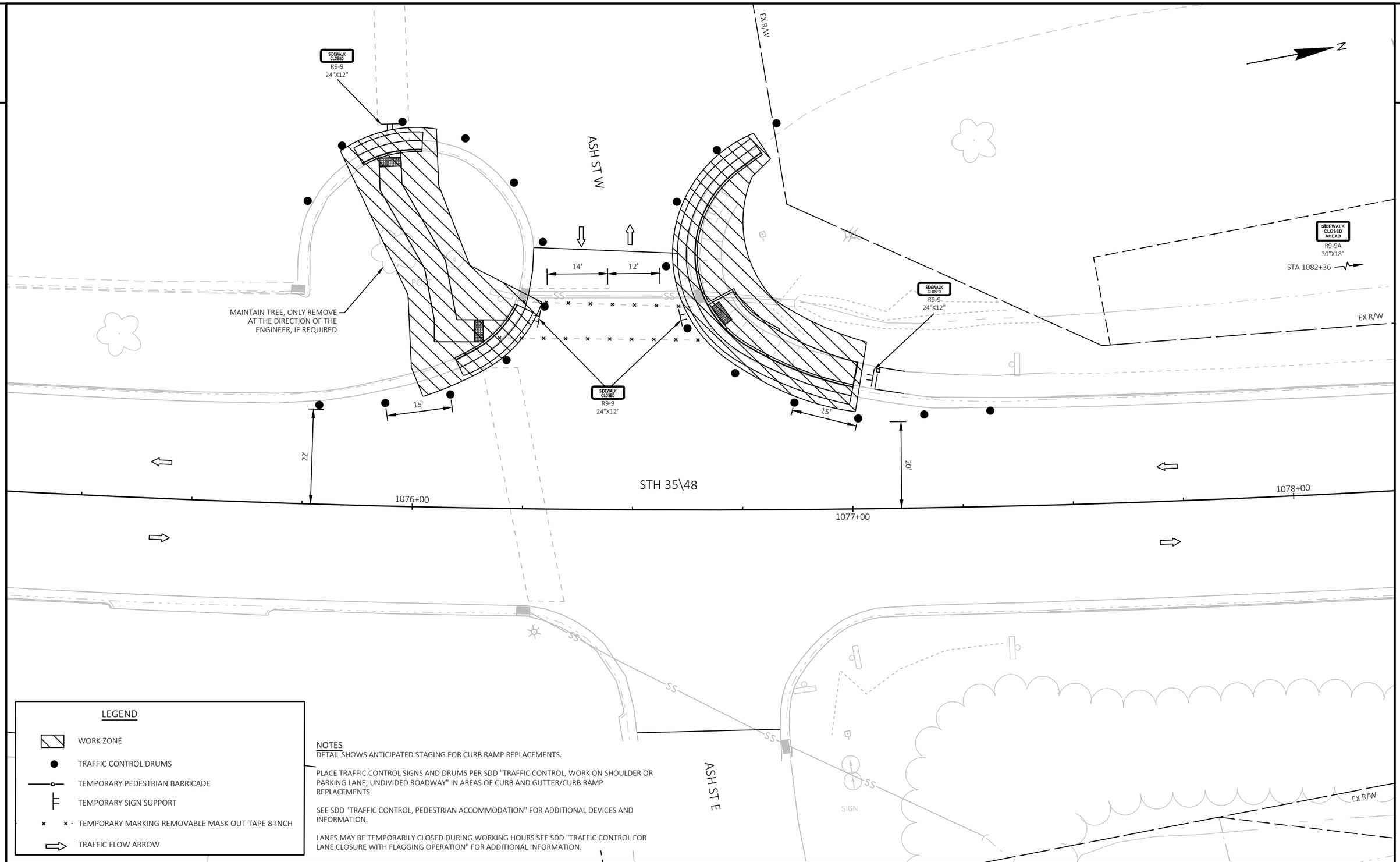

LEGEND

- WORK ZONE
- TRAFFIC CONTROL DRUMS
- TEMPORARY PEDESTRIAN BARRICADE
- TEMPORARY SIGN SUPPORT
- TEMPORARY MARKING REMOVABLE MASK OUT TAPE 8-INCH
- TRAFFIC FLOW ARROW

NOTES

DETAIL SHOWS ANTICIPATED STAGING FOR CURB RAMP REPLACEMENTS.

PLACE TRAFFIC CONTROL SIGNS AND DRUMS PER SDD "TRAFFIC CONTROL, WORK ON SHOULDER OR PARKING LANE, UNDIVIDED ROADWAY" IN AREAS OF CURB AND GUTTER/CURB RAMP REPLACEMENTS.

SEE SDD "TRAFFIC CONTROL, PEDESTRIAN ACCOMMODATION" FOR ADDITIONAL DEVICES AND INFORMATION.

LANES MAY BE TEMPORARILY CLOSED DURING WORKING HOURS SEE SDD "TRAFFIC CONTROL FOR LANE CLOSURE WITH FLAGGING OPERATION" FOR ADDITIONAL INFORMATION.

PROJECT NO: 8010-01-80	HWY: STH 35	COUNTY: POLK	TRAFFIC CONTROL - PEDESTRIAN STAGING	SHEET 70	E

FILE NAME : P:\55XX\5508.DP.22.STH35-48.PLK\CADDS\80100180\SHEETS\025102-TC.DWG
LAYOUT NAME - 01
PLOT DATE : 4/20/2026 10:06 AM
PLOT BY : PARKER TISCHAUSER
PLOT NAME :
PLOT SCALE : 1 IN:20 FT
WISDOT/CADDS SHEET 42

Estimate Of Quantities

8010-01-80

Line	Item	Item Description	Unit	Total	Qty
0002	201.0105	Clearing	STA	20.000	20.000
0004	201.0205	Grubbing	STA	20.000	20.000
0006	203.0100	Removing Small Pipe Culverts	EACH	15.000	15.000
0008	204.0100	Removing Concrete Pavement	SY	2,260.000	2,260.000
0010	204.0109.S	Removing Concrete Surface Partial Depth	SF	104.000	104.000
0012	204.0110	Removing Asphaltic Surface	SY	265.000	265.000
0014	204.0115	Removing Asphaltic Surface Butt Joints	SY	170.000	170.000
0016	204.0120	Removing Asphaltic Surface Milling	SY	160,100.000	160,100.000
0018	204.0150	Removing Curb & Gutter	LF	688.000	688.000
0020	204.0155	Removing Concrete Sidewalk	SY	36.000	36.000
0022	204.0165	Removing Guardrail	LF	610.000	610.000
0024	204.0180	Removing Delineators and Markers	EACH	36.000	36.000
0026	205.0100	Excavation Common	CY	8,036.000	8,036.000
0028	208.0100	Borrow	CY	932.000	932.000
0030	208.1500.S	Temporary Lane Shift During Culvert Work	EACH	21.000	21.000
0032	211.0101	Prepare Foundation for Asphaltic Paving (project) 01. 8010-01-80	EACH	1.000	1.000
0034	211.0400	Prepare Foundation for Asphaltic Shoulders	STA	17.000	17.000
0036	213.0100	Finishing Roadway (project) 01. 8010-01-80	EACH	1.000	1.000
0038	305.0110	Base Aggregate Dense 3/4-Inch	TON	3,600.000	3,600.000
0040	305.0120	Base Aggregate Dense 1 1/4-Inch	TON	7,720.000	7,720.000
0042	305.0500	Shaping Shoulders	STA	6.000	6.000
0044	455.0605	Tack Coat	GAL	19,950.000	19,950.000
0046	460.0105.S	HMA Percent Within Limits (PWL) Test Strip Volumetrics	EACH	2.000	2.000
0048	460.6244	HMA Pavement 4 MT 58-34 S	TON	19,875.000	19,875.000
0050	460.6245	HMA Pavement 5 MT 58-34 S	TON	15,625.000	15,625.000
0052	460.9000.S	Material Transfer Vehicle	EACH	1.000	1.000
0054	465.0105	Asphaltic Surface	TON	2,150.000	2,150.000
0056	465.0110	Asphaltic Surface Patching	TON	180.000	180.000
0058	465.0120	Asphaltic Surface Driveways and Field Entrances	TON	180.000	180.000
0060	465.0315	Asphaltic Flumes	SY	10.000	10.000
0062	465.0560	Asphaltic Rumble Strips, Centerline	LF	23,570.000	23,570.000
0064	520.1015	Apron Endwalls for Culvert Pipe 15-Inch	EACH	1.000	1.000
0066	520.1021	Apron Endwalls for Culvert Pipe 21-Inch	EACH	1.000	1.000
0068	520.1024	Apron Endwalls for Culvert Pipe 24-Inch	EACH	6.000	6.000
0070	520.1030	Apron Endwalls for Culvert Pipe 30-Inch	EACH	4.000	4.000
0072	520.1036	Apron Endwalls for Culvert Pipe 36-Inch	EACH	4.000	4.000
0074	520.2024	Culvert Pipe Temporary 24-Inch	LF	24.000	24.000
0076	520.3424	Culvert Pipe Class III-A Non-metal 24-Inch	LF	172.000	172.000
0078	520.3430	Culvert Pipe Class III-A Non-metal 30-Inch	LF	176.000	176.000
0080	520.3436	Culvert Pipe Class III-A Non-metal 36-Inch	LF	164.000	164.000
0082	520.3624	Culvert Pipe Class III-B Non-metal 24-Inch	LF	106.000	106.000
0084	520.8700	Cleaning Culvert Pipes	EACH	4.000	4.000
0086	521.3115	Culvert Pipe Corrugated Steel 15-Inch	LF	14.000	14.000
0088	522.0148	Culvert Pipe Reinforced Concrete Class III 48-Inch	LF	166.000	166.000
0090	522.0154	Culvert Pipe Reinforced Concrete Class III 54-Inch	LF	94.000	94.000
0092	522.0424	Culvert Pipe Reinforced Concrete Class IV 24-Inch	LF	66.000	66.000
0094	522.0430	Culvert Pipe Reinforced Concrete Class IV 30-Inch	LF	126.000	126.000
0096	522.1024	Apron Endwalls for Culvert Pipe Reinforced Concrete 24-Inch	EACH	2.000	2.000
0098	522.1030	Apron Endwalls for Culvert Pipe Reinforced Concrete 30-Inch	EACH	4.000	4.000

8010-01-80

Line	Item	Item Description	Unit	Total	Qty
0100	522.1048	Apron Endwalls for Culvert Pipe Reinforced Concrete 48-Inch	EACH	2.000	2.000
0102	522.1054	Apron Endwalls for Culvert Pipe Reinforced Concrete 54-Inch	EACH	2.000	2.000
0104	522.2338	Culvert Pipe Reinforced Concrete Horizontal Elliptical Class HE-III 38x60-Inch	LF	160.000	160.000
0106	522.2638	Apron Endwalls for Culvert Pipe Reinforced Concrete Horizontal Elliptical 38x60-Inch	EACH	4.000	4.000
0108	601.0411	Concrete Curb & Gutter 30-Inch Type D	LF	115.000	115.000
0110	601.0557	Concrete Curb & Gutter 6-Inch Sloped 36-Inch Type D	LF	563.000	563.000
0112	601.0600	Concrete Curb Pedestrian	LF	20.000	20.000
0114	602.0405	Concrete Sidewalk 4-Inch	SF	490.000	490.000
0116	602.0505	Curb Ramp Detectable Warning Field Yellow	SF	30.000	30.000
0118	606.0200	Riprap Medium	CY	34.000	34.000
0120	606.0300	Riprap Heavy	CY	71.000	71.000
0122	611.8110	Adjusting Manhole Covers	EACH	5.000	5.000
0124	611.8120.S	Cover Plates Temporary	EACH	7.000	7.000
0126	612.0902.S	Insulation Board Polystyrene (inch) 01. 4-Inch	SY	4.000	4.000
0128	614.0397	Guardrail Mow Strip Emulsified Asphalt	SY	132.000	132.000
0130	614.2300	MGS Guardrail 3	LF	262.500	262.500
0132	614.2340	MGS Guardrail 3 L	LF	337.500	337.500
0134	614.2350	MGS Guardrail Short Radius	LF	60.000	60.000
0136	614.2610	MGS Guardrail Terminal EAT	EACH	8.000	8.000
0138	618.0100	Maintenance and Repair of Haul Roads (project) 01. 8010-01-80	EACH	1.000	1.000
0140	619.1000	Mobilization	EACH	1.000	1.000
0142	624.0100	Water	MGAL	260.000	260.000
0144	625.0100	Topsoil	SY	18,930.000	18,930.000
0146	628.1104	Erosion Bales	EACH	700.000	700.000
0148	628.1504	Silt Fence	LF	13,260.000	13,260.000
0150	628.1520	Silt Fence Maintenance	LF	13,260.000	13,260.000
0152	628.1905	Mobilizations Erosion Control	EACH	8.000	8.000
0154	628.1910	Mobilizations Emergency Erosion Control	EACH	4.000	4.000
0156	628.2004	Erosion Mat Class I Type B	SY	15,700.000	15,700.000
0158	628.2027	Erosion Mat Class II Type C	SY	3,230.000	3,230.000
0160	628.6005	Turbidity Barriers	SY	70.000	70.000
0162	628.7015	Inlet Protection Type C	EACH	30.000	30.000
0164	628.7504	Temporary Ditch Checks	LF	625.000	625.000
0166	628.7555	Culvert Pipe Checks	EACH	120.000	120.000
0168	629.0210	Fertilizer Type B	CWT	12.000	12.000
0170	630.0130	Seeding Mixture No. 30	LB	850.000	850.000
0172	630.0160	Seeding Mixture No. 60	LB	20.000	20.000
0174	630.0500	Seed Water	MGAL	430.000	430.000
0176	633.5200	Markers Culvert End	EACH	36.000	36.000
0178	634.0616	Posts Wood 4x6-Inch x 16-FT	EACH	10.000	10.000
0180	637.2210	Signs Type II Reflective H	SF	9.000	9.000
0182	638.2102	Moving Signs Type II	EACH	20.000	20.000
0184	642.5001	Field Office Type B	EACH	1.000	1.000
0186	643.0300	Traffic Control Drums	DAY	10,775.000	10,775.000
0188	643.0420	Traffic Control Barricades Type III	DAY	150.000	150.000
0190	643.0705	Traffic Control Warning Lights Type A	DAY	300.000	300.000
0192	643.0900	Traffic Control Signs	DAY	10,550.000	10,550.000
0194	643.1000	Traffic Control Signs Fixed Message	SF	128.000	128.000
0196	643.3165	Temporary Marking Line Paint 6-Inch	LF	184,608.000	184,608.000

8010-01-80

Line	Item	Item Description	Unit	Total	Qty
0198	643.3980	Temporary Marking Removable Mask Out Tape 8-Inch	LF	90.000	90.000
0200	643.5000	Traffic Control	EACH	1.000	1.000
0202	644.1810	Temporary Pedestrian Barricade	LF	18.000	18.000
0204	645.0120	Geotextile Type HR	SY	219.000	219.000
0206	646.1020	Marking Line Epoxy 4-Inch	LF	80.000	80.000
0208	646.2025	Marking Line Grooved Black Epoxy 6-Inch	LF	2,075.000	2,075.000
0210	646.2040	Marking Line Grooved Wet Ref Epoxy 6-Inch	LF	125,336.000	125,336.000
0212	646.4040	Marking Line Grooved Wet Ref Epoxy 10-Inch	LF	1,625.000	1,625.000
0214	646.5020	Marking Arrow Epoxy	EACH	19.000	19.000
0216	646.5120	Marking Word Epoxy	EACH	3.000	3.000
0218	646.6120	Marking Stop Line Epoxy 18-Inch	LF	340.000	340.000
0220	646.7120	Marking Diagonal Epoxy 12-Inch	LF	1,930.000	1,930.000
0222	646.7420	Marking Crosswalk Epoxy Transverse Line 6-Inch	LF	840.000	840.000
0224	646.8120	Marking Curb Epoxy	LF	1,156.000	1,156.000
0226	646.8220	Marking Island Nose Epoxy	EACH	15.000	15.000
0228	646.9002	Marking Removal Line 6-Inch	LF	705.000	705.000
0230	646.9200	Marking Removal Line Wide	LF	250.000	250.000
0232	648.0100	Locating No-Passing Zones	MI	7.030	7.030
0234	650.4500	Construction Staking Subgrade	LF	2,693.000	2,693.000
0236	650.5000	Construction Staking Base	LF	2,693.000	2,693.000
0238	650.5500	Construction Staking Curb Gutter and Curb & Gutter	LF	674.000	674.000
0240	650.6000	Construction Staking Pipe Culverts	EACH	13.000	13.000
0242	650.8000	Construction Staking Resurfacing Reference	LF	36,274.000	36,274.000
0244	650.9000	Construction Staking Curb Ramps	EACH	3.000	3.000
0246	650.9500	Construction Staking Sidewalk (project) 01. 8010-01-80	EACH	1.000	1.000
0248	650.9911	Construction Staking Supplemental Control (project) 01. 8010-01-80	EACH	1.000	1.000
0250	650.9920	Construction Staking Slope Stakes	LF	6,953.000	6,953.000
0252	680.0100	Public Land Survey Monument Verify and Reset	EACH	9.000	9.000
0254	690.0150	Sawing Asphalt	LF	3,832.000	3,832.000
0256	690.0250	Sawing Concrete	LF	476.000	476.000
0258	740.0440	Incentive IRI Ride	DOL	32,500.000	32,500.000
0260	SPV.0055	Special 01. Incentive Density PWL HMA Pavement	DOL	23,150.000	23,150.000
0262	SPV.0055	Special 02. Incentive Air Voids HMA Pavement	DOL	35,500.000	35,500.000
0264	SPV.0055	Special 03. Incentive Density HMA Pavement Longitudinal Joints	DOL	17,170.000	17,170.000
0266	SPV.0060	Special 01. Inlet Covers Type H-D	EACH	1.000	1.000
0268	SPV.0060	Special 02. Adjusting Water Valves	EACH	1.000	1.000
0270	SPV.0060	Special 03. Adjusting Sanitary Manhole Covers	EACH	2.000	2.000
0272	SPV.0060	Special 04. Temporary Water Diversion Dual Culvert Station 876+25	EACH	1.000	1.000
0274	SPV.0060	Special 05. Cleaning Storm Sewer	EACH	2.000	2.000
0276	SPV.0060	Special 06. Box Culvert Joint Repair C-48-180	EACH	1.000	1.000
0278	SPV.0090	Special 02. Ditch Cleaning	LF	327.000	327.000
0280	SPV.0090	Special 03. Marking Removal Curb Marking	LF	1,156.000	1,156.000
0282	SPV.0090	Special 04. Marking Crosswalk Grooved Epoxy Transverse Line 6-Inch	LF	980.000	980.000

3

CLEARING AND GRUBBING ITEMS

CATEGORY	STATION	TO	STATION	OFFSET	201.0105 CLEARING STA	201.0205 GRUBBING STA	COMMENTS
0010							
	803+26	-	806+21	RT	4	4	
	833+23	-	833+44	RT	1	1	
	876+06	-	876+46	RT	1	1	
	884+43	-	885+25	LT	2	2	
	951+44	-	952+11	LT&RT	2	2	
	968+31	-	971+41	LT&RT	4	4	
	976+76	-	977+15	RT	2	2	
	1036+10	-	1036+97	LT&RT	1	1	
	1079+01	-	1079+23	RT	1	1	
	8+41	-	9+39	RT	2	2	160TH ST
TOTALS					20	20	

REMOVING CULVERT PIPE ITEMS

CATEGORY	STATION	OFFSET	203.0100 REMOVING SMALL PIPE CULVERTS EACH	204.0180* REMOVING DELINEATORS AND MARKERS EACH	COMMENTS
0010					
	804+54	LT&RT	1	2	48-INCH CPRC
	828+34	LT&RT	1	2	30-INCH CPRC
	833+31	LT&RT	1	2	24-INCH CPRC
	840+02	LT&RT	1	2	30-INCH CPRC
	846+91	LT&RT	1	2	36-INCH CPRC
	856+83	LT&RT	1	2	30-INCH CPRC
	876+18	LT&RT	1	2	30-INCH CPRC
	876+25	LT&RT	1	2	36-INCH CPRC
	876+32	LT&RT	1	2	36-INCH CPRC
	884+53	LT&RT	1	2	30-INCH CPRC
	908+78	LT&RT	1	2	36-INCH CPRC
	951+93	LT&RT	1	2	24-INCH CPRC
	969+85	LT&RT	1	2	24-INCH CPRC
	977+00	LT&RT	1	2	24-INCH CPCM
	1036+30	LT&RT	1	2	36-INCH CPCM
	8+91	LT&RT	--	2	15-INCH CPCM
TOTALS			15	32	

*ADDITIONAL QUANTITIES SHOWN ELSEWHERE

3

REMOVAL ITEMS

CATEGORY	STATION	TO	STATION	OFFSET	204.0109.S REMOVING CONCRETE SURFACE PARTIAL DEPTH SF	204.0100* REMOVING CONCRETE PAVEMENT SY	204.0110* REMOVING ASPHALTIC SURFACE SY	204.0115 REMOVING ASPHALTIC SURFACE BUTT JOINTS SY	204.0120 REMOVING ASPHALTIC SURFACE MILLING SY	204.0150 REMOVING CURB & GUTTER LF	204.0155 REMOVING CONCRETE SIDEWALK SY	204.0165 REMOVING GUARDRAIL LF	COMMENTS
0010													
	747+52	-	863+25	LT&RT	--	1,250	--	46	43,040	--	--	--	MAINLINE, SHOULDERS, INTERSECTIONS, AND CULVERTS
	858+32	-	862+60	LT	--	--	162	--	--	420	--	--	CURB AND GUTTER REMOVAL
	863+25	-	869+50	LT&RT	--	--	--	--	2,370	--	--	285	GUARDRAIL
	869+50	-	940+50	LT&RT	--	750	--	12	35,170	--	--	--	MAINLINE, SHOULDERS, INTERSECTIONS, AND CULVERTS
	940+50	-	945+75	LT&RT	--	--	--	6	2,515	--	--	325	160TH ST INTERSECTION
	945+75	-	1065+60	LT&RT	--	244	--	36	55,810	--	--	--	MAINLINE, SHOULDERS, INTERSECTIONS, AND CULVERTS
	1030+64	-	1031+08	RT	104	--	--	--	--	--	--	--	UNITED WAY INTERSECTION
	1059+00	-	1061+82	RT	--	--	34	--	--	153	--	--	INDUSTRIAL WAY INTERSECTION
	1065+60	-	1118+61	LT&RT	--	--	--	70	17,835	--	--	--	MAINLINE, SHOULDERS, AND INTERSECTIONS
	1075+84	-	1077+01	LT	--	--	30	--	--	115	36	--	ASH ST INTERSECTION
CATEGORY 0010 TOTALS					104	2,244	226	170	156,740	688	36	610	
0020													
	1070+43	-	1076+04	LT&RT	--	--	--	--	722	--	--	--	PARKING LANE (6' WIDE)
	1077+05	-	1082+15	LT&RT	--	--	--	--	670	--	--	--	PARKING LANE (6' WIDE)
	1083+00	-	1085+85	LT	--	--	--	--	190	--	--	--	PARKING LANE (6' WIDE)
	1094+05	-	1097+60	LT	--	--	--	--	237	--	--	--	PARKING LANE (6' WIDE)
	1098+39	-	1102+67	LT	--	--	--	--	285	--	--	--	PARKING LANE (6' WIDE)
	1103+41	-	1107+85	LT	--	--	--	--	296	--	--	--	PARKING LANE (6' WIDE)
	1108+65	-	1109+70	LT	--	--	--	--	72	--	--	--	PARKING LANE (6' WIDE)
	1108+85	-	1116+18	RT	--	--	--	--	480	--	--	--	PARKING LANE (6' WIDE)
	1110+59	-	1112+44	LT	--	--	--	--	126	--	--	--	PARKING LANE (6' WIDE)
	1113+41	-	1117+59	LT	--	--	--	--	282	--	--	--	PARKING LANE (6' WIDE)
CATEGORY 0020 TOTALS					--	--	--	--	3,360	--	--	--	
TOTALS					104	2,244	226	170	160,100	688	36	610	

*ADDITIONAL QUANTITIES SHOWN ELSEWHERE

3

EARTHWORK SUMMARY

DIVISION	STATION	TO	STATION	LOCATION	205.0100 EXCAVATION COMMON (NOTE 1) (CY)	SALVAGED/UNUSABLE PAVEMENT MATERIAL (NOTE 2) (CY)	AVAILABLE MATERIAL (NOTE 3) (CY)	UNEXPANDED FILL (CY)	EXPANDED FILL (NOTE 4) (CY) FACTOR 1.25	MASS ORDINATE +/- (NOTE 5) (CY)	208.0100 BORROW (CY)
1											
	803+90	-	805+19	CULVERT REPLACEMENT TRANSITION CUT	632	164	468	--	--	468	--
	827+81	-	828+88	CULVERT REPLACEMENT TRANSITION CUT	381	135	246	--	--	246	--
	832+79	-	833+85	CULVERT REPLACEMENT TRANSITION CUT	374	157	217	--	--	217	--
	839+49	-	840+55	CULVERT REPLACEMENT TRANSITION CUT	355	137	218	--	--	218	--
	846+35	-	847+48	CULVERT REPLACEMENT TRANSITION CUT	506	144	362	--	--	362	--
	856+31	-	857+36	CULVERT REPLACEMENT TRANSITION CUT	443	83	360	--	--	360	--
	875+65	-	876+86	CULVERT REPLACEMENT TRANSITION CUT	748	176	572	--	--	572	--
	884+00	-	885+05	CULVERT REPLACEMENT TRANSITION CUT	654	168	486	--	--	486	--
	908+24	-	909+33	CULVERT REPLACEMENT TRANSITION CUT	794	200	594	--	--	594	--
	951+39	-	952+46	CULVERT REPLACEMENT TRANSITION CUT	529	98	431	--	--	431	--
	969+32	-	970+38	CULVERT REPLACEMENT TRANSITION CUT	449	84	365	--	--	365	--
	976+46	-	977+54	CULVERT REPLACEMENT TRANSITION CUT	601	172	429	--	--	429	--
	1035+77	-	1036+83	CULVERT REPLACEMENT TRANSITION CUT	704	132	572	--	--	572	--
SUBTOTAL					7,170	1,850	5,320	--	--	5,320	--
2											
	803+90	-	805+19	CULVERT STAGING - TEMPORARY BASE REMOVAL AT PAVEMENT PATCH (6")	72	--	72	--	--	72	--
	827+81	-	828+88	CULVERT STAGING - TEMPORARY BASE REMOVAL AT PAVEMENT PATCH (6")	59	--	59	--	--	59	--
	832+79	-	833+85	CULVERT STAGING - TEMPORARY BASE REMOVAL AT PAVEMENT PATCH (6")	59	--	59	--	--	59	--
	839+49	-	840+55	CULVERT STAGING - TEMPORARY BASE REMOVAL AT PAVEMENT PATCH (6")	59	--	59	--	--	59	--
	846+35	-	847+48	CULVERT STAGING - TEMPORARY BASE REMOVAL AT PAVEMENT PATCH (6")	63	--	63	--	--	63	--
	856+31	-	857+36	CULVERT STAGING - TEMPORARY BASE REMOVAL AT PAVEMENT PATCH (6")	58	--	58	--	--	58	--
	875+65	-	876+86	CULVERT STAGING - TEMPORARY BASE REMOVAL AT PAVEMENT PATCH (6")	67	--	67	--	--	67	--
	884+00	-	885+05	CULVERT STAGING - TEMPORARY BASE REMOVAL AT PAVEMENT PATCH (6")	58	--	58	--	--	58	--
	908+24	-	909+33	CULVERT STAGING - TEMPORARY BASE REMOVAL AT PAVEMENT PATCH (6")	61	--	61	--	--	61	--
	951+39	-	952+46	CULVERT STAGING - TEMPORARY BASE REMOVAL AT PAVEMENT PATCH (6")	59	--	59	--	--	59	--
	969+32	-	970+38	CULVERT STAGING - TEMPORARY BASE REMOVAL AT PAVEMENT PATCH (6")	59	--	59	--	--	59	--
	976+46	-	977+54	CULVERT STAGING - TEMPORARY BASE REMOVAL AT PAVEMENT PATCH (6")	60	--	60	--	--	60	--
	1035+77	-	1036+83	CULVERT STAGING - TEMPORARY BASE REMOVAL AT PAVEMENT PATCH (6")	59	--	59	--	--	59	--
SUBTOTAL					793	--	793	--	--	793	--
3											
	858+42	-	862+50	CEMETERY CURB LT	--	--	--	15	19	-19	19
	863+52	-	868+34	SOUTH BRANCH OF TRADE RIVER, LT	--	--	--	140	175	-175	175
	863+27	-	868+09	SOUTH BRANCH OF TRADE RIVER, RT	--	--	--	154	193	-193	193
	940+53	-	943+50	TRADE RIVER, LT	--	--	--	53	66	-66	66
	940+62	-	945+59	TRADE RIVER, RT	30	--	30	129	161	-131	131
	6+91	-	9+42	160TH ST GUARDRAIL	2	--	2	192	240	-238	238
	1000+00	-	1003+00	GRANDY DANCER TRAIL, LT	40	--	40	48	60	-20	20
	999+00	-	1000+50	GRANDY DANCER TRAIL, RT	1	--	1	73	91	-90	90
SUBTOTAL					73	--	73	804	1,005	-932	932
PROJECT TOTAL					8,036	1,850	6,186	804	1,005	5,181	932

NOTES:
1) SALVAGED/UNSUABLE PAVEMENT MATERIAL IS INCLUDED IN CUT
2) SALVAGED/UNUSABLE PAVEMENT MATERIAL = (AREA OF PROJECT PAVEMENT) * (TYPICAL DEPTH)
3) AVAILABLE MATERIAL = CUT - SALVAGED/UNUSUABLE PAVEMENT MATERIAL
4) EXPANDED FILL = (UNEXPANDED FILL) * (FILL FACTOR)
5) MASS ORDINATE = AVAILABLE MATERIAL - (EXPANDED FILL); POSITIVE INDICATES AN EXCESS OF MATERIAL; NEGATIVE INDICATES A SHORTAGE OF MATERIAL

3

TEMPORARY LANE SHIFT ITEM

CATEGORY	STATION	OFFSET	208.1500.S TEMPORARY LANE SHIFT DURING CULVERT WORK EACH
0010			
	804+54	LT&RT	2
	828+34	LT&RT	2
	840+02	RT	1
	846+91	LT&RT	2
	856+83	LT&RT	2
	876+18	LT&RT	2
	876+27	LT&RT	2
	884+53	LT	1
	908+78	LT	1
	951+93	LT&RT	2
	969+85	LT&RT	2
	977+00	LT	1
	1036+30	LT	1
TOTALS			21

PREPARE FOUNDATION ITEMS

CATEGORY	STATION	TO	STATION	OFFSET	211.0400 PREPARE FOUNDATION FOR ASPHALTIC SHOULDERS STA	COMMENTS
0010						
	863+78	-	864+90	RT	2	GUARDRAIL PAVING
	864+33	-	865+07	LT	2	GUARDRAIL PAVING
	866+59	-	867+49	RT	2	GUARDRAIL PAVING
	866+65	-	867+78	LT	2	GUARDRAIL PAVING
	867+50	-	867+78	LT	1	GUARDRAIL PAVING
	941+01	-	941+80	RT	1	GUARDRAIL PAVING
	941+36	-	941+75	LT	1	GUARDRAIL PAVING
	942+35	-	943+35	LT	2	GUARDRAIL PAVING
	944+31	-	944+71	RT	1	GUARDRAIL PAVING
	7+91	-	9+42	RT	3	160TH STREET WIDENING
		PROJECT			--	
TOTALS					17	

3

BASE AGGREGATE ITEMS

CATEGORY	STATION	TO	STATION	OFFSET	305.0110 BASE AGGREGATE DENSE 3/4-INCH TON	305.0120* BASE AGGREGATE DENSE 1 1/4-INCH TON	305.0500 SHAPING SHOULDERS STA	COMMENTS
0010								
	747+52	-	863+25	LT&RT	966	--	--	MAINLINE
	803+90	-	805+19	LT&RT	77	592	--	CULVERT REPLACEMENT
	827+81	-	828+88	LT&RT	63	490	--	CULVERT REPLACEMENT
	832+79	-	833+85	LT&RT	50	560	--	CULVERT REPLACEMENT
	839+49	-	840+55	LT&RT	63	496	--	CULVERT REPLACEMENT
	846+35	-	847+48	LT&RT	67	520	--	CULVERT REPLACEMENT
	856+31	-	857+36	LT&RT	62	482	--	CULVERT REPLACEMENT
	863+25	-	869+50	LT&RT	150	124	--	GUARDRAIL REPLACEMENT
	869+50	-	940+50	LT&RT	750	--	--	MAINLINE
	875+65	-	876+86	LT&RT	58	622	--	CULVERT REPLACEMENT
	884+00	-	885+05	LT&RT	50	605	--	CULVERT REPLACEMENT
	908+24	-	909+33	LT&RT	39	720	--	CULVERT REPLACEMENT
	940+50	-	945+75	LT&RT	114	154	--	GUARDRAIL REPLACEMENT
	945+75	-	1065+60	LT&RT	805	--	--	MAINLINE
	951+39	-	952+46	LT&RT	63	550	--	CULVERT REPLACEMENT
	969+32	-	970+38	LT&RT	62	487	--	CULVERT REPLACEMENT
	976+46	-	977+54	LT&RT	52	619	--	CULVERT REPLACEMENT
	1035+77	-	1036+83	LT&RT	38	646	--	CULVERT REPLACEMENT
	1065+60	-	1118+61	LT&RT	--	--	6	MAINLINE
	1075+84	-	1077+01	LT	16	--	--	CURB RAMP REPLACEMENT
	6+91	-	9+41	RT	55	38	--	160TH ST
TOTALS					3,600	7,705	6	

*ADDITIONAL QUANTITIES SHOWN ELSEWHERE

DRIVEWAY ITEMS

CATEGORY	STATION	TO	STATION	OFFSET	465.0120 ASPHALTIC SURFACE DRIVEWAYS AND FIELD ENTRANCES TON	690.0150* SAWING ASPHALT LF
0010						
	755+44	-	756+64	LT	40	49
	757+42	-	758+04	RT	16	34
	759+47	-	760+32	RT	29	36
	785+91	-	786+55	LT	20	33
	787+56	-	788+18	LT	20	35
	858+72	-	859+18	LT	6	29
	871+00	-	871+70	LT	14	18
	956+98	-	957+37	LT	8	21
	1039+20	-	1039+85	RT	12	26
	1041+57	-	1042+07	RT	9	27
	1043+44	-	1043+90	RT	6	30
TOTALS					180	338

*ADDITIONAL QUANTITIES SHOWN ELSEWHERE

ASPHALTIC ITEMS

CATEGORY	STATION	TO	STATION	OFFSET	455.0605 TACK COAT GAL	460.0105.S HMA PERCENT WITHIN LIMITS (PWL) TEST STRIP VOLUMETRICS EACH	460.6244 HMA PAVEMENT 4 MT 58-34 S TON	460.6245 HMA PAVEMENT 5 MT 58-34 S TON	465.0105 ASPHALTIC SURFACE TON	465.0110* ASPHALTIC SURFACE PATCHING TON	465.0315 ASPHALTIC FLUMES SY	465.0560 ASPHALTIC RUMBLE STRIPS, CENTERLINE LF	COMMENTS
0010													
	747+52	-	863+25	LT&RT	5,155	--	5,504	4,281	--	--	10	9,470	MAILINE, SHOULDERS, AND INTERSECTIONS
	803+90	-	805+19	LT&RT	52	--	--	--	145	--	--	--	CULVERT REPLACEMENT
	827+81	-	828+88	LT&RT	43	--	--	--	120	--	--	--	CULVERT REPLACEMENT
	832+79	-	833+85	LT&RT	54	--	--	--	152	--	--	--	CULVERT REPLACEMENT
	839+49	-	840+55	LT&RT	44	--	--	--	122	--	--	--	CULVERT REPLACEMENT
	846+35	-	847+48	LT&RT	45	--	--	--	127	--	--	--	CULVERT REPLACEMENT
	856+31	-	857+36	LT&RT	42	--	--	--	120	--	--	--	CULVERT REPLACEMENT
	863+25	-	869+50	LT&RT	295	--	325	253	--	--	--	625	GUARDRAIL REPLACEMENT
	869+50	-	940+50	LT&RT	4,230	--	4,508	3,507	--	--	--	6,480	MAILINE, SHOULDERS, AND INTERSECTIONS
	875+65	-	876+86	LT&RT	60	--	--	--	167	--	--	--	CULVERT REPLACEMENT
	884+00	-	885+05	LT&RT	60	--	--	--	167	--	--	--	CULVERT REPLACEMENT
	908+24	-	909+33	LT&RT	75	--	--	--	211	--	--	--	CULVERT REPLACEMENT
	940+50	-	945+75	LT&RT	315	--	322	250	--	--	--	28	GUARDRAIL REPLACEMENT
	945+75	-	1065+60	LT&RT	6,700	--	7,116	5,534	--	--	--	6,967	MAILINE, SHOULDERS, AND INTERSECTIONS
	951+39	-	952+46	LT&RT	50	--	--	--	140	--	--	--	CULVERT REPLACEMENT
	969+32	-	970+38	LT&RT	43	--	--	--	120	--	--	--	CULVERT REPLACEMENT
	976+46	-	977+54	LT&RT	61	--	--	--	171	--	--	--	CULVERT REPLACEMENT
	1035+77	-	1036+83	LT&RT	67	--	--	--	189	--	--	--	CULVERT REPLACEMENT
	1065+60	-	1118+61	LT&RT	2,148	--	1,755	1,505	--	--	--	--	MAILINE, SHOULDERS, AND INTERSECTIONS
	7+91	-	9+41	RT	6	--	14	11	--	--	--	--	160TH ST
	PROJECT				--	2	--	--	200	100	--	--	
CATEGORY 0010 TOTALS					19,545	2	19,544	15,341	2,150	100	10	23,570	
0020													
	1070+43	-	1076+04	LT&RT	87	--	73	62	--	--	--	--	PARKING LANE (6' WIDE)
	1077+05	-	1082+15	LT&RT	80	--	66	56	--	--	--	--	PARKING LANE (6' WIDE)
	1083+00	-	1085+85	LT	23	--	18	16	--	--	--	--	PARKING LANE (6' WIDE)
	1094+05	-	1097+60	LT	28	--	23	20	--	--	--	--	PARKING LANE (6' WIDE)
	1098+39	-	1102+67	LT	34	--	28	24	--	--	--	--	PARKING LANE (6' WIDE)
	1103+41	-	1107+85	LT	36	--	29	25	--	--	--	--	PARKING LANE (6' WIDE)
	1108+65	-	1109+70	LT	10	--	7	6	--	--	--	--	PARKING LANE (6' WIDE)
	1108+85	-	1116+18	RT	58	--	47	40	--	--	--	--	PARKING LANE (6' WIDE)
	1110+59	-	1112+44	LT	15	--	12	11	--	--	--	--	PARKING LANE (6' WIDE)
	1113+41	-	1117+59	LT	34	--	28	24	--	--	--	--	PARKING LANE (6' WIDE)
CATEGORY 0020 TOTALS					405	--	331	284	--	--	--	--	
TOTALS					19,950	2	19,875	15,625	2,150	100	10	23,570	

NOTES:
UNDISTRIBUTED ASPHALTIC SURFACE USED FOR WEDGING, LEVELING AND SPOT LANE FAILURES AFTER MILLING
UNDISTRIBUTED ASPHALTIC SURFACE PATCHING USED FOR MISCELLANEOUS REPAIRS DESIGNATED BY THE ENGINEER
*ADDITIONAL QUANTITIES SHOWN ELSEWHERE

CONCRETE ITEMS ITEMS

CATEGORY	STATION	TO	STATION	OFFSET	465.0110* ASPHALTIC SURFACE PATCHING TON	601.0411 CONCRETE CURB & GUTTER 30-INCH TYPE D LF	601.0557 CONCRETE CURB & GUTTER 6-INCH SLOPED 36-INCH TYPE D LF	601.0600 CONCRETE CURB PEDESTRIAN LF	602.0405 CONCRETE SIDEWALK 4-INCH SF	602.0505 CURB RAMP DETECTABLE WARNING FIELD YELLOW SF	690.0150* SAWING ASPHALT LF	690.0250* SAWING CONCRETE LF
0010												
	858+32	-	862+60	LT	36	--	410	--	--	--	432	--
	1059+00	-	1061+82	RT	18	--	153	--	--	--	161	5
	1075+84	-	1076+27	LT	4	35	--	--	270	20	46	10
	1076+60	-	1077+01	LT	7	80	--	20	220	10	93	5
TOTALS					65	115	563	20	490	30	732	20

*ADDITIONAL QUANTITIES SHOWN ELSEWHERE

ASPHALTIC MATERIAL/HMA ACCEPTANCE TABLE

LOCATION	STA	TO	STA	MIXTURE USE	UNDERLYING SURFACE	BID ITEM	TONS	THICKNESS	QUALITY MANAGEMENT PROGRAM TO BE USED FOR: MIXTURE ACCEPTANCE	QUALITY MANAGEMENT PROGRAM TO BE USED FOR: DENSITY ACCEPTANCE
12 FOOT DRIVING LANE	747+52	-	1065+60	LOWER LAYER	MILLED EXISTING HMA SURFACE	HMA PAVEMENT 4 MT 58-34 S	11,804	2.25"	INCENTIVE AIR VOIDS HMA PAVEMENT SPV.0055.02	INCENTIVE DENSITY PWL HMA PAVEMENT SPV.0055.01
12 FOOT DRIVING LANE	1065+60	-	1118+61	LOWER LAYER	MILLED EXISTING HMA SURFACE	HMA PAVEMENT 4 MT 58-34 S	1,167	1.75"	INCENTIVE AIR VOIDS HMA PAVEMENT SPV.0055.02	INCENTIVE DENSITY PWL HMA PAVEMENT SPV.0055.01
12 FOOT DRIVING LANE	747+52	-	1065+60	UPPER LAYER	HMA PAVEMENT 4 MT 58-34 S	HMA PAVEMENT 5 MT 58-34 S	9,181	1.75"	INCENTIVE AIR VOIDS HMA PAVEMENT SPV.0055.02	INCENTIVE DENSITY PWL HMA PAVEMENT SPV.0055.01
12 FOOT DRIVING LANE	1065+60	-	1118+61	UPPER LAYER	HMA PAVEMENT 4 MT 58-34 S	HMA PAVEMENT 5 MT 58-34 S	1,000	1.5"	INCENTIVE AIR VOIDS HMA PAVEMENT SPV.0055.02	INCENTIVE DENSITY PWL HMA PAVEMENT SPV.0055.01
SHOULDERS, SIDEROADS, GUARDRAIL WIDENING, TURN LANES, AND PARKING LANES	747+52	-	1065+60	LOWER LAYER	BASE AGGREGATE OR EXISTING ASPHALT SURFACE	HMA PAVEMENT 4 MT 58-34 S	5,985	2.25"	INCENTIVE AIR VOIDS HMA PAVEMENT SPV.0055.02	DEPARTMENT ACCEPTANCE (SS 460.3.3.2); NOT ELIGIBLE FOR INCENTIVE
SHOULDERS, SIDEROADS, GUARDRAIL WIDENING, TURN LANES, AND PARKING LANES	1065+60	-	1118+61	LOWER LAYER	BASE AGGREGATE OR EXISTING ASPHALT SURFACE	HMA PAVEMENT 4 MT 58-34 S	919	1.75"	INCENTIVE AIR VOIDS HMA PAVEMENT SPV.0055.02	DEPARTMENT ACCEPTANCE (SS 460.3.3.2); NOT ELIGIBLE FOR INCENTIVE
SHOULDERS, SIDEROADS, GUARDRAIL WIDENING, TURN LANES, AND PARKING LANES	747+52	-	1065+60	UPPER LAYER	HMA PAVEMENT 4 MT 58-34 S	HMA PAVEMENT 5 MT 58-34 S	4,655	1.75"	INCENTIVE AIR VOIDS HMA PAVEMENT SPV.0055.02	DEPARTMENT ACCEPTANCE (SS 460.3.3.2); NOT ELIGIBLE FOR INCENTIVE
SHOULDERS, SIDEROADS, GUARDRAIL WIDENING, TURN LANES, AND PARKING LANES	1065+60	-	1118+61	UPPER LAYER	HMA PAVEMENT 4 MT 58-34 S	HMA PAVEMENT 5 MT 58-34 S	789	1.5"	INCENTIVE AIR VOIDS HMA PAVEMENT SPV.0055.02	DEPARTMENT ACCEPTANCE (SS 460.3.3.2); NOT ELIGIBLE FOR INCENTIVE
VARIOUS	VARIOUS			CULVERT PATCHES, WEDGING, LEVELING, AND SPOT LANE FAILURES	BASE AGGREGATE	ASPHALTIC SURFACE	2,150	6"	SS 465	ORDINARY COMPACTION (SS 450.3.2.6.2)
VARIOUS	VARIOUS			DRIVEWAYS	BASE AGGREGATE	ASPHALTIC SURFACE DRIVEWAYS AND FIELD ENTRANCES	180	3"	SS 465	ORDINARY COMPACTION (SS 450.3.2.6.2)
VARIOUS	VARIOUS			MISCELLANEOUS REPAIRS AFTER MILLING AND CURB PATCHES	BASE AGGREGATE	ASPHALTIC SURFACE PATCHING	180	VARIES	SS 465	ORDINARY COMPACTION (SS 450.3.2.6.2)

DRAINAGE AND UTILITY ADJUSTMENT ITEMS

CATEGORY	STATION	OFFSET	204.0100* REMOVING CONCRETE PAVEMENT SY	204.0110* REMOVING ASPHALTIC SURFACE SY	305.0120* BASE AGGREGATE DENSE 1 1/4-INCH TON	465.0110* ASPHALTIC SURFACE PATCHING TON	612.0902.S.01 INSULATION BOARD POLYSTYRENE 4-INCH SY	611.8110 ADJUSTING MANHOLE COVERS EACH	611.8120.S COVER PLATES TEMPORARY EACH	690.0150* SAWING ASPHALT LF	690.0250* SAWING CONCRETE LF	SPV.0060.02 ADJUSTING WATER VALVE BOXES EACH	SPV.0060.03 ADJUSTING SANITARY MANHOLE COVERS EACH
0010													
	1082+51	LT	4	4	2	2	--	1	1	24	24	--	--
	1097+76	LT	4	4	2	2	--	1	1	24	24	--	--
	1098+32	LT	4	4	2	2	--	1	1	24	24	--	--
	1101+00	LT	4	4	2	2	--	1	1	24	24	--	--
	1103+27	LT	--	7	2	2	--	1	1	48	--	--	--
CATEGORY 0010 TOTALS			16	23	10	10	--	5	5	144	96	--	--
0020													
	1030+90	RT	--	7	2	2	--	--	1	48	--	--	1
	1036+30	RT	--	--	--	--	4	--	--	--	--	--	--
	1060+34	RT	--	2	1	1	--	--	--	12	--	1	--
	1069+97	RT	--	7	2	2	--	--	1	48	--	--	1
CATEGORY 0020 TOTALS			--	16	5	5	4	--	2	108	--	1	2
TOTALS			16	39	15	15	4	5	7	252	96	1	2

*ADDITIONAL QUANTITIES SHOWN ELSEWHERE

CULVERT PIPE ITEMS

CATEGORY	STATION	OFFSET	520.1015 APRON ENDWALLS FOR CULVERT PIPE 15-INCH EACH	520.1021 APRON ENDWALLS FOR CULVERT PIPE 21-INCH EACH	520.1024 APRON ENDWALLS FOR CULVERT PIPE 24-INCH EACH	520.1030 APRON ENDWALLS FOR CULVERT PIPE 30-INCH EACH	520.1036 APRON ENDWALLS FOR CULVERT PIPE 36-INCH EACH	520.2024 CULVERT PIPE TEMPORARY 24-INCH LF	520.3424 CULVERT PIPE CLASS III-A NON-METAL 24-INCH LF	520.3430 CULVERT PIPE CLASS III-A NON-METAL 30-INCH LF	520.3436 CULVERT PIPE CLASS III-A NON-METAL 36-INCH LF	520.3624 CULVERT PIPE CLASS III-B NON METAL 24-INCH LF	521.3115 ## CULVERT PIPE CORRUGATED STEEL 15-INCH LF	522.0148 CULVERT PIPE REINFORCED CONCRETE CLASS III 48-INCH LF	522.0154 CULVERT PIPE REINFORCED CONCRETE CLASS III 54-INCH LF	522.0424 CULVERT PIPE REINFORCED CONCRETE CLASS IV 24-INCH LF	522.0430 CULVERT PIPE REINFORCED CONCRETE CLASS IV 30-INCH LF	522.1024 APRON ENDWALLS FOR CULVERT PIPE REINFORCED CONCRETE 24-INCH EACH	522.1030 APRON ENDWALLS FOR CULVERT PIPE REINFORCED CONCRETE 30-INCH EACH	522.1048 APRON ENDWALLS FOR CULVERT PIPE REINFORCED CONCRETE 48-INCH EACH	522.1054 APRON ENDWALLS FOR CULVERT PIPE REINFORCED CONCRETE 54-INCH EACH	522.2338 CULVERT PIPE REINFORCED CONCRETE HORIZONTAL ELLIPTICAL CLASS HE-III 38X60-INCH LF	522.2638 APRON ENDWALLS FOR CULVERT PIPE REINFORCED CONCRETE HORIZONTAL ELLIPTICAL 38X60-INCH EACH	633.5200* MARKERS CULVERT END EACH
0010																									
	804+54	LT&RT	--	--	--	--	--	--	--	--	--	--	--	--	94	--	--	--	--	--	2	--	--	2
	828+34	LT&RT	--	--	--	--	--	--	--	--	--	--	--	--	--	56	--	2	--	--	--	--	--	2
	833+31	LT&RT	--	--	--	--	--	--	--	--	--	--	--	--	66	--	2	--	--	--	--	--	--	2
	840+02	LT&RT	--	--	--	--	--	--	--	--	--	--	--	--	--	70	--	2	--	--	--	--	--	2
	846+91	LT&RT	--	--	--	--	2	--	--	--	66	--	--	--	--	--	--	--	--	--	--	--	--	2
	856+83	LT&RT	--	--	--	2	--	--	--	94	--	--	--	--	--	--	--	--	--	--	--	--	--	2
	876+18	LT&RT	--	--	--	--	--	--	--	--	--	--	--	--	--	--	--	--	--	--	80	2	--	2
	876+27	LT&RT	--	--	--	--	--	--	--	--	--	--	--	--	--	--	--	--	--	--	80	2	--	2
	884+53	LT&RT	--	--	--	2	--	--	--	82	--	--	--	--	--	--	--	--	--	--	--	--	--	2
	908+78	LT&RT	--	--	--	--	2	--	--	--	98	--	--	--	--	--	--	--	--	--	--	--	--	2
	951+93	LT&RT	--	--	2	--	--	8	96	--	--	--	--	--	--	--	--	--	--	--	--	--	--	2
	969+85	LT&RT	--	--	2	--	--	16	--	--	--	106	--	--	--	--	--	--	--	--	--	--	--	2
	977+00	LT&RT	--	--	2	--	--	--	76	--	--	--	--	--	--	--	--	--	--	--	--	--	--	2
	1036+30	LT&RT	--	--	--	--	--	--	--	--	--	--	--	166	--	--	--	--	--	2	--	--	--	2
	1079+11	LT&RT	--	1	--	--	--	--	--	--	--	--	--	--	--	--	--	--	--	--	--	--	--	2
	8+91	LT&RT	1	--	--	--	--	--	--	--	--	--	14	--	--	--	--	--	--	--	--	--	--	2
TOTALS			1	1	6	4	4	24	172	176	164	106	14	166	94	66	126	2	4	2	2	160	4	32

NOTES:
*ADDITIONAL QUANTITIES SHOWN ELSEWHERE
CULVERT PIPE INVERTS ARE SHOWN ON CROSS SECTIONS
MINIMUM WALL THICKNESS = 0.064-INCH

TEMPORARY WATER DIVERSION

CATEGORY	STATION	OFFSET	SPV.0060.04 TEMPORARY WATER DIVERSION DUAL CULVERT STATION 876+25 EACH
0010			
	876+25	LT&RT	1
TOTAL			1

STORM SEWER AND CULVERT MAINTENCE ITEMS

CATEGORY	STATION	OFFSET	204.0180* REMOVING DELINEATORS AND MARKERS EACH	520.8700 CLEANING CULVERT PIPES EACH	633.5200* MARKERS CULVERT END EACH	SPV.0060.05 CLEANING STORM SEWER EACH
0010						
	782+58	RT	--	1	--	--
	887+32	RT	--	1	--	--
	919+75	LT&RT	2	1	2	--
	963+72	LT&RT	2	--	2	--
	1022+53	RT	--	1	--	--
	1076+88	LT	--	--	--	2
TOTALS			4	4	4	2

*ADDITIONAL QUANTITIES SHOWN ELSEWHERE

INLET COVER ITEMS

CATEGORY	STATION	OFFSET	SPV.0060.01 INLET COVERS TYPE H-D EACH
0010			
	1076+65	LT	1
TOTAL			1

3

RIPRAP ITEMS

CATEGORY	STATION	TO	STATION	OFFSET	606.0200 RIPRAP MEDIUM CY	606.0300 RIPRAP HEAVY CY	645.0120 GEOTEXTILE TYPE HR SY
0010							
	804+85	-	804+99	RT	5	--	17
	846+99	-	847+06	RT	3	--	11
	884+49	-	884+57	LT	6	--	20
	908+71	-	908+77	LT	3	--	11
	942+78	-	943+31	LT&RT	--	50	78
	976+91	-	976+99	RT	10	--	31
	1036+27	-	1036+33	LT	4	--	13
	1079+10	-	1079+14	RT	3	--	8
TOTALS					34	50	187

GUARDRAIL ITEMS

CATEGORY	STATION	TO	STATION	OFFSET	614.0397 GUARDRAIL MOW STRIP EMULSIFIED ASPHALT SY	614.2300 MGS GUARDRAIL 3 LF	614.2340 MGS GUARDRAIL 3 L LF	614.2350 MGS GUARDRAIL SHORT RADIUS LF	614.2610 MGS GUARDRAIL TERMINAL EAT EACH
0010									
	864+46	-	866+90	RT	28	25.0	112.5	--	2
	864+71	-	867+15	LT	34	25.0	112.5	--	2
	941+18	-	944+54	RT	30	112.5	112.5	--	2
	941+20	-	943+33	LT	40	75.0	--	60	1
	8+71	-	9+42	RT	--	25.0	--	--	1
TOTALS					132	262.5	337.5	60	8

NOTES:
CRT POSTS = 13

RESTORATION ITEMS

CATEGORY	STATION	TO	STATION	OFFSET	625.0100 TOPSOIL SY	628.2004 EROSION MAT CLASS I TYPE B SY	628.2027 EROSION MAT CLASS II TYPE C SY	629.0210 FERTILIZER TYPE B CWT	630.0130 SEEDING MIXTURE NO. 30 LB	630.0160 SEEDING MIXTURE NO. 60 LB	630.0500 SEED WATER MGAL
0010											
	802+51	-	807+03	LT&RT	801	801	--	0.5	36	--	18
	826+72	-	829+93	LT&RT	261	261	--	0.2	12	--	6
	831+49	-	834+45	LT&RT	209	209	--	0.1	9	--	5
	837+95	-	842+45	LT&RT	527	527	--	0.3	24	--	12
	845+07	-	848+75	LT&RT	660	660	--	0.4	30	--	15
	854+55	-	858+16	LT&RT	1,153	1,153	--	0.7	52	--	26
	858+08	-	862+60	LT	160	160	--	0.1	7	--	4
	863+19	-	868+40	LT&RT	1,048	650	398	0.7	47	--	24
	874+03	-	878+44	LT&RT	1,006	793	213	0.6	45	--	23
	882+08	-	886+49	LT&RT	712	712	--	0.5	32	--	16
	907+05	-	910+56	LT&RT	500	443	56	0.3	22	--	11
	940+42	-	945+62	LT&RT	955	665	290	0.6	43	--	21
	949+84	-	953+63	LT&RT	1,176	1,176	--	0.7	53	--	26
	967+08	-	971+75	LT&RT	2,201	2,201	--	1.4	99	--	49
	975+17	-	978+71	LT&RT	416	416	--	0.3	19	--	9
	998+96	-	1003+18	LT&RT	1,545	--	1,545	1.0	70	--	35
	1034+20	-	1038+34	LT&RT	1,313	1,313	--	0.8	59	--	30
	1058+91	-	1061+97	RT	171	171	--	0.1	8	--	4
	1075+84	-	1077+01	LT	61	--	61	0.1	3	--	1
	1079+04	-	1079+18	LT&RT	39	39	--	0.1	2	--	1
	6+80	-	9+41	RT	216	216	--	0.1	10	--	5
	UNDISTRIBUTED				3,800	3,134	667	2.4	169	20	90
TOTALS					18,930	15,700	3,230	12.0	850	20	430

EROSION CONTROL ITEMS

CATEGORY	STATION	TO	STATION	OFFSET	628.1104 EROSION BALES EACH	628.1504 SILT FENCE LF	628.1520 SILT FENCE MAINTENANCE LF	628.6005 TURBIDITY BARRIERS SY	628.7504 TEMPORARY DITCH CHECKS LF	628.7555 CULVERT PIPE CHECKS EACH	628.7015 INLET PROTECTION TYPE C EACH	SPV.0090.02 DITCH CLEANING LF
0010												
	782+25	-	784+13	RT	--	--	--	--	25.0	3	--	120
	802+51	-	807+03	LT&RT	40	660	660	--	50.0	8	--	--
	826+72	-	829+93	LT&RT	32	620	620	--	12.5	5	--	--
	831+49	-	834+45	LT&RT	32	570	570	--	12.5	4	--	--
	837+95	-	842+45	LT&RT	32	540	540	--	12.5	5	--	--
	845+07	-	848+75	LT&RT	16	320	320	--	62.5	6	--	--
	854+55	-	858+16	LT&RT	32	730	730	--	12.5	5	--	--
	858+08	-	862+60	LT	--	150	150	--	12.5	3	--	--
	863+19	-	868+40	LT&RT	56	1,010	1,010	--	--	--	--	--
	874+03	-	878+44	LT&RT	32	710	710	--	12.5	20	--	--
	882+08	-	886+49	LT&RT	32	380	380	--	50.0	5	--	--
	886+16	-	887+02	RT	--	--	--	--	25.0	--	--	86
	907+05	-	910+56	LT&RT	32	500	500	--	--	6	--	--
	940+42	-	945+62	LT&RT	32	700	700	55	25.0	--	--	--
	949+84	-	953+63	LT&RT	32	700	700	--	12.5	4	--	--
	967+08	-	971+75	LT&RT	48	880	880	--	12.5	4	--	--
	975+17	-	978+71	LT&RT	24	540	540	--	25.0	4	--	--
	998+96	-	1003+18	LT&RT	24	530	530	--	12.5	--	--	--
	1023+17	-	1023+67	RT	--	--	--	--	12.5	--	--	50
	1034+20	-	1038+34	LT&RT	32	560	560	--	50.0	6	--	--
	1058+91	-	1061+97	RT	32	340	340	--	--	--	--	--
	1075+72	-	1118+61	LT&RT	--	--	--	--	--	--	26	--
	1076+87	-	1077+18	LT	--	--	--	--	12.5	--	--	31
	1079+04	-	1079+18	LT&RT	--	--	--	--	--	3	--	--
	1118+72	-	1119+12	LT	--	--	--	--	12.5	--	--	40
	6+80	-	9+41	RT	--	170	170	--	37.5	--	--	--
	UNDISTRIBUTED				140	2,650	2,650	15	125	29	4	--
TOTALS					700	13,260	13,260	70	625	120	30	327

3

TYPE II SIGNS AND SUPPORTS

CATEGORY	STATION	OFFSET	SIGN CODE	SIGN DIMENSION W X H IN	X	IN	DESCRIPTION	634.0616* POSTS WOOD 4X6-INCH X 16-FT EACH	637.2210 SIGNS TYPE II REFLECTIVE H SF	COMMENTS
0010										
	1066+16	RT	R7-1D	18	X	24	NO PARKING ANY TIME	1	3.00	
	1067+22	RT	R7-1D	18	X	24	NO PARKING ANY TIME	--	3.00	MOUNT ON EXISTING LIGHT POLE
	1068+74	RT	R7-1D	18	X	24	NO PARKING ANY TIME	1	3.00	
TOTALS								2	9.00	

*ADDITIONAL QUANTITIES SHOWN ELSEWHERE

MOVING SIGNS

CATEGORY	STATION	OFFSET	634.0616* POSTS WOOD 4X6-INCH X 16-FT EACH	638.2102 MOVING SIGNS TYPE II EACH	COMMENTS
0010					
	840+39	RT	--	1	NO PASSING ZONE SIGN
	846+77	LT	--	1	JCT CTH B SIGN
	866+25	RT	--	1	NO PASSING ZONE SIGN
	901+87	RT	1	1	MERGE SIGN - MOVE TO STA 904+98, RT AND INSTALL ON NEW POST
	901+90	LT	1	1	RT LANE ENDS - MOVE TO STA 904+98, LT AND INSTALL ON NEW POST
	907+09	LT	--	1	MOVE TO STA 909+93, LT
	943+30	LT	--	1	STOP SIGN
	1059+28	RT	--	1	REDUCED SPEED AHEAD 35 MPH SIGN
	8+59	RT	--	1	160TH ST - ARROW SIGN
UNDISTRIBUTED			6	11	
TOTAL			8	20	

*ADDITIONAL QUANTITIES SHOWN ELSEWHERE

3

TRAFFIC CONTROL ITEMS

CATEGORY	LOCATION	STAGE DURATION DAYS	643.0300 TRAFFIC CONTROL DRUMS NO.	DAY	643.0420 TRAFFIC CONTROL BARRICADES TYPE III NO.	DAY	643.0705 TRAFFIC CONTROL WARNING LIGHTS TYPE A NO.	DAY	643.0900 TRAFFIC CONTROL SIGNS NO.	DAY
0010										
	CLEARING AND GRUBBING	5	35	175	--	--	--	--	3	15
	PROJECT - ADVANCED WARNING	110	--	--	--	--	--	--	44	4,840
	WIDTH RESTRICTION - CULVERT REPLACEMENTS	45	--	--	--	--	--	--	96	4,320
	LANE SHIFT DURING CULVERT REPLACEMENTS	45	35	1,575	--	--	--	--	2	90
	SHOULDER CLOSURE FOR CURB & GUTTER AND GUARDRAIL	25	40	1,000	--	--	--	--	2	50
	CURB RAMP REPLACEMENTS	5	20	100	--	--	--	--	4	20
	PASSING LANE CLOSURE	50	162	8,100	3	150	6	300	3	150
	MILL AND OVERLAY	60	--	--	--	--	--	--	18	1,080
TOTALS				10,775		150		300		10,550

TRAFFIC CONTROL SIGNS FIXED MESSAGE

CATEGORY	LOCATION	SIGN SIZE W X H IN X IN	643.1000 SF	SIGN MESSAGE
0010				
	SOUTH PROJECT LIMIT	96" X 48"	32.00	HWY 35 / ROAD WORK / BEGINS XXX-XX
	SOUTH TRAIL LIMIT	96" X 48"	32.00	HWY 35/48 / ROAD WORK / BEGINS XXX-XX
	NORTH TRAIL LIMIT	96" X 48"	32.00	HWY 35/48 / ROAD WORK / BEGINS XXX-XX
	NORTH PROJECT LIMIT	96" X 48"	32.00	HWY 35 / ROAD WORK / BEGINS XXX-XX
TOTAL			128.00	

TEMPORARY PEDESTRIAN FACILITIES

CATEGORY	STATION	TO	STATION	OFFSET	643.3980 TEMPORARY MARKING REMOVABLE MASK OUT TAPE 8-INCH LF	644.1810 TEMPORARY PEDESTRIAN BARRICADE LF
0010						
	1075+84	-	1077+01	LT	90	18
TOTALS					90	18

3

LONG LINE PAVEMENT MARKING ITEMS

CATEGORY	STATION	TO	STATION	643.3165 TEMPORARY MARKING LINE PAINT 6-INCH 12.5' LINE 37.5' SKIP YELLOW LF	643.3165 TEMPORARY MARKING LINE PAINT 6-INCH SOLID YELLOW LF	646.1020 MARKING LINE EPOXY 4-INCH SOLID YELLOW LF	646.2040 MARKING LINE GROOVED WET REFLECTIVE EPOXY 6-INCH 12.5' LINE 37.5' SKIP YELLOW LF	646.2040 SOLID YELLOW LF	646.2040 3' LINE 9' SKIP WHITE LF	646.2040 12.5 LINE 37.5' SKIP WHITE LF	646.2040 SOLID WHITE LF	646.2025 MARKING LINE GROOVED BLACK EPOXY 6-INCH 12.5' LINE 37.5' SKIP LF	646.4040 MARKING LINE GROOVED WET REFLECTIVE EPOXY 10-INCH SOLID WHITE LF
0010													
	747+52	-	1068+88	13,350	142,080	80	4,450	47,360	240	2,075	61,485	2,075	1,625
	1068+88	-	1118+61	--	29,178	--	--	9,726	--	--	--	--	--
TOTALS					184,608	80			125,336			2,075	1,625

NOTES:
PLACE TEMPORARY MARKING LINE PAINT ON MILLED SURFACE, ON LOWER LAYER OF HMA PAVEMENT, AND ON SURFACE LAYER OF HMA PAVEMENT PRIOR TO GROOVING.
MARKING LINE EPOXY 4-INCH IS FOR CTH W.

3

MISCELLANEOUS PAVEMENT MARKING ITEMS

CATEGORY	STATION	TO	STATION	646.5020 MARKING ARROW EPOXY EACH	646.5120 MARKING WORD EPOXY EACH	646.6120 MARKING STOP LINE EPOXY 18-INCH LF	646.7120 MARKING DIAGONAL EPOXY 12-INCH LF	646.7420 MARKING CROSSWALK EPOXY TRANSVERSE LINE 6-INCH LF	SPV.0090.04 MARKING CROSSWALK GROOVED EPOXY TRANSVERSE LINE 6-INCH LF	646.8120 MARKING CURB EPOXY LF	646.8220 MARKING ISLAND NOSE EPOXY EACH
0010											
	755+97	-	756+14	--	--	18	--	--	--	--	--
	1020+50	-	1068+88	19	3	22	1,930	--	--	--	15
	1069+56	-	1076+45	--	--	36	--	--	--	--	--
	1082+86	-	1082+92	--	--	--	--	98	--	--	--
	1085+68	-	1094+04	--	--	--	--	546	--	--	--
	1097+78	-	1098+17	--	--	15	--	--	--	--	--
	1103+34	-	1103+42	--	--	--	--	98	--	--	--
	1107+91	-	1107+97	--	--	--	--	98	--	--	--
CATEGORY 0010 TOTALS				19	3	91	1,930	840	--	--	15
0020											
	1076+19	-	1076+68	--	--	--	--	--	90	--	--
	1082+19	-	1083+18	--	--	28	--	--	140	146	--
	1085+68	-	1094+16	--	--	174	--	--	393	505	--
	1097+58	-	1098+63	--	--	17	--	--	147	149	--
	1102+64	-	1103+50	--	--	30	--	--	140	141	--
	1107+83	-	1108+69	--	--	--	--	--	70	127	--
	1109+70	-	1110+60	--	--	--	--	--	--	88	--
CATEGORY 0020 TOTALS				--	--	249	--	--	980	1,156	--
TOTALS				19	3	340	1,930	840	980	1,156	15

MARKING REMOVAL LINE ITEMS

CATEGORY	STATION	TO	STATION	646.9002 MARKING REMOVAL LINE 6-INCH (NOTE 1) LF	646.9200 MARKING REMOVAL LINE WIDE (NOTE 2) LF	SPV.0090.03 MARKING REMOVAL CURB MARKING (NOTE 3) LF
0020						
	1082+19	-	1083+18	30	28	146
	1085+68	-	1094+16	546	175	505
	1097+58	-	1098+63	--	17	149
	1102+64	-	1103+50	29	30	141
	1107+83	-	1108+69	100	--	127
	1109+70	-	1110+60	--	--	88
TOTALS				705	250	1,156

NOTES:
REMOVALS ARE NOT PAID WHERE MARKING IS REMOVED BY MILLING OPERATIONS OR PROPOSED GROOVED MARKING.
1. REMOVAL OF EXISTING CROSSWALKS ACROSS STH 35 AND STH 48.
2. REMOVAL OF EXISTING STOP BARS ON LOCAL ROADS WHERE NOT REMOVED BY MILLING OPERATIONS.
3. REMOVAL OF EXISTING CURB MARKINGS.

3

LOCATING NO-PASSING ZONES

CATEGORY	STATION	TO	STATION	648.0100 MI
0010				
	747+52	-	1118+61	7.03
TOTAL				7.03

STAKING ITEMS

CATEGORY	STATION	TO	STATION	OFFSET	650.4500 CONSTRUCTION STAKING SUBGRADE LF	650.5000 CONSTRUCTION STAKING BASE LF	650.5500 CONSTRUCTION STAKING CURB GUTTER AND CURB & GUTTER LF	650.6000 CONSTRUCTION STAKING PIPE CULVERTS EACH	650.8000 CONSTRUCTION STAKING RESURFACING REFERENCE LF	650.9000 CONSTRUCTION STAKING CURB RAMPS EACH	650.9920 CONSTRUCTION STAKING SLOPE STAKES LF	COMMENTS
0010												
	747+52	-	1118+61	LT&RT	--	--	--	--	36,274	--	--	MAINLINE PAVING
	802+18	-	806+96	LT&RT	129	129	--	1	--	--	478	CULVERT REPLACEMENT (TRANSITION CUT)
	826+80	-	829+90	LT&RT	107	107	--	1	--	--	310	CULVERT REPLACEMENT (TRANSITION CUT)
	831+54	-	834+43	LT&RT	106	106	--	1	--	--	289	CULVERT REPLACEMENT (TRANSITION CUT)
	838+07	-	842+31	LT&RT	106	106	--	1	--	--	424	CULVERT REPLACEMENT (TRANSITION CUT)
	845+03	-	848+75	LT&RT	113	113	--	1	--	--	372	CULVERT REPLACEMENT (TRANSITION CUT)
	854+70	-	858+81	LT&RT	105	105	--	1	--	--	411	CULVERT REPLACEMENT (TRANSITION CUT)
	858+42	-	862+60	LT	--	--	408	--	--	--	--	CURB AND GUTTER REPLACEMENT
	863+27	-	868+34	LT&RT	507	507	--	--	--	--	507	GUARDRAIL REPLACEMENT
	874+11	-	878+38	LT&RT	121	121	--	1	--	--	427	CULVERT REPLACEMENT (TRANSITION CUT)
	882+20	-	886+45	LT&RT	105	105	--	1	--	--	425	CULVERT REPLACEMENT (TRANSITION CUT)
	907+13	-	910+45	LT&RT	109	109	--	1	--	--	332	CULVERT REPLACEMENT (TRANSITION CUT)
	940+52	-	945+59	LT&RT	507	507	--	--	--	--	507	GUARDRAIL REPLACEMENT
	949+53	-	954+38	LT&RT	107	107	--	1	--	--	485	CULVERT REPLACEMENT (TRANSITION CUT)
	967+11	-	972+23	LT&RT	106	106	--	1	--	--	512	CULVERT REPLACEMENT (TRANSITION CUT)
	975+21	-	978+80	LT&RT	108	108	--	1	--	--	359	CULVERT REPLACEMENT (TRANSITION CUT)
	999+00	-	1003+00	LT&RT	--	--	--	--	--	--	400	ROADWAY SIDE SLOPE GRADING
	1033+78	-	1038+42	LT&RT	106	106	--	1	--	--	464	CULVERT REPLACEMENT (TRANSITION CUT)
	1059+00	-	1061+82	RT	--	--	153	--	--	--	--	CURB AND GUTTER REPLACEMENT
	1075+84	-	1077+01	LT	--	--	113	--	--	3	--	CURB RAMP INSTALLATION
	6+91	-	9+42	RT	251	251	--	--	--	--	251	CULVERT REPLACEMENT (TRANSITION CUT)
		PROJECT			--	--	--	--	--	--	--	
TOTALS					2,693	2,693	674	13	36,274	3	6,953	

WATER

CATEGORY	LOCATION	624.0100 MGAL
0010		
	PROJECT	260
TOTAL		260

MONUMENT ITEMS

LOCATION	680.0100 PUBLIC LAND REFERENCE MONUMENT VERIFY AND RESET EACH	COMMENTS
SEC 29 / 28, T36N, R17W	1	QUARTER CORNER
SEC 20 / 21 / 29 / 28, T36N, R17W	1	SECTION CORNER
SEC 20 / 21, T36N, R17W	1	QUARTER CORNER
SEC 17 / 16 / 20 / 21, T36N, R17W	1	SECTION CORNER
SEC 17 / 16, T36N, R17W	1	QUARTER CORNER
SEC 8 / 9 / 17 / 16, T36N, R17W	1	SECTION CORNER
SEC 8 / 9, T36N, R17W	1	QUARTER CORNER
SEC 5 / 4 / 8 / 9, T36N, R17W	1	SECTION CORNER
SEC 33 / 34, T37N, R17W	1	QUARTER CORNER
TOTALS	9	

SAWING ITEMS

CATEGORY	STATION	TO	STATION	OFFSET	690.0150* SAWING ASPHALT LF	690.0250* SAWING CONCRETE LF	COMMENTS
0010							
	803+90	-	805+19	LT&RT	20	40	CULVERT REPLACEMENT
	827+81	-	828+88	LT&RT	20	40	CULVERT REPLACEMENT
	832+79	-	833+85	LT&RT	38	40	CULVERT REPLACEMENT
	839+49	-	840+55	LT&RT	23	40	CULVERT REPLACEMENT
	846+35	-	847+48	LT&RT	20	40	CULVERT REPLACEMENT
	856+31	-	857+36	LT&RT	60	--	CULVERT REPLACEMENT
	864+94	-	866+61	LT&RT	317	--	GUARDRAIL REPLACEMENT
	875+65	-	876+86	LT&RT	34	40	CULVERT REPLACEMENT
	884+00	-	885+05	LT&RT	45	40	CULVERT REPLACEMENT
	889+07	-	900+03	LT	1,100	--	PASSING LANE TAPER
	908+24	-	909+33	LT&RT	64	40	CULVERT REPLACEMENT
	940+75	-	944+30	LT&RT	334	--	GUARDRAIL REPLACEMENT
	951+39	-	952+46	LT&RT	70	--	CULVERT REPLACEMENT
	969+32	-	970+38	LT&RT	62	--	CULVERT REPLACEMENT
	976+46	-	977+54	LT&RT	45	40	CULVERT REPLACEMENT
	1035+77	-	1036+83	LT&RT	95	--	CULVERT REPLACEMENT
	7+91	-	9+41	LT&RT	163	--	GUARDRAIL REPLACEMENT
TOTALS					2,510	360	

*ADDITIONAL QUANTITIES SHOWN ELSEWHERE

COMPOSITE DRAWING, ORIGINAL ON FILE AT COUNTY REGISTER OF DEEDS

TRANSPORTATION PROJECT PLAT NO: 8010-01-24 - 4.01 AMENDMENT NO:1

AMENDS UTILITY NUMBERS 201 AND 206 AND REMOVES UTILITY NUMBER 208 OF TRANSPORTATION PROJECT PLAT NO: 8010-01-24 - 4.01 RECORDED AS DOCUMENT NUMBER 926087.

THAT PART OF THE SW1/4 OF THE SW1/4 OF SECTION 21, TOWNSHIP 36 NORTH, RANGE 17 WEST, TOWN OF LUCK, POLK COUNTY, WISCONSIN.

RELOCATION ORDER - STH 35, LUCK-SIREN (STH 48 E TO POLK STREET), POLK COUNTY

TO PROPERLY ESTABLISH, LAY OUT, WIDEN, ENLARGE, EXTEND, CONSTRUCT, RECONSTRUCT, IMPROVE, OR MAINTAIN A PORTION OF THE HIGHWAY DESIGNATED ABOVE, THE STATE OF WISCONSIN DEPARTMENT OF TRANSPORTATION DEEMS IT NECESSARY TO RELOCATE OR CHANGE SAID HIGHWAY AND ACQUIRE CERTAIN LANDS AND INTERESTS OR RIGHTS IN LANDS FOR THE ABOVE PROJECT.

TO EFFECT THIS CHANGE, PURSUANT TO AUTHORITY GRANTED UNDER SECTION 84.02 (3), 84.09, AND 84.30, WISCONSIN STATUTES, THE DEPARTMENT OF TRANSPORTATION HEREBY ORDERS THAT:
1. THAT PORTION OF SAID HIGHWAY AS SHOWN ON THIS PLAT IS LAID OUT AND ESTABLISHED TO THE LINES AND WIDTHS AS SO SHOWN FOR THE ABOVE PROJECT.
2. THE LANDS OR INTERESTS OR RIGHTS IN LANDS AS SHOWN ON THIS PLAT ARE REQUIRED BY THE DEPARTMENT FOR THE ABOVE PROJECT AND SHALL BE ACQUIRED IN THE NAME OF THE STATE OF WISCONSIN, PURSUANT TO THE PROVISIONS OF SECTION 84.09 (1) OR (2), WISCONSIN STATUTES.

NOTES:

POSITIONS SHOWN ON THIS PLAT ARE WISCONSIN COORDINATE REFERENCE SYSTEM COORDINATES (WISCRS), POLK COUNTY, NAD83 (2011), IN U.S. SURVEY FEET. VALUES ARE GRID COORDINATES, GRID BEARINGS, AND GRID DISTANCES. GRID DISTANCES MAY BE USED AS GROUND DISTANCES.

ALL NEW RIGHT-OF-WAY MONUMENTS WILL BE TYPE 2 (TYPICALLY 3/4" X 24" IRON REBARS), UNLESS OTHERWISE NOTED, AND WILL BE PLACED PRIOR TO THE COMPLETION OF THE PROJECT.

ALL RIGHT-OF-WAY LINES DEPICTED IN THE NON-ACQUISITION AREAS ARE INTENDED TO RE-ESTABLISH EXISTING RIGHT-OF-WAY LINES AS DETERMINED FROM PREVIOUS PROJECTS, OTHER RECORDED DOCUMENTS, CENTERLINE OF EXISTING PAVEMENTS AND/OR EXISTING OCCUPATIONAL LINES.

RIGHT-OF-WAY BOUNDARIES ARE DEFINED WITH COURSES OF THE PERIMETER OF THE HIGHWAY LANDS REFERENCED TO THE U.S. PUBLIC LAND SURVEY SYSTEM OR OTHER "SURVEYS" OF PUBLIC RECORD.

DIMENSIONING FOR THE NEW RIGHT-OF-WAY IS MEASURED ALONG AND PERPENDICULAR TO THE NEW REFERENCE LINES.

AN EASEMENT FOR HIGHWAY PURPOSES (HE), AS LONG AS SO USED, INCLUDING THE RIGHT TO PRESERVE, PROTECT, REMOVE, OR PLANT THEREON ANY VEGETATION THAT THE HIGHWAY AUTHORITIES MAY DEEM DESIRABLE.

PROPERTY LINES SHOWN ON THIS PLAT FOR PROPERTIES BEING IMPACTED ARE DRAWN FROM DATA DERIVED FROM FILED/RECORDED MAPS AND DOCUMENTS OF PUBLIC RECORD. THIS PLAT MAY NOT BE A TRUE REPRESENTATION OF EXISTING PROPERTY LINES, EXCLUDING RIGHT-OF-WAY, AND SHOULD NOT BE USED AS A SUBSTITUTE FOR AN ACCURATE FIELD SURVEY.

EXISTING HIGHWAY RIGHT-OF-WAY SHOWN HEREIN IS BASED ON THE FOLLOWING POINTS OF REFERENCE FOR STH 35/48: FEDERAL AID PROJECT 407G, R/W PLAT 8556, R/W PLAT 8010-06-21, AND EXISTING CENTERLINE.

EXISTING HIGHWAY RIGHT-OF-WAY SHOWN HEREIN IS BASED ON THE FOLLOWING POINTS OF REFERENCE FOR 260TH AVE: FEDERAL AID PROJECT 407G, R/W PLAT 8556, R/W PLAT 8010-06-21, AND EXISTING CENTERLINE.

FOR THE CURRENT ACCESS/DRIVEWAY INFORMATION, CONTACT THE PLANNING UNIT OF THE WISCONSIN DEPARTMENT OF TRANSPORTATION OFFICE IN SUPERIOR, WI.

PARCEL AND UTILITY IDENTIFICATION NUMBERS MAY NOT POINT TO ALL AREAS OF ACQUISITION, AS NOTED ON THE TPP DETAIL PAGES.

LOCATION SKETCH NOT TO SCALE

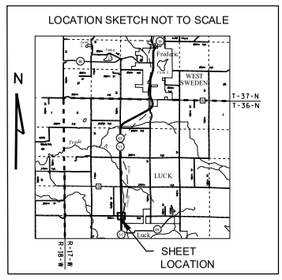

Doc # 942441
Envelope #: 357A
Polk County, Wisconsin
Sally L. Spanel, Register of Deeds
PLAT FEE: 25.00
Total: 25.00
RECORDED ON: 02/11/2026 01:17 PM
PAGES: 1
Document Electronically Recorded

84

8010-01-24-4.01A1

RESERVED FOR REGISTER OF DEEDS
PROJECT NUMBER 8010-01-24-4.01
AMENDMENT NO: 1

DETAILS ARE NOT TO SCALE.

SCALE, FEET
0 20 40

GN

CONVENTIONAL SYMBOLS

SECTION LINE
QUARTER LINE
SIXTEENTH LINE
NEW REFERENCE LINE
NEW R/W LINE
EXISTING R/W OR HE LINE
PROPERTY LINE
LOT, TIE & OTHER MINOR LINES
SLOPE INTERCEPT
CORPORATE LIMITS
UNDERGROUND FACILITY (COMMUNICATIONS, ELECTRIC, ETC.)
NEW R/W (FEE OR HE) (HATCHING VARIES BY OWNER)
TEMPORARY LIMITED EASEMENT AREA
EASEMENT AREA (PERMANENT LIMITED OR RESTRICTED DEVELOPMENT)
TRANSMISSION STRUCTURES
BUILDING TO BE REMOVED
BRIDGE CULVERT

SECTION CORNER SYMBOL
SECTION CORNER MONUMENT
R/W MONUMENT (TO BE SET)
NON-MONUMENTED R/W POINT
FOUND IRON PIN (1-INCH UNLESS NOTED) IP
GEODETIC SURVEY MONUMENT
SIXTEENTH CORNER MONUMENT
SIGN
OFF-PREMISE SIGN
COMPENSABLE NON-COMPENSABLE
ELECTRIC POLE
TELEPHONE POLE
PEDESTAL (LABEL TYPE) (TV, TEL, ELEC, ETC.)
ACCESS RESTRICTED BY ACQUISITION
NO ACCESS (BY STATUTORY AUTHORITY)
ACCESS RESTRICTED (BY PREVIOUS PROJECT OR CONTROL)
NO ACCESS (NEW HIGHWAY)
PARCEL NUMBER 25 UTILITY NUMBER 40
PARALLEL OFFSETS

CONVENTIONAL ABBREVIATIONS

ACCESS RIGHTS	AR	POINT OF COMPOUND CURVE	PCC
ACRES	AC	POINT OF INTERSECTION	PI
AHEAD	AH	PROPERTY LINE	PL
ALUMINUM	ALUM	RECORDED AS	(100')
AND/OTHERS	ET AL	REEL / IMAGE	R/I
BACK	BK	REFERENCE LINE	R/L
BLOCK	BLK	REMAINING	REM
CENTERLINE	C/L	RESTRICTIVE DEVELOPMENT EASEMENT	RDE
CERTIFIED SURVEY MAP	CSM	RIGHT	RT
CONCRETE	CONC	RIGHT OF WAY	R/W
COUNTY	CO	SECTION	SEC
COUNTY TRUNK HIGHWAY	CTH	SEPTIC VENT	SEPV
DISTANCE	DIST	SQUARE FEET	SF
CORNER	COR	STATE TRUNK HIGHWAY	STH
DOCUMENT NUMBER	DOC	STATION	STA
EASEMENT	EASE	TELEPHONE PEDESTAL	TP
EXISTING	EX	TEMPORARY LIMITED EASEMENT	TLE
GAS VALVE	GV	TRANSPORTATION PROJECT PLAT	TPP
GRID NORTH	GN	UNITED STATES HIGHWAY	USH
HIGHWAY EASEMENT	HE	VOLUME	V
IDENTIFICATION	ID		
LAND CONTRACT	LC		
LEFT	LT		
MONUMENT	MON		
NATIONAL GEODETIC SURVEY	NGS		
NUMBER	NO		
OUTLOT	OL		
PAGE	P		
POINT OF TANGENCY	PT		
PERMANENT LIMITED EASEMENT	PLE		
POINT OF BEGINNING	POB		
POINT OF CURVATURE	PC		

CURVE DATA ABBREVIATIONS

LONG CHORD	LCH
LONG CHORD BEARING	LCB
RADIUS	R
DEGREE OF CURVE	D
CENTRAL ANGLE	Δ/DELTA
LENGTH OF CURVE	L
TANGENT	T
DIRECTION AHEAD	DA
DIRECTION BACK	DB

CONVENTIONAL UTILITY SYMBOLS

WATER
GAS
TELEPHONE
OVERHEAD TRANSMISSION LINES
ELECTRIC
CABLE TELEVISION
FIBER OPTIC
SANITARY SEWER
STORM SEWER
ELECTRIC TOWER

(201) LAKELAND TELECOM INC (COMMUNICATION)
DOC. 209733 - PAR. 1

(206) NORTHERN STATES POWER COMPANY, A WISCONSIN CORPORATION (ELECTRIC)
DOC. 827612 - PAR. 1
DOC. 161885A - PAR. 1

(207) DAIRYLAND POWER COOPERATIVE (ELECTRIC)
DOC. 310082 - PAR. 1
DOC. 302878 - PAR. 1
DOC. 456963 - PAR. 1

COURSE TABLE

COURSE	BEARING	DISTANCE
1000-1001	N89° 18' 34"E	58.76'
1001-1002	S00° 41' 26"E	13.42'
1002-PRW1003	S89° 18' 34"W	15.00'
PRW1003-PRW1004	S00° 41' 26"E	66.46'
PRW1004-1005	S44° 50' 19"E	108.35'
1005-1006	S01° 15' 23"W	30.67'
1006-1007	S01° 15' 23"W	35.33'
1007-1008	N88° 44' 37"W	85.78'
1008-1009	N89° 52' 57"W	31.73'
1009-1010	N89° 52' 57"W	1.27'
1010-1011	N89° 52' 57"W	33.00'
1011-1012	N00° 07' 03"E	11.46'
1012-1013	N89° 14' 12"W	29.55'
1013-1014	N00° 45' 48"E	24.14'
1014-1015	N00° 45' 48"E	89.46'
1015-1016	N00° 41' 26"W	93.98'
1016-1017	N89° 18' 34"E	60.00'
1017-1000	N89° 18' 34"E	1.24'

STATION & OFFSET TABLE

POINT NO.	STATION	OFFSET
1000	784+46.46	1.24'
1001	784+46.46	60.00'
1002	784+33.03	60.00'
PRW1003	784+33.03	45.00'
PRW1004	783+66.57	45.00'
1005	782+88.83	120.47'
1006	782+59.86	119.47'
1007	782+24.54	118.77'
1008	782+26.24	33.00'
1009	782+26.24	1.27'
1010	782+26.24	0.00'
1011	782+26.24	33.00'
1012	782+37.70	33.00'
1013	782+38.03	62.55'
1014	782+63.05	62.27'
1015	783+52.48	60.00'
1016	784+46.46	60.00'
1017	784+46.46	0.00'

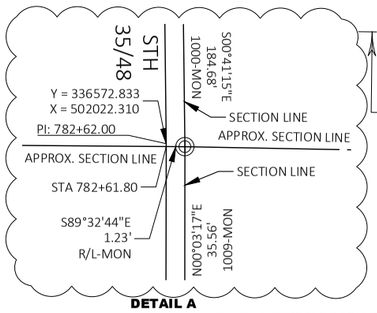

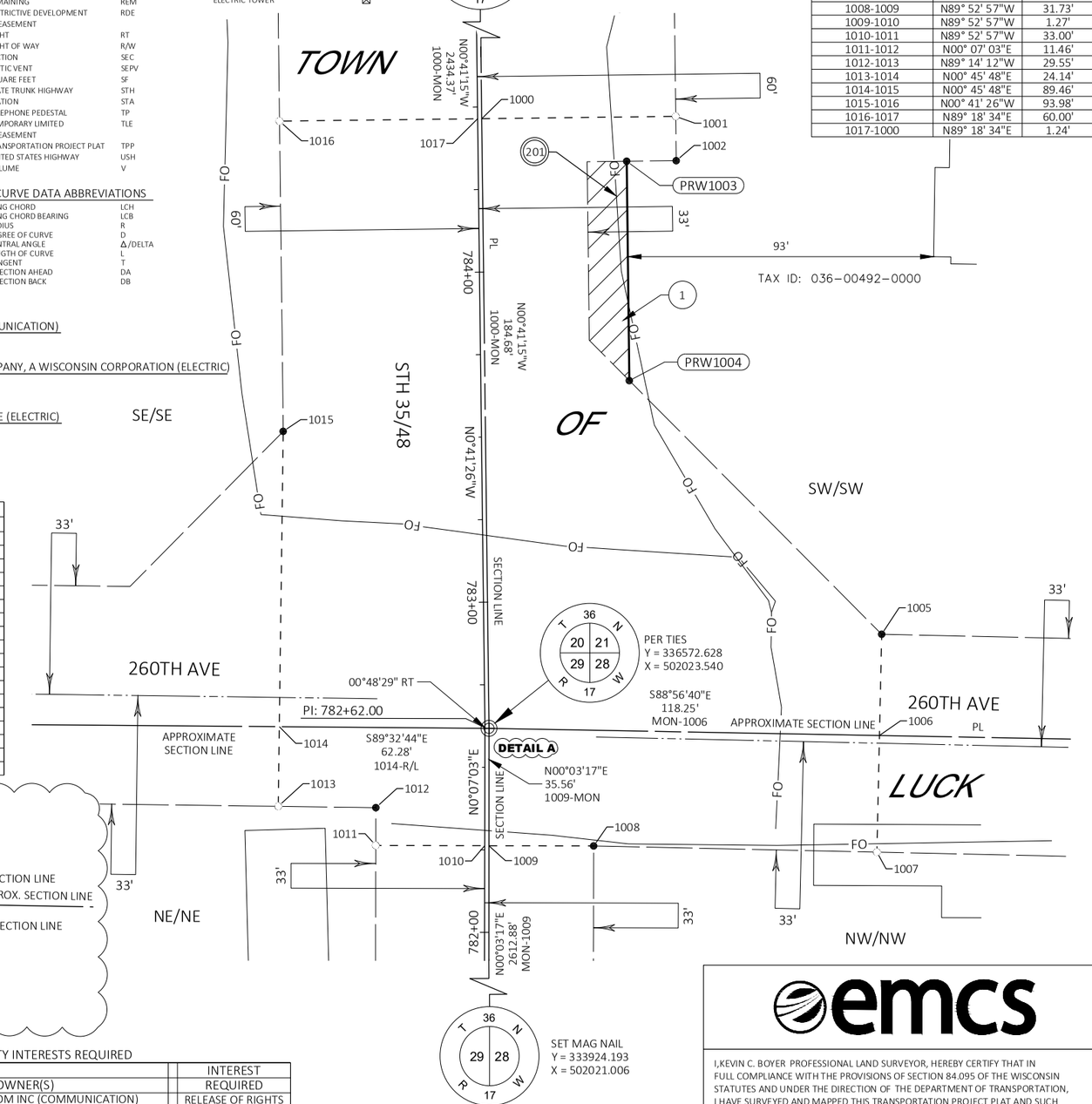

UTILITY INTERESTS REQUIRED

UTILITY NUMBER	OWNER(S)	INTEREST REQUIRED
201	LAKELAND TELECOM INC (COMMUNICATION)	RELEASE OF RIGHTS
206	NORTHERN STATES POWER COMPANY, A WISCONSIN CORPORATION (ELECTRIC)	RELEASE OF RIGHTS
207	DAIRYLAND POWER COOPERATIVE (ELECTRIC)	RELEASE OF RIGHTS

SCHEDULE OF LANDS & INTERESTS REQUIRED

OWNER'S NAMES ARE SHOWN FOR REFERENCE PURPOSES ONLY AND ARE SUBJECT TO CHANGE PRIOR TO THE TRANSFER OF LAND INTERESTS TO THE DEPARTMENT.

PARCEL NUMBER	OWNERS	INTERESTS REQUIRED	FEE SF REQUIRED NEW	EXISTING	TOTAL	HE SF
1	MARY A. LUNDQUIST	HE	---	---	---	723

emcs

I,KEVIN C. BOYER PROFESSIONAL LAND SURVEYOR, HEREBY CERTIFY THAT IN FULL COMPLIANCE WITH THE PROVISIONS OF SECTION 84.095 OF THE WISCONSIN STATUTES AND UNDER THE DIRECTION OF THE DEPARTMENT OF TRANSPORTATION, I HAVE SURVEYED AND MAPPED THIS TRANSPORTATION PROJECT PLAT AND SUCH PLAT CORRECTLY REPRESENTS ALL EXTERIOR BOUNDARIES OF THE SURVEYED LAND.

WISCONSIN KEVIN C. BOYER S-2675 HEWITT WI LAND SURVEYOR

SIGNATURE: Kevin C. Boyer DATE: 2/9/2026
PRINT NAME: KEVIN C. BOYER
REGISTRATION NUMBER: S-2675

THIS PLAT AND RELOCATION ORDER ARE APPROVED FOR THE WISCONSIN DEPARTMENT OF TRANSPORTATAION NW REGION - SUPERIOR OFFICE

SIGNATURE: Aaron Gustafson DATE: 2/10/2026
PRINT NAME: AARON GUSTAFSON

PLOT SCALE :
PLOT NAME :
PLOT BY : Michaela Galganski
PLOT DATE : 2/9/2026 1:54 PM
PLOT DATE :
PLOT DATE :
FILE NAME : P:\55XX\5508.DP.22.STH35-48.PLK\CADDS\8010080\SHEETS\TPP\040101-RP.DWG
APPRAISAL PLAT DATE : 02/09/2026

COMPOSITE DRAWING, ORIGINAL ON FILE AT COUNTY REGISTER OF DEEDS

TRANSPORTATION PROJECT PLAT NO: 8010-01-24 - 4.01

THAT PART OF THE SW1/4 OF THE SW1/4 OF SECTION 21, TOWNSHIP 36 NORTH, RANGE 17 WEST, TOWN OF LUCK, POLK COUNTY, WISCONSIN.

RELOCATION ORDER - STH 35, LUCK-SIREN (STH 48 E TO POLK STREET), POLK COUNTY

TO PROPERLY ESTABLISH, LAY OUT, WIDEN, ENLARGE, EXTEND, CONSTRUCT, RECONSTRUCT, IMPROVE, OR MAINTAIN A PORTION OF THE HIGHWAY DESIGNATED ABOVE, THE STATE OF WISCONSIN DEPARTMENT OF TRANSPORTATION DEEMS IT NECESSARY TO RELOCATE OR CHANGE SAID HIGHWAY AND ACQUIRE CERTAIN LANDS AND INTERESTS OR RIGHTS IN LANDS FOR THE ABOVE PROJECT.

TO EFFECT THIS CHANGE, PURSUANT TO AUTHORITY GRANTED UNDER SECTION 84.02 (3), 84.09, AND 84.30, WISCONSIN STATUTES, THE DEPARTMENT OF TRANSPORTATION HEREBY ORDERS THAT:
1. THAT PORTION OF SAID HIGHWAY AS SHOWN ON THIS PLAT IS LAID OUT AND ESTABLISHED TO THE LINES AND WIDTHS AS SO SHOWN FOR THE ABOVE PROJECT.
2. THE LANDS OR INTERESTS OR RIGHTS IN LANDS AS SHOWN ON THIS PLAT ARE REQUIRED BY THE DEPARTMENT FOR THE ABOVE PROJECT AND SHALL BE ACQUIRED IN THE NAME OF THE STATE OF WISCONSIN, PURSUANT TO THE PROVISIONS OF SECTION 84.09 (1) OR (2), WISCONSIN STATUTES.

NOTES:

POSITIONS SHOWN ON THIS PLAT ARE WISCONSIN COORDINATE REFERENCE SYSTEM COORDINATES (WISCRS), POLK COUNTY, NAD83 (2011), IN U.S. SURVEY FEET. VALUES ARE GRID COORDINATES, GRID BEARINGS, AND GRID DISTANCES. GRID DISTANCES MAY BE USED AS GROUND DISTANCES.

ALL NEW RIGHT-OF-WAY MONUMENTS WILL BE TYPE 2 (TYPICALLY 3/4" X 24" IRON REBARS), UNLESS OTHERWISE NOTED, AND WILL BE PLACED PRIOR TO THE COMPLETION OF THE PROJECT.

ALL RIGHT-OF-WAY LINES DEPICTED IN THE NON-ACQUISITION AREAS ARE INTENDED TO RE-ESTABLISH EXISTING RIGHT-OF-WAY LINES AS DETERMINED FROM PREVIOUS PROJECTS, OTHER RECORDED DOCUMENTS, CENTERLINE OF EXISTING PAVEMENTS AND/OR EXISTING OCCUPATIONAL LINES.

RIGHT-OF-WAY BOUNDARIES ARE DEFINED WITH COURSES OF THE PERIMETER OF THE HIGHWAY LANDS REFERENCED TO THE U.S. PUBLIC LAND SURVEY SYSTEM OR OTHER "SURVEYS" OF PUBLIC RECORD.

DIMENSIONING FOR THE NEW RIGHT-OF-WAY IS MEASURED ALONG AND PERPENDICULAR TO THE NEW REFERENCE LINES.

AN EASEMENT FOR HIGHWAY PURPOSES (HE), AS LONG AS SO USED, INCLUDING THE RIGHT TO PRESERVE, PROTECT, REMOVE, OR PLANT THEREON ANY VEGETATION THAT THE HIGHWAY AUTHORITIES MAY DEEM DESIRABLE.

PROPERTY LINES SHOWN ON THIS PLAT FOR PROPERTIES BEING IMPACTED ARE DRAWN FROM DATA DERIVED FROM FILED/RECORDED MAPS AND DOCUMENTS OF PUBLIC RECORD. THIS PLAT MAY NOT BE A TRUE REPRESENTATION OF EXISTING PROPERTY LINES, EXCLUDING RIGHT-OF-WAY, AND SHOULD NOT BE USED AS A SUBSTITUTE FOR AN ACCURATE FIELD SURVEY.

EXISTING HIGHWAY RIGHT-OF-WAY SHOWN HEREIN IS BASED ON THE FOLLOWING POINTS OF REFERENCE FOR STH 35/48: FEDERAL AID PROJECT 407G, R/W PLAT 8556, R/W PLAT 8010-06-21, AND EXISTING CENTERLINE.

EXISTING HIGHWAY RIGHT-OF-WAY SHOWN HEREIN IS BASED ON THE FOLLOWING POINTS OF REFERENCE FOR 260TH AVE: FEDERAL AID PROJECT 407G, R/W PLAT 8556, R/W PLAT 8010-06-21, AND EXISTING CENTERLINE.

FOR THE CURRENT ACCESS/DRIVEWAY INFORMATION, CONTACT THE PLANNING UNIT OF THE WISCONSIN DEPARTMENT OF TRANSPORTATION OFFICE IN SUPERIOR, WI.

PARCEL AND UTILITY IDENTIFICATION NUMBERS MAY NOT POINT TO ALL AREAS OF ACQUISITION, AS NOTED ON THE TPP DETAIL PAGES.

LOCATION SKETCH NOT TO SCALE

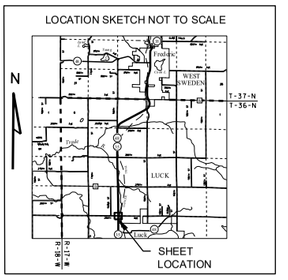

Doc # 926087
Envelope #: 349A
Polk County, Wisconsin
Sally L. Spanel, Register of Deeds
PLAT FEE: 25.00
Total: 25.00
RECORDED ON: 05/24/2024 11:08 AM
PAGES: 1
Document Electronically Recorded

85

RESERVED FOR REGISTER OF DEEDS
PROJECT NUMBER 8010-01-24-4.01
AMENDMENT NO:___

DETAILS ARE NOT TO SCALE.

SCALE, FEET
0 20 40

GN

CONVENTIONAL SYMBOLS

SECTION LINE
QUARTER LINE
SIXTEENTH LINE
NEW REFERENCE LINE
NEW R/W LINE
EXISTING R/W OR HE LINE
PROPERTY LINE
LOT, TIE & OTHER MINOR LINES
SLOPE INTERCEPT
CORPORATE LIMITS
UNDERGROUND FACILITY (COMMUNICATIONS, ELECTRIC, ETC)
NEW R/W (FEE OR HE) (HATCHING VARIES BY OWNER)
TEMPORARY LIMITED EASEMENT AREA
EASEMENT AREA (PERMANENT LIMITED OR RESTRICTED DEVELOPMENT)
TRANSMISSION STRUCTURES
BUILDING TO BE REMOVED
BRIDGE CULVERT

SECTION CORNER SYMBOL
SECTION CORNER MONUMENT
R/W MONUMENT (TO BE SET)
NON-MONUMENTED R/W POINT
FOUND IRON PIN (1-INCH UNLESS NOTED) IP
GEODETIC SURVEY MONUMENT
SIXTEENTH CORNER MONUMENT
SIGN
OFF-PREMISE SIGN
COMPENSABLE NON-COMPENSABLE
ELECTRIC POLE
TELEPHONE POLE
PEDESTAL (LABEL TYPE) (TV, TEL, ELEC, ETC.)
ACCESS RESTRICTED BY ACQUISITION
NO ACCESS (BY STATUTORY AUTHORITY)
ACCESS RESTRICTED (BY PREVIOUS PROJECT OR CONTROL)
NO ACCESS (NEW HIGHWAY)
PARCEL NUMBER 25 UTILITY NUMBER 40
PARALLEL OFFSETS

CONVENTIONAL ABBREVIATIONS

ACCESS RIGHTS	AR	POINT OF COMPOUND CURVE	PCC
ACRES	AC	POINT OF INTERSECTION	PI
AHEAD	AH	PROPERTY LINE	PL
ALUMINUM	ALUM	RECORDED AS	(100')
AND OTHERS	ET AL	REEL / IMAGE	R/I
BACK	BK	REFERENCE LINE	R/L
BLOCK	BLK	REMAINING	REM
CENTERLINE	C/L	RESTRICTIVE DEVELOPMENT EASEMENT	RDE
CERTIFIED SURVEY MAP	CSM	RIGHT	RT
CONCRETE	CONC	RIGHT OF WAY	R/W
COUNTY	CO	SECTION	SEC
COUNTY TRUNK HIGHWAY	CTH	SEPTIC VENT	SEPV
DISTANCE	DIST	SQUARE FEET	SF
CORNER	COR	STATE TRUNK HIGHWAY	STH
DOCUMENT NUMBER	DOC	STATION	STA
EASEMENT	EASE	TELEPHONE PEDESTAL	TP
EXISTING	EX	TEMPORARY LIMITED EASEMENT	TLE
GAS VALVE	GV	TRANSPORTATION PROJECT PLAT	TPP
GRID NORTH	GN	UNITED STATES HIGHWAY	USH
HIGHWAY EASEMENT	HE	VOLUME	V
IDENTIFICATION	ID		
LAND CONTRACT	LC		
LEFT	LT		
MONUMENT	MON		
NATIONAL GEODETIC SURVEY	NGS		
NUMBER	NO		
OUTLOT	OL		
PAGE	P		
POINT OF TANGENCY	PT		
PERMANENT LIMITED EASEMENT	PLE		
POINT OF BEGINNING	POB		
POINT OF CURVATURE	PC		

CURVE DATA ABBREVIATIONS

LONG CHORD	LCH
LONG CHORD BEARING	LCB
RADIUS	R
DEGREE OF CURVE	D
CENTRAL ANGLE	Δ/DELTA
LENGTH OF CURVE	L
TANGENT	T
DIRECTION AHEAD	DA
DIRECTION BACK	DB

CONVENTIONAL UTILITY SYMBOLS

WATER
GAS
TELEPHONE
OVERHEAD TRANSMISSION LINES
ELECTRIC
CABLE TELEVISION
FIBER OPTIC
SANITARY SEWER
STORM SEWER
ELECTRIC TOWER

(201) LAKELAND TELECOM INC (COMMUNICATION)
DOC. 161885A - PAR. 1
DOC. 209733 - PAR. 1

(206) NORTHERN STATES POWER COMPANY, A WISCONSIN CORPORATION (ELECTRIC)
DOC. 827612 - PAR. 1

(207) DAIRYLAND POWER COOPERATIVE (ELECTRIC)
DOC. 310082 - PAR. 1
DOC. 302878 - PAR. 1
DOC. 456963 - PAR. 1
DOC. 302878 - PAR. 1

(208) ~~LUCK LIGHT & POWER COMPANY (ELECTRIC)~~ VACATION DOC. 942524
~~DOC. 161885A - PAR. 1~~

STATION & OFFSET TABLE

POINT NO.	STATION	OFFSET
1000	784+46.46	1.24'
1001	784+46.46	60.00'
1002	784+33.03	60.00'
PRW1003	784+33.03	45.00'
PRW1004	783+66.57	45.00'
1005	782+88.83	120.47'
1006	782+59.86	119.47'
1007	782+24.54	118.77'
1008	782+26.24	33.00'
1009	782+26.24	1.27'
1010	782+26.24	0.00'
1011	782+26.24	33.00'
1012	782+37.70	33.00'
1013	782+38.03	62.55'
1014	782+63.05	62.27'
1015	783+52.48	60.00'
1016	784+46.46	60.00'
1017	784+46.46	0.00'

COURSE TABLE

COURSE	BEARING	DISTANCE
1000-1001	N89° 18' 34"E	58.76'
1001-1002	S00° 41' 26"E	13.42'
1002-PRW1003	S89° 18' 34"W	15.00'
PRW1003-PRW1004	S00° 41' 26"E	66.46'
PRW1004-1005	S44° 50' 19"E	108.35'
1005-1006	S01° 15' 23"W	30.67'
1006-1007	S01° 15' 23"W	35.33'
1007-1008	N88° 44' 37"W	85.78'
1008-1009	N89° 52' 57"W	31.73'
1009-1010	N89° 52' 57"W	1.27'
1010-1011	N89° 52' 57"W	33.00'
1011-1012	N00° 07' 03"E	11.46'
1012-1013	N89° 14' 12"W	29.55'
1013-1014	N00° 45' 48"E	24.14'
1014-1015	N00° 45' 48"E	89.46'
1015-1016	N0° 41' 26"W	93.98'
1016-1017	N89° 18' 34"E	60.00'
1017-1000	N89° 18' 34"E	1.24'

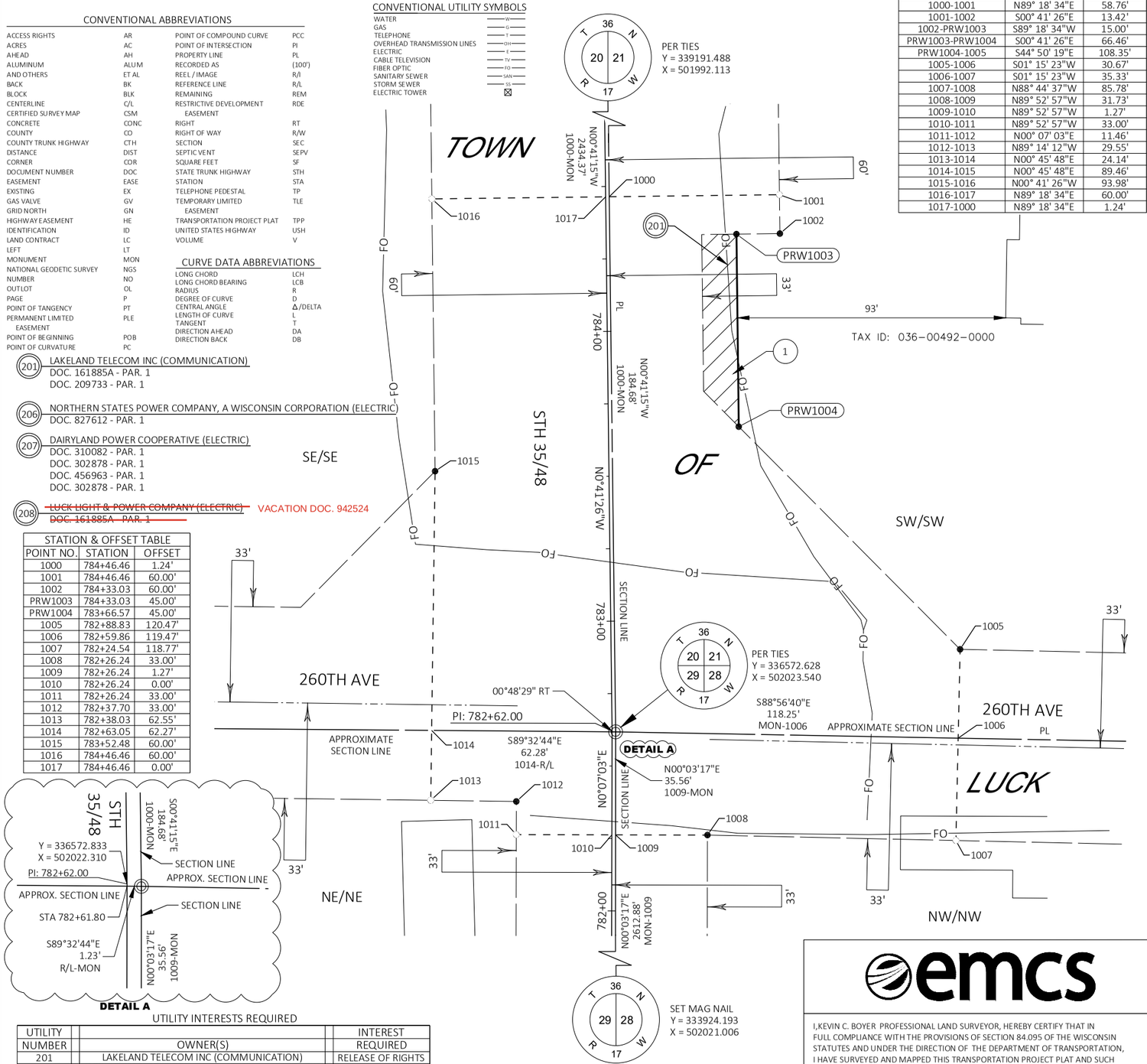

UTILITY INTERESTS REQUIRED

UTILITY NUMBER	OWNER(S)	INTEREST REQUIRED
201	LAKELAND TELECOM INC (COMMUNICATION)	RELEASE OF RIGHTS
206	NORTHERN STATES POWER COMPANY, A WISCONSIN CORPORATION (ELECTRIC)	RELEASE OF RIGHTS
207	DAIRYLAND POWER COOPERATIVE (ELECTRIC)	RELEASE OF RIGHTS
208	LUCK LIGHT & POWER COMPANY (ELECTRIC)	RELEASE OF RIGHTS

SCHEDULE OF LANDS & INTERESTS REQUIRED

OWNER'S NAMES ARE SHOWN FOR REFERENCE PURPOSES ONLY AND ARE SUBJECT TO CHANGE PRIOR TO THE TRANSFER OF LAND INTERESTS TO THE DEPARTMENT.

PARCEL NUMBER	OWNERS	INTERESTS REQUIRED	FEE SF REQUIRED NEW	EXISTING	TOTAL	HE SF
1	MARY A. LUNDQUIST	HE	---	---	---	723

emcs

I,KEVIN C. BOYER PROFESSIONAL LAND SURVEYOR, HEREBY CERTIFY THAT IN FULL COMPLIANCE WITH THE PROVISIONS OF SECTION 84.095 OF THE WISCONSIN STATUTES AND UNDER THE DIRECTION OF THE DEPARTMENT OF TRANSPORTATION, I HAVE SURVEYED AND MAPPED THIS TRANSPORTATION PROJECT PLAT AND SUCH PLAT CORRECTLY REPRESENTS ALL EXTERIOR BOUNDARIES OF THE SURVEYED LAND.

SIGNATURE: Kevin C. Boyer DATE: 5/20/2024
PRINT NAME: KEVIN C. BOYER
REGISTRATION NUMBER: S-2675

WISCONSIN KEVIN C. BOYER S-2675 HEWITT WI LAND SURVEYOR

THIS PLAT AND RELOCATION ORDER ARE APPROVED FOR THE WISCONSIN DEPARTMENT OF TRANSPORTATAION NW REGION - SUPERIOR OFFICE

SIGNATURE: Aaron Gustafson DATE:5/20/2024
PRINT NAME: AARON GUSTAFSON

FILE NAME : P:\55XX\5508.DP.22.STH35-48.PLK\CADDS\8010080\SHEETS\TPP\040101-RP.DWG
APPRAISAL PLAT DATE : 05/20/2024
PLOT SCALE :
PLOT NAME : Michaela Galganski
PLOT BY : 5/28/2024 11:48 AM
PLOT DATE :
PLOT DATE :
8010-01-24-4.01

COMPOSITE DRAWING, ORIGINAL ON FILE AT COUNTY REGISTER OF DEEDS

TRANSPORTATION PROJECT PLAT NO: 8010-01-24 - 4.02

THAT PART OF THE NE1/4 OF THE NE1/4 OF SECTION 17, AND PART OF THE NW1/4 OF THE NW1/4 OF SECTION 16, ALL LOCATED IN TOWNSHIP 36 NORTH, RANGE 17 WEST, TOWN OF LUCK, POLK COUNTY, WISCONSIN.

RELOCATION ORDER - STH 35, LUCK-SIREN (STH 48 E TO POLK STREET), POLK COUNTY

TO PROPERLY ESTABLISH, LAY OUT, WIDEN, ENLARGE, EXTEND, CONSTRUCT, RECONSTRUCT, IMPROVE, OR MAINTAIN A PORTION OF THE HIGHWAY DESIGNATED ABOVE, THE STATE OF WISCONSIN DEPARTMENT OF TRANSPORTATION DEEMS IT NECESSARY TO RELOCATE OR CHANGE SAID HIGHWAY AND ACQUIRE CERTAIN LANDS AND INTERESTS OR RIGHTS IN LANDS FOR THE ABOVE PROJECT.

TO EFFECT THIS CHANGE, PURSUANT TO AUTHORITY GRANTED UNDER SECTION 84.02 (3), 84.09, AND 84.30, WISCONSIN STATUTES, THE DEPARTMENT OF TRANSPORTATION HEREBY ORDERS THAT:
1. THAT PORTION OF SAID HIGHWAY AS SHOWN ON THIS PLAT IS LAID OUT AND ESTABLISHED TO THE LINES AND WIDTHS AS SO SHOWN FOR THE ABOVE PROJECT.
2. THE LANDS OR INTERESTS OR RIGHTS IN LANDS AS SHOWN ON THIS PLAT ARE REQUIRED BY THE DEPARTMENT FOR THE ABOVE PROJECT AND SHALL BE ACQUIRED IN THE NAME OF THE STATE OF WISCONSIN, PURSUANT TO THE PROVISIONS OF SECTION 84.09 (1) OR (2), WISCONSIN STATUTES.

LOCATION SKETCH NOT TO SCALE

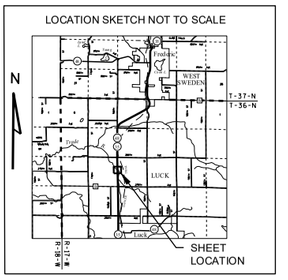

Doc # 926088
Envelope #: 3498
Polk County, Wisconsin
Sally L. Spanel, Register of Deed
PLAT FEE: 25.00
Total: 25.00
RECORDED ON: 05/24/2024 11:10 AM
PAGES: 1
Document Electronically Recorded

86

8010-01-24-4.02

RESERVED FOR REGISTER OF DEEDS.
PROJECT NUMBER 8010-01-24-4.02
AMENDMENT NO:___

NOTES:

POSITIONS SHOWN ON THIS PLAT ARE WISCONSIN COORDINATE REFERENCE SYSTEM COORDINATES (WISCRS), POLK COUNTY, NAD83 (2011), IN U.S. SURVEY FEET. VALUES ARE GRID COORDINATES, GRID BEARINGS, AND GRID DISTANCES. GRID DISTANCES MAY BE USED AS GROUND DISTANCES.

ALL NEW RIGHT-OF-WAY MONUMENTS WILL BE TYPE 2 (TYPICALLY 3/4" X 24" IRON REBARS), UNLESS OTHERWISE NOTED, AND WILL BE PLACED PRIOR TO THE COMPLETION OF THE PROJECT.

ALL RIGHT-OF-WAY LINES DEPICTED IN THE NON-ACQUISITION AREAS ARE INTENDED TO RE-ESTABLISH EXISTING RIGHT-OF-WAY LINES AS DETERMINED FROM PREVIOUS PROJECTS, OTHER RECORDED DOCUMENTS, CENTERLINE OF EXISTING PAVEMENTS AND/OR EXISTING OCCUPATIONAL LINES.

RIGHT-OF-WAY BOUNDARIES ARE DEFINED WITH COURSES OF THE PERIMETER OF THE HIGHWAY LANDS REFERENCED TO THE U.S. PUBLIC LAND SURVEY SYSTEM OR OTHER "SURVEYS" OF PUBLIC RECORD.

DIMENSIONING FOR THE NEW RIGHT-OF-WAY IS MEASURED ALONG AND PERPENDICULAR TO THE NEW REFERENCE LINES.

A TEMPORARY LIMITED EASEMENT (TLE) IS A RIGHT FOR CONSTRUCTION PURPOSES, AS DEFINED HEREIN, INCLUDING THE RIGHT TO OPERATE NECESSARY EQUIPMENT THEREON, THE RIGHT OF INGRESS AND EGRESS, AS LONG AS REQUIRED FOR SUCH PUBLIC PURPOSE, INCLUDING THE RIGHT TO PRESERVE, PROTECT, REMOVE, OR PLANT THEREON ANY VEGETATION THAT THE HIGHWAY AUTHORITIES MAY DEEM DESIRABLE. ALL (TLEs) ON THIS PLAT EXPIRE AT THE COMPLETION OF THE CONSTRUCTION PROJECT FOR WHICH THIS INSTRUMENT IS GIVEN.

AN EASEMENT FOR HIGHWAY PURPOSES (HE), AS LONG AS SO USED, INCLUDING THE RIGHT TO PRESERVE, PROTECT, REMOVE, OR PLANT THEREON ANY VEGETATION THAT THE HIGHWAY AUTHORITIES MAY DEEM DESIRABLE.

PROPERTY LINES SHOWN ON THIS PLAT FOR PROPERTIES BEING IMPACTED ARE DRAWN FROM DATA DERIVED FROM FILED/RECORDED MAPS AND DOCUMENTS OF PUBLIC RECORD. THIS PLAT MAY NOT BE A TRUE REPRESENTATION OF EXISTING PROPERTY LINES, EXCLUDING RIGHT-OF-WAY, AND SHOULD NOT BE USED AS A SUBSTITUTE FOR AN ACCURATE FIELD SURVEY.

EXISTING HIGHWAY RIGHT-OF-WAY SHOWN HEREIN IS BASED ON THE FOLLOWING POINTS OF REFERENCE FOR STH 35/48: FEDERAL AID PROJECT 407G, R/W PLAT 8556, R/W PLAT 8010-06-21, AND EXISTING CENTERLINE.

FOR THE CURRENT ACCESS/DRIVEWAY INFORMATION, CONTACT THE PLANNING UNIT OF THE WISCONSIN DEPARTMENT OF TRANSPORTATION OFFICE IN SUPERIOR, WI.

PARCEL AND UTILITY IDENTIFICATION NUMBERS MAY NOT POINT TO ALL AREAS OF ACQUISITION, AS NOTED ON THE TPP DETAIL PAGES.

ALL TLES ARE FOR SLOPE GRADING PURPOSES

SCALE, FEET
0 20 40

GN

CONVENTIONAL SYMBOLS

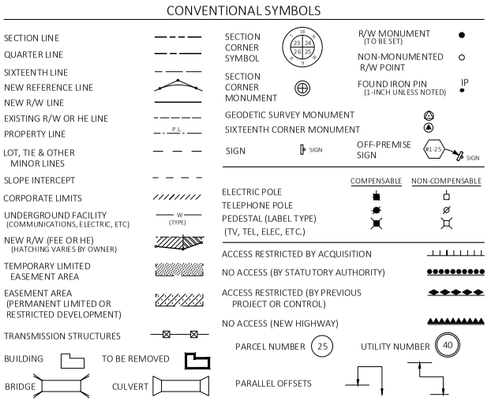

CONVENTIONAL ABBREVIATIONS

ACCESS RIGHTS	AR	POINT OF COMPOUND CURVE	PCC
ACRES	AC	POINT OF INTERSECTION	PI
AHEAD	AH	PROPERTY LINE	PL
ALUMINUM	ALUM	RECORDED AS	(100')
AND OTHERS	ET AL	REEL / IMAGE	R/I
BACK	BK	REFERENCE LINE	R/L
BLOCK	BLK	REMAINING	REM
CENTERLINE	C/L	RESTRICTIVE DEVELOPMENT EASEMENT	RDE
CERTIFIED SURVEY MAP	CSM	RIGHT	RT
CONCRETE	CONC	RIGHT OF WAY	R/W
COUNTY	CO	SECTION	SEC
COUNTY TRUNK HIGHWAY	CTH	SEPTIC VENT	SEPV
DISTANCE	DIST	SQUARE FEET	SF
CORNER	COR	STATE TRUNK HIGHWAY	STH
DOCUMENT NUMBER	DOC	STATION	STA
EASEMENT	EASE	TELEPHONE PEDESTAL	TP
EXISTING	EX	TEMPORARY LIMITED EASEMENT	TLE
GAS VALVE	GV	TRANSPORTATION PROJECT PLAT	TPP
GRID NORTH	GN	UNITED STATES HIGHWAY	USH
HIGHWAY EASEMENT	HE	VOLUME	V
IDENTIFICATION	ID		
LAND CONTRACT	LC		
LEFT	LT		
MONUMENT	MON		
NATIONAL GEODETIC SURVEY	NGS		
NUMBER	NO		
OUTLOT	OL		
PAGE	P		
POINT OF TANGENCY	PT		
PERMANENT LIMITED EASEMENT	PLE		
POINT OF BEGINNING	POB		
POINT OF CURVATURE	PC		

CURVE DATA ABBREVIATIONS

LONG CHORD	LCH
LONG CHORD BEARING	LCB
RADIUS	R
DEGREE OF CURVE	D
CENTRAL ANGLE	Δ/DELTA
LENGTH OF CURVE	L
TANGENT	T
DIRECTION AHEAD	DA
DIRECTION BACK	DB

CONVENTIONAL UTILITY SYMBOLS

WATER	W
GAS	G
TELEPHONE	T
OVERHEAD TRANSMISSION LINES	OH
ELECTRIC	E
CABLE TELEVISION	TV
FIBER OPTIC	FO
SANITARY SEWER	SAN
STORM SEWER	SS
ELECTRIC TOWER	

STATION & OFFSET TABLE		
POINT NO.	STATION	OFFSET
2000	876+54.00	2.06'
2001	876+54.00	0.00'
2002	876+54.00	55.00'
2003	875+88.00	55.00'
2004	875+88.00	0.00'
2005	875+88.00	2.20'
PRW2006	875+88.00	50.00'
PRW2007	876+09.00	71.00'
PRW2008	876+32.00	71.00'
PRW2009	876+53.00	50.00'
2010	876+54.00	50.00'

COURSE TABLE		
COURSE	BEARING	DISTANCE
2000-2001	N88° 27' 23"E	2.06'
2001-2002	N88° 27' 23"E	55.00'
2002-2003	S01° 32' 37"E	66.00'
2003-2004	S88° 27' 23"W	55.00'
2004-2005	S88° 27' 23"W	2.20'
2005-PRW2006	S88° 27' 23"W	47.80'
PRW2006-PRW2007	N46° 32' 49"W	29.70'
PRW2007-PRW2008	N01° 32' 37"W	23.00'
PRW2008-PRW2009	N43° 27' 11"E	29.70'
PRW2009-2010	N01° 32' 37"W	1.00'
2010-2000	N88° 27' 23"E	47.94'

TLE STATION & OFFSET TABLE		
POINT NO.	STATION	OFFSET
TLE2100	876+54.00	63.00'
TLE2101	875+92.00	63.00'
TLE2102	875+92.00	55.00'

TOWN

T 36 N, R 17 W, Sec 8, 9, 16, 17

FOUND SURVEY NAIL
Y = 347051.644
X = 501819.862

TAX ID: 0036-00378-0000

NW/NW

NE/NE

SOUTH BRANCH TRADE RIVER

LUCK

TAX ID: 036-00359-0000

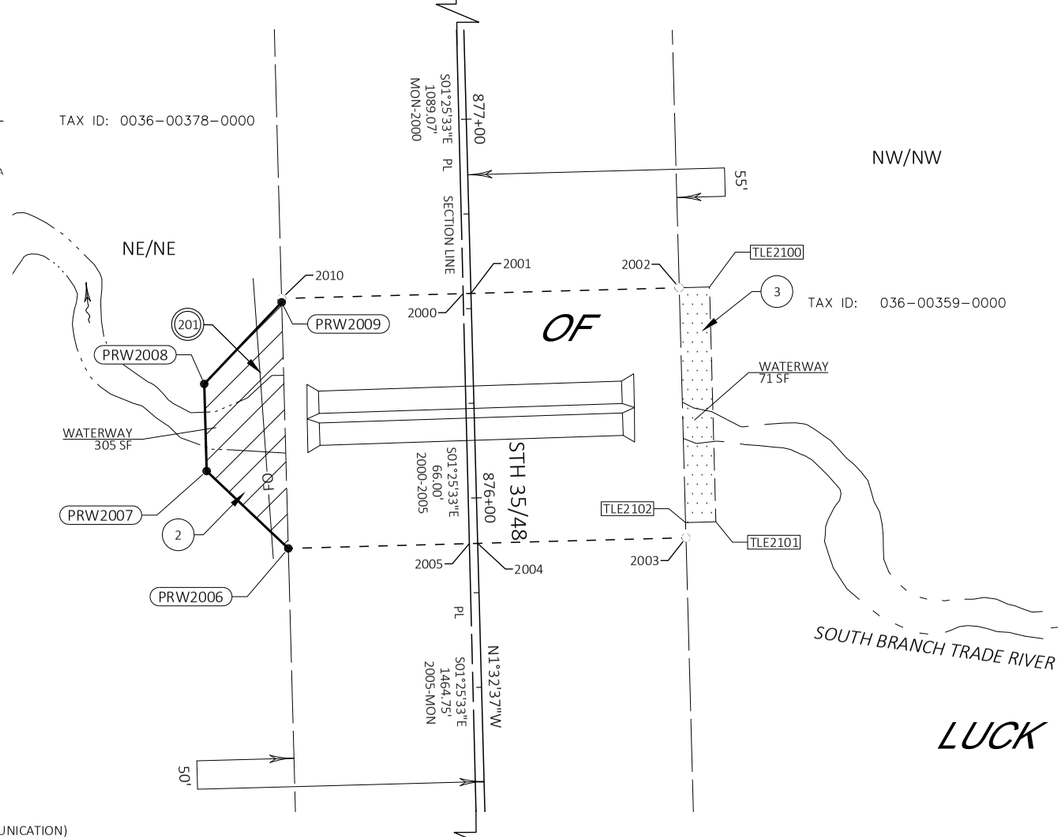

FOUND SURVEY NAIL
Y = 344432.636
X = 501885.056

(201) LAKELAND TELECOM INC (COMMUNICATION)
DOC. 346207 - PAR. 3
DOC. 514173 - PAR. 3
DOC. 841544 - PAR. 2

(202) BRIGHTSPEED OF NORTHWEST WISCONSIN, LLC (COMMUNICATION)
DOC. 116927A - PAR. 2

(203) POLK-BURNETT ELECTRIC COOPERATIVE (ELECTRIC)
DOC. 216081 - PAR. 2
DOC. 371540 - PAR. 2
DOC. 216068 - PAR. 3

(206) NORTHERN STATES POWER COMPANY, A WISCONSIN CORPORATION (ELECTRIC)
DOC. 823090 - PAR. 2
DOC. 546745 - PAR. 3

(207) DAIRYLAND POWER COOPERATIVE (ELECTRIC)
DOC. 302882 - PAR. 3

UTILITY INTERESTS REQUIRED

UTILITY NUMBER	OWNER(S)	INTEREST REQUIRED
201	LAKELAND TELECOM INC (COMMUNICATION)	RELEASE OF RIGHTS
202	BRIGHTSPEED OF NORTHWEST WISCONSIN, LLC (COMMUNICATION)	RELEASE OF RIGHTS
203	POLK-BURNETT ELECTRIC COOPERATIVE (ELECTRIC)	RELEASE OF RIGHTS
206	NORTHERN STATES POWER COMPANY, A WISCONSIN CORPORATION (ELECTRIC)	RELEASE OF RIGHTS
207	DAIRYLAND POWER COOPERATIVE (ELECTRIC)	RELEASE OF RIGHTS

SCHEDULE OF LANDS & INTERESTS REQUIRED

OWNER'S NAMES ARE SHOWN FOR REFERENCE PURPOSES ONLY AND ARE SUBJECT TO CHANGE PRIOR TO THE TRANSFER OF LAND INTERESTS TO THE DEPARTMENT.

PARCEL NUMBER	OWNERS	INTERESTS REQUIRED	FEE SF REQUIRED NEW	EXISTING	TOTAL	HE SF	TLE SF
2	JOSHUA W. KELCH AND SHANNON I. KELCH	HE	---	---	---	923	---
3	WESLEY ANDERSON AND MARIE ANDERSON, HUSBAND AND WIFE AS SURVIVORSHIP MARITAL PROPERTY	TLE	---	---	---	---	496

emcs

I,KEVIN C. BOYER PROFESSIONAL LAND SURVEYOR, HEREBY CERTIFY THAT IN FULL COMPLIANCE WITH THE PROVISIONS OF SECTION 84.095 OF THE WISCONSIN STATUTES AND UNDER THE DIRECTION OF THE DEPARTMENT OF TRANSPORTATION, I HAVE SURVEYED AND MAPPED THIS TRANSPORTATION PROJECT PLAT AND SUCH PLAT CORRECTLY REPRESENTS ALL EXTERIOR BOUNDARIES OF THE SURVEYED LAND.

WISCONSIN KEVIN C. BOYER S-2675 HEWITT WI LAND SURVEYOR

SIGNATURE: Kevin C. Boyer DATE:5/20/2024
PRINT NAME: KEVIN C. BOYER
REGISTRATION NUMBER: S-2675

THIS PLAT AND RELOCATION ORDER ARE APPROVED FOR THE WISCONSIN DEPARTMENT OF TRANSPORTATAION NW REGION - SUPERIOR OFFICE

SIGNATURE: Aaron Gustafson DATE:5/20/2024
PRINT NAME: AARON GUSTAFSON

FILE NAME : P:\55XX\5508.DP.22.STH35-48.PLK\CADDS\8010080\SHEETS\TPP\040101-RP.DWG
APPRAISAL PLAT DATE : 05/20/2024
PLOT DATE : 5/28/2024 11:48 AM
PLOT BY : Michaela Galganski
PLOT NAME :
PLOT SCALE :
PLOT DATE :

COMPOSITE DRAWING, ORIGINAL ON FILE AT COUNTY REGISTER OF DEEDS

TRANSPORTATION PROJECT PLAT NO: 8010-01-24 - 4.03

THAT PART OF THE NE1/4 OF THE NE1/4 OF SECTION 17, TOWNSHIP 36 NORTH, RANGE 17 WEST, TOWN OF LUCK, POLK COUNTY, WISCONSIN.

RELOCATION ORDER - STH 35, LUCK-SIREN (STH 48 E TO POLK STREET), POLK COUNTY

TO PROPERLY ESTABLISH, LAY OUT, WIDEN, ENLARGE, EXTEND, CONSTRUCT, RECONSTRUCT, IMPROVE, OR MAINTAIN A PORTION OF THE HIGHWAY DESIGNATED ABOVE, THE STATE OF WISCONSIN DEPARTMENT OF TRANSPORTATION DEEMS IT NECESSARY TO RELOCATE OR CHANGE SAID HIGHWAY AND ACQUIRE CERTAIN LANDS AND INTERESTS OR RIGHTS IN LANDS FOR THE ABOVE PROJECT.

TO EFFECT THIS CHANGE, PURSUANT TO AUTHORITY GRANTED UNDER SECTION 84.02 (3), 84.09, AND 84.30, WISCONSIN STATUTES, THE DEPARTMENT OF TRANSPORTATION HEREBY ORDERS THAT:
1. THAT PORTION OF SAID HIGHWAY AS SHOWN ON THIS PLAT IS LAID OUT AND ESTABLISHED TO THE LINES AND WIDTHS AS SO SHOWN FOR THE ABOVE PROJECT.
2. THE LANDS OR INTERESTS OR RIGHTS IN LANDS AS SHOWN ON THIS PLAT ARE REQUIRED BY THE DEPARTMENT FOR THE ABOVE PROJECT AND SHALL BE ACQUIRED IN THE NAME OF THE STATE OF WISCONSIN, PURSUANT TO THE PROVISIONS OF SECTION 84.09 (1) OR (2), WISCONSIN STATUTES.

LOCATION SKETCH NOT TO SCALE

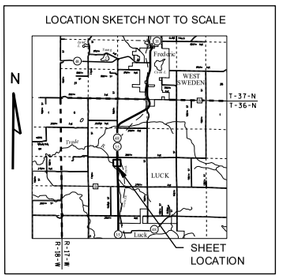

Doc # 926089
Envelope #: 350A
Polk County, Wisconsin
Sally L. Spanel, Register of Deeds
PLAT FEE: 25.00
Total: 25.00
RECORDED ON: 05/24/2024 11:11 AM
PAGES: 1
Document Electronically Recorded

87

RESERVED FOR REGISTER OF DEEDS
PROJECT NUMBER 8010-01-24-4.03
AMENDMENT NO:___

8010-01-24-4.03

NOTES:

POSITIONS SHOWN ON THIS PLAT ARE WISCONSIN COORDINATE REFERENCE SYSTEM COORDINATES (WISCRS), POLK COUNTY, NAD83 (2011), IN U.S. SURVEY FEET. VALUES ARE GRID COORDINATES, GRID BEARINGS, AND GRID DISTANCES. GRID DISTANCES MAY BE USED AS GROUND DISTANCES.

ALL NEW RIGHT-OF-WAY MONUMENTS WILL BE TYPE 2 (TYPICALLY 3/4" X 24" IRON REBARS), UNLESS OTHERWISE NOTED, AND WILL BE PLACED PRIOR TO THE COMPLETION OF THE PROJECT.

ALL RIGHT-OF-WAY LINES DEPICTED IN THE NON-ACQUISITION AREAS ARE INTENDED TO RE-ESTABLISH EXISTING RIGHT-OF-WAY LINES AS DETERMINED FROM PREVIOUS PROJECTS, OTHER RECORDED DOCUMENTS, CENTERLINE OF EXISTING PAVEMENTS AND/OR EXISTING OCCUPATIONAL LINES.

RIGHT-OF-WAY BOUNDARIES ARE DEFINED WITH COURSES OF THE PERIMETER OF THE HIGHWAY LANDS REFERENCED TO THE U.S. PUBLIC LAND SURVEY SYSTEM OR OTHER "SURVEYS" OF PUBLIC RECORD.

DIMENSIONING FOR THE NEW RIGHT-OF-WAY IS MEASURED ALONG AND PERPENDICULAR TO THE NEW REFERENCE LINES.

AN EASEMENT FOR HIGHWAY PURPOSES (HE), AS LONG AS SO USED, INCLUDING THE RIGHT TO PRESERVE, PROTECT, REMOVE, OR PLANT THEREON ANY VEGETATION THAT THE HIGHWAY AUTHORITIES MAY DEEM DESIRABLE.

PROPERTY LINES SHOWN ON THIS PLAT FOR PROPERTIES BEING IMPACTED ARE DRAWN FROM DATA DERIVED FROM FILED/RECORDED MAPS AND DOCUMENTS OF PUBLIC RECORD. THIS PLAT MAY NOT BE A TRUE REPRESENTATION OF EXISTING PROPERTY LINES, EXCLUDING RIGHT-OF-WAY, AND SHOULD NOT BE USED AS A SUBSTITUTE FOR AN ACCURATE FIELD SURVEY.

EXISTING HIGHWAY RIGHT-OF-WAY SHOWN HEREIN IS BASED ON THE FOLLOWING POINTS OF REFERENCE FOR STH 35/48: FEDERAL AID PROJECT 407G, R/W PLAT 8556, R/W PLAT 8010-06-21, AND EXISTING CENTERLINE.

FOR THE CURRENT ACCESS/DRIVEWAY INFORMATION, CONTACT THE PLANNING UNIT OF THE WISCONSIN DEPARTMENT OF TRANSPORTATION OFFICE IN SUPERIOR, WI.

PARCEL AND UTILITY IDENTIFICATION NUMBERS MAY NOT POINT TO ALL AREAS OF ACQUISITION, AS NOTED ON THE TPP DETAIL PAGES.

GN

SCALE, FEET
0 20 40

CONVENTIONAL SYMBOLS

SECTION LINE
QUARTER LINE
SIXTEENTH LINE
NEW REFERENCE LINE
NEW R/W LINE
EXISTING R/W OR HE LINE
PROPERTY LINE
LOT, TIE & OTHER MINOR LINES
SLOPE INTERCEPT
CORPORATE LIMITS
UNDERGROUND FACILITY (COMMUNICATIONS, ELECTRIC, ETC)
NEW R/W (FEE OR HE) (HATCHING VARIES BY OWNER)
TEMPORARY LIMITED EASEMENT AREA
EASEMENT AREA (PERMANENT LIMITED OR RESTRICTED DEVELOPMENT)
TRANSMISSION STRUCTURES
BUILDING TO BE REMOVED
BRIDGE CULVERT

SECTION CORNER SYMBOL
SECTION CORNER MONUMENT
R/W MONUMENT (TO BE SET)
NON-MONUMENTED R/W POINT
FOUND IRON PIN (1-INCH UNLESS NOTED) IP
GEODETIC SURVEY MONUMENT
SIXTEENTH CORNER MONUMENT
SIGN
OFF-PREMISE SIGN

	COMPENSABLE	NON-COMPENSABLE
ELECTRIC POLE		
TELEPHONE POLE		
PEDESTAL (LABEL TYPE) (TV, TEL, ELEC, ETC.)		

ACCESS RESTRICTED BY ACQUISITION
NO ACCESS (BY STATUTORY AUTHORITY)
ACCESS RESTRICTED (BY PREVIOUS PROJECT OR CONTROL)
NO ACCESS (NEW HIGHWAY)
PARCEL NUMBER 25 UTILITY NUMBER 40
PARALLEL OFFSETS

CONVENTIONAL ABBREVIATIONS

ACCESS RIGHTS	AR	POINT OF COMPOUND CURVE	PCC
ACRES	AC	POINT OF INTERSECTION	PI
AHEAD	AH	PROPERTY LINE	PL
ALUMINUM	ALUM	RECORDED AS	(100')
AND OTHERS	ET AL	REEL / IMAGE	R/I
BACK	BK	REFERENCE LINE	R/L
BLOCK	BLK	REMAINING	REM
CENTERLINE	C/L	RESTRICTIVE DEVELOPMENT EASEMENT	RDE
CERTIFIED SURVEY MAP	CSM	RIGHT	RT
CONCRETE	CONC	RIGHT OF WAY	R/W
COUNTY	CO	SECTION	SEC
COUNTY TRUNK HIGHWAY	CTH	SEPTIC VENT	SEPV
DISTANCE	DIST	SQUARE FEET	SF
CORNER	COR	STATE TRUNK HIGHWAY	STH
DOCUMENT NUMBER	DOC	STATION	STA
EASEMENT	EASE	TELEPHONE PEDESTAL	TP
EXISTING	EX	TEMPORARY LIMITED EASEMENT	TLE
GAS VALVE	GV	TRANSPORTATION PROJECT PLAT	TPP
GRID NORTH	GN	UNITED STATES HIGHWAY	USH
HIGHWAY EASEMENT	HE	VOLUME	V
IDENTIFICATION	ID		
LAND CONTRACT	LC		
LEFT	LT		
MONUMENT	MON		
NATIONAL GEODETIC SURVEY	NGS		
NUMBER	NO		
OUTLOT	OL		
PAGE	P		
POINT OF TANGENCY	PT		
PERMANENT LIMITED EASEMENT	PLE		
POINT OF BEGINNING	POB		
POINT OF CURVATURE	PC		

CURVE DATA ABBREVIATIONS

LONG CHORD	LCH
LONG CHORD BEARING	LCB
RADIUS	R
DEGREE OF CURVE	D
CENTRAL ANGLE	Δ/DELTA
LENGTH OF CURVE	L
TANGENT	T
DIRECTION AHEAD	DA
DIRECTION BACK	DB

CONVENTIONAL UTILITY SYMBOLS

WATER — W
GAS — G
TELEPHONE — T
OVERHEAD TRANSMISSION LINES — OH
ELECTRIC — E
CABLE TELEVISION — TV
FIBER OPTIC — FO
SANITARY SEWER — SAN
STORM SEWER — SS
ELECTRIC TOWER

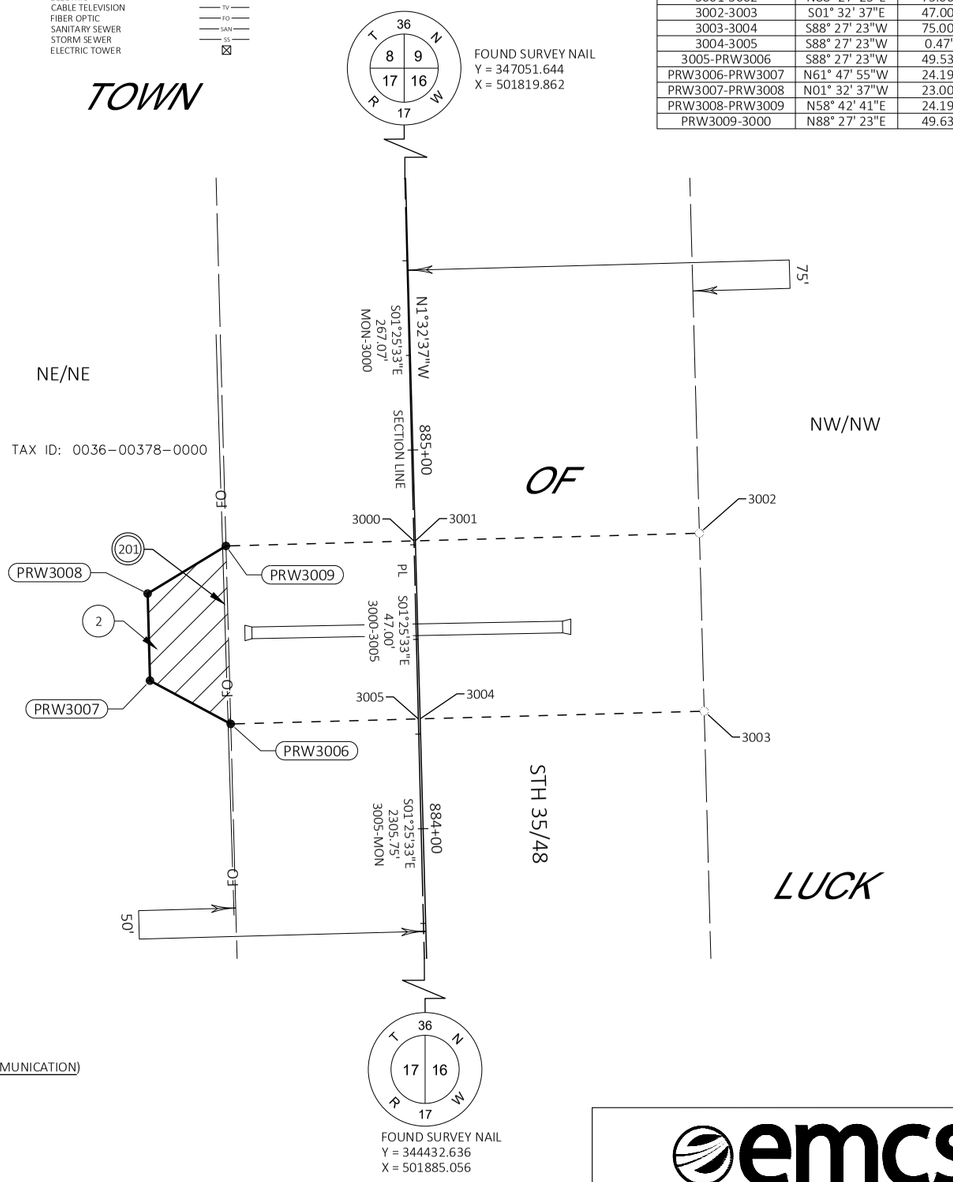

COURSE TABLE		
COURSE	BEARING	DISTANCE
3000-3001	N88° 27' 23"E	0.37'
3001-3002	N88° 27' 23"E	75.00'
3002-3003	S01° 32' 37"E	47.00'
3003-3004	S88° 27' 23"W	75.00'
3004-3005	S88° 27' 23"W	0.47'
3005-PRW3006	S88° 27' 23"W	49.53'
PRW3006-PRW3007	N61° 47' 55"W	24.19'
PRW3007-PRW3008	N01° 32' 37"W	23.00'
PRW3008-PRW3009	N58° 42' 41"E	24.19'
PRW3009-3000	N88° 27' 23"E	49.63'

STATION & OFFSET TABLE		
POINT NO.	STATION	OFFSET
3000	884+76.00	0.37'
3001	884+76.00	0.00'
3002	884+76.00	75.00'
3003	884+29.00	75.00'
3004	884+29.00	0.00'
3005	884+29.00	0.47'
PRW3006	884+29.00	50.00'
PRW3007	884+41.00	71.00'
PRW3008	884+64.00	71.00'
PRW3009	884+76.00	50.00'

201 LAKELAND TELECOM INC (COMMUNICATION)
DOC. 841544 - PAR. 2

202 BRIGHTSPEED OF NORTHWEST WISCONSIN, LLC (COMMUNICATION)
DOC. 116927A - PAR. 2

203 POLK-BURNETT ELECTRIC COOPERATIVE (ELECTRIC)
DOC. 216081 - PAR. 2
DOC. 371540 - PAR. 2

UTILITY INTERESTS REQUIRED

UTILITY NUMBER	OWNER(S)	INTEREST REQUIRED
201	LAKELAND TELECOM INC (COMMUNICATION)	RELEASE OF RIGHTS
202	BRIGHTSPEED OF NORTHWEST WISCONSIN, LLC (COMMUNICATION)	RELEASE OF RIGHTS
203	POLK-BURNETT ELECTRIC COOPERATIVE (ELECTRIC)	RELEASE OF RIGHTS

SCHEDULE OF LANDS & INTERESTS REQUIRED

OWNER'S NAMES ARE SHOWN FOR REFERENCE PURPOSES ONLY AND ARE SUBJECT TO CHANGE PRIOR TO THE TRANSFER OF LAND INTERESTS TO THE DEPARTMENT.

PARCEL NUMBER	OWNERS	INTERESTS REQUIRED	FEE SF REQUIRED NEW	EXISTING	TOTAL	HE SF
2	JOSHUA W. KELCH AND SHANNON I. KELCH	HE	---	---	---	735

emcs

I,KEVIN C. BOYER PROFESSIONAL LAND SURVEYOR, HEREBY CERTIFY THAT IN FULL COMPLIANCE WITH THE PROVISIONS OF SECTION 84.095 OF THE WISCONSIN STATUTES AND UNDER THE DIRECTION OF THE DEPARTMENT OF TRANSPORTATION, I HAVE SURVEYED AND MAPPED THIS TRANSPORTATION PROJECT PLAT AND SUCH PLAT CORRECTLY REPRESENTS ALL EXTERIOR BOUNDARIES OF THE SURVEYED LAND.

WISCONSIN KEVIN C. BOYER S-2675 HEWITT WI LAND SURVEYOR

SIGNATURE: Kevin C. Boyer DATE: 5/20/2024
PRINT NAME: KEVIN C. BOYER
REGISTRATION NUMBER: S-2675

THIS PLAT AND RELOCATION ORDER ARE APPROVED FOR THE WISCONSIN DEPARTMENT OF TRANSPORTATAION NW REGION - SUPERIOR OFFICE

SIGNATURE: Aaron Gustafson DATE: 5/20/2024
PRINT NAME: AARON GUSTAFSON

PLOT SCALE :
PLOT NAME :
PLOT BY : Michaela Galganski
PLOT DATE : 5/28/2024 11:49 AM
PLOT DATE :
PLOT DATE :
FILE NAME : P:\55XX\5508.DP.22.STH35-48.PLK\CADDS\8010080\SHEETS\TPP\040101-RP.DWG
APPRAISAL PLAT DATE : 05/20/2024

COMPOSITE DRAWING, ORIGINAL ON FILE AT COUNTY REGISTER OF DEEDS

TRANSPORTATION PROJECT PLAT NO: 8010-01-24 - 4.04

THAT PART OF THE SW1/4 OF THE SW1/4 OF SECTION 4, TOWNSHIP 36 NORTH, RANGE 17 WEST, TOWN OF LUCK, POLK COUNTY, WISCONSIN.

RELOCATION ORDER - STH 35, LUCK-SIREN (STH 48 E TO POLK STREET), POLK COUNTY

TO PROPERLY ESTABLISH, LAY OUT, WIDEN, ENLARGE, EXTEND, CONSTRUCT, RECONSTRUCT, IMPROVE, OR MAINTAIN A PORTION OF THE HIGHWAY DESIGNATED ABOVE, THE STATE OF WISCONSIN DEPARTMENT OF TRANSPORTATION DEEMS IT NECESSARY TO RELOCATE OR CHANGE SAID HIGHWAY AND ACQUIRE CERTAIN LANDS AND INTERESTS OR RIGHTS IN LANDS FOR THE ABOVE PROJECT.

TO EFFECT THIS CHANGE, PURSUANT TO AUTHORITY GRANTED UNDER SECTION 84.02 (3), 84.09, AND 84.30, WISCONSIN STATUTES, THE DEPARTMENT OF TRANSPORTATION HEREBY ORDERS THAT:
1. THAT PORTION OF SAID HIGHWAY AS SHOWN ON THIS PLAT IS LAID OUT AND ESTABLISHED TO THE LINES AND WIDTHS AS SO SHOWN FOR THE ABOVE PROJECT.
2. THE LANDS OR INTERESTS OR RIGHTS IN LANDS AS SHOWN ON THIS PLAT ARE REQUIRED BY THE DEPARTMENT FOR THE ABOVE PROJECT AND SHALL BE ACQUIRED IN THE NAME OF THE STATE OF WISCONSIN, PURSUANT TO THE PROVISIONS OF SECTION 84.09 (1) OR (2), WISCONSIN STATUTES.

NOTES:

POSITIONS SHOWN ON THIS PLAT ARE WISCONSIN COORDINATE REFERENCE SYSTEM COORDINATES (WISCRS), POLK COUNTY, NAD83 (2011), IN U.S. SURVEY FEET. VALUES ARE GRID COORDINATES, GRID BEARINGS, AND GRID DISTANCES. GRID DISTANCES MAY BE USED AS GROUND DISTANCES.

ALL NEW RIGHT-OF-WAY MONUMENTS WILL BE TYPE 2 (TYPICALLY 3/4" X 24" IRON REBARS), UNLESS OTHERWISE NOTED, AND WILL BE PLACED PRIOR TO THE COMPLETION OF THE PROJECT.

ALL RIGHT-OF-WAY LINES DEPICTED IN THE NON-ACQUISITION AREAS ARE INTENDED TO RE-ESTABLISH EXISTING RIGHT-OF-WAY LINES AS DETERMINED FROM PREVIOUS PROJECTS, OTHER RECORDED DOCUMENTS, CENTERLINE OF EXISTING PAVEMENTS AND/OR EXISTING OCCUPATIONAL LINES.

RIGHT-OF-WAY BOUNDARIES ARE DEFINED WITH COURSES OF THE PERIMETER OF THE HIGHWAY LANDS REFERENCED TO THE U.S. PUBLIC LAND SURVEY SYSTEM OR OTHER "SURVEYS" OF PUBLIC RECORD.

DIMENSIONING FOR THE NEW RIGHT-OF-WAY IS MEASURED ALONG AND PERPENDICULAR TO THE NEW REFERENCE LINES.

AN EASEMENT FOR HIGHWAY PURPOSES (HE), AS LONG AS SO USED, INCLUDING THE RIGHT TO PRESERVE, PROTECT, REMOVE, OR PLANT THEREON ANY VEGETATION THAT THE HIGHWAY AUTHORITIES MAY DEEM DESIRABLE.

PROPERTY LINES SHOWN ON THIS PLAT FOR PROPERTIES BEING IMPACTED ARE DRAWN FROM DATA DERIVED FROM FILED/RECORDED MAPS AND DOCUMENTS OF PUBLIC RECORD. THIS PLAT MAY NOT BE A TRUE REPRESENTATION OF EXISTING PROPERTY LINES, EXCLUDING RIGHT-OF-WAY, AND SHOULD NOT BE USED AS A SUBSTITUTE FOR AN ACCURATE FIELD SURVEY.

EXISTING HIGHWAY RIGHT-OF-WAY SHOWN HEREIN IS BASED ON THE FOLLOWING POINTS OF REFERENCE FOR STH 35/48: FEDERAL AID PROJECT 407G, R/W PLAT 8556, R/W PLAT 8010-06-21, AND EXISTING CENTERLINE.

FOR THE CURRENT ACCESS/DRIVEWAY INFORMATION, CONTACT THE PLANNING UNIT OF THE WISCONSIN DEPARTMENT OF TRANSPORTATION OFFICE IN SUPERIOR, WI.

PARCEL AND UTILITY IDENTIFICATION NUMBERS MAY NOT POINT TO ALL AREAS OF ACQUISITION, AS NOTED ON THE TPP DETAIL PAGES.

LOCATION SKETCH NOT TO SCALE

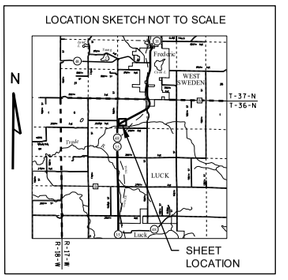

Doc # 926090
Envelope #: 3508
Polk County, Wisconsin
Sally L. Spanel, Register of Deed
PLAT FEE: 25.00
Total: 25.00
RECORDED ON: 05/24/2024 11:12 AM
PAGES: 1
Document Electronically Recorded

88

RESERVED FOR REGISTER OF DEEDS
PROJECT NUMBER 8010-01-24-4.04
AMENDMENT NO:___

8010-01-24-4.04

SCALE, FEET
0 20 40

GN

CONVENTIONAL SYMBOLS

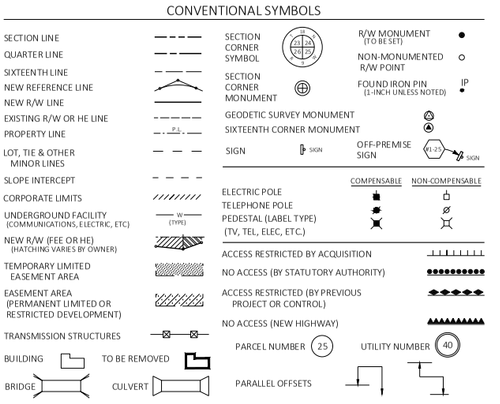

CONVENTIONAL ABBREVIATIONS

ACCESS RIGHTS	AR	POINT OF COMPOUND CURVE	PCC
ACRES	AC	POINT OF INTERSECTION	PI
AHEAD	AH	PROPERTY LINE	PL
ALUMINUM	ALUM	RECORDED AS	(100')
AND OTHERS	ET AL	REEL / IMAGE	R/I
BACK	BK	REFERENCE LINE	R/L
BLOCK	BLK	REMAINING	REM
CENTERLINE	C/L	RESTRICTIVE DEVELOPMENT EASEMENT	RDE
CERTIFIED SURVEY MAP	CSM	RIGHT	RT
CONCRETE	CONC	RIGHT OF WAY	R/W
COUNTY	CO	SECTION	SEC
COUNTY TRUNK HIGHWAY	CTH	SEPTIC VENT	SEPV
DISTANCE	DIST	SQUARE FEET	SF
CORNER	COR	STATE TRUNK HIGHWAY	STH
DOCUMENT NUMBER	DOC	STATION	STA
EASEMENT	EASE	TELEPHONE PEDESTAL	TP
EXISTING	EX	TEMPORARY LIMITED EASEMENT	TLE
GAS VALVE	GV	TRANSPORTATION PROJECT PLAT	TPP
GRID NORTH	GN	UNITED STATES HIGHWAY	USH
HIGHWAY EASEMENT	HE	VOLUME	V
IDENTIFICATION	ID		
LAND CONTRACT	LC		
LEFT	LT		
MONUMENT	MON		
NATIONAL GEODETIC SURVEY NUMBER	NGS NO		
OUTLOT	OL		
PAGE	P		
POINT OF TANGENCY	PT		
PERMANENT LIMITED EASEMENT	PLE		
POINT OF BEGINNING	POB		
POINT OF CURVATURE	PC		

CURVE DATA ABBREVIATIONS

LONG CHORD	LCH
LONG CHORD BEARING	LCB
RADIUS	R
DEGREE OF CURVE	D
CENTRAL ANGLE	Δ/DELTA
LENGTH OF CURVE	L
TANGENT	T
DIRECTION AHEAD	DA
DIRECTION BACK	DB

CONVENTIONAL UTILITY SYMBOLS

WATER	W
GAS	G
TELEPHONE	T
OVERHEAD TRANSMISSION LINES	OH
ELECTRIC	E
CABLE TELEVISION	TV
FIBER OPTIC	FO
SANITARY SEWER	SAN
STORM SEWER	SS
ELECTRIC TOWER	

FOUND 7/8" IRON ROD
W/POLK CO ALUMINUM CAP
Y = 354982.480
X = 501847.540

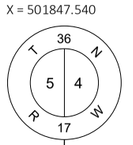

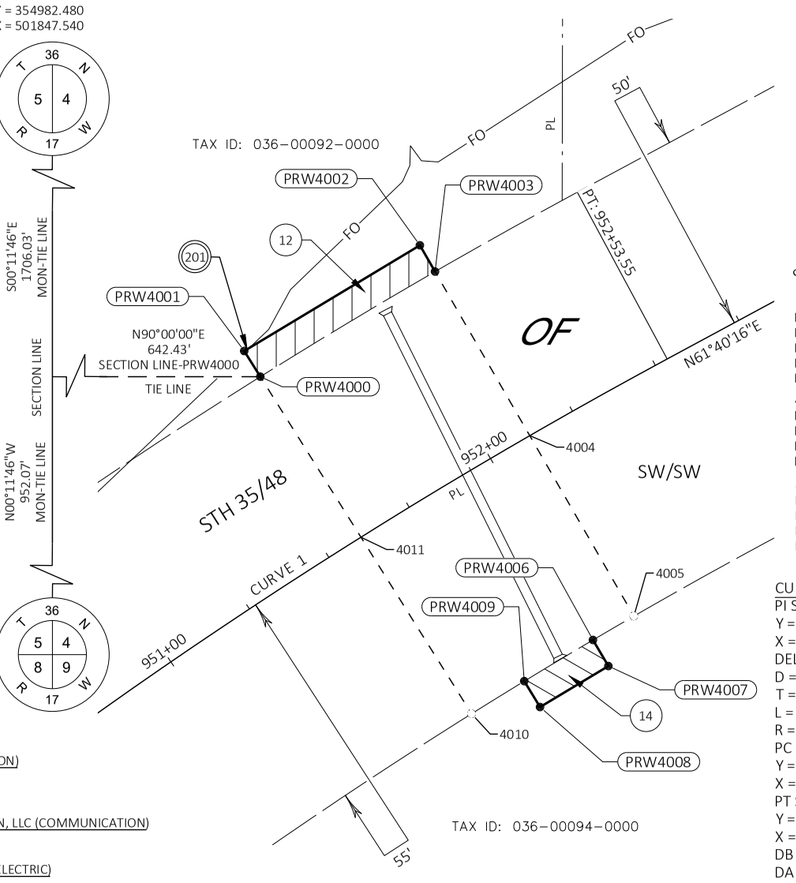

PC-4011
LCB=N29°08'22"E
LCH=1379.68'
L=1439.49'
R=1432.39'

4011-4004
LCB=N58°58'10"E
LCH=52.00'
L=52.00'
R=1432.39'

4004-PT
LCB=N60°50'25"E
LCH=41.54'
L=41.54'
R=1432.39'

CURVE 1
PI STA = 945+69.67
Y = 352878.181
X = 501855.720
DELTA = 61°19'18" RT
D = 4°00'00"
T = 849.17'
L = 1533.04'
R = 1432.39'
PC STA = 937+20.51
Y = 352029.028
X = 501850.541
PT STA = 952+53.55
Y = 353281.138
X = 502603.191
DB = S00°20'58"W
DA = N61°40'16"E

FOUND 7/8" IRON ROD
W/POLK CO ALUMINUM CAP
Y = 352324.398
X = 501856.642

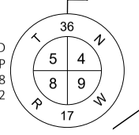

COURSE TABLE

COURSE	BEARING	DISTANCE
PRW4000-PRW4001	N32° 04' 14"W	8.00'
PRW4001-PRW4002	N58° 58' 10"E	54.10'
PRW4002-PRW4003	S29° 59' 26"E	8.00'
PRW4003-4004	S29° 59' 26"E	50.00'
4004-4005	S29° 59' 26"E	55.00'
4005-PRW4006	SEE CURVE DATA	
PRW4006-PRW4007	S30° 30' 38"E	8.00'
PRW4007-PRW4008	S59° 02' 58"W	21.03'
PRW4008-PRW4009	N31° 23' 26"W	8.00'
PRW4009-4010	SEE CURVE DATA	
4010-4011	N32° 04' 14"W	55.00'
4011-PRW4000	N32° 04' 14"W	50.00'

STATION & OFFSET TABLE

POINT NO.	STATION	OFFSET
PRW4000	951+60.00	50.00'
PRW4001	951+60.00	58.00'
PRW4002	952+12.00	58.00'
PRW4003	952+12.00	50.00'
4004	952+12.00	0.000'
4005	952+12.00	55.00'
PRW4006	951+99.00	55.00'
PRW4007	951+99.00	63.00'
PRW4008	951+77.00	63.00'
PRW4009	951+77.00	55.00'
4010	951+60.00	55.00'
4011	951+60.00	0.00'

(201) LAKELAND TELECOM INC (COMMUNICATION)
DOC. 346199 - PAR. 12
DOC. 841547 - PAR. 14

(202) BRIGHTSPEED OF NORTHWEST WISCONSIN, LLC (COMMUNICATION)
DOC. 116923A - PAR. 12 & 14

(203) POLK-BURNETT ELECTRIC COOPERATIVE (ELECTRIC)
DOC. 376491 - PAR. 12
DOC. 683341 - PAR. 14

(205) NORTHERN NATURAL GAS COMPANY (GAS)
~~WISCONSIN GAS LLC D/B/A WE ENERGIES (GAS)~~
DOC. 320600 - PAR. 12
AFFIDAVIT OF CORRECTION DOC. 943095

(206) NORTHERN STATES POWER COMPANY, A WISCONSIN CORPORATION (ELECTRIC)
DOC. 287683 - PAR. 14

4005-PRW4006
LCB=S59°44'58"W
LCH=12.50'
L=12.50'
R=1377.39'

PRW4009-4010
LCB=S58°16'10"W
LCH=16.35'
L=16.35'
R=1377.39'

UTILITY INTERESTS REQUIRED

UTILITY NUMBER	OWNER(S)	INTEREST REQUIRED
201	LAKELAND TELECOM INC (COMMUNICATION)	RELEASE OF RIGHTS
202	BRIGHTSPEED OF NORTHWEST WISCONSIN, LLC (COMMUNICATION)	RELEASE OF RIGHTS
203	POLK-BURNETT ELECTRIC COOPERATIVE (ELECTRIC)	RELEASE OF RIGHTS
205	WISCONSIN GAS LLC D/B/A WE ENERGIES (GAS)	RELEASE OF RIGHTS
206	NORTHERN STATES POWER COMPANY, A WISCONSIN CORPORATION (ELECTRIC)	RELEASE OF RIGHTS

SCHEDULE OF LANDS & INTERESTS REQUIRED

OWNER'S NAMES ARE SHOWN FOR REFERENCE PURPOSES ONLY AND ARE SUBJECT TO CHANGE PRIOR TO THE TRANSFER OF LAND INTERESTS TO THE DEPARTMENT.

PARCEL NUMBER	OWNERS	INTERESTS REQUIRED	FEE SF REQUIRED NEW	EXISTING	TOTAL	HE SF
12	JAMES E. LYNCH	HE	---	---	---	423
14	KEVIN SCHOENHEIDER AND SANDY SCHOENHEIDER	HE	---	---	---	169

emcs

I,KEVIN C. BOYER PROFESSIONAL LAND SURVEYOR, HEREBY CERTIFY THAT IN FULL COMPLIANCE WITH THE PROVISIONS OF SECTION 84.095 OF THE WISCONSIN STATUTES AND UNDER THE DIRECTION OF THE DEPARTMENT OF TRANSPORTATION, I HAVE SURVEYED AND MAPPED THIS TRANSPORTATION PROJECT PLAT AND SUCH PLAT CORRECTLY REPRESENTS ALL EXTERIOR BOUNDARIES OF THE SURVEYED LAND.

WISCONSIN KEVIN C. BOYER S-2675 HEWITT WI LAND SURVEYOR

SIGNATURE: Kevin C. Boyer DATE: 5/20/2024
PRINT NAME: KEVIN C. BOYER
REGISTRATION NUMBER: S-2675

THIS PLAT AND RELOCATION ORDER ARE APPROVED FOR THE WISCONSIN DEPARTMENT OF TRANSPORTATAION NW REGION - SUPERIOR OFFICE

SIGNATURE: Aaron Gustafson DATE: 5/20/2024
PRINT NAME: AARON GUSTAFSON

PLOT SCALE :
PLOT NAME :
PLOT BY : Michaela Galganski
PLOT DATE : 5/28/2024 11:49 AM
PLOT DATE :
PLOT DATE :

FILE NAME : P:\5SX\5508.DP.22.STH35-48.PLK\CADDS\8010080\SHEETS\TPP\040101-RP.DWG
APPRAISAL PLAT DATE : 05/20/2024

COMPOSITE DRAWING, ORIGINAL ON FILE AT COUNTY REGISTER OF DEEDS

TRANSPORTATION PROJECT PLAT NO: 8010-01-24 - 4.05 AMENDMENT NO: 1

AMENDS UTILITY NUMBER 204 OF TRANSPORTATION PROJECT PLAT 8010-01-24-4.05 RECORDED AS DOCUMENT NUMBER 926091.

THAT PART OF THE SW1/4 OF THE SW1/4 OF SECTION 34, TOWNSHIP 37 NORTH, RANGE 17 WEST, VILLAGE OF FREDERIC, POLK COUNTY, WISCONSIN.

RELOCATION ORDER - STH 35, LUCK-SIREN (STH 48 E TO POLK STREET), POLK COUNTY

TO PROPERLY ESTABLISH, LAY OUT, WIDEN, ENLARGE, EXTEND, CONSTRUCT, RECONSTRUCT, IMPROVE, OR MAINTAIN A PORTION OF THE HIGHWAY DESIGNATED ABOVE, THE STATE OF WISCONSIN DEPARTMENT OF TRANSPORTATION DEEMS IT NECESSARY TO RELOCATE OR CHANGE SAID HIGHWAY AND ACQUIRE CERTAIN LANDS AND INTERESTS OR RIGHTS IN LANDS FOR THE ABOVE PROJECT.

TO EFFECT THIS CHANGE, PURSUANT TO AUTHORITY GRANTED UNDER SECTION 84.02 (3), 84.09, AND 84.30, WISCONSIN STATUTES, THE DEPARTMENT OF TRANSPORTATION HEREBY ORDERS THAT:
1. THAT PORTION OF SAID HIGHWAY AS SHOWN ON THIS PLAT IS LAID OUT AND ESTABLISHED TO THE LINES AND WIDTHS AS SO SHOWN FOR THE ABOVE PROJECT.
2. THE LANDS OR INTERESTS OR RIGHTS IN LANDS AS SHOWN ON THIS PLAT ARE REQUIRED BY THE DEPARTMENT FOR THE ABOVE PROJECT AND SHALL BE ACQUIRED IN THE NAME OF THE STATE OF WISCONSIN, PURSUANT TO THE PROVISIONS OF SECTION 84.09 (1) OR (2), WISCONSIN STATUTES.

LOCATION SKETCH NOT TO SCALE

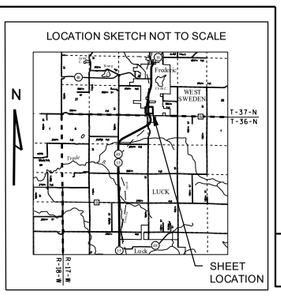

Doc # 944107
Envelope #: 3578
Polk County, Wisconsin
Sally L. Spanel, Register of Deeds
PLAT FEE: 30.00
Total: 30.00
RECORDED ON: 04/16/2026 10:20 AM
PAGES: 1
Document Electronically Recorded

89

8010-01-24-4.05A1

RESERVED FOR REGISTER OF DEEDS
PROJECT NUMBER 8010-01-24-4.05
AMENDMENT NO: 1

NOTES:

POSITIONS SHOWN ON THIS PLAT ARE WISCONSIN COORDINATE REFERENCE SYSTEM COORDINATES (WISCRS), POLK COUNTY, NAD83 (2011), IN U.S. SURVEY FEET. VALUES ARE GRID COORDINATES, GRID BEARINGS, AND GRID DISTANCES. GRID DISTANCES MAY BE USED AS GROUND DISTANCES.

ALL NEW RIGHT-OF-WAY MONUMENTS WILL BE TYPE 2 (TYPICALLY 3/4" X 24" IRON REBARS), UNLESS OTHERWISE NOTED, AND WILL BE PLACED PRIOR TO THE COMPLETION OF THE PROJECT.

ALL RIGHT-OF-WAY LINES DEPICTED IN THE NON-ACQUISITION AREAS ARE INTENDED TO RE-ESTABLISH EXISTING RIGHT-OF-WAY LINES AS DETERMINED FROM PREVIOUS PROJECTS, OTHER RECORDED DOCUMENTS, CENTERLINE OF EXISTING PAVEMENTS AND/OR EXISTING OCCUPATIONAL LINES.

RIGHT-OF-WAY BOUNDARIES ARE DEFINED WITH COURSES OF THE PERIMETER OF THE HIGHWAY LANDS REFERENCED TO THE U.S. PUBLIC LAND SURVEY SYSTEM OR OTHER "SURVEYS" OF PUBLIC RECORD.

DIMENSIONING FOR THE NEW RIGHT-OF-WAY IS MEASURED ALONG AND PERPENDICULAR TO THE NEW REFERENCE LINES.

AN EASEMENT FOR HIGHWAY PURPOSES (HE), AS LONG AS SO USED, INCLUDING THE RIGHT TO PRESERVE, PROTECT, REMOVE, OR PLANT THEREON ANY VEGETATION THAT THE HIGHWAY AUTHORITIES MAY DEEM DESIRABLE.

PROPERTY LINES SHOWN ON THIS PLAT FOR PROPERTIES BEING IMPACTED ARE DRAWN FROM DATA DERIVED FROM FILED/RECORDED MAPS AND DOCUMENTS OF PUBLIC RECORD. THIS PLAT MAY NOT BE A TRUE REPRESENTATION OF EXISTING PROPERTY LINES, EXCLUDING RIGHT-OF-WAY, AND SHOULD NOT BE USED AS A SUBSTITUTE FOR AN ACCURATE FIELD SURVEY.

EXISTING HIGHWAY RIGHT-OF-WAY SHOWN HEREIN IS BASED ON THE FOLLOWING POINTS OF REFERENCE FOR STH 35/48: CSM 789, FEDERAL AID PROJECT 407G, R/W PLAT T028-3(20), R/W PLAT 8556, R/W PLAT 1000-58-22, R/W PLAT 8010-06-21, AND EXISTING CENTERLINE.

FOR THE CURRENT ACCESS/DRIVEWAY INFORMATION, CONTACT THE PLANNING UNIT OF THE WISCONSIN DEPARTMENT OF TRANSPORTATION OFFICE IN SUPERIOR, WI.

PARCEL AND UTILITY IDENTIFICATION NUMBERS MAY NOT POINT TO ALL AREAS OF ACQUISITION, AS NOTED ON THE TPP DETAIL PAGES.

CONVENTIONAL ABBREVIATIONS

ACCESS RIGHTS	AR	POINT OF COMPOUND CURVE	PCC
ACRES	AC	POINT OF INTERSECTION	PI
AHEAD	AH	PROPERTY LINE	PL
ALUMINUM	ALUM	RECORDED AS	(100')
AND OTHERS	ET AL	REEL / IMAGE	R/I
BACK	BK	REFERENCE LINE	R/L
BLOCK	BLK	REMAINING	REM
CENTERLINE	C/L	RESTRICTIVE DEVELOPMENT EASEMENT	RDE
CERTIFIED SURVEY MAP	CSM		
CONCRETE	CONC	RIGHT	RT
COUNTY	CO	RIGHT OF WAY	R/W
COUNTY TRUNK HIGHWAY	CTH	SECTION	SEC
DISTANCE	DIST	SEPTIC VENT	SEPV
CORNER	COR	SQUARE FEET	SF
DOCUMENT NUMBER	DOC	STATE TRUNK HIGHWAY	STH
EASEMENT	EASE	STATION	STA
EXISTING	EX	TELEPHONE PEDESTAL	TP
GAS VALVE	GV	TEMPORARY LIMITED EASEMENT	TLE
GRID NORTH	GN		
HIGHWAY EASEMENT	HE	TRANSPORTATION PROJECT PLAT	TPP
IDENTIFICATION	ID	UNITED STATES HIGHWAY	USH
LAND CONTRACT	LC	VOLUME	V
LEFT	LT		
MONUMENT	MON		
NATIONAL GEODETIC SURVEY	NGS		
NUMBER	NO		
OUTLOT	OL		
PAGE	P		
POINT OF TANGENCY	PT		
PERMANENT LIMITED EASEMENT	PLE		
POINT OF BEGINNING	POB		
POINT OF CURVATURE	PC		

CURVE DATA ABBREVIATIONS

LONG CHORD	LCH
LONG CHORD BEARING	LCB
RADIUS	R
DEGREE OF CURVE	D
CENTRAL ANGLE	Δ/DELTA
LENGTH OF CURVE	L
TANGENT	T
DIRECTION AHEAD	DA
DIRECTION BACK	DB

GN

SCALE, FEET
0 20 40

CONVENTIONAL SYMBOLS

SECTION LINE
QUARTER LINE
SIXTEENTH LINE
NEW REFERENCE LINE
NEW R/W LINE
EXISTING R/W OR HE LINE
PROPERTY LINE
LOT, TIE & OTHER MINOR LINES
SLOPE INTERCEPT
CORPORATE LIMITS
UNDERGROUND FACILITY (COMMUNICATIONS, ELECTRIC, ETC)
NEW R/W (FEE OR HE) (HATCHING VARIES BY OWNER)
TEMPORARY LIMITED EASEMENT AREA
EASEMENT AREA (PERMANENT LIMITED OR RESTRICTED DEVELOPMENT)
TRANSMISSION STRUCTURES
BUILDING — TO BE REMOVED
BRIDGE — CULVERT

SECTION CORNER SYMBOL
SECTION CORNER MONUMENT
GEODETIC SURVEY MONUMENT
SIXTEENTH CORNER MONUMENT
SIGN
OFF-PREMISE SIGN
R/W MONUMENT (TO BE SET)
NON-MONUMENTED R/W POINT
FOUND IRON PIN (1-INCH UNLESS NOTED)

	COMPENSABLE	NON-COMPENSABLE
ELECTRIC POLE		
TELEPHONE POLE		
PEDESTAL (LABEL TYPE) (TV, TEL, ELEC, ETC.)		

ACCESS RESTRICTED BY ACQUISITION
NO ACCESS (BY STATUTORY AUTHORITY)
ACCESS RESTRICTED (BY PREVIOUS PROJECT OR CONTROL)
NO ACCESS (NEW HIGHWAY)
PARCEL NUMBER (25) — UTILITY NUMBER (40)
PARALLEL OFFSETS

CONVENTIONAL UTILITY SYMBOLS

WATER
GAS
TELEPHONE
OVERHEAD TRANSMISSION LINES
ELECTRIC
CABLE TELEVISION
FIBER OPTIC
SANITARY SEWER
STORM SEWER
ELECTRIC TOWER

COURSE TABLE		
COURSE	BEARING	DISTANCE
5000-5001	N89° 21' 04"W	59.82'
5001-5002	N21° 09' 09"W	107.70'
5002-5003	N14° 41' 07"E	103.08'
5003-5004	S89° 21' 04"E	74.24'
5004-5005	S89° 21' 04"E	0.76'
5005-5006	S89° 21' 04"E	60.00'
5006-PRW5007	S00° 38' 56"W	52.35'
PRW5007-PRW5008	S72° 57' 41"E	70.88'
PRW5008-PRW5009	S00° 38' 56"W	31.00'
PRW5009-PRW5010	S70° 27' 47"W	72.45'
PRW5010-5011	S00° 38' 56"W	71.65'
5011-5012	N89° 21' 04"W	60.00'
5012-5000	N89° 21' 04"W	0.18'

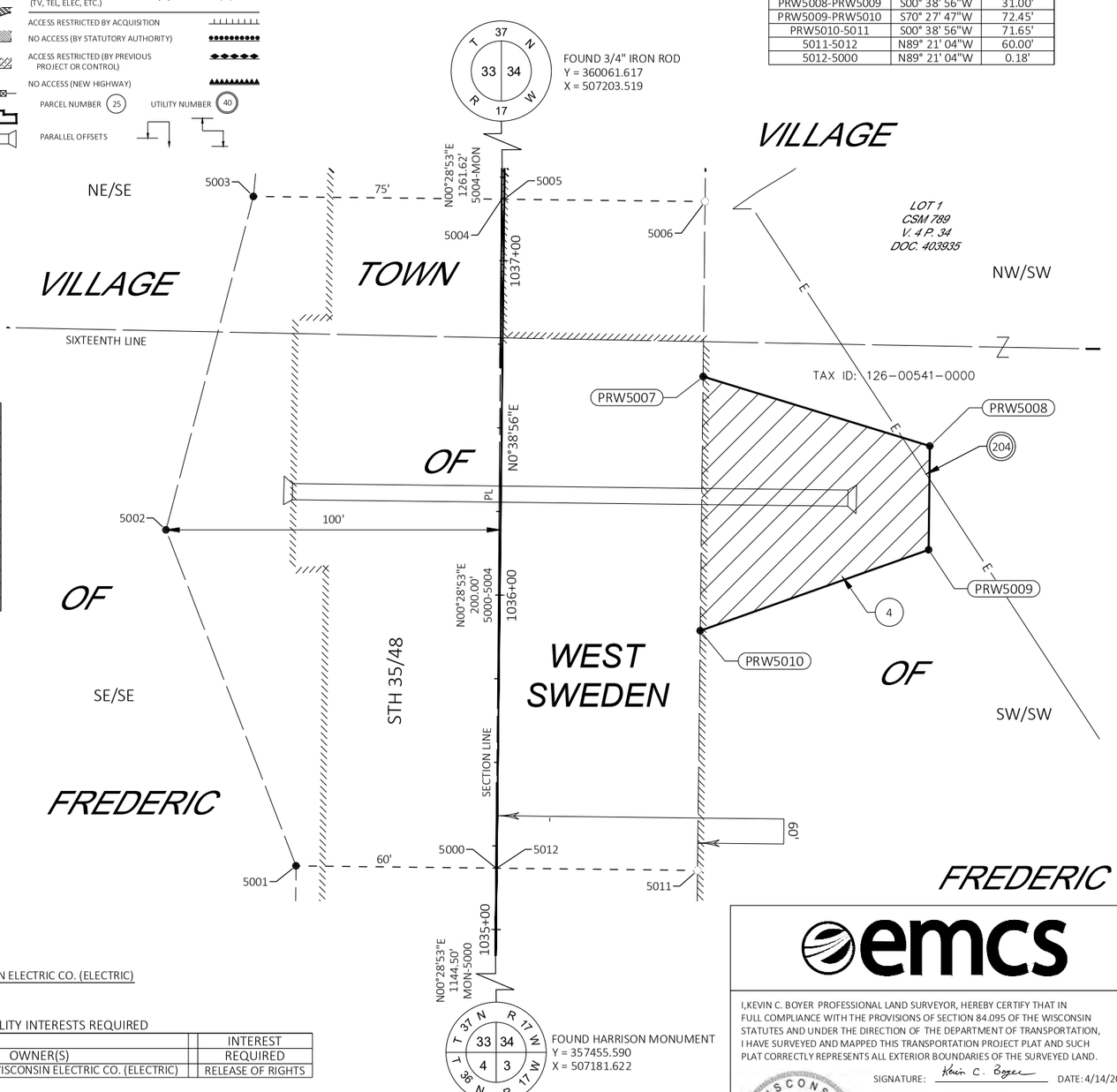

STATION & OFFSET TABLE		
POINT NO.	STATION	OFFSET
5000	1035+18.35	0.18'
5001	1035+18.35	60.00'
5002	1036+18.35	100.00'
5003	1037+18.35	75.00'
5004	1037+18.35	0.76'
5005	1037+18.35	0.00'
5006	1037+18.35	60.00'
PRW5007	1036+66.00	60.00'
PRW5008	1036+46.00	128.00'
PRW5009	1036+15.00	128.00'
PRW5010	1035+90.00	60.00'
5011	1035+18.35	60.00'
5012	1035+18.35	0.00'

(204) NORTHWESTERN WISCONSIN ELECTRIC CO. (ELECTRIC)
DOC. 222203 - PAR. 4

UTILITY INTERESTS REQUIRED

UTILITY NUMBER	OWNER(S)	INTEREST REQUIRED
204	NORTHWESTERN WISCONSIN ELECTRIC CO. (ELECTRIC)	RELEASE OF RIGHTS

SCHEDULE OF LANDS & INTERESTS REQUIRED

OWNER'S NAMES ARE SHOWN FOR REFERENCE PURPOSES ONLY AND ARE SUBJECT TO CHANGE PRIOR TO THE TRANSFER OF LAND INTERESTS TO THE DEPARTMENT.

PARCEL NUMBER	OWNERS	INTERESTS REQUIRED	FEE SF REQUIRED NEW	EXISTING	TOTAL	HE SF
4	VASATKA LINKS, LLC, A WISCONSIN CORPORATION	HE	---	---	---	3638

emcs

I, KEVIN C. BOYER PROFESSIONAL LAND SURVEYOR, HEREBY CERTIFY THAT IN FULL COMPLIANCE WITH THE PROVISIONS OF SECTION 84.095 OF THE WISCONSIN STATUTES AND UNDER THE DIRECTION OF THE DEPARTMENT OF TRANSPORTATION, I HAVE SURVEYED AND MAPPED THIS TRANSPORTATION PROJECT PLAT AND SUCH PLAT CORRECTLY REPRESENTS ALL EXTERIOR BOUNDARIES OF THE SURVEYED LAND.

WISCONSIN KEVIN C. BOYER S-2675 HEWITT WI LAND SURVEYOR

SIGNATURE: Kevin C. Boyer DATE: 4/14/2026
PRINT NAME: KEVIN C. BOYER
REGISTRATION NUMBER: S-2675

THIS PLAT AND RELOCATION ORDER ARE APPROVED FOR THE WISCONSIN DEPARTMENT OF TRANSPORTATAION NW REGION - SUPERIOR OFFICE

SIGNATURE: Aaron Gustafson DATE: 4/14/2026
PRINT NAME: AARON GUSTAFSON

PLOT SCALE : 1 = 50
PLOT NAME : P:\55XX\5508.DP.22.STH35-48.PLK\CADDS\8010018O\SHEETS\TPP\040101-RP.DWG
PLOT BY : Drew Nelson
PLOT DATE : 4/14/2026 11:35 AM
PLOT DATE :
PLOT DATE :
FILE NAME : P:\55XX\5508.DP.22.STH35-48.PLK\CADDS\8010018O\SHEETS\TPP\040101-RP.DWG
APPRAISAL PLAT DATE : 04/14/2026

COMPOSITE DRAWING, ORIGINAL ON FILE AT COUNTY REGISTER OF DEEDS

TRANSPORTATION PROJECT PLAT NO: 8010-01-24 - 4.05

THAT PART OF THE SW1/4 OF THE SW1/4 OF SECTION 34, TOWNSHIP 37 NORTH, RANGE 17 WEST, VILLAGE OF FREDERIC, POLK COUNTY, WISCONSIN.

RELOCATION ORDER - STH 35, LUCK-SIREN (STH 48 E TO POLK STREET), POLK COUNTY

TO PROPERLY ESTABLISH, LAY OUT, WIDEN, ENLARGE, EXTEND, CONSTRUCT, RECONSTRUCT, IMPROVE, OR MAINTAIN A PORTION OF THE HIGHWAY DESIGNATED ABOVE, THE STATE OF WISCONSIN DEPARTMENT OF TRANSPORTATION DEEMS IT NECESSARY TO RELOCATE OR CHANGE SAID HIGHWAY AND ACQUIRE CERTAIN LANDS AND INTERESTS OR RIGHTS IN LANDS FOR THE ABOVE PROJECT.

TO EFFECT THIS CHANGE, PURSUANT TO AUTHORITY GRANTED UNDER SECTION 84.02 (3), 84.09, AND 84.30, WISCONSIN STATUTES, THE DEPARTMENT OF TRANSPORTATION HEREBY ORDERS THAT:
1. THAT PORTION OF SAID HIGHWAY AS SHOWN ON THIS PLAT IS LAID OUT AND ESTABLISHED TO THE LINES AND WIDTHS AS SO SHOWN FOR THE ABOVE PROJECT.
2. THE LANDS OR INTERESTS OR RIGHTS IN LANDS AS SHOWN ON THIS PLAT ARE REQUIRED BY THE DEPARTMENT FOR THE ABOVE PROJECT AND SHALL BE ACQUIRED IN THE NAME OF THE STATE OF WISCONSIN, PURSUANT TO THE PROVISIONS OF SECTION 84.09 (1) OR (2), WISCONSIN STATUTES.

NOTES:

POSITIONS SHOWN ON THIS PLAT ARE WISCONSIN COORDINATE REFERENCE SYSTEM COORDINATES (WISCRS), POLK COUNTY, NAD83 (2011), IN U.S. SURVEY FEET. VALUES ARE GRID COORDINATES, GRID BEARINGS, AND GRID DISTANCES. GRID DISTANCES MAY BE USED AS GROUND DISTANCES.

ALL NEW RIGHT-OF-WAY MONUMENTS WILL BE TYPE 2 (TYPICALLY 3/4" X 24" IRON REBARS), UNLESS OTHERWISE NOTED, AND WILL BE PLACED PRIOR TO THE COMPLETION OF THE PROJECT.

ALL RIGHT-OF-WAY LINES DEPICTED IN THE NON-ACQUISITION AREAS ARE INTENDED TO RE-ESTABLISH EXISTING RIGHT-OF-WAY LINES AS DETERMINED FROM PREVIOUS PROJECTS, OTHER RECORDED DOCUMENTS, CENTERLINE OF EXISTING PAVEMENTS AND/OR EXISTING OCCUPATIONAL LINES.

RIGHT-OF-WAY BOUNDARIES ARE DEFINED WITH COURSES OF THE PERIMETER OF THE HIGHWAY LANDS REFERENCED TO THE U.S. PUBLIC LAND SURVEY SYSTEM OR OTHER "SURVEYS" OF PUBLIC RECORD.

DIMENSIONING FOR THE NEW RIGHT-OF-WAY IS MEASURED ALONG AND PERPENDICULAR TO THE NEW REFERENCE LINES.

AN EASEMENT FOR HIGHWAY PURPOSES (HE), AS LONG AS SO USED, INCLUDING THE RIGHT TO PRESERVE, PROTECT, REMOVE, OR PLANT THEREON ANY VEGETATION THAT THE HIGHWAY AUTHORITIES MAY DEEM DESIRABLE.

PROPERTY LINES SHOWN ON THIS PLAT FOR PROPERTIES BEING IMPACTED ARE DRAWN FROM DATA DERIVED FROM FILED/RECORDED MAPS AND DOCUMENTS OF PUBLIC RECORD. THIS PLAT MAY NOT BE A TRUE REPRESENTATION OF EXISTING PROPERTY LINES, EXCLUDING RIGHT-OF-WAY, AND SHOULD NOT BE USED AS A SUBSTITUTE FOR AN ACCURATE FIELD SURVEY.

EXISTING HIGHWAY RIGHT-OF-WAY SHOWN HEREIN IS BASED ON THE FOLLOWING POINTS OF REFERENCE FOR STH 35/48: CSM 789, FEDERAL AID PROJECT 407G, R/W PLAT T028-3(20), R/W PLAT 8556, R/W PLAT 1000-58-22, R/W PLAT 8010-06-21, AND EXISTING CENTERLINE.

FOR THE CURRENT ACCESS/DRIVEWAY INFORMATION, CONTACT THE PLANNING UNIT OF THE WISCONSIN DEPARTMENT OF TRANSPORTATION OFFICE IN SUPERIOR, WI.

PARCEL AND UTILITY IDENTIFICATION NUMBERS MAY NOT POINT TO ALL AREAS OF ACQUISITION, AS NOTED ON THE TPP DETAIL PAGES.

LOCATION SKETCH NOT TO SCALE

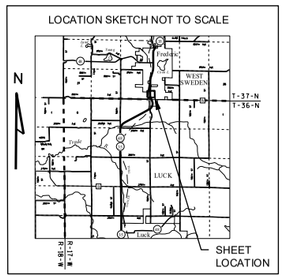

Doc # 926091
Envelope #: 351A
Polk County, Wisconsin
Sally L. Spanel, Register of Deeds
PLAT FEE: 25.00
Total: 25.00
RECORDED ON: 05/24/2024 11:13 AM
PAGES: 1
Document Electronically Recorded

90

RESERVED FOR REGISTER OF DEEDS
PROJECT NUMBER 8010-01-24-4.05
AMENDMENT NO:___

8010-01-24-4.05

CONVENTIONAL ABBREVIATIONS

ACCESS RIGHTS	AR	POINT OF COMPOUND CURVE	PCC
ACRES	AC	POINT OF INTERSECTION	PI
AHEAD	AH	PROPERTY LINE	PL
ALUMINUM	ALUM	RECORDED AS	(100')
AND OTHERS	ET AL	REEL / IMAGE	R/I
BACK	BK	REFERENCE LINE	R/L
BLOCK	BLK	REMAINING	REM
CENTERLINE	C/L	RESTRICTIVE DEVELOPMENT EASEMENT	RDE
CERTIFIED SURVEY MAP	CSM		
CONCRETE	CONC	RIGHT	RT
COUNTY	CO	RIGHT OF WAY	R/W
COUNTY TRUNK HIGHWAY	CTH	SECTION	SEC
DISTANCE	DIST	SEPTIC VENT	SEPV
CORNER	COR	SQUARE FEET	SF
DOCUMENT NUMBER	DOC	STATE TRUNK HIGHWAY	STH
EASEMENT	EASE	STATION	STA
EXISTING	EX	TELEPHONE PEDESTAL	TP
GAS VALVE	GV	TEMPORARY LIMITED EASEMENT	TLE
GRID NORTH	GN		
HIGHWAY EASEMENT	HE	TRANSPORTATION PROJECT PLAT	TPP
IDENTIFICATION	ID	UNITED STATES HIGHWAY	USH
LAND CONTRACT	LC	VOLUME	V
LEFT	LT		
MONUMENT	MON		
NATIONAL GEODETIC SURVEY	NGS		
NUMBER	NO		
OUTLOT	OL		
PAGE	P		
POINT OF TANGENCY	PT		
PERMANENT LIMITED EASEMENT	PLE		
POINT OF BEGINNING	POB		
POINT OF CURVATURE	PC		

CURVE DATA ABBREVIATIONS

LONG CHORD	LCH
LONG CHORD BEARING	LCB
RADIUS	R
DEGREE OF CURVE	D
CENTRAL ANGLE	Δ/DELTA
LENGTH OF CURVE	L
TANGENT	T
DIRECTION AHEAD	DA
DIRECTION BACK	DB

SCALE, FEET
0 20 40

GN

CONVENTIONAL SYMBOLS

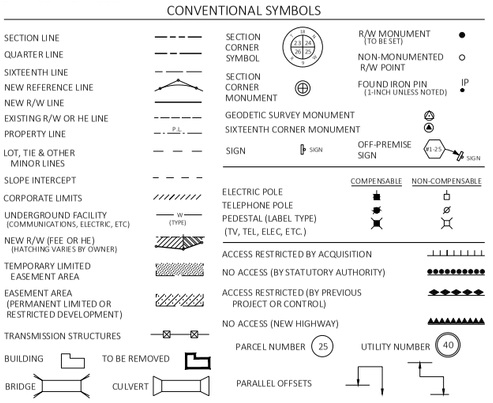

CONVENTIONAL UTILITY SYMBOLS

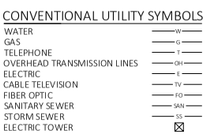

COURSE TABLE		
COURSE	BEARING	DISTANCE
5000-5001	N89° 21' 04"W	59.82'
5001-5002	N21° 09' 09"W	107.70'
5002-5003	N14° 41' 07"E	103.08'
5003-5004	S89° 21' 04"E	74.24'
5004-5005	S89° 21' 04"E	0.76'
5005-5006	S89° 21' 04"E	60.00'
5006-PRW5007	S00° 38' 56"W	52.35'
PRW5007-PRW5008	S72° 57' 41"E	70.88'
PRW5008-PRW5009	S00° 38' 56"W	31.00'
PRW5009-PRW5010	S70° 27' 47"W	72.45'
PRW5010-5011	S00° 38' 56"W	71.65'
5011-5012	N89° 21' 04"W	60.00'
5012-5000	N89° 21' 04"W	0.18'

STATION & OFFSET TABLE		
POINT NO.	STATION	OFFSET
5000	1035+18.35	0.18'
5001	1035+18.35	60.00'
5002	1036+18.35	100.00'
5003	1037+18.35	75.00'
5004	1037+18.35	0.76'
5005	1037+18.35	0.00'
5006	1037+18.35	60.00'
PRW5007	1036+66.00	60.00'
PRW5008	1036+46.00	128.00'
PRW5009	1036+15.00	128.00'
PRW5010	1035+90.00	60.00'
5011	1035+18.35	60.00'
5012	1035+18.35	0.00'

(204) NORTHWESTERN WISCONSIN ELECTRIC CO. (ELECTRIC)
DOC. 222203 - PAR. 4

UTILITY INTERESTS REQUIRED

UTILITY NUMBER	OWNER(S)	INTEREST REQUIRED
204	NORTHWESTERN WISCONSIN ELECTRIC CO. (ELECTRIC)	RELEASE OF RIGHTS

SCHEDULE OF LANDS & INTERESTS REQUIRED

OWNER'S NAMES ARE SHOWN FOR REFERENCE PURPOSES ONLY AND ARE SUBJECT TO CHANGE PRIOR TO THE TRANSFER OF LAND INTERESTS TO THE DEPARTMENT.

PARCEL NUMBER	OWNERS	INTERESTS REQUIRED	FEE SF REQUIRED			HE SF
			NEW	EXISTING	TOTAL	
4	VASATKA LINKS, LLC, A WISCONSIN CORPORATION	HE	---	---	---	3638

emcs

I,KEVIN C. BOYER PROFESSIONAL LAND SURVEYOR, HEREBY CERTIFY THAT IN FULL COMPLIANCE WITH THE PROVISIONS OF SECTION 84.095 OF THE WISCONSIN STATUTES AND UNDER THE DIRECTION OF THE DEPARTMENT OF TRANSPORTATION, I HAVE SURVEYED AND MAPPED THIS TRANSPORTATION PROJECT PLAT AND SUCH PLAT CORRECTLY REPRESENTS ALL EXTERIOR BOUNDARIES OF THE SURVEYED LAND.

WISCONSIN KEVIN C BOYER S-2675 HEWITT WI LAND SURVEYOR

SIGNATURE: Kevin C. Boyer DATE: 5/20/2024
PRINT NAME: KEVIN C. BOYER
REGISTRATION NUMBER: S-2675

THIS PLAT AND RELOCATION ORDER ARE APPROVED FOR THE WISCONSIN DEPARTMENT OF TRANSPORTATAION NW REGION - SUPERIOR OFFICE

SIGNATURE: Aaron Gustafson DATE: 5/20/2024
PRINT NAME: AARON GUSTAFSON

FILE NAME : P:\5SX\5508.DP.22.STH35-48.PLK\CADDS\8010080\SHEETS\TPP\040101-RP.DWG
APPRAISAL PLAT DATE : 05/20/2024
PLOT DATE : 5/28/2024 11:49 AM
PLOT BY : Michaela Galganski
PLOT NAME :
PLOT SCALE :
PLOT DATE :

COMPOSITE DRAWING, ORIGINAL ON FILE AT COUNTY REGISTER OF DEEDS

TRANSPORTATION PROJECT PLAT NO: 8010-01-24 - 4.06

THAT PART OF LOT 2 OF CSM 3736, AND PART OF LOT 11, BLOCK 14 OF THE PLAT OF SUBDIVISION OF BLOCKS 13, 14, AND 15, OF THE TOWN OF FREDERIC, ALL LOCATED IN THE THE SW1/4 OF THE SW1/4, SECTION 27, TOWNSHIP 37 NORTH, RANGE 17 WEST, VILLAGE OF FREDERIC, POLK COUNTY, WISCONSIN.

RELOCATION ORDER - STH 35, LUCK-SIREN (STH 48 E TO POLK STREET), POLK COUNTY

TO PROPERLY ESTABLISH, LAY OUT, WIDEN, ENLARGE, EXTEND, CONSTRUCT, RECONSTRUCT, IMPROVE, OR MAINTAIN A PORTION OF THE HIGHWAY DESIGNATED ABOVE, THE STATE OF WISCONSIN DEPARTMENT OF TRANSPORTATION DEEMS IT NECESSARY TO RELOCATE OR CHANGE SAID HIGHWAY AND ACQUIRE CERTAIN LANDS AND INTERESTS OR RIGHTS IN LANDS FOR THE ABOVE PROJECT.

TO EFFECT THIS CHANGE, PURSUANT TO AUTHORITY GRANTED UNDER SECTION 84.02 (3), 84.09, AND 84.30, WISCONSIN STATUTES, THE DEPARTMENT OF TRANSPORTATION HEREBY ORDERS THAT:
1. THAT PORTION OF SAID HIGHWAY AS SHOWN ON THIS PLAT IS LAID OUT AND ESTABLISHED TO THE LINES AND WIDTHS AS SO SHOWN FOR THE ABOVE PROJECT.
2. THE LANDS OR INTERESTS OR RIGHTS IN LANDS AS SHOWN ON THIS PLAT ARE REQUIRED BY THE DEPARTMENT FOR THE ABOVE PROJECT AND SHALL BE ACQUIRED IN THE NAME OF THE STATE OF WISCONSIN, PURSUANT TO THE PROVISIONS OF SECTION 84.09 (1) OR (2), WISCONSIN STATUTES.

LOCATION SKETCH NOT TO SCALE

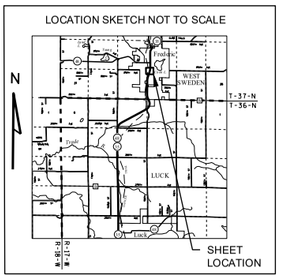

Doc # 926092
Envelope #: 3518
Polk County, Wisconsin
Sally L. Spanel, Register of Deeds
PLAT FEE: 25.00
Total: 25.00
RECORDED ON: 05/24/2024 11:14 AM
PAGES: 1
Document Electronically Recorded

91

RESERVED FOR REGISTER OF DEEDS
PROJECT NUMBER 8010-01-24-4.06
AMENDMENT NO:___

8010-01-24-4.06

NOTES:

POSITIONS SHOWN ON THIS PLAT ARE WISCONSIN COORDINATE REFERENCE SYSTEM COORDINATES (WISCRS), POLK COUNTY, NAD83 (2011), IN U.S. SURVEY FEET. VALUES ARE GRID COORDINATES, GRID BEARINGS, AND GRID DISTANCES. GRID DISTANCES MAY BE USED AS GROUND DISTANCES.

ALL NEW RIGHT-OF-WAY MONUMENTS WILL BE TYPE 2 (TYPICALLY 3/4" X 24" IRON REBARS), UNLESS OTHERWISE NOTED, AND WILL BE PLACED PRIOR TO THE COMPLETION OF THE PROJECT.

ALL RIGHT-OF-WAY LINES DEPICTED IN THE NON-ACQUISITION AREAS ARE INTENDED TO RE-ESTABLISH EXISTING RIGHT-OF-WAY LINES AS DETERMINED FROM PREVIOUS PROJECTS, OTHER RECORDED DOCUMENTS, CENTERLINE OF EXISTING PAVEMENTS AND/OR EXISTING OCCUPATIONAL LINES.

RIGHT-OF-WAY BOUNDARIES ARE DEFINED WITH COURSES OF THE PERIMETER OF THE HIGHWAY LANDS REFERENCED TO THE U.S. PUBLIC LAND SURVEY SYSTEM OR OTHER "SURVEYS" OF PUBLIC RECORD.

DIMENSIONING FOR THE NEW RIGHT-OF-WAY IS MEASURED ALONG AND PERPENDICULAR TO THE NEW REFERENCE LINES.

AN EASEMENT FOR HIGHWAY PURPOSES (HE), AS LONG AS SO USED, INCLUDING THE RIGHT TO PRESERVE, PROTECT, REMOVE, OR PLANT THEREON ANY VEGETATION THAT THE HIGHWAY AUTHORITIES MAY DEEM DESIRABLE.

PROPERTY LINES SHOWN ON THIS PLAT FOR PROPERTIES BEING IMPACTED ARE DRAWN FROM DATA DERIVED FROM FILED/RECORDED MAPS AND DOCUMENTS OF PUBLIC RECORD. THIS PLAT MAY NOT BE A TRUE REPRESENTATION OF EXISTING PROPERTY LINES, EXCLUDING RIGHT-OF-WAY, AND SHOULD NOT BE USED AS A SUBSTITUTE FOR AN ACCURATE FIELD SURVEY.

EXISTING HIGHWAY RIGHT-OF-WAY SHOWN HEREIN IS BASED ON THE FOLLOWING POINTS OF REFERENCE FOR STH 35/48: PLAT OF SUBDIVISION OF BLOCKS 13, 14, AND 15, OF THE TOWN OF FREDERIC, FEDERAL AID PROJECT 407G, R/W PLAT 8556, R/W PLAT T028-3(19), R/W PLAT T028-3(20), R/W PLAT 8010-06-21, AND EXISTING CENTERLINE.

FOR THE CURRENT ACCESS/DRIVEWAY INFORMATION, CONTACT THE PLANNING UNIT OF THE WISCONSIN DEPARTMENT OF TRANSPORTATION OFFICE IN SUPERIOR, WI.

PARCEL AND UTILITY IDENTIFICATION NUMBERS MAY NOT POINT TO ALL AREAS OF ACQUISITION, AS NOTED ON THE TPP DETAIL PAGES.

GN

SCALE, FEET
0 20 40

CONVENTIONAL SYMBOLS

SECTION LINE
QUARTER LINE
SIXTEENTH LINE
NEW REFERENCE LINE
NEW R/W LINE
EXISTING R/W OR HE LINE
PROPERTY LINE
LOT, TIE & OTHER MINOR LINES
SLOPE INTERCEPT
CORPORATE LIMITS
UNDERGROUND FACILITY (COMMUNICATIONS, ELECTRIC, ETC)
NEW R/W (FEE OR HE) (HATCHING VARIES BY OWNER)
TEMPORARY LIMITED EASEMENT AREA
EASEMENT AREA (PERMANENT LIMITED OR RESTRICTED DEVELOPMENT)
TRANSMISSION STRUCTURES
BUILDING TO BE REMOVED
BRIDGE CULVERT

SECTION CORNER SYMBOL
SECTION CORNER MONUMENT
R/W MONUMENT (TO BE SET)
NON-MONUMENTED R/W POINT
FOUND IRON PIN (1-INCH UNLESS NOTED)
GEODETIC SURVEY MONUMENT
SIXTEENTH CORNER MONUMENT
SIGN
OFF-PREMISE SIGN

	COMPENSABLE	NON-COMPENSABLE
ELECTRIC POLE		
TELEPHONE POLE		
PEDESTAL (LABEL TYPE) (TV, TEL, ELEC, ETC.)		

ACCESS RESTRICTED BY ACQUISITION
NO ACCESS (BY STATUTORY AUTHORITY)
ACCESS RESTRICTED (BY PREVIOUS PROJECT OR CONTROL)
NO ACCESS (NEW HIGHWAY)
PARCEL NUMBER 25 UTILITY NUMBER 40
PARALLEL OFFSETS

CONVENTIONAL ABBREVIATIONS

ACCESS RIGHTS	AR	POINT OF COMPOUND CURVE	PCC
ACRES	AC	POINT OF INTERSECTION	PI
AHEAD	AH	PROPERTY LINE	PL
ALUMINUM	ALUM	RECORDED AS	(100')
AND OTHERS	ET AL	REEL / IMAGE	R/I
BACK	BK	REFERENCE LINE	R/L
BLOCK	BLK	REMAINING	REM
CENTERLINE	C/L	RESTRICTIVE DEVELOPMENT EASEMENT	RDE
CERTIFIED SURVEY MAP	CSM	RIGHT	RT
CONCRETE	CONC	RIGHT OF WAY	R/W
COUNTY	CO	SECTION	SEC
COUNTY TRUNK HIGHWAY	CTH	SEPTIC VENT	SEPV
DISTANCE	DIST	SQUARE FEET	SF
CORNER	COR	STATE TRUNK HIGHWAY	STH
DOCUMENT NUMBER	DOC	STATION	STA
EASEMENT	EASE	TELEPHONE PEDESTAL	TP
EXISTING	EX	TEMPORARY LIMITED EASEMENT	TLE
GAS VALVE	GV	TRANSPORTATION PROJECT PLAT	TPP
GRID NORTH	GN	UNITED STATES HIGHWAY	USH
HIGHWAY EASEMENT	HE	VOLUME	V
IDENTIFICATION	ID		
LAND CONTRACT	LC		
LEFT	LT		
MONUMENT	MON		
NATIONAL GEODETIC SURVEY NUMBER	NGS		
NUMBER	NO		
OUTLOT	OL		
PAGE	P		
POINT OF TANGENCY	PT		
PERMANENT LIMITED EASEMENT	PLE		
POINT OF BEGINNING	POB		
POINT OF CURVATURE	PC		

CURVE DATA ABBREVIATIONS

LONG CHORD	LCH
LONG CHORD BEARING	LCB
RADIUS	R
DEGREE OF CURVE	D
CENTRAL ANGLE	Δ/DELTA
LENGTH OF CURVE	L
TANGENT	T
DIRECTION AHEAD	DA
DIRECTION BACK	DB

CONVENTIONAL UTILITY SYMBOLS

WATER (W)
GAS (G)
TELEPHONE (T)
OVERHEAD TRANSMISSION LINES (OH)
ELECTRIC (E)
CABLE TELEVISION (TV)
FIBER OPTIC (FO)
SANITARY SEWER (SAN)
STORM SEWER (SS)
ELECTRIC TOWER

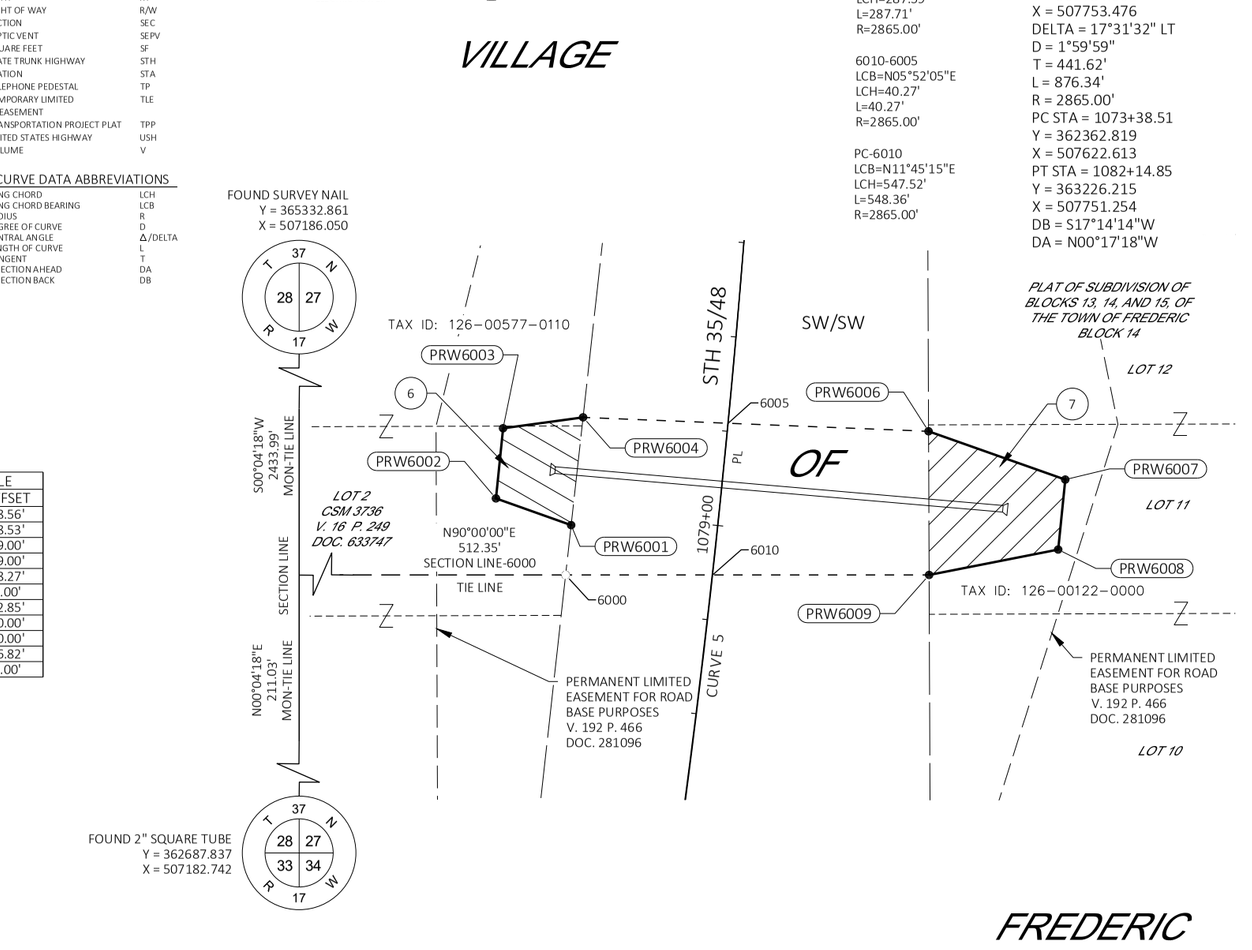

6005-PT
LCB=N02°35'19"E
LCH=287.59'
L=287.71'
R=2865.00'

6010-6005
LCB=N05°52'05"E
LCH=40.27'
L=40.27'
R=2865.00'

PC-6010
LCB=N11°45'15"E
LCH=547.52'
L=548.36'
R=2865.00'

CURVE 5
PI STA = 1077+80.13
Y = 362784.602
X = 507753.476
DELTA = 17°31'32" LT
D = 1°59'59"
T = 441.62'
L = 876.34'
R = 2865.00'
PC STA = 1073+38.51
Y = 362362.819
X = 507622.613
PT STA = 1082+14.85
Y = 363226.215
X = 507751.254
DB = S17°14'14"W
DA = N00°17'18"W

STATION & OFFSET TABLE

POINT NO.	STATION	OFFSET
6000	1078+82.58	38.56'
PRW6001	1078+96.00	38.53'
PRW6002	1079+01.00	59.00'
PRW6003	1079+20.00	59.00'
PRW6004	1079+25.00	38.27'
6005	1079+27.14	0.00'
PRW6006	1079+30.00	52.85'
PRW6007	1079+21.00	90.00'
PRW6008	1079+03.00	90.00'
PRW6009	1078+93.00	56.82'
6010	1078+86.88	0.00'

COURSE TABLE

COURSE	BEARING	DISTANCE
6000-PRW6001	N06° 19' 43"E	13.24'
PRW6001-PRW6002	N70° 27' 38"W	21.05'
PRW6002-PRW6003	N05° 47' 54"E	18.61'
PRW6003-PRW6004	N82° 13' 08"E	21.30'
PRW6004-6005	S87° 41' 25"E	38.33'
6005-PRW6006	S87° 41' 25"E	52.93'
PRW6006-PRW6007	S70° 33' 22"E	38.28'
PRW6007-PRW6008	S05° 46' 06"W	18.57'
PRW6008-PRW6009	S78° 52' 22"W	34.73'
PRW6009-6010	N90° 00' 00"W	57.15'
6010-6000	N90° 00' 00"W	38.79'

SCHEDULE OF LANDS & INTERESTS REQUIRED

OWNER'S NAMES ARE SHOWN FOR REFERENCE PURPOSES ONLY AND ARE SUBJECT TO CHANGE PRIOR TO THE TRANSFER OF LAND INTERESTS TO THE DEPARTMENT.

PARCEL NUMBER	OWNERS	INTERESTS REQUIRED	FEE SF REQUIRED NEW	EXISTING	TOTAL	HE SF
6	STEFAN P. BENSON AND DEBORA L. BENSON, HUSBAND AND WIFE, AS SURVIVORSHIP MARITAL PROPERTY	HE	---	---	---	486
7	VILLAGE OF FREDERIC	HE	---	---	---	992

emcs

I,KEVIN C. BOYER PROFESSIONAL LAND SURVEYOR, HEREBY CERTIFY THAT IN FULL COMPLIANCE WITH THE PROVISIONS OF SECTION 84.095 OF THE WISCONSIN STATUTES AND UNDER THE DIRECTION OF THE DEPARTMENT OF TRANSPORTATION, I HAVE SURVEYED AND MAPPED THIS TRANSPORTATION PROJECT PLAT AND SUCH PLAT CORRECTLY REPRESENTS ALL EXTERIOR BOUNDARIES OF THE SURVEYED LAND.

WISCONSIN KEVIN C BOYER S-2675 HEWITT WI LAND SURVEYOR

SIGNATURE: Kevin C. Boyer DATE: 5/20/2024
PRINT NAME: KEVIN C. BOYER
REGISTRATION NUMBER: S-2675

THIS PLAT AND RELOCATION ORDER ARE APPROVED FOR THE WISCONSIN DEPARTMENT OF TRANSPORTATAION NW REGION - SUPERIOR OFFICE

SIGNATURE: Aaron Gustafson DATE: 5/20/2024
PRINT NAME: AARON GUSTAFSON

PLOT SCALE :
PLOT NAME : Michaela Galganski
PLOT BY : 5/28/2024 11:49 AM
PLOT DATE :
PLOT DATE :
FILE NAME : P:\55XX\5508.DP.22.STH35-48.PLK\CADDS\8010018O\SHEETS\TPP\040101-RP.DWG
APPRAISAL PLAT DATE : 05/20/2024

NOTES:
THIS EXHIBIT IS A GRAPHIC REPRESENTATION AND IS FOR REFERENCE PURPOSES ONLY. REFER TO THE CONVEYANCE DOCUMENT FOR PARCEL RELATED DETAILS.

ALL TLES ARE FOR SLOPE GRADING PURPOSES.

R/W PROJECT NUMBER: 8010-01-24	EXHIBIT NUMBER: 1

TLE ACQUISITION EXHIBIT
LUCK-SIREN
STH 35 STH 48 E TO POLK STREET
STH 35 POLK COUNTY

THAT PART OF THE SE1/4 OF THE SE1/4 OF SECTION 17, TOWNSHIP 36 NORTH, RANGE 17 WEST, TOWN OF LUCK, POLK COUNTY, WISCONSIN.

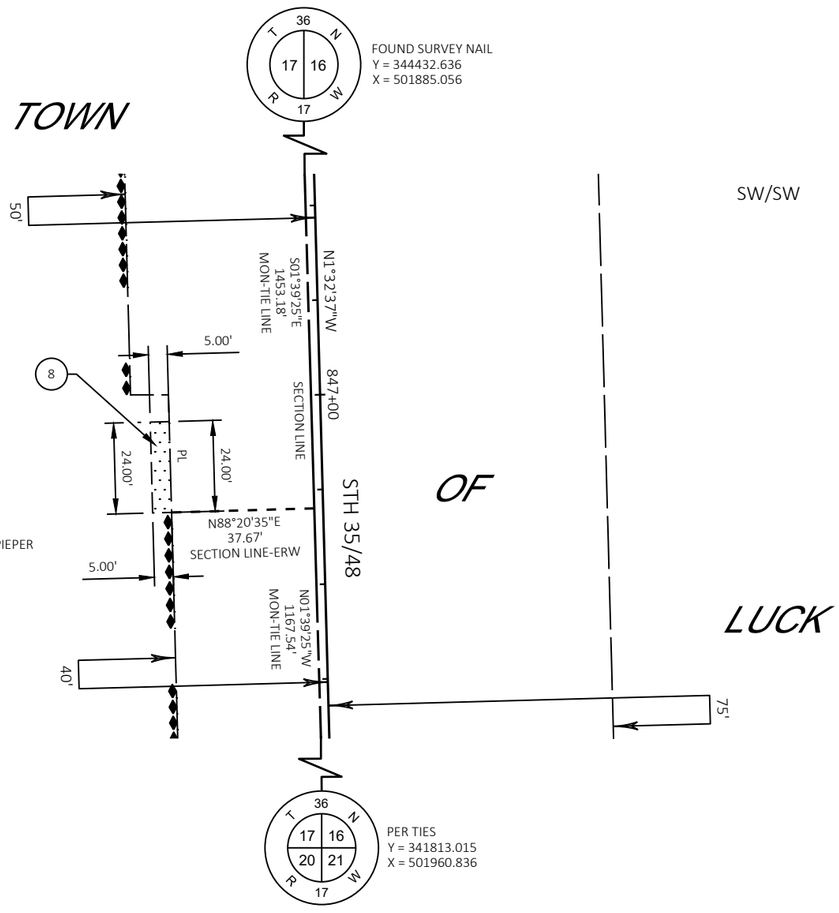

SCHEDULE OF LANDS & INTERESTS REQUIRED

OWNERS NAMES ARE SHOWN FOR REFERENCE PURPOSES ONLY AND ARE SUBJECT TO CHANGE PRIOR TO THE TRANSFER OF LAND INTERESTS TO THE DEPARTMENT

PARCEL NUMBER	OWNER(S)	INTEREST REQUIRED	TLE S.F.
8	GERALD L. PIEPER AND SHARON K. PIEPER	TLE	120

UTILITY INTERESTS REQUIRED

UTILITY NUMBER	UTILITY OWNER(S)	INTEREST REQUIRED
201	LAKELAND TELECOM INC (COMMUNICATION)	RELEASE OF RIGHTS
202	BRIGHTSPEED OF NORTHWEST WISCONSIN, LLC (COMMUNICATION)	RELEASE OF RIGHTS
206	NORTHERN STATES POWER COMPANY, A WISCONSIN CORPORATION (ELECTRIC)	RELEASE OF RIGHTS

SCALE, FEET
0 20 40

GN

(201) LAKELAND TELECOM INC (COMMUNICATION)
DOC. 841539 - PAR. 8

(202) BRIGHTSPEED OF NORTHWEST WISCONSIN, LLC (COMMUNICATION)
DOC. 116929A - PAR. 8

(206) NORTHERN STATES POWER COMPANY, A WISCONSIN CORPORATION (ELECTRIC)
DOC. 161892A - PAR. 8

DATE: 5/01/2024

FILE NAME : TLE EXHIBITS.DWG PLOT DATE : 4/24/2024 12:14 PM R/W PROJECT: 8010-01-24

4

NOTES:
THIS EXHIBIT IS A GRAPHIC REPRESENTATION AND IS FOR REFERENCE PURPOSES ONLY. REFER TO THE CONVEYANCE DOCUMENT FOR PARCEL RELATED DETAILS.

ALL TLES ARE FOR SLOPE GRADING PURPOSES.

R/W PROJECT NUMBER: 8010-01-24	EXHIBIT NUMBER: 2

TLE ACQUISITION EXHIBIT
LUCK-SIREN
STH 35 STH 48 E TO POLK STREET
STH 35 POLK COUNTY

THAT PART OF THE NE1/4 OF THE SE1/4 OF SECTION 17, TOWNSHIP 36 NORTH, RANGE 17 WEST, TOWN OF LUCK, POLK COUNTY, WISCONSIN.

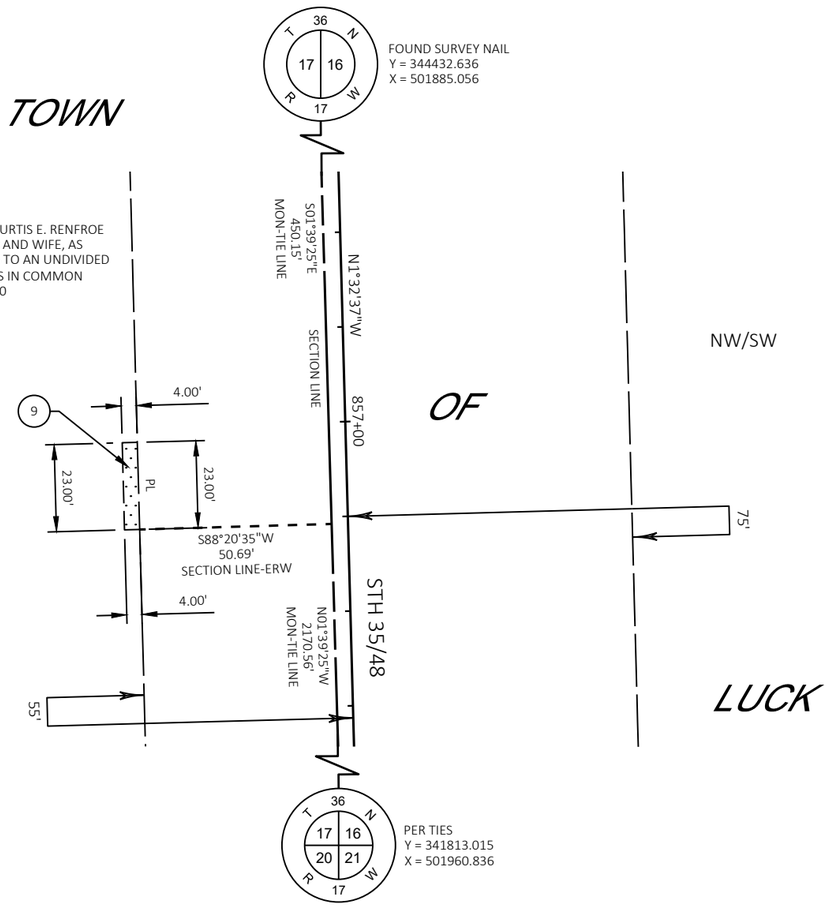

SCHEDULE OF LANDS & INTERESTS REQUIRED

OWNERS NAMES ARE SHOWN FOR REFERENCE PURPOSES ONLY AND ARE SUBJECT TO CHANGE PRIOR TO THE TRANSFER OF LAND INTERESTS TO THE DEPARTMENT

PARCEL NUMBER	OWNER(S)	INTEREST REQUIRED	TLE S.F.
9	4 ROSS INVESTMENTS IV, LLC, VENDOR, CURTIS E. RENFROE AND JENNIFER J. RENFROE, HUSBAND AND WIFE, AS SURVIVORSHIP OF MARITAL PROPERTY, AS TO AN UNDIVIDED 1/2 INTEREST; TOGETHER AS TENANTS IN COMMON	TLE	92

UTILITY INTERESTS REQUIRED

UTILITY NUMBER	UTILITY OWNER(S)	INTEREST REQUIRED
201	LAKELAND TELECOM INC (COMMUNICATION)	RELEASE OF RIGHTS
206	NORTHERN STATES POWER COMPANY, A WISCONSIN CORPORATION (ELECTRIC)	RELEASE OF RIGHTS

SCALE, FEET
0 20 40

GN

(201) LAKELAND TELECOM INC (COMMUNICATION)
DOC. 841540 - PAR. 9

(206) NORTHERN STATES POWER COMPANY, A WISCONSIN CORPORATION (ELECTRIC)
DOC. 161893A - PAR. 9

DATE: 5/0

FILE NAME : TLE EXHIBITS.DWG PLOT DATE : 4/24/2024 12:14 PM R/W PROJECT: 8010-01-24

4

NOTES:
THIS EXHIBIT IS A GRAPHIC REPRESENTATION AND IS FOR REFERENCE PURPOSES ONLY. REFER TO THE CONVEYANCE DOCUMENT FOR PARCEL RELATED DETAILS.

ALL TLES ARE FOR SLOPE GRADING FOR BEAM GUARD PURPOSES.

R/W PROJECT NUMBER: 8010-01-24	EXHIBIT NUMBER: 3

TLE ACQUISITION EXHIBIT
LUCK-SIREN
STH 48 E TO POLK STREET

STH 35 — POLK COUNTY

THAT PART OF THE SE1/4 OF THE SE1/4 OF SECTION 5, AND PART OF THE SW1/4 OF THE SW1/4 OF SECTION 4, ALL LOCATED IN TOWNSHIP 36 NORTH, RANGE 17 WEST, TOWN OF LUCK, POLK COUNTY, WISCONSIN.

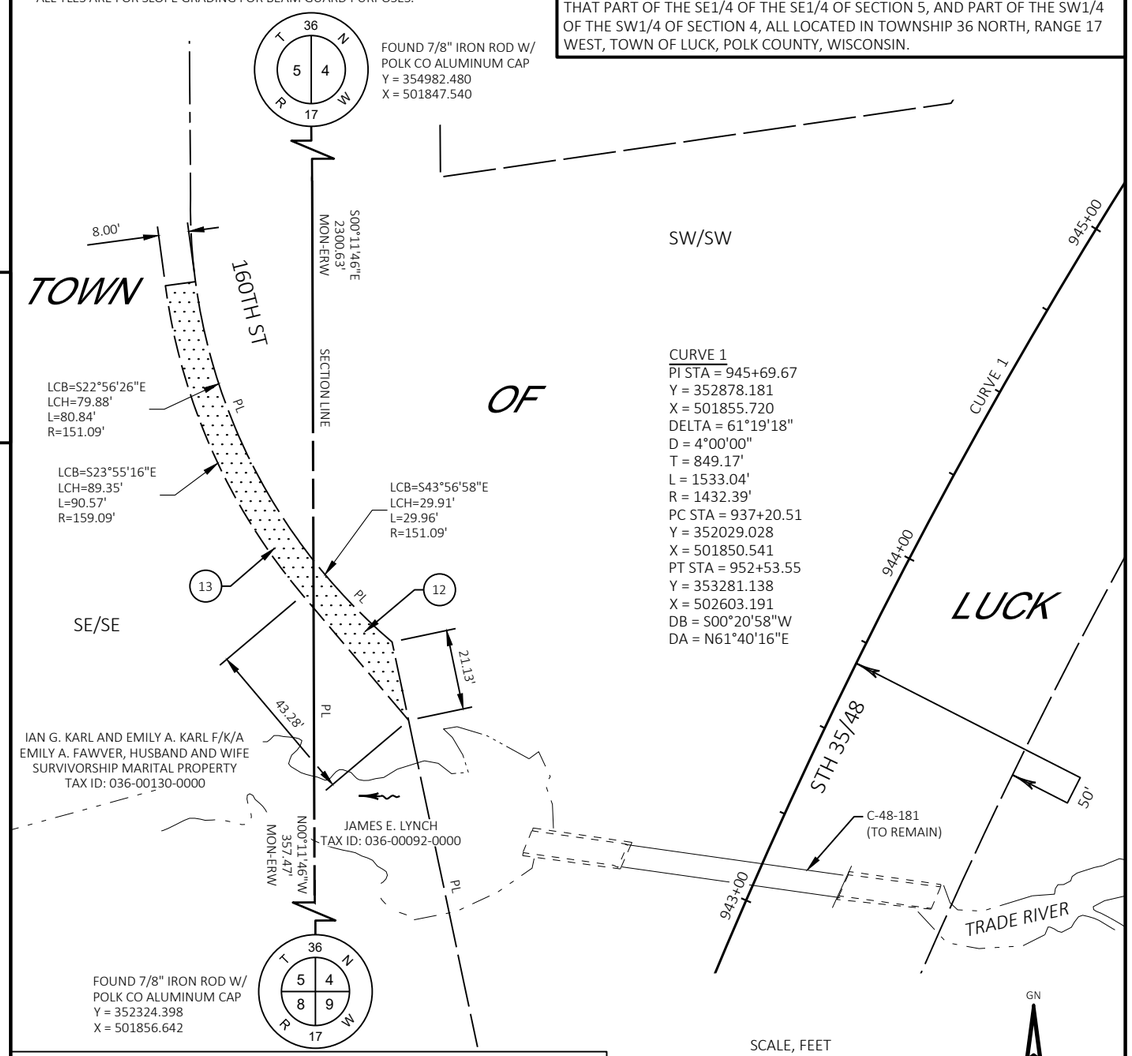

SCHEDULE OF LANDS & INTERESTS REQUIRED

OWNERS NAMES ARE SHOWN FOR REFERENCE PURPOSES ONLY AND ARE SUBJECT TO CHANGE PRIOR TO THE TRANSFER OF LAND INTERESTS TO THE DEPARTMENT

PARCEL NUMBER	OWNER(S)	INTEREST REQUIRED	TLE S.F.
12	JAMES E. LYNCH	TLE	310
13	IAN G. KARL AND EMILY A. KARL F/K/A EMILY A. FAWVER, HUSBAND AND WIFE SURVIVORSHIP MARITAL PROPERTY	TLE	704

UTILITY INTERESTS REQUIRED

UTILITY NUMBER	UTILITY OWNER(S)	INTEREST REQUIRED
201	LAKELAND TELECOM INC (COMMUNICATION)	RELEASE OF RIGHTS
202	BRIGHTSPEED OF NORTHWEST WISCONSIN, LLC (COMMUNICATION)	RELEASE OF RIGHTS
203	POLK-BURNETT ELECTRIC COOPERATIVE (ELECTRIC)	RELEASE OF RIGHTS
205	WISCONSIN GAS LLC D/B/A WE ENERGIES (GAS)	RELEASE OF RIGHTS
206	NORTHERN STATES POWER COMPANY, A WISCONSIN CORPORATION (ELECTRIC)	RELEASE OF RIGHTS

(201) LAKELAND TELECOM INC (COMMUNICATION)
DOC. 346199 - PAR. 12
DOC. 841548 - PAR. 13

(202) BRIGHTSPEED OF NORTHWEST WISCONSIN, LLC (COMMUNICATION)
DOC. 116923A - PAR. 12

(203) POLK-BURNETT ELECTRIC COOPERATIVE (ELECTRIC)
DOC. 376491 - PAR. 12

(205) WISCONSIN GAS LLC D/B/A WE ENERGIES (GAS)
DOC. 320599 - PAR. 13
DOC. 320600 - PAR. 12

(206) NORTHERN STATES POWER COMPANY, A WISCONSIN CORPORATION (ELECTRIC)
DOC. 161902A - PAR. 13
DOC. 248435 - PAR. 13

DATE: 5/01/2024

NOTES
FIELD VERIFY AND MATCH EXISTING SUPERELEVATIONS AND TRANSITIONS ON CURVES.

DRIVEWAY LOCATIONS NOT SHOWN, MATCH EXISTING WIDTHS AND TYPES.

SEE CONSTRUCTION DETAILS FOR DITCH CLEANING, CULVERT REPLACEMENTS, AND MISCELLANEOUS CULVERT REPAIRS.

SEE CONSTRUCTION DETAILS FOR WETLANDS, SLOPE INTERCEPT, GUARDRAIL DATA, AND CLEARING AND GRUBBING INFORMATION AND LOCATIONS.

CP #6
Y = 331,279.72
X = 500,989.67
3/4" REBAR W/RED CAP
SET BY CBS2

T 36 N
R 17 W
29 28
32 33
(DO NOT DISTURB)

Y = 333,011.55
X = 502,046.26

BP: 747+00.00

PUBLIC LAND SURVEY
MONUMENT VERIFY AND RESET

PI: 759+73.82

Y = 334,284.66
X = 502,017.61

PUBLIC LAND SURVEY
MONUMENT VERIFY AND RESET

260TH AVE

PI: 782+62.00

END CONSTRUCTION
STA 782+72, 65' LT
BUTT JOINT REQ'D
(SEE CONSTRUCTION DETAILS)

N

STH 35

750+00 N1°17'21"W 760+00 N0°07'03"E 770+00 STH 35\48 780+00 790+00 N0°41'26"W 800+00

BEGIN PROJECT
STA 747+52
Y=333,063.15
X=502,045.10
BUTT JOINT REQ'D
(SEE CONSTRUCTION DETAILS)

ROBERTSON RD

STH 48\W 1ST AVE

END CONSTRUCTION
STA 755+78, 91' RT
BUTT JOINT REQ'D
(SEE CONSTRUCTION DETAILS)

DUNCAN ST

END CONSTRUCTION
STA 782+59, 47' RT
BUTT JOINT REQ'D
(SEE CONSTRUCTION DETAILS)

Y = 336,572.83
X = 502,022.31
STA 782+60, RT
CLEANING CULVERT PIPES REQ'D

NORTH STAR CREEK

ICE AGE NATIONAL SCENIC TRAIL/
GANDY DANCER STATE TRAIL

260TH AVE

5

5

T 36 N
R 17 W
20 21

PUBLIC LAND SURVEY
MONUMENT VERIFY AND RESET

PI: 808+80.93

END CONSTRUCTION
STA 835+10, 89' LT
BUTT JOINT REQ'D
(SEE CONSTRUCTION DETAILS)

T 36 N
R 17 W
17 16
20 21

PUBLIC LAND SURVEY
MONUMENT VERIFY AND RESET

CTH B

PI: 835+23.63

T 36 N
R 17 W
17 16

PUBLIC LAND SURVEY
MONUMENT VERIFY AND RESET

N

C-48-180
BOX CULVERT JOINT REPAIR
AND RIPRAP AT WINGWALLS
(SEE STRUCTURE PLANS)

NORTH STAR CREEK

ST PETERS
CEMETERY
(DO NOT ENTER)

BM 66

BM 67

800+00 N0°41'26"W 810+00 820+00 N0°39'38"W 830+00 840+00 STH 35\48 850+00 N1°32'37"W 860+00 870+00 N1°32'37

REPLACE CULVERT
STA 804+54

Y = 339,191.57
X = 501,990.75

NGS

CP #80001
Y = 340,316.69
X = 502,017.33
ELEV = 1169.96
NGS LUCK W466
(DO NOT DISTURB)

NORTH STAR CREEK

REPLACE CULVERT
STA 828+34

REPLACE CULVERT
STA 833+31

END CONSTRUCTION
STA 835+00, 67' RT
BUTT JOINT REQ'D
(SEE CONSTRUCTION DETAILS)

Y = 341,834.10
X = 501,960.29

REPLACE CULVERT
STA 840+02

REPLACE CULVERT
STA 846+91

REPLACE CULVERT
STA 856+83

NORTH STAR CREEK

REMOVE AND REPLACE GUARDRAIL, LT&RT
(SEE CONSTRUCTION DETAILS)

270TH AVE

UNNAMED STREAM

SOUTH BRANCH TRADE RIVER

ICE AGE NATIONAL SCENIC TRAIL/
GANDY DANCER STATE TRAIL

BENCH MARKS

NO.	STATION/OFFSET	DESCRIPTION	ELEV.
66	866+13.44, 49.65' LT	BM 3/8" SPIKE IN POWER POLE	1115.71'
67	865+85.54, 28.81' RT	BM CHISELED "X"	1116.19'

PROJECT NO: 8010-01-80	HWY: STH 35	COUNTY: POLK	PLAN	SHEET 94	E

NOTES
FIELD VERIFY AND MATCH EXISTING SUPERELEVATIONS AND TRANSITIONS ON CURVES.

DRIVEWAY LOCATIONS NOT SHOWN, MATCH EXISTING WIDTHS AND TYPES.

SEE CONSTRUCTION DETAILS FOR DITCH CLEANING, CULVERT REPLACEMENTS, AND MISCELLANEOUS CULVERT REPAIRS.

SEE CONSTRUCTION DETAILS FOR WETLANDS, SLOPE INTERCEPT, GUARDRAIL DATA, AND CLEARING AND GRUBBING INFORMATION AND LOCATIONS.

NORTH STAR CREEK

CP #3
Y = 347,046.84
X = 501,240.11
3/4" REBAR W/RED CAP
SET BY CBS2

PI: 886+56.36

280TH AVE

PI: 896+89.40

UNNAMED STREAM

REPLACE CULVERT
STA 884+53

END CONSTRUCTION
STA 887+40, 71' LT
BUTT JOINT REQ'D
(SEE CONSTRUCTION DETAILS)

N1°32'37"W

880+00

890+00

N0°13'06"E

900+00

STH 35\48

910+00

920+00

N0°20'58"E

930+00

940+00

REPLACE CULVERT
STA 876+18
STA 876+27

Y = 346,964.96
X = 501,822.02

STA 887+30, RT
CLEANING CULVERT PIPES REQ'D

280TH AVE

Y = 347,998.00
X = 501,825.96

REPLACE CULVERT
STA 908+78

STA 919+75
CLEANING CULVERT PIPES REQ'D

END CONSTRUCTION
STA 887+40, 67' RT
BUTT JOINT REQ'D
(SEE CONSTRUCTION DETAILS)

PUBLIC LAND SURVEY
MONUMENT VERIFY AND RESET

PUBLIC LAND SURVEY
MONUMENT VERIFY AND RESET

PUBLIC LAND SURVEY
MONUMENT VERIFY AND RESET

CURVE NO. 1
PI STA = 945+69.67
Y = 352878.18
X = 501855.72
PC STA = 937+20.51
Y=352029.03
X=501850.54
PT STA = 952+53.55
Y=353281.14
X=502603.19
DELTA = 61°19'18"
D = 4°00'00"
T = 849.17'
L = 1533.04'
R = 1432.39'
SE TRANSITION (T) = 202'
RO (RUNOFF) =151'
PROPOSED SE = 5.9%

EXTEND CULVERT
STA 8+91

END CONSTRUCTION
STA 943+49, 59' LT
STA 9+41 (160TH ST)
BUTT JOINT REQ'D
(SEE CONSTRUCTION DETAILS)

REMOVE AND REPLACE
GUARDRAIL, LT&RT

PC: 937+20.51

BROWN BROOK

160TH ST

CURVE 1

950+00

290TH AVE

C-48-181
(TO REMAIN)

TRADE RIVER

SOUTH BRANCH TRADE RIVER

ICE AGE NATIONAL SCENIC TRAIL/
GANDY DANCER STATE TRAIL

END CONSTRUCTION
STA 940+32, 52' RT
MATCH EXISTING BASE AGGREGATE SIDE ROAD
(SEE CONSTRUCTION DETAILS)

5

5

CURVE NO. 1
PI STA = 945+69.67
Y = 352878.18
X = 501855.72
PC STA = 937+20.51
Y=352029.03
X=501850.54
PT STA = 952+53.55
Y=353281.14
X=502603.19
DELTA = 61°19'18"
D = 4°00'00"
T = 849.17'
L = 1533.04'
R = 1432.39'
SE TRANSITION (T) = 202'
RO (RUNOFF) = 151'
PROPOSED SE = 5.9%

CURVE NO. 2
PI STA = 1013+44.90
Y = 356171.67
X = 507965.04
PC STA = 1002+84.97
Y=355668.70
X=507032.05
PT STA = 1019+95.68
Y=357140.99
X=507536.23
DELTA = 85°32'06"
D = 5°00'00"
T = 1059.93'
L = 1710.71'
R = 1145.92'
MATCH EXISTING
SUPERELEVATION

BROWN BROOK

END CONSTRUCTION
STA 943+49, 59' LT
STA 9+41 (160TH ST)
BUTT JOINT REQ'D
(SEE CONSTRUCTION DETAILS)

160TH ST

PT: 952+53.55

PC: 1002+84.97

GANDY DANCER STATE TRAIL

ROADWAY SIDE SLOPE GRADING, LT&RT
(SEE CONSTRUCTION DETAILS)

C-48-8
(TO REMAIN)

CURVE 1

950+00

960+00

970+00

STH 35\48

980+00

N61°40'16"E

990+00

1000+00

CURVE 2

1010+00

REPLACE CULVERT
STA 951+93

REPLACE CULVERT
STA 969+85

REPLACE CULVERT
STA 977+00

ICE AGE NATIONAL SCENIC TRAIL CONNECTING ROUTE
(CONTINUES SOUTH ON 150TH ST)

C-48-181
(TO REMAIN)

PC: 937+20.51

940+00

290TH AVE

150TH ST

TRADE RIVER

N0°20'58"E

END CONSTRUCTION
STA 940+32, 52' RT
MATCH EXISTING BASE AGGREGATE SIDE ROAD
(SEE CONSTRUCTION DETAILS)

END CONSTRUCTION
STA 1004+08, 65' RT
BUTT JOINT REQ'D
(SEE CONSTRUCTION DETAILS)

ICE AGE NATIONAL SCENIC TRAIL/
GANDY DANCER STATE TRAIL

PROJECT NO: 8010-01-80	HWY: STH 35	COUNTY: POLK	PLAN	SHEET 95	E

NOTES
FIELD VERIFY AND MATCH EXISTING SUPERELEVATIONS AND TRANSITIONS ON CURVES.

DRIVEWAY LOCATIONS NOT SHOWN, MATCH EXISTING WIDTHS AND TYPES.

SEE CONSTRUCTION DETAILS FOR DITCH CLEANING, CULVERT REPLACEMENTS, AND MISCELLANEOUS CULVERT REPAIRS.

SEE CONSTRUCTION DETAILS FOR WETLANDS, SLOPE INTERCEPT, GUARDRAIL DATA, AND CLEARING AND GRUBBING INFORMATION AND LOCATIONS.

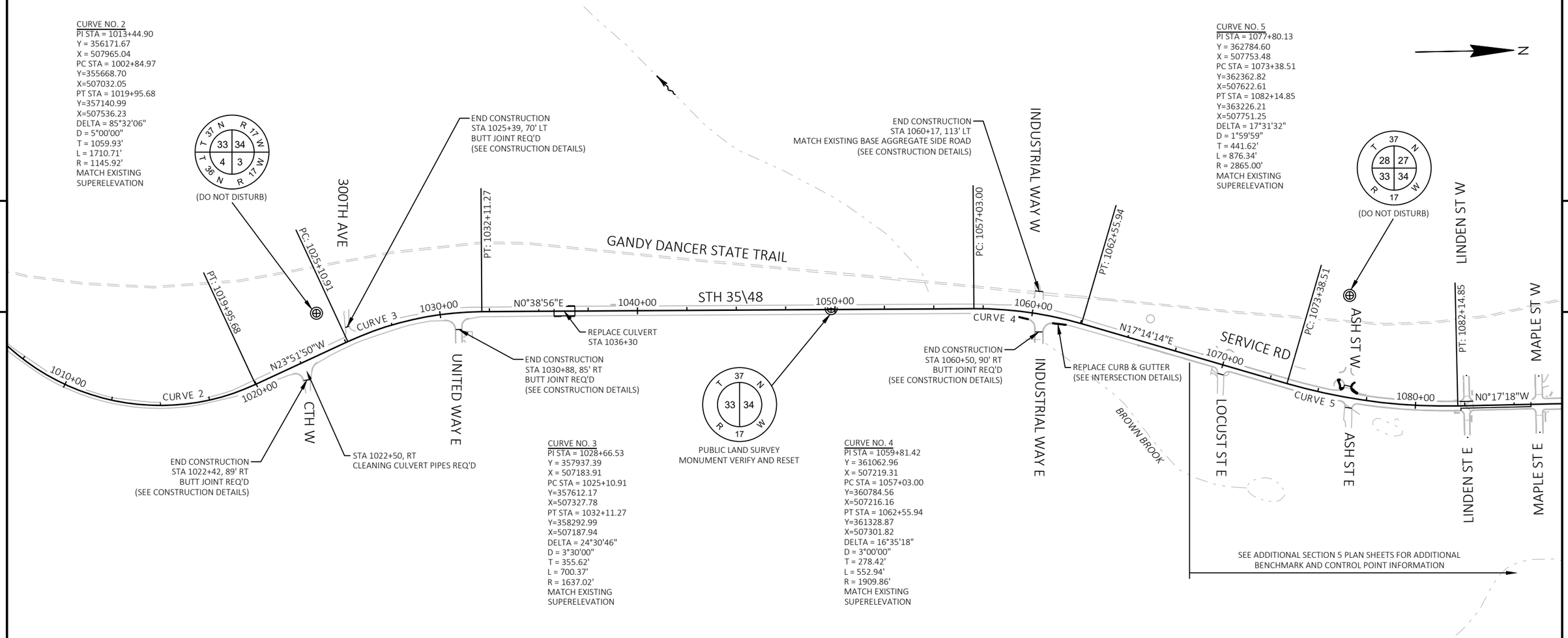

PROJECT NO: 8010-01-80	HWY: STH 35	COUNTY: POLK	PLAN	SHEET 96	E

FILE NAME : P:\55XX\5508.DP.22.STH35-48.PLK\CADDS\80100180\SHEETS\050201-PN.DWG
LAYOUT NAME - 03
PLOT DATE : 4/20/2026 9:55 AM PLOT BY : PARKER TISCHAUSER PLOT NAME : PLOT SCALE : 1 IN:500 FT

LEGEND

- DELINEATED WETLAND BOUNDARY
- SLOPE INTERCEPT
- SAN ADJUSTING SANITARY MANHOLE COVERS
- WV ADJUSTING WATER VALVE BOXES

BENCH MARKS

NO.	STATION/OFFSET	DESCRIPTION	ELEV.
50	1068+98.47, 74.37' LT	BM MTSMP 7PO5	1209.21'
51	1069+69.34, 30.92' RT	BM WHIP BOLT	1209.69'

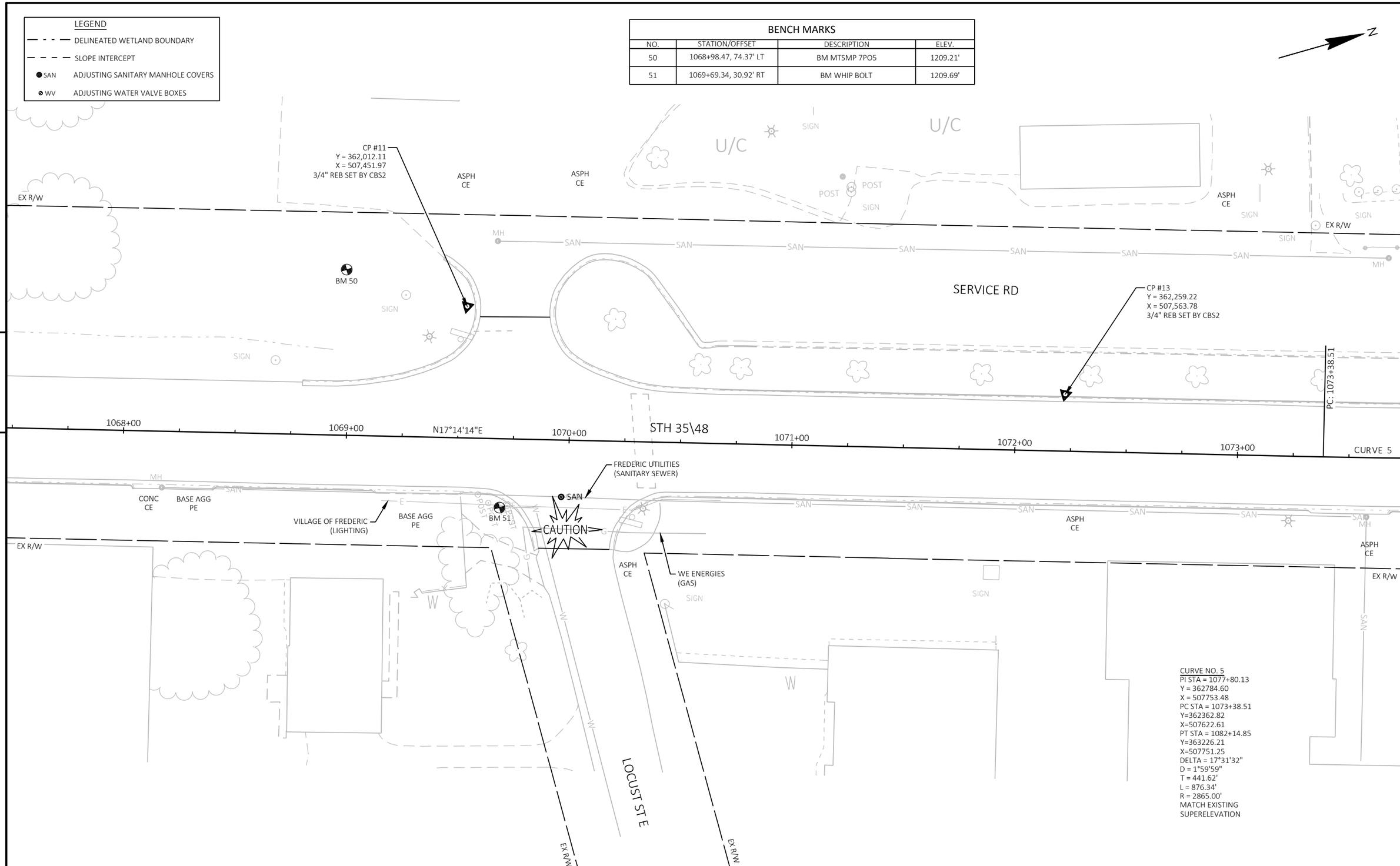

CURVE NO. 5
PI STA = 1077+80.13
Y = 362784.60
X = 507753.48
PC STA = 1073+38.51
Y=362362.82
X=507622.61
PT STA = 1082+14.85
Y=363226.21
X=507751.25
DELTA = 17°31'32"
D = 1°59'59"
T = 441.62'
L = 876.34'
R = 2865.00'
MATCH EXISTING
SUPERELEVATION

PROJECT NO: 8010-01-80	HWY: STH 35	COUNTY: POLK	PLAN	SHEET 97	E

FILE NAME : P:\55XX\5508.DP.22.STH35-48.PLK\CADDS\80100180\SHEETS\050202-PN.DWG
LAYOUT NAME - 01
PLOT DATE : 4/20/2026 10:11 AM
PLOT BY : PARKER TISCHAUSER
PLOT NAME :
PLOT SCALE : 1 IN:40 FT
WISDOT/CADDS SHEET 42

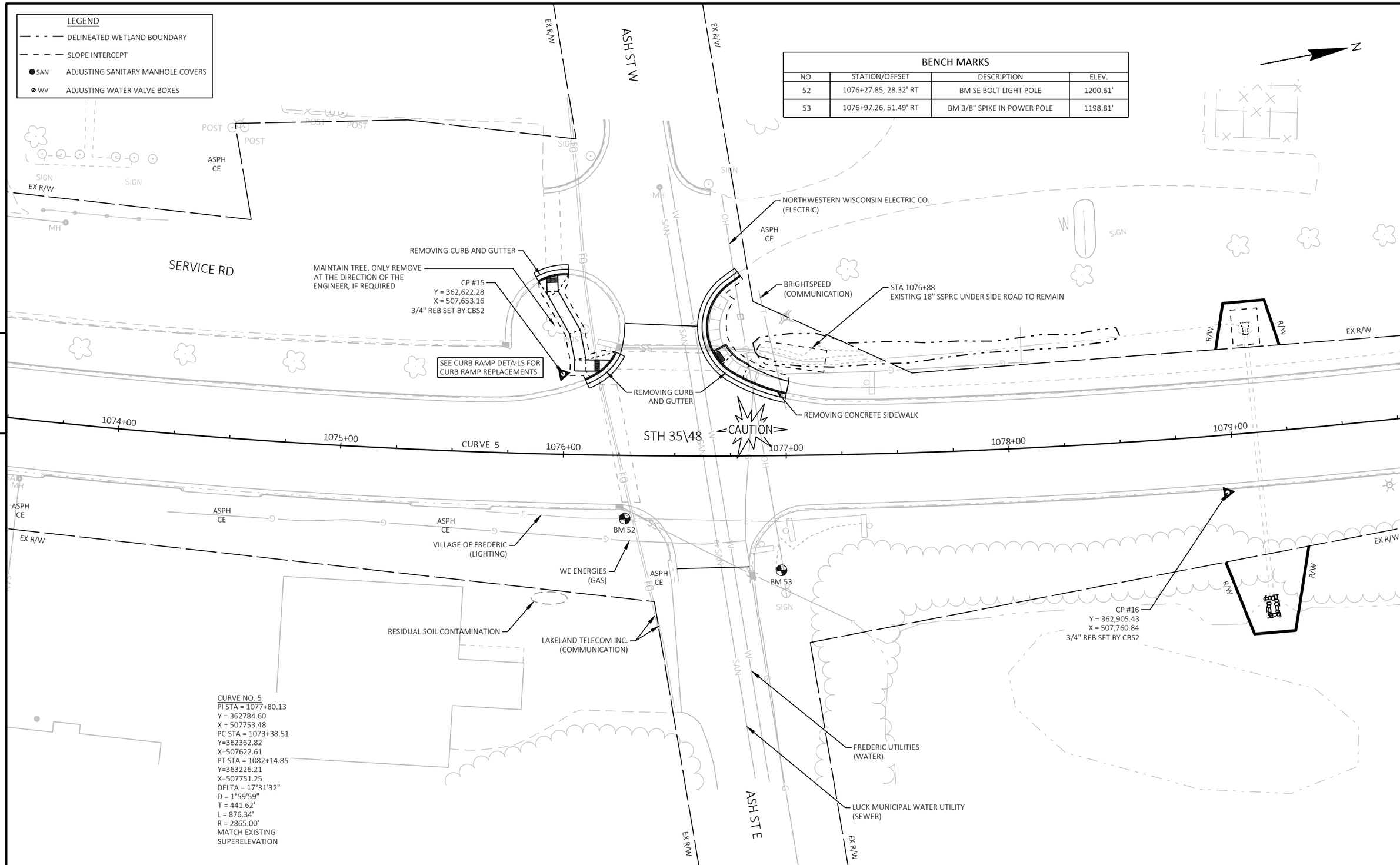

BENCH MARKS

NO.	STATION/OFFSET	DESCRIPTION	ELEV.
52	1076+27.85, 28.32' RT	BM SE BOLT LIGHT POLE	1200.61'
53	1076+97.26, 51.49' RT	BM 3/8" SPIKE IN POWER POLE	1198.81'

PROJECT NO: 8010-01-80	HWY: STH 35	COUNTY: POLK	PLAN	SHEET 98	E

LEGEND

DELINEATED WETLAND BOUNDARY

SLOPE INTERCEPT

SAN ADJUSTING SANITARY MANHOLE COVERS

WV ADJUSTING WATER VALVE BOXES

N

EX R/W

LINDEN ST W

EX R/W

A/C

A/C

CP #17
Y = 363,304.64
X = 507,710.45
3/4" REB SET BY CBS2

NO MILL AND OVERLAY ON
SIDE ROAD APPROACH

EX R/W

SIGN

SIGN

W

EX R/W

5

5

PT: 1082+14.85

CAUTION

1080+00

1081+00

CURVE 5

1082+00

1083+00

STH 35\48

1084+00

N0°17'18"W

1085+00

WE ENERGIES
(GAS)

EX R/W

CP #19
Y = 363,222.21
X = 507,777.83
3/4" REB SET BY CBS2

STA 1082+30, 12' RT
BUTT JOINT REQ'D
(SEE CONSTRUCTION DETAILS)

NO MILL AND OVERLAY IN
RIGHT PARKING LANE

CURVE NO. 5
PI STA = 1077+80.13
Y = 362784.60
X = 507753.48
PC STA = 1073+38.51
Y=362362.82
X=507622.61
PT STA = 1082+14.85
Y=363226.21
X=507751.25
DELTA = 17°31'32"
D = 1°59'59"
T = 441.62'
L = 876.34'
R = 2865.00'
MATCH EXISTING
SUPERELEVATION

LINDEN ST E

EX R/W

EX R/W

LAKELAND TELECOM INC.
(COMMUNICATION)

CP #18
Y = 363,427.98
X = 507,806.23
3/4" REB SET BY CBS2

NO MILL AND OVERLAY IN
RIGHT PARKING LANE

EX R/W

LAKELAND TELECOM INC.
(COMMUNICATION)

POST

PROJECT NO: 8010-01-80	HWY: STH 35	COUNTY: POLK	PLAN	SHEET 99	E

FILE NAME : P:\55XX\5508.DP.22.STH35-48.PLK\CADDS\80100180\SHEETS\050202-PN.DWG
LAYOUT NAME - 03

PLOT DATE : 4/20/2026 9:55 AM PLOT BY : PARKER TISCHAUSER PLOT NAME : PLOT SCALE : 1 IN:40 FT

WISDOT/CADDS SHEET 42

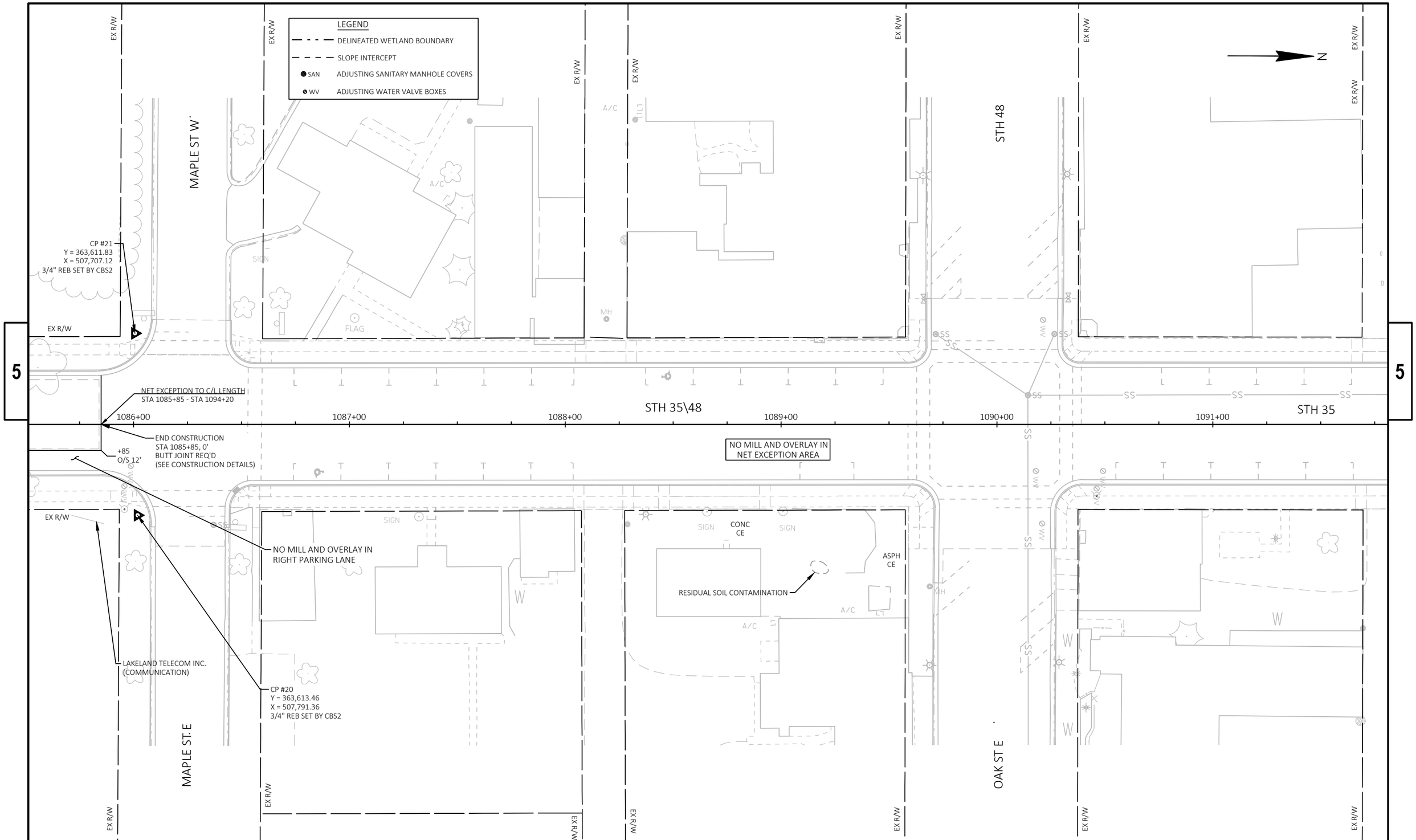

PROJECT NO: 8010-01-80	HWY: STH 35	COUNTY: POLK	PLAN	SHEET 100	E

FILE NAME : P:\55XX\5508.DP.22.STH35-48.PLK\CADDS\80100180\SHEETS\050202-PN.DWG
LAYOUT NAME - 04
PLOT DATE : 8/19/2026 11:22 AM
PLOT BY : PARKER TISCHAUSER
PLOT NAME :
PLOT SCALE : 1 IN:40 FT
WISDOT/CADDS SHEET 42

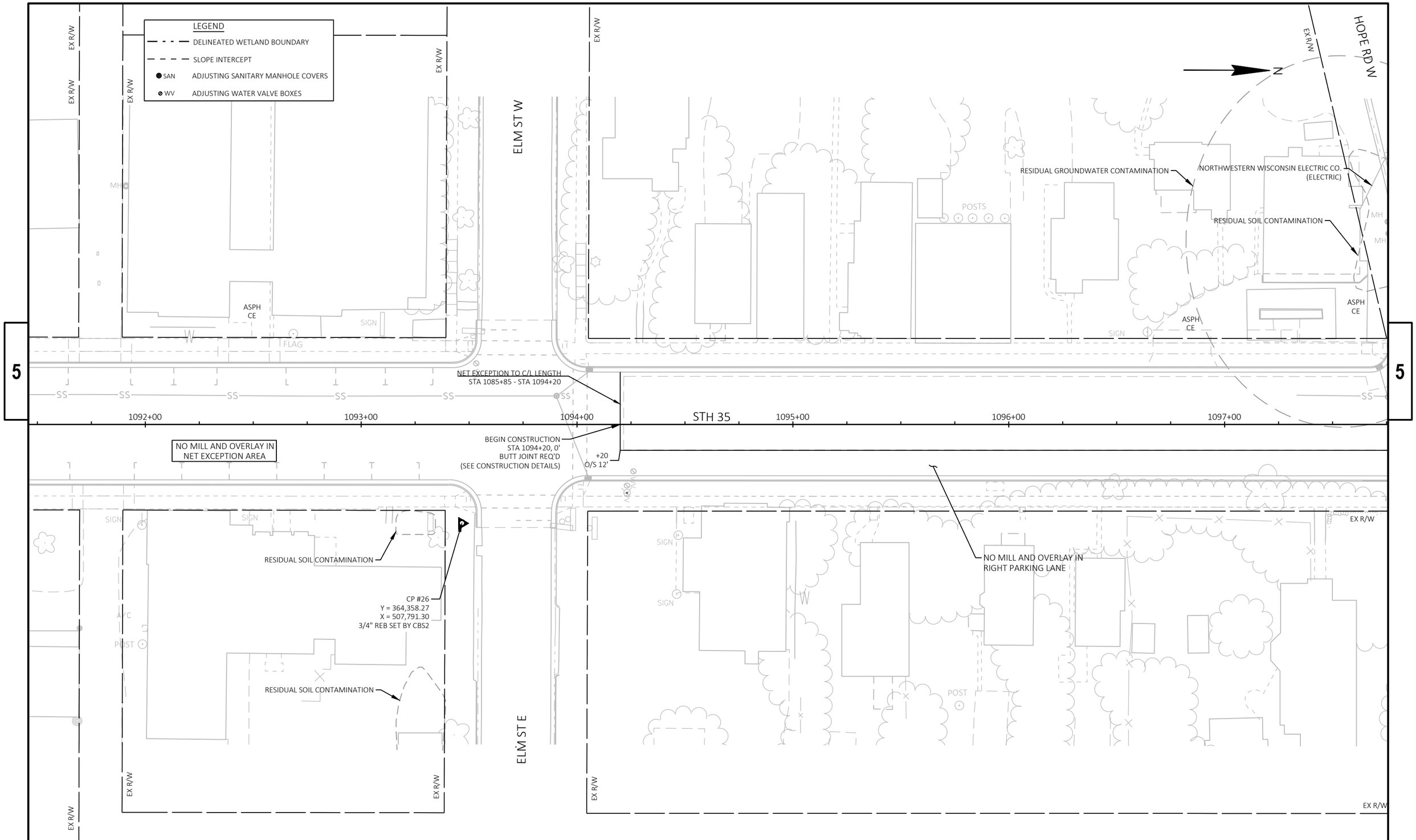

PROJECT NO: 8010-01-80	HWY: STH 35	COUNTY: POLK	PLAN	SHEET 101	E

FILE NAME : P:\55XX\5508.DP.22.STH35-48.PLK\CADDS\80100180\SHEETS\050202-PN.DWG
LAYOUT NAME - 05
PLOT DATE : 8/19/2026 11:22 AM
PLOT BY : PARKER TISCHAUSER
PLOT NAME :
PLOT SCALE : 1 IN:40 FT
WISDOT/CADDS SHEET 42

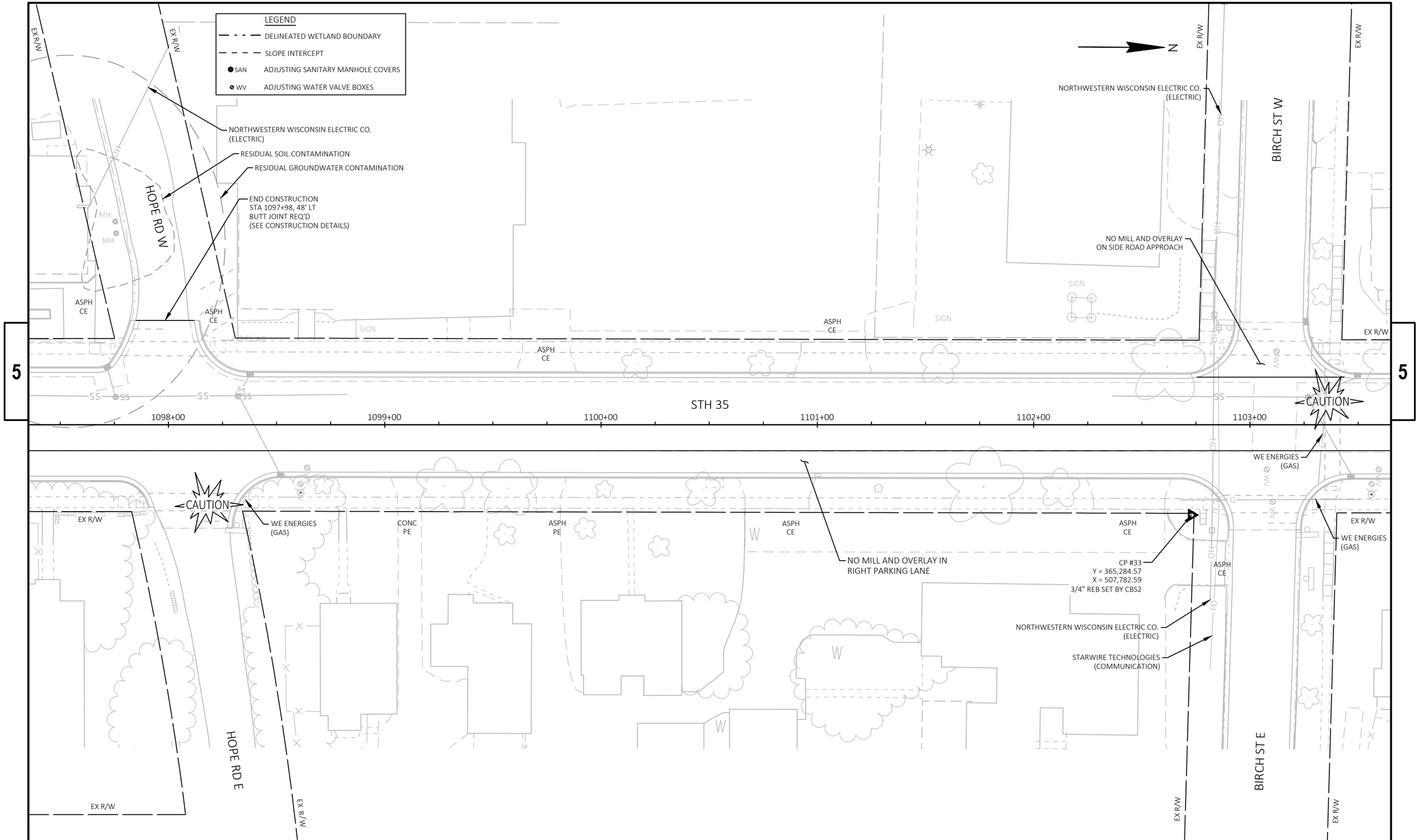

PROJECT NO: 8010-01-80	HWY: STH 35	COUNTY: POLK	PLAN	SHEET 102	E

FILE NAME : P:\55XX\5508.DP.22.STH35-48.PLK\CADDS\80100180\SHEETS\050202-PN.DWG
LAYOUT NAME - 06
PLOT DATE : 4/20/2026 10:03 AM
PLOT BY : PARKER TISCHAUSER
PLOT NAME :
PLOT SCALE : 1 IN:40 FT
WISDOT/CADDS SHEET 42

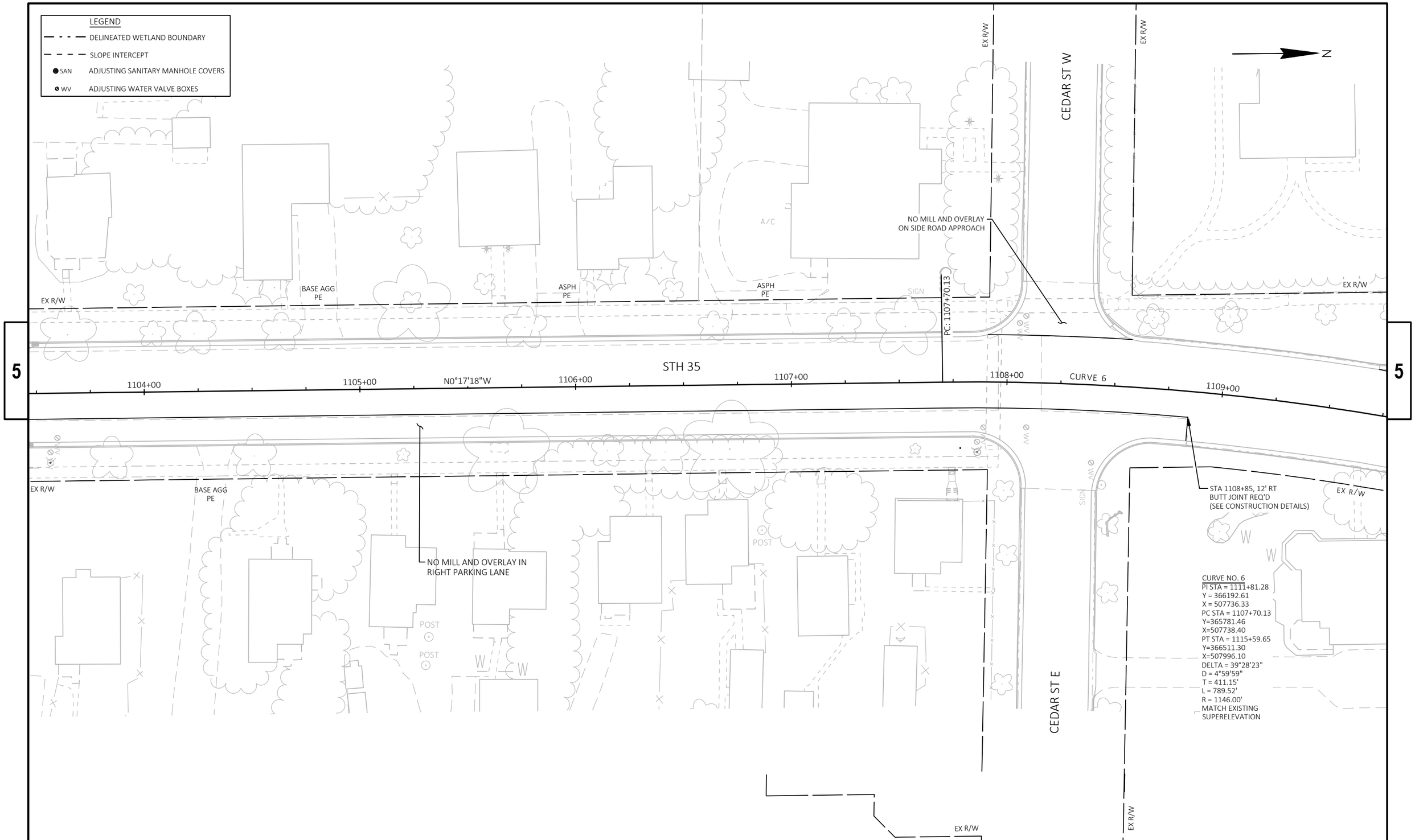

PROJECT NO: 8010-01-80	HWY: STH 35	COUNTY: POLK	PLAN	SHEET 103	E

FILE NAME : P:\55XX\5508.DP.22.STH35-48.PLK\CADDS\80100180\SHEETS\050202-PN.DWG
LAYOUT NAME - 07
PLOT DATE : 4/20/2026 10:01 AM
PLOT BY : PARKER TISCHAUSER
PLOT NAME :
PLOT SCALE : 1 IN:40 FT
WISDOT/CADDS SHEET 42

LEGEND

DELINEATED WETLAND BOUNDARY

SLOPE INTERCEPT

SAN ADJUSTING SANITARY MANHOLE COVERS

WV ADJUSTING WATER VALVE BOXES

NO MILL AND OVERLAY
ON SIDE ROAD APPROACH

CURVE NO. 6
PI STA = 1111+81.28
Y = 366192.61
X = 507736.33
PC STA = 1107+70.13
Y=365781.46
X=507738.40
PT STA = 1115+59.65
Y=366511.30
X=507996.10
DELTA = 39°28'23"
D = 4°59'59"
T = 411.15'
L = 789.52'
R = 1146.00'
MATCH EXISTING
SUPERELEVATION

WISCONSIN AVE N

STH 35

CURVE 6

1110+00

1111+00

1112+00

1113+00

1114+00

1115+00

EX R/W

WATER TOW

SIGN

FLAG

POST

ASPH
PE

N

5

5

PROJECT NO: 8010-01-80	HWY: STH 35	COUNTY: POLK	PLAN	SHEET 104	E

FILE NAME : P:\55XX\5508.DP.22.STH35-48.PLK\CADDS\80100180\SHEETS\050202-PN.DWG
LAYOUT NAME - 08

PLOT DATE : 4/20/2026 10:01 AM PLOT BY : PARKER TISCHAUSER PLOT NAME : PLOT SCALE : 1 IN:40 FT

LEGEND

DELINEATED WETLAND BOUNDARY

SLOPE INTERCEPT

SAN ADJUSTING SANITARY MANHOLE COVERS

WV ADJUSTING WATER VALVE BOXES

CURVE NO. 6
PI STA = 1111+81.28
Y = 366192.61
X = 507736.33
PC STA = 1107+70.13
Y=365781.46
X=507738.40
PT STA = 1115+59.65
Y=366511.30
X=507996.10
DELTA = 39°28'23"
D = 4°59'59"
T = 411.15'
L = 789.52'
R = 1146.00'
MATCH EXISTING
SUPERELEVATION

FREDERIC UTILITIES
(WATER)

NORTHWESTERN WISCONSIN ELECTRIC CO.
(ELECTRIC)

POLK ST

EX R/W

BASE AGG
PE

POST

SIGN

GUY

CAUTION

DITCH CLEANING
(SEE CONSTRUCTION DETAILS)

WE ENERGIES
(GAS)

PT: 1115+59.65

5

5

1115+00 CURVE 6 1116+00 N39°11'05"E 1117+00 STH 35 1118+00 1119+00 1120+00 1121+00

BASE AGG
FE

ASPH
PE

OHW

NVS

MH

FLAG

END PROJECT
STA 1118+61
BUTT JOINT REQ'D
(SEE CONSTRUCTION DETAILS)

CP #1
Y = 368,517.82
X = 509,804.79
3/4" REB SET BY CBS2

POLK AVE N

LUCK MUNICIPAL WATER UTILITY
(SEWER)

PROJECT NO: 8010-01-80	HWY: STH 35	COUNTY: POLK	PLAN	SHEET 105	E

FILE NAME : P:\55XX\5508.DP.22.STH35-48.PLK\CADDS\80100180\SHEETS\050202-PN.DWG
LAYOUT NAME - 09

PLOT DATE : 4/20/2026 10:00 AM PLOT BY : PARKER TISCHAUSER PLOT NAME : PLOT SCALE : 1 IN:40 FT

Standard Detail Drawing List

08D01-24A	CONCRETE CURB & GUTTER
08D01-24B	CONCRETE CURB, TIES AND CURB AND GUTTER APPLICATIONS
08D05-22A	CURB RAMPS TYPES 1 AND 1-A
08D05-22B	CURB RAMPS TYPES 2 AND 3
08D05-22C	CURB RAMPS TYPES 4A AND 4A1
08D05-22D	CURB RAMPS TYPES 4B AND 4B1
08D05-22E	CURB RAMPS TYPES 5, 6, 7A, 7B & 8
08D05-22F	CURB RAMPS RADIAL DETECTABLE WARNING FIELD APPLICATIONS
08D05-22G	CURB RAMPS RECTANGULAR AND RADIAL DETECTABLE WARNING PLATES
08D16-11	CONCRETE GUTTER, CURB AND GUTTER AND PAVEMENT TIES
08E08-03	TYPICAL INSTALLATIONS OF EROSION BALES / TEMPORARY DITCH CHECKS
08E09-06	SILT FENCE
08E10-02	INLET PROTECTION TYPE A, B, C AND D
08E15-01	CULVERT PIPE CHECK
08F01-11	APRON ENDWALLS FOR CULVERT PIPE
08F02-01	APRON ENDWALLS FOR PIPE ARCH AND ELLIPTICAL PIPE
08F04-08	JOINT TIES FOR CONCRETE PIPE AND CONCRETE COLLAR DETAIL
13A11-04A	CENTERLINE RUMBLE STRIPS - ASPHALT
13A11-04D	CENTERLINE RUMBLE STRIPS - INTERSECTIONS, DRIVEWAYS, BRIDGES, RAILROADS
13C19-03	HMA LONGITUDINAL JOINTS
14B28-04A	GUARDRAIL MOW STRIP
14B28-04B	GUARDRAIL MOW STRIP
14B29-01	SAFETY EDGE
14B42-07A	MIDWEST GUARDRAIL SYSTEM (MGS) GUARDRAIL
14B42-07B	MIDWEST GUARDRAIL SYSTEM (MGS) GUARDRAIL
14B42-07C	MIDWEST GUARDRAIL SYSTEM (MGS) GUARDRAIL
14B42-07D	MIDWEST GUARDRAIL SYSTEM (MGS) GUARDRAIL
14B43-04A	MIDWEST GUARDRAIL SYSTEM LONG SPAN MGS (L)
14B43-04B	MIDWEST GUARDRAIL SYSTEM LONG SPAN MGS (L)
14B43-04C	MIDWEST GUARDRAIL SYSTEM LONG SPAN MGS (L)
14B44-04A	MIDWEST GUARDRAIL SYSTEM ENERGY ABSORBING TERMINAL (MGS)
14B44-04B	MIDWEST GUARDRAIL SYSTEM ENERGY ABSORBING TERMINAL (MGS)
14B44-04C	MIDWEST GUARDRAIL SYSTEM ENERGY ABSORBING TERMINAL (MGS)
14B45-05A	MIDWEST GUARDRAIL SYSTEM THRIE BEAM TRANSITION (MGS)
14B45-05B	MIDWEST GUARDRAIL SYSTEM THRIE BEAM TRANSITION (MGS)
14B45-05C	MIDWEST GUARDRAIL SYSTEM THRIE BEAM TRANSITION (MGS)
14B45-05D	MIDWEST GUARDRAIL SYSTEM THRIE BEAM TRANSITION (MGS)
14B45-05E	MIDWEST GUARDRAIL SYSTEM THRIE BEAM TRANSITION (MGS)
14B45-05F	MIDWEST GUARDRAIL SYSTEM THRIE BEAM TRANSITION (MGS)
14B45-05G	MIDWEST GUARDRAIL SYSTEM THRIE BEAM TRANSITION (MGS)
14B45-05H	MIDWEST GUARDRAIL SYSTEM THRIE BEAM TRANSITION (MGS)
14B45-05I	MIDWEST GUARDRAIL SYSTEM THRIE BEAM TRANSITION (MGS)
14B45-05J	MIDWEST GUARDRAIL SYSTEM THRIE BEAM TRANSITION (MGS)
14B45-05K	MIDWEST GUARDRAIL SYSTEM THRIE BEAM TRANSITION (MGS)
14B45-05L	MIDWEST GUARDRAIL SYSTEM THRIE BEAM TRANSITION (MGS)
14B53-03A	SHORT RADIUS BEAM GUARD (MGS) SHORT RADIUS TERMINAL (MGS)
14B53-03B	SHORT RADIUS BEAM GUARD (MGS) SHORT RADIUS TERMINAL (MGS)
14B53-03C	SHORT RADIUS BEAM GUARD (MGS) SHORT RADIUS TERMINAL (MGS)
14B53-03D	SHORT RADIUS BEAM GUARD (MGS) SHORT RADIUS TERMINAL (MGS)
14B53-03E	SHORT RADIUS BEAM GUARD (MGS) SHORT RADIUS TERMINAL (MGS)
14B53-03F	SHORT RADIUS BEAM GUARD (MGS) SHORT RADIUS TERMINAL (MGS)
14B53-03G	SHORT RADIUS BEAM GUARD (MGS) SHORT RADIUS TERMINAL (MGS)
14B53-03H	SHORT RADIUS BEAM GUARD (MGS) SHORT RADIUS TERMINAL (MGS)
14B53-03I	SHORT RADIUS BEAM GUARD (MGS) SHORT RADIUS TERMINAL (MGS)
15A03-02A	FLEXIBLE MARKER POST FOR CULVERT END
15A03-02B	FLEXIBLE MARKER POST FOR CULVERT END
15C02-10A	BARRICADES AND SIGNS FOR MAINLINE CLOSURES
15C02-10B	BARRICADES AND SIGNS FOR VARIOUS CLOSURES
15C02-10F	ADVANCED WIDTH RESTRICTION SIGNING
15C03-05	BARRICADES AND SIGNS FOR SIDEROAD CLOSURES
15C04-05	TRAFFIC CONTROL, ADVANCE WARNING SIGNS 45 M.P.H. OR GREATER TWO-WAY UNDIVIDED ROAD OPEN TO TRAFFIC
15C05-05	TRAFFIC CONTROL, ADVANCE WARNING SIGNS 40 M.P.H. OR LESS TWO-WAY UNDIVIDED ROAD OPEN TO TRAFFIC
15C07-16B	PAVEMENT MARKING WORDS
15C07-16C	PAVEMENT MARKING ARROWS
15C08-24A	PERMANENT LONGITUDINAL PAVEMENT MARKINGS
15C08-24B	TEMPORARY LONGITUDINAL PAVEMENT MARKING

6

Standard Detail Drawing List

15C11-11B	CHANNELIZING DEVICES DRUMS, CONES, BARRICADES AND VERTICAL PANELS
15C12-09A	TRAFFIC CONTROL FOR LANE CLOSURE WITH FLAGGING OPERATION
15C12-09B	TRAFFIC CONTROL, LANE CLOSURE WITH AUTOMATED FLAGGER ASSISTANCE DEVICE
15C18-09A	MEDIAN ISLAND PAVEMENT MARKINGS
15C19-11A	MOVING PAVEMENT MARKING OPERATION TWO-LANE TWO-WAY ROADWAY
15C33-05	STOP LINE AND CROSSWALK PAVEMENT MARKING
15C35-06A	PAVEMENT MARKING (INTERSECTIONS)
15C35-06B	PAVEMENT MARKING AND SIGNING (CLIMBING LANE & PASSING LANE)
15C35-06C	PAVEMENT MARKING AND SIGNING (CLIMBING LANE & PASSING LANE)
15D28-05	TRAFFIC CONTROL, WORK ON SHOULDER OR PARKING LANE, UNDIVIDED ROADWAY
15D30-12A	TRAFFIC CONTROL, PEDESTRIAN ACCOMMODATION
15D30-12B	TRAFFIC CONTROL, PEDESTRIAN ACCOMMODATION
15D30-12C	TRAFFIC CONTROL, PEDESTRIAN ACCOMMODATION
15D30-12D	TRAFFIC CONTROL, PEDESTRIAN ACCOMMODATION
15D30-12E	TRAFFIC CONTROL, PEDESTRIAN ACCOMMODATION
15D30-12F	TRAFFIC CONTROL, PEDESTRIAN ACCOMMODATION
15D30-12G	TRAFFIC CONTROL, PEDESTRIAN ACCOMMODATION
15D30-12H	TRAFFIC CONTROL, PEDESTRIAN ACCOMMODATION
15D30-12I	TRAFFIC CONTROL, PEDESTRIAN ACCOMMODATION
15D30-12J	TRAFFIC CONTROL, PEDESTRIAN ACCOMMODATION
15D30-12K	TRAFFIC CONTROL, PEDESTRIAN ACCOMMODATION
15D30-12L	TRAFFIC CONTROL, PEDESTRIAN ACCOMMODATION
15D39-03	TRAFFIC CONTROL, DROP-OFF SIGNING
15D44-02	TRAFFIC CONTROL, SIGNING ON ROADWAYS WITH MILLED SURFACES
15D45-03	TRAFFIC CONTROL, SIGNING ON ROADWAYS WITH LOOSE GRAVEL
15D48-01	TRAFFIC CONTROL, LANE SHIFT IN FLAGGING OPERATION
15D51-02	TRAFFIC CONTROL, MOBILE OPERATIONS ON AN UNDIVIDED ROADWAY
16A02-01	GEODETIC SURVEY MONUMENT

6

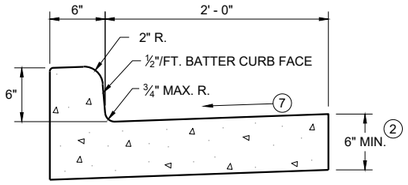

TYPES A (1) & D

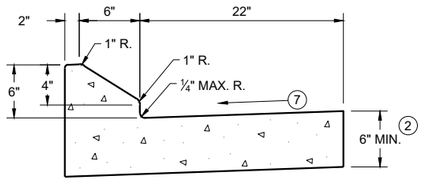

6" SLOPED CURB TYPES G (1) & J

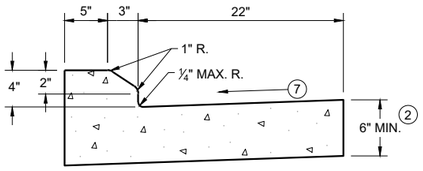

4" SLOPED CURB TYPES G (1) & J

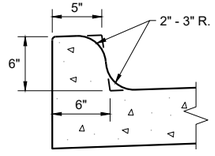

TYPES K (1) & L
(OPTIONAL CURB SHAPE)

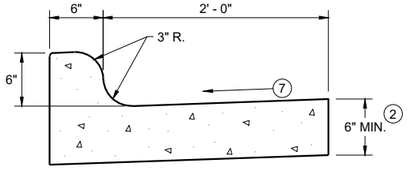

TYPES K (1) & L

CONCRETE CURB AND GUTTER 30"

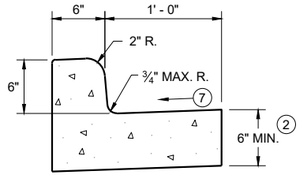

TYPES A (1) & D

CONCRETE CURB AND GUTTER 18"

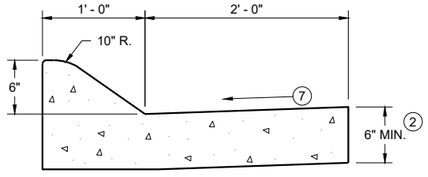

6" SLOPED CURB TYPES A (1) & D

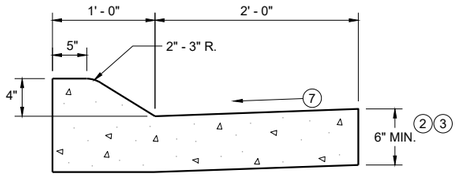

4" SLOPED CURB TYPES A (1) & D

CONCRETE CURB AND GUTTER 36"

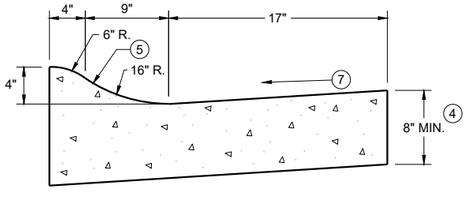

4" SLOPED CURB TYPES R (1) & T
CONCRETE CURB AND GUTTER 30"

TBT & TBTT	X
30"	22"
36"	28"

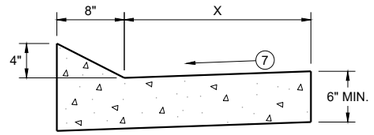

TYPES TBT & TBTT (1)

CONCRETE CURB AND GUTTER

PAVEMENT THICKNESS AND MAXIMUM CONCRETE PANEL WIDTH TABLE

PAVEMENT THICKNESS	MAXIMUM PANEL WIDTH
LESS THAN 10"	12'
10" & ABOVE	15'

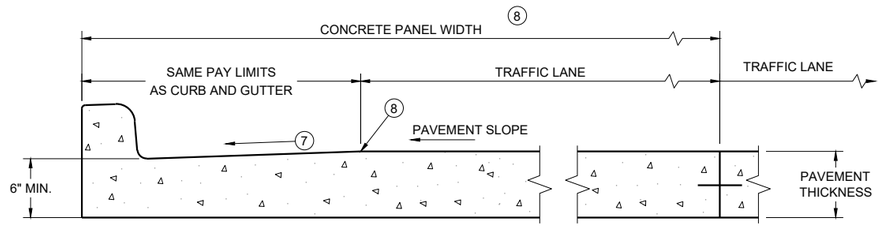

PARTIAL SECTION OF PAVEMENT WITH INTEGRAL CURB AND GUTTER *

* BIKE LANE IS NOT SHOWN

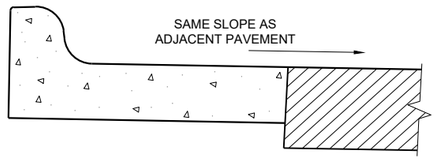

REVERSE SLOPE GUTTER (6)
(TYPICAL FOR ALL CURB & GUTTER TYPES)

GENERAL NOTES

DETAILS OF CONSTRUCTION AND WORKMANSHIP NOT SHOWN ON THIS DRAWING SHALL CONFORM TO THE PERTINENT REQUIREMENTS OF THE CONTRACT.

PAVEMENT TIES AND TIE BARS SHALL BE EPOXY COATED IN CONFORMANCE WITH SUBSECTION 505.2.6.2 OF THE STANDARD SPECIFICATIONS.

INTEGRAL CURB AND GUTTER SHALL CONFORM TO THE DETAILS SHOWN FOR CONCRETE CURB AND GUTTER INCLUDING THE TRANSVERSE GUTTER SLOPE.

UNLESS OTHERWISE SHOWN ON THE TYPICAL CROSS SECTIONS, THE BASE AGGREGATE AND COMMON EXCAVATION LIMITS ARE 2' - 0" BEHIND THE BACK OF CURBS.

(1) TIE BARS ARE REQUIRED FOR CURB AND GUTTERS TYPES A, G, K, R, AND TBTT.

(2) THE BOTTOM OF CURB AND GUTTER MAY BE CONSTRUCTED EITHER LEVEL OR PARALLEL TO THE SLOPE OF THE SUBGRADE OR BASE AGGREGATE PROVIDED A 6" MINIMUM GUTTER THICKNESS IS MAINTAINED.

(3) USE 8" MINIMUM GUTTER THICKNESS WHEN USED WITH AN ADJACENT CONCRETE TRUCK APRON PLACED BEHIND BACK OF CURB.

(4) THE BOTTOM OF CURB AND GUTTER MAY BE CONSTRUCTED EITHER LEVEL OR PARALLEL TO THE SLOPE OF THE SUBGRADE OR BASE AGGREGATE PROVIDED A 8" MINIMUM GUTTER THICKNESS IS MAINTAINED.

(5) UNLESS OTHERWISE NOTED, FOR STAKING PURPOSES THE FACE OF CURB IS 6" FROM THE BACK OF CURB.

(6) WHEN REVERSE SLOPE GUTTER IS REQUIRED, THE LOCATION(S) WILL BE SHOWN ELSEWHERE IN THE PLAN.

(7) USE 4% GUTTER CROSS SLOPE UNLESS OTHERWISE NOTED IN THE PLANS.

(8) INCLUDE LONGITUDINAL JOINT AND TIE BARS ALONG LANE EDGE WHEN CONCRETE PANEL WIDTH EXCEEDS THE MAXIMUM WIDTH PER TABLE BELOW. LONGITUDINAL JOINT(S) ARE NOT ALLOWED WITHIN TRAFFIC LANES AND BIKE LANES. LONGITUDINAL JOINT MAY BE SAWED.

(9) SLOPE TO BE REVERSE SLOPE MATCHING THE SLOPE OF THE PAVEMENT AND THE CIRCULATORY ROADWAY

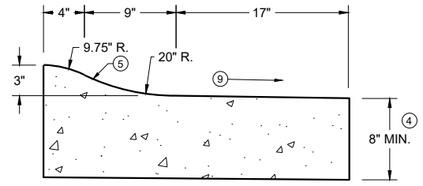

3" SLOPED CURB TYPES R (1) & T

CONCRETE CURB AND GUTTER

STATE OF WISCONSIN
DEPARTMENT OF TRANSPORTATION

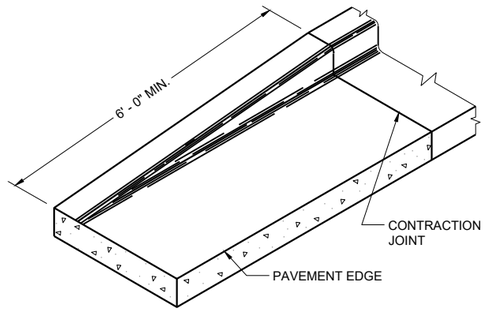

END SECTION CURB AND GUTTER

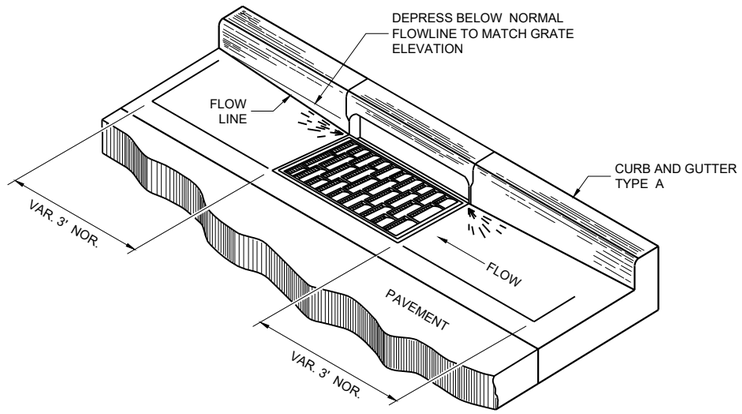

DETAIL OF CURB AND GUTTER AT INLETS

(TYPICAL H INLET COVER SHOWN)

GENERAL NOTES

DETAILS OF CONSTRUCTION AND WORKMANSHIP NOT SHOWN ON THIS DRAWING SHALL CONFORM TO THE PERTINENT REQUIREMENTS OF THE CONTRACT.

PAVEMENT TIES AND TIE BARS SHALL BE EPOXY COATED IN CONFORMANCE WITH SUBSECTION 505.2.6.2 OF THE STANDARD SPECIFICATIONS.

UNLESS OTHERWISE SHOWN ON THE TYPICAL CROSS SECTIONS, THE BASE AGGREGATE AND COMMON EXCAVATION LIMITS ARE 2' - 0" BEHIND THE BACK OF CURBS.

(1) TIE BARS ARE REQUIRED FOR CURB AND GUTTERS TYPES A, G, K, R, AND TBTT.

(2) THE BOTTOM OF CURB AND GUTTER MAY BE CONSTRUCTED EITHER LEVEL OR PARALLEL TO THE SLOPE OF THE SUBGRADE OR BASE AGGREGATE PROVIDED A 6" MINIMUM GUTTER THICKNESS IS MAINTAINED.

(10) REFER TO SDD 08D18 AND 08D19 FOR ADDITIONAL DRIVEWAY ENTRANCE CURB DETAILS.

(11) PLACE 1" THICK EXPANSION JOINT MATERIAL BETWEEN VERTICAL FACE CURB TYPES EXTENDING FROM THE TOP OF CURB TO 1 INCH BELOW THE ADJOINING CONCRETE SURFACE. RIGID CONCRETE STRUCTURES INCLUDE RAISED CONCRETE MEDIANS, CONCRETE SAFETY ISLANDS, SPLITTER ISLANDS, OR LOCATIONS IDENTIFIED ON THE PLANS.

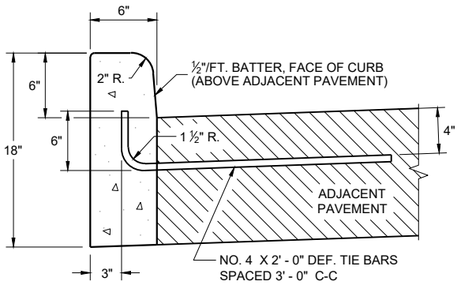

TYPES A (1) & D

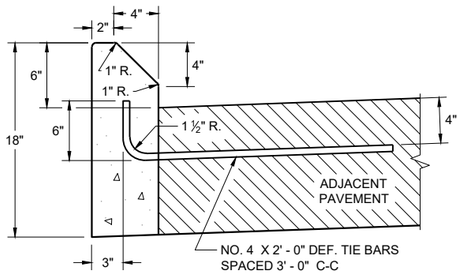

TYPES G (1) & J

CONCRETE CURB

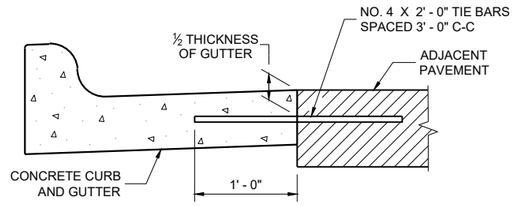

TYPICAL TIE BAR LOCATION (1)

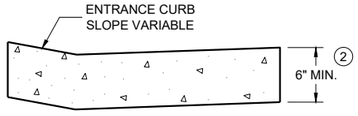

DRIVEWAY ENTRANCE CURB (10)

(WHEN DIRECTED BY THE ENGINEER)

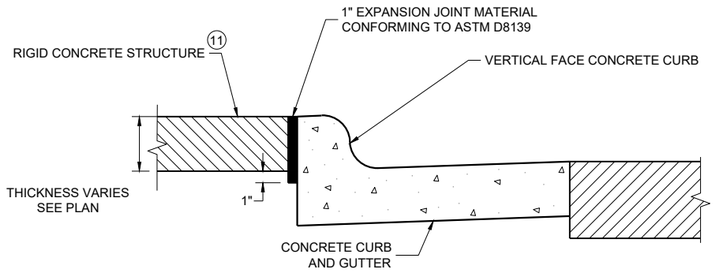

EXPANSION JOINT DETAIL FOR VERTICAL CURB ABUTTING A RIGID STRUCTURE (11)

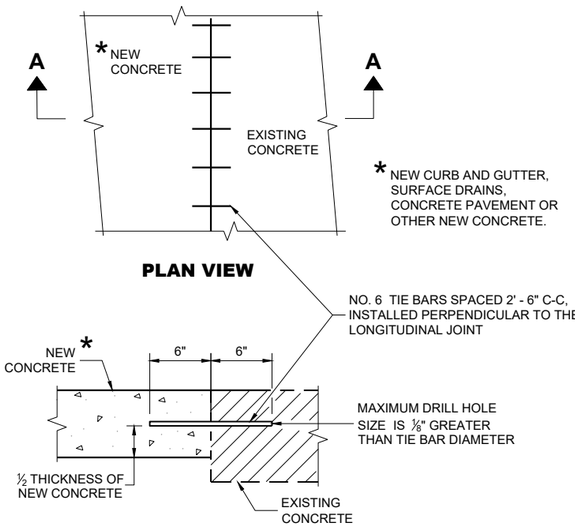

PLAN VIEW

SECTION A - A

TIE BARS DRILLED INTO EXISTING PAVEMENT

CONCRETE CURB, TIES AND CURB AND GUTTER APPLICATIONS

STATE OF WISCONSIN
DEPARTMENT OF TRANSPORTATION

APPROVED
February 2025 — DATE
/S/ Rodnery Taylor — ROADWAY STANDARDS DEVELOPMENT UNIT SUPERVISOR

FHWA

6
SDD 08D01-24b

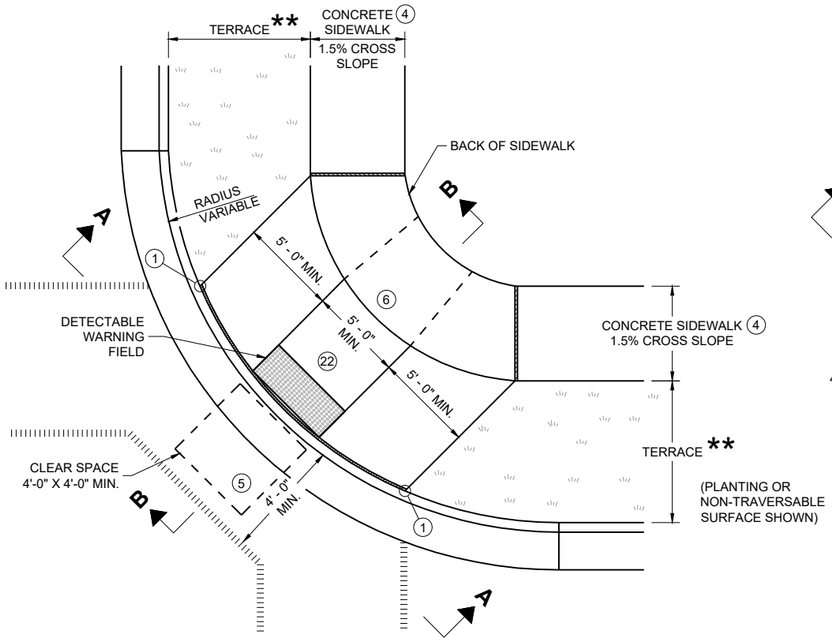

PLAN VIEW

CURB RAMP TYPE 1

(CENTER OF CORNER RADIUS)

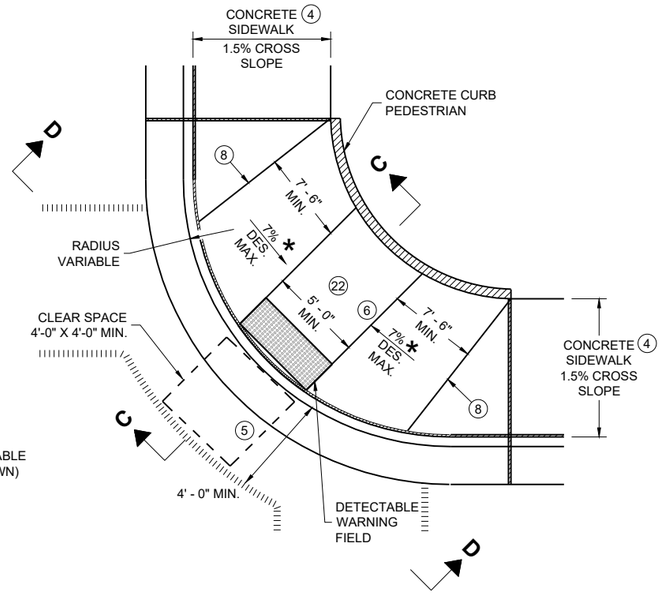

PLAN VIEW

CURB RAMP TYPE 1 - A

(NO TERRACE)

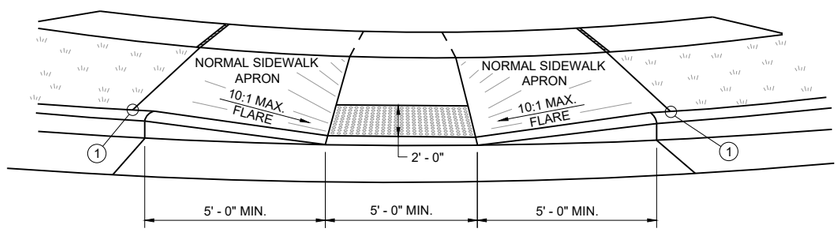

VIEW A - A FOR TYPE 1

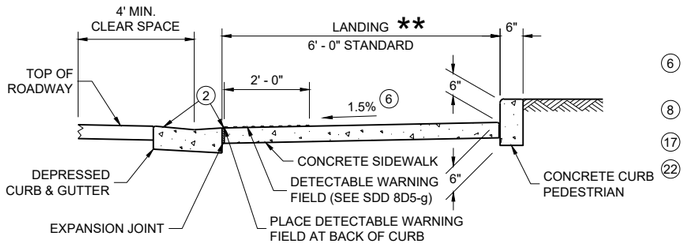

SECTION C - C FOR TYPE 1 - A

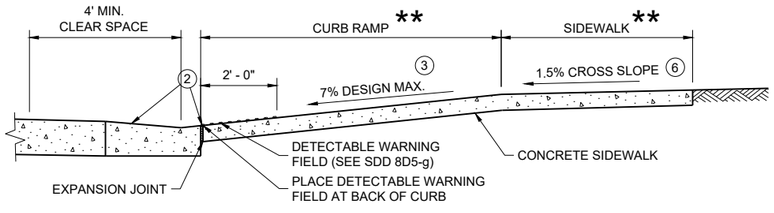

SECTION B - B FOR TYPE 1

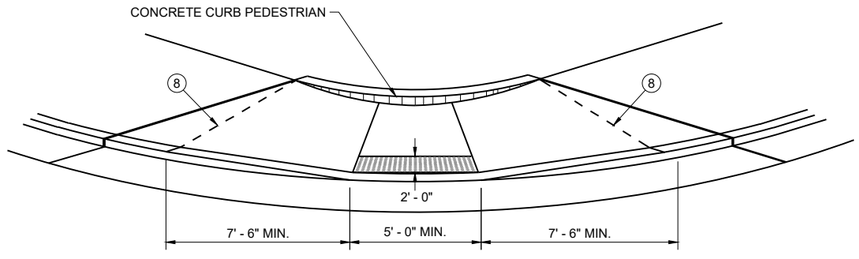

VIEW D - D FOR TYPE 1 - A

GENERAL NOTES

AVOID PLACING DRAINAGE STRUCTURES, JUNCTION BOXES OR OTHER OBSTRUCTIONS IN FRONT OF CURB RAMP ACCESS AREAS.

DETAILS OF CONSTRUCTION, MATERIALS AND WORKMANSHIP NOT SHOWN ON THIS DRAWING SHALL CONFORM TO THE PERTINENT REQUIREMENTS OF THE STANDARD SPECIFICATIONS AND THE APPLICABLE SPECIAL PROVISIONS.

WHEN NECESSARY, THE SIDEWALK ELEVATION MAY BE LOWERED TO MEET THE HIGH POINT ON THE CURB RAMP.

TYPE 1 CURB RAMPS SHALL HAVE A NORMAL SIDEWALK APRON AND CURB ON BOTH SIDES OF CURB RAMP.

DETECTABLE WARNING FILED SHALL BE MEASURED AND PAID BY THE SQUARE FOOT AS "CURB RAMP DETECTABLE WARNING FIELD". THE CONCRETE PEDESTRIAN CURB, IF NEEDED, SHALL BE MEASURED AND PAID BY THE LINEAR FOOT AS "CONCRETE CURB PEDESTRIAN". CONCRETE SIDEWALK IN THE CURB RAMP AREA SHALL BE MEASURED AND PAID BY THE SQUARE FOOT AS CONCRETE SIDEWALK, INCLUDING THE AREA UNDER THE DETECTABLE WARNING FIELD.

SELECT CURB RAMP DETECTABLE WARNING FIELD MATERIALS AND DEVICES FROM THE DEPARTMENT'S APPROVED MATERIALS LIST. THE COLOR OF THE DETECTABLE WARNING FIELD IS SPECIFIED ELSEWHERE AND IS INCIDENTAL TO THE BID ITEM OF "CURB RAMP DETECTABLE WARNING FIELD"

DETECTABLE WARNING FIELDS THAT ARE INSTALLED AS A GROUP OR SIDE BY SIDE, SHALL BE FROM THE SAME MANUFACTURER.

SURFACE TEXTURE OF THE RAMP SHALL BE OBTAINED BY COARSE BROOMING TRANSVERSE TO THE SLOPE OF THE CURB RAMP.

(1) THIS POINT IS AN EXTENSION OF OUTSIDE EDGE OF APPROACHING SIDEWALK WHERE IT MEETS THE BACK OF CONCRETE CURB. POINT LOCATION MAY BE ADJUSTED TO ALIGN WITH BEGINNING OF FULL-HEIGHT CURB IF THIS DISTANCE IS SHORT.

(2) GRADE CHANGE BETWEEN GUTTER COUNTER SLOPE AND THE CURB RAMP SLOPE IS DESIRABLY 11% OR LESS AND SHALL NOT EXCEED 13.3%. TYPICAL GUTTER COUNTER SLOPE IS 4% BUT MAY BE MODIFIED TO FIT FIELD CONDITIONS. PROVIDE LONGITUDINAL DRAINAGE AROUND CURB AND AWAY FROM CURB RAMP. NO VERTICAL LIPS OR DISCONTINUITIES ARE ALLOWED. SLOPE OF CURB HEAD OPENING SHALL MATCH THE RAMP SLOPE, MINIMALLY 1.5%, DESIRABLY 7% OR LESS, AND SHALL NOT EXCEED A MAXIMUM OF 8.3%. WHEN ADJACENT TO 1.5% LANDING, CONSTRUCT CURB HEAD OPENING AT 1.5% IN THE DIRECTION OF PEDESTRIAN TRAVEL.

(3) MAXIMUM 8.3% CURB RAMP SLOPE IS ALLOWABLE WITH GUTTER COUNTER SLOPE OF 5% MAXIMUM AND A 13.3% MAXIMUM GRADE CHANGE.

(4) ±0.5% CONSTRUCTION TOLERANCE IN SIDEWALK CROSS SLOPE. THE SIDEWALK CROSS SLOPE SHALL NOT EXCEED 2.1% WITHOUT PRIOR APPROVAL FROM THE ENGINEER.

(5) PROVIDE A CLEAR SPACE IN THE STREET AND GUTTER AREA. WHEN THE GUTTER CROSS SLOPE EXCEEDS 2.1%, CONSTRUCT THE CLEAR SPACE IN THE STREET AREA AND THE 4 FOOT WIDTH IS MEASURED FROM THE FLANGE LINE. FOR RECONSTRUCTION AND MODERNIZATION PROJECTS THE CLEAR SPACE SLOPE PARALLEL TO THE CURBLINE SHOULD BE 2.1% MAX FOR CROSSINGS THAT ARE STOP AND YIELD CONTROLLED, AND 5% MAX FOR THOSE THAT ARE SIGNAL CONTROLLED. FOR PERPETUATION AND REHABILITATION PROJECTS THE SLOPE OF THE CLEAR SPACE PARALLEL TO THE CURBLINE WILL MATCH THE ROADWAY LONGITUDINAL SLOPE. THE SLOPE OF THE CLEAR SPACE PERPENDICULAR TO THE CURBLINE WILL MATCH THE ROADWAY CROSS SLOPE BUT SHOULD NOT EXCEED 5% UNLESS THE ROADWAY IS SUPERELEVATED (WHEN SUPERELEVATED THE ROADWAY CROSS SLOPE SHOULD MATCH THE SUPERELEVATION).

(6) PROVIDE A 5 FOOT BY 5 FOOT LANDING. SLOPE PERPENDICULAR TO CURB SHALL BE 2.1% MAXIMUM. SLOPE PARALLEL TO CURB SHALL MATCH THE CURB AND GUTTER LONGITUDINAL SLOPE.

(8) PROVIDE GRADE BREAK PERPENDICULAR TO DIRECTION OF WHEELCHAIR TRAVEL.

(17) A MAXIMUM 2-INCH CONCRETE BORDER IS PERMITTED ALONG ALL SIDES OF THE DETECTABLE WARNING FIELD SURFACE.

(22) THE ENTIRE RAMP SHALL BE A PLANAR SURFACE. DO NOT WARP THE RUNNING SLOPE OR CROSS SLOPE OF THE RAMP. WARPING OF THE SIDEWALK CROSS SLOPE SHALL TAKE PLACE BETWEEN THE LANDING AND MATCH POINT.

LEGEND

- ½" EXPANSION JOINT SIDEWALK
- CONTRACTION JOINT FIELD LOCATED
- PAVEMENT MARKING CROSSWALK (WHITE)
- * MAXIMUM 8.3%
- ** WIDTH SHOWN ELSEWHERE IN THE PLANS

CURB RAMPS TYPE 1 AND 1-A

STATE OF WISCONSIN
DEPARTMENT OF TRANSPORTATION

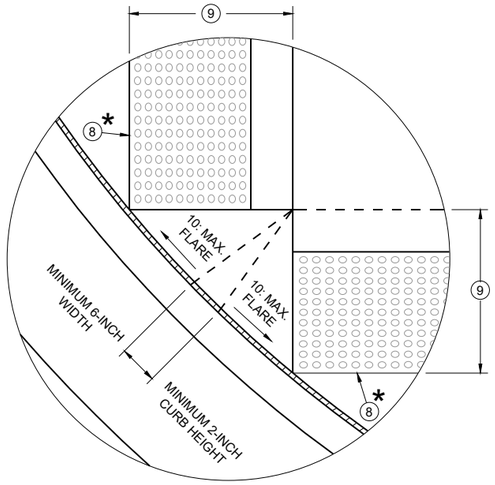

DETAIL A

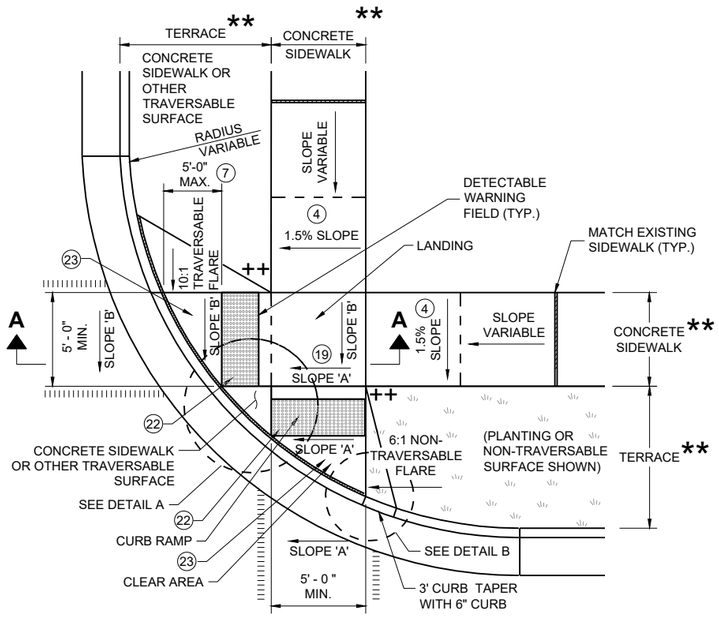

PLAN VIEW

CURB RAMP TYPE 2

(CENTER OF CORNER RADIUS)

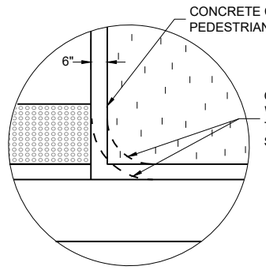

DETAIL B

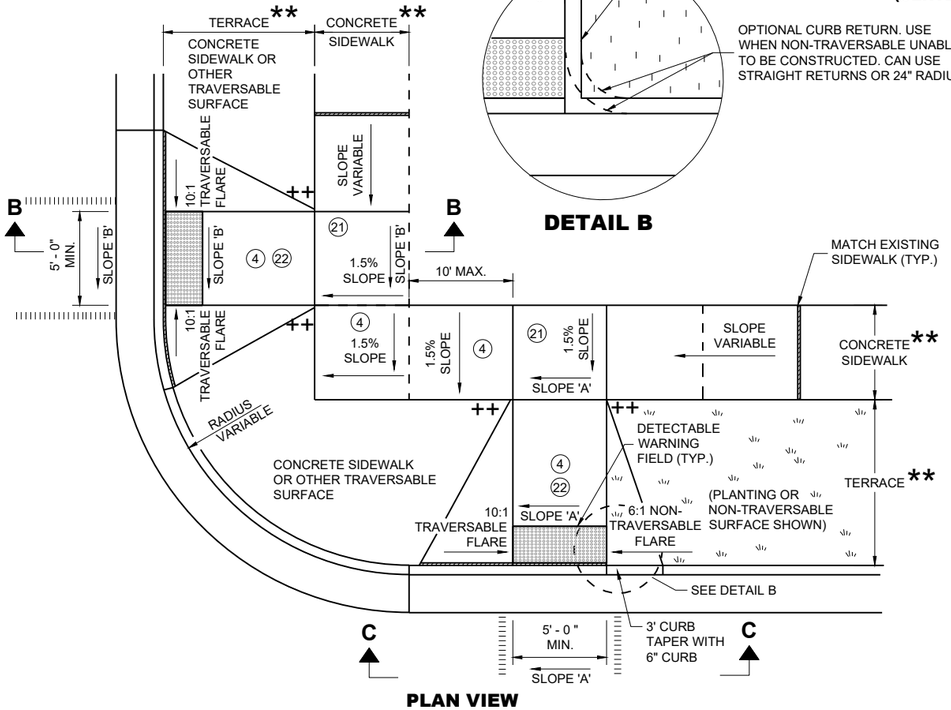

PLAN VIEW

CURB RAMP TYPE 3

(OUTSIDE OF CROSSWALK AREA)

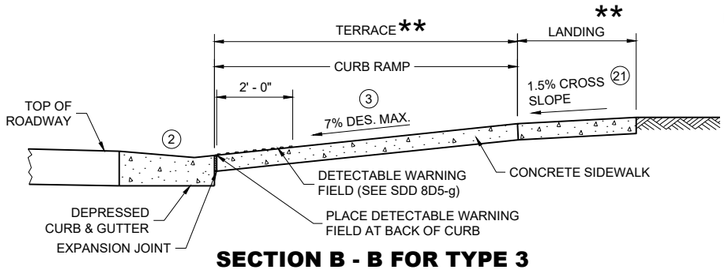

SECTION B - B FOR TYPE 3

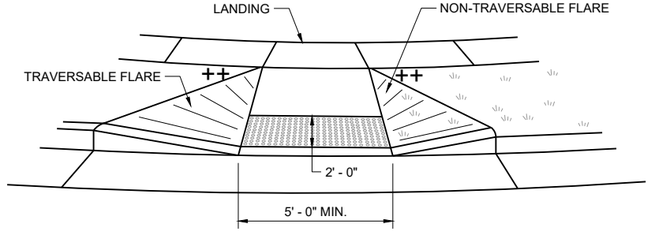

VIEW C - C FOR TYPE 3

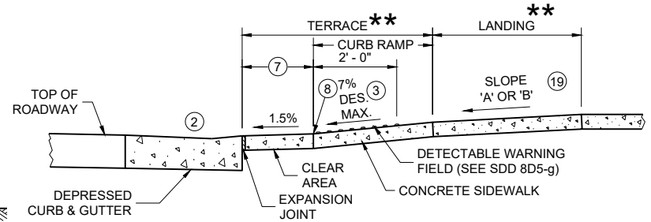

SECTION A - A FOR TYPE 2

GENERAL NOTES

AVOID PLACING DRAINAGE STRUCTURES, JUNCTION BOXES OR OTHER OBSTRUCTIONS IN FRONT OF CURB RAMP ACCESS AREAS.

DETAILS OF CONSTRUCTION, MATERIALS AND WORKMANSHIP NOT SHOWN ON THIS DRAWING SHALL CONFORM TO THE PERTINENT REQUIREMENTS OF THE STANDARD SPECIFICATIONS AND THE APPLICABLE SPECIAL PROVISIONS.

DETECTABLE WARNING FIELDS THAT ARE INSTALLED AS A GROUP OR SIDE BY SIDE SHALL BE FROM THE SAME MANUFACTURER.

(2) GRADE CHANGE BETWEEN GUTTER COUNTER SLOPE AND THE CURB RAMP SLOPE IS DESIRABLY 11% OR LESS AND SHALL NOT EXCEED 13.3%. TYPICAL GUTTER COUNTER SLOPE IS 4% BUT MAY BE MODIFIED TO FIT FIELD CONDITIONS. PROVIDE LONGITUDINAL DRAINAGE AROUND CURB AND AWAY FROM CURB RAMP. NO VERTICAL LIPS OR DISCONTINUITIES ARE ALLOWED. SLOPE OF CURB HEAD OPENING SHALL MATCH THE RAMP SLOPE, MINIMALLY 1.5%, DESIRABLY 7% OR LESS, AND SHALL NOT EXCEED A MAXIMUM OF 8.3%. WHEN ADJACENT TO 1.5% LANDING, CONSTRUCT CURB HEAD OPENING AT 1.5% IN THE DIRECTION OF PEDESTRIAN TRAVEL.

(3) MAXIMUM 8.3% CURB RAMP SLOPE IS ALLOWABLE WITH GUTTER COUNTER SLOPE OF 5% MAXIMUM AND A 13.3% MAXIMUM GRADE CHANGE.

(4) ±0.5% CONSTRUCTION TOLERANCE IN SIDEWALK CROSS SLOPE. THE SIDEWALK CROSS SLOPE SHALL NOT EXCEED 2.1% WITHOUT PRIOR APPROVAL FROM THE ENGINEER.

(7) WHEN GRADE BREAK DISTANCE EXCEEDS 5 FEET, USE RADIAL DETECTABLE WARNING FIELD PER SDD 8D5-f.

(8) PROVIDE GRADE BREAK PERPENDICULAR TO DIRECTION OF WHEELCHAIR TRAVEL.

(9) WHEN DISTANCE IS LESS THAN 6' - 0", IT MAY BE DIFFICULT TO ACHIEVE A 7% DESIGN MAXIMUM SLOPE OR FLATTER ALONG THE RAMP. REDUCE CURB HEIGHT IN TRIANGLE AREA TO ACHIEVE 7% DESIGN MAXIMUM SLOPE OR FLATTER ON RAMP. CONSTRUCT 2-INCH MINIMUM CURB HEIGHT BETWEEN 10:1 FLARES.

(17) A MAXIMUM 2-INCH CONCRETE BORDER IS PERMITTED ALONG ALL SIDES OF THE DETECTABLE WARNING FIELD SURFACE.

(19) WHERE A LANDING SERVES TWO CURB RAMPS, THE LANDING SLOPE SHALL NOT EXCEED THE CROSS SLOPE AT THE BOTTOM OF THE RAMP OR WITHIN THE CROSSWALK PARALLEL TO THE DIRECTION OF TRAVEL.

(21) PROVIDE A LANDING WITH A SLOPE PARALLEL TO ROADWAY THAT MATCHES SLOPE AT THE BOTTOM OF THE ADJACENT RAMP. SLOPE PERPENDICULAR TO ROADWAY SHALL BE 2.1% MAXIMUM. STANDARD LANDING SIZE IS 5 FEET BY 5 FEET.

(22) THE ENTIRE RAMP SHALL BE A PLANAR SURFACE. DO NOT WARP THE RUNNING SLOPE OR CROSS SLOPE OF THE RAMP. WARPING OF THE SIDEWALK CROSS SLOPE SHALL TAKE PLACE BETWEEN THE LANDING AND MATCH POINT.

(23) THE CLEAR AREA BETWEEN THE BOTTOM OF RAMP AND BACK OF CURB SHALL BE SLOPED SO THAT WATER DRAINS OUT OF ONE SIDE OR BOTH SIDES OF THE CURB OPENING.

LEGEND

- ½" EXPANSION JOINT SIDEWALK
- – – – CONTRACTION JOINT SIDEWALK
- PAVEMENT MARKING CROSSWALK (WHITE)
- * MAXIMUM 2.1% SLOPE IN ALL DIRECTIONS IN FRONT OF GRADE BREAK
- ** WIDTH SHOWN ELSEWHERE IN THE PLANS
- ++ CONSTRUCT 6" WEDGE TO AVOID CONCRETE BREAKAGE

CURB RAMPS TYPE 2 AND 3

STATE OF WISCONSIN
DEPARTMENT OF TRANSPORTATION

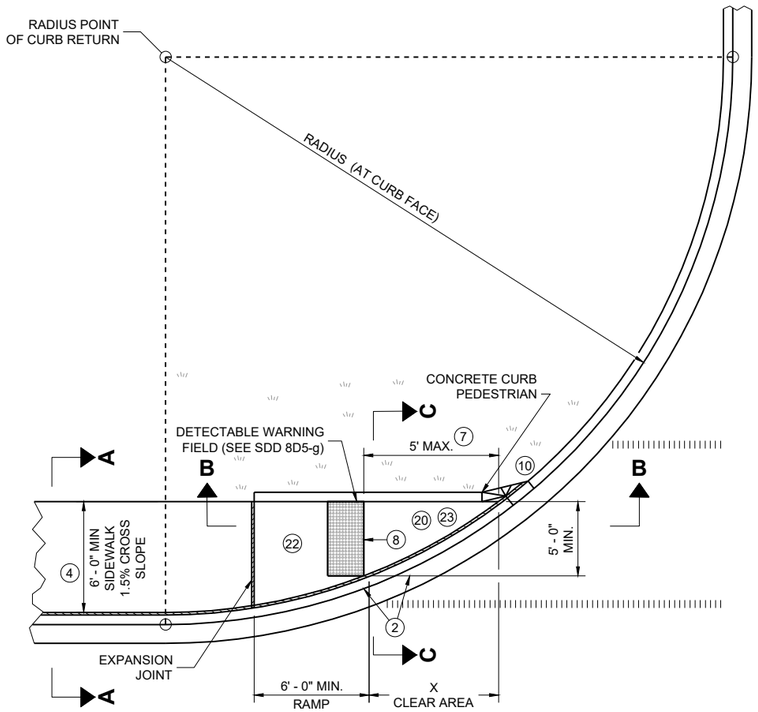

PLAN VIEW

CURB RAMP TYPE 4A

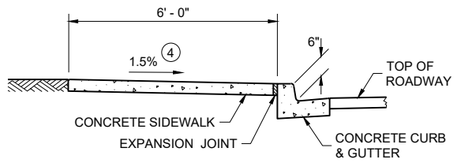

SECTION A - A FOR TYPE 4A

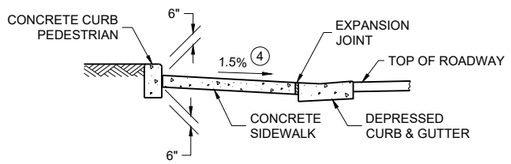

SECTION C - C FOR TYPE 4A

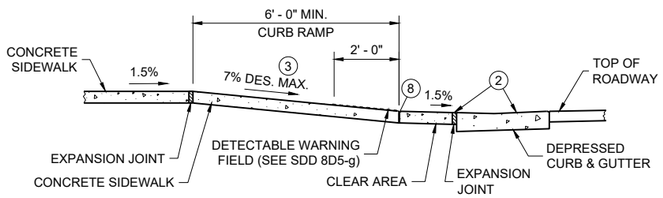

SECTION B - B FOR TYPE 4A AND TYPE 4A1

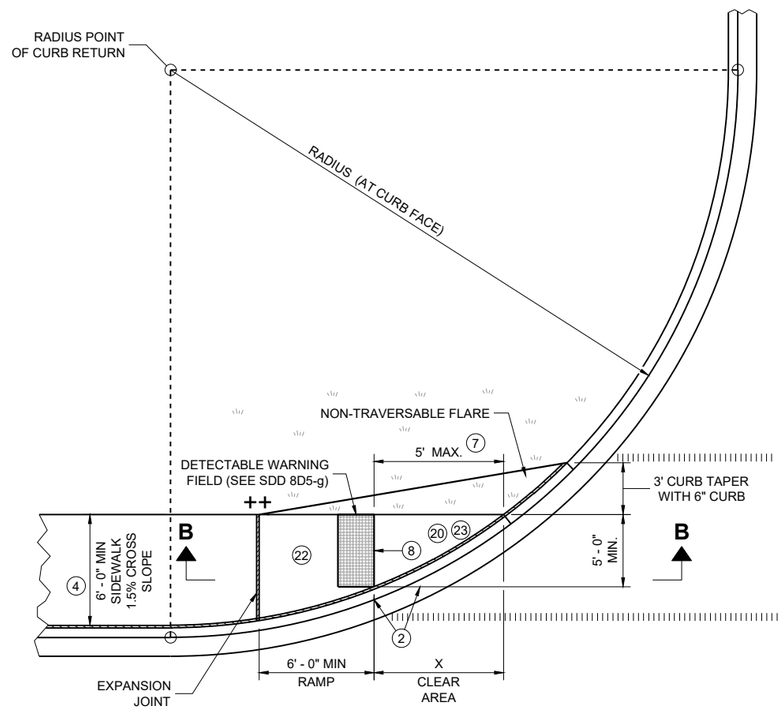

PLAN VIEW

CURB RAMP TYPE 4A1

LEGEND

- ½" EXPANSION JOINT SIDEWALK
- CONTRACTION JOINT SIDEWALK
- PAVEMENT MARKING CROSSWALK (WHITE)
- ++ CONSTRUCT 6" WEDGE TO AVOID CONCRETE BREAKAGE

RADIUS (AT CURB FACE)	X
10 FEET	4' - 7"

INTERMEDIATE RADII CAN BE INTERPOLATED

GENERAL NOTES

AVOID PLACING DRAINAGE STRUCTURES, JUNCTION BOXES OR OTHER OBSTRUCTIONS IN FRONT OF CURB RAMP ACCESS AREAS.

DETAILS OF CONSTRUCTION, MATERIALS AND WORKMANSHIP NOT SHOWN ON THIS DRAWING SHALL CONFORM TO THE PERTINENT REQUIREMENTS OF THE STANDARD SPECIFICATIONS AND THE APPLICABLE SPECIAL PROVISIONS.

DETECTABLE WARNING FIELDS THAT ARE INSTALLED AS A GROUP OR SIDE BY SIDE, SHALL BE FROM THE SAME MANUFACTURER.

(2) GRADE CHANGE BETWEEN GUTTER COUNTER SLOPE AND THE CURB RAMP SLOPE IS DESIRABLY 11% OR LESS AND SHALL NOT EXCEED 13.3%. TYPICAL GUTTER COUNTER SLOPE IS 4% BUT MAY BE MODIFIED TO FIT FIELD CONDITIONS. PROVIDE LONGITUDINAL DRAINAGE AROUND CURB AND AWAY FROM CURB RAMP. NO VERTICAL LIPS OR DISCONTINUITIES ARE ALLOWED. SLOPE OF CURB HEAD OPENING SHALL MATCH THE RAMP SLOPE, MINIMALLY 1.5%, DESIRABLY 7% OR LESS, AND SHALL NOT EXCEED A MAXIMUM OF 8.3%. WHEN ADJACENT TO 1.5% LANDING, CONSTRUCT CURB HEAD OPENING AT 1.5% IN THE DIRECTION OF PEDESTRIAN TRAVEL.

(3) MAXIMUM 8.3% CURB RAMP SLOPE IS ALLOWABLE WITH GUTTER COUNTER SLOPE OF 5% MAXIMUM AND A 13.3% MAXIMUM GRADE CHANGE.

(4) ±0.5% CONSTRUCTION TOLERANCE IN SIDEWALK CROSS SLOPE. THE SIDEWALK CROSS SLOPE SHALL NOT EXCEED 2.1% WITHOUT PRIOR APPROVAL FROM THE ENGINEER.

(7) WHEN THIS GRADE BREAK DISTANCE EXCEEDS 5 FEET, USE RADIAL DETECTABLE WARNING FIELD PER SDD 8D5-f.

(8) PROVIDE GRADE BREAK PERPENDICULAR TO DIRECTION OF WHEELCHAIR TRAVEL.

(10) INSTALL TRANSITION NOSE (INCIDENTAL TO OTHER PAY ITEMS). DO NOT MARK TRANSITION NOSE.

(17) A MAXIMUM 2-INCH CONCRETE BORDER IS PERMITTED ALONG ALL SIDES OF THE DETECTABLE WARNING FIELD SURFACE.

(20) MAXIMUM 1.5% DESIGN MAXIMUM AND 2.1% PROWAG MAXIMUM RUNNING SLOPE ON CLEAR AREA. CROSS SLOPE OF CLEAR AREA SHALL MATCH THE CROSS SLOPE OF THE ADJACENT CROSSWALK.

(22) THE ENTIRE RAMP SHALL BE A PLANAR SURFACE. DO NOT WARP THE RUNNING SLOPE OR CROSS SLOPE OF THE RAMP. WARPING OF THE SIDEWALK CROSS SLOPE SHALL TAKE PLACE BETWEEN THE LANDING AND MATCH POINT.

(23) THE CLEAR AREA BETWEEN THE BOTTOM OF RAMP AND BACK OF CURB SHALL BE SLOPED SO THAT WATER DRAINS OUT OF ONE SIDE OR BOTH SIDES OF THE CURB OPENING.

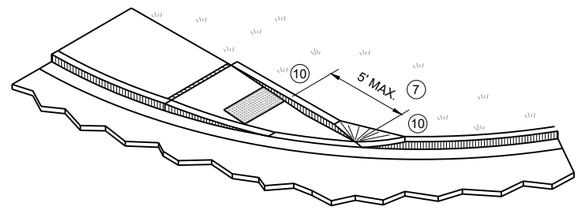

ISOMETRIC VIEW FOR TYPE 4A

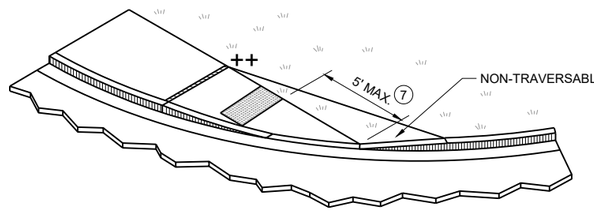

ISOMETRIC VIEW FOR TYPE 4A1

CURB RAMPS
TYPE 4A AND 4A1

STATE OF WISCONSIN
DEPARTMENT OF TRANSPORTATION

6
SDD 08D05-22c

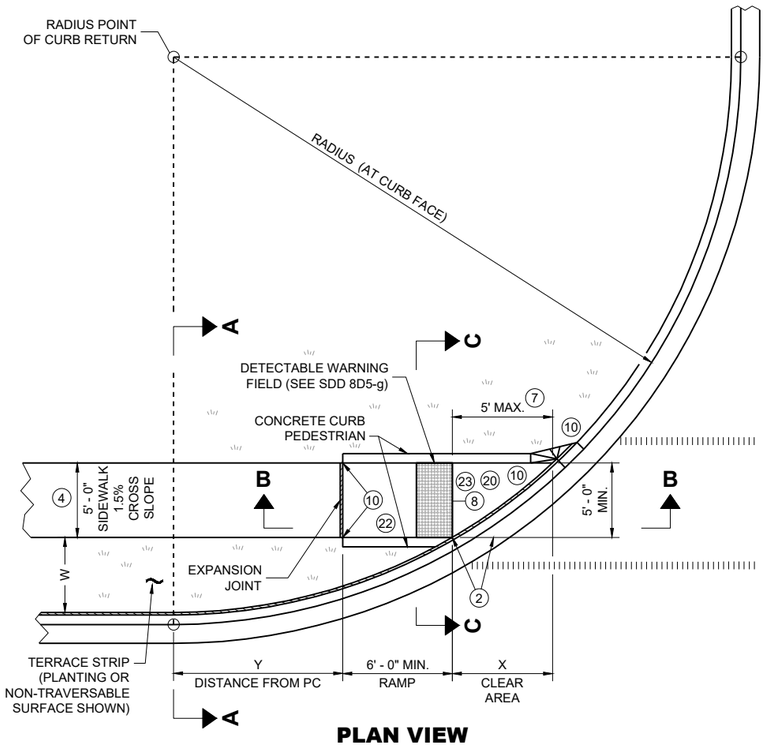

PLAN VIEW
CURB RAMP TYPE 4B

RADIUS (AT CURB FACE)	W = 3' - 0"		W = 4' - 0"		W = 5' - 0"		W = 6' - 0"		W = 7' - 0"		W = 8' - 0"		W = 9' - 0"		W = 10' - 0"	
	X	Y	X	Y	X	Y	X	Y	X	Y	X	Y	X	Y	X	Y
10 FEET	2' - 10 ¼"	0' - 5"	2' - 1"	1' - 4 ½"	1' - 5"	2' - 1"	0' - 10"	2' - 7 ½"	0' - 3 ¼"	3' - 0 ¼"						
15 FEET	4' - 6 ¾"	2' - 1 ¾"	3' - 9"	3' - 5 ¾"	3' - 1 ¼"	4' - 6"	2' - 6 ¾"	5' - 4 ½"	2' - 1"	6' - 1"	1' - 8"	6' - 8 ½"	1' - 3 ¼"	7' - 2 ½"	0' - 10 ¾"	7' - 7 ¼"
20 FEET			4' - 11 ½"	5' - 1 ¾"	4' - 3 ¼"	6' - 5 ½"	3' - 8 ¾"	7' - 7"	3' - 3"	8' - 6 ½"	2' - 10"	9' - 4 ½"	2' - 5 ½"	10' - 1 ¼"	2' - 1 ¼"	10' - 9"
30 FEET									4' - 10 ¾"	12' - 5 ¾"	4' - 5 ½"	13' - 7 ¾"	4' - 0 ¾"	14' - 8 ½"	3' - 8 ½"	15' - 8 ¼"
40 FEET															4' - 10 ¾"	19' - 8 ¼"

INTERMEDIATE RADII CAN BE INTERPOLATED
DIMENSION "Y" IS CALCULATED BASED ON 6'-0" RAMP LENGTH
DIMENSION "X" IS CALCULATED BASED ON 5'-0" SIDEWALK WIDTH

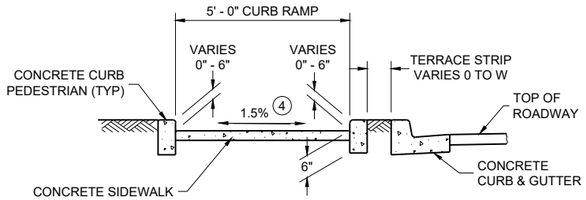

SECTION C - C FOR TYPE 4B

LEGEND

- ½" EXPANSION JOINT SIDEWALK
- CONTRACTION JOINT SIDEWALK
- PAVEMENT MARKING CROSSWALK (WHITE)
- * MAXIMUM 2.1% SLOPE IN ALL DIRECTIONS IF FRONT OF GRADE BREAK
- ++ CONSTRUCT 6" WEDGE TO AVOID CONCRETE BREAKAGE

GENERAL NOTES

AVOID PLACING DRAINAGE STRUCTURES, JUNCTION BOXES OR OTHER OBSTRUCTIONS IN FRONT OF CURB RAMP ACCESS AREAS.

DETAILS OF CONSTRUCTION, MATERIALS AND WORKMANSHIP NOT SHOWN ON THIS DRAWING SHALL CONFORM TO THE PERTINENT REQUIREMENTS OF THE STANDARD SPECIFICATIONS AND THE APPLICABLE SPECIAL PROVISIONS.

DETECTABLE WARNING FIELDS THAT ARE INSTALLED AS A GROUP OR SIDE BY SIDE, SHALL BE FROM THE SAME MANUFACTURER.

(2) GRADE CHANGE BETWEEN GUTTER COUNTER SLOPE AND THE CURB RAMP SLOPE IS DESIRABLY 11% OR LESS AND SHALL NOT EXCEED 13.3%. TYPICAL GUTTER COUNTER SLOPE IS 4% BUT MAY BE MODIFIED TO FIT FIELD CONDITIONS. PROVIDE LONGITUDINAL DRAINAGE AROUND CURB AND AWAY FROM CURB RAMP. NO VERTICAL LIPS OR DISCONTINUITIES ARE ALLOWED. SLOPE OF CURB HEAD OPENING SHALL MATCH THE RAMP SLOPE, MINIMALLY 1.5%, DESIRABLY 7% OR LESS, AND SHALL NOT EXCEED A MAXIMUM OF 8.3%. WHEN ADJACENT TO 1.5% LANDING, CONSTRUCT CURB HEAD OPENING AT 1.5% IN THE DIRECTION OF PEDESTRIAN TRAVEL.

(3) MAXIMUM 8.3% CURB RAMP SLOPE IS ALLOWABLE WITH GUTTER COUNTER SLOPE OF 5% MAXIMUM AND A 13.3% MAXIMUM GRADE CHANGE.

(4) ±0.5% CONSTRUCTION TOLERANCE IN SIDEWALK CROSS SLOPE. THE SIDEWALK CROSS SLOPE SHALL NOT EXCEED 2.1% WITHOUT PRIOR APPROVAL FROM THE ENGINEER.

(7) WHEN THIS GRADE BREAK DISTANCE EXCEEDS 5 FEET, USE RADIAL DETECTABLE WARNING FIELD PER SDD 8D5-f.

(8) PROVIDE GRADE BREAK PERPENDICULAR TO DIRECTION OF WHEELCHAIR TRAVEL.

(10) INSTALL TRANSITION NOSE (INCIDENTAL TO OTHER PAY ITEMS). DO NOT MARK TRANSITION NOSE.

(17) A MAXIMUM 2-INCH CONCRETE BORDER IS PERMITTED ALONG ALL SIDES OF THE DETECTABLE WARNING FIELD SURFACE.

(20) MAXIMUM 1.5% DESIGN MAXIMUM AND 2.1% PROWAG MAXIMUM RUNNING SLOPE ON CLEAR AREA. CROSS SLOPE OF CLEAR AREA SHALL MATCH THE CROSS SLOPE OF THE ADJACENT CROSSWALK.

(22) THE ENTIRE RAMP SHALL BE A PLANAR SURFACE. DO NOT WARP THE RUNNING SLOPE OR CROSS SLOPE OF THE RAMP. WARPING OF THE SIDEWALK CROSS SLOPE SHALL TAKE PLACE BETWEEN THE LANDING AND MATCH POINT.

(23) THE CLEAR AREA BETWEEN THE BOTTOM OF RAMP AND BACK OF CURB SHALL BE SLOPED SO THAT WATER DRAINS OUT OF ONE SIDE OR BOTH SIDES OF THE CURB OPENING.

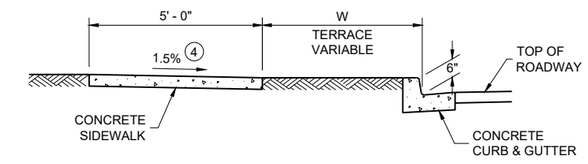

SECTION A - A FOR TYPE 4B

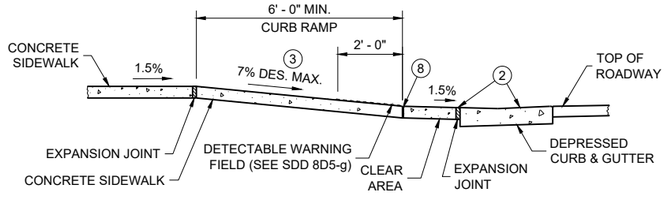

SECTION B - B FOR TYPE 4B AND TYPE 4B1

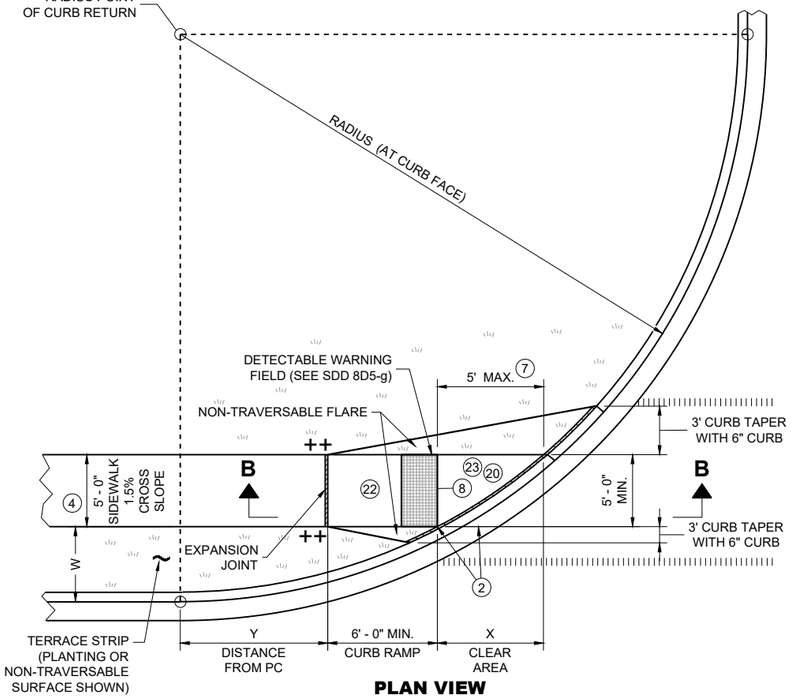

PLAN VIEW
CURB RAMP TYPE 4B1

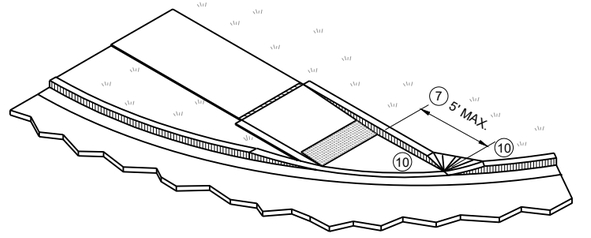

ISOMETRIC VIEW FOR TYPE 4B

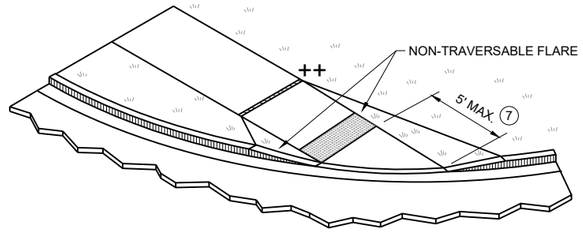

ISOMETRIC VIEW FOR TYPE 4B1

CURB RAMPS
TYPE 4B AND 4B1

STATE OF WISCONSIN
DEPARTMENT OF TRANSPORTATION

6

SDD 08D05-22d

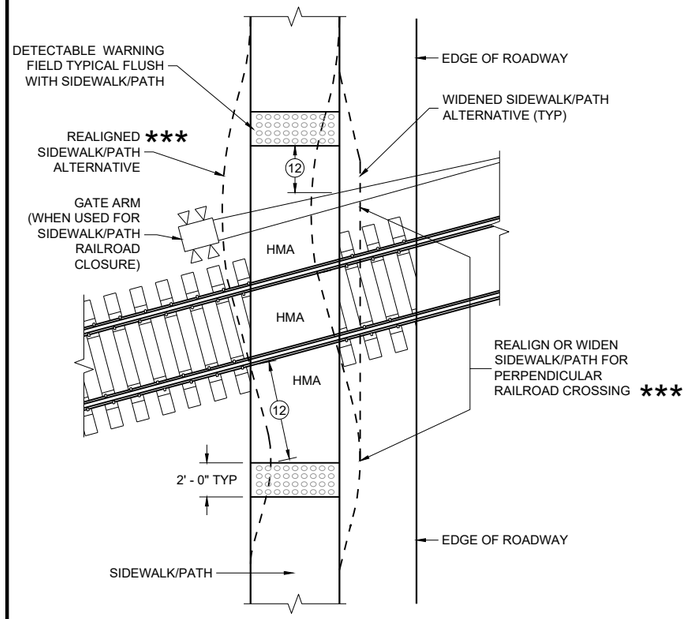

CURB RAMP TYPE 8

DETECTABLE WARNINGS FOR SIDEWALKS OR SHARED USE PATHS AT RAILROAD CROSSINGS

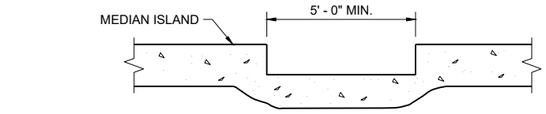

SECTION A - A FOR TYPE 5

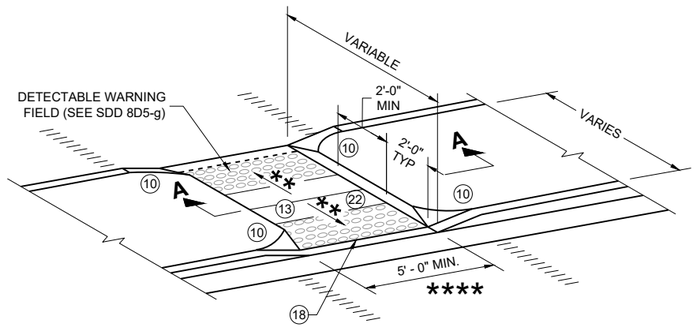

CURB RAMP TYPE 5

MEDIAN ISLAND NON-ELEVATED PEDESTRIAN CROSSING

GENERAL NOTES

AVOID PLACING DRAINAGE STRUCTURES, JUNCTION BOXES OR OTHER OBSTRUCTIONS IN FRONT OF CURB RAMP ACCESS AREAS.

DETAILS OF CONSTRUCTION, MATERIALS AND WORKMANSHIP NOT SHOWN ON THIS DRAWING SHALL CONFORM TO THE PERTINENT REQUIREMENTS OF THE STANDARD SPECIFICATIONS AND THE APPLICABLE SPECIAL PROVISIONS.

SIDEWALK CROSS SLOPE SHALL NOT EXCEED 2.1%.

DETECTABLE WARNING FIELDS THAT ARE INSTALLED AS A GROUP OR SIDE BY SIDE, SHALL BE FROM THE SAME MANUFACTURER.

(2) GRADE CHANGE BETWEEN GUTTER COUNTER SLOPE AND THE CURB RAMP SLOPE IS DESIRABLY 11% OR LESS AND SHALL NOT EXCEED 13.3%. TYPICAL GUTTER COUNTER SLOPE IS 4% BUT MAY BE MODIFIED TO FIT FIELD CONDITIONS. PROVIDE LONGITUDINAL DRAINAGE AROUND CURB AND AWAY FROM CURB RAMP. NO VERTICAL LIPS OR DISCONTINUITIES ARE ALLOWED. SLOPE OF CURB HEAD OPENING SHALL MATCH THE RAMP SLOPE, MINIMALLY 1.5%, DESIRABLY 7% OR LESS, AND SHALL NOT EXCEED A MAXIMUM OF 8.3%. WHEN ADJACENT TO 1.5% LANDING, CONSTRUCT CURB HEAD OPENING AT 1.5% IN THE DIRECTION OF PEDESTRIAN TRAVEL.

(3) MAXIMUM 8.3% CURB RAMP SLOPE IS ALLOWABLE WITH GUTTER COUNTER SLOPE OF 5% MAXIMUM AND A 13.3% MAXIMUM GRADE CHANGE.

(4) ±0.5% CONSTRUCTION TOLERANCE IN SIDEWALK CROSS SLOPE. THE SIDEWALK CROSS SLOPE SHALL NOT EXCEED 2.1% WITHOUT PRIOR APPROVAL FROM THE ENGINEER.

(6) PROVIDE A 5 FOOT BY 5 FOOT LANDING. SLOPE PERPENDICULAR TO CURB SHALL BE 2.1% MAXIMUM. SLOPE PARALLEL TO CURB SHALL MATCH THE CURB AND GUTTER LONGITUDINAL SLOPE.

(10) INSTALL TRANSITION NOSE (INCIDENTAL TO OTHER PAY ITEMS). DO NOT MARK TRANSITION NOSE.

(11) SLOPE SIDEWALK TOWARD LANDING AS SHOWN WHERE THERE IS NO TERRACE OR WHERE THE TERRACE WIDTH IS LESS THAN 6 FEET WIDE.

(12) THE EDGE OF THE DETECTABLE WARNING FIELD NEAREST TO A RAILROAD CROSSING SHALL BE 1.5 FEET ±0.1' FROM THE FACE OF THE GATE ARM IF THE GATE ARM EXTENDS ACROSS THE SIDEWALK/PATH, WHERE THERE IS NO PEDESTRIAN GATE, THE EDGE OF THE DETECTABLE WARNING FIELD NEAREST TO THE RAILROAD TRACK IS 15 FEET MAXIMUM AND 12 FEET MINIMUM, 15 FEET TYPICAL FROM THE NEAREST RAIL.

(13) DO NOT INSTALL DETECTABLE WARNING FIELDS AT THE EDGES OF STEET-LEVEL PEDESTRIAN REFUGE ISLANDS IF A MINIMUM 2 FOOT CONCRETE SURFACE WITHOUT DETECTABLE WARNINGS (MEASURED IN THE DIRECTION OF PEDESTRIAN TRAVEL) CANNOT BE ACHIEVED.

(17) A MAXIMUM 2-INCH CONCRETE BORDER IS PERMITTED ALONG ALL SIDES OF THE DETECTABLE WARNING FIELD SURFACE.

(18) WHEN THE DISTANCE BETWEEN THE BACK OF CURBS IS LESS THAN 6 FEET BUT THE FACE OF CURB TO FACE OF CURB DISTANCE IS 6 FEET OR GREATER THEN THE DETECTABLE WARNING FIELDS MAY BE MOVED SO THAT THE EDGE OF THE WARNING FIELD IS PLACED AT THE GUTTER FLOWLINE. MAINTAIN A MINIMUM OF TWO FEET BETWEEN DETECTABLE WARNING FIELD PANELS.

(22) THE ENTIRE RAMP SHALL BE A PLANAR SURFACE. DO NOT WARP THE RUNNING SLOPE OR CROSS SLOPE OF THE RAMP. WARPING OF THE SIDEWALK CROSS SLOPE SHALL TAKE PLACE BETWEEN THE LANDING AND MATCH POINT.

CURB RAMP TYPE 7A

FOR INTERSECTIONS AND MID BLOCK CROSSINGS

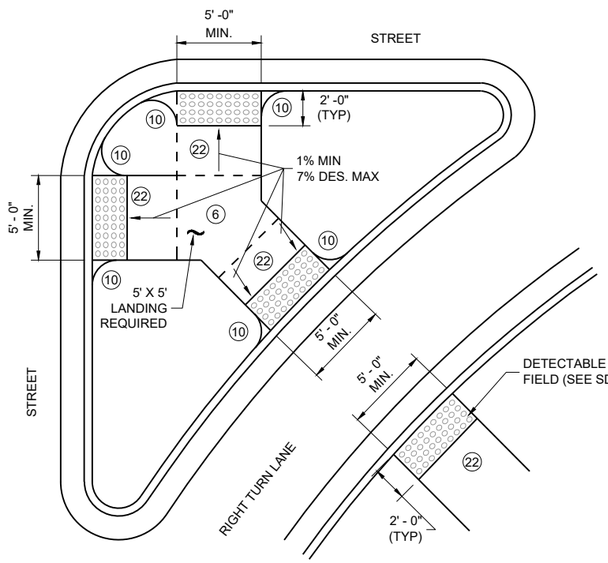

CURB RAMP TYPE 6

DETECTABLE WARNING AT ISLANDS

REFER TO GENERAL NOTES (2) AND (3) FOR ALL ISLAND CURB RAMPS

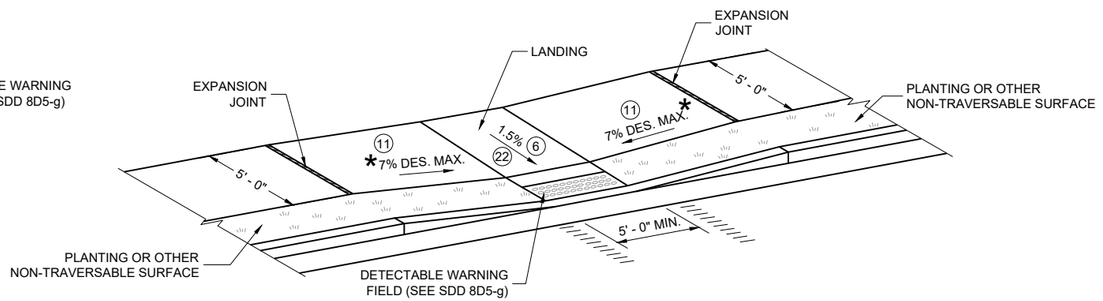

CURB RAMP TYPE 7B

FOR INTERSECTIONS AND MID BLOCK CROSSINGS

LEGEND

- ½" EXPANSION JOINT SIDEWALK
- CONTRACTION JOINT FIELD LOCATED
- PAVEMENT MARKING CROSSWALK (WHITE)
- * MAXIMUM 8.3%
- ** 1% MINIMUM (PROVIDE DRAINAGE)
- *** DETAILS TO BE DETERMINED BY ENGINEER
- **** FOR SHARED USE PATHS, WIDTH MUST BE AS WIDE AS THE CROSSWALK

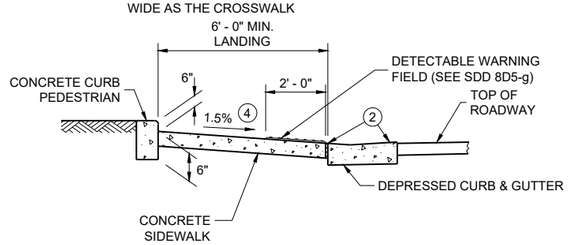

SECTION B - B FOR TYPE 7A

CURB RAMPS
TYPE 5, 6, 7A, 7B & 8

STATE OF WISCONSIN
DEPARTMENT OF TRANSPORTATION

6

SDD 08D05-22e

RADIAL DETECTABLE WARNING FIELD PLACEMENT WHEN 5 FOOT GRADE BREAK DISTANCE PER SDD 8D5-c IS EXCEEDED

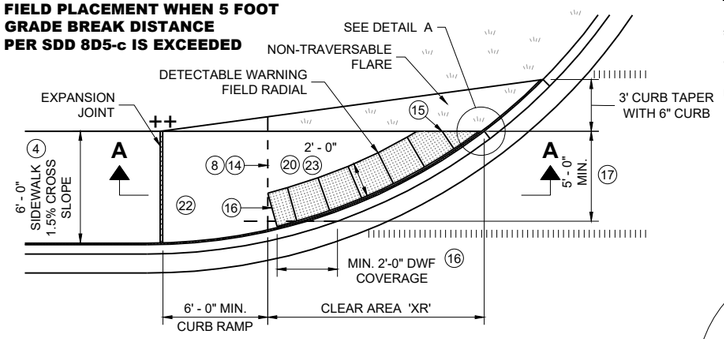

PLAN VIEW

CURB RAMP TYPE 4A1

(GRADE BREAK DISTANCE GREATER THAN 5 FEET)

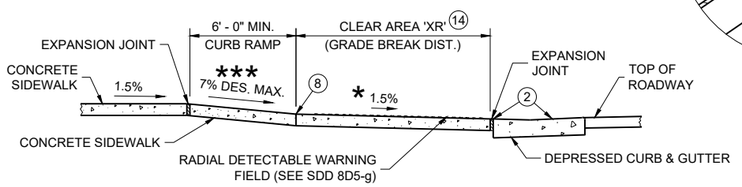

SECTION A - A FOR TYPE 4A1

RADIAL DETECTABLE WARNING FIELD PLACEMENT WHEN 5 FOOT GRADE BREAK DISTANCE PER SDD 8D5-d IS EXCEEDED

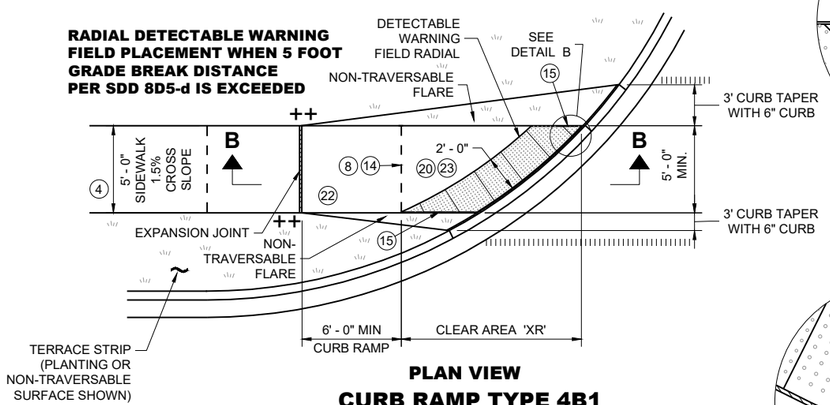

PLAN VIEW

CURB RAMP TYPE 4B1

(GRADE BREAK DISTANCE GREATER THAN 5 FEET)

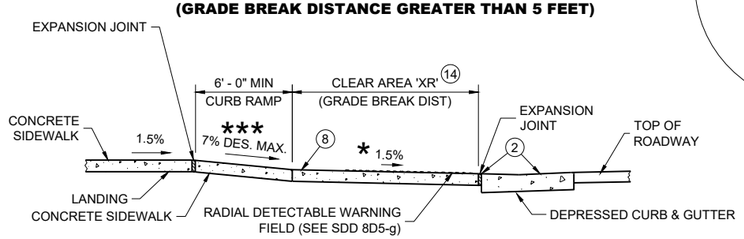

SECTION B - B FOR TYPE 4B1

LEGEND

═══	½" EXPANSION JOINT SIDEWALK
– – – –	CONTRACTION JOINT SIDEWALK
ıı ıı ıı ıı	PAVEMENT MARKING CROSSWALK (WHITE)
**	WIDTH SHOWN ELSEWHERE IN THE PLANS
***	MAXIMUM 8.3%
++	CONSTRUCT 6" WEDGE TO AVOID CONCRETE BREAKAGE

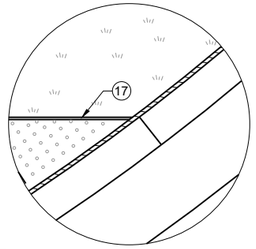

DETAIL A

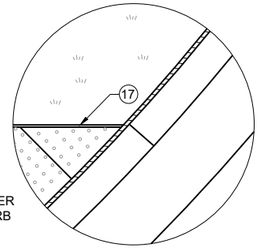

DETAIL B

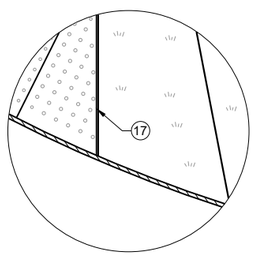

DETAIL C

GENERAL NOTES

AVOID PLACING DRAINAGE STRUCTURES, JUNCTION BOXES OR OTHER OBSTRUCTIONS IN FRONT OF CURB RAMP ACCESS AREAS.

DETAILS OF CONSTRUCTION, MATERIALS AND WORKMANSHIP NOT SHOWN ON THIS DRAWING SHALL CONFORM TO THE PERTINENT REQUIREMENTS OF THE STANDARD SPECIFICATIONS AND THE APPLICABLE SPECIAL PROVISIONS.

DETECTABLE WARNING FIELDS THAT ARE INSTALLED AS A GROUP OR SIDE BY SIDE, SHALL BE FROM THE SAME MANUFACTURER.

APPLY RADIAL DETECTABLE WARNING PLACEMENT SIMILARLY FOR TYPE 4A AND 4A1 CURB RAMPS AND SIMILARLY FOR TYPE 4B AND 4B1 CURB RAMPS. TYPE 4A AND 4B CURB RAMPS ARE NOT SHOWN.

REFER TO SDD 8D5-g FOR ADDITIONAL RADIAL PLATE REQUIREMENTS.

FIELD CUTS AT INTERMEDIATE JOINTS WITHIN THE RADIAL DETECTABLE WARNING FILED ARE PROHIBITED.

DETERMINE FINAL RADIAL WARNING FIELD CONFIGURATION AD ITS INDIVIDUAL PLATE LOCATIONS. PERFORM PRE-LAYOUT PRIOR TO PLACEMENT IN PLASTIC CONCRETE. FOLLOW MANUFACTURER'S PRODUCT LIST AND INSTALLATION RECOMMENDATIONS.

(2) GRADE CHANGE BETWEEN GUTTER COUNTER SLOPE AND THE CURB RAMP SLOPE IS DESIRABLY 11% OR LESS AND SHALL NOT EXCEED 13.3%. TYPICAL GUTTER COUNTER SLOPE IS 4% BUT MAY BE MODIFIED TO FIT FIELD CONDITIONS. PROVIDE LONGITUDINAL DRAINAGE AROUND CURB AND AWAY FROM CURB RAMP. NO VERTICAL LIPS OR DISCONTINUITIES ARE ALLOWED. SLOPE OF CURB HEAD OPENING SHALL MATCH THE RAMP SLOPE, MINIMALLY 1.5%, DESIRABLY 7% OR LESS, AND SHALL NOT EXCEED A MAXIMUM OF 8.3%. WHEN ADJACENT TO 1.5% LANDING, CONSTRUCT CURB HEAD OPENING AT 1.5% IN THE DIRECTION OF PEDESTRIAN TRAVEL.

(3) MAXIMUM 8.3% CURB RAMP SLOPE IS ALLOWABLE WITH GUTTER COUNTER SLOPE OF 5% MAXIMUM AND A 13.3% MAXIMUM GRADE CHANGE.

(4) ±0.5% CONSTRUCTION TOLERANCE IN SIDEWALK CROSS SLOPE. THE SIDEWALK CROSS SLOPE SHALL NOT EXCEED 2.1% WITHOUT PRIOR APPROVAL FROM THE ENGINEER.

(6) PROVIDE A 5 FOOT BY 5 FOOT LANDING. SLOPE PERPENDICULAR TO CURB SHALL BE 2.1% MAXIMUM. SLOPE PARALLEL TO CURB SHALL MATCH THE CURB AND GUTTER LONGITUDINAL SLOPE.

(8) PROVIDE GRADE BREAK PERPENDICULAR TO DIRECTION OF WHEELCHAIR TRAVEL.

(14) CONSULT ENGINEER IF GRADE BREAK LOCATION (END OF LANDING DIMENSION "XR") REQUIRES FIELD ADJUSTMENT WHEN ESTABLISHING FINAL RADIAL DETECTABLE WARNING FIELD LOCATION.

(15) FIELD SAW CUTS ALONG RADIAL DETECTABLE WARNING PLATES WILL BE NECESSARY TO MATCH EACH CURB RAMP EDGE. AVOID CUTTING THROUGH DOMES WHENEVER POSSIBLE. MAKE FIELD CUTS TRUE TO LINE AND WITHIN ⅛" DEVIATION. SMOOTH EDGES OF FIELD CUT PLATES.

(16) USE 1' X 2" RECTANGULAR END PLATE AT END OF TYPE 4A1 RAMP AND PROVIDE MINIMUM 2' - 0" DETECTABLE WARNING FIELD COVERAGE (IN DIRECTION OF PEDESTRIAN TRAVEL) ALONG THE ENTIRE CURB RAMP WIDTH.

(17) A MAXIMUM 2-INCH CONCRETE BORDER IS PERMITTED ALONG ALL SIDES OF THE DETECTABLE WARNING FIELD SURFACE.

(19) WHERE A LANDING SERVES TWO CURB RAMPS, THE LANDING SLOPE SHALL NOT EXCEED THE CROSS SLOPE AT THE BOTTOM OF THE RAMP OR WITHIN THE CROSSWALK PARALLEL TO THE DIRECTION OF TRAVEL.

(20) MAXIMUM 1.5% DESIGN MAXIMUM AND 2.1% PROWAG MAXIMUM RUNNING SLOPE ON CLEAR AREA. CROSS SLOPE OF CLEAR AREA SHALL MATCH THE CROSS SLOPE OF THE ADJACENT CROSSWALK.

(22) THE ENTIRE RAMP SHALL BE A PLANAR SURFACE. DO NOT WARP THE RUNNING SLOPE OR CROSS SLOPE OF THE RAMP. WARPING OF THE SIDEWALK CROSS SLOPE SHALL TAKE PLACE BETWEEN THE LANDING AND MATCH POINT.

(23) THE CLEAR AREA BETWEEN THE BOTTOM OF RAMP AND BACK OF CURB SHALL BE SLOPED SO THAT WATER DRAINS OUT OF ONE SIDE OR BOTH SIDES OF THE CURB OPENING.

RADIAL DETECTABLE WARNING FIELD PLACEMENT WHEN 5 FOOT GRADE BREAK DISTANCE PER SDD 8D5-b IS EXCEEDED

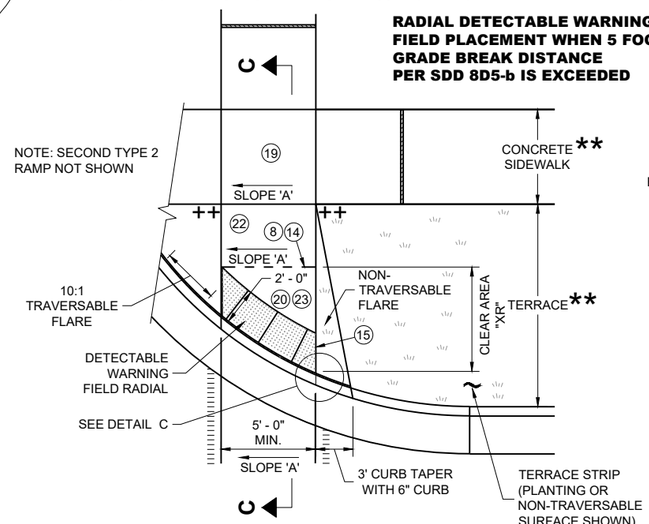

PLAN VIEW

CURB RAMP TYPE 2

(GRADE BREAK DISTANCE GREATER THAN 5 FEET)

(ON LINE WITH SIDEWALK)

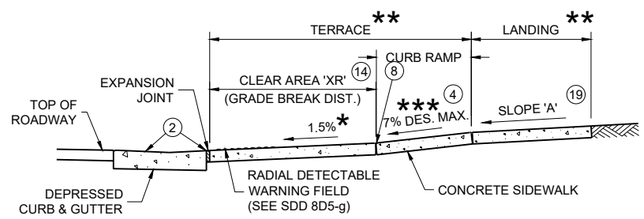

SECTION C - C FOR TYPE 2

CURB RAMPS
RADIAL DETECTABLE WARNING

STATE OF WISCONSIN
DEPARTMENT OF TRANSPORTATION

	MIN.	MAX.
A	1.6"	2.4"
B	0.65"	1.5"
C	*	*
D	0.9"	1.4"

* THE C DIMENSION IS 50% TO 65% OF THE D DIMENSION.

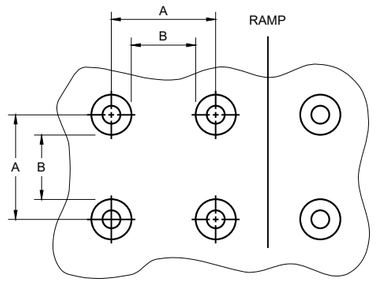

PLAN VIEW

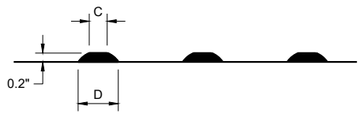

ELEVATION VIEW

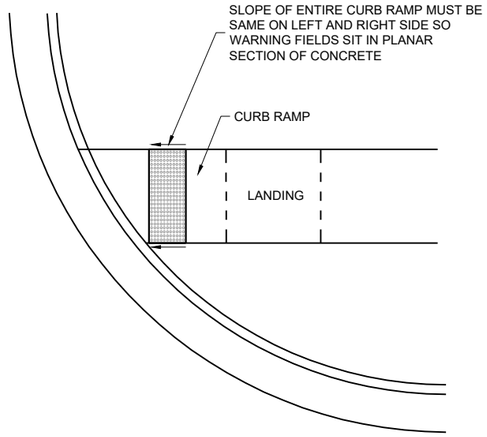

DETECTABLE WARNING FIELD
PLANAR INSTALLATION

GENERAL NOTES

DETECTABLE WARNING FIELDS THAT ARE INSTALLED AT A CURB RAMP SHALL BE FROM THE SAME MANUFACTURER.

PLACE ALL DETECTABLE WARNING FIELD SYSTEMS IN ACCORDANCE TO THE MANUFACTURER'S RECOMMENDATION.

FIELD CUTS AT INTERMEDIATE JOINTS WITHIN THE RADIAL DETECTABLE WARNING FILED ARE PROHIBITED.

DETERMINE FINAL RADIAL WARNING FIELD CONFIGURATION AND ITS INDIVIDUAL PLATE LOCATIONS. PERFORM PRE-LAYOUT PRIOR TO PLACEMENT IN PLASTIC CONCRETE. FOLLOW MANUFACTURER'S PRODUCT LIST AND INSTALLATION RECOMMENDATIONS.

FOR RADIAL DETECTABLE WARNING FIELD APPLICATIONS WHERE STANDARD RADIAL PLATES ARE NOT AVAILABLE AT AN INTERSECTION CURB RADIUS, A COMBINATION OF SQUARE OR RECTANGULAR PLATES AND RADIAL PLATES MAY BE USED TO FORM RADIAL CONFIGURATION. RADIAL WEDGE PLATES IN COMBINATION WITH SQUARE PLATES ARE ALSO ACCEPTABLE. FOLLOW MANUFACTURER'S RECOMMENDATIONS.

REFER TO CONTRACT AND STANDARD SPECIFICATIONS FOR FIELD CUTTING REQUIREMENTS.

DO NOT EMBED IN CONCRETE ANY FIELD-CUT PLATES WITH CUT EDGES SHORTER THAN 6 INCHES. CONSULT WITH MANUFACTURER FOR RE-DRILLING AND ANCHORING REQUIREMENTS OF FIELD-CUT PLATES.

(15) FIELD SAW CUTS ALONG RADIAL DETECTABLE WARNING PLATES WILL BE NECESSARY TO MATCH EACH CURB RAMP EDGE. AVOID CUTTING THROUGH DOMES WHENEVER POSSIBLE. MAKE FIELD CUTS TRUE TO LINE AND WITHIN ⅛" DEVIATION. SMOOTH EDGES OF FIELD CUT PLATES.

TRUNCATED DOMES
DETECTABLE WARNING PATTERN DETAIL

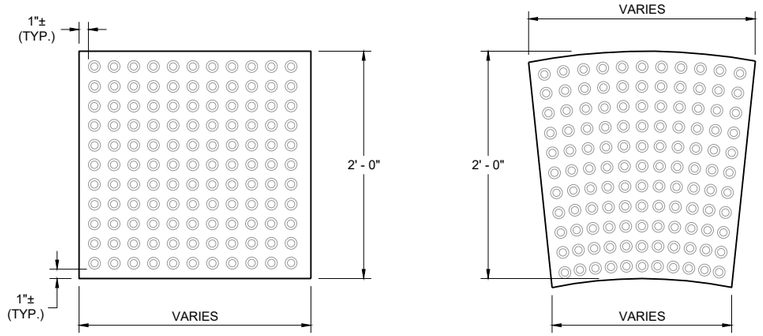

RECTANGULAR PLATES

RADIAL PLATES

PLAN VIEW
DETECTABLE WARNING FIELDS (TYPICAL)

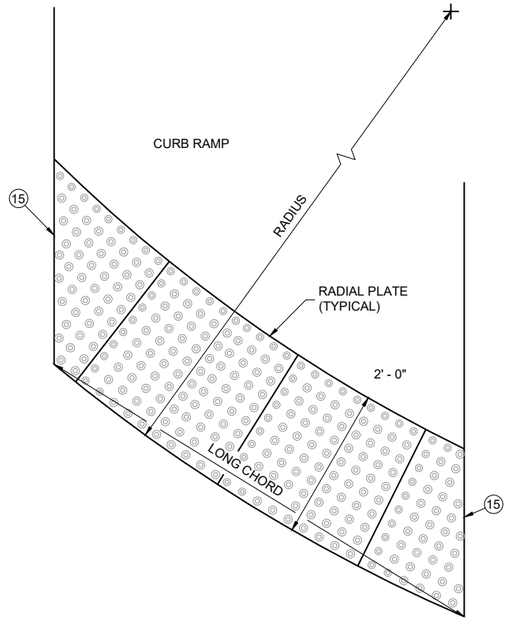

PLAN VIEW
RADIAL DETECTABLE WARNING FIELD ATTRIBUTES

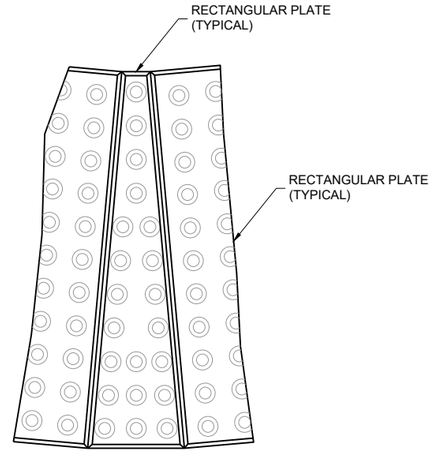

PLAN VIEW
RADIAL WEDGE PLATE CONNECTION DETAIL

CURB RAMPS
RECTANGULAR AND RADIAL
DETECTABLE WARNING PLATES

STATE OF WISCONSIN
DEPARTMENT OF TRANSPORTATION

APPROVED
February 2025 — DATE
/S/ Rodney Taylor — <position>

FHWA

6
SDD 08D05-22g

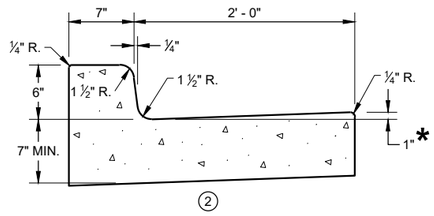

CONCRETE CURB AND GUTTER 31" ①

*TO BE MEASURED TO A MAXIMUM OF 3" WHERE DRAINAGE PROBLEMS EXIST.

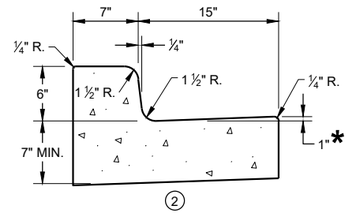

CONCRETE CURB AND GUTTER 22" ①

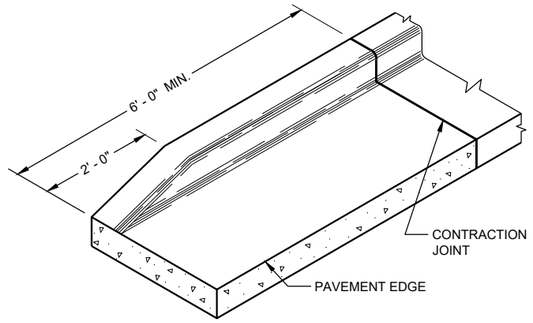

END SECTIONCURB AND GUTTER

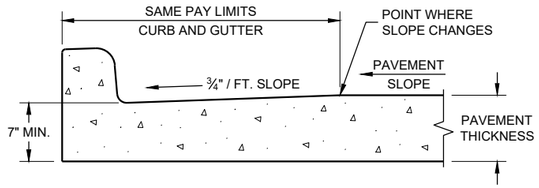

PARTIAL SECTION OF PAVEMENT WITH INTEGRAL CURB AND GUTTER

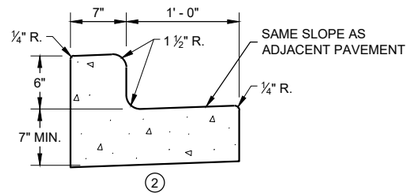

CONCRETE CURB AND GUTTER 19" ①

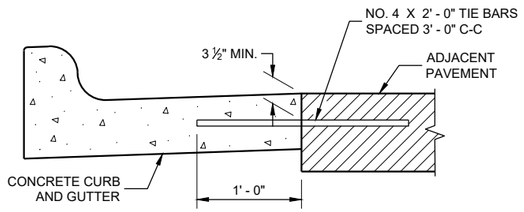

TYPICAL TIE BAR LOCATION ①

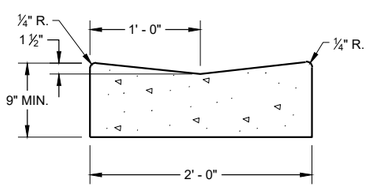

CONCRETE GUTTER 24" ①

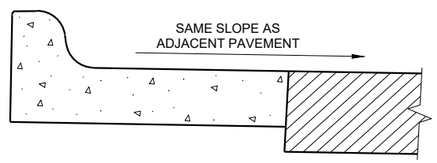

HIGH SIDE SECTION ③

(TYPICAL FOR ALL CURB & GUTTER TYPES)

GENERAL NOTES

DETAILS OF CONSTRUCTION AND WORKMANSHIP NOT SHOWN ON THIS DRAWING SHALL CONFORM TO THE PERTINENT REQUIREMENTS OF THE CONTRACT.

PAVEMENT TIES AND TIE BARS SHALL BE EPOXY COATED IN CONFORMANCE WITH SUBSECTION 505.2.6.2 OF THE STANDARD SPECIFICATIONS.

INTEGRAL CURB AND GUTTER SHALL CONFORM TO THE DETAILS SHOWN FOR CONCRETE CURB AND GUTTER INCLUDING THE TRANSVERSE GUTTER SLOPE. A LONGITUDINAL CONSTRUCTION JOINT IS NOT REQUIRED WITH INTEGRAL CURB AND GUTTER.

UNLESS OTHERWISE SHOWN ON THE TYPICAL CROSS SECTIONS, THE BASE COURSE AND UNCLASSIFIED EXCAVATION LIMITS ARE 2' - 0" BEHIND THE BACK OF CURBS.

① WHEN PLACED ADJACENT TO NEW CONCRETE, TIE BARS ARE REQUITED FOR CURB AND GUTTER 31", 22", 19" AND CONCRETE GUTTER 24".

② THE BOTTOM OF CURB AND GUTTER MAY BE CONSTRUCTED EITHER LEVEL OR PARALLEL TO THE SLOPE OF THE SUBGRADE OR BASE COURSE PROVIDED A 7" MINIMUM GUTTER THICKNESS IS MAINTAINED.

③ WHEN HIGH SIDE CURB SECTION IS REQUIRED, THE LOCATION(S) WILL BE NOTED ON THE PLANS

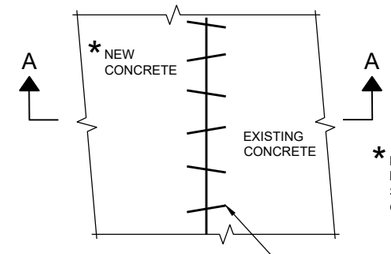

PLAN VIEW

* EXISTING AND NEW CONCRETE MAY BE CURB AND GUTTER, SURFACE DRAINS, PAVEMENT OR OTHER CONCRETE STRUCTURE.

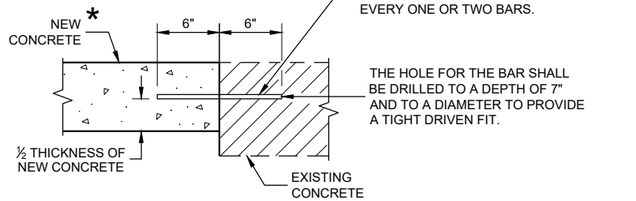

SECTION A - A

PAVEMENT TIES

CONCRETE GUTTER, CURB AND GUTTER AND PAVEMENT TIES

(For Optional use in Milwaukee Co. Only)

STATE OF WISCONSIN
DEPARTMENT OF TRANSPORTATION

APPROVED
February 2020 — DATE
/S/ Rodney Taylor — ROADWAY STANDARDS DEVE ENGINEER
FHWA

6

SDD 08D16 - 11
SDD 08D16 - 11

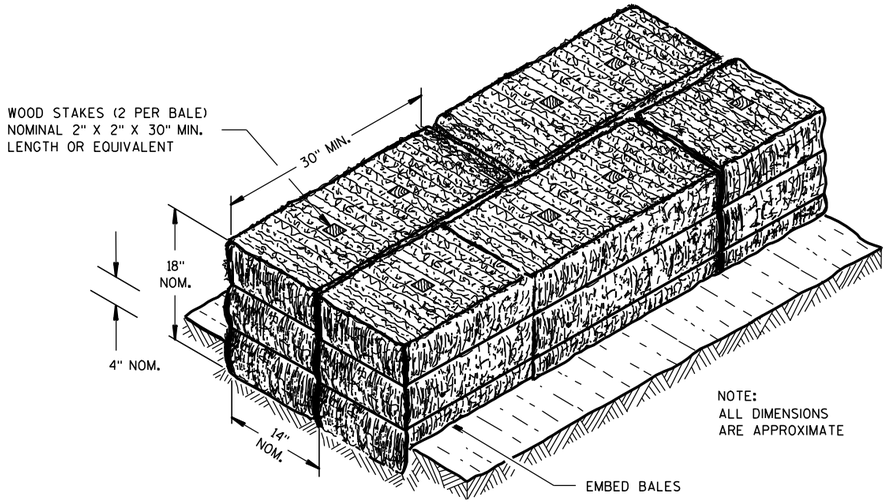

SECTION A-A

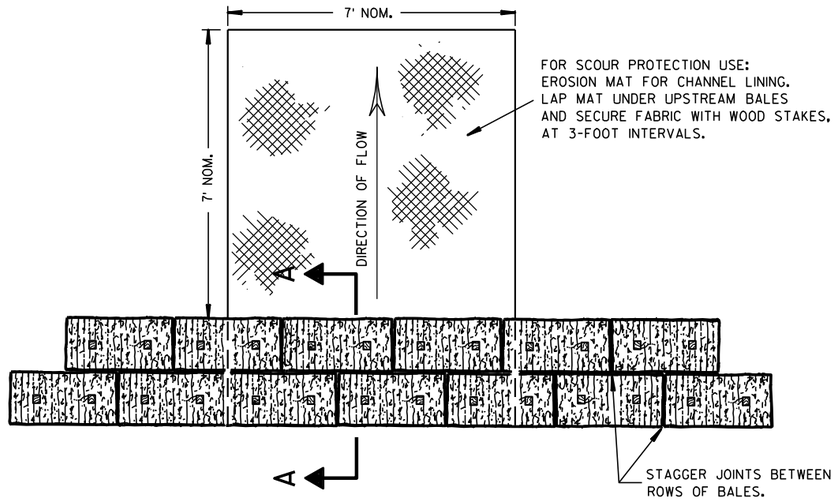

PLAN VIEW

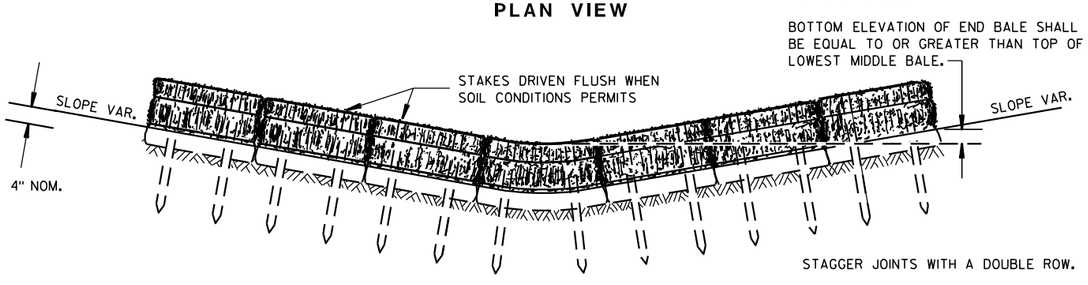

FRONT ELEVATION

TEMPORARY DITCH CHECK USING EROSION BALES ①

GENERAL NOTES

DETAILS OF CONSTRUCTION, MATERIALS AND WORKMANSHIP NOT SHOWN ON THIS DRAWING SHALL CONFORM TO THE PERTINENT REQUIREMENTS OF THE STANDARD SPECIFICATIONS AND THE APPLICABLE SPECIAL PROVISIONS.

① TEMPORARY DITCH CHECKS EITHER EROSION BALES OR MANUFACTURED SHALL BE PAID FOR UNDER THE BID ITEM OF TEMPORARY DITCH CHECK. THE DEPARTMENT WILL NOT PAY FOR TEMPORARY DITCH CHECKS CONSTRUCTED OF A SINGLE ROW OF EROSION BALES.

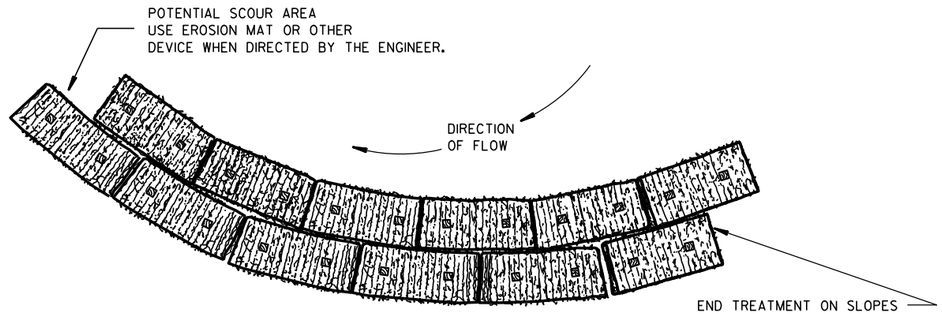

PLAN VIEW

WHEN ALTERING THE DIRECTION OF FLOW

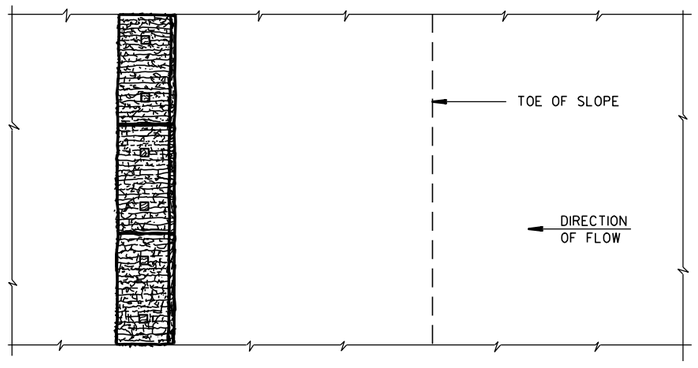

PLAN VIEW

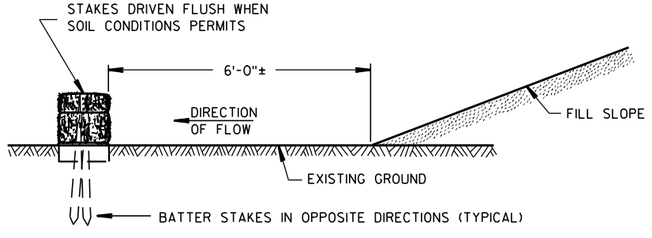

FRONT ELEVATION

WHEN EXISTING GROUND SLOPES AWAY FROM FILL SLOPE

EROSION BALES FOR SHEET FLOW

TYPICAL INSTALLATIONS OF EROSION BALES / TEMPORARY DITCH CHECKS

STATE OF WISCONSIN
DEPARTMENT OF TRANSPORTATION

APPROVED

6/04/02 DATE — /S/ Beth Cannestra — CHIEF ROADWAY DEVELOPMENT ENGINEER

FHWA

6

S.D.D. 8 E 8-3

6

S.D.D. 8 E 8-3

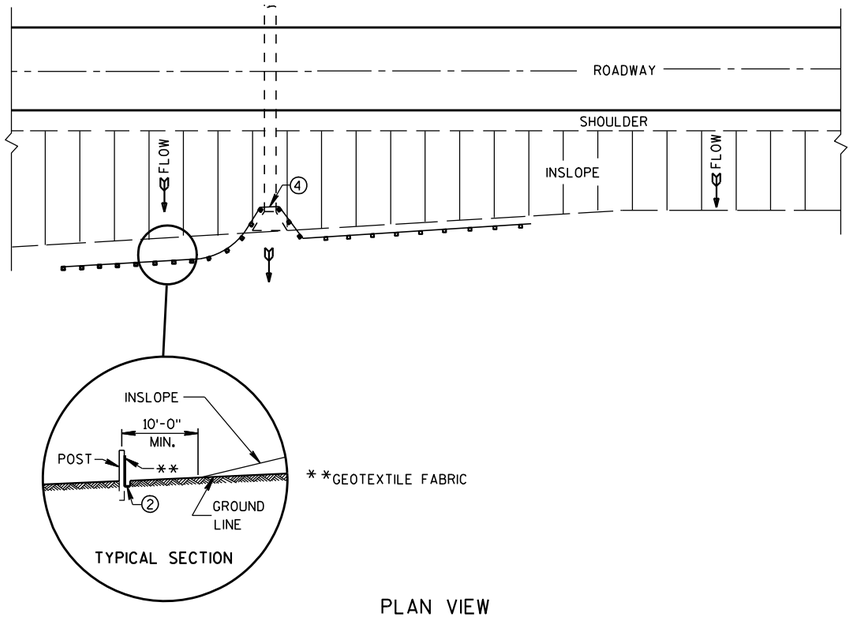

PLAN VIEW

TYPICAL APPLICATION OF SILT FENCE

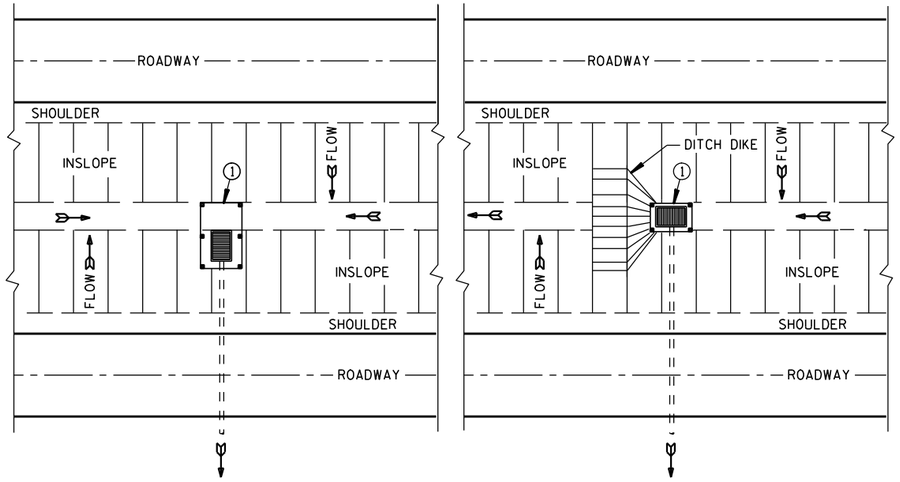

PLAN VIEW

SILT FENCE AT MEDIAN SURFACE DRAINS

GENERAL NOTES

DETAILS OF CONSTRUCTION NOT SHOWN ON THIS DRAWING SHALL CONFORM TO THE PERTINENT REQUIREMENTS OF THE STANDARD SPECIFICATIONS AND APPLICABLE SPECIAL PROVISIONS.

1. HORIZONTAL BRACE REQUIRED WITH 2" X 4" WOODEN FRAME OR EQUIVALENT AT TOP OF POSTS.
2. FOR MANUAL INSTALLATIONS THE TRENCH SHALL BE A MINIMUM OF 4" WIDE & 6" DEEP TO BURY AND ANCHOR THE GEOTEXTILE FABRIC. FOLD MATERIAL TO FIT TRENCH AND BACKFILL & COMPACT TRENCH WITH EXCAVATED SOIL.
3. WOOD POSTS SHALL BE A MINIMUM SIZE OF 1⅛" X 1⅛" OF OAK OR HICKORY.
4. SILT FENCE TO EXTEND ACROSS THE TOP OF THE PIPE.
5. CONSTRUCT SILT FENCE FROM A CONTINUOUS ROLL IF POSSIBLE BY CUTTING LENGTHS TO AVOID JOINTS. IF A JOINT IS NECESSARY USE ONE OF THE FOLLOWING TWO METHODS; A) OVERLAP THE END POSTS AND TWIST, OR ROTATE, AT LEAST 180 DEGREES, B) HOOK THE END OF EACH SILT FENCE LENGTH.

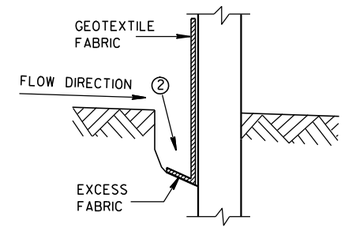

TRENCH DETAIL

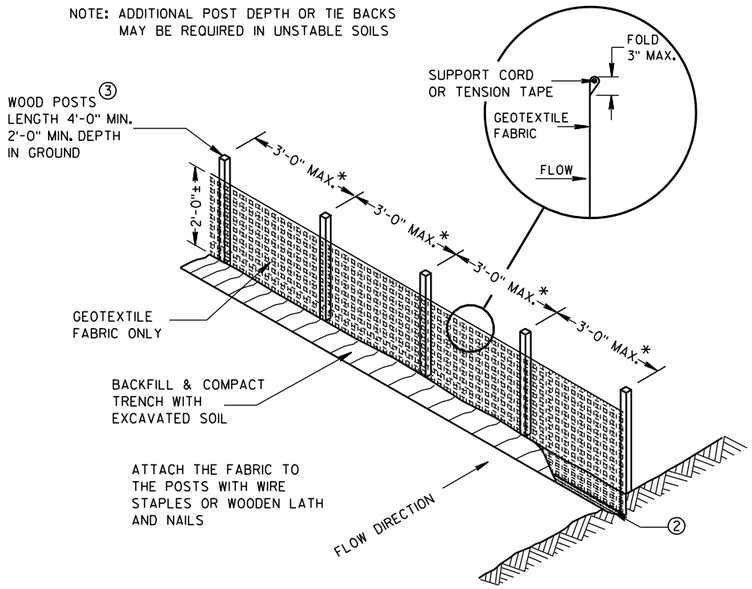

SILT FENCE

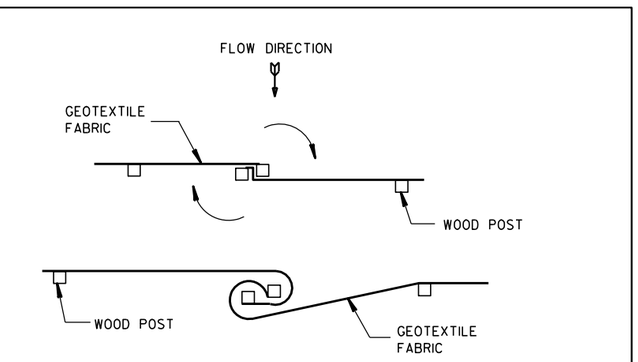

TWIST METHOD

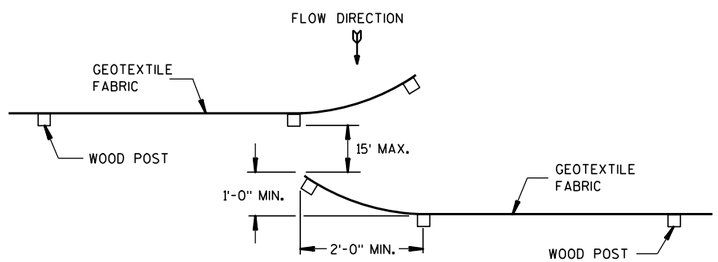

HOOK METHOD

JOINING TWO LENGTHS OF SILT FENCE 5

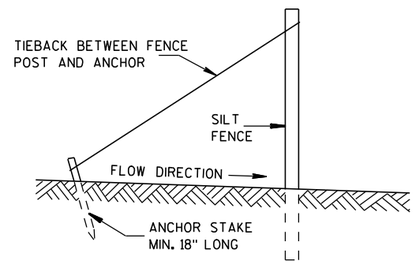

SILT FENCE TIE BACK

(WHEN REQUIRED BY THE ENGINEER)

SILT FENCE

STATE OF WISCONSIN
DEPARTMENT OF TRANSPORTATION

APPROVED
4-29-05 DATE
/S/ Beth Cannestra
CHIEF ROADWAY DEVELOPMENT ENGINEER
FHWA

6

S.D.D. 8 E 9-6

6

S.D.D. 8 E 9-6

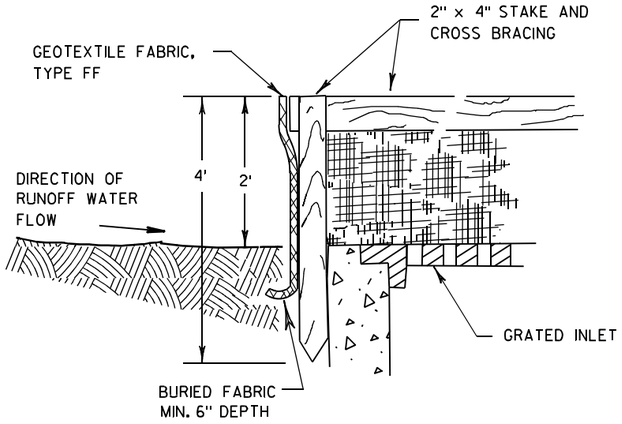

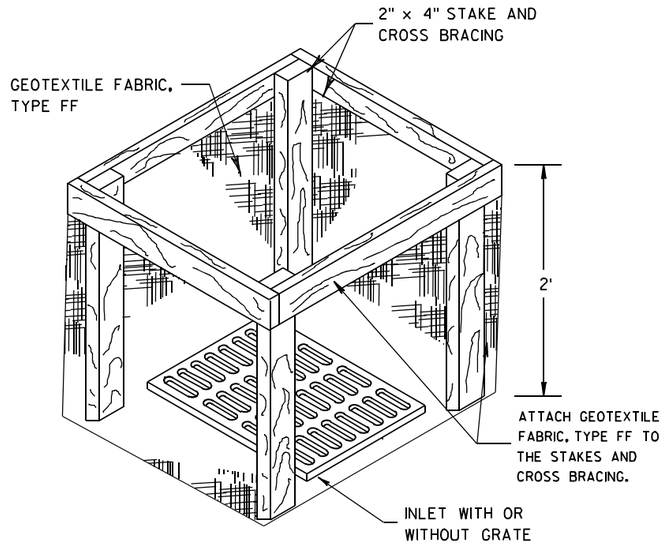

INLET PROTECTION, TYPE A

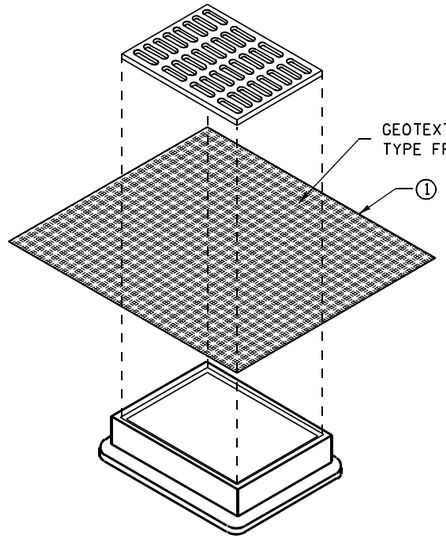

INLET PROTECTION, TYPE B
(WITHOUT CURB BOX)

(CAN BE INSTALLED IN ANY INLET WITHOUT A CURB BOX)

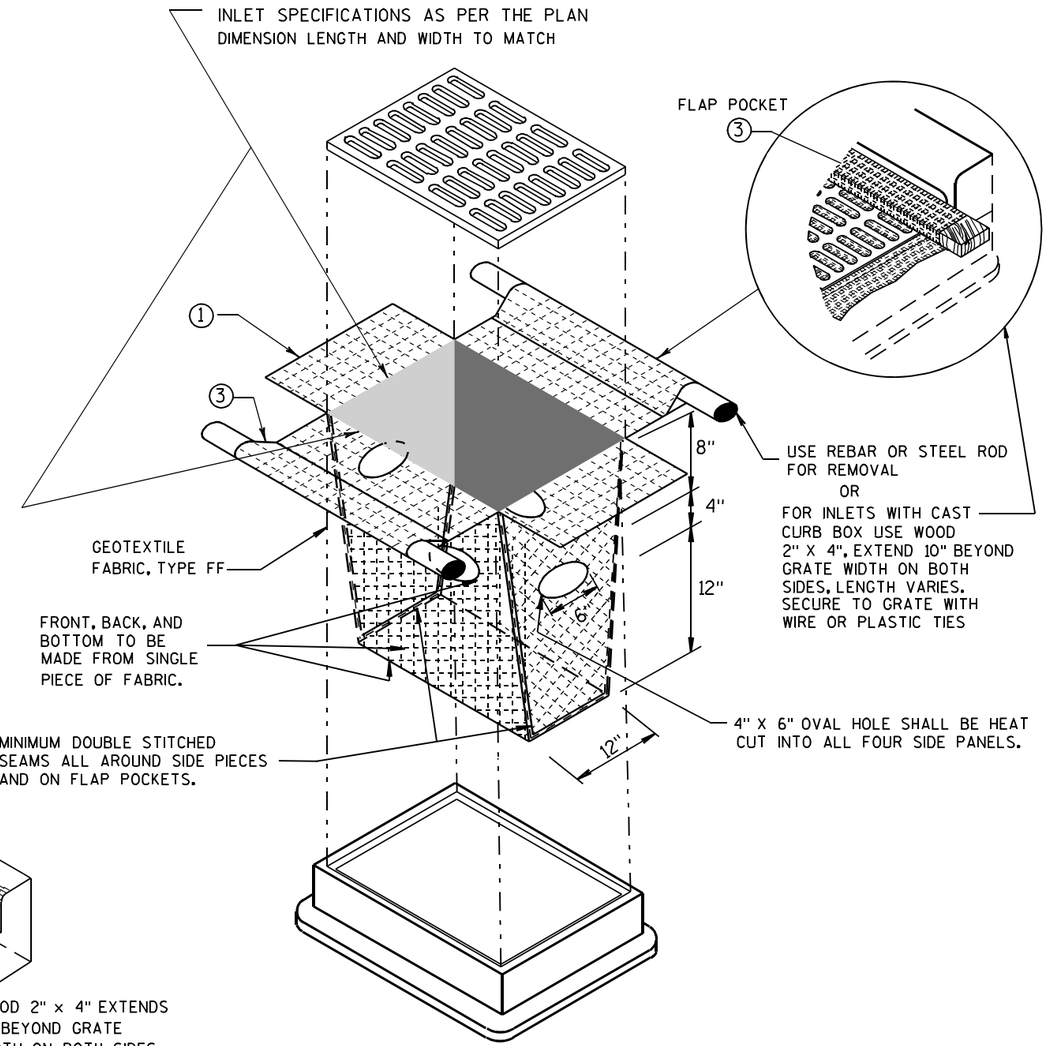

INLET PROTECTION, TYPE D

(CAN BE INSTALLED IN ANY INLET TYPE WITH
OR WITHOUT A CURB BOX AS PER NOTE ②)

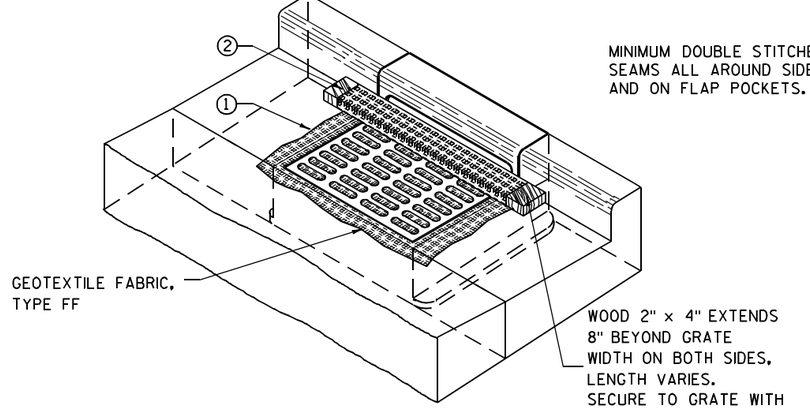

INLET PROTECTION, TYPE C (WITH CURB BOX)

GENERAL NOTES

INLET PROTECTION DEVICES SHALL BE MAINTAINED OR REPLACED AT THE DIRECTION OF THE ENGINEER.

MANUFACTURED ALTERNATIVES APPROVED AND LISTED ON THE DEPARTMENT'S EROSION CONTROL PRODUCT ACCEPTABILITY LIST MAY BE SUBSTITUTED.

WHEN REMOVING OR MAINTAINING INLET PROTECTION, CARE SHALL BE TAKEN SO THAT THE SEDIMENT TRAPPED ON THE GEOTEXTILE FABRIC DOES NOT FALL INTO THE INLET. ANY MATERIAL FALLING INTO THE INLET SHALL BE REMOVED IMMEDIATELY.

① FINISHED SIZE, INCLUDING FLAP POCKETS WHERE REQUIRED, SHALL EXTEND A MINIMUM OF 10" AROUND THE PERIMETER TO FACILITATE MAINTENANCE OR REMOVAL.

② FOR INLET PROTECTION, TYPE C (WITH CURB BOX), AN ADDITIONAL 18" OF FABRIC IS WRAPPED AROUND THE WOOD AND SECURED WITH STAPLES. THE WOOD SHALL NOT BLOCK THE ENTIRE HEIGHT OF THE CURB BOX OPENING.

③ FLAP POCKETS SHALL BE LARGE ENOUGH TO ACCEPT WOOD 2X4.

INSTALLATION NOTES

TYPE B & C

TRIM EXCESS FABRIC IN THE FLOW LINE TO WITHIN 3" OF THE GRATE.

THE CONTRACTOR SHALL DEMONSTRATE A METHOD OF MAINTENANCE, USING A SEWN FLAP, HAND HOLDS OR OTHER METHOD TO PREVENT ACCUMULATED SEDIMENT FROM ENTERING THE INLET.

TYPE D

DO NOT INSTALL INLET PROTECTION TYPE D IN INLETS SHALLOWER THAN 30", MEASURED FROM THE BOTTOM OF THE INLET TO THE TOP OF THE GRATE.

TRIM EXCESS FABRIC IN THE FLOW LINE TO WITHIN 3" OF THE GRATE.

THE INSTALLED BAG SHALL HAVE A MINIMUM SIDE CLEARANCE, BETWEEN THE INLET WALLS AND THE BAG, MEASURED AT THE BOTTOM OF THE OVERFLOW HOLES, OF 3". WHERE NECESSARY THE CONTRACTOR SHALL CINCH THE BAG, USING PLASTIC ZIP TIES, TO ACHIEVE THE 3" CLEARANCE. THE TIES SHALL BE PLACED AT A MAXIMUM OF 4" FROM THE BOTTOM OF THE BAG.

INLET PROTECTION
TYPE A, B, C, AND D

STATE OF WISCONSIN
DEPARTMENT OF TRANSPORTATION

APPROVED
10/16/02
DATE
/S/ Beth Cannestra
CHIEF ROADWAY DEVELOPMENT ENGINEER
FHWA

6
S.D.D. 8 E 10-2

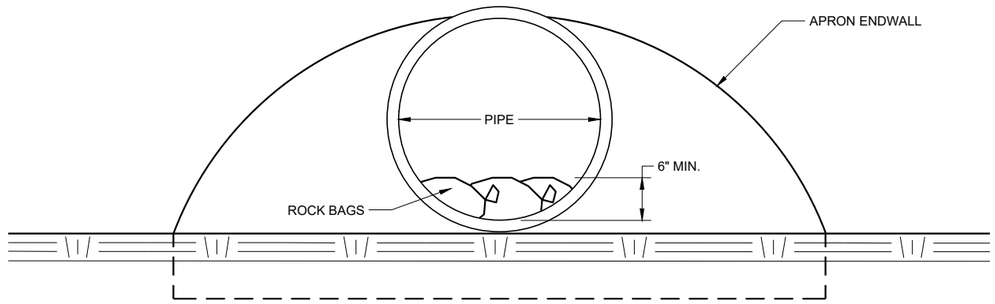

END VIEW

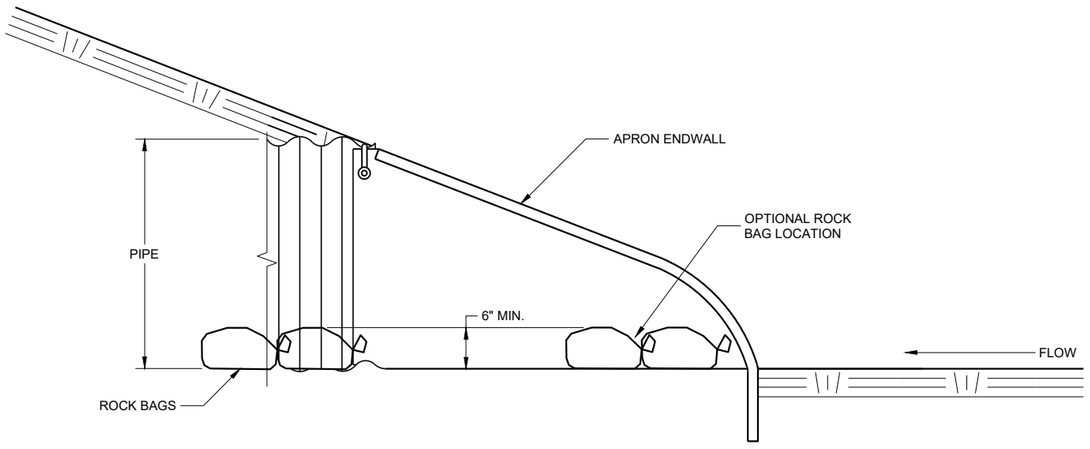

SIDE VIEW

CULVERT PIPE CHECK

(INSTALL ON INLET END ONLY)

CULVERT PIPE CHECK	
STATE OF WISCONSIN DEPARTMENT OF TRANSPORTATION	
APPROVED May 2019 DATE	/S/ Daniel Schave EROSION CONTROL ENGI
FHWA	

6

SDD 08E15 - 01

METAL APRON ENDWALLS

PIPE DIA. (IN.)	MIN. THICK. (Inches) STEEL	MIN. THICK. (Inches) ALUM.	DIMENSIONS (Inches) A (±1")	B (MAX.)	H (±1")	L (±1 1/2")	L1 ①	L2 ①	W (±2")	APPROX. SLOPE	BODY
12	.064	.060	6	6	6	21	12	17 1/2	24	2 1/2 to 1	1 Pc.
15	.064	.060	7	8	6	26	14	21 3/4	30	2 1/2 to 1	1 Pc.
18	.064	.060	8	10	6	31	15	28 1/4	36	2 1/2 to 1	1 Pc.
21	.064	.060	9	12	6	36	18	29 5/8	42	2 1/2 to 1	1 Pc.
24	.064	.075	10	13	6	41	18	37 1/4	48	2 1/2 to 1	1 Pc.
30	.079	.075	12	16	8	51	18	52 1/4	60	2 1/2 to 1	1 Pc.
36	.079	.105	14	19	9	60	24	59 3/4	72	2 1/2 to 1	2 Pc.
42	.109	.105	16	22	11	69	24	75 5/8	84	2 1/2 to 1	2 Pc.
48	.109	.105	18	27	12	78	24	81	90	2 1/4 to 1	3 Pc.
54	.109	.105	18	30	12	84	30	85 1/2	102	2 1/4 to 1	3 Pc.
60	.109×	.105×	18	33	12	87	—	—	114	2 to 1	3 Pc.
66	.109×	.105×	18	36	12	87	—	—	120	2 to 1	3 Pc.
72	.109×	.105×	18	39	12	87	—	—	126	2 to 1	3 Pc.
78	.109×	.105×	18	42	12	87	—	—	132	1 1/2 to 1	3 Pc.
84	.109×	.105×	18	45	12	87	—	—	138	1 1/2 to 1	3 Pc.
90	.109×	.105×	18	37	12	87	—	—	144	1 1/2 to 1	3 Pc.
96	.109×	.105×	18	35	12	87	—	—	150	1 1/2 to 1	3 Pc.

× EXCEPT CENTER PANEL SEE GENERAL NOTES

REINFORCED CONCRETE APRON ENDWALLS

PIPE DIA. (IN.)	DIMENSIONS (Inches) T	A	B	C	D	E	G	APPROX. SLOPE
12	2	4	24	48 7/8	72 1/8	24	2	3 to 1
15	2 1/4	6	27	46	73	30	2 1/4	3 to 1
18	2 1/2	9	27	46	73	36	2 1/2	3 to 1
21	2 3/4	9	36	37 1/2	73 1/2	42	2 3/4	3 to 1
24	3	9 1/2	43 1/2	30	73 1/2	48	3	3 to 1
27	3 1/4	10 1/2	49 1/2	24	73 1/2	54	3 1/4	3 to 1
30	3 1/2	12	54	19 3/4	73 1/2	60	3 1/2	3 to 1
36	4	15	63	34 3/4	97 3/4	72	4	3 to 1
42	4 1/2	21	63	35	98	78	4 1/2	3 to 1
48	5	24	72	26	98	84	5	3 to 1
54	5 1/2	27	65	* 33 1/4 - ** 35	* 98 1/4 - ** 100	90	5 1/2	2 2/5 to 1
60	6	* 30 - ** 35	60	39	99	96	5	2 to 1
66	6 1/2	* 24 - ** 30	* 72 - ** 78	* 21 - ** 27	99	102	5 1/2	2 to 1
72	7	* 24 - ** 36	78	21	99	108	6	2 to 1
78	7 1/2	* 24 - ** 36	78	21	99	114	6 1/2	2 to 1
84	8	36	90 1/2	21	111 1/2	120	6 1/2	1 1/2 to 1
90	8 1/2	41	87 1/2	24	111 1/2	132	6 1/2	1 1/2 to 1

*MINIMUM
**MAXIMUM

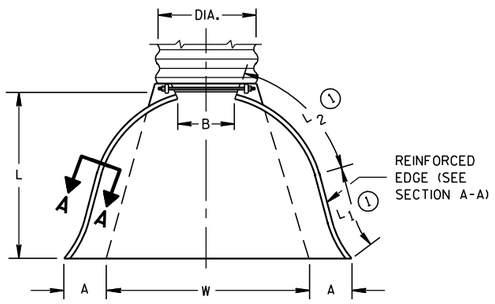

PLAN VIEW

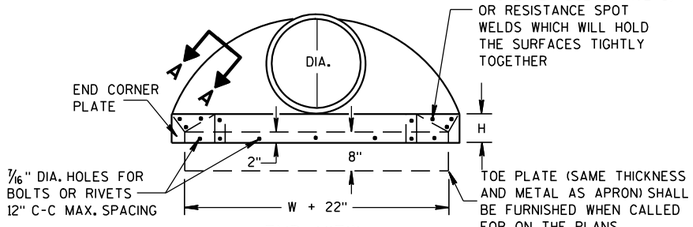

END VIEW

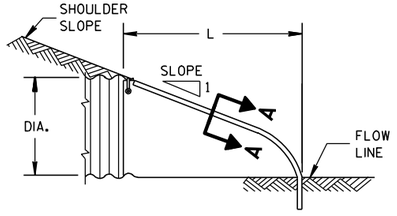

SIDE ELEVATION

METAL ENDWALLS

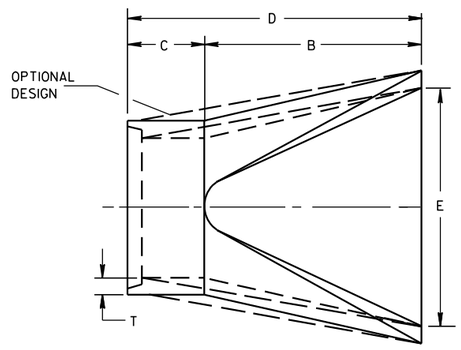

PLAN

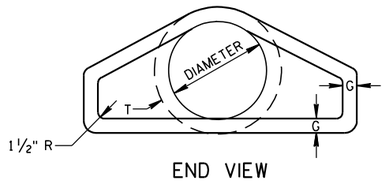

END VIEW

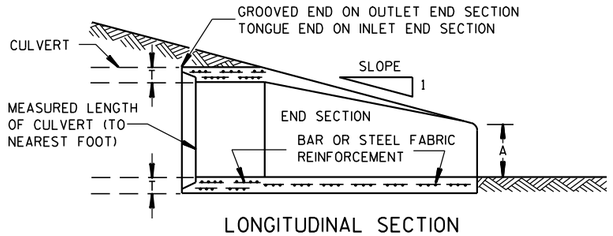

LONGITUDINAL SECTION

CONCRETE ENDWALLS

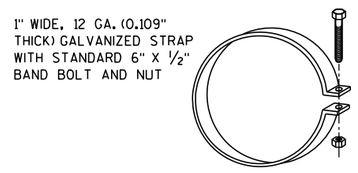

ALTERNATE FOR TYPE 1 CONNECTION

END SECTION CONNECTOR STRAP

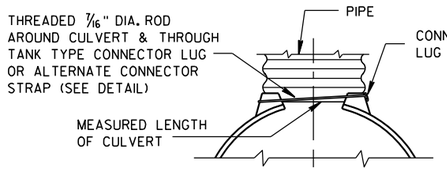

TYPE 1
FOR 12" THRU 24" CORR. PIPE

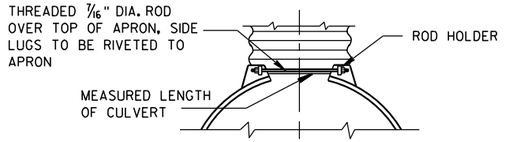

TYPE 2
FOR 30" THRU 96" CORR. PIPE

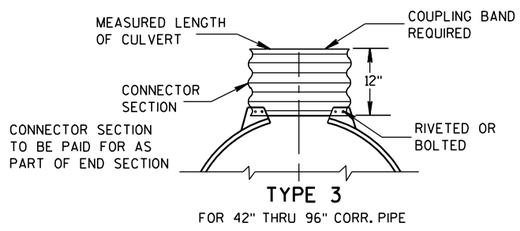

TYPE 3
FOR 42" THRU 96" CORR. PIPE

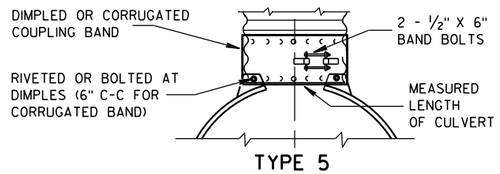

TYPE 5
ALTERNATE FOR:
ALL SIZES CORRUGATED CIRCULAR PIPE

NOTE: DIMPLED BAND FITS OVER OUTSIDE OF ENDWALL. AND CORRUGATED BAND FITS INSIDE ENDWALL. DIMPLED BAND MAY BE USED WITH HELICALLY CORRUGATED PIPE.

FOR CIRCUMFERENTIALLY CORRUGATED PIPE USE ENDWALL CONNECTION DETAILS 1, 2, 3 OR 5 AS APPLICABLE.

FOR HELICALLY CORRUGATED PIPE USE ENDWALL CONNECTION DETAILS 1, 2 OR 5.

FOR HELICALLY CORRUGATED PIPES WITH TWO CIRCUMFERENTIAL CORRUGATIONS AT EACH END USE ENDWALL CONNECTION DETAILS 1, 2 OR 3.

CONNECTION DETAILS

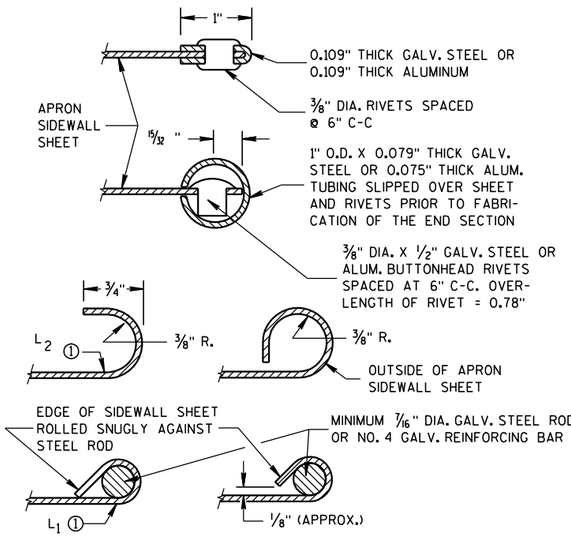

SECTION A-A

GENERAL NOTES

DETAILS OF CONSTRUCTION, MATERIALS AND WORKMANSHIP NOT SHOWN ON THIS DRAWING SHALL CONFORM TO THE PERTINENT REQUIREMENTS OF THE STANDARD SPECIFICATIONS AND THE APPLICABLE SPECIAL PROVISIONS.

CONCRETE CULVERT ENDWALLS MAY NOT BE USED WITH GALVANIZED STEEL OR ALUMINUM CULVERT PIPE OR VISE VERSA. GALVANIZED STEEL OR ALUMINUM ENDWALLS SHALL NORMALLY BE INSTALLED ON CULVERT PIPE OF THE SAME METAL.

ALL THREE PIECE STEEL APRON ENDWALLS FOR 60" DIAMETER PIPE AND LARGER SHALL HAVE 0.109" SIDES AND 0.138" CENTER PANELS. ALL THREE PIECE ALUMINUM APRON ENDWALLS FOR 60" DIAMETER PIPE AND LARGER SHALL HAVE 0.105" SIDES AND 0.134" CENTER PANELS. THE WIDTH OF CENTER PANELS SHALL BE GREATER THAN 20 PERCENT OF THE PIPE PERIMETER.

LAP SEAMS SHALL BE TIGHTLY JOINED BY GALVANIZED RIVETS OR BOLTS FOR STEEL UNITS AND ALUMINUM RIVETS AND BOLTS FOR ALUMINUM UNITS. FOR THE 60" THROUGH 96" DIAMETER APRON ENDWALL SIZES, THE REINFORCED EDGES AND CENTER PANEL SEAMS SHALL BE FURTHER REINFORCED WITH GALVANIZED STEEL OR ALUMINUM STIFFENER ANGLES. THE ANGLES SHALL BE ATTACHED BY GALVANIZED NUTS AND BOLTS FOR STEEL UNITS AND ALUMINUM NUTS AND BOLTS FOR ALUMINUM UNITS.

WHERE TWO OR MORE PIPES WITH APRON ENDWALLS ARE LAID ADJACENT TO EACH OTHER, THEY SHALL BE SEPARATED BY A DISTANCE SUFFICIENT TO PROVIDE A MINIMUM CLEARANCE OF 6 INCHES BETWEEN APRON ENDWALLS.

① FOR PIPE SIZES UP TO 60" DIAMETER, A 180° ROLLED EDGE MAY BE USED INSTEAD OF STEEL ROD REINFORCEMENT. SEE SECTION A-A.

APRON ENDWALLS FOR CULVERT PIPE

STATE OF WISCONSIN
DEPARTMENT OF TRANSPORTATION

APPROVED
11/30/94 DATE
/S/ Rory L. Rhinesmith
CHIEF ROADWAY DEVELOPMENT ENGINEER
FHWA

6

S.D.D. 8 F 1-11

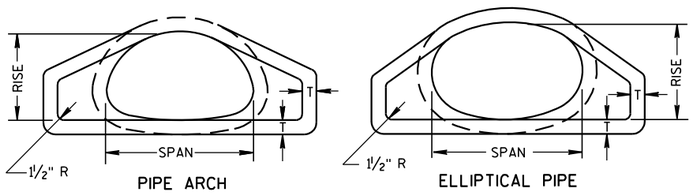

END VIEW

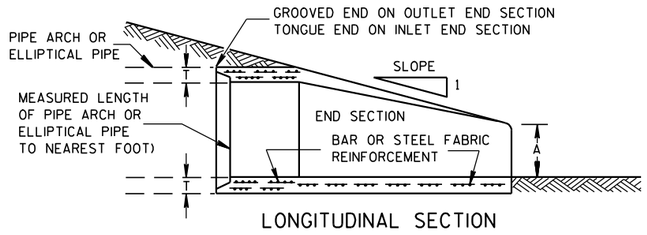

LONGITUDINAL SECTION

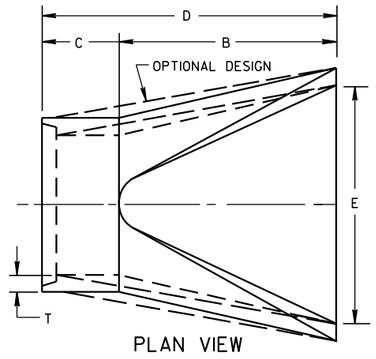

PLAN VIEW

CONCRETE ENDWALLS

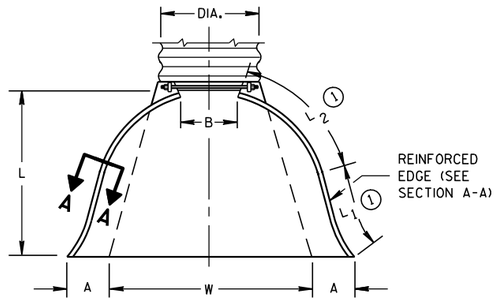

PLAN VIEW

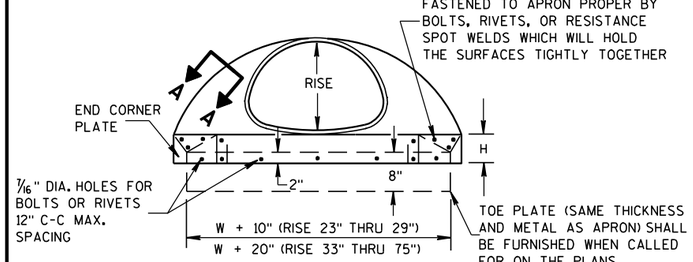

END VIEW

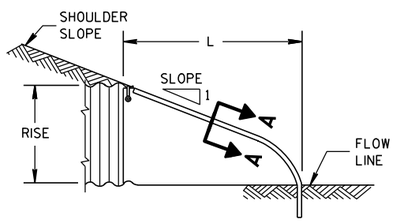

SIDE ELEVATION

METAL ENDWALLS

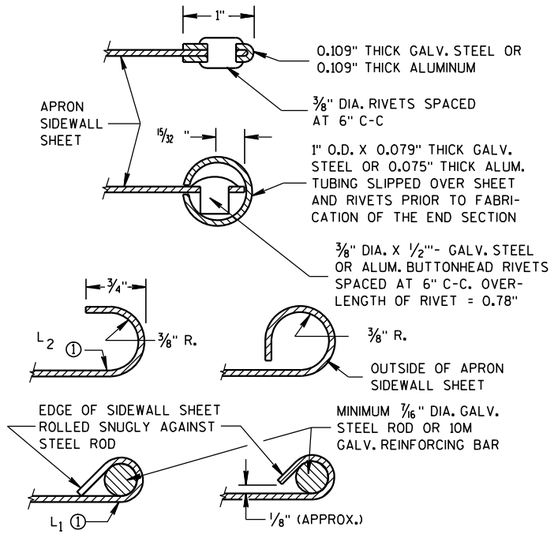

SECTION A-A

2- 2/3" X 1/2" CORRUGATIONS

EQUIV. DIA. (Inches)	(Inches) SPAN	(Inches) RISE	MIN. THICK. (Inches) STEEL	MIN. THICK. (Inches) ALUM.	DIMENSIONS (Inches) A (±1")	B (MAX.)	H (±1")	L (±1 1/2")	L1 ①	L2 ①	W (±2")	APPROX. SLOPE	BODY
15	17	13	.064	.060	7	9	6	19	14	16	30	2½ to 1	1 Pc.
18	21	15	.064	.060	7	10	6	23	14	19⅜	36	2½ to 1	1 Pc.
21	24	18	.064	.060	8	12	6	28	18	21¾	42	2½ to 1	1 Pc.
24	28	20	.064	.060	9	14	6	32	18	27½	48	2½ to 1	1 Pc.
30	35	24	.079	.075	10	16	6	39	18	37⅝	60	2½ to 1	1 Pc.
36	42	29	.079	.075	12	18	8	46	24	45⅜	75	2½ to 1	1 Pc.
42	49	33	.109	.105	13	21	9	53	24	54¾	85	2½ to 1	2 Pc.
48	57	38	.109	.105	18	26	12	63	24	68	90	2½ to 1	3 Pc.
54	64	43	.109	.105	18	30	12	70	24	72¾	102	2¼ to 1	3 Pc.
60	71	47	.109*	.105*	18	33	12	77	30	82¼	114	2¼ to 1	3 Pc.
66	77	52	.109*	.105*	18	36	12	77	—	—	126	2 to 1	3 Pc.
72	83	57	.109*	.105*	18	39	12	77	—	—	138	2 to 1	3 Pc.

3" X 1" CORRUGATIONS

EQUIV. DIA. (Inches)	(Inches) SPAN	(Inches) RISE	MIN. THICK. (Inches) STEEL	MIN. THICK. (Inches) ALUM.	DIMENSIONS (Inches) A (±1")	B (MAX.)	H (±1")	L (±1 1/2")	L1 ①	L2 ①	W (±2")	APPROX. SLOPE	BODY
48	53	41	.109	.105	18	26	12	63	24	72¾	90	2½ to 1	2 Pc.
54	60	46	.109	.105	18	30	12	70	30	82¼	102	2 to 1	2 Pc.
60	66	51	.109*	.105*	18	33	12	77	—	—	114	1½ to 1	3 Pc.
66	73	55	.109*	.105*	18	36	12	77	—	—	126	1½ to 1	3 Pc.
72	81	59	.109*	.105*	18	39	12	77	—	—	138	2 to 1	3 Pc.
78	87	63	.109*	.105*	22	38	12	77	—	—	148	1½ to 1	3 Pc.
84	95	67	.109*	.105*	22	34	12	77	—	—	162	1½ to 1	3 Pc.
90	103	71	.109*	.105*	22	38	12	77	—	—	174	1½ to 1	3 Pc.
96	112	75	.109*	.105*	24	40	12	77	—	—	174	1½ to 1	3 Pc.

NOTE: ALL SPLICES TO BE LAP RIVETED OR BOLTED.

* EXCEPT CENTER PANEL SEE GENERAL NOTES

REINFORCED CONCRETE PIPE ARCH

EQUIV. DIA. (Inches)	DIMENSIONS (Inches) ** SPAN	** RISE	T	A	B	C	D	E	APPROX. SLOPE
24	29	18	3	8½	39	33	72	48	3 to 1
30	36	22	3½	9½	50	46	96	60	3 to 1
36	44	27	4	11⅛	60	36	96	72	3 to 1
42	51	31	4½	15 13/16	60	36	96	78	3 to 1
48	58	36	5	21	60	36	96	84	3 to 1
54	65	40	5½	25½	60	36	96	90	3 to 1
60	73	45	6	31	60	36	96	96	3 to 1
72	88	54	7	31	60	39	99	120	2 to 1
84	102	62	8	28½	83	19	102	144	2 to 1

REINFORCED CONCRETE ELLIPTICAL PIPE

EQUIV. DIA. (Inches)	DIMENSIONS (Inches) ** SPAN	** RISE	T	A	B	C	D	E	APPROX. SLOPE
24	30	19	3¼	8½	39	33	72	48	3 to 1
30	38	24	3¾	9½	54	18	72	60	3 to 1
36	45	29	4½	11⅛	60	24	84	72	2½ to 1
42	53	34	5	15¾	60	36	96	78	2½ to 1
48	60	38	5½	21	60	36	96	84	2½ to 1
54	68	43	6	25½	60	36	96	90	2½ to 1
60	76	48	6½	30	60	36	96	96	2½ to 1

**NOMINAL SIZE

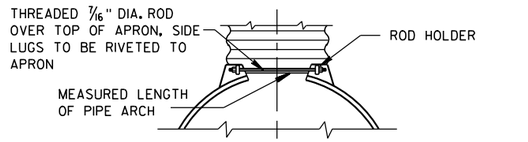

TYPE 2

FOR 17" X 13" THRU 112" X 75" PIPE ARCH

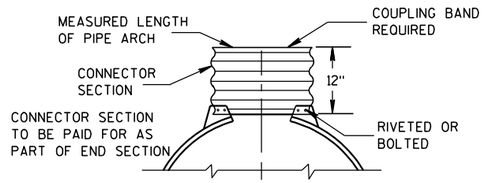

TYPE 3

FOR 64" X 43" THRU 112" X 75" PIPE ARCH

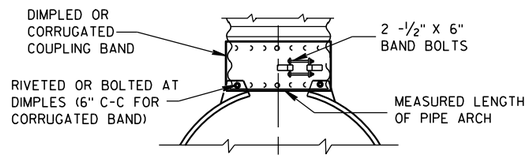

TYPE 5

ALTERNATE FOR:

ALL SIZES CORRUGATED PIPE ARCHES

NOTE: DIMPLED BAND FITS OVER OUTSIDE OF ENDWALL, AND CORRUGATED BAND FITS INSIDE ENDWALL.

CONNECTION DETAILS

GENERAL NOTES

DETAILS OF CONSTRUCTION, MATERIALS AND WORKMANSHIP NOT SHOWN ON THIS DRAWING SHALL CONFORM TO THE PERTINENT REQUIREMENTS OF THE STANDARD SPECIFICATIONS AND THE APPLICABLE SPECIAL PROVISIONS.

CONCRETE APRON ENDWALLS MAY NOT BE USED WITH GALVANIZED STEEL OR ALUMINUM CULVERT PIPE OR VISE VERSA. GALVANIZED STEEL OR ALUMINUM APRON ENDWALLS SHALL NORMALLY BE INSTALLED ON CULVERT PIPE OF THE SAME METAL.

ALL THREE PIECE STEEL APRON ENDWALLS FOR 66" X 51" PIPE ARCH AND LARGER SHALL HAVE 0.109" SIDES AND 0.138" CENTER PANELS. ALL THREE PIECE ALUMINUM APRON ENDWALLS FOR 66" X 51" PIPE ARCH AND LARGER SHALL HAVE 0.105" SIDES AND 0.134" CENTER PANELS. THE WIDTH OF CENTER PANELS SHALL BE GREATER THAN 20 PERCENT OF THE PIPE ARCH PERIMETER.

LAP SEAMS SHALL BE TIGHTLY JOINED BY GALVANIZED RIVETS OR BOLTS FOR STEEL UNITS AND ALUMINUM RIVETS AND BOLTS FOR ALUMINUM UNITS. FOR THE 77" X 52" THROUGH 112" X 75" APRON ENDWALL SIZES, THE REINFORCED EDGES AND CENTER PANEL SEAMS SHALL BE FURTHER REINFORCED WITH GALVANIZED STEEL OR ALUMINUM STIFFENER ANGLES. THE ANGLES SHALL BE ATTACHED BY GALVANIZED NUTS AND BOLTS FOR STEEL UNITS AND ALUMINUM NUTS AND BOLTS FOR ALUMINUM UNITS.

WHERE TWO OR MORE PIPES WITH APRON ENDWALLS ARE LAID ADJACENT TO EACH OTHER, THEY SHALL BE SEPARATED BY A DISTANCE SUFFICIENT TO PROVIDE A MINIMUM CLEARANCE OF 6 INCHES BETWEEN APRON ENDWALLS.

① FOR PIPE ARCH SIZES UP TO 73" X 55" A 180° ROLLED EDGE MAY BE USED INSTEAD OF STEEL ROD REINFORCEMENT. SEE SECTION A-A.

APRON ENDWALLS FOR PIPE ARCH AND ELLIPTICAL PIPE

STATE OF WISCONSIN
DEPARTMENT OF TRANSPORTATION

APPROVED

11/30/94 — DATE

/S/ Rory L. Rhinesmith — CHIEF ROADWAY DEVELOPMENT ENGINEER

FHWA

6

S.D.D. 8 F 2-1

6

S.D.D. 8 F 2-1

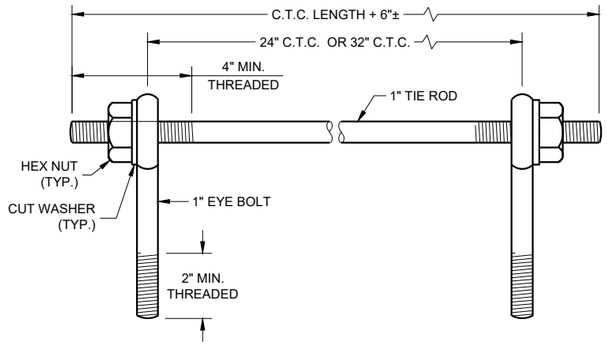

EYE BOLTS AND TIE ROD

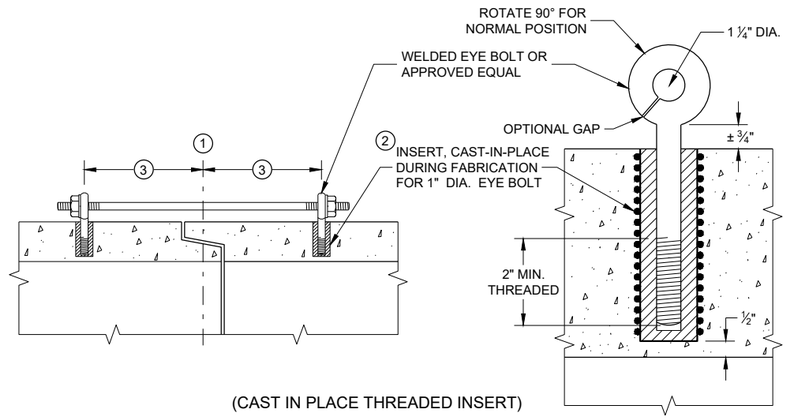

(CAST IN PLACE THREADED INSERT)

LONGITUDINAL SECTIONS

EYE BOLT AND TIE ROD ASSEMBLY (ALTERNATE NO. 1)

GENERAL NOTES

DETAILS OF CONSTRUCTION, MATERIALS, AND WORKMANSHIP NOT SHOWN ON THIS DRAWING SHALL CONFORM TO THE PERTINENT REQUIREMENTS OF THE STANDARD SPECIFICATIONS AND APPLICABLE SPECIAL PROVISIONS.

CONCRETE CULVERT AND STORM SEWER PIPE SHALL BE TIED TOGETHER IN THE MANNER ILLUSTRATED BY THIS DETAIL AT LOCATIONS DESIGNATED IN THE STANDARD SPECIFICATIONS AND THE PLAN. THE CONTRACTOR MAY USE EITHER ALTERNATE 1, 2 OR 3 FOR DRAINAGE STRUCTURES. ONLY ALTERNATE 1 AND 3 MAY BE USED FOR CATTLE PASSES, UNLESS OTHERWISE STATED IN THE CONTRACT. THE MATERIALS, FABRICATION AND WORK NECESSARY TO TIE THE PIPE BY THIS DETAIL WILL BE CONSIDERED INCIDENTAL TO THE PIPE AND APRON ENDWALLS IF REQUIRED.

DETAILED DRAWINGS FOR PROPOSED ALTERNATE DESIGNS FOR JOINT TIES SHALL BE SUBMITTED TO THE ENGINEER FOR APPROVAL.

JOINT TIES TO BE HOT-DIP GALVANIZED PER ASTM A 153.

(1) CENTER LINE OF TONGUE AND GROOVE OR BELL AND SPIGOT JOINTS.

(2) THE INSIDE OF THE THREADED INSERTS SHALL BE CLEAN TO ALLOW THE INSERTION OF THREADED EYE BOLTS.

(3) HOLES SHALL BE CAST-IN-PLACE OR DRILLED PER THE APPLICABLE DETAIL, AND EQUAL DISTANCE FROM THE CENTERLINE OF THE JOINT.

(4) BOLT PROJECTION INSIDE OF PIPE SHALL NOT EXCEED 2 INCHES.

(5) OPENING TO BE ROD DIAMETER PLUS 1 INCH.

(6) LENGTH ADEQUATE TO EXTEND TO WITHIN ½ INCH OF THE INNER SURFACE OF THE PIPE.

(7) EYE BOLT LENGTH DETERMINED BY WALL THICKNESS, BELL THICKNESS AND BOLT PROJECTION INSIDE PIPE.

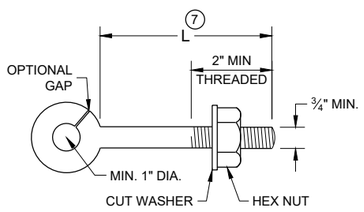

EYE BOLT (7)

NOTE: TWO EYE BOLTS MAY BE USED WITH A 30" OR 38" LONG THREADED ROD IN LIEU OF THE 90° BENT TIE ROD.

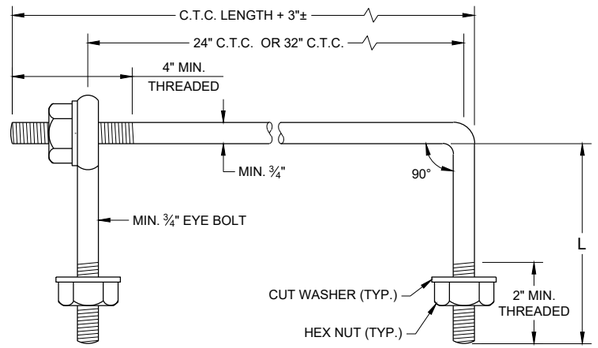

EYE BOLT AND TIE ROD

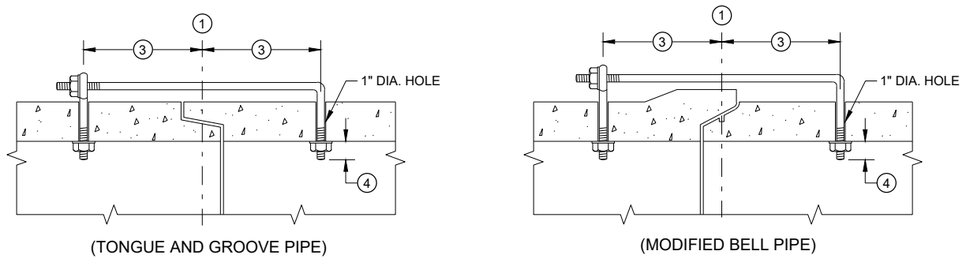

(TONGUE AND GROOVE PIPE)

(MODIFIED BELL PIPE)

LONGITUDINAL SECTION

(JOINT TIES FOR 18" TO 66" DIA. CONCRETE PIPE)

EYE BOLT AND TIE ROD ASSEMBLY (ALTERNATE NO. 2)

ADJUSTABLE TIE ROD TABLE

PIPE DIAMETER	TIE ROD DIAMETER	D	L_1	N
12 - 60	⅝	⅝	5	½
66 - 84	¾	¾	5	½
90 - 144	1	1	7	1 7/16

DIMENSIONS SHOWN ARE IN INCHES

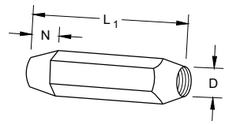

TAPERED

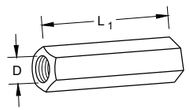

PLAIN

RIGHT AND LEFT THREADS

SLEEVE NUTS

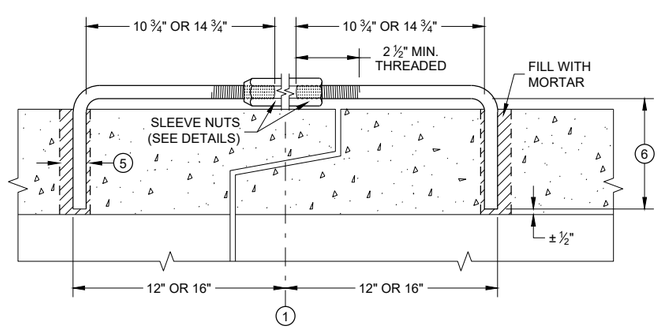

LONGITUDINAL SECTION

ADJUSTABLE TIE ROD (ALTERNATE NO. 3)

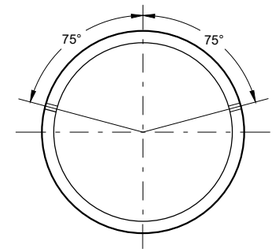

PLACEMENT OF (2) CAST-IN-PLACE INSERTS OR HOLES DURING FABRICATION FOR PIPE SECTIONS REQUIRING TIE RODS

TRANSVERSE SECTION

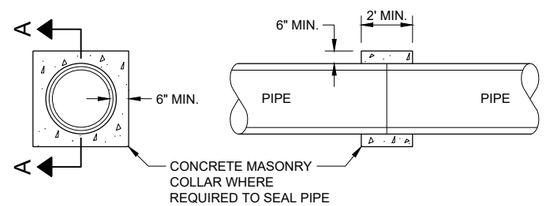

SECTION A - A

CONCRETE COLLAR DETAIL

JOINT TIES FOR CONCRETE PIPE AND CONCRETE COLLAR DETAIL

STATE OF WISCONSIN
DEPARTMENT OF TRANSPORTATION

APPROVED
November 2021 — DATE
/S/ Rodney Taylor — ROADWAY STANDARDS DEVE ENGINEER

FHWA

6
SDD 08F04 - 08

GENERAL NOTES

DO NOT MILL SHOULDER GROOVES THROUGH INTERSECTIONS, MARKED CROSSWALKS, NON-MOTORIZED PATH CROSSINGS, ETC. REFER TO SDD 13A11 SHEETS "d" AND "e".

CENTERLINE GROOVES MAY BE OMITTED IN AREAS WITH HIGH CONCENTRATIONS OF DRIVEWAYS WHEN DIRECTED BY THE ENGINEER.

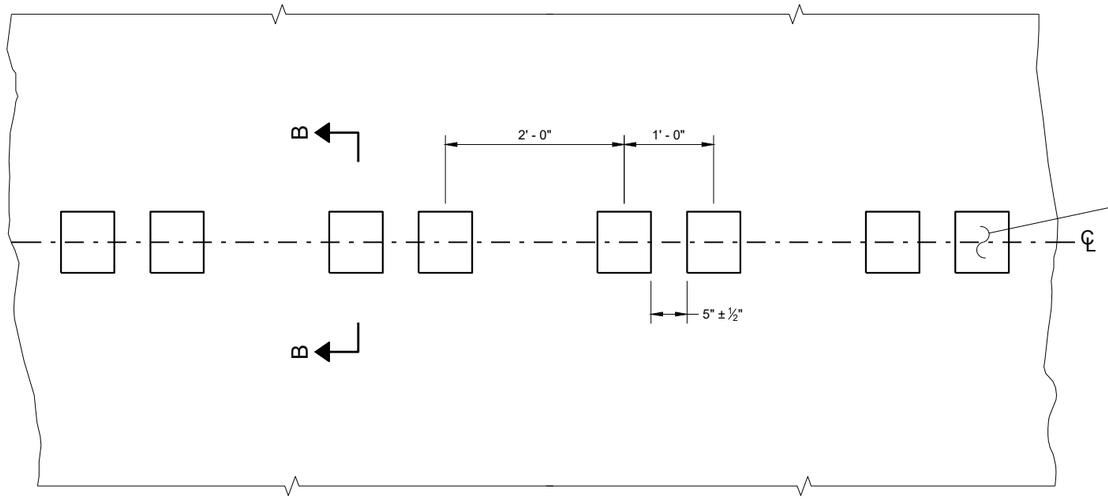

PLAN DETAIL VIEW

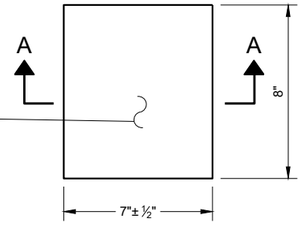

PLAN VIEW
(SINGLE GROOVE)

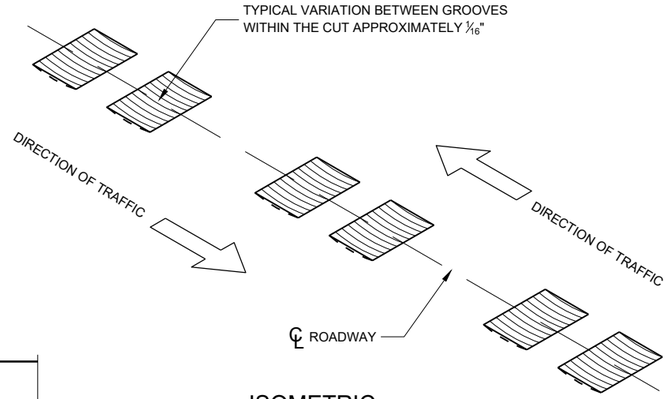

ISOMETRIC

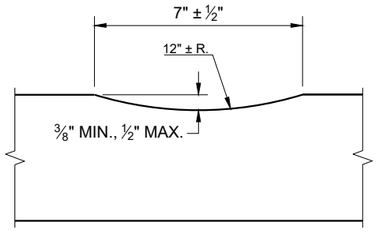

SECTION A - A

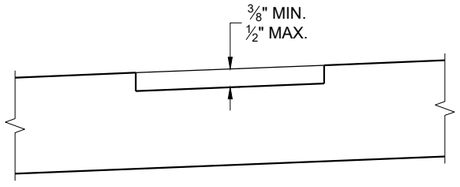

SECTION B - B
SUPERELEVATED ROADWAY

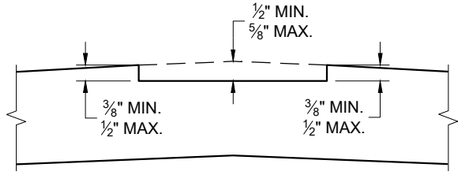

SECTION B - B
CROWNED ROADWAY

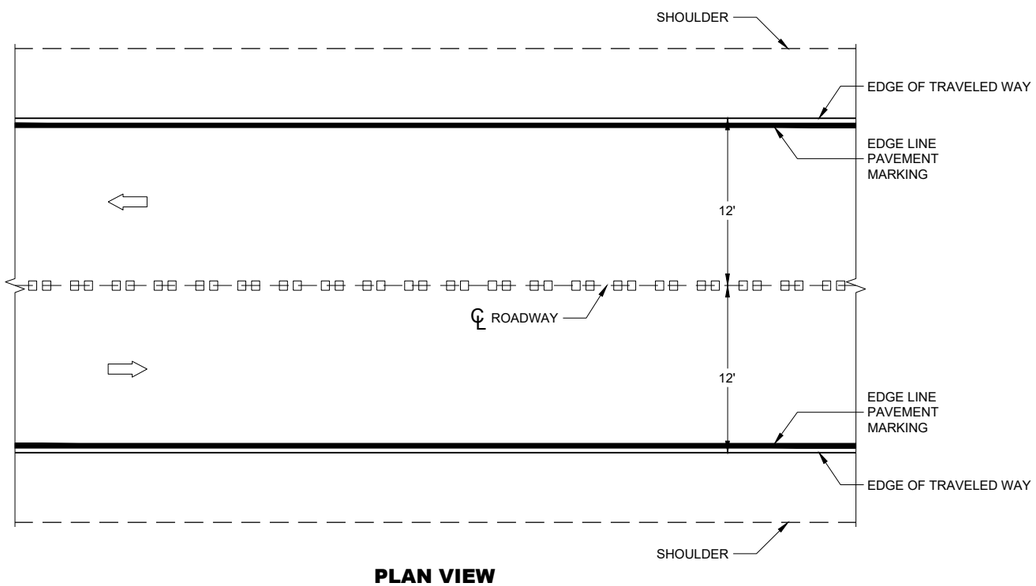

PLAN VIEW

CENTERLINE RUMBLE STRIPS - ASPHALT

CENTERLINE RUMBLE STRIPS - ASPHALT	
STATE OF WISCONSIN DEPARTMENT OF TRANSPORTATION	125

6

SDD 13A11 - 04a

6

SDD 13A11 - 04a

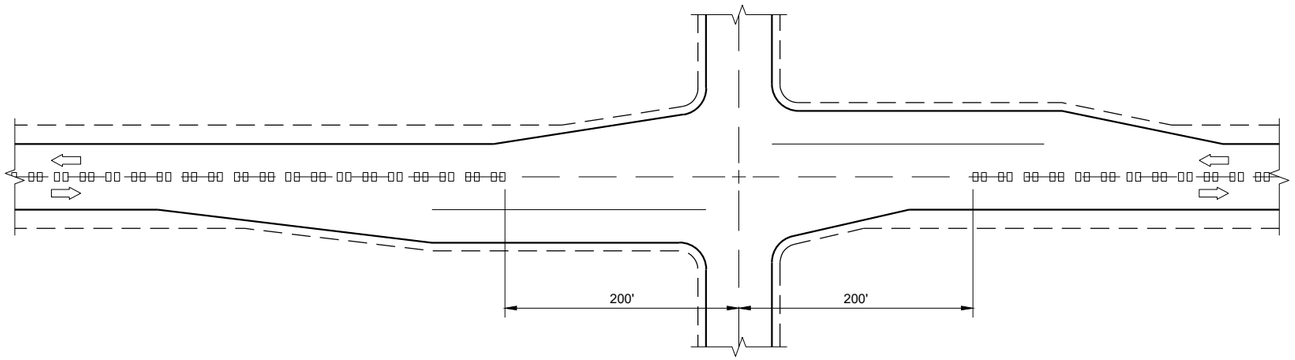

CENTERLINE GROOVES AT INTERSECTIONS

GENERAL NOTES

(1) CENTERLINE GROOVES MAY BE OMITTED IN AREAS WITH HIGH CONCENTRATIONS OF DRIVEWAYS WHEN DIRECTED BY THE ENGINEER.

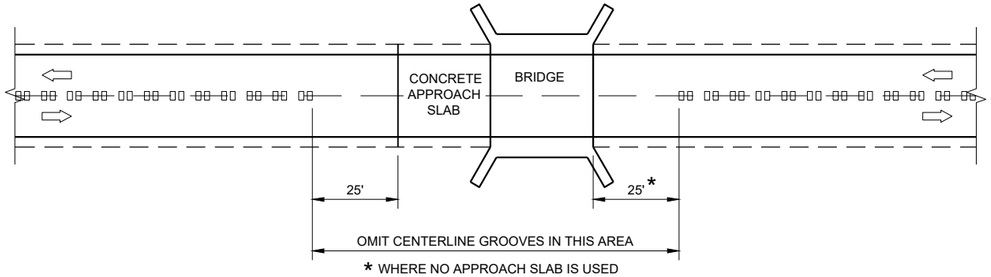

CENTERLINE GROOVES AT BRIDGES

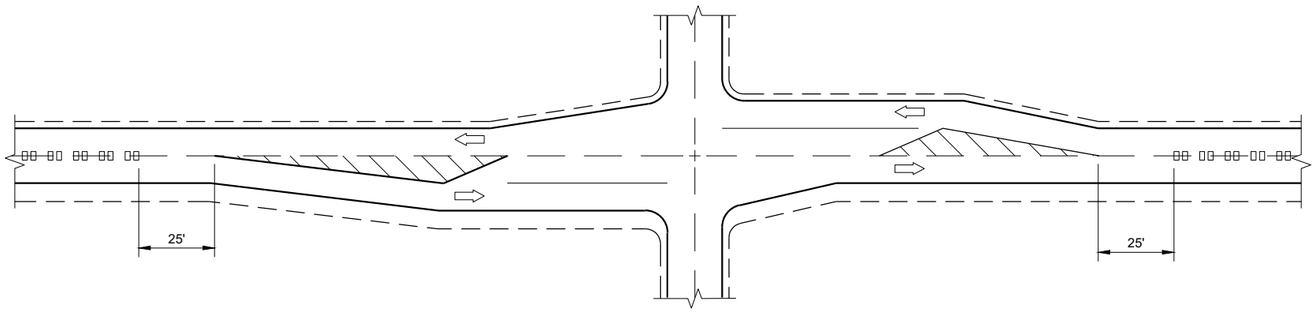

CENTERLINE GROOVES AT INTERSECTIONS (WITH LEFT TURN LANES)

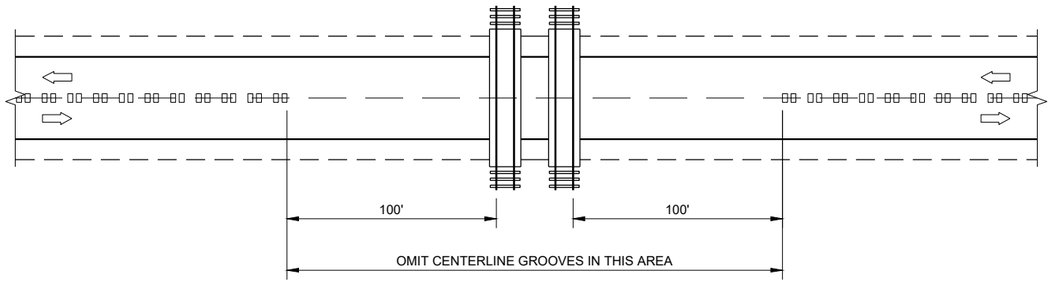

CENTERLINE GROOVES AT RAILROADS

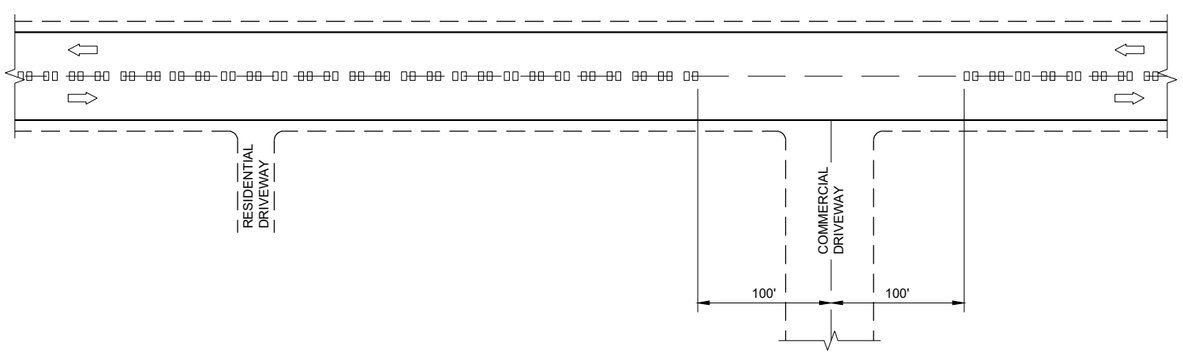

CENTERLINE GROOVES AT DRIVEWAYS (1)

CENTER LINE RUMBLE STRIPS - INTERSECTIONS, DRIVEWAYS, BRIDGES, RAIL ROADS

STATE OF WISCONSIN
DEPARTMENT OF TRANSPORTATION

APPROVED
May 2023 — DATE
/S/ John Jenkins — ROADWAY STANDARDS DEVE ENGINEER

FHWA

6

SDD 13A11 - 04d

SDD 13A11 - 04d

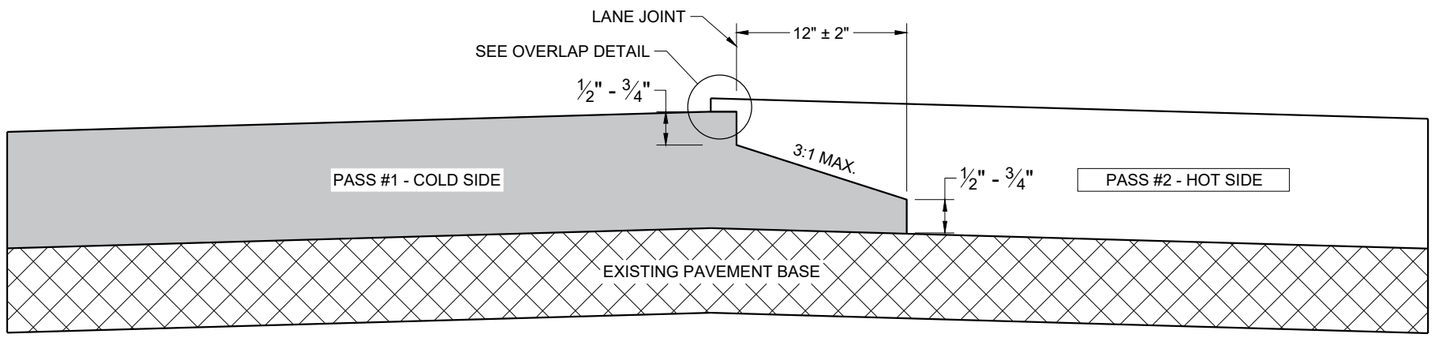

TYPICAL PAVEMENT CROSS SECTION
NOTCHED WEDGE JOINT

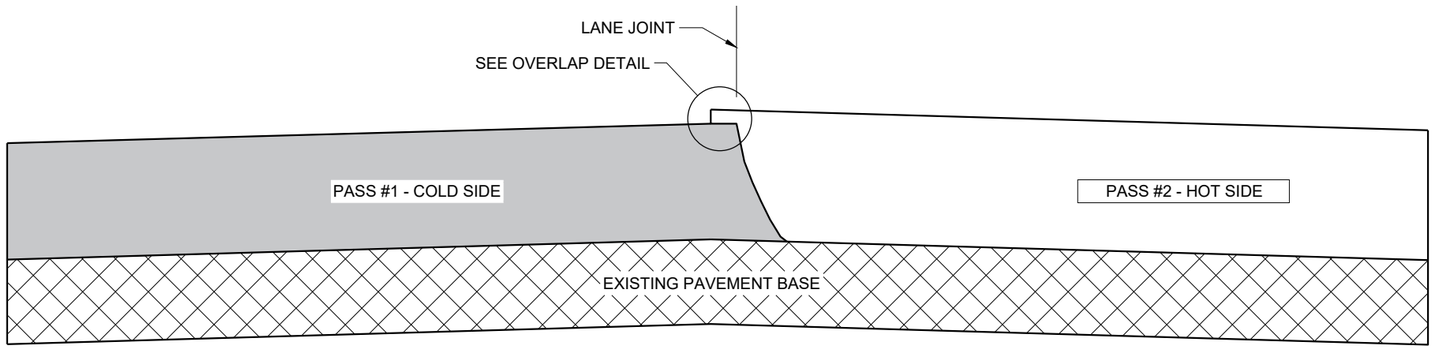

TYPICAL PAVEMENT CROSS SECTION
VERTICAL JOINT

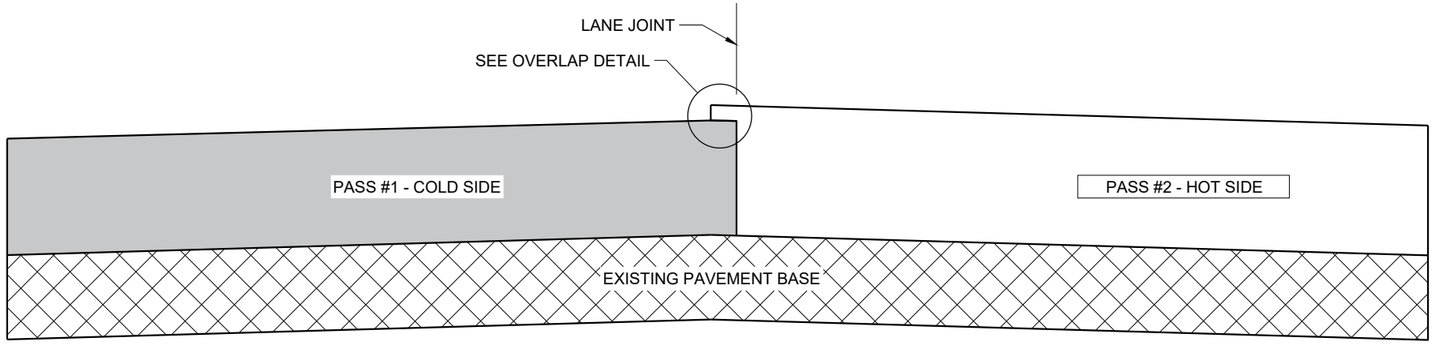

TYPICAL PAVEMENT CROSS SECTION
VERTICAL JOINT (MILLED)

GENERAL NOTES

IN ADDITION TO THE DETAILS PROVIDED IN THIS DRAWING, CONFORM TO STANDARD SPECIFICATION 450.3.2.8 FOR WHEN A NOTCHED WEDGE JOINT IS REQUIRED AND FOR GENERAL JOINT CONSTRUCTION REQUIREMENTS.

FOR ALL LONGITUDINAL JOINTS, ENSURE THE PAVER SCREED OVERLAPS THE PREVIOUSLY PLACED PAVEMENT BY 1" ± 0.5" AND THE HOT SIDE OF THE JOINT REMAINS HIGHER THAN THE COLD SIDE BY APPROXIMATELY 0.1" AFTER FINAL COMPACTION. (IT WILL BE FLUSH WHEN PAVING IN ECHELON.)

ONLY REMOVE THE LONGITUDINAL NOTCHED WEDGE JOINT FOR SMA PAVEMENT OR AS DIRECTED BY THE ENGINEER TO ADDRESS SPECIFIC LENGTHS OF JOINT DAMAGED BY TRAFFIC.

WHEN MILLING BACK OR REMOVING ANY LONGITUDINAL JOINT, LIMIT THE MATERIAL REMOVED TO 2" FROM THE TOP NOTCH OR FROM THE VERTICAL JOINT EDGE ON THE COLD SIDE OF THE JOINT.

USE LONGITUDINAL MILLED JOINT AS PLANS SHOW OR THE AS THE ENGINEER DIRECTS.

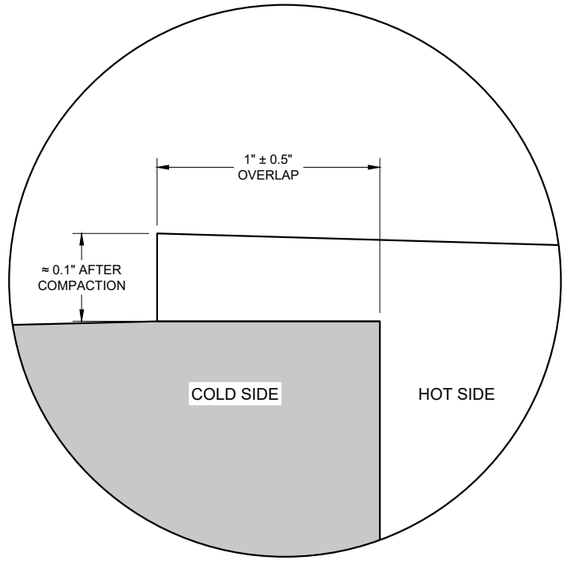

OVERLAP DETAIL (TYPICAL)

6

6

SDD 13C19 - 03

SDD 13C19 - 03

HMA LONGITUDINAL JOINTS

STATE OF WISCONSIN
DEPARTMENT OF TRANSPORTATION

APPROVED
November 2020
DATE

/S/ Steven Hefel
HMA PAVEMENT ENGIN

FHWA

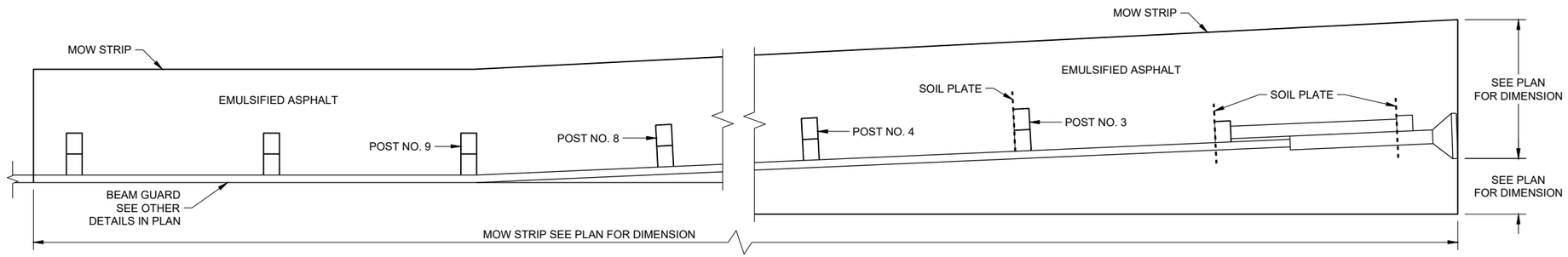

PLAN VIEW

MOW STRIP LAYOUT FOR ENERGY ABSORBING TERMINAL

GENERAL NOTES

ONLY USE STEEL POSTS IN CONCRETE AND ASPHALT MOW STRIPS.

1. CONTROLLED LOW-STRENGTH BACKFILL OR EMULSIFIED ASPHALT.
2. DEPTH OF MOW STRIP:
   ASPHALT - 4"
   CONCRETE - 4"
   EMULSIFIED ASPHALT - 1" OR LESS
3. FOR EMULSIFIED ASPHALT, MOW STRIP STRIP LEAVE OUTS NOT REQUIRED. (TYPICAL FOR ALL POSTS)

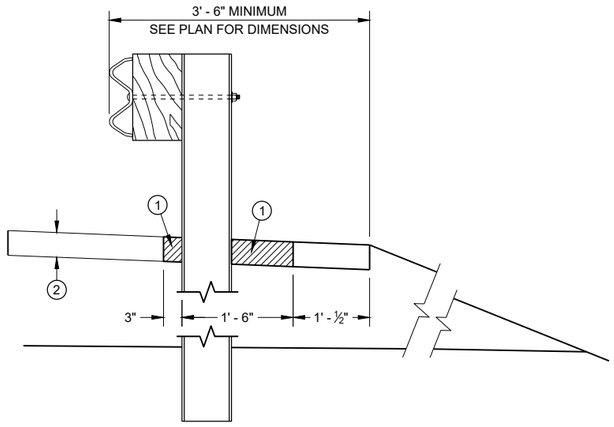

SECTION A - A

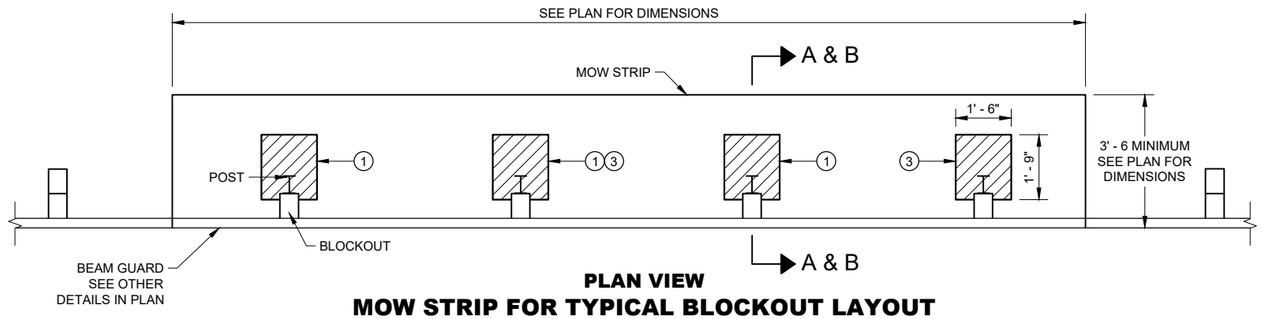

PLAN VIEW

MOW STRIP FOR TYPICAL BLOCKOUT LAYOUT

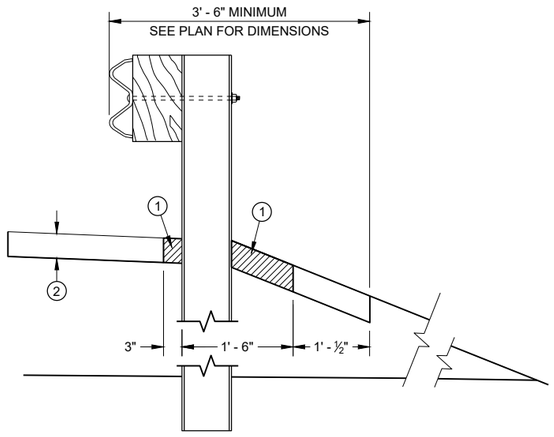

SECTION B - B

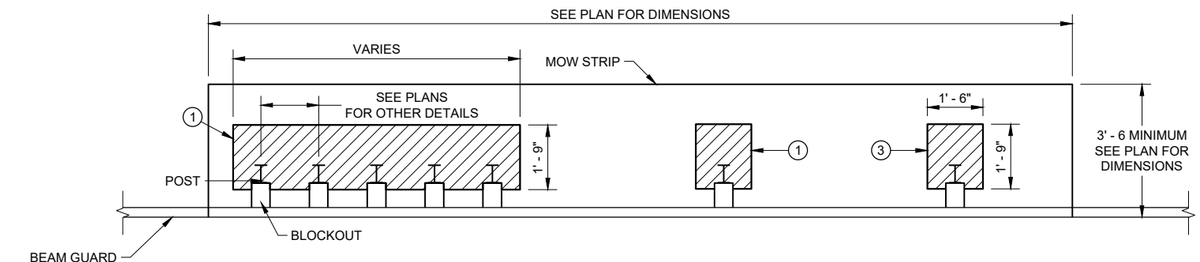

PLAN VIEW

MOW STRIP FOR TIGHT SPACING LAYOUT

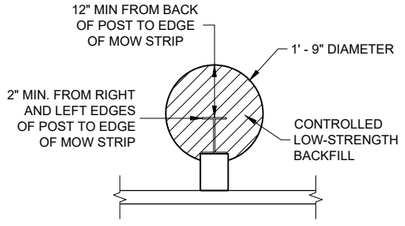

ALTERNATIVE HMA MOW STRIP DESIGN

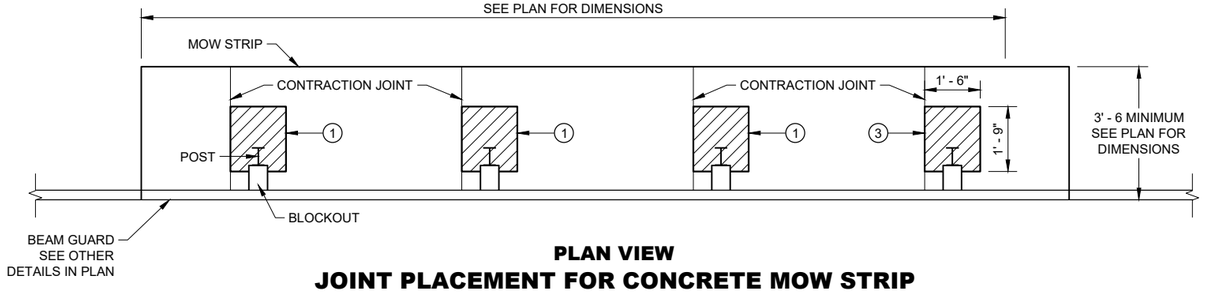

PLAN VIEW

JOINT PLACEMENT FOR CONCRETE MOW STRIP

GUARDRAIL MOW STRIP

STATE OF WISCONSIN
DEPARTMENT OF TRANSPORTATION

6

SDD 14B28 - 04a

LEGEND

CONCRETE, ASPHALT, OR EMULSIFIED ASPHALT MOW STRIP (SEE OTHER DETAILS)

EMULSIFIED ASPHALT MOW STRIP (SEE OTHER DETAILS)

GENERAL NOTES

EXISTING THRIE BEAM BULLNOSES MAY HAVE WOOD POSTS. NEW THRIE BEAM BULLNOSE WILL HAVE STEEL POSTS.

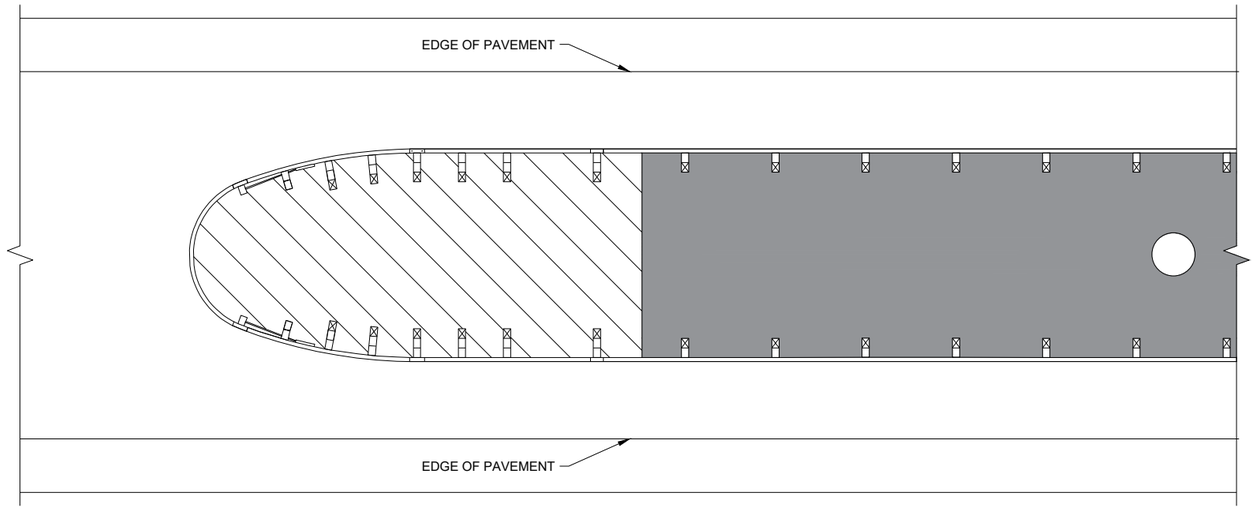

THRIE BEAM BULLNOSE

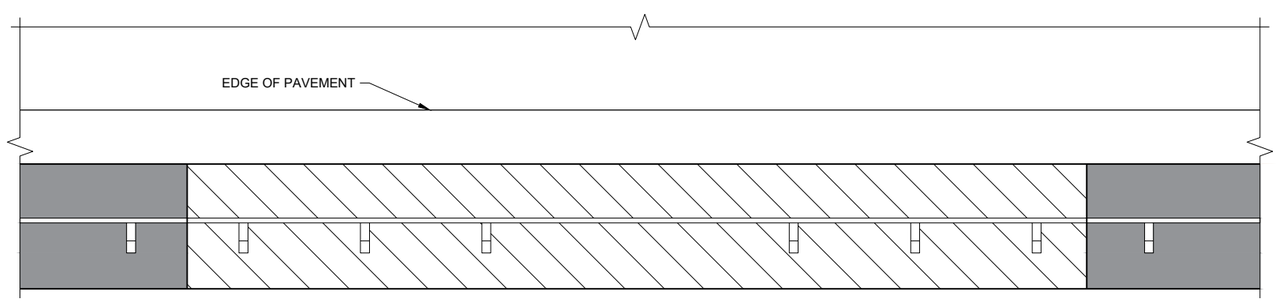

LONG - SPAN

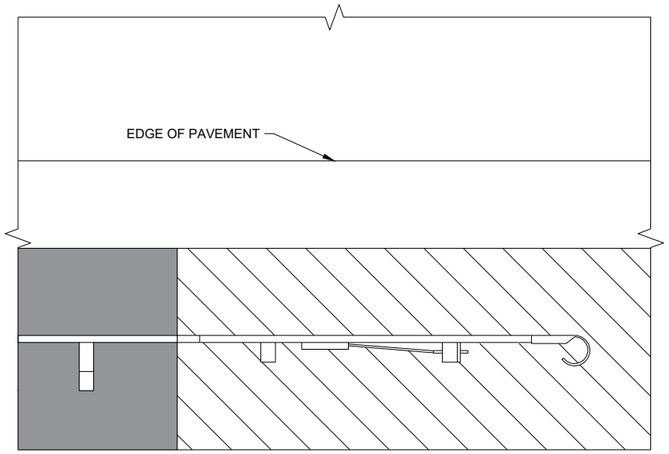

TYPE 2 TERMINAL

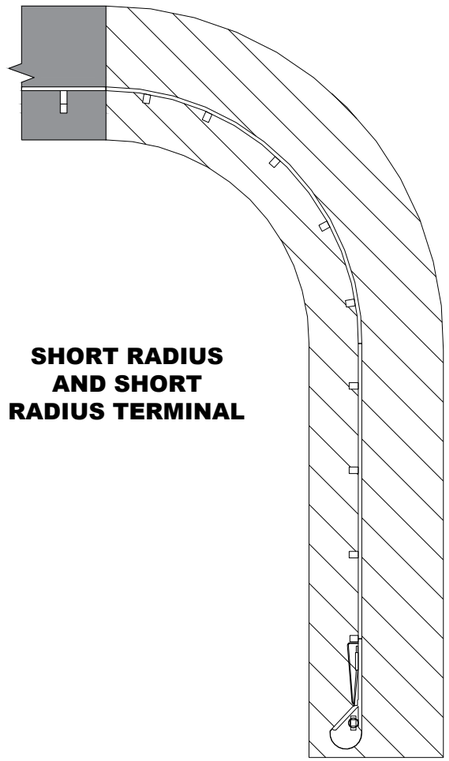

SHORT RADIUS AND SHORT RADIUS TERMINAL

GUARDRAIL MOW STRIP

STATE OF WISCONSIN
DEPARTMENT OF TRANSPORTATION

APPROVED
August 2020
DATE

/S/ Rodney Taylor
ROADWAY STANDARDS DEVE
ENGINEER

FHWA

6

SDD 14B28 - 04b

6

SDD 14B28 - 04b

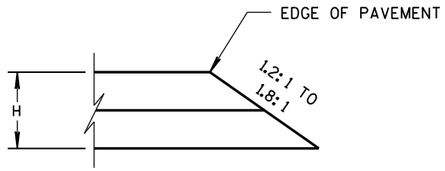

CONSTRUCTED WITH FINAL TWO LAYERS

FOR H 5" OR LESS

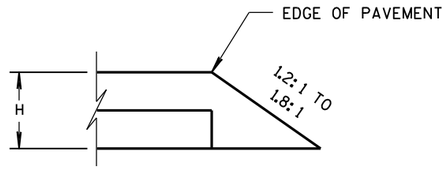

CONSTRUCTED WITH FINAL LAYER

FOR H 5" OR LESS

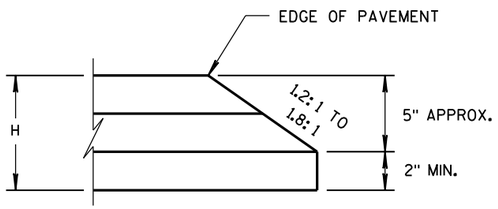

CONSTRUCTED WITH FINAL TWO LAYERS

FOR H GREATER THAN 5"

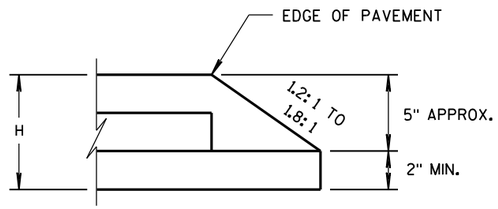

CONSTRUCTED WITH FINAL LAYER

FOR H GREATER THAN 5"

HMA PAVEMENT AND HMA OVERLAYS

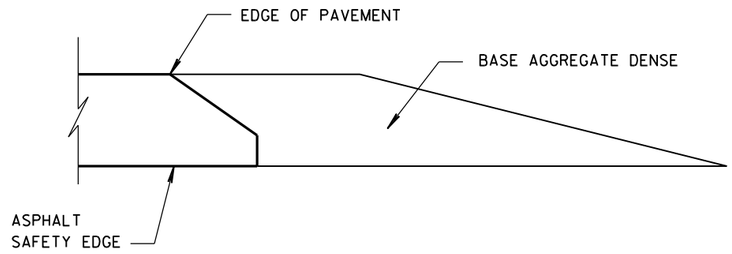

FINISHED SHOULDER AGGREGATE PLACEMENT

6

6

S.D.D. 14 B 29-1

S.D.D. 14 B 29-1

SAFETY EDGE SM

STATE OF WISCONSIN
DEPARTMENT OF TRANSPORTATION

APPROVED

11/30/2012
DATE

/S/ Jerry H. Zoda
ROADWAY STANDARDS DEVELOPMENT ENGINEER

FHWA

(1) WOOD OR STEEL POSTS (w6X9 OR w6X8.5) MAY BE USED. DO NOT INTERMIX WOOD AND STEEL POSTS. INSTALL STEEL POSTS WITH HOLES ON APPROACHING TRAFFIC SIDE.

(2) USE WOOD OR APPROVED PLASTIC BLOCKOUTS. WOOD BLOCKOUTS MAY BE CONSTRUCTED OUT OF TWO OR MORE WOOD BLOCKOUTS. SEE ALTERNATE WOOD BLOCKOUT DETAIL. DIMENSIONS OF APPROVED PLASTIC BLOCKOUTS MAY VARY.

(3) IF ROCK IS ENCOUNTERED DURING EXCAVATION, PROVIDE A HOLE 12 INCHES IN DIAMETER EXTENDING 20 INCHES DEEP INTO THE ROCK. PLACE APPROXIMATELY 2 1/2" INCHES OF GRANULAR MATERIAL IN THE BOTTOM OF THE HOLE. CUT THE POSTS THE TO LENGTH AMD INSTALL. BACKFILL WITH EXCAVATED MATERIAL AND COMPACT. BACKFILL IS TO BE FREE OF LARGE ROCKS.

(4) WHEN THE DISTANCE FROM BACK OF POST TO SHOULDER HINGE POINT IS LESS THAN 2 FEET INSTALL LONGER POST AT HALF POST SPACING (K).

(5) FOR NEW MGS INSTALLATION TOP OF W-BEAM RAIL TOLERANCE IS ±1". FOR EXISTING MGS INSTALLATION TOP OF W-BEAM IS BETWEEN 27 ¾" TO 32".

(6) WHEN USING STEEL POST AND WOOD BLOCKOUTS INSTALL FOUR 16D GALVANIZED NAILS. INSTALL NAILS AT THE BACK CORNERS OF THE BLOCK AND BEND THE NAILS OVER THE FLANGE OF THE STEEL POST.

(7) TOTAL POST LENGTH FOR TYPE K IS 7' - 0".
TOTAL POST LENGTH FOR OTHER MGS TYPES IS 6' - 0".

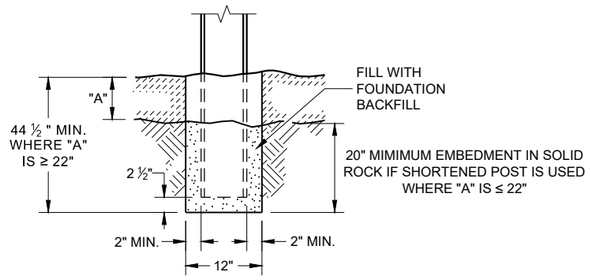

END VIEW
SETTING STEEL OR WOOD POST IN ROCK (3)

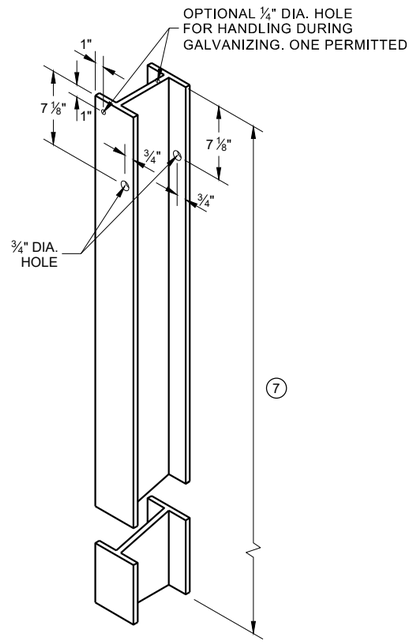

STEEL POST & HOLE PUNCHING DETAIL (W 6 X 9) (1)

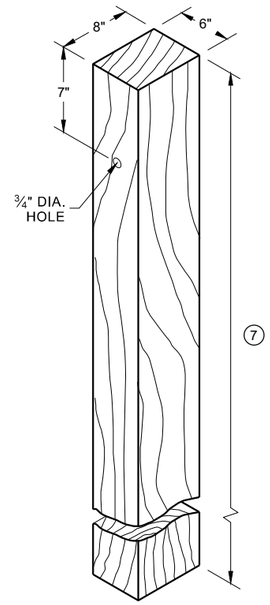

WOOD POST (6" X 8") NOMINAL (1)

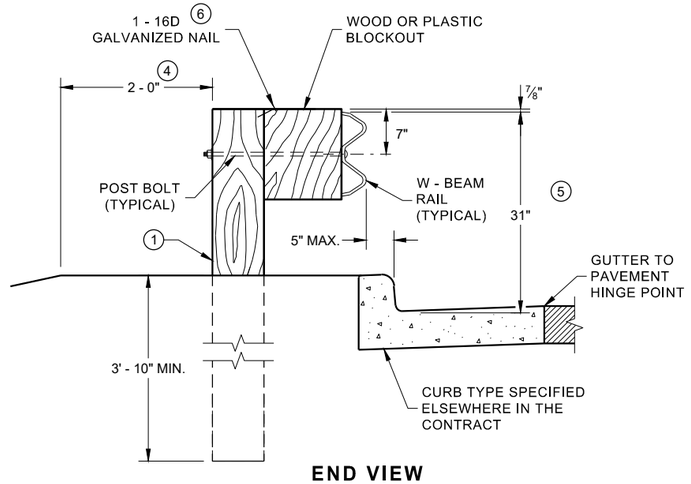

END VIEW
LOCATED ALONG A CURBED ROADWAY

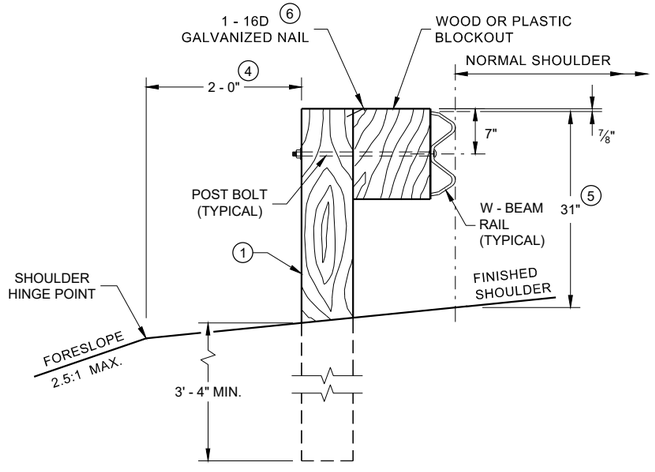

END VIEW
LOCATED ALONG A ROADWAY SHOULDER STANDARD INSTALLATION

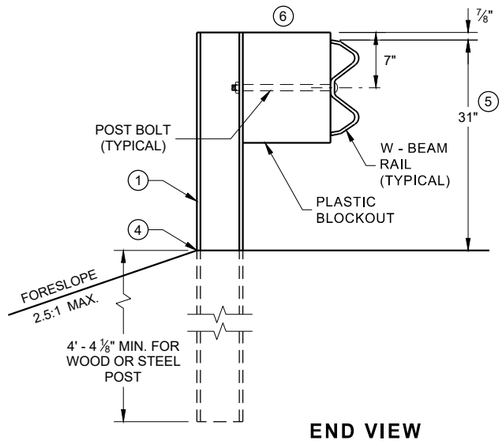

END VIEW
MGS LONGER POST AT HALFPOST SPACING W BEAM (K)

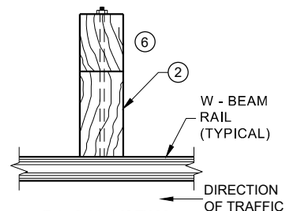

PLAN VIEW
WOOD POST, BLOCKOUT & BEAM

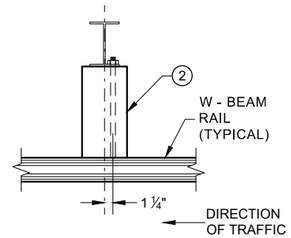

PLAN VIEW
STEEL POST, PLASTIC BLOCKOUT & BEAM

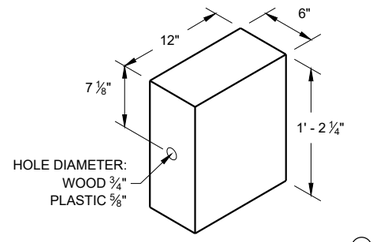

WOOD OR PLASTIC BLOCKOUT (2)

MIDWEST GUARDRAIL SYSTEM (MGS) GUARDRAIL

STATE OF WISCONSIN
DEPARTMENT OF TRANSPORTATION

SDD 14B42 - 07a

6

SDD 14B42 - 07a

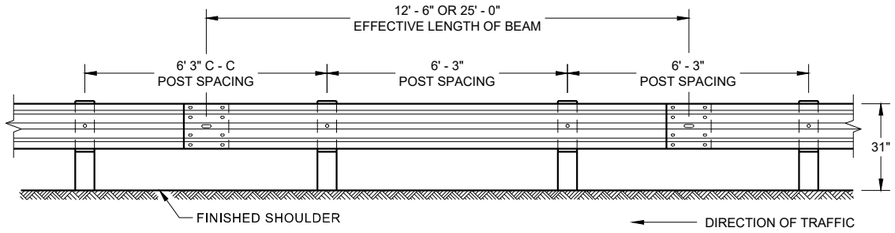

FRONT VIEW
POST SPACING STANDARD INSTALLATION

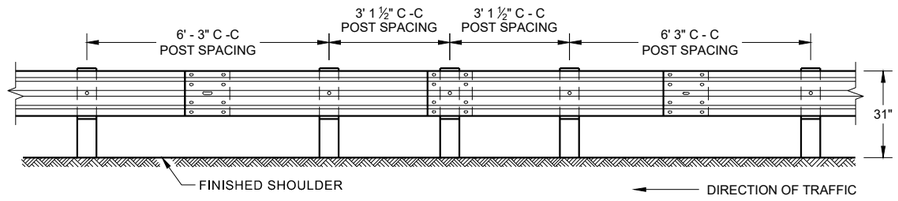

FRONT VIEW
HALF POST SPACING (HS) AND
HALF POST SPACING WITH LONGER POSTS (K)

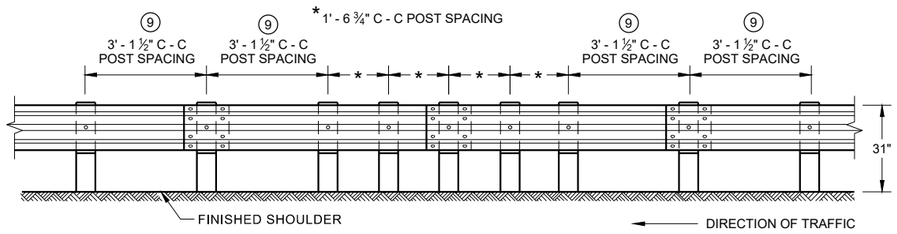

FRONT VIEW
QUARTER POST SPACING (QS)

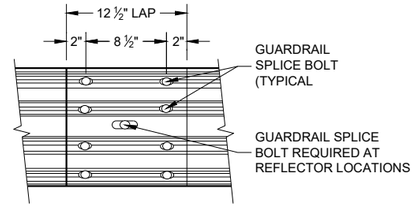

FRONT VIEW
MID-SPAN BEAM SPLICE

GENERAL NOTES

⑧ DO NOT INSTALL REFLECTORS ON THE FIRST 50 FEET OF THE APPROACH END OF THE ENERGY ABSORBING TERMINAL.

⑨ 25 FEET OF HALF POST SPACING IS REQUIRED ON APPROACH AND DEPARTURE ENDS OF QUARTER POST SPACING.

POST BOLTS ARE A ⅝" DIAMETER ASTM A307 GUARDRAIL BOLT. A POST BOLT REQUIRES ⅝" DIAMETER A563A DOUBLE RECESSED (DR) HEAVY HEX NUT AND ⅝" DIAMETER F844 FLAT WASHER. POST BOLTS MAY BE LONGER IF MULTIPLE BLOCKOUTS ARE BEING USED.

GUARD RAIL SPLICE BOLTS ARE A ⅝" DIAMETER ASTM A307 GUARDRAIL HEAD BOLT. A GUARDRAIL SPLICE BOLT REQUIRES ⅝" DIAMETER A563A DOUBLE RECESSED (DR) HEAVY HEX NUT.

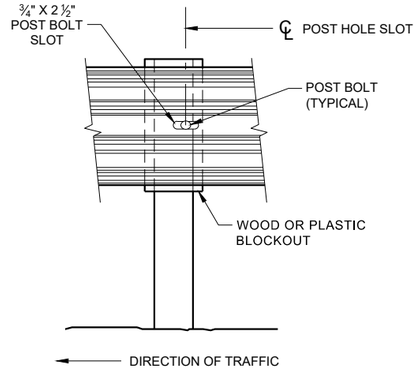

FRONT VIEW AT STEEL POST

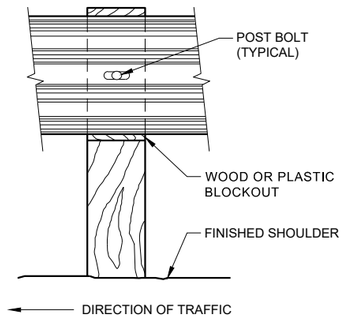

FRONT VIEW AT WOOD POST

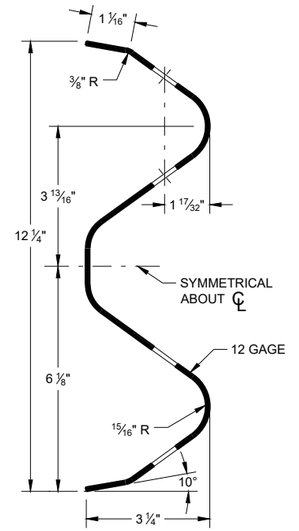

SECTION THRU W-BEAM RAIL

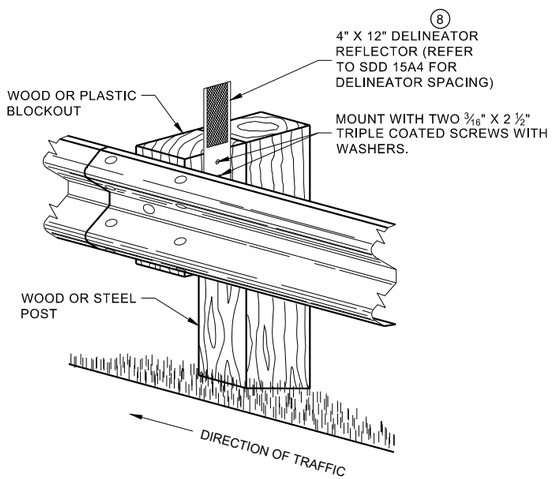

ONE SIDED REFLECTOR DETAIL
AND TYPICAL INSTALLATION

MIDWEST GUARDRAIL SYSTEM
(MGS) GUARDRAIL

STATE OF WISCONSIN
DEPARTMENT OF TRANSPORTATION

6

SDD 14B42 - 07b
SDD 14B42 - 07b

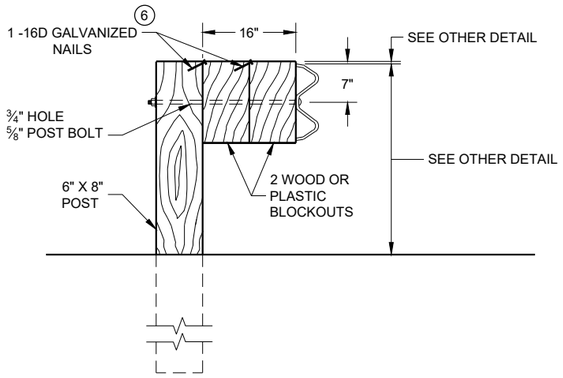

DETAIL FOR 16" BLOCKOUT DEPTH

IT IS ACCEPTABLE TO USE BLOCKOUTS UP TO 16" DEEP TO INCREASE THE POST OFFSET TO AVOID UNDERGROUND OBSTACLES. THERE IS NO LIMIT TO THE NUMBER OF POSTS THAT CAN HAVE ADDITIONAL BLOCKOUTS UP TO 16" DEEP.

NOTE:

1. ALL FILLETS SHALL HAVE A MINIMUM RADIUS OF 3⁄16".
2. IF THE BOLT EXTENDS MORE THAN ¼" FROM THE NUT THE BOLT SHOULD BE TRIMMED BACK.

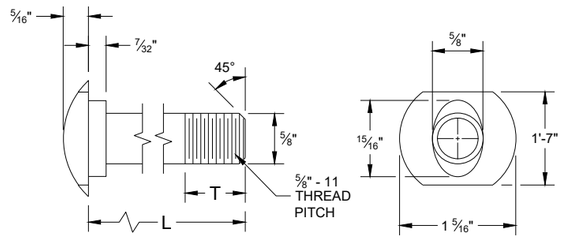

POST BOLT TABLE

L	T (MIN.)
1 ¼"	1 ⅛"
2"	1 ¾"
10"	4"
14"	4 1⁄16"
18"	4"
21"	4 1⁄16"
25"	4"

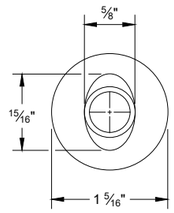

ALTERNATE BOLT HEAD

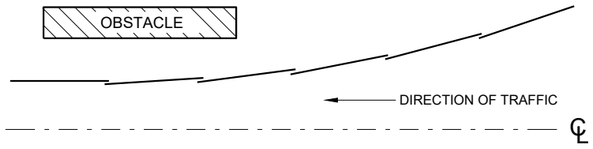

PLAN VIEW
BEAM LAPPING DETAIL

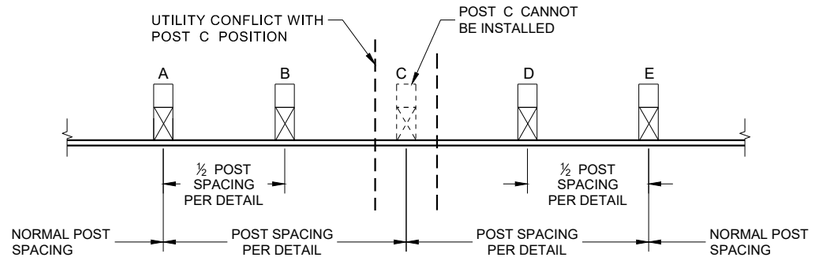

POST DRIVING FOR CONTINUOUS UNDERGROUND OBSTRUCTION

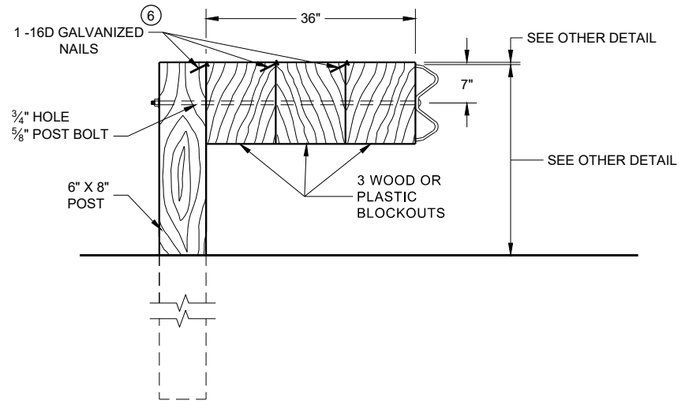

DETAIL FOR 36" BLOCKOUT DEPTH

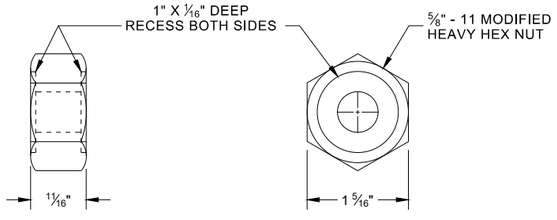

POST BOLT, SPLICE BOLT AND RECESS NUT

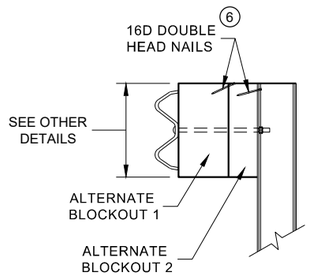

SIDE VIEW

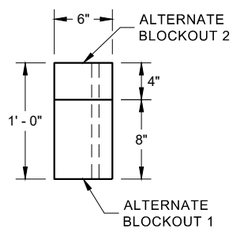

PLAN VIEW

ALTERNATE WOOD BLOCKOUT DETAIL

NOTES: UNDER SPECIAL CIRCUMSTANCES, SUCH AS AVOIDING OBSTACLES THAT ARE NOT RELOCATED, IT IS ACCEPTABLE TO INSTALL ADDITIONAL BLOCKOUTS TO OBTAIN UP TO 36" DEPTH FOR ONE OR TWO POSTS IN A SECTION OF GUARDRAIL.

DO NOT USE 16" OR 36" BLOCKOUTS IF IT CAUSES THE POST TO BE DRIVEN BEYOND SHOULDER HINGE POINT OR CAUSES A FIXED OBJECT TO BE WITHIN THE DEFLECTION DISTANCE OF THE BARRIER.

(6) WHEN USING STEEL POST AD WOOD BLOCKOUTS, INSTALL FOUR 16D GALVANIZED NAILS. INSTALL NAILS AT THE BACK CORNERS OF THE BLOCK AND BEND THE NAILS OVER THE FLANGE OF THE STEEL POST.

6

MIDWEST GUARDRAIL SYSTEM (MGS) GUARDRAIL

SDD 14B42 - 07c

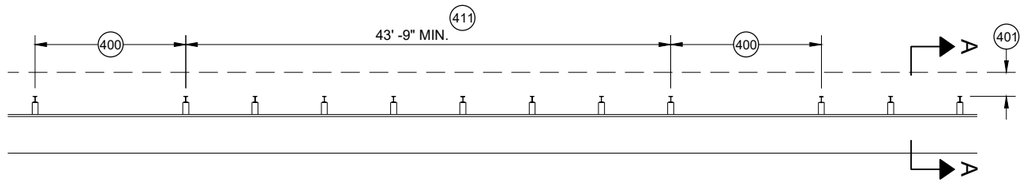

MISSING POST IN MGS GUARDRAIL

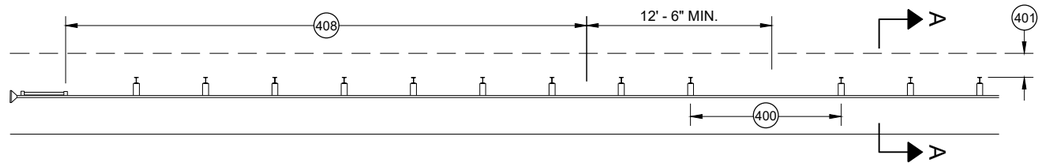

MISSING POST IN MGS GUARDRAIL NEAR EAT

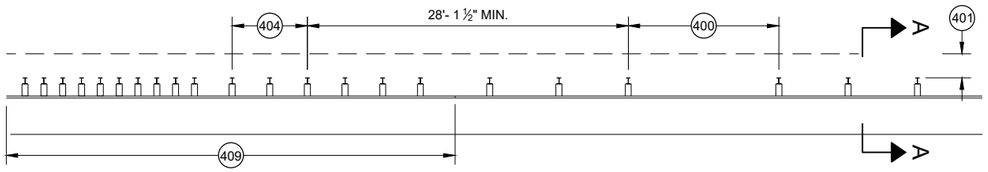

MISSING POST IN MGS GUARDRAIL NEAR AN APPROACH TRANSITION

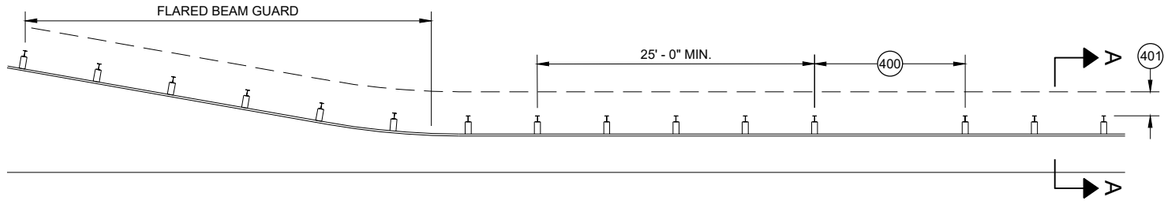

MISSING POST IN MGS GUARDRAIL NEAR FLARED BEAM GUARD

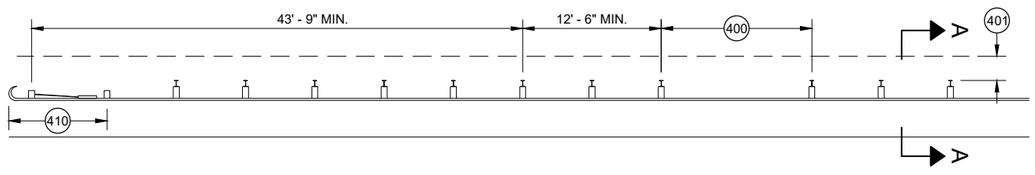

MISSING POST IN MGS GUARDRAIL NEAR A TYPE 2 END TERMINAL

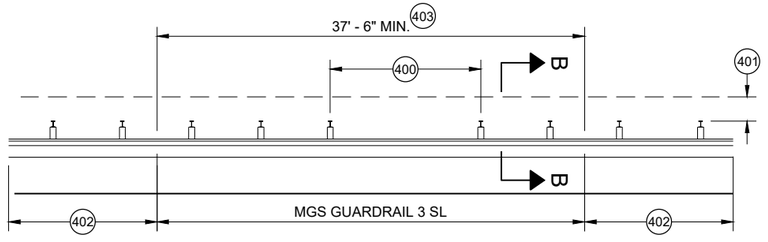

MISSING POST IN SHORT SPAN MGS GUARDRAIL NEAR CURB (SL) 407

(400) MAX SPAN 12' - 6"
(401) 2' MIN.
(402) MGS GUARDRAIL 3
(403) NESTING BEAM GUARD
(404) ASYMMETRIC TRANSITION
(405) SOIL WELL DRAINED AND COMPACTED
(406) SEE OTHER DRAWINGS IN THIS SDD
(407) SEE OTHER DRAWINGS FOR MIN. SPACING BETWEEN SPANS
(408) SEE SDD 14B44
(409) SEE SDD 14B45
(410) SEE SDD 14B47
(411) MINIMUM DISTANCE BETWEEN MISSING POST SPANS.

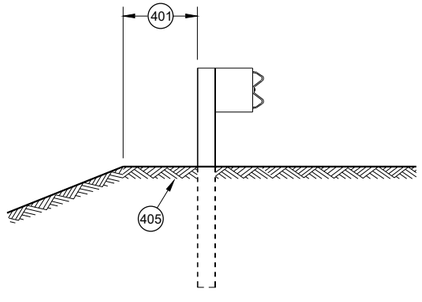

SECTION A - A 406

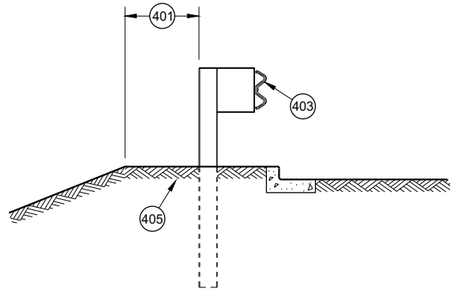

SECTION B - B 406

MIDWEST GUARDRAIL SYSTEM (MGS) GUARDRAIL

STATE OF WISCONSIN
DEPARTMENT OF TRANSPORTATION

APPROVED
May 2021
DATE
/S/ Rodney Taylor
ROADWAY STANDARDS DEVE
UNIT SUPERVISOR

FHWA

6

SDD 14B42 - 07d

GENERAL NOTES

POSTS 1 THROUGH 3 ARE CRT POSTS.
ALL OTHER POSTS SHALL BE WOOD OR STEEL.

SEE SDD 14 B 42 FOR MORE DETAILS.

(A) FLARE FOR MGS EAT SHOWN. IF INSTALLING MGS NO FLARE NEEDED.

(B) VALUES SHOWN ON DRAWING REPRESENT THE MAXIMUM LENGTH. SHORTER DIMENSIONS ARE POSSIBLE. SEE OTHER SECTION OF PLAN FOR MORE INFORMATION.

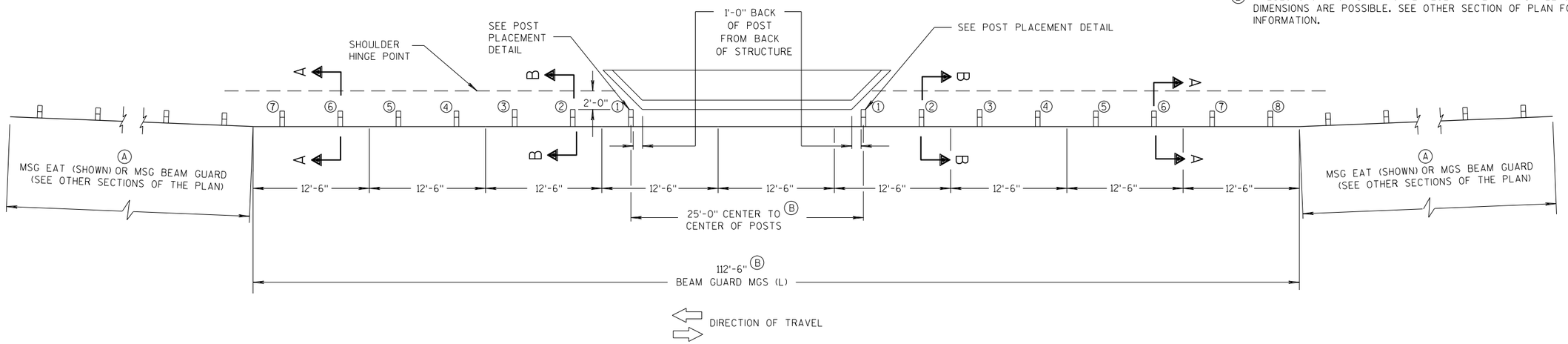

PLAN VIEW

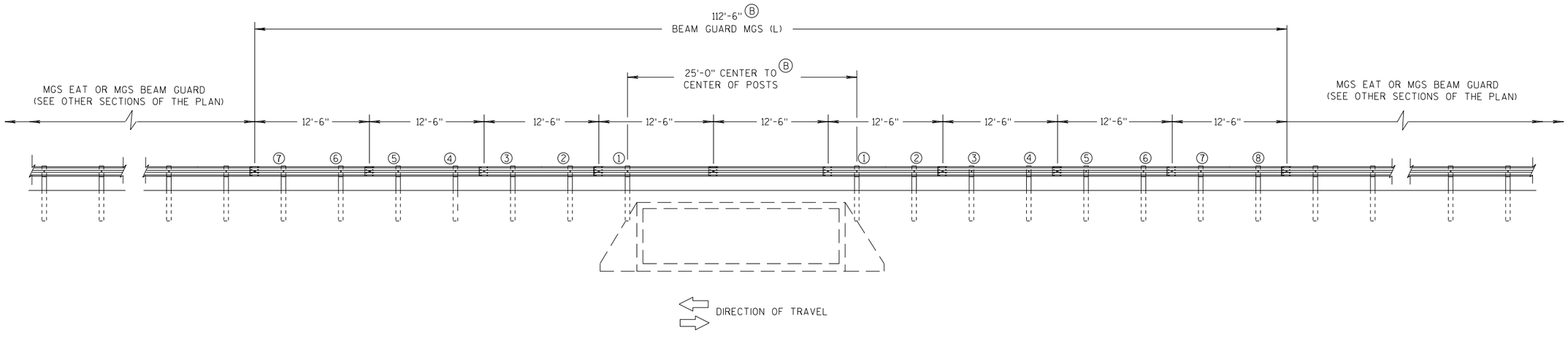

ELEVATION VIEW

MIDWEST GUARDRAIL SYSTEM LONG SPAN MGS (L) TWO-WAY TRAFFIC

MIDWEST GUARDRAIL SYSTEM LONG SPAN MGS (L)

STATE OF WISCONSIN
DEPARTMENT OF TRANSPORTATION

6

S.D.D. 14 B 43-4a

GENERAL NOTES

POSTS 1 THROUGH 3 ARE CRT POSTS.
ALL OTHER POSTS SHALL BE WOOD OR STEEL.

SEE SDD 14 B 42 FOR MORE DETAILS.

(A) FLARE FOR MGS EAT SHOWN. IF INSTALLING MGS NO FLARE NEEDED.

(B) VALUES SHOWN ON DRAWING REPRESENT THE MAXIMUM LENGTH. SHORTER DIMENSIONS ARE POSSIBLE. SEE OTHER SECTION OF PLAN FOR MORE INFORMATION.

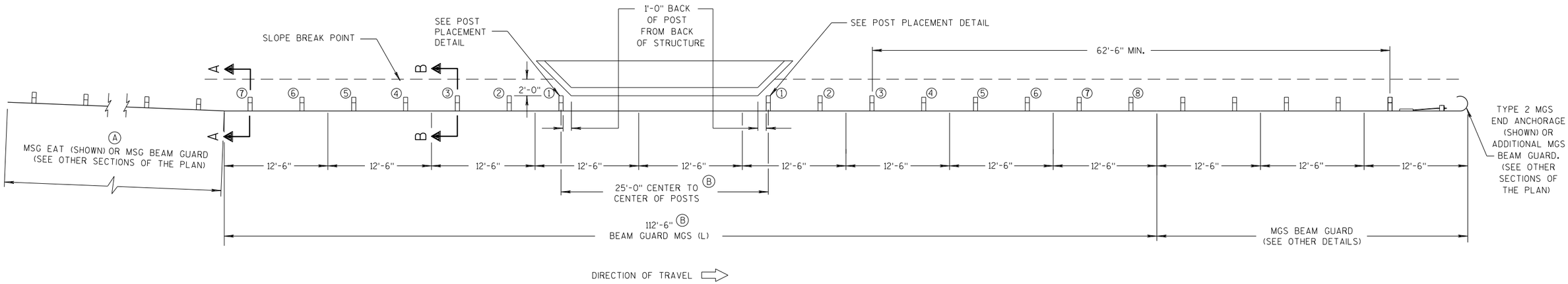

PLAN VIEW

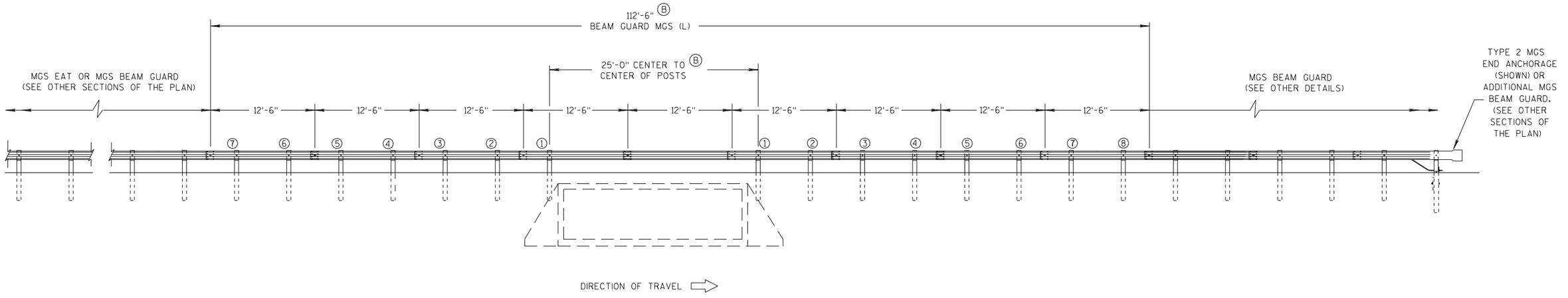

ELEVATION VIEW

MIDWEST GUARDRAIL SYSTEM LONG SPAN MGS (L) ONE-WAY TRAFFIC

MIDWEST GUARDRAIL SYSTEM LONG SPAN MGS (L)	
STATE OF WISCONSIN DEPARTMENT OF TRANSPORTATION	136

6

S.D.D. 14 B 43-4b

6

S.D.D. 14 B 43-4b

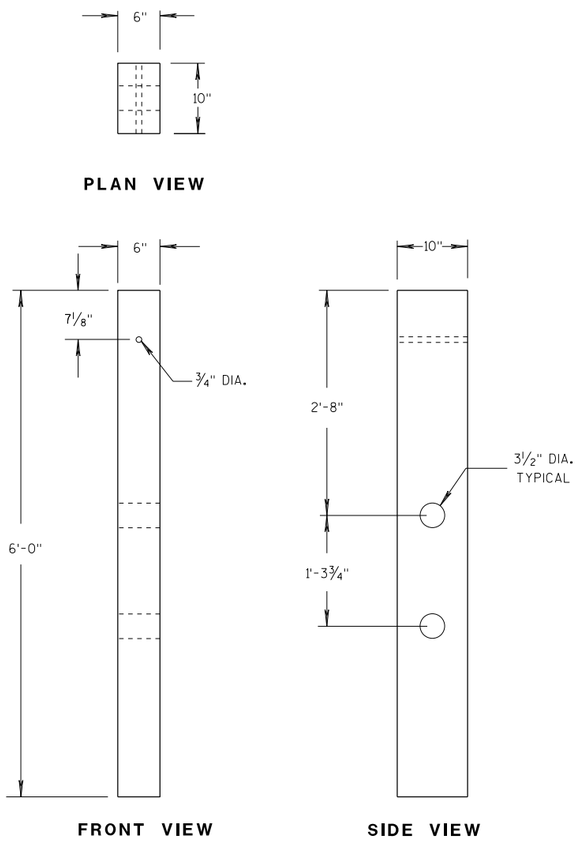

CRT WOOD POST

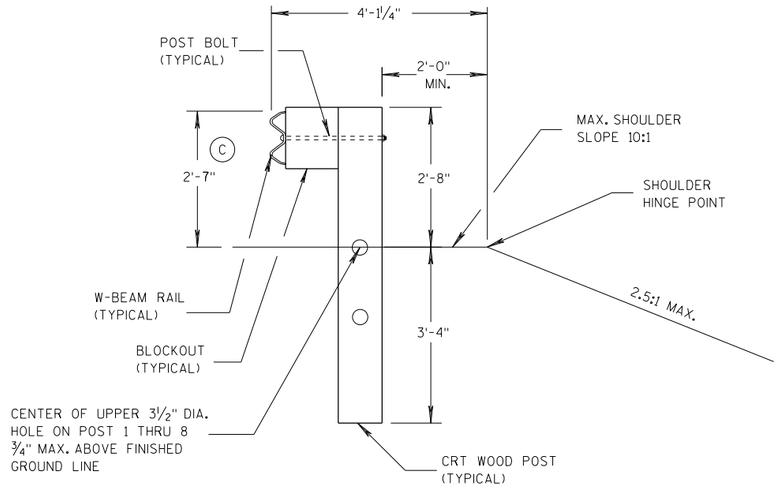

SECTION B-B

POSTS NO. 1-3

SEE OTHER DETAILS

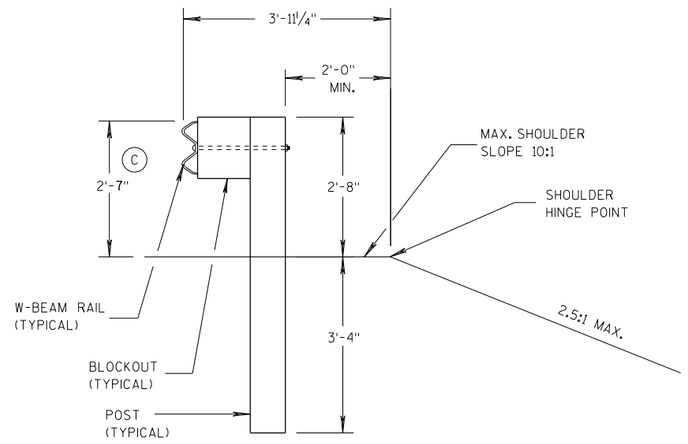

SECTION A-A

POSTS NO. 4-8

SEE OTHER DETAILS

GENERAL NOTES

(C) TOLERANCE FOR TOP OF W-BEAM RAIL IS ± 1".

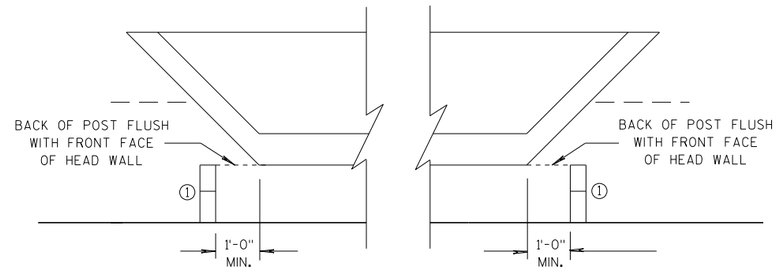

POST PLACEMENT DETAIL

MIDWEST GUARDRAIL SYSTEM
LONG SPAN MGS (L)

STATE OF WISCONSIN
DEPARTMENT OF TRANSPORTATION

APPROVED
07/2018
DATE
FHWA

/S/ Rodney Taylor
ROADWAY STANDARDS D 137 NT
ENGINEER

6

S.D.D. 14 B 43-4c

6

S.D.D. 14 B 43-4c

GENERAL NOTES

(A) THE SLOPE IN THE AREA BOUNDED BY THE GRADELINE, THE HINGE POINT LINE (HPL) AND THE CLEAR ZONE LIMITS (CZL) SHALL BE 4:1 OR FLATTER.

(B) AFTER FINAL ASSEMBLY, RECHECK CABLE TO BE SURE IT IS TAUT AND HAS NOT RELAXED

(C) DIFFERENT MANUFACTURERS REQUIRE DIFFERENT PERFORATED W - BEAM RAIL END PANELS. SEE MANUFACTURER'S INFORMATION.

(D) ATTACH ALUMINUM SHEET TO E.A.T. HEAD USING 4 STAINLESS STEEL SELF - TAPPING SCREWS. ONE SCREW PER CORNER.

(E) HARDWARE MAY VARY BETWEEN MANUFACTURER. SEE MANUFACTURER'S DRAWING FOR INFORMATION.

DIMENSIONS MAY VARY, MANUFACTURER'S INFORMATION.

SEE SDD 14B42 FOR MORE INFORMATION.

* DO NOT ATTACH BLOCKOUTS TO POST 1 AND 2.

DO NOT INSTALL REFLECTORS ON THE FIRST 50 FEET OF THE APPROACH END OF THE ENERGY ABSORBING TERMINAL.

SEE MANUFACTURER'S DRAWING FOR SPLICE LOCATION, HARDWARE DIMENSIONS AND INSTALLATION INSTRUCTIONS.

THE CENTER OF THE UPPER 3 ½" DIAMETER HOLE ON POST NUMBER 3 THROUGH POST 9 IS TO BE FLUSH WITH THE GROUND LINE UP TO A MAXIMUM OF 2" ABOVE GROUND LINE. WOOD BLOCKS ON POSTS NUMBERED 3 THROUGH 9 MAY BE ADJUSTED UP TO 3" ABOVE THE TOP OF POST.

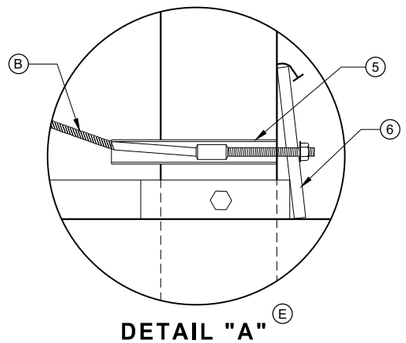

DETAIL "A" (E)

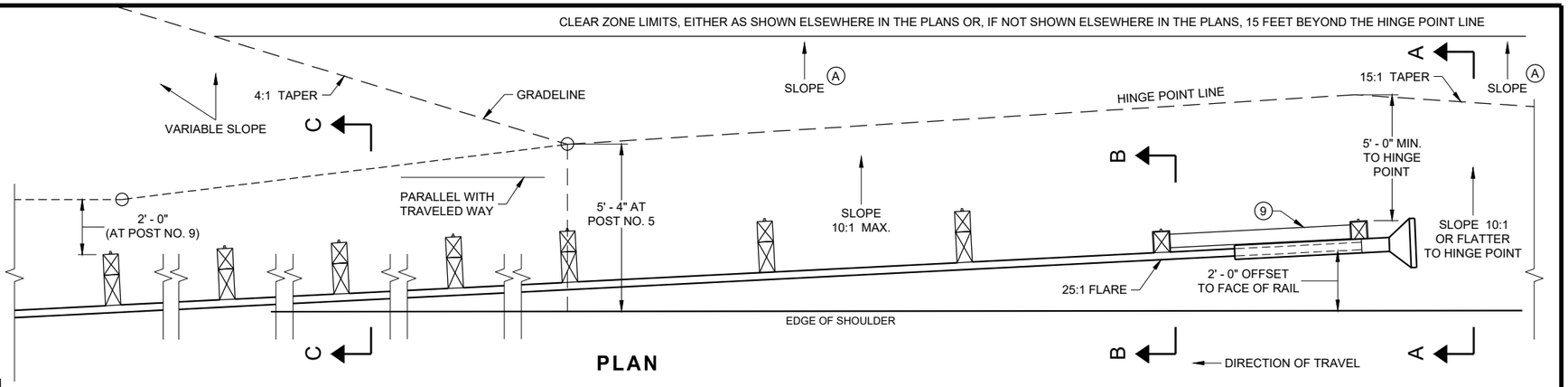

PLAN

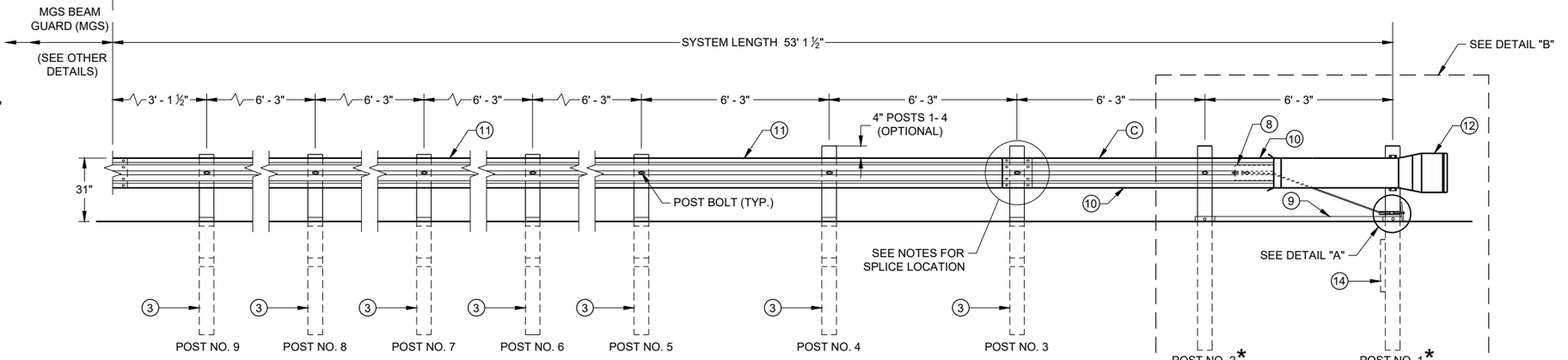

ELEVATION

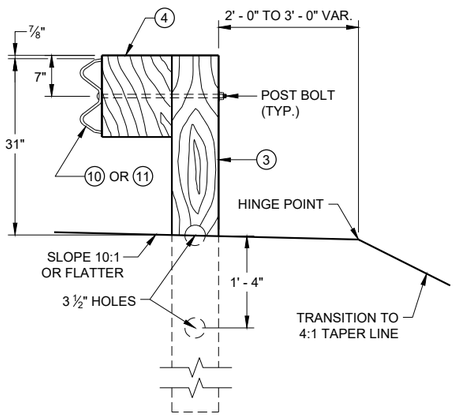

SECTION C - C
TYPICAL AT POST NOS. 3 - 9

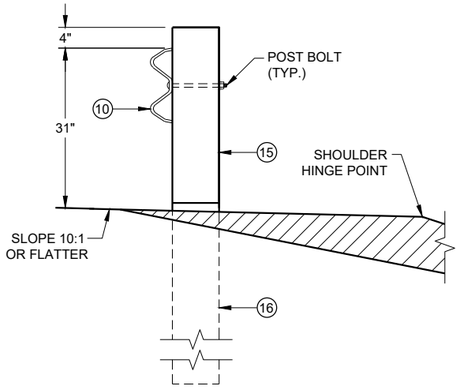

SECTION B - B
TYPICAL AT POST NO. 2*

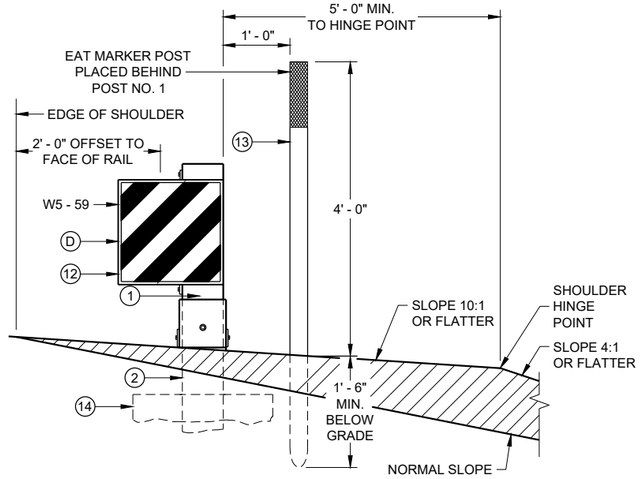

SECTION A - A
TYPICAL AT POST NO. 1*

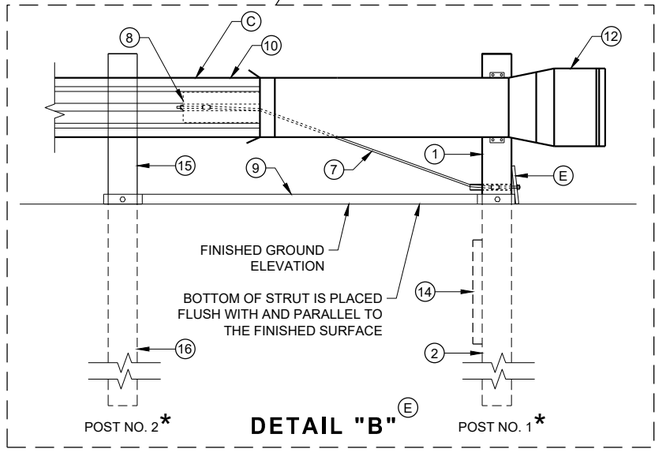

DETAIL "B" (E)

MIDWEST GUARDRAIL SYSTEM
ENERGY ABSORBING TERMINAL (MGS)

STATE OF WISCONSIN
DEPARTMENT OF TRANSPORTATION

SDD 14B44 - 04a

SDD 14B44 - 04a

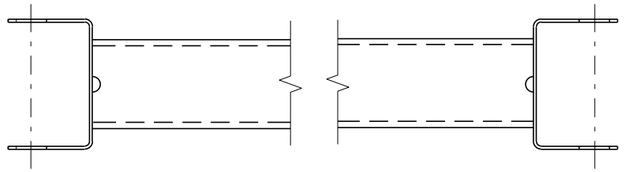

GENERIC GROUND STRUT ⑨ Ⓔ

BILL OF MATERIALS

PART NO.	DESCRIPTION MATERIALS PROVIDED BY MGS EAT MANUFACTURER. SEE MANUGACTURER'S DETAILS FOR MORE INFORMATION.
①	UPPER POST NO. 1 6" X 6" TUBE
②	LOWER POST NO. 1
③	WOOD CRT
④	WOOD BLOCKOUT
⑤	PIPE SLEEVE
⑥	BEARING PLATE
⑦	BCT CABLE ASSEMBLY
⑧	ANCHOR CABLE BOX
⑨	GROUND STRUT
⑩	PERFORATED W-BEAM RAIL END PANEL, 12'-6" LONG.
⑪	STANDARD W-BEAM RAIL. MULTIPLE SECTIONS REQUIRED. SECTIONS VARY IN LENGTH.
⑫	IMPACT HEAD
⑬	EAT MARKER POST - YELLOW (SEE APPROVED PRODUCTS LIST)
⑭	SOIL PLATE
⑮	UPPER POST NO. 2
⑯	LOWER POST NO. 2

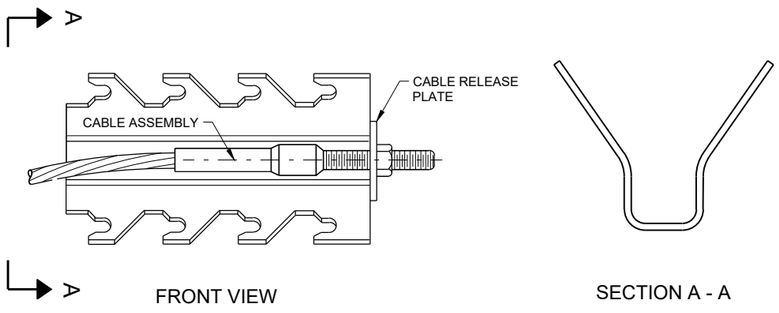

GENERIC ANCHOR CABLE BOX ⑧ Ⓔ

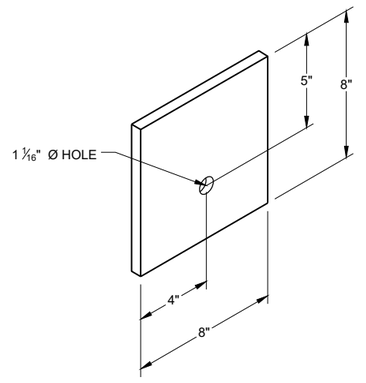

BEARING PLATE ⑥ Ⓔ

6

6

SDD 14B44 - 04b

SDD 14B44 - 04b

MIDWEST GUARDRAIL SYSTEM
ENERGY ABSORBING TERMINAL
(MGS)

STATE OF WISCONSIN
DEPARTMENT OF TRANSPORTATION

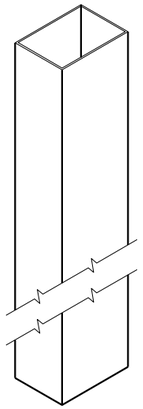

UPPER POST NO. 1 (1) (E)

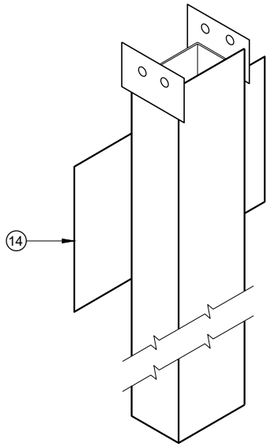

LOWER POST NO. 1 (2) (E)

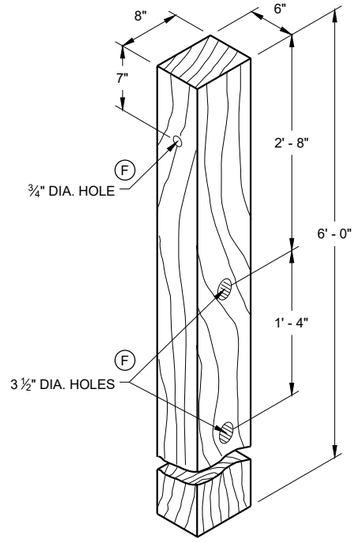

WOOD CRT POST (3) (E)
POSTS NUMBER 3-9

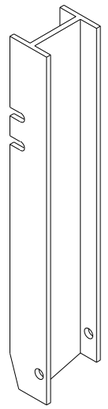

UPPER POST NO. 2 (15) (E)

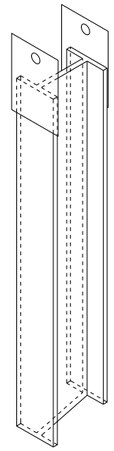

LOWER POST NO. 2 (16) (E)

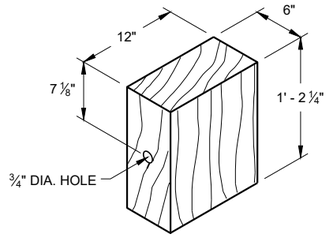

WOOD BLOCKOUT (4)
REQ'D. AT ALL POSTS EXCEPT POST NO'S 1 & 2

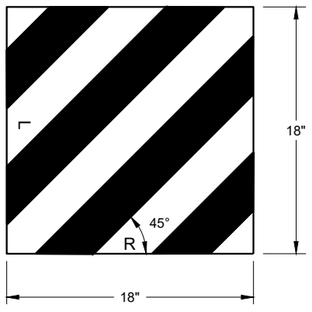

W5 - 59

REFLECTIVE SHEETING DETAIL (E)

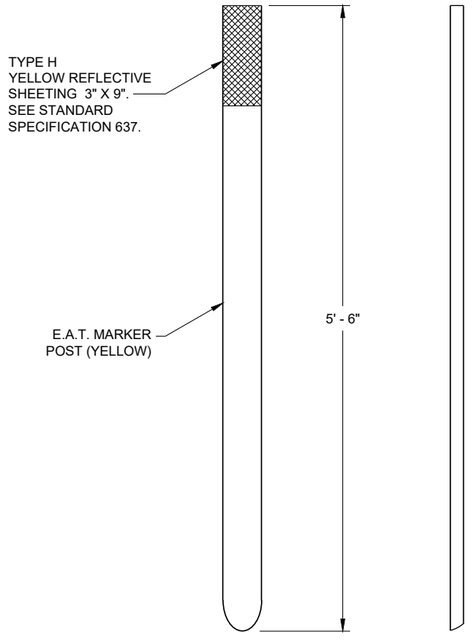

FRONT VIEW SIDE VIEW

E.A.T. MARKER POST (13)

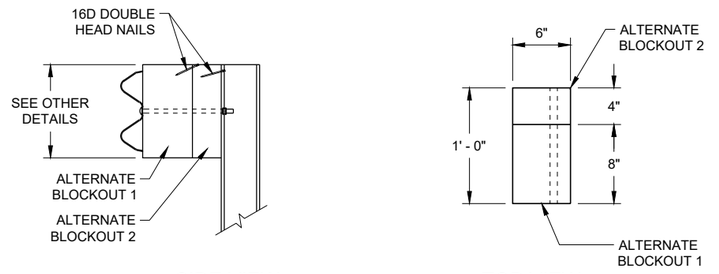

SIDE VIEW TOP VIEW

ALTERNATE WOOD BLOCKOUT DETAIL

MIDWEST GUARDRAIL SYSTEM ENERGY ABSORBING TERMINAL (MGS)

STATE OF WISCONSIN
DEPARTMENT OF TRANSPORTATION

APPROVED
7/2018 — DATE
/S/ Rodney Taylor — ROADWAY STANDARDS DEVE UNIT SUPERVISOR

FHWA

6

SDD 14B44 - 04c

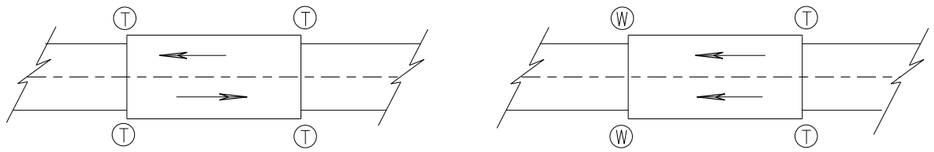

TWO WAY TRAFFIC

ONE WAY TRAFFIC

(T) THRIE BEAM CONNECTION

(W) W-BEAM CONNECTION WHEN REQUIRED

TYPICAL LOCATIONS OF THRIE BEAM AND W-BEAM CONNECTIONS TO BRIDGE

GENERAL NOTES

IF ROCK IS ENCOUNTERED, REMOVE ROCK TO FULL DEPTH OF POST PLUS 2½", AND 12" DIAMETER AROUND POST. SEE 14B42 FOR MORE DETAILS.

TRANSITION USES STEEL POSTS ONLY.

SEE STANDARD DETAIL DRAWING 14 B 42 FOR MORE INFORMATION.

POST 2 THROUGH 17 USES STEEL POST ONLY

(1) BRIDGE RAILING TYPE "W" DOES NOT REQUIRE A TERMINAL CONNECTOR.

(2) OPTIONAL CURB AND GUTTER OR DRAINAGE FEATURE SEE PLAN FOR INFORMATION.

(13) STEEL OR WOOD POST IS ACCEPTABLE AT POST 1. SEE SDD14B42

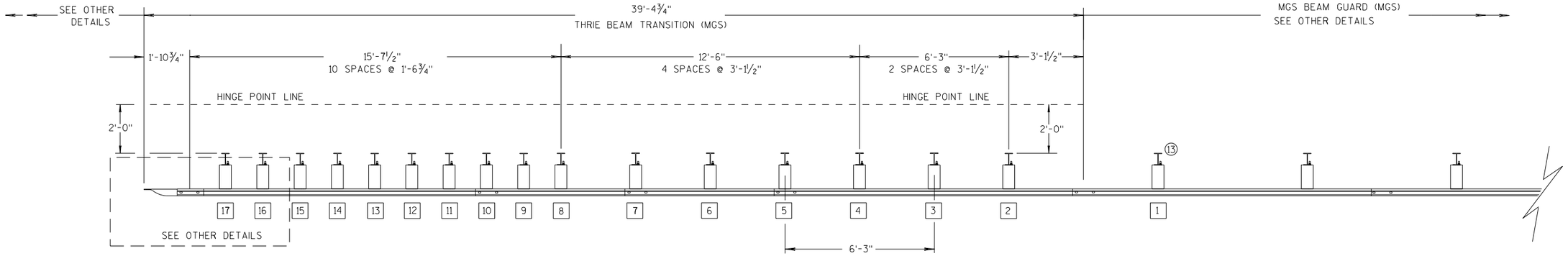

PLAN VIEW

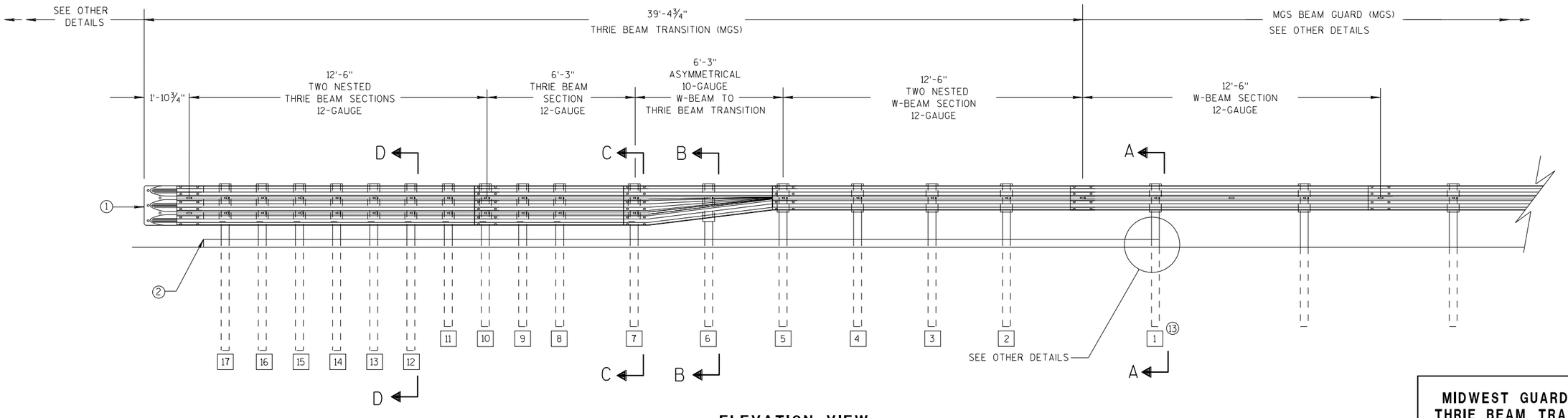

ELEVATION VIEW

MIDWEST GUARDRAIL SYSTEM THRIE BEAM TRANSITION

MIDWEST GUARDRAIL SYSTEM
THRIE BEAM TRANSITION (MGS)

STATE OF WISCONSIN
DEPARTMENT OF TRANSPOR

6

S.D.D. 14 B 45-5a

GENERAL NOTES

(2) OPTIONAL CURB AND GUTTER OR DRAINAGE FEATURE SEE PLAN FOR INFORMATION.

(3) WHEN USING STEEL POSTS AND WOOD BLOCKOUTS INSTALL FOUR 10D GALVANIZED NAILS. INSTALL NAILS AT THE BACK CORNERS OF THE BLOCK AND BEND THE NAILS OVER THE FLANGE OF THE STEEL POST.

(4) TOLERANCE FOR TOP OF W-BEAM RAIL IS ± 1".

(13) STEEL OR WOOD POST IS ACCEPTABLE AT POST 1. SEE SDD 14B42

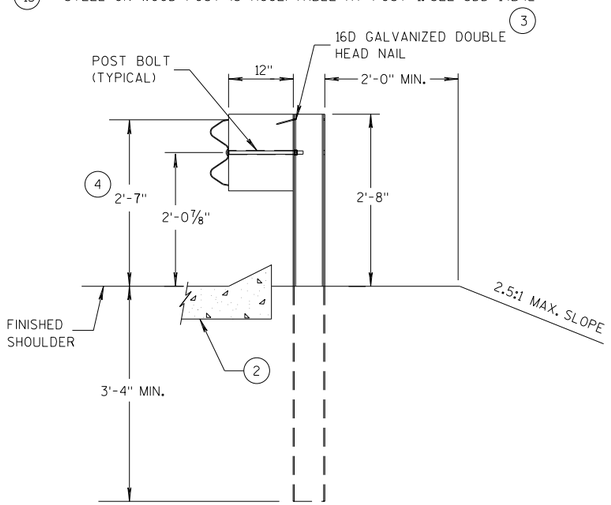

SECTION A-A (13)

POSTS 1-5

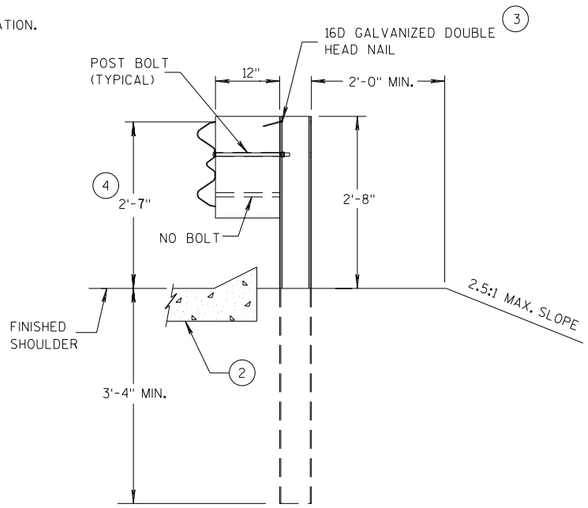

SECTION B-B

POST 6

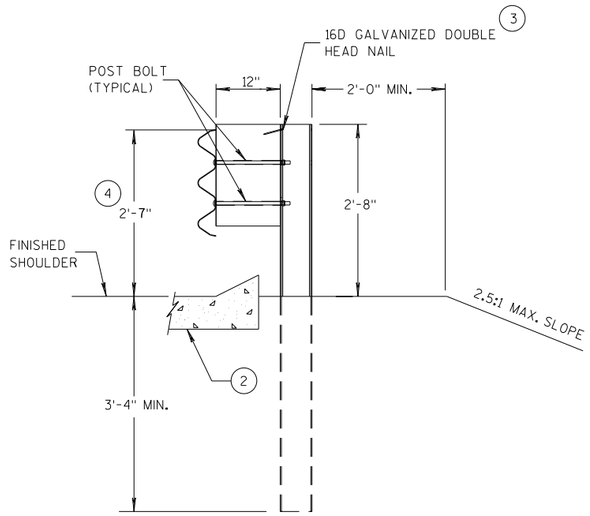

SECTION C-C

POSTS 7-11

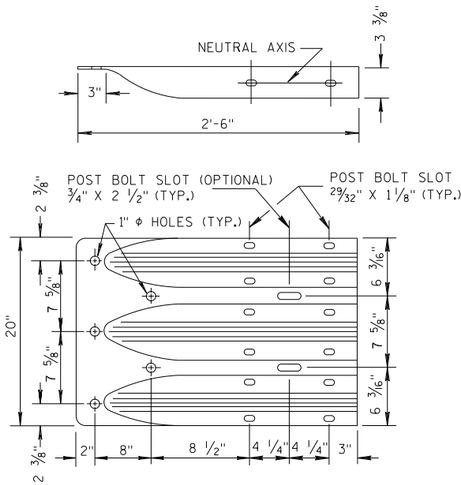

THRIE BEAM TERMINAL CONNECTOR

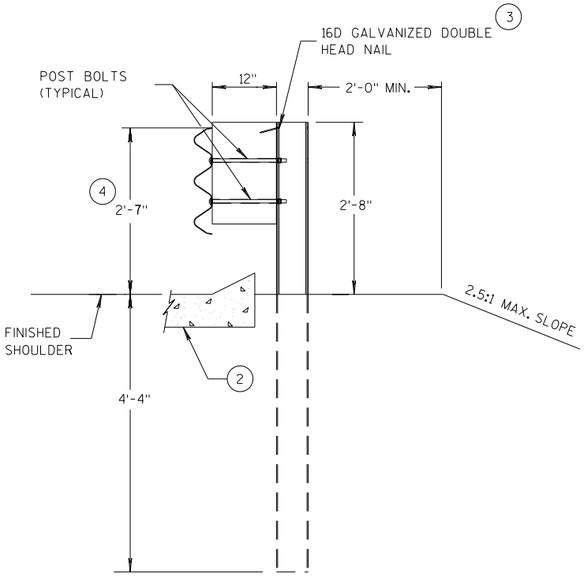

SECTION D-D

POSTS 12-17

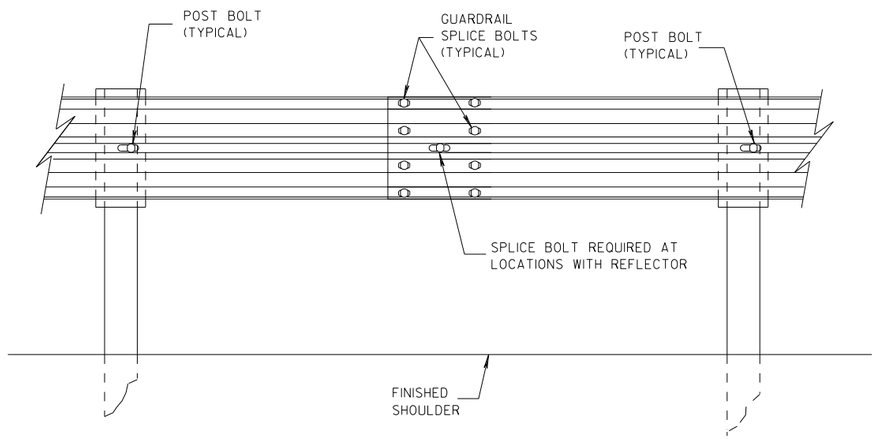

SPLICE DETAIL

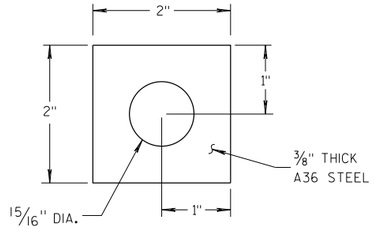

PLATE WASHER DETAIL

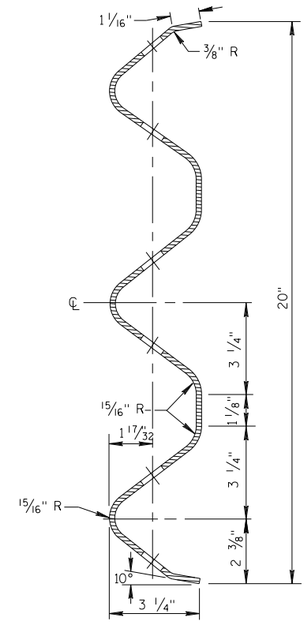

SECTION THRU THRIE BEAM RAIL ELEMENT

MIDWEST GUARDRAIL SYSTEM
THRIE BEAM TRANSITION (MGS)

STATE OF WISCONSIN
DEPARTMENT OF TRANSPOR

6

S.D.D. 14 B 45-5b

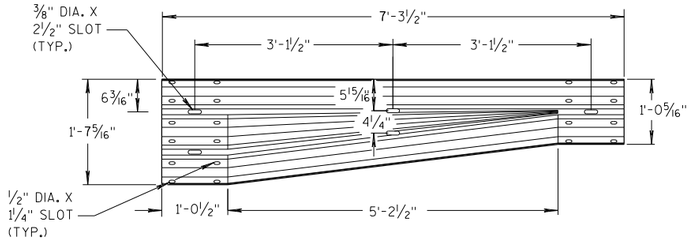

W-BEAM TO THRIE BEAM TRANSITION SECTION

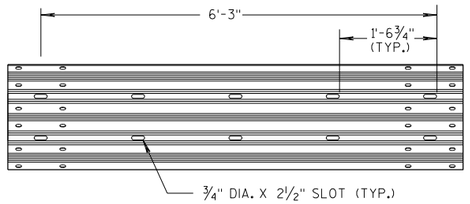

6'-3" THRIE BEAM SECTION

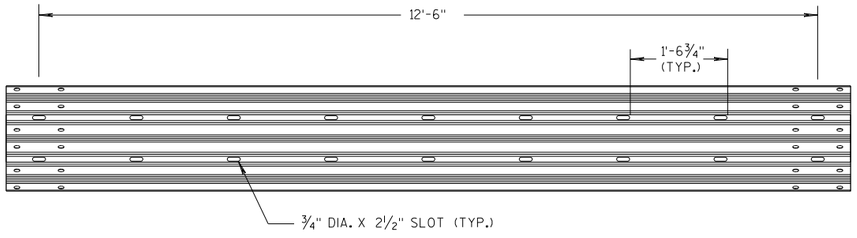

12'-6" THRIE BEAM SECTION

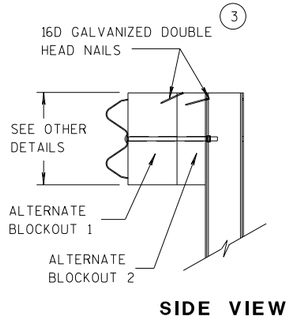

SIDE VIEW

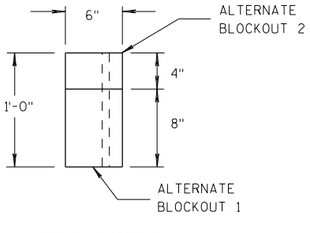

TOP VIEW

ALTERNATE WOOD BLOCKOUT DETAIL

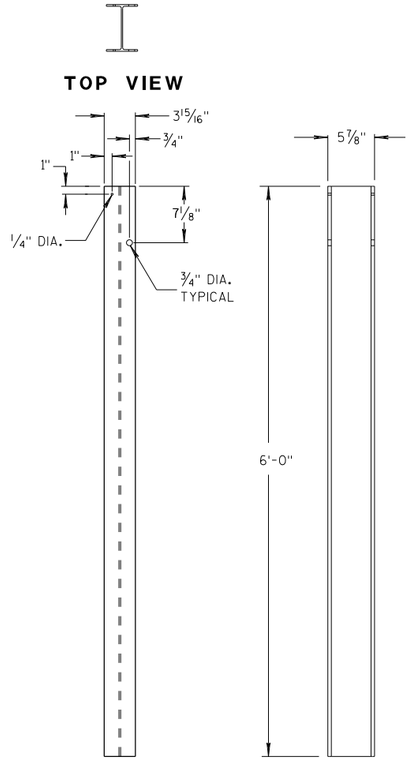

FRONT VIEW SIDE VIEW

STEEL POSTS 1-5 (13)

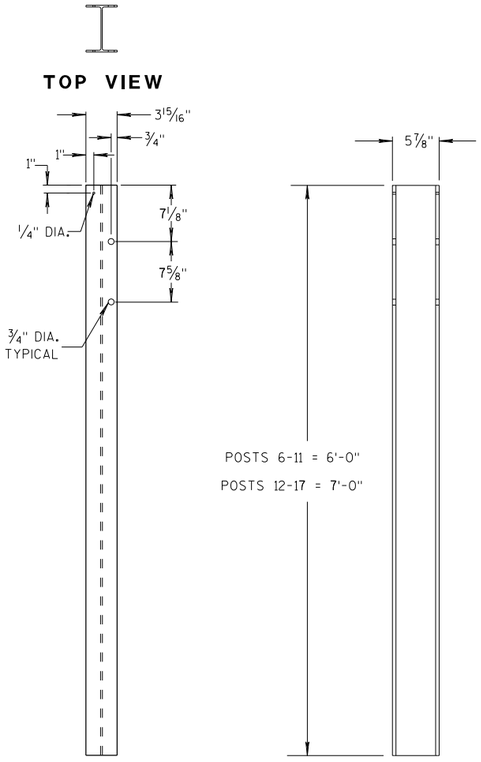

FRONT VIEW SIDE VIEW

STEEL POSTS 6-17

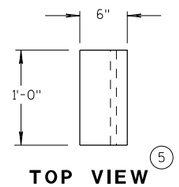

TOP VIEW (5)

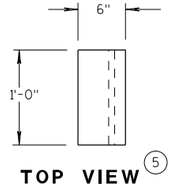

TOP VIEW (5)

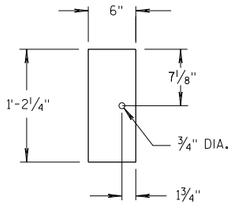

FRONT VIEW

BLOCKOUT POSTS 1-5

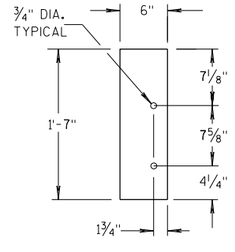

FRONT VIEW

BLOCKOUT POSTS 6-17

GENERAL NOTES

STEEL POSTS ARE W6X9 OR W6X8.5.

BOLT HOLES FOR POST ARE ON FRONT AND OF SIDE OF POST.

(3) WHEN USING STEEL POSTS AND WOOD BLOCKOUTS INSTALL FOUR 16D GALVANIZED NAILS. INSTALL NAILS AT THE BACK CORNERS OF THE BLOCK AND BEND THE NAILS OVER THE FLANGE OF THE STEEL POST.

(5) WOOD BLOCKS MAY BE CONSTRUCTED OUT OF 2 WOOD BLOCKS. SEE ALTERNATE WOOD BLOCK DETAIL.

(13) STEEL OR WOOD POST IS ACCEPTABLE AT POST 1. SEE SDD 14B42.

MIDWEST GUARDRAIL SYSTEM
THRIE BEAM TRANSITION (MGS)

STATE OF WISCONSIN
DEPARTMENT OF TRANSPOF

6
S.D.D. 14 B 45-5c

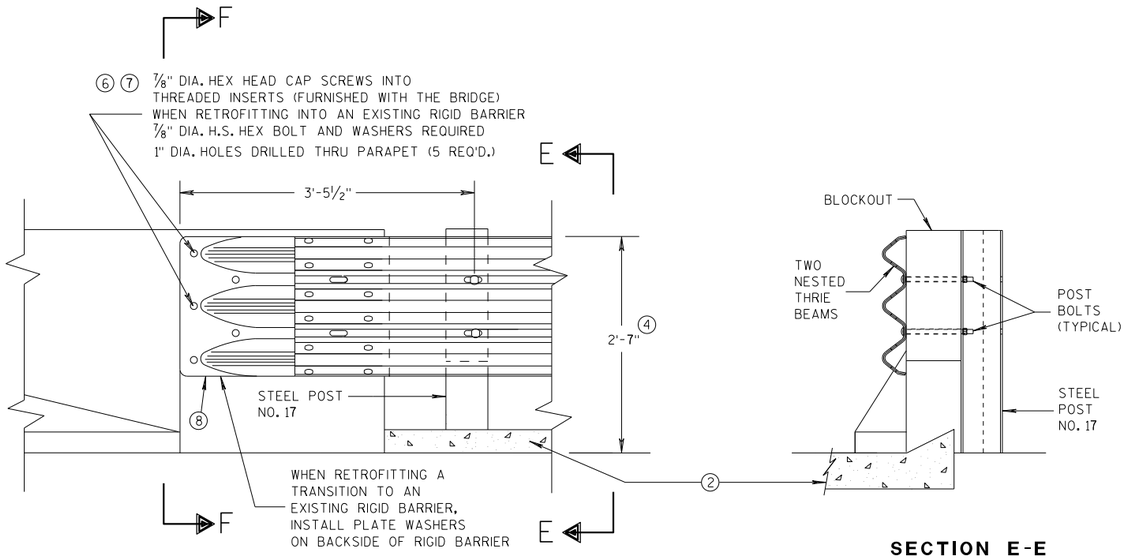

FRONT VIEW

SECTION E-E

THRIE BEAM CONNECTION TO BRIDGE PARAPET WITH SQUARE ENDS

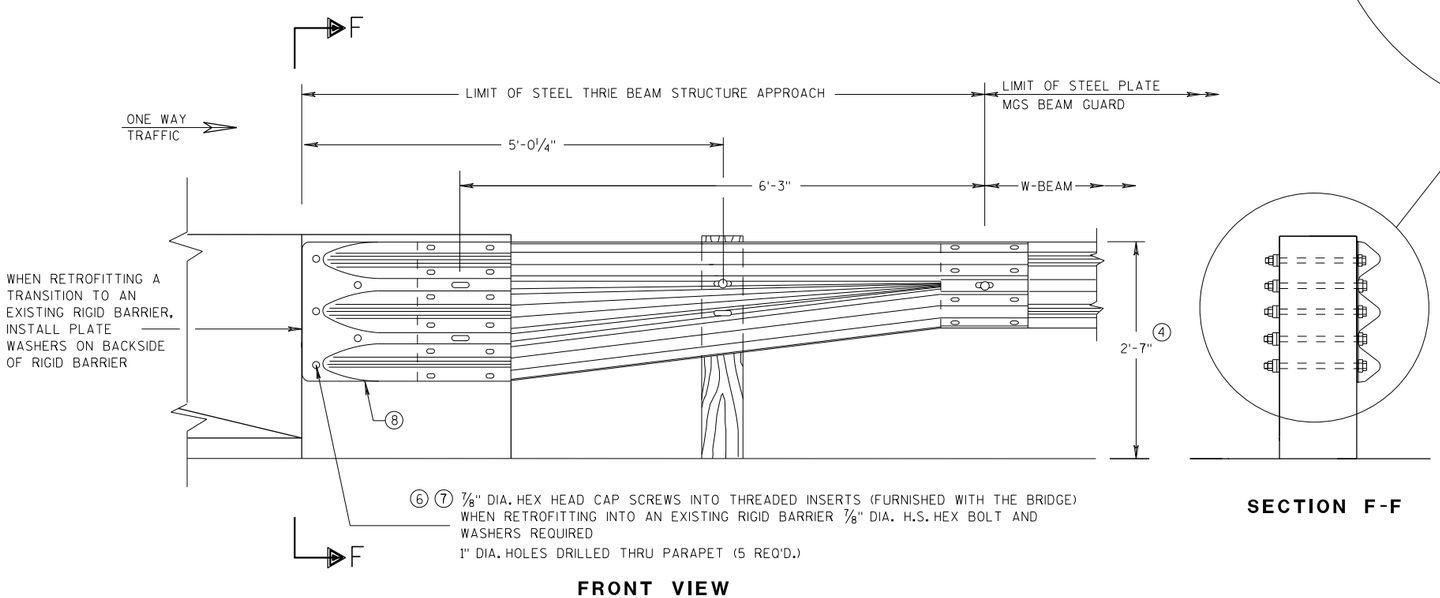

FRONT VIEW

SECTION F-F

W BEAM TRANSITION AND CONNECTION TO BRIDGE PARAPETS WITH SQUARE ENDS

(USE ONLY ON THE TRAFFIC EXIT END OF ONE WAY BRIDGES)

GENERAL NOTES

THESE ARE TYPICAL CONNECTION DETAILS. ADJUST THE POSTION OF CONNECTIONS TO EXISTING BRIDGES TO FIT THE ACTUAL BRIDGE AND SITE DIMENSIONS.

② OPTIONAL CURB AND GUTTER OR DRAINAGE FEATURE SEE PLAN FOR INFORMATION.

④ TOLERANCE FOR TOP OF BEAM IS ± 1".

⑥ DRILLING BOLT HOLES THROUGH THE PARAPET, BOLTS, NUTS, WASHERS AND REPAIRING DAMAGED CONCRETE ARE INCIDENTAL TO THE CONTRACT.

⑦ BOLTS MAY BE A325 BOLTS OR A449 BOLTS. BOLT LENGTH AND THREADING LENGTH ARE TO ALLOW FOR A TIGHT CONNECTION BETWEEN RIGID BARRIER AND THRIE BEAM CONNECTION PLATE. CONTRACTOR IS TO FIELD VERIFY BOLT LENGTH AND THREAD LENGTH. ONE ROUND WASHER REQUIRED BETWEEN BOLT HEAD AND THRIE BEAM CONNECTOR PLATE. BOLTS THAT EXTEND THROUGH THE PARAPET AND OUT THE BACK FACE REQUIRE A HARDENED ROUND STEEL WASHER THAT IS 2" O.D. X 5/32" THICK AND ONE PLATE WASHER. REPAIR ANY DAMAGED CONCRETE FROM BOLT INSTALLATION.

⑧ THE RECESS FOR A W-BEAM CONNECTION, WHICH EXISTS ON SOME PARAPETS OF THIS TYPE, SHALL BE FILLED WITH A TREATED TIMBER BLOCKOUT. BLOCKOUT SIZE IS 1'-6" X 2'-0" X 3 1/2".

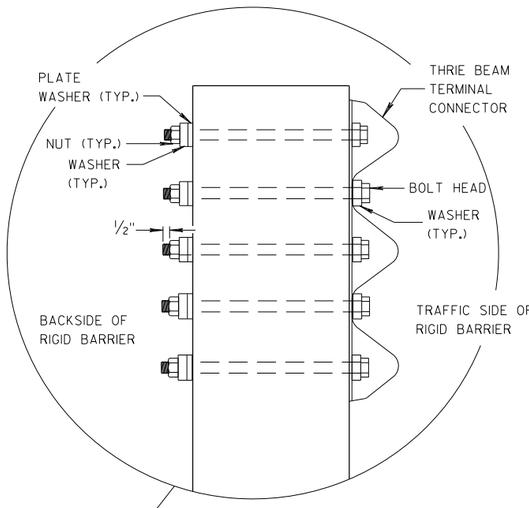

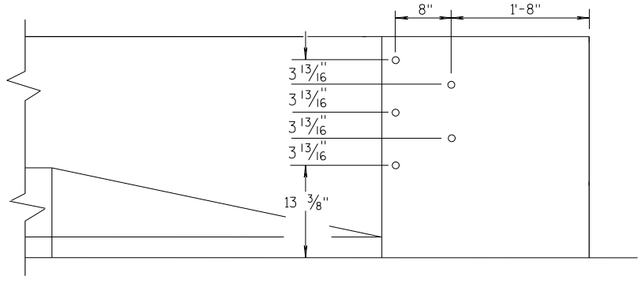

DRILL HOLE LOCATION

MIDWEST GUARDRAIL SYSTEM
THRIE BEAM TRANSITION (MGS)

STATE OF WISCONSIN
DEPARTMENT OF TRANSPORTATION

APPROVED
07/2018 /S/ Rodney Taylor
DATE ROADWAY STANDARDS D NT
UNIT SUPERVIS
FHWA

6

S.D.D. 14 B 45-5d

GENERAL NOTES

THESE ARE TYPICAL CONNECTION DETAILS. ADJUST THE POSTION OF CONNECTIONS TO EXISTING BRIDGES TO FIT THE ACTUAL BRIDGE AND SITE DIMENSIONS.

(2) OPTIONAL CURB AND GUTTER OR DRAINAGE FEATURE SEE PLAN FOR INFORMATION.

(4) TOLERANCE FOR TOP OF BEAM IS ± 1".

(6) DRILLING BOLT HOLES THROUGH THE PARAPET, BOLTS, NUTS, WASHERS AND REPAIRING DAMAGED CONCRETE ARE INCIDENTAL TO THE CONTRACT.

(7) BOLTS MAY BE A325 BOLTS OR A449 BOLTS. BOLT LENGTH AND THREADING LENGTH ARE TO ALLOW FOR A TIGHT CONNECTION BETWEEN RIGID BARRIER AND THRIE BEAM CONNECTION PLATE. CONTRACTOR IS TO FIELD VERIFY BOLT LENGTH AND THREAD LENGTH. ONE ROUND WASHER REQUIRED BETWEEN BOLT HEAD AND THRIE BEAM CONNECTOR PLATE. BOLTS THAT EXTEND THROUGH THE PARAPET AND OUT THE BACK FACE REQUIRE A HARDENED ROUND STEEL WASHER THAT IS 2" O.D. X 5/32" THICK AND ONE PLATE WASHER. REPAIR ANY DAMAGED CONCRETE FROM BOLT INSTALLATION.

(8) THE RECESS FOR A W-BEAM CONNECTION, WHICH EXISTS ON SOME PARAPETS OF THIS TYPE, SHALL BE FILLED WITH A TREATED TIMBER BLOCKOUT. BLOCKOUT SIZE IS 1'-6" X 2'-0" X 3 ½".

(9) BOLT, NUT AND WASHERS NOT REQUIRED FOR THIS LOCATION WHEN RETROFITTING AN EXISTING PAPAPET AND THE HOLE IS EITHER ABOVE PARAPET OR WITHIN 4 INCHES OF THE EDGE OF PARAPET.

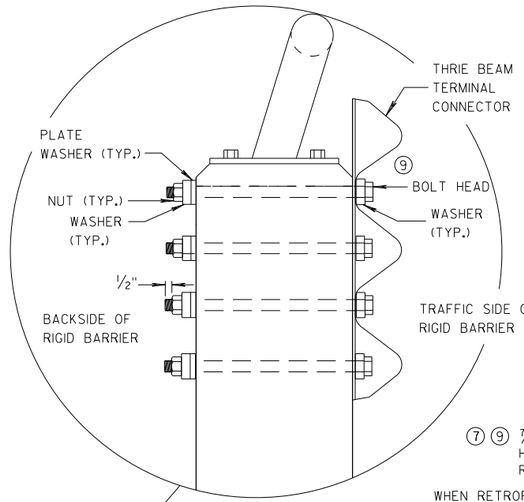

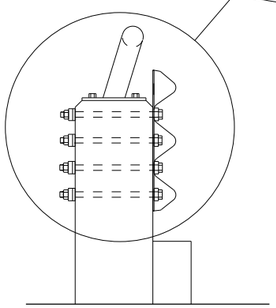

SECTION G-G

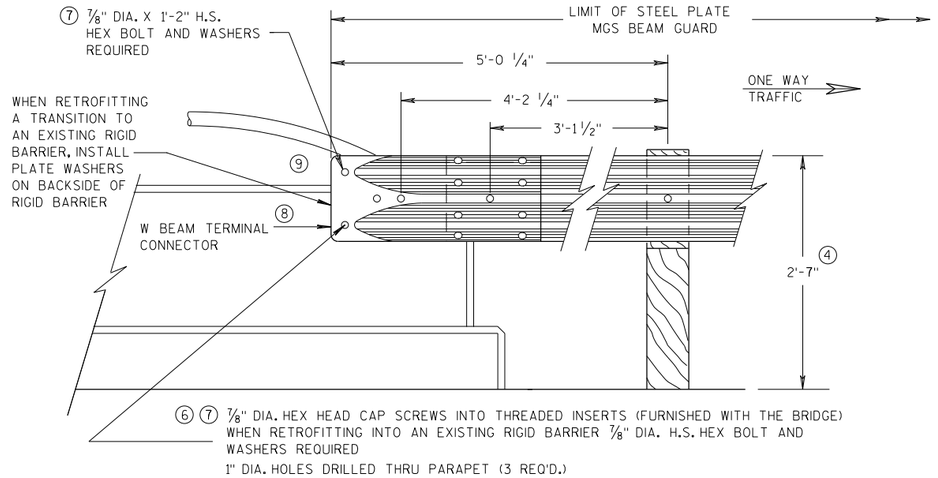

FRONT VIEW

W BEAM CONNECTION TO VERTICAL FACE PARAPET

(USE ONLY ON THE TRAFFIC EXIT END OF ONE WAY BRIDGES)

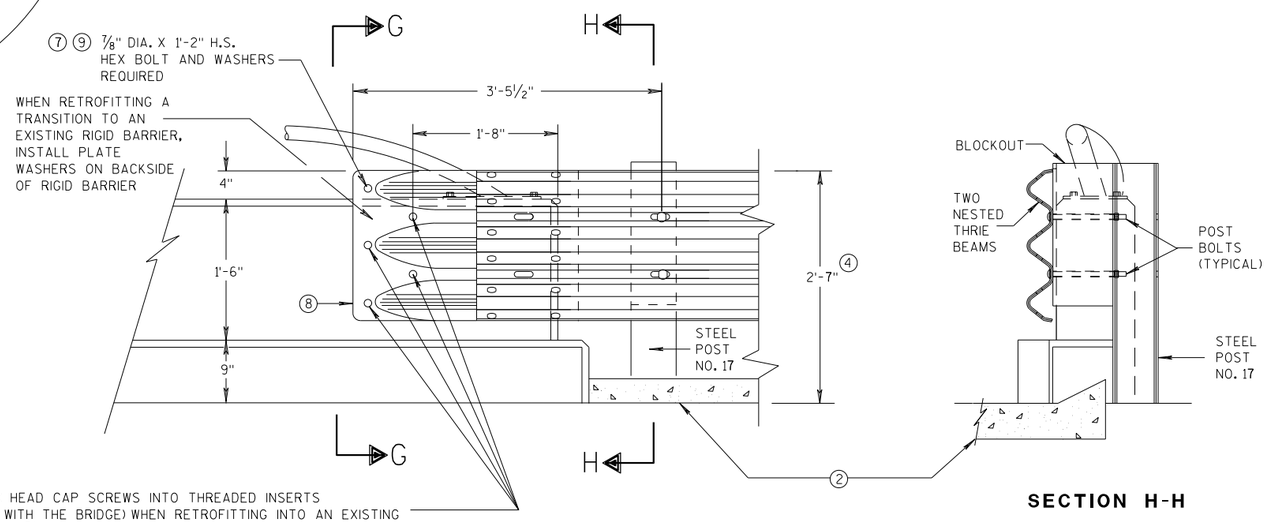

FRONT VIEW

SECTION H-H

THRIE BEAM CONNECTION TO VERTICAL FACED PARAPETS

MIDWEST GUARDRAIL SYSTEM
THRIE BEAM TRANSITION (MGS)

STATE OF WISCONSIN
DEPARTMENT OF TRANSPORTATION

APPROVED
07/2018
DATE
FHWA

/S/ Rodney Taylor
ROADWAY STANDARDS D UNIT SUPERVIS NT

6

S.D.D. 14 B 45-5e

6

S.D.D. 14 B 45-5e

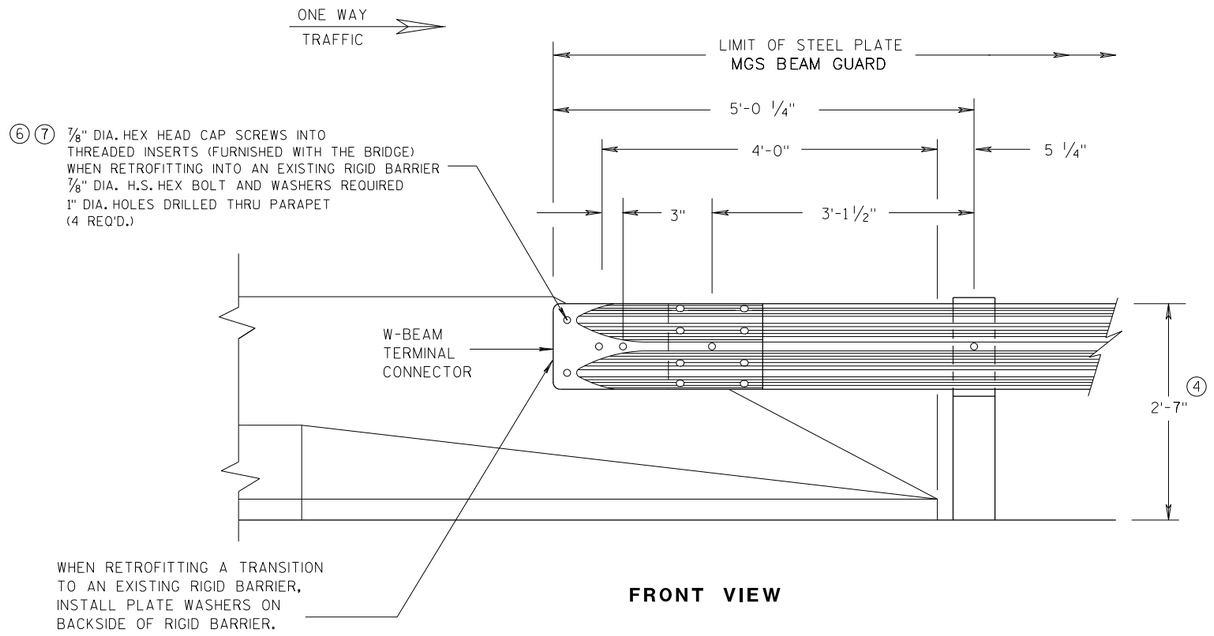

FRONT VIEW

W BEAM CONNECTION TO PARAPETS WITH SLOPED ENDS

(USE ONLY AT TRAFFIC EXIT END OF ONE WAY BRIDGE)

GENERAL NOTES

② OPTIONAL CURB AND GUTTER OR DRAINAGE FEATURE SEE PLAN FOR INFORMATION.

④ TOLERANCE FOR TOP OF BEAM IS ± 1".

⑥ DRILLING BOLT HOLES THROUGH THE PARAPET, BOLTS, NUTS, WASHERS AND REPAIRING DAMAGED CONCRETE ARE INCIDENTAL TO THE CONTRACT.

⑦ BOLTS MAY BE A325 BOLTS OR A449 BOLTS. BOLT LENGTH AND THREADING LENGTH ARE TO ALLOW FOR A TIGHT CONNECTION BETWEEN RIGID BARRIER AND THRIE BEAM CONNECTION PLATE. CONTRACTOR IS TO FIELD VERIFY BOLT LENGTH AND THREAD LENGTH. ONE ROUND WASHER REQUIRED BETWEEN BOLT HEAD AND THRIE BEAM CONNECTOR PLATE. BOLTS THAT EXTEND THROUGH THE PARAPET AND OUT THE BACK FACE REQUIRE A HARDENED ROUND STEEL WASHER THAT IS 2" O.D. X 5/32" THICK AND ONE PLATE WASHER. REPAIR ANY DAMAGED CONCRETE FROM BOLT INSTALLATION.

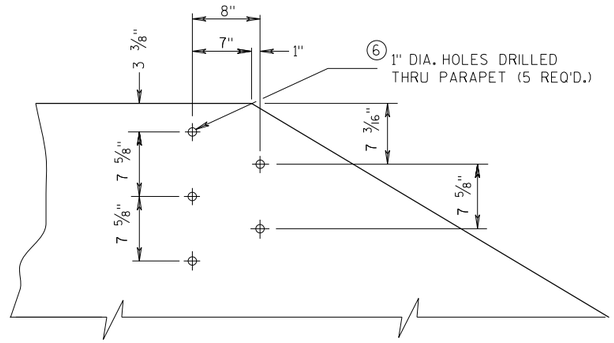

DRILL HOLE LOCATION AND PATTERN FOR THRIE BEAM CONNECTION

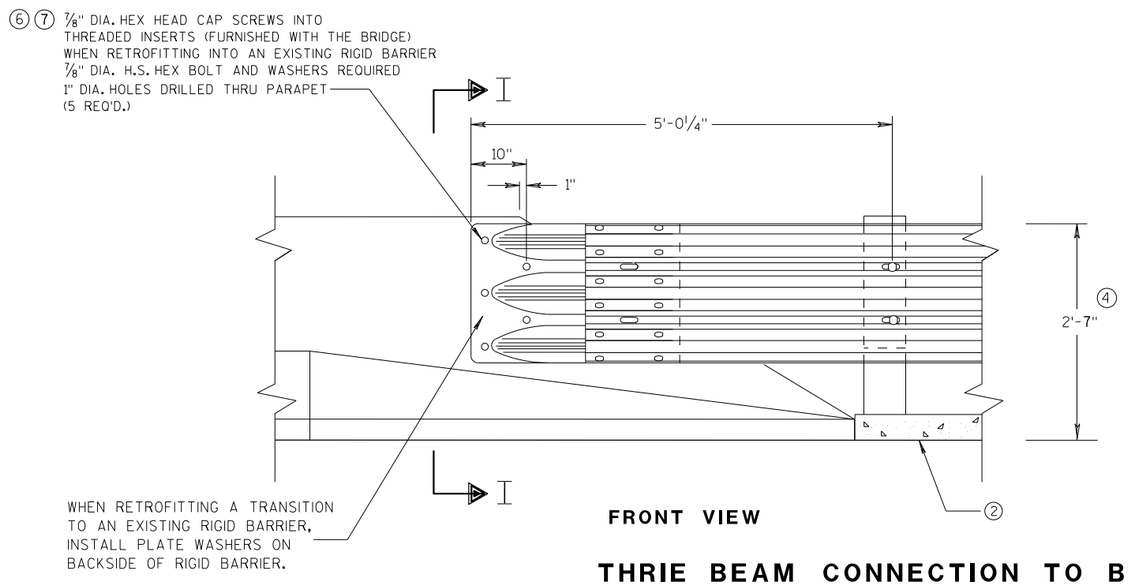

FRONT VIEW

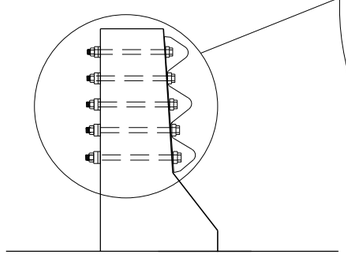

SECTION I-I

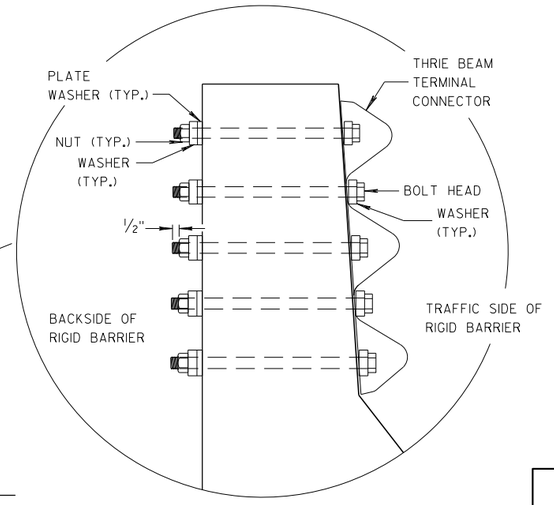

THRIE BEAM CONNECTION TO BRIDGE PARAPETS WITH SLOPED ENDS

MIDWEST GUARDRAIL SYSTEM
THRIE BEAM TRANSITION (MGS)

STATE OF WISCONSIN
DEPARTMENT OF TRANSPORTATION

APPROVED
07/2018 — DATE
/S/ Rodney Taylor
ROADWAY STANDARDS [illegible] UNIT SUPERVI[illegible]ENT
FHWA

6

S.D.D. 14 B 45-5f

6

S.D.D. 14 B 45-5f

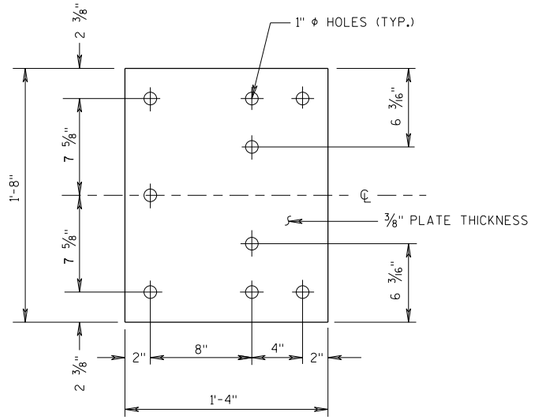

BACK-UP PLATE DETAIL

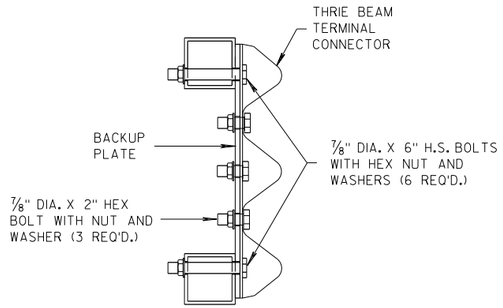

SECTION J-J

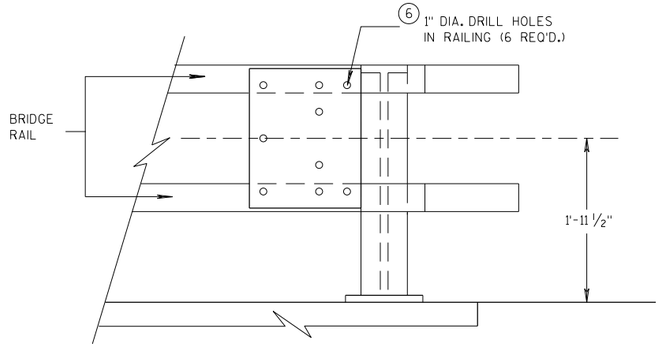

BACK-UP PLATE MOUNTING ONTO BRIDGE RAILING

GENERAL NOTES

④ TOLERANCE FOR TOP OF BEAM IS ± 1".

⑥ DRILLING HOLES THROUGH THE PAPRPET, BOLTS, NUTS, WASHERS AND REPAIRING DAMAGED CONCRETE ARE INCIDENTAL TO THE CONTRACT.

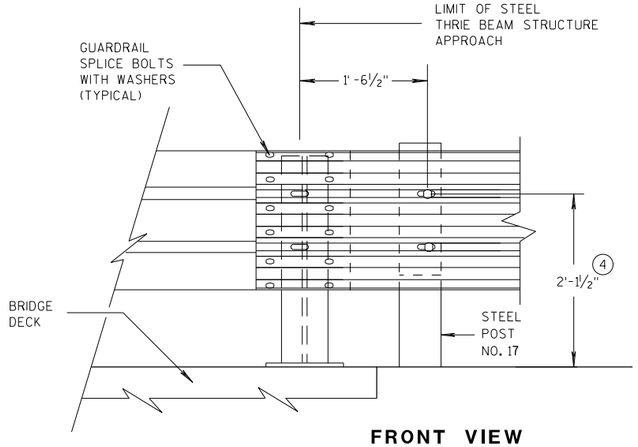

FRONT VIEW

THRIE BEAM CONNECTION TO STEEL RAILING TYPE "W"

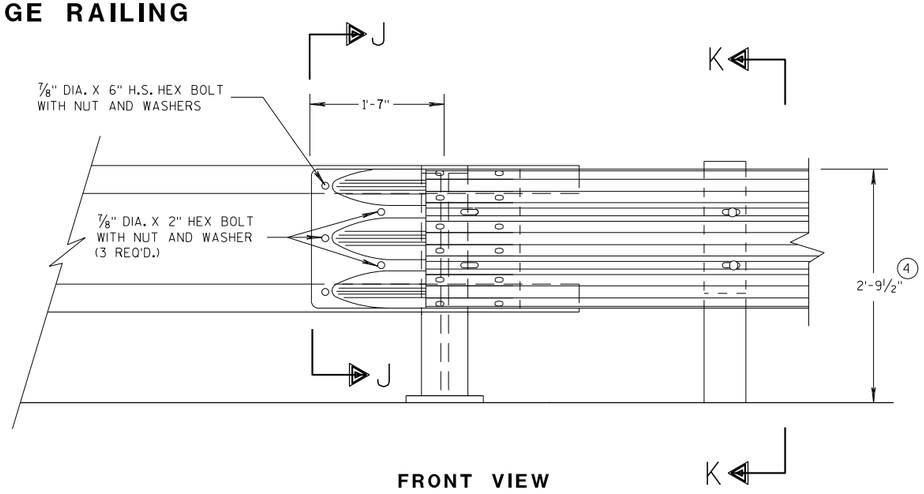

FRONT VIEW

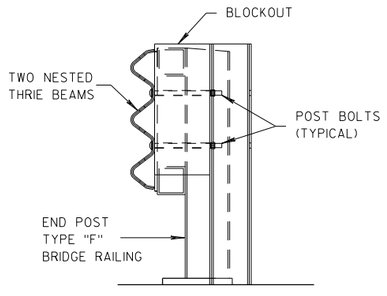

SECTION K-K

THRIE BEAM CONNECTION TO TUBULAR RAILING TYPE "F"

MIDWEST GUARDRAIL SYSTEM THRIE BEAM TRANSITION (MGS)

STATE OF WISCONSIN
DEPARTMENT OF TRANSPORTATION

APPROVED 07/2018 — DATE
FHWA

/S/ Rodney Taylor — ROADWAY STANDARDS DEVELOPMENT UNIT SUPERVISOR

147

6

S.D.D. 14 B 45-5g

6

S.D.D. 14 B 45-5g

GENERAL NOTES

(4) TOLERANCE FOR TOP OF W-BEAM RAIL IS ± 1".

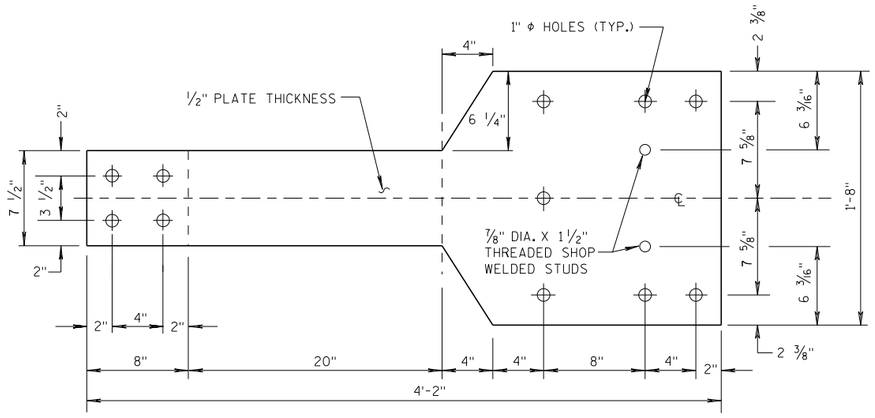

FRONT VIEW

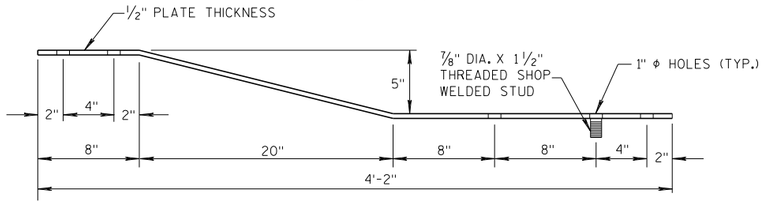

PLAN VIEW

BACK-UP PLATE DETAIL, TYPE "M"

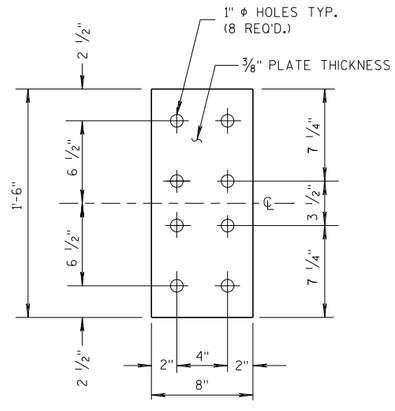

FRONT VIEW

ANCHOR PLATE DETAIL, TYPE "M"

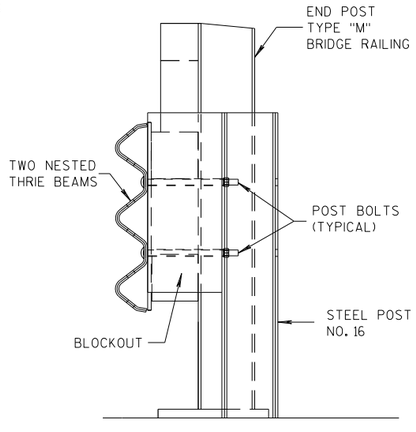

SECTION M-M

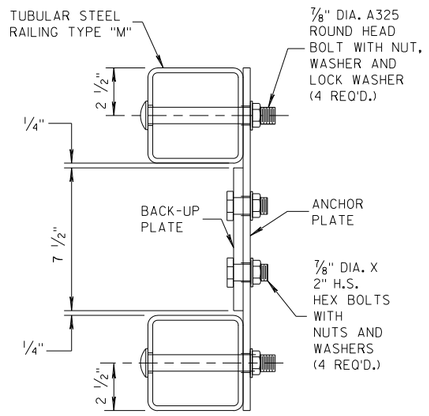

SECTION L-L

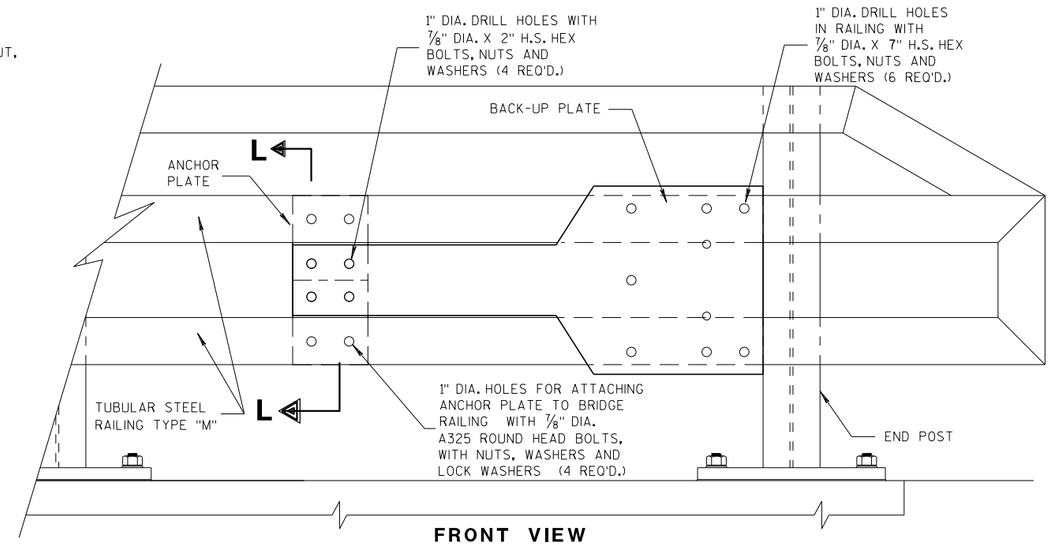

FRONT VIEW

ANCHOR AND BACK-UP PLATE MOUNTING TO BRIDGE RAILING, TYPE "M"

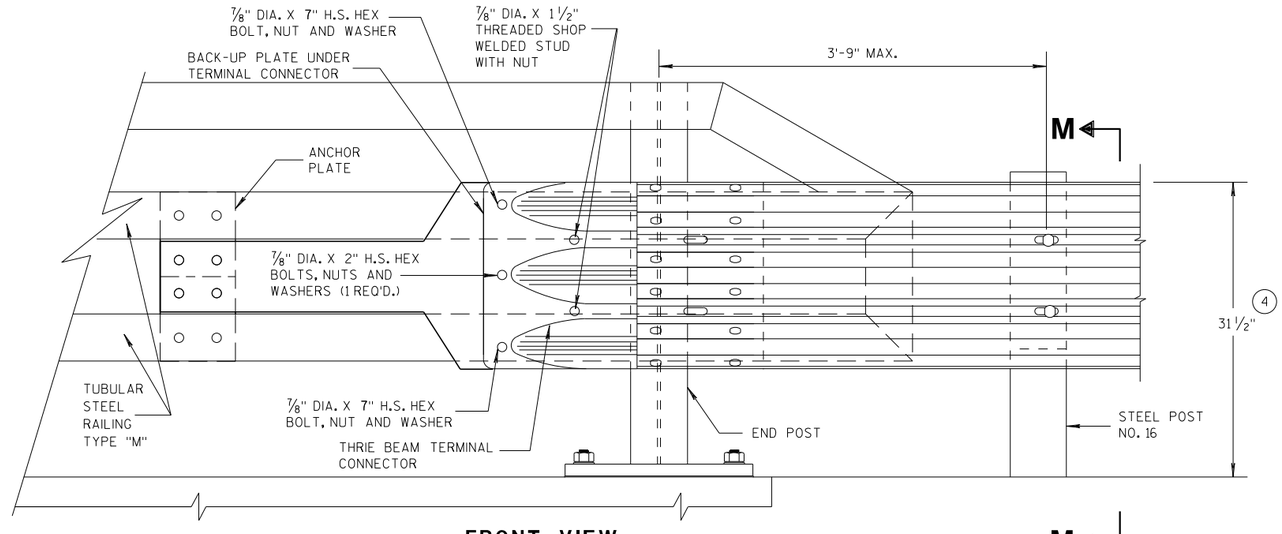

FRONT VIEW

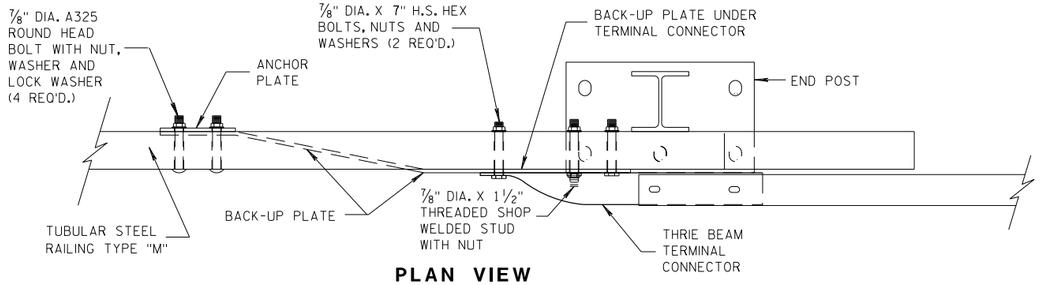

PLAN VIEW

THRIE BEAM CONNECTION TO TUBULAR RAILING, TYPE "M"

MIDWEST GUARDRAIL SYSTEM
THRIE BEAM TRANSITION (MGS)

STATE OF WISCONSIN
DEPARTMENT OF TRANSPORTATION

APPROVED
07/2018 — DATE
/S/ Rodney Taylor — ROADWAY STANDARDS UNIT SUPERVISOR
FHWA

6

S.D.D. 14 B 45-5h

6

S.D.D. 14 B 45-5h

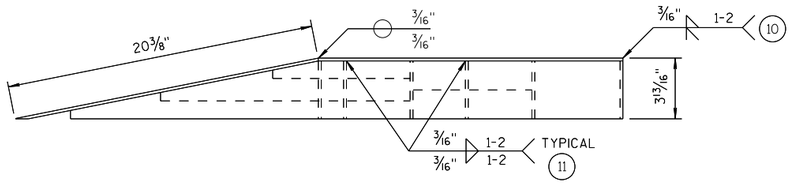

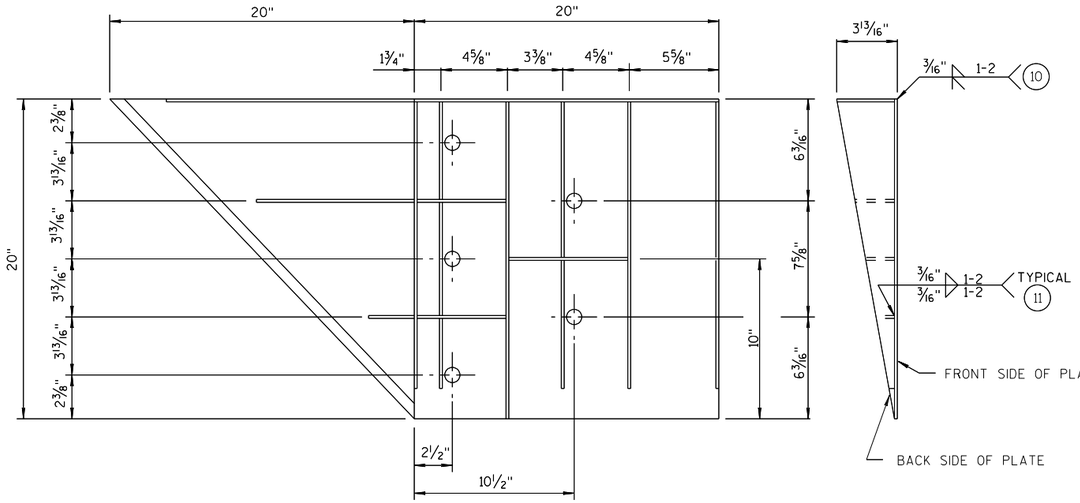

WELDING INSTRUCTION

(VIEWED FROM BACK SIDE OF PLATE)

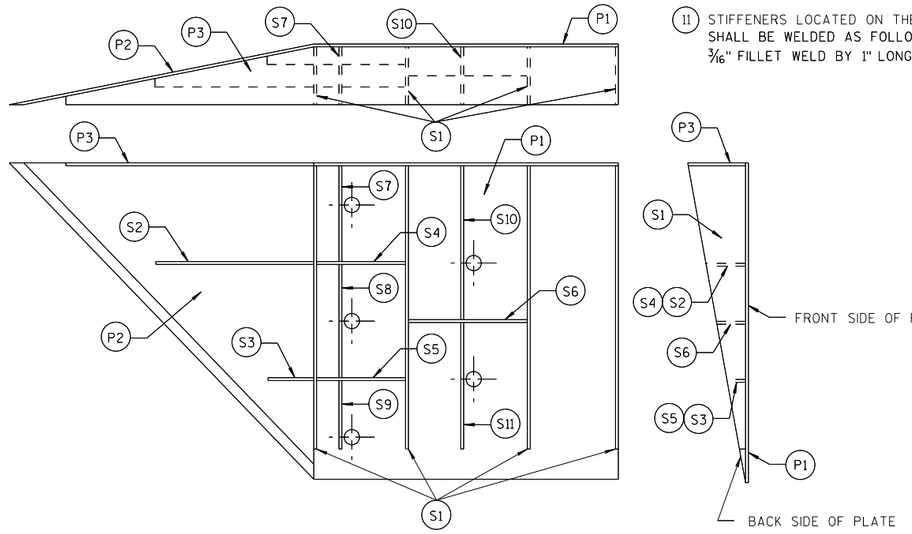

PLATE AND STIFFENER IDENTIFICATION

(VIEWED FROM BACK SIDE OF PLATE)

GENERAL NOTES

COVER PLATE PANELS ARE 3/16" THICK.

ALL STIFFENERS ARE 1/4" THICK.

CONNECTOR PLATE SHALL BE FABRICATED FROM ASTM GRADE A36 STEEL AND GALVANIZED.

FOR GALVANIZED REQUIREMENTS, SEE SECTION 614 OF THE STANDARD SPECIFICATIONS.

ALL HOLE DIAMETERS SHALL BE 1".

FOR OPPOSITE SIDE INSTALLATION MIRROR DRAWINGS.

(10) STIFFENERS LOCATED AT THE OUTSIDE EDGES OF THE COVER PLATES SHALL BE WELDED AS FOLLOWS:
SINGLE BEVEL GROOVE WELD ON EXTERNAL SIDES AND 3/16" FILLET WELD BY 1" LONG SPACED AT 2" ON INTERNAL SIDES.

(11) STIFFENERS LOCATED ON THE INSIDE OF THE COVER PLATE SHALL BE WELDED AS FOLLOWS:
3/16" FILLET WELD BY 1" LONG SPACED AT 2".

CONNECTOR PLATE DIMENSION (PER ASSEMBLY)

PLATE	QUANTITY	SHAPE	SIZE (A x B x C x D)	THICKNESS
P1	1		20" x 20"	3/16"
P2	1		20" x 20" x 28 9/16"	3/16"
P3	1		39" x 3 5/8" x 20" x 19 5/16"	3/16"
S1	4		18 7/16" x 3 5/8" x 18 3/4"	1/4"
S2	1		10 1/4" x 2 7/16" x 10 3/8" x 1/2"	1/4"
S3	1		3" x 1 1/16" x 3 1/8" x 1/2"	1/4"
S4	1		6 1/8" x 2 7/16"	1/4"
S5	1		6 1/8" x 1 1/16"	1/4"
S6	1		7 3/4" x 1 3/4"	1/4"
S7	1		2 9/16" x 6" x 3 5/8" x 5 7/8"	1/4"
S8	1		1 5/32" x 7 1/2" x 2 1/2" x 7 3/8"	1/4"
S9	1		6 1/16" x 6 3/16" x 1 3/32"	1/4"
S10	1		1 7/8" x 9 7/8" x 3 5/8" x 9 11/16"	1/4"
S11	1		8 1/2" x 8 3/4" x 1 13/16"	1/4"

SINGLE SLOPE CONNECTION PLATE

MIDWEST GUARDRAIL SYSTEM
THRIE BEAM TRANSITION (MGS)

STATE OF WISCONSIN
DEPARTMENT OF TRANSPORTATION

APPROVED
7/2018
DATE
FHWA

/S/ Rodney Taylor
ROADWAY STANDARDS I
UNIT SUPERVI

6
S.D.D. 14 B 45-5i

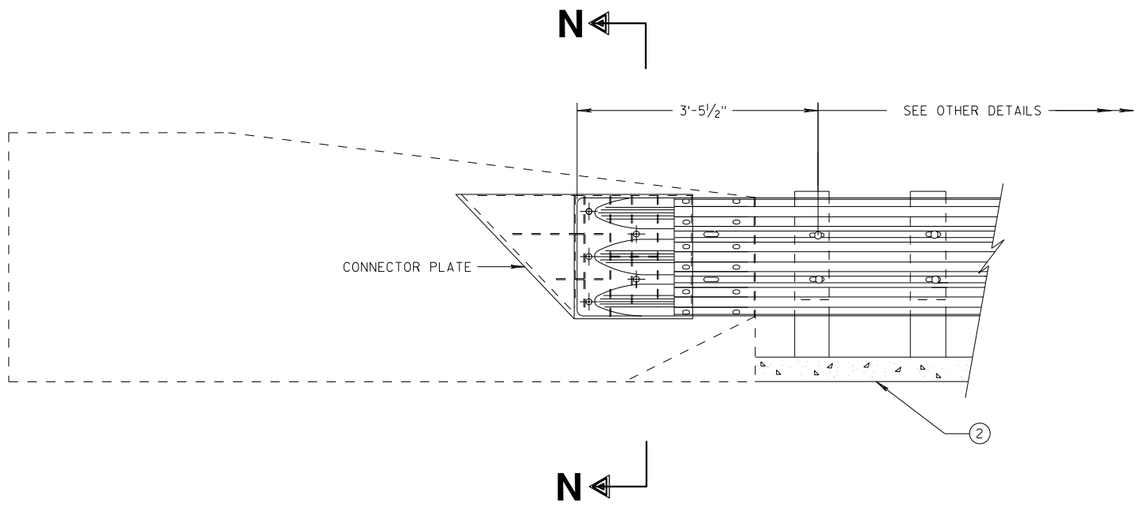

THRIE BEAM CONNECTION TO SINGLE SLOPE BARRIER

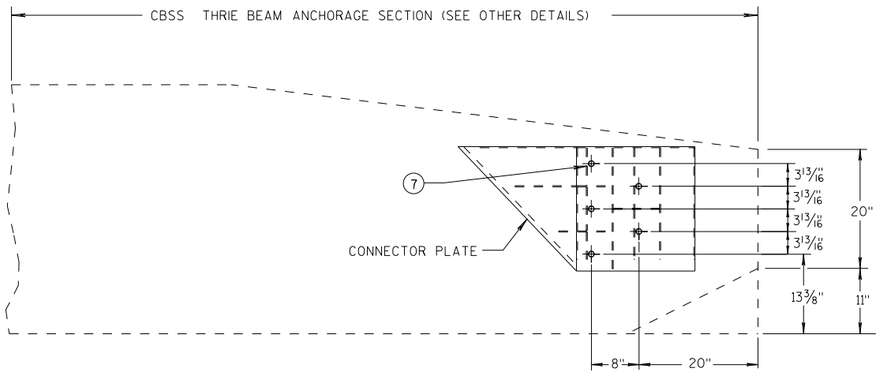

SINGLE SLOPE CONNECTION PLATE PLACEMENT

GENERAL NOTES

CONNECTOR PLATE, DRILLING BOLT HOLES THROUGH THE PARAPET, BOLTS, NUTS, WASHERS AND REPAIRING DAMAGED CONCRETE ARE INCIDENTAL TO THE CONTRACT.

(2) OPTIONAL CURB AND GUTTER OR DRAINAGE FEATURE SEE PLAN FOR INFORMATION.

(7) BOLTS MAY BE A325 BOLTS OR A449 BOLTS. BOLT LENGTH AND THREADING LENGTH ARE TO ALLOW FOR A TIGHT CONNECTION BETWEEN RIGID BARRIER AND THRIE BEAM CONNECTION PLATE. CONTRACTOR IS TO FIELD VERIFY BOLT LENGTH AND THREAD LENGTH. ONE ROUND WASHER REQUIRED BETWEEN BOLT HEAD AND THRIE BEAM CONNECTOR PLATE. BOLTS THAT EXTEND THROUGH THE PARAPET AND OUT THE BACK FACE REQUIRE A HARDENED ROUND STEEL WASHER THAT IS 2" O.D. X 5/32" THICK AND ONE PLATE WASHER. REPAIR ANY DAMAGED CONCRETE FROM BOLT INSTALLATION.

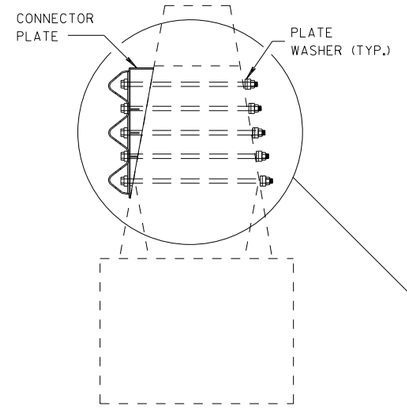

SECTION N-N

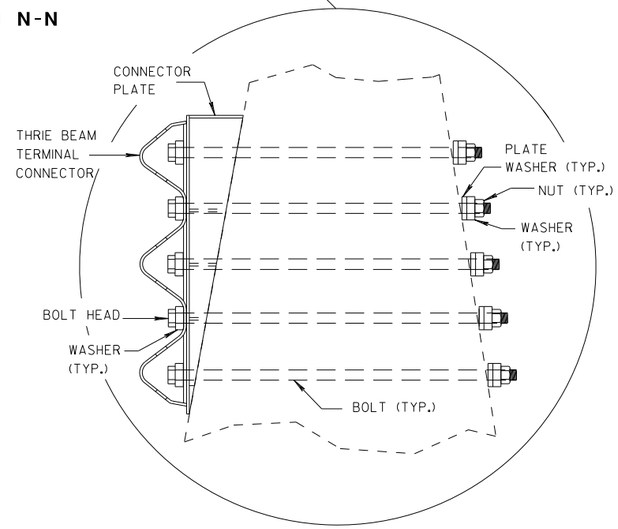

MIDWEST GUARDRAIL SYSTEM
THRIE BEAM TRANSITION (MGS)

STATE OF WISCONSIN
DEPARTMENT OF TRANSPORTATION

APPROVED
7/2018
DATE
/S/ Rodney Taylor
ROADWAY STANDARDS DI UNIT SUPERVIS
NT
FHWA

6

S.D.D. 14 B 45-5j

6

S.D.D. 14 B 45-5j

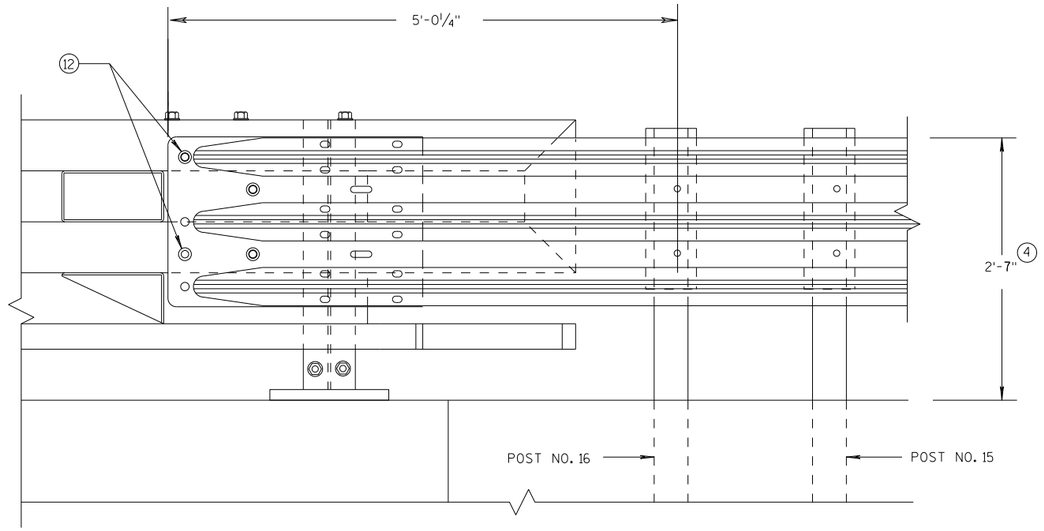

ELEVATION OF DETAIL AT NY3 END POST

THRIE BEAM RAIL ATTACHMENT

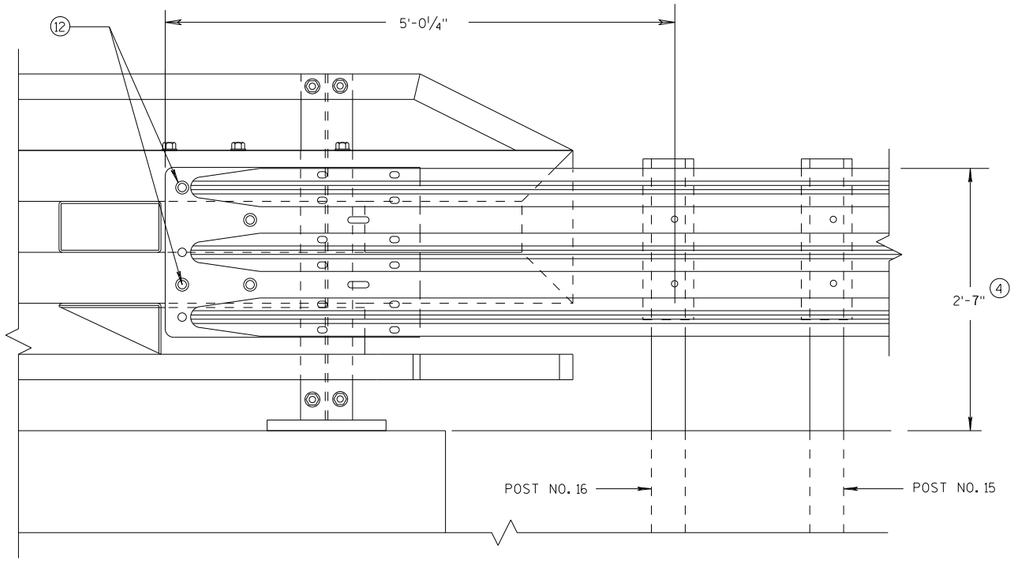

ELEVATION OF DETAIL AT NY4 END POST

THRIE BEAM RAIL ATTACHMENT

GENERAL NOTES

(4) TOLERANCE FOR TOP OF BEAM IS ± 1".

(12) BOLTS MAY BE A325 BOLTS OR A449 BOLTS. BOLT LENGTH AND THREADING LENGTH ARE TO ALLOW FOR A TIGHT CONNECTION BETWEEN RIGID BARRIER AND THRIE BEAM CONNECTION PLATE. CONTRACTOR IS TO FIELD VERIFY BOLT LENGTH AND THREAD LENGTH. ONE ROUND WASHER REQUIRED BETWEEN BOLT HEAD AND THRIE BEAM CONNECTOR PLATE. ON BACKSIDE OF PARAPET ONE ROUND WASHER, AND NUT REQUIRED. BOLT THREAD IS TO EXTEND 1/2-INCH BEYOND NUT.

MIDWEST GUARDRAIL SYSTEM
THRIE BEAM TRANSITION (MGS)

STATE OF WISCONSIN
DEPARTMENT OF TRANSPORTATION

APPROVED
7/2018
DATE
FHWA

/S/ Rodney Taylor
ROADWAY STANDARDS D
UNIT SUPERVIS

NT

6

S.D.D. 14 B 45-5k

6

S.D.D. 14 B 45-5k

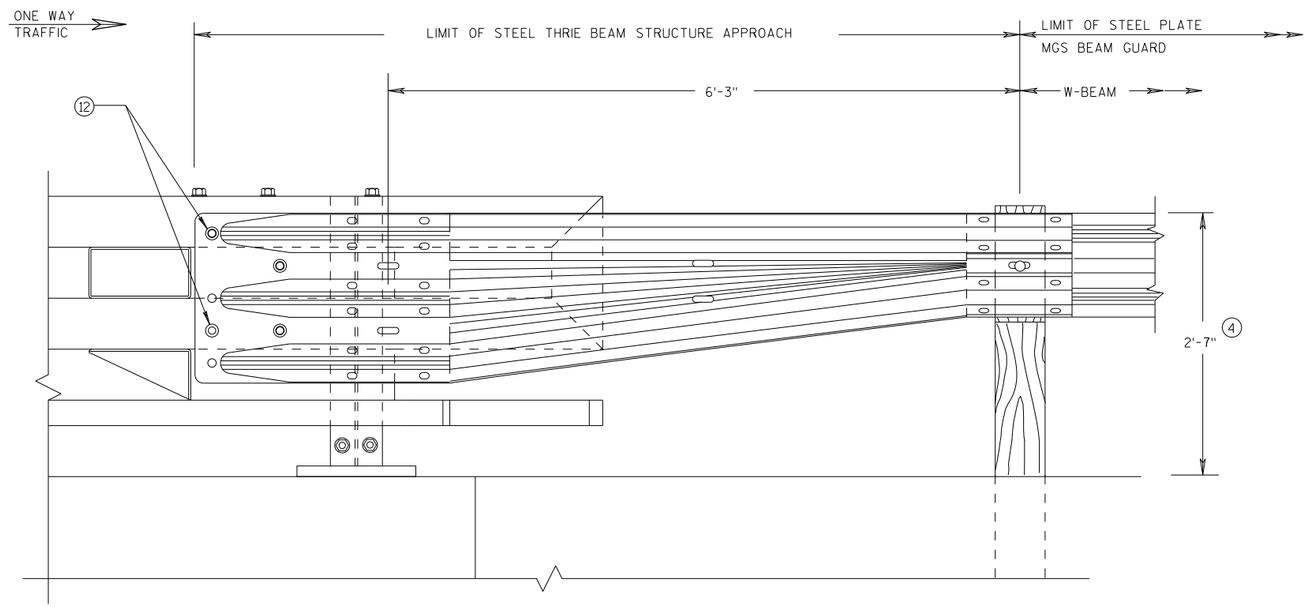

FRONT VIEW

W BEAM TRANSITION AND CONNECTION TO BRIDGE RAILING TYPE "NY3"

(USE ONLY ON THE TRAFFIC EXIT END OF ONE WAY BRIDGES)

GENERAL NOTES

(4) TOLERANCE FOR TOP OF BEAM IS ± 1".

(12) BOLTS MAY BE A325 BOLTS OR A449 BOLTS. BOLT LENGTH AND THREADING LENGTH ARE TO ALLOW FOR A TIGHT CONNECTION BETWEEN RIGID BARRIER AND THRIE BEAM CONNECTION PLATE. CONTRACTOR IS TO FIELD VERIFY BOLT LENGTH AND THREAD LENGTH. ONE ROUND WASHER REQUIRED BETWEEN BOLT HEAD AND THRIE BEAM CONNECTOR PLATE. ON BACKSIDE OF PARAPET ONE ROUND WASHER, AND NUT REQUIRED. BOLT THREAD IS TO EXTEND 1/2-INCH BEYOND NUT.

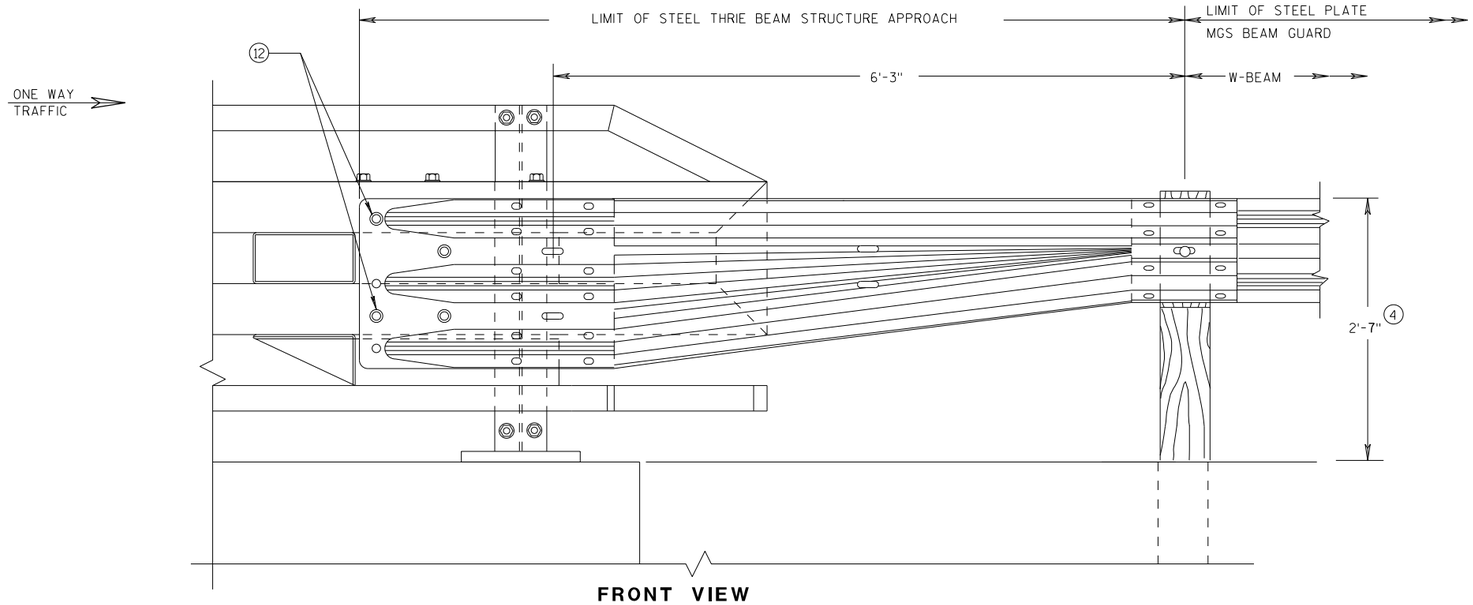

FRONT VIEW

W BEAM TRANSITION AND CONNECTION TO BRIDGE RAILING TYPE "NY4"

(USE ONLY ON THE TRAFFIC EXIT END OF ONE WAY BRIDGES)

MIDWEST GUARDRAIL SYSTEM
THRIE BEAM TRANSITION (MGS)

STATE OF WISCONSIN
DEPARTMENT OF TRANSPORTATION

APPROVED
7/2018 DATE
FHWA

/S/ Rodney Taylor
ROADWAY STANDARDS D UNIT SUPERVIS

NT

6

S.D.D. 14 B 45-5L

6

S.D.D. 14 B 45-5L

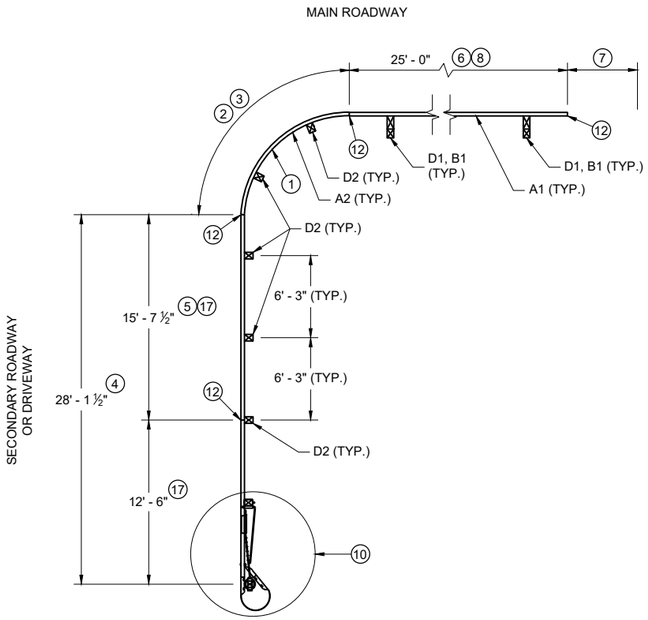

PLAN VIEW

SHORT RADIUS BEAM GUARD WITH SHORT RADIUS TERMINAL ON SECONDARY ROAD OR DRIVEWAY

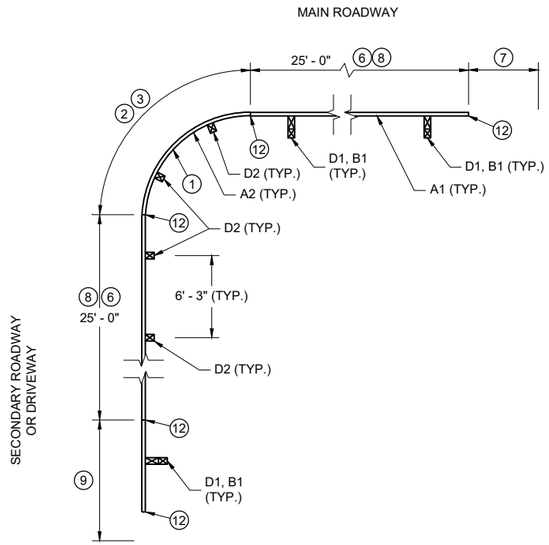

PLAN VIEW

SHORT RADIUS BEAM GUARD WITH EAT, ADDITIONAL BEAM GUARD OR TRANSITION TO RIGID BARRIER ON SECONDARY ROAD OR DRIVEWAY

TABLE FOR RADIUS OF 32' AND LESS

RADIUS (FT)	LENGTH (FT)	WIDTH (FT)
8	25	15
16	30	15
24	40	20
32	50	30

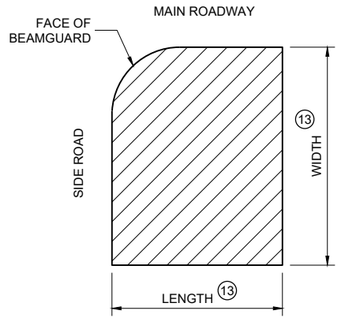

16

AREA FREE OF FIXED OBJECTS FOR RADIUS 32' AND LESS

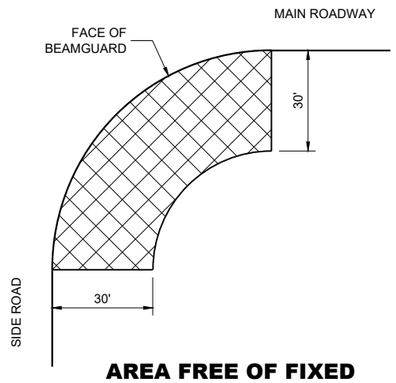

AREA FREE OF FIXED OBJECTS FOR RADIUS GREATER THAN 32'

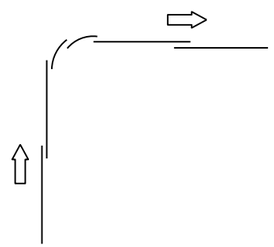

LAP SPLICE DETAIL

GENERAL NOTES

SEE PLANS FOR OTHER BARRIER SYSTEM AND LOCATION SPECIFICS.

SEE SDD 14B42 FOR MORE INFORMATION ON BEAM GUARD INSTALLATION, PARTS, MATERIALS, AND INSTALLATION INFORMATION.

GALVANIZE PARTS AFTER FABRICATION.

WELDING TO FOLLOW CURRENT REQUIREMENTS OF THE AMERICAN WELDING SOCIETY STRUCTURAL WELDING CODE ANSI / AWS D1.1.

UNLESS NOTED OTHERWISE, ALL PLATES ARE FLAT AND FREE OF WARP.

UNLESS NOTED OTHERWISE, ALL EDGES ARE SMOOTH, STRAIGHT AND VERTICAL.

ALL CUTS AND HOLES, EXCEPT IN BEAM GUARD RAIL ARE TO BE MACHINED OR MACHINE FLAME CUT.

UNLESS NOTED OTHERWISE, CUT OR PROVIDE BOLTS THAT ARE ¼" TO ½" BEYOND THE NUT.

DRAWINGS ARE NOT TO SCALE.

(1) RADIUS MEASURE FROM INSIDE OF RAIL. LENGTH OF BEAM GUARD SHORT RADIUS GUARD MEASURED ALONG TRAFFIC SIDE OF RAIL. RADIUS BETWEEN 8 FEET TO 150 FEET. SEE PLAN FOR REQUIRED RADIUS. BEAM GUARD RAIL IN RADIUS IS SHOP BENT. ODD RAIL LENGTH OR FIELD CUTS MAY BE REQUIRED.

(2) CONTROLLED RELEASE TERMINAL (CRT) POSTS ARE USED IN THE RADIUS. CONTROLLED RELEASE TERMINAL (CRT) POSTS ARE SPACED 6' - 3". SEE PLAN FOR NUMBER OF CONTROLLED RELEASE (CRT) POSTS.

(3) WITHIN RADIUS BEAM GUARD RAILS ARE NOT BOLTED TO POSTS. BEAM GUARD RAIL IS RESTED ON TOP OF LAG SCREW.

(4) MINIMUM LENGTH OF BEAM GUARD ALONG SIDE ROAD OR DRIVEWAY TO INSTALL SHORT RADIUS TERMINAL. BEAM GUARD IS PAID WITH BEAM GUARD ITEM.

(5) ODD LENGTH OF BEAM GUARD REQUIRED TO INSTALL SHORT RADIUS TERMINAL.

(6) MINIMUM AMOUNT OF BEAM GUARD TO BE INSTALLED PRIOR TO TRANSITION TO RIGID BARRIER. ADDITIONAL BEAM GUARD, OR EAT. BEAM GUARD PAID FOR WITH BEAM GUARD ITEM. SEE PLANS FOR MORE DETAIL.

(7) BEAM GUARD, EAT, OR TRANSITION TO RIGID BARRIER. SEE PLAN.

(8) TOP OF BEAM GUARD BY THE RADIUS IS 27". HEIGHT OF BEAM GUARD IS 31" BY TRANSITION TO RIGID BARRIER, ADDITIONAL BEAM GUARD OR EAT.

(9) ADDITIONAL BEAM GUARD, EAT OR TRANSITION TO RIGID BARRIER. BEAM GUARD SHOWN. SEE PLAN FOR DETAILS.

(10) SHORT RADIUS TERMINAL (SEE OTHER DETAILS).

(11) HEIGHT VARIES. SEE NOTE (8) AND (17).

(12) BEAM GUARD RAIL SPLICE LOCATION. SPLICE LOCATION REQUIRES PART F1 AND F2. SEE SDD 14B42 FOR DETAILS.

(13) SEE TABLE FOR VALUES.

(14) MAXIMUM HEIGHT FOR CENTER OF HOLE IS ¾ " ABOVE FINISHED GROUND ±1".

(15) DRILL POST $^{15}/_{64}$ " DIA. PILOT HOLE. DO NOT HAMMER LAG SCREW INTO POST.

(16) SMALL SIGNS ON BREAKAWAY HARDWARE ARE ACCEPTABLE.

(17) TOP OF RAIL HEIGHT IS 27" WHEN USING A SHORT RADIUS TERMINAL (CRT).

(18) INITIAL 1 NAIL AT EACH CORNER OF THE BLOCK TO CONNECT BLOCKS.

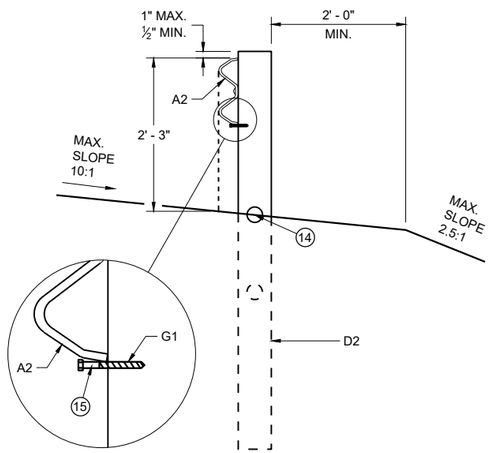

CONTROLLED RELEASE TERMINAL POST (CRT) IN RADIUS

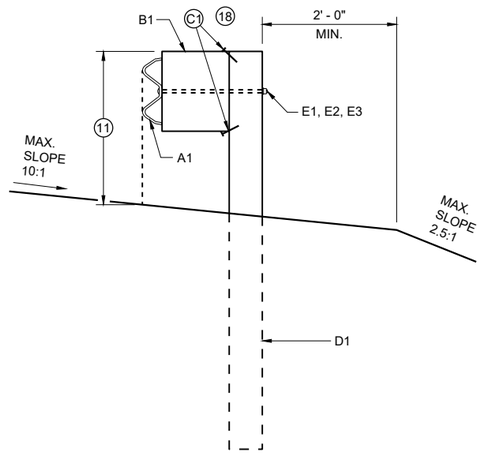

BEAM GUARD POSTS IN HEIGHT TRANSITION

SHORT RADIUS BEAM GUARD (MGS) SHORT RADIUS TERMINAL (MGS)

STATE OF WISCONSIN
DEPARTMENT OF TRANSPORTATION

6

SDD 14B53-04a

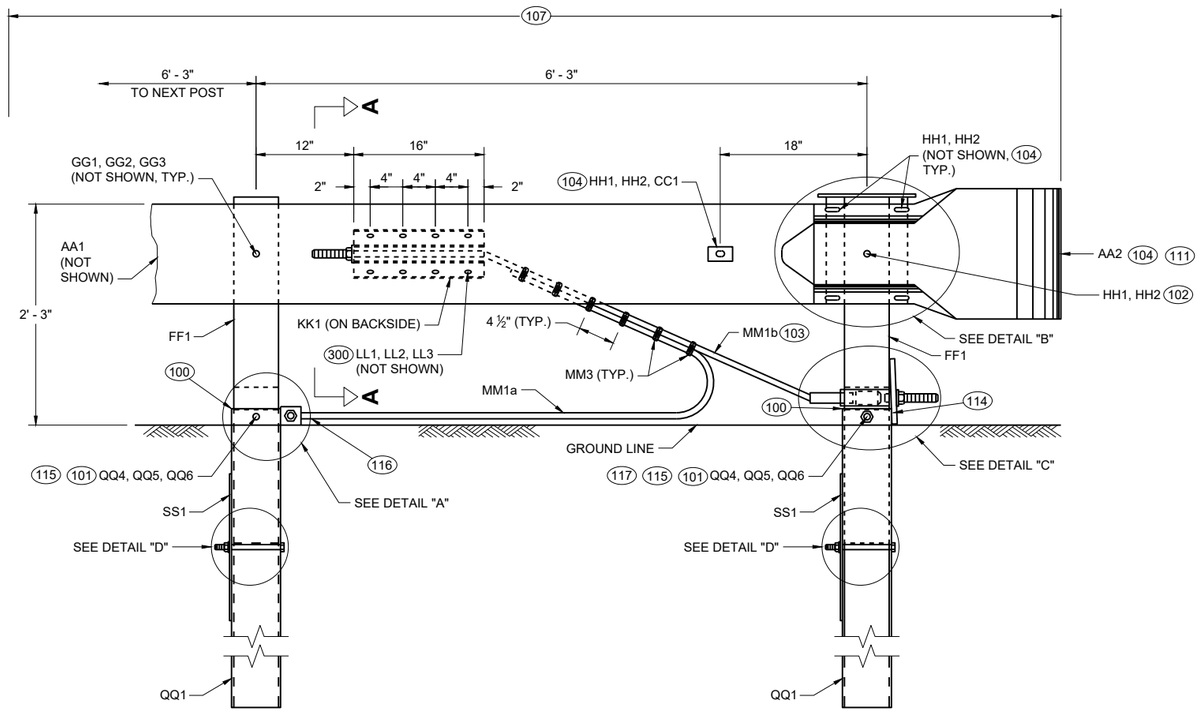

PROFILE VIEW

SHORT RADIUS TERMINAL

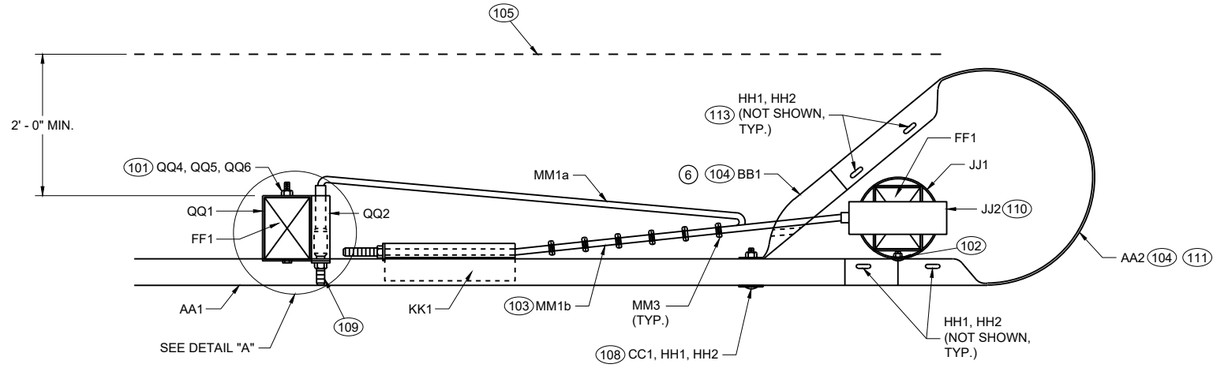

TOP VIEW

SHORT RADIUS TERMINAL

GENERAL NOTES

(100) TOP OF FOUNDATION TUBE 2 INCHES MAXIMUM ABOVE FINISHED GROUND.

(101) WASHERS REQUIRED BETWEEN BOLT HEAD AND FOUNDATION TUBE AND BETWEEN NUT AND FOUNDATION TUBE.

(102) SPLICE BOLT AND NUT CONNECTS BEAM GUARD RAIL, W-BEAM SECTION BUFFER, AND STEEL PIPE ASSEMBLY. NO WASHER REQUIRED. SEE DETAIL "B".

(103) CABLE IS TAUT.

(104) ADJUST AA2 AND BB1 TO FIT.

(105) BREAK POINT OF SHOULDER.

(106) TACK WELD CABLE CONNECTOR TUBE PLATE TO CABLE CONNECTION TUBE. SEE DETAIL "A" PROFILE VIEW.

(107) PAY LIMIT FOR BEAM GUARD.

(108) SQUARE WASHER BETWEEN HEAD OF BOLT AND TRAFFIC FACE OF BEAM GUARD. ROUND WASHER REQUIRED BETWEEN NUT AND BB1.

(109) CUT OR PROVIDE THREADED STUD THAT IS FLUSH WITH FACE OF BEAM GUARD RAIL KK1 (PLUS OR MINUS 1/2" TOLERANCE). DEBURR AFTER CUTTING.

(110) SEE STEEL PIPE ASSEMBLY DETAILS.

(111) ATTACH UU2 WITH UU3. SHOP APPLY UU1 TO UU2.

(112) FOUR (4) HH1 AND HH2 REQUIRED TO ATTACH AA1 TO AA2.

(113) FOUR (4) HH1 AND HH2 REQUIRED TO ATTACH AA2 TO BB1.

(114) NO MATERIAL IS TO BE PLACED AGAINST THE VERTICAL FACES OF BEARING PLATE.

(115) PREVENT OR REMOVE MATERIALS THAT BLOCK ACCESS TO BOLTS FOR POST AND SOIL TUBE.

(116) PREVENT OR REMOVE MATERIALS THAT BLOCK ACCESS TO BOLT. PLACE CABLE ON TOP OF MATERIAL.

(117) ONE WASHER BETWEEN BOLD HEAD AND FOUNDATION TUBE AND BETWEEN NUT AND FOUNDATION TUBE.

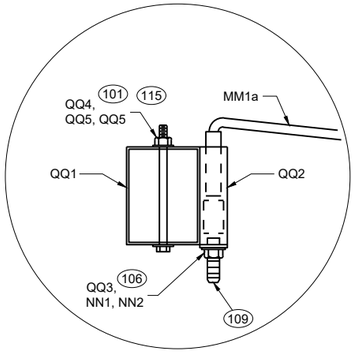

TOP VIEW

DETAIL "A"

(WOOD BREAKAWAY AND BEAM GUARD RAIL POSTS NOT SHOWN)

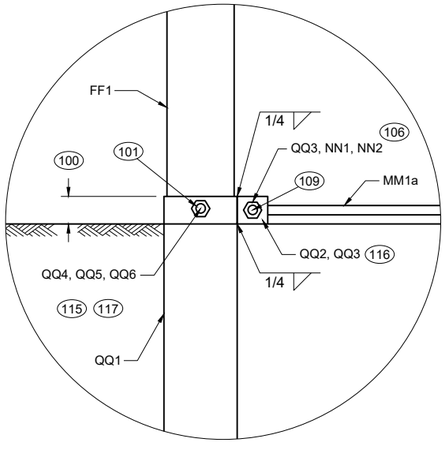

PROFILE VIEW

DETAIL "A"

SHORT RADIUS BEAM GUARD (MGS) SHORT RADIUS TERMINAL (MGS)

STATE OF WISCONSIN
DEPARTMENT OF TRANSPORTATION

6

SDD 14B53-04b

GENERAL NOTES

(200) TWO (2) NAILS SPACED 4 INCHES CENTER TO CENTER.

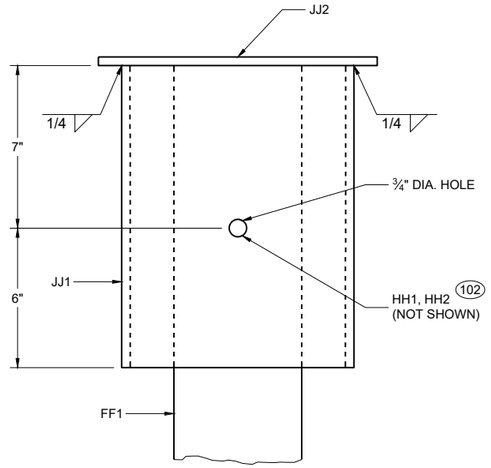

PROFILE VIEW

DETAIL "B"
STEEL PIPE ASSEMBLY
(BEAM GUARD AND W BEAM END SECTION NOT SHOWN)

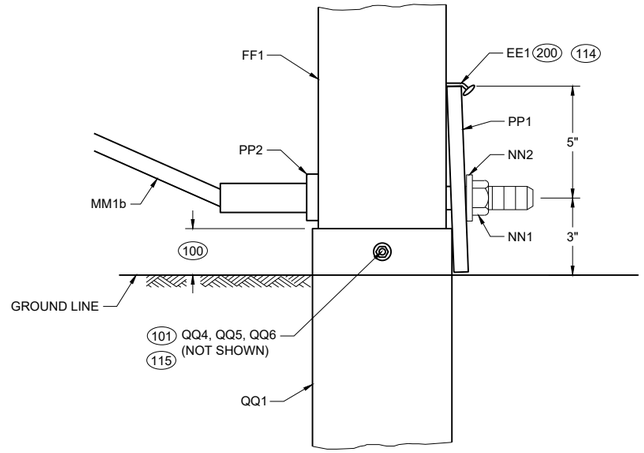

PROFILE VIEW

DETAIL "C"

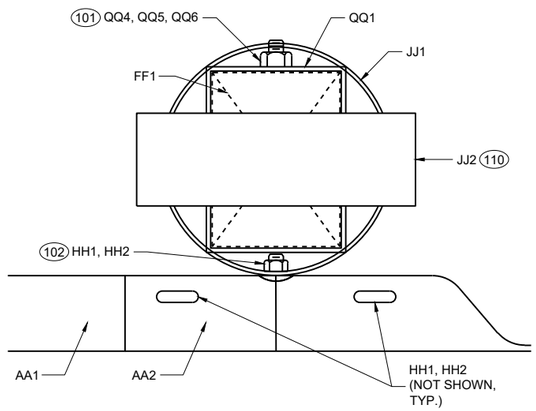

PLAN VIEW

DETAIL "B"
STEEL PIPE ASSEMBLY

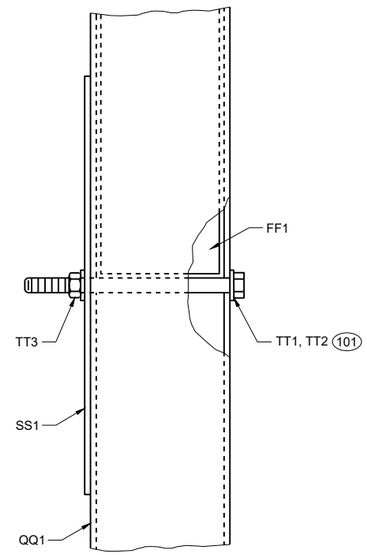

PROFILE VIEW

DETAIL "D"

SHORT RADIUS BEAM GUARD (MGS) SHORT RADIUS TERMINAL (MGS)

STATE OF WISCONSIN
DEPARTMENT OF TRANSPORTATION

6

SDD 14B53-04c

6

SDD 14B53-04c

GENERAL NOTES

(300) WASHERS REQUIRED BETWEEN BOLT HEAD AND BEAM GUARD RAIL AND BETWEEN NUT AND ANCHOR BRACKET. EIGHT (8) LL1 AND LL3 REQUIRED. SIXTEEN (16) LL2 REQUIRED.

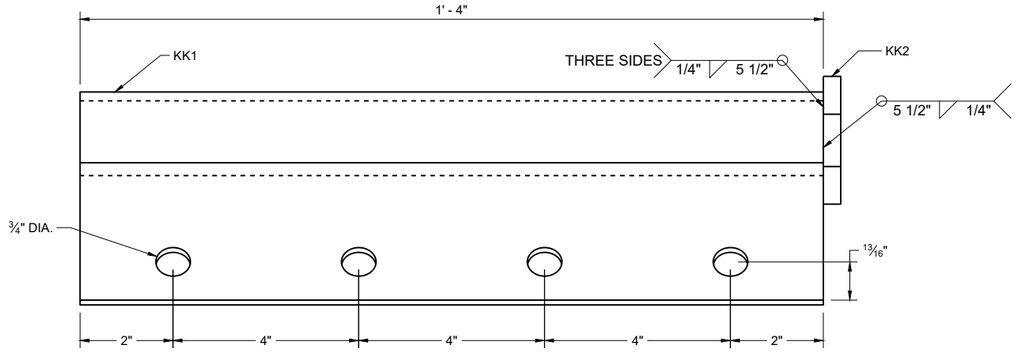

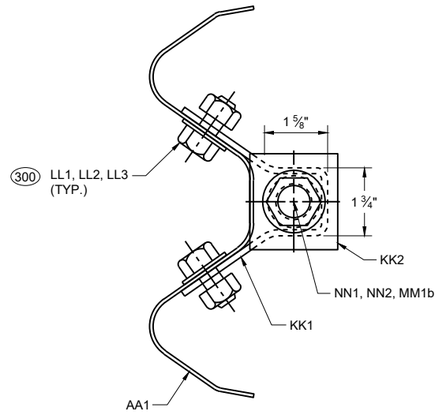

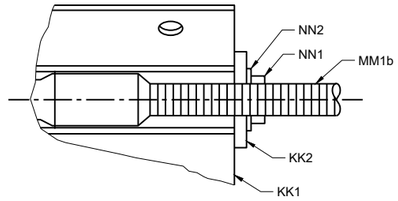

SECTION A - A

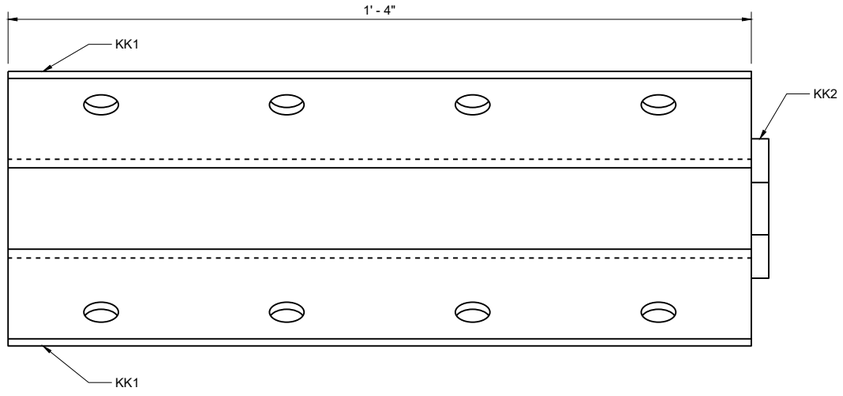

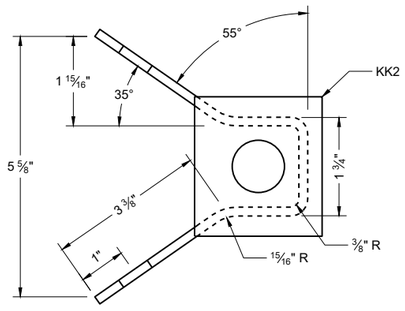

ANCHOR BRACKET (KK1, KK2)

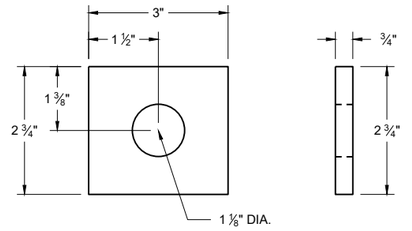

ANCHOR BRACKET BEARING PLATE (KK2)

SHORT RADIUS BEAM GUARD (MGS) SHORT RADIUS TERMINAL (MGS)

STATE OF WISCONSIN
DEPARTMENT OF TRANSPORTATION

6
SDD 14B53-04d

GENERAL NOTES

(400) CROSS SECTION OF PART IS TO FIT OVER AA1 .

(401) CROSS SECTION OF PART IS TO FIT OVER OR UNDER AA1 .

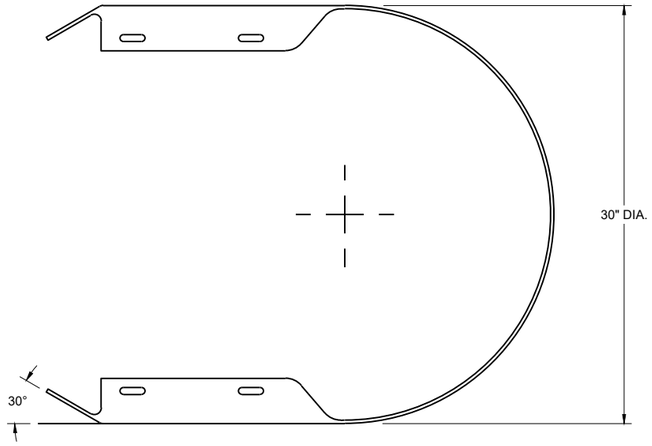

TOP VIEW

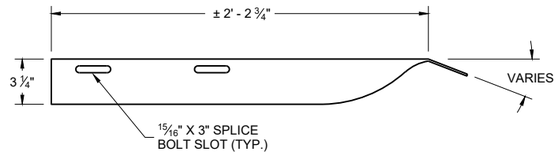

TOP VIEW

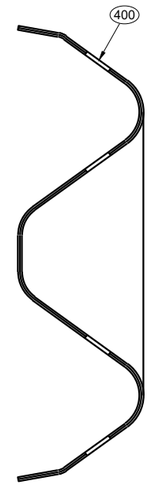

SECTION B -B

SECTION C -C

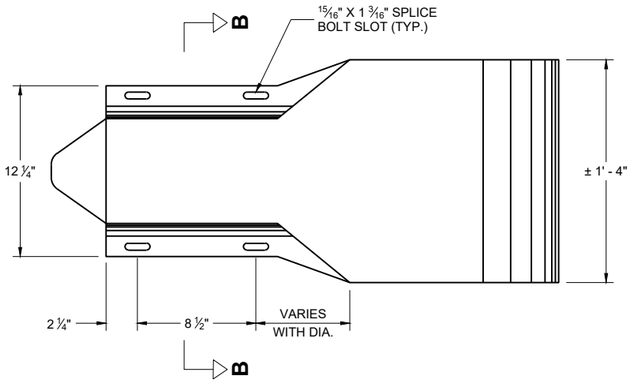

PROFILE VIEW

W BEAM
END SECTION BUFFER (AA2)

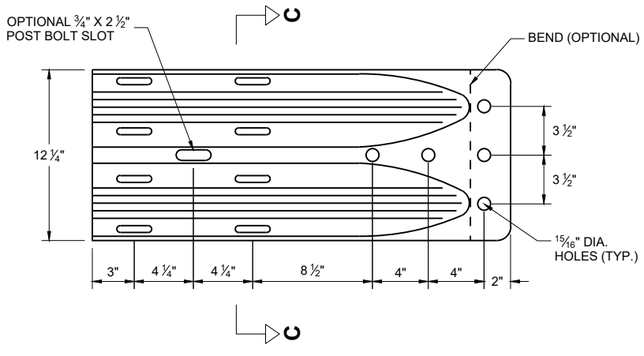

PROFILE VIEW

W BEAM
TERMINAL CONNECTOR (BB1)

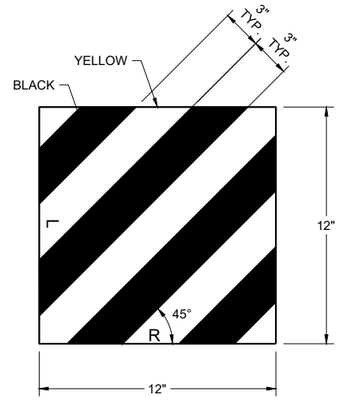

REFLECTIVE SHEETING (UU1, UU2)

SHORT RADIUS BEAM GUARD (MGS) SHORT RADIUS TERMINAL (MGS)

STATE OF WISCONSIN
DEPARTMENT OF TRANSPORTATION

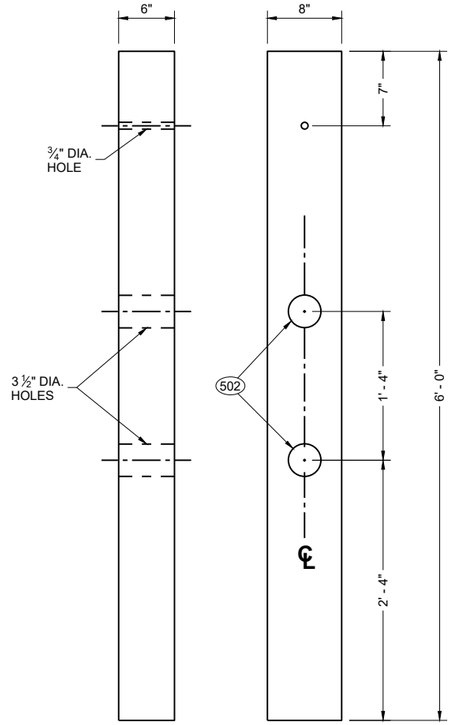

CONTROLLED RELEASE POST (CRT) (DD2)

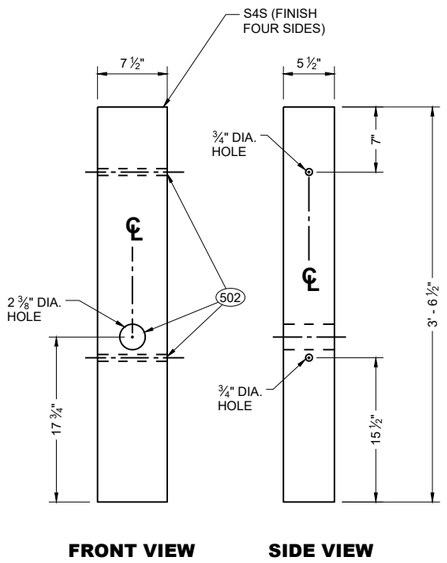

WOOD BREAKAWAY POST (FF1)

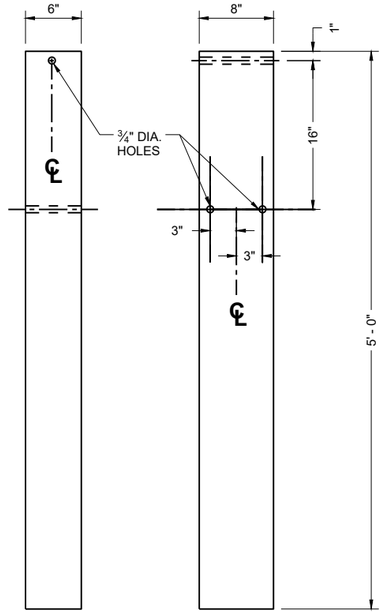

FOUNDATION TUBE (QQ1) (500)

GENERAL NOTES

(500) SEE DETAIL "D" FOR LOCATION AND ATTACHMENT OF SS1.

(501) FOR MM1a THREADED STUD ONLY REQUIRED ON ONE END. SWAGED FITTING REQUIRED.

(502) LOCATE HOLES ON THE CENTERLINE OF THE SIDE OF THE POST.

(503) MM1a MAY HAVE ONE THREADED STUD 4 INCHES LONG. SEE NOTE (109)

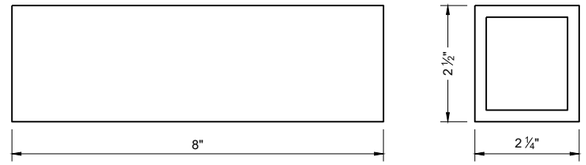

FOUNDATION TUBE - ANCHOR CABLE TUBE (QQ2)

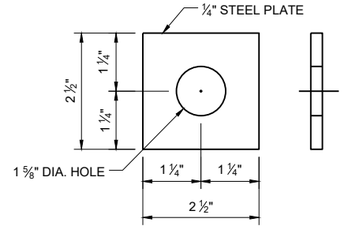

ANCHOR CABLE TUBE END PLATE (QQ3)

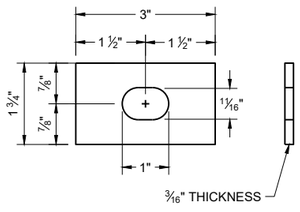

RECTANGULAR PLATE WASHER (CC1)

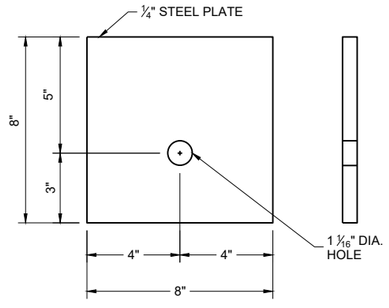

BEARING PLATE (PP1)

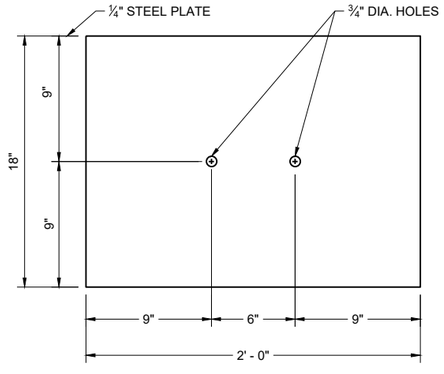

SOIL PLATE (SS1)

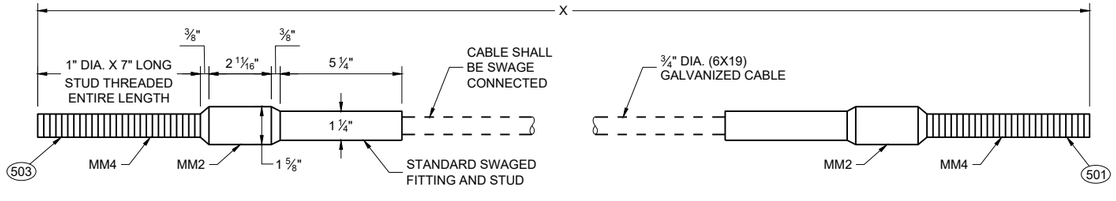

CABLE ASSEMBLY (MM1a, MM1b)

"X" LENGTH

MM1b	9' - 0"
MM1b	6' - 8"

SHORT RADIUS BEAM GUARD (MGS) SHORT RADIUS TERMINAL (MGS)

STATE OF WISCONSIN
DEPARTMENT OF TRANSPORTATION

6
SDD 14B53-04f

BILL OF MATERIALS - SHORT RADIUS BEAM GUARD (MGS)

PART	DESCRIPTION	MATERIALS SPECIFICATIONS	NOTES
A1	BEAM GUARD RAIL	AASHTO M180, CLASS A, TYPE 2	
		APPROVED PRODUCER	
A2	BEAM GUARD RAIL - SHOP BENT	INDICATE ON BACK OF RAIL THE RADIUS THAT RAIL WAS BENT TO. SHOP BEND RADIUS IS TO THE NEAREST FOOT. FOLLOW AASHTO M180 ON HOW TO MARK RADIUS INFORMATION.	
		AASHTO M180, CLASS A, TYPE 2	
		APPROVED PRODUCER	
B1	BLOCK - WOOD	WISDOT SPEC. 614	SEE SDD 14B42
C1	NAIL	ASTM A153 HOT DIP CLASS D	
		ASTM F1667 TYPE 1 STYLE 12 (16 DOUBLE HEAD)	
D1	POST-STRONG POST-WOOD	WISDOT SPEC. 614	SEE SDD 14B42
D2	POST-CRT-WOOD	WISDOT SPEC. 614	
E1	POST BOLT	ASTM A307 GRADE A OR SAE J429 GRADE 2	5/8" DIA. SEE SDD 14B42 FOR BOLT GEOMETRY
		AASHTO M180	
		GALV. HOT DIP TO AASHTO M232 CLASS C / ASTM A153 CLASS C / ASTM F2329 OR GALV. MECHANICALLY TO AASHTO M298 CLASS 50, TYPE 1 / ASTM B695 CLASS 50, TYPE 1	
		UNC	
E2	POST BOLT - WASHER	ASTM F436 TYPE 1 (HARDEN TYPICALLY USED WITH STEEL) OR ASTM F844 (UNHARDENED TYPICALLY WITH WOOD)	5/8" DIA.
		GALV. AASHTO M111 / ASTM A 123 OR GALV. HOT DIP. TO AASHTO M232 CLASS C / ASTM A153 CLASS C / ASTM F2329	
E3	POST BOLT - NUT	AASHTO M180 DOUBLE RECESSED HEAVY HEX HEAD	5/8" DIA. SEE SDD 14B42 FOR BOLT GEOMETRY
		GALV. HOT DIP TO AASHTO M232 CLASS C / ASTM A153 CLASS C / ASTM F2329 OR GALV. MECHANICALLY TO AASHTO M298 CLASS 50, TYPE 1 / ASTM B695 CLASS 50, TYPE 1	
		UNC	
		OVER TAPPED NUTS OVER-SIZE AS SPECIFIED IN AASHTO 291 / ASTM A 563	
		ASTM A563 GRADE A HEAVY HEX HEAD	
F1	SPLICE BOLT	GALV. HOT DIP TO AASHTO M232 CLASS C / ASTM A153 CLASS C / ASTM F2329 OR GALV. MECHANICALLY TO AASHTO M298 CLASS 50, TYPE 1 / ASTM B695 CLASS 50, TYPE 1	5/8" DIA. SEE SDD 14B42 FOR BOLT GEOMETRY
		ASTM A307 GRADE A OR SAE J429 GRADE 2	
		UNC	
		AASHTO M180	

PART	DESCRIPTION	MATERIALS SPECIFICATIONS	NOTES
F2	SPLICE BOLT - NUT	ASTM A563 GRADE A	5/8" DIA. SEE SDD 14B42 FOR BOLT GEOMETRY
		AASHTO M180 DOUBLE RECESSED HEAVY HEX HEAD	
		GALV. HOT DIP TO AASHTO M232 CLASS C/ASTM A153 CLASS C/ASTM F2329 OR GALV. MECHANICALLY TO AASHTO M298 CLASS 50, TYPE 1/ASTM B695 CLASS 50, TYPE 1	
		OVER TAPPED NUTS OVER-SIZE AS SPECIFIED IN AASHTO 291 / ASTM A 563	
		UNC	
G1	LAG SCREW	ASTM A308 GRADE A ASTM A153 CLASS D	1/2" DIA. 6" LONG
H1	DELINEATOR - BEAM GUARD		SEE SDD 14B42 FOR MORE INFORMATION
H2	DELINEATION - SHEETING	YELLOW OR WHITE	
		WISDOT SPEC 637 TYPE SH	
		APPROVED PRODUCT LIST	
J1	FOUNDATION BACKFILL	STANDARD SPEC. 614	
AA1	BEAM GUARD RAIL - PUNCHED	AASHTO M180, CLASS A, TYPE 2	
		APPROVED PRODUCER	
AA2	BEAM GUARD RAIL - END SECTION BUFFER	AASHTO M180, CLASS A, TYPE 2	
		APPROVED PRODUCER	
BB1	BEAM GUARD RAIL - TERMINAL CONNECTOR MODIFIED	AASHTO M180, CLASS A, TYPE 2	
		APPROVED PRODUCER	
CC1	SHORT RADIUS - SQUARE WASHER	AASHTO M180	
		GALV. AASHTO M111 / ASTM A123	
EE1	NAIL	ASTM A153 HOT DIP CLASS D	
		ASTM F1667 TYPE 1 STYLE 12 (16 DOUBLE HEADED)	
FF1	POST - BCT - WOOD	S4S FINISH ON 4 SIDES	
		WISDOT SPEC. 614	
GG1	POST BOLT	ASTM A307 GRADE A OR SAE J429 GRADE 2	3/8" DIA. SEE SDD 14B42 FOR BOLT GEOMETRY
		AASHTO M180	
		GALV. HOT DIP TO AASHTO M232 CLASS C/ASTM A153 CLASS C/ASTM F2329 OR GALV. MECHANICALLY TO AASHTO M298 CLASS 50, TYPE 1/ASTM B695 CLASS 50, TYPE 1	
		UNC	
GG2	POST BOLT - WASHER	ASTM F436 TYPE 1 (HARDEN TYPICALLY USED WITH STEEL) OR ASTM F844 (UNHARDENED TYPICALLY WITH WOOD)	3/8" DIA.
		GALV. AASHTO M111 / ASTM A 123 OR GALV. HOT DIP. TO AASHTO M232 CLASS C/ASTM A153 CLASS C / ASTM F2329	

SHORT RADIUS BEAM GUARD (MGS) SHORT RADIUS TERMINAL (MGS)

STATE OF WISCONSIN
DEPARTMENT OF TRANSPORTATION

6

SDD 14B53-04g

BILL OF MATERIALS - SHORT RADIUS BEAM GUARD (MGS)

PART	DESCRIPTION	MATERIALS SPECIFICATIONS	NOTES
GG3	POST BOLT - NUT	ASTM A563 GRADE A	3/8" DIA. SEE 14B42 FOR GEOMETRY
		AASHTO M180 DOUBLE RECESSED HEAVY HEX HEAD	
		GALV. HOT DIP TO AASHTO M232 CLASS C / ASTM A153 CLASS C / ASTM F2329 OR GALV. MECHANICALLY TO AASHTO M298 CLASS 50, TYPE 1 / ASTM B695 CLASS 50, TYPE 1	
		UNC	
		OVER TAPPED NUTS OVER-SIZE AS SPECIFIED IN AASHTO 291 / ASTM A 563	
		ASTM A563 GRADE A HEAVY HEX HEAD	
HH1	SPLICE BOLT	GALV. HOT DIP TO AASHTO M232 CLASS C / ASTM A153 CLASS C / ASTM F2329 OR GALV. MECHANICALLY TO AASHTO M298 CLASS 50, TYPE 1 / ASTM B695 CLASS 50, TYPE 1	3/8" DIA. SEE SDD 14B42 FOR BOLT GEOMETRY
		ASTM A307 GRADE A OR SAE J429 GRADE 2	
		UNC	
		AASHTO M180 HEAD GEOMETRY	
HH2	SPLICE BOLT - NUT	ASTM A563 GRADE A	3/8" DIA. SEE SDD 14B42 FOR BOLT GEOMETRY
		AASHTO M180 DOUBLE RECESSED HEAVY HEX HEAD	
		GALV. HOT DIP TO AASHTO M232 CLASS C / ASTM A153 CLASS C / ASTM F2329 OR GALV. MECHANICALLY TO AASHTO M298 CLASS 50, TYPE 1 / ASTM B695 CLASS 50, TYPE 1	
		OVER TAPPED NUTS OVER-SIZE AS SPECIFIED IN AASHTO 291 / ASTM A 563	
		UNC	
JJ1	PIPE - STEEL	ASTM A53 GALVANIZED GRADE B SCHEDULE 40	10" O.D.
JJ2	TOP PLATE	ASTM A36 MIN. STRENGTH 36 KSI, OR ASTM A529 MAX. STRENGTH 50 KSI, OR ASTM A572 MAX STRENGTH 50 KSI OR ASTM A709 MAX STRENGTH 50 KSI OR ASTM A992 MAX STRENGTH 50 KSI	DIMENSIONS 3/8" X 4" X 1' - 0"
		GALV. AASHTO M111 / ASTM A123	
KK1	ANCHOR BRACKET	ASTM A36 MIN. STRENGTH 36 KSI, OR ASTM A529 MAX. STRENGTH 50 KSI, OR ASTM A572 MAX STRENGTH 50 KSI OR ASTM A709 MAX STRENGTH 50 KSI OR ASTM A992 MAX STRENGTH 50 KSI	
		GALV. AASHTO M111 / ASTM A123	
KK2	ANCHOR BRACKET - BEARING PLATE	ASTM A36 MIN. STRENGTH 36 KSI, OR ASTM A529 MAX. STRENGTH 50 KSI, OR ASTM A572 MAX STRENGTH 50 KSI OR ASTM A709 MAX STRENGTH 50 KSI OR ASTM A992 MAX STRENGTH 50 KSI	
		GALV. AASHTO M111 / ASTM A123	
LL1	ANCHOR BRACKET - BOLT	ASTM A307 GRADE B HEAVY HEX HEAD OR SAE J429 GRADE 2 HEAVY HEX HEAD	5/8" DIA.
		GALV. HOT DIP TO AASHTO M232 CLASS C / ASTM A153 CLASS C / ASTM F2329 OR GALV. MECHANICALLY TO AASHTO M298 CLASS 50, TYPE 1 / ASTM B695 CLASS 50, TYPE 1	
		UNC	

PART	DESCRIPTION	MATERIALS SPECIFICATIONS	NOTES
LL2	ANCHOR BRACKET - WASHER	ASTM F436 TYPE 1 (HARDEN WASHER ONLY)	5/8" DIA.
		GALV. AASHTO M111 / ASTM A123 OR GALV. HOT DIP TO AASHTO M232 CLASS C / ASTM A153 CLASS C / ASTM F2329	
LL3	ANCHOR BRACKET - NUT	ASTM A563 GRADE A	5/8" DIA.
		GALV. HOT DIP TO AASHTO M232 CLASS C / ASTM A153 CLASS C / ASTM F2329 OR GALV. MECHANICALLY TO AASHTO M298 CLASS 50, TYPE 1 / ASTM B695 CLASS 50, TYPE 1	
		OVER TAPPED NUTS OVER-SIZE AS SPECIFIED IN AASHTO 291 / ASTM A 563	
		UNC	
MM1a	ANCHOR CABLE	AASHTO M30 / ASTM A741 INDEPENDENT WIRE CORE (IWRC) OR WIRE STRAND CORE (WCS), IMPROVED PLOW STEEL (IPS), 6X19, TYPE II OR IIc CLASS C ZINC COATED	
MM1b	ANCHOR CABLE	AASHTO M30 / ASTM A741 INDEPENDENT WIRE CORE (IWRC) OR WIRE STRAND CORE (WCS), IMPROVED PLOW STEEL (IPS), 6X19, TYPE II OR IIc CLASS C ZINC COATED	
MM2	ANCHOR CABLE - SWAGE FITTING	ASTM A576 GRADE 1035	
		SWAGE FITTINGS ARE TO BE FACTORY SWEDGED. WITH A BREAKING STRENGTH 40,000 LBS.	
		GALV. AASHTO M111 / ASTM A123	
		ASME B30.26 FORGED, CAST, OR DIE STAMPED WITH THE FOLLOWING INTO CONNECTION: NAME OF MANUFACTURER OR TRADEMARK OF CONNECTION'S MANUFACTURER, SIZE OR RATED LOAD, GRADE.	
MM3	WIRE ROPE CABLE CLAMPS	FF-C-450D TYPE 1 CLASS 1	3/4"
		ASTM A153 HOT DIP CLASS D	
MM4	ANCHOR CABLE - SWAGE FITTING - STUD	ASTM F3125 GRADE A325 TYPE 1 OR SAE GRADE 5 OR ASTM A449 TYPE 1 HEAVY HEX HEAD	
		GALV. HOT DIP TO AASHTO M232 CLASS C / ASTM A153 CLASS C / ASTM F2329 OR GALV. MECHANICALLY TO AASHTO M298 CLASS 50, TYPE 1 / ASTM B695 CLASS 50, TYPE 1	
		UNC	
NN1	ANCHOR CABLE - NUT	ASTM A563 GRADE A	1" DIA.
		AASHTO M180 DOUBLE RECESSED HEAVY HEX HEAD	
		GALV. HOT DIP TO AASHTO M232 CLASS C / ASTM A153 CLASS C / ASTM F2329 OR GALV. MECHANICALLY TO AASHTO M298 CLASS 50, TYPE 1 / ASTM B695 CLASS 50, TYPE 1	
		OVER TAPPED NUTS OVER-SIZE AS SPECIFIED IN AASHTO 291 / ASTM A 563	
		UNC	
NN2	ANCHOR CABLE - NUT - WASHER	ASTM F436 TYPE 1 (HARDEN WASHER ONLY)	1" DIA.
		GALV. AASHTO M111 / ASTM A123 OR GALV. HOT DIP TO AASHTO M232 CLASS C / ASTM A153 CLASS C / ASTM F2329	

SHORT RADIUS BEAM GUARD (MGS) SHORT RADIUS TERMINAL (MGS)

STATE OF WISCONSIN
DEPARTMENT OF TRANSPORTATION

6

SDD 14B53-04h

BILL OF MATERIALS - SHORT RADIUS BEAM GUARD (MGS)

PART	DESCRIPTION	MATERIALS SPECIFICATIONS	NOTES
PP1	BEARING PLATE AT POST	ASTM A36 MIN. STRENGTH 36 KSI, OR ASTM A529 MAX. STRENGTH 50 KSI, OR ASTM A572 MAX STRENGTH 50 KSI OR ASTM A709 MAX STRENGTH 50 KSI OR ASTM A992 MAX STRENGTH 50 KSI	
		GALV. AASHTO M111 / ASTM A123	
PP2	PIPE - STEEL	ASTM A53 GALVANIZED GRADE B SCHEDULE 40	2" DIA. x 6" LONG
QQ1	FOUNDATION TUBE	ASTM A500 GRADE B	8" X 6" X 3/16"
		GALV. AASHTO M111 / ASTM A123	
QQ2	SHORT RADIUS - FOUNDATION TUBE - ANCHOR CABLE - TUBE	ASTM A500 GRADE B	DIMENSIONS 2 1/2" X 2 1/4" X 1/4" X 8"
		GALV. AASHTO M111 / ASTM A123	
QQ3	SHORT RADIUS - SOIL TUBE - ANCHOR CABLE - TUBE - END PLATE	ASTM A36 MIN. STRENGTH 36 KSI, OR ASTM A529 MAX. STRENGTH 50 KSI, OR ASTM A572 MAX STRENGTH 50 KSI OR ASTM A709 MAX STRENGTH 50 KSI OR ASTM A992 MAX STRENGTH 50 KSI	DIMENSIONS 2 1/2" X 2 1/2" X 1/4"
		GALV. AASHTO M111 / ASTM A123	
QQ4	GROUND STRUT AND YOKE - BOLT	GALV. HOT DIP TO AASHTO M232 CLASS C / ASTM A153 CLASS C / ASTM F2329 OR GALV. MECHANICALLY TO AASHTO M298 CLASS 50, TYPE 1 / ASTM B695 CLASS 50, TYPE 1	5/8 DIA.
		ASTM A307 GRADE B HEAVY HEX HEAD OR SAE J429 GRADE 2 HEAVY HEX HEAD	
		UNC	
QQ5	GROUND PLATE AND YOKE - WASHER	ASTM F436 TYPE 1 (HARDEN WASHER ONLY)	5/8 DIA.
		GALV. AASHTO M111 / ASTM A123 OR GALV. HOT DIP TO AASHTO M232 CLASS C / ASTM A153 CLASS C / ASTM F2329	
QQ6	GROUND STRUT AND YOKE - NUT	HEAVY HEX	5/8 DIA.
		UNC	
		ASTM A563 GRADE A	
		OVER TAPPED NUTS AS SPECIFIED IN AASHTO 291 / ASTM A 563	
		GALV. HOT DIP TO AASHTO M232 CLASS C / ASTM A153 CLASS C / ASTM F2329 OR GALV. MECHANICALLY TO AASHTO M298 CLASS 50, TYPE 1 / ASTM B695 CLASS 50, TYPE 1	

PART	DESCRIPTION	MATERIALS SPECIFICATIONS	NOTES
SS1	SOIL PLATE	ASTM A36 MIN. STRENGTH 36 KSI, OR ASTM A529 MAX. STRENGTH 50 KSI, OR ASTM A572 MAX STRENGTH 50 KSI OR ASTM A709 MAX STRENGTH 50 KSI OR ASTM A992 MAX STRENGTH 50 KSI	
		GALV. AASHTO M111 / A123	
TT1	SOIL PLATE - BOLT	ASTM A307 GRADE B HEAVY HEX HEAD OR SAE J429 GRADE 2 HEAVY HEX HEAD	5/8 DIA.
		GALV. HOT DIP TO AASHTO M232 CLASS C / ASTM A153 CLASS C / ASTM F2329 OR GALV. MECHANICALLY TO AASHTO M298 CLASS 50, TYPE 1 / ASTM B695 CLASS 50, TYPE 1	
		UNC	
TT2	SOIL PLATE - WASHER	ASTM F436 TYPE 1 (HARDEN WASHER ONLY)	5/8 DIA.
		GALV. AASHTO M111 / ASTM A123 OR GALV. HOT DIP TO AASHTO M232 CLASS C / ASTM A153 CLASS C / ASTM F2329	
TT3	SOIL PLATE - NUT	GALV. HOT DIP TO AASHTO M232 CLASS C / ASTM A153 CLASS C / ASTM F2329 OR GALV. MECHANICALLY TO AASHTO M298 CLASS 50, TYPE 1 / ASTM B695 CLASS 50, TYPE 1	5/8 DIA.
UU1	OBJECT MARKER - SHEETING	MUTCD / WISDOT OBJECT MARKER TYPE 3	PATTERN AND COLOR FOR SHEETING. SHEETING TYPE FOR MARKER.
		WISDOT SPEC 637 TYPE F	
		APPROVED PRODUCT LIST	
UU2	OBJECT MARKER - ALUMINUM PLATE	WISDOT SPEC 637 ALUMINUM PLATE	MATERIAL AND THICKNESS OF MATERIALS
UU3	OBJECT MARKER - SCREWS	STAINLESS SELF-TAPPING SCREWS	
VV1	FOUNDATION BACKFILL	WISDOT SPEC 614	

SHORT RADIUS BEAM GUARD (MGS) SHORT RADIUS TERMINAL (MGS)

STATE OF WISCONSIN
DEPARTMENT OF TRANSPORTATION

APPROVED
December 2024 — DATE
/S/ Rodney Taylor — ROADWAY STANDARDS DEVELOPMENT ENGINEER

FHWA

6

SDD 14B53-04i

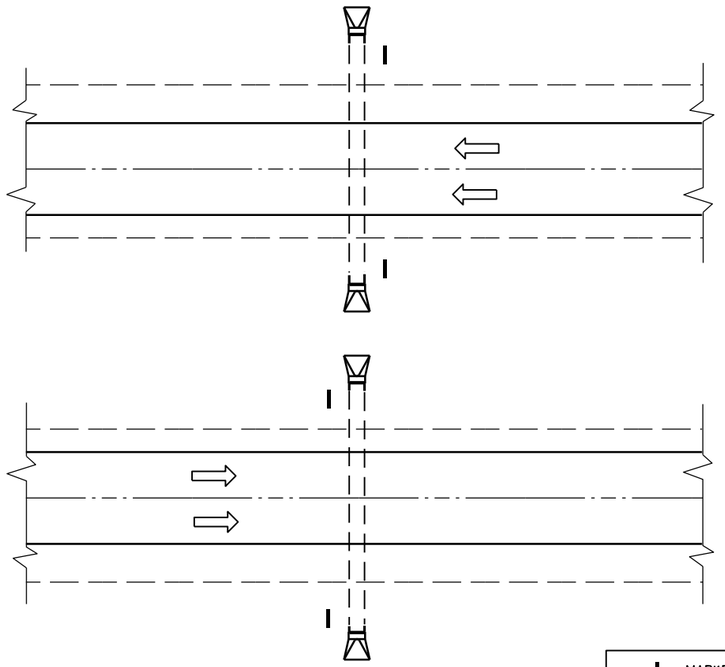

PLAN VIEW

DIVIDED HIGHWAY

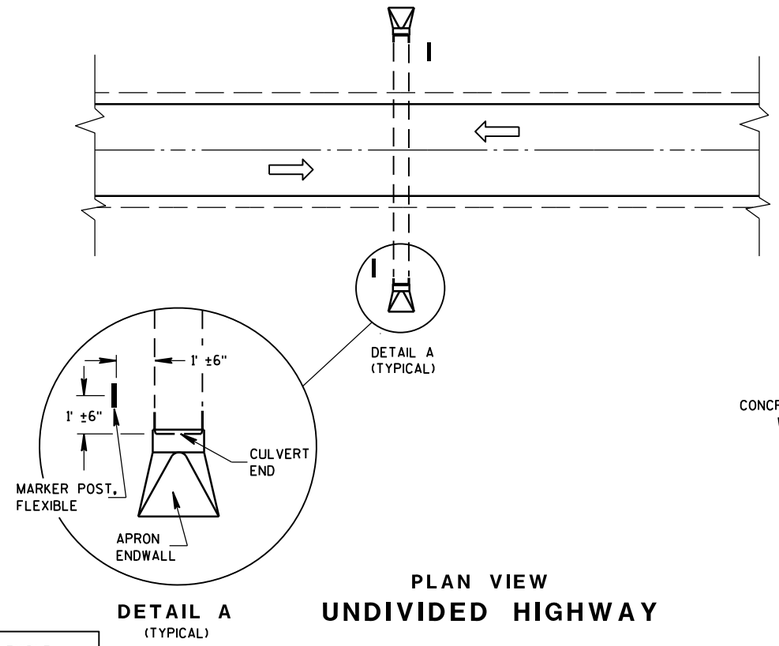

DETAIL A
(TYPICAL)

PLAN VIEW

UNDIVIDED HIGHWAY

MARKER POST, FLEXIBLE

DIRECTION OF TRAFFIC FLOW

GENERAL NOTES

DETAILS OF CONSTRUCTION, MATERIALS AND WORKMANSHIP NOT SHOWN ON THIS DRAWING SHALL CONFORM TO THE PERTINENT REQUIREMENTS OF THE STANDARD SPECIFICATIONS AND THE APPLICABLE SPECIAL PROVISIONS.

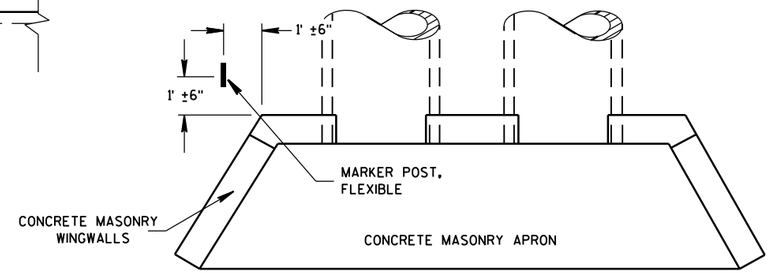

PLAN VIEW

CONCRETE MASONRY ENDWALLS FOR CULVERT PIPE AND PIPE ARCH

FLEXIBLE MARKER POST LOCATION

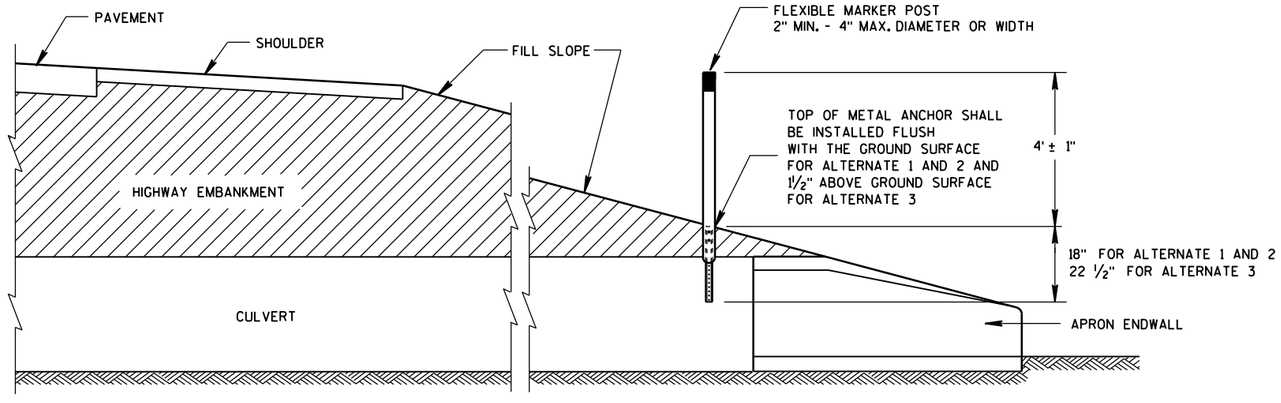

CROSS SECTION

FLEXIBLE MARKER POST

FLEXIBLE MARKER POST FOR CULVERT END

STATE OF WISCONSIN
DEPARTMENT OF TRANSPOI

6

S.D.D. 15 A 3-2a

6

S.D.D. 15 A 3-2a

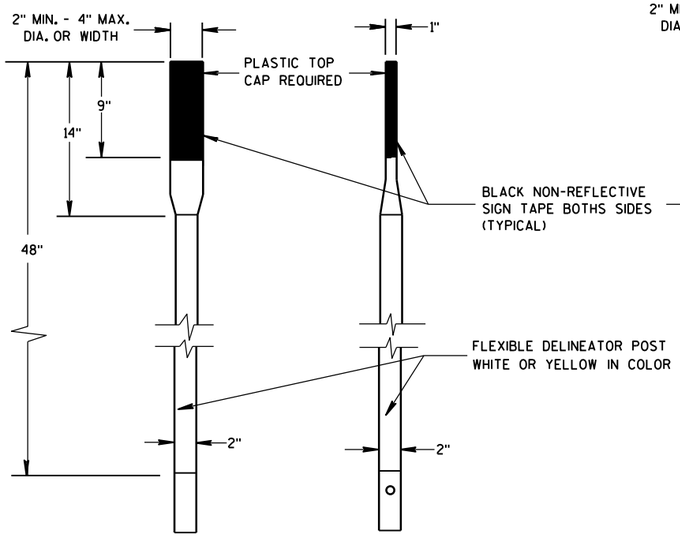

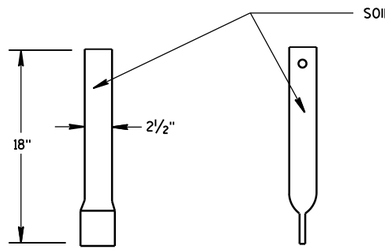

FRONT VIEW SIDE VIEW

ALTERNATE 1

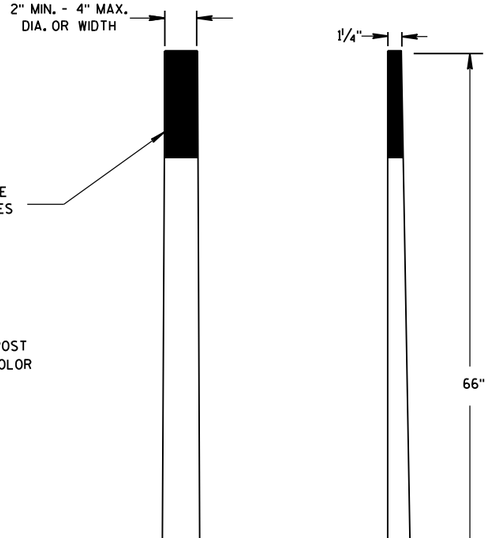

FRONT VIEW SIDE VIEW

ALTERNATE 2

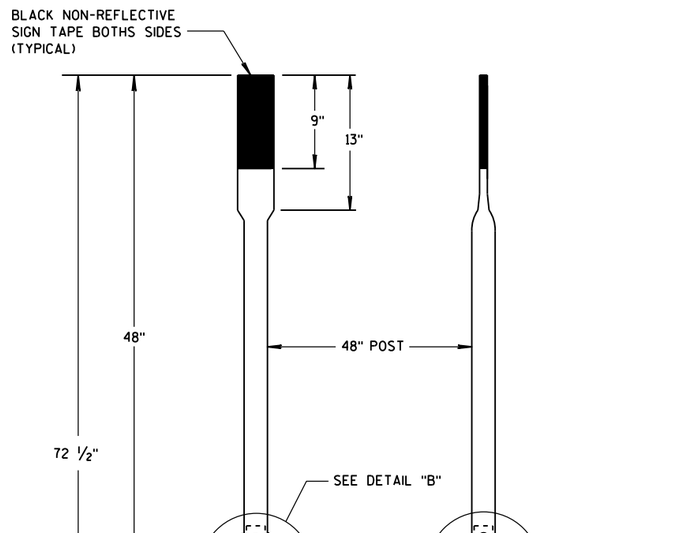

FRONT VIEW SIDE VIEW

ALTERNATE 3

FLEXIBLE MARKER POSTS

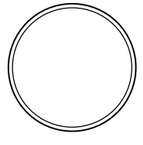

SECTION A-A

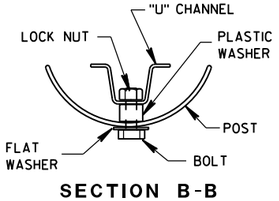

SECTION B-B

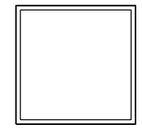

SECTION C-C

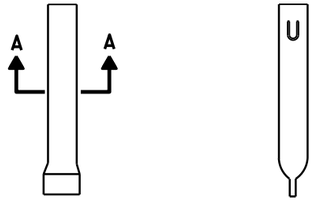

FRONT VIEW SIDE VIEW

ALTERNATE 1

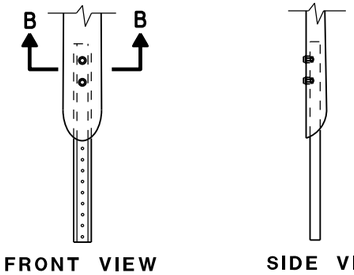

FRONT VIEW SIDE VIEW

ALTERNATE 2

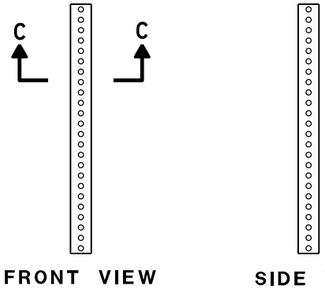

FRONT VIEW SIDE VIEW

ALTERNATE 3

FLEXIBLE MARKER POST ANCHORS

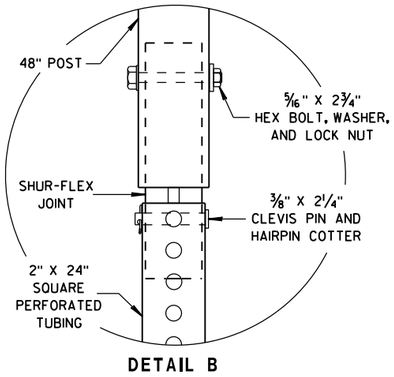

DETAIL B

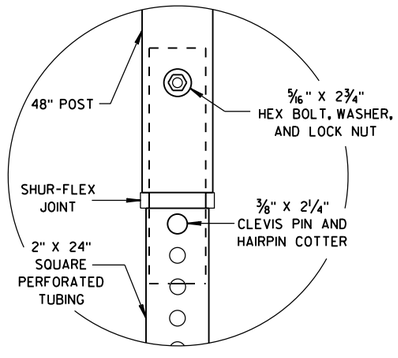

DETAIL C

FLEXIBLE MARKER POST
FOR CULVERT END

STATE OF WISCONSIN
DEPARTMENT OF TRANSPORTATION

APPROVED
10/1/2012 — DATE
/S/ Travis Feltes — STATE TRAFFIC ENGINEER
FHWA

6

S.D.D. 15 A 3-2b

6

S.D.D. 15 A 3-2b

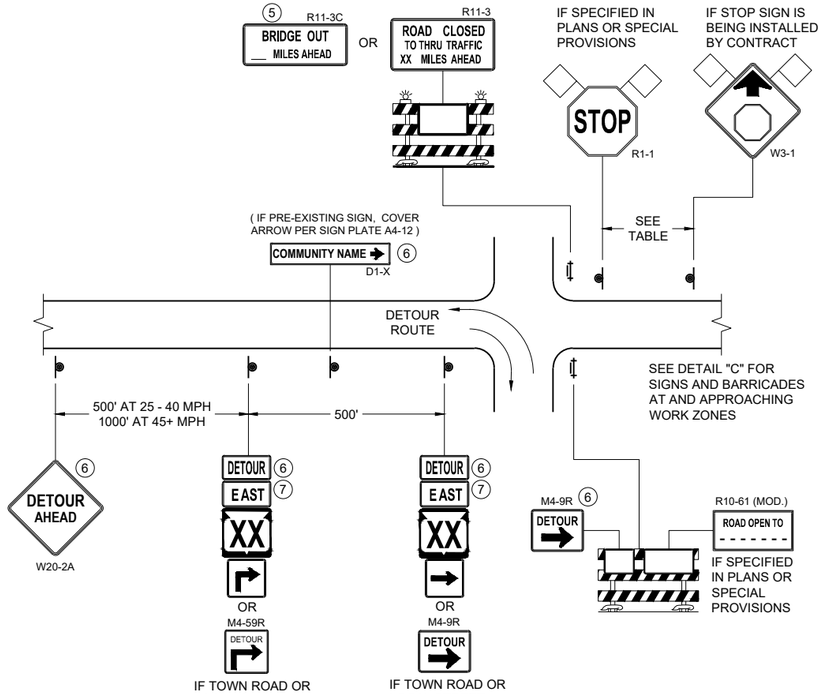

DETAIL A
MAINLINE CLOSURE WITH POSTED DETOUR

WORK ZONE GREATER THAN OR EQUAL TO ½ MILE FROM DETOUR ROUTE (1000 FEET IF URBAN)

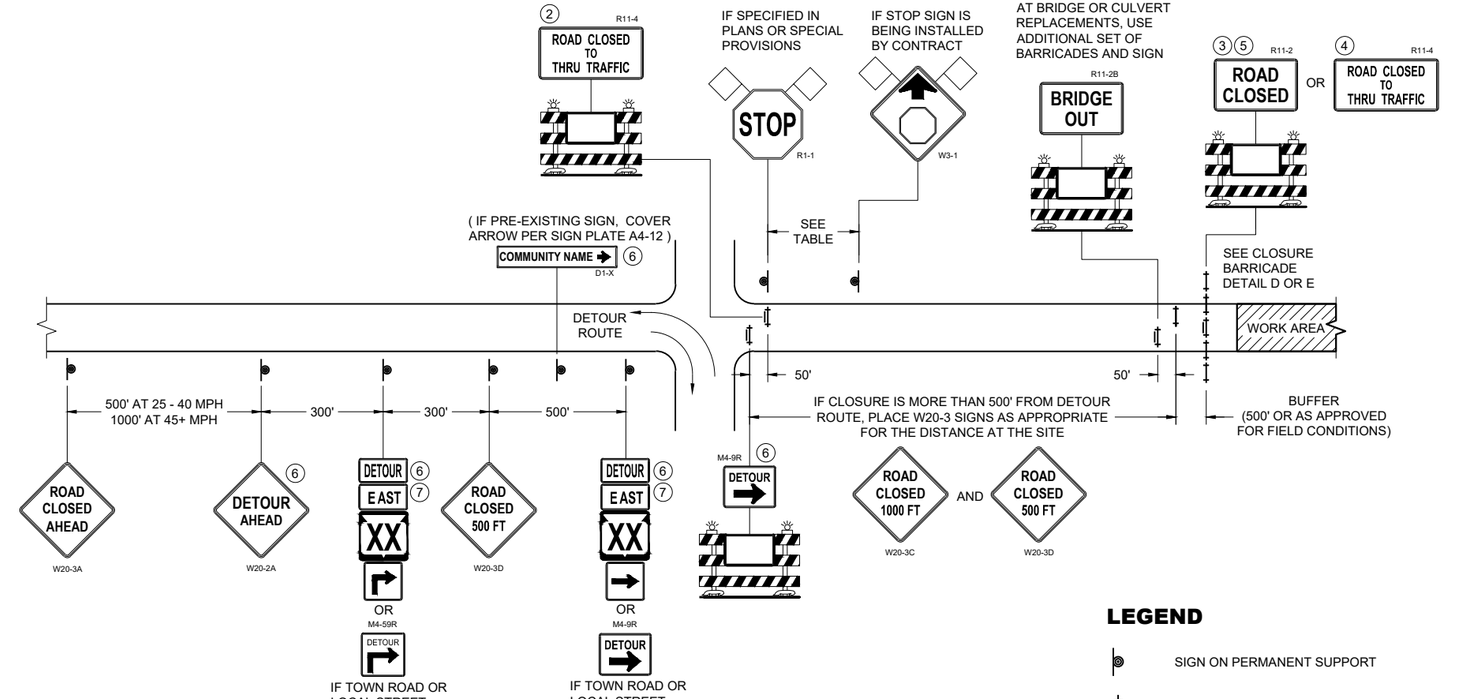

DETAIL B
MAINLINE CLOSURE WITH POSTED DETOUR

WORK ZONE LESS THAN ½ MILE FROM DETOUR ROUTE (1000 FEET IF URBAN)

SPEED LIMIT (MPH)	"STOP AHEAD" ADVANCE WARNING DISTANCE (FT)
25	200
30	200
35	350
40	350
45	500
50	550
55	750

SEE SDD 15C2-SHEET "b" FOR GENERAL NOTES AND FOOTNOTES (1) THROUGH (7)

LEGEND

- SIGN ON PERMANENT SUPPORT
- TYPE III BARRICADE
- TYPE III BARRICADE WITH ATTACHED SIGN
- TYPE "A" WARNING LIGHT (FLASHING)
- WORK AREA
- FLAGS, 16" X 16" MIN. (ORANGE)

DETOUR M4 - 8
EAST M3 - X
XX M1 - 4 OR XX M1 - 6 OR COUNTY X M1 - 5A
M05 - 1 OR M06 - 1

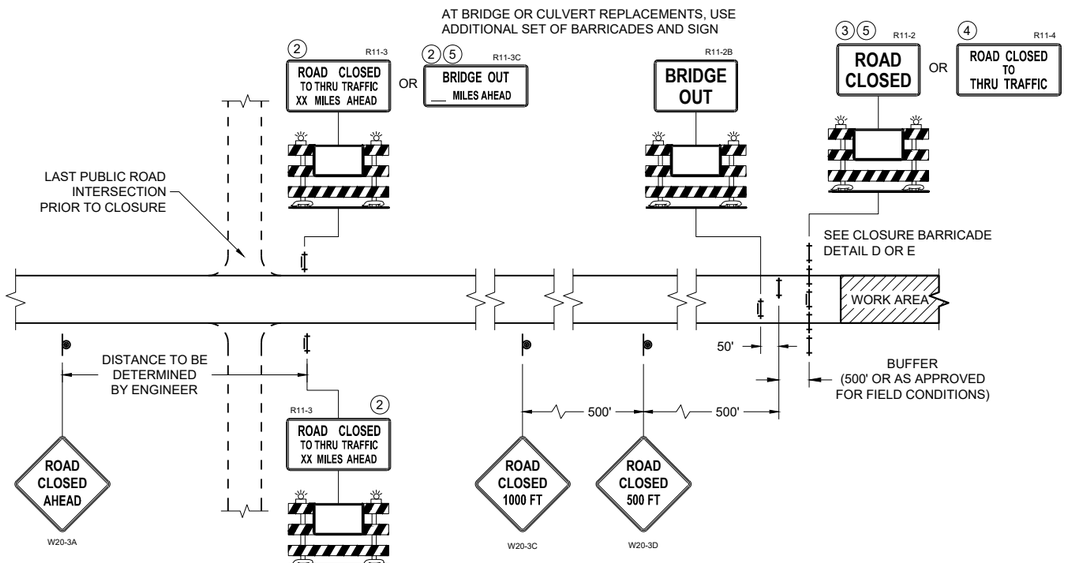

DETAIL C
MAINLINE CLOSURE, NO POSTED DETOUR

BARRICADES AND SIGNS FOR MAINLINE CLOSURES

STATE OF WISCONSIN
DEPARTMENT OF TRANSPORTATION

APPROVED
November 2025 — DATE
/S/ Andrew Heidtke — WORK ZONE ENGINEER

FHWA

6
SDD 15C02-10a

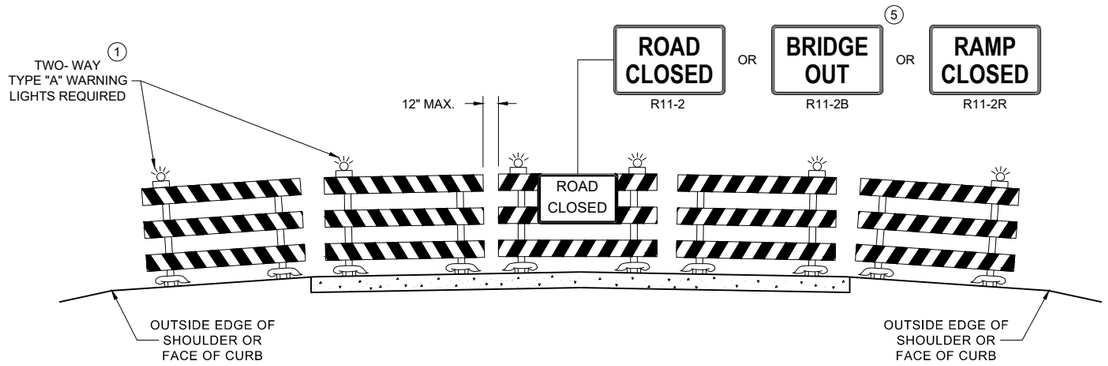

DETAIL D

ROAD CLOSURE BARRICADE DETAIL

APPROACH VIEW

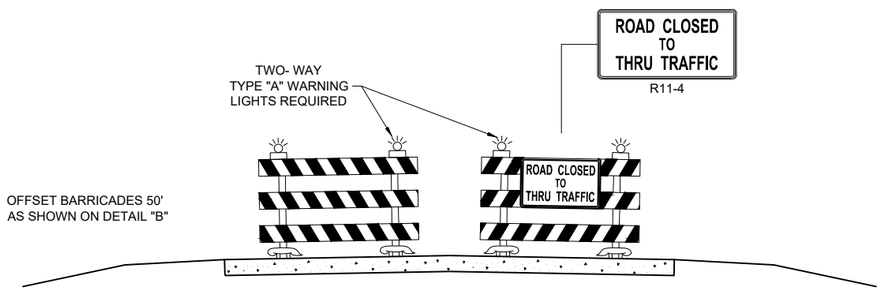

DETAIL E

LANE CLOSURE BARRICADE DETAIL

APPROACH VIEW

SEE SDD 15C2 - SHEET "a" FOR LEGEND

GENERAL NOTES

THE EXACT NUMBER, LOCATION, AND SPACING OF ALL SIGNS AND BARRICADES SHALL BE ADJUSTED TO FIT FIELD CONDITIONS AS APPROVED BY THE ENGINEER.

ANY SIGNS TEMPORARY OR EXISTING, WHICH CONFLICT WITH TRAFFIC CONTROL "IN USE", SHALL BE REMOVED OR COVERED AS NEEDED AND AS APPROVED BY THE ENGINEER.

THE SPACING BETWEEN TRAFFIC CONTROL SIGNS SHOULD BE ADJUSTED TO NOT CONFLICT WITH AND SHOULD PROVIDE A DESIRABLE MINIMUM OF 200 FEET CLEARANCE TO EXISTING SIGNS THAT WILL REMAIN IN PLACE.

BARRICADES THAT MUST BE MOVED FOR A WORK OPERATION SHALL BE IMMEDIATELY RE-ESTABLISHED UPON COMPLETION OF THE OPERATION, OR FOR CONTINUING OPERATIONS, AT THE END OF EACH WORKING DAY.

SIGNS THAT WILL BE IN PLACE LESS THAN 7 CONTINUOUS DAYS AND NIGHTS MAY BE MOUNTED ON PORTABLE SUPPORTS.

ALL TYPE III BARRICADES SHALL HAVE RAILS REFLECTORIZED ON BOTH FACES. STRIPES SHALL BE PROPERLY SLOPED DOWN TOWARD THE TRAFFIC SIDE OR AS SHOWN IN THE ROAD CLOSURE BARRICADE DETAIL "D" FOR FULL ROAD CLOSURES.

TYPE "A" LOW - INTENSITY FLASHING WARNING LIGHTS SHALL BE VISIBLE ON BOTH SIDES OF THE BARRICADE.

PARTIAL NUMBERS ON SIGNS SHALL BE DISPLAYED AS A WHOLE NUMBER(AS NEEDED) FOLLOWED BY A FRACTION. SIGNS SHALL NOT DISPLAY NUMBERS IN DECIMAL FORM.

"WO" AND "MO" SIGNS ARE THE SAME AS "W" AND "M" SIGNS EXCEPT THE BACKGROUND IS ORANGE.

ALL SIGNS SHALL BE 48" X 48" UNLESS OTHERWISE NOTED BELOW:

- R11 - 2 SHALL BE 48" X 30"
- R11 - 3 SHALL, R11 - 4 AND R10 - 61 SHALL BE 60 " X 30"
- M4 - 9 SHALL BE 30" X 24"
- M3 - X SHALL BE 24" X 12" (36" X 18" IF NEEDED TO MATCH EXISTING SIGNS)
- M4 - 8 SHALL BE 24" X 12" (36" X 18" IF NEEDED TO MATCH EXISTING SIGNS)
- M1 - 4, M1 - 5A AND M1 - 6 SHALL BE 24" X 24" (36" X 36" IF NEEDED TO MATCH EXISTING SIGNS)
- MO5 - 1 AND MO6 - 1 SHALL BE 21" X 21" (30" X 30" IF NEEDED TO MATCH EXISTING SIGNS)
- D1 - X SHALL BE AS SHOWN ON SPECIFIC PROJECT SIGNING DETAIL SHEETS.
- R1 - 1 SHALL BE 36" X 36"

SIGNS PLACED ON TYPE III BARRICADES THAT ARE SIZES OTHER THAN 48"X30" SHALL HAVE A CORRUGATED POLYPROPYLENE OR POLYETHYLENE PLASTIC SIGN BASE.

(1) TWO WARNING LIGHTS SHALL BE PROVIDED ON THE CENTER BARRICADE AND A MINIMUM OF ONE WARNING LIGHT SHALL BE PROVIDED ON EACH OF THE OTHER BARRICADES WITHIN THE ROADWAY LIMITS. SPACING OF THE WARNING LIGHTS SHALL BE UNIFORM TO THE EDGE OF ROADWAY AS SHOWN (APPROX. 8 FOOT LIGHT SPACING.

(2) THESE SIGNS AND BARRICADES ARE NOT REQUIRED IF ROAD CLOSURE BEGINS AT AN INTERSECTION.

(3) FOR ROAD CLOSURE WITHOUT LOCAL ACCESS TO PROJECT, SEE ROAD CLOSURE BARRICADE DETAIL "D".

(4) FOR ROAD CLOSURE WITH LOCAL ACCESS TO PROJECT, SEE ROAD CLOSURE BARRICADE DETAIL "E".

(5) FOR BRIDGE OR CULVERT REPLACEMENTS, SUBSTITUTE "BRIDGE OUT" INSTEAD OF "ROAD CLOSED" ON R11 - 2 AND R11 - 3 SIGNS.

(6) INSTALL DETOUR AND COMMUNITY GUIDE SIGNS AND ARROWS ONLY IF SPECIFIED IN THE CONTRACT. IF THERE ARE EXISTING ROUTE MARKER ASSEMBLIES THAT WILL REMAIN IN PLACE, ADJUST THE LOCATION OF THE DETOUR ROUTE SIGNS TO CORRESPOND WITH THE EXISTING ASSEMBLIES. MODIFY EXISTING SIGNS WHERE POSSIBLE. SEE SPECIFIC PROJECT DETOUR SIGNING DETAIL SHEETS. IF DETOUR SIGNS ARE BEING INSTALLED BY OTHERS, PLACE THE CONTRACTED TRAFFIC CONTROL SIGNS TO ALLOW FOR PLACEMENT OF ALL WARNING, DETOUR AND GUIDE SIGNS AS SHOWN.

(7) "EAST" CARDINAL DIRECTION MARKERS AND RIGHT TURN ARROWS ARE SHOWN. USE OTHER CARDINAL DIRECTIONS AND ARROWS AS APPROPRIATE.

BARRICADES AND SIGNS FOR VARIOUS CLOSURES

STATE OF WISCONSIN
DEPARTMENT OF TRANSPORTATION

APPROVED
November 2025 — DATE
/S/ Andrew Heidtke — WORK ZONE ENGINEER

FHWA

6

SDD 15C02-10b

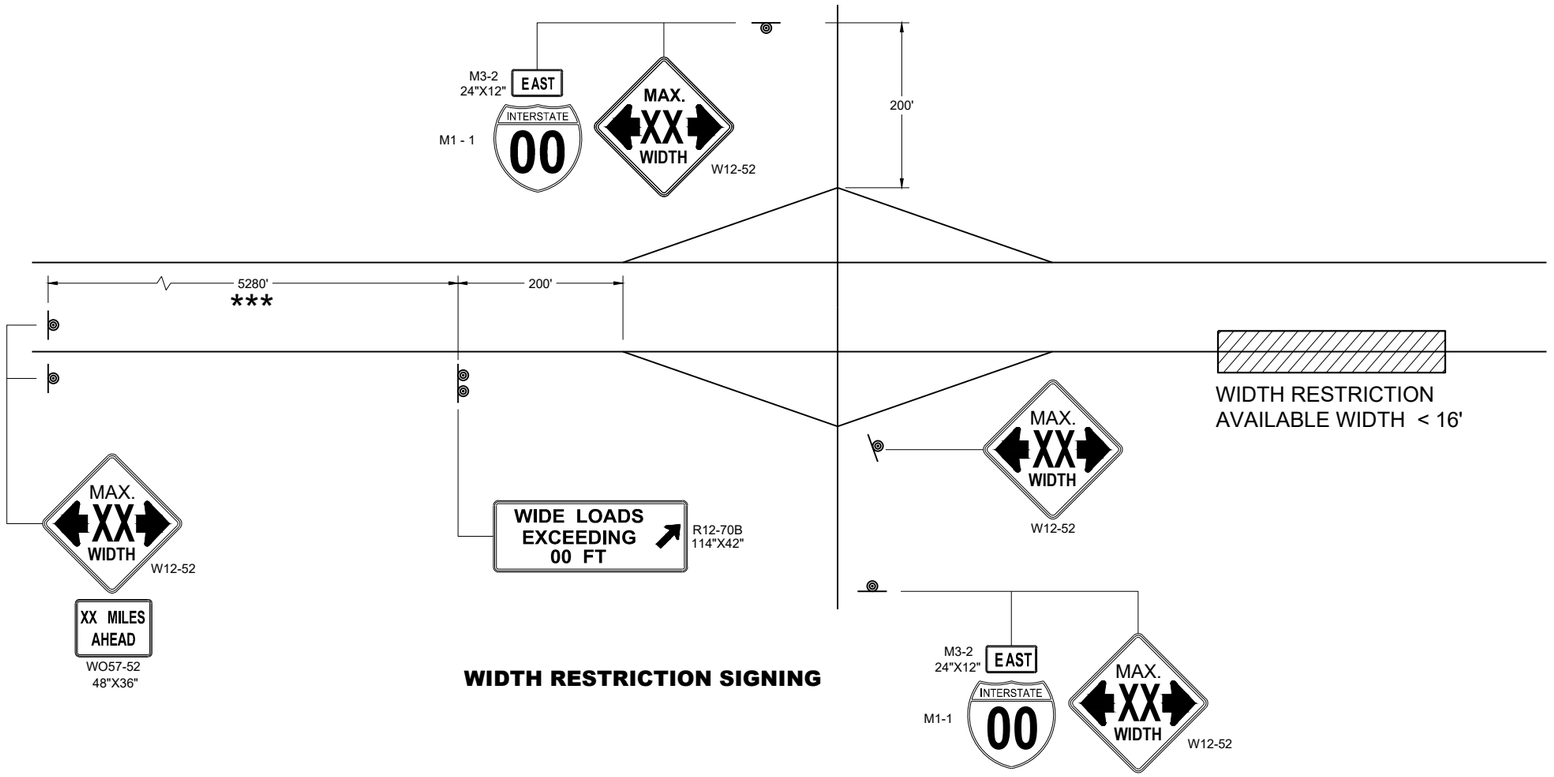

WIDTH RESTRICTION SIGNING

LEGEND

SIGN ON PERMANENT SUPPORT

GENERAL NOTES

THE EXACT NUMBER, LOCATION AND SPACING OF ALL SIGNS SHALL BE ADJUSTED TO FIT FIELD CONDITIONS AS APPROVED BY THE ENGINEER.

THE SPACING BETWEEN SIGNS SHOULD BE ADJUSTED TO NOT CONFLICT WITH AND TO PROVIDE A DESIRABLE MINIMUM OF 200 FEET CLEARANCE TO EXISTING SIGNS THAT WILL REMAIN IN PLACE.

ANY SIGNS TEMPORARY OR EXISTING, WHICH CONFLICT WITH TRAFFIC CONTROL " IN USE" SHALL BE REMOVED OR COVERED AS NEEDED AND AS APPROVED BY THE ENGINEER.

ALL SIGNS ARE 48" X 48" UNLESS OTHERWISE NOTED.

"WO" SIGNS ARE THE SAME AS "W" SIGNS EXCEPT THE BACKGROUND IS ORANGE.

WIDTH ON SIGN TO BE APPROXIMATELY ONE FOOT LESS THAN AVAILABLE WIDTH.

* PLACE 500 FEET AFTER THE W20 - 1A AND 500 FEET BEFORE ADDITIONAL SIGNS FOR ROADWAYS WITH A PRE - CONSTRUCTION SPEED LIMIT OF 45 MPH OR MORE. FOR 35-40 MPH, USE 350 FOOT TYPICAL SPACING. FOR 25-30 MPH, USE 200 FOOT TYPICAL SPACING.

** SIGN SHALL BE VISIBLE FROM ROADWAY.

*** ADDITIONAL SIGNS NEEDED IF THERE IS AN ON RAMP BETWEEN SIGNS.

WIDTH ON SIGN TO BE APPROX. 1 - FOOT LESS THAN AVAILABLE WIDTH

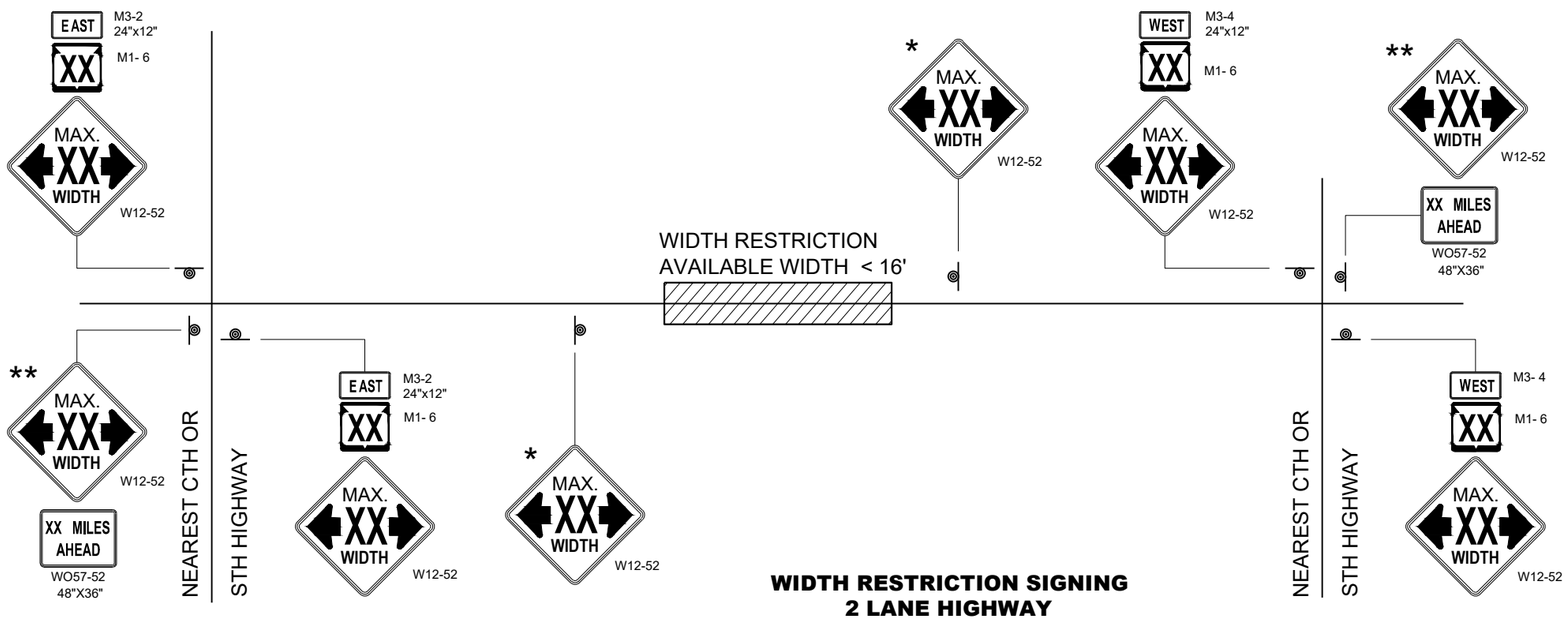

WIDTH RESTRICTION SIGNING
2 LANE HIGHWAY

ADVANCED WIDTH RESTRICTION SIGNING

STATE OF WISCONSIN
DEPARTMENT OF TRANSPORTATION

APPROVED
November 2025 — DATE
/S/ Andrew Heidtke — WORK ZONE ENGINEER

FHWA

6

SDD 15C02-10f

SDD 15C02-10f

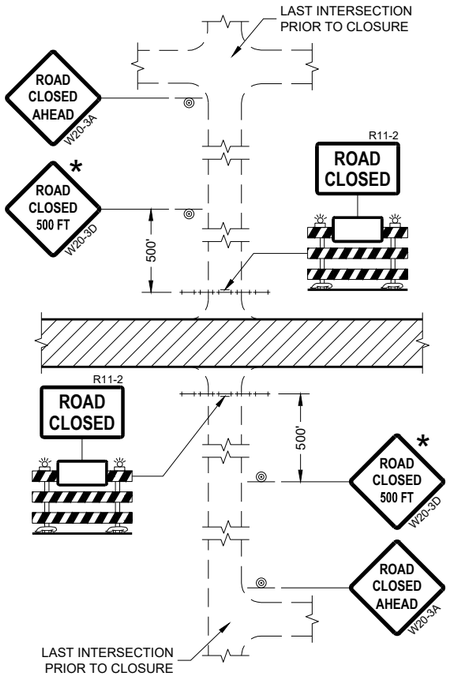

DETAIL 1
(NO ACCESS TO PROJECT)

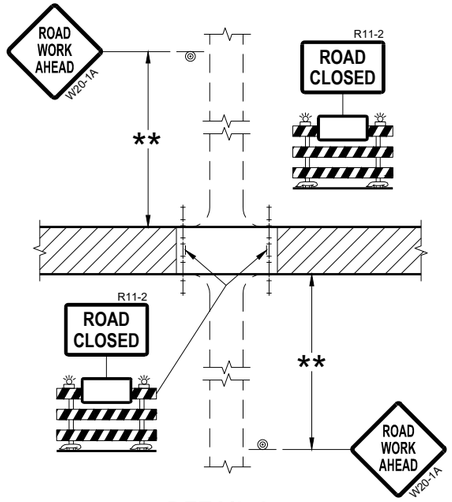

DETAIL 2
(PUBLIC CROSS-TRAFFIC MAINTAINED.
NO ACCESS TO PROJECT)

GENERAL NOTES

THE EXACT NUMBER, LOCATION, AND SPACING OF ALL SIGNS AND BARRICADES SHALL BE ADJUSTED TO FIT FIELD CONDITIONS AS APPROVED BY THE ENGINEER.

ANY SIGNS TEMPORARY OR EXISTING, WHICH CONFLICT WITH TRAFFIC CONTROL "IN USE" SHALL BE REMOVED OR COVERED AS NEEDED AND AS APPROVED BY THE ENGINEER.

THE SPACING BETWEEN TRAFFIC CONTROL SIGNS SHOULD BE ADJUSTED TO NOT CONFLICT WITH AND SHOULD PROVIDE A DESIRABLE MINIMUM OF 200 FEET CLEARANCE (500 FEET DESIRABLE) TO EXISTING SIGNS THAT WILL REMAIN IN PLACE.

IF A "STOP" SIGN MUST BE REMOVED FOR A WORK OPERATION, A TEMPORARY "STOP" SIGN SHALL BE PLACED PRIOR TO THE SIGN REMOVAL, OR A FLAGGER SHALL BE PROVIDED UNTIL THE SIGN IS REESTABLISHED.

BARRICADES THAT MUST BE MOVED FOR A WORK OPERATION SHALL BE IMMEDIATELY REESTABLISHED UPON COMPLETION OF THE OPERATION OR FOR CONTINUING OPERATIONS, AT THE END OF EACH WORKING DAY.

SIGNS THAT WILL BE IN PLACE LESS THAN SEVEN CONTINUOUS DAYS AND NIGHTS MAY BE MOUNTED ON PORTABLE SUPPORTS.

ALL TYPE III BARRICADES SHALL HAVE RAILS REFLECTORIZED ON BOTH FACES. STRIPES SHALL BE PROPERLY SLOPED DOWN TOWARD THE TRAFFIC SIDE OR AS SHOWN IN THE ROAD CLOSURE BARRICADE DETAIL "D" FOR FULL ROAD CLOSURES.

TYPE "A" LOW-INTENSITY FLASHING WARNING LIGHTS SHALL BE VISIBLE ON BOTH SIDES OF THE BARRICADE.

THE R11-2, R11-3, AND R11-4 SIGNS PLACED ON BARRICADES SHALL COVER NO MORE THAN THE TOP RAIL. THE SIGNS SHALL NOT COVER ANY PORTION OF THE MIDDLE OR BOTTOM RAILS.

ALL SIGNS SHALL BE 48" X 48" UNLESS OTHERWISE NOTED BELOW:
R11-2 SHALL BE 48" X 30".
R11-4 AND R11-3 SHALL BE 60" X 30".

* OMIT THE "ROAD CLOSED 500 FT." SIGN IF THE LAST INTERSECTION IS 500 FEET OR LESS FROM THE WORK ZONE.

** 500' MAX. OR AT LAST INTERSECTION, WHICHEVER IS CLOSEST.

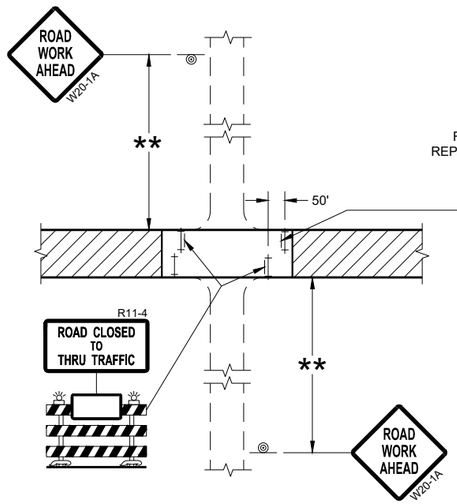

DETAIL 3
(PUBLIC CROSS-TRAFFIC MAINTAINED.
CONTRACTOR, LOCAL BUSINESS AND
RESIDENT ACCESS TO PROJECT)

DETAIL 4
(CONTRACTOR, LOCAL BUSINESS AND
RESIDENT ACCESS TO PROJECT)

LEGEND

- SIGN ON PERMANENT SUPPORT
- TYPE III BARRICADE
- TYPE III BARRICADE WITH ATTACHED SIGN
- TYPE "A" WARNING LIGHT (FLASHING)
- WORK AREA

BARRICADES AND SIGNS FOR SIDEROAD CLOSURES

STATE OF WISCONSIN
DEPARTMENT OF TRANSPORTATION

APPROVED
July 2018
DATE

/S/ Andrew Heidtke
WORK ZONE ENGINEE

FHWA

6

SDD 15C03 - 05

SDD 15C03 - 05

GENERAL NOTES

THE EXACT NUMBER, LOCATION, AND SPACING OF ALL SIGNS AND DEVICES SHALL BE ADJUSTED TO FIT FIELD CONDITIONS.

THE SPACING BETWEEN TRAFFIC CONTROL SIGNS SHOULD BE ADJUSTED TO NOT CONFLICT WITH AND SHOULD PROVIDE A MINIMUM OF 200 FEET (500 FEET DESIRABLE) CLEARANCE TO EXISTING SIGNS THAT WILL REMAIN IN PLACE.

ALL SIGNS ARE 48" X 48" UNLESS OTHERWISE NOTED.

SIGNS THAT WILL BE IN PLACE LESS THAN SEVEN CONTINUOUS DAYS AND NIGHTS MAY BE MOUNTED ON PORTABLE SUPPORTS.

IF A "STOP" SIGN MUST BE REMOVED FOR A WORK OPERATION, A TEMPORARY "STOP" SIGN SHALL BE PLACED PRIOR TO THE SIGN REMOVAL, OR A FLAGGER SHALL BE PROVIDED UNTIL THE SIGN IS REESTABLISHED.

* OMIT G20-1 SIGNS IF LENGTH OF WORK AREA IS 2 MILES OR LESS

** PLACE AN ADDITIONAL W20-1A "ROAD WORK AHEAD" SIGN IF WORK AREA WITHIN THE PROJECT IS SEPARATED BY MORE THAN 2 MILES FROM PREVIOUS WORK AREA.

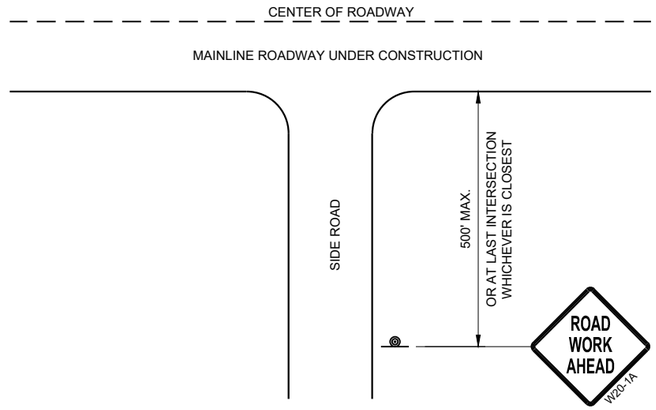

TYPICAL SIDE ROAD APPROACH WARNING SIGN DETAIL

LEGEND

SIGN ON PERMANENT SUPPORT

DIRECTION OF TRAFFIC

WORK AREA

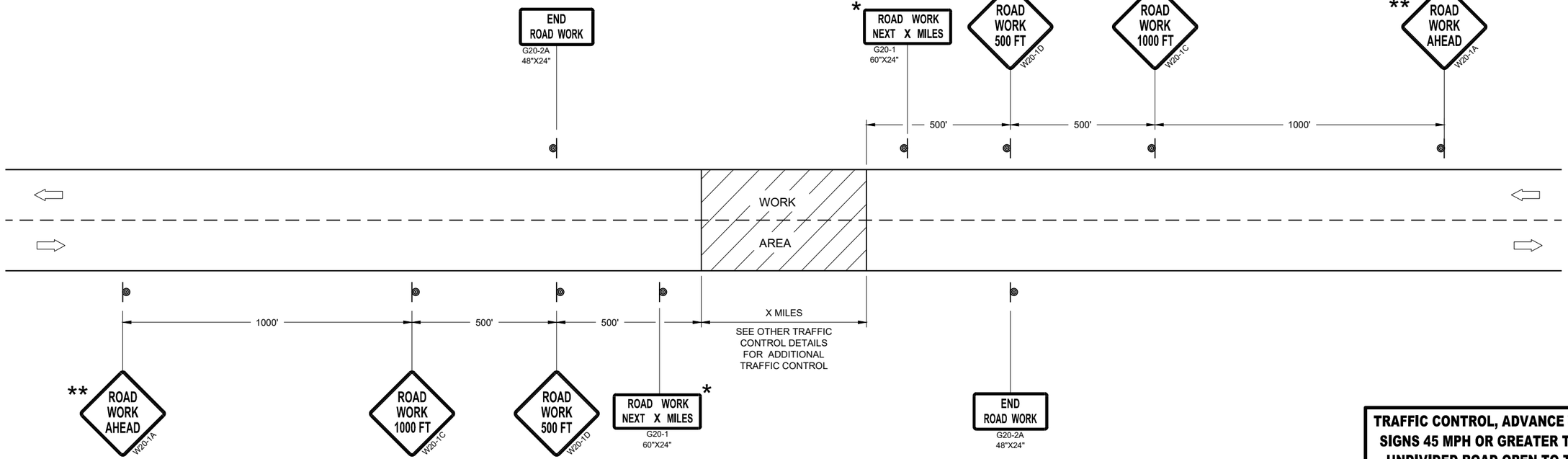

TRAFFIC CONTROL, ADVANCE WARNING SIGNS 45MPH OR GREATER

TRAFFIC CONTROL, ADVANCE WARNING SIGNS 45 MPH OR GREATER TWO-WAY UNDIVIDED ROAD OPEN TO TRAFFIC

STATE OF WISCONSIN
DEPARTMENT OF TRANSPORTATION

APPROVED
July 2018
DATE

/S/ Andrew Heidtke
WORK ZONE ENGINEE

FHWA

6

SDD 15C04 - 05

GENERAL NOTES

THE EXACT NUMBER, LOCATION, AND SPACING OF ALL SIGNS AND DEVICES SHALL BE ADJUSTED TO FIT FIELD CONDITIONS.

THE SPACING BETWEEN TRAFFIC CONTROL SIGNS SHOULD BE ADJUSTED TO NOT CONFLICT WITH AND SHOULD PROVIDE A MINIMUM OF 200 FEET (500 FEET DESIRABLE) CLEARANCE TO EXISTING SIGNS THAT WILL REMAIN IN PLACE.

ALL SIGNS ARE 48" X 48" UNLESS OTHERWISE NOTED. IF NECESSARY DUE TO SPACE CONSTRAINTS, 36"X36" SIGNS MAY BE USED INSTEAD OF 48" X 48" SIGNS.

SIGNS THAT WILL BE IN PLACE LESS THAN SEVEN CONTINUOUS DAYS AND NIGHTS MAY BE MOUNTED ON PORTABLE SUPPORTS.

IF A "STOP" SIGN MUST BE REMOVED FOR A WORK OPERATION, A TEMPORARY "STOP" SIGN SHALL BE PLACED PRIOR TO THE SIGN REMOVAL, OR A FLAGGER SHALL BE PROVIDED UNTIL THE SIGN IS REESTABLISHED.

* THE THIRD W20-1 SIGN IS REQUIRED ONLY IF THERE IS AN INTERSECTION BETWEEN THE "ROAD WORK 500 FEET" SIGN AND THE WORK ZONE. ADJUST THE PLACEMENT OF THIS SIGN BASED ON INTERSECTION LOCATION AND OTHER FIELD CONDITIONS.

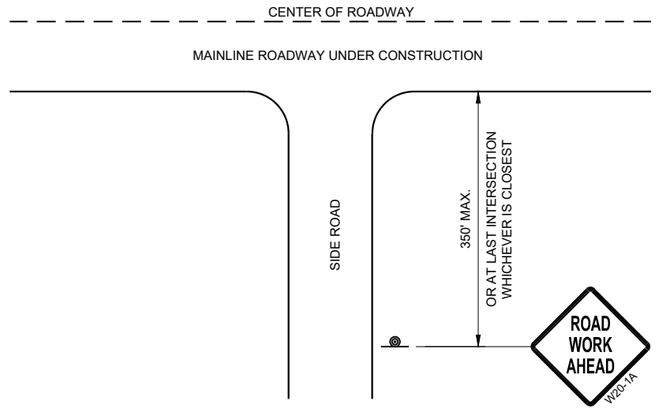

TYPICAL SIDE ROAD APPROACH WARNING SIGN DETAIL

LEGEND

SIGN ON PERMANENT SUPPORT

DIRECTION OF TRAFFIC

WORK AREA

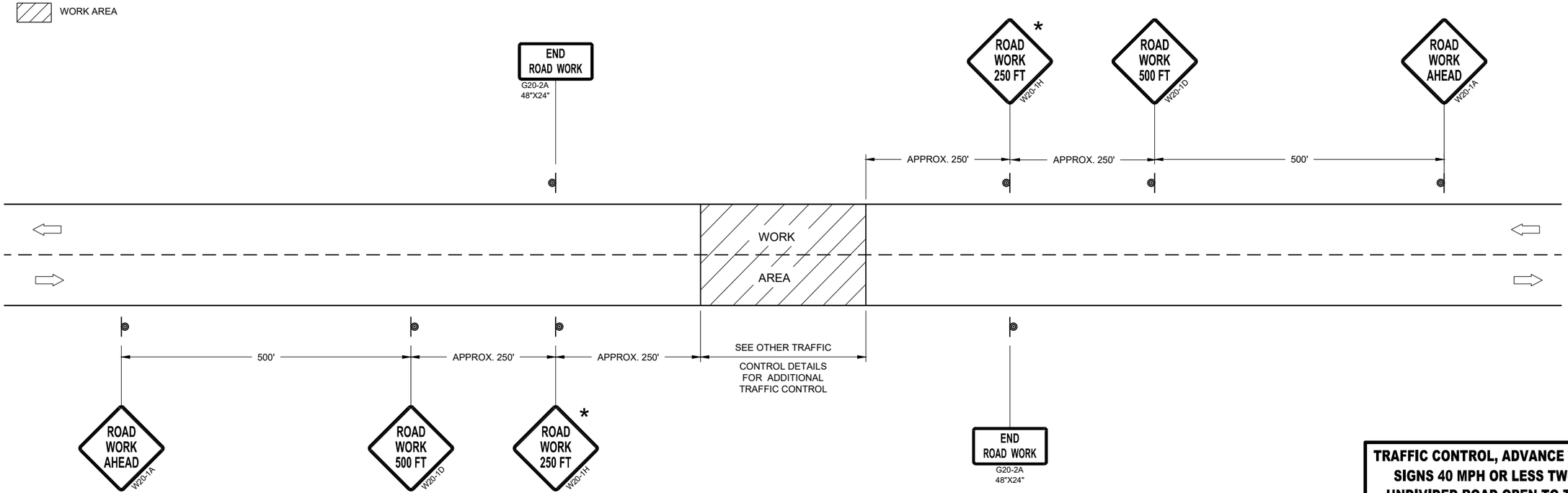

TRAFFIC CONTROL, ADVANCE WARNING SIGNS 40MPH OR LESS

TRAFFIC CONTROL, ADVANCE WARNING SIGNS 40 MPH OR LESS TWO-WAY UNDIVIDED ROAD OPEN TO TRAFFIC

STATE OF WISCONSIN
DEPARTMENT OF TRANSPORTATION

APPROVED
July 2018
DATE

/S/ Andrew Heidtke
WORK ZONE ENGINEE

FHWA

6

SDD 15C05 - 05

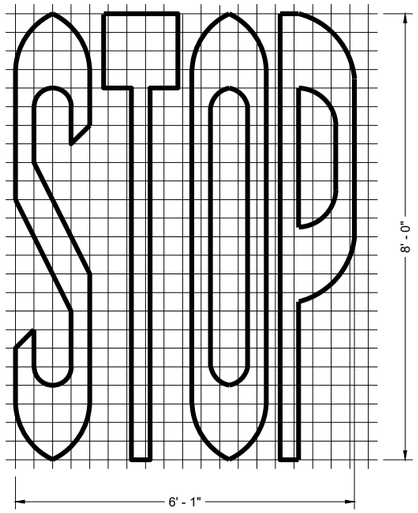

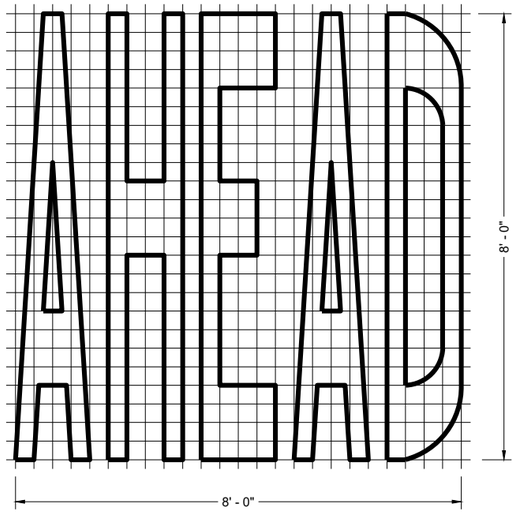

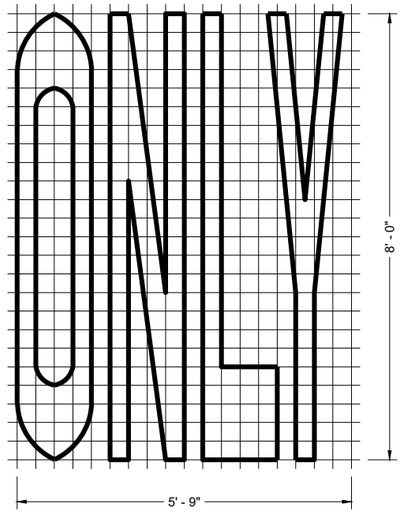

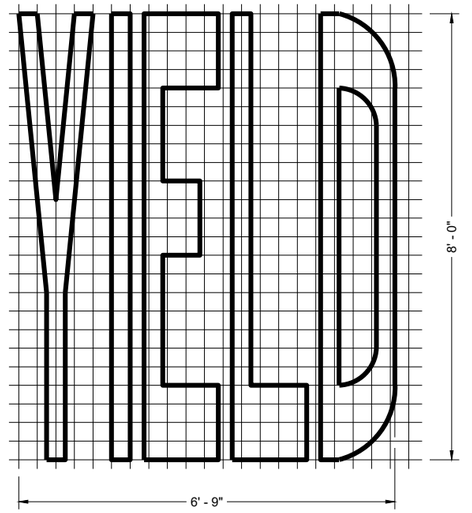

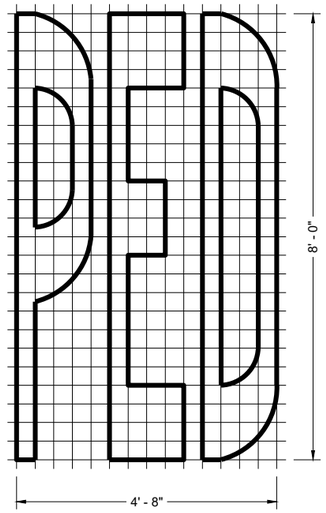

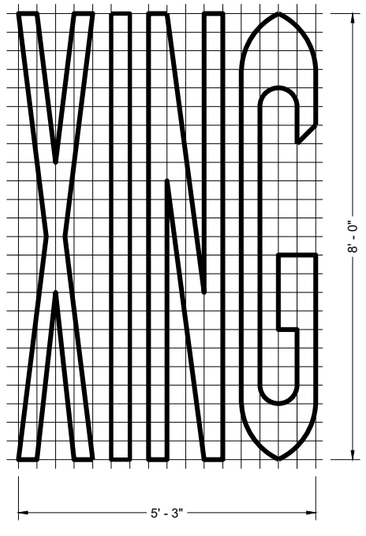

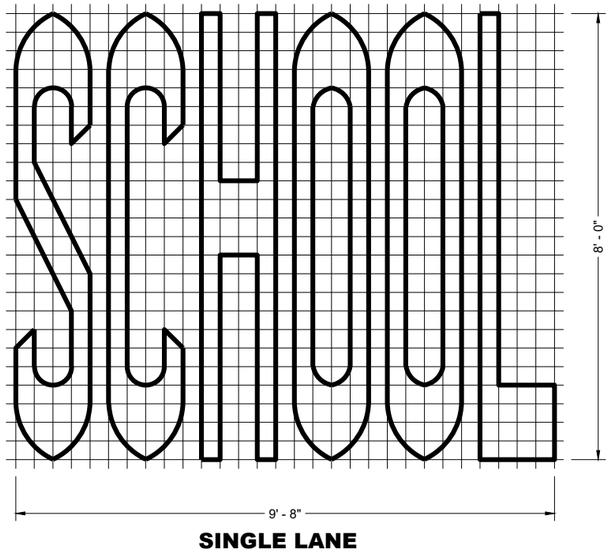

SINGLE LANE

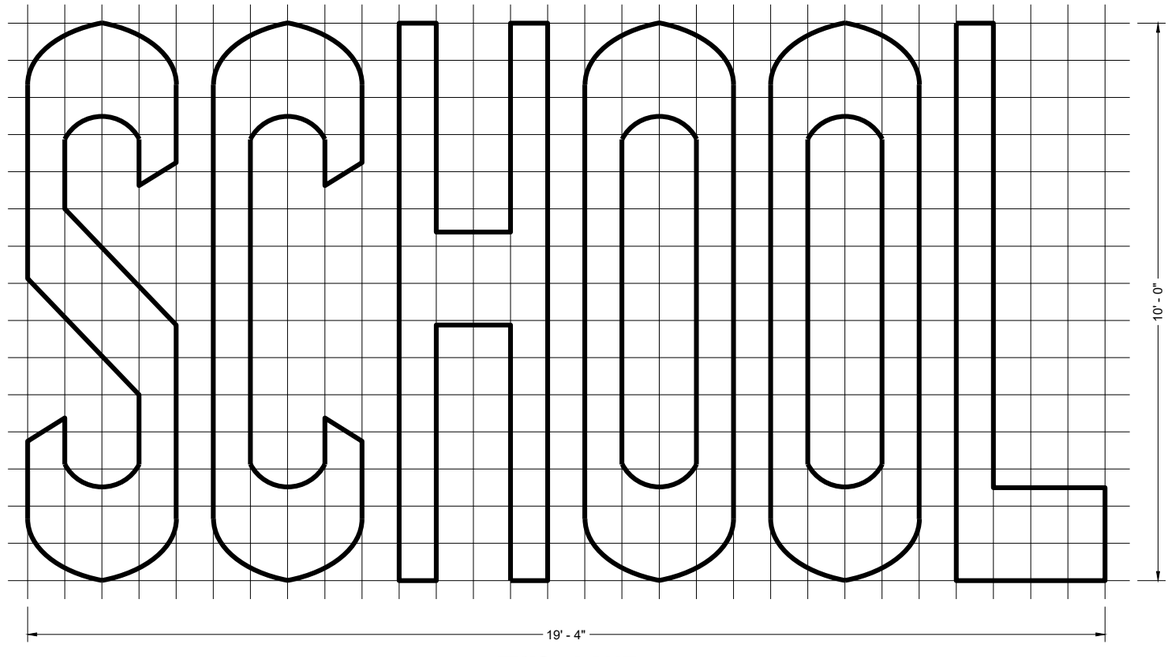

TWO - LANE

GENERAL NOTES

DETAILS OF INSTALLATION, MATERIALS AND WORKMANSHIP NOT SHOWN ON THIS DRAWING SHALL CONFORM TO THE PERTINENT REQUIREMENTS OF THE STANDARD SPECIFICATIONS AND APPLICABLE SPECIAL PROVISIONS.

PAVEMENT MARKING WORDS

STATE OF WISCONSIN
DEPARTMENT OF TRANSPORTATION

APPROVED
November 2024 — DATE
/S/ Jeannie Silver — STATE SIGNING AND MARKING ENGINEER

FHWA

6

SDD 15C07-16b

6

SDD 15C07-16b

GENERAL NOTES

DETAILS OF INSTALLATION, MATERIALS AND WORKMANSHIP NOT SHOWN ON THIS DRAWING SHALL CONFORM TO THE PERTINENT REQUIREMENTS OF THE STANDARD SPECIFICATIONS AND APPLICABLE SPECIAL PROVISIONS.

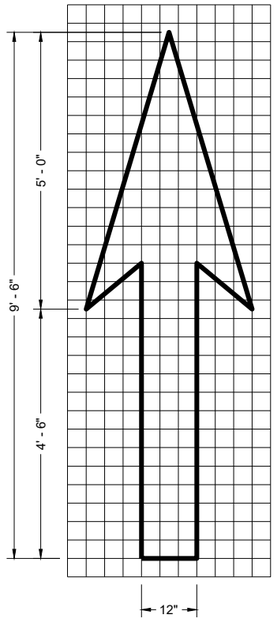

TYPE 1

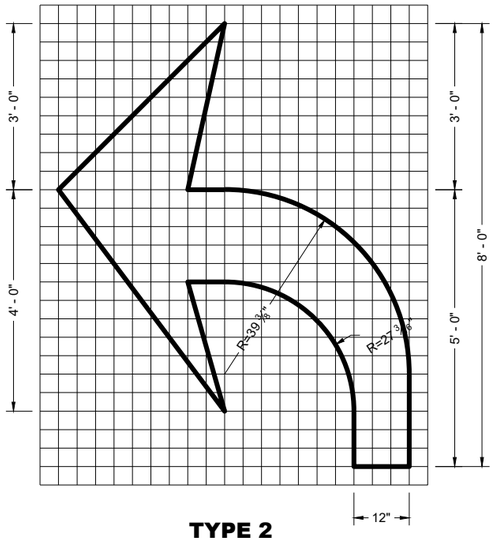

TYPE 2

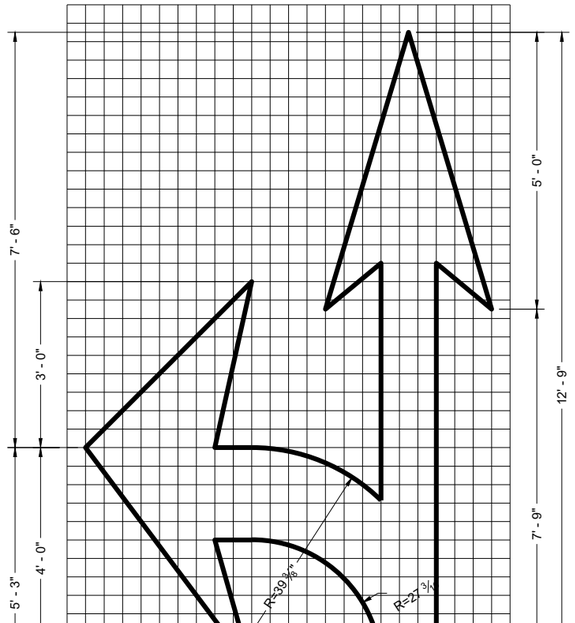

TYPE 3

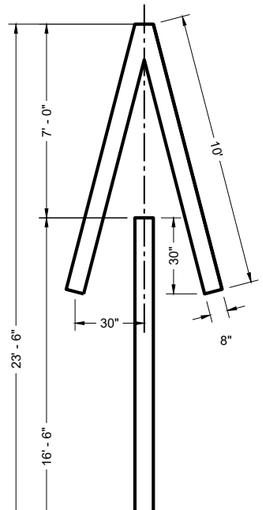

TYPE 4

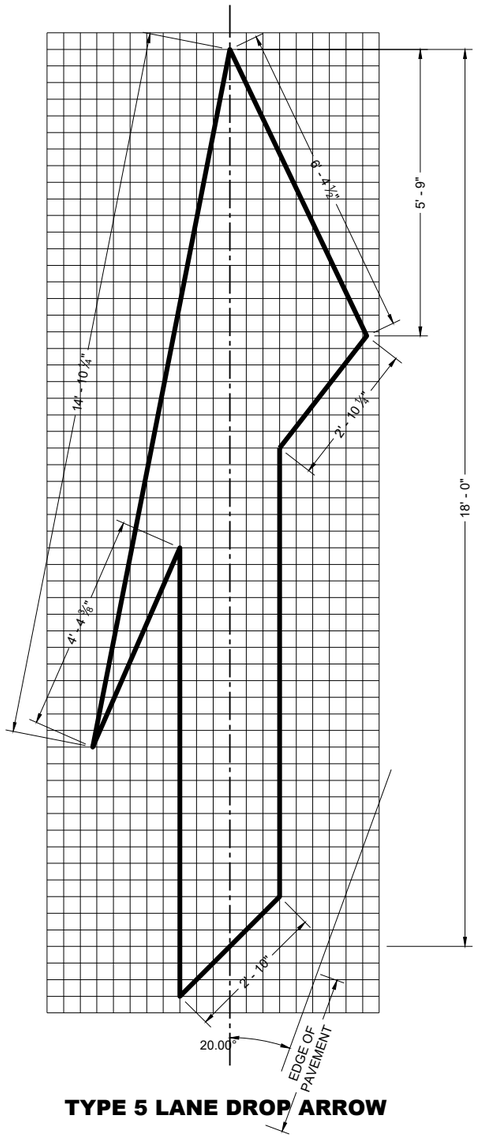

TYPE 5 LANE DROP ARROW

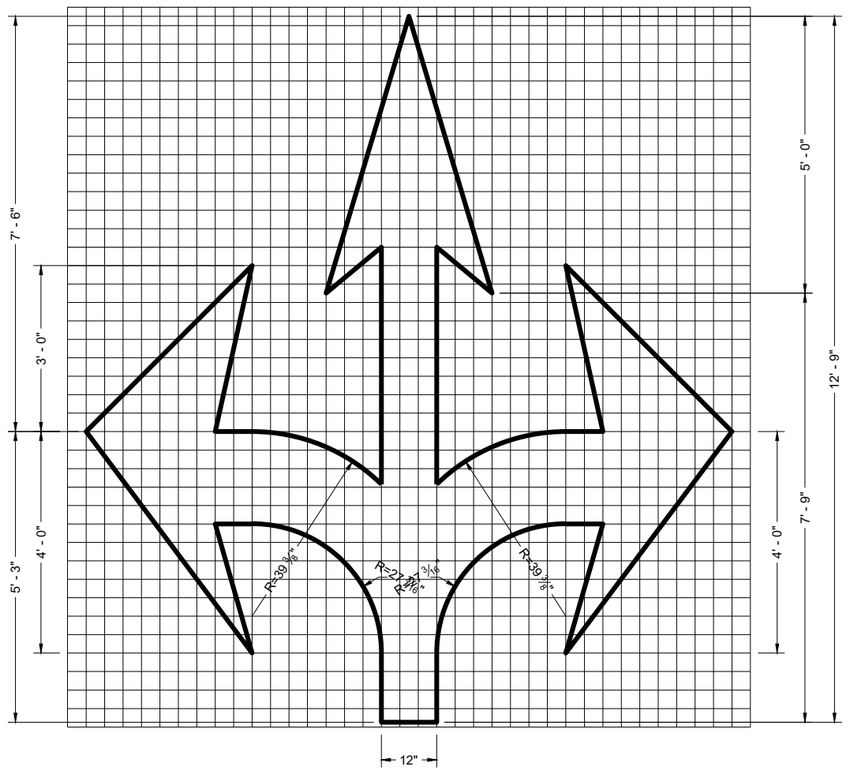

TYPE 6

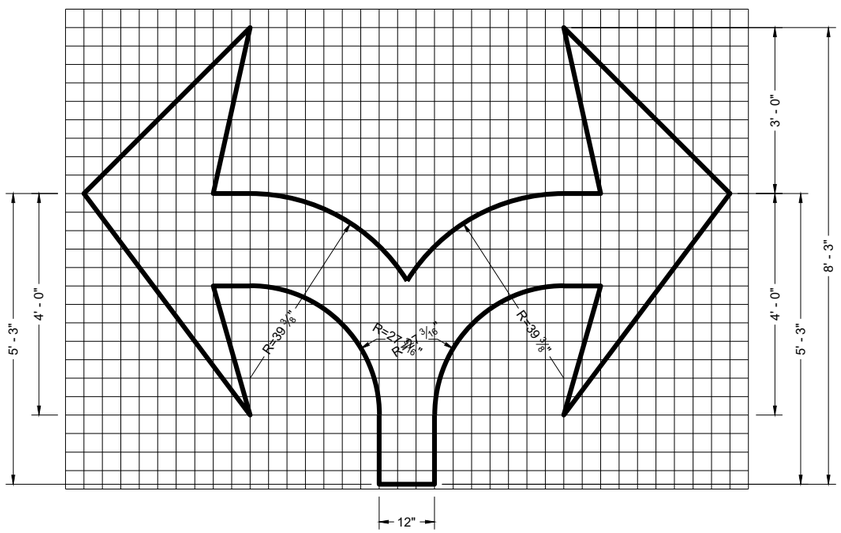

TYPE 7

PAVEMENT MARKING ARROWS

STATE OF WISCONSIN
DEPARTMENT OF TRANSPORTATION

APPROVED
November 2024 — DATE
/S/ Jeannie Silver — STATE SIGNING AND MARKING ENGINEER

FHWA

SDD 15C07-16c

6

SDD 15C07-16c

GENERAL NOTES

DETAILS OF CONSTRUCTION NOT SHOWN ON THIS DRAWING SHALL CONFORM TO STANDARD SPECIFICATIONS AND SPECIAL PROVISIONS.

(1) LOCATE THE NO PASSING ZONE W14-3 SIGN WITHIN 50 FEET OF THE "T" MARKING

(2) MEASURE FROM EDGE OF MARKING TO JOINT LINE. THIS DOES NOT INCLUDE SPACE NEEDED FOR GROOVING OPERATIONS.

*CONFIRM MARKING LINE WIDTH WITH THE MISCELLANEOUS QUANTITIES

LEGEND

"T" MARKING

SIGN ON PERMANENT SUPPORT

DIRECTION OF TRAFFIC

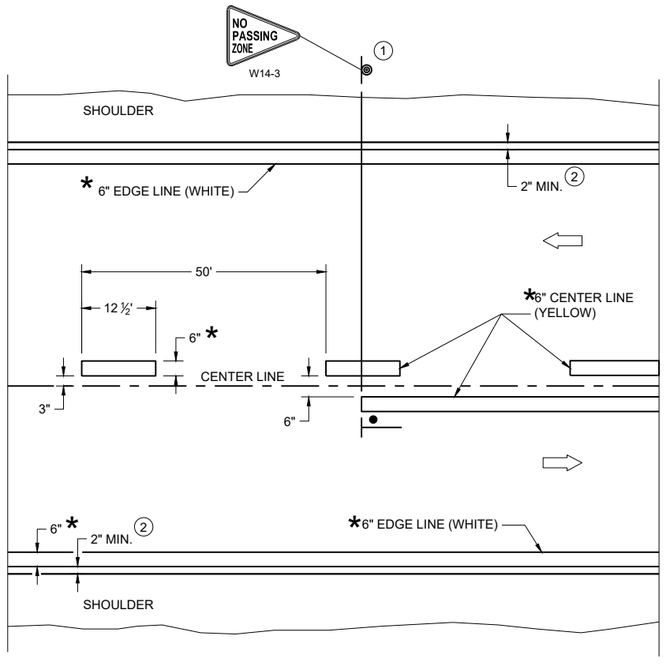

TWO WAY TRAFFIC

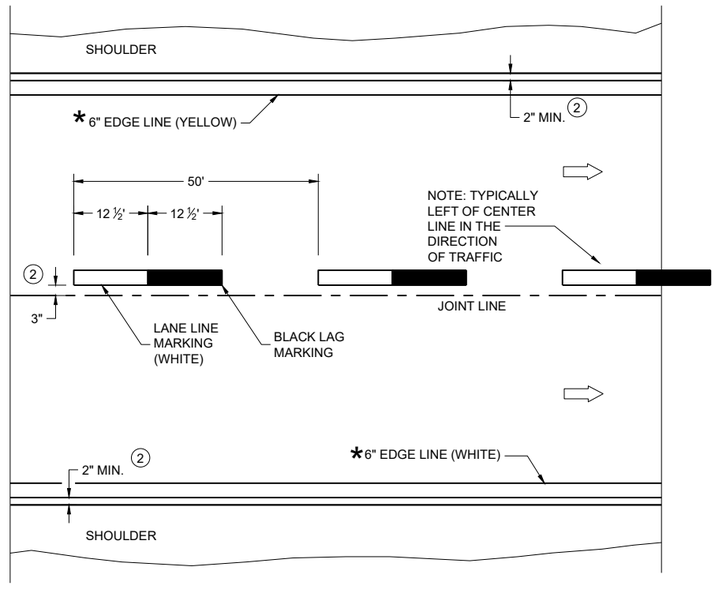

ONE WAY TRAFFIC

PERMANENT PAVEMENT MARKING

PERMANENT LONGITUDINAL PAVEMENT MARKINGS

STATE OF WISCONSIN
DEPARTMENT OF TRANSPORTATION

APPROVED
December 2024
DATE

/S/ Jeannie Silver
Statewide Pavement Marking Engineer

FHWA

6

SDD 15C08-24a

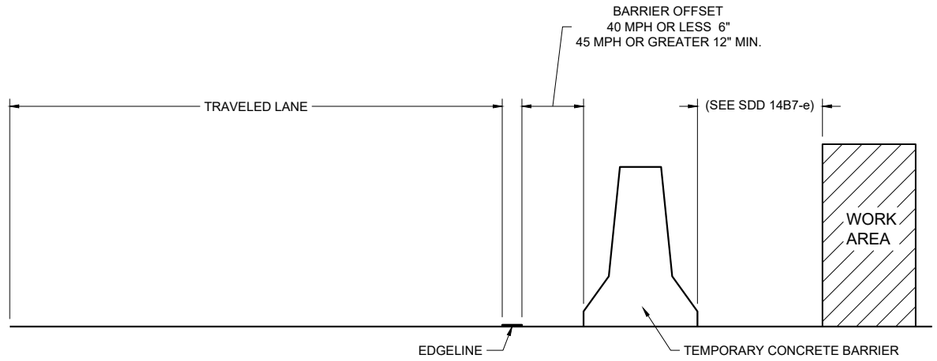

TEMPORARY BARRIER OFFSET FROM EDGELINE

GENERAL NOTES

DETAILS OF CONSTRUCTION NOT SHOWN ON THIS DRAWING SHALL CONFORM TO STANDARD SPECIFICATIONS AND SPECIAL PROVISIONS.

LEGEND

DIRECTION OF TRAFFIC

*CONFIRM MARKING LINE WIDTH WITH THE MISCELLANEOUS QUANTITIES

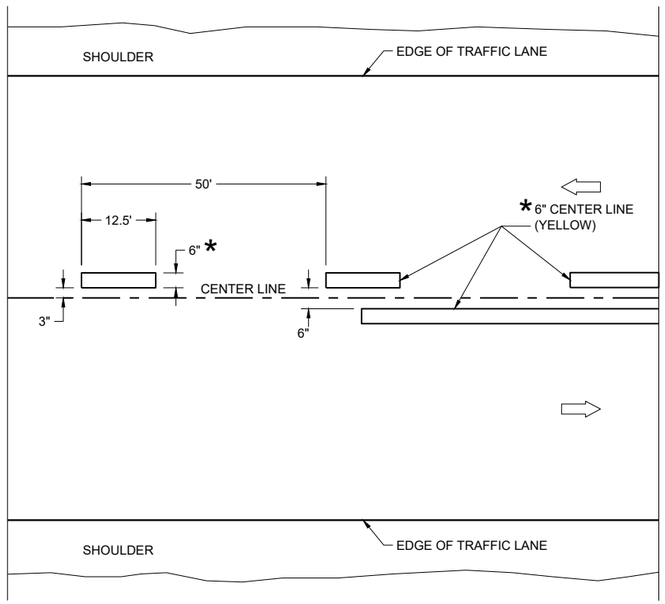

TWO WAY TRAFFIC

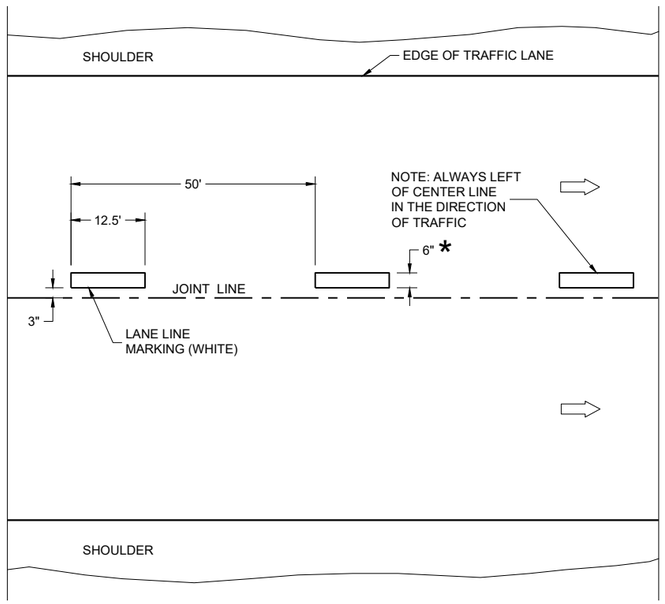

ONE WAY TRAFFIC

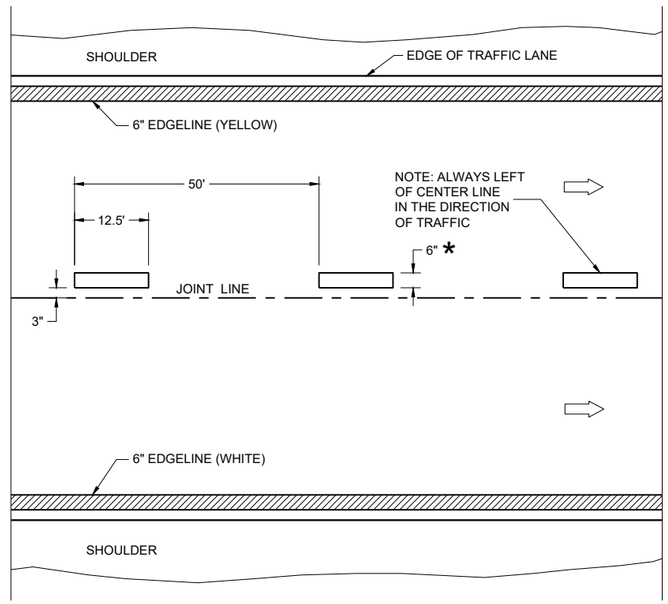

FREEWAYS AND EXPRESSWAYS

TEMPORARY PAVEMENT MARKING

TEMPORARY LONGITUDINAL PAVEMENT MARKING

STATE OF WISCONSIN
DEPARTMENT OF TRANSPORTATION

APPROVED
December 2024
DATE
/S/ Jeannie Silver
Statewide Pavement Marking Engineer
FHWA

6

SDD 15C08-24b

6

SDD 15C08-24b

GENERAL NOTES

(1) REFLECTIVE SHEETING SHALL FOLLOW THE REQUIREMENTS IN THE APPROVED PRODUCTS LISTING FOR SIGN SHEETING.

(2) LOCATION OF WARNING LIGHTS WHEN SHOWN ON THE PLAN.

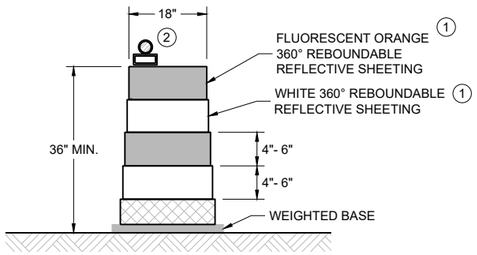

DRUM

BALLAST WIDTHS
RANGE FROM 24"-36"

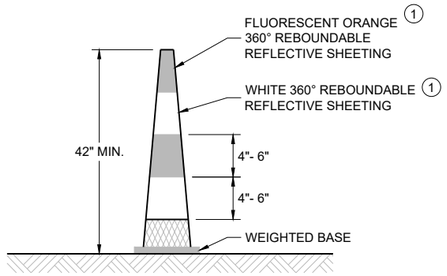

42" CONE

DO NOT USE IN TAPERS
½ SPACING OF DRUMS

BALLAST WIDTHS
RANGE FROM 14"-20"

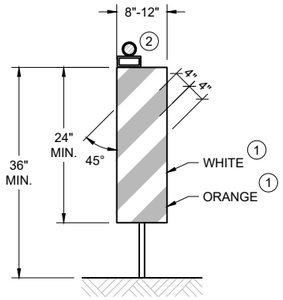

VERTICAL PANEL

THE STRIPES SHALL SLOPE DOWNWARD TO
THE TRAFFIC SIDE FOR CHANNELIZATION.

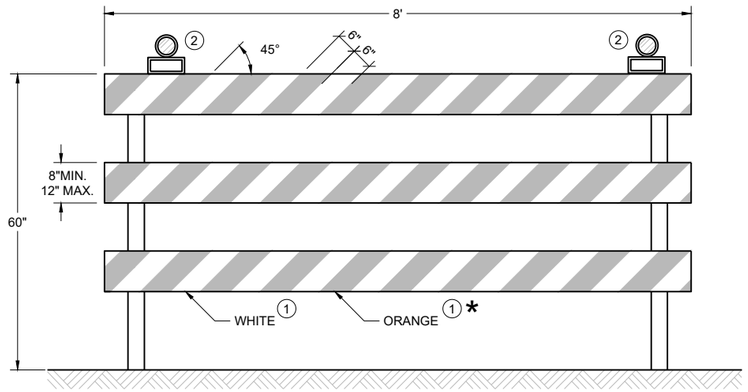

TYPE III BARRICADE

IF SIGN MOUNTED, DO NOT COVER MORE THAN 50% OF THE TOP TWO RAILS OR 33% OF THE TOTAL AREA OF THE THREE RAILS.

* IF USED FOR A PERMANENT APPLICATION USE RED SHEETING.

CHANNELIZING DEVICES
DRUMS, CONES, BARRICADES
AND VERTICAL PANELS

STATE OF WISCONSIN
DEPARTMENT OF TRANSPORTATION

APPROVED
February 2026 — DATE
/S/ Andrew Heidtke — WORK ZONE ENGINEER

FHWA

6
SDD 15C11-11b

LEGEND

SIGN ON PORTABLE OR PERMANENT SUPPORT

TEMPORARY PORTABLE RUMBLE STRIP ARRAY

DIRECTION OF TRAFFIC

WORK AREA

FLAGGER, EQUIPPED WITH STOP/SLOW PADDLE FASTENED ON SUPPORT STAFF

GENERAL NOTES

DETAILS OF TRAFFIC CONTROL DEVICES AND INSTALLATION NOT SHOWN ON THIS DRAWING SHALL CONFORM TO THE PERTINENT REQUIREMENTS OF THE STANDARD SPECIFICATIONS, THE SPECIAL PROVISIONS, AND THE MANUAL ON UNIFORM TRAFFIC CONTROL DEVICES.

ALL SIGNS ARE 48" X 48" UNLESS OTHERWISE NOTED.

"WO" SIGNS ARE THE SAME AS "W" SIGNS EXCEPT THE BACKGROUND IS ORANGE.

THE EXACT NUMBER, LOCATION AND SPACING OF ALL SIGNS, DEVICES, AND LOCATION OF ALL FLAGGERS SHALL BE ADJUSTED TO FIT FIELD CONDITIONS AS APPROVED BY THE ENGINEER.

THE FIRST ADVANCE WARNING SIGN SHOULD TYPICALLY BE LOCATED IN ADVANCE OF THE ANTICIPATED TRAFFIC BACKUP OR QUEUE.

WHEN A SIDE ROAD OR RAMP INTERSECTS THE FACILITY ON WHICH THE WORK IS BEING PERFORMED, ADDITIONAL TRAFFIC CONTROLS SHALL BE PROVIDED AS SPECIFIED IN THE PLANS AND/OR THE SPECIAL PROVISIONS OR AS APPROVED BY THE ENGINEER.

FLAGGING

FLAGGERS SHALL BE IN SIGHT OF EACH OTHER OR IN DIRECT COMMUNICATION AT ALL TIMES. THEY SHALL BE EQUIPPED WITH STOP/SLOW PADDLES FASTENED ON SUPPORT STAFFS. WHEN THE FLAGGING OPERATION IS NOT IN EFFECT REMOVE TEMPORARY PORTABLE RUMBLE STRIPS PRIOR TO COVERING OR REMOVING ALL ADVANCE SIGNING.

(1) FOR MOVING WORK OPERATIONS, POST ADDITIONAL W20-7A FLAGGER SIGNS AT APPROXIMATELY 3,500' INTERVALS IN THE MOVING WORK OPERATION OR AS APPROVED BY THE ENGINEER.

(2) SIGN NOT REQUIRED IF FLAGGING OPERATION OCCURS WITHIN A SIGNED ROAD WORK ZONE AREA.

WHEN THE DISTANCE BETWEEN FLAGGERS EXCEEDS 2 MILES, A PILOT CAR IS REQUIRED. WHEN CURVES REDUCE SIGHT DISTANCE BELOW 400', A PILOT CAR IS REQUIRED.

TEMPORARY PORTABLE RUMBLE STRIPS

UTILIZE TEMPORARY PORTABLE RUMBLE STRIPS ON ALL FLAGGING OPERATIONS.

(3) EACH TEMPORARY PORTABLE RUMBLE STRIP ARRAY CONSISTS OF THREE RUMBLE STRIPS PLACED TRANSVERSE ACROSS THE LANE AT THE LOCATIONS SHOWN. WITHIN EACH ARRAY, SPACING BETWEEN RUMBLE STRIPS SHALL BE 15 FEET ON CENTER

ONLY USE TEMPORARY PORTABLE RUMBLE STRIPS FROM THE APPROVED PRODUCTS LIST.

INSTALL TEMPORARY RUMBLE STRIPS PER MANUFACTURER'S RECOMMENDATIONS.

PLACE ADVANCE SIGNING PRIOR TO INSTALLING TEMPORARY RUMBLE STRIPS.

DO NOT INSTALL TEMPORARY PORTABLE RUMBLE STRIPS ON GRAVEL, MILLED SURFACES, OR ASPHALT THAT HAS BEEN PAVED LESS THAN 12 HOURS.

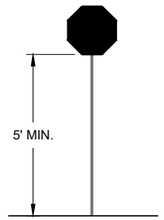

STOP/SLOW PADDLE ON SUPPORT STAFF

SIGN AND TEMPORARY RUMBLE STRIP ARRAY SPACING TABLE

SPEED LIMIT	SPACING "A"
25-30 MPH	200'
35-40 MPH	350'
45-55 MPH	500'

WO3-4

USE OF WO3-4 SIGN IS OPTIONAL. WHEN USED, THIS SIGN SHALL BE LOCATED BETWEEN THE W20-7A AND W20-4A SIGNS, USING SPACING "A".

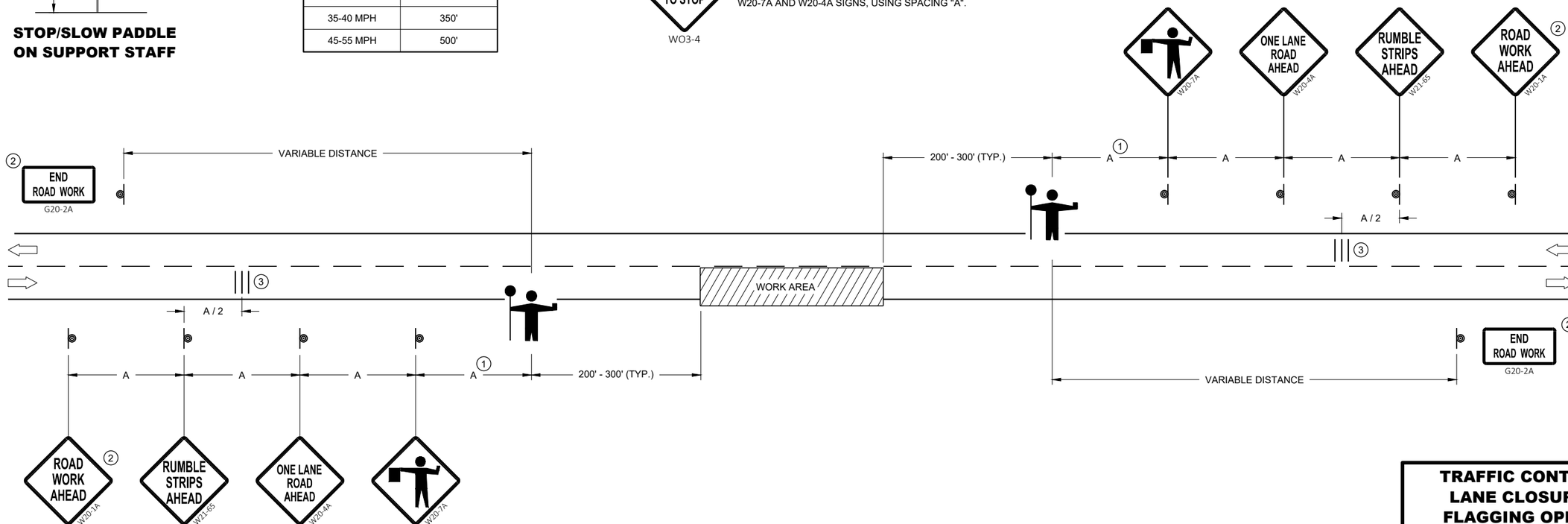

TRAFFIC CONTROL FOR LANE CLOSURE WITH FLAGGING OPERATION

STATE OF WISCONSIN
DEPARTMENT OF TRANSPORTATION

APPROVED
May 2022
DATE

/S/ Andrew Heidtke
WORK ZONE ENGINEE

FHWA

6

SDD 15C12 - 09a

6

SDD 15C12 - 09a

GENERAL NOTES

SIGN ON PERMANENT SUPPORT

TRAFFIC CONTROL CONE 42-INCH

TRAFFIC CONTROL DRUM

TEMPORARY PORTABLE RUMBLE STRIP ARRAY

DIRECTION OF TRAFFIC

WORK AREA

AFAD — AUTOMATED FLAGGER ASSISTANCE DEVICE (AFAD)

GENERAL NOTES

DETAILS OF TRAFFIC CONTROL DEVICES AND INSTALLATION NOT SHOWN ON THIS DRAWING SHALL CONFORM TO THE PERTINENT REQUIREMENTS OF THE STANDARD SPECIFICATIONS, THE SPECIAL PROVISIONS, AND THE MANUAL ON UNIFORM TRAFFIC CONTROL DEVICES.

ALL SIGNS ARE 48" X 48" UNLESS OTHERWISE NOTED.

"WO" SIGNS ARE THE SAME AS "W" SIGNS EXCEPT THE BACKGROUND IS ORANGE.

THE EXACT NUMBER, LOCATION AND SPACING OF ALL SIGNS, DEVICES, AND LOCATION OF ALL FLAGGERS SHALL BE ADJUSTED TO FIT FIELD CONDITIONS AS APPROVED BY THE ENGINEER.

THE FIRST ADVANCE WARNING SIGN SHOULD TYPICALLY BE LOCATED IN ADVANCE OF THE ANTICIPATED TRAFFIC BACKUP OR QUEUE.

WHEN A SIDE ROAD OR RAMP INTERSECTS THE FACILITY ON WHICH THE WORK IS BEING PERFORMED, ADDITIONAL TRAFFIC CONTROLS SHALL BE PROVIDED AS SPECIFIED IN THE PLANS AND/OR THE SPECIAL PROVISIONS OR AS APPROVED BY THE ENGINEER.

FLAGGING

IF THE AUTOMATED FLAGGER ASSISTANCE DEVICE (AFAD) STOPS WORKING, FLAGGERS SHALL BE IN SIGHT OF EACH OTHER OR IN DIRECT COMMUNICATION AT ALL TIMES. THEY SHALL BE EQUIPPED WITH STOP/SLOW PADDLES FASTENED ON SUPPORT STAFFS. WHEN THE FLAGGING OPERATION IS NOT IN EFFECT REMOVE TEMPORARY PORTABLE RUMBLE STRIPS PRIOR TO COVERING OR REMOVING ALL ADVANCE SIGNING.

WHEN THE DISTANCE BETWEEN FLAGGERS EXCEEDS 2 MILES, A PILOT CAR IS REQUIRED. WHEN CURVES REDUCE SIGHT DISTANCE BELOW 400', A PILOT CAR IS REQUIRED.

(1) SIGN NOT REQUIRED IF FLAGGING OPERATION OCCURS WITHIN A SIGNED ROAD WORK ZONE AREA.

(2) IF FLAGGERS ARE PHYSICALLY NEEDED TO FLAG, REPLACE WO3-4 SIGNS WITH W20-7A SIGNS.

TEMPORARY PORTABLE RUMBLE STRIPS

UTILIZE TEMPORARY PORTABLE RUMBLE STRIPS ON ALL FLAGGING OPERATIONS.

ONLY USE TEMPORARY PORTABLE RUMBLE STRIPS FROM THE APPROVED PRODUCTS LIST.

PLACE ADVANCE SIGNING PRIOR TO INSTALLING TEMPORARY RUMBLE STRIPS.

DO NOT INSTALL TEMPORARY PORTABLE RUMBLE STRIPS ON GRAVEL, MILLED SURFACES, OR ASPHALT THAT HAS BEEN PAVED LESS THAN 12 HOURS.

(3) EACH TEMPORARY PORTABLE RUMBLE STRIP ARRAY CONSISTS OF THREE RUMBLE STRIPS PLACED TRANSVERSELY AT THE LOCATIONS SHOWN. WITHIN EACH ARRAY, SPACING BETWEEN RUMBLE STRIPS SHALL BE 15 FEET ON CENTER.

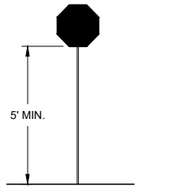

STOP/SLOW PADDLE ON SUPPORT STAFF

SIGN AND TEMPORARY RUMBLE STRIP ARRAY SPACING TABLE

SPEED LIMIT	SPACING "A"
25-30 MPH	200'
35-40 MPH	350'
45-55 MPH	500'

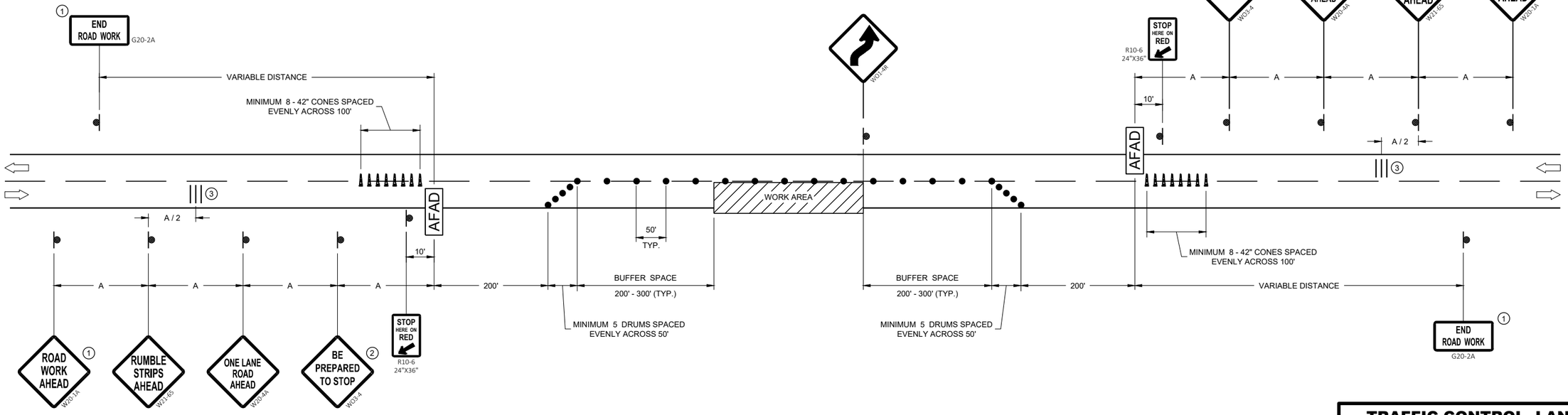

TRAFFIC CONTROL, LANE CLOSURE WITH AUTOMATED FLAGGER ASSISTANCE DEVICE

STATE OF WISCONSIN
DEPARTMENT OF TRANSPORTATION

APPROVED
May 2022 — DATE
/S/ Andrew Heidtke — WORK ZONE ENGINEER
FHWA

SDD 15C12 - 09b

SDD 15C12 - 09b

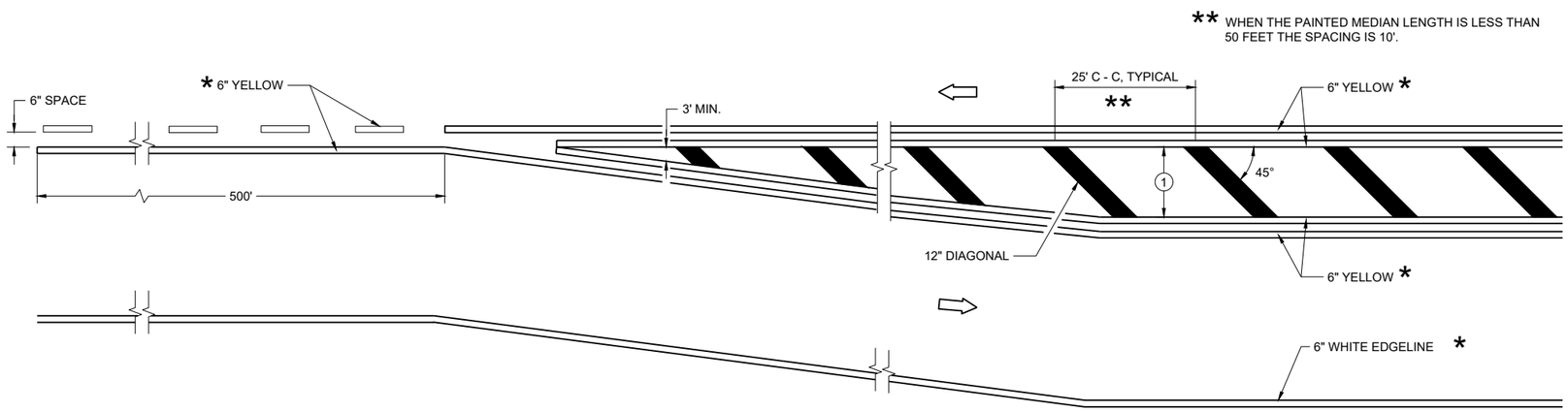

MEDIAN ISLAND DETAIL

GENERAL NOTES

(1) DIAGONALS ARE OPTIONAL WHEN PAINTED ISLAND IS LESS THAN 6 FEET AT THE WIDEST POINT. OMIT DIAGONALS IF WIDTH IS LESS THAN 4 FEET.

DIRECTION OF TRAVEL

*CONFIRM MARKING LINE WIDTH WITH THE MISCELLANEOUS QUANTITIES

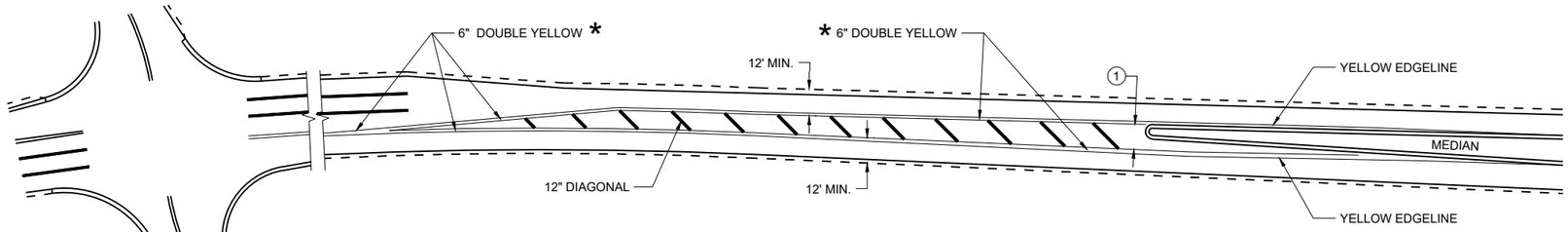

APPROACH MARKINGS FOR OTHER MEDIAN TYPES

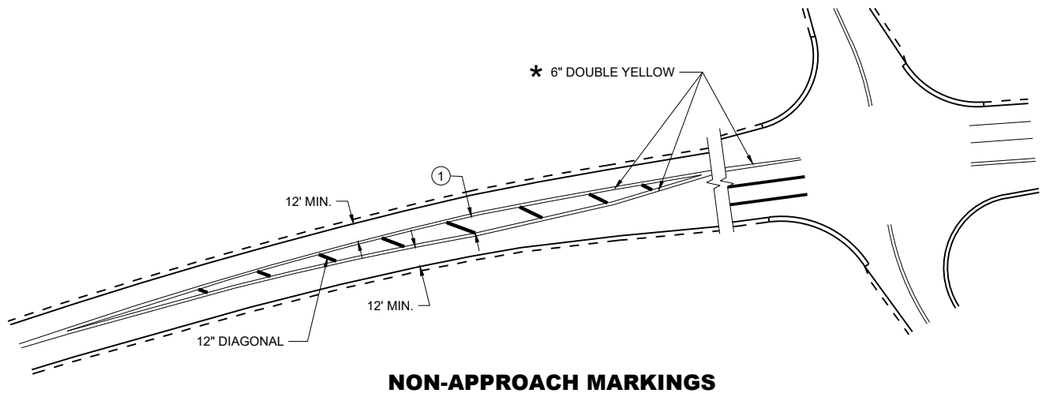

NON-APPROACH MARKINGS

MEDIAN ISLAND PAVEMENT MARKINGS

STATE OF WISCONSIN
DEPARTMENT OF TRANSPORTATION

APPROVED
August 2024
DATE

/S/ Jeannie Silver
Statewide Pavement Marking Engineer

FHWA

6

SDD 15C18-09a

SDD 15C18-09a

LEGEND

V1 LEAD VEHICLE

V2 MARKING VEHICLE

V3 SHADOW VEHICLE

TRUCK MOUNTED ATTENUATOR (TMA)

SIGN ON TEMPORARY SUPPORT

DIRECTION OF TRAFFIC

GENERAL NOTES

ALL VEHICLES SHALL BE EQUIPPED WITH TWO 360 DEGREE HIGH INTENSITY YELLOW FLASHING LIGHTS OR STROBE LIGHTS AND OPERATED WITH HEADLIGHTS TURNED ON.

ALL VEHICLES SHALL BE EQUIPPED WITH REAR FACING TYPE B OR C FLASHING ARROW PANEL OPERATING IN CAUTION MODE. SIGNS PLACED ON VEHICLES MUST NOT OBSCURE THE ARROW PANEL.

ALL SIGNS ARE 48" X 48" UNLESS OTHERWISE SPECIFIED.

DISTANCE BETWEEN VEHICLES MAY VARY ACCORDING TO TERRAIN, SIGHT DISTANCE, PAINT DRYING TIME, AND OTHER FACTORS. WHENEVER ADEQUATE STOPPING SIGHT DISTANCE EXISTS TO THE REAR, SHADOW VEHICLES SHOULD MAINTAIN THE MINIMUM DISTANCE FROM THE WORK VEHICLE AND PROCEED AT THE SAME SPEED AS THE WORK VEHICLE. SHADOW VEHICLES SHOULD SLOW DOWN IN ADVANCE OF VERTICAL AND HORIZONTAL CURVES THAT RESTRICT SIGHT DISTANCE.

THE WORK AND SHADOW VEHICLES SHOULD PULL OVER PERIODICALLY TO ALLOW TRAFFIC TO PASS.

WHEN NO WORK ACTIVITY IS TAKING PLACE, REMOVE OR LAY STATIONARY SIGNS AND SUPPORTS FLAT ON THE GRADE WITH

WORKERS SHALL NOT PERFORM WORK FROM ANY SHADOW OR PROTECTION VEHICLES.

UPRIGHTS ORIENTED PARALLEL TO AND DOWNSTREAM FROM TRAFFIC.

CONES SHOULD BE USED BETWEEN THE MARKING AND SHADOW VEHICLE AT 100 FOOT SPACING. CONES MAY BE OMITTED ON PAINTED LINE IF APPROVED BY THE ENGINEER. CONSIDER PAVEMENT MARKING DRY OR CURE TIMES AND TRAFFIC VOLUME.

CONES SHALL BE A MINIMUM OF 28" FOR WET PAVEMENT MARKING .

(1) SIGNS SHALL BE REPEATED APPROXIMATELY EVERY THREE MILES AND AFTER EVERY MAJOR INTERSECTION.

(2) IF CONSTRUCTION WORK ZONE SIGNS ARE IN PLACE, W20-1A OR W21-63 ARE NOT REQUIRED.

(3) V1 AND V2 CAN BE SWITCHED SO THAT THE MARKER IS THE LEAD VEHICLE.

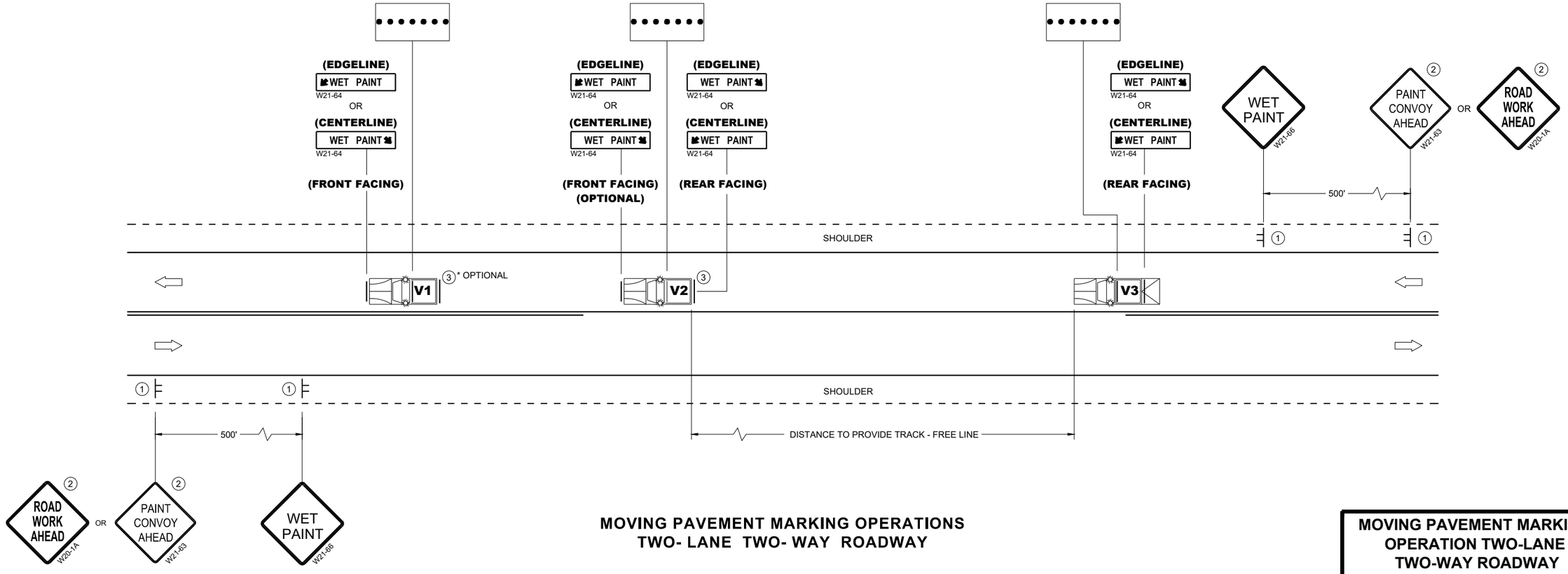

MOVING PAVEMENT MARKING OPERATIONS
TWO- LANE TWO- WAY ROADWAY

MOVING PAVEMENT MARKING OPERATION TWO-LANE TWO-WAY ROADWAY

STATE OF WISCONSIN
DEPARTMENT OF TRANSPORTATION

APPROVED
November 2025 — DATE
/S/ Andrew Heidtke — STATE ELECTRICAL ENGINEER

FHWA

6

SDD 15C19-11a

GENERAL NOTES

STOP SIGN SHALL BE PLACED A MINIMUM OF 6 FEET TO A MAXIMUM OF 50 FEET FROM THE EDGELINE LOCATION.

1. 18-INCH STOP LINES MAY BE DELETED OR ADDED BY THE REGION MARKING ENGINEER BASED ON VISIBILITY AND SIGHT LINES.
2. NO STOP LINE IS REQUIRED IF STOP SIGN IS LESS THAN OR EQUAL TO 40 FEET FROM THE EDGELINE.
3. NO STOP LINE IS REQUIRED IF STOP SIGN IS LESS THAN OR EQUAL TO 30 FEET FROM THE FLANGE LINE EXTENSION.
4. MOVE CLOSER TO THE EDGE OF TRAVEL LINE AS NEEDED FOR VISIBILITY AND SIGHT LINES (NO CLOSER THAN 4 FEET).
5. LADDER BAR CROSSWALKS SHOULD ONLY BE USED FOR MID BLOCK CROSSINGS. USE 2 - 6" TRANSVERSE LINES.
6. POSTED SPEED LIMITS OF 40 MPH OR GREATER USE A MINIMUM WIDTH OF 8' FOR MIDBLOCK CROSSWALKS

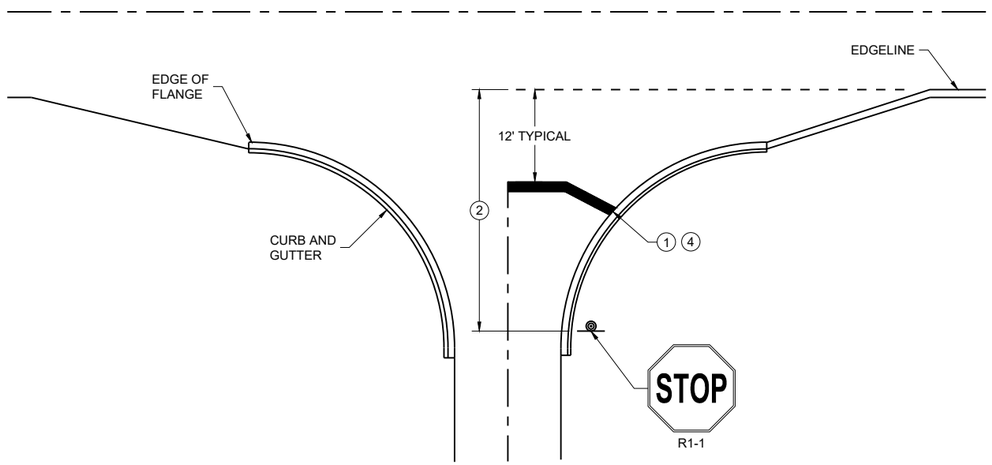

TYPICAL STOP LINE PAVEMENT MARKING WITH CURB AND GUTTER

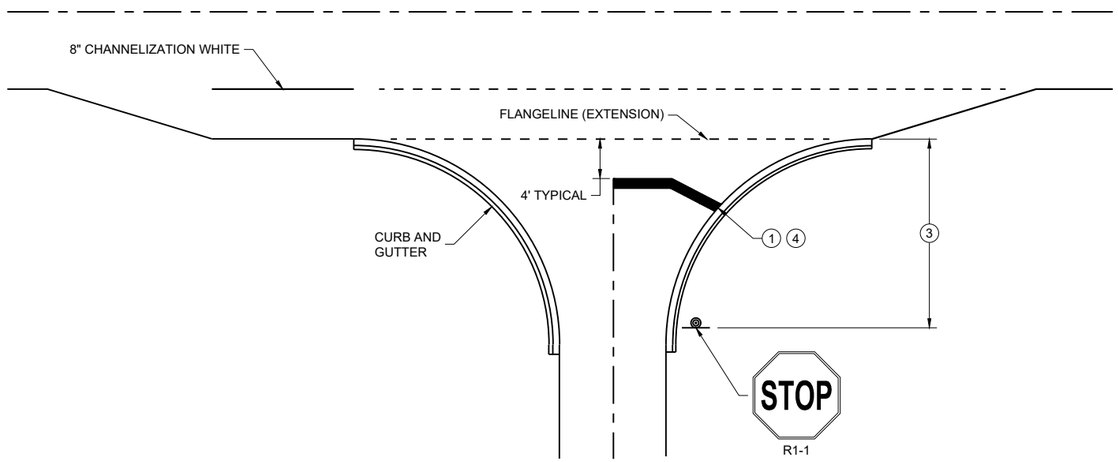

TYPICAL STOP LINE PAVEMENT MARKING FOR SIDE ROADS WITH RIGHT TURN LANE

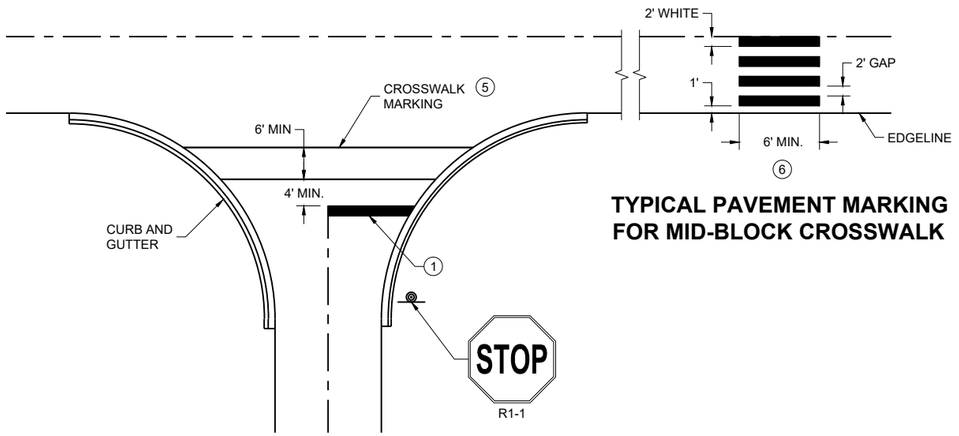

TYPICAL PAVEMENT MARKING FOR MID-BLOCK CROSSWALK (5)

TYPICAL STOP LINE PAVEMENT MARKING FOR SIDE ROADS WITH CROSSWALK MARKING

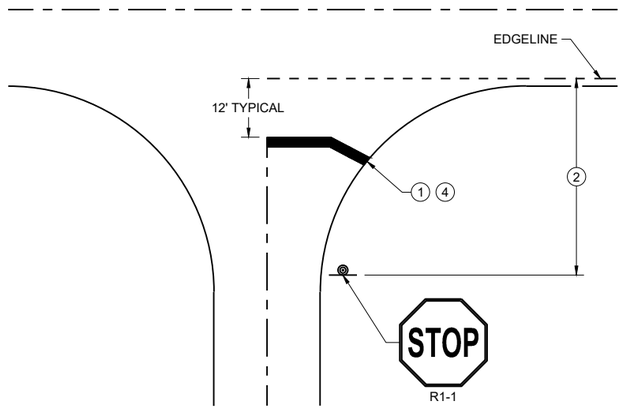

TYPICAL STOP LINE PAVEMENT MARKING WITHOUT CURB AND GUTTER

STOP LINE AND CROSSWALK PAVEMENT MARKING

STATE OF WISCONSIN
DEPARTMENT OF TRANSPORTATION

APPROVED

March 2024 — DATE

/S/ Matthew Rauch — STATE SIGNING AND MARKING ENGINEER

FHWA

6
SDD 15C33-05

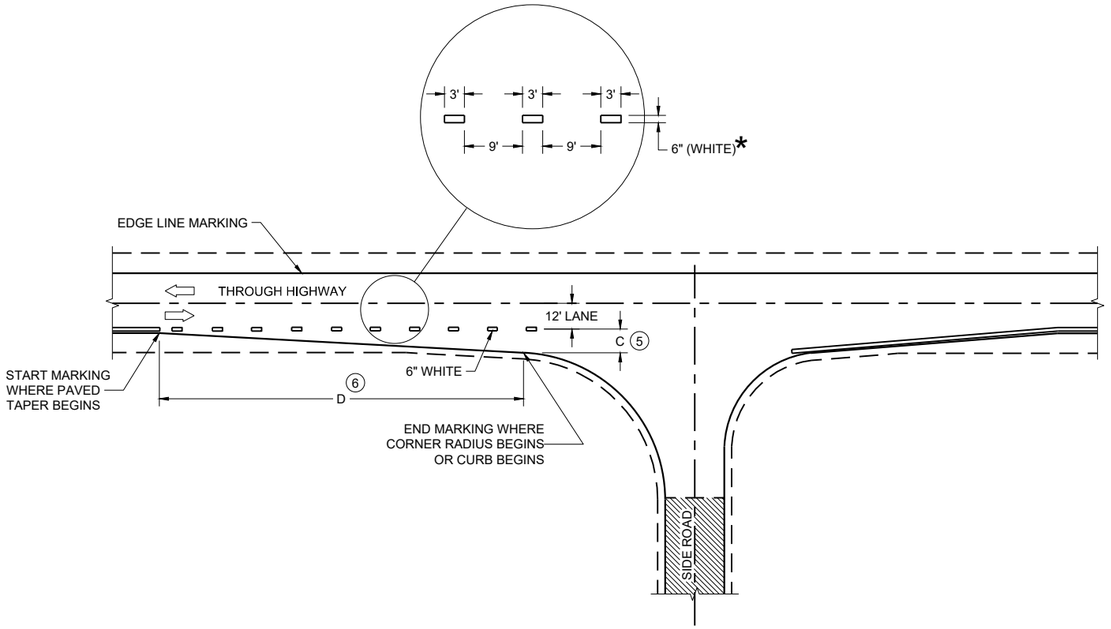

MINOR INTERSECTION

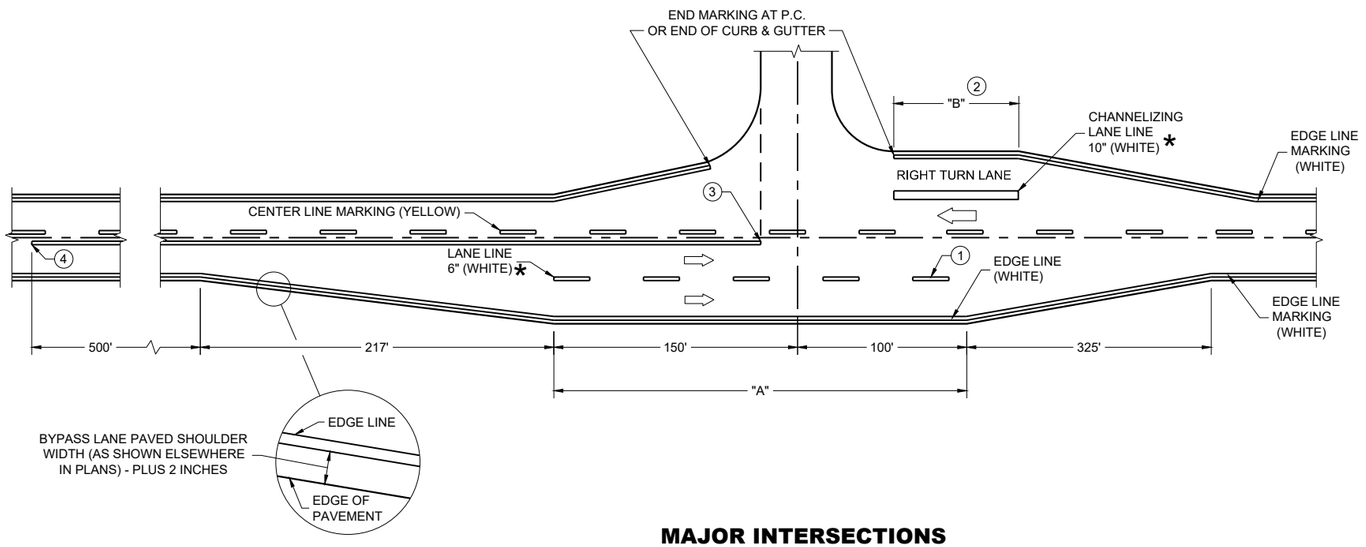

MAJOR INTERSECTIONS

(INTERSECTION WITH FULL RIGHT TURN LANE OR BYPASS LANE)

*CONFIRM MARKING LINE WIDTH WITH THE MISCELLANEOUS QUANTITIES

GENERAL NOTES

OMIT EDGE LINES THROUGH INTERSECTIONS. CONTINUE EDGE LINES THROUGH DRIVEWAYS.

1. WHEN DISTANCE "A" IS LESS THAN 250 FEET, OMIT LANE LINE.
2. WHEN DISTANCE "B" IS LESS THAN 100 FEET, OMIT CHANNELIZING LANE LINE.
3. BARRIER LINE ENDS AT SIDE ROAD PAVEMENT / SURFACE EDGE EXTENSION.
4. BARRIER LINE STARTS 500 FEET PRIOR TO THE BYPASS TAPER.
5. WHEN DISTANCE "C" IS LESS THAN 4 FEET, OMIT DOTTED EXTENSION.
6. WHEN DISTANCE "D" IS LESS THAN 50 FEET, OMIT DOTTED EXTENSION.

LEGEND

DIRECTION OF TRAVEL

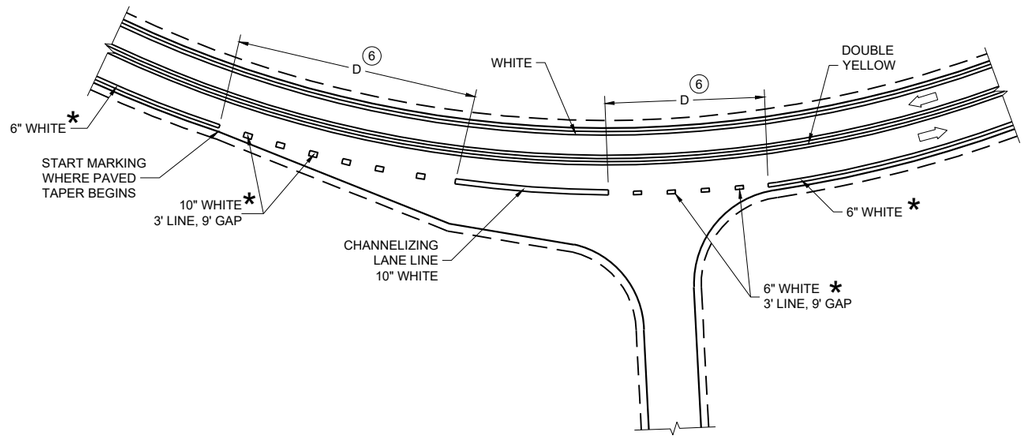

INTERSECTION ON OUTSIDE OF CURVE

PAVEMENT MARKING (INTERSECTIONS)

STATE OF WISCONSIN
DEPARTMENT OF TRANSPORTATION

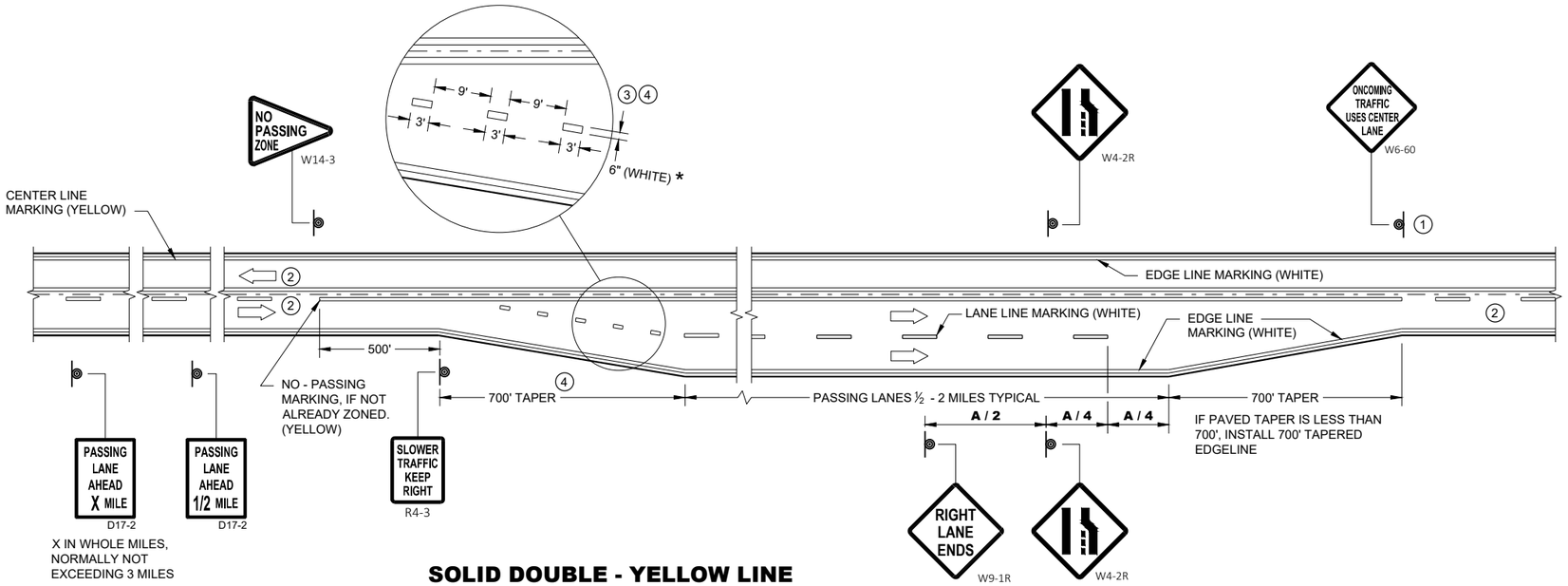

SOLID DOUBLE - YELLOW LINE
(THROUGHOUT ENTIRE PASSING / CLIMBING LANE)

GENERAL NOTES

1. SIGN SHALL BE REPEATED AT 1 MILE INCREMENTS OR AT THE DISCRETION OF THE REGIONAL TRAFFIC ENGINEER.
2. THERE MAY BE SOLID YELLOW ON THE CENTERLINE DUE TO SIGHT CONDITIONS.
3. THE TAPER LENGTH OF THE DOTTED LINE PAVEMENT MARKING SHALL BE 700 FEET, 3' LINE, 9' GAP, EXCEPT RETRACE THE EXISTING LINE - GAP PATTERN WHERE EXISTING MARKINGS ARE IN PLACE.
4. WHEN THE ENTRANCE TAPER IS LESS THAN 700 FEET OR THE SHOULDER WIDTH IN THE PASSING / CLIMBING LANE IS LESS THAN THE ADJACENT HIGHWAY, DO NOT INSTALL DOTTED LINE PAVEMENT MARKING.
5. REPEAT EVERY 1 MILE UP UNTIL R4-53.

ARROW SYMBOL (⇨) SHOWS DIRECTION OF TRAVEL

DISTANCE TABLE

POSTED OR 85th PERCENTILE SPEED	DISTANCE "A"
45	775
50	885
55	990

* CONFIRM MARKING LINE WIDTH WITH THE MISCELLANEOUS QUANTITIES

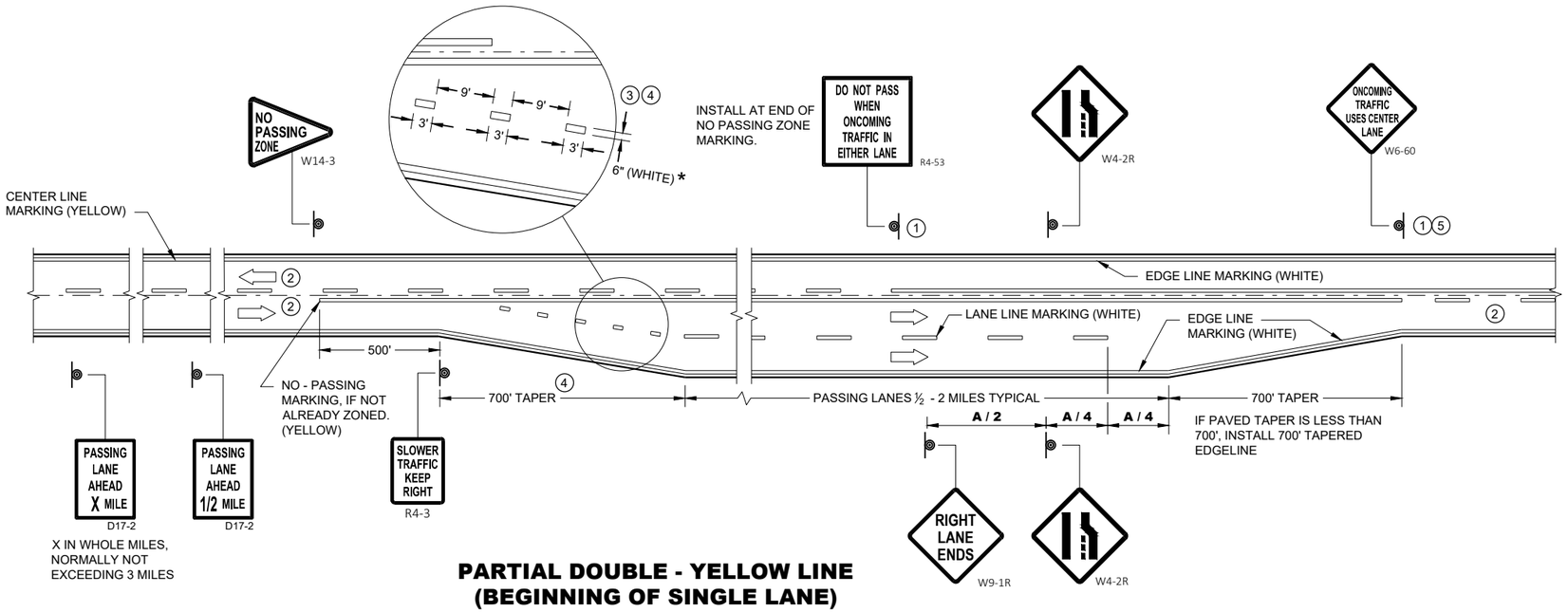

PARTIAL DOUBLE - YELLOW LINE
(BEGINNING OF SINGLE LANE)

PAVEMENT MARKING & SIGNING (CLIMBING LANE & PASSING LANE)

6
SDD 15C35-06b

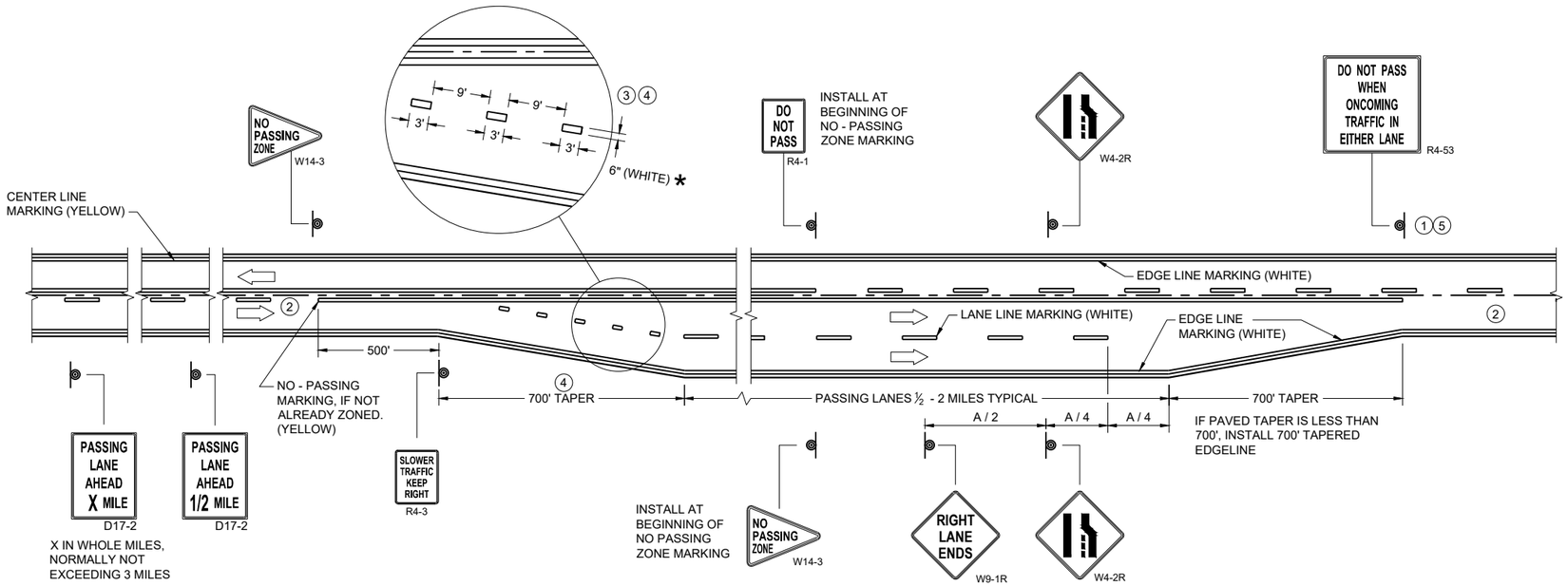

SOLID DOUBLE - YELLOW LINE
(END OF SINGLE LANE)

GENERAL NOTES

1. SIGN SHALL BE REPEATED AT 1 MILE INCREMENTS OR AT THE DISCRETION OF THE REGIONAL TRAFFIC ENGINEER.
2. THERE MAY BE SOLID YELLOW ON THE CENTERLINE DUE TO SIGHT CONDITIONS.
3. THE TAPER LENGTH OF THE DOTTED LINE PAVEMENT MARKING SHALL BE 700 FEET, 3' LINE, 9' GAP, EXCEPT RETRACE THE EXISTING LINE - GAP PATTERN WHERE EXISTING MARKINGS ARE IN PLACE.
4. WHEN THE ENTRANCE TAPER IS LESS THAN 700 FEET OR THE SHOULDER WIDTH IN THE PASSING / CLIMBING LANE IS LESS THAN THE ADJACENT HIGHWAY, DO NOT INSTALL DOTTED LINE PAVEMENT MARKING.
5. REPEAT EVERY ONE MILE UP UNTIL NO PASSING ZONE.

ARROW SYMBOL (⇨) SHOWS DIRECTION OF TRAVEL

DISTANCE TABLE

POSTED OR 85th PERCENTILE SPEED	DISTANCE "A"
45	775
50	885
55	990

*CONFIRM MARKING LINE WIDTH WITH THE MISCELLANEOUS QUANTITIES

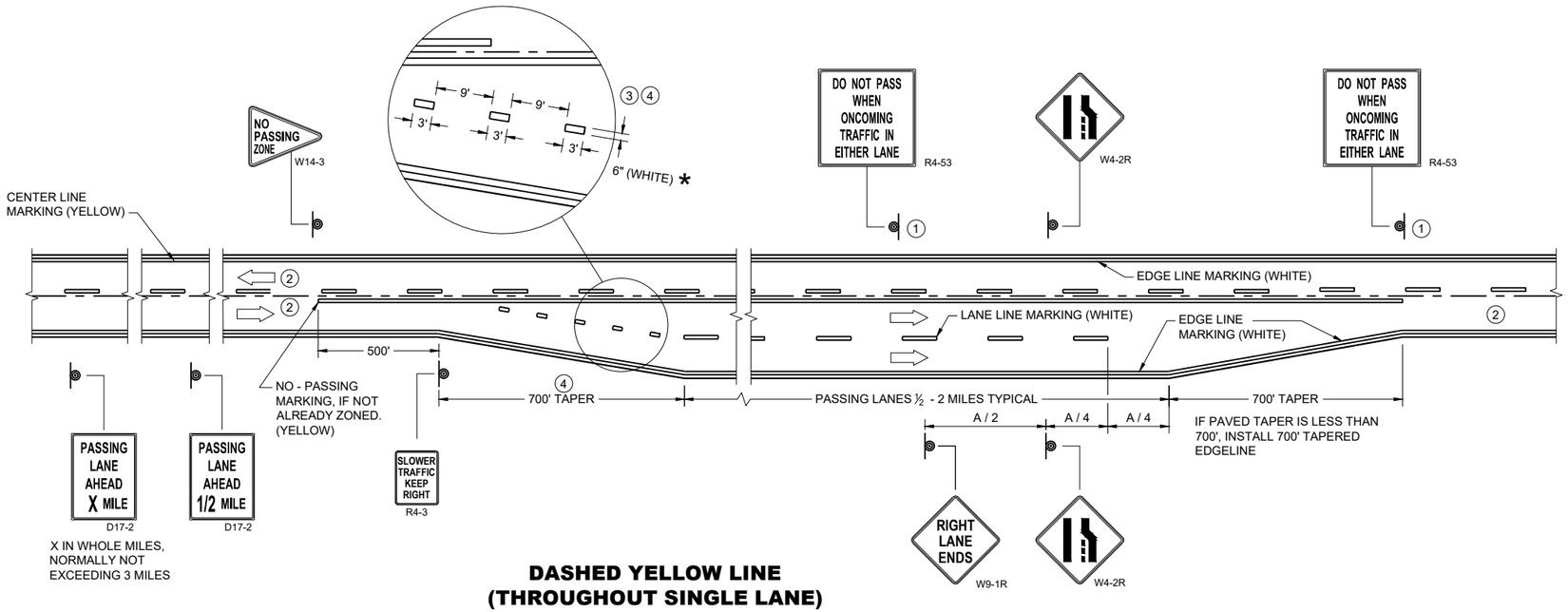

DASHED YELLOW LINE
(THROUGHOUT SINGLE LANE)

PAVEMENT MARKING & SIGNING (CLIMBING LANE & PASSING LANE)

STATE OF WISCONSIN
DEPARTMENT OF TRANSPORTATION

APPROVED
May 2023 — DATE
/S/ Jeannie Silver — Statewide Pavement Marking Engineer

FHWA

6

SDD 15C35-06c

LEGEND

- SIGN ON PERMANENT SUPPORT
- TRAFFIC CONTROL DRUM
- DIRECTION OF TRAFFIC
- WORK ZONE

GENERAL NOTES

ALL SIGNS ARE 48"X48" UNLESS OTHERWISE NOTED. IF NECESSARY DUE TO SPACE CONSTRAINTS IN URBAN AREAS, 36" X 36" SIGNS MAY BE USED IF APPROVED BY THE REGIONAL TRAFFIC UNIT.

"WO" SIGN IS THE SAME AS "W" SIGN EXCEPT THE BACKGROUND IS ORANGE.

ANY SIGNS TEMPORARY OR EXISTING, WHICH CONFLICT WITH THE TRAFFIC CONTROL "IN USE" SHALL BE REMOVED OR COVERED AS NEEDED AND AS APPROVED BY THE ENGINEER.

THE EXACT NUMBER, LOCATION, AND SPACING OF ALL SIGNS AND DEVICES SHALL BE ADJUSTED TO FIT FIELD CONDITIONS AS APPROVED BY THE ENGINEER.

CHANNELIZING DEVICES PLACED ADJACENT TO WORK AREA SHALL BE PULLED BACK FROM THE TRAVEL LANE WHEN WORK IS NOT IN PROGRESS.

SIGNS THAT WILL BE IN PLACE LESS THAN 7 CONTINUOUS DAYS AND NIGHTS MAY BE MOUNTED ON PORTABLE SUPPORTS.

W20-1A AND G20-2A SIGNS ARE NOT REQUIRED IF THE WORK AREA IS WITHIN A LARGER WORK ZONE WHERE THESE SIGNS ARE ALREADY PRESENT. G20-2A SIGNS MAY ALSO BE OMITTED IF DURATION OF WORK IS LESS THAN 7 CONTINUOUS DAYS AND NIGHTS.

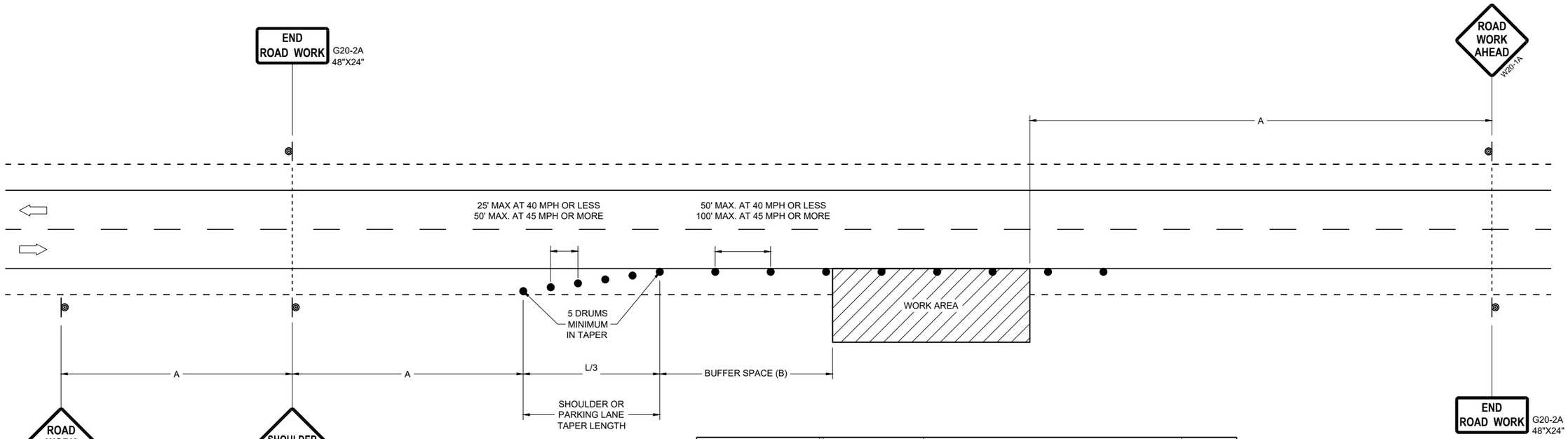

POSTED SPEED LIMIT PRIOR TO WORK STARTING (MPH)	ADVANCE WARNING SIGN SPACING (A) FEET	SHOULDER TAPER L / 3 W, LATERAL OFFSET (FT)						BUFFER SPACE (B) FEET
		3	4	5	6	7	8	
25	200'	10	14	17	21	24	28	155
30	200'	15	20	25	30	35	40	200
35	350'	20	27	34	40	47	54	250
40	350'	26	35	44	53	62	70	305
45	500'	45	59	74	89	104	119	360
50	500'	50	66	83	99	116	132	425
55	500'	54	73	91	109	127	145	495

TRAFFIC CONTROL, WORK ON SHOULDER OR PARKING LANE, UNDIVIDED ROADWAY

STATE OF WISCONSIN
DEPARTMENT OF TRANSPORTATION

APPROVED
November 2025
DATE

/S/ ANDREW HEIDTKE
STATEWIDE WORK ZONE TRAFFIC SAFETY ENGINEER

FHWA

6

SDD 15D28-05

6

SDD 15D28-05

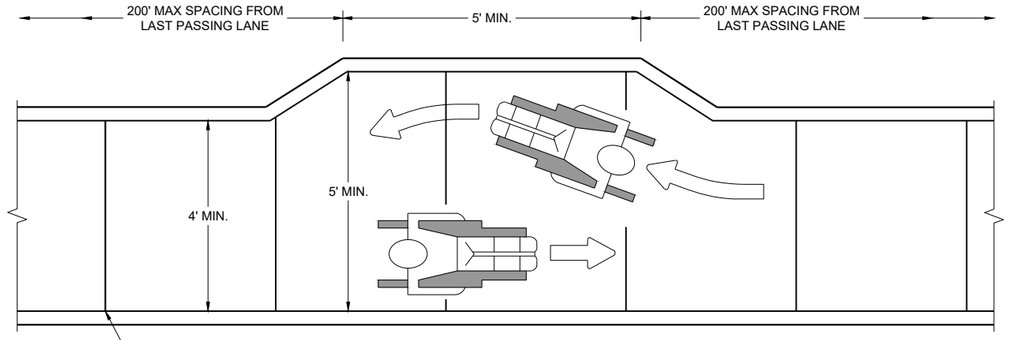

NARROW SIDEWALK PASSING DETAIL

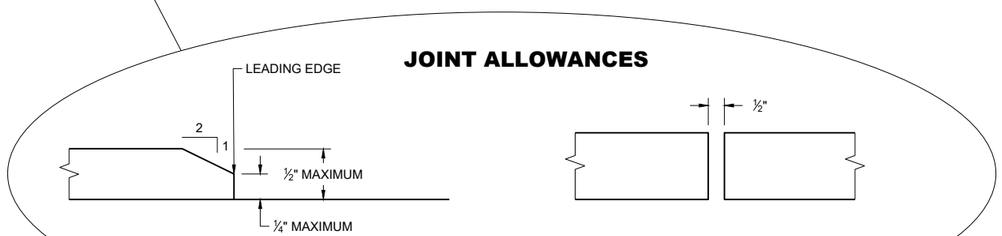

MAXIMUM VERTICAL GAP

MAXIMUM HORIZONTAL GAP

GENERAL NOTES

BARRICADE DEVICE SELECTED FROM APPROVED PRODUCT LIST

1. REFLECTIVE SHEETING SHALL FOLLOW THE REQUIREMENTS IN THE APPROVED PRODUCTS LISTING FOR SIGN SHEETING.
2. SHEETING REQUIRED ON MORE THAN 50% OF BARRICADE WIDTH.
3. PLACE SHEETING ON BOTH SIDES OF THE BARRICADE.
* USE THIS DETAIL FOR SHEETING PLACEMENT REFERENCE.
4. WHEN THE TEMPORARY PEDESTRIAN ACCESS ROUTE RUNS PARALLEL ON THE ROADWAY SURFACE, THE MAXIMUM CROSS SLOPE WILL MATCH THE EXISTING ROADWAY CROSS SLOPE.
5. WHERE SIGNS FOR TEMPORARY PEDESTRIAN ACCOMMODATIONS ARE SHOWN BEING PLACED BEHIND TEMPORARY PEDESTRIAN BARRICADE, THE SIGNS MAY BE MOUNTED ON THE TEMPORARY PEDESTRIAN BARRICADE INSTEAD. A CORRUGATED POLYPROPYLENE OR POLYETHYLENE PLASTIC SIGN BASE SHALL BE USED IF MOUNTED ON THE BARRICADE. THE TOP OF THE SIGN SHALL BE MOUNTED BELOW THE TOP OF THE BARRICADE TO ALLOW A CONTINUOUS HAND-TRAILING EDGE.

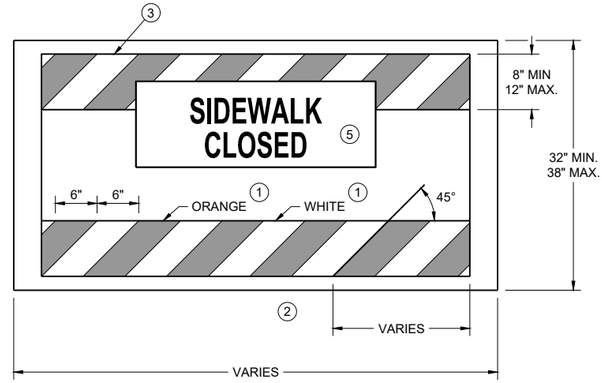

TEMPORARY PEDESTRIAN BARRICADE *

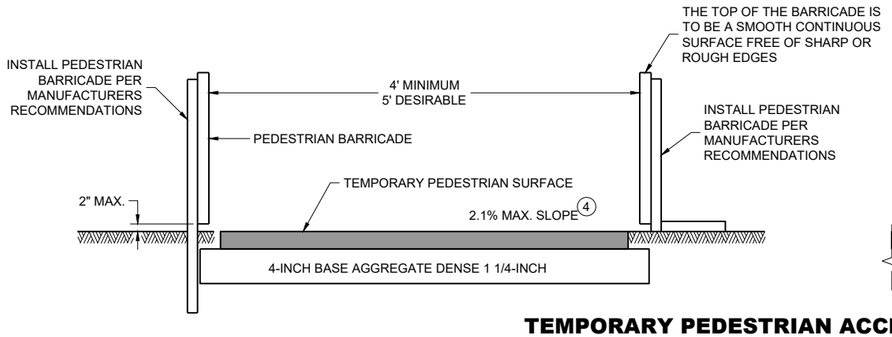

TEMPORARY PEDESTRIAN ACCESS

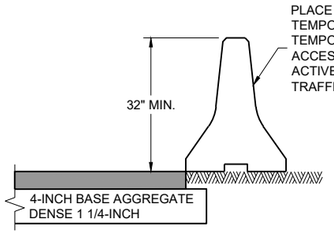

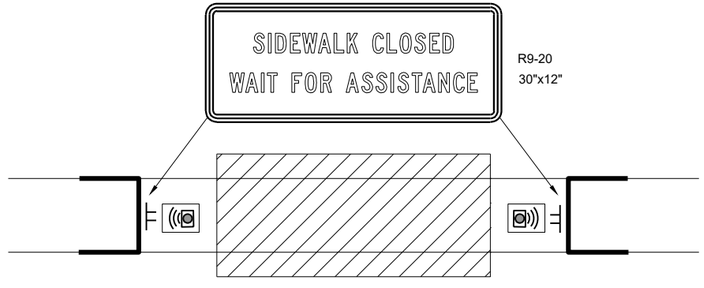

TEMPORARY PEDESTRIAN FLAGGING

LEGEND

- TEMPORARY PEDESTRIAN BARRICADE
- AUDIBLE MESSAGE DEVICE
- TEMPORARY SIGN SUPPORT
- WORK AREA

TRAFFIC CONTROL, PEDESTRIAN ACCOMMODATION

STATE OF WISCONSIN
DEPARTMENT OF TRANSPORTATION

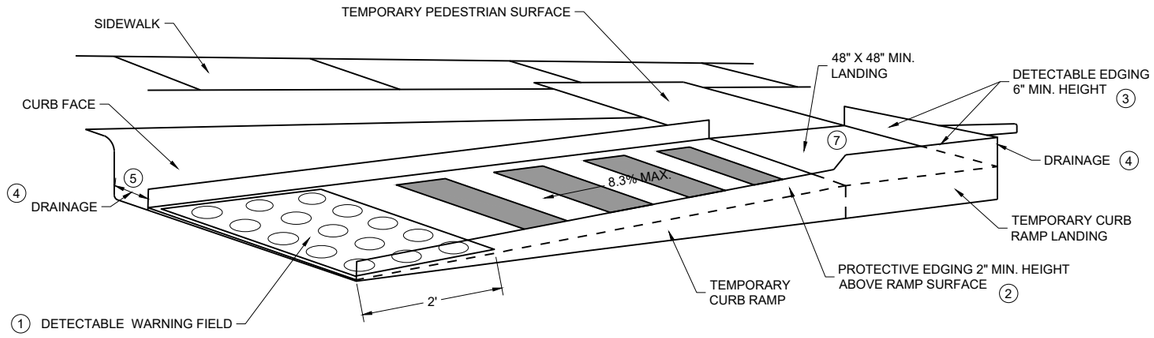

PERSPECTIVE VIEW

GENERAL NOTES

CURB RAMPS SHALL BE 48" MIN. WIDTH WITH A FIRM, STABLE AND SLIP RESISTANT SURFACE.

CURB RAMPS AND LANDINGS SHALL HAVE A 1:48 (2.1%) MAX. CROSS-SLOPE.

CLEAR SPACE OF 48" X 48" SHALL BE PROVIDED ABOVE AND BELOW THE CURB RAMP. LATERAL JOINTS OR GAPS BETWEEN SURFACES SHALL BE LESS THAN ½" WIDTH.

CHANGES BETWEEN SURFACE HEIGHTS SHALL NOT EXCEED ½". LATERAL EDGES MAY BE VERTICAL UP TO ¼" HIGH AND SHALL BE BEVELED AT 1:2 BETWEEN ¼" AND ½".

1. INSTALL CONTRASTING TEMPORARY DETECTABLE WARNING FIELD AT PEDESTRIAN STREET CROSSINGS, AS SHOWN IN THE PLANS.
2. PROTECTIVE EDGING WITH A 2" MIN. HEIGHT SHALL BE INSTALLED WHEN A CURB RAMP OR LANDING PLATFORM HAS A VERTICAL DROP OF 6" OR GREATER OR HAS A SIDE APRON SLOPE STEEPER THAN 1:3 (33%). PROTECTIVE EDGING SHOULD BE CONSIDERED WHEN CURB RAMPS OR LANDING PLATFORMS HAVE A VERTICAL DROP OF 3" OR MORE.
3. DETECTABLE EDGING WITH 6" MIN. HEIGHT AND CONTRASTING COLOR SHALL BE INSTALLED ON ALL CURB RAMP LANDINGS WHERE THE WALKWAY CHANGES DIRECTION (TURNS).
4. DO NOT RESTRICT WATER FLOW IN THE GUTTER SYSTEM.
5. ENSURE CURB RAMP IS OUT OF THE GUTTER PAN.
6. IF ONLY PART OF THE END PANEL OF TEMPORARY PEDESTRIAN BARRICADE PANEL IS NEEDED, EXTEND EXCESS PORTION OF TEMPORARY PEDESTRIAN BARRICADE PANEL HERE.
7. LANDING TO BE SLOPED A MAXIMUM OF 2.1% IN ALL DIRECTIONS OF PEDESTRIAN TRAVEL.

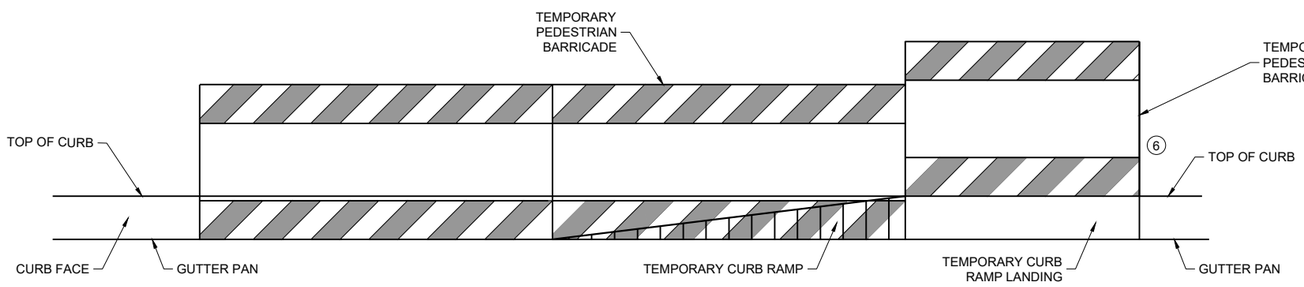

FRONT VIEW

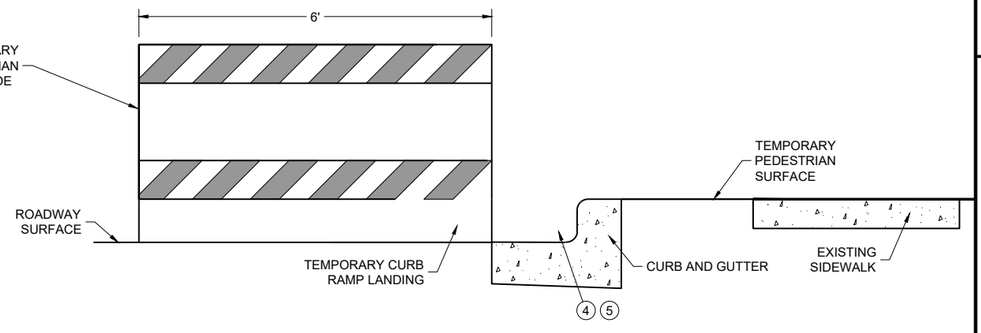

SIDE VIEW

TEMPORARY CURB RAMP PARALLEL TO CURB

TRAFFIC CONTROL, PEDESTRIAN ACCOMMODATION

STATE OF WISCONSIN
DEPARTMENT OF TRANSPORTATION

6

SDD 15D30-12b

6

SDD 15D30-12b

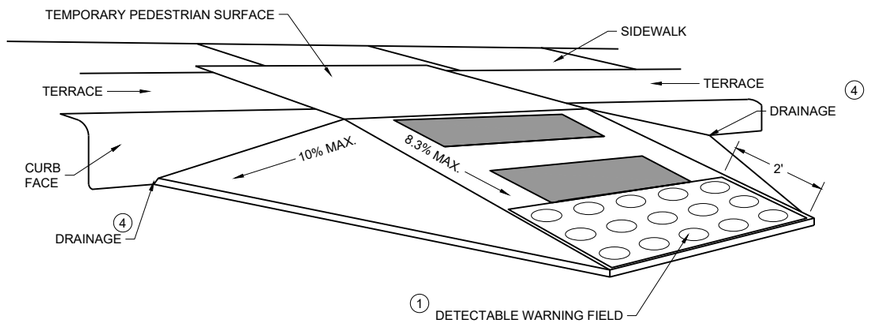

WITH SIDE APRON (5)

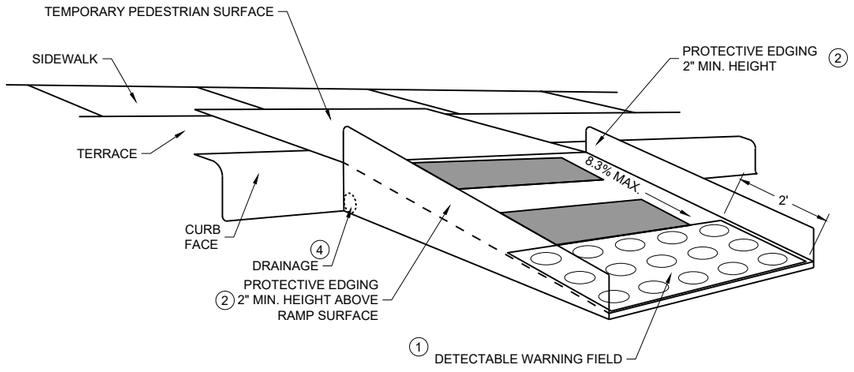

WITH PROTECTIVE EDGE

TEMPORARY CURB RAMP PERPENDICULAR TO CURB

GENERAL NOTES

CURB RAMPS SHALL BE 48" MINIMUM WIDTH WITH A FIRM, STABLE AND SLIP RESISTANT SURFACE.

ALTERNATE SIDEWALK WORK BETWEEN LEFT AND RIGHT SIDE OF ROADWAY TO MAINTAIN PEDESTRIAN ACCESS.

CURB RAMPS AND LANDINGS SHALL HAVE A 1:48 (2.1%) MAX. CROSS-SLOPE.

CLEAR SPACE OF 48" X 48" SHALL BE PROVIDED ABOVE AND BELOW THE CURB RAMP.

LATERAL JOINTS OR GAPS BETWEEN SURFACES SHALL BE LESS THAN ½" WIDTH.

CHANGES BETWEEN SURFACE HEIGHTS SHALL NOT EXCEED ½". LATERAL EDGES MAY BE VERTICAL UP TO ¼" HIGH AND SHALL BE BEVELED AT 1:2 BETWEEN ¼" AND ½".

(1) INSTALL CONTRASTING TEMPORARY DETECTABLE WARNING FIELD AT PEDESTRIAN STREET CROSSINGS, AS SHOWN IN THE PLANS

(2) PROTECTIVE EDGING WITH A 2" MIN. HEIGHT SHALL BE INSTALLED WHEN A CURB RAMP OR LANDING PLATFORM HAS A VERTICAL DROP OF 6" OR GREATER OR HAS A SIDE APRON SLOPE STEEPER THAN 1:3 (33%). PROTECTIVE EDGING SHOULD BE CONSIDERED WHEN CURB RAMPS OR LANDING PLATFORMS HAVE A VERTICAL DROP OF 3" OR MORE.

(3) DETECTABLE EDGING WITH 6" MIN. HEIGHT AND CONTRASTING COLOR SHALL BE INSTALLED ON ALL CURB RAMP LANDINGS WHERE THE WALKWAY CHANGES DIRECTION (TURNS).

(4) DO NOT RESTRICT WATER FLOW IN THE GUTTER SYSTEM.

(5) CAN ONLY BE USED FOR RAMPS WITH 6" OR LESS OF VERTICAL CHANGE.

GENERAL NOTES

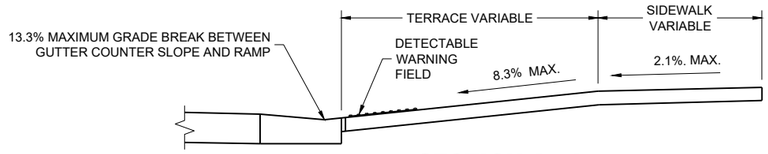

SECTION A - A

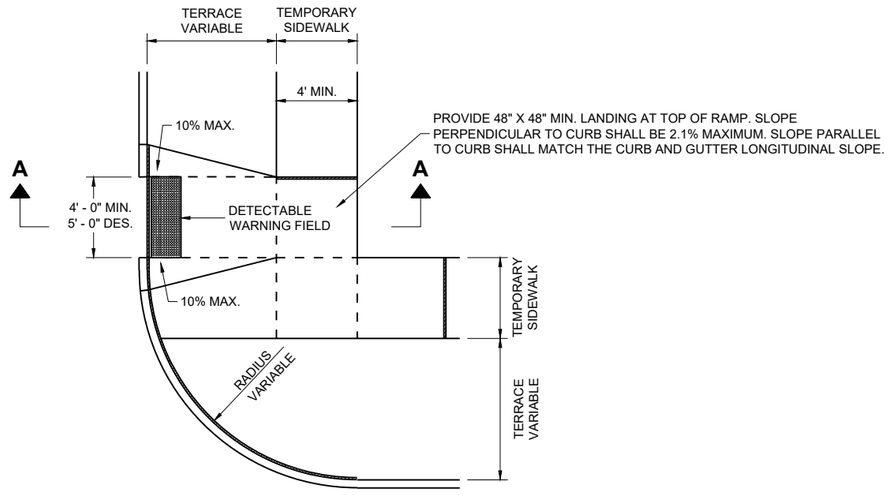

PLAN VIEW
TEMPORARY TYPE 3 RAMP
(OUTSIDE OF CROSSWALK AREA)

6

SDD 15D30-12d

TRAFFIC CONTROL,
PEDESTRIAN ACCOMMODATION

STATE OF WISCONSIN
DEPARTMENT OF TRANSPORTATION

6

SDD 15D30-12d

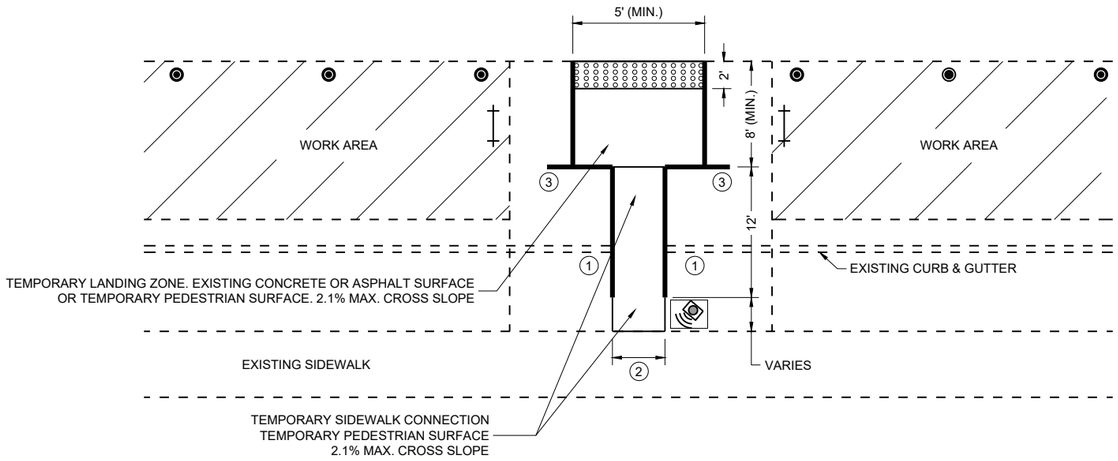

PLAN VIEW

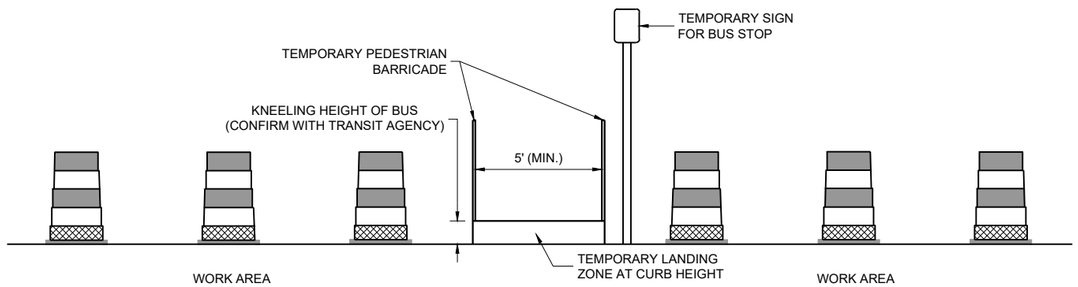

PROFILE VIEW TEMPORARY BUS STOP PAD

GENERAL NOTES

TYPICAL TEMPORARY PEDESTRIAN BARRICADE PANEL IS 6 FEET LONG.

NOTIFY THE BUS COMPANY 7 DAYS IN ADVANCE OF THE BUS STOP RELOCATION.

PROTECTIVE EDGING WITH A 2" MIN. HEIGHT SHALL BE INSTALLED WHEN A CURB RAMP OR LANDING PLATFORM HAS A VERTICAL DROP OF 6" OR GREATER OR HAS A SIDE APRON SLOPE STEEPER THAN 1:3 (33%). PROTECTIVE EDGING SHOULD BE CONSIDERED WHEN CURB RAMPS OR LANDING PLATFORMS HAVE A VERTICAL DROP OF 3" OR MORE.

DETECTABLE EDGING WITH 6" MIN. HEIGHT AND CONTRASTING COLOR SHALL BE INSTALLED ON ALL CURB RAMP LANDINGS WHERE THE WALKWAY CHANGES DIRECTION (TURNS).

LATERAL JOINTS OR GAPS BETWEEN SURFACES SHALL BE LESS THAN ½" WIDTH.

CHANGES BETWEEN SURFACE HEIGHTS SHALL NOT EXCEED ½". LATERAL EDGES MAY BE VERTICAL UP TO ¼" HIGH AND SHALL BE BEVELED AT 1:2 BETWEEN ¼" AND ½".

CURB RAMPS AND LANDINGS SHALL HAVE A 1:48 (2.1%) MAX. CROSS-SLOPE.

(1) DO NOT RESTRICT WATER FLOW IN THE GUTTER SYSTEM.

(2) 5' WIDE MIN. WITH TEMPORARY PEDESTRIAN BARRICADE, 10' WIDE MIN. WITHOUT TEMPORARY PEDESTRIAN BARRICADE.

(3) PLACE EXCESS PORTION OF TEMPORARY PEDESTRIAN BARRICADE INTO THIS SPACE.

LEGEND

- TRAFFIC CONTROL DRUM
- TYPE III BARRICADE
- TEMPORARY PEDESTRIAN BARRICADE
- TEMPORARY DETECTABLE WARNING FIELD
- WORK AREA
- TEMPORARY AUDIBLE MESSAGE DEVICE (EXACT PLACEMENT BASED UPON FIELD CONDITIONS)

6

SDD 15D30-12e

TRAFFIC CONTROL, PEDESTRIAN ACCOMMODATION

STATE OF WISCONSIN
DEPARTMENT OF TRANSPORTATION

LEGEND

- SIGN ON PERMANENT SUPPORT
- SIGN ON TEMPORARY SUPPORT
- UNDER PEDESTRIAN TRAFFIC
- WORK AREA
- TEMPORARY PEDESTRIAN BARRICADE
- DIRECTION OF TRAFFIC
- TEMPORARY AUDIBLE MESSAGE DEVICE (EXACT PLACEMENT BASED UPON FIELD CONDITIONS)

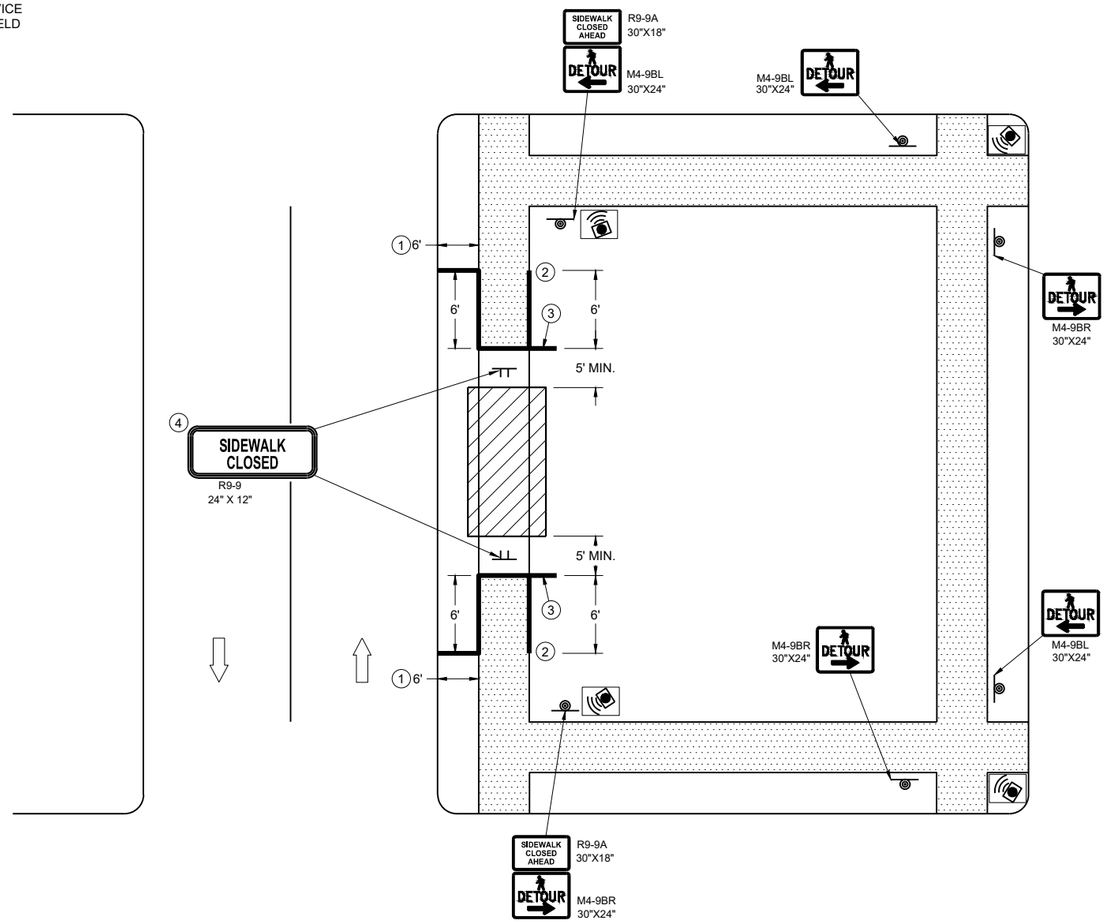

SIDEWALK DETOUR, SIDEWALK ONLY ON ONE SIDE

GENERAL NOTES

WHERE TEMPORARY BARRICADE RUNS PARALLEL ALONG SIDEWALK, PLACE THE FACE OF THE BARRICADE AT THE EDGE OF THE SIDEWALK.

SIGNS THAT REMAIN IN PLACE LESS THAN SEVEN CONTINUOUS DAYS AND NIGHTS MAY BE MOUNTED ON PORTABLE SUPPORTS.

PLACE TEMPORARY PEDESTRIAN BARRICADE TO FIT FIELD CONDITIONS, AVOIDING CONFLICTS WITH DRIVEWAYS AND OTHER EXISTING FEATURES.

1. IF TERRACE IS LESS THAN 6 FEET WIDE, OMIT TEMPORARY PEDESTRIAN BARRICADE FROM THE SIDEWALK TO THE CURB.
2. PLACE BARRICADE CLOSURE SO THAT THE TEMPORARY PEDESTRIAN BARRICADE END IS AT THE LAST OPEN SIDEWALK ACCESS TO RESIDENCES OR BUSINESSES BEFORE THE SIDEWALK CLOSURE.
3. IF TEMPORARY PEDESTRIAN BARRICADE PANEL IS WIDER THAN THE SIDEWALK WIDTH, THE PORTION OF EXCESS PANEL SHOULD EXTEND INTO THE TERRACE.
4. MOUNTING HEIGHT OF 5 FEET FROM THE SURFACE TO THE BOTTOM OF SIGN.

TRAFFIC CONTROL, PEDESTRIAN ACCOMMODATION

STATE OF WISCONSIN
DEPARTMENT OF TRANSPORTATION

6
SDD 15D30-12f

LEGEND

- SIGN ON TEMPORARY SUPPORT
- WORK AREA
- UNDER PEDESTRIAN TRAFFIC
- TEMPORARY PEDESTRIAN SURFACE
- TEMPORARY PEDESTRIAN BARRICADE
- OPTIONAL TEMPORARY PEDESTRIAN BARRICADE
- DIRECTION OF TRAFFIC

GENERAL NOTES

TYPICAL TEMPORARY PEDESTRIAN BARRICADE PANEL IS 6 FEET LONG.

WHERE TEMPORARY BARRICADE RUNS PARALLEL ALONG SIDEWALK, PLACE THE FACE OF THE BARRICADE AT THE EDGE OF THE SIDEWALK.

SIGNS THAT REMAIN IN PLACE LESS THAN SEVEN CONTINUOUS DAYS AND NIGHTS MAY BE MOUNTED ON PORTABLE SUPPORTS.

(1) USE TEMPORARY PEDESTRIAN BARRICADE TO SEPARATE PEDESTRIANS FROM DROP OFFS OR FOR ADDITIONAL PEDESTRIAN CHANNELIZATION.

(2) IF TEMPORARY PEDESTRIAN BARRICADE PANEL IS WIDER THAN THE SIDEWALK WIDTH, THE PORTION OF EXCESS PANEL SHOULD EXTEND INTO THE TERRACE.

(3) MOUNTING HEIGHT OF 5 FEET FROM THE SURFACE TO THE BOTTOM OF SIGN.

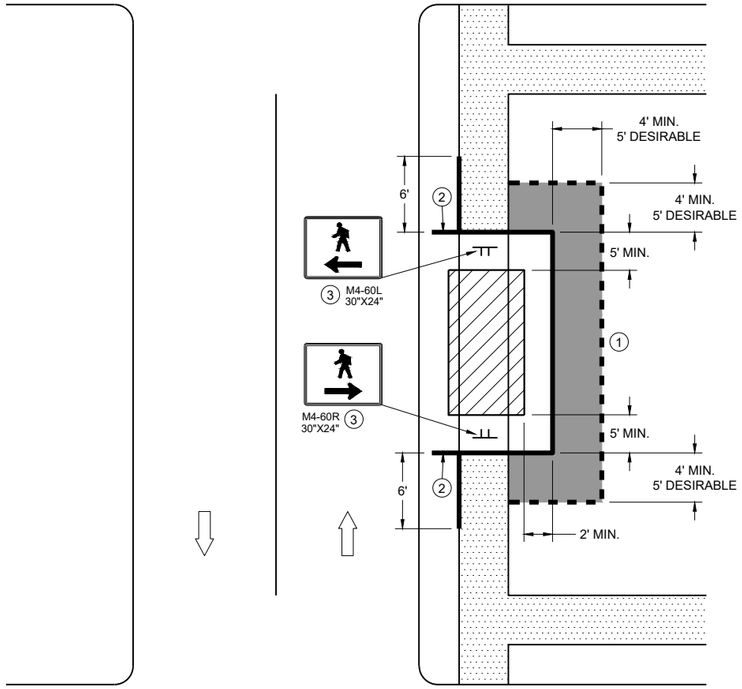

SIDEWALK BYPASS
SINGLE SIDE

6

SDD 15D30-12g

6

SDD 15D30-12g

TRAFFIC CONTROL,
PEDESTRIAN ACCOMMODATION

STATE OF WISCONSIN
DEPARTMENT OF TRANSPORTATION

LEGEND

- SIGN ON TEMPORARY SUPPORT
- TRAFFIC CONTROL DRUM
- WORK AREA
- UNDER PEDESTRIAN TRAFFIC
- TEMPORARY CURB RAMP
- TEMPORARY PEDESTRIAN SURFACE "A"
- TEMPORARY PEDESTRIAN SURFACE "B"
- TEMPORARY PEDESTRIAN BARRICADE
- DIRECTION OF TRAFFIC

GENERAL NOTES

TYPICAL TEMPORARY PEDESTRIAN BARRICADE PANEL IS 6 FEET LONG.

WHERE TEMPORARY BARRICADE RUNS PARALLEL ALONG SIDEWALK, PLACE THE FACE OF THE BARRICADE AT THE EDGE OF THE SIDEWALK.

(1) SHOULDER OR LANE CLOSURE ADVANCE WARNING AND BUFFER SPACE REQUIRED.

(2) PLACE EXCESS PORTION OF TEMPORARY PEDESTRIAN BARRICADE PANEL PAST THE SIDEWALK ON THE SIDE AWAY FROM THE ROAD.

(3) MOUNTING HEIGHT OF 5 FEET FROM THE SURFACE TO THE BOTTOM OF SIGN.

(4) USE EXISTING PAVEMENT SURFACE. IF EXISTING PAVEMENT SURFACE HAS BEEN REMOVED, USE A TEMPORARY PEDESTRIAN SURFACE. WHEN THE TEMPORARY PEDESTRIAN ACCESS ROUTE RUNS PARALLEL ON THE ROADWAY SURFACE, THE MAXIMUM CROSS SLOPE WILL MATCH THE EXISTING ROADWAY CROSS SLOPE.

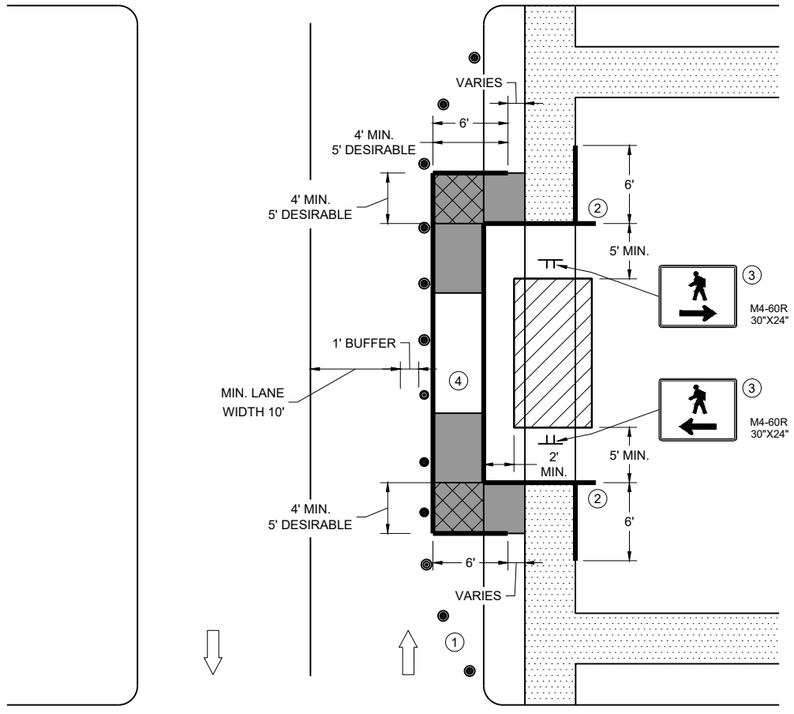

SIDEWALK BYPASS, SINGLE SIDE

6

SDD 15D30-12h

TRAFFIC CONTROL, PEDESTRIAN ACCOMMODATION

STATE OF WISCONSIN
DEPARTMENT OF TRANSPORTATION

6

SDD 15D30-12h

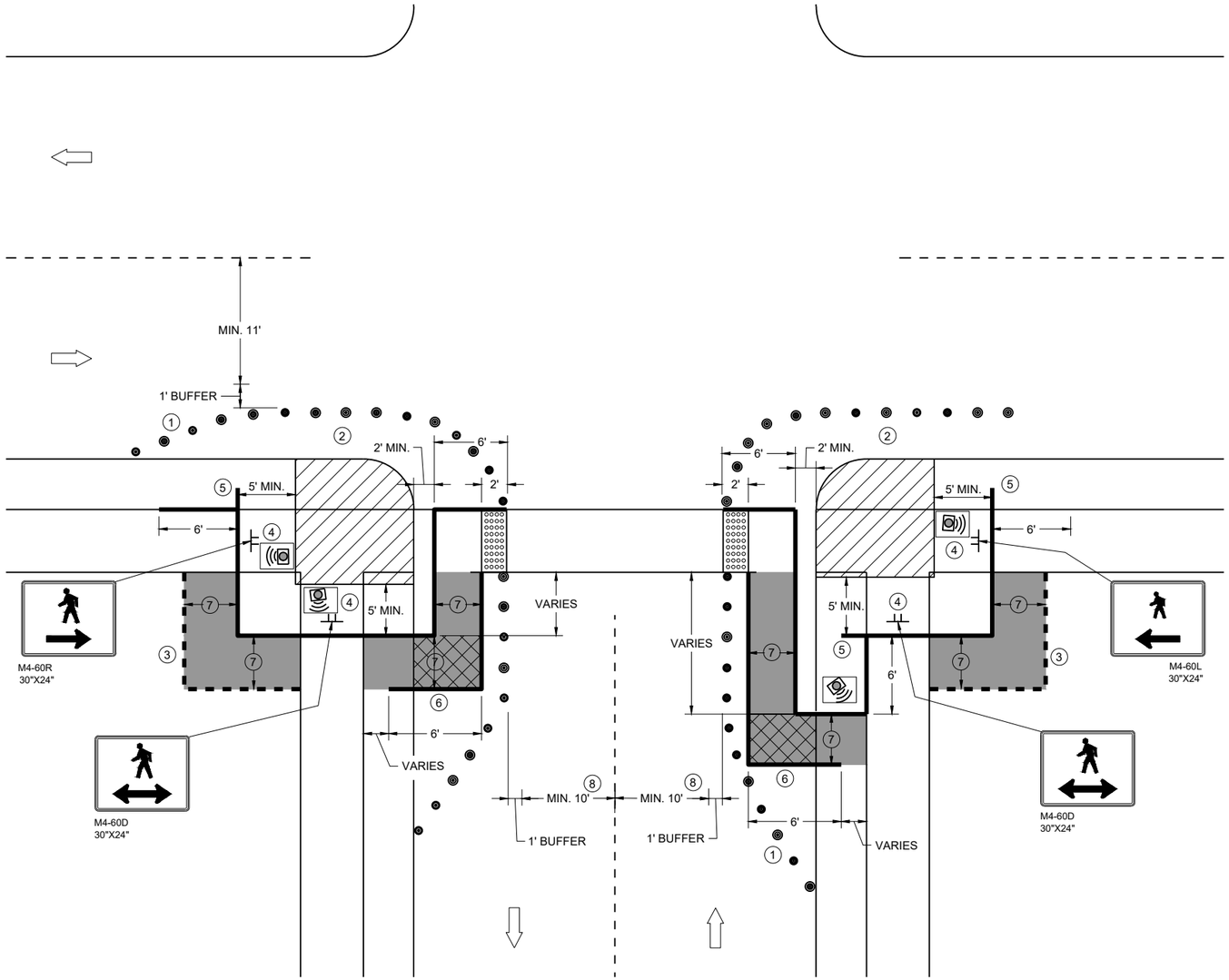

CURB RAMP PEDESTRIAN TRAFFIC CONTROL
SIDEWALK ON SINGLE SIDE

GENERAL NOTES

IF PEDESTRIAN PUSH BUTTONS ARE PRESENT ON THE EXISTING FACILITY, ENSURE THEY ARE MAINTAINED/ACCESSIBLE FOR PEDESTRIAN USE THROUGHOUT THE TEMPORARY PEDESTRIAN ACCOMMODATIONS.

TYPICAL TEMPORARY PEDESTRIAN BARRICADE PANEL IS 6 FEET LONG

WHEN TEMPORARY PEDESTRIAN BARRICADE RUNS PARALLEL ALONG THE SIDEWALK, PLACE THE FACE OF THE BARRICADE AT THE EDGE OF THE SIDEWALK.

WHEN THE TEMPORARY PEDESTRIAN ACCESS ROUTE RUNS PARALLEL ON THE ROADWAY SURFACE, THE MAXIMUM CROSS SLOPE WILL MATCH THE EXISTING ROADWAY CROSS SLOPE.

1. SHOULDER OR LANE CLOSURE ADVANCE WARNING AND PROPER BUFFER SPACE REQUIRED.
2. PROVIDE ADEQUATE SPACE FOR CONTRACTOR OPERATIONS
3. USE TEMPORARY PEDESTRIAN BARRICADE TO SEPARATE PEDESTRIANS FROM DROP OFFS OR FOR ADDITIONAL PEDESTRIAN CHANNELIZATION.
4. MOUNTING HEIGHT OF 5 FEET FROM SIDEWALK SURFACE TO BOTTOM OF SIGN.
5. PLACE EXCESS PORTION OF TEMPORARY PEDESTRIAN BARRICADE PANEL IN THE SIDEWALK TERRACE.
6. IF TEMPORARY PEDESTRIAN BARRICADE DOES NOT REACH THE FACE OF THE CURB, USE AN ADDITIONAL PANEL AND EXTEND INTO THE TERRACE.
7. 4 FEET MINIMUM, 5 FEET DESIRABLE
8. IF MINIMUM LANE WIDTHS CAN'T BE ATTAINED, CURB RAMPS MAY NEED TO BE CONSTRUCTED AT SEPARATE TIMES.

LEGEND

- SIGN ON TEMPORARY SUPPORT
- TRAFFIC CONTROL DRUM
- WORK AREA
- TEMPORARY CURB RAMP
- TEMPORARY PEDESTRIAN SURFACE "A"
- TEMPORARY PEDESTRIAN SURFACE "B"
- TEMPORARY DETECTABLE WARNING FIELD
- TEMPORARY PEDESTRIAN BARRICADE
- OPTIONAL TEMPORARY PEDESTRIAN BARRICADE
- DIRECTION OF TRAFFIC
- TEMPORARY AUDIBLE MESSAGE DEVICE (EXACT PLACEMENT BASED UPON FIELD CONDITIONS)

TRAFFIC CONTROL, PEDESTRIAN ACCOMMODATION

STATE OF WISCONSIN
DEPARTMENT OF TRANSPORTATION

6
SDD 15D30-12i

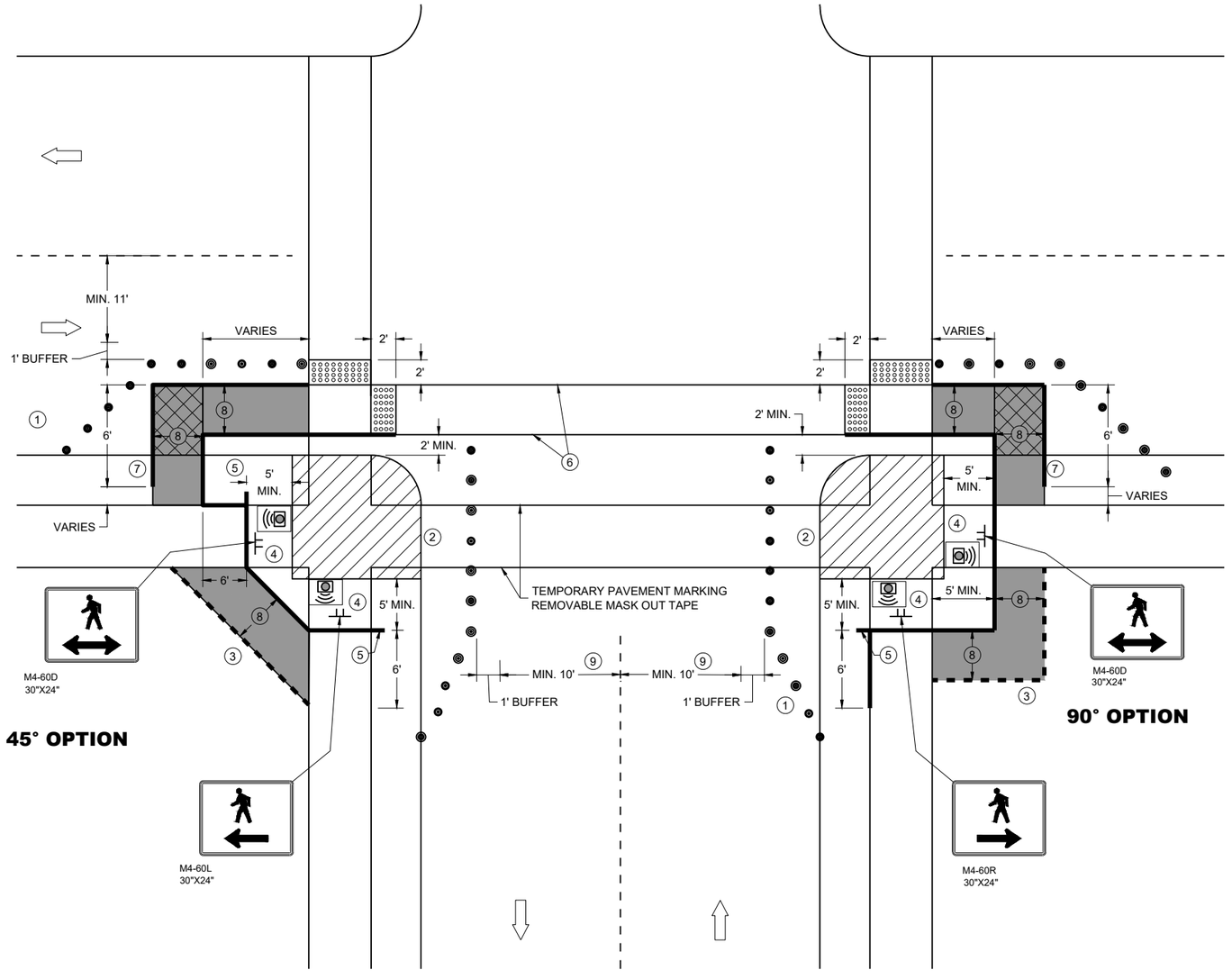

CURB RAMP PEDESTRIAN TRAFFIC CONTROL

GENERAL NOTES

IF PEDESTRIAN PUSH BUTTONS ARE PRESENT ON THE EXISTING FACILITY, ENSURE THEY ARE MAINTAINED/ACCESSIBLE FOR PEDESTRIAN USE THROUGHOUT THE TEMPORARY PEDESTRIAN ACCOMMODATIONS.

TYPICAL TEMPORARY PEDESTRIAN BARRICADE PANEL IS 6 FEET LONG

WHEN TEMPORARY PEDESTRIAN BARRICADE RUNS PARALLEL ALONG THE SIDEWALK, PLACE THE FACE OF THE BARRICADE AT THE EDGE OF THE SIDEWALK.

WHEN THE TEMPORARY PEDESTRIAN ACCESS ROUTE RUNS PARALLEL ON THE ROADWAY SURFACE, THE MAXIMUM CROSS SLOPE WILL MATCH THE EXISTING ROADWAY CROSS SLOPE.

(1) SHOULDER OR LANE CLOSURE ADVANCE WARNING AND PROPER BUFFER SPACE REQUIRED.

(2) PROVIDE ADEQUATE SPACE FOR CONTRACTOR OPERATIONS

(3) USE TEMPORARY PEDESTRIAN BARRICADE TO SEPARATE PEDESTRIANS FROM DROP OFFS OR FOR ADDITIONAL PEDESTRIAN CHANNELIZATION.

(4) MOUNTING HEIGHT OF 5 FEET FROM SIDEWALK SURFACE TO BOTTOM OF SIGN.

(5) PLACE EXCESS PORTION OF TEMPORARY PEDESTRIAN BARRICADE PANEL IN THE SIDEWALK TERRACE.

(6) WHITE 6" TEMPORARY PAVEMENT MARKING

(7) IF TEMPORARY PEDESTRIAN BARRICADE DOES NOT REACH THE FACE OF THE CURB, USE AN ADDITIONAL PANEL AND EXTEND INTO THE TERRACE.

(8) 4 FEET MINIMUM, 5 FEET DESIRABLE

(9) IF MINIMUM LANE WIDTHS CAN'T BE ATTAINED, CURB RAMPS MAY NEED TO BE CONSTRUCTED AT SEPARATE TIMES.

LEGEND

- SIGN ON TEMPORARY SUPPORT
- TRAFFIC CONTROL DRUM
- WORK AREA
- TEMPORARY CURB RAMP
- TEMPORARY PEDESTRIAN SURFACE "A"
- TEMPORARY PEDESTRIAN SURFACE "B"
- TEMPORARY DETECTABLE WARNING FIELD
- TEMPORARY PEDESTRIAN BARRICADE
- OPTIONAL TEMPORARY PEDESTRIAN BARRICADE
- DIRECTION OF TRAFFIC
- TEMPORARY AUDIBLE MESSAGE DEVICE (EXACT PLACEMENT BASED UPON FIELD CONDITIONS)

TRAFFIC CONTROL, PEDESTRIAN ACCOMMODATION

STATE OF WISCONSIN
DEPARTMENT OF TRANSPORTATION

6
SDD 15D30-12j

LEGEND

SIGN ON PERMANENT SUPPORT

SIGN ON TEMPORARY SUPPORT

UNDER PEDESTRIAN TRAFFIC

WORK AREA

TEMPORARY PEDESTRIAN BARRICADE

DIRECTION OF TRAFFIC

TEMPORARY AUDIBLE MESSAGE DEVICE (EXACT PLACEMENT BASED UPON FIELD CONDITIONS)

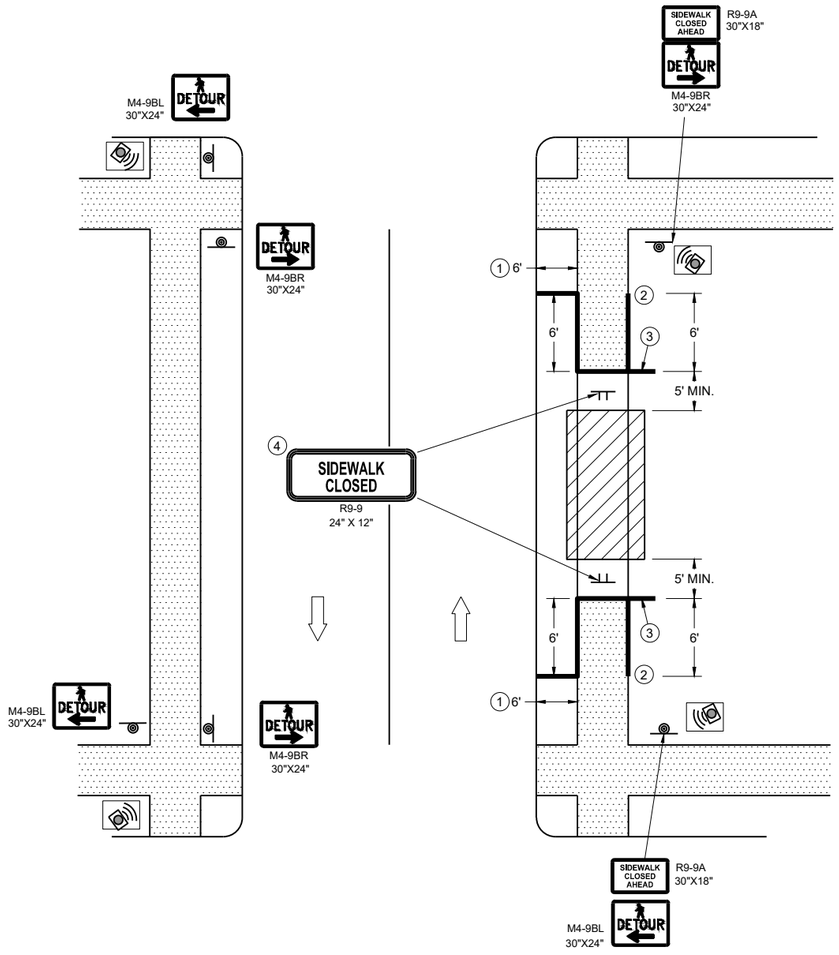

SIDEWALK DETOUR, SIDEWALK ON BOTH SIDES

GENERAL NOTES

WHERE TEMPORARY BARRICADE RUNS PARALLEL ALONG SIDEWALK, PLACE THE FACE OF THE BARRICADE AT THE EDGE OF THE SIDEWALK.

SIGNS THAT REMAIN IN PLACE LESS THAN SEVEN CONTINUOUS DAYS AND NIGHTS MAY BE MOUNTED ON PORTABLE SUPPORTS.

PLACE TEMPORARY PEDESTRIAN BARRICADE TO FIT FIELD CONDITIONS, AVOIDING CONFLICT WITH DRIVEWAYS AND OTHER EXISTING FEATURES.

1. IF TERRACE IS LESS THAN 6 FEET WIDE, OMIT TEMPORARY PEDESTRIAN BARRICADE FROM THE SIDEWALK TO THE CURB.
2. PLACE BARRICADE CLOSURE SO THAT THE TEMPORARY PEDESTRIAN BARRICADE END IS AT THE LAST OPEN SIDEWALK ACCESS TO RESIDENCES OR BUSINESSES BEFORE THE SIDEWALK CLOSURE.
3. IF TEMPORARY PEDESTRIAN BARRICADE PANEL IS WIDER THAN THE SIDEWALK WIDTH, THE PORTION OF EXCESS PANEL SHOULD EXTEND INTO THE TERRACE.
4. MOUNTING HEIGHT OF 5 FEET FROM THE SURFACE TO THE BOTTOM OF SIGN.

TRAFFIC CONTROL, PEDESTRIAN ACCOMMODATION

STATE OF WISCONSIN
DEPARTMENT OF TRANSPORTATION

6

SDD 15D30-12k

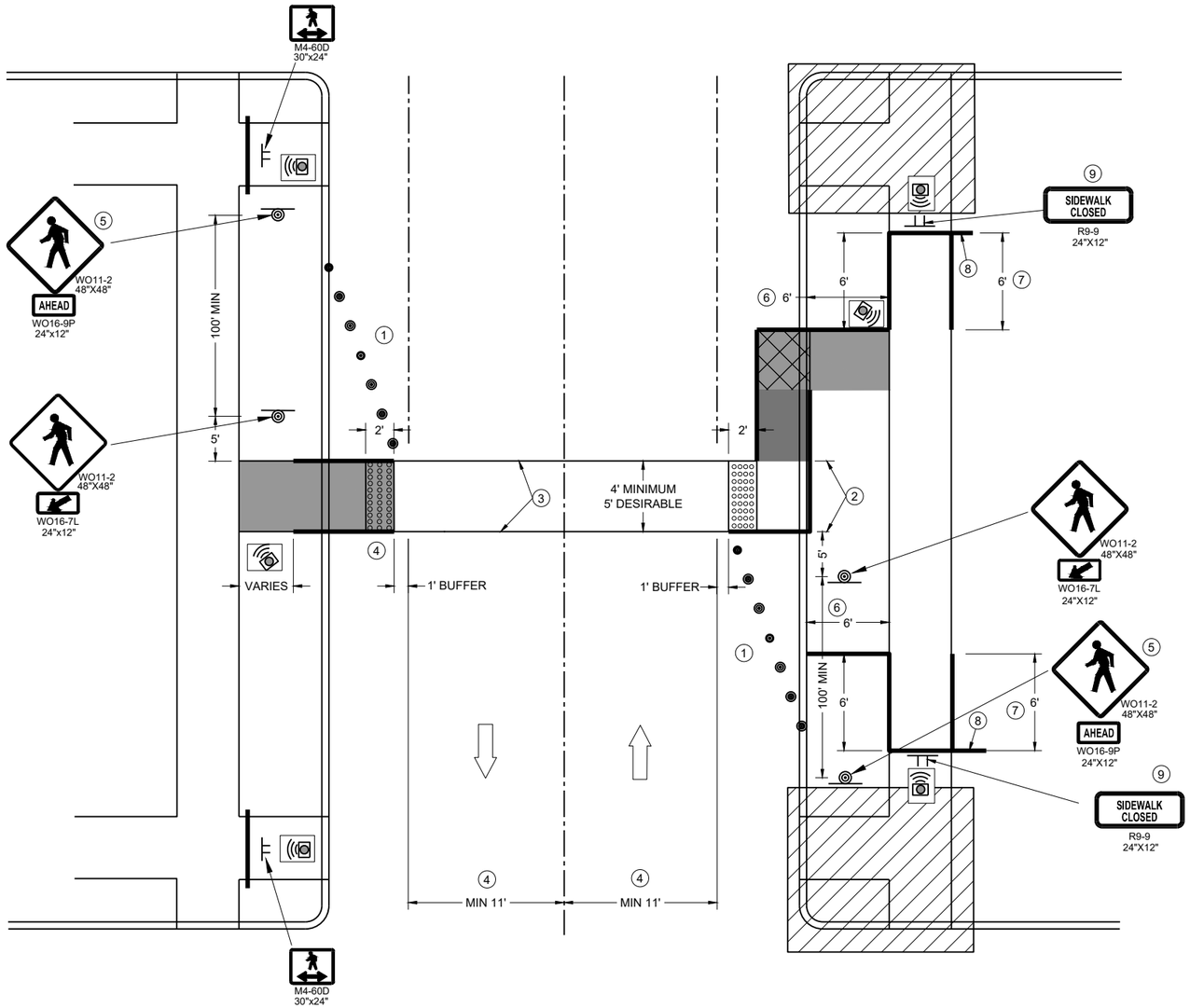

TEMPORARY PEDESTRIAN CROSSING

GENERAL NOTES

TYPICAL TEMPORARY PEDESTRIAN BARRICADE PANEL IS 6 FEET LONG.

SEE OTHER PEDESTRIAN ACCOMMODATION DETAILS FOR SIGNING AND DEVICES FOR DIFFERENT PEDESTRIAN FACILITIES CLOSURES.

WHEN THE TEMPORARY PEDESTRIAN ACCESS ROUTE RUNS PARALLEL ON THE ROADWAY SURFACE, THE MAXIMUM CROSS SLOPE WILL MATCH THE EXISTING ROADWAY CROSS SLOPE.

1. SHOULDER OR LANE CLOSURE ADVANCED WARNING AND PROPER BUFFER SPACE REQUIRED.
2. 4 FEET MINIMUM, 5 FEET DESIRABLE.
3. WHITE 6" TEMPORARY PAVEMENT MARKING.
4. IF MINIMUM LANE WIDTHS CAN'T BE ATTAINED, PERPENDICULAR CURB RAMPS MAY NEED TO BE UTILIZED.
5. IF MINIMUM 100' SPACING FROM THE MID-BLOCK CROSSING CANNOT BE ATTAINED BEFORE THE INTERSECTION, REMOVE THIS SIGN ASSEMBLY.
6. IF TERRACE IS LESS THAN 6 FEET WIDE, OMIT TEMPORARY PEDESTRIAN BARRICADE FROM THE SIDEWALK TO THE CURB.
7. PLACE BARRICADE CLOSURE SO THAT THE TEMPORARY PEDESTRIAN BARRICADE END IS AT THE LAST OPEN SIDEWALK ACCESS TO RESIDENCES OR BUSINESSES BEFORE THE SIDEWALK CLOSURE.
8. IF TEMPORARY PEDESTRIAN BARRICADE PANEL IS WIDER THAN THE SIDEWALK WIDTH, THE PORTION OF THE EXCESS PANEL SHOULD EXTEND INTO THE TERRACE.
9. MOUNTING HEIGHT OF 5 FEET FROM THE SURFACE TO THE BOTTOM OF THE SIGN.

LEGEND

- TRAFFIC CONTROL DRUM
- SIGN ON TEMPORARY SUPPORT
- TEMPORARY CURB RAMP
- TEMPORARY DETECTABLE WARNING FIELD
- TEMPORARY PEDESTRIAN SURFACE "A"
- TEMPORARY PEDESTRIAN SURFACE "B"
- WORK AREA
- TEMPORARY PEDESTRIAN BARRICADE
- DIRECTION OF TRAFFIC
- TEMPORARY AUDIBLE MESSAGE DEVICE (EXACT PLACEMENT BASED UPON FIELD CONDITIONS)

TRAFFIC CONTROL, PEDESTRIAN ACCOMMODATION

STATE OF WISCONSIN
DEPARTMENT OF TRANSPORTATION

APPROVED
November 2025 — DATE
/S/ Andrew Heidtke — WORK ZONE ENGINEER

FHWA

6
SDD 15D30-12I

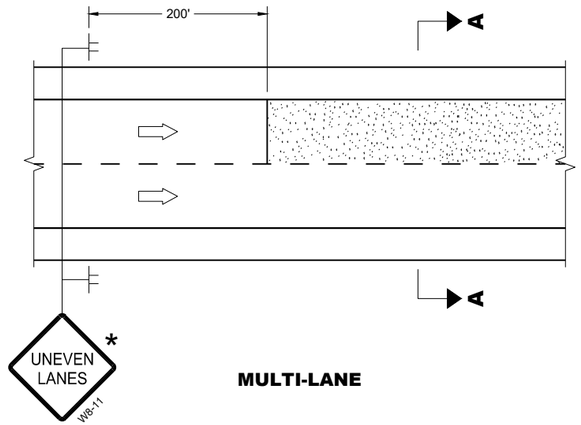

MULTI-LANE

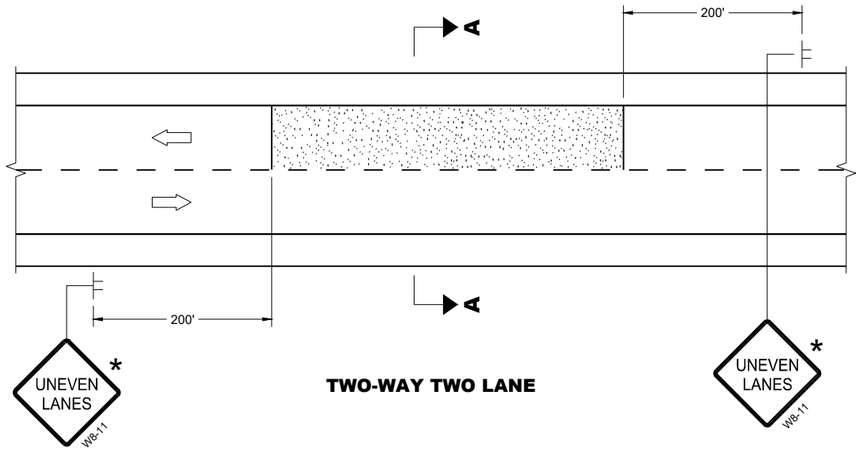

TWO-WAY TWO LANE

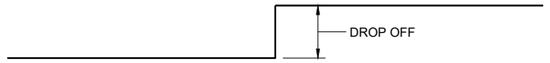

SECTION A - A

OR

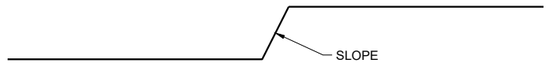

SECTION A - A

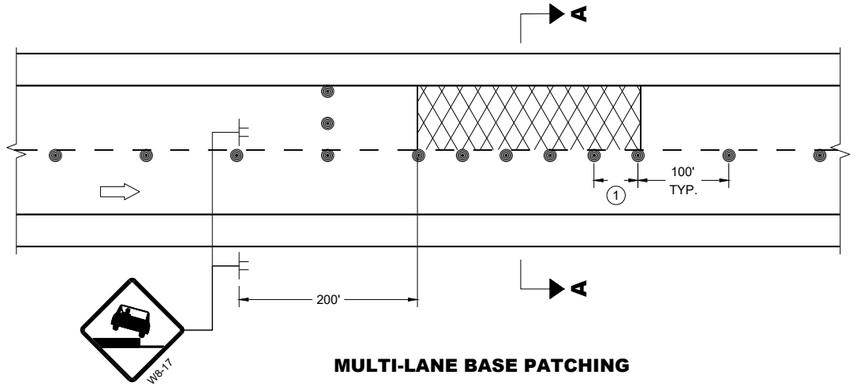

MULTI-LANE BASE PATCHING

ADJACENT LANE DROP-OFFS

GENERAL NOTES

FOR SPOT LOCATIONS USE ENGINEERING JUDGEMENT WHEN PLACING ADDITIONAL SIGNS.

ALL SIGNS ARE 48" X 48" UNLESS OTHERWISE NOTED.

"WO" SIGNS ARE THE SAME AS "W" SIGNS EXCEPT THE BACKGROUND IS ORANGE.

WARNING LIGHTS ARE NOT REQUIRED IF THE LANE CLOSURE IS A DAYTIME ONLY OPERATION.

* IF THE DROP-OFF IS CONTINUOUS ALONG THE PROJECT, PLACE ADDITIONAL SIGNS EVERY 1 MILE AND AFTER EVERY ENTRANCE RAMP.

(1) USE CLOSER SPACING WHEN DELINEATING DROP-OFF.

LEGEND

- SIGN ON TEMPORARY SUPPORT
- TRAFFIC CONTROL DRUM
- TYPE III BARRICADE WITH ATTACHED SIGN
- TYPE "A" WARNING LIGHT (FLASHING)
- DIRECTION OF TRAFFIC
- WORK AREA WITH DROP-OFF
- MILLED SURFACE

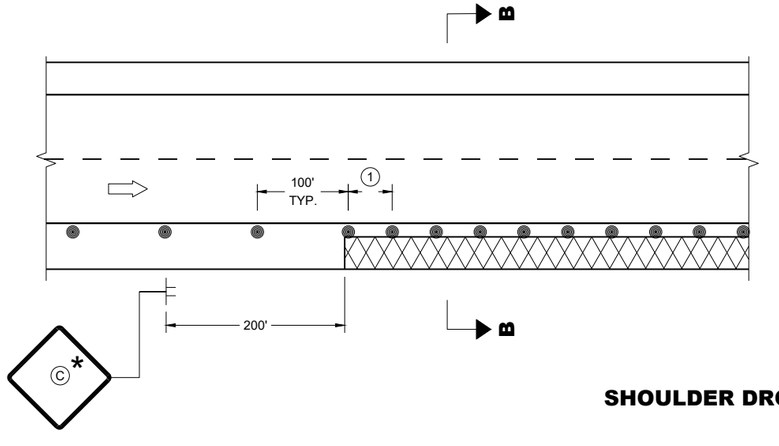

SHOULDER DROP-OFFS

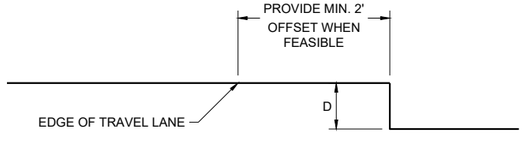

SECTION B - B

D	SIGN (C)
< 2" WITH A SLOPE STEEPER THAN 3:1	LOW SHOULDER WO8-9
2" < 6" WITH A SLOPE STEEPER THAN 3:1	SHOULDER DROP - OFF W8-9A
	PROVIDE A 3:1 OR FLATTER SLOPE OF MATERIAL ADJACENT TO THE PAVEMENT

TRAFFIC CONTROL, DROP-OFF SIGNING

STATE OF WISCONSIN
DEPARTMENT OF TRANSPORTATION

APPROVED
February 2025 — DATE
/S/ Andrew Heidtke — WORK ZONE ENGINEER

FHWA

6
SDD 15D39-03

GENERAL NOTES

DRAWING NOT TO SCALE. ALL SIGNS AND POSTS ON THIS SHEET SHALL BE PAID FOR WITH 'TRAFFIC CONTROL SIGNS' BID ITEM. ALL SIDE ROADS WHICH ARE UNDER CONSTRUCTION OF CURB AND GUTTER AND/OR GRADING SHALL BE ADEQUATELY SIGNED.

ALL SIGNS AND DEVICES SHALL BE IN CONFORMANCE WITH THE WISCONSIN MANUAL OF UNIFORM TRAFFIC CONTROL DEVICES (WMUTCD). SIGN LAYOUTS SHALL BE IN ACCORDANCE WITH THE WISDOT STANDARD SIGN PLATES.

"WO" SIGNS ARE THE SAME AS "W" SIGNS EXCEPT THAT THE BACKGROUND IS ORANGE.

ALL SIGNS ARE 48" X 48" UNLESS OTHERWISE NOTED.

THE EXACT NUMBER, LOCATION AND SPACING OF ALL SIGNS AND DEVICES SHALL BE ADJUSTED TO FIT FIELD CONDITIONS AS DIRECTED BY THE ENGINEER.

ALL SIGNS INAPPROPRIATE TO THE STATUS OF THE CONTROL ZONE, INCLUDING PRE-EXISTING SIGNS IN THE VICINITY, SHALL BE COVERED OR REMOVED AS DIRECTED BY THE ENGINEER.

SEE 15C34 FOR ADDITIONAL TRAFFIC CONTROL SIGNING WHEN CENTERLINE PAVEMENT MAKINGS ARE MISSING. 'DO NOT PASS' SIGNS MUST BE INSTALLED ON THE SAME DAY AS MILLING OPERATIONS.

(1) PLACE SIGNS 350' IN ADVANCE OF MILLED SURFACES AND AT 1 MILE INTERVALS, OR AS DIRECTED BY THE ENGINEER.

(2) PLACE SIGN 200' MIN. FROM INTERSECTION AND 200' MIN. AFTER ADVANCE WARNING SIGN SHOWN IN SDD 15C04.

LEGEND

SIGN ON TEMPORARY SUPPORT

DIRECTION OF TRAFFIC

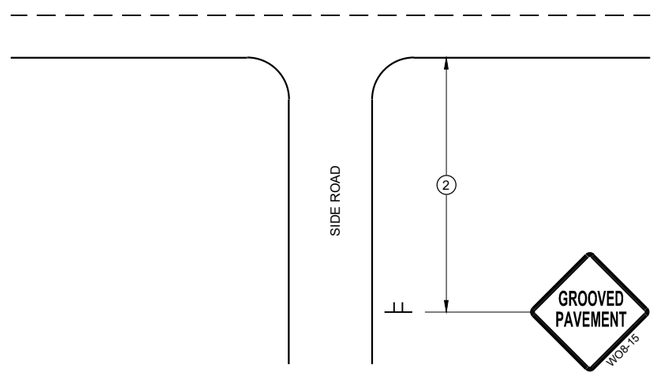

TYPICAL SIDE ROAD APPROACH SIGN DETAIL

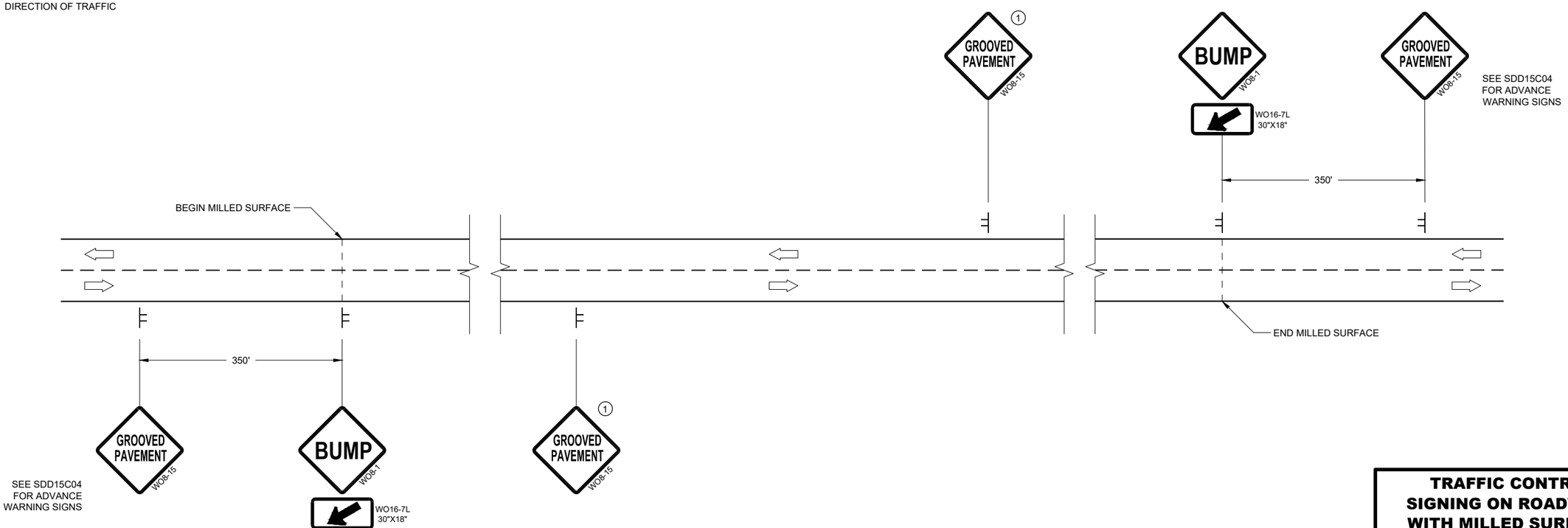

DETAIL FOR SIGNING ON MILLED SURFACES

TRAFFIC CONTROL, SIGNING ON ROADWAYS WITH MILLED SURFACES

STATE OF WISCONSIN
DEPARTMENT OF TRANSPORTATION

APPROVED
February 2020
DATE

/S/ Andrew Heidtke
WORK ZONE ENGINEE

FHWA

6
SDD 15D44 - 02

GENERAL NOTES

DRAWING NOT TO SCALE. ALL SIGNS AND POSTS ON THIS SHEET SHALL BE PAID FOR WITH 'TRAFFIC CONTROL SIGNS' BID ITEM. ALL SIDE ROADS WHICH ARE UNDER CONSTRUCTION OF CURB AND GUTTER AND/OR GRADING SHALL BE ADEQUATELY SIGNED.

ALL SIGNS AND DEVICES SHALL BE IN CONFORMANCE WITH THE WISCONSIN MANUAL OF UNIFORM TRAFFIC CONTROL DEVICES (WMUTCD). SIGN LAYOUTS SHALL BE IN ACCORDANCE WITH THE WISDOT STANDARD SIGN PLATES.

"WO" SIGNS ARE THE SAME AS "W" SIGNS EXCEPT THAT THE BACKGROUND IS ORANGE.

ALL SIGNS ARE 48" X 48" UNLESS OTHERWISE NOTED.

THE EXACT NUMBER, LOCATION AND SPACING OF ALL SIGNS AND DEVICES SHALL BE ADJUSTED TO FIT FIELD CONDITIONS AS DIRECTED BY THE ENGINEER.

ALL SIGNS INAPPROPRIATE TO THE STATUS OF THE CONTROL ZONE, INCLUDING PRE-EXISTING SIGNS IN THE VICINITY, SHALL BE COVERED OR REMOVED AS DIRECTED BY THE ENGINEER.

SEE 15C34 FOR ADDITIONAL TRAFFIC CONTROL SIGNING WHEN CENTERLINE PAVEMENT MAKINGS ARE MISSING. 'DO NOT PASS' SIGNS MUST BE INSTALLED ON THE SAME DAY AS MILLING OPERATIONS.

(1) PLACE SIGNS 350' IN ADVANCE OF CHIP SEALED OR LOOSE GRAVEL SURFACES AND AT 1 MILE INTERVALS, OR AS DIRECTED BY THE ENGINEER.

(2) PLACE SIGN 200' MIN. FROM INTERSECTION AND 200' MIN. AFTER ADVANCE WARNING SIGN SHOWN IN SDD 15C04.

(3) ADD WO8-1 OR WO8-2 SIGN WHEN THE CONDITION IS PRESENT.

LEGEND

SIGN ON TEMPORARY SUPPORT

DIRECTION OF TRAFFIC

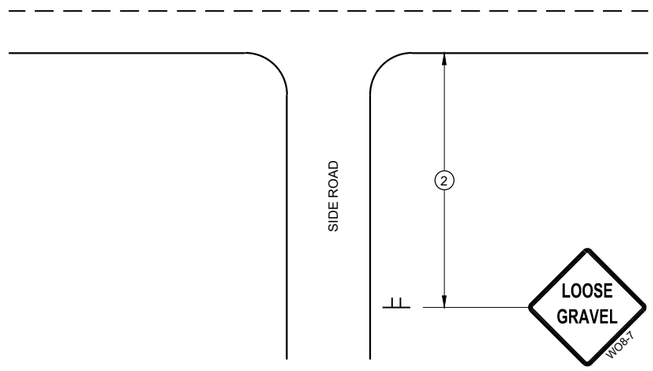

TYPICAL SIDE ROAD APPROACH SIGN DETAIL

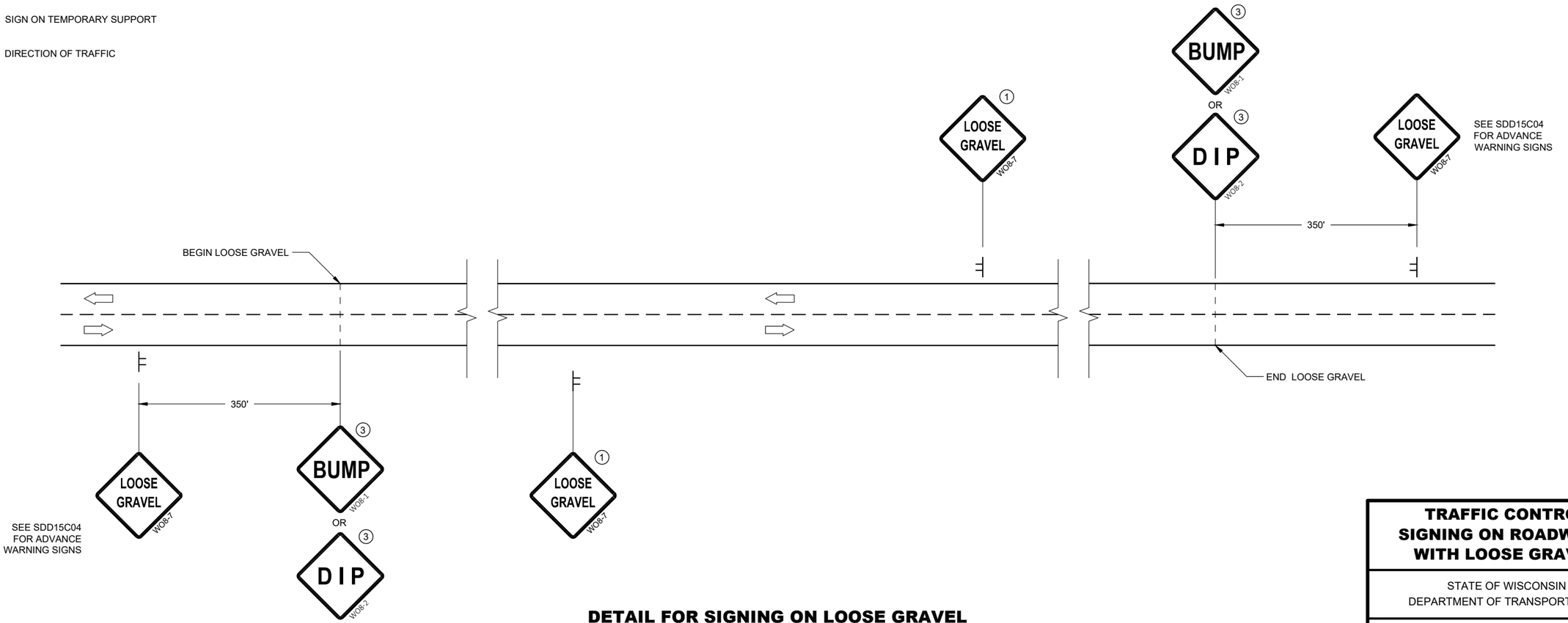

DETAIL FOR SIGNING ON LOOSE GRAVEL OR CHIP SEALED SURFACES

TRAFFIC CONTROL SIGNING ON ROADWAYS WITH LOOSE GRAVEL

STATE OF WISCONSIN
DEPARTMENT OF TRANSPORTATION

APPROVED
February 2021
DATE

/S/ Andrew Heidtke
WORK ZONE ENGINEE

FHWA

6

SDD 15D45 - 03

6

SDD 15D45 - 03

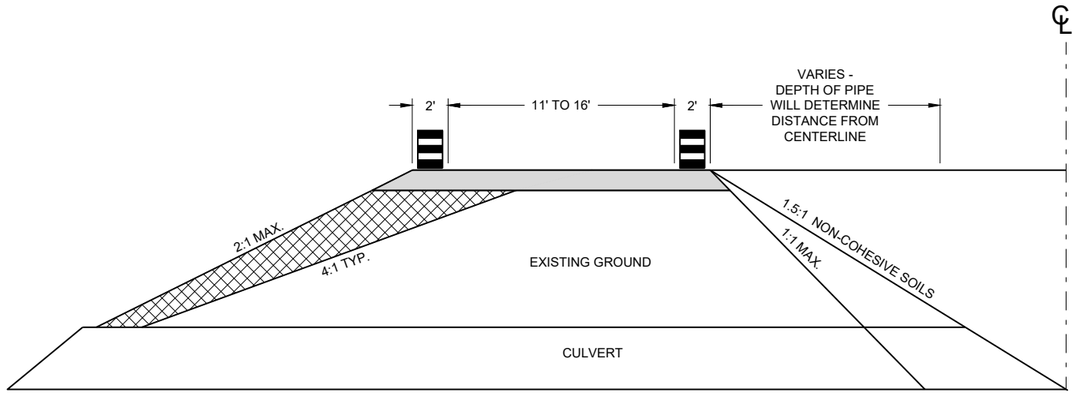

CROSS SECTION

GENERAL NOTES

USE 1:1 FOR COHESIVE CLAYS AND SILTS, LOAMS, SANDY CLAYS AND ANGULAR GRAVEL SOILS.
USE 1.5:1 FOR NON-COHESIVE SOILS.

THE TAPER SHOULD EXTEND ACROSS THE SHOULDER UNLESS DOING SO WOULD GREATLY CONFLICT WITH THE WORK OPERATION.

ALL LANE CLOSURE SIGNS SHALL BE REMOVED OR COVERED AND ALL DEVICES REMOVED BEYOND THE SHOULDER WHEN WORK IS NOT IN PROGRESS AND THE LANE IS RESTORED TO A SAFE OPERATING CONDITION.

CHANNELIZING DEVICES PLACED ADJACENT TO WORK AREA SHALL BE PULLED BACK FROM TRAVEL LANE WHEN WORK IS NOT IN PROGRESS.

USE WITH SDD 15C12 "TRAFFIC CONTROL FOR LANE CLOSURE WITH FLAGGING OPERATIONS"

USE WITH SDD 15D45 "SIGNING ON ROADWAYS WITH LOOSE GRAVEL"

LEGEND

- DRUM WITHOUT WARNING LIGHT
- 6" BASE AGGREGATE DENSE 1 ¼" -INCIDENTAL TO LANE SHIFT ITEM
- FILL - INCIDENTAL TO LANE SHIFT ITEM
- WORK AREA
- FLAGGER, EQUIPPED WITH STOP/SLOW PADDLE FASTENED ON SUPPORT STAFF

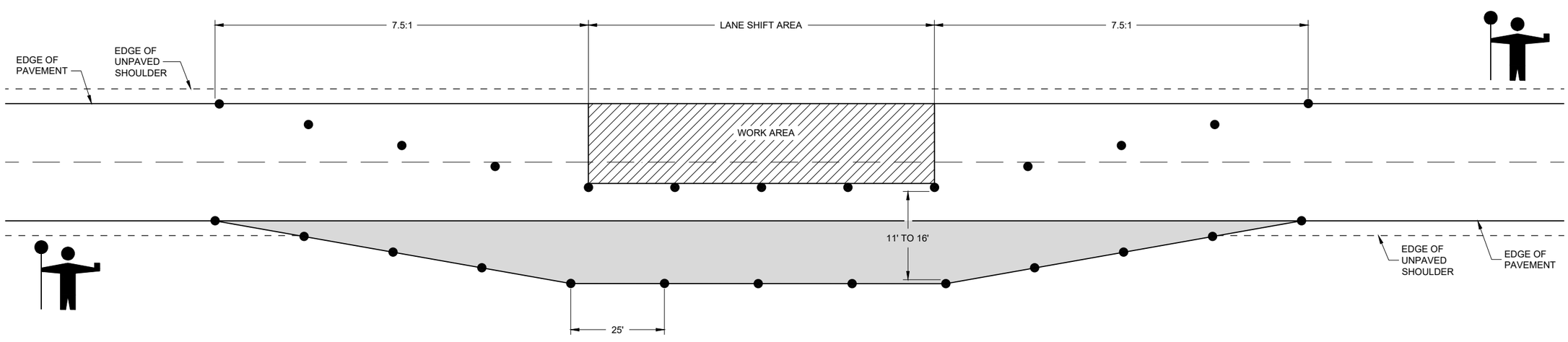

LANE SHIFT IN FLAGGING OPERATION

TRAFFIC CONTROL, TEMPORARY LANE SHIFT DURING CULVERT WORK

STATE OF WISCONSIN
DEPARTMENT OF TRANSPORTATION

APPROVED
February 2021
DATE

/S/ Andrew Heidtke
WORK ZONE ENGINEER

FHWA

6

SDD 15D48 - 01

6

SDD 15D48 - 01

LEGEND

V1 WORK VEHICLE

V2 SHADOW VEHICLE

TRUCK MOUNTED ATTENUATOR (TMA)

FLASHING ARROW PANEL (CAUTION)

WORK AREA

DIRECTION OF TRAFFIC

POSTED SPEED PRIOR TO WORK STARTING (MPH)	DECISION SIGHT DISTANCE (D)
0 - 25	550'
30	550'
35	700'
40	700'
45	900'
50	900'
55	1200'

GENERAL NOTES

ALL SIGNS ARE 48"X48" UNLESS OTHERWISE NOTED.

MOBILE IS WORK THAT MOVES CONTINUOUSLY OR MOVES AT LEAST THE DECISION SIGHT DISTANCE EVERY 15 MINUTES.

ALL VEHICLES SHALL BE EQUIPPED WITH TWO 360 DEGREE HIGH INTENSITY YELLOW FLASHING LIGHTS OR STROBE LIGHTS AND OPERATED WITH HEADLIGHTS TURNED ON.

ALL ARROW PANELS SHALL BE REAR FACING, TYPE "B" OR "C", AND DISPLAYING THE FLASHING CAUTION MODE. SIGNS PLACED ON VEHICLES MUST NOT OBSCURE THE ARROW PANEL.

USE AN ATTENUATOR ON THE REARMOST VEHICLE THAT BLOCKS ALL OR PART OF THE TRAFFIC LANE.

WORKERS SHALL NOT PERFORM WORK FROM ANY SHADOW OR PROTECTION VEHICLES.

(1) DISTANCE BETWEEN VEHICLES MAY INCREASE FROM THE ATTENUATOR'S ROLL AHEAD BASED ON TERRAIN, SIGHT DISTANCE, AND OTHER FACTORS. WHENEVER ADEQUATE STOPPING SIGHT DISTANCE EXISTS TO THE REAR, SHADOW VEHICLES SHOULD MAINTAIN THE MINIMUM DISTANCE FROM THE WORK VEHICLE AND PROCEED AT THE SAME SPEED AS THE WORK VEHICLE. SHADOW VEHICLES SHOULD SLOW DOWN IN ADVANCE OF VERTICAL OR HORIZONTAL CURVES THAT RESTRICT SIGHT DISTANCE.

(2) ALIGN LEFT SIDE OF SHADOW VEHICLE WITH EDGE OF WORK AREA.

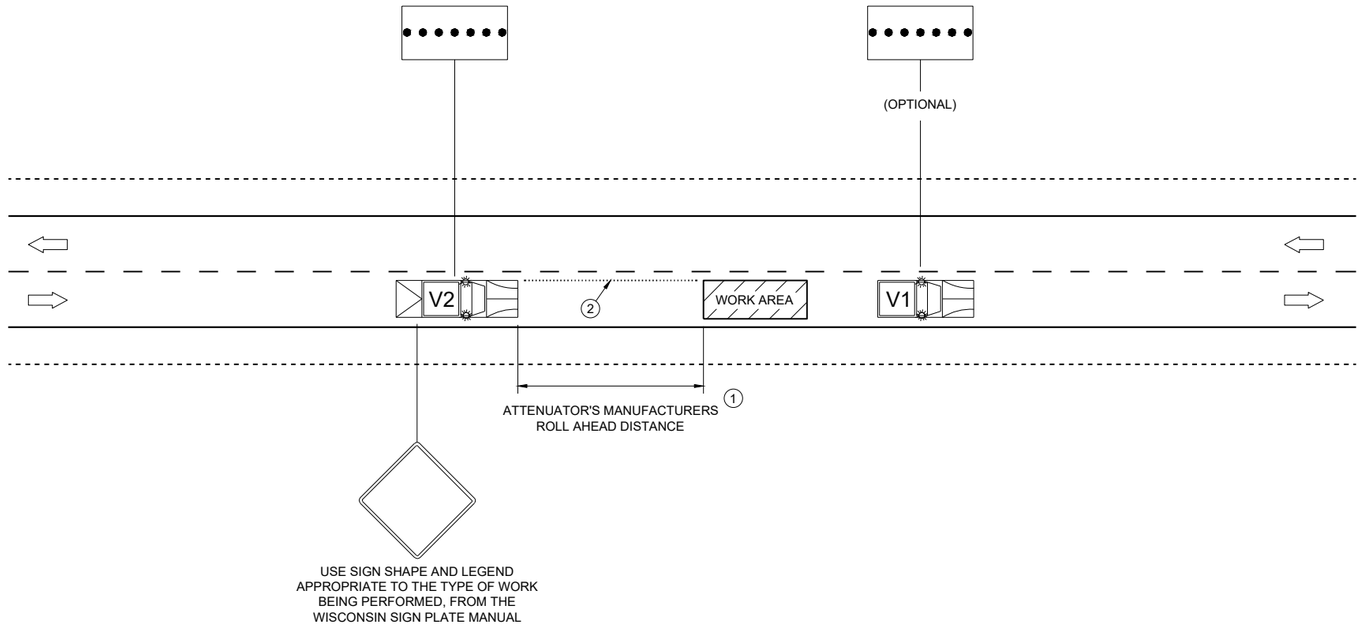

TRAFFIC CONTROL, MOBILE OPERATIONS ON AN UNDIVIDED ROADWAY

STATE OF WISCONSIN
DEPARTMENT OF TRANSPORTATION

APPROVED

November 2025 — DATE

/S/ Andrew Heidtke — STATEWIDE WORK ZONE TRAFFIC SAFETY ENGINEER

FHWA

6 SDD 15D51-02

GENERAL NOTES

DETAILS OF CONSTRUCTION, MATERIALS AND WORKMANSHIP NOT SHOWN ON THIS DRAWING SHALL CONFORM TO THE PERTINENT REQUIREMENTS OF THE STANDARD SPECIFICATIONS AND THE APPLICABLE SPECIAL PROVISIONS.

SURVEY MONUMENT SHALL BE EXCAVATED BY USE OF A CIRCULAR AUGER.

IF A SURVEY MONUMENT REQUIRES A DEEP FORM BECAUSE OF LOOSE DIRT OR FILL, THE FORM SHALL BE REMOVED BEFORE BACKFILLING AROUND THE BASE. BACKFILL SHALL BE TAMPED TIGHT AGAINST THE BARE CONCRETE BASE IN LAYERS OF 1 FOOT OR LESS.

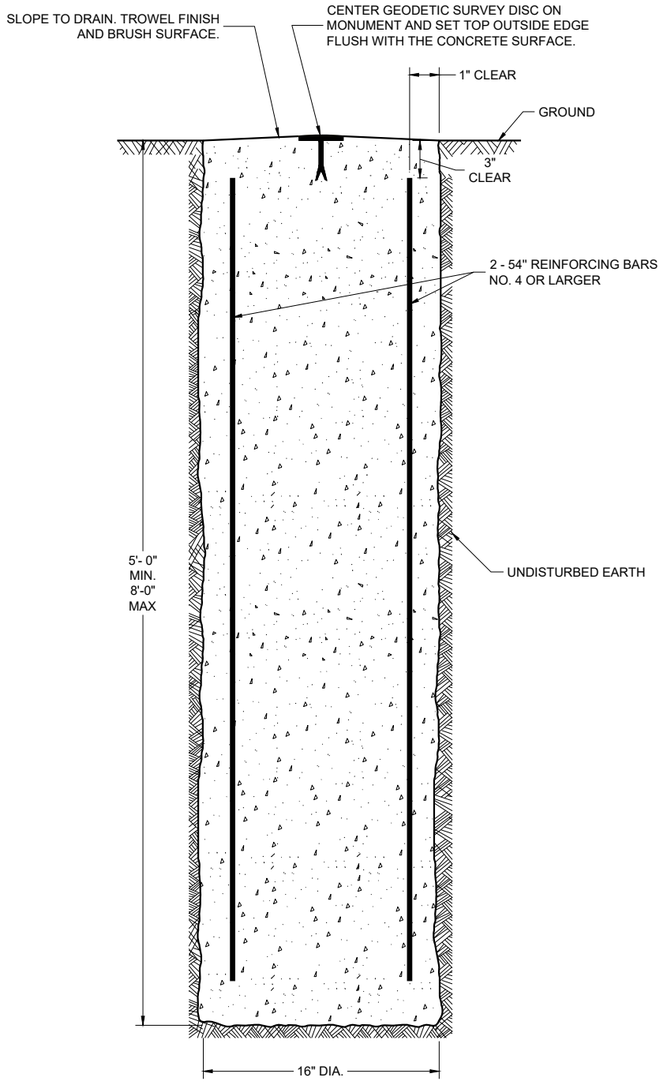

CAST-IN-PLACE CONCRETE MONUMENT

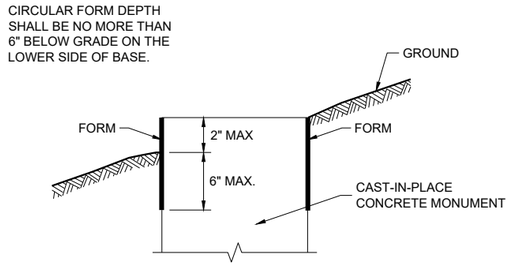

FORMING DETAIL

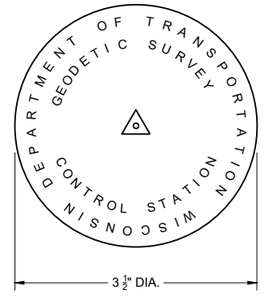

GEODETIC SURVEY DISC
FURNISHED BY WISDOT

GEODETIC SURVEY MONUMENT

STATE OF WISCONSIN
DEPARTMENT OF TRANSPORTATION

APPROVED
August 2025 — DATE
/S/ DAVID J. LAYTON — CHIEF SURVEY AND MAPPING ENGINEER

FHWA

SDD 16A02-01

6

URBAN AREA

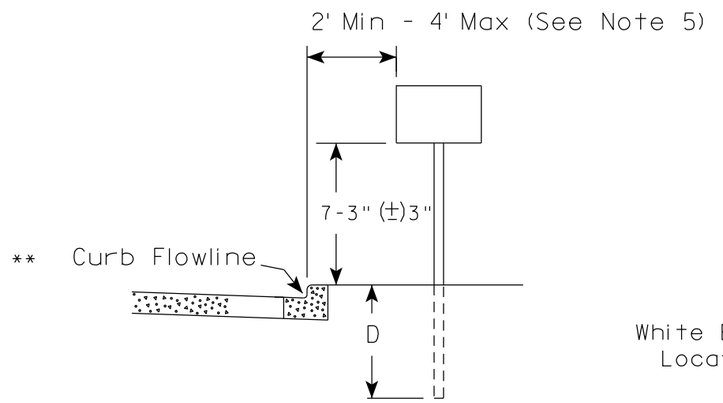

RURAL AREA (See Note 2)

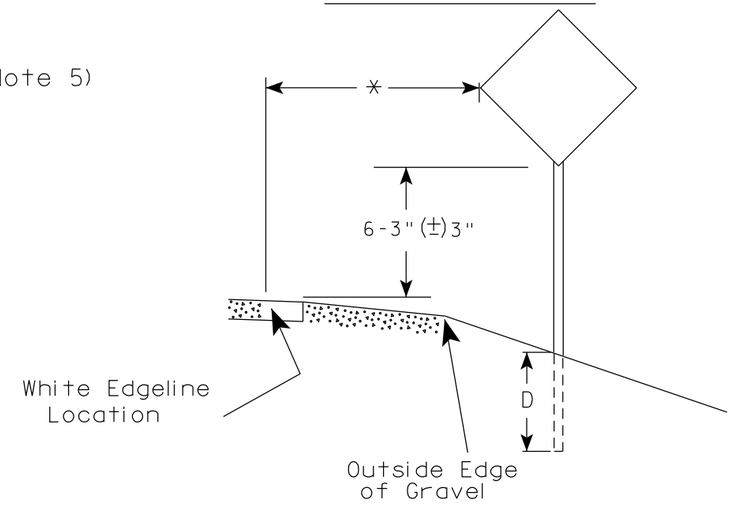

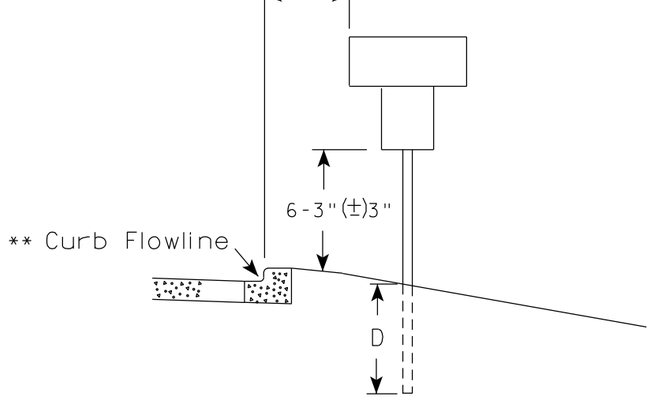

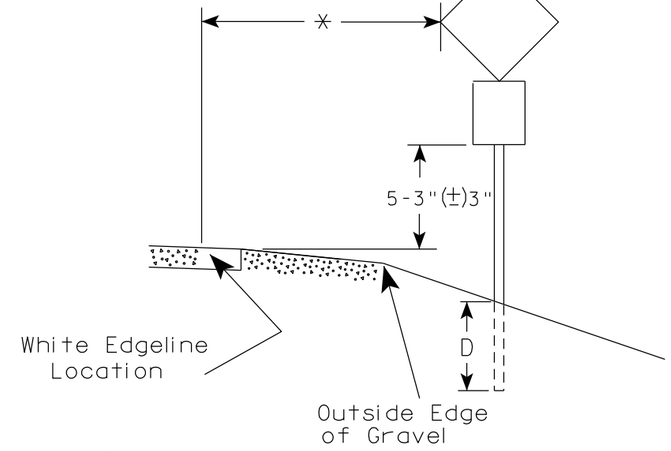

** The existence of curb and gutter does not in itself mandate the vertical clearance illustrated. That height is typically measured where there is sidewalk adjacent to the roadway or parking is permitted. In the absence of sidewalk vertical clearance is measured from the top of the curb. Offset of signs is measured from the flow line.

* 6 feet from edge of a paved shoulder or 12 feet from the edge of pavement (edge line location) or 2 feet from outside edge of gravel, whichever is greater unless directed by project engineer.

POST EMBEDMENT DEPTH

Area of Sign Installation (Sq. Ft.)	D (Min)
20 or Less	4'
Greater than 20	5'

GENERAL NOTES

1. Signs wider than 4 feet or 20 sq.ft or larger, shall be mounted on multiple posts. Refer to plate A4-4.
2. If signs are mounted on or behind barrier wall, see A4-10 sign plate.
   The Double Arrow sign (W12-1D) shall be mounted at a height of 2'-3" (±) 3". The Chevron sign (W1-8), Roundabout Chevron panel (R6-4B), Enhanced Reference Markers, Clearance Markers (W5-52), Mile Markers (D10 series), In Road Object Markers (W5-54) & End of Road Markers (W5-56) shall be mounted at a height of 4'-3" (±) 3".
3. For expressways and freeways, mounting height is 7'- 3" (±) 3" or 6'-3" (±) 3" depending upon existence of a sub-sign.
4. Minimum mounting height for signs mounted on traffic signal poles is 5'- 3" (±) 3".
5. Offset distance shall be consistent with existing signs or consistent throughout length of project.
6. Folding signs shall be mounted at a height of 5'-3" (±) 3" or as directd by the Engineer.

TYPICAL INSTALLATION OF PERMANENT TYPE II SIGNS ON SINGLE POSTS

WISCONSIN DEPT OF TRANSPORTATION

APPROVED Matthew R Rauch
for State Traffic Engineer

DATE 12/6/23 PLATE NO. A4-3.23

PROJECT NO:	HWY:	COUNTY:		SHEET NO: 202	E

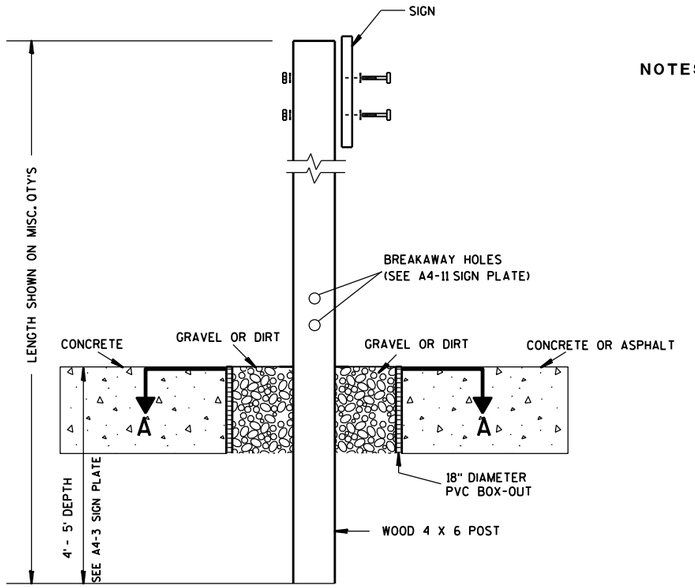

ELEVATION VIEW

DETAIL OF WOOD 4 X 6 SIGN POST IN BOX-OUT

NOTES:
1. ALL MATERIAL TO BE APPROVED BY ENGINEER PRIOR TO INSTALLATION
2. SEE SIGN PLATE A4-8 FOR SIGN HARDWARE REQUIREMENTS
3. 18 INCH X 18 INCH SQUARE BOX-OUTS MAY BE USED FOR INSTALLATIONS IN EXISTING CONCRETE OR ASPHALT LOCATIONS.

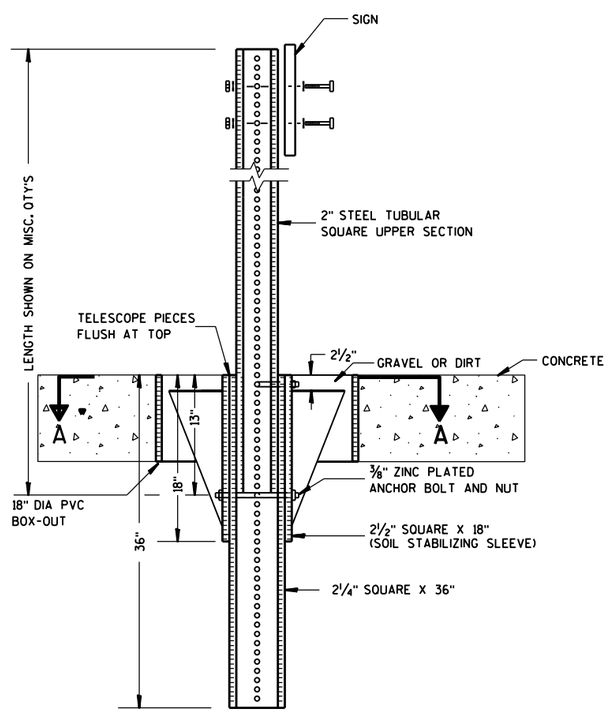

ELEVATION VIEW

DETAIL OF STEEL 2 X 2 SIGN POST IN BOX-OUT

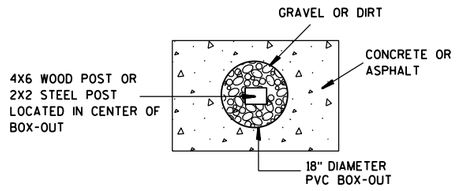

PLAN VIEW

FOR NEW CONCRETE/ASPHALT INSTALLATIONS

SIGN POST BOX-OUTS A4-3B

WISCONSIN DEPT OF TRANSPORTATION

APPROVED Matthew R Rauch
for State Traffic Engineer

DATE 1/27/14 PLATE NO. A4-3B.1

PROJECT NO:	HWY:	COUNTY:		SHEET NO:	E

FILE NAME : C:\CAEFiles\Projects\tr_stdplate\A43B.DGN PLOT DATE : 27-JAN-2014 09:48 PLOT BY : mscsja PLOT NAME : PLOT SCALE : 13.659812:1.000000 WISDOT/CADDS SHEET 42

URBAN AREA

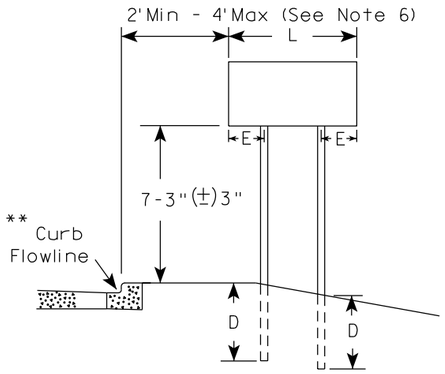

RURAL AREA (See Note 3)

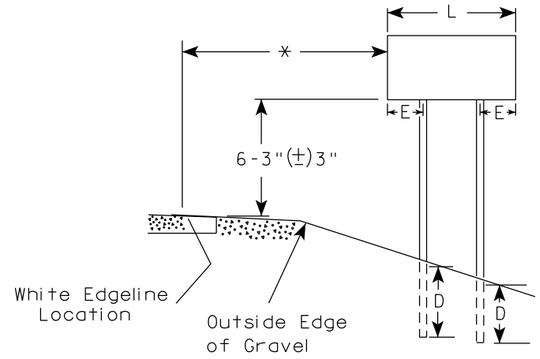

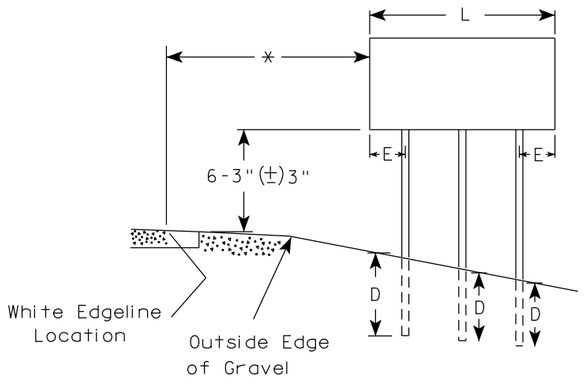

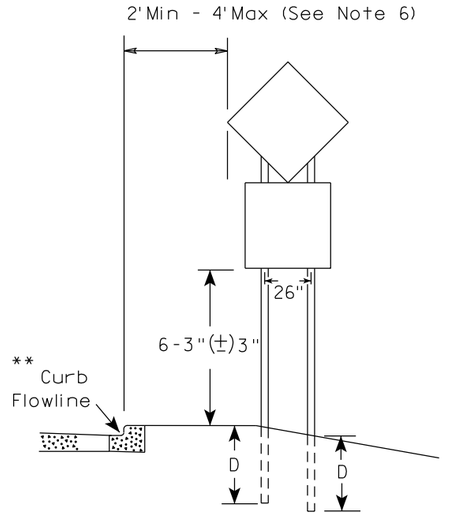

48" DIAMOND WARNING SIGN

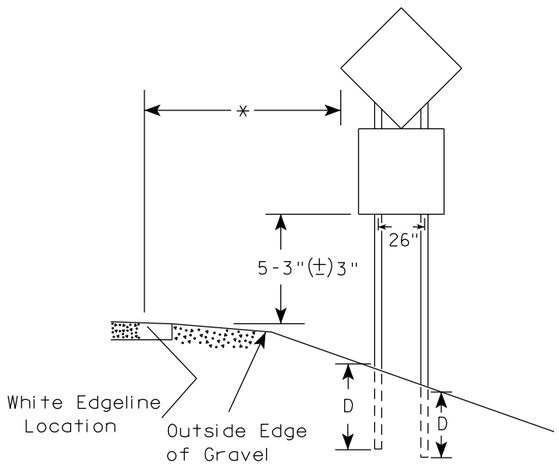

48" DIAMOND WARNING SIGN

SIGN SHAPE OTHER THAN DIAMOND (TWO POSTS REQUIRED)		
	L	E
***	Greater than 48" Less than 60"	12"
	60" to 108"	L/5

SIGN SHAPE OTHER THAN DIAMOND (THREE POSTS REQUIRED)	
L	E
Greater than 108" to 144"	12"

GENERAL NOTES

1. For 3 or 4 post installations, individual post spacing shall be greater than 3'-6".
2. See tables below for required number of posts.
3. For expressways and freeways, mounting height is 7'-3" (±) 3" or 6'-3" (±) 3" depending upon existence of sub-sign.
4. The (±) tolerance for mounting height is 3 inches.
5. J-Assemblies are considered to be one sign for mounting height.
6. Offset distance shall be consistent with existing signs or consistent throughout length of project.
7. Folding signs shall be mounted at a height of 5'-3" (±) 3" or as directed by the engineer.
8. The Double Arrow sign (W12-1) shall be mounted at a height of 2'-3" (±) 3". The Chevron sign (W1-8), Roundabout Chevron panel (R6-4B), Clearance Markers (W5-52), Mile Markers (D10 series), In Road Object Markers (W5-54) & End of Road Markers (W5-56) shall be mounted at a height of 4"-3" (±) 3".

* 6 feet from edge of a paved shoulder or 12 feet from the edge of pavement (edge line location) or 2 feet from outside edge of gravel, whichever is greater unless directed by project engineer.

** The existence of curb and gutter does not in itself mandate the vertical clearance illustrated. That height is typically measured where there is sidewalk adjacent to the roadway or parking is permitted. In the absence of sidewalk vertical clearance is measured from the top of the curb. Offset of signs is measured from the flow line.

*** See A4-3 sign plate for signs 4' or less in width and less than 20 S.F. in area.

POST EMBEDMENT DEPTH

Area of Sign Installation (Sq. Ft.)	D (Min)
20 or Less	4'
Greater than 20	5'

TYPICAL INSTALLATION OF TYPE II SIGNS ON MULTIPLE POSTS

WISCONSIN DEPT OF TRANSPORTATION

APPROVED Matthew R Rauch
for State Traffic Engineer

DATE 12/6/23 PLATE NO. A4-4.16

PROJECT NO:	HWY:	COUNTY:		SHEET NO: 204	E

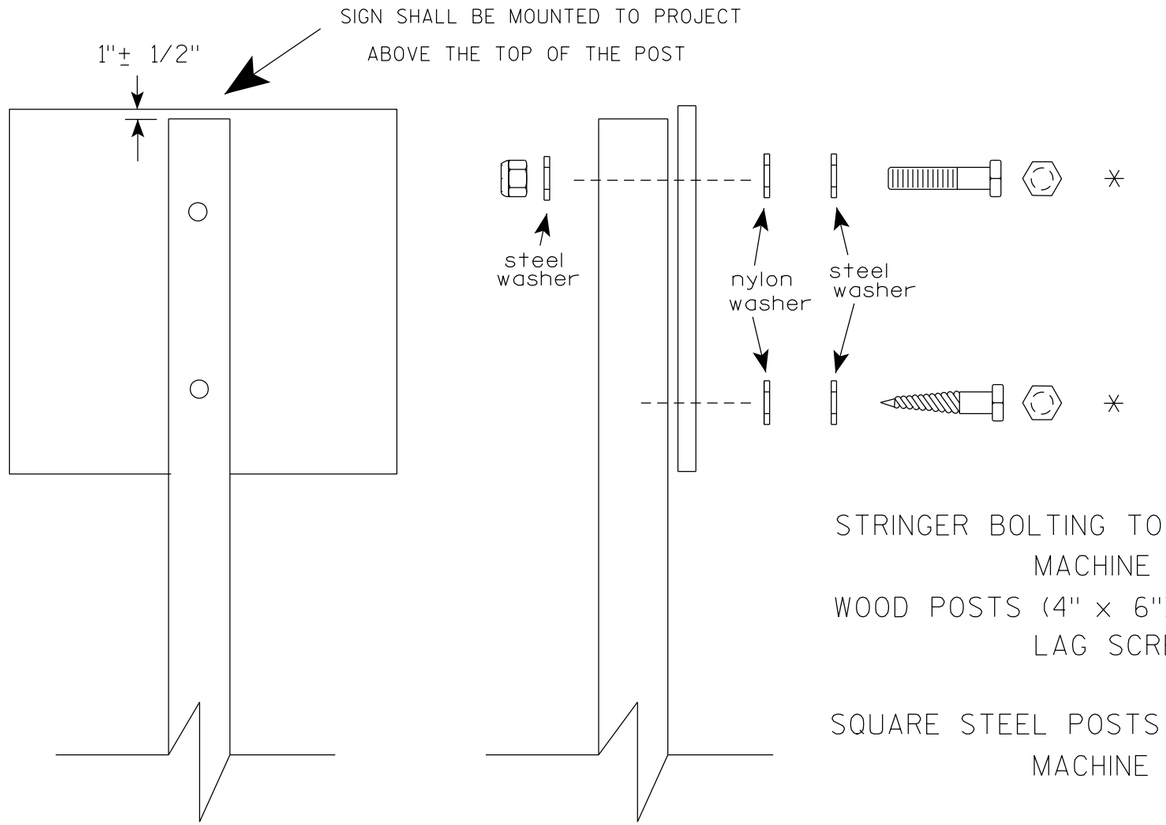

Nuts, bolts and lags used for mounting signs shall have hexagonal heads and shall be either :

a. Hot dip galvanized in accordance with ASTM Designation: A 153, Class D, or SC 3

b. Electro-galvanized in accordance with ASTM Designation : B 633, TYPE III, SC 3.

Threads on bolts and nuts shall be manufactured with sufficient allowance for the cadmium plate or galvanized coating to permit the nuts to run freely on the bolts.

STRINGER BOLTING TO ALUMINUM SIGNS (SEE SIGN PLATE A4-18)

MACHINE BOLTS - 5/16" X 1-3/4" Length w/ lock nuts

WOOD POSTS (4" x 6")

LAG SCREWS - 3/8" X 3" (NO STRINGERS ON BACK OF SIGN)
3/8" X 4" (STRINGERS ON BACK OF SIGN)

SQUARE STEEL POSTS (2" x 2")

MACHINE BOLTS - 3/8" X 3-1/4" Length w/ nuts (NO STRINGER ON BACK OF SIGN)
3/8" X 5" Length w/ nuts (STRINGERS ON BACK OF SIGN)

RIVETS - 9/32" (6605-9-6) BULB-TITE, TRI-FOLD, ALUMINUM BODY/MANDREL
O.D. FLANGE .720-.765 INCH, GRIP RANGE .042-.375 INCH

WASHERS (ALL POSTS) -

1-1/4" O.D. X 3/8" I.D. X 1/16" STEEL
1-1/4" O.D. X 3/8" I.D. X .080 NYLON

* Two different fastening systems are shown for illustration purposes. On any individual sign, either one or the other system shall be used. Actual number of fasteners per sign varies with the sign area, but normally there are two. For a single post installation, all signs greater than 9 sq. ft. require the use of 3 fasteners.

ATTACHMENT OF SIGNS TO POSTS

WISCONSIN DEPT OF TRANSPORTATION

APPROVED Matthew R Rauch
for State Traffic Engineer

DATE 4/1/2020 PLATE NO. A4-8.9

PROJECT NO:

SHEET NO: 205 E

TELESCOPIC TUBING ANCHORS
TWO PIECE SYSTEM

2 1/4 " SQUARE
12 GAUGE
PERFORATED
GALVANIZED FINISH

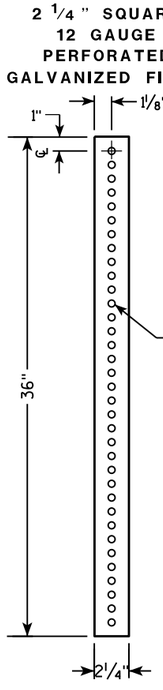

2 1/2 " SQUARE
12 GAUGE
OMNI-DIRECTIONAL
PERFORATED
SOIL STABILIZING SLEEVE
GALVANIZED FINISH

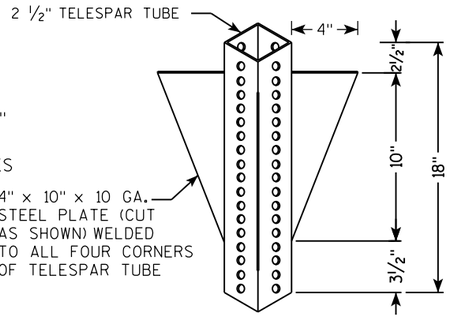

DETAIL OF TUBULAR STEEL SIGN POST
(IN POURED CONCRETE OR ASPHALT)

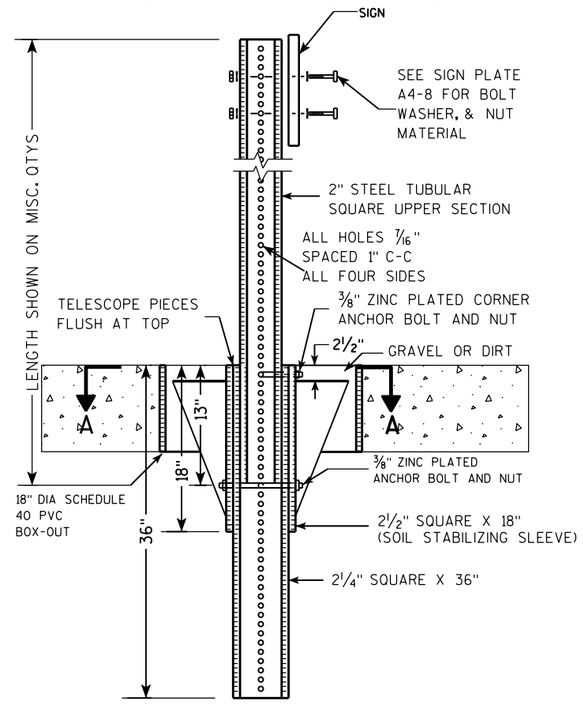

DETAIL OF TUBULAR STEEL SIGN POST
(IN LOCATIONS OTHER THAN POURED CONCRETE OR ASPHALT)

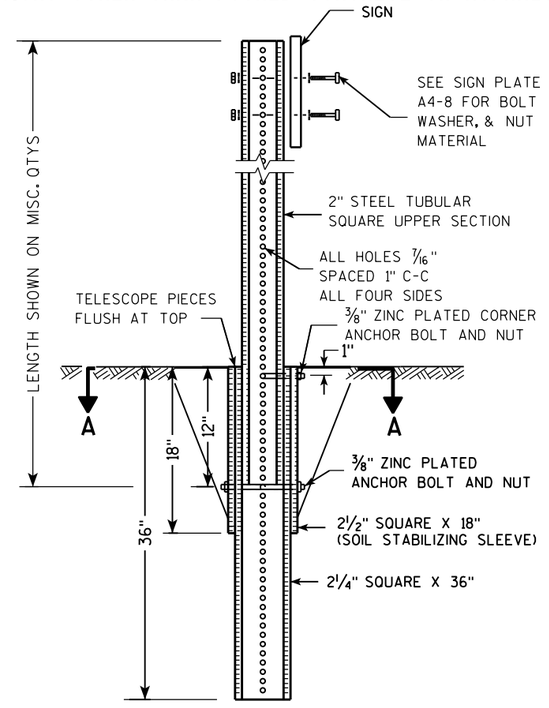

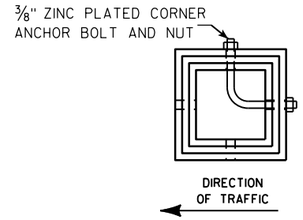

SECTION A-A

Area of Sign Installation (Sq. Ft.)	Number of Required Posts
9 or less	1
Greater than 9 less than or equal to 18	2
Greater than 18 less than or equal to 27	3

Signs wider than 3 feet or larger than 9 sq. ft shall be mounted on multiple posts (see above table).

TUBULAR STEEL
SIGN POST
A4-9

WISCONSIN DEPT OF TRANSPORTATION

APPROVED Matthew R Rauch
for State Traffic Engineer

DATE 2/05/15 PLATE 206 A4-9.9

PROJECT NO:	HWY:	COUNTY:		SHEET NO:	E

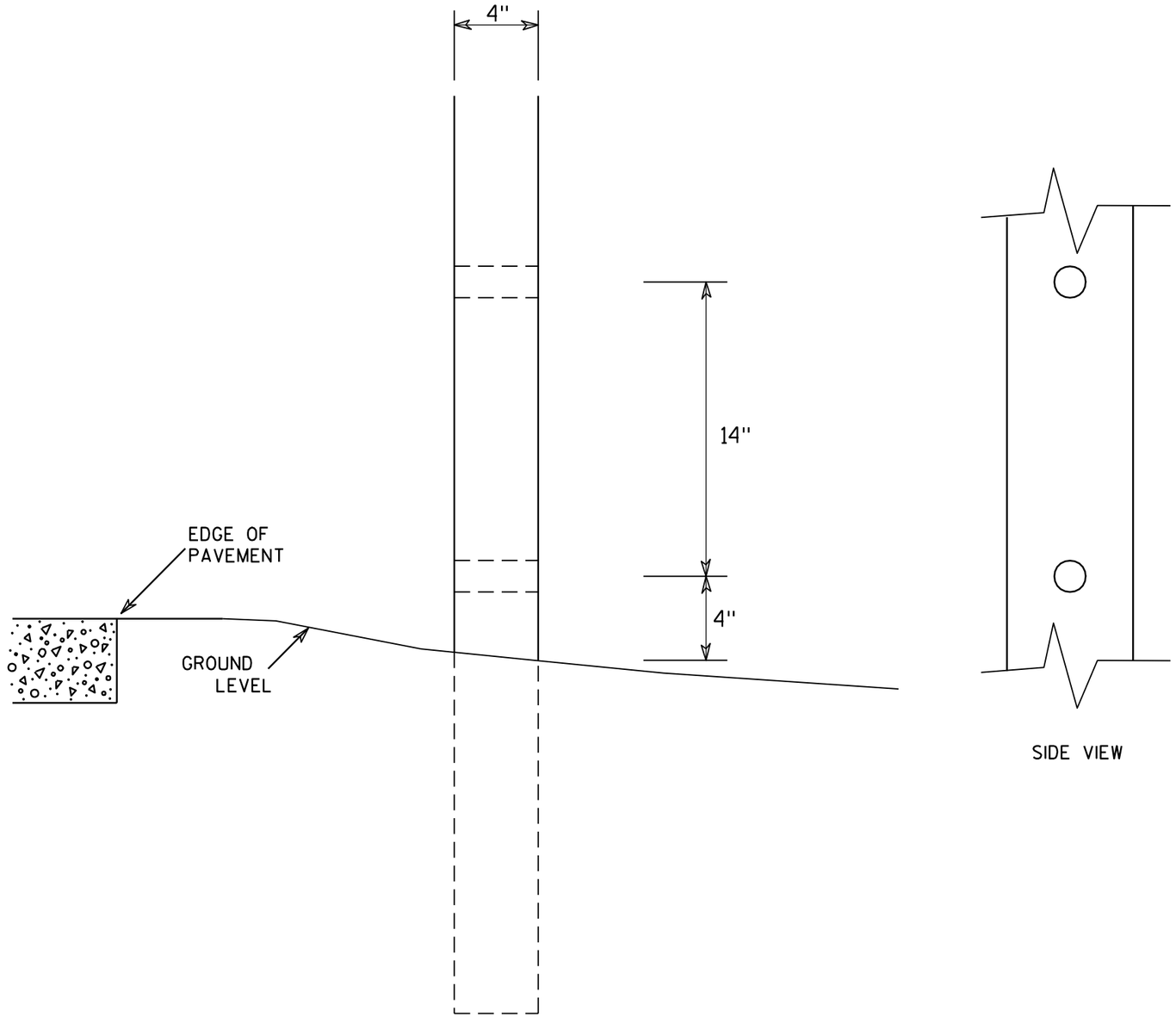

SIDE VIEW

GENERAL NOTES

1. All 4 x 6 Wood Posts shall be modified by having two 1½" diameter holes drilled perpendicular to the roadway centerline.

7

7

4 X 6 WOOD POST MODIFICATIONS

WISCONSIN DEPT OF TRANSPORTATION

APPROVED Chester J Spang for State Traffic Engineer

DATE 3/27/97 PLATE NO. A4-11.2

PROJECT NO:	HWY:	COUNTY:		SHEET NO: 207	E

BANDING

SINGLE SIGN

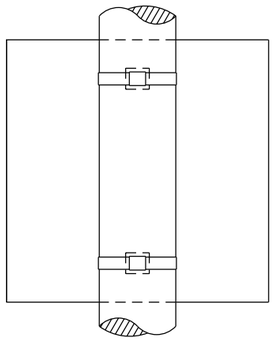

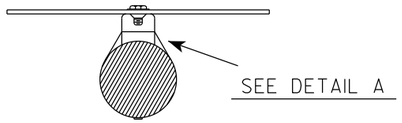

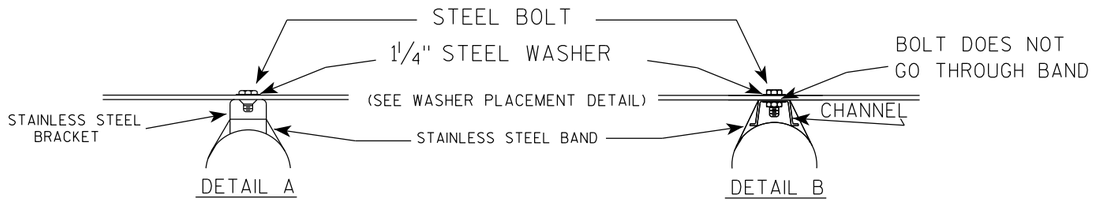

GENERAL NOTES

1. Any sign over 3 feet in width shall use the V-Block banding method. See A5-10 standard plate.
2. Signs 3 feet or greater in height shall have three bracket bands installed. Signs less than 3 feet in height shall have two bracket bands installed.
3. Banding and assembly bracket shall be stainless steel. All bands shall be ¾" in width and 0.025" thickness.
4. ALL SIGN MOUNTING BOLTS AND WASHERS SHALL BE EITHER:
   a. Hot dip or mechanically galvanized in accordance with ASTM Designation: A 153, Class D
   b. Electro-galvanized in accordance with ASTM designation: B 633, Type III, SC 3

"J" ASSEMBLY

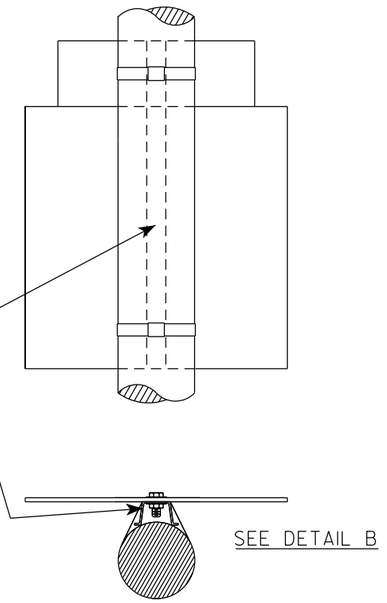

WASHER PLACEMENT

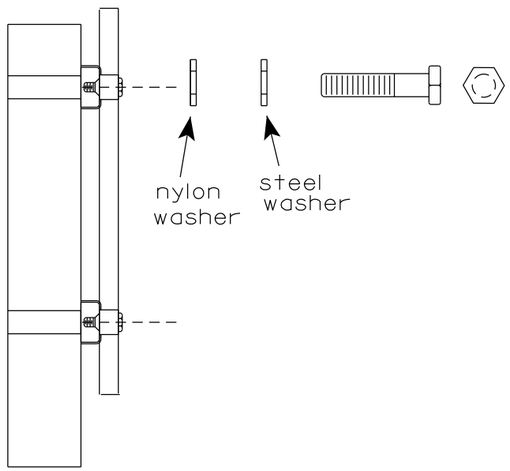

WASHERS (ALL POSTS) -
1-1/4" O.D. X ⅜" I.D. X 1/16" STEEL
1-1/4" O.D. X ⅜" I.D. X .080 NYLON
FOR ALL TYPE H SIGNS

STANDARD SIGN
SIGN BANDING DETAILS

WISCONSIN DEPT OF TRANSPORTATION

APPROVED Matthew R Rauch
for State Traffic Engineer

DATE 6/10/19 PLATE NO. A5-9.4

PROJECT NO:	HWY:	COUNTY:		SHEET NO: 208	E

FILE NAME : C:\CAEfiles\Projects\tr_stdplate\A59.dgn PLOT DATE : 10-JUN 2019 4:10 PLOT BY : mscj9h PLOT NAME : PLOT SCALE : $$.....plotscale.....$$

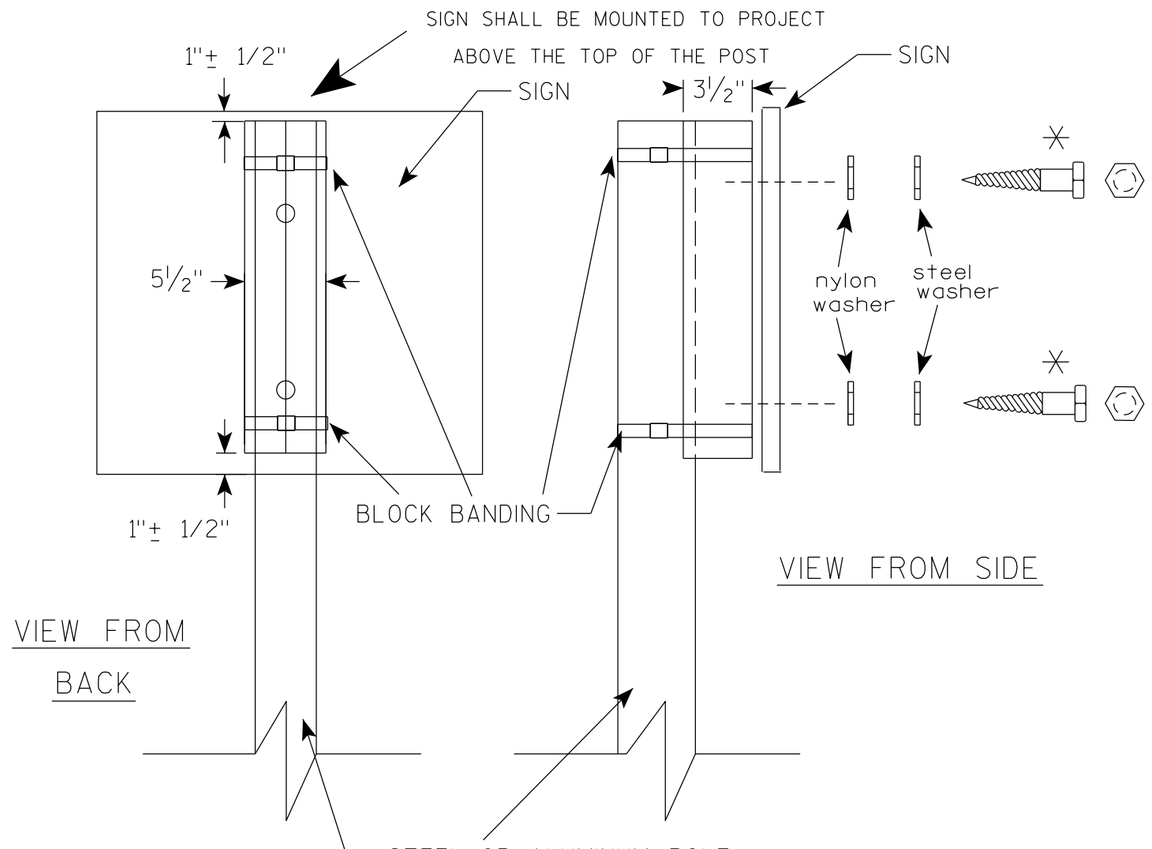

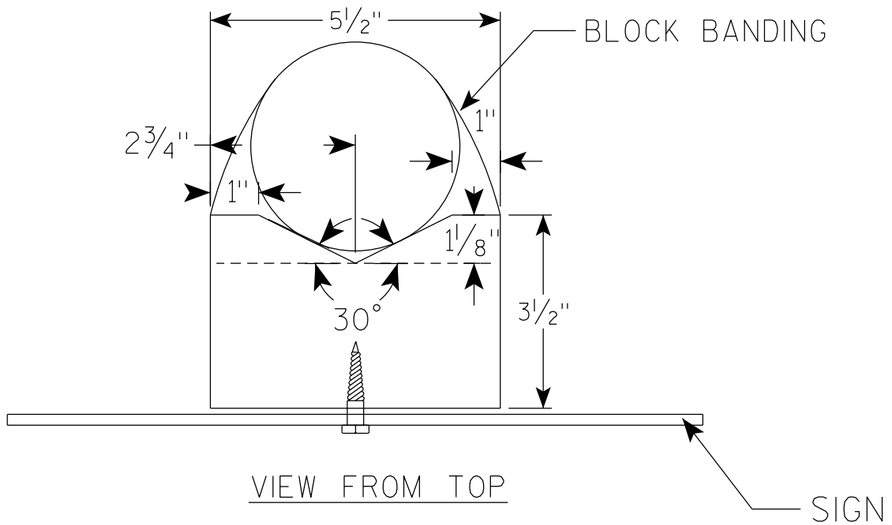

GENERAL NOTES

1. WOOD 4"X6" POST MATERIAL SHALL CONFORM TO 507.2.2 OF THE WisDOT STANDARD SPECIFICATIONS
2. BLOCK BANDING AND CLIPS SHALL BE STAINLESS STEEL, ¾" WIDTH AND 0.025" THICKNESS
3. SIGNS 3' OR GREATER IN HEIGHT SHALL UTILIZE 3 BLOCK BANDS. SIGNS UNDER 3' IN HEIGHT SHALL UTILIZE 2 BLOCK BANDS
4. ACTUAL NUMBER OF FASTENERS PER SIGN VARIES WITH THE SIGN AREA, BUT NORNALLY THERE ARE TWO. FOR SIGNS GREATER THAN 9 S.F. 3 FASTENERS SHALL BE USED.
5. ALL SIGN MOUNTING BOLTS AND WASHERS SHALL BE EITHER:
   a. Hot dip or mechanically galvanized in accordance with ASTM Designation: A 153, Class D
   b. Electro-galvanized in accordance with ASTM Designation : B 633, TYPE III, SC 3
6. ALL BOLTS SHALL HAVE HEXAGONAL HEADS.
7. STEEL WASHERS SHALL BE 1¼" O.D. X ⅜" I.D. X 1/16"
8. NYLON WASHERS SHALL BE 1¼" O.D. X ⅜" I.D. X .080 FOR TYPE H OR TYPE F FACE SIGN

✳ LAG BOLTS SHALL BE ⅜" X 2½"

BLOCK BANDING DETAIL (V-BLOCK OPTION)

WISCONSIN DEPT OF TRANSPORTATION

APPROVED Matthew R Rauch
for State Traffic Engineer

DATE 4/19/2022 PLATE NO. A5-10.3

PROJECT NO:

SHEET NO: 209 E

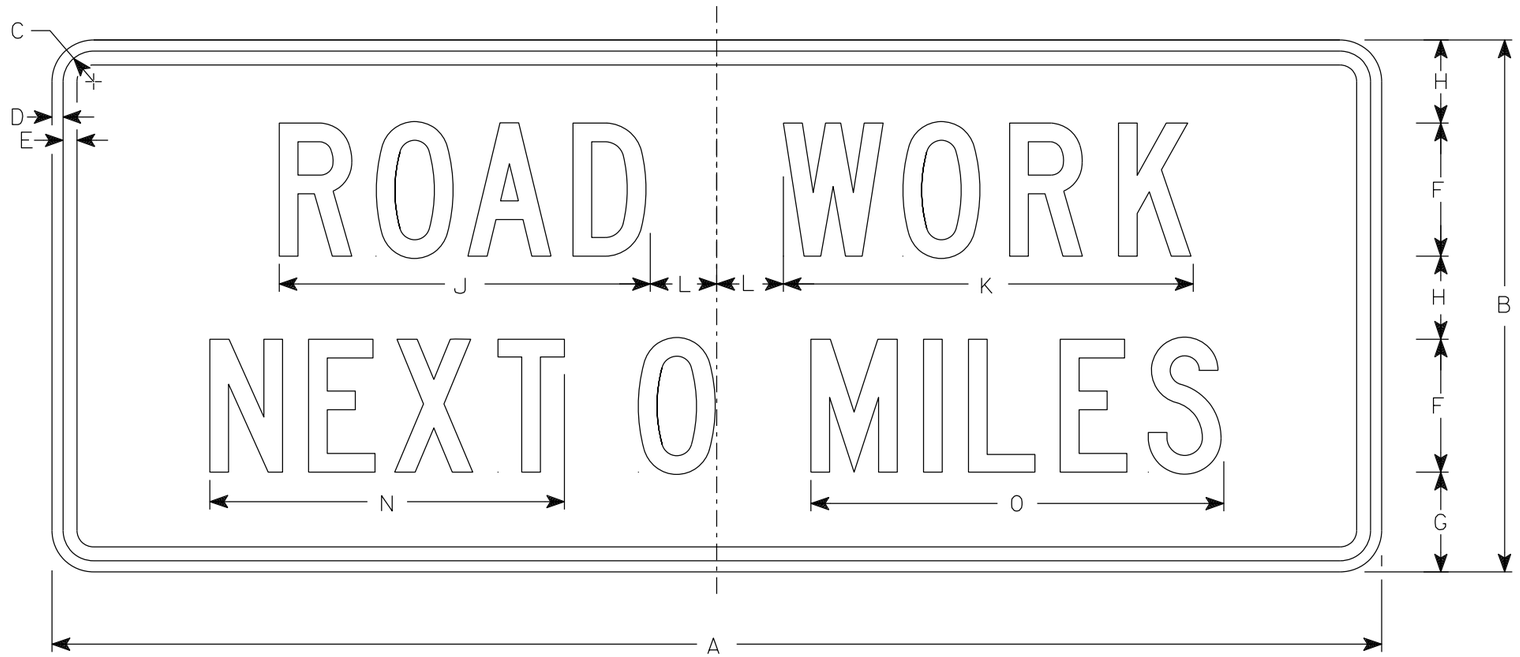

G20-1

NOTES

1. Sign is Type II - Type F Reflective
2. Color:
   Background - Orange
   Message - Black
3. Message Series - C
4. Corners may be square or rounded when base material is plywood but borders shall be rounded as shown. When base material is metal, the corners and borders shall be rounded.
5. Round distance to nearest whole Mile and substitute appropriate numerals and optically adjust spacing to achieve proper balance

SIZE	A	B	C	D	E	F	G	H	I	J	K	L	M	N	O	P	Q	R	S	T	U	V	W	X	Y	Z	Area sq. ft.
1																											
2S	60	24	1 7/8	1/2	5/8	6	4 1/2	3 3/4		16 3/4	18 1/2	3		16	18 5/8												10.0
2M	60	24	1 7/8	1/2	5/8	6	4 1/2	3 3/4		16 3/4	18 1/2	3		16	18 5/8												10.0
3	60	24	1 7/8	1/2	5/8	6	4 1/2	3 3/4		16 3/4	18 1/2	3		16	18 5/8												10.0
4	60	24	1 7/8	1/2	5/8	6	4 1/2	3 3/4		16 3/4	18 1/2	3		16	18 5/8												10.0
5	60	24	1 7/8	1/2	5/8	6	4 1/2	3 3/4		16 3/4	18 1/2	3		16	18 5/8												10.0

STANDARD SIGN
G20-1

WISCONSIN DEPT OF TRANSPORTATION

APPROVED Matthew R Rauch
for State Traffic Engineer

DATE 1/26/2023 PLATE NO. G20-1.9

PROJECT NO:	HWY:	COUNTY:		SHEET NO: 210	E

NOTES

1. Sign is Type II - Type F Reflective
2. Color:
   Background - Orange
   Message - Black
3. Message Series - D
4. Substitute appropriate numeral and adjust spacing to achieve proper balance.

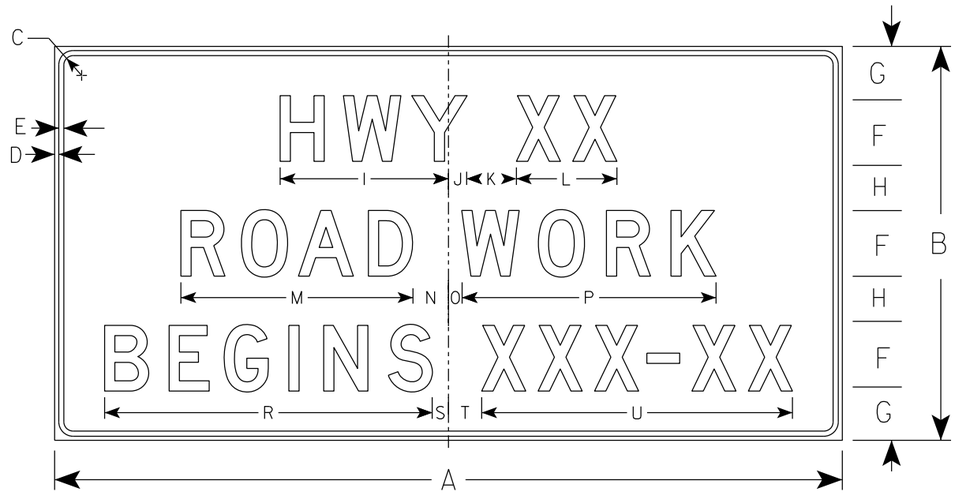

G20-57

SIZE	A	B	C	D	E	F	G	H	I	J	K	L	M	N	O	P	Q	R	S	T	U	V	W	X	Y	Z	Area sq. ft.
1																											
2																											
3	72	36	1 1/8	1/2	5/8	6	5	4	15 5/8	1 5/8	5	9 1/4	21 1/4	3 1/2	1 1/2	23 1/4		29 7/8	1 3/4	3 1/4	28 1/2						18.0
4	96	48	2 1/4	3/4	1	8	6 1/2	5 1/2	20 5/8	2 1/4	6	12 1/4	28 1/4	4 3/8	1 5/8	31		39 1/4	2	4	37 7/8						32.0
5																											

STANDARD SIGN
G20-57

WISCONSIN DEPT OF TRANSPORTATION

APPROVED Matthew R Rauch
For State Traffic Engineer

DATE 1/22/19 PLATE NO. G20-57.3

PROJECT NO: | HWY: | COUNTY: | SHEET NO: 211 | E

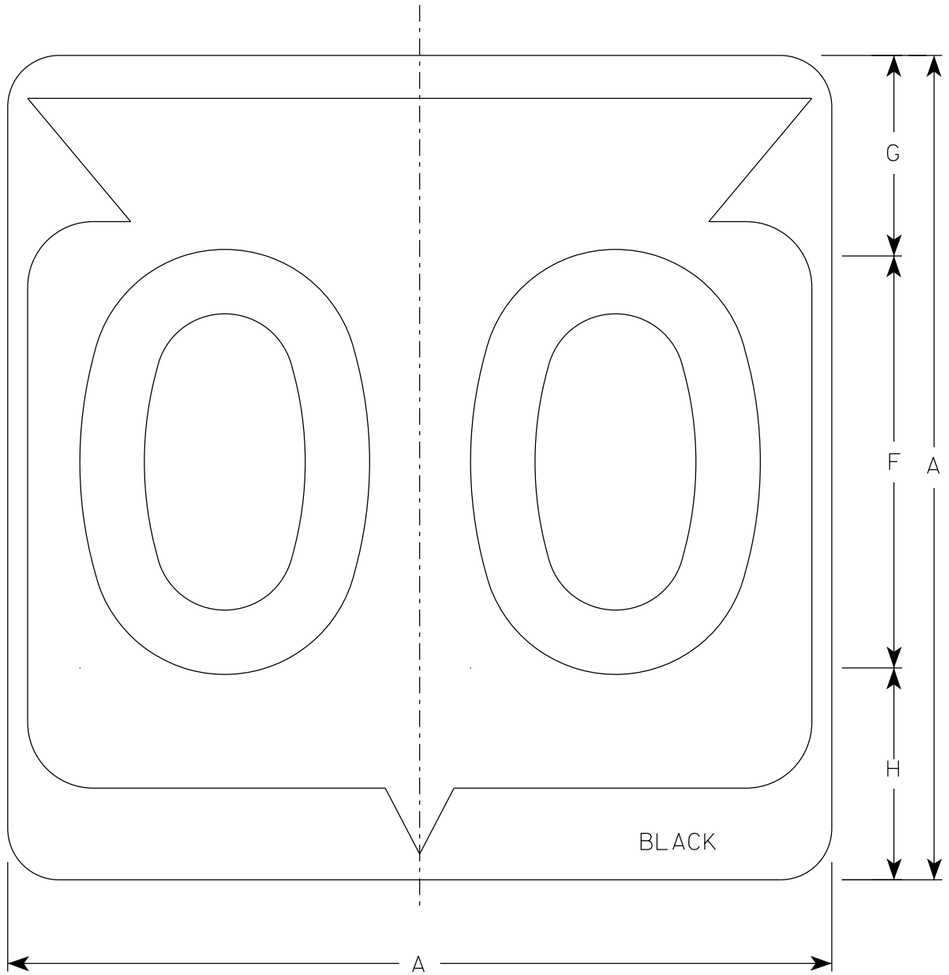

M1-6

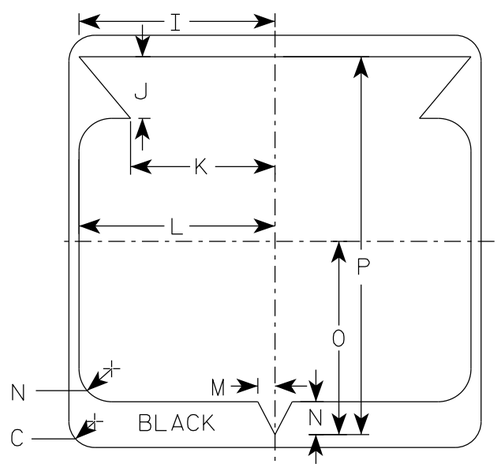

NOTES

1. Sign is Type II - Type H Reflective
2. Color:
   Background - White
   Message - Black
3. Message Series - D except 3 number signs Series C

SIZE	A	B	C	D	E	F	G	H	I	J	K	L	M	N	O	P	Q	R	S	T	U	V	W	X	Y	Z	Area sq. ft.
1																											
2	24		1 1/2			12	5 1/2	6 1/2	10 1/4	2 1/2	8 7/8	11 1/2	1	1 7/8	11 1/4	21 7/8											4.0
2M	24		1 1/2			12	5 1/2	6 1/2	10 1/4	2 1/2	8 7/8	11 1/2	1	1 7/8	11 1/4	21 7/8											4.0
3	36		2 1/4			18	8 3/4	9 1/4	15 3/8	5 3/8	12 5/8	17 1/8	1 1/2	2 7/8	16 7/8	33											9.0
4	36		2 1/4			18	8 3/4	9 1/4	15 3/8	5 3/8	12 5/8	17 1/8	1 1/2	2 7/8	16 7/8	33											9.0
5	36		2 1/4			18	8 3/4	9 1/4	15 3/8	5 3/8	12 5/8	17 1/8	1 1/2	2 7/8	16 7/8	33											9.0

STATE ROUTE MARKER
M1-6 FOR ASSEMBLIES

WISCONSIN DEPT OF TRANSPORTATION

APPROVED Matthew R Rauch
for State Traffic Engineer

DATE 11/8/2022 PLATE NO. M1-6.11

PROJECT NO:	HWY:	COUNTY:		SHEET NO: 212	E

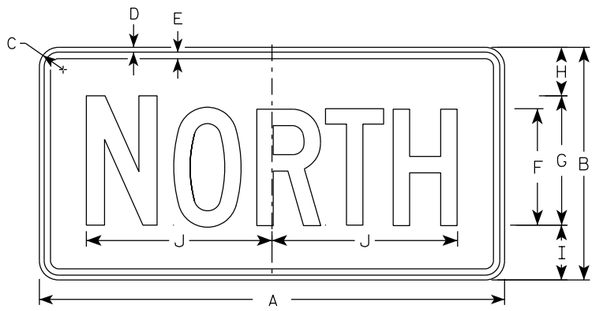

M3-1
MM3-1
MP3-1

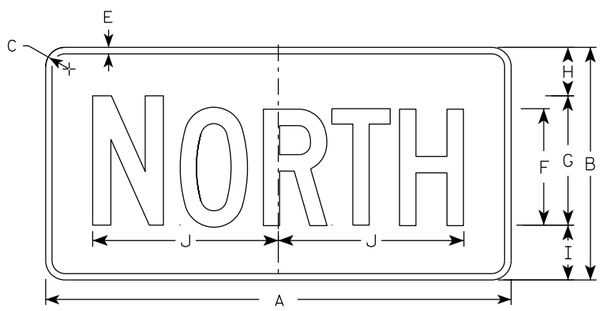

MB3-1
MK3-1
MN3-1

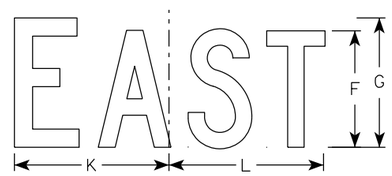

M3-2
MM3-2
MP3-2

MB3-2
MK3-2
MN3-2

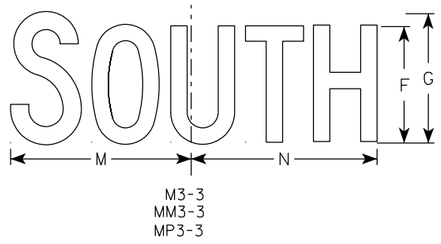

M3-3
MM3-3
MP3-3

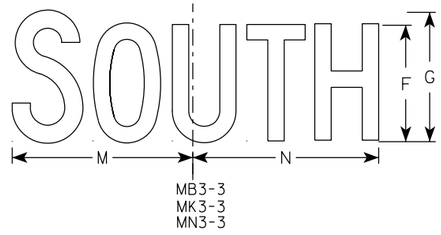

MB3-3
MK3-3
MN3-3

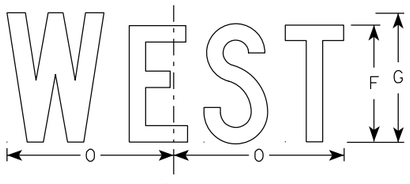

M3-4
MM3-4
MP3-4

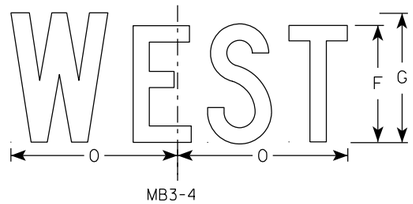

MB3-4
MK3-4
MN3-4

NOTES

1. All Signs Type II - Type H Reflective
2. Color:
   Background - See note 5
   Message - See note 5
3. Message Series - C
4. Corners may be square or rounded when base material is plywood but borders shall be rounded as shown. When base material is metal, the corners and borders shall be rounded.
5. M3-1 thru M3-4 Background - White
   Message - Black
   MB3-1 thru MB3-4 Background - Blue
   Message - White
   MK3-1 thru MK3-4 Background - Green
   Message - White
   MM3-1 thru MM3-4 Background - White
   Message - Green
   MN3-1 thru MN3-4 Background - Brown
   Message - White
   MP3-1 thru MP3-4 Background - White
   Message - Blue
6. Note the first letter of each direction is larger than the remainder of the message.

SIZE	A	B	C	D	E	F	G	H	I	J	K	L	M	N	O	P	Q	R	S	T	U	V	W	X	Y	Z	Area sq. ft.
1																											
2S	24	12	1 1/2	3/8	3/8	6	7	2 1/4	2 3/4	10 1/4	7 7/8	8 3/8	10 1/4	9 3/4	8 3/4												2.00
2M	24	12	1 1/2	3/8	3/8	6	7	2 1/4	2 3/4	10 1/4	7 7/8	8 3/8	10 1/4	9 3/4	8 3/4												2.00
3	36	18	1 1/2	3/8	1/2	9	10	3 3/4	4 1/4	14 3/8	12	12 1/8	14	14 1/8	13												4.5
4	36	18	1 1/2	3/8	1/2	9	10	3 3/4	4 1/4	14 3/8	12	12 1/8	14	14 1/8	13												4.5
5	36	18	1 1/2	3/8	1/2	9	10	3 3/4	4 1/4	14 3/8	12	12 1/8	14	14 1/8	13												4.5

STANDARD SIGNS
M3-1 THRU M3-4
SERIES

WISCONSIN DEPT OF TRANSPORTATION

APPROVED Matthew R Rauch
For State Traffic Engineer

DATE 2/8/2023 PLATE NO. M3-1.15

PROJECT NO: | HWY: | COUNTY: | SHEET NO: 213 | E

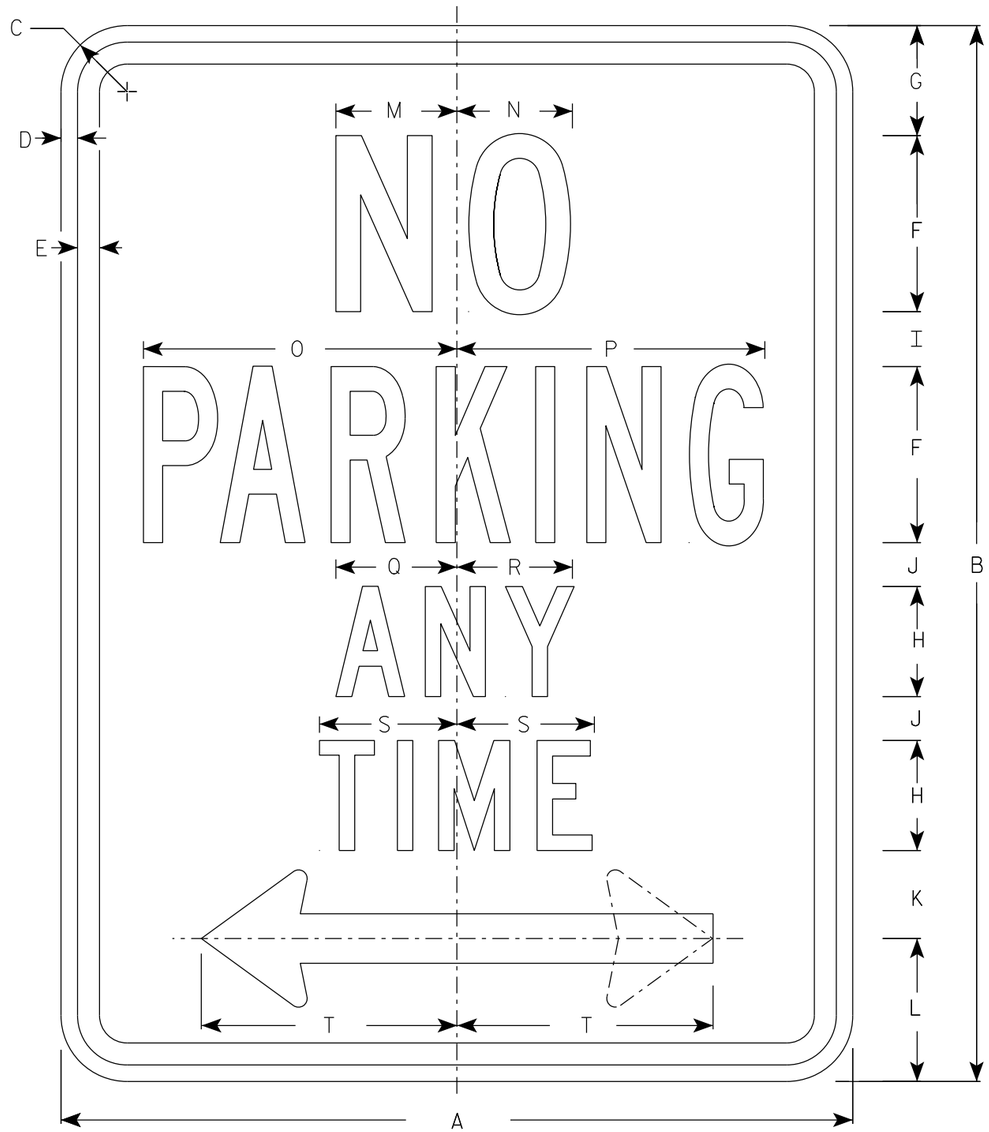

R7-1

NOTES

1. Sign is Type II - Type H Reflective
2. Color:
   Background - White
   Message - Red
3. Message Series - See Note 4
4. Lines 1, 3 and 4 are series C, line 2 is series B.
5. R7-1D (double arrow)
   R7-1L (left arrow)
   R7-1R (right arrow)

ARROW DETAIL

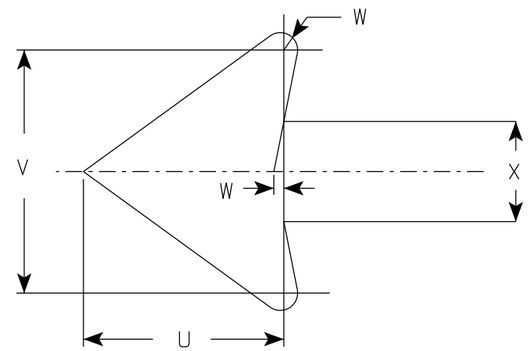

SIZE	A	B	C	D	E	F	G	H	I	J	K	L	M	N	O	P	Q	R	S	T	U	V	W	X	Y	Z	Area sq. ft.
1	12	18	1 ½	⅜	⅜	3	1 ⅞	2	⅞	⅝	1 ½	2 ½	2	2	4 ⅞	4 ⅞	2 ¼	2 ⅛	2 ½	3 ⅞	1 ½	1 ¾	⅛	¾			1.5
2S	18	24	1 ½	⅜	½	4	2 ½	2 ½	1 ¼	1	2	3 ¼	2 ¾	2 ⅝	7 ⅛	7	2 ¾	2 ⅝	3 ⅛	5 ⅞	2 ¼	2 ⅝	¼	1 ⅛			3.0
2M	24	30	1 ½	⅜	½	5	3	3	2	1 ¼	2 ½	4	3 ¼	3 ⅜	9 ¼	9 ¼	3 ¼	3 ¼	3 ¾	7 ¾	3	3 ½	¼	1 ½			5.0
3	24	30	1 ½	⅜	½	5	3	3	2	1 ¼	2 ½	4	3 ¼	3 ⅜	9 ¼	9 ¼	3 ¼	3 ¼	3 ¾	7 ¾	3	3 ½	¼	1 ½			5.0
4																											
5																											

STANDARD SIGN
R7-1

WISCONSIN DEPT OF TRANSPORTATION

APPROVED Matthew R Rauch
for State Traffic Engineer

DATE 10/26/23 PLATE NO. R7-1.11

PROJECT NO: | HWY: | COUNTY: | SHEET NO: 214 E

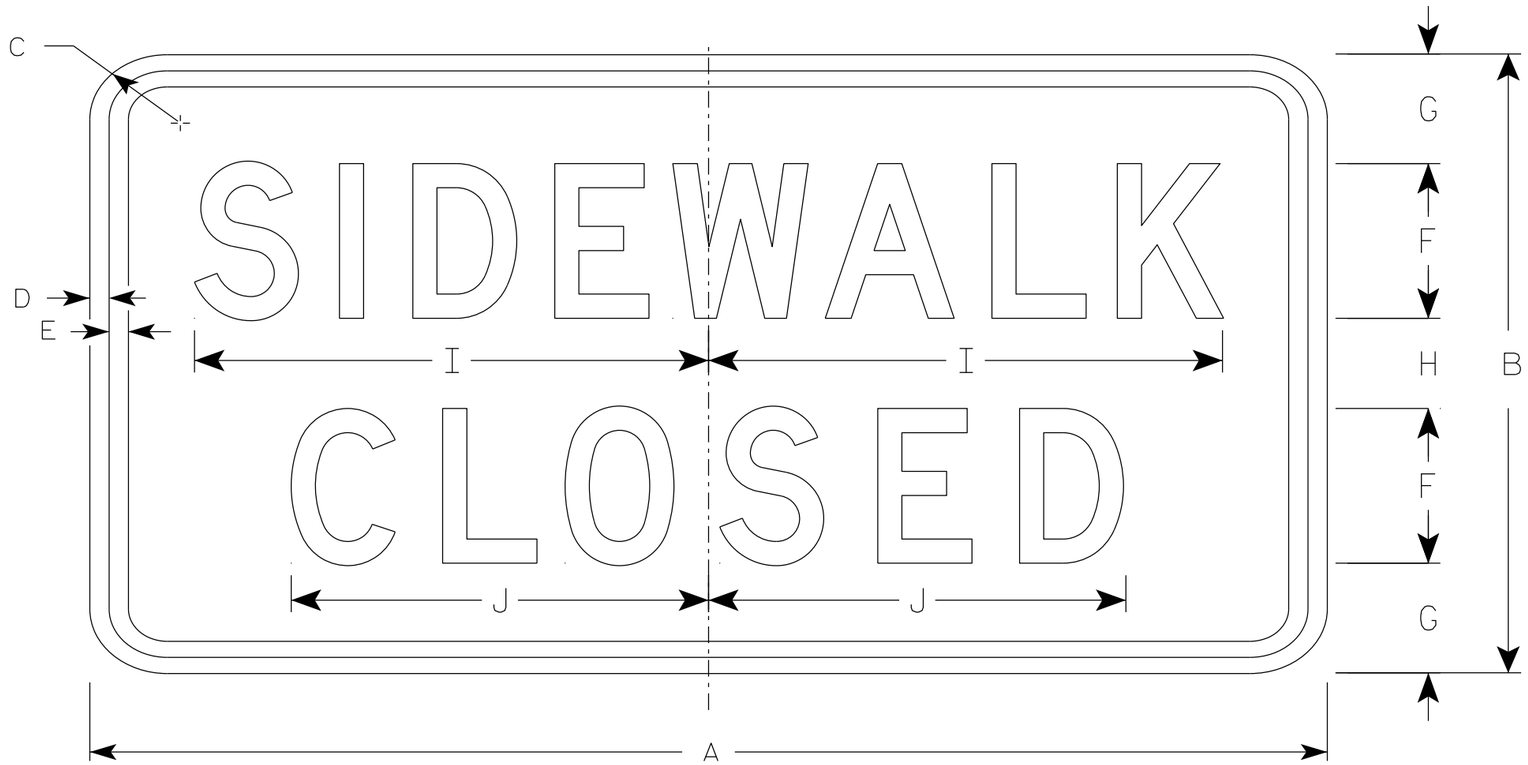

R9-9

NOTES

1. Sign is Type II - Type H Reflective
2. Color:
   Background - White
   Message - Black
3. Message Series - C
4. Use Size 2 for Sidewalks. Use Size 3 for Paths and Trails.

SIZE	A	B	C	D	E	F	G	H	I	J	K	L	M	N	O	P	Q	R	S	T	U	V	W	X	Y	Z	Area sq. ft.
1																											
2S	24	12	1 ½	½	½	3	2 ⅛	1 ¾	10	8 ⅛																	2.0
2M	24	12	1 ½	½	½	3	2 ⅛	1 ¾	10	8 ⅛																	2.0
3	30	18	1 ½	½	½	4	3 ½	3	12 ½	10 ¼																	3.75
4																											
5																											

STANDARD SIGN
R9-9

WISCONSIN DEPT OF TRANSPORTATION

APPROVED Matthew R Rauch
for State Traffic Engineer

DATE 1/24/24 PLATE NO. R9-9.7

PROJECT NO: | HWY: | COUNTY: | SHEET NO: 215 | E

NOTES

1. Sign is Type II - Type H Reflective
2. Color:
   Background - White
   Message - Black
3. Message Series - D

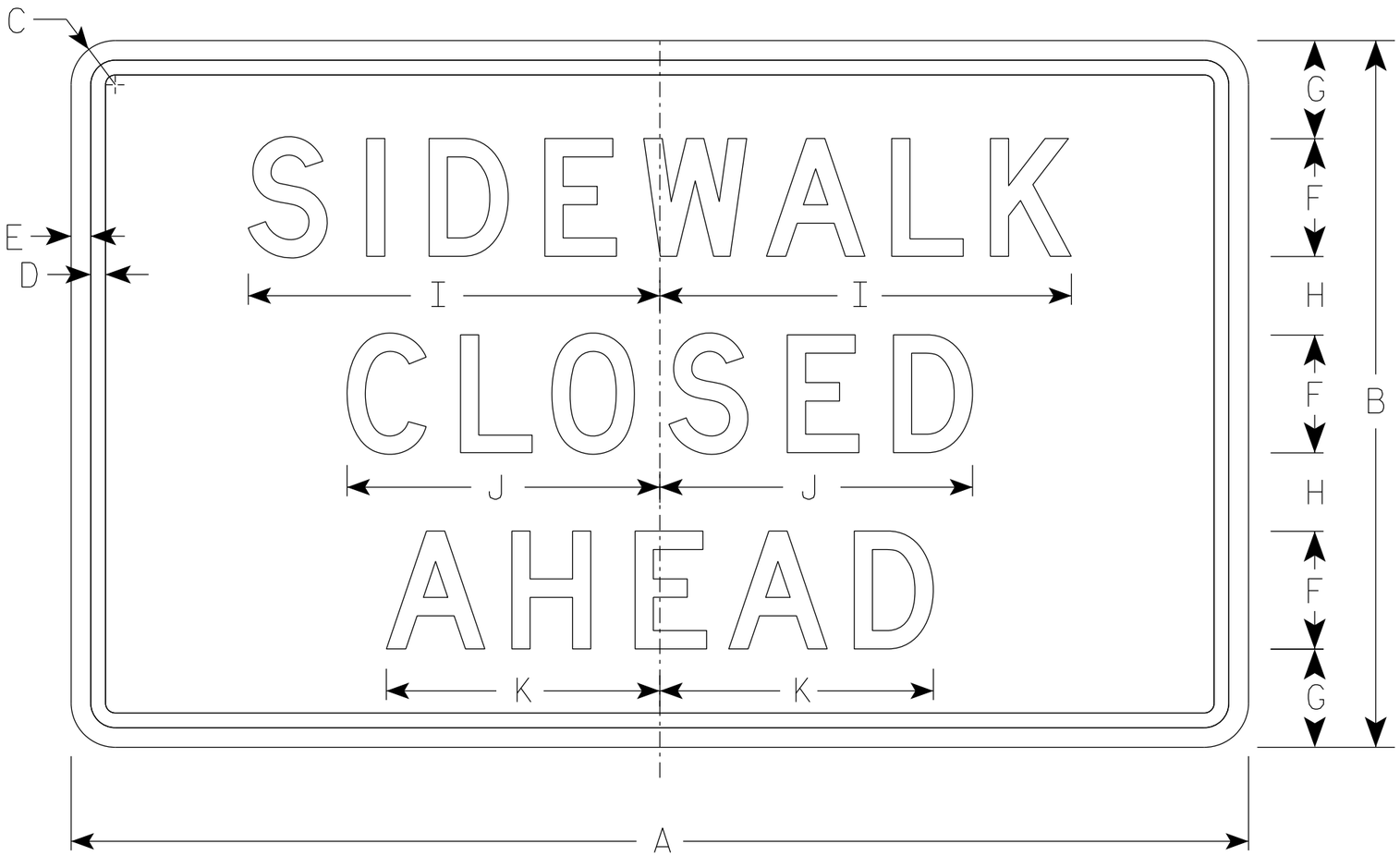

R9-9A

SIZE	A	B	C	D	E	F	G	H	I	J	K	L	M	N	O	P	Q	R	S	T	U	V	W	X	Y	Z	Area sq. ft.
1																											
2S	30	18	1 ½	⅜	½	3	2 ½	2	10 ½	8	7																3.75
2M	30	18	1 ½	⅜	½	3	2 ½	2	10 ½	8	7																3.75
3																											
4																											
5																											

STANDARD SIGN
R9-9A

WISCONSIN DEPT OF TRANSPORTATION

APPROVED Matthew R Rauch
for State Traffic Engineer

DATE 1/24/24 PLATE NO. R9-9A.2

PROJECT NO: | HWY: | COUNTY: | SHEET NO: 216 | E

FILE NAME : C:\CAEFiles\Projects\tr_stdplate\R99A.DGN PLOT DATE : 24-JAN 2024 11:58 PLOT BY : mscj9h PLOT SCALE : $$.....plotscale.....$$ WISDOT/CADDS SHEET 42

7 7

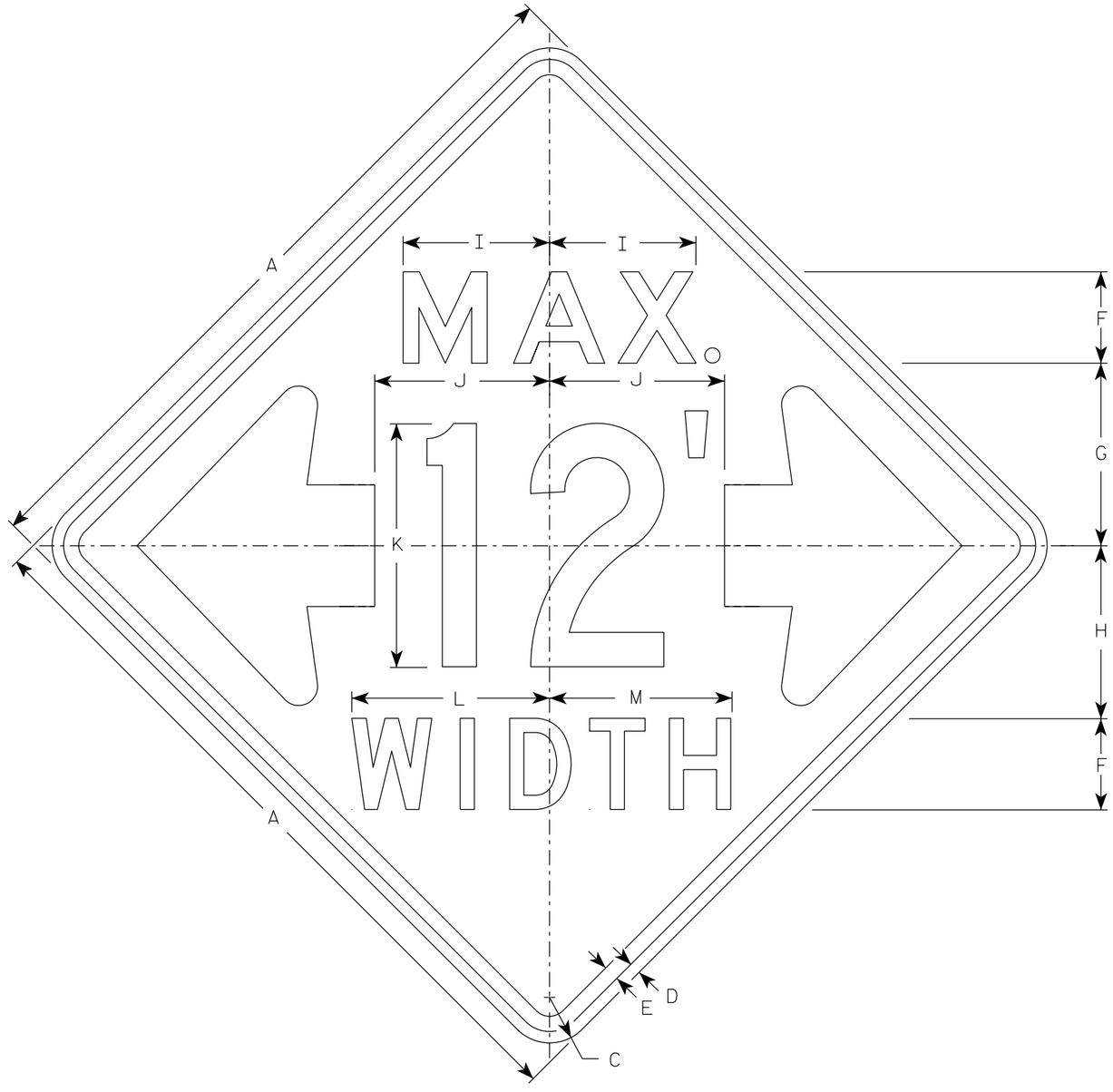

W12-52

NOTES

1. Sign is Type II - Type F Reflective
2. Color:
   Background - Orange
   Message - Black
3. Message Series - See note 5
4. The top line is series E, the numerals are series C, and the bottom line is series D.
5. Substitute appropriate numerals and adjust spacing as required.

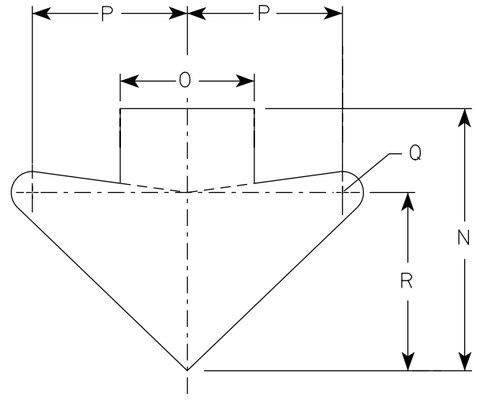

ARROW DETAIL

SIZE	A	B	C	D	E	F	G	H	I	J	K	L	M	N	O	P	Q	R	S	T	U	V	W	X	Y	Z	Area sq. ft.
1																											
2S	48		3	¾	1	6	12	11 ⅜	9 ⅝	11 ½	16	13	12	15 ⅝	8	9 ¼	1 ¼	10 ⅝									16.0
2M	48		3	¾	1	6	12	11 ⅜	9 ⅝	11 ½	16	13	12	15 ⅝	8	9 ¼	1 ¼	10 ⅝									16.0
3																											
4																											
5																											

STANDARD SIGN
W12-52

WISCONSIN DEPT OF TRANSPORTATION

APPROVED Matthew R Rauch
for State Traffic Engineer

DATE 3/10/2024 PLATE NO. W12-52.8

PROJECT NO: | HWY: | COUNTY: | SHEET NO: 217 | E

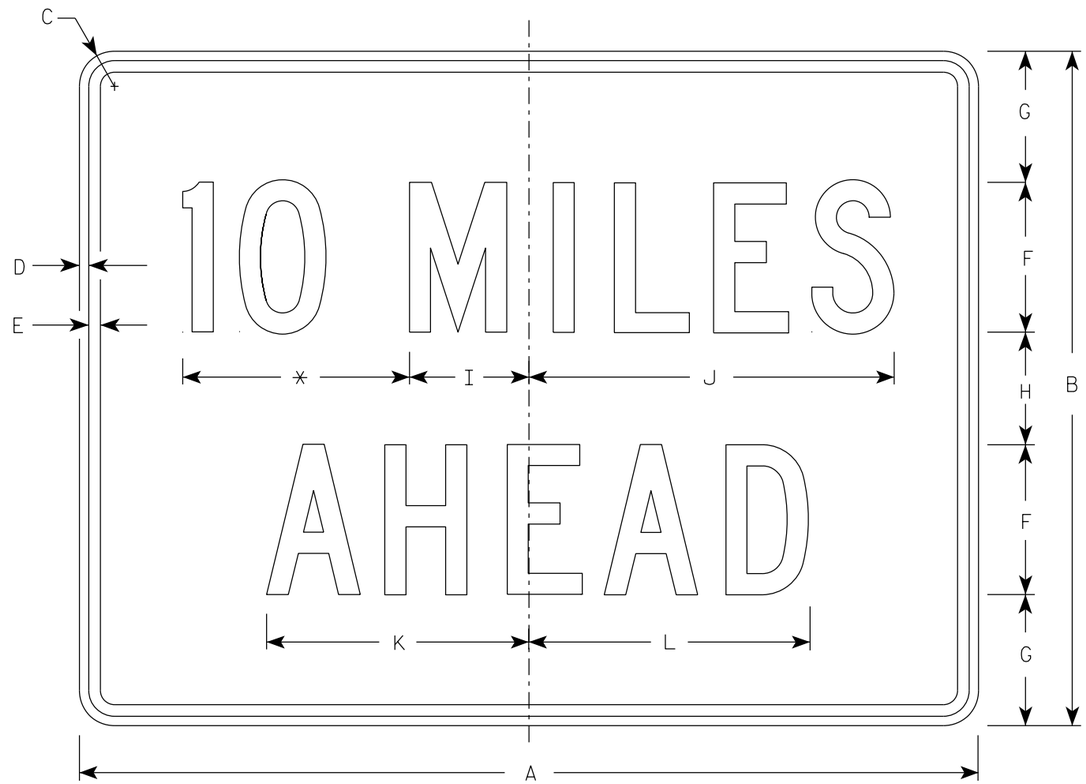

W057-52

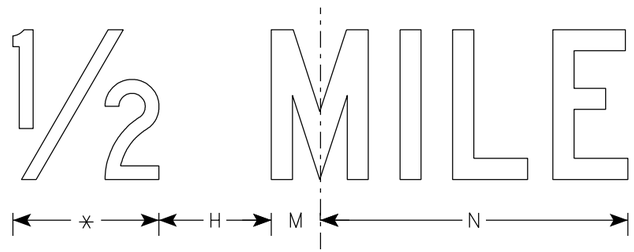

NOTES

1. Sign is Type II - Type F Reflective
2. Color:
   Background - Orange
   Message - Black
3. Message Series - C
4. Corners may be square or rounded when base material is plywood but borders shall be rounded as shown. When base material is metal, the corners and borders shall be rounded.
5. Substitute appropriate numerals to the nearest quarter mile and optically adjust spacing to achieve proper balance.

* See note 5

SIZE	A	B	C	D	E	F	G	H	I	J	K	L	M	N	O	P	Q	R	S	T	U	V	W	X	Y	Z	Area sq. ft.
1	36	24	1 1/2	3/8	1/2	6	4 1/2	3	4 3/4	14 5/8	10 5/8	11 3/8	2	12													6.0
2S	48	36	2 1/4	1/2	5/8	8	7	6	6 3/8	19 1/2	14	15	2 3/4	16 3/8													12.0
2M	48	36	2 1/4	1/2	5/8	8	7	6	6 3/8	19 1/2	14	15	2 3/4	16 3/8													12.0
3	48	36	2 1/4	1/2	5/8	8	7	6	6 3/8	19 1/2	14	15	2 3/4	16 3/8													12.0
4	48	36	2 1/4	1/2	5/8	8	7	6	6 3/8	19 1/2	14	15	2 3/4	16 3/8													12.0
5	48	36	2 1/4	1/2	5/8	8	7	6	6 3/8	19 1/2	14	15	2 3/4	16 3/8													12.0

STANDARD SIGN
W057-52

WISCONSIN DEPT OF TRANSPORTATION

APPROVED Matthew R Rauch
for State Traffic Engineer

DATE 2/1/2024 PLATE NO. W057-52.3

PROJECT NO: | HWY: | COUNTY: | SHEET NO: 218 E

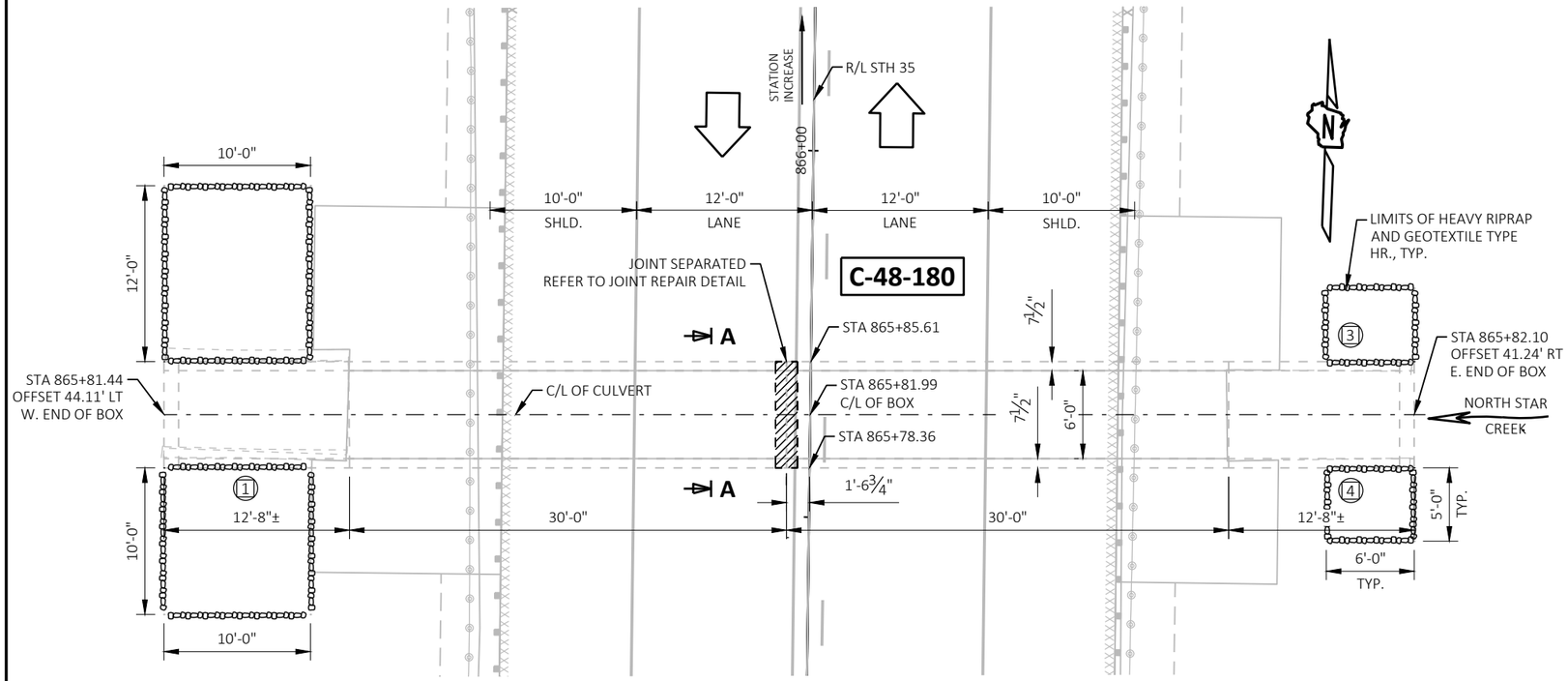

PLAN

(6'-0" X 6'-0" SINGLE CELL BOX CULVERT)

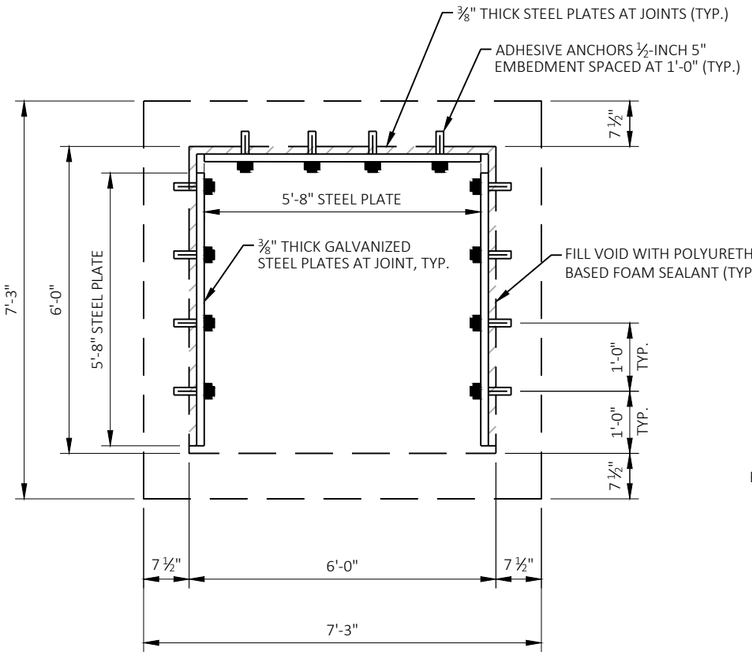

SECTION A-A

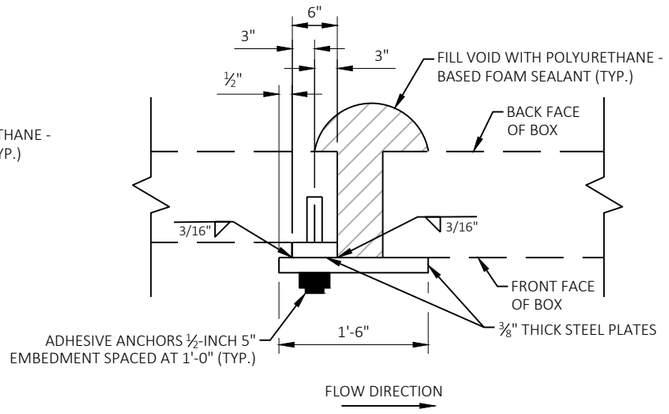

JOINT REPAIR DETAIL

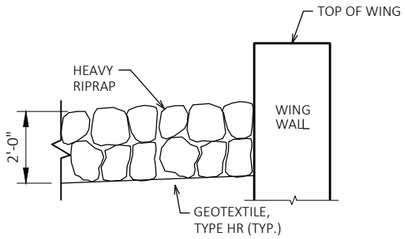

TYPICAL SECTION AT WING

GENERAL NOTES

DRAWINGS SHALL NOT BE SCALED.

DIMENSIONS SHOWN ARE BASED ON FIELD MEASUREMENTS AND THE ORIGINAL STRUCTURE PLANS.

ALL DIMENSIONS ARE IN FEET AND INCHES UNLESS NOTED OTHERWISE.

REPAIR JOINT AT JOINT LOCATION SHOWN ON PLAN VIEW. WORK TO BE PAID FOR UNDER BID ITEM, "BOX CULVERT JOINT REPAIR C-48-180".

ALL STRUCTURAL STEEL PLATES SHALL BE FURNISHED AND FABRICATED IN ACCORDANCE WITH SECTION 506 OF THE STANDARD SPECIFICATIONS. GALVANIZE THE STRUCTURAL STEEL PLATES IN ACCORDANCE WITH ASTM A123.

ALL ADHESIVE ANCHORS, NUTS, AND WASHERS SHALL BE FURNISHED AND GALVANIZED IN ACCORDANCE WITH SECTION 502.2.12 OF THE STANDARD SPECIFICATIONS. THE SAME GALVANIZATION PROCESS SHALL BE USED FOR ALL PARTS OF THE ANCHOR, NUT, AND WASHER ASSEMBLY.

TRAFFIC DATA

STH 35:

ADT = 6,400 (2028)
ADT = 6,910 (2048)
R.D.S. = 55 MPH

LEGEND

(X) WINGWALL NUMBER

DESIGN DATA

MATERIAL PROPERTIES:

STRUCTURAL CARBON STEEL:
ASTM A709, GRADE 36 —— f_y = 36,000 PSI

LIST OF DRAWINGS:

1 GENERAL PLAN & JOINT REPAIR DETAILS

WISCONSIN
ANTHONY J. CASTLE
E-43345
OAK CREEK
WI
PROFESSIONAL ENGINEER

4/24/2026

TOTAL ESTIMATED QUANTITIES

BID ITEM NUMBER	BID ITEMS	UNIT	TOTALS
606.0300	RIPRAP HEAVY	CY	21
645.0120	GEOTEXTILE TYPE HR	SY	32
SPV.0060	BOX CULVERT JOINT REPAIR C-48-180	EACH	1

STRUCTURE DESIGN CONTACTS:

BUREAU OF STRUCTURES: AARON BONK (608) 261-0261
EMCS: TONY CASTLE (414) 347-1607

NO.	DATE	REVISION	BY

emcs

STATE OF WISCONSIN DEPARTMENT OF TRANSPORATION

ACCEPTED JLR 05/12/26
CHIEF STRUCTURES DESIGN ENGINEER DATE

STRUCTURE C-48-180

STH 35 OVER NORTH STAR CREEK

COUNTY	TOWN
POLK	LUCK

DESIGN SPEC.
REHABILITATION N/A

DESIGNED BY	DESIGNED CK'D	DRAWN BY	PLANS CK'D
JRM	AJC	JRM	AJC

GENERAL PLAN & JOINT REPAIR DETAILS

SHEET 1 OF 1
219

SCALE = 1:10

I.D. 8010-01-80 DATE:

STATE PROJECT NUMBER
8010-01-80

8

8

N:\55xx\5508.DP.22.STH35-48.PLK\CADDS\80100180\sheets\struct\C-48-0180_pln.dwg, 4/24/2026 12:01:36 PM, WisDOT PDF.pc3

DIVISION 3 - CEMETERY CURB LT								
STATION	DISTANCE	AREA (SF)		INCREMENTAL VOL (CY)		CUMULATIVE VOL (CY)		
		CUT	FILL	CUT	FILL	CUT	EXPANDED FILL	MASS ORDINATE
							1.25	
				NOTE 1	NOTE 2	1.00	NOTE 3	NOTE 4
858+42	0	0	0	0	0	0	0	0
858+50	8	0	2	0	0	0	0	0
859+00	50	0	1	0	2	0	3	-3
859+50	50	0	5	0	5	0	9	-9
860+00	50	0	1	0	6	0	16	-16
860+50	50	0	0	0	1	0	18	-18
861+00	50	0	0	0	0	0	18	-18
861+50	50	0	0	0	0	0	18	-18
862+00	50	0	0	0	0	0	18	-18
862+50	50	0	1	0	1	0	19	-19
				0	15			

DIVISION 3 - SOUTH BRANCH OF TRADE RIVER, RT								
STATION	DISTANCE	AREA (SF)		INCREMENTAL VOL (CY)		CUMULATIVE VOL (CY)		
		CUT	FILL	CUT	FILL	CUT	EXPANDED FILL	MASS ORDINATE
							1.25	
				NOTE 1	NOTE 2	1.00	NOTE 3	NOTE 4
863+27	0	0	0	0	0	0	0	0
863+50	23	0	0	0	0	0	0	0
863+52	2	0	0	0	0	0	0	0
863+66	14	0	2	0	0	0	0	0
863+91	25	0	7	0	4	0	5	-5
864+00	9	0	7	0	2	0	8	-8
864+46	46	0	10	0	15	0	26	-26
864+50	4	0	11	0	2	0	29	-29
864+71	21	0	5	0	6	0	36	-36
864+96	25	0	1	0	3	0	40	-40
865+00	4	0	5	0	0	0	40	-40
865+21	21	0	4	0	3	0	44	-44
865+50	29	0	8	0	6	0	51	-51
865+71	21	0	17	0	10	0	64	-64
865+82	11	0	2	0	4	0	69	-69
865+96	14	0	15	0	4	0	74	-74
866+00	4	0	14	0	2	0	76	-76
866+40	40	0	6	0	14	0	94	-94
866+50	10	0	6	0	2	0	96	-96
866+65	15	0	7	0	3	0	100	-100
866+90	25	0	14	0	10	0	113	-113
867+00	10	0	16	0	6	0	120	-120
867+15	15	0	18	0	9	0	131	-131
867+50	35	0	20	0	25	0	163	-163
867+70	20	0	14	0	12	0	178	-178
867+95	25	0	7	0	10	0	190	-190
868+00	5	0	6	0	1	0	191	-191
868+09	9	0	3	0	1	0	193	-193
				0	154			

DIVISION 3 - SOUTH BRANCH OF TRADE RIVER, LT								
STATION	DISTANCE	AREA (SF)		INCREMENTAL VOL (CY)		CUMULATIVE VOL (CY)		
		CUT	FILL	CUT	FILL	CUT	EXPANDED FILL	MASS ORDINATE
							1.25	
				NOTE 1	NOTE 2	1.00	NOTE 3	NOTE 4
863+52	0	1	0	0	0	0	0	0
863+66	14	0	1	0	0	0	0	0
863+91	25	0	5	0	3	0	4	-4
864+00	9	0	6	0	2	0	6	-6
864+46	46	0	10	0	13	0	23	-23
864+50	4	0	10	0	2	0	25	-25
864+71	21	0	11	0	8	0	35	-35
864+96	25	0	4	0	7	0	44	-44
865+00	4	0	2	0	0	0	44	-44
865+21	21	0	3	0	2	0	46	-46
865+50	29	0	6	0	5	0	53	-53
865+71	21	0	31	0	14	0	70	-70
865+82	11	0	1	0	7	0	79	-79
865+96	14	0	17	0	5	0	85	-85
866+00	4	0	15	0	2	0	88	-88
866+40	40	0	3	0	13	0	104	-104
866+50	10	0	0	0	1	0	105	-105
866+65	15	0	1	0	0	0	105	-105
866+90	25	0	13	0	6	0	113	-113
867+00	10	0	12	0	5	0	119	-119
867+15	15	0	17	0	8	0	129	-129
867+50	35	0	11	0	19	0	153	-153
867+70	20	0	8	0	7	0	161	-161
867+95	25	0	5	0	6	0	169	-169
868+00	5	0	6	0	1	0	170	-170
868+09	9	0	5	0	2	0	173	-173
868+34	25	0	0	0	2	0	175	-175
				0	140			

DIVISION 3 - TRADE RIVER, LT								
STATION	DISTANCE	AREA (SF)		INCREMENTAL VOL (CY)		CUMULATIVE VOL (CY)		
		CUT	FILL	CUT	FILL	CUT	EXPANDED FILL	MASS ORDINATE
							1.25	
				NOTE 1	NOTE 2	1.00	NOTE 3	NOTE 4
940+53	0	0	0	0	0	0	0	0
940+62	9	0	0	0	0	0	0	0
941+00	38	0	0	0	0	0	0	0
941+18	18	0	0	0	0	0	0	0
941+20	2	0	0	0	0	0	0	0
941+43	23	0	5	0	2	0	3	-3
941+50	7	0	5	0	1	0	4	-4
941+69	19	0	4	0	3	0	8	-8
941+94	25	0	1	0	2	0	10	-10
942+00	6	0	4	0	0	0	10	-10
942+18	18	0	6	0	3	0	14	-14
942+50	32	0	10	0	9	0	25	-25
942+89	39	0	7	0	13	0	41	-41
942+95	6	0	5	0	1	0	43	-43
943+00	5	0	5	0	1	0	44	-44
943+07	7	0	4	0	1	0	45	-45
943+08	1	0	13	0	0	0	45	-45
943+11	3	0	22	0	2	0	48	-48
943+18	7	0	29	0	6	0	55	-55
943+20	3	0	26	0	3	0	59	-59
943+33	13	0	0	0	6	0	66	-66
943+47	14	0	0	0	0	0	66	-66
943+50	3	0	0	0	0	0	66	-66
				0	53			

NOTES:

1 - CUT	CUT INCLUDES SALVAGED/UNUSABLE PAVEMENT MATERIAL. SALVAGED/UNUSABLE PAVEMENT MATERIAL IS CALCULATED ON THE SECTION 3 SUMMARY SHEET.
2 - FILL	FILL DOES NOT INCLUDE UNUSABLE PAVEMENT AREA/VOLUME. SALVAGED/UNUSABLE PAVEMENT MATERIAL IS CALCULATED ON THE SECTION 3 SUMMARY SHEET.
3 - EXPANDED FILL	(UNEXPANDED MATERIAL)*(EXPANSION FACTOR)
4 - MASS ORDINATE	CUT - (EXPANDED FILL); POSITIVE INDICATES AN EXCESS OF MATERIAL; NEGATIVE INDICATES A SHORTAGE OF MATERIAL

DIVISION 3 - TRADE RIVER, RT								
STATION	DISTANCE	AREA (SF)		INCREMENTAL VOL (CY)		CUMULATIVE VOL (CY)		
		CUT	FILL	CUT	FILL	CUT	EXPANDED FILL	MASS ORDINATE
							1.25	
				NOTE 1	NOTE 2	1.00	NOTE 3	NOTE 4
940+62	0	0	1	0	0	0	0	0
941+00	38	17	11	12	8	12	10	2
941+18	18	15	12	11	7	23	19	4
941+20	2	13	12	1	1	24	20	4
941+43	23	1	14	6	11	30	34	-4
941+50	7	0	15	0	4	30	39	-9
941+69	19	0	16	0	11	30	53	-23
941+94	25	0	14	0	14	30	70	-40
942+00	6	0	10	0	3	30	74	-44
942+18	18	0	3	0	4	30	79	-49
942+50	32	0	3	0	3	30	83	-53
942+89	39	0	6	0	6	30	90	-60
942+95	6	0	6	0	1	30	91	-61
943+00	5	0	7	0	1	30	93	-63
943+07	7	0	0	0	1	30	94	-64
943+08	1	0	10	0	0	30	94	-64
943+11	3	0	0	0	1	30	95	-65
943+18	7	0	0	0	0	30	95	-65
943+20	3	0	5	0	0	30	95	-65
943+33	13	0	7	0	3	30	99	-69
943+47	14	0	4	0	3	30	103	-73
943+50	3	0	4	0	0	30	103	-73
944+00	50	0	3	0	7	30	111	-81
944+03	3	0	4	0	0	30	111	-81
944+28	25	0	12	0	8	30	121	-91
944+50	22	0	12	0	10	30	134	-104
944+54	4	0	11	0	2	30	136	-106
944+94	41	0	6	0	13	30	153	-123
945+00	6	0	6	0	1	30	154	-124
945+50	50	0	1	0	6	30	161	-131
945+59	9	0	1	0	0	30	161	-131
				30	129			

DIVISION 3 - 160TH ST GUARDRAIL								
STATION	DISTANCE	AREA (SF)		INCREMENTAL VOL (CY)		CUMULATIVE VOL (CY)		
		CUT	FILL	CUT	FILL	CUT	EXPANDED FILL	MASS ORDINATE
							1.25	
				NOTE 1	NOTE 2	1.00	NOTE 3	NOTE 4
6+91	0	0	0	0	0	0	0	0
7+00	9	0	1	0	0	0	0	0
7+79	79	0	13	1	20	1	25	-24
8+00	21	0	24	0	14	1	43	-42
8+71	71	0	29	1	70	2	130	-128
8+91	19	0	52	0	29	2	166	-164
8+94	3	0	43	0	5	2	173	-171
9+00	6	0	52	0	11	2	186	-184
9+16	16	0	24	0	23	2	215	-213
9+42	26	0	16	0	20	2	240	-238
				2	192			

DIVISION 3 - GRANDY DANCER TRAIL, LT								
STATION	DISTANCE	AREA (SF)		INCREMENTAL VOL (CY)		CUMULATIVE VOL (CY)		
		CUT	FILL	CUT	FILL	CUT	EXPANDED FILL	MASS ORDINATE
							1.25	
				NOTE 1	NOTE 2	1.00	NOTE 3	NOTE 4
1000+00	0	0	0	0	0	0	0	0
1000+22	22	7	0	3	0	3	0	3
1000+50	28	9	0	8	0	11	0	11
1001+00	50	5	1	13	0	24	0	24
1001+14	14	2	1	2	0	26	0	26
1001+31	17	1	9	1	3	27	4	23
1001+50	19	2	22	1	11	28	18	11
1001+57	7	2	19	0	5	28	24	4
1002+00	43	2	6	3	20	31	49	-18
1002+50	50	4	1	5	7	36	58	-22
1003+00	50	0	1	4	2	40	60	-20
				40	48			

DIVISION 3 - GRANDY DANCER TRAIL, RT								
STATION	DISTANCE	AREA (SF)		INCREMENTAL VOL (CY)		CUMULATIVE VOL (CY)		
		CUT	FILL	CUT	FILL	CUT	EXPANDED FILL	MASS ORDINATE
							1.25	
				NOTE 1	NOTE 2	1.00	NOTE 3	NOTE 4
999+00	0	0	0	0	0	0	0	0
999+50	50	1	17	1	16	1	20	-19
999+77	27	0	27	0	22	1	48	-47
1000+00	23	0	18	0	19	1	71	-70
1000+22	22	0	9	0	11	1	85	-84
1000+50	28	0	0	0	5	1	91	-90
				1	73			

NOTES:

1 - CUT	CUT INCLUDES SALVAGED/UNUSABLE PAVEMENT MATERIAL. SALVAGED/UNUSABLE PAVEMENT MATERIAL IS CALCULATED ON THE SECTION 3 SUMMARY SHEET.
2 - FILL	FILL DOES NOT INCLUDE UNUSABLE PAVEMENT AREA/VOLUME. SALVAGED/UNUSABLE PAVEMENT MATERIAL IS CALCULATED ON THE SECTION 3 SUMMARY SHEET.
3 - EXPANDED FILL	(UNEXPANDED MATERIAL)*(EXPANSION FACTOR)
4 - MASS ORDINATE	CUT - (EXPANDED FILL); POSITIVE INDICATES AN EXCESS OF MATERIAL; NEGATIVE INDICATES A SHORTAGE OF MATERIAL

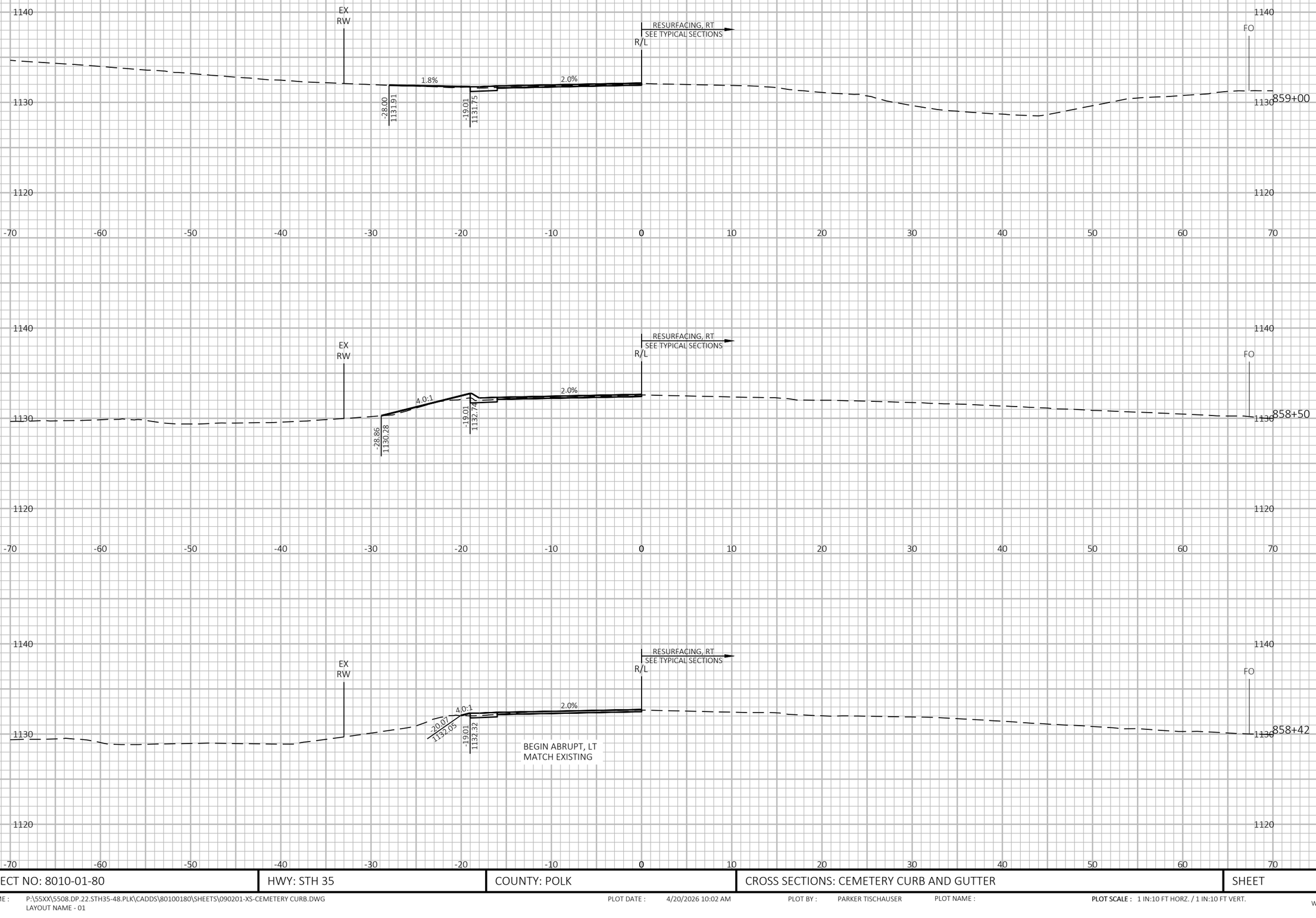

9

9

PROJECT NO: 8010-01-80	HWY: STH 35	COUNTY: POLK	CROSS SECTIONS: CEMETERY CURB AND GUTTER	SHEET 222	E

FILE NAME : P:\55XX\5508.DP.22.STH35-48.PLK\CADDS\80100180\SHEETS\090201-XS-CEMETERY CURB.DWG
LAYOUT NAME - 01

PLOT DATE : 4/20/2026 10:02 AM PLOT BY : PARKER TISCHAUSER PLOT NAME : **PLOT SCALE :** 1 IN:10 FT HORZ. / 1 IN:10 FT VERT.

WISDOT/CADDS SHEET 49

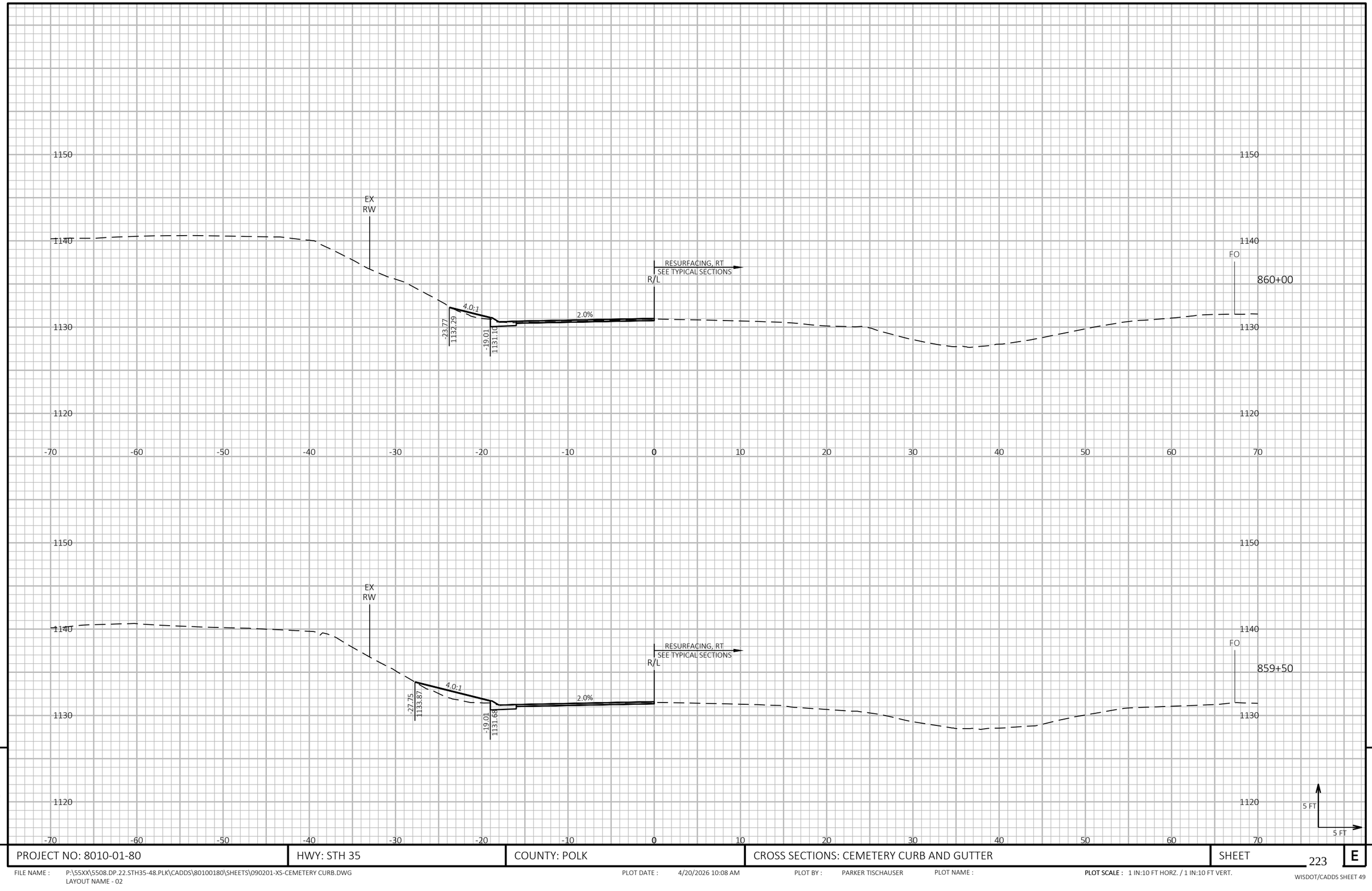

9

9

PROJECT NO: 8010-01-80	HWY: STH 35	COUNTY: POLK	CROSS SECTIONS: CEMETERY CURB AND GUTTER	SHEET 223	E

FILE NAME : P:\55XX\5508.DP.22.STH35-48.PLK\CADDS\80100180\SHEETS\090201-XS-CEMETERY CURB.DWG
LAYOUT NAME - 02

PLOT DATE : 4/20/2026 10:08 AM PLOT BY : PARKER TISCHAUSER PLOT NAME : PLOT SCALE : 1 IN:10 FT HORZ. / 1 IN:10 FT VERT.

WISDOT/CADDS SHEET 49

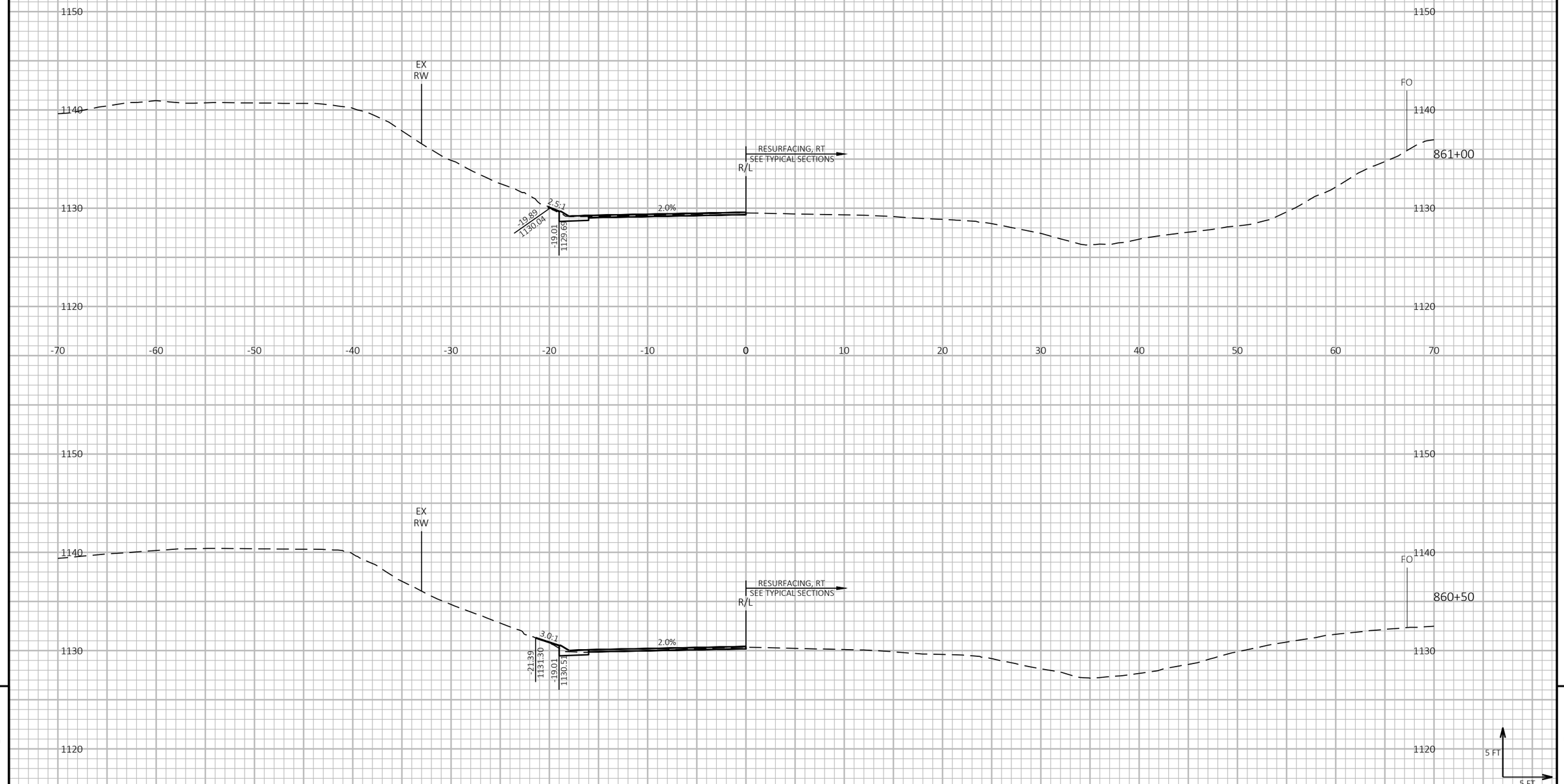

9

PROJECT NO: 8010-01-80	HWY: STH 35	COUNTY: POLK	CROSS SECTIONS: CEMETERY CURB AND GUTTER	SHEET 224	E

9

FILE NAME : P:\55XX\5508.DP.22.STH35-48.PLK\CADDS\80100180\SHEETS\090201-XS-CEMETERY CURB.DWG
LAYOUT NAME - 03

PLOT DATE : 4/20/2026 10:05 AM PLOT BY : PARKER TISCHAUSER PLOT NAME : PLOT SCALE : 1 IN:10 FT HORZ. / 1 IN:10 FT VERT.

WISDOT/CADDS SHEET 49

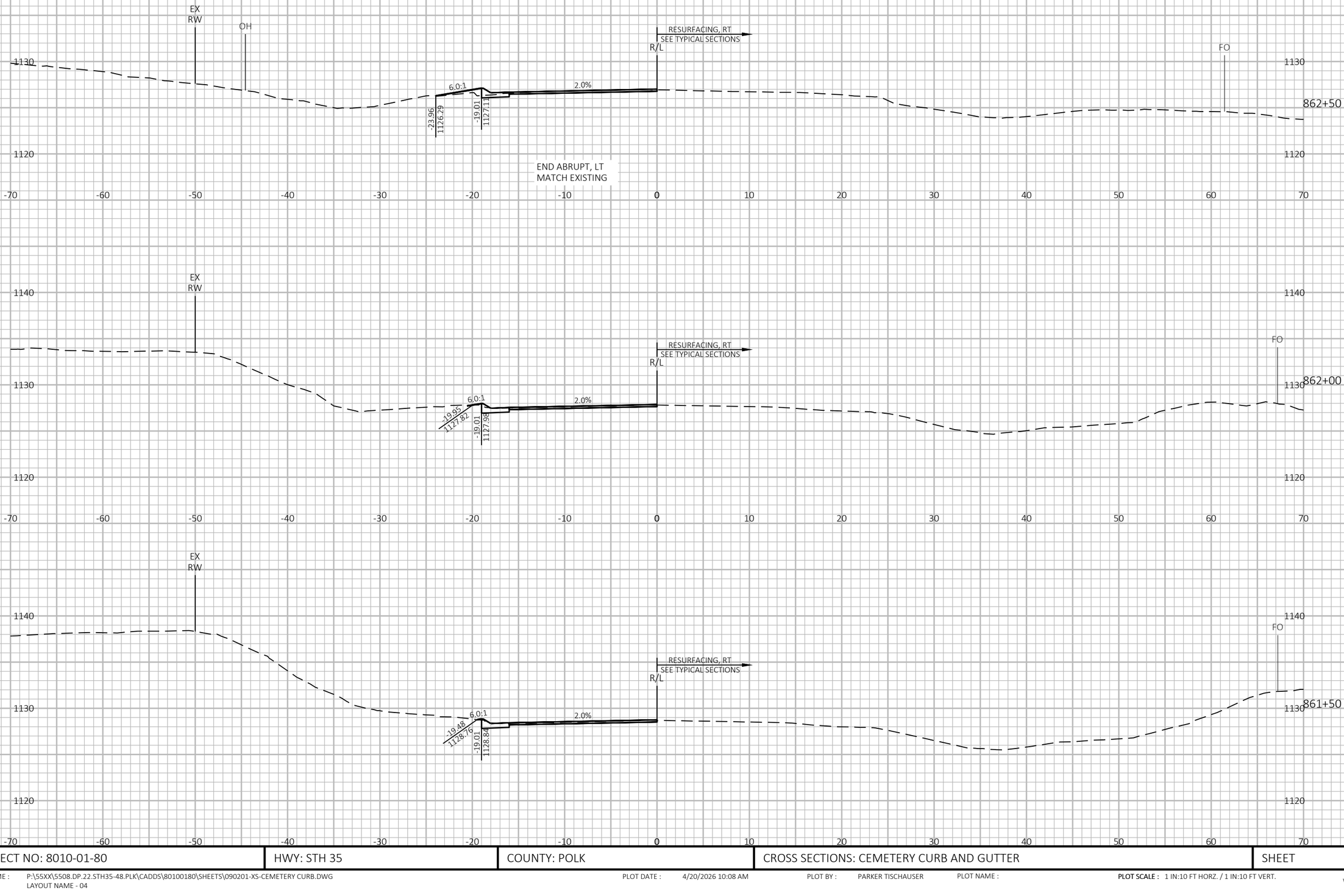

9

9

PROJECT NO: 8010-01-80	HWY: STH 35	COUNTY: POLK	CROSS SECTIONS: CEMETERY CURB AND GUTTER	SHEET 225	E

FILE NAME : P:\55XX\5508.DP.22.STH35-48.PLK\CADDS\80100180\SHEETS\090201-XS-CEMETERY CURB.DWG
LAYOUT NAME - 04

PLOT DATE : 4/20/2026 10:08 AM PLOT BY : PARKER TISCHAUSER PLOT NAME : **PLOT SCALE :** 1 IN:10 FT HORZ. / 1 IN:10 FT VERT.

WISDOT/CADDS SHEET 49

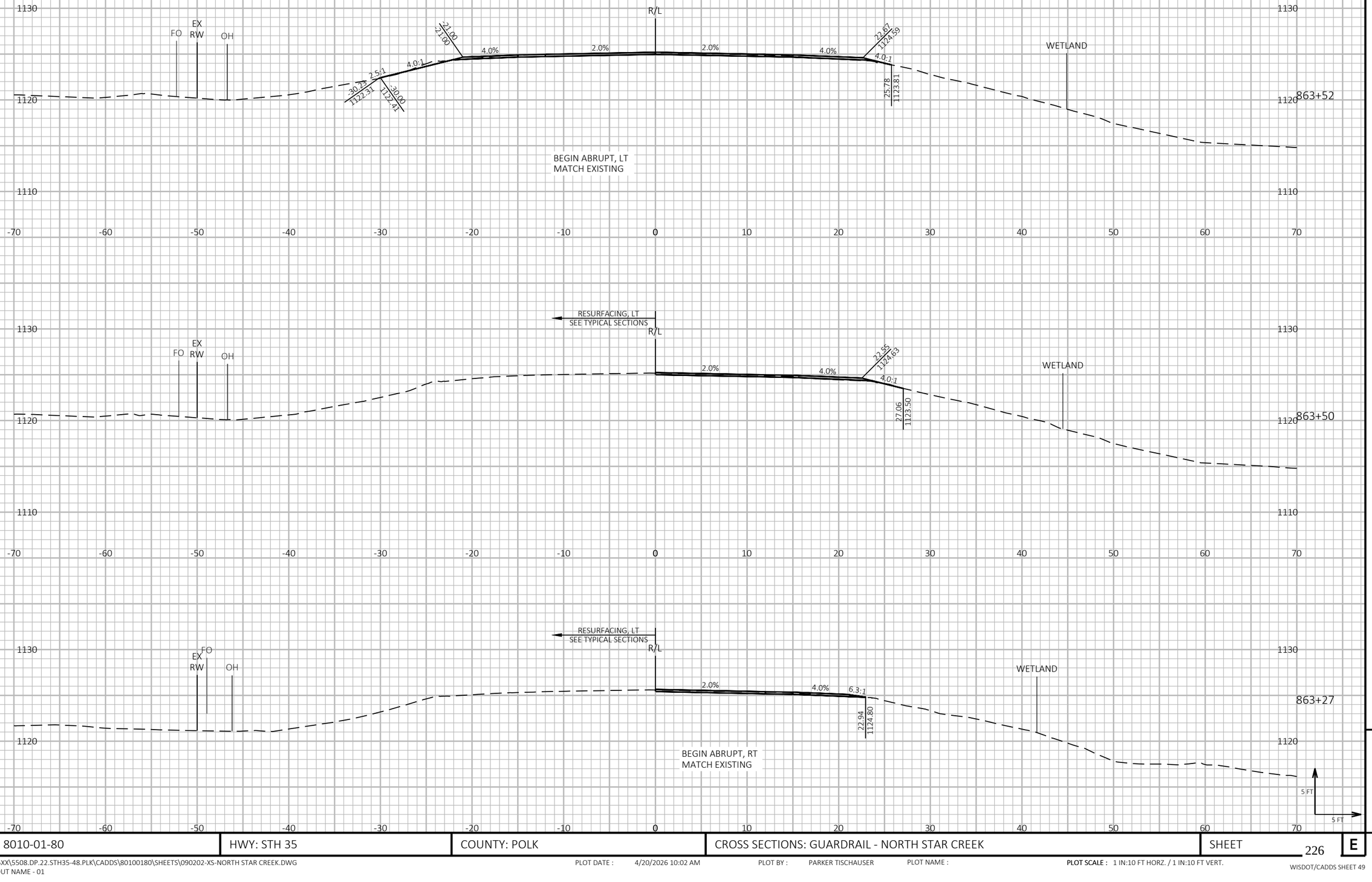

9

PROJECT NO: 8010-01-80	HWY: STH 35	COUNTY: POLK	CROSS SECTIONS: GUARDRAIL - NORTH STAR CREEK	SHEET 226	E

FILE NAME : P:\55XX\5508.DP.22.STH35-48.PLK\CADDS\80100180\SHEETS\090202-XS-NORTH STAR CREEK.DWG
LAYOUT NAME - 01

PLOT DATE : 4/20/2026 10:02 AM PLOT BY : PARKER TISCHAUSER PLOT NAME : PLOT SCALE : 1 IN:10 FT HORZ. / 1 IN:10 FT VERT.

WISDOT/CADDS SHEET 49

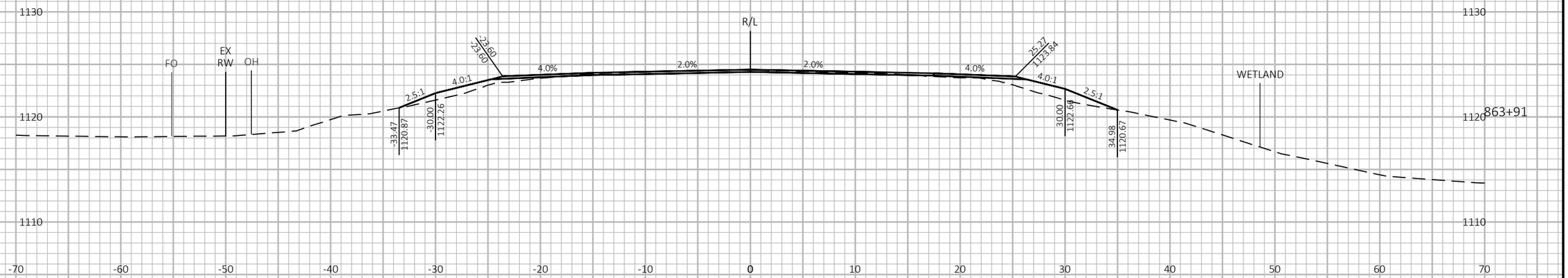

9

9

PROJECT NO: 8010-01-80	HWY: STH 35	COUNTY: POLK	CROSS SECTIONS: GUARDRAIL - NORTH STAR CREEK	SHEET 227	E

FILE NAME : P:\55XX\5508.DP.22.STH35-48.PLK\CADDS\80100180\SHEETS\090202-XS-NORTH STAR CREEK.DWG
LAYOUT NAME - 02

PLOT DATE : 4/20/2026 9:57 AM PLOT BY : PARKER TISCHAUSER PLOT NAME :

PLOT SCALE : 1 IN:10 FT HORZ. / 1 IN:10 FT VERT.

WISDOT/CADDS SHEET 49

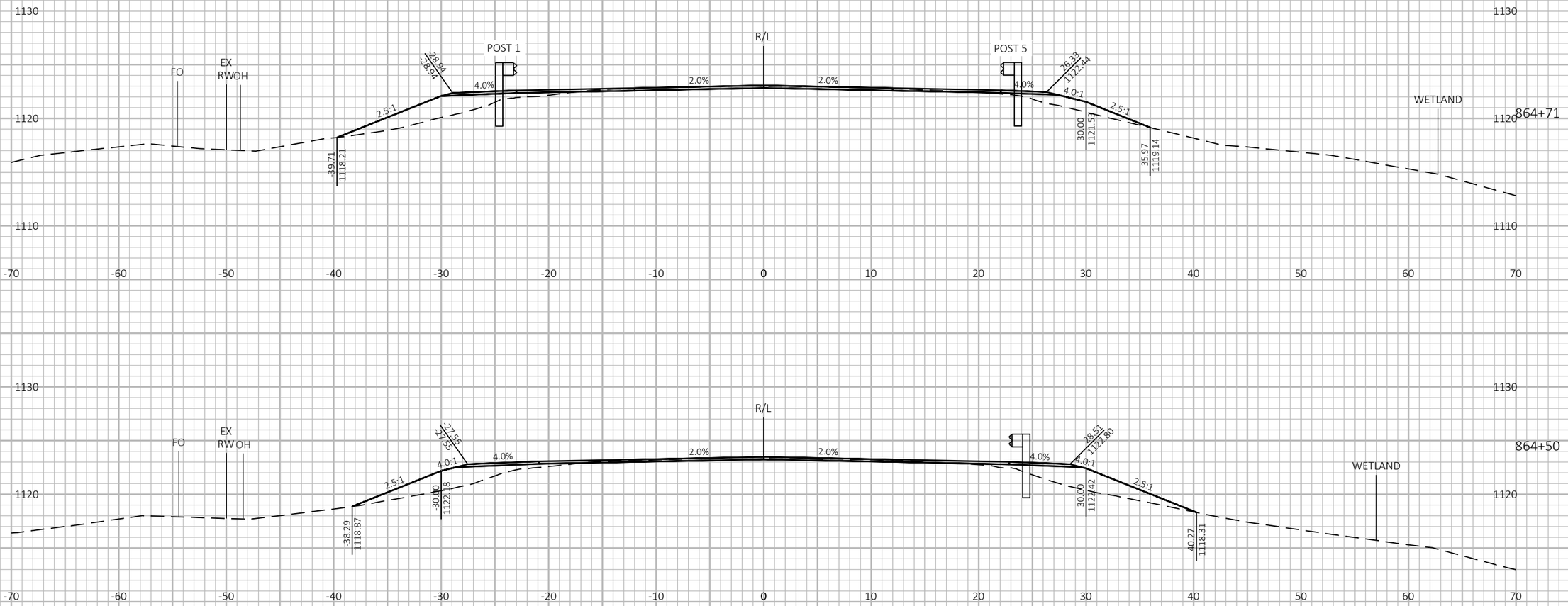

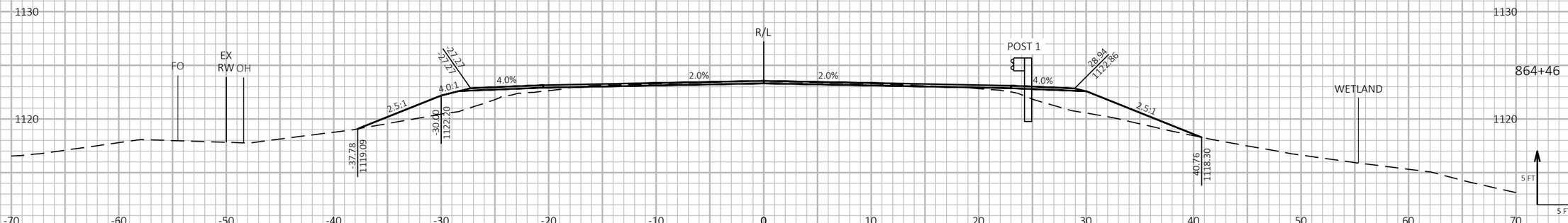

9

9

PROJECT NO: 8010-01-80	HWY: STH 35	COUNTY: POLK	CROSS SECTIONS: GUARDRAIL - NORTH STAR CREEK	SHEET 228	E

FILE NAME : P:\55XX\5508.DP.22.STH35-48.PLK\CADDS\80100180\SHEETS\090202-XS-NORTH STAR CREEK.DWG
LAYOUT NAME - 03

PLOT DATE : 4/20/2026 10:02 AM PLOT BY : PARKER TISCHAUSER PLOT NAME :

PLOT SCALE : 1 IN:10 FT HORZ. / 1 IN:10 FT VERT.

WISDOT/CADDS SHEET 49

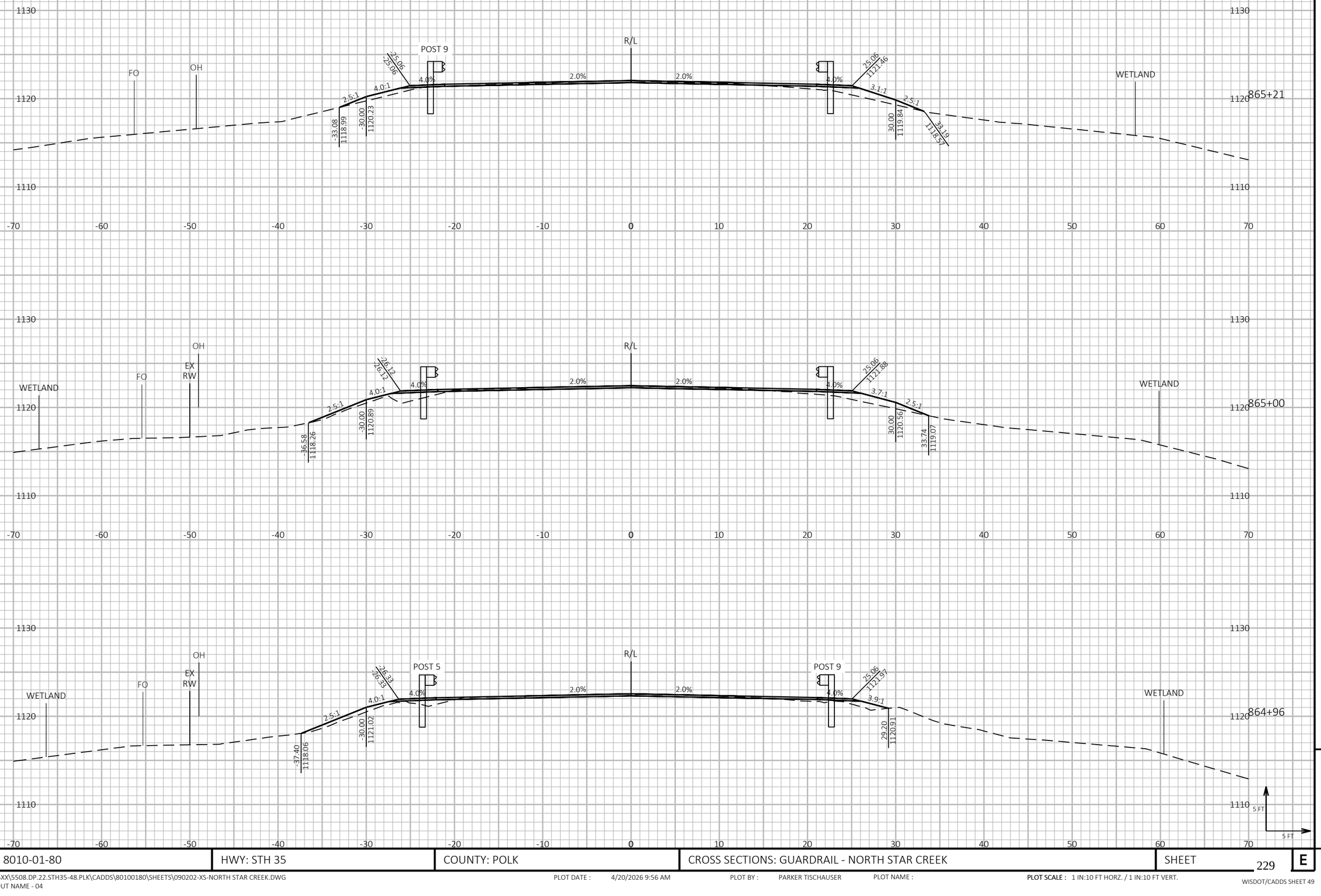

9

9

PROJECT NO: 8010-01-80	HWY: STH 35	COUNTY: POLK	CROSS SECTIONS: GUARDRAIL - NORTH STAR CREEK	SHEET 229	E

FILE NAME : P:\55XX\5508.DP.22.STH35-48.PLK\CADDS\80100180\SHEETS\090202-XS-NORTH STAR CREEK.DWG
LAYOUT NAME - 04

PLOT DATE : 4/20/2026 9:56 AM PLOT BY : PARKER TISCHAUSER PLOT NAME : **PLOT SCALE :** 1 IN:10 FT HORZ. / 1 IN:10 FT VERT.

WISDOT/CADDS SHEET 49

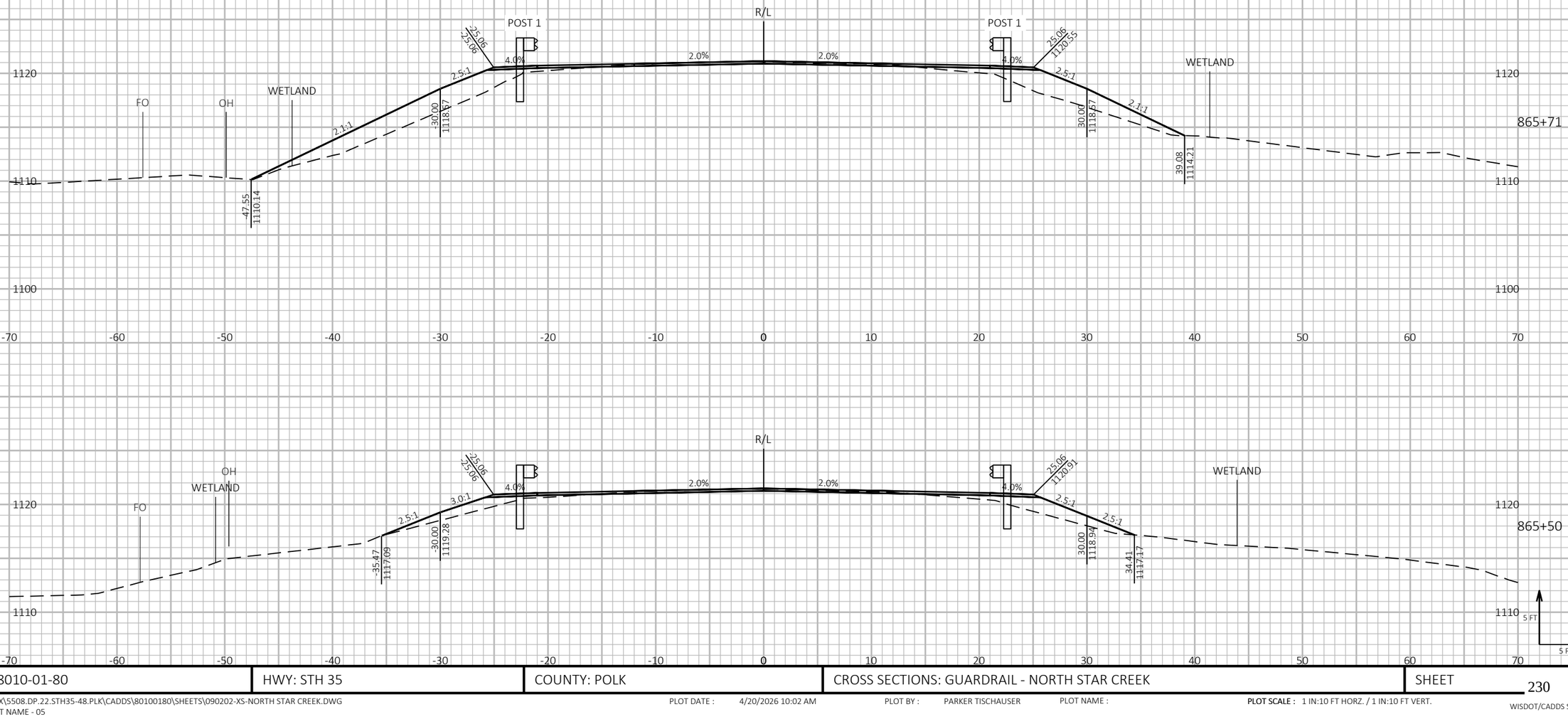

9

PROJECT NO: 8010-01-80	HWY: STH 35	COUNTY: POLK	CROSS SECTIONS: GUARDRAIL - NORTH STAR CREEK	SHEET 230	E

FILE NAME : P:\55XX\5508.DP.22.STH35-48.PLK\CADDS\80100180\SHEETS\090202-XS-NORTH STAR CREEK.DWG
LAYOUT NAME - 05

PLOT DATE : 4/20/2026 10:02 AM PLOT BY : PARKER TISCHAUSER PLOT NAME : **PLOT SCALE :** 1 IN:10 FT HORZ. / 1 IN:10 FT VERT.

WISDOT/CADDS SHEET 49

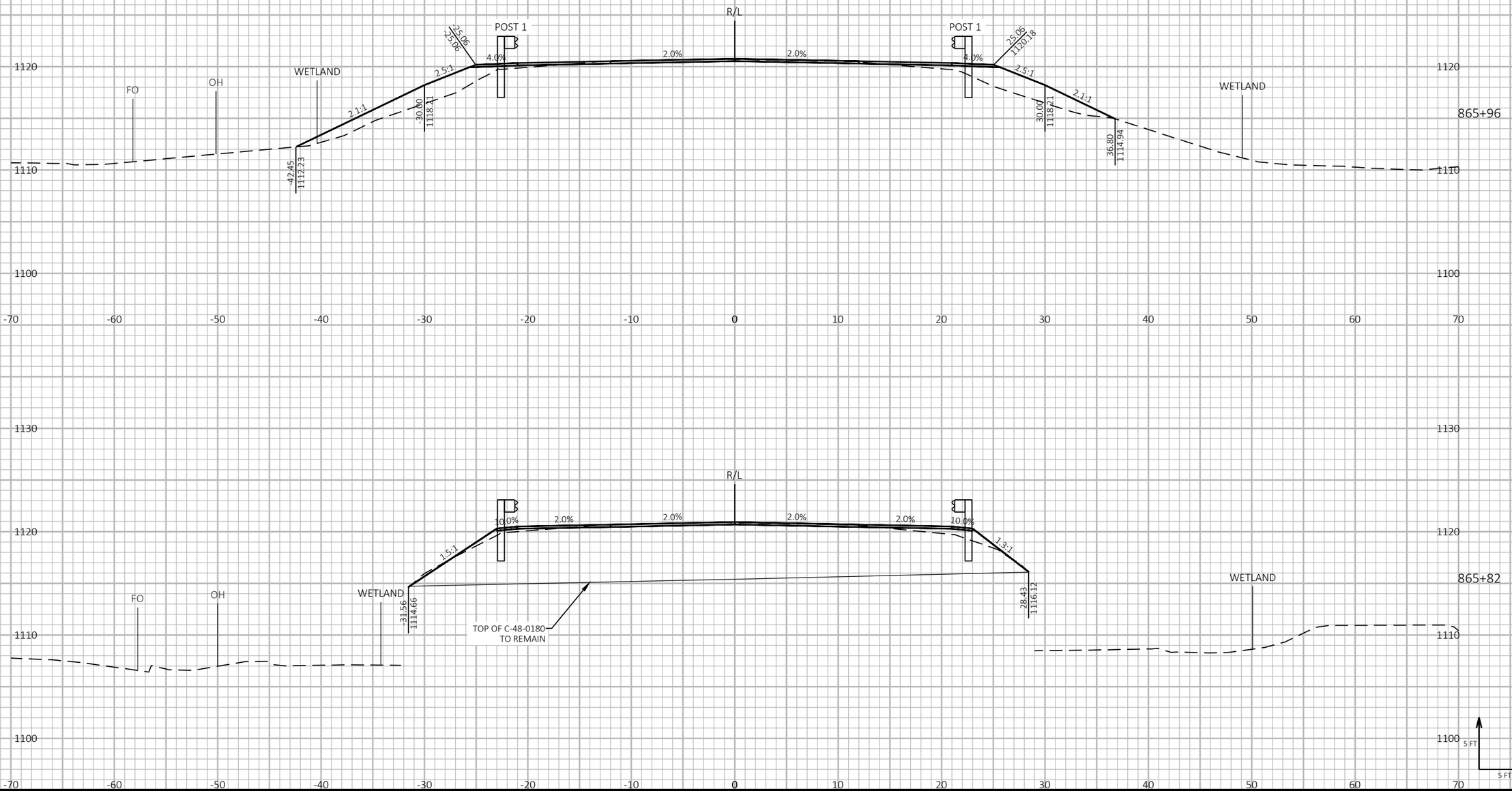

PROJECT NO: 8010-01-80	HWY: STH 35	COUNTY: POLK	CROSS SECTIONS: GUARDRAIL - NORTH STAR CREEK	SHEET 231	E

FILE NAME : P:\55XX\5508.DP.22.STH35-48.PLK\CADDS\80100180\SHEETS\090202-XS-NORTH STAR CREEK.DWG
LAYOUT NAME - 06

PLOT DATE : 4/20/2026 9:56 AM PLOT BY : PARKER TISCHAUSER PLOT NAME : **PLOT SCALE :** 1 IN:10 FT HORZ. / 1 IN:10 FT VERT.

WISDOT/CADDS SHEET 49

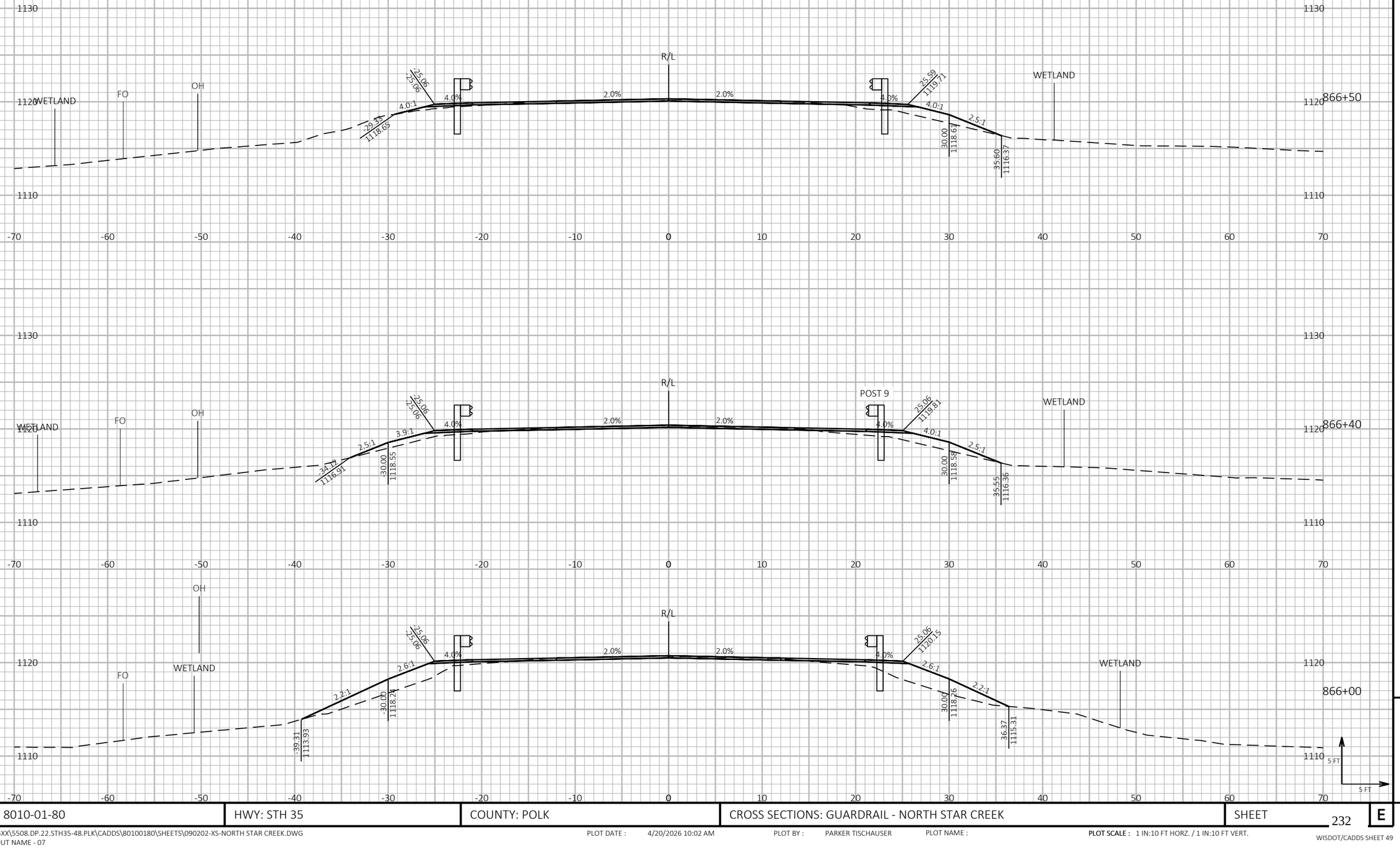

9

9

PROJECT NO: 8010-01-80	HWY: STH 35	COUNTY: POLK	CROSS SECTIONS: GUARDRAIL - NORTH STAR CREEK	SHEET 232	E

FILE NAME : P:\55XX\5508.DP.22.STH35-48.PLK\CADDS\80100180\SHEETS\090202-XS-NORTH STAR CREEK.DWG
LAYOUT NAME - 07

PLOT DATE : 4/20/2026 10:02 AM PLOT BY : PARKER TISCHAUSER PLOT NAME :

PLOT SCALE : 1 IN:10 FT HORZ. / 1 IN:10 FT VERT.

WISDOT/CADDS SHEET 49

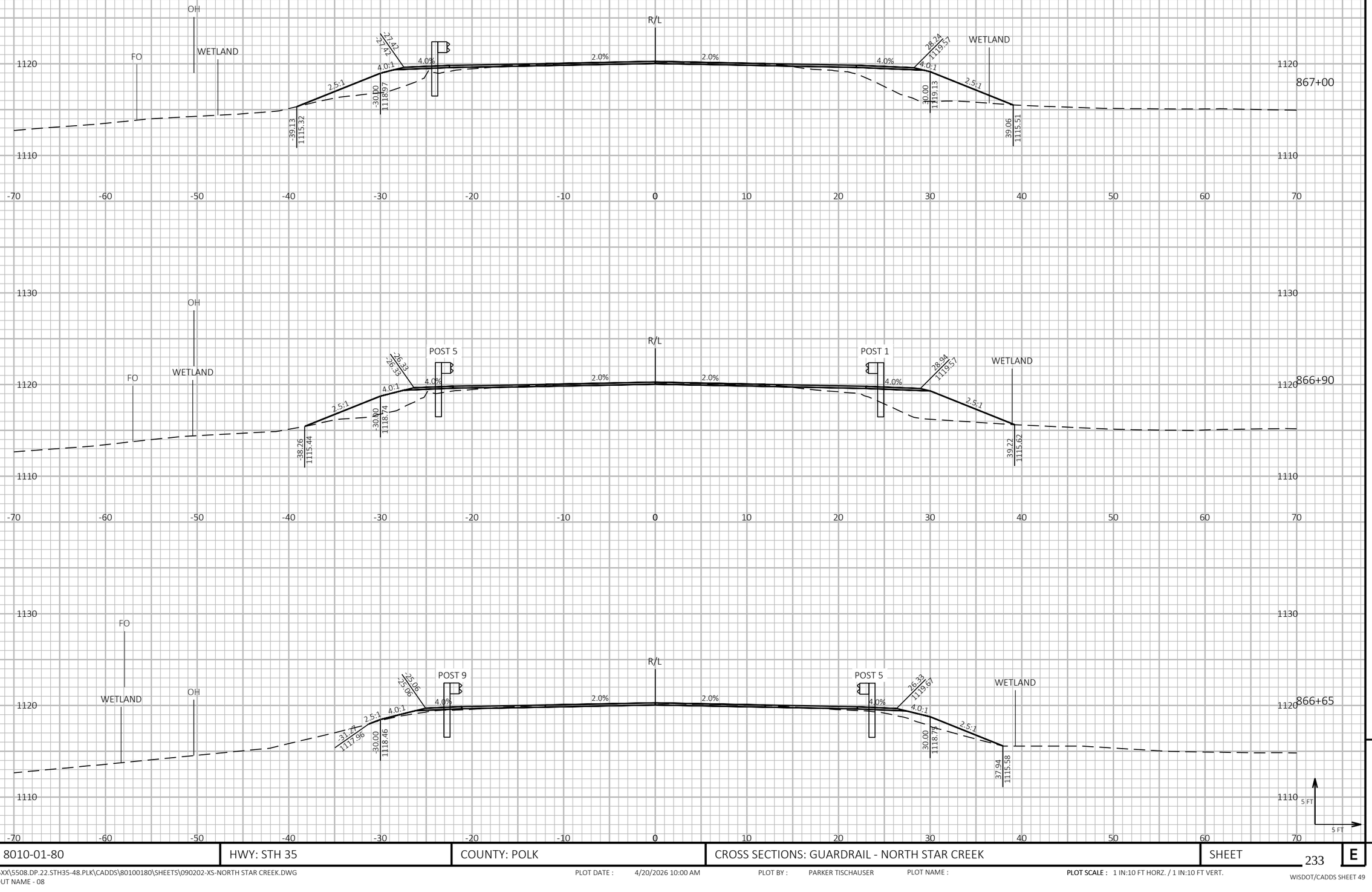

9

9

PROJECT NO: 8010-01-80	HWY: STH 35	COUNTY: POLK	CROSS SECTIONS: GUARDRAIL - NORTH STAR CREEK	SHEET 233	E

FILE NAME : P:\55XX\5508.DP.22.STH35-48.PLK\CADDS\80100180\SHEETS\090202-XS-NORTH STAR CREEK.DWG
LAYOUT NAME - 08

PLOT DATE : 4/20/2026 10:00 AM PLOT BY : PARKER TISCHAUSER PLOT NAME :

PLOT SCALE : 1 IN:10 FT HORZ. / 1 IN:10 FT VERT.

WISDOT/CADDS SHEET 49

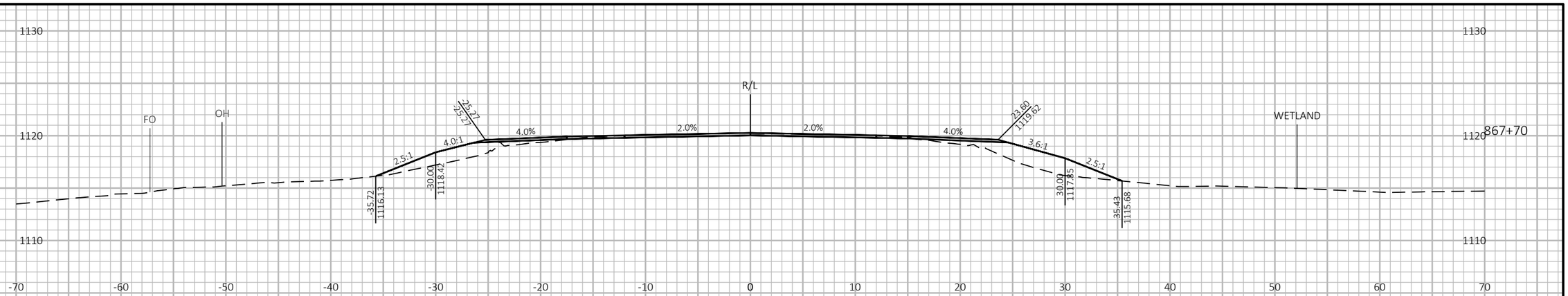

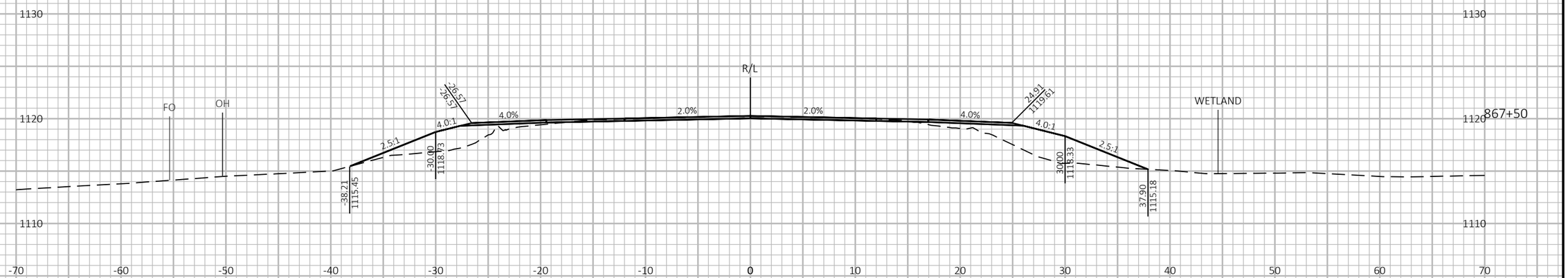

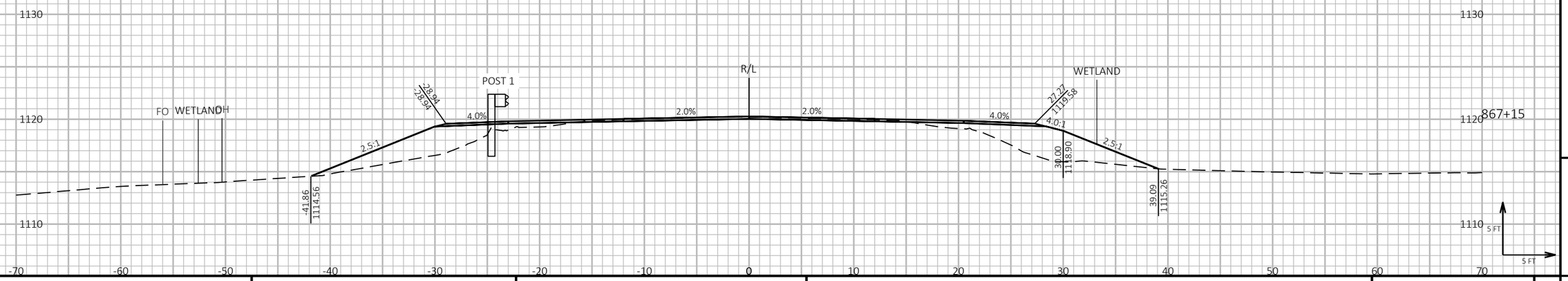

9

9

PROJECT NO: 8010-01-80	HWY: STH 35	COUNTY: POLK	CROSS SECTIONS: GUARDRAIL - NORTH STAR CREEK	SHEET 234	E

FILE NAME : P:\55XX\5508.DP.22.STH35-48.PLK\CADDS\80100180\SHEETS\090202-XS-NORTH STAR CREEK.DWG
LAYOUT NAME - 09

PLOT DATE : 4/20/2026 10:02 AM PLOT BY : PARKER TISCHAUSER PLOT NAME : **PLOT SCALE :** 1 IN:10 FT HORZ. / 1 IN:10 FT VERT.

WISDOT/CADDS SHEET 49

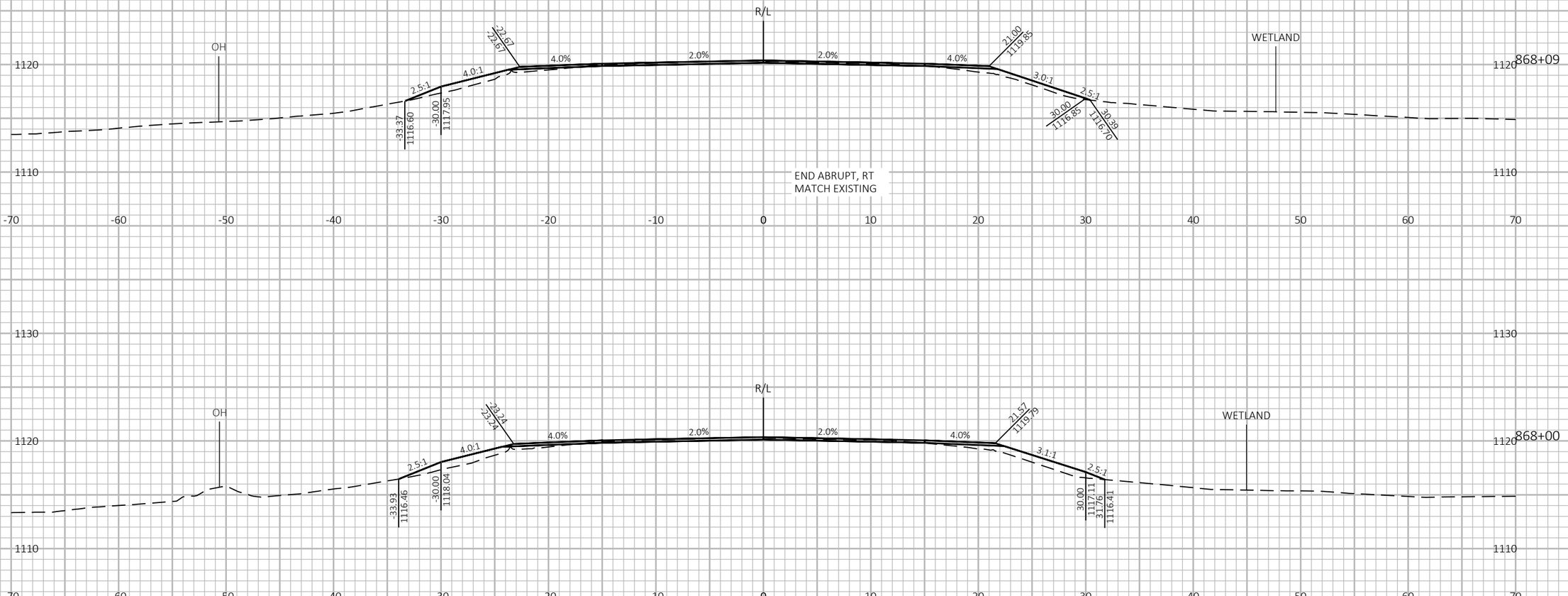

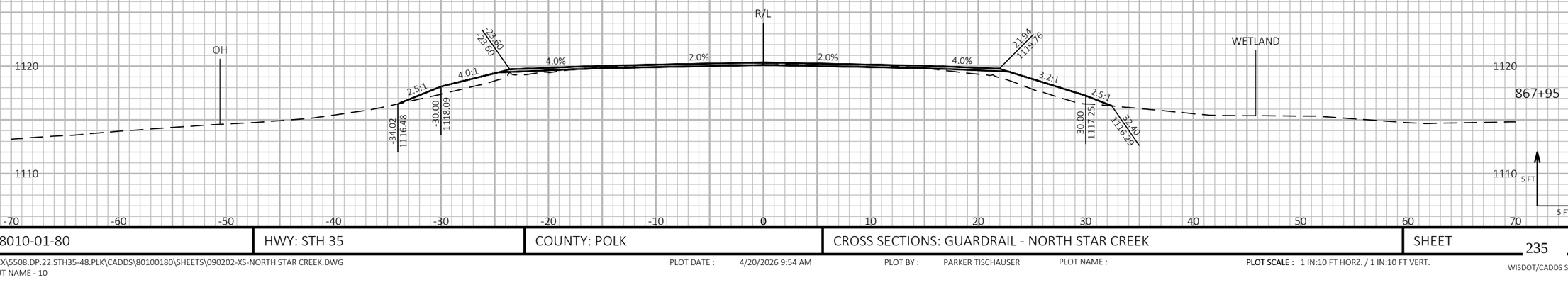

9

9

PROJECT NO: 8010-01-80	HWY: STH 35	COUNTY: POLK	CROSS SECTIONS: GUARDRAIL - NORTH STAR CREEK	SHEET 235	E

FILE NAME : P:\5SXX\5508.DP.22.STH35-48.PLK\CADDS\80100180\SHEETS\090202-XS-NORTH STAR CREEK.DWG
LAYOUT NAME - 10

PLOT DATE : 4/20/2026 9:54 AM PLOT BY : PARKER TISCHAUSER PLOT NAME :

PLOT SCALE : 1 IN:10 FT HORZ. / 1 IN:10 FT VERT.

WISDOT/CADDS SHEET 49

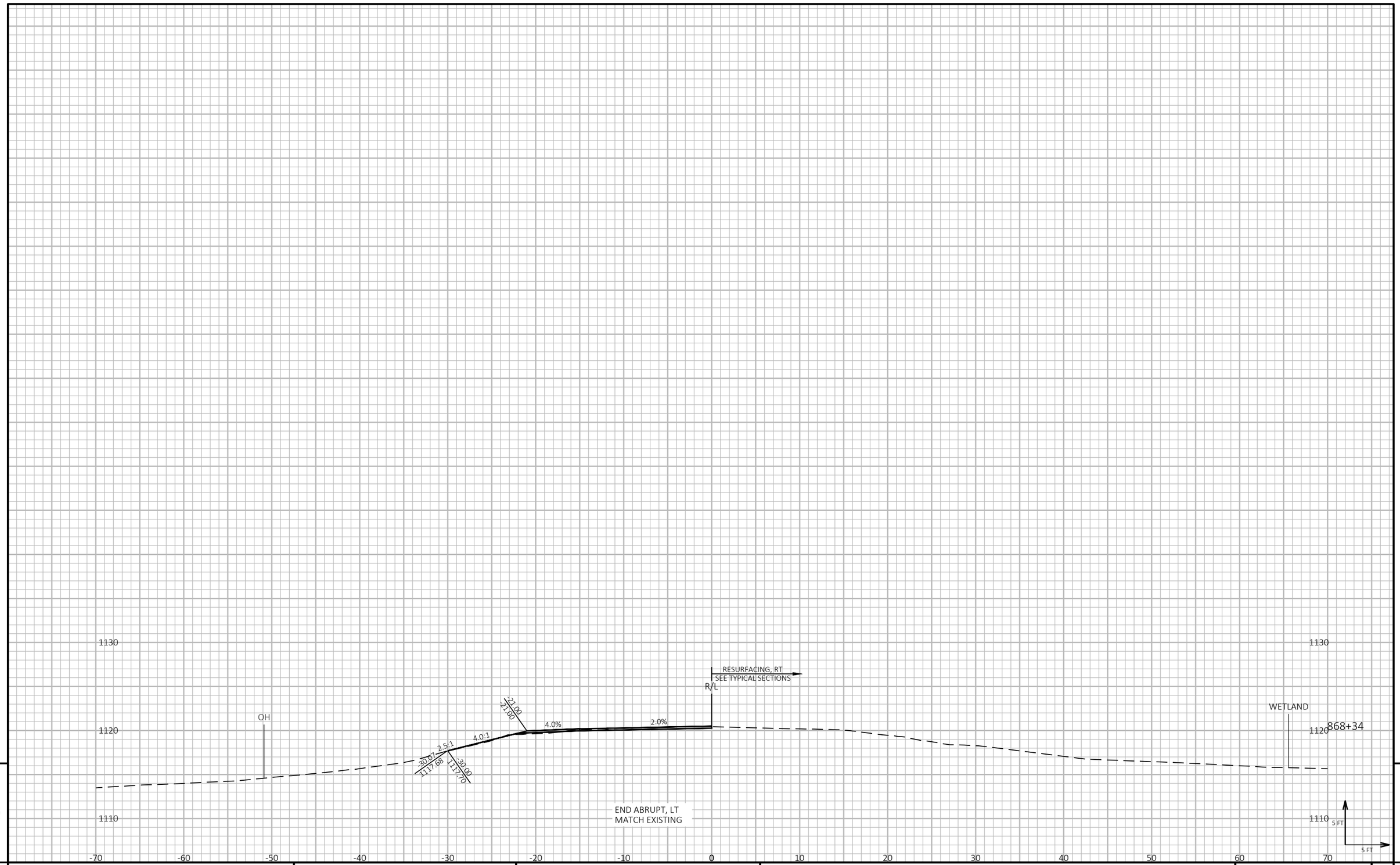

9

9

PROJECT NO: 8010-01-80	HWY: STH 35	COUNTY: POLK	CROSS SECTIONS: GUARDRAIL - NORTH STAR CREEK	SHEET 236	E

FILE NAME : P:\55XX\5508.DP.22.STH35-48.PLK\CADDS\80100180\SHEETS\090202-XS-NORTH STAR CREEK.DWG
LAYOUT NAME - 11

PLOT DATE : 4/20/2026 10:11 AM PLOT BY : PARKER TISCHAUSER PLOT NAME :

PLOT SCALE : 1 IN:10 FT HORZ. / 1 IN:10 FT VERT.

WISDOT/CADDS SHEET 49

9

9

PROJECT NO: 8010-01-80	HWY: STH 35	COUNTY: POLK	CROSS SECTIONS: GUARDRAIL - TRADE RIVER	SHEET 237	E

FILE NAME : P:\55XX\5508.DP.22.STH35-48.PLK\CADDS\80100180\SHEETS\090203-XS-TRADE RIVER.DWG
LAYOUT NAME - 01

PLOT DATE : 4/20/2026 10:03 AM PLOT BY : PARKER TISCHAUSER PLOT NAME :

PLOT SCALE : 1 IN:10 FT HORZ. / 1 IN:10 FT VERT.

WISDOT/CADDS SHEET 49

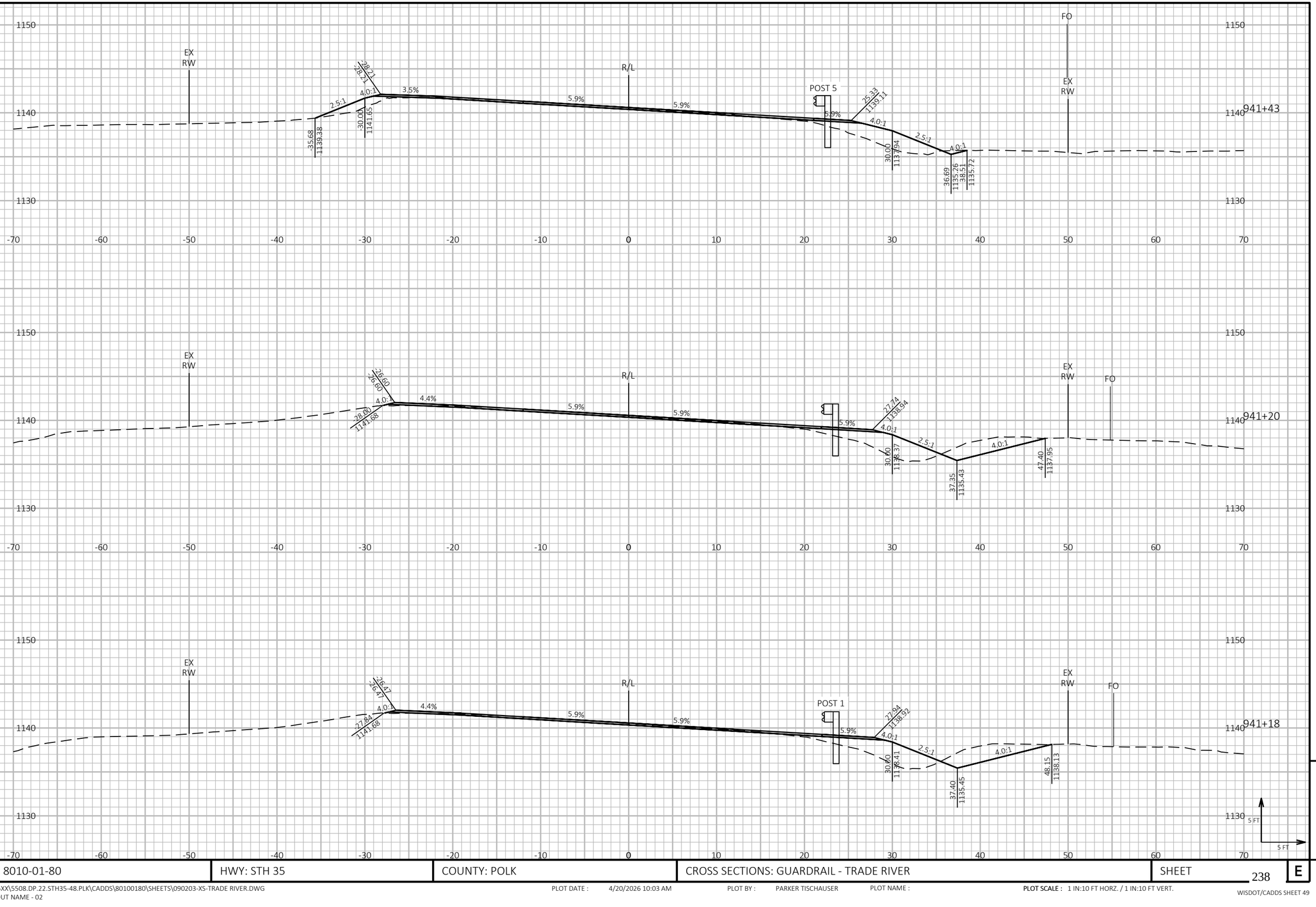

9

9

PROJECT NO: 8010-01-80	HWY: STH 35	COUNTY: POLK	CROSS SECTIONS: GUARDRAIL - TRADE RIVER	SHEET 238	E

FILE NAME : P:\55XX\5508.DP.22.STH35-48.PLK\CADDS\80100180\SHEETS\090203-XS-TRADE RIVER.DWG
LAYOUT NAME - 02

PLOT DATE : 4/20/2026 10:03 AM PLOT BY : PARKER TISCHAUSER PLOT NAME :

PLOT SCALE : 1 IN:10 FT HORZ. / 1 IN:10 FT VERT.

WISDOT/CADDS SHEET 49

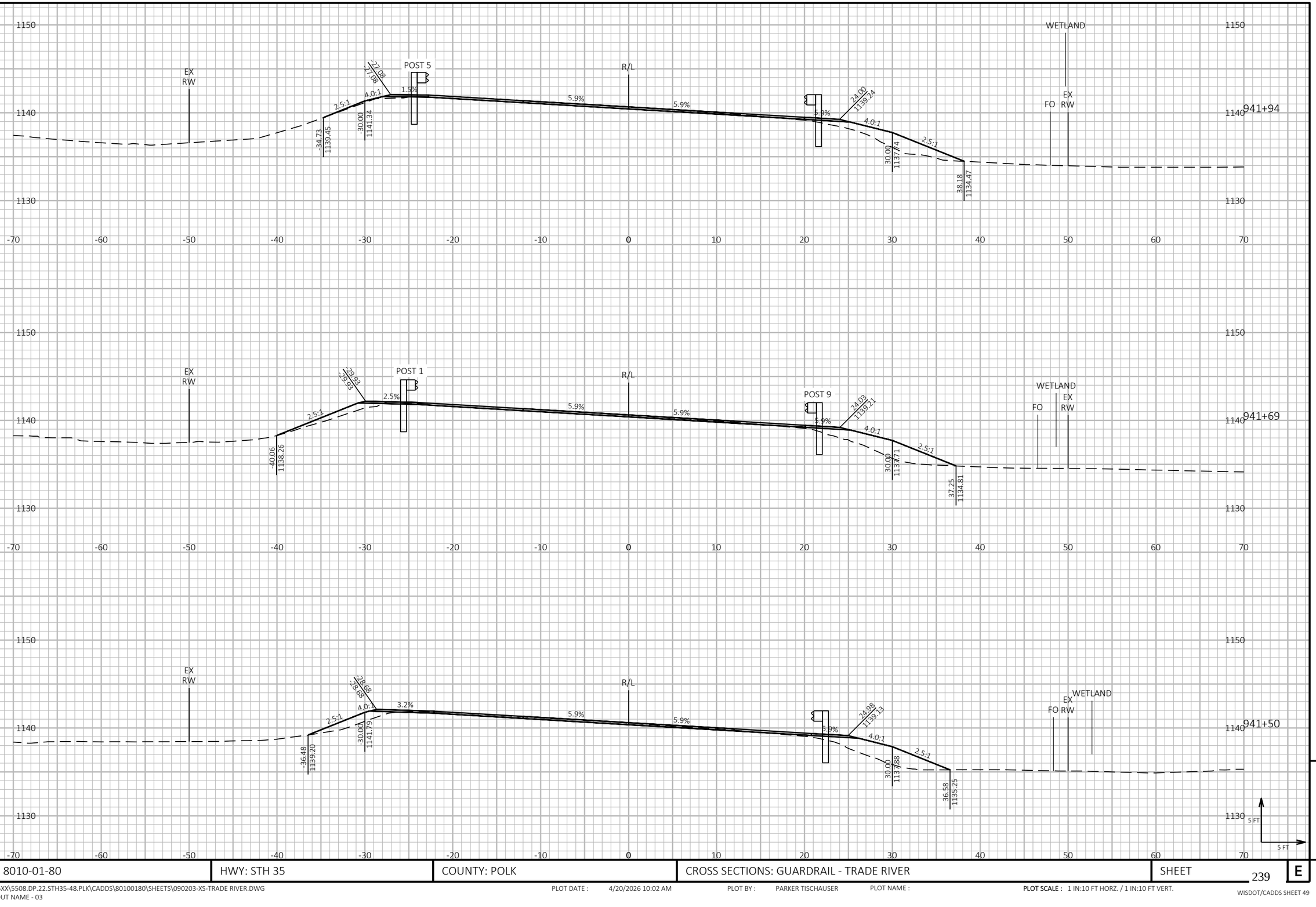

9

9

PROJECT NO: 8010-01-80	HWY: STH 35	COUNTY: POLK	CROSS SECTIONS: GUARDRAIL - TRADE RIVER	SHEET 239	E

FILE NAME : P:\55XX\5508.DP.22.STH35-48.PLK\CADDS\80100180\SHEETS\090203-XS-TRADE RIVER.DWG
LAYOUT NAME - 03

PLOT DATE : 4/20/2026 10:02 AM PLOT BY : PARKER TISCHAUSER PLOT NAME :

PLOT SCALE : 1 IN:10 FT HORZ. / 1 IN:10 FT VERT.

WISDOT/CADDS SHEET 49

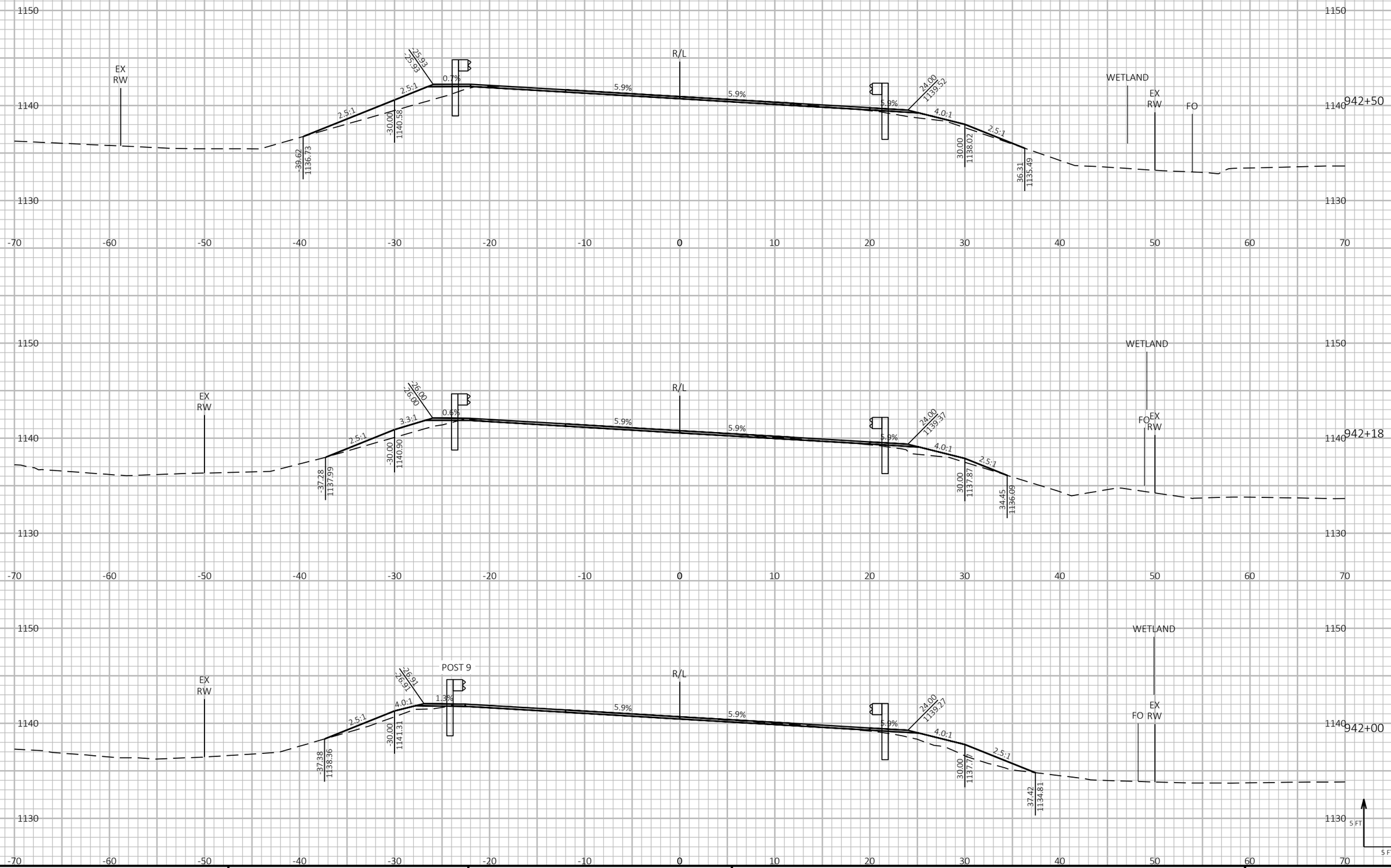

9

9

PROJECT NO: 8010-01-80	HWY: STH 35	COUNTY: POLK	CROSS SECTIONS: GUARDRAIL - TRADE RIVER	SHEET 240	E

FILE NAME : P:\55XX\5508.DP.22.STH35-48.PLK\CADDS\80100180\SHEETS\090203-XS-TRADE RIVER.DWG
LAYOUT NAME - 04

PLOT DATE : 4/20/2026 10:04 AM PLOT BY : PARKER TISCHAUSER PLOT NAME :

PLOT SCALE : 1 IN:10 FT HORZ. / 1 IN:10 FT VERT.

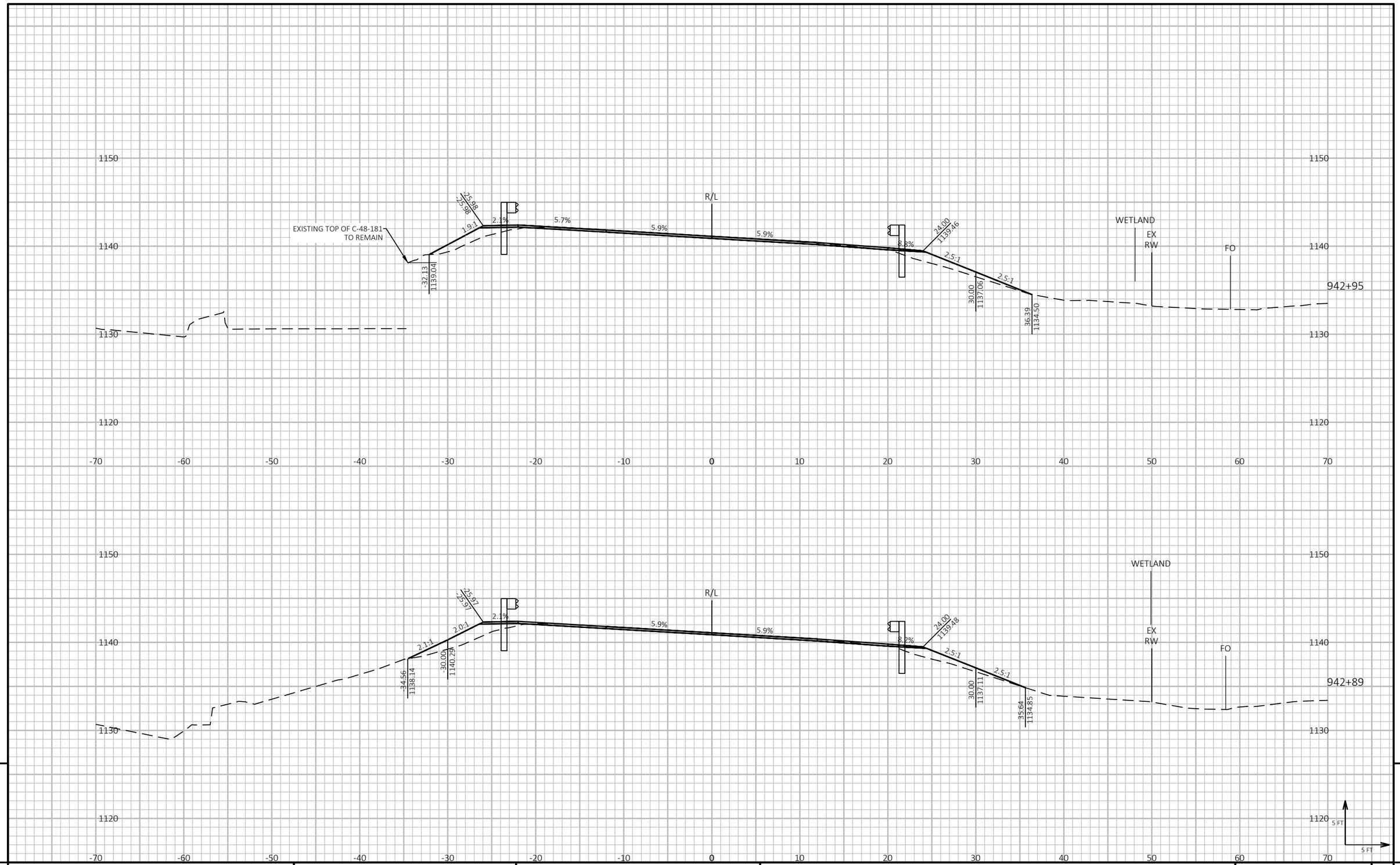

9

9

PROJECT NO: 8010-01-80	HWY: STH 35	COUNTY: POLK	CROSS SECTIONS: GUARDRAIL - TRADE RIVER	SHEET 241	E

FILE NAME : P:\55XX\5508.DP.22.STH35-48.PLK\CADDS\80100180\SHEETS\090203-XS-TRADE RIVER.DWG
LAYOUT NAME - 05

PLOT DATE : 4/20/2026 9:55 AM

PLOT BY : PARKER TISCHAUSER

PLOT NAME :

PLOT SCALE : 1 IN:10 FT HORZ. / 1 IN:10 FT VERT.

WISDOT/CADDS SHEET 49

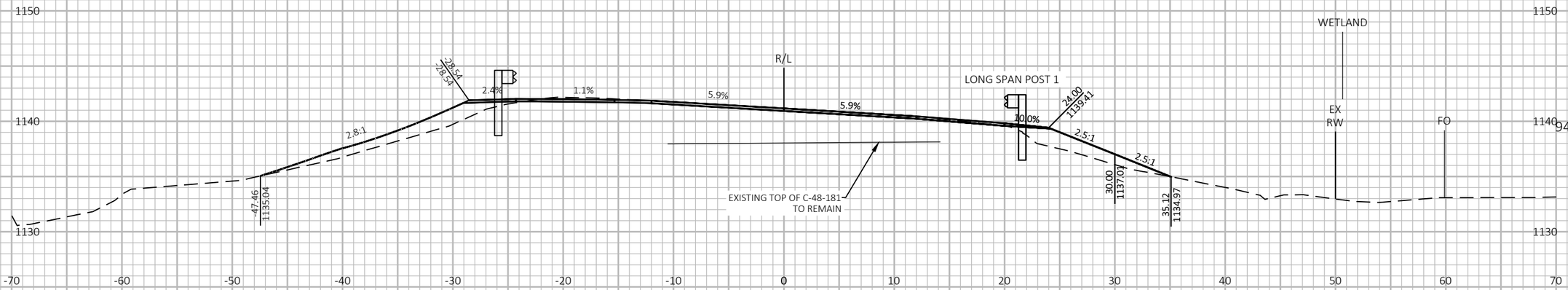

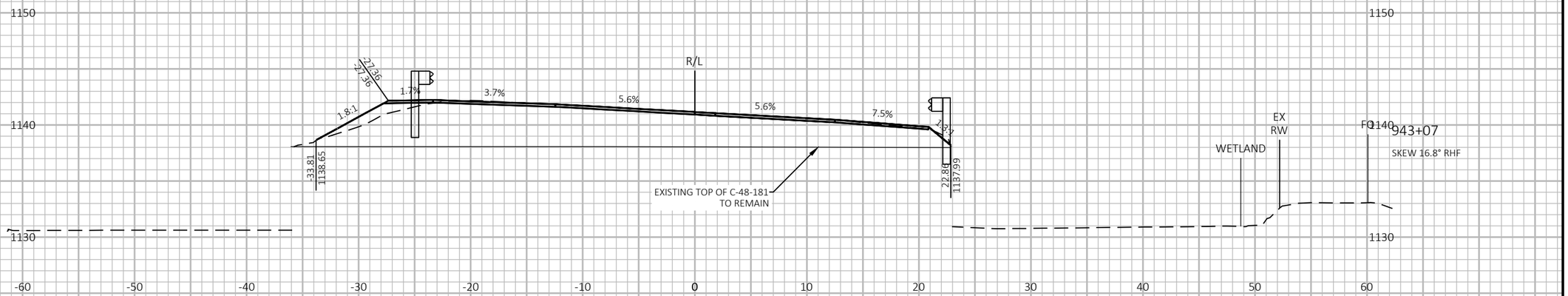

9 9

PROJECT NO: 8010-01-80	HWY: STH 35	COUNTY: POLK	CROSS SECTIONS: GUARDRAIL - TRADE RIVER	SHEET 242	E

FILE NAME : P:\55XX\5508.DP.22.STH35-48.PLK\CADDS\80100180\SHEETS\090203-XS-TRADE RIVER.DWG
LAYOUT NAME - 06

PLOT DATE : 4/20/2026 9:58 AM PLOT BY : PARKER TISCHAUSER PLOT NAME : **PLOT SCALE :** 1 IN:10 FT HORZ. / 1 IN:10 FT VERT.

WISDOT/CADDS SHEET 49

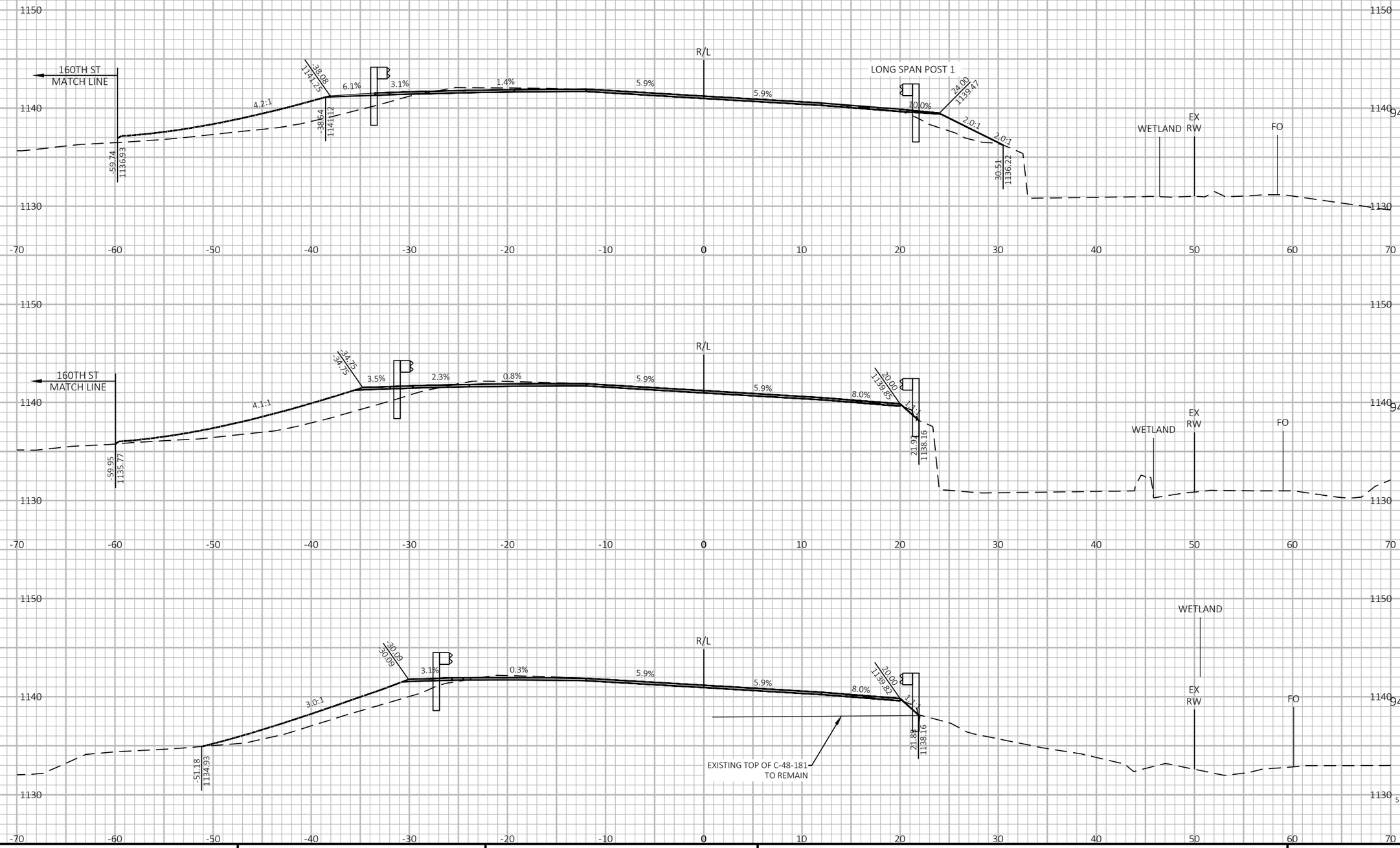

9

9

PROJECT NO: 8010-01-80	HWY: STH 35	COUNTY: POLK	CROSS SECTIONS: GUARDRAIL - TRADE RIVER	SHEET 243	E

FILE NAME : P:\55XX\5508.DP.22.STH35-48.PLK\CADDS\80100180\SHEETS\090203-XS-TRADE RIVER.DWG
LAYOUT NAME - 07

PLOT DATE : 4/20/2026 10:02 AM PLOT BY : PARKER TISCHAUSER PLOT NAME :

PLOT SCALE : 1 IN:10 FT HORZ. / 1 IN:10 FT VERT.

WISDOT/CADDS SHEET 49

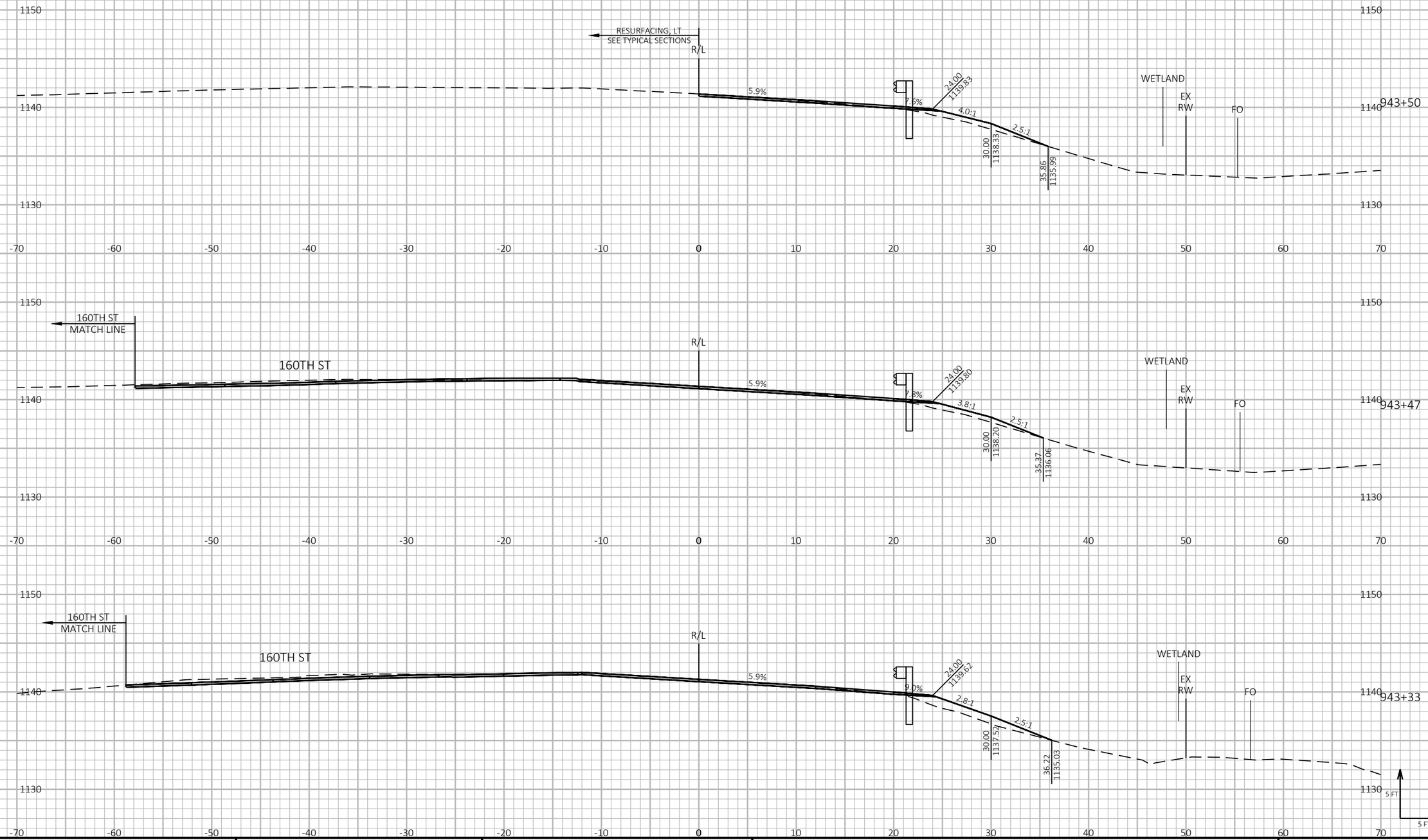

9

9

PROJECT NO: 8010-01-80	HWY: STH 35	COUNTY: POLK	CROSS SECTIONS: GUARDRAIL - TRADE RIVER	SHEET 244	E

FILE NAME : P:\55XX\5508.DP.22.STH35-48.PLK\CADDS\80100180\SHEETS\090203-XS-TRADE RIVER.DWG
LAYOUT NAME - 08

PLOT DATE : 4/20/2026 10:02 AM PLOT BY : PARKER TISCHAUSER PLOT NAME :

PLOT SCALE : 1 IN:10 FT HORZ. / 1 IN:10 FT VERT.

WISDOT/CADDS SHEET 49

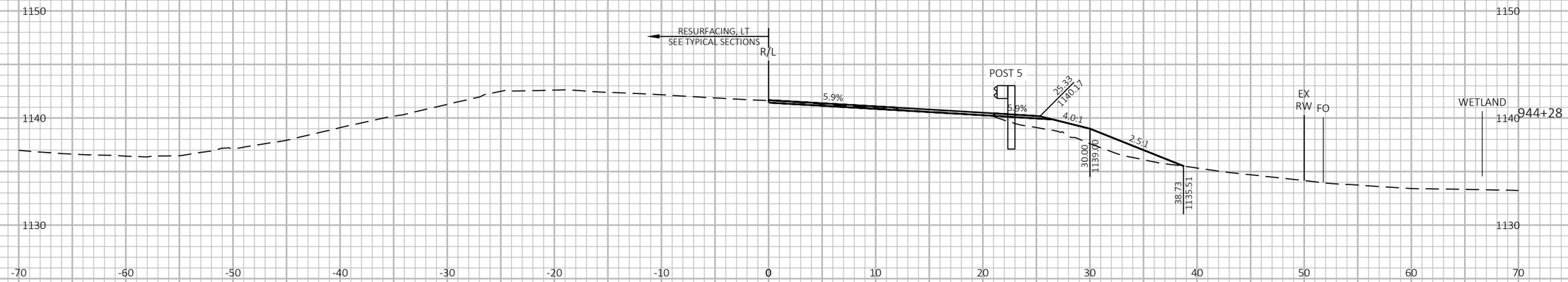

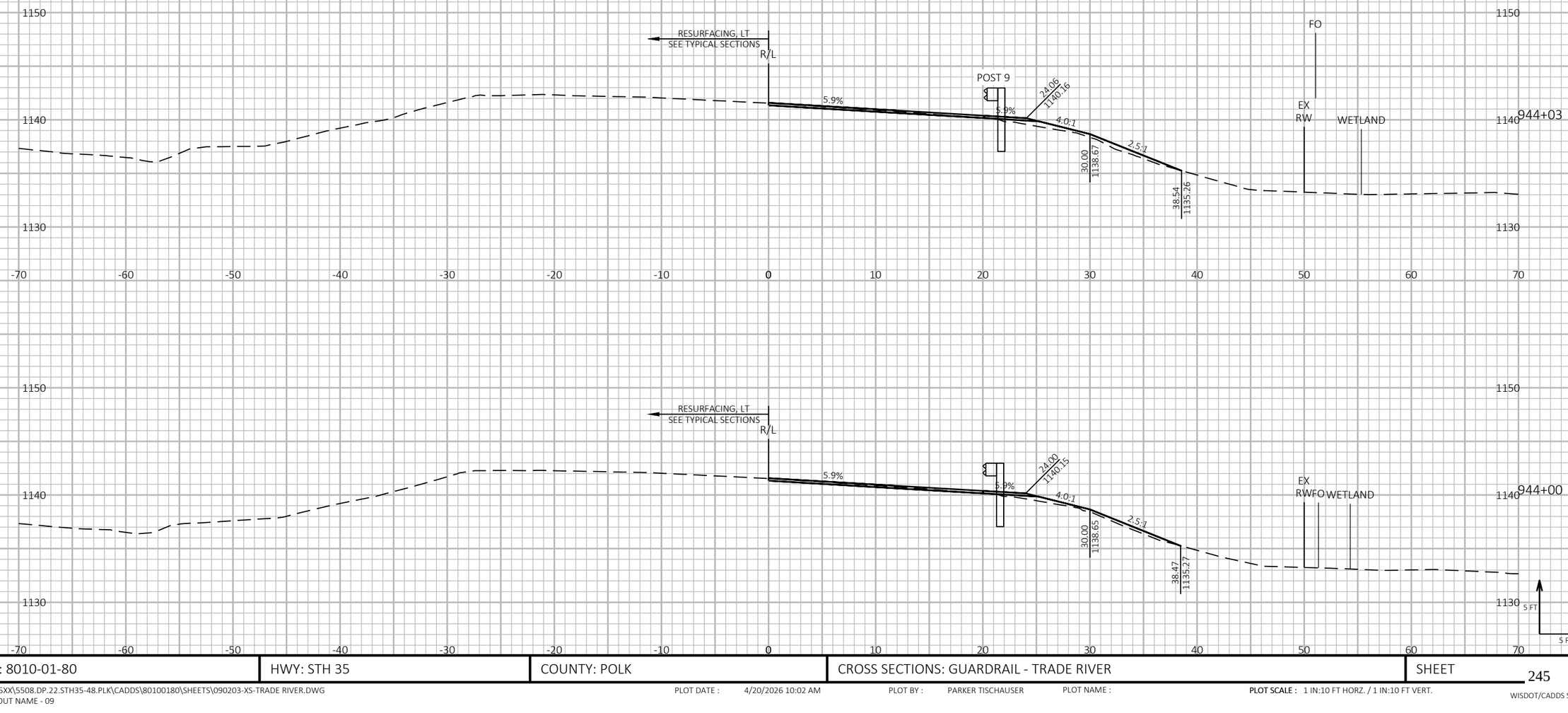

9 9

PROJECT NO: 8010-01-80	HWY: STH 35	COUNTY: POLK	CROSS SECTIONS: GUARDRAIL - TRADE RIVER	SHEET 245	E

FILE NAME : P:\55XX\5508.DP.22.STH35-48.PLK\CADDS\80100180\SHEETS\090203-XS-TRADE RIVER.DWG
LAYOUT NAME - 09

PLOT DATE : 4/20/2026 10:02 AM PLOT BY : PARKER TISCHAUSER PLOT NAME : **PLOT SCALE :** 1 IN:10 FT HORZ. / 1 IN:10 FT VERT.

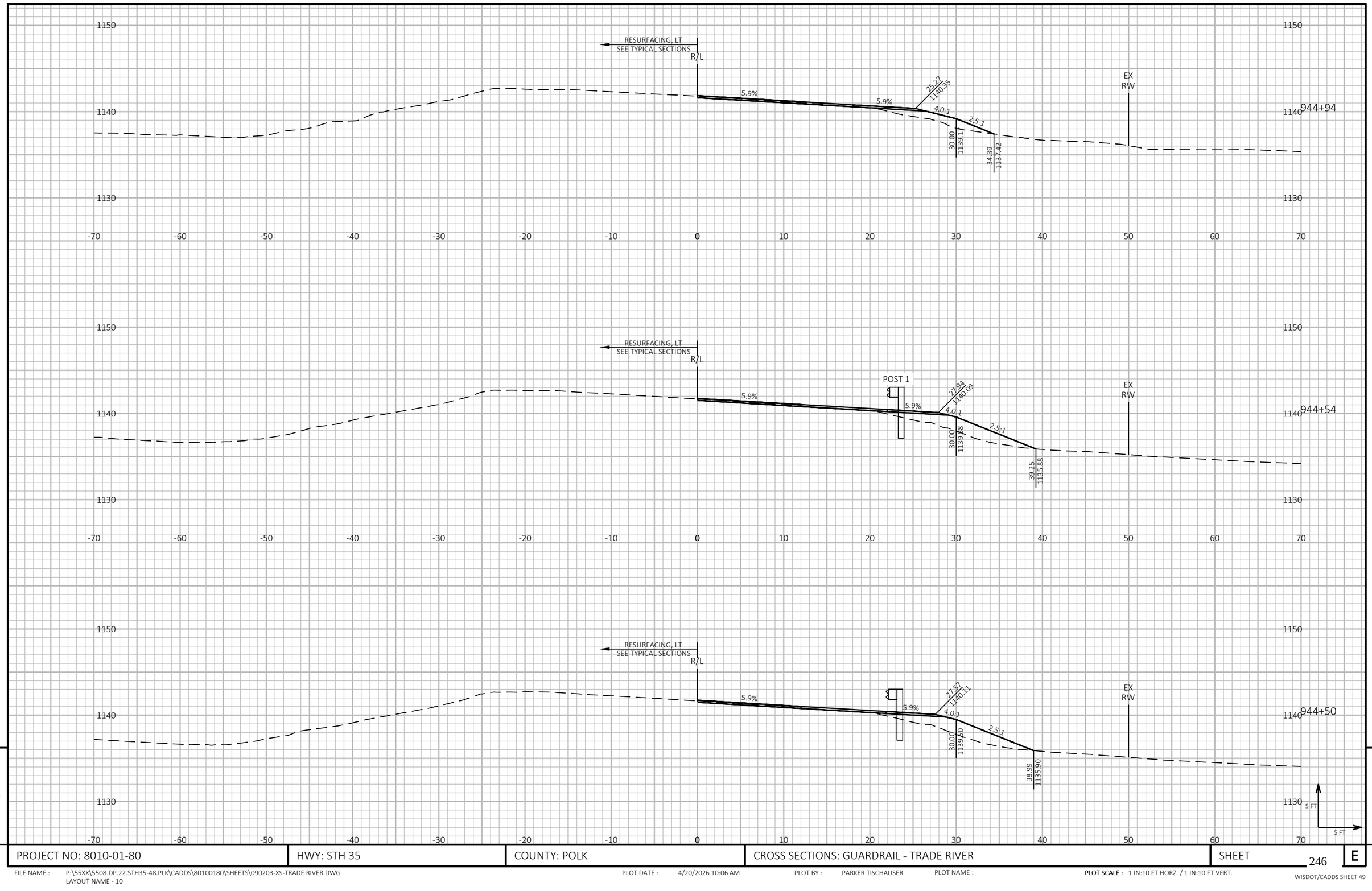

9

9

PROJECT NO: 8010-01-80	HWY: STH 35	COUNTY: POLK	CROSS SECTIONS: GUARDRAIL - TRADE RIVER	SHEET 246	E

FILE NAME : P:\5SXX\5508.DP.22.STH35-48.PLK\CADDS\80100180\SHEETS\090203-XS-TRADE RIVER.DWG
LAYOUT NAME - 10

PLOT DATE : 4/20/2026 10:06 AM PLOT BY : PARKER TISCHAUSER PLOT NAME :

PLOT SCALE : 1 IN:10 FT HORZ. / 1 IN:10 FT VERT.

WISDOT/CADDS SHEET 49

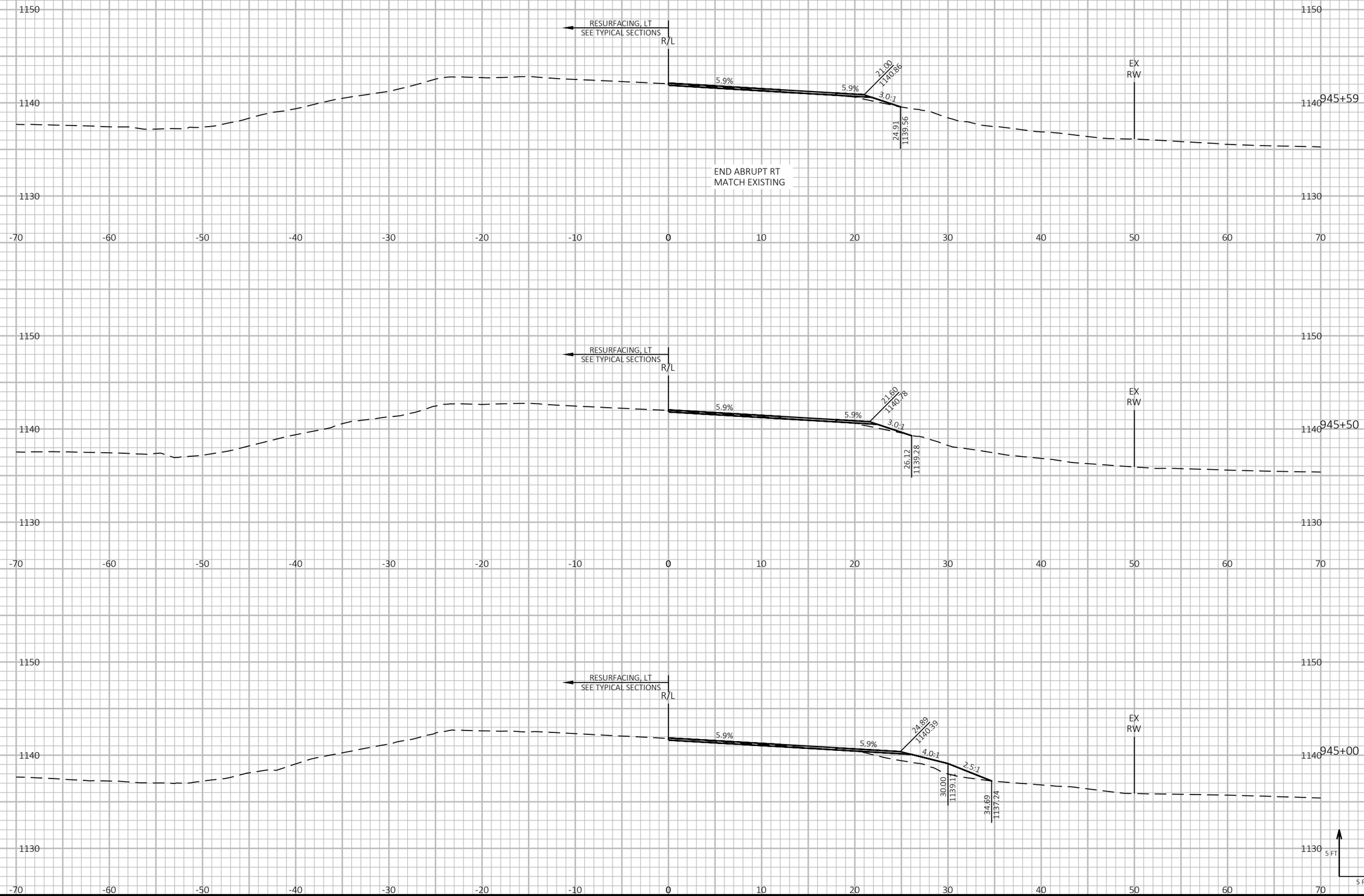

9

9

PROJECT NO: 8010-01-80	HWY: STH 35	COUNTY: POLK	CROSS SECTIONS: GUARDRAIL - TRADE RIVER	SHEET 247	E

FILE NAME : P:\55XX\5508.DP.22.STH35-48.PLK\CADDS\80100180\SHEETS\090203-XS-TRADE RIVER.DWG
LAYOUT NAME - 11

PLOT DATE : 4/20/2026 9:54 AM

PLOT BY : PARKER TISCHAUSER

PLOT NAME :

PLOT SCALE : 1 IN:10 FT HORZ. / 1 IN:10 FT VERT.

WISDOT/CADDS SHEET 49

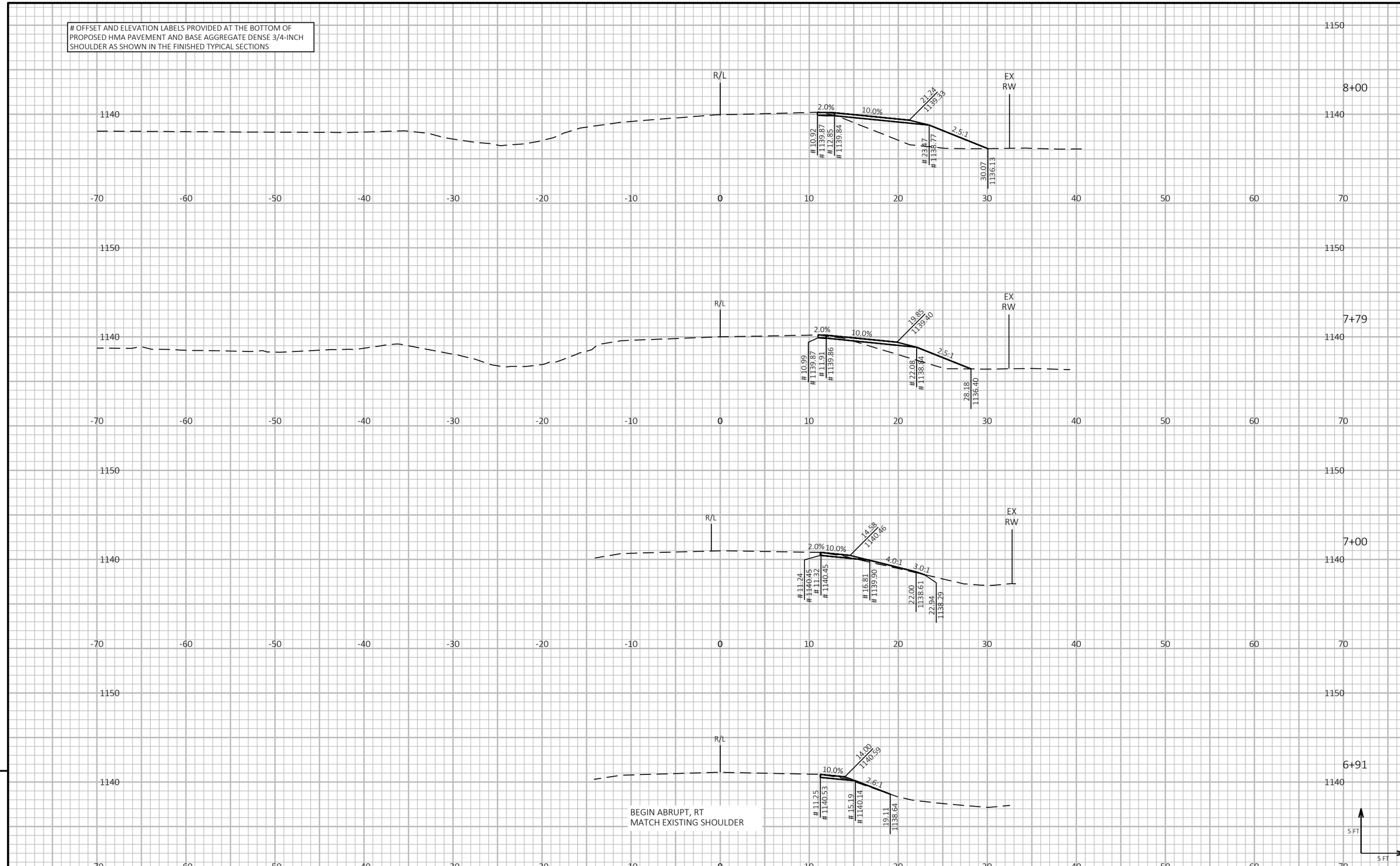

9

9

PROJECT NO: 8010-01-80	HWY: STH 35	COUNTY: POLK	CROSS SECTIONS: GUARDRAIL - TRADE RIVER - 160TH ST	SHEET 248	E

FILE NAME : P:\55XX\5508.DP.22.STH35-48.PLK\CADDS\80100180\SHEETS\090204-XS-160TH ST.DWG
LAYOUT NAME - 01
PLOT DATE : 4/20/2026 9:57 AM
PLOT BY : PARKER TISCHAUSER
PLOT NAME :
PLOT SCALE : 1 IN:10 FT HORZ. / 1 IN:10 FT VERT.
WISDOT/CADDS SHEET 49

OFFSET AND ELEVATION LABELS PROVIDED AT THE BOTTOM OF PROPOSED HMA PAVEMENT AND BASE AGGREGATE DENSE 3/4-INCH SHOULDER AS SHOWN IN THE FINISHED TYPICAL SECTIONS

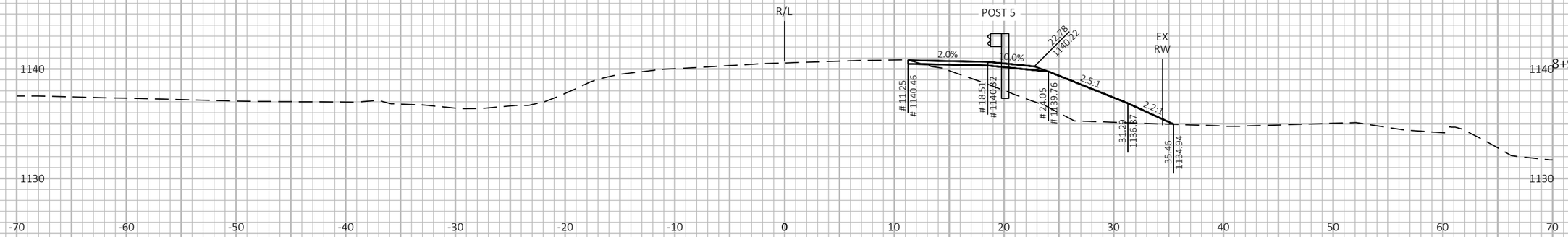

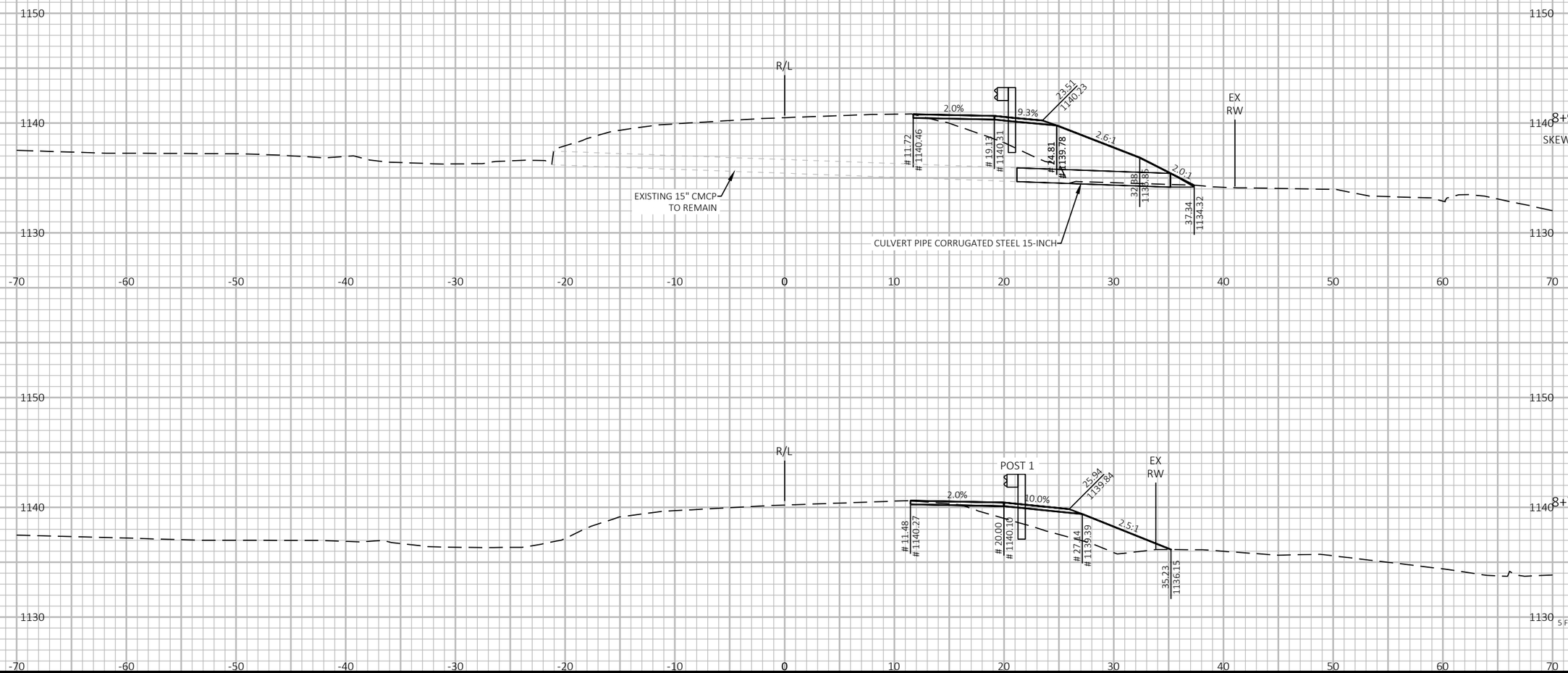

9

9

PROJECT NO: 8010-01-80	HWY: STH 35	COUNTY: POLK	CROSS SECTIONS: GUARDRAIL - TRADE RIVER - 160TH ST	SHEET 249	E

FILE NAME : P:\55XX\5508.DP.22.STH35-48.PLK\CADDS\80100180\SHEETS\090204-XS-160TH ST.DWG
LAYOUT NAME - 02
PLOT DATE : 4/20/2026 9:57 AM
PLOT BY : PARKER TISCHAUSER
PLOT NAME :
PLOT SCALE : 1 IN:10 FT HORZ. / 1 IN:10 FT VERT.
WISDOT/CADDS SHEET 49

OFFSET AND ELEVATION LABELS PROVIDED AT THE BOTTOM OF PROPOSED HMA PAVEMENT AND BASE AGGREGATE DENSE 3/4-INCH SHOULDER AS SHOWN IN THE FINISHED TYPICAL SECTIONS

MATCH PROPOSED STH 35
CROSS SECTIONS

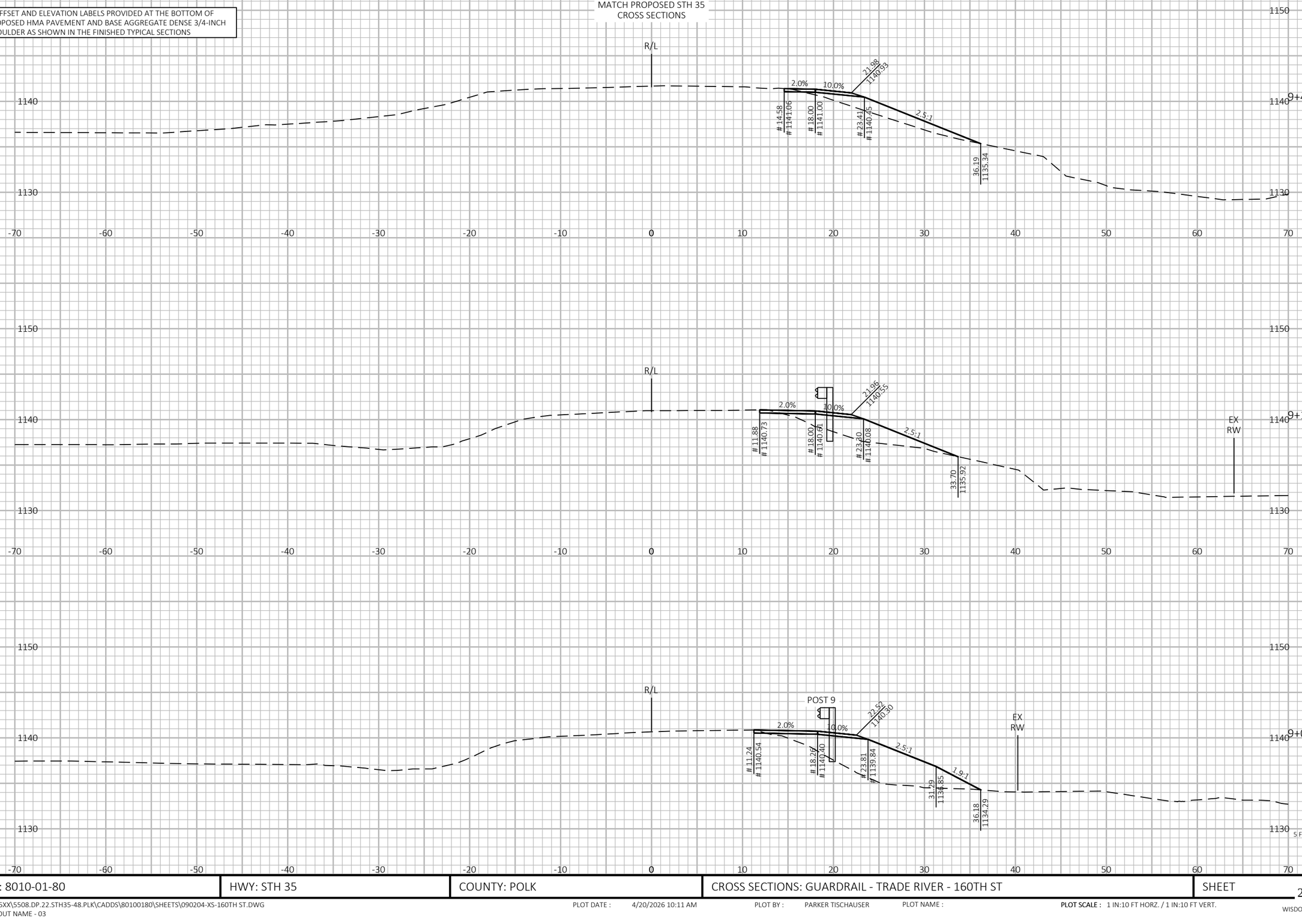

PROJECT NO: 8010-01-80	HWY: STH 35	COUNTY: POLK	CROSS SECTIONS: GUARDRAIL - TRADE RIVER - 160TH ST	SHEET 250	E

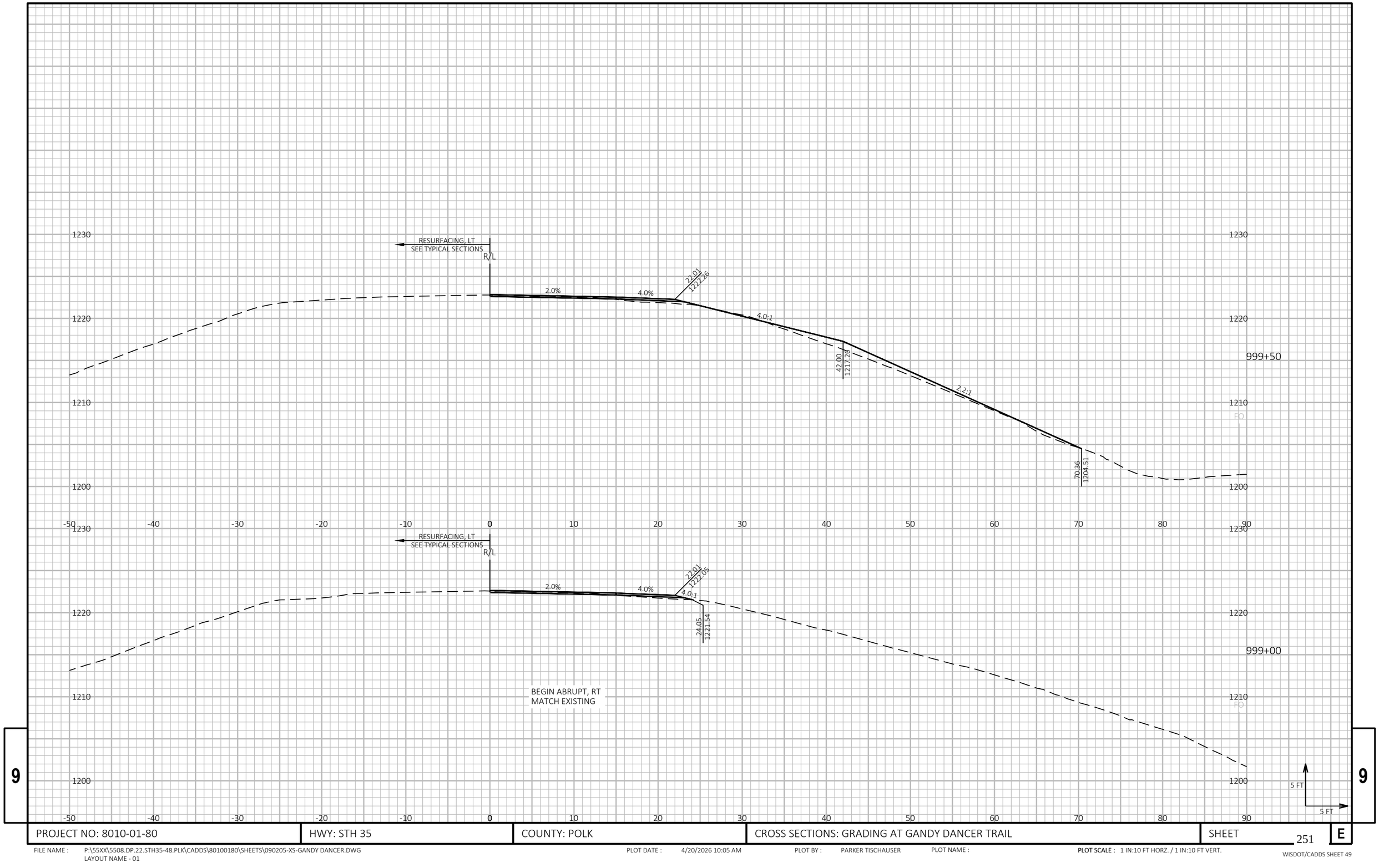

9

PROJECT NO: 8010-01-80	HWY: STH 35	COUNTY: POLK	CROSS SECTIONS: GRADING AT GANDY DANCER TRAIL	SHEET 251	E

FILE NAME : P:\55XX\5508.DP.22.STH35-48.PLK\CADDS\80100180\SHEETS\090205-XS-GANDY DANCER.DWG
LAYOUT NAME - 01

PLOT DATE : 4/20/2026 10:05 AM PLOT BY : PARKER TISCHAUSER PLOT NAME : PLOT SCALE : 1 IN:10 FT HORZ. / 1 IN:10 FT VERT.

WISDOT/CADDS SHEET 49

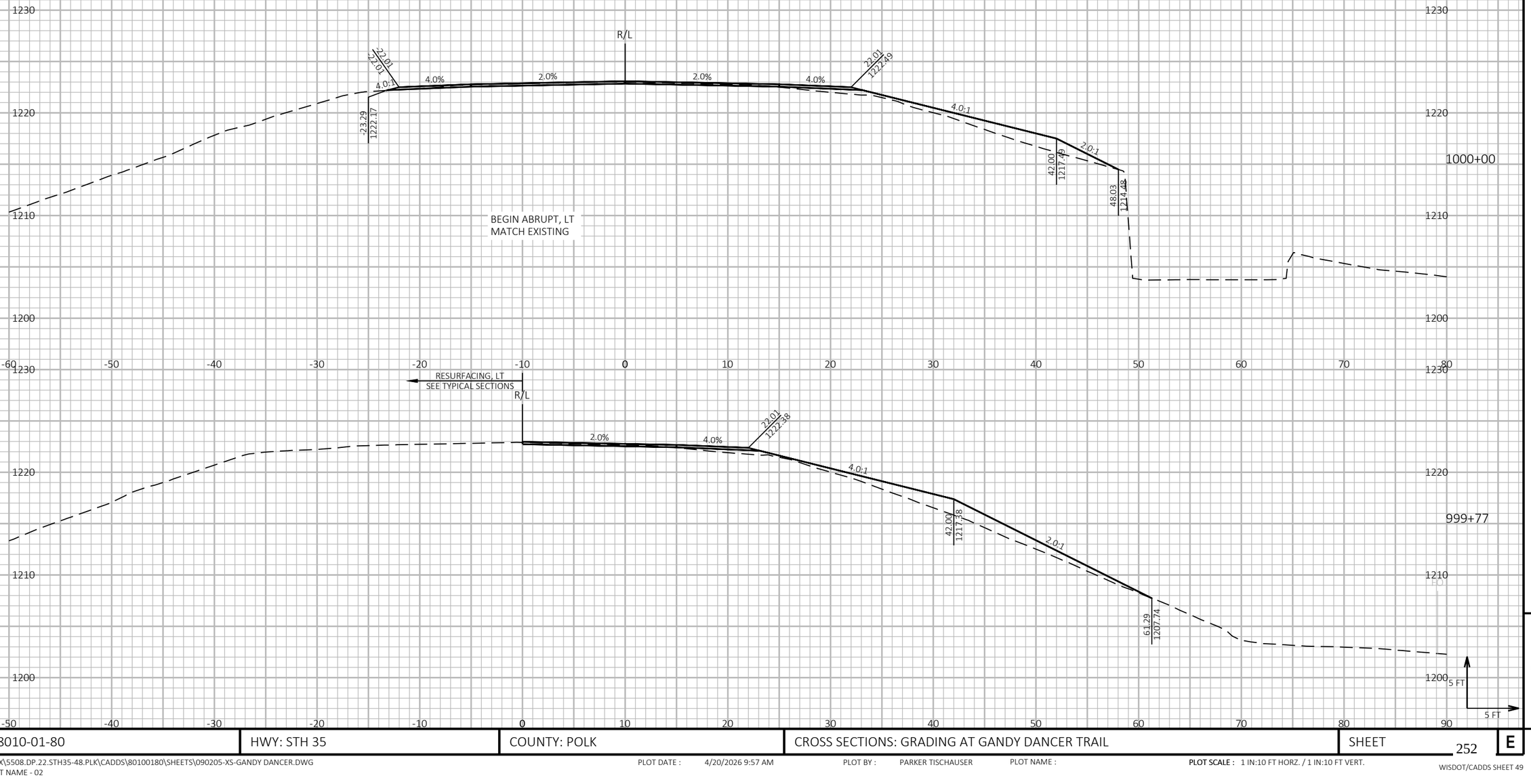

PROJECT NO: 8010-01-80	HWY: STH 35	COUNTY: POLK	CROSS SECTIONS: GRADING AT GANDY DANCER TRAIL	SHEET 252	E

FILE NAME : P:\55XX\5508.DP.22.STH35-48.PLK\CADDS\80100180\SHEETS\090205-XS-GANDY DANCER.DWG
LAYOUT NAME - 02

PLOT DATE : 4/20/2026 9:57 AM PLOT BY : PARKER TISCHAUSER PLOT NAME : **PLOT SCALE :** 1 IN:10 FT HORZ. / 1 IN:10 FT VERT.

WISDOT/CADDS SHEET 49

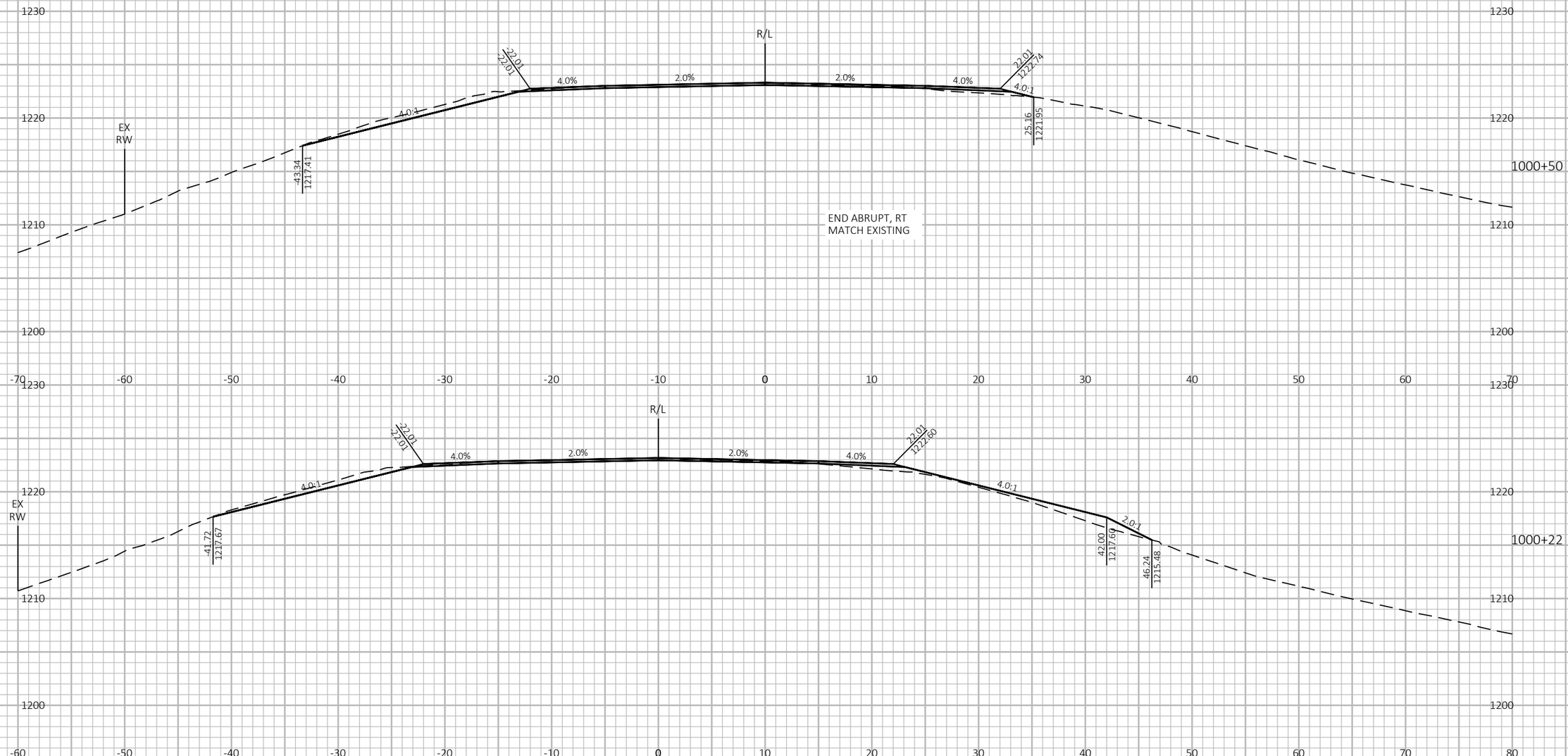

PROJECT NO: 8010-01-80	HWY: STH 35	COUNTY: POLK	CROSS SECTIONS: GRADING AT GANDY DANCER TRAIL	SHEET 253	E

FILE NAME : P:\55XX\5508.DP.22.STH35-48.PLK\CADDS\80100180\SHEETS\090205-XS-GANDY DANCER.DWG
LAYOUT NAME - 03

PLOT DATE : 4/20/2026 9:55 AM PLOT BY : PARKER TISCHAUSER PLOT NAME : PLOT SCALE : 1 IN:10 FT HORZ. / 1 IN:10 FT VERT.

WISDOT/CADDS SHEET 49

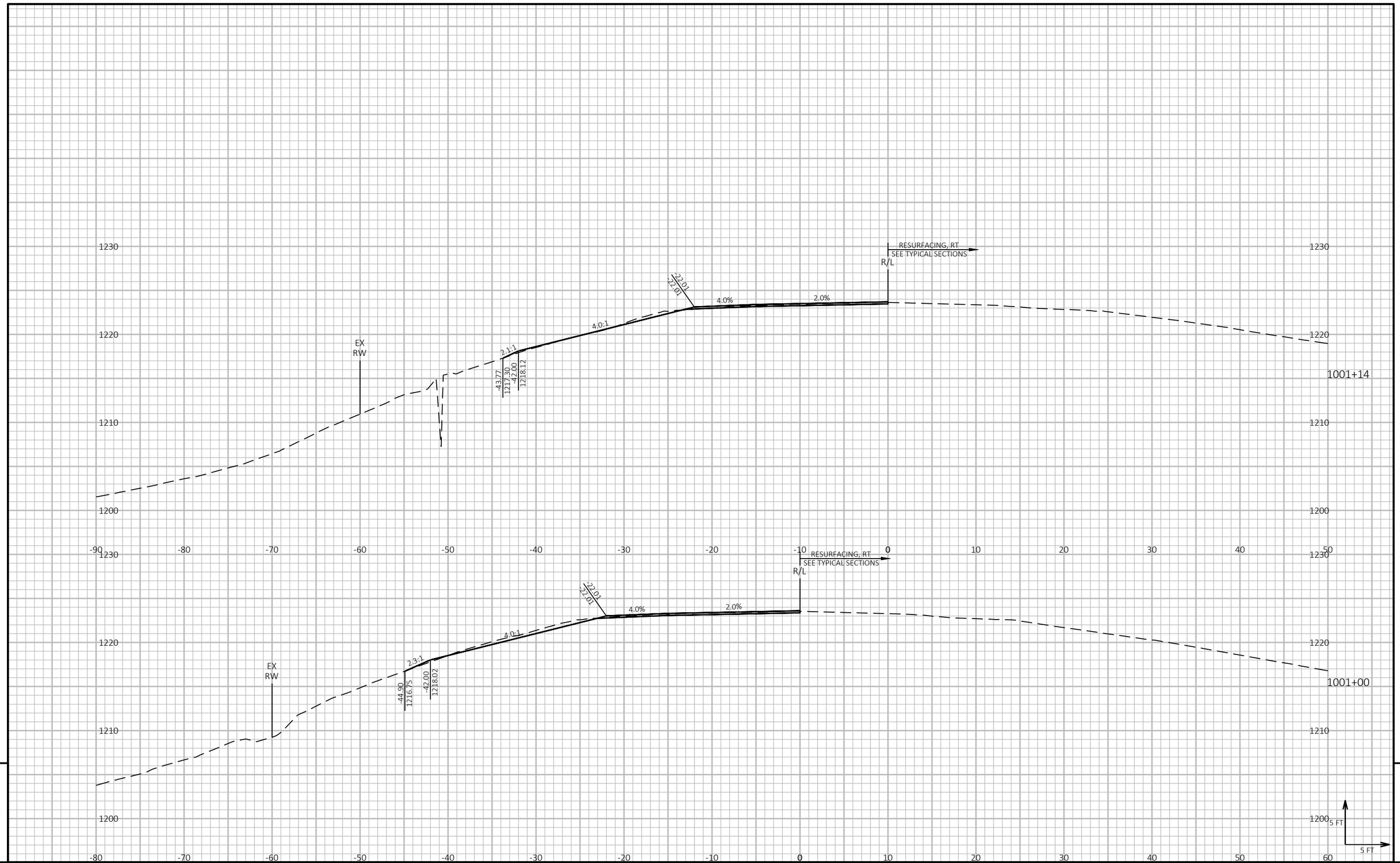

PROJECT NO: 8010-01-80	HWY: STH 35	COUNTY: POLK	CROSS SECTIONS: GRADING AT GANDY DANCER TRAIL	SHEET 254	E

FILE NAME : P:\55XX\5508.DP.22.STH35-48.PLK\CADDS\80100180\SHEETS\090205-XS-GANDY DANCER.DWG
LAYOUT NAME - 04

PLOT DATE : 4/20/2026 10:02 AM PLOT BY : PARKER TISCHAUSER PLOT NAME : **PLOT SCALE :** 1 IN:10 FT HORZ. / 1 IN:10 FT VERT.

WISDOT/CADDS SHEET 49

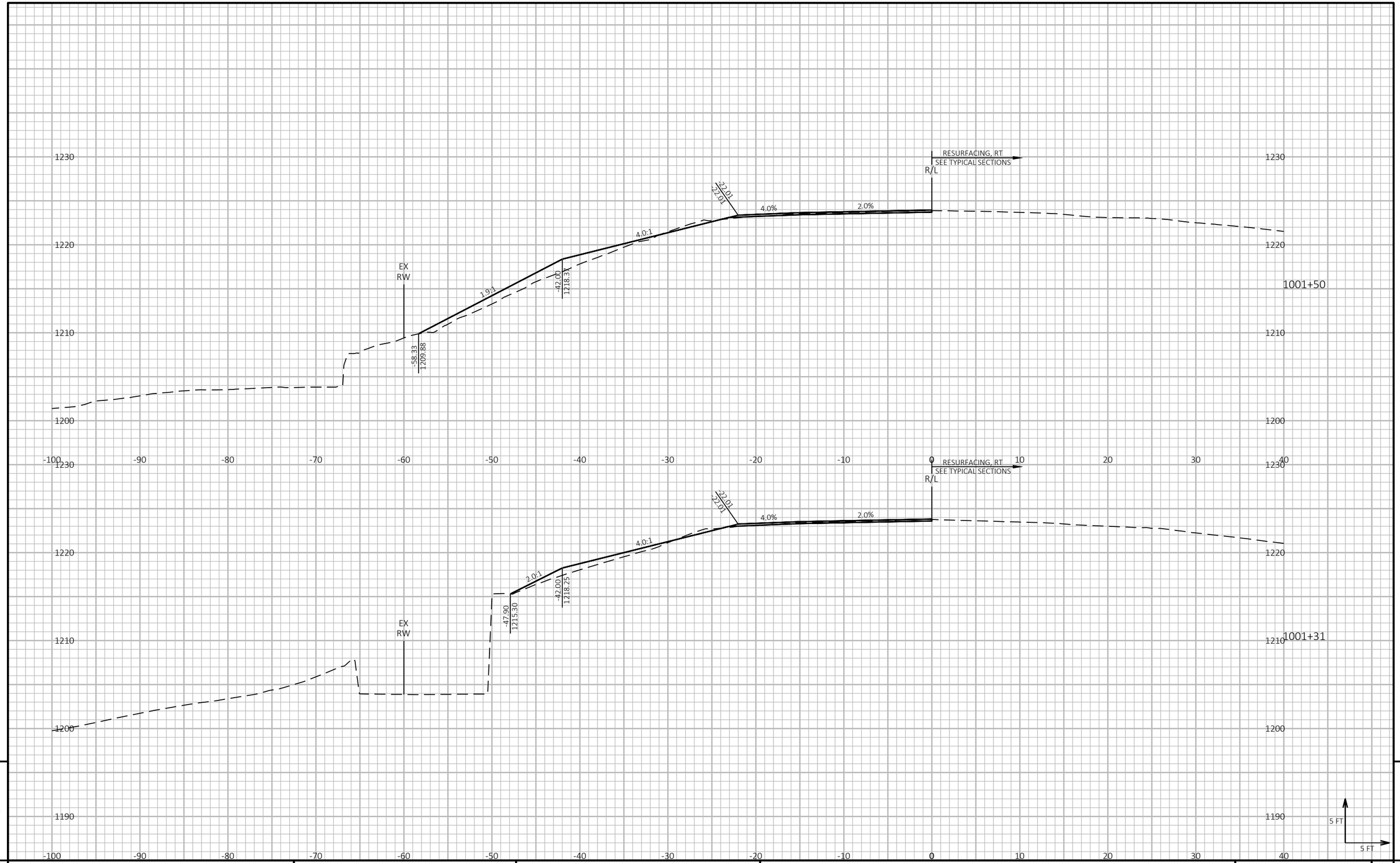

PROJECT NO: 8010-01-80	HWY: STH 35	COUNTY: POLK	CROSS SECTIONS: GRADING AT GANDY DANCER TRAIL	SHEET 255	E

FILE NAME : P:\55XX\5508.DP.22.STH35-48.PLK\CADDS\80100180\SHEETS\090205-XS-GANDY DANCER.DWG
LAYOUT NAME - 05

PLOT DATE : 4/20/2026 10:02 AM PLOT BY : PARKER TISCHAUSER PLOT NAME : **PLOT SCALE :** 1 IN:10 FT HORZ. / 1 IN:10 FT VERT.

WISDOT/CADDS SHEET 49

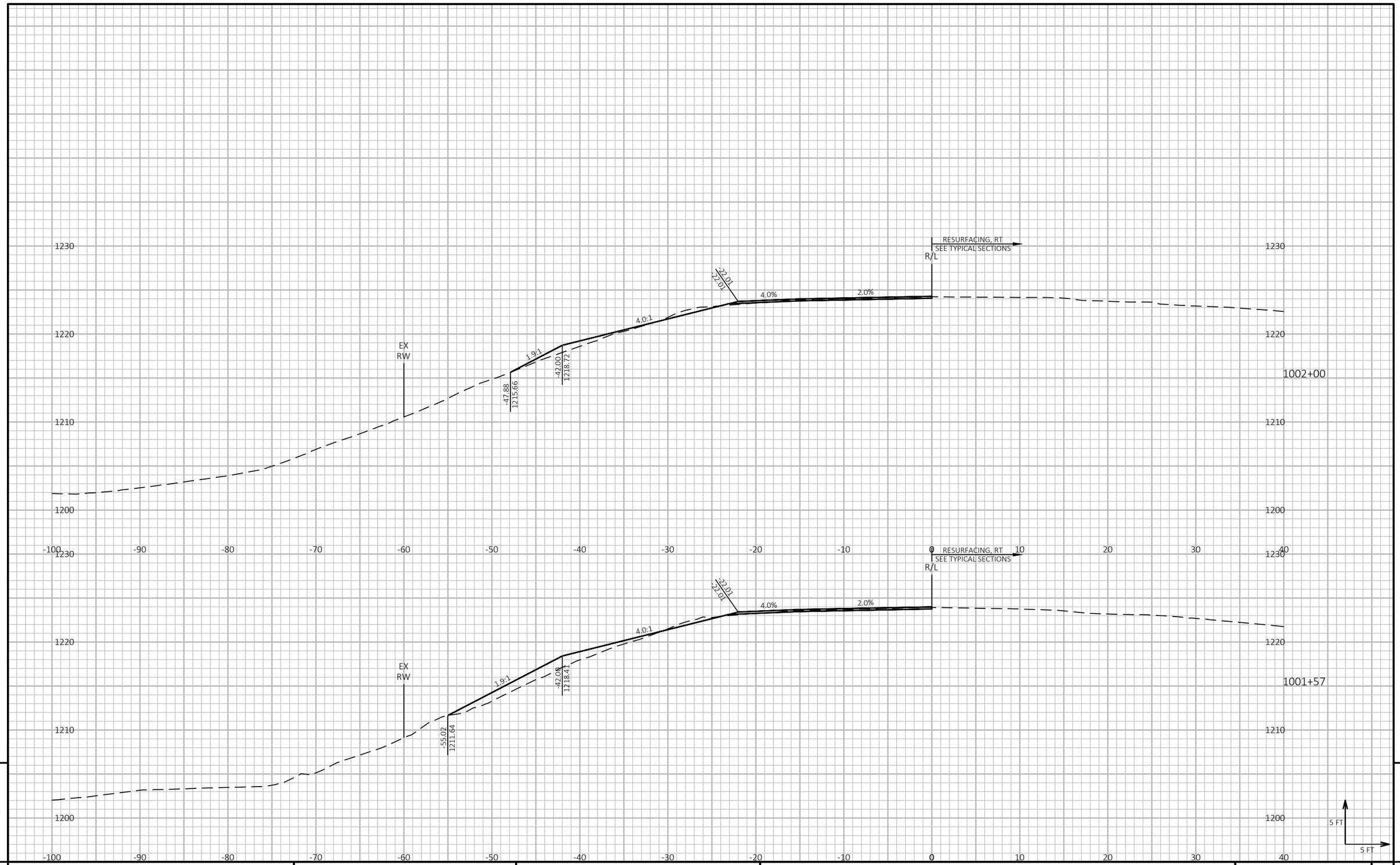

9

9

PROJECT NO: 8010-01-80	HWY: STH 35	COUNTY: POLK	CROSS SECTIONS: GRADING AT GANDY DANCER TRAIL	SHEET 256	E

FILE NAME : P:\5SXX\5508.DP.22.STH35-48.PLK\CADDS\80100180\SHEETS\090205-XS-GANDY DANCER.DWG
LAYOUT NAME - 06

PLOT DATE : 4/20/2026 10:10 AM PLOT BY : PARKER TISCHAUSER PLOT NAME : **PLOT SCALE :** 1 IN:10 FT HORZ. / 1 IN:10 FT VERT.

WISDOT/CADDS SHEET 49

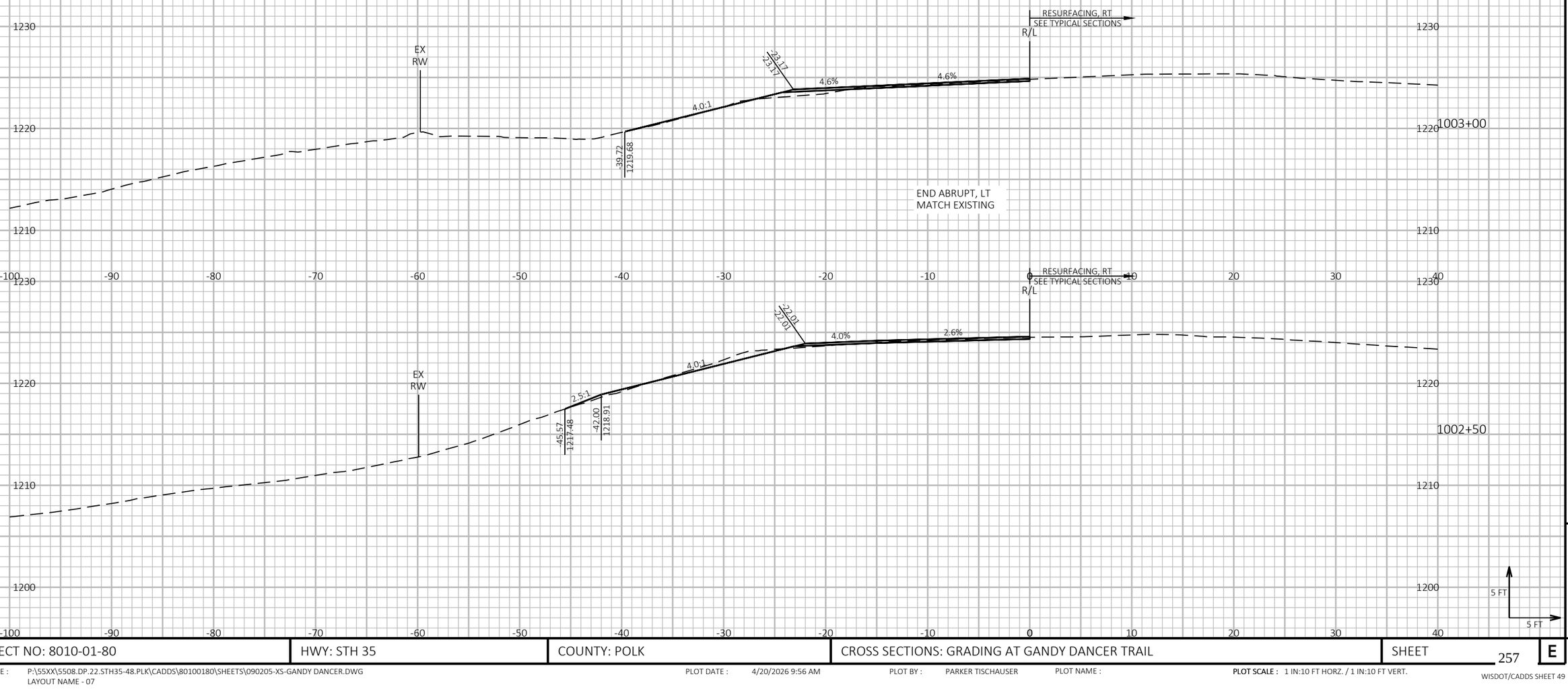

9

9

PROJECT NO: 8010-01-80	HWY: STH 35	COUNTY: POLK	CROSS SECTIONS: GRADING AT GANDY DANCER TRAIL	SHEET 257	E

FILE NAME : P:\55XX\5508.DP.22.STH35-48.PLK\CADDS\80100180\SHEETS\090205-XS-GANDY DANCER.DWG
LAYOUT NAME - 07

PLOT DATE : 4/20/2026 9:56 AM

PLOT BY : PARKER TISCHAUSER

PLOT NAME :

PLOT SCALE : 1 IN:10 FT HORZ. / 1 IN:10 FT VERT.

WISDOT/CADDS SHEET 49

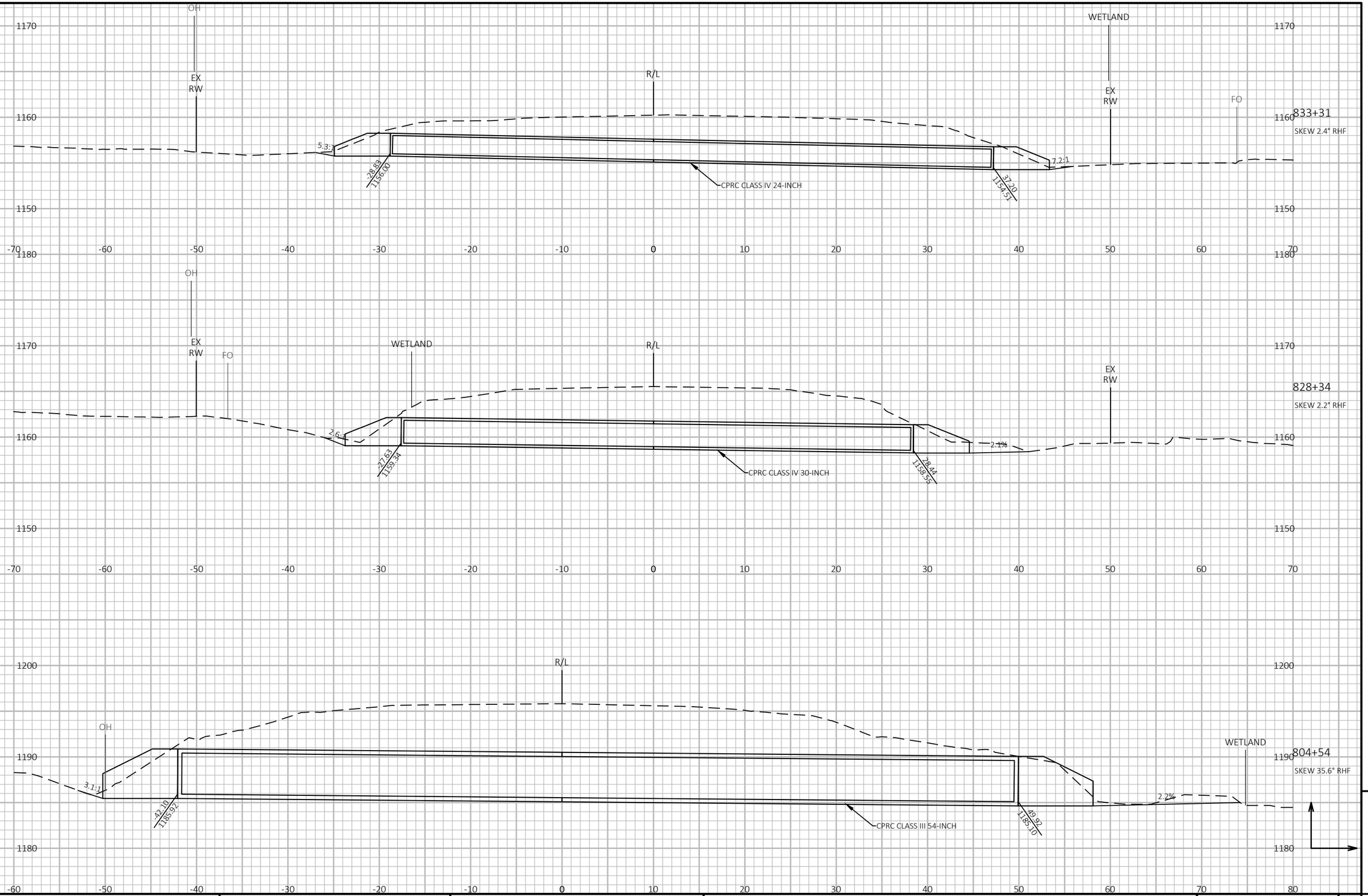

9

9

PROJECT NO: 8010-01-80	HWY: STH 35	COUNTY: POLK	CROSS SECTIONS: CULVERT REPLACEMENTS	SHEET 258	E

FILE NAME : P:\55XX\5508.DP.22.STH35-48.PLK\CADDS\80100180\SHEETS\090206-XS-CULVERT REPLACEMENTS.DWG
LAYOUT NAME - 10

PLOT DATE : 4/20/2026 9:59 AM PLOT BY : PARKER TISCHAUSER PLOT NAME : **PLOT SCALE :** 1 IN:10 FT HORZ. / 1 IN:10 FT VERT.

WISDOT/CADDS SHEET 49

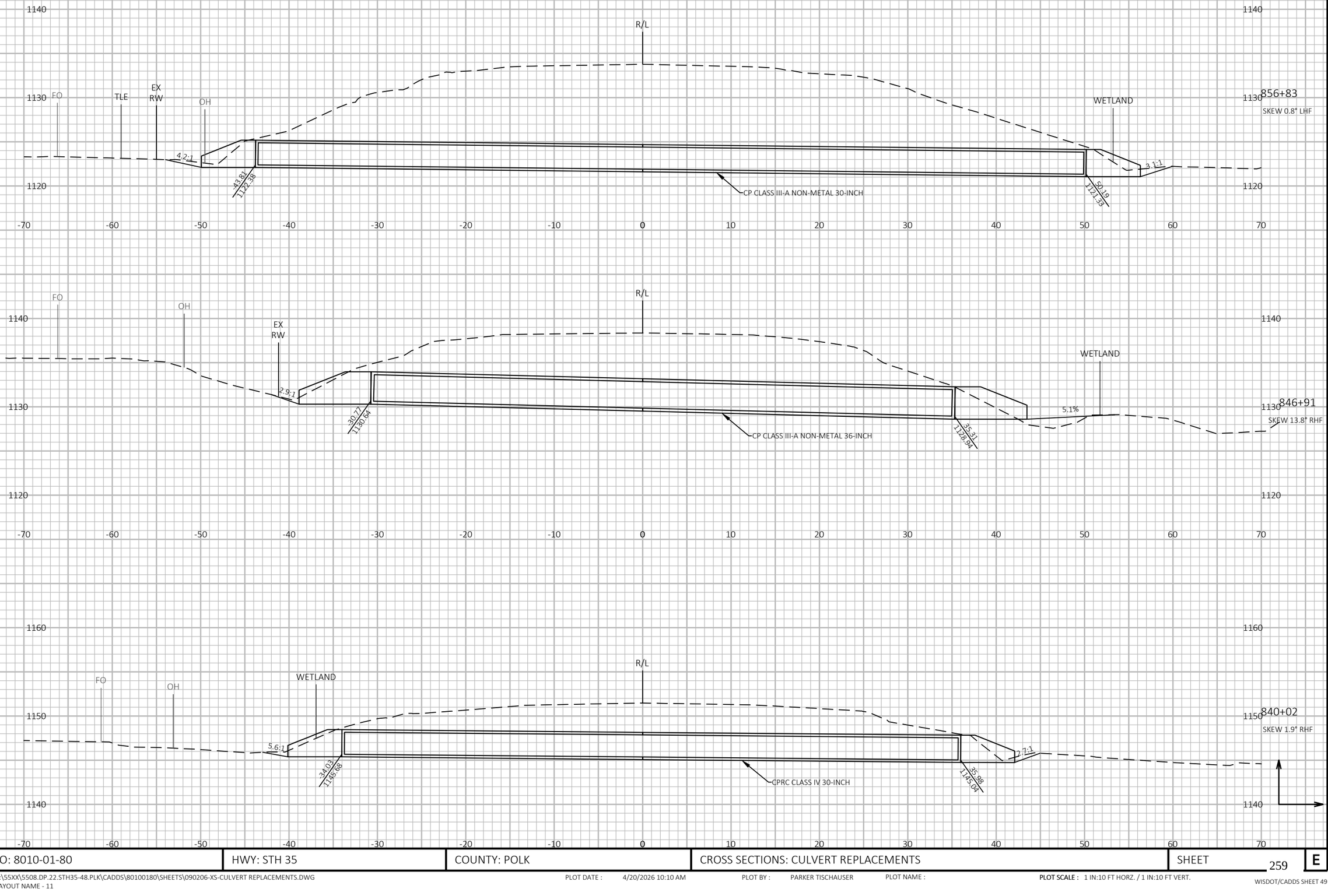

PROJECT NO: 8010-01-80	HWY: STH 35	COUNTY: POLK	CROSS SECTIONS: CULVERT REPLACEMENTS	SHEET 259	E

FILE NAME : P:\55XX\5508.DP.22.STH35-48.PLK\CADDS\80100180\SHEETS\090206-XS-CULVERT REPLACEMENTS.DWG
LAYOUT NAME - 11

PLOT DATE : 4/20/2026 10:10 AM PLOT BY : PARKER TISCHAUSER PLOT NAME : PLOT SCALE : 1 IN:10 FT HORZ. / 1 IN:10 FT VERT.

WISDOT/CADDS SHEET 49

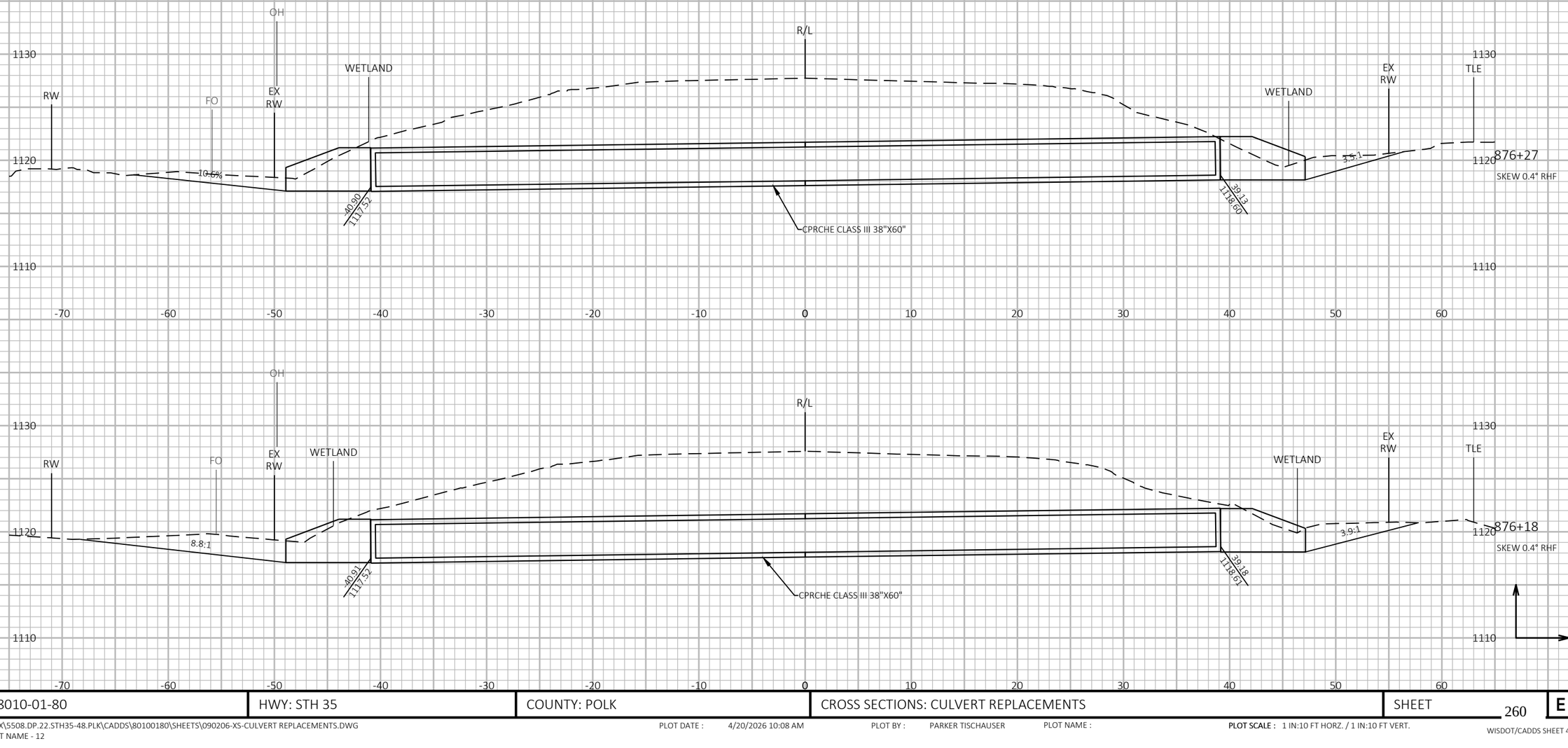

9

9

PROJECT NO: 8010-01-80	HWY: STH 35	COUNTY: POLK	CROSS SECTIONS: CULVERT REPLACEMENTS	SHEET 260	E

FILE NAME : P:\55XX\5508.DP.22.STH35-48.PLK\CADDS\80100180\SHEETS\090206-XS-CULVERT REPLACEMENTS.DWG
LAYOUT NAME - 12

PLOT DATE : 4/20/2026 10:08 AM PLOT BY : PARKER TISCHAUSER PLOT NAME :

PLOT SCALE : 1 IN:10 FT HORZ. / 1 IN:10 FT VERT.

WISDOT/CADDS SHEET 49

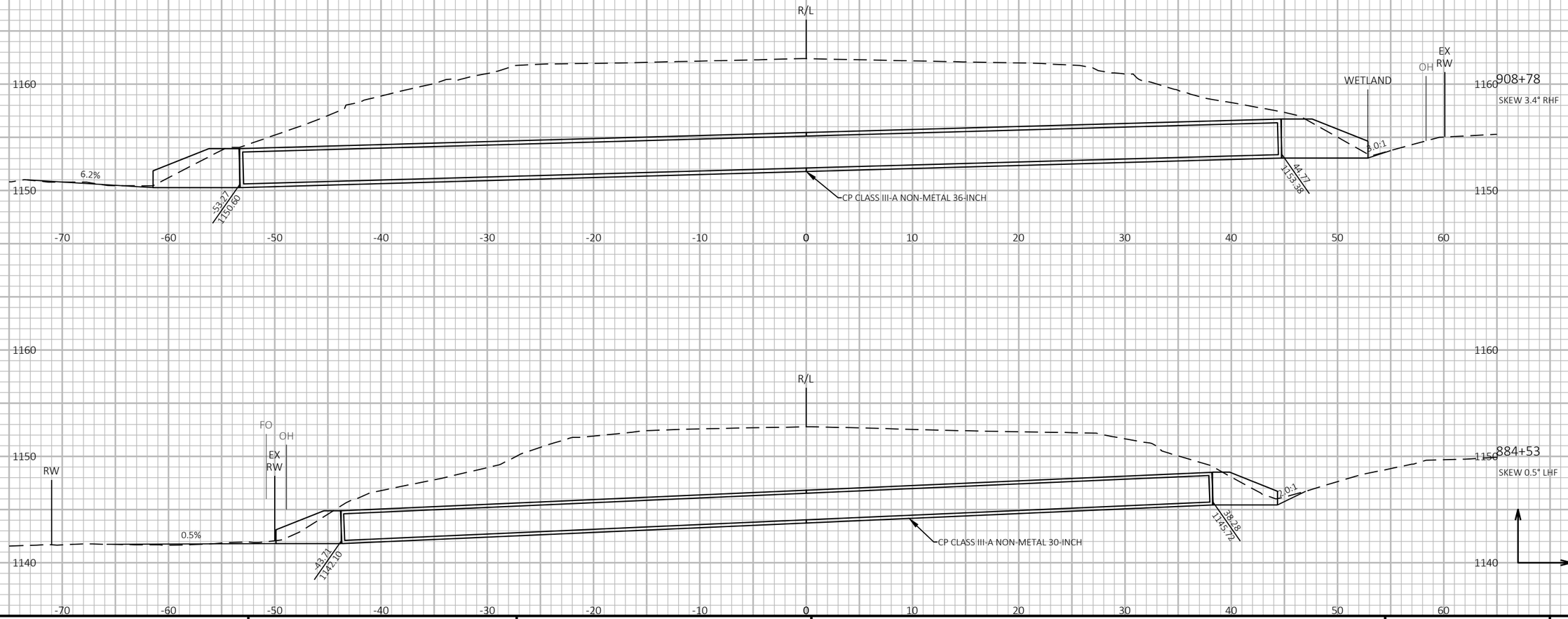

9

9

PROJECT NO: 8010-01-80	HWY: STH 35	COUNTY: POLK	CROSS SECTIONS: CULVERT REPLACEMENTS	SHEET 261	E

FILE NAME : P:\55XX\5508.DP.22.STH35-48.PLK\CADDS\80100180\SHEETS\090206-XS-CULVERT REPLACEMENTS.DWG
LAYOUT NAME - 13

PLOT DATE : 4/20/2026 10:10 AM PLOT BY : PARKER TISCHAUSER PLOT NAME : **PLOT SCALE :** 1 IN:10 FT HORZ. / 1 IN:10 FT VERT.

WISDOT/CADDS SHEET 49

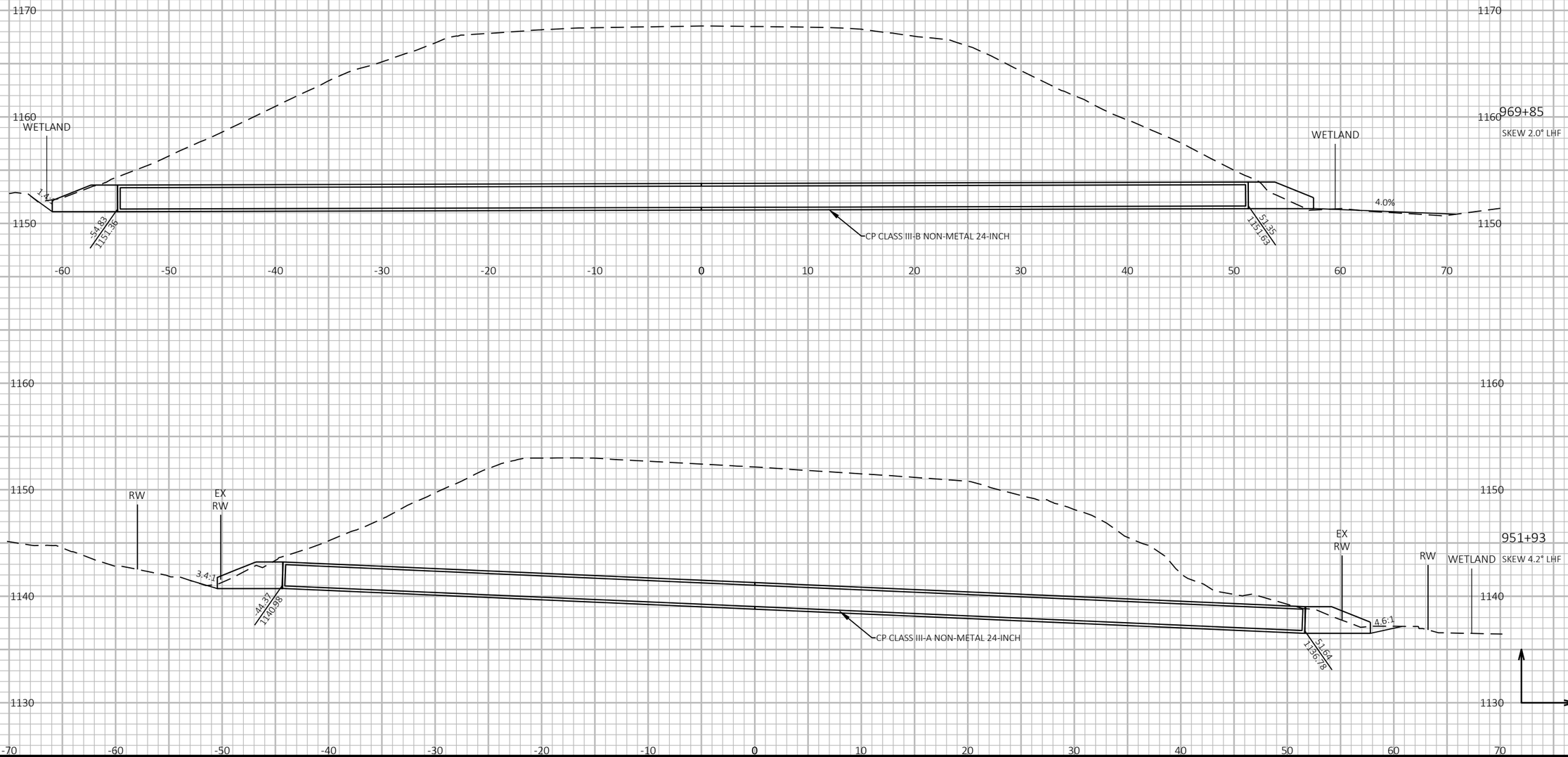

9

9

PROJECT NO: 8010-01-80	HWY: STH 35	COUNTY: POLK	CROSS SECTIONS: CULVERT REPLACEMENTS	SHEET 262	E

FILE NAME : P:\55XX\5508.DP.22.STH35-48.PLK\CADDS\80100180\SHEETS\090206-XS-CULVERT REPLACEMENTS.DWG
LAYOUT NAME - 14

PLOT DATE : 4/20/2026 10:04 AM PLOT BY : PARKER TISCHAUSER PLOT NAME : **PLOT SCALE :** 1 IN:10 FT HORZ. / 1 IN:10 FT VERT.

WISDOT/CADDS SHEET 49

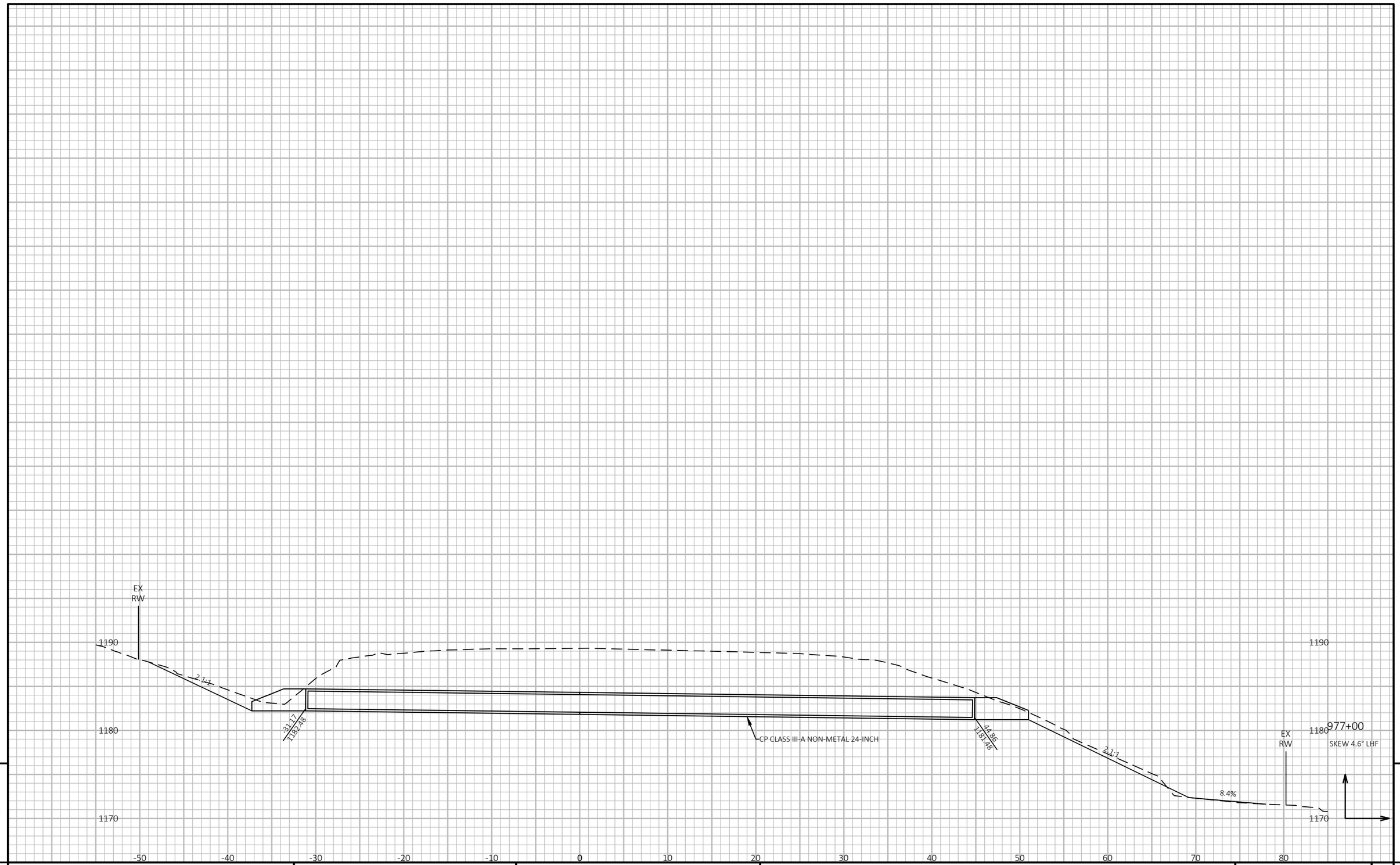

9

9

PROJECT NO: 8010-01-80	HWY: STH 35	COUNTY: POLK	CROSS SECTIONS: CULVERT REPLACEMENTS	SHEET 263	E

FILE NAME : P:\55XX\5508.DP.22.STH35-48.PLK\CADDS\80100180\SHEETS\090206-XS-CULVERT REPLACEMENTS.DWG
LAYOUT NAME - 15

PLOT DATE : 4/20/2026 10:07 AM PLOT BY : PARKER TISCHAUSER PLOT NAME :

PLOT SCALE : 1 IN:10 FT HORZ. / 1 IN:10 FT VERT.

WISDOT/CADDS SHEET 49

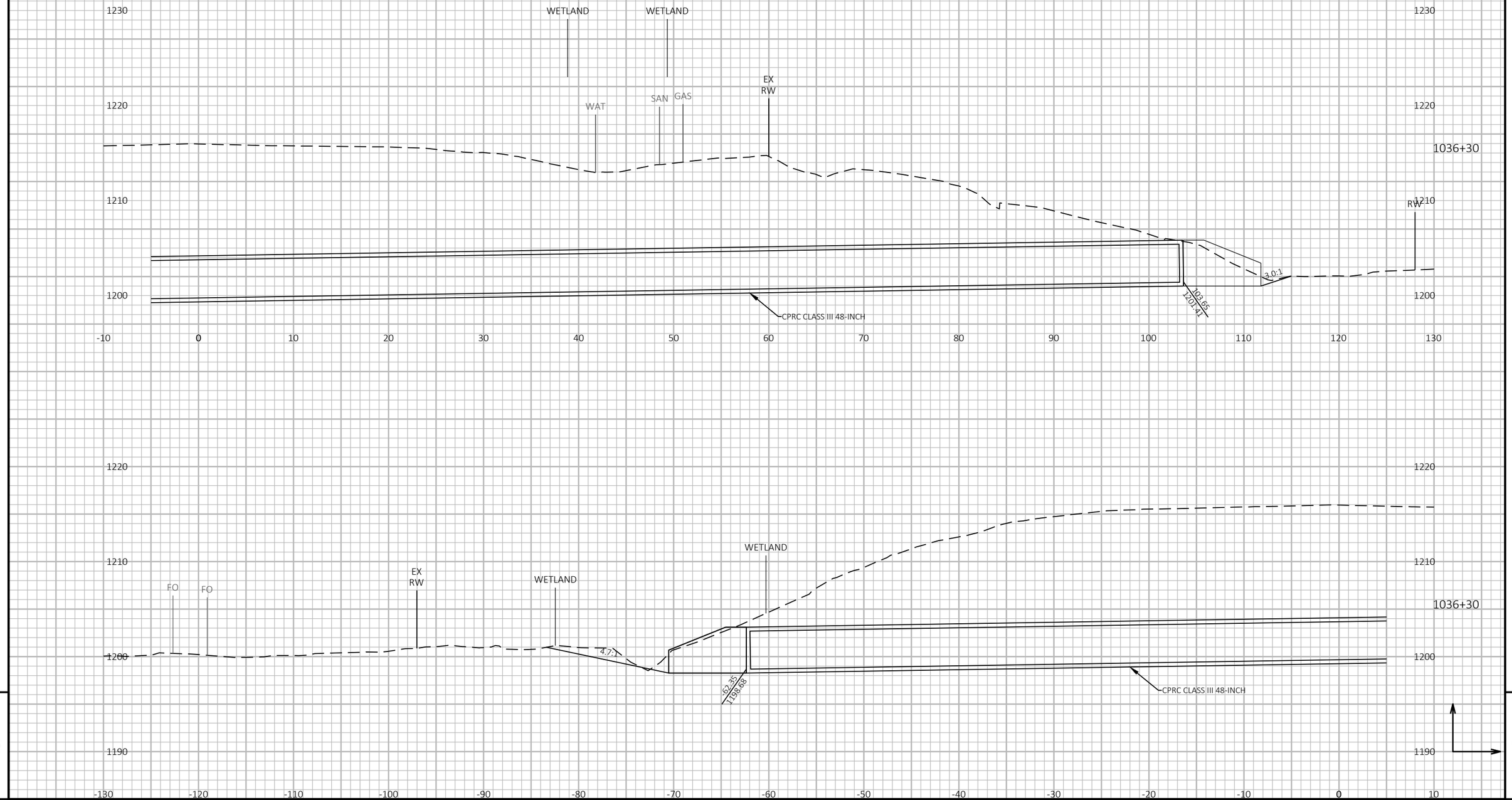

PROJECT NO: 8010-01-80	HWY: STH 35	COUNTY: POLK	CROSS SECTIONS: CULVERT REPLACEMENTS	SHEET 264	E

FILE NAME : P:\55XX\5508.DP.22.STH35-48.PLK\CADDS\80100180\SHEETS\090206-XS-CULVERT REPLACEMENTS.DWG
LAYOUT NAME - 16

PLOT DATE : 4/20/2026 10:07 AM PLOT BY : PARKER TISCHAUSER PLOT NAME : PLOT SCALE : 1 IN:10 FT HORZ. / 1 IN:10 FT VERT.

WISDOT/CADDS SHEET 49

Notes

Wisconsin Department of Transportation

Dedicated people creating transportation solutions
through innovation and exceptional service.

http://www.dot.wisconsin.gov