MAD

NOVEMBER 2026

PROJECT ID: 5709-00-70

WITH:

COUNTY: SAUK

ORDER OF SHEETS

Section No.	1	Title
Section No.	2	Typical Sections and Details
Section No.	3	Estimate of Quantities
Section No.	3	Miscellaneous Quantities
Section No.	4	Right of Way Plat
Section No.	5	Plan and Profile
Section No.	6	Standard Detail Drawings
Section No.	7	Sign Plates
~~Section No.~~	~~8~~	~~Structure Plans~~
Section No.	9	Computer Earthwork Data
Section No.	9	Cross Sections

TOTAL SHEETS = 158

N

DESIGN DESIGNATION 5709-00-01

A.A.D.T.	2024	=	400
A.A.D.T.	2044	=	500
D.H.V.		=	100
D.D.		=	60/40
T.		=	5%
DESIGN SPEED		=	45 MPH
ESALS		=	35,000

CONVENTIONAL SYMBOLS

PLAN

- CORPORATE LIMITS
- PROPERTY LINE
- LOT LINE
- LIMITED HIGHWAY EASEMENT
- EXISTING RIGHT OF WAY
- PROPOSED OR NEW R/W LINE
- SLOPE INTERCEPT
- REFERENCE LINE (300'EB')
- EXISTING CULVERT
- PROPOSED CULVERT (Box or Pipe)
- COMBUSTIBLE FLUIDS (CAUTION)
- MARSH AREA
- WOODED OR SHRUB AREA

PROFILE

- GRADE LINE
- ORIGINAL GROUND
- MARSH OR ROCK PROFILE (To be noted as such) (ROCK)
- SPECIAL DITCH (LABEL)
- GRADE ELEVATION (95.36)
- CULVERT (Profile View)

UTILITIES

- ELECTRIC (E)
- FIBER OPTIC (FO)
- GAS (G)
- SANITARY SEWER (SAN)
- STORM SEWER (SS)
- TELEPHONE (T)
- WATER (W)
- UTILITY PEDESTAL
- POWER POLE
- TELEPHONE POLE

STATE OF WISCONSIN
DEPARTMENT OF TRANSPORTATION

PLAN OF PROPOSED IMPROVEMENT

T EXCELSIOR, NORTH REEDSBURG ROAD

NORTHWOODS DRIVE TO STH 23

LOC STR

SAUK COUNTY

STATE PROJECT NUMBER
5709-00-70

STATE PROJECT	FEDERAL PROJECT	
	PROJECT	CONTRACT
5709-00-70	WISC 2027055	1

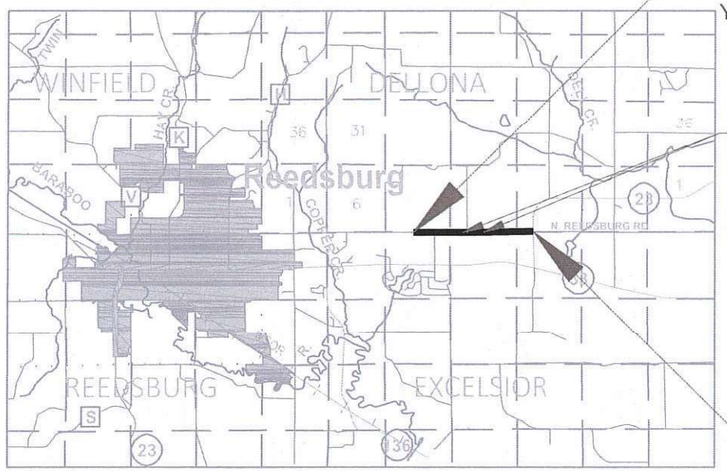

BEGIN PROJECT
STA 16+00
X = 602,676.843
Y = 262,735.815

NET EXCEPTION TO CL LENGTH
STA 43+50 - STA 55+00

END PROJECT
STA 99+50
X = 611,026.537
Y = 262,726.234

LAYOUT

SCALE 0 1.0 MI

TOTAL NET LENGTH OF CENTERLINE = 1.363 MI

HORIZONTAL POSITIONS SHOWN ON THIS PLAN ARE WISCONSIN COORDINATE REFERENCE SYSTEM (WISCRS), SAUK COUNTY, NAD83 (2011), IN U.S. SURVEY FEET. POSITIONS SHOWN ARE GRID COORDINATES, GRID BEARINGS, AND GRID DISTANCES. GRID DISTANCES ARE THE SAME AS GROUND DISTANCES.

ELEVATIONS ARE REFERENCED TO NAVD 88 (2012). GPS DERIVED ELEVATIONS ARE BASED ON GEOID 12A.

ACCEPTED FOR

TOWN OF EXCELSIOR

Date: 6/8/26 (Signature and Title of Official)

ORIGINAL PLANS PREPARED BY

TEAM ENGINEERING

WISCONSIN PROFESSIONAL ENGINEER
JEREMY F. KRACHEY
E-37258
WAUZEKA
WIS.

Digitally signed by JEREMY F KRACHEY, PE
DN: C=US, E=JKRACHEY@TEAMENGINC.COM, O="TEAM ENGINEERING, INC.", CN=JEREMY F KRACHEY, PE
Date: 2026.06.08 10:55:04-05'00'

DATE: _____ (Professional Engineer Signature)

STATE OF WISCONSIN
DEPARTMENT OF TRANSPORTATION

PREPARED BY

Surveyor	TEAM ENGINEERING
Designer	JEREMY KRACHEY, P.E.
Project Manager	PEGGY WISCHHOFF, P.E.
Regional Examiner	WISDOT SW REGION
Regional Supervisor	DELLA KOENIG, P.E.

APPROVED FOR THE DEPARTMENT

DATE: 07/15/2026 *Peggy Wischhoff, P.E.* (Signature)

E

LIST OF STANDARD ABBREVIATIONS

ABUT.	Abutment
AC	Acre
AGG.	Aggregate
AH	Ahead
<	Angle
ASPH	Asphaltic
AVG.	Average
A.D.T.	Average Daily Traffic
BAD	Base Aggregate Dense
BK.	Back
BF	Back Face
B.M	Bench Mark
BR.	Bridge
C/L	Center Line
CC	Center to Center
CTH	County Trunk Highway
CR.	Creek
CY OR CU YD	Cubic Yard
CP	Culvert Pipe
C & G	Curb and Gutter
D	Degree of Curve
DHV	Design Hour Volume
DIA	Diameter
E	East
X	East Grid Coordinate
ELEC	Electric
EL OR ELEV	Elevation
ESALS	Equivalent Single Axle Loads
EBS	Excavation Below Subgrade
FF	Face to Face
FE	Field Entrance
F	Fill
FG	Finished Grade
FL OR F/L	Flow Line
FT	Foot
FTG	Footing
GN	Grid North
HT	Height
CWT	Hundredweight
HYD	Hydrant
INL	Inlet
ID	Inside Diameter
INV	Invert
IP	Iron Pipe or Pin
IRS	Iron Rod Set
JT	Joint
JCT	Junction
LHF	Left-Hand Forward
L	Length of Curve
LIN FT OR LF	Linear Foot
LC	Long Chord of Curve
MH	Manhole
MB	Mailbox
ML OR M/L	Match Line
N	North
Y	North Grid Coordinate
OD	Outside Diameter
PLE	Permanent Limited Easement
PT	Point
PC	Point of Curvature
PI	Point of Intersection
PRC	Point of Reverse Curvature
PT	Point of Tangency
POC	Point on Curve
POT	Point of Tangent
PVC	Polyvinyl Chloride
PCC	Portland Cement Concrete
LB	Pound
PSI	Pounds Per Square Inch
PE	Private Entrance
R	Radius
RR	Railroad
RL OR R/L	Reference Line
RP	Reference Point
RCCP	Reinforced Concrete Culvert Pipe
REQD	Required
RES	Residence or Residential
RW	Retaining Wall
RT	Right
RHF	Right-Hand Forward
R/W	Right-of-Way
R	River
RD	Road
RDWY	Roadway
SALV	Salvaged
SAN S	Sanitary Sewer
SEC	Section
SHLDR	Shoulder
SHR	Shrinkage
SW	Sidewalk
S	South
SQ	Square
SF OR SQ FT	Square Feet
SY OR SQ YD	Square Yard
STD	Standard
SDD	Standard Detail Drawings
STH	State Trunk Highways
STA	Station
SS	Storm Sewer
SG	Subgrade
SE	Superelevation
SL OR S/L	Survey Line
SV	Septic Vent
T	Tangent
TEL	Telephone
TEMP	Temporary
TI	Temporary Interest
TLE	Temporary Limited Easement
t	Ton
T OR TN	Town
TRANS	Transition
TL OR T/L	Transit Line
T	Trucks (percent of)
TYP	Typical
UNCL	Unclassified
UG	Underground Cable
USH	United States Highway
VAR	Variable
V	Velocity or Design Speed
VERT	Vertical
VC	Vertical Curve
VOL	Volume
WM	Water Main
WV	Water Valve
W	West
WB	Wesbound
YD	Yard

UTILITIES

ALLIANT ENERGY
ELECTRIC
DANIEL CORLEY
520 COMMERCE AVE
BARABOO, WI 53913
PHONE: (608) 341-7010
EMAIL: DANIELCORLEY@ALLIANTENERGY.COM

FRONTIER COMMUNICATIONS OF WI LLC
COMMUNICATION
CHRISTOPHER BLUMER
451 BROADWAY
SUN PRAIRIE, WI 53590
PHONE: (608) 622-3807
EMAIL: CHRISTOPHER.BLUMER@FTR.COM

REEDSBURG UTILITY COMMISSION
COMMUNICATION
KEN LAS
501 UTILITY COURT
REEDSBURG, WI 53959
PHONE: (608) 768-1000
EMAIL: KLAS@RUCLS.NET

DIGGERS HOTLINE
Dial 811 or (800)242-8511
www.DiggersHotline.com

DESIGN PROJECT LEADER

JEREMY KRACHEY, PE
TEAM ENGINEERING INC.
210 GUARD STREET
WAUZEKA, WI 53826
PHONE: (608) 988-7059
EMAIL: JKRACHEY@TEAMENGINC.COM

DESIGN PROJECT MANAGER

PEGGY F WISCHHOFF, PE
SW - MADISON
2101 WRIGHT ST
MADISON, WI 53704
PHONE: (608) 246-5328
EMAIL: PEGGYF.WISCHHOFF@DOT.WI.GOV

OWNER - TOWN OF EXCELSIOR

KURT MUCHOW
CHAIRMAN
P.O. BOX 57
ROCK SPRINGS, WI 53961
PHONE: (608) 963-6594
EMAIL: KURTMUCHOW 2255@GMAIL.COM
EMAIL: EXCELSIORTOWNCLERK@GMAIL.COM

WISCONSIN DNR LIAISON

ANDY BARTA
SW
3911 FISH HATCHERY RD
FITCHBURG, WI 53711
PHONE: (608) 275-3308
EMAIL: ANDREW.BARTA@WISCONSIN.GOV

GENERAL NOTES

MULCH ALL SLOPES AS DIRECTED BY THE ENGINEER IN THE FIELD.

FINISHING ITEMS SHALL BE PLACED 5 FT. BEYOND THE SLOPE INTERCEPT WITH THE ORIGINAL GROUND AS SHOWN ON THE CROSS SECTIONS AND ON ALL DISTURBED AREAS.

THE LOCATIONS OF EXISTING AND PROPOSED UTILITY INSTALLATIONS AS SHOWN ON THE PLAN ARE APPROXIMATE. THERE MAY BE OTHER UTILITY INSTALLATIONS WITHIN THE PROJECT AREA THAT ARE NOT SHOWN.

THE EXACT LOCATION AND WIDTH OF PRIVATE, COMMERCIAL AND FIELD ENTRANCES TO BE DETERMINED BY THE ENGINEER IN THE FIELD. EXISTING DRIVEWAYS WILL BE RESTORED IN KIND AS DIRECTED BY THE ENGINEER IN THE FIELD.

ALL RADII ARE MEASURED FROM TO THE EDGE OF PAVEMENT UNLESS OTHERWISE SHOWN OR NOTED ON THE PLAN.

CURB AND GUTTER ELEVATIONS ARE GIVEN TO THE FLANGE OF THE CURB UNLESS OTHERWISE SHOWN OR NOTED ON THE PLAN.

HMA PAVEMENT WEIGHT CALCULATIONS ARE BASED ON 112/LB/SY/IN.

APPLY TACK COAT BETWEEN LAYERS OF PAVEMENT AND TO MILLED SURFACES. THE APPLICATION RATE IS 0.07 GALLONS PER SQUARE YARD BETWEEN THE MILLED SURFACE AND 0.05 GALLONS PER SQUARE YARD BETWEEN NEW HMA PAVEMENT LAYERS, OR AS DIRECTED BY THE ENGINEER.

ORDER OF SECTION 2 DETAIL SHEETS

GENERAL NOTES
PROJECT OVERVIEW
TYPICAL SECTIONS
CONSTRUCTION DETAILS
PLAN DETAILS - CURB & GUTTER
PLAN DETAILS - INTERSECTION
PLAN DETAILS - EROSION CONTROL
PLAN DETAILS - SIGNING
PLAN DETAILS - TRAFFIC CONTROL
PLAN DETAILS - ALIGNMENT
PLAN SHEETS

2

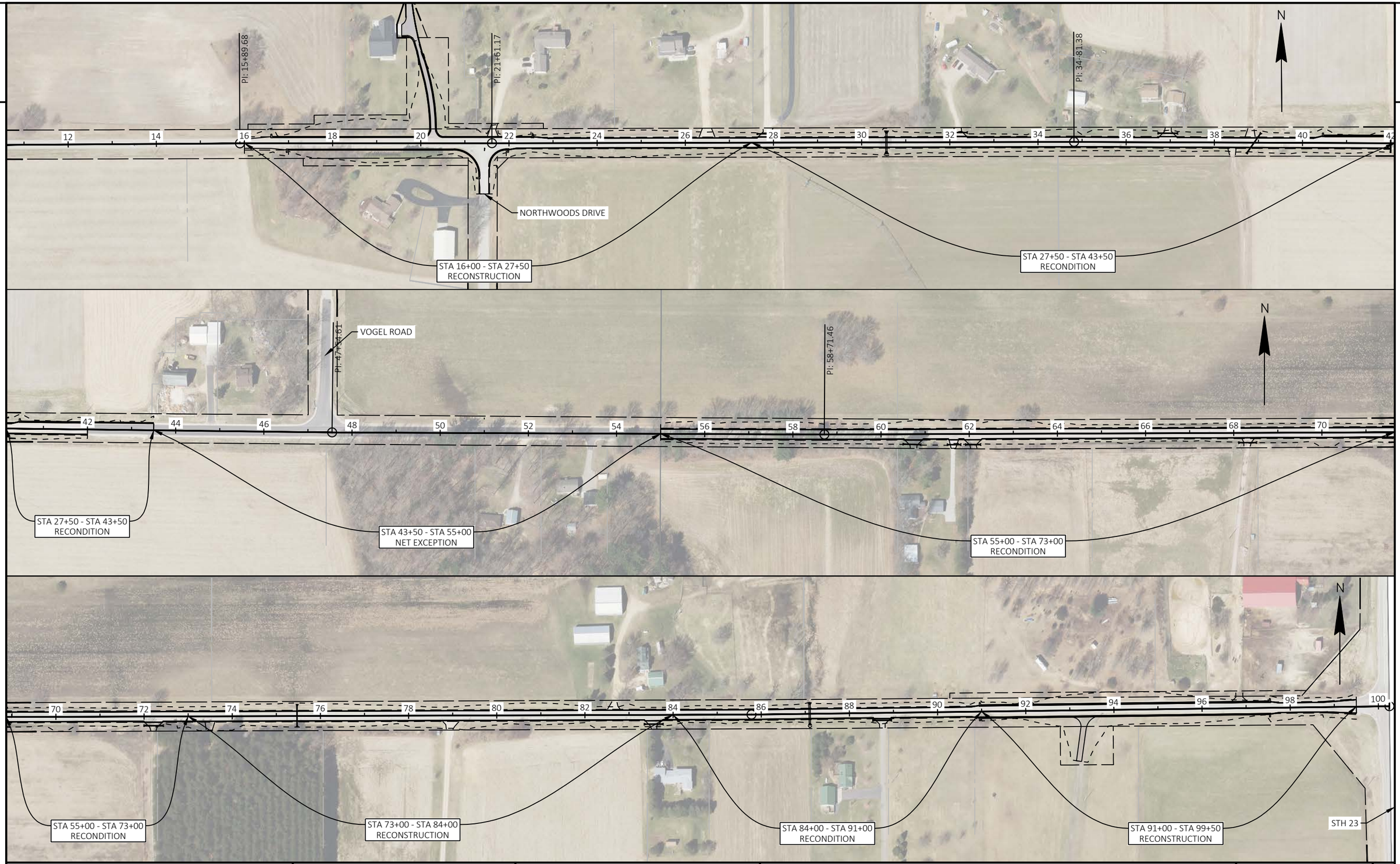

2

PROJECT NO: 5709-00-70	HWY: NORTH REEDSBURG ROAD	COUNTY: SAUK	PROJECT OVERVIEW	SHEET 3	E

FILE NAME : T:\PROJECTS\2023\23-2044-1 (WAUZEKA DRIVE)T EXCELSIOR, NORTH REEDSBURG ROAD, NORTHWOODS DRIVE TO STH 23, 5709-00-01\DRAWINGS\N REEDSBURG ROAD PROJECT OVERVIEW.DWG PLOT DATE : 5/18/2026 8:16 AM PLOT BY : TYLER BUCHANAN PLOT NAME : PLOT SCALE : 1 IN:200 FT
LAYOUT NAME - Project Overview 1

WISDOT/CADDS SHEET 44

2

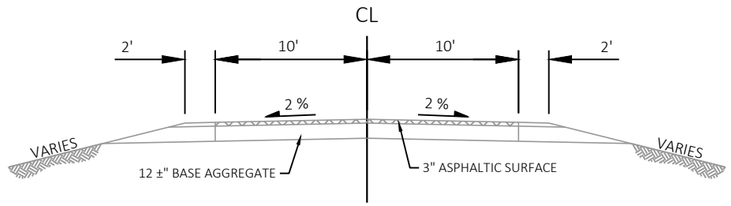

EXISTING TYPICAL SECTION
NORTH REEDSBURG ROAD
STA 16+00 - 99+50

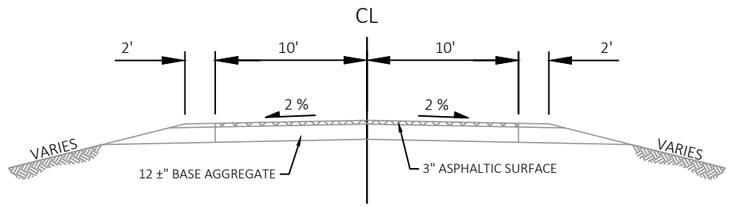

EXISTING TYPICAL SECTION
NORTHWOODS DR
STA 301+85 'NW' - STA 303+00 'NW'

PROJECT NO: 5709-00-70	HWY: NORTH REEDSBURG ROAD	COUNTY: SAUK	TYPICAL SECTIONS	SHEET 4	E

2

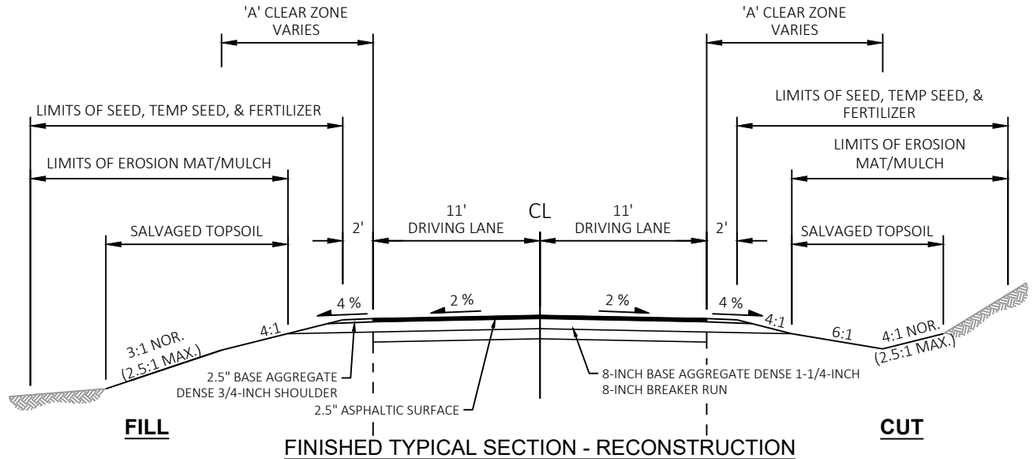

FINISHED TYPICAL SECTION - RECONSTRUCTION

NORTH REEDSBURG ROAD
STA 16+00 - STA 23+00
STA 23+00 - STA 27+50
STA 73+00 - STA 84+00
STA 91+00 - STA 99+50

CLEAR ZONE DISTANCE		
STATION	STATION	DISTANCE
16+00	23+00	16'-0"
23+00	27+50	12'-0"
73+00	84+00	12'-0"
91+00	99+50	16'-0"
301+85 'NW'	303+00 'NW'	12'-0"

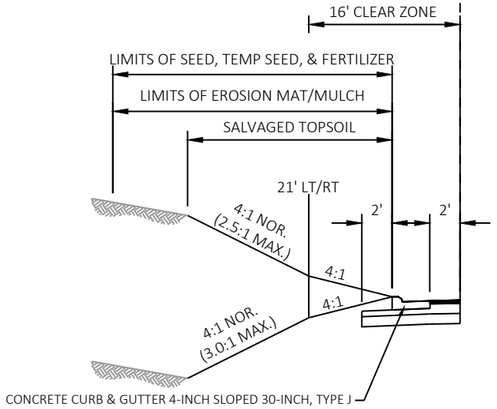

FINISHED TYPICAL SECTION - RECONSTRUCTION

NORTH REEDSBURG ROAD
STA 17+00 - 22+50, LT
STA 91+00 - 97+50, LT

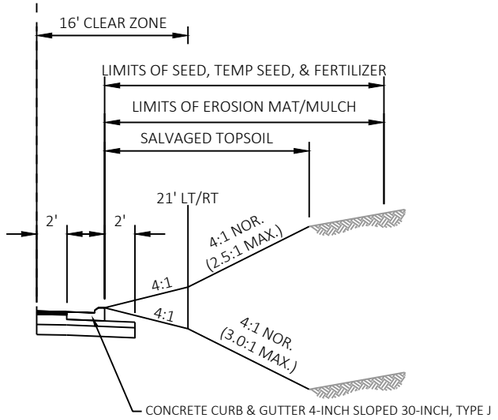

FINISHED TYPICAL SECTION - RECONSTRUCTION

NORTH REEDSBURG ROAD
STA 17+00 - 21+93.85, RT
STA 91+00 - 97+50, RT

PROJECT NO: 5709-00-70	HWY: NORTH REEDSBURG ROAD	COUNTY: SAUK	TYPICAL SECTIONS	SHEET 5	E

FILE NAME : T:\PROJECTS\2023\23-2044-1 (WAUZEKA DRIVE)T EXCELSIOR, NORTH REEDSBURG ROAD, NORTHWOODS DRIVE TO STH 23, 5709-00-01\DRAWINGS\N REEDSBURG ROAD TYPICAL SECTIONS.DWG
LAYOUT NAME - 01-10ft
PLOT DATE : 5/18/2026 8:16 AM PLOT BY : TYLER BUCHANAN PLOT NAME : PLOT SCALE : 1 IN:10 FT

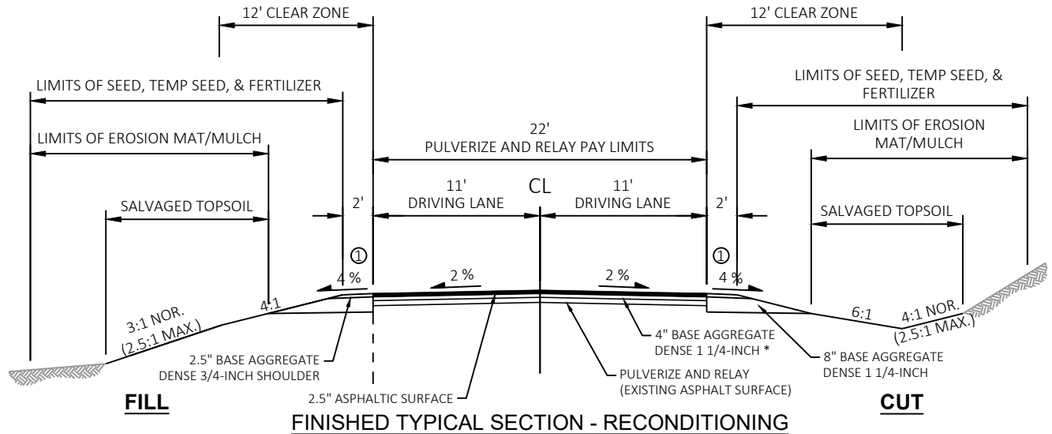

FINISHED TYPICAL SECTION - RECONDITIONING

NORTH REEDSBURG ROAD
STA 27+50 - 42+00
STA 55+00 - 73+00
STA 84+00 - 91+00

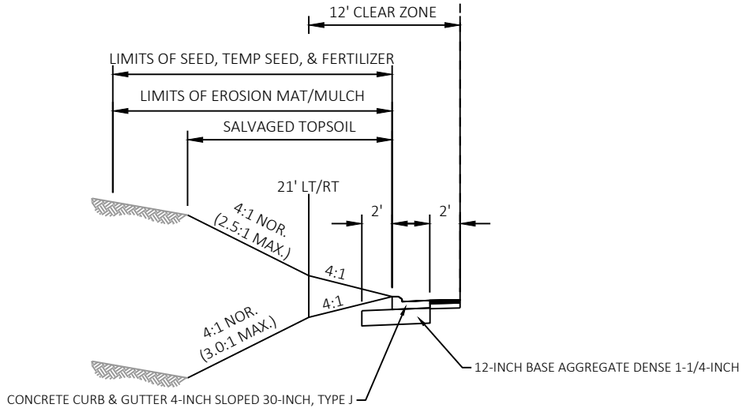

FINISHED TYPICAL SECTION - RECONDITIONING

NORTH REEDSBURG ROAD
STA 40+50 - 43+50, LT

NOTES:
1. BASE AGGREGATE SHOULDER WIDTH VARIES DUE TO EXISTING SIDE SLOPES

* PLACE 4" BASE AGGREGATE DENSE 1-1/4-INCH (18FT WIDTH) PRIOR TO PERFORMING THE PULVERIZE AND RELAY OPERATION TO INCORPORATE THE MATERIALS INTO A SINGLE 8-INCH MAXIMUM LAYER.

PROJECT NO: 5709-00-70	HWY: NORTH REEDSBURG ROAD	COUNTY: SAUK	TYPICAL SECTIONS	SHEET 6	E

2

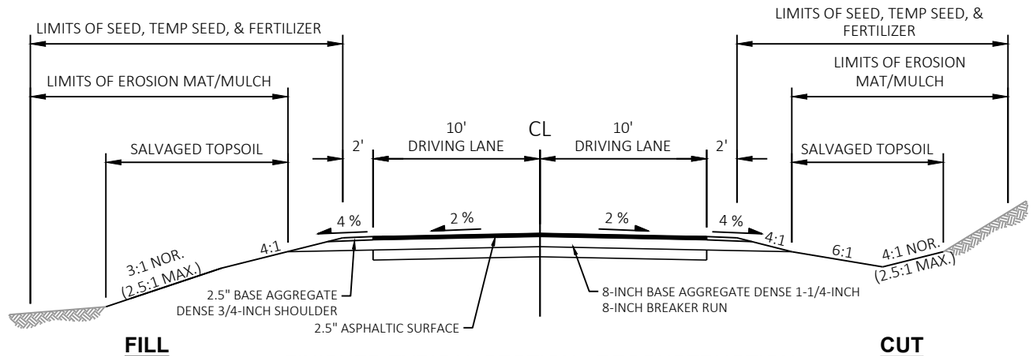

FINISHED TYPICAL SECTION - RECONSTRUCTION

NORTHWOODS ROAD
STA 301+85'NW' - STA 303+00'NW', 'A' = 16'

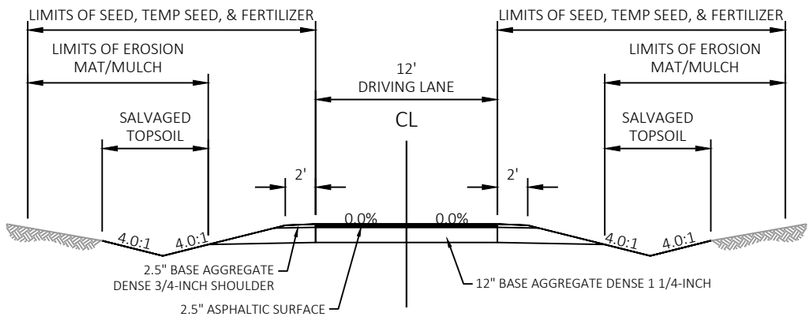

FINISHED TYPICAL SECTION - 'C' DRIVEWAY

STA 0+00 - 1+01.17

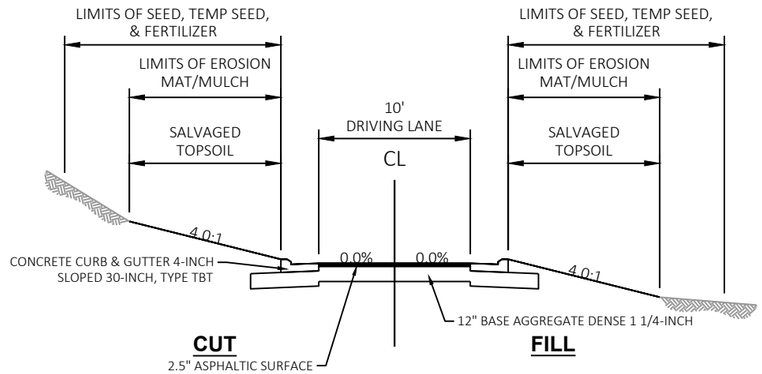

FINISHED TYPICAL SECTION - DRIVEWAY

STA -0+50 'G' - STA 2+08 'G'

PROJECT NO: 5709-00-70	HWY: NORTH REEDSBURG ROAD	COUNTY: SAUK	TYPICAL SECTIONS	SHEET 7	E

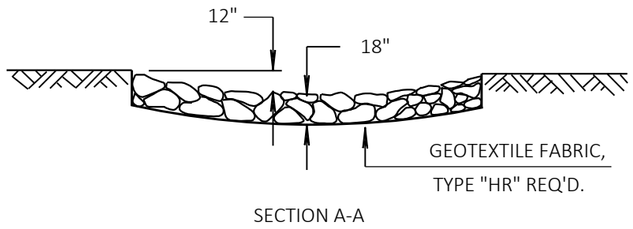

SECTION A-A

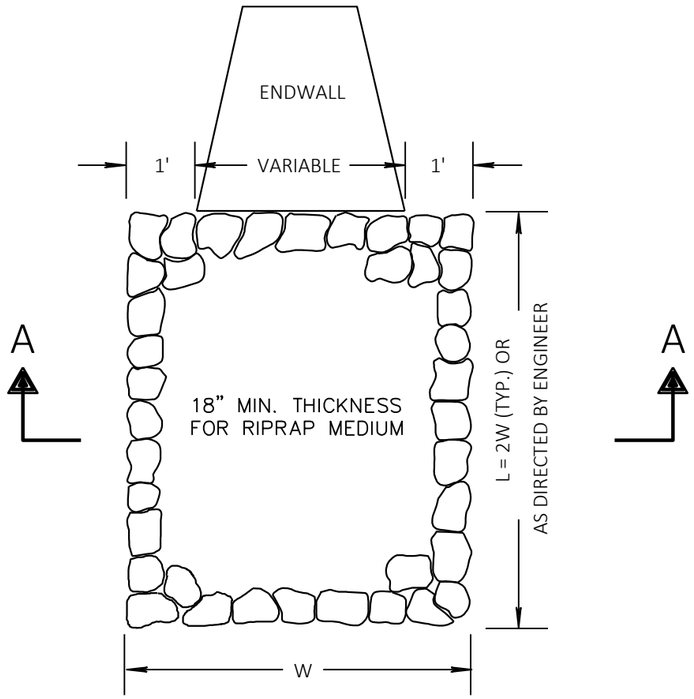

RIPRAP MEDIUM TREATMENT AT CULVERTS

2

* PAVEMENT REMOVAL LIMITS (TYPICAL)

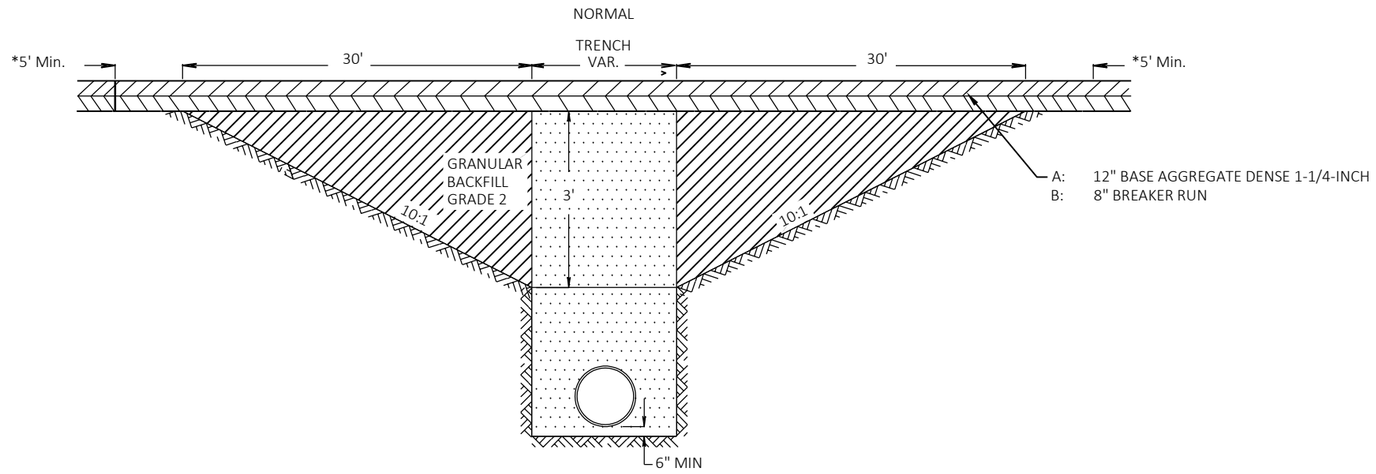

TRENCH CROSS SECTION
PRIOR TO HMA PLACEMENT

LEGEND

COMMON EXCAVATION & BACKFILL
GRANULAR GRADE 2 PAID SEPARATELY

EXCAVATION (INCIDENTAL TO REMOVING EXISTING
CULVERT) & BACKFILL GRANULAR GRADE 2

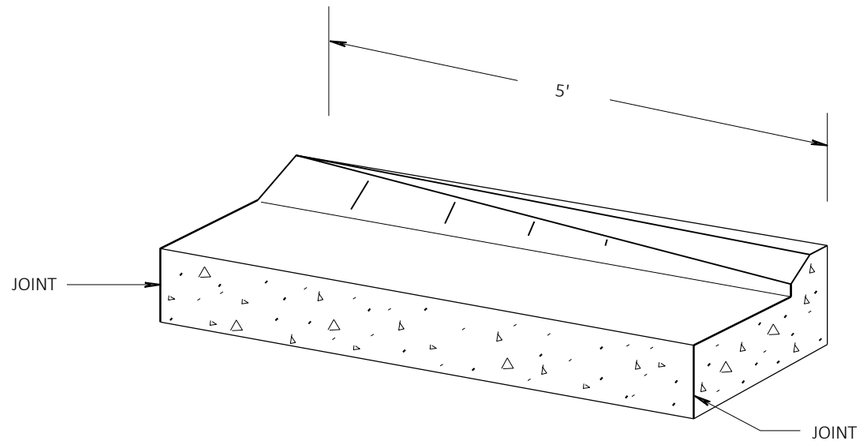

TRANSITION DETAIL

CONCRETE CURB & GUTTER 4-INCH SLOPED 30-INCH TYPE J TO CONCRETE CURB & GUTTER 4-INCH SLOPED 30-INCH TYPE TBT
(TO BE MEASURED & PAID FOR AS CONCRETE CURB & GUTTER 4-INCH SLOPED 30-INCH TYPE J TO CONCRETE CURB)

PROJECT NO: 5709-00-70	HWY: NORTH REEDSBURG ROAD	COUNTY: SAUK	CONSTRUCTION DETAILS	SHEET 9	E

2

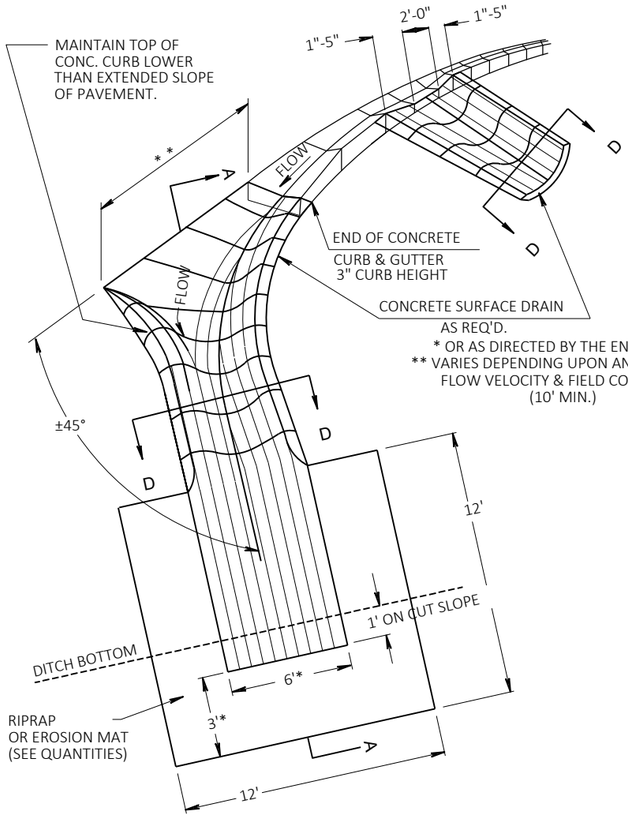

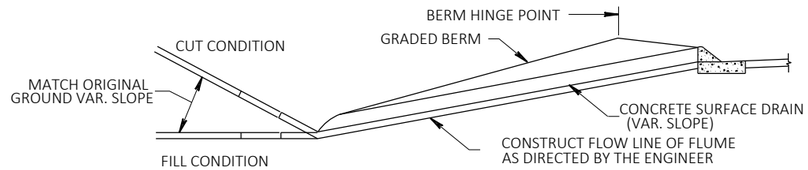

SECTION A-A

SEE SDD DRAWING FOR MORE DETAILS

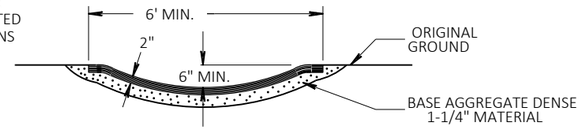

SECTION D-D

CONCRETE SURFACE DRAIN DETAIL

PROJECT NO: 5709-00-70	HWY: NORTH REEDSBURG ROAD	COUNTY: SAUK	CONSTRUCTION DETAILS	SHEET 10	E

FILE NAME : T:\PROJECTS\2023\23-2044-1 (WAUZEKA DRIVE)T EXCELSIOR, NORTH REEDSBURG ROAD, NORTHWOODS DRIVE TO STH 23, 5709-00-01\DRAWINGS\N REEDSBURG ROAD CONSTRUCTION DETAILS.DWG PLOT DATE : 5/18/2026 8:16 AM PLOT BY : TYLER BUCHANAN PLOT NAME : PLOT SCALE : 1 IN:10 FT
LAYOUT NAME - 03

STA 17+00 TO STA 22+50 LT CURB GRADES				STA 17+00 TO STA 22+50 LT CURB GRADES			
POINT NUMBER	STATION	OFFSET	ELEVATION	POINT NUMBER	STATION	OFFSET	ELEVATION
1	16+65.00	13.00' LT	942.80	14	19+75.00	13.00' LT	951.42
2	16+74.90	13.00' LT	943.24	15	20+00.00	13.00' LT	951.47
3	17+00.00	13.00' LT	944.34	16	20+05.84	13.00' LT	951.46
4	17+25.00	13.00' LT	945.45	17	20+49.74	13.00' LT	951.25
5	17+50.00	13.00' LT	946.50	18	20+75.00	13.00' LT	950.99
6	17+75.00	13.00' LT	947.45	19	21+00.00	13.00' LT	950.63
7	18+00.00	13.00' LT	948.30	20	21+25.00	13.00' LT	950.17
8	18+25.00	13.00' LT	949.05	21	21+50.00	13.00' LT	949.61
9	18+50.00	13.00' LT	949.70	22	21+75.00	13.00' LT	948.94
10	18+75.00	13.00' LT	950.24	23	22+00.00	13.00' LT	948.23
11	19+00.00	13.00' LT	950.69	24	22+25.00	13.00' LT	947.51
12	19+25.00	13.00' LT	951.03	25	22+50.00	13.00' LT	946.79
13	19+50.00	13.00' LT	951.28				

SEE CURB DETAILS AND PLAN AND PROFILE SHEETS FOR LIMITS ON THE "G" ALIGNMENT

15' RADIUS
STA 20+05.79, 28.00' LT
STA 1+26.49, 22.00' RT
REJECT CURB ON RADIUS

15' RADIUS
STA 20+49.79, 28.00' LT
STA 1+26.49, 22.00' LT

PI: 21+61.17

17+00 18+00 19+00 20+00 21+00 22+00

EP: 303+00.00 'NW'

NORTH REEDSBURG RD

60' RADIUS
STA 20+73.85, 73.06' RT
STA 300+76.75'NW', 70.03' LT

40' RADIUS
STA 21+93.85, 51.00' RT
STA 300+99.20'NW', 50.00'RT

302+00 'NW'

NORTHWOODS DR

STA 17+00 TO STA 21+44 RT CURB GRADES				STA 17+00 TO STA 21+44 RT CURB GRADES			
POINT NUMBER	STATION	OFFSET	ELEVATION	POINT NUMBER	STATION	OFFSET	ELEVATION
30	17+00.00	13.00' RT	944.34	39	19+25.00	13.00' RT	951.03
31	17+25.00	13.00' RT	945.45	40	19+50.00	13.00' RT	951.28
32	17+50.00	13.00' RT	946.50	41	19+75.00	13.00' RT	951.42
33	17+75.00	13.00' RT	947.45	42	20+00.00	13.00' RT	951.47
34	18+00.00	13.00' RT	948.30	43	20+25.00	13.00' RT	951.41
35	18+25.00	13.00' RT	949.05	44	20+49.98	13.00' RT	951.25
36	18+50.00	13.00' RT	949.70	45	20+73.87	13.00' RT	950.97
37	18+74.99	13.00' RT	950.24	46	21+17.06	31.35' RT	950.11
38	19+00.00	13.00' RT	950.69	47	21+33.87	75.16' RT	949.25

STA 21+44 TO STA 22+00 RT CURB GRADES			
POINT NUMBER	STATION	OFFSET	ELEVATION
48	21+53.94	50.83' RT	949.38
49	21+65.63	22.65' RT	948.98
50	21+93.85	11.00' RT	948.44

PROJECT NO: 5709-00-70	HWY: NORTH REEDSBURG ROAD	COUNTY: SAUK	PLAN DETAILS - CURB & GUTTER	SHEET 11	E

2

N

STA 40+50 TO STA 43+50 LT CURB GRADES			
POINT NUMBER	STATION	OFFSET	ELEVATION
60	40+50.00	15.00' LT	945.05
61	40+75.00	15.00' LT	945.57
62	41+00.00	15.00' LT	946.08
63	41+24.99	15.00' LT	946.60
64	41+50.00	15.00' LT	947.12
65	41+75.00	15.00' LT	947.68
66	42+00.00	15.00' LT	948.32
67	42+25.00	15.00' LT	949.03
68	42+50.00	15.00' LT	949.83
69	42+75.00	15.00' LT	950.67
70	43+00.00	15.00' LT	951.45
71	43+25.00	15.00' LT	952.13
72	43+50.00	15.00' LT	952.70

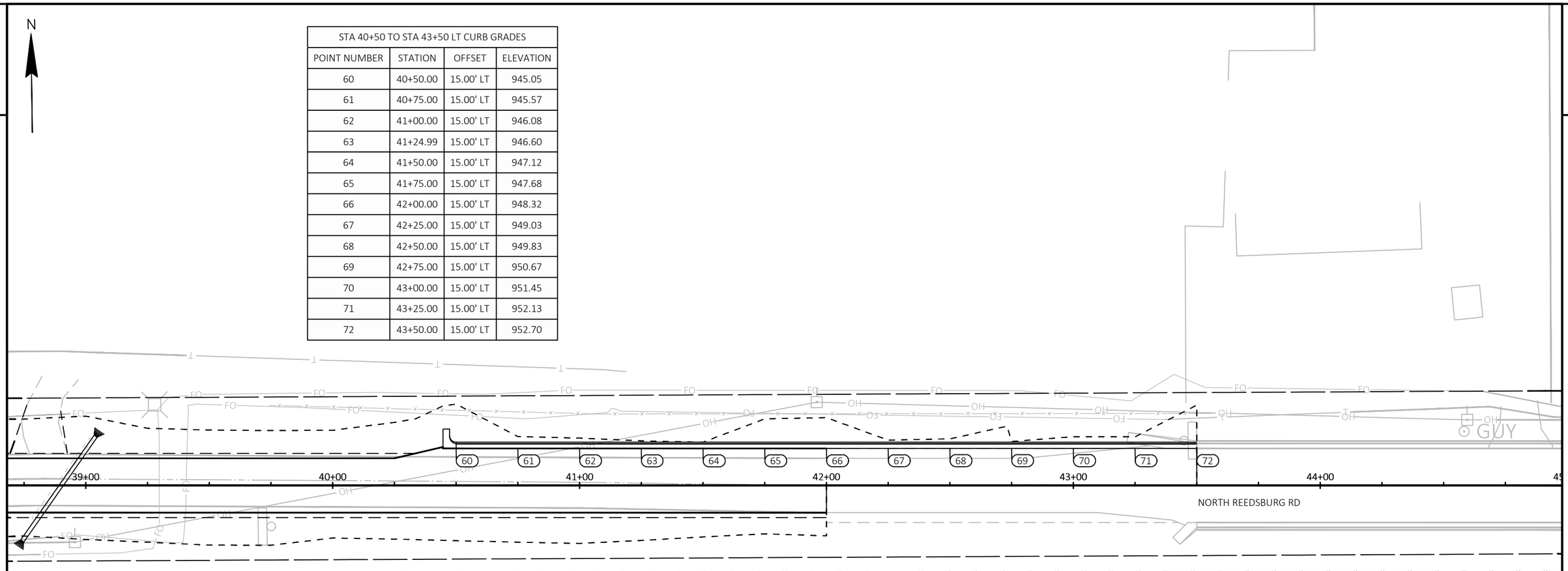

2

PROJECT NO: 5709-00-70	HWY: NORTH REEDSBURG ROAD	COUNTY: SAUK	PLAN DETAILS - CURB & GUTTER	SHEET 12	E

FILE NAME : T:\PROJECTS\2023\23-2044-1 (WAUZEKA DRIVE)T EXCELSIOR, NORTH REEDSBURG ROAD, NORTHWOODS DRIVE TO STH 23, 5709-00-01\DRAWINGS\N REEDSBURG ROAD CURB DETAILS.DWG PLOT DATE : 5/18/2026 8:16 AM PLOT BY : TYLER BUCHANAN PLOT NAME : PLOT SCALE : 1 IN:40 FT
LAYOUT NAME - Curb Detail 2

WISDOT/CADDS SHEET 42

2

STA 91+00 TO STA 97+50 LT CURB GRADES				STA 91+00 TO STA 97+50 LT CURB GRADES			
POINT NUMBER	STATION	OFFSET	ELEVATION	POINT NUMBER	STATION	OFFSET	ELEVATION
80	91+00.00	13.00' LT	916.52	94	94+50.00	13.00' LT	924.71
81	91+25.00	13.00' LT	917.69	95	94+75.00	13.00' LT	924.55
82	91+50.00	13.00' LT	918.82	96	95+00.00	13.00' LT	924.29
83	91+75.00	13.00' LT	919.86	97	95+25.00	13.00' LT	923.93
84	92+00.00	13.00' LT	920.80	98	95+50.00	13.00' LT	923.47
85	92+25.00	13.00' LT	921.64	99	95+75.00	13.00' LT	922.92
86	92+50.00	13.00' LT	922.38	100	96+00.00	13.00' LT	922.26
87	92+75.00	13.00' LT	923.02	101	96+25.00	13.00' LT	921.50
88	93+00.00	13.00' LT	923.56	102	96+50.00	13.00' LT	920.64
89	93+25.00	13.00' LT	924.00	103	96+75.00	13.00' LT	919.69
90	93+50.00	13.00' LT	924.34	104	97+00.00	13.00' LT	918.68
91	93+75.00	13.00' LT	924.58	105	97+25.00	13.00' LT	917.68
92	94+00.00	13.00' LT	924.73	106	97+50.00	13.00' LT	916.67
93	94+25.00	13.00' LT	924.77				

N

2

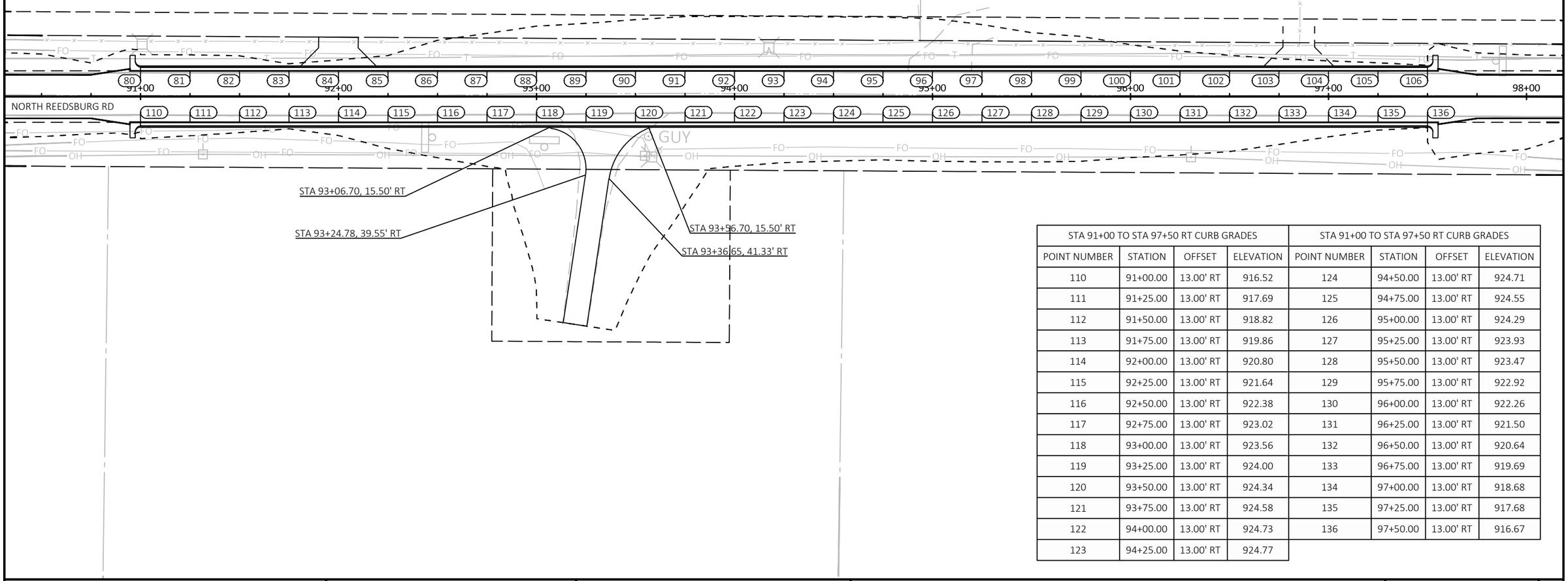

STA 91+00 TO STA 97+50 RT CURB GRADES				STA 91+00 TO STA 97+50 RT CURB GRADES			
POINT NUMBER	STATION	OFFSET	ELEVATION	POINT NUMBER	STATION	OFFSET	ELEVATION
110	91+00.00	13.00' RT	916.52	124	94+50.00	13.00' RT	924.71
111	91+25.00	13.00' RT	917.69	125	94+75.00	13.00' RT	924.55
112	91+50.00	13.00' RT	918.82	126	95+00.00	13.00' RT	924.29
113	91+75.00	13.00' RT	919.86	127	95+25.00	13.00' RT	923.93
114	92+00.00	13.00' RT	920.80	128	95+50.00	13.00' RT	923.47
115	92+25.00	13.00' RT	921.64	129	95+75.00	13.00' RT	922.92
116	92+50.00	13.00' RT	922.38	130	96+00.00	13.00' RT	922.26
117	92+75.00	13.00' RT	923.02	131	96+25.00	13.00' RT	921.50
118	93+00.00	13.00' RT	923.56	132	96+50.00	13.00' RT	920.64
119	93+25.00	13.00' RT	924.00	133	96+75.00	13.00' RT	919.69
120	93+50.00	13.00' RT	924.34	134	97+00.00	13.00' RT	918.68
121	93+75.00	13.00' RT	924.58	135	97+25.00	13.00' RT	917.68
122	94+00.00	13.00' RT	924.73	136	97+50.00	13.00' RT	916.67
123	94+25.00	13.00' RT	924.77				

PROJECT NO: 5709-00-70	HWY: NORTH REEDSBURG ROAD	COUNTY: SAUK	PLAN DETAILS - CURB & GUTTER	SHEET 13	E

FILE NAME : T:\PROJECTS\2023\23-2044-1 (WAUZEKA DRIVE)T EXCELSIOR, NORTH REEDSBURG ROAD, NORTHWOODS DRIVE TO STH 23, 5709-00-01\DRAWINGS\N REEDSBURG ROAD CURB DETAILS.DWG PLOT DATE : 5/18/2026 8:16 AM PLOT BY : TYLER BUCHANAN PLOT NAME : PLOT SCALE : 1 IN:50 FT
LAYOUT NAME - Curb Detail 3

WISDOT/CADDS SHEET 42

DRIVEWAY CURB GRADES				DRIVEWAY CURB GRADES			
POINT NUMBER	STATION	OFFSET	ELEVATION	POINT NUMBER	STATION	OFFSET	ELEVATION
150	-0+20.07	28.33' RT	0.00	166	2+21.91	14.23' RT	951.49
151	-0+17.43	18.37' RT	0.00	167	0+25.00	3.68' LT	963.04
152	-0+10.62	8.28' RT	0.00	168	0+32.84	3.66' LT	962.83
153	0+00.77	4.01' RT	963.90	169	0+50.00	5.16' LT	962.07
154	0+25.00	3.41' RT	963.07	170	0+69.47	5.17' LT	960.72
155	0+50.00	5.16' RT	962.07	171	1+00.00	5.17' LT	957.83
156	0+69.47	5.17' RT	960.72	172	1+25.00	5.17' LT	955.39
157	1+00.00	5.17' RT	957.83	173	1+37.64	5.17' LT	954.16
158	1+25.00	5.17' RT	955.39	174	1+50.00	5.17' LT	953.10
159	1+37.53	5.17' RT	954.17	175	1+75.00	5.17' LT	951.82
160	1+50.00	5.17' RT	953.10	176	2+05.81	5.17' LT	951.52
161	1+75.00	5.17' RT	951.82	177	2+12.75	6.92' LT	951.45
162	2+05.60	5.16' RT	951.53	178	2+14.43	7.82' LT	951.43
163	2+09.31	5.61' RT	951.52	179	2+16.11	8.71' LT	951.41
164	2+12.78	6.94' RT	951.51	180	2+21.91	14.23' LT	951.33
165	2+16.11	8.71' RT	951.50				

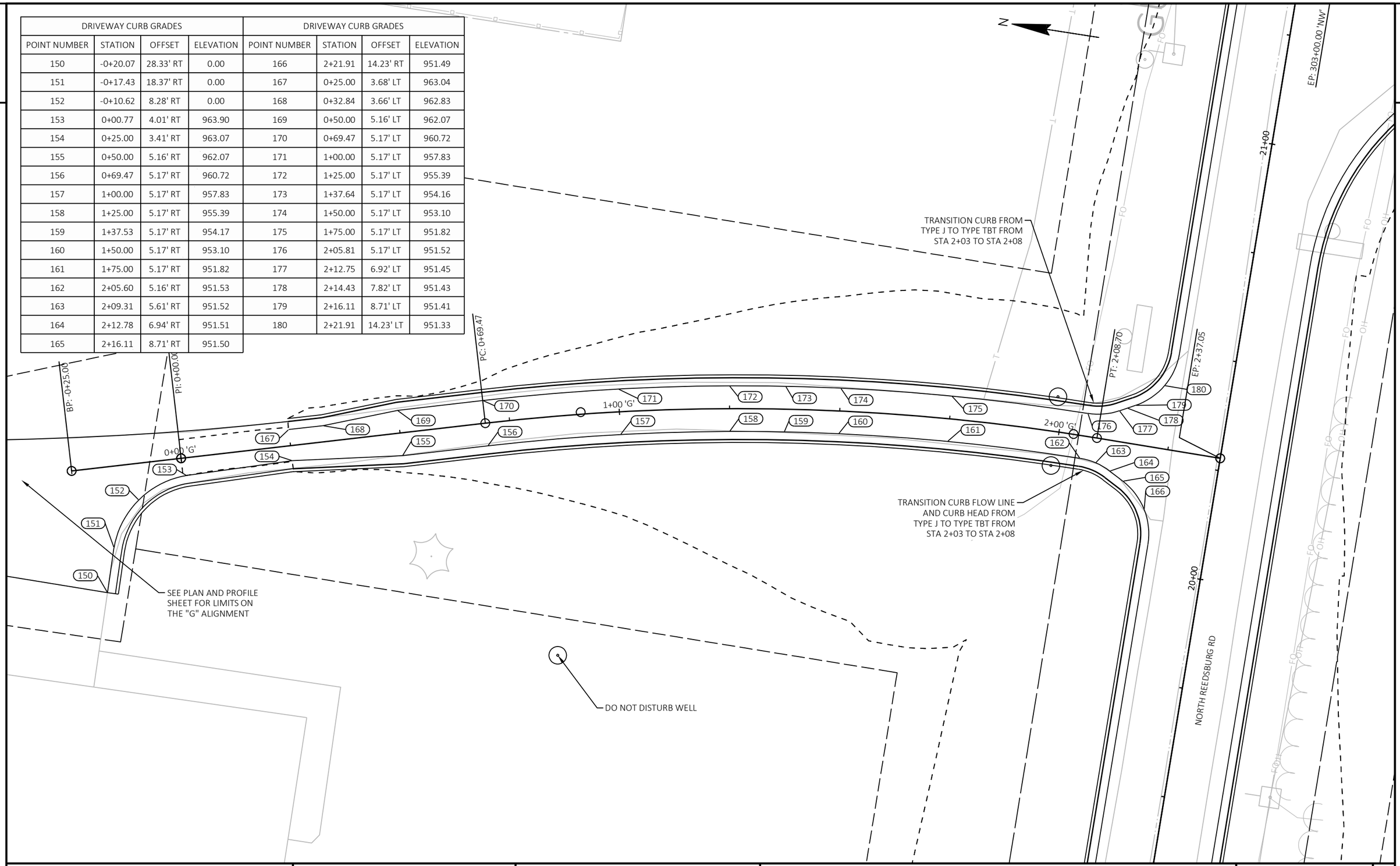

PROJECT NO: 5709-00-70	HWY: NORTH REEDSBURG ROAD	COUNTY: SAUK	PLAN DETAILS - CURB & GUTTER	SHEET 14	E

FILE NAME : T:\PROJECTS\2023\23-2044-1 (WAUZEKA DRIVE)T EXCELSIOR, NORTH REEDSBURG ROAD, NORTHWOODS DRIVE TO STH 23, 5709-00-01\DRAWINGS\N REEDSBURG ROAD CURB DETAILS.DWG PLOT DATE : 9/21/2026 2:06 PM PLOT BY : JEREMY PLOT NAME : PLOT SCALE : 1 IN:20 FT
LAYOUT NAME - Driveway Curb Detail 1

WISDOT/CADDS SHEET 42

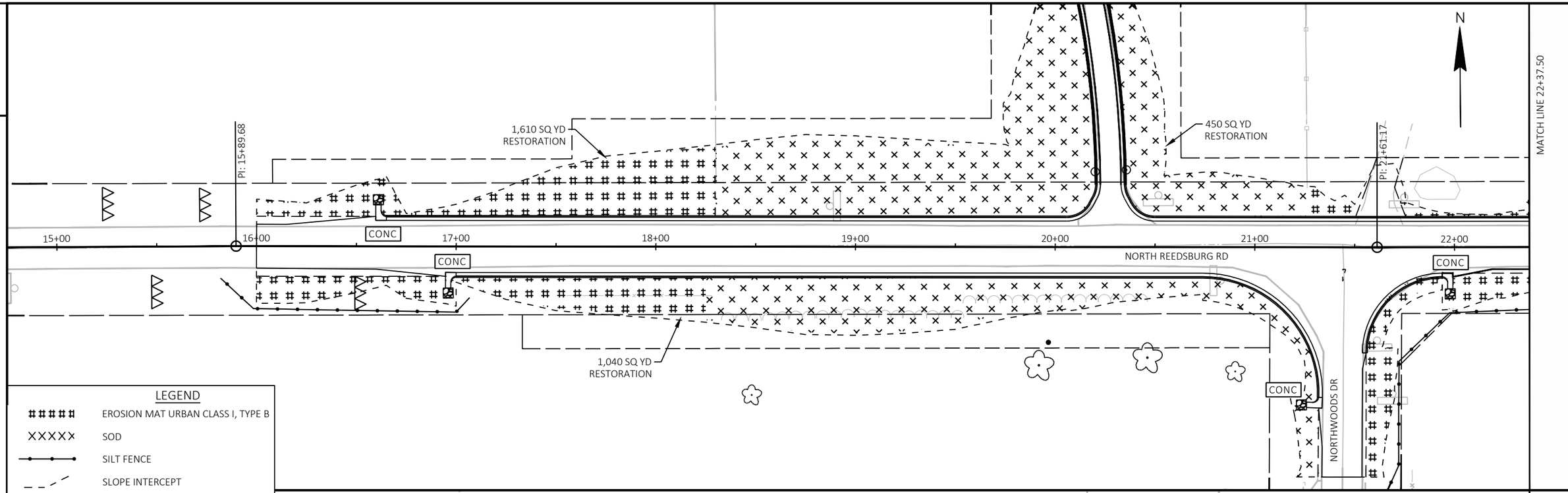

PROJECT NO: 5709-00-70	HWY: NORTH REEDSBURG ROAD	COUNTY: SAUK	PLAN DETAILS - EROSION CONTROL	SHEET 15	E

FILE NAME : T:\PROJECTS\2023\23-2044-1 (WAUZEKA DRIVE)T EXCELSIOR, NORTH REEDSBURG ROAD, NORTHWOODS DRIVE TO STH 23, 5709-00-01\DRAWINGS\N REEDSBURG ROAD EROSION CONTROL.DWG PLOT DATE : 5/18/2026 8:16 AM PLOT BY : TYLER BUCHANAN PLOT NAME : PLOT SCALE : 1 IN:50 FT
LAYOUT NAME - EC 1

WISDOT/CADDS SHEET 44

2

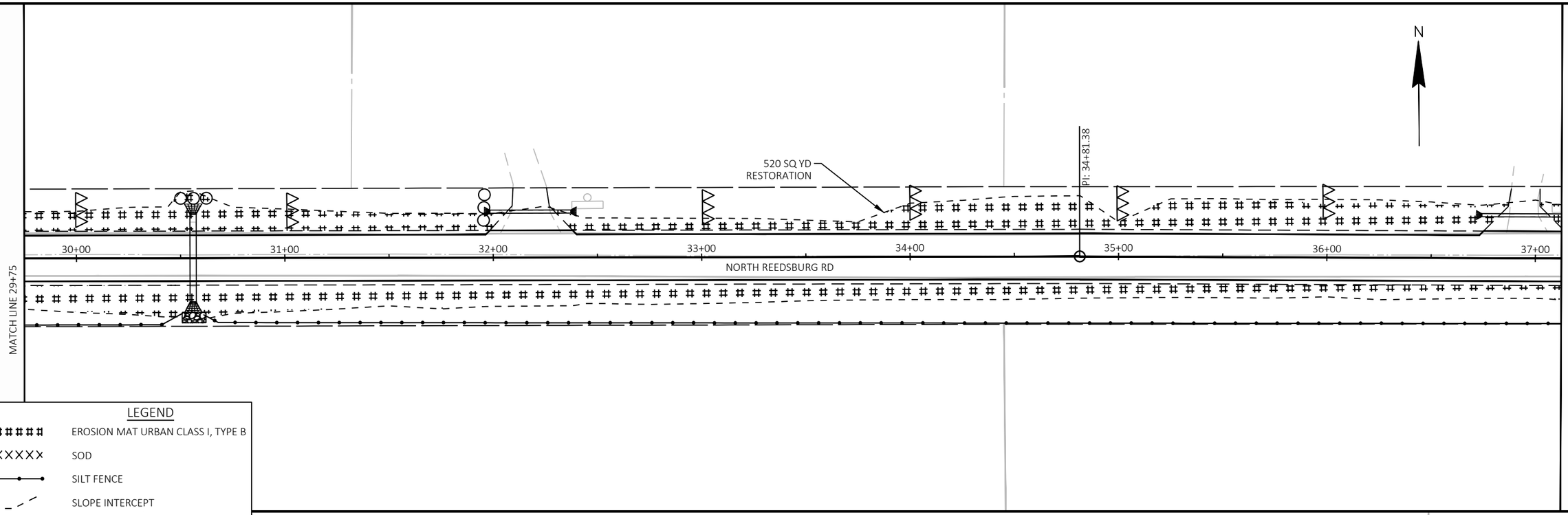

2

LEGEND

- EROSION MAT URBAN CLASS I, TYPE B
- SOD
- SILT FENCE
- SLOPE INTERCEPT
- CONC — CONCRETE SURFACE DRAIN
- TEMPORARY DITCH CHECK
- CULVERT PIPE CHECK

NOTES:

- ALL AREAS DISTURBED ARE TO HAVE SALVAGED TOPSOIL
- AREAS NOT LABELED AS E-MAT ARE TO BE MULCHED
- USE SEED MIX NO. 40 IN ALL RESIDENTIAL LAWN LOCATIONS

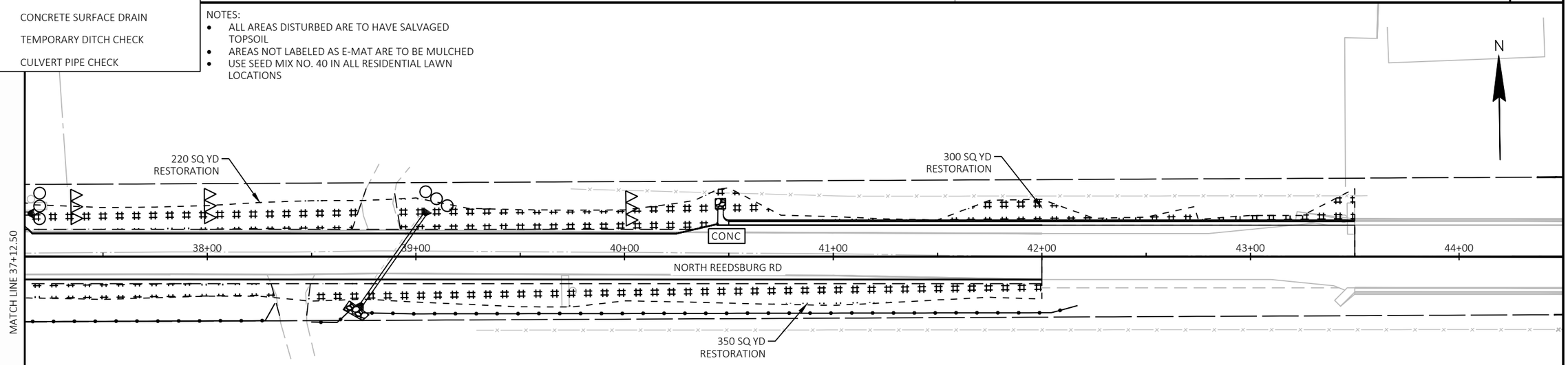

PROJECT NO: 5709-00-70	HWY: NORTH REEDSBURG ROAD	COUNTY: SAUK	PLAN DETAILS - EROSION CONTROL	SHEET 16	E

FILE NAME : T:\PROJECTS\2023\23-2044-1 (WAUZEKA DRIVE)T EXCELSIOR, NORTH REEDSBURG ROAD, NORTHWOODS DRIVE TO STH 23, 5709-00-01\DRAWINGS\N REEDSBURG ROAD EROSION CONTROL.DWG
LAYOUT NAME - EC 2
PLOT DATE : 5/18/2026 8:16 AM PLOT BY : TYLER BUCHANAN PLOT NAME : PLOT SCALE : 1 IN:50 FT

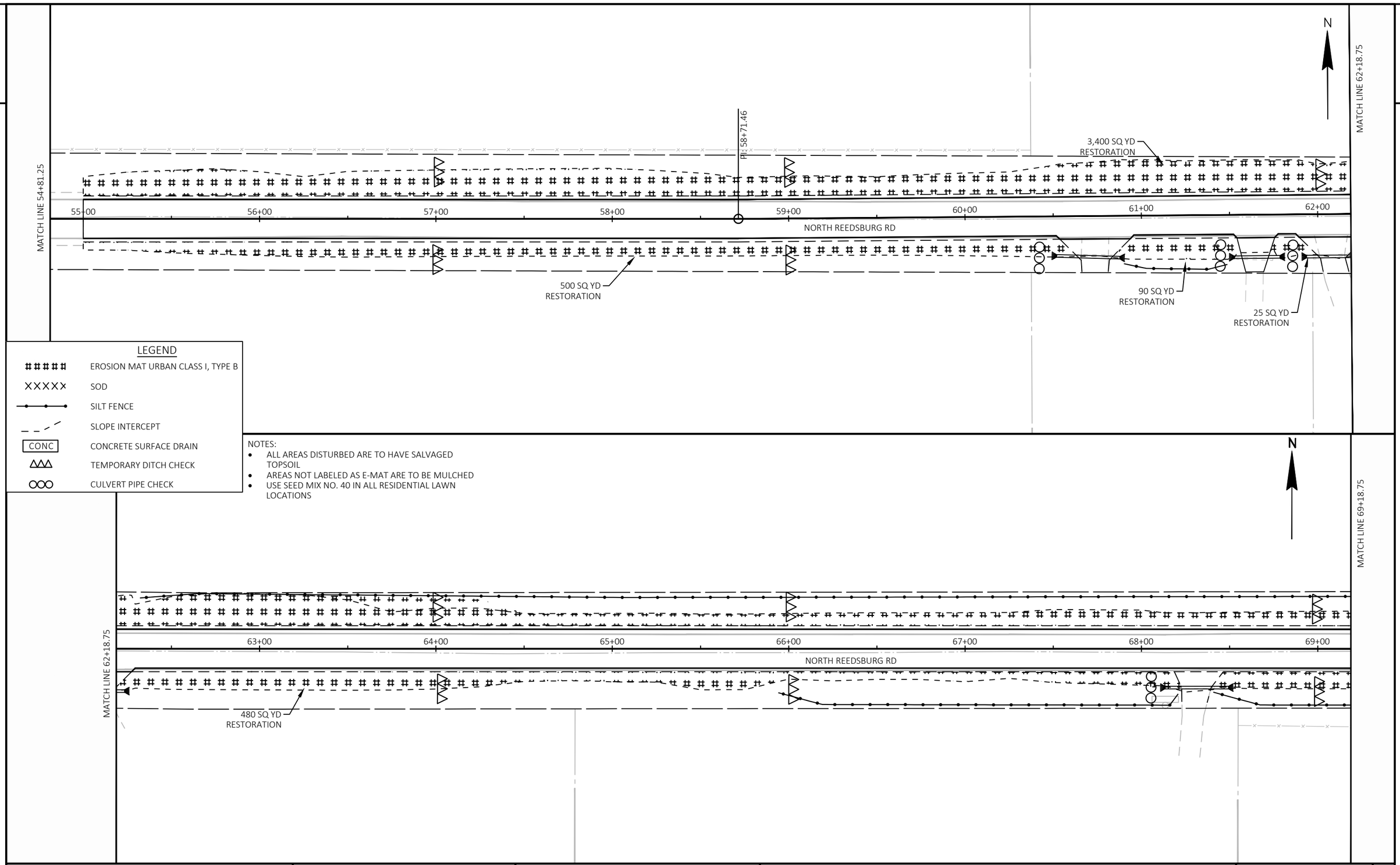

PROJECT NO: 5709-00-70	HWY: NORTH REEDSBURG ROAD	COUNTY: SAUK	PLAN DETAILS - EROSION CONTROL	SHEET 17	E

FILE NAME : T:\PROJECTS\2023\23-2044-1 (WAUZEKA DRIVE)T EXCELSIOR, NORTH REEDSBURG ROAD, NORTHWOODS DRIVE TO STH 23, 5709-00-01\DRAWINGS\N REEDSBURG ROAD EROSION CONTROL.DWG
LAYOUT NAME - EC 3
PLOT DATE : 5/18/2026 8:16 AM PLOT BY : TYLER BUCHANAN PLOT NAME : PLOT SCALE : 1 IN:50 FT
WISDOT/CADDS SHEET 44

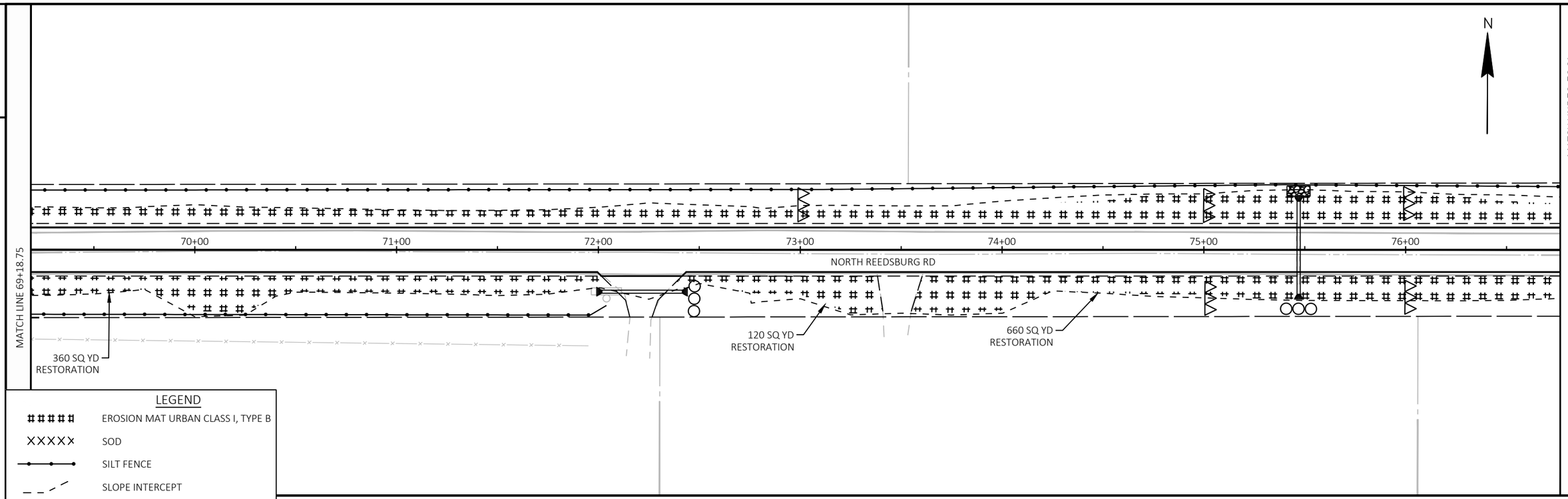

LEGEND

#####	EROSION MAT URBAN CLASS I, TYPE B
XXXXX	SOD
—•—•—	SILT FENCE
– – –	SLOPE INTERCEPT
CONC	CONCRETE SURFACE DRAIN
ΔΔΔ	TEMPORARY DITCH CHECK
OOO	CULVERT PIPE CHECK

NOTES:
- ALL AREAS DISTURBED ARE TO HAVE SALVAGED TOPSOIL
- AREAS NOT LABELED AS E-MAT ARE TO BE MULCHED
- USE SEED MIX NO. 40 IN ALL RESIDENTIAL LAWN LOCATIONS

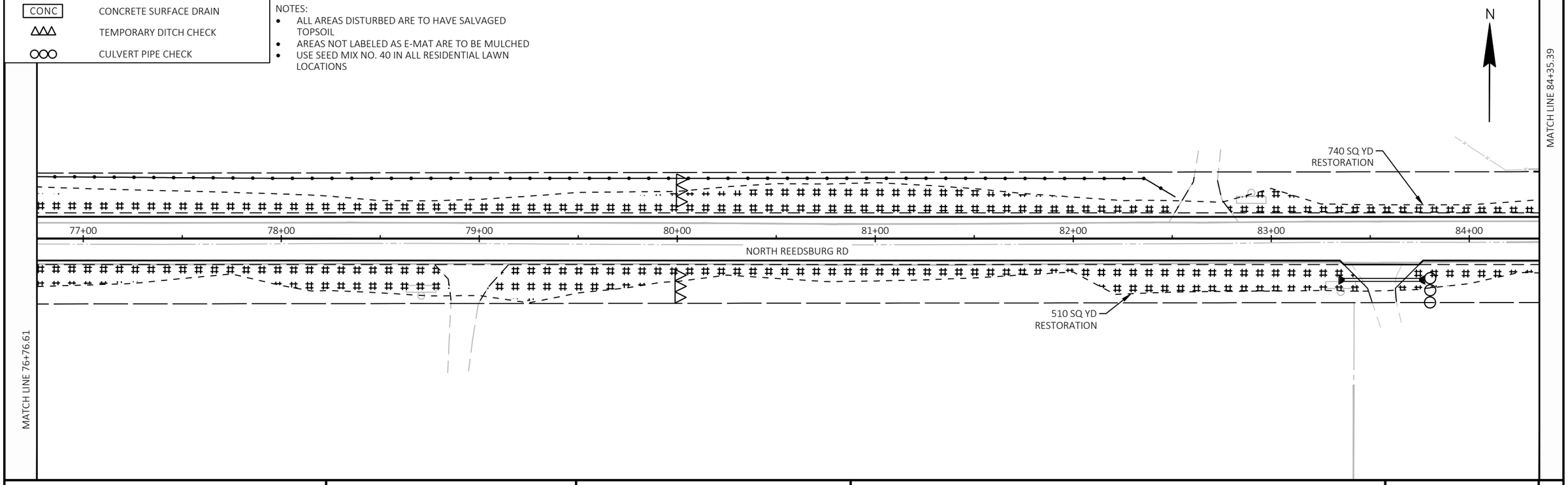

PROJECT NO: 5709-00-70	HWY: NORTH REEDSBURG ROAD	COUNTY: SAUK	PLAN DETAILS - EROSION CONTROL	SHEET 18	E

FILE NAME : T:\PROJECTS\2023\23-2044-1 (WAUZEKA DRIVE)T EXCELSIOR, NORTH REEDSBURG ROAD, NORTHWOODS DRIVE TO STH 23, 5709-00-01\DRAWINGS\N REEDSBURG ROAD EROSION CONTROL.DWG PLOT DATE : 5/18/2026 8:16 AM PLOT BY : TYLER BUCHANAN PLOT NAME : PLOT SCALE : 1 IN:50 FT
LAYOUT NAME - EC 4

WISDOT/CADDS SHEET 44

2

MATCH LINE 84+35.39

PI: 85+77.63

85+00 86+00 87+00 88+00 89+00 90+00 91+00 92+

NORTH REEDSBURG RD

CONC

CONC

340 SQ YD RESTORATION

640 SQ YD RESTORATION

N

MATCH LINE 92+00

2

LEGEND

- EROSION MAT URBAN CLASS I, TYPE B
- SOD
- SILT FENCE
- SLOPE INTERCEPT
- CONC — CONCRETE SURFACE DRAIN
- TEMPORARY DITCH CHECK
- CULVERT PIPE CHECK

NOTES:

- ALL AREAS DISTURBED ARE TO HAVE SALVAGED TOPSOIL
- AREAS NOT LABELED AS E-MAT ARE TO BE MULCHED
- USE SEED MIX NO. 40 IN ALL RESIDENTIAL LAWN LOCATIONS

740 SQ YD RESTORATION

200 SQ YD RESTORATION

MATCH LINE 92+00

-00 93+00 94+00 95+00 96+00 97+00 98+00 99+00

CONC

CONC

NORTH REEDSBURG RD

1,040 SQ YD RESTORATION

N

PROJECT NO: 5709-00-70	HWY: NORTH REEDSBURG ROAD	COUNTY: SAUK	PLAN DETAILS - EROSION CONTROL	SHEET 19	E

FILE NAME : T:\PROJECTS\2023\23-2044-1 (WAUZEKA DRIVE)T EXCELSIOR, NORTH REEDSBURG ROAD, NORTHWOODS DRIVE TO STH 23, 5709-00-01\DRAWINGS\N REEDSBURG ROAD EROSION CONTROL.DWG LAYOUT NAME - EC 5

PLOT DATE : 5/18/2026 8:16 AM PLOT BY : TYLER BUCHANAN PLOT NAME : PLOT SCALE : 1 IN:50 FT

WISDOT/CADDS SHEET 44

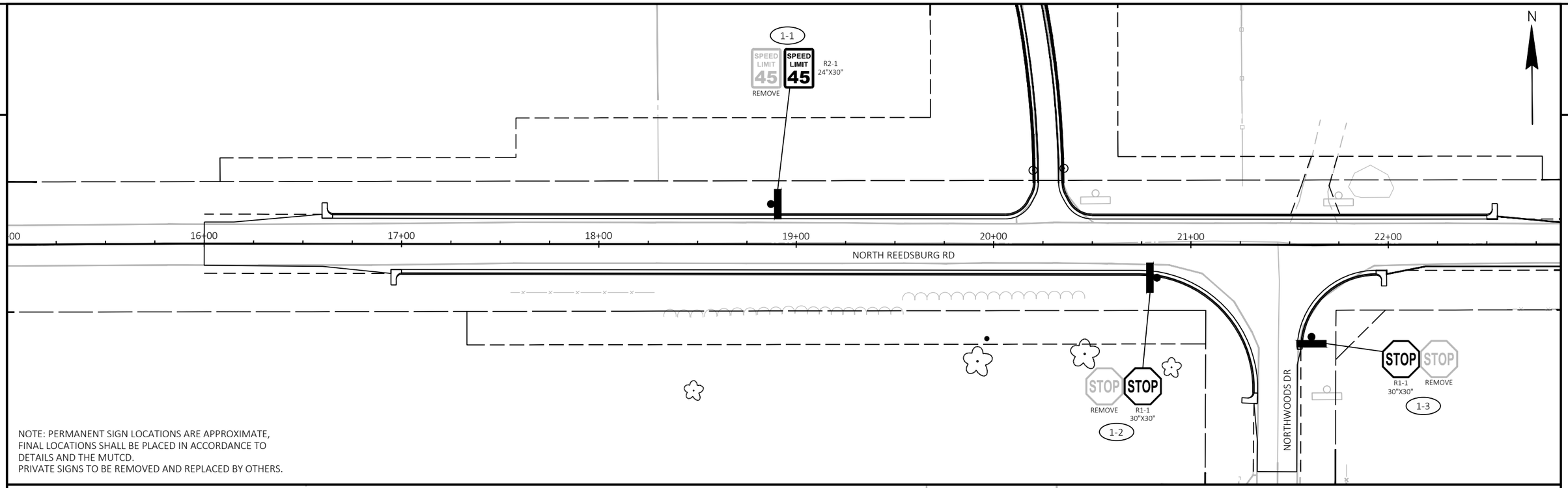

NOTE: PERMANENT SIGN LOCATIONS ARE APPROXIMATE,
FINAL LOCATIONS SHALL BE PLACED IN ACCORDANCE TO
DETAILS AND THE MUTCD.
PRIVATE SIGNS TO BE REMOVED AND REPLACED BY OTHERS.

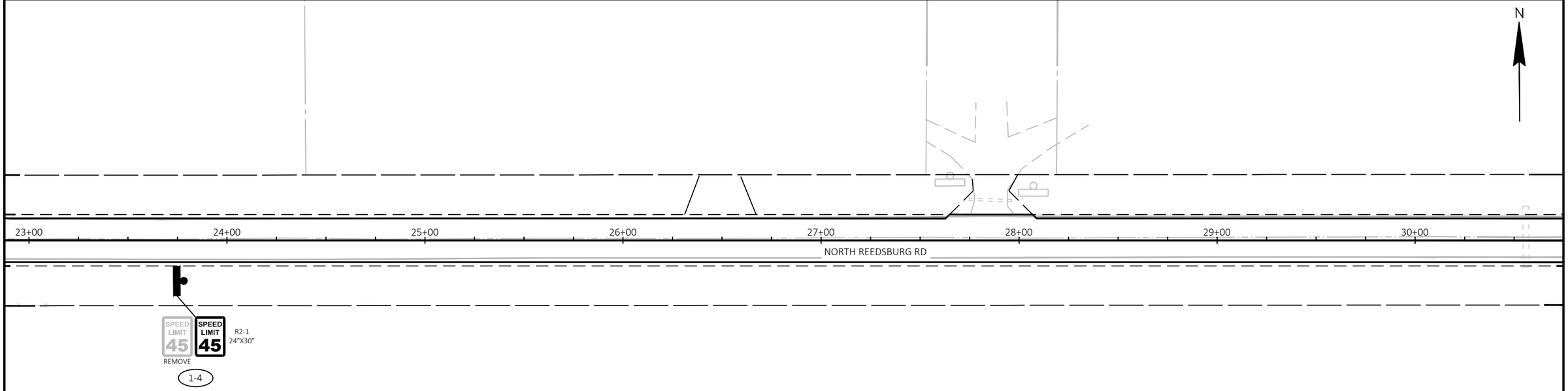

PROJECT NO: 5709-00-70	HWY: NORTH REEDSBURG ROAD	COUNTY: SAUK	PLAN DETAILS - SIGNING	SHEET 20	E

FILE NAME : T:\PROJECTS\2023\23-2044-1 (WAUZEKA DRIVE)T EXCELSIOR, NORTH REEDSBURG ROAD, NORTHWOODS DRIVE TO STH 23, 5709-00-01\DRAWINGS\N REEDSBURG ROAD SIGN PLAN.DWG PLOT DATE : 5/18/2026 8:17 AM PLOT BY : TYLER BUCHANAN PLOT NAME : PLOT SCALE : 1 IN:50 FT
LAYOUT NAME - Sign Plan Removals 1

2

N

31+00 32+00 33+00 34+00 35+00 36+00 37+00 38+00

NORTH REEDSBURG RD

NOTE: PERMANENT SIGN LOCATIONS ARE APPROXIMATE,
FINAL LOCATIONS SHALL BE PLACED IN ACCORDANCE TO
DETAILS AND THE MUTCD.
PRIVATE SIGNS TO BE REMOVED AND REPLACED BY OTHERS.

N

39+00 40+00 41+00 42+00 43+00 44+00 45+00 46+00

NORTH REEDSBURG RD

STOP AHEAD
REMOVE

W3-1
36"X36"

ALL WAY
R1-3P
18"X6"

R1-3-P SIGNS TO BE ADDED TO ALL 3 STOP SIGNS
AT THE INTERSECTION OF N REEDSBURG ROAD
AND VOGEL ROAD WITHIN NET EXCEPTION

2-1

PROJECT NO: 5709-00-70	HWY: NORTH REEDSBURG ROAD	COUNTY: SAUK	PLAN DETAILS - SIGNING	SHEET 21	E

FILE NAME : T:\PROJECTS\2023\23-2044-1 (WAUZEKA DRIVE)T EXCELSIOR, NORTH REEDSBURG ROAD, NORTHWOODS DRIVE TO STH 23, 5709-00-01\DRAWINGS\N REEDSBURG ROAD SIGN PLAN.DWG PLOT DATE : 5/18/2026 8:17 AM PLOT BY : TYLER BUCHANAN PLOT NAME : PLOT SCALE : 1 IN:50 FT
LAYOUT NAME - Sign Plan Removals 2

WISDOT/CADDS SHEET 44

2

N

86+00 87+00 88+00 89+00 90+00 91+00 92+00 93+00

NORTH REEDSBURG RD

EP: 1+01.21

PC: 0+78.26

PT:

STOP AHEAD

REMOVE 5-1

W3-1 36"X36"

BP: 0+00.00

NOTE: PERMANENT SIGN LOCATIONS ARE APPROXIMATE,
FINAL LOCATIONS SHALL BE PLACED IN ACCORDANCE TO
DETAILS AND THE MUTCD.
PRIVATE SIGNS TO BE REMOVED AND REPLACED BY OTHERS.

N

SPEED LIMIT 45

MOVE 5-2

TOWN OF EXCELSIOR ROADS & HIGHWAYS ARE ATV ROUTES UNLESS POSTED

35 M P H

MOVE 5-3

WEIGHT LIMIT CLASS B

EP: 1+15.90 94+00 95+00 96+00 97+00 98+00 99+00 100+00

NORTH REEDSBURG RD

1+01.21

PT: 0+85.75

ATV ROUTE

5-4 MOVE

PROJECT NO: 5709-00-70	HWY: NORTH REEDSBURG ROAD	COUNTY: SAUK	PLAN DETAILS - SIGNING	SHEET 22	E

FILE NAME : T:\PROJECTS\2023\23-2044-1 (WAUZEKA DRIVE)T EXCELSIOR, NORTH REEDSBURG ROAD, NORTHWOODS DRIVE TO STH 23, 5709-00-01\DRAWINGS\N REEDSBURG ROAD SIGN PLAN.DWG PLOT DATE : 5/18/2026 8:17 AM PLOT BY : TYLER BUCHANAN PLOT NAME : PLOT SCALE : 1 IN:50 FT
LAYOUT NAME - Sign Plan Removals 5

2

2

N

BRIAR BLUFF RD

VOGEL RD

SEE SDD 15C03-05 FOR MORE DETAILS

SEE SDD 15C02-10A FOR MORE DETAILS

SEE SDD 15C02-10A FOR MORE DETAILS

A 2 3 4 5

1

N REEDSBURG RD

1

2 3 4 5 A

1

SEE SDD 15C03-05 FOR MORE DETAILS

NORTHWOODS DR

23

23 33

33

ABLEMAN RD

A
MB

FRAME 1	FRAME 2
ROAD TO CLOSE	XX/XX/XX

PLACE 7 CALENDAR DAYS PRIOR TO BEGINNING CONSTRUCTION

LEGEND:

WORK ZONE

TRAFFIC CONTROL GENERAL NOTES:

DRAWING IS NOT TO SCALE

ALL TRAFFIC CONTROL SIGNS AND DEVICES AND THEIR LOCATIONS SHALL BE IN CONFORMANCE WITH THE WISCONSIN MANUAL ON UNIFORM TRAFFIC CONTROL DEVICES (WMUTCD), THE PLANS, STANDARD SPECIFICATIONS AND APPLICABLE STANDARD DETAIL DRAWINGS.

ADJUST THE EXACT NUMBER, LOCATION AND SPACING OF ALL SIGNS AND DEVICES TO FIT FIELD CONDITIONS AS DIRECTED BY THE ENGINEER.

ALL W SIGNS ARE 48" X 48" UNLESS OTHERWISE NOTED.

"WO" SIGNS ARE THE SAME AS "W" SIGNS EXCEPT THE BACKGROUND IS ORANGE.

"MO" SIGNS ARE THE SAME AS "M" SIGNS EXCEPT THE BACKGROUND IS ORANGE.

1. INSTALL ADVANCED WARNING SIGNS ON NORTH REEDSBURG ROAD PRIOR TO THE PROJECT ENDING WORK ZONE AND ON ALL SIDEROADS LOCATED WITHIN THE PROJECT LIMITS WITH SPEED LIMITS 45 M.P.H. OR GREATER, IN ACCORDANCE WITH SDD "TRAFFIC CONTROL, ADVANCE WARNING SIGNS 45 M.P.H. OR GREATER, TWO WAY UNDIVIDED ROAD OPEN TO TRAFFIC".
2. UTILIZE FLAGGING OPERATIONS IN ACCORDANCE WITH SDD "TRAFFIC CONTROL FOR LANE CLOSURE WITH FLAGGING OPERATION" AND CONFORMING TO THE STANDARD SPECIFICATIONS WHEN CLOSING A LANE FOR CONSTRUCTION OPERATIONS.
3. INSTALL TRAFFIC CONTROL SIGNS IN ACCORDANCE WITH SDD "TRAFFIC CONTROL FOR DROP-OFF SIGNING" DURING WORK OPERATIONS THAT CREATE DROP-OFFS OR HAZARDS DEFINED BY THE STANDARD SPECIFICATIONS.
4. INSTALL SIGNING IN ACCORDANCE WITH SDD "TRAFFIC CONTROL, SIGNING ON ROADWAYS WITH MILLED SURFACES" DURING THE MILLING OPERATIONS.
5. INSTALL SIGNING IN ACCORDANCE WITH SDD "TRAFFIC CONTROL, SIGNING ON ROADWAYS WITH LOOSE GRAVEL" WHEN PAVEMENT IS REMOVED AND TRAFFI CNEEDS TO RUN ON ANY REMAINING GRAVEL SURFACE.

PROJECT NO: 5709-00-70	HWY: NORTH REEDSBURG ROAD	COUNTY: SAUK	PLAN DETAILS - TRAFFIC CONTROL	SHEET 23	E

2

2

N

BP: 10+00.00

PI: 15+89.68

11+00 | 12+00 | S89°51'24"E 589.68' | 13+00 | 14+00 | 15+00 | 16+00 | 17+00

NORTH REEDSBURG ROAD

STA 10+00.00
0.00'
Y=262737.380
X=602076.844

STA 15+89.68
0.00'
Y=262735.904
X=602666.518

'G'

SEE OTHER SHEETS
FOR DATA

N

Control Points					
POINT NUMBER	STATION	OFFSET	ELEVATION	NORTHING	EASTING
1	18+30.13	32.23' LT	961.47	262766.06	602907.25
2	24+39.76	32.87' LT	938.00	262761.97	603516.80

1
RBR

2
RBR

2+00 'G'

PT: 2+08.70 'G'

PI: 21+61.17

STA 21+61.17
0.00'
Y=262730.983
X=603237.996

EP: 303+00.00 'NW'

18+00 | S89°30'24"E 571.50' | 19+00 | 20+00 | 21+00 | 22+00 | 23+00 | 24+00 | 25+00

EP: 2+37.05 'G'

NORTH REEDSBURG ROAD

STA 20+27.79
0.00'
Y=262732.131
X=603104.619

STA 21+44.08
0.00'
Y=262731.130
X=603220.900

NORTHWOODS DRIVE

SEE OTHER SHEETS
FOR DATA

2+00 'NW'

PROJECT NO: 5709-00-70	HWY: NORTH REEDSBURG ROAD	COUNTY: SAUK	PLAN DETAILS - ALIGNMENT DETAILS NORTH REEDSBURG ROAD	SHEET 24	E

FILE NAME : T:\PROJECTS\2023\23-2044-1 (WAUZEKA DRIVE)T EXCELSIOR, NORTH REEDSBURG ROAD, NORTHWOODS DRIVE TO STH 23, 5709-00-01\DRAWINGS\N REEDSBURG ROAD ALIGNMENT DETAILS.DWG
LAYOUT NAME - Alignment Details 1

PLOT DATE : 5/18/2026 8:17 AM PLOT BY : TYLER BUCHANAN PLOT NAME : PLOT SCALE : 1 IN:50 FT

WISDOT/CADDS SHEET 44

2

2

Control Points					
POINT NUMBER	STATION	OFFSET	ELEVATION	NORTHING	EASTING
3	27+52.98	33.04' LT	934.05	262760.03	603830.01
4	31+31.94	33.37' LT	933.45	262757.80	604208.96

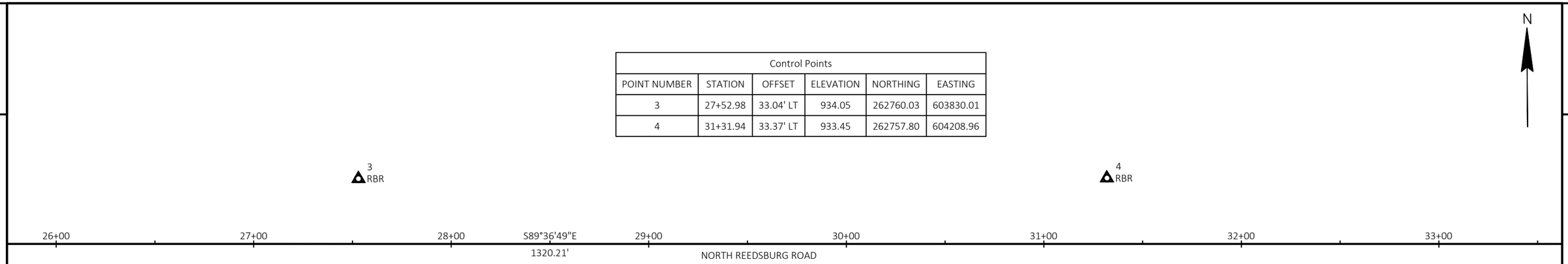

Section Corners					
POINT NUMBER	STATION	OFFSET	ELEVATION	NORTHING	EASTING
101	34+44.77	0.63' LT	934.70	262722.96	604521.57

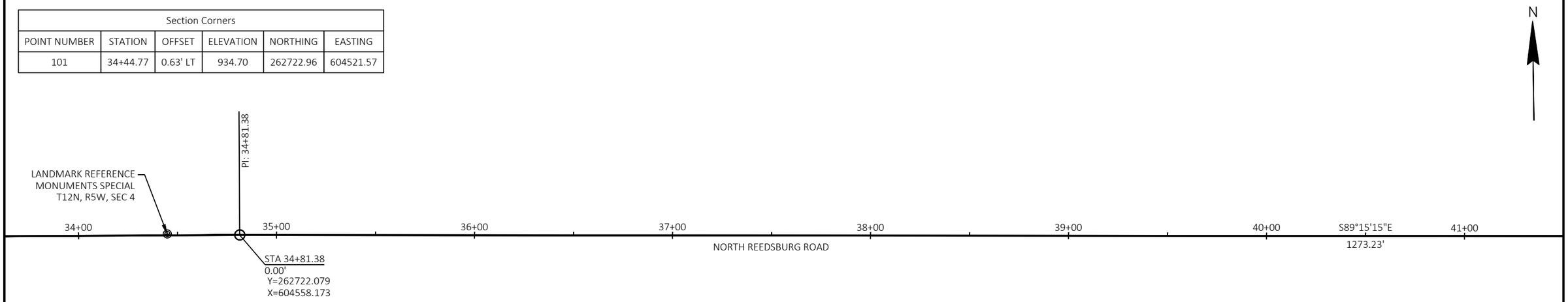

PROJECT NO: 5709-00-70	HWY: NORTH REEDSBURG ROAD	COUNTY: SAUK	PLAN DETAILS - ALIGNMENT DETAILS NORTH REEDSBURG ROAD	SHEET 25	E

FILE NAME : T:\PROJECTS\2023\23-2044-1 (WAUZEKA DRIVE)T EXCELSIOR, NORTH REEDSBURG ROAD, NORTHWOODS DRIVE TO STH 23, 5709-00-01\DRAWINGS\N REEDSBURG ROAD ALIGNMENT DETAILS.DWG
LAYOUT NAME - Alignment Details 2
PLOT DATE : 5/18/2026 8:17 AM PLOT BY : TYLER BUCHANAN PLOT NAME : PLOT SCALE : 1 IN:50 FT

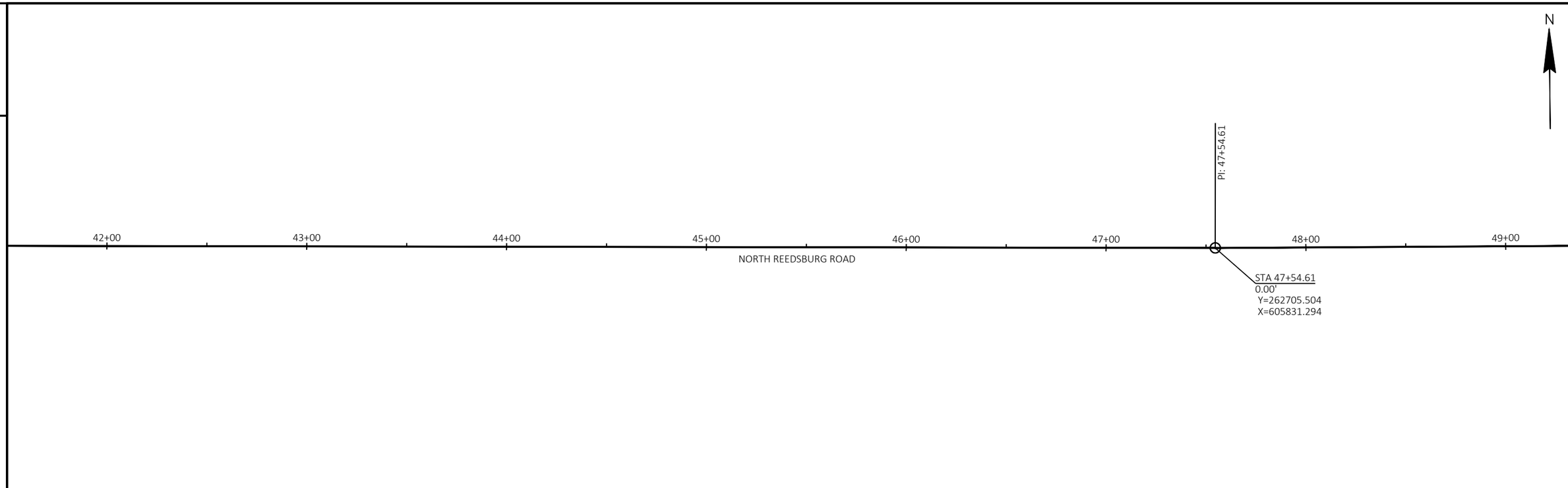

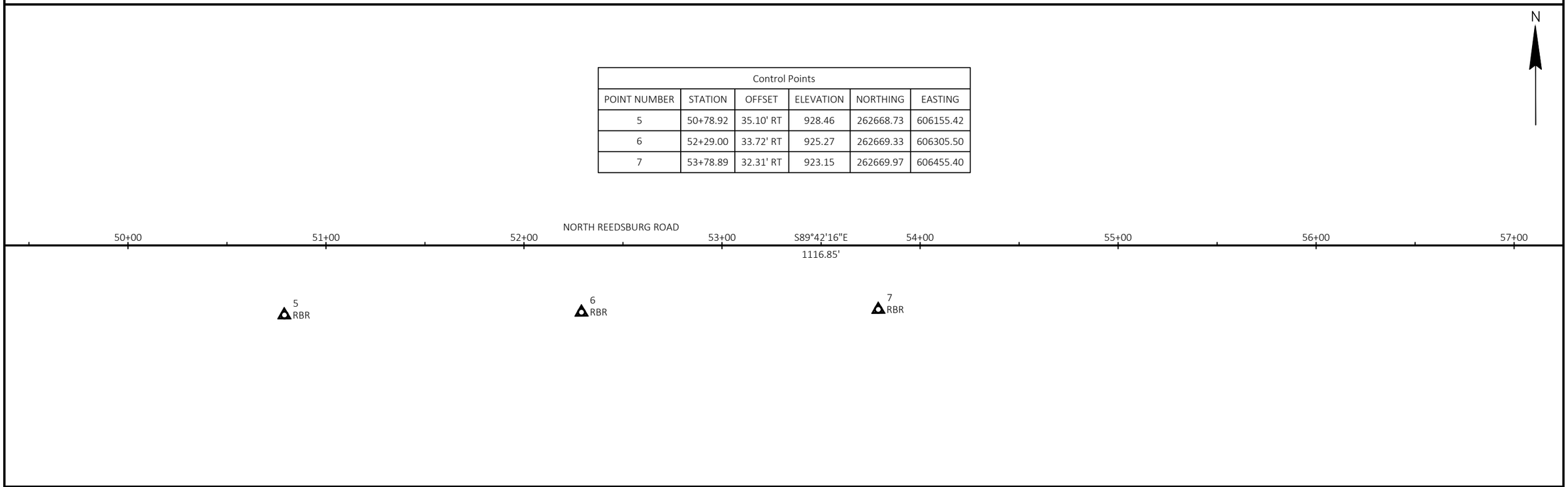

Control Points					
POINT NUMBER	STATION	OFFSET	ELEVATION	NORTHING	EASTING
5	50+78.92	35.10' RT	928.46	262668.73	606155.42
6	52+29.00	33.72' RT	925.27	262669.33	606305.50
7	53+78.89	32.31' RT	923.15	262669.97	606455.40

Section Corners					
POINT NUMBER	STATION	OFFSET	ELEVATION	NORTHING	EASTING
102	60+37.43	1.40' RT	915.03	262698.86	607114.11

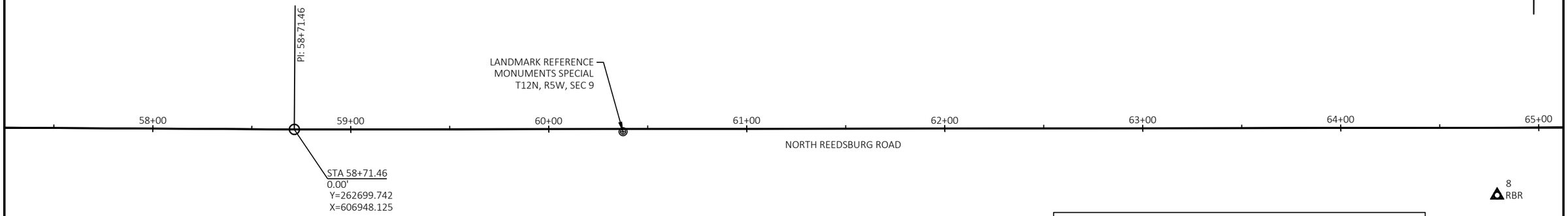

Control Points					
POINT NUMBER	STATION	OFFSET	ELEVATION	NORTHING	EASTING
8	64+78.88	34.07' RT	912.45	262667.56	607555.65

Control Points					
POINT NUMBER	STATION	OFFSET	ELEVATION	NORTHING	EASTING
9	68+54.91	33.78' RT	911.93	262669.02	607931.67
10	72+30.46	33.67' RT	911.72	262670.29	608307.23

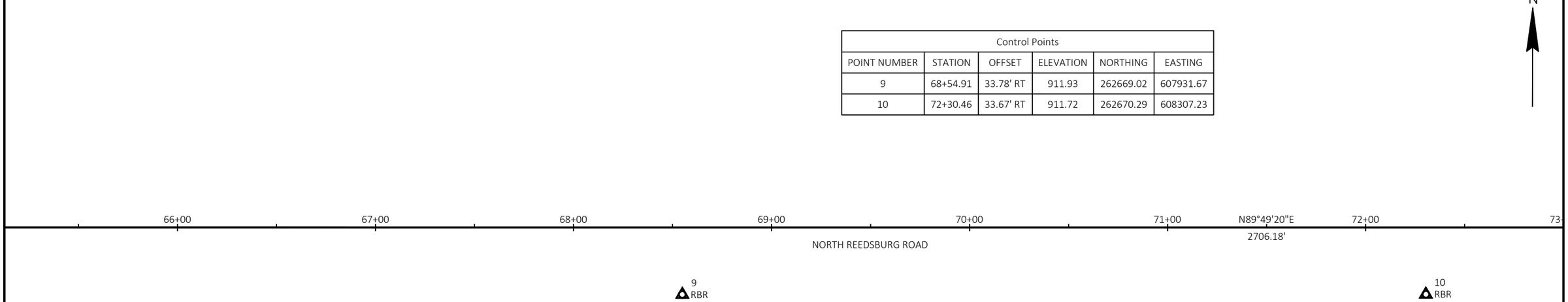

PROJECT NO: 5709-00-70	HWY: NORTH REEDSBURG ROAD	COUNTY: SAUK	PLAN DETAILS - ALIGNMENT DETAILS NORTH REEDSBURG ROAD	SHEET 27	E

FILE NAME : T:\PROJECTS\2023\23-2044-1 (WAUZEKA DRIVE)T EXCELSIOR, NORTH REEDSBURG ROAD, NORTHWOODS DRIVE TO STH 23, 5709-00-01\DRAWINGS\N REEDSBURG ROAD ALIGNMENT DETAILS.DWG
LAYOUT NAME - Alignment Details 4
PLOT DATE : 5/18/2026 8:17 AM PLOT BY : TYLER BUCHANAN PLOT NAME : PLOT SCALE : 1 IN:50 FT

2

Control Points					
POINT NUMBER	STATION	OFFSET	ELEVATION	NORTHING	EASTING
11	76+06.16	33.10' RT	911.65	262672.02	608682.92

N

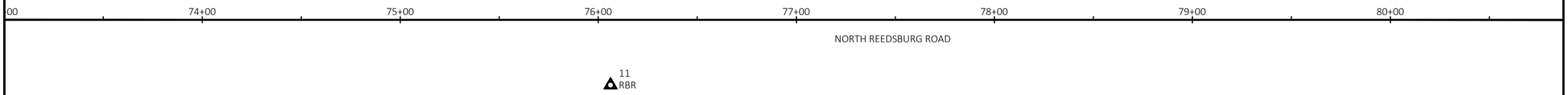

Control Points					
POINT NUMBER	STATION	OFFSET	ELEVATION	NORTHING	EASTING
12	83+41.82	31.95' RT	914.71	262675.46	609418.57
13	84+81.82	31.92' RT	910.41	262675.92	609558.58
14	86+96.30	32.42' RT	907.21	262677.29	609773.37
15	86+96.87	32.87' LT	906.72	262742.58	609773.08
16	87+12.85	33.21' RT	907.42	262676.72	609789.93
17	88+48.35	33.75' RT	907.90	262677.97	609925.43

Section Corners					
POINT NUMBER	STATION	OFFSET	ELEVATION	NORTHING	EASTING
103	86+96.77	0.14' RT	908.17	262709.57	609773.42

N

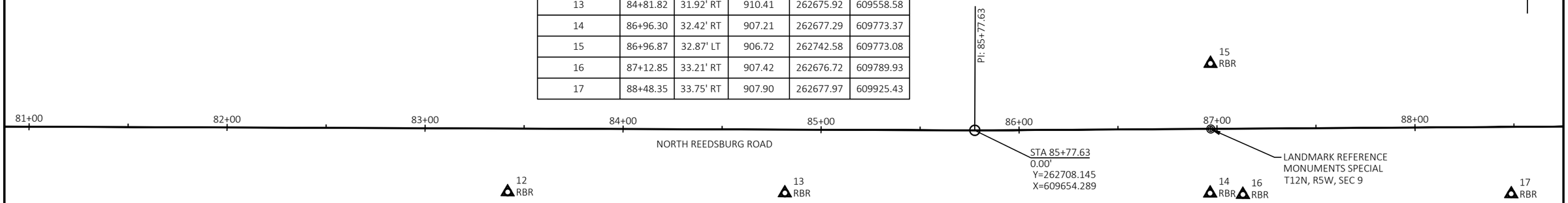

PROJECT NO: 5709-00-70	HWY: NORTH REEDSBURG ROAD	COUNTY: SAUK	PLAN DETAILS - ALIGNMENT DETAILS NORTH REEDSBURG ROAD	SHEET 28	E

FILE NAME : T:\PROJECTS\2023\23-2044-1 (WAUZEKA DRIVE)T EXCELSIOR, NORTH REEDSBURG ROAD, NORTHWOODS DRIVE TO STH 23, 5709-00-01\DRAWINGS\N REEDSBURG ROAD ALIGNMENT DETAILS.DWG
LAYOUT NAME - Alignment Details 5
PLOT DATE : 5/18/2026 8:17 AM PLOT BY : TYLER BUCHANAN PLOT NAME : PLOT SCALE : 1 IN:50 FT

Control Points					
POINT NUMBER	STATION	OFFSET	ELEVATION	NORTHING	EASTING
18	94+86.82	19.26' RT	931.58	262700.87	610563.65

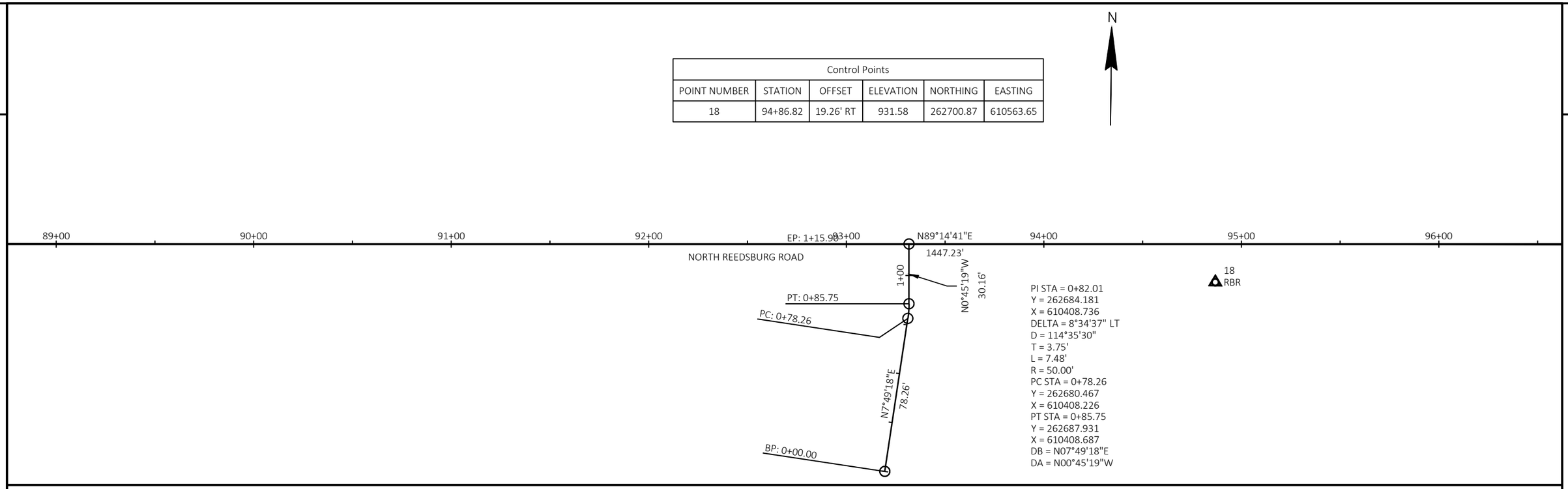

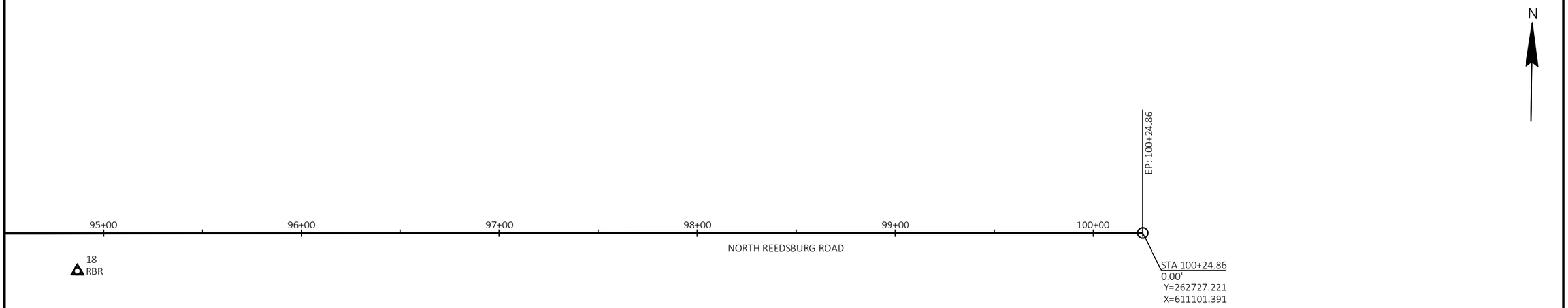

PROJECT NO: 5709-00-70	HWY: NORTH REEDSBURG ROAD	COUNTY: SAUK	PLAN DETAILS - ALIGNMENT DETAILS NORTH REEDSBURG ROAD	SHEET 29	E

2

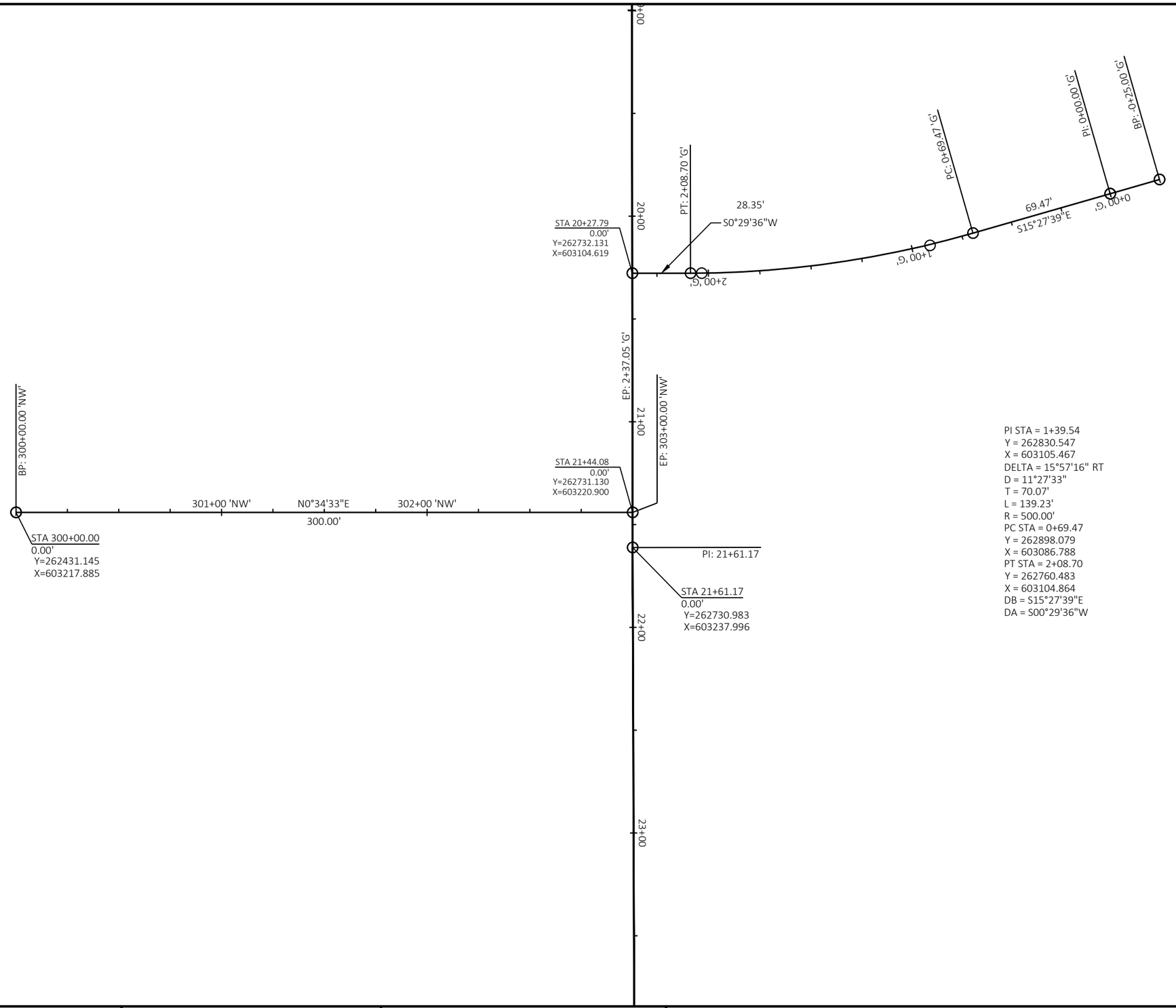

PI STA = 1+39.54
Y = 262830.547
X = 603105.467
DELTA = 15°57'16" RT
D = 11°27'33"
T = 70.07'
L = 139.23'
R = 500.00'
PC STA = 0+69.47
Y = 262898.079
X = 603086.788
PT STA = 2+08.70
Y = 262760.483
X = 603104.864
DB = S15°27'39"E
DA = S00°29'36"W

PROJECT NO: 5709-00-70	HWY: NORTH REEDSBURG ROAD	COUNTY: SAUK	PLAN DETAILS - ALIGNMENT DETAILS NORTHWOODS DRIVE	SHEET 30	E

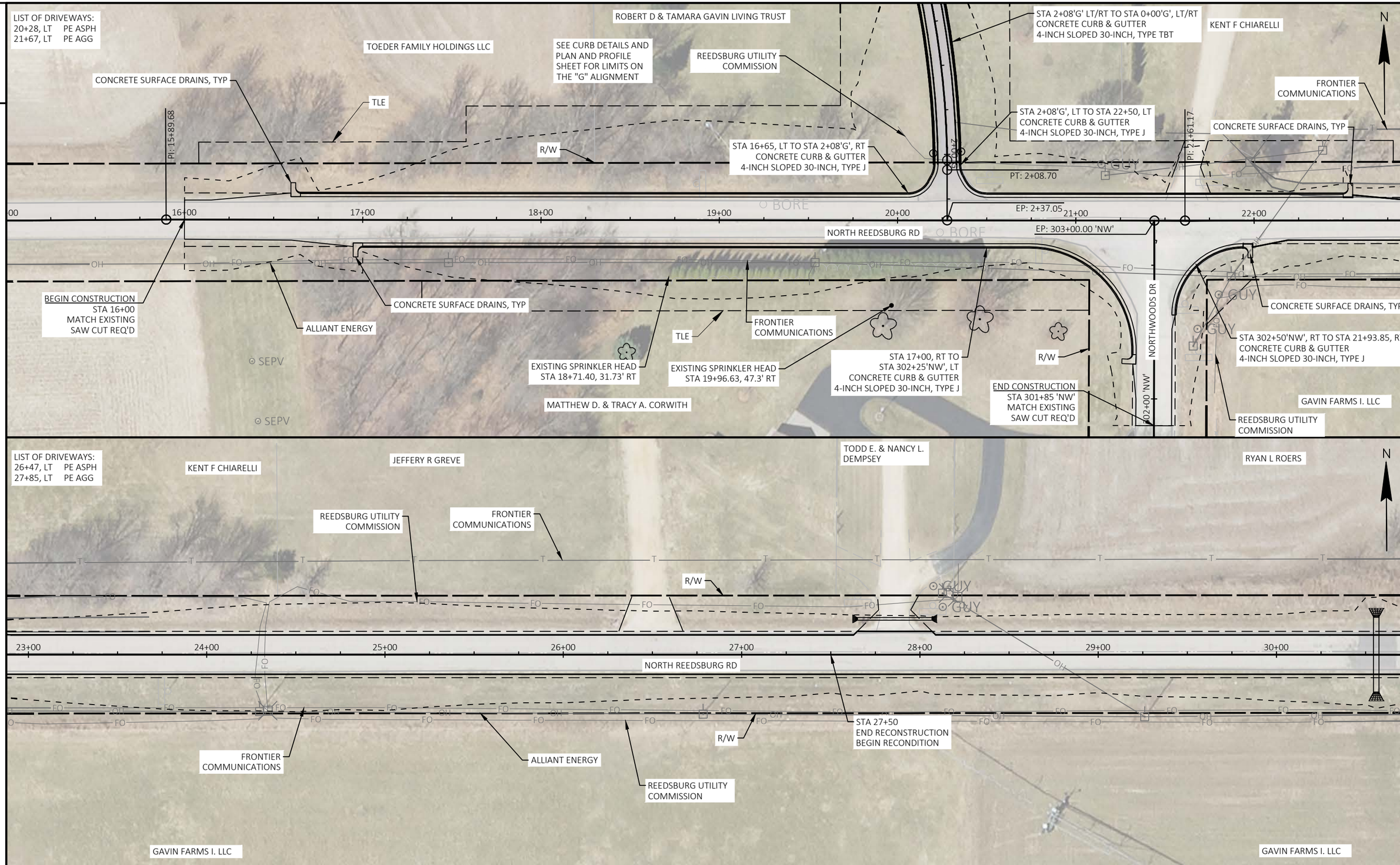

PROJECT NO: 5709-00-70	HWY: NORTH REEDSBURG ROAD	COUNTY: SAUK	PLAN SHEETS	SHEET 31	E

FILE NAME : T:\PROJECTS\2023\23-2044-1 (WAUZEKA DRIVE)T EXCELSIOR, NORTH REEDSBURG ROAD, NORTHWOODS DRIVE TO STH 23, 5709-00-01\DRAWINGS\N REEDSBURG ROAD PROPOSED LINEWORK.DWG PLOT DATE : 5/18/2026 8:17 AM PLOT BY : TYLER BUCHANAN PLOT NAME : PLOT SCALE : 1 IN:50 FT
LAYOUT NAME - N Reeds Plan 50 Scale 1

WISDOT/CADDS SHEET 44

2

LIST OF DRIVEWAYS:
32+18, LT PE AGG
36+94, LT PE AGG
38+35, RT FE AGG

FRANK E. & KRISTIN K. ZENZ

DONALD N. & BEVERLY LEAKE

JODI J VOGEL

N

FRONTIER COMMUNICATIONS

R/W

STA 34+44.77, 0.63' LT
LANDMARK REFERENCE
MONUMENTS SPECIAL
T12N, R5W, SEC 4

PI: 34+81.38

31+00 32+00 33+00 34+00 35+00 36+00 37+00 38+00

NORTH REEDSBURG RD

R/W

FRONTIER COMMUNICATIONS

REEDSBURG UTILITY COMMISSION

ALLIANT ENERGY

GAVIN FARMS I. LLC

GAVIN FARMS I. LLC

2

LIST OF DRIVEWAYS:
38+81, LT FE AGG

JODI J VOGEL

BRYAN M ANTOINE

ELSIE M. DUANE R. & GORDON D. RETZLAFF

N

FRONTIER COMMUNICATIONS

STA 40+50, LT TO STA 43+50, LT
CONCRETE CURB & GUTTER
4-INCH SLOPED 30-INCH, TYPE J

ALLIANT ENERGY

REEDSBURG UTILITY COMMISSION

CONCRETE SURFACE DRAINS, TYP

R/W

39+00 40+00 41+00 42+00 43+00 44+00 45+00 46+00

NORTH REEDSBURG RD

R/W

END RECONDITION
STA 43+50
MATCH EXISTING
SAW CUT REQ'D
REMOVING ASPHALTIC
SURFACE BUTT JOINT REQ'D
250-FT LENGTH

GAVIN FARMS I. LLC

PROJECT NO: 5709-00-70	HWY: NORTH REEDSBURG ROAD	COUNTY: SAUK	PLAN SHEETS	SHEET 32	E

FILE NAME : T:\PROJECTS\2023\23-2044-1 (WAUZEKA DRIVE)T EXCELSIOR, NORTH REEDSBURG ROAD, NORTHWOODS DRIVE TO STH 23, 5709-00-01\DRAWINGS\N REEDSBURG ROAD PROPOSED LINEWORK.DGN
LAYOUT NAME - N Reeds Plan 50 Scale 2
PRO DATE : 5/18/2026 8:17 AM PLOT BY : TYLER BUCHANAN PLOT NAME : PLOT SCALE : 1 IN:50 FT

LIST OF DRIVEWAYS:
60+72, RT FE AGG
61+63, RT PE CONC
62+08, RT FE AGG

ELSIE M. DUANE R. & GORDON D. RETZLAFF

ELSIE M. DUANE R. & GORDON D. RETZLAFF

N

R/W

REEDSBURG UTILITY COMMISSION

ALLIANT ENERGY

PI 58+71.46

STA 60+37.43, 1.4' RT
LANDMARK REFERENCE
MONUMENTS SPECIAL
T12N, R5W, SEC 9

55+00 56+00 57+00 58+00 59+00 60+00 61+00 62+00

NORTH REEDSBURG RD

R/W

FRONTIER COMMUNICATIONS

BEGIN RECONDITION
STA 55+00
MATCH EXISTING
SAW CUT REQ'D
REMOVING ASPHALTIC
SURFACE BUTT JOINT REQ'D
100-FT LENGTH

GAVIN FARMS I. LLC

PAUL J KENNEDY

2

LIST OF DRIVEWAYS:
68+30, RT PE AGG

ELSIE M. DUANE R. & GORDON D. RETZLAFF

ELSIE M. DUANE R. & GORDON D. RETZLAFF

N

FRONTIER COMMUNICATIONS

R/W

REEDSBURG UTILITY COMMISSION

63+00 64+00 65+00 66+00 67+00 68+00 69+00 70+00

NORTH REEDSBURG RD

R/W

ALLIANT ENERGY

FRONTIER COMMUNICATIONS

REEDSBURG UTILITY COMMISSION

CHADD M ASPSETER

CHADD M ASPSETER

DAN R. ASTLE

PROJECT NO: 5709-00-70	HWY: NORTH REEDSBURG ROAD	COUNTY: SAUK	PLAN SHEETS	SHEET 33	E

FILE NAME : T:\PROJECTS\2023\23-2044-1 (WAUZEKA DRIVE)T EXCELSIOR, NORTH REEDSBURG ROAD, NORTHWOODS DRIVE TO STH 23, 5709-00-01\DRAWINGS\N REEDSBURG ROAD PROPOSED LINEWORK.DWG
LAYOUT NAME - N Reeds Plan 50 Scale 3

PRINT DATE : 5/18/2026 8:17 AM PLOT BY : TYLER BUCHANAN PLOT NAME : PLOT SCALE : 1 IN:50 FT

2

LIST OF DRIVEWAYS:
72+21, RT PE AGG
73+50, RT FE AGG

ELSIE M. DUANE R. & GORDON D. RETZLAFF

ELSIE M. DUANE R. & GORDON D. RETZLAFF

N

FRONTIER COMMUNICATIONS

STA 73+00
END RECONDITION
BEGIN RECONSTRUCTION

R/W

REEDSBURG UTILITY COMMISSION

71+00 72+00 73+00 74+00 75+00 76+00 77+00 78

NORTH REEDSBURG RD

FRONTIER COMMUNICATIONS

R/W

ALLIANT ENERGY

REEDSBURG UTILITY COMMISSION

DAN R. ASTLE

JOSEPH PERUSHEK

DAVID M FRIE

2

LIST OF DRIVEWAYS:
78+95, RT PE AGG
82+67, LT PE AGG
83+57, RT PE ASPH

ELSIE M. DUANE R. & GORDON D. RETZLAFF

ELSIE M. DUANE R. & GORDON D. RETZLAFF

N

REEDSBURG UTILITY COMMISSION

R/W

FRONTIER COMMUNICATIONS

PI: 85+77.63

79+00 80+00 81+00 82+00 83+00 84+00 85+00

NORTH REEDSBURG RD

R/W

STA 84+00
END RECONSTRUCTION
BEGIN RECONDITION

FRONTIER COMMUNICATIONS

ALLIANT ENERGY

REEDSBURG UTILITY COMMISSION

DAVID M FRIE

DAVID M FRIE

WAYNE R. WINCH

KENNETH G. & JO ANNE C. KRUSE

PROJECT NO: 5709-00-70	HWY: NORTH REEDSBURG ROAD	COUNTY: SAUK	PLAN SHEETS	SHEET 34	E

FILE NAME : T:\PROJECTS\2023\23-2044-1 (WAUZEKA DRIVE)T EXCELSIOR, NORTH REEDSBURG ROAD, NORTHWOODS DRIVE TO STH 23, 5709-00-01\DRAWINGS\N REEDSBURG ROAD PROPOSED LINEWORK.DWG
LAYOUT NAME - N Reeds Plan 50 Scale 4

PRINT DATE : 5/18/2026 8:17 AM PLOT BY : TYLER BUCHANAN PLOT NAME : PLOT SCALE : 1 IN:50 FT

WISDOT/CADDS SHEET 44

2

ELSIE M. DUANE R. & GORDON D. RETZLAFF

LIST OF DRIVEWAYS:
88+75, RT PE ASPH
92+00, LT FE AGG
93+32, RT PE ASPH

DENNIS J GAWRONSKI

DENNIS J GAWRONSKI

N

FRONTIER COMMUNICATIONS

R/W

REEDSBURG UTILITY COMMISSION

CONCRETE SURFACE DRAINS, TYP

STA 91+00 TO STA 97+50, LT
CONCRETE CURB & GUTTER
4-INCH SLOPED 30-INCH TYPE J

TLE

86+00 87+00 88+00 89+00 90+00 91+00 92+00 93+00 EP:

NORTH REEDSBURG RD

STA 86+96.77, 0.14' RT
LANDMARK REFERENCE
MONUMENTS SPECIAL
T12N, R5W, SEC 9

ALLIANT ENERGY

REEDSBURG UTILITY COMMISSION

R/W

STA 91+00
END RECONDITION
BEGIN RECONSTRUCTION

CONCRETE SURFACE DRAINS, TYP

STA 91+00 TO STA 97+50, RT
CONCRETE CURB & GUTTER
4-INCH SLOPED 30-INCH TYPE J

FRONTIER COMMUNICATIONS

PC: 0+78.26

1+01 'C'

PT:

TLE

BP: 0+00.00

KENNETH G. & JO ANNE C. KRUSE

TRON R GRIFFITH

CAROL MOE-KIEFER

CALEB GAWRONSKI

DENNIS J GAWRONSKI

TRAVIS J. & JENNIFER L. SKINNER

LIST OF DRIVEWAYS:
93+78, LT PE REMOVE
95+10, LT PE REMOVE
96+82, LT PE AGG

FRONTIER COMMUNICATIONS

STA 91+00 TO STA 97+50, LT
CONCRETE CURB & GUTTER
4-INCH SLOPED 30-INCH TYPE J

TLE

REEDSBURG UTILITY COMMISSION

R/W

CONCRETE SURFACE DRAINS, TYP

EP: 100+24.86

EP: 1+15.90 94+00 95+00 96+00 97+00 98+00 99+00 100+00

NORTH REEDSBURG RD

END CONSTRUCTION
STA 99+50
MATCH EXISTING
SAW CUT REQ'D

1+01 'C'

PT: 0+85.75

STA 91+00 TO STA 97+50, RT
CONCRETE CURB & GUTTER
4-INCH SLOPED 30-INCH TYPE J

ALLIANT ENERGY

R/W

CONCRETE SURFACE DRAINS, TYP

FRONTIER COMMUNICATIONS

TLE

REEDSBURG UTILITY COMMISSION

CALEB GAWRONSKI

GEORGE T. & RITA A. ASTLE

PROJECT NO: 5709-00-70	HWY: NORTH REEDSBURG ROAD	COUNTY: SAUK	PLAN SHEETS	SHEET 35	E

FILE NAME : T:\PROJECTS\2023\23-2044-1 (WAUZEKA DRIVE)T EXCELSIOR, NORTH REEDSBURG ROAD, NORTHWOODS DRIVE TO STH 23, 5709-00-01\DRAWINGS\N REEDSBURG ROAD PROPOSED LINEWORK.DGN
LAYOUT NAME - N Reeds Plan 50 Scale 5

PLOT DATE : 5/18/2026 8:17 AM PLOT BY : TYLER BUCHANAN PLOT NAME : PLOT SCALE : 1 IN:50 FT

WISDOT/CADDS SHEET 44

Estimate Of Quantities

5709-00-70

Line	Item	Item Description	Unit	Total	Qty
0002	201.0105	Clearing	STA	25.000	25.000
0004	201.0120	Clearing	ID	18.000	18.000
0006	201.0205	Grubbing	STA	26.000	26.000
0008	201.0220	Grubbing	ID	18.000	18.000
0010	203.0100	Removing Small Pipe Culverts	EACH	12.000	12.000
0012	204.0115	Removing Asphaltic Surface Butt Joints	SY	630.000	630.000
0014	205.0100	Excavation Common	CY	15,587.000	15,587.000
0016	205.0200	Excavation Rock	CY	3,815.000	3,815.000
0018	209.2500	Backfill Granular Grade 2	TON	1,140.000	1,140.000
0020	213.0100	Finishing Roadway (project) 01. 5709-00-70	EACH	1.000	1.000
0022	305.0110	Base Aggregate Dense 3/4-Inch	TON	540.000	540.000
0024	305.0120	Base Aggregate Dense 1 1/4-Inch	TON	9,845.000	9,845.000
0026	311.0110	Breaker Run	TON	4,180.000	4,180.000
0028	325.0100	Pulverize and Relay	SY	10,100.000	10,100.000
0030	465.0105	Asphaltic Surface	TON	2,700.000	2,700.000
0032	465.0120	Asphaltic Surface Driveways and Field Entrances	TON	155.000	155.000
0034	521.1018	Apron Endwalls for Culvert Pipe Steel 18-Inch	EACH	24.000	24.000
0036	521.1036	Apron Endwalls for Culvert Pipe Steel 36-Inch	EACH	2.000	2.000
0038	521.1235	Apron Endwalls for Pipe Arch Steel 35x24-Inch	EACH	2.000	2.000
0040	521.3118	Culvert Pipe Corrugated Steel 18-Inch	LF	464.000	464.000
0042	521.3136	Culvert Pipe Corrugated Steel 36-Inch	LF	42.000	42.000
0044	521.3735	Pipe Arch Corrugated Steel 35x24-Inch	LF	44.000	44.000
0046	601.0576	Concrete Curb & Gutter 4-Inch Sloped 30-Inch Type J	LF	2,919.000	2,919.000
0048	601.0584	Concrete Curb & Gutter 4-Inch Sloped 30-Inch Type TBT	LF	484.000	484.000
0050	602.0810	Concrete Driveway 6-Inch	SY	31.000	31.000
0052	602.3010	Concrete Surface Drains	CY	12.000	12.000
0054	606.0200	Riprap Medium	CY	40.000	40.000
0056	618.0100	Maintenance and Repair of Haul Roads (project) 01. 5709-00-70	EACH	1.000	1.000
0058	619.1000	Mobilization	EACH	1.000	1.000
0060	624.0100	Water	MGAL	43.000	43.000
0062	625.0500	Salvaged Topsoil	SY	17,495.000	17,495.000
0064	627.0200	Mulching	SY	5,000.000	5,000.000
0066	628.1504	Silt Fence	LF	6,500.000	6,500.000
0068	628.1520	Silt Fence Maintenance	LF	13,000.000	13,000.000
0070	628.1905	Mobilizations Erosion Control	EACH	8.000	8.000
0072	628.1910	Mobilizations Emergency Erosion Control	EACH	8.000	8.000
0074	628.2004	Erosion Mat Class I Type B	SY	2,500.000	2,500.000
0076	628.2008	Erosion Mat Urban Class I Type B	SY	23,290.000	23,290.000
0078	628.7504	Temporary Ditch Checks	LF	640.000	640.000
0080	628.7555	Culvert Pipe Checks	EACH	50.000	50.000
0082	628.7560	Tracking Pads	EACH	1.000	1.000
0084	629.0210	Fertilizer Type B	CWT	26.800	26.800
0086	630.0120	Seeding Mixture No. 20	LB	1,005.000	1,005.000
0088	630.0140	Seeding Mixture No. 40	LB	375.000	375.000
0090	630.0200	Seeding Temporary	LB	1,000.000	1,000.000
0092	630.0300	Seeding Borrow Pit	LB	300.000	300.000
0094	630.0500	Seed Water	MGAL	174.900	174.900
0096	631.0300	Sod Water	MGAL	20.000	20.000
0098	631.1000	Sod Lawn	SY	2,710.000	2,710.000

5709-00-70

Line	Item	Item Description	Unit	Total	Qty
0100	633.5200	Markers Culvert End	EACH	8.000	8.000
0102	634.0614	Posts Wood 4x6-Inch x 14-FT	EACH	9.000	9.000
0104	637.2210	Signs Type II Reflective H	SF	27.610	27.610
0106	637.2230	Signs Type II Reflective F	SF	18.000	18.000
0108	638.2102	Moving Signs Type II	EACH	3.000	3.000
0110	638.2602	Removing Signs Type II	EACH	7.000	7.000
0112	638.3000	Removing Small Sign Supports	EACH	9.000	9.000
0114	638.4000	Moving Small Sign Supports	EACH	1.000	1.000
0116	642.5001	Field Office Type B	EACH	1.000	1.000
0118	643.0300	Traffic Control Drums	DAY	870.000	870.000
0120	643.0420	Traffic Control Barricades Type III	DAY	2,000.000	2,000.000
0122	643.0705	Traffic Control Warning Lights Type A	DAY	4,000.000	4,000.000
0124	643.0900	Traffic Control Signs	DAY	1,400.000	1,400.000
0126	643.1050	Traffic Control Signs PCMS	DAY	14.000	14.000
0128	643.5000	Traffic Control	EACH	1.000	1.000
0130	645.0120	Geotextile Type HR	SY	123.000	123.000
0132	650.4500	Construction Staking Subgrade	LF	3,524.000	3,524.000
0134	650.5000	Construction Staking Base	LF	7,624.000	7,624.000
0136	650.5500	Construction Staking Curb Gutter and Curb & Gutter	LF	3,403.000	3,403.000
0138	650.6000	Construction Staking Pipe Culverts	EACH	14.000	14.000
0140	650.9911	Construction Staking Supplemental Control (project) 01. 5709-00-70	EACH	1.000	1.000
0142	650.9920	Construction Staking Slope Stakes	LF	7,593.000	7,593.000
0144	680.0100	Public Land Survey Monument Verify and Reset	EACH	3.000	3.000
0146	690.0150	Sawing Asphalt	LF	314.000	314.000
0148	690.0250	Sawing Concrete	LF	10.000	10.000
0150	740.0440	Incentive IRI Ride	DOL	5,450.000	5,450.000
0152	999.1001.S	Seismograph (project) 01. 5709-00-70	EACH	1.000	1.000
0154	999.1501.S	Crack and Damage Survey	EACH	5.000	5.000
0156	ASP.1T0A	On-the-Job Training Apprentice at $5.00/HR	HRS	1,200.000	1,200.000
0158	ASP.1T0G	On-the-Job Training Graduate at $5.00/HR	HRS	600.000	600.000

DIVISION	FROM/TO STATION	LOCATION	205.0100 EXCAVATION COMMON (1) CUT (2)	AVAILABLE MATERIAL (5)	205.0200 ROCK EXCAVATION (7)	EXPANDED ROCK (12) FACTOR 1.50	UNEXPANDED FILL	EXPANDED FILL (13) FACTOR 1.30	MASS ORDINATE +/- (14)	WASTE	650.9920 CONSTRUCTION STAKING SLOPE STAKES (LF)	COMMENT
DIVISION 1												
N REEDSBURG RD 1	16+00.00/43+50.00		7,420	7,420	316	474	2,400	2,504	4,916		2,750	
N REEDSBURG RD 2	55+00.00/99+50.00		6,126	6,126	3,499	5,249	1,828	-4,447	10,573		4,450	
DIVISION 1 SUBTOTAL			13,546	13,546	3,815	5,723	4,228	-1,943	15,489	15,489	7,200	
DIVISION 2												
NORTHWOODS RD	301+85.02/302+50.00		160	160	0	0	0	0	160		90	
DIVISION 2 SUBTOTAL			160	160	0	0	0	0	160	160	90	
DIVISION 3												
DRIVEWAY 20+50	0+00.00/1+50.00		619	619	0	0	1	1	618		212	
DIVISION 3 SUBTOTAL			619	619	0	0	1	1	618	618	212	
DIVISION 4												
DRIVEWAY 93+00	0+00.00/0+75.00		736	736	0	0	0	0	736		91	
DIVISION 4 SUBTOTAL			736	736	0	0	0	0	736	736	91	
DIVISION 5												
CULVERT TRENCH	30+56		120	120	0	0	0	0	120			
CULVERT TRENCH	38+90		153	153	0	0	0	0	273			
CULVERT TRENCH	75+47		133	133	0	0	0	0	406			
CULVERT TRENCH	87+10		120	120	0	0	0	0	526			
DIVISION 5 SUBTOTAL			526	526	0	0	0	0	526	526	0	
GRAND TOTAL			15,587	15,587	3,815	5,723	4,229	-1,942	17,529	17,529	7,593	

NOTES:

(1) COMMON EXCAVATION IS THE SUM OF THE CUT AND EBS EXCAVATION COLUMNS. ITEM NUMBER 205.0100

(2) SALVAGED/UNSUABLE PAVEMENT MATERIAL IS INCLUDED IN CUT.

5) AVAILABLE MATERIAL = CUT - SALVAGED/UNUSUABLE PAVEMENT MATERIAL

(7) ROCK EXCAVATION ITEM NUMBER 205.0200

(12) EXPANDED ROCK FACTOR = 1.50

(13) EXPANDED FILL FACTOR = 1.30

EXPANDED FILL = (UNEXPANDED FILL - EXPANDED ROCK) * FILL FACTOR

(14) THE MASS ORDINATE + OR - QTY CALCULATED FOR THE DIVISION. PLUS QUANTITY INDICATES AN EXCESS OF MATERIAL WITHIN THE DIVISION. MINUS INDICATES A SHORTAGE OF MATERIAL WITHIN THE DIVISION.

(15) FACTORS USED TO COMPUTE ANTICIPATED WASTE AND THE COMPUTED WASTE VOLUME IDENTIFIED ARE FOR GENERAL INFORMATION ONLY.

CLEARING & GRUBBING

CATEGORY	STATION	TO	STATION	LOCATION	201.0105 CLEARING STA	201.0120 CLEARING ID	201.0205 GRUBBING STA	201.0220 GRUBBING ID	REMARKS
0010	16+00	-	22+00	LT & RT	6	-	6	-	
0010		39+50		RT	-	18	-	18	
0010	55+00	-	62+00	LT & RT	6	-	6	-	
0010	63+00	-	64+00	LT & RT	1	-	1	-	
0010	69+00	-	70+00	LT & RT	1	-	1	-	
0010	71+00	-	73+00	LT & RT	2	-	2	-	
0010	78+00	-	79+00	LT & RT	-	-	1	-	STUMP
0010	82+00	-	84+00	LT & RT	2	-	2	-	
0010	86+00	-	87+00	LT & RT	1	-	1	-	
0010	92+00	-	98+00	LT & RT	6	-	6	-	
				TOTAL 0010	25	18	26	18	

AGGREGATE ITEMS

* ITEMS SHOWN ELSEWHERE

CATEGORY	STATION	TO	STATION	LOCATION	305.0110 BASE AGGREGATE DENSE 3/4-INCH TON	PRE SHOULDER WIDENING BASE AGGREGATE DENSE 1 1/4-INCH TON	4" POST PULVERIZE AND RELAY BASE AGGREGATE DENSE 1 1/4-INCH TON	8" RECONSTRUCT BASE AGGREGATE DENSE 1 1/4-INCH TON	* SUMMARY OF LOCATIONS 305.0120 BASE AGGREGATE DENSE 1 1/4-INCH TON	* 311.0110 BREAKER RUN TON	624.0100 WATER MGAL	650.4500 CONSTRUCTION STAKING SUBGRADE LF	650.5000 CONSTRUCTION STAKING BASE LF	REMARKS
0010	16+00	-	27+50		42	-	-	1,850	1,850	1,440	8	1,150	1,150	RECONSTRUCTION
0010	27+50	-	43+50		94	700	830	-	1,530	-	7	-	1,600	RECONDITIONING
0010	55+00	-	73+00		123	750	980	-	1,730	-	7	-	1,800	RECONDITIONING
0010	73+00	-	84+00		75	-	-	1,650	1,650	1,080	7	1,100	1,100	RECONSTRUCTION
0010	84+00	-	91+00		48	290	380	-	670	-	3	-	700	RECONDITIONING
0010	91+00	-	99+50		14	-	-	1,430	1,430	1,210	6	850	850	RECONSTRUCTION
0010	301'NW'+85	-	302'NW'+89	NORTHWOODS DR	4	-	-	170	170	150	1	104	104	RECONSTRUCTION
0010	0'G'+00	-	2'G'+12	GAVIN DRIVEWAY	-	-	-	245	245	-	1	220	220	
0010	0'C'+00	-	0'C'+91	SAWRONSKI DRIVEWAY	-	-	-	110	110	-	1	100	100	
0010		-		MISC DRIVEWAYS	120	-	-	-	0	-	-	-	-	
0010		-		UNDISTRIBUTED	20	-	-	-	340	120	2	-	-	
				TOTAL 0010	540				9,725	4,000	43	3,524	7,624	

3

HMA ITEMS

CATEGORY	STATION	TO	STATION	LOCATION	204.0115 REMOVING ASPHALTIC SURFACE BUTT JOINTS SY	325.0100 PULVERIZE AND RELAY SY	465.0105 ASPHALTIC SURFACE TON	465.0120 ASPHALTIC SURFACE DRIVEWAYS AND FIELD ENTRANCES TON	690.0150 SAWING ASPHALT LF	REMARKS
0010	16+00	-	27+50		-	-	435	-	20	RECONSTRUCTION
0010	27+50	-	43+50		389	3,730	545	-	172	RECONDITIONING
0010	55+00	-	73+00		222	4,400	620	-	20	RECONDITIONING
0010	73+00	-	84+00		-	-	380	-	-	RECONSTRUCTION
0010	84+00	-	91+00		-	1,720	245	-	-	RECONDITIONING
0010	91+00	-	99+50		-	-	340	-	30	RECONSTRUCTION
0010	301'NW'+85	-	302'NW'+87	NORTHWOODS DRIVE	-	-	55	-	20	RECONSTRUCTION
0010	0'NW'+00	-	2'NW'+24	GAVIN DRIVEWAY	-	-	-	65	-	RECONSTRUCTION
0010	0'NW'+00	-	1'NW'+03	SAWRONSKI DRIVEWAY	-	-	-	25	12	RECONSTRUCTION
0010		-		MISC PES	-	-	-	50	40	
0010		-		UNDISTRIBUTED	19	250	80	15	-	
				TOTAL 0010	630	10,100	2,700	155	314	

LANDMARK REFERENCE ITEMS

CATEGORY	STATION	LOCATION	TOWN RANGE SECT	680.0100 PUBLIC LAND SURVEY MONUMENT VERIFY AND RESET EACH	REMARKS
0010	34+44.77	0.63 FT LT	T12N, R5E, 4	1	
0010	60+37.43	1.4FT RT	T12N, R5E, 9	1	
0010	86+96.77	0.14 FT RT	T12N, R5E, 9	1	
			TOTAL 0010	3	

3

CULVERT PIPE ITEMS

NOTE: STEEL THICKNESS
0.064 (INCHES) 18-INCH
0.079 (INCHES) 36-INCH AND 35X24-INCH

* ITEMS SHOWN ELSEWHERE

CATEGORY	STATION	LOCATION	EXISTING PIPE INFO	203.0100 REMOVING SMALL PIPE CULVERTS EACH	209.2500 BACKFILL GRANULAR GRADE 2 TON	* 305.0120 BASE AGGREGATE DENSE 1 1/4-INCH TON	* 311.0110 BREAKER RUN TON	521.1018 APRON ENDWALLS FOR CULVERT PIPE STEEL 18-INCH EACH	521.1036 APRON ENDWALLS FOR CULVERT PIPE STEEL 36-INCH EACH	521.1235 APRON ENDWALLS FOR PIPE ARCH STEEL 35X24-INCH EACH	521.3118 CULVERT PIPE CORRUGATED STEEL 18-INCH LF	521.3136 CULVERT PIPE CORRUGATED STEEL 36-INCH LF	521.3735 PIPE ARCH CORRUGATED STEEL 35X24-INCH LF	* 606.0200 RIPRAP MEDIUM CY	633.5200 MARKERS CULVERT END EACH	* 645.0120 GEOTEXTILE TYPE HR SY	650.6000 CONSTRUCTION STAKING PIPE CULVERTS EACH	REMARKS
0010	27+85	PE LT	18 INCH STEEL	1	-	-	-	2	-	-	42	-	-	-	-	-	1	REPLACEMENTS
0010	30+56	C/L	36 INCH STEEL	1	270	40	60	-	2	-	-	42	-	4	2	12	1	"
0010	32+18	PE LT	18 INCH STEEL	1	-	-	-	2	-	-	40	-	-	-	-	-	1	"
0010	36+94	PE LT	18 INCH STEEL	1	-	-	-	2	-	-	40	-	-	-	-	-	1	"
0010	38+90	C/L	18 INCH STEEL	1	320	40	60	2	-	-	52	-	-	4	2	12	1	"
0010	60+72	FE RT	18 INCH STEEL	1	-	-	-	2	-	-	36	-	-	-	-	-	1	"
0010	61+63	PE RT	18 INCH STEEL	1	-	-	-	2	-	-	26	-	-	-	-	-	1	"
0010	62+08	FE RT	18 INCH STEEL	1	-	-	-	2	-	-	30	-	-	-	-	-	1	"
0010	68+32	PE RT	18 INCH STEEL	1	-	-	-	2	-	-	36	-	-	-	-	-	1	"
0010	72+21	PE RT	-	-	-	-	-	2	-	-	40	-	-	-	-	-	1	"
0010	75+47	C/L	18 INCH STEEL	1	295	-	-	2	-	-	46	-	-	8	2	24	1	BOTH LT AND RT
0010	83+57	PE RT	-	-	-	-	-	2	-	-	38	-	-	-	-	3	1	"
0010	87+10	C/L	18 INCH STEEL	1	255	40	60	-	-	2	-	-	44	4	2	12	1	"
0010	88+75	PE RT	18 INCH STEEL	1	-	-	-	2	-	-	38	-	-	-	-	-	1	"
		TOTAL 0010		12	1,140	120	180	24	2	2	464	42	44	20	8	63	14	

3

3

CONCRETE ITEMS

* ITEMS SHOWN ELSEWHERE

CATEGORY	STATION	TO	STATION	LOCATION	601.0576 CONCRETE CURB & GUTTER 4-INCH SLOPED 30-INCH TYPE J LF	601.0584 CONCRETE CURB & GUTTER 4-INCH SLOPED 30-INCH TYPE TBT LF	602.0810 CONCRETE DRIVEWAY 6-INCH SY	602.3010 CONCRETE SURFACE DRAINS CY	* 606.0200 RIPRAP MEDIUM CY	* 645.0120 GEOTEXTILE TYPE HR SY	650.5500 CONSTRUCTION STAKING CURB GUTTER AND CURB & GUTTER LF	690.0250 SAWING CONCRETE LF	REMARKS
													45DEGREE SKEW
0010	16+65	-	20+06	LT	588	-	-	1.2	2	6	588	-	1 FLUME
0010	20+50	-	22+50	LT	200	-	-	1.2	2	6	200	-	1 FLUME
0010	17+00	-	302'NW'+25	RT	468	-	-	2.4	4	12	468	-	2 FLUMES
0010	302'NW'+50	-	21+94	RT	63	-	-	1.2	2	6	63	-	1 FLUME
0010	40+50	-	43+50	LT	300	-	-	1.2	2	6	300	-	1 FLUME
0010	91+00	-	97+50	LT	650	-	-	2.4	4	12	650	-	2 FLUMES
0010	91+00	-	97+50	RT	650	-	-	2.4	4	12	650	-	2 FLUMES
0010	0+25	-	2+22	LT	-	272	-	-	-	-	272	-	
0010	0+25	-	2+22	RT	-	212	-	-	-	-	212	-	
0010		61+63		PE RT	-	-	31	-	-	-	-	10	
				TOTAL 0010	2,919	484	31	12	20	60	3,403	10	

SIGN ITEMS

CATEGORY	SIGN NO.	STATION	LOCATION	SIGN CODE	SIGN MESSAGE	SIZE	634.0614 POSTS WOOD 4X6-INCH X 14-FT EACH	637.2210 SIGNS TYPE II REFLECTIVE H SF	637.2230 SIGNS TYPE II REFLECTIVE F SF	638.2102 MOVING SIGNS TYPE II EACH	638.2602 REMOVING SIGNS TYPE II EACH	638.3000 REMOVING SMALL SIGN EACH	638.4000 MOVING SMALL SIGN SUPPORTS EACH	REMARKS
0010	1-1	18+90	LT	R2-1	45 MPH	24" x 30"	1	5.00	-	-	1	1	-	
0010	1-2	20+80	RT	R1-1	STOP	30" x 30"	1	5.18	-	-	1	1	-	
0010	1-3	302'NW'+50	RT	R1-1	STOP	30" x 30"	1	5.18	-	-	1	1	-	
0010	1-4	23+80	RT	R2-1	45 MPH	24" x 30"	1	5.00	-	-	1	1	-	
0010	2-1	39+75	RT	W3-1	STOP AHEAD	36" x 36"	1	-	9.00	-	1	1	-	
0010	3-1	98+60	RT	R1-3P	ALL WAY	18" X 6"	-	0.75	-	-	-	-	-	Add to Existing Stop Sign at Vogel Road Intersection
0010	3-2	98+60	RT	R1-3P	ALL WAY	18" X 6"	-	0.75	-	-	-	-	-	
0010	3-3	98+60	RT	R1-3P	ALL WAY	18" X 6"	-	0.75	-	-	-	-	-	
0010	5-1	92+50	RT	W3-1	STOP AHEAD	36" x 36"	1	-	9.00	-	1	1	-	
0010	5-1A	96+00	RT	R2-1	45 MPH	24" x 30"	1	5.00	-	-	1	1	-	
0010	5-2	97+85	LT	N/A	"SPEED LIMIT 45", ATV SIGN, & ATV "35 MPH"	N/A	1	-	-	1	-	1	-	
0010	5-3	98+40	LT	N/A	"WEIGHT LIMIT CLASS B"	N/A	1	-	-	1	-	1	-	
0010	5-4	98+60	RT	N/A	"ATV ROUTE" & ARROW	N/A	-	-	-	1	-	-	1	
						TOTAL 0010	9	27.61	18.00	3	7	9	1	

3

EROSION CONTROL ITEMS

CATEGORY	STATION	TO	STATION	LOCATION	628.1504 SILT FENCE LF	628.1520 SILT FENCE MAINTENANCE LF	628.1905 MOBILIZATIONS EROSION CONTROL EACH	628.1910 MOBILIZATIONS EMERGENCY EROSION CONTROL EACH	628.7504 TEMPORARY DITCH CHECKS LF	628.7555 CULVERT PIPE CHECKS EACH	628.7560 TRACKING PADS EACH	REMARKS
0010	16+00	-	27+50		715	1,430	-	-	90	-	-	
0010	27+50	-	43+50		1,450	2,900	-	-	100	13	-	
0010	55+00	-	73+00		1,730	3,460	-	-	120	10	-	
0010	73+00	-	84+00		955	1,910	-	-	60	4	-	
0010	84+00	-	91+00		30	60	-	-	80	9	-	
0010	91+00	-	99+50		725	1,450	-	-	-	-	-	
0010	301'NW'+85	-	302'NW'+89	NORTHWOODS DR	75	150	-	-	-	-	-	
0010	0'G'+00	-	2'G'+12	GAVIN DRIVEWAY	-	-	-	-	-	-	-	
0010	0'C'+00	-	0'C'+91	AWRONSKI DRIVEWA	-	-	-	-	60	-	-	
0010				WASTE PIT	500	1,000	2	2	100	-	1	
0010				VARIOUS STAGES	320	640	6	6	30	14	-	
				TOTAL 0010	6,500	13,000	8	8	640	50	1	

LANDSCAPING ITEMS

CATEGORY	STATION	TO	STATION	LOCATION	625.0500 SALVAGED TOPSOIL SY	627.0200 MULCHING SY	628.2004 EROSION MAT CLASS I TYPE B SY	628.2008 EROSION MAT URBAN CLASS I TYPE B SY	TOTAL SEEDED AREA SF	629.0210 FERTILIZER TYPE B CWT	630.0120 SEEDING MIXTURE NO. 20 LB	630.0140 SEEDING MIXTURE NO. 40 LB	630.0200 SEEDING TEMPORARY LB	630.0300 SEEDING BORROW PIT LB	630.0500 SEED WATER MGAL	631.0300 SOD WATER MGAL	631.1000 SOD LAWN SY	REMARKS
0010	16+00	-	27+50		3,892	-	-	2,380	50,270	3.6	100	50	50	-	25	20	2,710	
0010	27+50	-	43+50		2,982	-	-	4,760	53,910	3.8	215	55	160	-	27	-	-	
0010	55+00	-	73+00		3,794	-	-	5,790	65,210	4.6	260	65	195	-	33	-	-	
0010	73+00	-	84+00		2,475	-	-	3,700	41,260	2.9	165	40	125	-	21	-	-	
0010	84+00	-	91+00		1,166	-	-	1,940	22,580	1.6	90	25	70	-	11	-	-	
0010	91+00	-	99+50		1,816	-	-	2,700	30,820	2.2	125	30	90	-	16	-	-	
0010	301'NW'+85	-	302'NW'+89	NORTHWOODS DR	177	-	-	270	2,780	0.2	-	15	10	-	1	-	-	
0010	0'G'+00	-	2'G'+12	GAVIN DRIVEWAY	599	-	-	820	7,530	0.6	-	40	25	-	4	-	-	
0010	0'C'+00	-	0'C'+91	AWRONSKI DRIVEWA	594	-	-	690	6,900	0.5	-	35	20	-	4	-	-	
0010				WASTE PIT	-	5,000	2,500	-	67,500	4.8	-	-	205	300	34	-	-	
0010				UNDISTRIBUTED	-	-	-	240	-	2	50	20	50	-	-	-	-	
				TOTAL 0010	17,495	5,000	2,500	23,290		26.8	1,005	375	1,000	300	174.9	20	2,710	

3

TRAFFIC CONTROL ITEMS

CATEGORY	LOCATION	DAYS	643.0300 TRAFFIC CONTROL DRUMS QTY	643.0300 DAY	643.0420 TRAFFIC CONTROL BARRICADES TYPE III QTY	643.0420 DAY	643.0705 TRAFFIC CONTROL WARNING LIGHTS TYPE QTY	643.0705 DAY	643.0900 TRAFFIC CONTROL SIGNS QTY	643.0900 DAY	643.1050 TRAFFIC CONTROL SIGNS PCMS QTY	643.1050 DAY	DAY
0010	PCMS BOARDS	7	10	70	-	-	-	-	-	-	2	14	
0010	ADVANCED WARNING SIGNS @ BOP	100	-	-	6	600	12	1,200	6	600	-	-	
0010	NORTHWOODS DRIVE	100	-	-	1	100	2	200	3	300	-	-	
0010	CLOSURE @ 43+50	100	-	-	4	400	8	800	1	100	-	-	
0010	CLOSURE @ 55+00	100	-	-	4	400	8	800	1	100	-	-	
0010	ADVANCED WARNING SIGNS @ EOP	100	-	-	5	500	10	1,000	3	300	-	-	
0010	VARIOUS LOCATIONS AS NEEDED	20	40	800	-	-	-	-	-	-	-	-	
	TOTAL 0010			870		2,000		4,000		1,400		14	

3

SEISMIC BID ITEMS

CATEGORY	STATION	PARCEL	LOCATION	999.1001.S.01 SEISMOGRAPH (5709-00-70) (01) EACH	999.1501.S CRACK AND DAMAGE SURVEY EACH	REMARKS
0010	PROJECT WIDE	-	-	1	-	
0010	19+25	PARCEL 2	LT	-	1	
0010	19+25	PARCEL 5	RT	-	1	
0010	23+00	PARCEL 3	LT	-	1	
0010	88+00	-	RT	-	1	
0010	97+00	PARCEL 7	LT	-	1	
			TOTAL 0010	1	5	

CONVENTIONAL SYMBOLS

SECTION LINE
QUARTER LINE
SIXTEENTH LINE
NEW REFERENCE LINE
NEW R/W LINE
EXISTING R/W OR HE LINE
PROPERTY LINE (P.L.)
LOT, TIE & OTHER MINOR LINES
EXISTING CENTERLINE
CORPORATE LIMITS
NEW R/W (FEE OR HE) (HATCHING VARIES BY OWNER)
TEMPORARY LIMITED EASEMENT AREA
EASEMENT AREA (PERMANENT LIMITED OR RESTRICTED DEVELOPMENT)
BUILDING (B) TO BE REMOVED (B)
BRIDGE
CULVERT

SECTION CORNER SYMBOL (18 / 23 24 / 26 25 / 9)
SECTION CORNER MONUMENT
GEODETIC SURVEY MONUMENT
SIGN (SIGN)
PERMITTED SIGN (#1-25, SIGN)
ACCESS RESTRICTED BY ACQUISITION
NO ACCESS (BY STATUTORY AUTHORITY)
ACCESS RESTRICTED (BY PREVIOUS PROJECT OR CONTROL)
NO ACCESS (NEW HIGHWAY)
PARCEL NUMBER (25)
UTILITY NUMBER (40)
PARALLEL OFFSETS

R/W MONUMENT (TO BE SET)
NON-MONUMENTED R/W POINT
FOUND SURVEY MONUMENT (SEE FOUND MONUMENT TABLE) IP

CONVENTIONAL UTILITY SYMBOLS

WATER	W
GAS	G
TELEPHONE	T
OVERHEAD TRANSMISSION LINES	OH
ELECTRIC	E
CABLE TELEVISION	TV
FIBER OPTIC	FO
SANITARY SEWER	SAN
STORM SEWER	SS
COMBINED SEWER	SSS
ELECTRIC TOWER	
TRANSMISSION STRUCTURES	

	COMPENSABLE	NON-COMPENSABLE
ELECTRIC POLE	■	□
TELEPHONE POLE	✗	⌀
PEDESTAL (LABEL TYPE) (TV, TEL, ELEC, ETC.)	▣	⌑

CONVENTIONAL ABBREVIATIONS

ACCESS RIGHTS	AR	RECORDED AS	(100')
ACRES	AC	REEL / IMAGE	R/I
ALUMINUM	ALUM	REFERENCE LINE	R/L
AND OTHERS	ET AL	REMAINING	REM
BLOCK	BLK	RESTRICTIVE DEVELOPMENT EASEMENT	RDE
CENTERLINE	C/L	RIGHT	RT
CERTIFIED SURVEY MAP	CSM	RIGHT OF WAY	R/W
CONCRETE	CONC	SECTION	SEC
COUNTY TRUNK HIGHWAY	CTH	SEPTIC VENT	SEPV
CORNER	COR	SQUARE FEET	SF
DOCUMENT NUMBER	DOC	STATE TRUNK HIGHWAY	STH
EASEMENT	EASE	STATION	STA
EXISTING	EX	TELEPHONE PEDESTAL	TP
GAS VALVE	GV	TRANSPORTATION PROJECT PLAT	TPP
GRID NORTH	GN	UNITED STATES HIGHWAY	USH
IDENTIFICATION	ID	VOLUME	V
LEFT	LT		
MONUMENT	MON		
NATIONAL GEODETIC SURVEY	NGS		
NUMBER	NO		
OUTLOT	OL		
PAGE	P		
POINT OF TANGENCY	PT		
POINT OF BEGINNING	POB		
POINT OF CURVATURE	PC		
POINT OF COMPOUND CURVE	PCC		
POINT OF INTERSECTION	PI		
PROPERTY LINE	PL		

CURVE DATA ABBREVIATIONS

LONG CHORD	LCH
LONG CHORD BEARING	LCB
RADIUS	R
DEGREE OF CURVE	D
DELTA ANGLE	Δ/DELTA
LENGTH OF CURVE	L
TANGENT	T
DIRECTION AHEAD	DA
DIRECTION BACK	DB

RECEIVED
JUL - 9 2025
By

R/W PROJECT NUMBER 5709-00-01	SHEET NUMBER	TOTAL SHEETS
FEDERAL PROJECT NUMBER	4.01	6

PLAT OF RIGHT OF WAY REQUIRED FOR

NORTH REEDSBURG ROAD
NORTHWOODS DRIVE TO STH 23

NORTH REEDSBURG ROAD	SAUK

CONSTRUCTION PROJECT NUMBER
5709-00-70

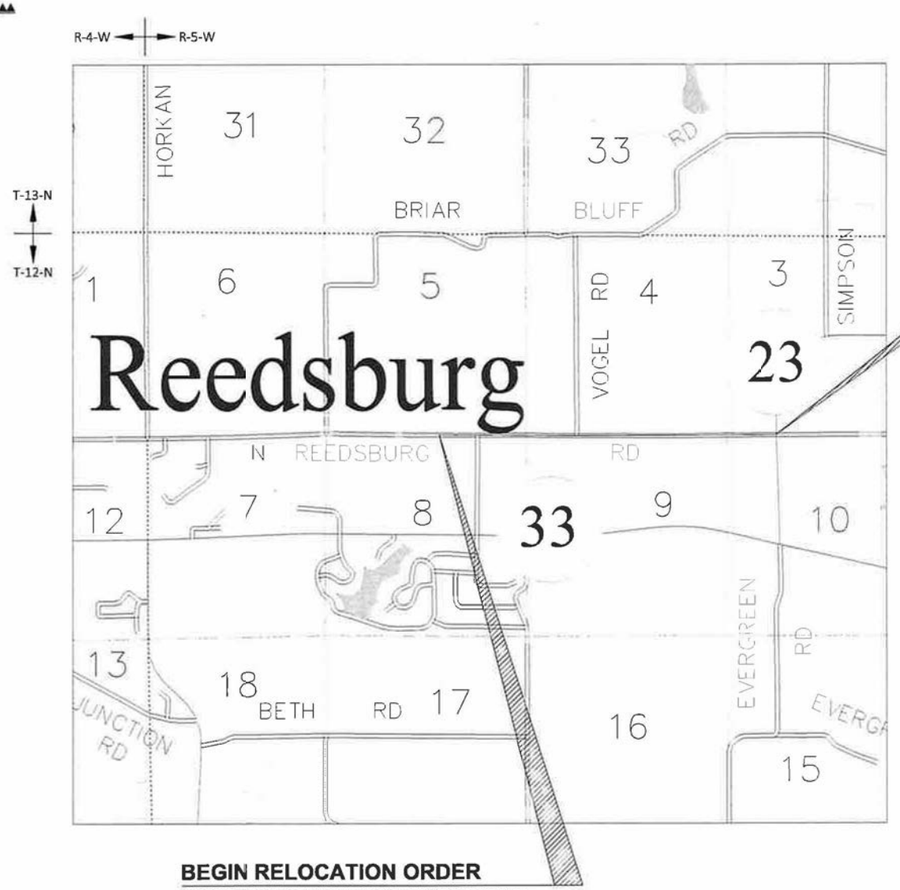

BEGIN RELOCATION ORDER
3.06 FT SOUTH AND 499.99 FT EAST OF THE SOUTH 1/4 CORNER OF SEC. 5, T12N, R5E
Y=262,736.077
X=602,334.903

LAYOUT
SCALE 0 2000

TOTAL NET LENGTH OF CENTERLINE = 1.62

END RELOCATION ORDER
8.64 FT NORTH AND 1154.48 FT EAST OF THE SOUTHWEST CORNER OF SEC. 3, T8N, R5E
Y=262,718.175
X=610,927.909

NOTES:

POSITIONS SHOWN ON THIS PLAT ARE WISCONSIN COORDINATE REFERENCE SYSTEM COORDINATES (WISCRS), SAUK COUNTY, NAD83 (2011)IN US SURVEY FEET. VALUES SHOWN ARE GRID COORDINATES, GRID BEARINGS, AND GRID DISTANCES. GRID DISTANCES MAY BE USED AS GROUND DISTANCES.

ALL NEW RIGHT-OF-WAY MONUMENTS WILL BE TYPE 2 (TYPICALLY 3/4" X 24" IRON REBARS), UNLESS OTHERWISE NOTED, AND WILL BE PLACED PRIOR TO THE COMPLETION OF THE PROJECT.

DIMENSIONING FOR THE NEW RIGHT-OF-WAY IS MEASURED ALONG AND PERPENDICULAR TO THE NEW REFERENCE LINES.

RIGHT-OF-WAY BOUNDARIES ARE DEFINED WITH COURSES OF THE PERIMETER OF THE HIGHWAY LANDS REFERENCED TO THE U.S. PUBLIC LAND SURVEY SYSTEM OR OTHER "SURVEYS" OF PUBLIC RECORD.

FOR THE CURRENT ACCESS/DRIVEWAY INFORMATION, CONTACT THE PLANNING UNIT OF THE WISCONSIN DEPARTMENT OF TRANSPORTATION OFFICE IN SW REGION LA CROSSE

PARCEL AND UTILITY IDENTIFICATION NUMBERS MAY NOT POINT TO ALL AREAS OF ACQUISITION, AS NOTED ON THE DETAIL PAGES.

A TEMPORARY LIMITED EASEMENT (TLE) IS A RIGHT FOR CONSTRUCTION PURPOSES, AS DEFINED HEREIN, INCLUDING THE RIGHT TO OPERATE NECESSARY EQUIPMENT THEREON, THE RIGHT OF INGRESS AND EGRESS, AS LONG AS REQUIRED FOR SUCH PUBLIC PURPOSE INCLUDING THE RIGHT TO PRESERVE, PROTECT, REMOVE, OR PLANT THEREON ANY VEGETATION THAT THE HIGHWAY AUTHORITIES MAY DEEM DESIRABLE. ALL (TLEs) ON THIS PLAT EXPIRE AT THE COMPLETION OF THE CONSTRUCTION PROJECT FOR WHICH THIS INSTRUMENT IS GIVEN.

PROPERTY LINES SHOWN ON THIS PLAT ARE DRAWN FROM DATA DERIVED FROM MAPS AND DOCUMENTS OF PUBLIC RECORD AND/OR EXISTING OCCUPATIONAL LINES. THIS PLAT MAY NOT BE A TRUE REPRESENTATION OF EXISTING PROPERTY LINES, EXCLUDING RIGHT-OF-WAY, AND SHOULD NOT BE USED AS A SUBSTITUTE FOR AN ACCURATE FIELD SURVEY.

INFORMATION FOR THE BASIS OF EXISTING HIGHWAY RIGHT-OF-WAY POINTS OF REFERENCE AND ACCESS CONTROL ARE LISTED ON THE DETAIL PAGES.

TEAM ENGINEERING

REVISION DATE

THIS PLAT IS A GRAPHIC REPRESENTATION AND IS FOR REFERENCE PURPOSES ONLY. DEEDS MUST BE CHECKED TO DETERMINE PROPERTY BOUNDARIES AND ACCESS RIGHTS.

WISCONSIN
STEVEN A. ALT
S-3061
LONE ROCK WIS.
LAND SURVEYOR

TOWN OF EXCELSIOR

APPROVED FOR THE TOWN
DATE: 7/9/25
(Signature)

FILE NAME : T:\PROJECTS\2023\23-2044-1 (WAUZEKA DRIVE)T EXCELSIOR, NORTH REEDSBURG ROAD, NORTHWOODS DRIVE TO STH 23, 5709-00-01\RW\ROW PLAT_PLAT.DWG
PLOT DATE : 1/21/2025 2:00 PM
PLOT BY : PAIGE
PLOT NAME :

FOUND 4" HARRISON MONUMENT
Y = 262,739.145
X = 601,884.912

T 12 N
R 5 8 E 5

S89°38'54"E, 500.00'
MON TO BEGIN RELOCATION ORDER

BP: 10+00.00

SW - SE

POS
RICHARD T. BLAKESLEE
4-13-2021

LOT 1
CSM #5097
DOC. #851675
V.28, PG.5097-5097A

PI: 15+22.17

EAST LINE SW-SE

SE - SE

LOT 2
CSM #5097
DOC. #851675
V.28, PG.5097-5097A

GN

LOT 1
CSM #3950
DOC. #686036
V.20, PG.3950-3950A

1 2 3 4 5

R/W

IP

11 12 13 14 15 16 17 18 19 20 21 22 23 24

S89°39'06"E

S89°38'33"E

33'

NORTH REEDSBURG ROAD

SECTION LINE

BEGIN RELOCATION ORDER
STA 10+00.00
Y = 262,736.077
X = 602,384.903

PI STA 15+22.17
Y = 262,732.901
X = 602,907.067

LOT 2
CSM #4613
DOC. #772267
V.25, PG.4613-4613A

NW - NE

LOT 2
CSM #3521
DOC. #645117
V.17, PG.3521-3521A

EAST LINE NW-NE

NORTHWOODS DRIVE

NE - NE

LOT 1
CSM #3521
DOC. #645117
V.17, PG.3521-3521A

4 4

LOT 2
CSM #4018
DOC. #698526
V.20, PG.4018,
4018A, 4018B

LOT 2
CSM #3950
DOC. #686036
V.20, PG.3950-3950A

SE - SE

LOT 1
CSM #3885
DOC. #677319
V.20, PG.3885-3885A

SECTION LINE

POS
RICHARD T. BLAKESLEE
4-18-2016

LOT 1
CSM #1424
DOC. #463327
V.20, PG.1424-1424A

SW - SW

GN

PI: 31+36.65

25 26 27 28 29 30 31 32 33 34 35 36 37 38 39 40

S89°38'33"E

SECTION LINE

S89°31'46"E

SECTION LINE

NE - NE

T 12 N
R 5 4 8 9 E 5

S05°51'14"E, 0.13'
MON TO PI STA 31+36.65

PI STA 31+36.65
Y = 262,722.831
X = 604,521.517

NW - NW

FOUND 4" HARRISON MONUMENT
Y = 262,722.963
X = 604,521.503

REVISION DATE	DATE 1-14-25	SCALE, FEET 0 50 100	HWY: NORTH REEDSBURG ROAD	STATE R/W PROJECT NUMBER 5709-00-01	PLAT SHEET 4.02	
	GRID FACTOR		COUNTY: SAUK	CONSTRUCTION PROJECT NUMBER 5709-00-70	PS&E SHEET 45	E

FILE NAME : ROW PLAT_PLAT.DWG
LAYOUT NAME - 4.02

PLOT DATE : 1/21/2025 2:00 PM PLOT BY : PAIGE PLOT NAME : PLOT SCALE :

WISDOT/CADDS SHEET 75

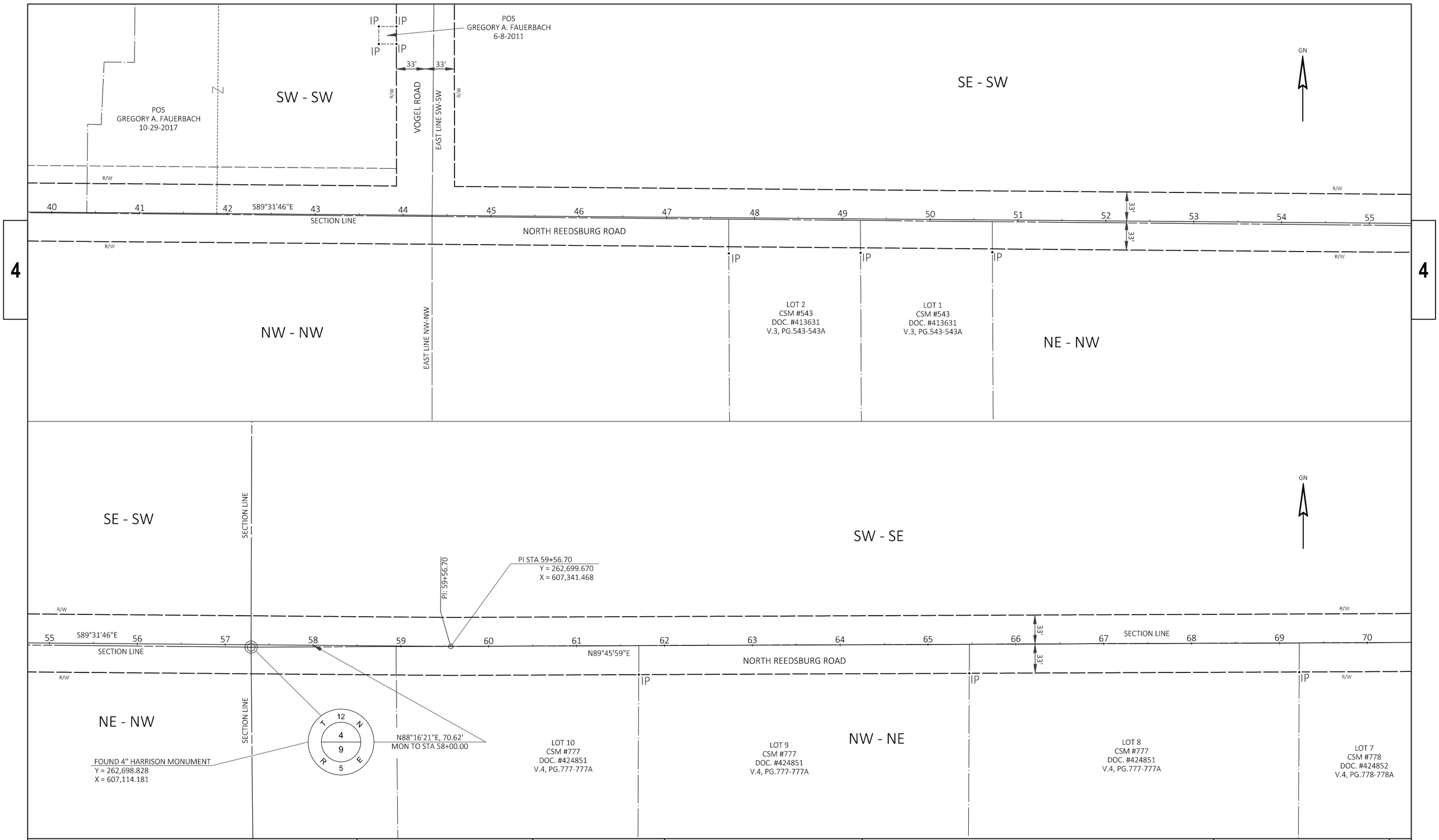

REVISION DATE	DATE 1-14-25	SCALE, FEET 0 50 100	HWY: NORTH REEDSBURG ROAD	STATE R/W PROJECT NUMBER 5709-00-01	PLAT SHEET 4.03
	GRID FACTOR		COUNTY: SAUK	CONSTRUCTION PROJECT NUMBER 5709-00-70	PS&E SHEET 46 E

FILE NAME : ROW PLAT_PLAT.DWG
LAYOUT NAME - 4.03
PLOT DATE : 1/21/2025 2:00 PM PLOT BY : PAIGE PLOT NAME : PLOT SCALE :
WISDOT/CADDS SHEET 75

SW - SE

EAST LINE SW-SE

SE - SE

FOUND 4" HARRISON MONUMENT
Y = 262,709.536
X = 609,773.425

T 12 N
4 3
9 10
R 5 E

N89°34'17"E, 1154.52'
MON TO END RELOCATION ORDER

PI STA 83+88.50
Y = 262,709.610
X = 609,773.247

SECTION LINE

GN

SW - SW

PI: 83+88.50

PI: 72+98.02

R/W

IP

R/W

33'

33'

70 71 72 73 74 75 76 77 78 79 80 81 82 83 84 SECTION LINE 85

SECTION LINE

N89°45'59"E

NORTH REEDSBURG ROAD

N89°45'54"E

N89°34'30"E

R/W

IP IP IP IP

R/W

4

4

PI STA 72+98.02
Y = 262,705.138
X = 608,682.778

NW - NE

EAST LINE NW-NE

LOT 7
CSM #778
DOC. #424852
V.4, PG.778-778A

LOT 6
CSM #778
DOC. #424852
V.4, PG.778-778A

NE - NE

LOT 5
CSM #778
DOC. #424852
V.4, PG.778-778A

LOT 1
CSM #1459
DOC. #466179
V.6, PG.1459,1459A,1459B

LOT 1
CSM #6400
DOC. #1125902
V.38, PG.6400-6400A

SECTION LINE

LOT 3
CSM #4912
DOC. #822571
V.27, PG.4912-4912A

NW - NW

SW - SW

LOT 2
CSM #1704
DOC. #486288
V.7, PG.1704-1704A

LOT 2
CSM #2250
DOC. #536455
V.9, PG.2250-2250A

IP

EAST LINE SW-SW

6

7

R/W

33'

33'

85 86 87 88 89 90 91 92 93 94 95 SECTION LINE

N89°34'30"E

NORTH REEDSBURG ROAD

R/W

IP IP

EP: 95+43.19

END RELOCATION ORDER
STA 95+43.19
Y = 262,718.175
X = 610,927.909

S.T.H. 23

8

LOT 3
CSM #4912
DOC. #822571
V.27, PG.4912-4912A

LOT 2
CSM #1354
DOC. #458409
V.5, PG.1354-1354A

POS
SCOTT P. HEWITT
8-11-2022

LOT 2
CSM #779
DOC. #424853
V.4, PG.779-779A

NW - NW

LOT 1
CSM #779
DOC. #424853
V.4, PG.779-779A

IP

EAST LINE NW-NW

GN

REVISION DATE	DATE 1-14-25	SCALE, FEET 0 50 100	HWY: NORTH REEDSBURG ROAD	STATE R/W PROJECT NUMBER 5709-00-01	PLAT SHEET 4.04
	GRID FACTOR		COUNTY: SAUK	CONSTRUCTION PROJECT NUMBER 5709-00-70	PS&E SHEET 47 E

FILE NAME : ROW PLAT_PLAT.DWG
LAYOUT NAME - 4.04

PLOT DATE : 1/21/2025 2:00 PM PLOT BY : PAIGE PLOT NAME : PLOT SCALE :

WISDOT/CADDS SHEET 75

SCHEDULE OF LANDS & INTERESTS REQUIRED

OWNER'S NAMES ARE SHOWN FOR REFERENCE PURPOSES ONLY AND ARE SUBJECT TO CHANGE PRIOR TO THE TRANSFER OF LAND INTERESTS TO THE DEPARTMENT.

PARCEL NUMBER	OWNER(S)	INTERESTS REQUIRED	R/W REQUIRED SF			PLE ACRE	TLE ACRE
			NEW	EXISTING	TOTAL		
1	TOEDER FAMILY HOLIDINGS LLC	TLE	--	--	--	--	0.09
2	ROBERT D. AND TAMARA GAVIN LIVING TRUST	TLE	--	--	--	--	0.57
3	KENT F. CHIARELLI AND HEIDI S. HIHN	TLE	--	--	--	--	0.04
4	GAVIN FARMS I, LLC	TLE	--	--	--	--	0.01
5	MATTHEW D. CORWITH AND TRACEY A. CORWITH	TLE	--	--	--	--	0.15

EXISTING MONUMENTATION					
POINT	STATION	OFFSET	Y COORDINATE	X COORDINATE	DESCRIPTION
1	11+61.33	33.00' RT	262,702.0960	602,546.034	3/4" IRON ROD
2	15+22.28	33.00' LT	262,765.8995	602,907.377	3/4" IRON ROD
3	17+99.40	32.46' RT	262,698.7110	603,184.083	DISTURBED 3/4" IRON ROD
4	18+18.07	33.00' LT	262,764.0546	603,203.159	3/4" IRON ROD

UTILITY INTERESTS REQUIRED		
UTILITY NO	OWNER(S)	INTEREST REQUIRED
100	VERISON COMMUNICATIONS INC.	RELEASE OF RIGHTS
101	AT & T	RELEASE OF RIGHTS
102	ALLIANT ENERGY CORPORATION	RELEASE OF RIGHTS

UTILITY EASEMENT TABLE			
UTILITY NO	PARCEL	OWNER	RECORDING INFORMATION
100	1, 2, 4 & 5	GENERAL TELEPHONE COMPANY OF WISCONSIN 20' EASEMENT	DOC. 382642 V. 369, P. 673 DOC. 380764 V. 368, P. 179 DOC. 380537 V. 368, P. 10
101	3	WISCONSIN TELEPHONE COMPANY - BLANKET EASEMENT	DOC. 175689 V. 110, P. 281
102	3	WISCONSIN POWER AND LIGHT COMPANY - BLANKET EASEMENT	DOC. 237388 V. 165, P. 169

STATION & OFFSET/COORDINATE TABLE				
POINT	STATION	OFFSET	Y COORDINATE	X COORDINATE
100	13+00.00	33.00' LT	262,767.251	602,685.098
101	13+00.00	45.00' LT	262,779.251	602,685.171
102	14+50.00	45.00' LT	262,778.339	602,835.168
103	14+50.00	65.00' LT	262,798.339	602,835.290
104	15+22.17	65.00' LT	262,797.900	602,907.456
105	16+60.00	65.00' LT	262,797.040	603,045.296
106	16+60.00	240.00' LT	262,972.036	603,046.387
107	17+55.00	240.00' LT	262,971.444	603,141.385
108	17+55.00	45.00' LT	262,776.448	603,140.169
109	19+70.00	45.00' LT	262,775.107	603,355.165
110	19+70.00	33.00' LT	262,763.107	603,355.090
111	18+90.40	33.00' RT	262,697.605	603,275.076
112	18+65.27	58.00' RT	262,672.762	603,249.795
113	18+65.40	33.00' RT	262,697.761	603,250.076
114	17+99.40	33.00' RT	262,698.172	603,184.077
115	17+99.31	50.00' RT	262,681.173	603,183.885
116	15+22.18	50.00' RT	262,682.902	602,906.763
117	14+25.00	50.00' RT	262,683.493	602,809.591
118	14+25.00	33.00' RT	262,700.492	602,809.694
119	15+22.18	33.00' RT	262,699.901	602,906.866

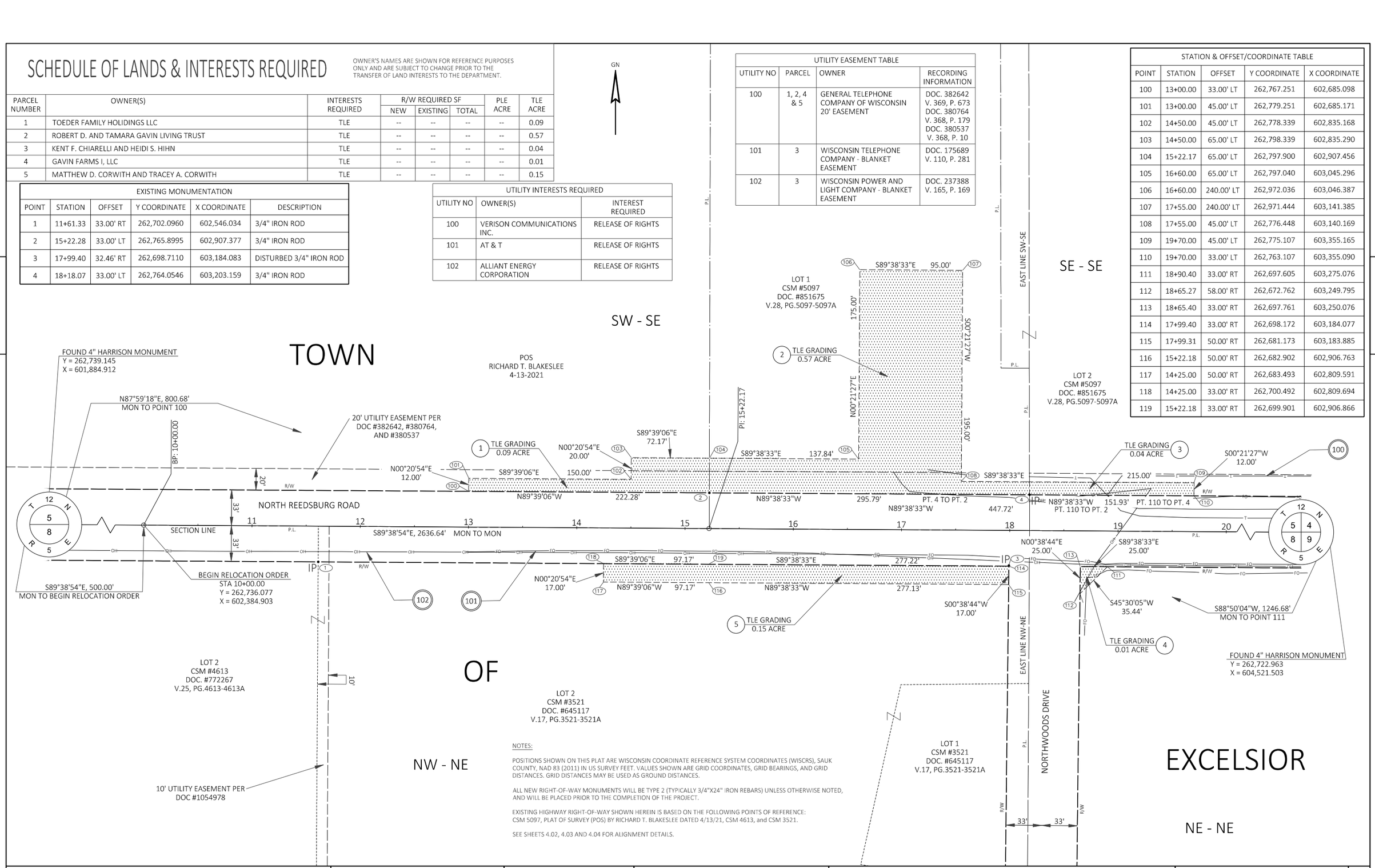
GN
SW - SE
TOWN
OF
NW - NE
SE - SE
EXCELSIOR
NE - NE
POS
RICHARD T. BLAKESLEE
4-13-2021
FOUND 4" HARRISON MONUMENT
Y = 262,739.145
X = 601,884.912
N87°59'18"E, 800.68'
MON TO POINT 100
BP: 10+00.00
20' UTILITY EASEMENT PER DOC #382642, #380764, AND #380537
NORTH REEDSBURG ROAD
SECTION LINE
S89°38'54"E, 2636.64' MON TO MON
S89°38'54"E, 500.00'
MON TO BEGIN RELOCATION ORDER
BEGIN RELOCATION ORDER
STA 10+00.00
Y = 262,736.077
X = 602,384.903
10' UTILITY EASEMENT PER DOC #1054978
LOT 1 CSM #5097 DOC. #851675 V.28, PG.5097-5097A
LOT 2 CSM #5097 DOC. #851675 V.28, PG.5097-5097A
LOT 2 CSM #4613 DOC. #772267 V.25, PG.4613-4613A
LOT 2 CSM #3521 DOC. #645117 V.17, PG.3521-3521A
LOT 1 CSM #3521 DOC. #645117 V.17, PG.3521-3521A
EAST LINE SW-SE
EAST LINE NW-NE
NORTHWOODS DRIVE
S89°38'33"E 95.00'
S00°21'27"W 175.00'
N00°21'27"E 195.00'
PI: 15+22.17
TLE GRADING 0.57 ACRE
TLE GRADING 0.09 ACRE
TLE GRADING 0.15 ACRE
TLE GRADING 0.04 ACRE
TLE GRADING 0.01 ACRE
N00°20'54"E 12.00'
S89°39'06"E 150.00'
N89°39'06"W 222.28'
N00°20'54"E 20.00'
S89°38'33"E 137.84'
S89°39'06"E 72.17'
N89°38'33"W 295.79'
PT. 4 TO PT. 2
N89°38'33"W 447.72'
S00°21'27"W 12.00'
S89°38'33"E 215.00'
N89°38'33"W 151.93'
PT. 110 TO PT. 2
PT. 110 TO PT. 4
S89°39'06"E 97.17'
N00°20'54"E 17.00'
N89°39'06"W 97.17'
S89°38'33"E 277.22'
N89°38'33"W 277.13'
N00°38'44"E 25.00'
S89°38'33"E 25.00'
S00°38'44"W 17.00'
S45°30'05"W 35.44'
S88°50'04"W, 1246.68'
MON TO POINT 111
FOUND 4" HARRISON MONUMENT
Y = 262,722.963
X = 604,521.503
33'
33'
20'
10'
R/W
P.I.
P.T.
P.C.
P.R.C.
P.C.C.
P.R.C.C.
P.C.C.C.
P.R.C.C.C.
P.T.C.C.
P.T.C.C.C.
P.T.R.C.C.
P.T.R.C.C.C.
P.C.R.C.C.
P.C.R.C.C.C.
P.I.R.C.C.
P.I.R.C.C.C.
P.I.C.C.
P.I.C.C.C.
P.I.C.R.C.C.
P.I.C.R.C.C.C.
P.I.R.C.R.C.C.
P.I.R.C.R.C.C.C.
P.I.C.C.R.C.C.
P.I.C.C.R.C.C.C.
P.I.C.C.C.R.C.C.
P.I.C.C.C.R.C.C.C.
P.I.R.C.C.R.C.C.
P.I.R.C.C.R.C.C.C.
P.I.R.C.C.C.R.C.C.
P.I.R.C.C.C.R.C.C.C.
P.I.C.C.C.C.R.C.C.
P.I.C.C.C.C.R.C.C.C.
P.I.R.C.C.C.C.R.C.C.
P.I.R.C.C.C.C.R.C.C.C.
P.I.C.C.C.C.C.R.C.C.
P.I.C.C.C.C.C.R.C.C.C.
P.I.R.C.C.C.C.C.R.C.C.
P.I.R.C.C.C.C.C.R.C.C.C.
P.I.C.C.C.C.C.C.R.C.C.
P.I.C.C.C.C.C.C.R.C.C.C.
P.I.R.C.C.C.C.C.C.R.C.C.
P.I.R.C.C.C.C.C.C.R.C.C.C.
P.I.C.C.C.C.C.C.C.R.C.C.
P.I.C.C.C.C.C.C.C.R.C.C.C.
P.I.R.C.C.C.C.C.C.C.R.C.C.
P.I.R.C.C.C.C.C.C.C.R.C.C.C.
P.I.C.C.C.C.C.C.C.C.R.C.C.
P.I.C.C.C.C.C.C.C.C.R.C.C.C.
P.I.R.C.C.C.C.C.C.C.C.R.C.C.
P.I.R.C.C.C.C.C.C.C.C.R.C.C.C.
P.I.C.C.C.C.C.C.C.C.C.R.C.C.
P.I.C.C.C.C.C.C.C.C.C.R.C.C.C.
P.I.R.C.C.C.C.C.C.C.C.C.R.C.C.
P.I.R.C.C.C.C.C.C.C.C.C.R.C.C.C.
P.I.C.C.C.C.C.C.C.C.C.C.R.C.C.
P.I.C.C.C.C.C.C.C.C.C.C.R.C.C.C.
P.I.R.C.C.C.C.C.C.C.C.C.C.R.C.C.
P.I.R.C.C.C.C.C.C.C.C.C.C.R.C.C.C.
P.I.C.C.C.C.C.C.C.C.C.C.C.R.C.C.
P.I.C.C.C.C.C.C.C.C.C.C.C.R.C.C.C.
P.I.R.C.C.C.C.C.C.C.C.C.C.C.R.C.C.
P.I.R.C.C.C.C.C.C.C.C.C.C.C.R.C.C.C.
P.I.C.C.C.C.C.C.C.C.C.C.C.C.R.C.C.
P.I.C.C.C.C.C.C.C.C.C.C.C.C.R.C.C.C.
P.I.R.C.C.C.C.C.C.C.C.C.C.C.C.R.C.C.
P.I.R.C.C.C.C.C.C.C.C.C.C.C.C.R.C.C.C.
P.I.C.C.C.C.C.C.C.C.C.C.C.C.C.R.C.C.
P.I.C.C.C.C.C.C.C.C.C.C.C.C.C.R.C.C.C.
P.I.R.C.C.C.C.C.C.C.C.C.C.C.C.C.R.C.C.
P.I.R.C.C.C.C.C.C.C.C.C.C.C.C.C.R.C.C.C.
P.I.C.C.C.C.C.C.C.C.C.C.C.C.C.C.R.C.C.
P.I.C.C.C.C.C.C.C.C.C.C.C.C.C.C.R.C.C.C.
P.I.R.C.C.C.C.C.C.C.C.C.C.C.C.C.C.R.C.C.
P.I.R.C.C.C.C.C.C.C.C.C.C.C.C.C.C.R.C.C.C.
P.I.C.C.C.C.C.C.C.C.C.C.C.C.C.C.C.R.C.C.
P.I.C.C.C.C.C.C.C.C.C.C.C.C.C.C.C.R.C.C.C.
P.I.R.C.C.C.C.C.C.C.C.C.C.C.C.C.C.C.R.C.C.
P.I.R.C.C.C.C.C.C.C.C.C.C.C.C.C.C.C.R.C.C.C.
P.I.C.C.C.C.C.C.C.C.C.C.C.C.C.C.C.C.R.C.C.
P.I.C.C.C.C.C.C.C.C.C.C.C.C.C.C.C.C.R.C.C.C.
P.I.R.C.C.C.C.C.C.C.C.C.C.C.C.C.C.C.C.R.C.C.
P.I.R.C.C.C.C.C.C.C.C.C.C.C.C.C.C.C.C.R.C.C.C.
P.I.C.C.C.C.C.C.C.C.C.C.C.C.C.C.C.C.C.R.C.C.
P.I.C.C.C.C.C.C.C.C.C.C.C.C.C.C.C.C.C.R.C.C.C.
P.I.R.C.C.C.C.C.C.C.C.C.C.C.C.C.C.C.C.C.R.C.C.
P.I.R.C.C.C.C.C.C.C.C.C.C.C.C.C.C.C.C.C.R.C.C.C.
P.I.C.C.C.C.C.C.C.C.C.C.C.C.C.C.C.C.C.C.R.C.C.
P.I.C.C.C.C.C.C.C.C.C.C.C.C.C.C.C.C.C.C.R.C.C.C.
P.I.R.C.C.C.C.C.C.C.C.C.C.C.C.C.C.C.C.C.C.R.C.C.
P.I.R.C.C.C.C.C.C.C.C.C.C.C.C.C.C.C.C.C.C.R.C.C.C.
P.I.C.C.C.C.C.C.C.C.C.C.C.C.C.C.C.C.C.C.C.R.C.C.
P.I.C.C.C.C.C.C.C.C.C.C.C.C.C.C.C.C.C.C.C.R.C.C.C.
P.I.R.C.C.C.C.C.C.C.C.C.C.C.C.C.C.C.C.C.C.C.R.C.C.
P.I.R.C.C.C.C.C.C.C.C.C.C.C.C.C.C.C.C.C.C.C.R.C.C.C.
P.I.C.C.C.C.C.C.C.C.C.C.C.C.C.C.C.C.C.C.C.C.R.C.C.
P.I.C.C.C.C.C.C.C.C.C.C.C.C.C.C.C.C.C.C.C.C.R.C.C.C.
P.I.R.C.C.C.C.C.C.C.C.C.C.C.C.C.C.C.C.C.C.C.C.R.C.C.
P.I.R.C.C.C.C.C.C.C.C.C.C.C.C.C.C.C.C.C.C.C.C.R.C.C.C.
P.I.C.C.C.C.C.C.C.C.C.C.C.C.C.C.C.C.C.C.C.C.C.R.C.C.
P.I.C.C.C.C.C.C.C.C.C.C.C.C.C.C.C.C.C.C.C.C.C.R.C.C.C.
P.I.R.C.C.C.C.C.C.C.C.C.C.C.C.C.C.C.C.C.C.C.C.C.R.C.C.
P.I.R.C.C.C.C.C.C.C.C.C.C.C.C.C.C.C.C.C.C.C.C.C.R.C.C.C.
P.I.C.C.C.C.C.C.C.C.C.C.C.C.C.C.C.C.C.C.C.C.C.C.R.C.C.
P.I.C.C.C.C.C.C.C.C.C.C.C.C.C.C.C.C.C.C.C.C.C.C.R.C.C.C.
P.I.R.C.C.C.C.C.C.C.C.C.C.C.C.C.C.C.C.C.C.C.C.C.C.R.C.C.
P.I.R.C.C.C.C.C.C.C.C.C.C.C.C.C.C.C.C.C.C.C.C.C.C.R.C.C.C.
P.I.C.C.C.C.C.C.C.C.C.C.C.C.C.C.C.C.C.C.C.C.C.C.C.R.C.C.
P.I.C.C.C.C.C.C.C.C.C.C.C.C.C.C.C.C.C.C.C.C.C.C.C.R.C.C.C.
P.I.R.C.C.C.C.C.C.C.C.C.C.C.C.C.C.C.C.C.C.C.C.C.C.C.R.C.C.
P.I.R.C.C.C.C.C.C.C.C.C.C.C.C.C.C.C.C.C.C.C.C.C.C.C.R.C.C.C.
P.I.C.C.C.C.C.C.C.C.C.C.C.C.C.C.C.C.C.C.C.C.C.C.C.C.R.C.C.
P.I.C.C.C.C.C.C.C.C.C.C.C.C.C.C.C.C.C.C.C.C.C.C.C.C.R.C.C.C.
P.I.R.C.C.C.C.C.C.C.C.C.C.C.C.C.C.C.C.C.C.C.C.C.C.C.C.R.C.C.
P.I.R.C.C.C.C.C.C.C.C.C.C.C.C.C.C.C.C.C.C.C.C.C.C.C.C.R.C.C.C.
P.I.C.C.C.C.C.C.C.C.C.C.C.C.C.C.C.C.C.C.C.C.C.C.C.C.C.R.C.C.
P.I.C.C.C.C.C.C.C.C.C.C.C.C.C.C.C.C.C.C.C.C.C.C.C.C.C.R.C.C.C.
P.I.R.C.C.C.C.C.C.C.C.C.C.C.C.C.C.C.C.C.C.C.C.C.C.C.C.C.R.C.C.
P.I.R.C.C.C.C.C.C.C.C.C.C.C.C.C.C.C.C.C.C.C.C.C.C.C.C.C.R.C.C.C.
P.I.C.C.C.C.C.C.C.C.C.C.C.C.C.C.C.C.C.C.C.C.C.C.C.C.C.C.R.C.C.
P.I.C.C.C.C.C.C.C.C.C.C.C.C.C.C.C.C.C.C.C.C.C.C.C.C.C.C.R.C.C.C.
P.I.R.C.C.C.C.C.C.C.C.C.C.C.C.C.C.C.C.C.C.C.C.C.C.C.C.C.C.R.C.C.
P.I.R.C.C.C.C.C.C.C.C.C.C.C.C.C.C.C.C.C.C.C.C.C.C.C.C.C.C.R.C.C.C.
P.I.C.C.C.C.C.C.C.C.C.C.C.C.C.C.C.C.C.C.C.C.C.C.C.C.C.C.C.R.C.C.
P.I.C.C.C.C.C.C.C.C.C.C.C.C.C.C.C.C.C.C.C.C.C.C.C.C.C.C.C.R.C.C.C.
P.I.R.C.C.C.C.C.C.C.C.C.C.C.C.C.C.C.C.C.C.C.C.C.C.C.C.C.C.C.R.C.C.
P.I.R.C.C.C.C.C.C.C.C.C.C.C.C.C.C.C.C.C.C.C.C.C.C.C.C.C.C.C.R.C.C.C.
P.I.C.C.C.C.C.C.C.C.C.C.C.C.C.C.C.C.C.C.C.C.C.C.C.C.C.C.C.C.R.C.C.
P.I.C.C.C.C.C.C.C.C.C.C.C.C.C.C.C.C.C.C.C.C.C.C.C.C.C.C.C.C.R.C.C.C.
P.I.R.C.C.C.C.C.C.C.C.C.C.C.C.C.C.C.C.C.C.C.C.C.C.C.C.C.C.C.C.R.C.C.
P.I.R.C.C.C.C.C.C.C.C.C.C.C.C.C.C.C.C.C.C.C.C.C.C.C.C.C.C.C.C.R.C.C.C.
P.I.C.C.C.C.C.C.C.C.C.C.C.C.C.C.C.C.C.C.C.C.C.C.C.C.C.C.C.C.C.R.C.C.
P.I.C.C.C.C.C.C.C.C.C.C.C.C.C.C.C.C.C.C.C.C.C.C.C.C.C.C.C.C.C.R.C.C.C.
P.I.R.C.C.C.C.C.C.C.C.C.C.C.C.C.C.C.C.C.C.C.C.C.C.C.C.C.C.C.C.C.R.C.C.
P.I.R.C.C.C.C.C.C.C.C.C.C.C.C.C.C.C.C.C.C.C.C.C.C.C.C.C.C.C.C.C.R.C.C.C.
P.I.C.C.C.C.C.C.C.C.C.C.C.C.C.C.C.C.C.C.C.C.C.C.C.C.C.C.C.C.C.C.R.C.C.
P.I.C.C.C.C.C.C.C.C.C.C.C.C.C.C.C.C.C.C.C.C.C.C.C.C.C.C.C.C.C.C.R.C.C.C.
P.I.R.C.C.C.C.C.C.C.C.C.C.C.C.C.C.C.C.C.C.C.C.C.C.C.C.C.C.C.C.C.C.R.C.C.
P.I.R.C.C.C.C.C.C.C.C.C.C.C.C.C.C.C.C.C.C.C.C.C.C.C.C.C.C.C.C.C.C.R.C.C.C.
P.I.C.C.C.C.C.C.C.C.C.C.C.C.C.C.C.C.C.C.C.C.C.C.C.C.C.C.C.C.C.C.C.R.C.C.
P.I.C.C.C.C.C.C.C.C.C.C.C.C.C.C.C.C.C.C.C.C.C.C.C.C.C.C.C.C.C.C.C.R.C.C.C.
P.I.R.C.C.C.C.C.C.C.C.C.C.C.C.C.C.C.C.C.C.C.C.C.C.C.C.C.C.C.C.C.C.C.R.C.C.
P.I.R.C.C.C.C.C.C.C.C.C.C.C.C.C.C.C.C.C.C.C.C.C.C.C.C.C.C.C.C.C.C.C.R.C.C.C.
P.I.C.C.C.C.C.C.C.C.C.C.C.C.C.C.C.C.C.C.C.C.C.C.C.C.C.C.C.C.C.C.C.C.R.C.C.
P.I.C.C.C.C.C.C.C.C.C.C.C.C.C.C.C.C.C.C.C.C.C.C.C.C.C.C.C.C.C.C.C.C.R.C.C.C.
P.I.R.C.C.C.C.C.C.C.C.C.C.C.C.C.C.C.C.C.C.C.C.C.C.C.C.C.C.C.C.C.C.C.C.R.C.C.
P.I.R.C.C.C.C.C.C.C.C.C.C.C.C.C.C.C.C.C.C.C.C.C.C.C.C.C.C.C.C.C.C.C.C.R.C.C.C.
P.I.C.C.C.C.C.C.C.C.C.C.C.C.C.C.C.C.C.C.C.C.C.C.C.C.C.C.C.C.C.C.C.C.C.R.C.C.
P.I.C.C.C.C.C.C.C.C.C.C.C.C.C.C.C.C.C.C.C.C.C.C.C.C.C.C.C.C.C.C.C.C.C.R.C.C.C.
P.I.R.C.C.C.C.C.C.C.C.C.C.C.C.C.C.C.C.C.C.C.C.C.C.C.C.C.C.C.C.C.C.C.C.C.R.C.C.
P.I.R.C.C.C.C.C.C.C.C.C.C.C.C.C.C.C.C.C.C.C.C.C.C.C.C.C.C.C.C.C.C.C.C.C.R.C.C.C.
P.I.C.C.C.C.C.C.C.C.C.C.C.C.C.C.C.C.C.C.C.C.C.C.C.C.C.C.C.C.C.C.C.C.C.C.R.C.C.
P.I.C.C.C.C.C.C.C.C.C.C.C.C.C.C.C.C.C.C.C.C.C.C.C.C.C.C.C.C.C.C.C.C.C.C.R.C.C.C.
P.I.R.C.C.C.C.C.C.C.C.C.C.C.C.C.C.C.C.C.C.C.C.C.C.C.C.C.C.C.C.C.C.C.C.C.C.R.C.C.
P.I.R.C.C.C.C.C.C.C.C.C.C.C.C.C.C.C.C.C.C.C.C.C.C.C.C.C.C.C.C.C.C.C.C.C.C.C.R.C.C.C.
P.I.C.C.C.C.C.C.C.C.C.C.C.C.C.C.C.C.C.C.C.C.C.C.C.C.C.C.C.C.C.C.C.C.C.C.C.R.C.C.
P.I.C.C.C.C.C.C.C.C.C.C.C.C.C.C.C.C.C.C.C.C.C.C.C.C.C.C.C.C.C.C.C.C.C.C.C.C.R.C.C.C.
P.I.R.C.C.C.C.C.C.C.C.C.C.C.C.C.C.C.C.C.C.C.C.C.C.C.C.C.C.C.C.C.C.C.C.C.C.C.C.R.C.C.
P.I.R.C.C.C.C.C.C.C.C.C.C.C.C.C.C.C.C.C.C.C.C.C.C.C.C.C.C.C.C.C.C.C.C.C.C.C.C.C.R.C.C.C.
P.I.C.C.C.C.C.C.C.C.C.C.C.C.C.C.C.C.C.C.C.C.C.C.C.C.C.C.C.C.C.C.C.C.C.C.C.C.R.C.C.
P.I.C.C.C.C.C.C.C.C.C.C.C.C.C.C.C.C.C.C.C.C.C.C.C.C.C.C.C.C.C.C.C.C.C.C.C.C.C.R.C.C.C.
P.I.R.C.C.C.C.C.C.C.C.C.C.C.C.C.C.C.C.C.C.C.C.C.C.C.C.C.C.C.C.C.C.C.C.C.C.C.C.C.R.C.C.
P.I.R.C.C.C.C.C.C.C.C.C.C.C.C.C.C.C.C.C.C.C.C.C.C.C.C.C.C.C.C.C.C.C.C.C.C.C.C.C.C.R.C.C.C.
P.I.C.C.C.C.C.C.C.C.C.C.C.C.C.C.C.C.C.C.C.C.C.C.C.C.C.C.C.C.C.C.C.C.C.C.C.C.C.R.C.C.
P.I.C.C.C.C.C.C.C.C.C.C.C.C.C.C.C.C.C.C.C.C.C.C.C.C.C.C.C.C.C.C.C.C.C.C.C.C.C.C.R.C.C.C.
P.I.R.C.C.C.C.C.C.C.C.C.C.C.C.C.C.C.C.C.C.C.C.C.C.C.C.C.C.C.C.C.C.C.C.C.C.C.C.C.C.R.C.C.
P.I.R.C

SCHEDULE OF LANDS & INTERESTS REQUIRED

OWNER'S NAMES ARE SHOWN FOR REFERENCE PURPOSES ONLY AND ARE SUBJECT TO CHANGE PRIOR TO THE TRANSFER OF LAND INTERESTS TO THE DEPARTMENT.

PARCEL NUMBER	OWNER(S)	INTERESTS REQUIRED	R/W REQUIRED SF			PLE ACRE	TLE ACRE
			NEW	EXISTING	TOTAL		
6	DENNIS J. GAWRONSKI & JACQUELINE J. GAWRONSKI	TLE	--	--	--	--	0.13
7	TRAVIS J. SKINNER & JENNIFER L. SKINNER	TLE	--	--	--	--	0.09
8	CALEB GAWRONSKI IRREVOCABLE TRUST	TLE	--	--	--	--	0.24

STATION & OFFSET/COORDINATE TABLE				
POINT	STATION	OFFSET	Y COORDINATE	X COORDINATE
200	87+20.00	33.00' LT	262,745.068	610,104.492
201	87+20.00	45.00' LT	262,757.068	610,104.403
202	95+28.99	45.00' LT	262,763.068	610,913.368
203	90+90.00	33.00' RT	262,681.814	610,474.972
204	90+90.00	120.00' RT	262,594.816	610,475.617
205	89+70.00	120.00' RT	262,593.926	610,355.620
206	89+70.00	33.00' RT	262,680.924	610,354.975

UTILITY EASEMENT TABLE			
UTILITY NO	PARCEL	OWNER	RECORDING INFORMATION
100	1, 2, 4 & 5	GENERAL TELEPHONE COMPANY OF WISCONSIN 20' EASEMENT	DOC. 382642 V. 369, P. 673 DOC. 380764 V. 368, P. 179 DOC. 380537 V. 368, P. 10
103	4 & 5	REEDSBURG UTILITY COMMISSION 20' EASEMENT	DOC. 1054974

UTILITY INTERESTS REQUIRED		
UTILITY NO	OWNER(S)	INTEREST REQUIRED
100	VERISON COMMUNICATIONS INC.	RELEASE OF RIGHTS
103	REEDSBURG UTILITY COMMISSION	RELEASE OF RIGHTS

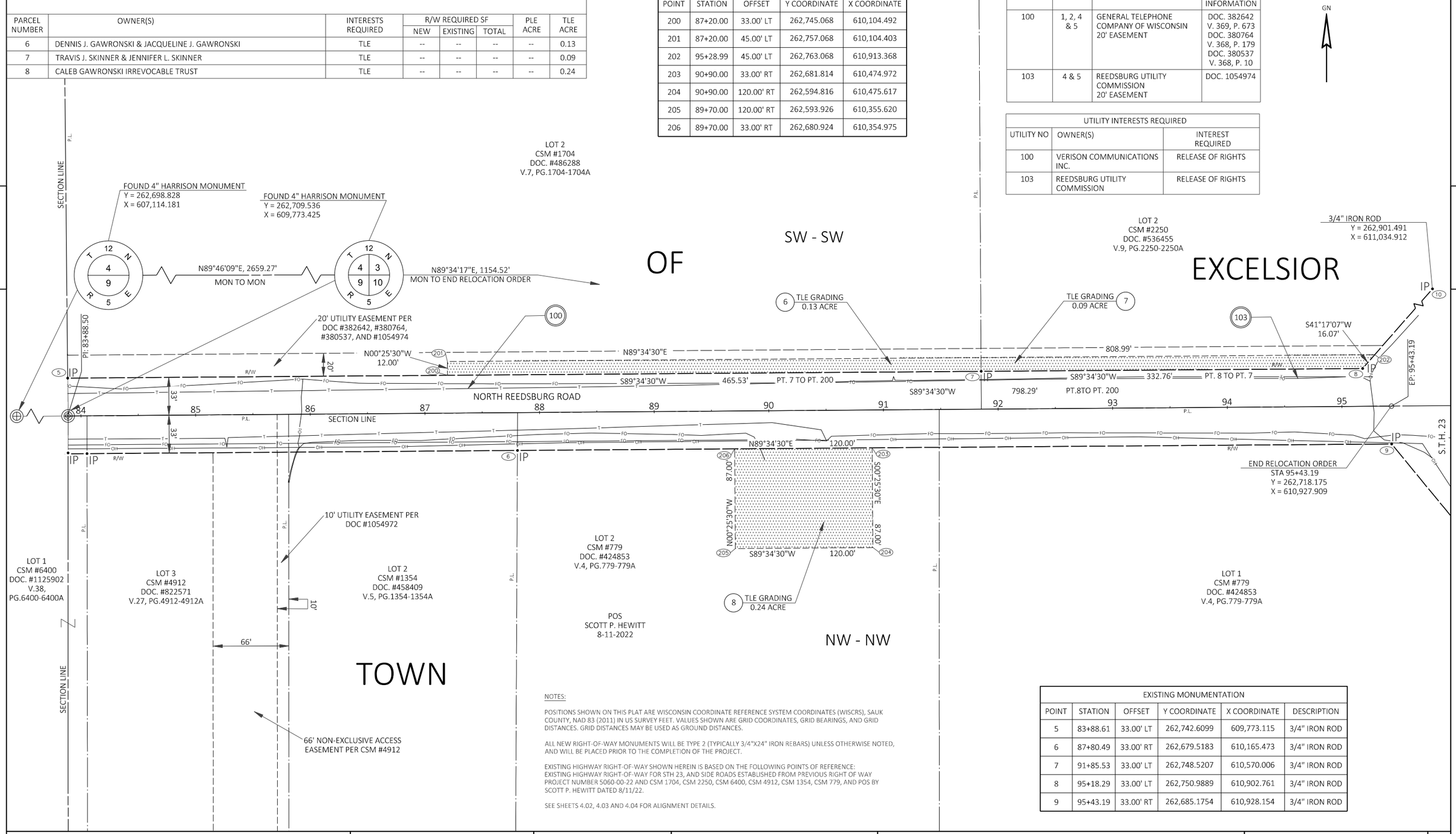

NOTES:

POSITIONS SHOWN ON THIS PLAT ARE WISCONSIN COORDINATE REFERENCE SYSTEM COORDINATES (WISCRS), SAUK COUNTY, NAD 83 (2011) IN US SURVEY FEET. VALUES SHOWN ARE GRID COORDINATES, GRID BEARINGS, AND GRID DISTANCES. GRID DISTANCES MAY BE USED AS GROUND DISTANCES.

ALL NEW RIGHT-OF-WAY MONUMENTS WILL BE TYPE 2 (TYPICALLY 3/4"X24" IRON REBARS) UNLESS OTHERWISE NOTED, AND WILL BE PLACED PRIOR TO THE COMPLETION OF THE PROJECT.

EXISTING HIGHWAY RIGHT-OF-WAY SHOWN HEREIN IS BASED ON THE FOLLOWING POINTS OF REFERENCE: EXISTING HIGHWAY RIGHT-OF-WAY FOR STH 23, AND SIDE ROADS ESTABLISHED FROM PREVIOUS RIGHT OF WAY PROJECT NUMBER 5060-00-22 AND CSM 1704, CSM 2250, CSM 6400, CSM 4912, CSM 1354, CSM 779, AND POS BY SCOTT P. HEWITT DATED 8/11/22.

SEE SHEETS 4.02, 4.03 AND 4.04 FOR ALIGNMENT DETAILS.

EXISTING MONUMENTATION					
POINT	STATION	OFFSET	Y COORDINATE	X COORDINATE	DESCRIPTION
5	83+88.61	33.00' LT	262,742.6099	609,773.115	3/4" IRON ROD
6	87+80.49	33.00' RT	262,679.5183	610,165.473	3/4" IRON ROD
7	91+85.53	33.00' LT	262,748.5207	610,570.006	3/4" IRON ROD
8	95+18.29	33.00' LT	262,750.9889	610,902.761	3/4" IRON ROD
9	95+43.19	33.00' RT	262,685.1754	610,928.154	3/4" IRON ROD

REVISION DATE

DATE 1-14-25

GRID FACTOR

SCALE, FEET 0 40 80

HWY: NORTH REEDSBURG ROAD

COUNTY: SAUK

STATE R/W PROJECT NUMBER 5709-00-01

CONSTRUCTION PROJECT NUMBER 5709-00-70

PLAT SHEET 4.06

PS&E SHEET 49

E

FILE NAME : ROW PLAT_PLAT.DWG
LAYOUT NAME - 4.06

PLOT DATE : 1/21/2025 2:00 PM PLOT BY : PAIGE PLOT NAME : PLOT SCALE :

WISDOT/CADDS SHEET 75

LIST OF DRIVEWAYS:
20+28, LT PE ASPH
21+67, LT PE AGG

TOEDER FAMILY HOLDINGS LLC

ROBERT D & TAMARA GAVIN LIVING TRUST

KENT F CHIARELLI

REEDSBURG UTILITY COMMISSION

N

MATCH LINE 22+00

PI 15+89.68

PI 21+61.17

PC: 2+00.00

PT: 2+08.70

EP: 2+37.05

EP: 303+00.00 'NW'

16+00 17+00 18+00 19+00 20+00 21+00 22+

N REEDSBURG RD

FRONTIER COMMUNICATIONS

ALLIANT ENERGY

NORTHWOODS DR

BEGIN CONSTRUCTION
STA 16+00
MATCH EXISTING
SAW CUT REQ'D

MATTHEW D. & TRACY A. CORWITH

EXISTING SPRINKLER HEAD
STA 19+96.63, 47.3' RT

VPC STA 17+24.24
VPC EL 945.68

VPI STA 19+50.00
VPI EL 955.65

VPT STA 21+75.76
VPT EL 949.18

ORIGINAL GROUND

PROPOSED PROFILE

HP STA 19+98.14
HP EL 951.73

VCL = 451.52

K = 62.00

4.42%

955 950 945 940

940.25 940.19 943.48 942.40 947.41 944.60 951.62 946.76 953.97 948.56 955.89 949.96 957.35 950.95 957.97 951.54 957.13 951.73 955.64 951.51 953.97 950.89 952.09 949.87 949.10 948.49

16 17 18 19 20 21 22

PROJECT NO: 5709-00-70	HWY: NORTH REEDSBURG ROAD	COUNTY: SAUK	PLAN AND PROFILE: NORTH REEDSBURG ROAD	SHEET 50 E

FILE NAME : T:\PROJECTS\2023\23-2044-1 (WAUZEKA DRIVE)T EXCELSIOR, NORTH REEDSBURG ROAD, NORTHWOODS DRIVE TO STH 23, 5709-00-01\DRAWINGS\N REEDSBURG ROAD PROPOSED LINEWORK.DGN
LAYOUT NAME - NRR P&P 1
PRO DATE : 5/18/2026 8:18 AM PLOT BY : TYLER BUCHANAN PLOT NAME : PLOT SCALE : 1 IN:40 FT

WISDOT/CADDS SHEET 44

LIST OF DRIVEWAYS:
26+47, LT PE ASPH
27+85, LT PE AGG

KENT F CHIARELLI

JEFFERY R GREVE

STA 27+64.89, 20.0' LT
521.3118 CPCS 18-INCH 42 LF
521.1018 APRON ENDWALL 18-INCH
INVERT ELEVATION = 932.50
SLOPE = 0.60%

STA 28+06.89, 20.0' LT
INVERT ELEVATION = 932.25
521.1018 APRON ENDWALL 18-INCH

TODD E. & NANCY L. DEMPSEY

N

ALLIANT ENERGY

FRONTIER COMMUNICATIONS

R/W

REEDSBURG UTILITY COMMISSION

MATCH LINE 28+00

23+00 24+00 25+00 26+00 27+00

N REEDSBURG RD

NORTH REEDSBURG RD

MATCH LINE 22+00

ALLIANT ENERGY

FRONTIER COMMUNICATIONS

R/W

SI

REEDSBURG UTILITY COMMISSION

GAVIN FARMS I. LLC

GAVIN FARMS I. LLC

STA 27+50
END RECONSTRUCTION
BEGIN RECONDITION

5

5

VCL = 194.73

K = 81.66

VPC STA 25+42.28
VPC EL 938.68

VPI STA 26+39.65
VPI EL 935.89

VPT STA 27+37.01
VPT EL 935.42

-2.86%

PROPOSED PROFILE

ORIGINAL GROUND

PROPOSED PROFILE
ORIGINAL GROUND

945
940
935
934

949.10 948.49 946.36 947.05 944.05 945.62 942.06 944.19 940.25 942.76 938.72 941.32 937.56 939.89 936.52 938.46 935.97 937.23 935.59 936.31 935.37 935.69 935.16 935.36 934.98 935.12

22 23 24 25 26 27 28

PROJECT NO: 5709-00-70	HWY: NORTH REEDSBURG ROAD	COUNTY: SAUK	PLAN AND PROFILE: NORTH REEDSBURG ROAD	SHEET 51 E

LIST OF DRIVEWAYS:
32+18, LT PE AGG

RYAN L ROERS

FRONTIER COMMUNICATIONS

FRANK E. & KRISTIN K. ZENZ

N

MATCH LINE 34+00

GUY

GUY

SI

29+00 30+00 31+00 32+00 33+00

N REEDSBURG RD

ALLIANT ENERGY

FRONTIER COMMUNICATIONS

STA 30+56.01, 21.0' LT
521.3136 CPCS 36-INCH 42 LF
521.1036 APRON ENDWALL 36-INCH
INVERT ELEVATION = 929.43
SLOPE = 1.57%

STA 30+56.01, 21.0' RT
INVERT ELEVATION = 928.77
521.1036 APRON ENDWALL 36-INCH

STA 31+98.10, 16.6' LT
521.3118 CPCS 18-INCH 40 LF
521.1018 APRON ENDWALL 18-INCH
INVERT ELEVATION = 932.50
SLOPE = 1.25%

STA 32+38.10 16.6' LT
INVERT ELEVATION = 933.00
521.1018 APRON ENDWALL 18-INCH

FRONTIER COMMUNICATIONS

GAVIN FARMS I. LLC

GAVIN FARMS I. LLC

MATCH LINE 28+00

5

5

VCL = 200.00
K = 162.98

VPC STA 30+43.92
VPC EL 933.95

LP STA 31+22.19
LP EL 933.76

VPI STA 31+43.92
VPI EL 933.47

VPT STA 32+43.92
VPT EL 934.22

PROPOSED PROFILE

-0.48%

0.75%

ORIGINAL GROUND

PROPOSED PROFILE
ORIGINAL GROUND

945 940 935 930

934.98	934.59	934.19	934.90	933.63	933.49	933.38	933.27	933.57	933.92	934.35	934.75	935.14
935.12	934.88	934.64	934.40	934.16	933.92	933.78	933.79	933.95	934.26	934.64	935.01	935.38

28 29 30 31 32 33 34

PROJECT NO: 5709-00-70	HWY: NORTH REEDSBURG ROAD	COUNTY: SAUK	PLAN AND PROFILE: NORTH REEDSBURG ROAD	SHEET 52	E

FILE NAME : T:\PROJECTS\2023\23-2044-1 (WAUZEKA DRIVE)T EXCELSIOR, NORTH REEDSBURG ROAD, NORTHWOODS DRIVE TO STH 23, 5709-00-01\DRAWINGS\N REEDSBURG ROAD PROPOSED LINEWORK.DGN
LAYOUT NAME - NRR P&P 3
PRINT DATE : 5/18/2026 8:18 AM PLOT BY : TYLER BUCHANAN PLOT NAME : PLOT SCALE : 1 IN:40 FT

WISDOT/CADDS SHEET 44

LIST OF DRIVEWAYS:
36+94, LT PE AGG
38+35, RT FE AGG
38+81, LT FE AGG

DONALD N. & BEVERLY LEAKE

JODI J VOGEL

FRONTIER COMMUNICATIONS

N

MATCH LINE 34+00

MATCH LINE 40+00

PI: 34+81.38

SI

R/W

35+00 36+00 37+00 38+00 39+00

N REEDSBURG RD

N REEDSBURG RD

REEDSBURG UTILITY COMMISSION

ALLIANT ENERGY

R/W

GAVIN FARMS I. LLC

STA 36+74.14, 20.6' LT
521.3118 CPCS 18-INCH 40 LF
521.1018 APRON ENDWALL 18-INCH
INVERT ELEVATION = 936.25
SLOPE = 1.87%

STA 37+14.14, 20.6' LT
INVERT ELEVATION = 937.00
521.1018 APRON ENDWALL 18-INCH

STA 39+03.98, 20.0' LT
521.3118 CPCS 18-INCH 52 LF
521.1018 APRON ENDWALL 18-INCH
INVERT ELEVATION = 940.17
SLOPE = 6.80%

STA 38+74.22, 22.5' RT
INVERT ELEVATION = 936.64
521.1018 APRON ENDWALL 18-INCH

REEDSBURG UTILITY COMMISSION

ALLIANT ENERGY

FRONTIER COMMUNICATIONS

R/W

GAVIN FARMS I. LLC

5

5

950
945
940
935

VCL = 200.00
K = 279.68

VCL = 200.00
K = 328.10

VPC STA 34+48.28
VPC EL 935.74

VPI STA 35+48.28
VPI EL 936.49

VPT STA 36+48.28
VPT EL 937.95

VPC STA 37+00.00
VPC EL 938.71

VPI STA 38+00.00
VPI EL 940.17

VPT STA 39+00.00
VPT EL 942.24

PROPOSED PROFILE

1.46%

ORIGINAL GROUND

PROPOSED PROFILE
ORIGINAL GROUND

| | | |

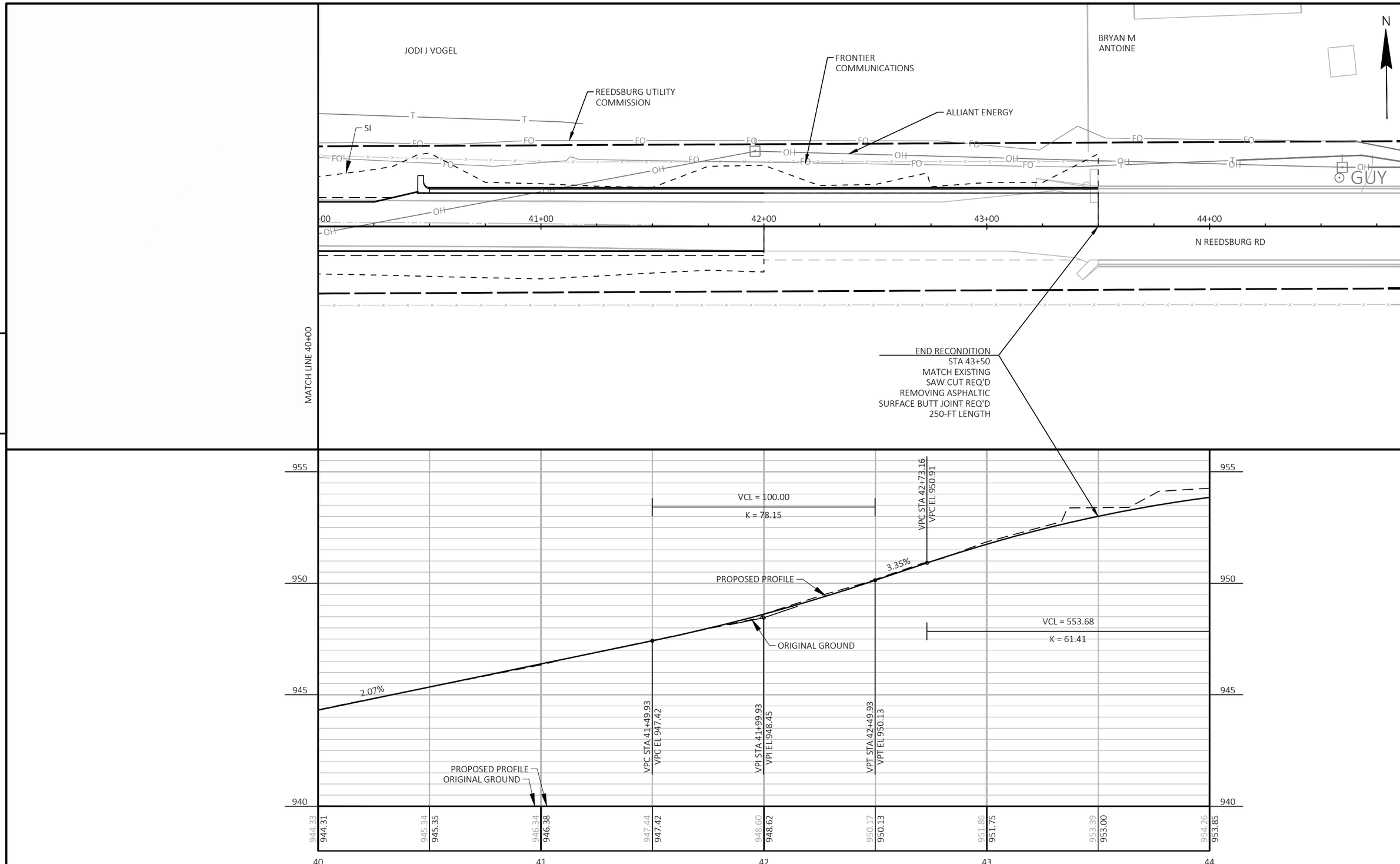

PROJECT NO: 5709-00-70	HWY: NORTH REEDSBURG ROAD	COUNTY: SAUK	PLAN AND PROFILE: NORTH REEDSBURG ROAD	SHEET 54	E

FILE NAME : T:\PROJECTS\2023\23-2044-1 (WAUZEKA DRIVE)T EXCELSIOR, NORTH REEDSBURG ROAD, NORTHWOODS DRIVE TO STH 23, 5709-00-01\DRAWINGS\N REEDSBURG ROAD PROPOSED LINEWORK.DWG PLOT DATE : 5/18/2026 8:18 AM PLOT BY : TYLER BUCHANAN PLOT NAME : PLOT SCALE : 1 IN:40 FT
LAYOUT NAME - NRR P&P 5

WISDOT/CADDS SHEET 44

LIST OF DRIVEWAYS:
60+72, RT FE AGG

ELSIE M. DUANE R. & GORDON D. RETZLAFF

ELSIE M. DUANE R. & GORDON D. RETZLAFF

MATCH LINE 61+00

FRONTIER COMMUNICATIONS

SI

ALLIANT ENERGY

REEDSBURG UTILITY COMMISSION

PI: 56+71.46

R/W

55+00 56+00 57+00 58+00 59+00 60+00 61-

N REEDSBURG RD

FRONTIER COMMUNICATIONS

R/W

PAUL J KENNEDY

STA 60+51.68, 22.5' RT
521.3118 CPCS 18-INCH 36 LF
521.1018 APRON ENDWALL 18-INCH
INVERT ELEVATION = 912.77
SLOPE = 2.14%

STA 60+87.66, 23.8' RT
INVERT ELEVATION = 912.00
521.1018 APRON ENDWALL 18-INCH

5

5

BEGIN RECONDITION
STA 55+00
MATCH EXISTING
SAW CUT REQ'D
REMOVING ASPHALTIC
SURFACE BUTT JOINT REQ'D
100-FT LENGTH

GAVIN FARMS I. LLC

VCL = 200.00
K = 387.27

VCL = 165.35
K = 200.36

-1.45%

-0.94%

-0.11%

PROPOSED PROFILE

ORIGINAL GROUND

VPC STA 56+54.24
VPC EL 919.39

VPI STA 57+54.24
VPI EL 917.93

VPT STA 58+54.24
VPT EL 917.00

VPC STA 59+11.40
VPC EL 916.46

VPI STA 59+94.07
VPI EL 915.69

VPT STA 60+76.75
VPT EL 915.60

VPC STA 60+87.83
VPC EL 915.59

PROPOSED PROFILE
ORIGINAL GROUND

VCL = 124.20
K = 201.76

920
915
910
909

921.64 921.63 | 920.84 920.90 | 920.07 920.17 | 919.30 919.45 | 918.62 918.75 | 917.93 918.11 | 917.37 917.54 | 916.82 917.04 | 916.33 916.57 | 915.89 916.14 | 915.43 915.83 | 915.29 915.65 | 915.28 915.57

55 56 57 58 59 60 61

PROJECT NO: 5709-00-70	HWY: NORTH REEDSBURG ROAD	COUNTY: SAUK	PLAN AND PROFILE: NORTH REEDSBURG ROAD	SHEET 55	E

FILE NAME : T:\PROJECTS\2023\23-2044-1 (WAUZEKA DRIVE)T EXCELSIOR, NORTH REEDSBURG ROAD, NORTHWOODS DRIVE TO STH 23, 5709-00-01\DRAWINGS\N REEDSBURG ROAD PROPOSED LINEWORK.DWG
LAYOUT NAME - N Reeds P&P 7
PRINT DATE : 5/18/2026 8:18 AM PLOT BY : TYLER BUCHANAN PLOT NAME : PLOT SCALE : 1 IN:40 FT

LIST OF DRIVEWAYS:
60+72, RT FE AGG
61+63, RT PE CONC
68+30, RT PE AGG

ELSIE M. DUANE R. & GORDON D. RETZLAFF

ELSIE M. DUANE R. & GORDON D. RETZLAFF

N

MATCH LINE 67+00

REEDSBURG UTILITY COMMISSION

FRONTIER COMMUNICATIONS

SI

R/W

FRONTIER COMMUNICATIONS

REEDSBURG UTILITY COMMISSION

62+00 63+00 64+00 65+00 66+00

N REEDSBURG RD

REEDSBURG UTILITY COMMISSION

PAUL J KENNEDY

MATCH LINE 61+00

5

STA 61+52.28, 24.0' RT
521.3118 CPCS 18-INCH 26 LF
521.1018 APRON ENDWALL 18-INCH
INVERT ELEVATION = 911.75
SLOPE = 0.75%

STA 61+78.28, 24.0' RT
INVERT ELEVATION = 911.55
521.1018 APRON ENDWALL 18-INCH

STA 61+93.40, 24.0' RT
521.3118 CPCS 18-INCH 30 LF
521.1018 APRON ENDWALL 18-INCH
INVERT ELEVATION = 911.25
SLOPE = 0.75%

STA 62+23.40, 24.0' RT
INVERT ELEVATION = 911.02
521.1018 APRON ENDWALL 18-INCH

CHADD M ASPSETER

ALLIANT ENERGY

R/W

FRONTIER COMMUNICATIONS

FRONTIER COMMUNICATIONS

CHADD M ASPSETER

5

920
915
910
905

VPI STA 61+49.93
VPI EL 915.52

VPT STA 62+12.03
VPT EL 915.07

VCL = 200.00
K = 246.26

LP STA 66+72.36
LP EL 912.38

-0.73%

PROPOSED PROFILE

ORIGINAL GROUND

VCL = 124.20
K = 201.76

VPC STA 64+93.65
VPC EL 913.03

VPI STA 65+93.65
VPI EL 912.30

VPT STA 66+93.65
VPT EL 912.39

PROPOSED PROFILE
ORIGINAL GROUND

915.28	915.25	914.94	914.46	914.04	913.61	913.25	912.90	912.59	912.31	912.09	911.93	911.91
915.57	915.42	915.15	914.79	914.43	914.07	913.71	913.34	912.98	912.68	912.48	912.39	912.39

61 62 63 64 65 66 67

PROJECT NO: 5709-00-70	HWY: NORTH REEDSBURG ROAD	COUNTY: SAUK	PLAN AND PROFILE: NORTH REEDSBURG ROAD	SHEET 56	E

FILE NAME : T:\PROJECTS\2023\23-2044-1 (WAUZEKA DRIVE)T EXCELSIOR, NORTH REEDSBURG ROAD, NORTHWOODS DRIVE TO STH 23, 5709-00-01\DRAWINGS\N REEDSBURG ROAD PROPOSED LINEWORK.DWG
LAYOUT NAME - N Reeds P&P 8
PLOT DATE : 5/18/2026 8:18 AM PLOT BY : TYLER BUCHANAN PLOT NAME : PLOT SCALE : 1 IN:40 FT

LIST OF DRIVEWAYS:
68+30, RT PE AGG
72+21, RT PE AGG

ELSIE M. DUANE R. & GORDON D. RETZLAFF

ELSIE M. DUANE R. & GORDON D. RETZLAFF

N

MATCH LINE 67+00

MATCH LINE 73+00

REEDSBURG UTILITY COMMISSION

R/W

FRONTIER COMMUNICATIONS

68+00 69+00 70+00 71+00 72+00

N REEDSBURG RD

REEDSBURG UTILITY COMMISSION

FRONTIER COMMUNICATIONS

CHADD M ASPSETER

SI

ALLIANT ENERGY

R/W

REEDSBURG UTILITY COMMISSION

FRONTIER COMMUNICATIONS

JOSEPH PERUSHEK

STA 68+13.37, 22.0' RT
521.3118 CPCS 18-INCH 36 LF
521.1018 APRON ENDWALL 18-INCH
INVERT ELEVATION = 909.50
SLOPE = 0.42%

STA 68+49.37, 22.0' RT
INVERT ELEVATION = 909.65
521.1018 APRON ENDWALL 18-INCH

DAN R. ASTLE

STA 72+01.59, 20.8' RT
521.3118 CPCS 18-INCH 40 LF
521.1018 APRON ENDWALL 18-INCH
INVERT ELEVATION = 909.50
SLOPE = 1.25%

STA 72+41.54, 20.8' RT
INVERT ELEVATION = 910.00
521.1018 APRON ENDWALL 18-INCH

5

5

920
915
910
905

VPC STA 69+65.02
VPC EL 912.62

VPI STA 70+02.58
VPI EL 912.65

VPT STA 70+40.14
VPT EL 912.35

VCL = 213.25
K = 79.96

LP STA 71+27.12
LP EL 911.91

VPC STA 72+81.26
VPC EL 913.39

PROPOSED PROFILE

0.09%

ORIGINAL GROUND

-0.81%

1.86%

HP STA 69+72.27
HP EL 912.62

VCL = 75.12
K = 83.88

VPC STA 70+62.43
VPC EL 912.17

VPI STA 71+69.06
VPI EL 911.31

VPT STA 72+75.68
VPT EL 913.29

VCL = 166.40
K = 64.16

PROPOSED PROFILE
ORIGINAL GROUND

911.91	912.39	911.88	912.44	911.87	912.48	911.84	912.52	911.81	912.56	911.94	912.61	912.19	912.58	911.92	912.27	911.63	911.95	911.35	911.94	911.45	912.24	912.34	912.85	913.44	913.71

67 68 69 70 71 72 73

PROJECT NO: 5709-00-70	HWY: NORTH REEDSBURG ROAD	COUNTY: SAUK	PLAN AND PROFILE: NORTH REEDSBURG ROAD	SHEET 57	E

FILE NAME : T:\PROJECTS\2023\23-2044-1 (WAUZEKA DRIVE)T EXCELSIOR, NORTH REEDSBURG ROAD, NORTHWOODS DRIVE TO STH 23, 5709-00-01\DRAWINGS\N REEDSBURG ROAD PROPOSED LINEWORK.DGN
LAYOUT NAME - N Reeds P&P 9

PLOT DATE : 5/18/2026 8:18 AM PLOT BY : TYLER BUCHANAN PLOT NAME : PLOT SCALE : 1 IN:40 FT

WISDOT/CADDS SHEET 44

LIST OF DRIVEWAYS:
73+50, RT FE AGG
78+95, RT PE AGG

STA 75+47.00, 24.00' LT
521.3118 CPCS 18-INCH 46 LF
521.1018 APRON ENDWALL 18-INCH
INVERT ELEVATION = 908.91
SLOPE = 2.00%

STA 75+47.00, 22.0' RT
INVERT ELEVATION = 909.83
521.1018 APRON ENDWALL 18-INCH

ELSIE M. DUANE R. & GORDON D. RETZLAFF

ELSIE M. DUANE R. & GORDON D. RETZLAFF

N

MATCH LINE 79+00

REEDSBURG UTILITY COMMISSION

FRONTIER COMMUNICATIONS

R/W

74+00 75+00 76+00 77+00 78+00

N REEDSBURG RD

SI

R/W

ALLIANT ENERGY

FRONTIER COMMUNICATIONS

REEDSBURG UTILITY COMMISSION

MATCH LINE 73+00

JOSEPH PERUSHEK

STA 73+00
END RECONDITION
BEGIN RECONSTRUCTION

DAVID M FRIE

5

5

VPI STA 73+64.46
VPI EL 914.94

VPT STA 74+47.66
VPT EL 914.33

VCL = 238.38
K = 163.08

LP STA 76+00.29
LP EL 913.64

VPC STA 78+15.10
VPC EL 914.77

PROPOSED PROFILE

-0.74%

0.73%

ORIGINAL GROUND

HP STA 74+00.48
HP EL 914.50

VCL = 166.40
K = 64.16

VPC STA 74+80.37
VPC EL 914.08

VPI STA 75+99.56
VPI EL 913.21

VPT STA 77+18.75
VPT EL 914.07

VCL = 176.95
K = 306.83

PROPOSED PROFILE
ORIGINAL GROUND

920 915 910 905

913.44 913.71 914.40 914.30 913.90 914.50 912.66 914.31 911.79 913.95 911.09 913.72 911.20 913.64 911.55 913.72 912.32 913.95 913.13 914.30 914.07 914.66 914.87 915.01 915.29 915.27

73 74 75 76 77 78 79

PROJECT NO: 5709-00-70	HWY: NORTH REEDSBURG ROAD	COUNTY: SAUK	PLAN AND PROFILE: NORTH REEDSBURG ROAD	SHEET 58	E

FILE NAME : T:\PROJECTS\2023\23-2044-1 (WAUZEKA DRIVE)T EXCELSIOR, NORTH REEDSBURG ROAD, NORTHWOODS DRIVE TO STH 23, 5709-00-01\DRAWINGS\N REEDSBURG ROAD PROPOSED LINEWORK.DWG
LAYOUT NAME - N Reeds P&P 10
PRINT DATE : 5/18/2026 8:18 AM PLOT BY : TYLER BUCHANAN PLOT NAME : PLOT SCALE : 1 IN:40 FT

WISDOT/CADDS SHEET 44

ELSIE M. DUANE R. & GORDON D. RETZLAFF

LIST OF DRIVEWAYS:
82+67, LT PE AGG
83+57, RT PE ASPH

REEDSBURG UTILITY COMMISSION

SI

FRONTIER COMMUNICATIONS

R/W

ELSIE M. DUANE R. & GORDON D. RETZLAFF

N

MATCH LINE 85+00

80+00 81+00 82+00 83+00 84+00

N REEDSBURG RD

FRONTIER COMMUNICATIONS

R/W

REEDSBURG UTILITY COMMUNICATION

ALLIANT ENERGY

STA 83+36.00, 20.8' RT
521.3118 CPCS 18-INCH 38 LF
521.1018 APRON ENDWALL 18-INCH
INVERT ELEVATION = 912.75
SLOPE = 1.96%

STA 83+74.00, 20.8' RT
INVERT ELEVATION = 912.00
521.1018 APRON ENDWALL 18-INCH

MATCH LINE 79+00

DAVID M FRIE

WAYNE R. WINCH

STA 84+00
END RECONSTRUCTION
BEGIN RECONDITION

5

5

VPI STA 79+03.57
VPI EL 915.42

VPT STA 79+92.05
VPT EL 915.55

VPC STA 82+21.09
VPC EL 915.89

VPI STA 83+39.71
VPI EL 916.07

VPT STA 84+58.34
VPT EL 912.88

VCL = 200.00
K = 86.24

PROPOSED PROFILE
0.15%

ORIGINAL GROUND

-2.69%

HP STA 82+33.59
HP EL 915.90

VCL = 176.95
K = 306.83

VCL = 237.25
K = 83.54

PROPOSED PROFILE
ORIGINAL GROUND

VPC STA 84+93.78
VPC EL 911.92

920
915
910
907

915.29 915.27 915.09 915.46 914.46 915.56 914.01 915.64 913.81 915.71 914.05 915.79 914.63 915.86 915.26 915.89 915.42 915.64 915.03 915.09 913.90 914.24 912.49 913.10 911.42 911.76

79 80 81 82 83 84 85

PROJECT NO: 5709-00-70	HWY: NORTH REEDSBURG ROAD	COUNTY: SAUK	PLAN AND PROFILE: NORTH REEDSBURG ROAD	SHEET 59	E

FILE NAME : T:\PROJECTS\2023\23-2044-1 (WAUZEKA DRIVE)T EXCELSIOR, NORTH REEDSBURG ROAD, NORTHWOODS DRIVE TO STH 23, 5709-00-01\DRAWINGS\N REEDSBURG ROAD PROPOSED LINEWORK.DWG
LAYOUT NAME - N Reeds P&P 11
PRINT DATE : 5/18/2026 8:18 AM PLOT BY : TYLER BUCHANAN PLOT NAME : PLOT SCALE : 1 IN:40 FT

WISDOT/CADDS SHEET 44

ELSIE M. DUANE R. & GORDON D. RETZLAFF

DENNIS J GAWRONSKI

LIST OF DRIVEWAYS:
88+75, RT PE ASPH

N

MATCH LINE 91+00

REEDSBURG UTILITY COMMISSION

FRONTIER COMMUNICATIONS

TLE

R/W

PI: 85+77.63

86+00 87+00 88+00 89+00 90+00

N REEDSBURG RD

SI

R/W

REEDSBURG UTILITY COMMISSION

ALLIANT ENERGY

FRONTIER COMMUNICATIONS

MATCH LINE 85+00

KENNETH G. & JO ANNE C. KRUSE

STA 87+10.00, 22.0' LT
521.3735 PIPE ARCH CORRUGATED STEEL 35x24-INCH 44 LF
521.1235 APRON ENDWALLS FOR PIPE ARCH STEEL 35x24-INCH
INVERT ELEVATION = 904.96
SLOPE = 0.59%

STA 87+10.00, 22.00' RT
INVERT ELEVATION = 905.22
521.1235 APRON ENDWALLS FOR PIPE ARCH STEEL 35x24-INCH
CONNECT TO EXISTING PLASTIC PIPE

TRON R GRIFFITH

STA 88+54.89, 16.8' RT
521.3118 CPCS 18-INCH 38 LF
521.1018 APRON ENDWALL 18-INCH
INVERT ELEVATION = 908.00
SLOPE = 1.97%

STA 88+92.89, 16.8' RT
INVERT ELEVATION = 908.75
521.1018 APRON ENDWALL 18-INCH

CAROL MOE-KIEFER

5

5

915
910
905
903

VCL = 200.00
K = 86.24

VCL = 364.11
K = 79.21

STA 87+37.61
EL 908.70

-0.37%
0.15%

PROPOSED PROFILE
ORIGINAL GROUND

PROPOSED PROFILE
ORIGINAL GROUND

VPI STA 85+93.78
VPI EL 909.23

VPT STA 86+93.78
VPT EL 908.86

VPC STA 87+54.48
VPC EL 908.73

VPI STA 89+36.54
VPI EL 909.00

| | | |

LIST OF DRIVEWAYS:
91+50, LT FE AGG
93+32, RT PE ASPH
93+78, LT PE REMOVE
95+10, LT PE REMOVE
96+82, LT PE AGG

DENNIS J GAWRONSKI

TRAVIS J. & JENNIFER L. SKINNER

N

MATCH LINE 97+00

REEDSBURG UTILITY COMMISSION

FRONTIER COMMUNICATIONS

TLE

SI

R/W

BORE

92+00 93+00 EP: 1+15.90 94+00 95+00 96+00 97+00

N REEDSBURG RD

1+00 CL

GUY

PT: 0+85.75

PC: 0+78.26

REEDSBURG UTILITY COMMISSION

TLE

R/W

FRONTIER COMMUNICATIONS

ALLIANT ENERGY

MATCH LINE 91+00

5

5

STA 91+00
END RECONDITION
BEGIN RECONSTRUCTION

CALEB GAWRONSKI

GEORGE T. & RITA A. ASTLE

930
925
920
915

VPC STA 91+25.53
VPC EL 917.97

VPI STA 94+00.00
VPI EL 931.00

VPT STA 96+74.47
VPT EL 919.97

ORIGINAL GROUND

PROPOSED PROFILE

VCL = 364.11
K = 79.21

VPT STA 91+18.59
VPT EL 917.64

4.15%

HP STA 94+22.79
HP EL 925.03

VCL = 548.93
K = 62.62

PROPOSED PROFILE
ORIGINAL GROUND

916.80	916.78	919.77	919.08	923.01	921.06	926.85	922.64	930.80	923.82	933.36	924.60	933.78	924.99	933.35	924.97	932.24	924.55	929.78	923.73	926.62	922.52	923.51	920.90	920.45	918.94
91			92				93						94				95				96				97

PROJECT NO: 5709-00-70	HWY: NORTH REEDSBURG ROAD	COUNTY: SAUK	PLAN AND PROFILE: NORTH REEDSBURG ROAD	SHEET 61	E

FILE NAME : T:\PROJECTS\2023\23-2044-1 (WAUZEKA DRIVE)T EXCELSIOR, NORTH REEDSBURG ROAD, NORTHWOODS DRIVE TO STH 23, 5709-00-01\DRAWINGS\N REEDSBURG ROAD PROPOSED LINEWORK.DWG
LAYOUT NAME - N Reeds P&P 13
PLOT DATE : 5/18/2026 8:18 AM PLOT BY : TYLER BUCHANAN PLOT NAME : PLOT SCALE : 1 IN:40 FT

WISDOT/CADDS SHEET 44

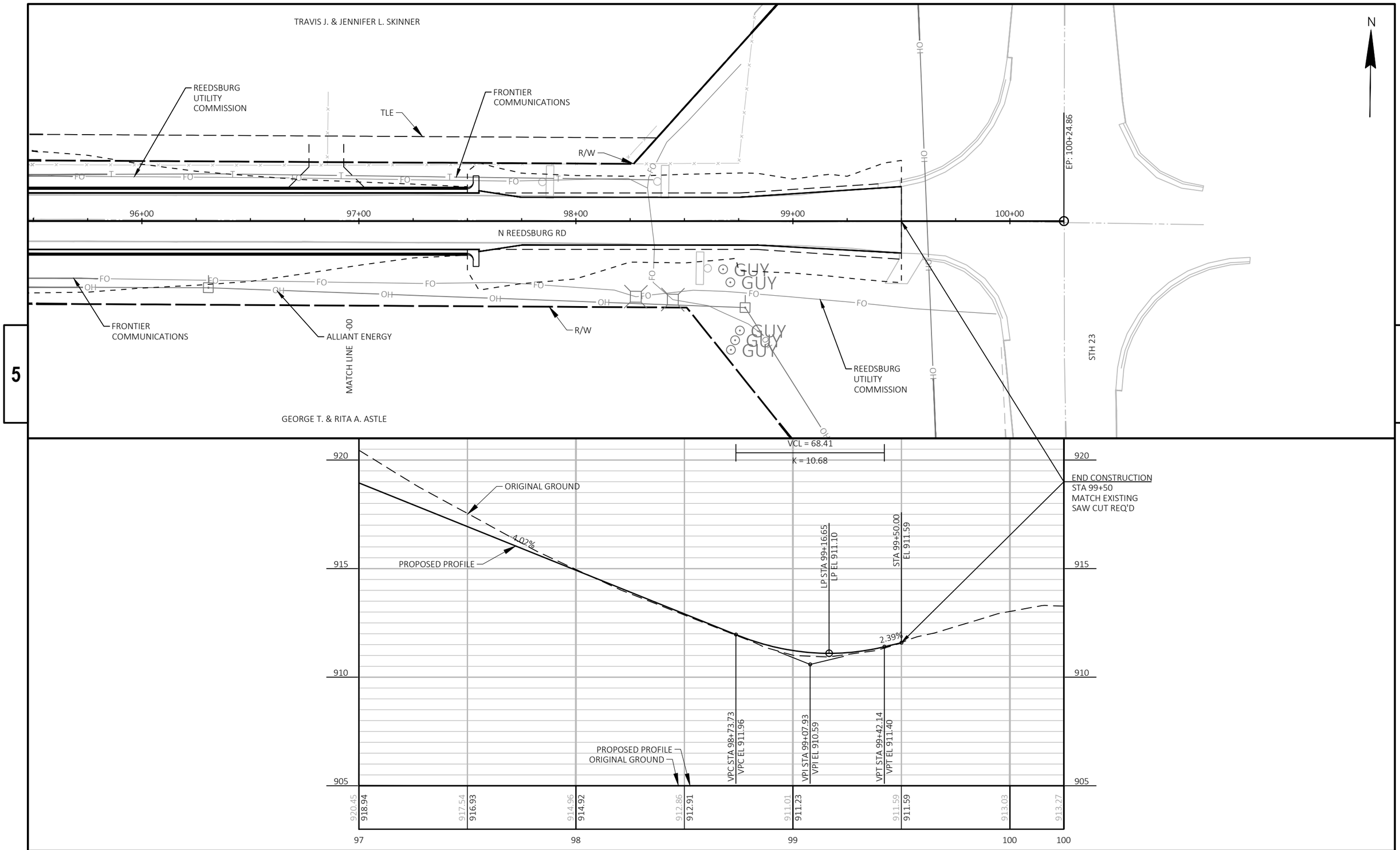

PROJECT NO: 5709-00-70	HWY: NORTH REEDSBURG ROAD	COUNTY: SAUK	PLAN AND PROFILE: NORTH REEDSBURG ROAD	SHEET 62	E

FILE NAME : T:\PROJECTS\2023\23-2044-1 (WAUZEKA DRIVE)T EXCELSIOR, NORTH REEDSBURG ROAD, NORTHWOODS DRIVE TO STH 23, 5709-00-01\DRAWINGS\N REEDSBURG ROAD PROPOSED LINEWORK.DWG
LAYOUT NAME - N Reeds P&P 14
PLOT DATE : 5/18/2026 8:18 AM PLOT BY : TYLER BUCHANAN PLOT NAME : PLOT SCALE : 1 IN:40 FT

WISDOT/CADDS SHEET 44

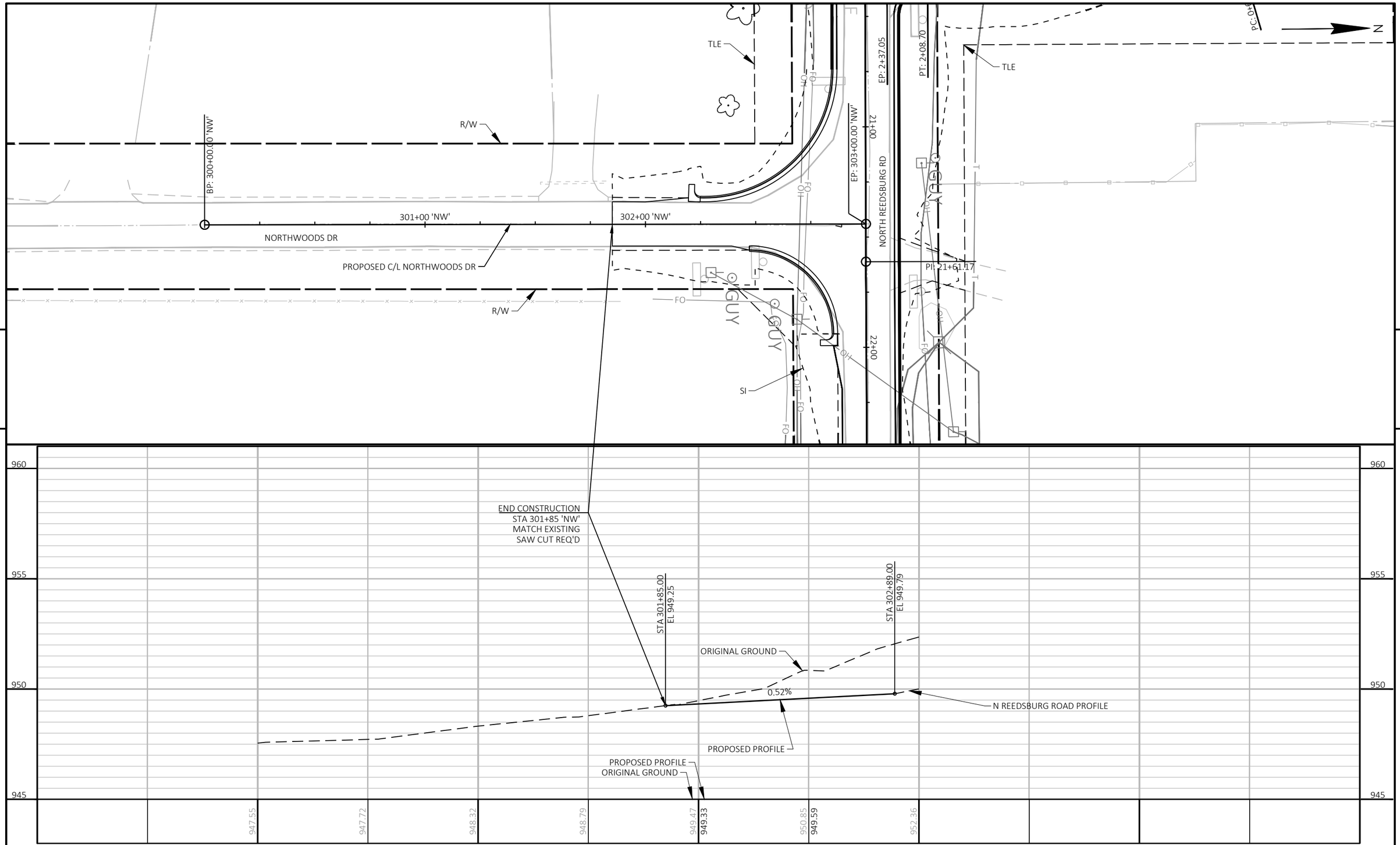

PROJECT NO: 5709-00-70	HWY: NORTH REEDSBURG ROAD	COUNTY: SAUK	PLAN AND PROFILE: NORTHWOODS DRIVE	SHEET 63 E

FILE NAME : T:\PROJECTS\2023\23-2044-1 (WAUZEKA DRIVE)T EXCELSIOR, NORTH REEDSBURG ROAD, NORTHWOODS DRIVE TO STH 23, 5709-00-01\DRAWINGS\N REEDSBURG ROAD PROPOSED LINEWORK.DGN
LAYOUT NAME - Northwoods P&P 1
PRINT DATE : 5/18/2026 8:18 AM PLOT BY : TYLER BUCHANAN PLOT NAME : PLOT SCALE : 1 IN:40 FT

WISDOT/CADDS SHEET 44

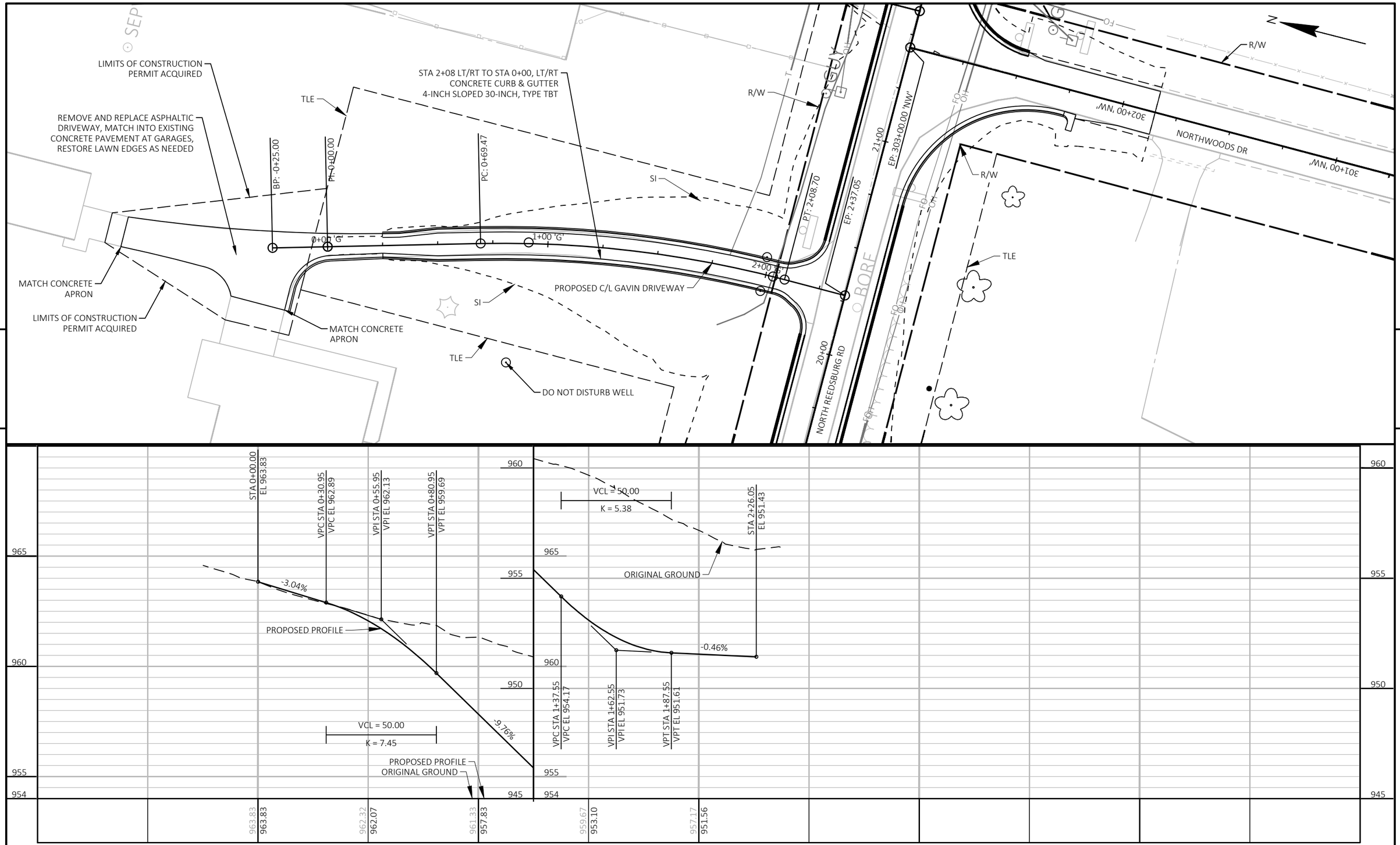

PROJECT NO: 5709-00-70	HWY: NORTH REEDSBURG ROAD	COUNTY: SAUK	PLAN AND PROFILE: GAVIN DRIVEWAY ALTERNATIVE 1	SHEET 64	E

FILE NAME : T:\PROJECTS\2023\23-2044-1 (WAUZEKA DRIVE)T EXCELSIOR, NORTH REEDSBURG ROAD, NORTHWOODS DRIVE TO STH 23, 5709-00-01\DRAWINGS\N REEDSBURG ROAD PROPOSED LINEWORK.DGN
LAYOUT NAME - Driveway 20+50 P&P 1
PRINT DATE : 5/18/2026 8:18 AM PLOT BY : TYLER BUCHANAN PLOT NAME : PLOT SCALE : 1 IN:40 FT

WISDOT/CADDS SHEET 44

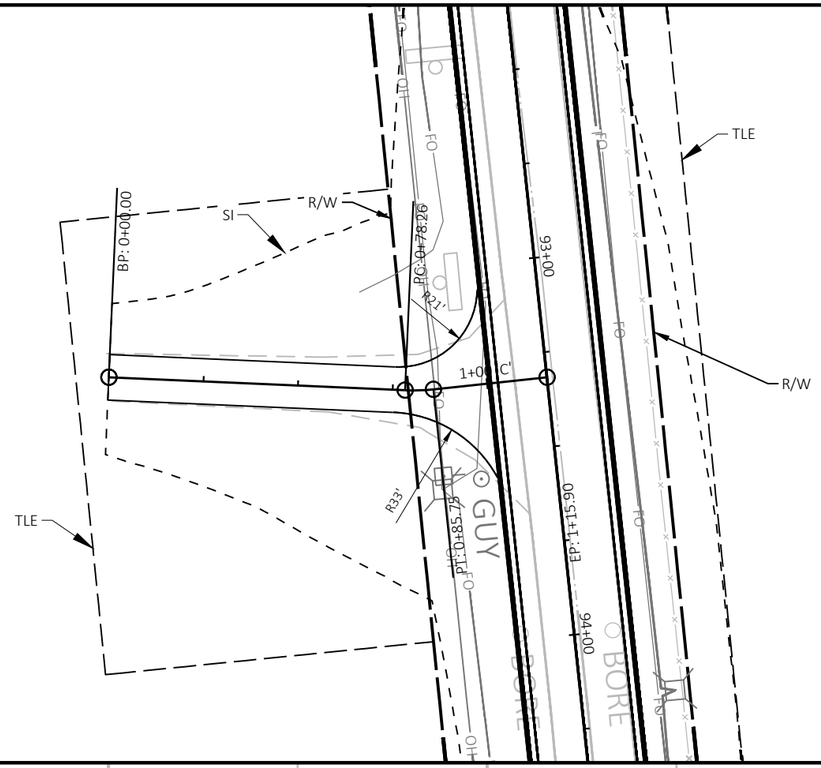

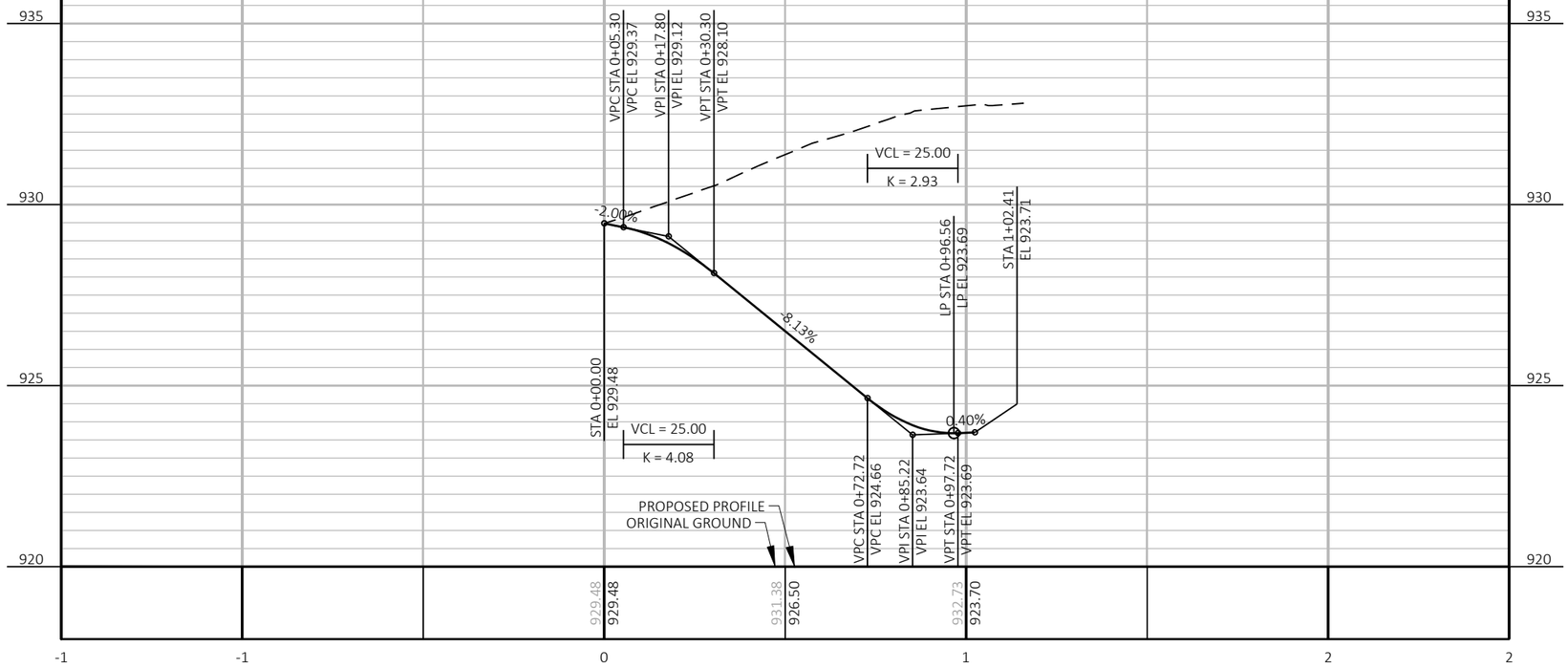

PROJECT NO: 5709-00-70	HWY: NORTH REEDSBURG ROAD	COUNTY: SAUK	PLAN AND PROFILE: GAWRONSKI DRIVEWAY	SHEET 65	E

FILE NAME : T:\PROJECTS\2023\23-2044-1 (WAUZEKA DRIVE)T EXCELSIOR, NORTH REEDSBURG ROAD, NORTHWOODS DRIVE TO STH 23, 5709-00-01\DRAWINGS\N REEDSBURG ROAD PROPOSED LINEWORK.DGN
LAYOUT NAME - Driveway 93 P&P 1
PRINT DATE : 5/18/2026 8:18 AM PLOT BY : TYLER BUCHANAN PLOT NAME : PLOT SCALE : 1 IN:40 FT

Standard Detail Drawing List

08D01-24A	CONCRETE CURB AND GUTTER
08D01-24B	CONCRETE CURB, TIES AND CURB AND GUTTER APPLICATIONS
08D04-07	CONCRETE SURFACE DRAINS AND ASPHALTIC FLUMES
08E08-03	TYPICAL INSTALLATIONS OF EROSION BALES / TEMPORARY DITCH CHECKS
08E09-06	SILT FENCE
08E14-01	TRACKING PAD
08E15-01	CULVERT PIPE CHECK
08F01-11	APRON ENDWALLS FOR CULVERT PIPE
08F02-01	APRON ENDWALLS FOR PIPE ARCH AND ELLIPTICAL PIPE
09A01-14A	AT-GRADE SIDE ROAD INTERSECTION, TYPES "B1", "B2", "C", "D" AND TEE INTERSECTION BYPASS LANE
09A01-14B	AT-GRADE SIDE ROAD INTERSECTION, TYPES "A1" & "A2"
13C19-03	HMA LONGITUDINAL JOINTS
15A03-02A	FLEXIBLE MARKER POST FOR CULVERT END
15A03-02B	FLEXIBLE MARKER POST FOR CULVERT END
15C02-10A	BARRICADES AND SIGNS FOR MAINLINE CLOSURES
15C02-10B	BARRICADES AND SIGNS FOR VARIOUS CLOSURES
15C03-05	BARRICADES AND SIGNS FOR SIDEROAD CLOSURES
15C04-05	TRAFFIC CONTROL, ADVANCE WARNING SIGNS 45 M.P.H. OR GREATER TWO-WAY UNDIVIDED ROAD OPEN TO TRAFFIC
15C11-11B	CHANNELIZING DEVICES DRUMS, CONES, BARRICADES AND VERTICAL PANELS
15C12-09A	TRAFFIC CONTROL FOR LANE CLOSURE WITH FLAGGING OPERATION
15D39-03	TRAFFIC CONTROL, DROP-OFF SIGNING
15D44-02	TRAFFIC CONTROL, SIGNING ON ROADWAYS WITH MILLED SURFACES
15D45-03	TRAFFIC CONTROL, SIGNING ON ROADWAYS WITH LOOSE GRAVEL

6

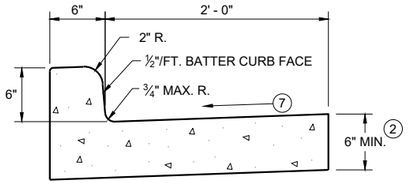

TYPES A (1) & D

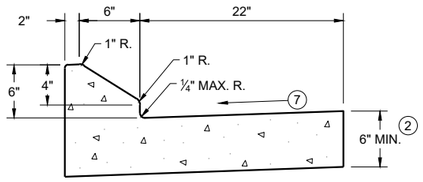

6" SLOPED CURB TYPES G (1) & J

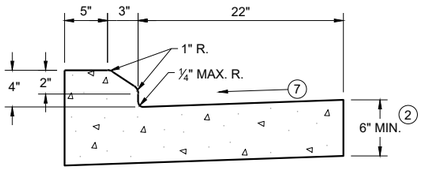

4" SLOPED CURB TYPES G (1) & J

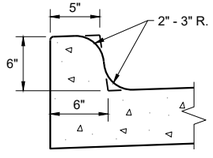

TYPES K (1) & L
(OPTIONAL CURB SHAPE)

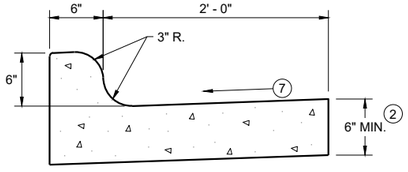

TYPES K (1) & L

CONCRETE CURB AND GUTTER 30"

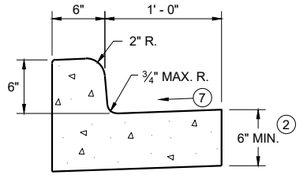

TYPES A (1) & D

CONCRETE CURB AND GUTTER 18"

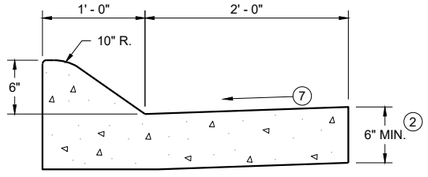

6" SLOPED CURB TYPES A (1) & D

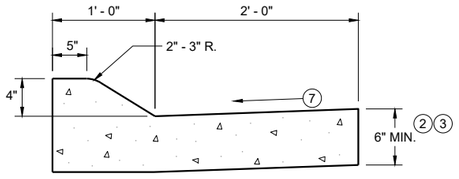

4" SLOPED CURB TYPES A (1) & D

CONCRETE CURB AND GUTTER 36"

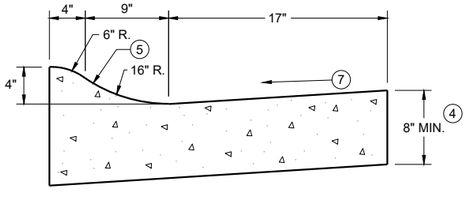

4" SLOPED CURB TYPES R (1) & T
CONCRETE CURB AND GUTTER 30"

TBT & TBTT	X
30"	22"
36"	28"

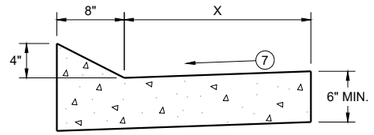

TYPES TBT & TBTT (1)

CONCRETE CURB AND GUTTER

PAVEMENT THICKNESS AND MAXIMUM CONCRETE PANEL WIDTH TABLE

PAVEMENT THICKNESS	MAXIMUM PANEL WIDTH
LESS THAN 10"	12'
10" & ABOVE	15'

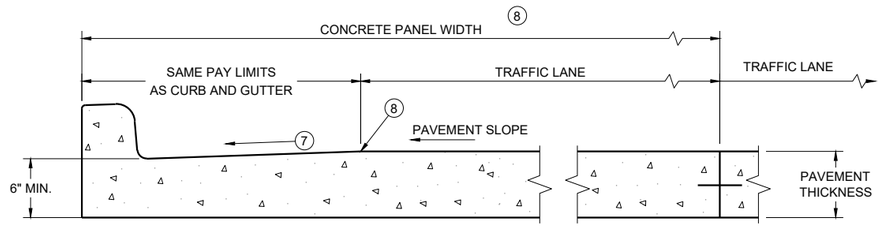

PARTIAL SECTION OF PAVEMENT WITH INTEGRAL CURB AND GUTTER *

* BIKE LANE IS NOT SHOWN

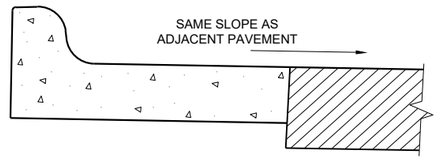

REVERSE SLOPE GUTTER (6)
(TYPICAL FOR ALL CURB & GUTTER TYPES)

GENERAL NOTES

DETAILS OF CONSTRUCTION AND WORKMANSHIP NOT SHOWN ON THIS DRAWING SHALL CONFORM TO THE PERTINENT REQUIREMENTS OF THE CONTRACT.

PAVEMENT TIES AND TIE BARS SHALL BE EPOXY COATED IN CONFORMANCE WITH SUBSECTION 505.2.6.2 OF THE STANDARD SPECIFICATIONS.

INTEGRAL CURB AND GUTTER SHALL CONFORM TO THE DETAILS SHOWN FOR CONCRETE CURB AND GUTTER INCLUDING THE TRANSVERSE GUTTER SLOPE.

UNLESS OTHERWISE SHOWN ON THE TYPICAL CROSS SECTIONS, THE BASE AGGREGATE AND COMMON EXCAVATION LIMITS ARE 2' - 0" BEHIND THE BACK OF CURBS.

(1) TIE BARS ARE REQUIRED FOR CURB AND GUTTERS TYPES A, G, K, R, AND TBTT.

(2) THE BOTTOM OF CURB AND GUTTER MAY BE CONSTRUCTED EITHER LEVEL OR PARALLEL TO THE SLOPE OF THE SUBGRADE OR BASE AGGREGATE PROVIDED A 6" MINIMUM GUTTER THICKNESS IS MAINTAINED.

(3) USE 8" MINIMUM GUTTER THICKNESS WHEN USED WITH AN ADJACENT CONCRETE TRUCK APRON PLACED BEHIND BACK OF CURB.

(4) THE BOTTOM OF CURB AND GUTTER MAY BE CONSTRUCTED EITHER LEVEL OR PARALLEL TO THE SLOPE OF THE SUBGRADE OR BASE AGGREGATE PROVIDED A 8" MINIMUM GUTTER THICKNESS IS MAINTAINED.

(5) UNLESS OTHERWISE NOTED, FOR STAKING PURPOSES THE FACE OF CURB IS 6" FROM THE BACK OF CURB.

(6) WHEN REVERSE SLOPE GUTTER IS REQUIRED, THE LOCATION(S) WILL BE SHOWN ELSEWHERE IN THE PLAN.

(7) USE 4% GUTTER CROSS SLOPE UNLESS OTHERWISE NOTED IN THE PLANS.

(8) INCLUDE LONGITUDINAL JOINT AND TIE BARS ALONG LANE EDGE WHEN CONCRETE PANEL WIDTH EXCEEDS THE MAXIMUM WIDTH PER TABLE BELOW. LONGITUDINAL JOINT(S) ARE NOT ALLOWED WITHIN TRAFFIC LANES AND BIKE LANES. LONGITUDINAL JOINT MAY BE SAWED.

(9) SLOPE TO BE REVERSE SLOPE MATCHING THE SLOPE OF THE PAVEMENT AND THE CIRCULATORY ROADWAY

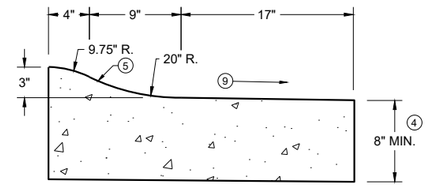

3" SLOPED CURB TYPES R (1) & T

CONCRETE CURB AND GUTTER

STATE OF WISCONSIN
DEPARTMENT OF TRANSPORTATION

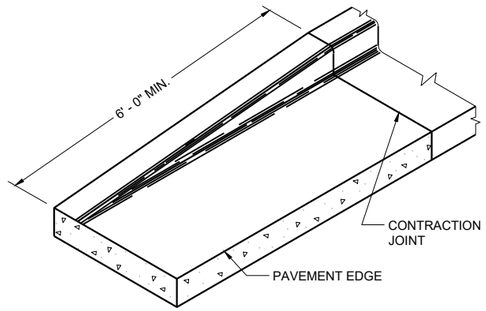

END SECTION CURB AND GUTTER

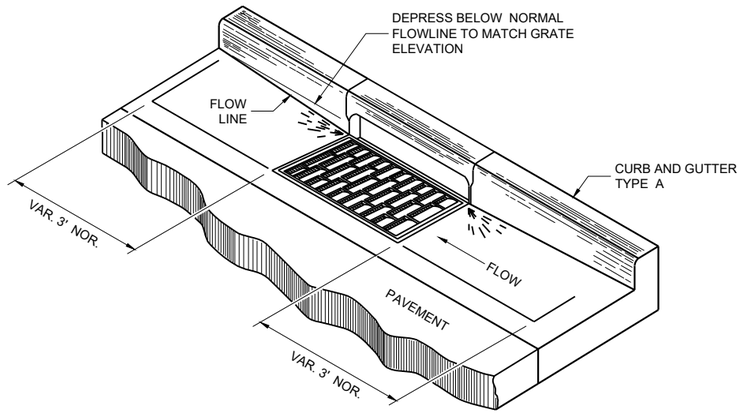

DETAIL OF CURB AND GUTTER AT INLETS

(TYPICAL H INLET COVER SHOWN)

GENERAL NOTES

DETAILS OF CONSTRUCTION AND WORKMANSHIP NOT SHOWN ON THIS DRAWING SHALL CONFORM TO THE PERTINENT REQUIREMENTS OF THE CONTRACT.

PAVEMENT TIES AND TIE BARS SHALL BE EPOXY COATED IN CONFORMANCE WITH SUBSECTION 505.2.6.2 OF THE STANDARD SPECIFICATIONS.

UNLESS OTHERWISE SHOWN ON THE TYPICAL CROSS SECTIONS, THE BASE AGGREGATE AND COMMON EXCAVATION LIMITS ARE 2' - 0" BEHIND THE BACK OF CURBS.

(1) TIE BARS ARE REQUIRED FOR CURB AND GUTTERS TYPES A, G, K, R, AND TBTT.

(2) THE BOTTOM OF CURB AND GUTTER MAY BE CONSTRUCTED EITHER LEVEL OR PARALLEL TO THE SLOPE OF THE SUBGRADE OR BASE AGGREGATE PROVIDED A 6" MINIMUM GUTTER THICKNESS IS MAINTAINED.

(10) REFER TO SDD 08D18 AND 08D19 FOR ADDITIONAL DRIVEWAY ENTRANCE CURB DETAILS.

(11) PLACE 1" THICK EXPANSION JOINT MATERIAL BETWEEN VERTICAL FACE CURB TYPES EXTENDING FROM THE TOP OF CURB TO 1 INCH BELOW THE ADJOINING CONCRETE SURFACE. RIGID CONCRETE STRUCTURES INCLUDE RAISED CONCRETE MEDIANS, CONCRETE SAFETY ISLANDS, SPLITTER ISLANDS, OR LOCATIONS IDENTIFIED ON THE PLANS.

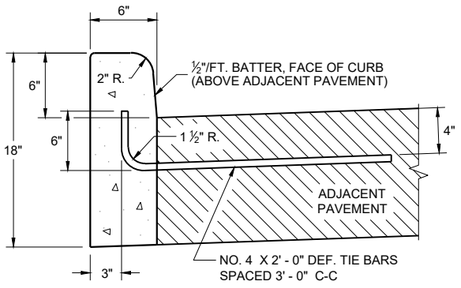

TYPES A (1) & D

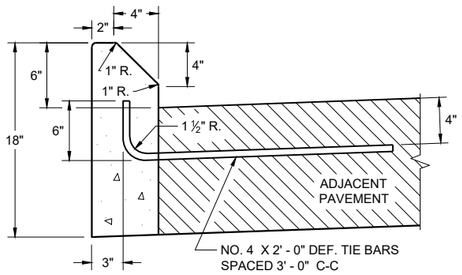

TYPES G (1) & J

CONCRETE CURB

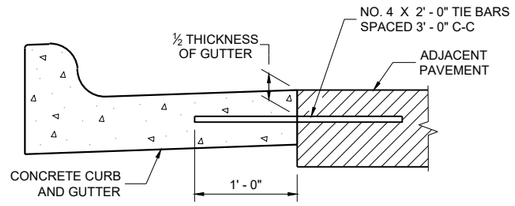

TYPICAL TIE BAR LOCATION (1)

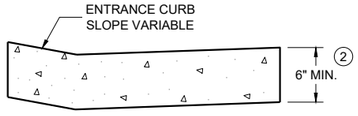

DRIVEWAY ENTRANCE CURB (10)

(WHEN DIRECTED BY THE ENGINEER)

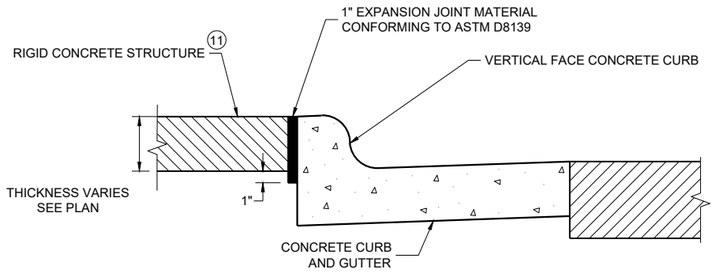

EXPANSION JOINT DETAIL FOR VERTICAL CURB ABUTTING A RIGID STRUCTURE (11)

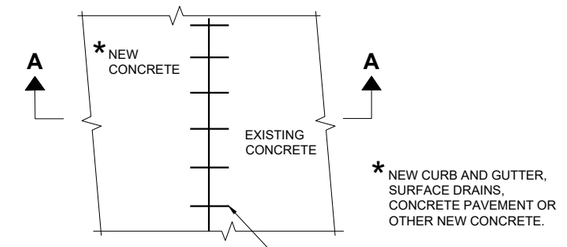

PLAN VIEW

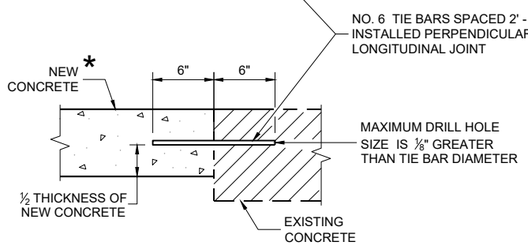

SECTION A - A

TIE BARS DRILLED INTO EXISTING PAVEMENT

CONCRETE CURB, TIES AND CURB AND GUTTER APPLICATIONS

STATE OF WISCONSIN
DEPARTMENT OF TRANSPORTATION

APPROVED
February 2025 — DATE
/S/ Rodnery Taylor — ROADWAY STANDARDS DEVELOPMENT UNIT SUPERVISOR

FHWA

6
SDD 08D01-24b

NOTE: TAPER CURB ENDS TO GUTTER IN 1' - 0"

ASPHALTIC FLUME

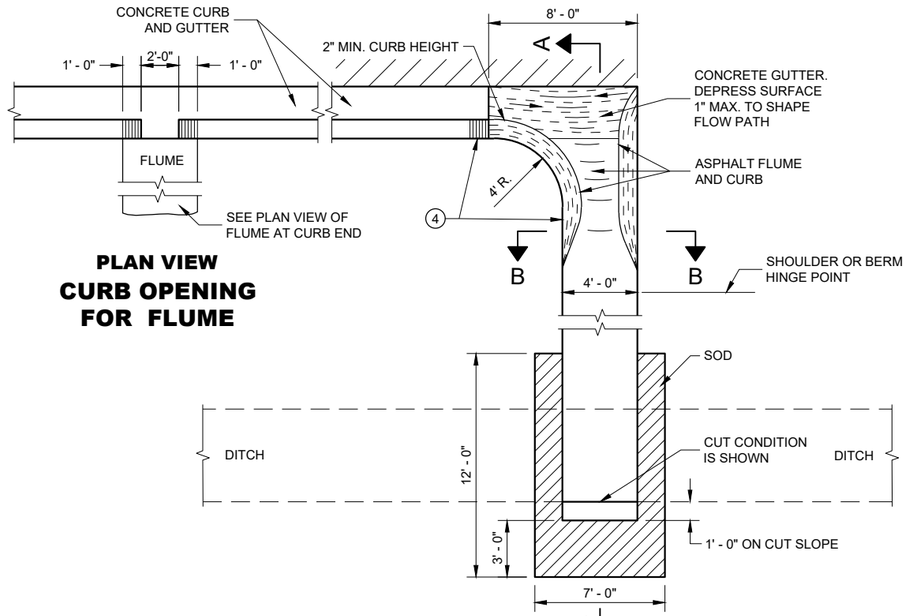

PLAN VIEW
CURB OPENING FOR FLUME

PLAN VIEW
FLUME AT CURB END

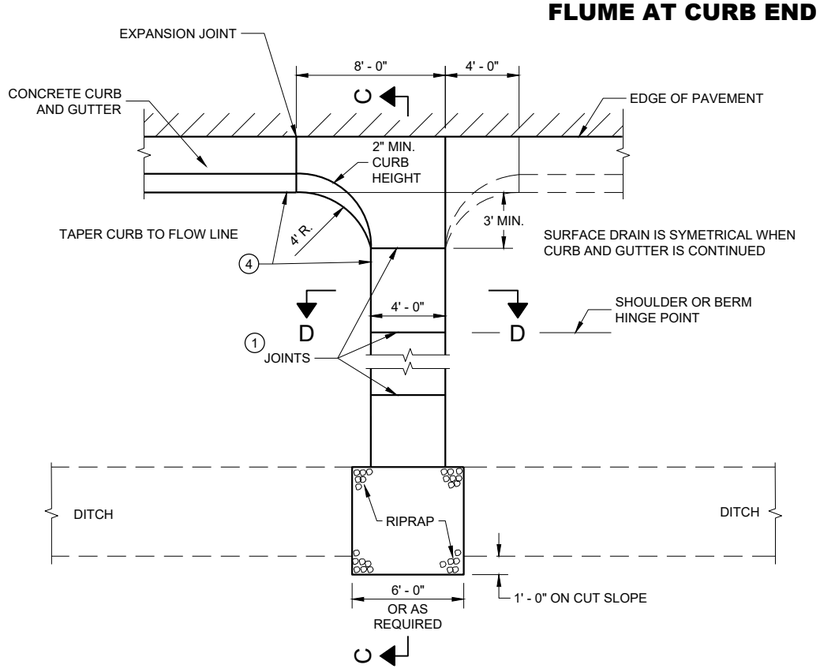

PLAN VIEW
CONCRETE SURFACE DRAIN

GENERAL NOTES

DETAILS OF CONSTRUCTION, MATERIALS AND WORKMANSHIP NOT SHOWN ON THIS DRAWING SHALL CONFORM TO PERTINENT REQUIREMENTS OF THE STANDARD SPECIFICATIONS AND APPLICABLE SPECIAL PROVISIONS.

4" X 4" - W3.0 X W3.0 CONCRETE REINFORCEMENT SHALL BE IN ACCORDANCE WITH AASHTO SPECIFICATION M55.

1. JOINTS SHALL BE ⅛" TO ¼" WIDE BY 1½" DEEP AND SPACED AT UNIFORM INTERVALS OF APPROXIMATELY 4 FEET.
2. GEOTEXTILE TYPE "R" SHALL UNDERLAY THE FULL LENGTH AND WIDTH OF THE CONCRETE SURFACE DRAIN AND RIPRAP.
3. CONCRETE SURFACE DRAIN WITHOUT CURB AND GUTTER MAY BE USED ON BACKSLOPES WHEN SPECIFIED.
4. ANGLE OF FLUME IN RELATION TO BACK OF CURB TO BE CONSTRUCTED PER THE PLAN DETAILS OR AS DIRECTED BY THE ENGINEER. ANGLE OF FLUME MAY BE OTHER THAN 90 DEGREES AS SHOWN.

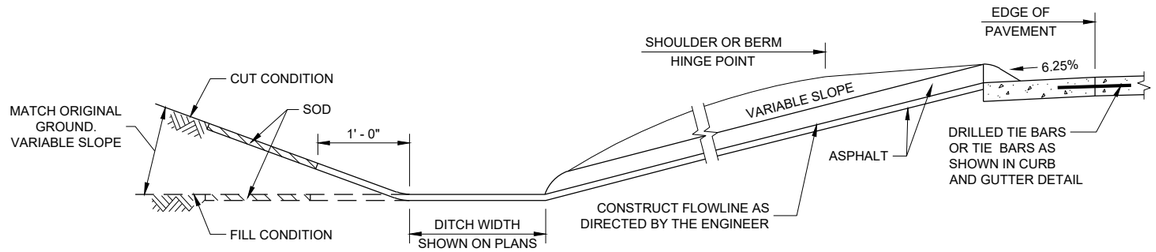

SECTION A - A

SECTION B - B

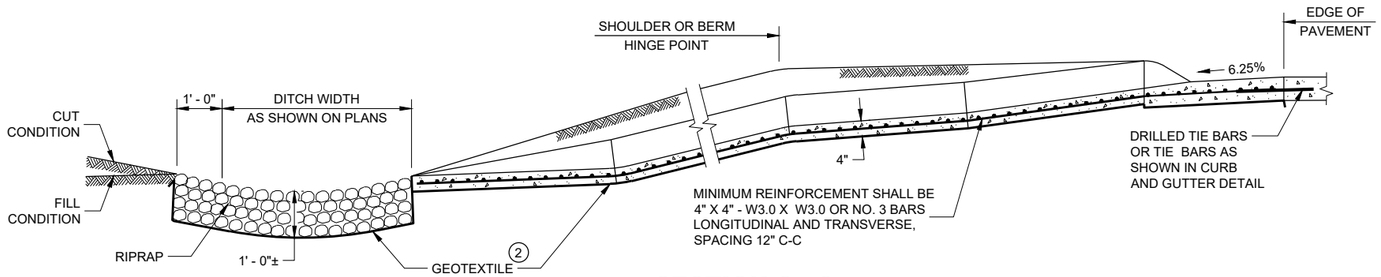

SECTION C - C

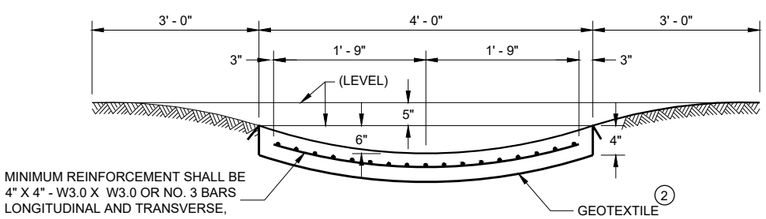

SECTION D - D

CONCRETE SURFACE DRAINS AND ASPHALTIC FLUMES

STATE OF WISCONSIN
DEPARTMENT OF TRANSPORTATION

APPROVED
May 2023
DATE

/S/ Rodney Taylor
ROADWAY STANDARDS DEVE ENGINEER

FHWA

6

SDD 08D04 - 07

6

SDD 08D04 - 07

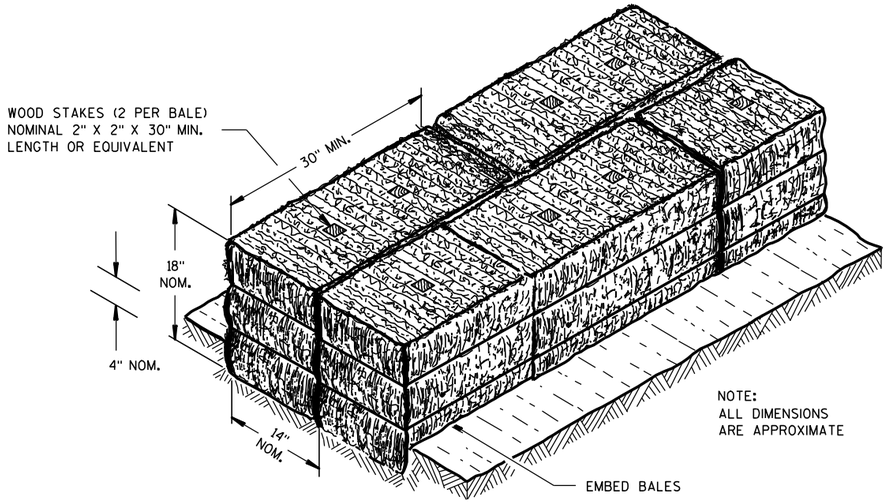

SECTION A-A

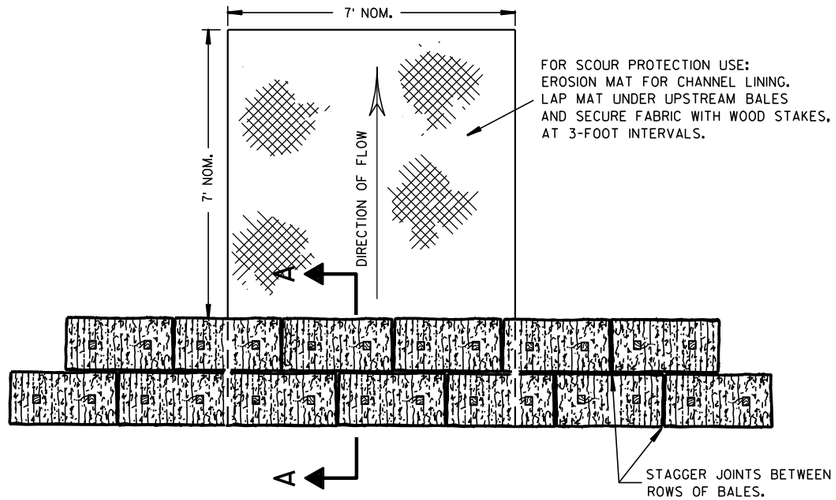

PLAN VIEW

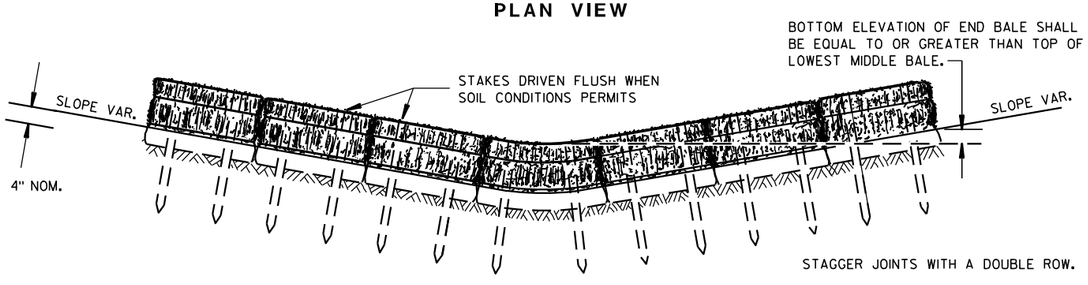

FRONT ELEVATION

TEMPORARY DITCH CHECK USING EROSION BALES (1)

GENERAL NOTES

DETAILS OF CONSTRUCTION, MATERIALS AND WORKMANSHIP NOT SHOWN ON THIS DRAWING SHALL CONFORM TO THE PERTINENT REQUIREMENTS OF THE STANDARD SPECIFICATIONS AND THE APPLICABLE SPECIAL PROVISIONS.

(1) TEMPORARY DITCH CHECKS EITHER EROSION BALES OR MANUFACTURED SHALL BE PAID FOR UNDER THE BID ITEM OF TEMPORARY DITCH CHECK. THE DEPARTMENT WILL NOT PAY FOR TEMPORARY DITCH CHECKS CONSTRUCTED OF A SINGLE ROW OF EROSION BALES.

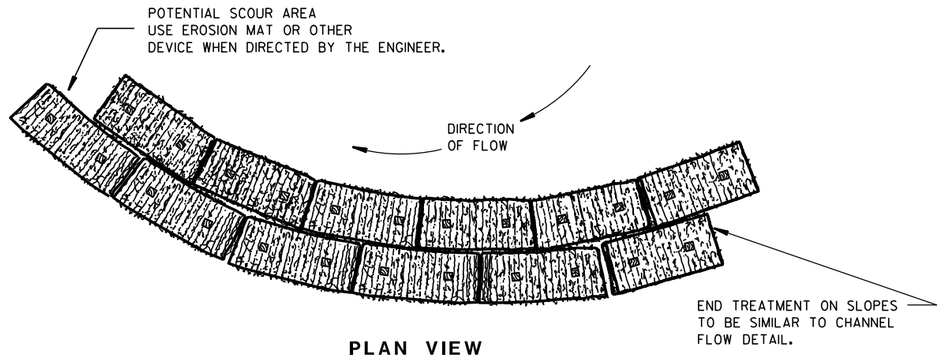

PLAN VIEW

WHEN ALTERING THE DIRECTION OF FLOW

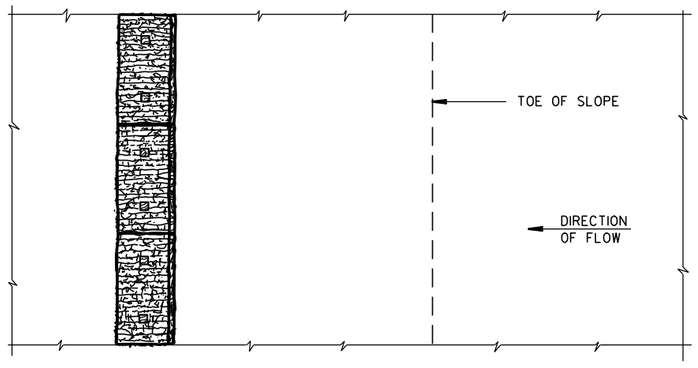

PLAN VIEW

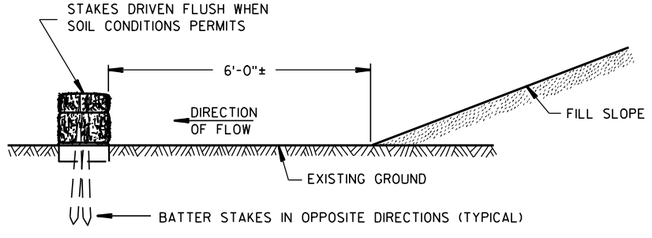

FRONT ELEVATION

WHEN EXISTING GROUND SLOPES AWAY FROM FILL SLOPE

EROSION BALES FOR SHEET FLOW

TYPICAL INSTALLATIONS OF EROSION BALES / TEMPORARY DITCH CHECKS

STATE OF WISCONSIN
DEPARTMENT OF TRANSPORTATION

APPROVED

6/04/02 DATE — /S/ Beth Cannestra — CHIEF ROADWAY DEVELOPMENT ENGINEER

FHWA

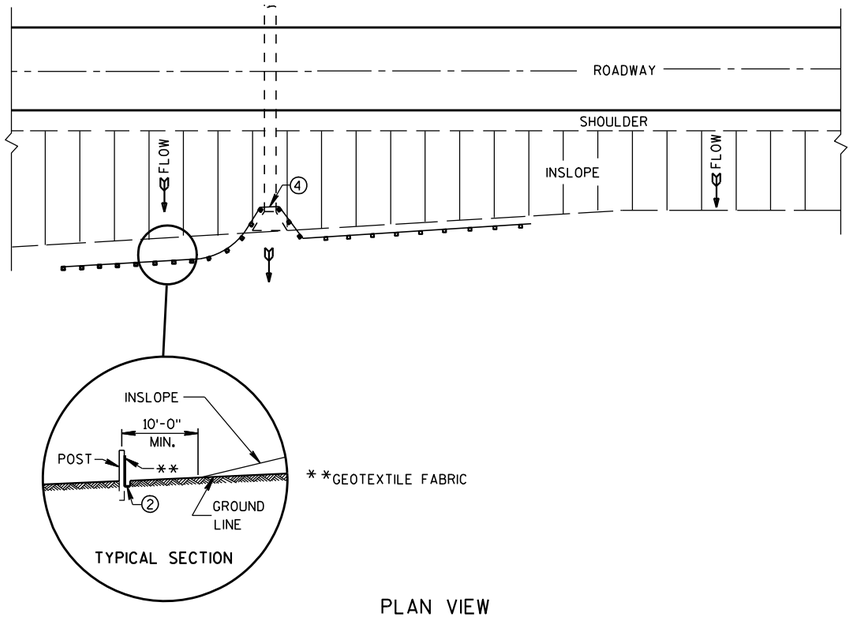

PLAN VIEW

TYPICAL APPLICATION OF SILT FENCE

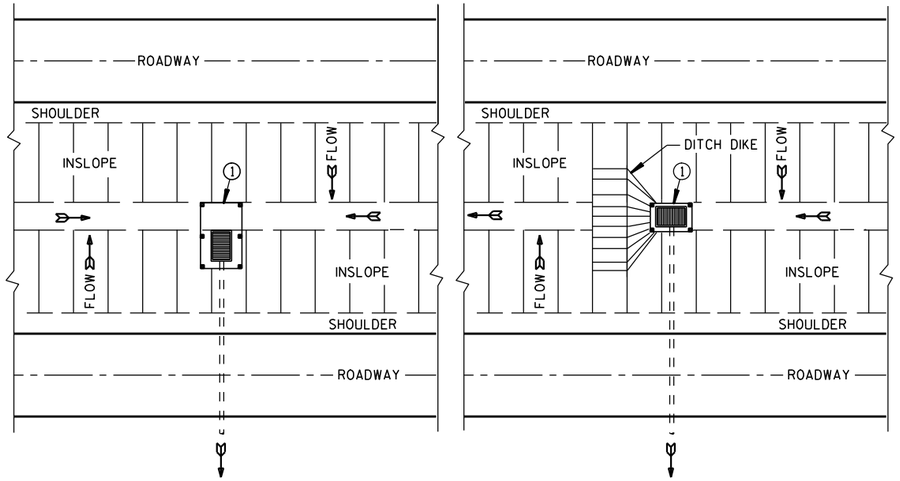

PLAN VIEW

SILT FENCE AT MEDIAN SURFACE DRAINS

GENERAL NOTES

DETAILS OF CONSTRUCTION NOT SHOWN ON THIS DRAWING SHALL CONFORM TO THE PERTINENT REQUIREMENTS OF THE STANDARD SPECIFICATIONS AND APPLICABLE SPECIAL PROVISIONS.

(1) HORIZONTAL BRACE REQUIRED WITH 2" X 4" WOODEN FRAME OR EQUIVALENT AT TOP OF POSTS.

(2) FOR MANUAL INSTALLATIONS THE TRENCH SHALL BE A MINIMUM OF 4" WIDE & 6" DEEP TO BURY AND ANCHOR THE GEOTEXTILE FABRIC. FOLD MATERIAL TO FIT TRENCH AND BACKFILL & COMPACT TRENCH WITH EXCAVATED SOIL.

(3) WOOD POSTS SHALL BE A MINIMUM SIZE OF 1⅛" X 1⅛" OF OAK OR HICKORY.

(4) SILT FENCE TO EXTEND ACROSS THE TOP OF THE PIPE.

(5) CONSTRUCT SILT FENCE FROM A CONTINUOUS ROLL IF POSSIBLE BY CUTTING LENGTHS TO AVOID JOINTS. IF A JOINT IS NECESSARY USE ONE OF THE FOLLOWING TWO METHODS; A) OVERLAP THE END POSTS AND TWIST, OR ROTATE, AT LEAST 180 DEGREES, B) HOOK THE END OF EACH SILT FENCE LENGTH.

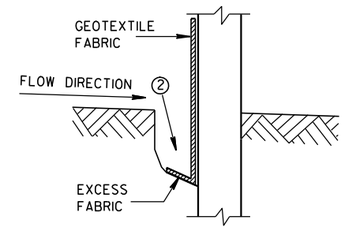

TRENCH DETAIL

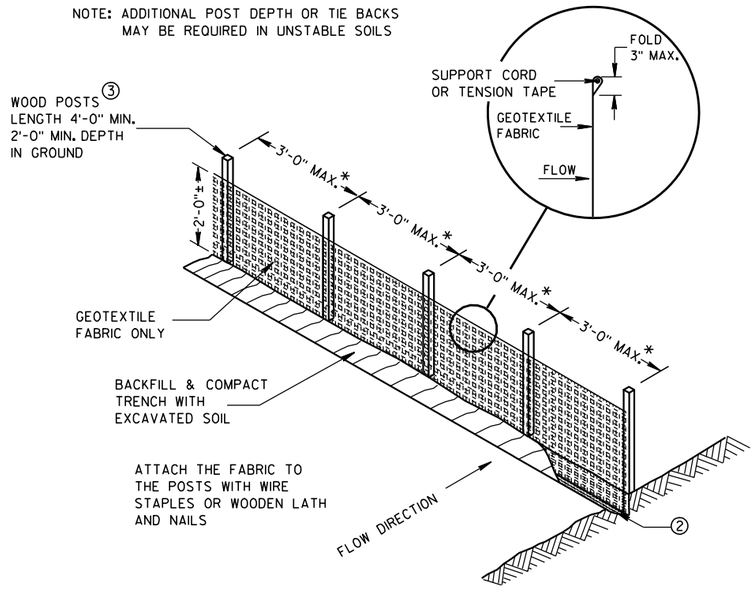

SILT FENCE

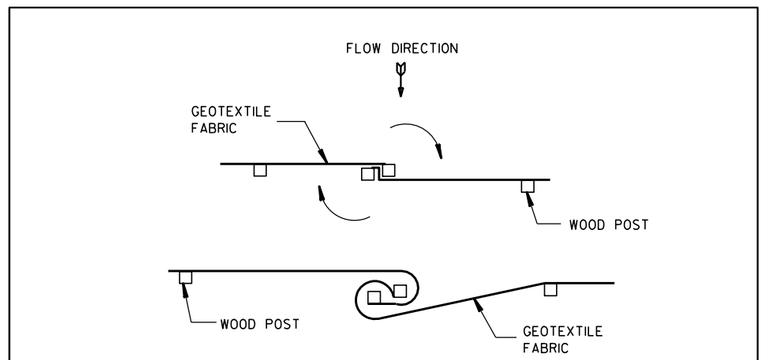

TWIST METHOD

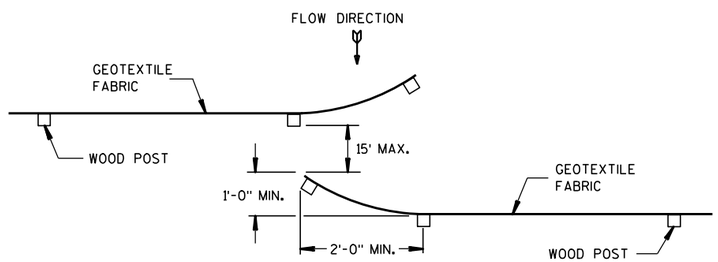

HOOK METHOD

JOINING TWO LENGTHS OF SILT FENCE (5)

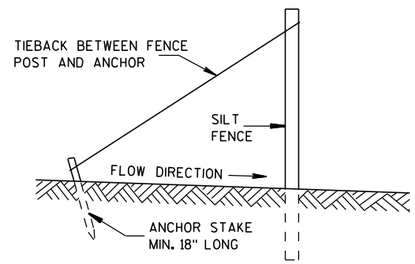

SILT FENCE TIE BACK

(WHEN REQUIRED BY THE ENGINEER)

SILT FENCE

STATE OF WISCONSIN
DEPARTMENT OF TRANSPORTATION

APPROVED
4-29-05 DATE
/S/ Beth Cannestra
CHIEF ROADWAY DEVELOPMENT ENGINEER
FHWA

6

S.D.D. 8 E 9-6

6

S.D.D. 8 E 9-6

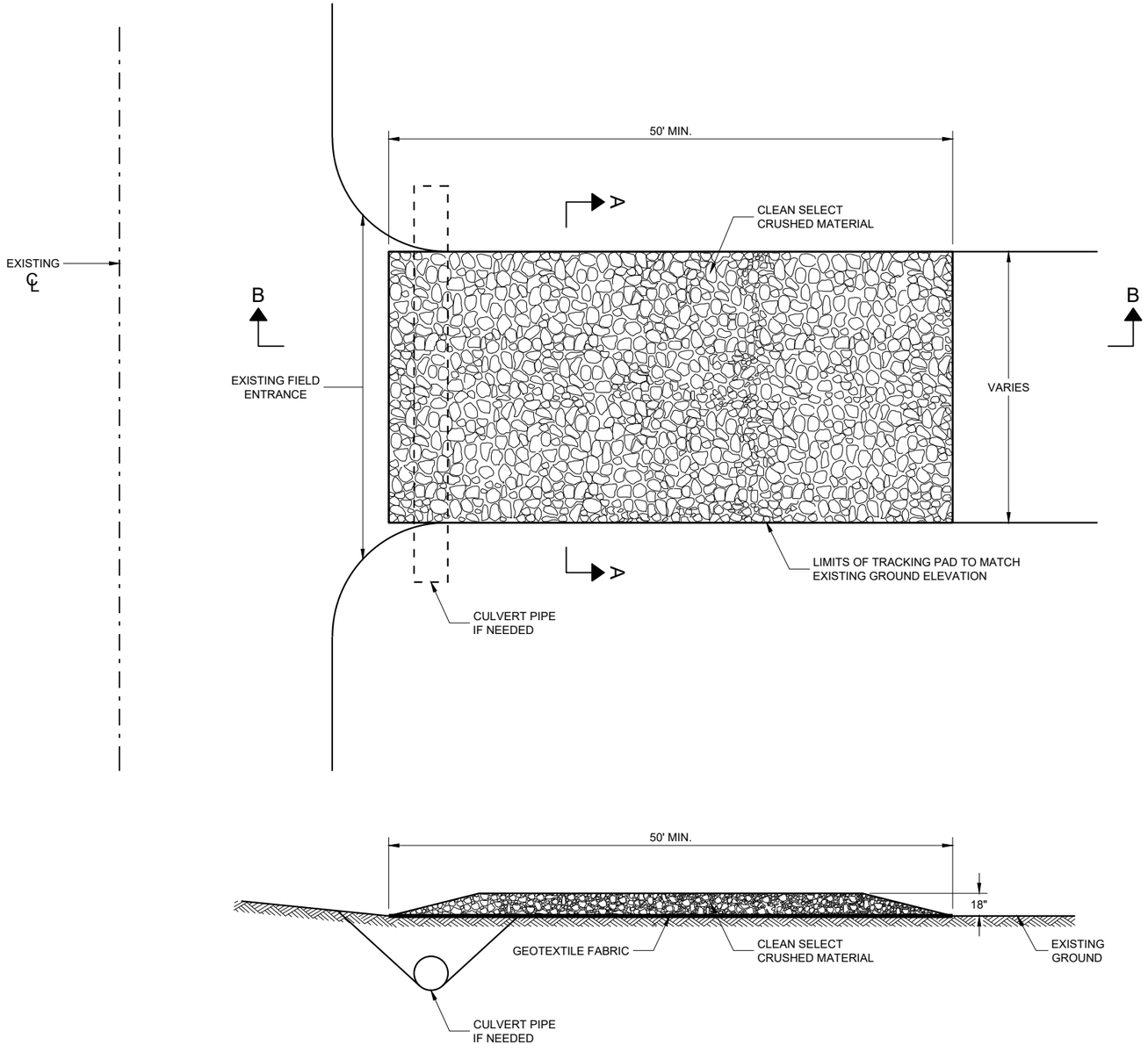

SECTION B - B

GENERAL NOTES

DETAILS OF CONSTRUCTION, MATERIALS AND WORKMANSHIP NOT SHOWN ON THIS DRAWING SHALL CONFORM TO THE PERTINENT REQUIREMENTS OF THE STANDARD SPECIFICATIONS AND THE APPLICABLE SPECIAL PROVISIONS.

TRACKING PAD SHALL BE INSPECTED DAILY. DEFICIENT AREAS SHALL BE REPAIRED OR REPLACED IMMEDIATELY.

TRACKING PAD TO BE REMOVED AFTER CONSTRUCTION IS COMPLETED.

TRACKING PAD SHALL BE THE FULL WIDTH OF THE EGRESS POINT.

SURFACE WATER MUST BE PREVENTED FROM PASSING THROUGH THE TRACKING PAD. FLOWS SHALL BE DIVERTED AWAY, AROUND OR CONVEYED UNDER THE TRACKING PAD.

CULVERT PIPE OR OTHER BMP USED TO DIVERT WATER AWAY, AROUND OR UNDER THE TRACKING PAD SHALL BE DESIGNED TO CONVEY THE 2 YEAR - 24 HOUR EVENT.

THE COST OF ADDITIONAL BMP TO DIVERT WATER ARE INCIDENTAL TO THE TRACKING PAD BID ITEM.

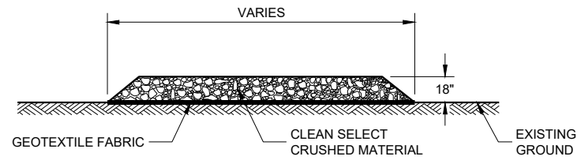

SECTION A - A

6

SDD 08E14 - 01

TRACKING PAD

STATE OF WISCONSIN
DEPARTMENT OF TRANSPORTATION

APPROVED
3/24/2011
DATE
/S/ Jerry H. Zogg
ROADWAY STANDARDS DEVE ENGINEER

FHWA

6

SDD 08E14 - 01

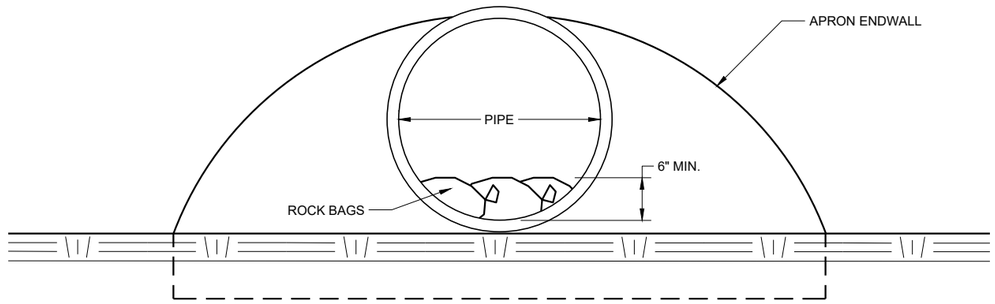

END VIEW

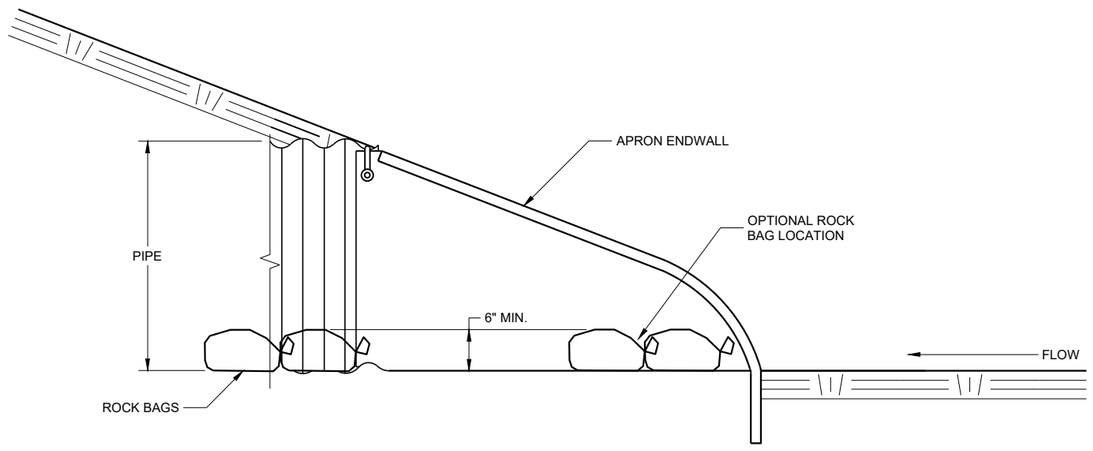

SIDE VIEW

CULVERT PIPE CHECK

(INSTALL ON INLET END ONLY)

CULVERT PIPE CHECK	
STATE OF WISCONSIN DEPARTMENT OF TRANSPORTATION	
APPROVED May 2019 DATE	/S/ Daniel Schave EROSION CONTROL ENGI
FHWA	

6

SDD 08E15 - 01

6

SDD 08E15 - 01

METAL APRON ENDWALLS

PIPE DIA. (IN.)	MIN. THICK. (Inches) STEEL	MIN. THICK. (Inches) ALUM.	DIMENSIONS (Inches) A (±1")	B (MAX.)	H (±1")	L (±1 1/2")	L1 ①	L2 ①	W (±2")	APPROX. SLOPE	BODY
12	.064	.060	6	6	6	21	12	17 1/2	24	2 1/2 to 1	1 Pc.
15	.064	.060	7	8	6	26	14	21 3/4	30	2 1/2 to 1	1 Pc.
18	.064	.060	8	10	6	31	15	28 1/4	36	2 1/2 to 1	1 Pc.
21	.064	.060	9	12	6	36	18	29 5/8	42	2 1/2 to 1	1 Pc.
24	.064	.075	10	13	6	41	18	37 1/4	48	2 1/2 to 1	1 Pc.
30	.079	.075	12	16	8	51	18	52 1/4	60	2 1/2 to 1	1 Pc.
36	.079	.105	14	19	9	60	24	59 3/4	72	2 1/2 to 1	2 Pc.
42	.109	.105	16	22	11	69	24	75 5/8	84	2 1/2 to 1	2 Pc.
48	.109	.105	18	27	12	78	24	81	90	2 1/4 to 1	3 Pc.
54	.109	.105	18	30	12	84	30	85 1/2	102	2 1/4 to 1	3 Pc.
60	.109×	.105×	18	33	12	87	—	—	114	2 to 1	3 Pc.
66	.109×	.105×	18	36	12	87	—	—	120	2 to 1	3 Pc.
72	.109×	.105×	18	39	12	87	—	—	126	2 to 1	3 Pc.
78	.109×	.105×	18	42	12	87	—	—	132	1 1/2 to 1	3 Pc.
84	.109×	.105×	18	45	12	87	—	—	138	1 1/2 to 1	3 Pc.
90	.109×	.105×	18	37	12	87	—	—	144	1 1/2 to 1	3 Pc.
96	.109×	.105×	18	35	12	87	—	—	150	1 1/2 to 1	3 Pc.

× EXCEPT CENTER PANEL SEE GENERAL NOTES

REINFORCED CONCRETE APRON ENDWALLS

PIPE DIA. (IN.)	DIMENSIONS (Inches) T	A	B	C	D	E	G	APPROX. SLOPE
12	2	4	24	48 7/8	72 1/8	24	2	3 to 1
15	2 1/4	6	27	46	73	30	2 1/4	3 to 1
18	2 1/2	9	27	46	73	36	2 1/2	3 to 1
21	2 3/4	9	36	37 1/2	73 1/2	42	2 3/4	3 to 1
24	3	9 1/2	43 1/2	30	73 1/2	48	3	3 to 1
27	3 1/4	10 1/2	49 1/2	24	73 1/2	54	3 1/4	3 to 1
30	3 1/2	12	54	19 3/4	73 1/2	60	3 1/2	3 to 1
36	4	15	63	34 3/4	97 3/4	72	4	3 to 1
42	4 1/2	21	63	35	98	78	4 1/2	3 to 1
48	5	24	72	26	98	84	5	3 to 1
54	5 1/2	27	65	* 33 1/4 - ** 35	* 98 1/4 - ** 100	90	5 1/2	2 2/5 to 1
60	6	* 30 - ** 35	60	39	99	96	5	2 to 1
66	6 1/2	* 24 - ** 30	* 72 - ** 78	* 21 - ** 27	99	102	5 1/2	2 to 1
72	7	* 24 - ** 36	78	21	99	108	6	2 to 1
78	7 1/2	* 24 - ** 36	78	21	99	114	6 1/2	2 to 1
84	8	36	90 1/2	21	111 1/2	120	6 1/2	1 1/2 to 1
90	8 1/2	41	87 1/2	24	111 1/2	132	6 1/2	1 1/2 to 1

*MINIMUM
**MAXIMUM

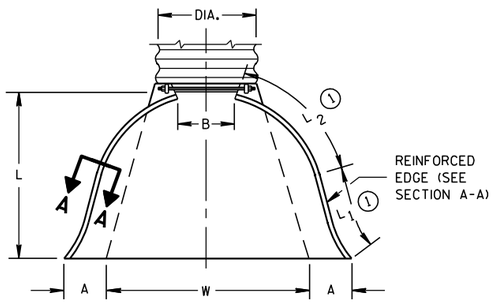

PLAN VIEW

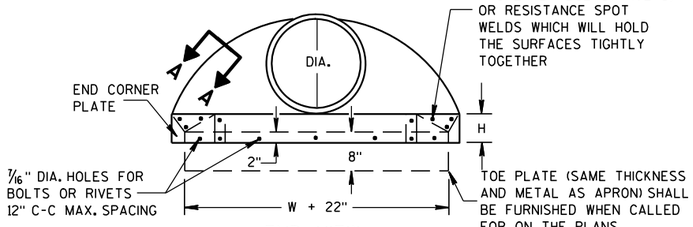

END VIEW

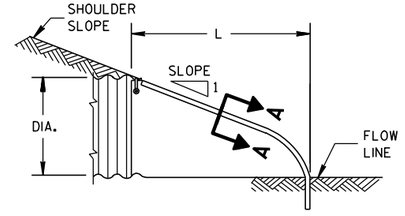

SIDE ELEVATION

METAL ENDWALLS

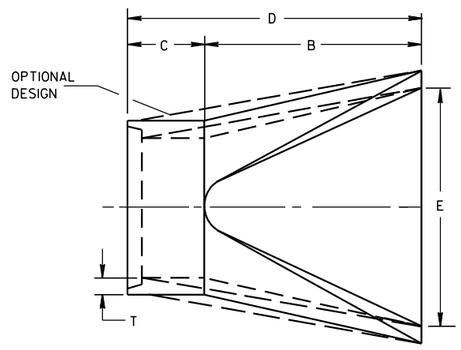

PLAN

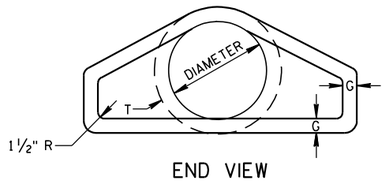

END VIEW

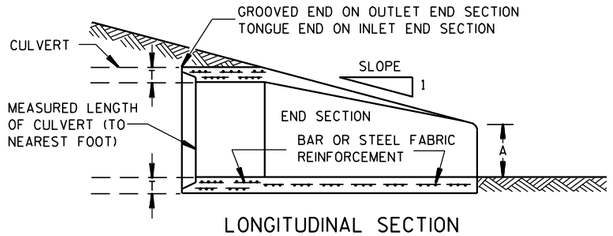

LONGITUDINAL SECTION

CONCRETE ENDWALLS

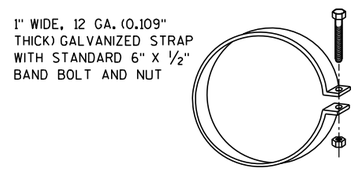

ALTERNATE FOR TYPE 1 CONNECTION

END SECTION CONNECTOR STRAP

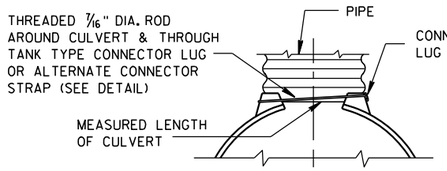

TYPE 1
FOR 12" THRU 24" CORR. PIPE

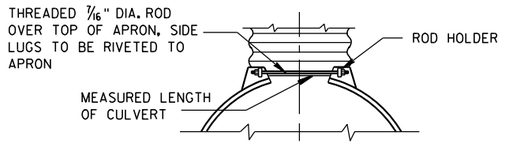

TYPE 2
FOR 30" THRU 96" CORR. PIPE

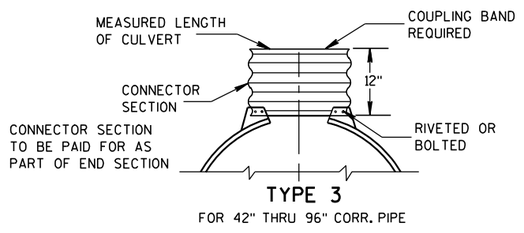

TYPE 3
FOR 42" THRU 96" CORR. PIPE

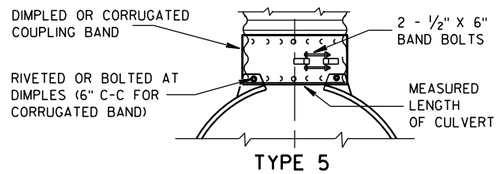

TYPE 5
ALTERNATE FOR:
ALL SIZES CORRUGATED CIRCULAR PIPE

NOTE: DIMPLED BAND FITS OVER OUTSIDE OF ENDWALL. AND CORRUGATED BAND FITS INSIDE ENDWALL. DIMPLED BAND MAY BE USED WITH HELICALLY CORRUGATED PIPE.

FOR CIRCUMFERENTIALLY CORRUGATED PIPE USE ENDWALL CONNECTION DETAILS 1, 2, 3 OR 5 AS APPLICABLE.

FOR HELICALLY CORRUGATED PIPE USE ENDWALL CONNECTION DETAILS 1, 2 OR 5.

FOR HELICALLY CORRUGATED PIPES WITH TWO CIRCUMFERENTIAL CORRUGATIONS AT EACH END USE ENDWALL CONNECTION DETAILS 1, 2 OR 3.

CONNECTION DETAILS

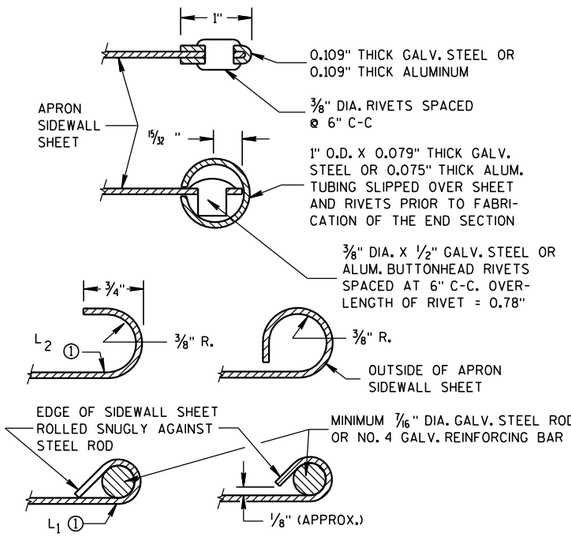

SECTION A-A

GENERAL NOTES

DETAILS OF CONSTRUCTION, MATERIALS AND WORKMANSHIP NOT SHOWN ON THIS DRAWING SHALL CONFORM TO THE PERTINENT REQUIREMENTS OF THE STANDARD SPECIFICATIONS AND THE APPLICABLE SPECIAL PROVISIONS.

CONCRETE CULVERT ENDWALLS MAY NOT BE USED WITH GALVANIZED STEEL OR ALUMINUM CULVERT PIPE OR VISE VERSA. GALVANIZED STEEL OR ALUMINUM ENDWALLS SHALL NORMALLY BE INSTALLED ON CULVERT PIPE OF THE SAME METAL.

ALL THREE PIECE STEEL APRON ENDWALLS FOR 60" DIAMETER PIPE AND LARGER SHALL HAVE 0.109" SIDES AND 0.138" CENTER PANELS. ALL THREE PIECE ALUMINUM APRON ENDWALLS FOR 60" DIAMETER PIPE AND LARGER SHALL HAVE 0.105" SIDES AND 0.134" CENTER PANELS. THE WIDTH OF CENTER PANELS SHALL BE GREATER THAN 20 PERCENT OF THE PIPE PERIMETER.

LAP SEAMS SHALL BE TIGHTLY JOINED BY GALVANIZED RIVETS OR BOLTS FOR STEEL UNITS AND ALUMINUM RIVETS AND BOLTS FOR ALUMINUM UNITS. FOR THE 60" THROUGH 96" DIAMETER APRON ENDWALL SIZES, THE REINFORCED EDGES AND CENTER PANEL SEAMS SHALL BE FURTHER REINFORCED WITH GALVANIZED STEEL OR ALUMINUM STIFFENER ANGLES. THE ANGLES SHALL BE ATTACHED BY GALVANIZED NUTS AND BOLTS FOR STEEL UNITS AND ALUMINUM NUTS AND BOLTS FOR ALUMINUM UNITS.

WHERE TWO OR MORE PIPES WITH APRON ENDWALLS ARE LAID ADJACENT TO EACH OTHER, THEY SHALL BE SEPARATED BY A DISTANCE SUFFICIENT TO PROVIDE A MINIMUM CLEARANCE OF 6 INCHES BETWEEN APRON ENDWALLS.

① FOR PIPE SIZES UP TO 60" DIAMETER, A 180° ROLLED EDGE MAY BE USED INSTEAD OF STEEL ROD REINFORCEMENT. SEE SECTION A-A.

APRON ENDWALLS FOR CULVERT PIPE

STATE OF WISCONSIN
DEPARTMENT OF TRANSPORTATION

APPROVED
11/30/94 DATE
/S/ Rory L. Rhinesmith CHIEF ROADWAY DEVELOPMENT ENGINEER
FHWA

6

S.D.D. 8 F 1-11

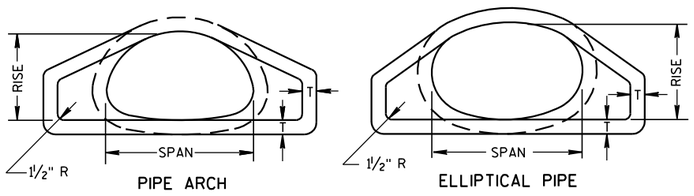

END VIEW

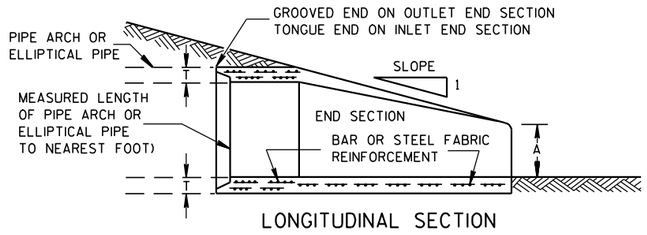

LONGITUDINAL SECTION

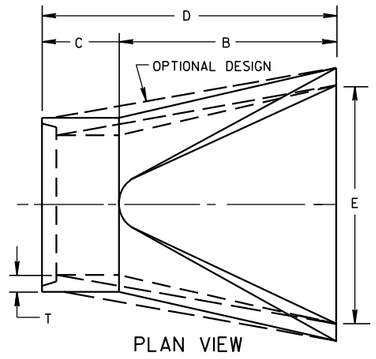

PLAN VIEW

CONCRETE ENDWALLS

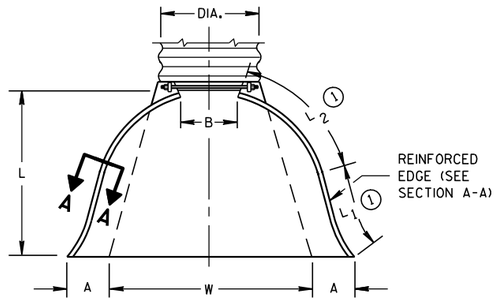

PLAN VIEW

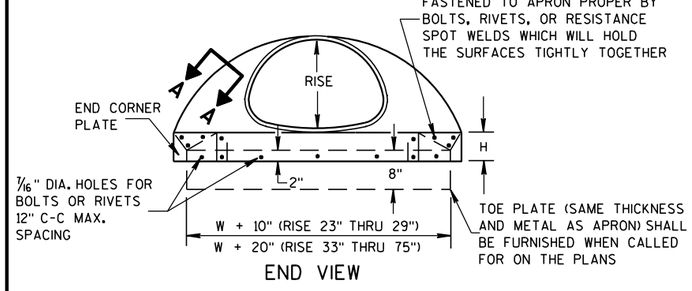

END CORNER PLATES MAY BE FASTENED TO APRON PROPER BY BOLTS, RIVETS, OR RESISTANCE SPOT WELDS WHICH WILL HOLD THE SURFACES TIGHTLY TOGETHER

END VIEW

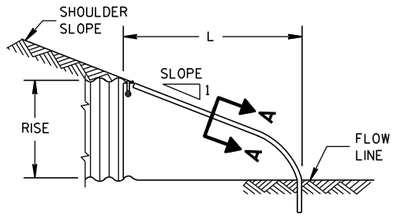

SIDE ELEVATION

METAL ENDWALLS

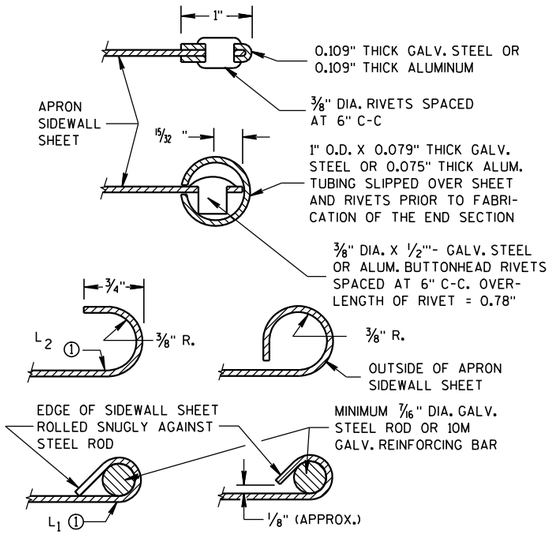

SECTION A-A

2- ⅔" X ½" CORRUGATIONS

EQUIV. DIA. (Inches)	(Inches) SPAN	(Inches) RISE	MIN. THICK. (Inches) STEEL	MIN. THICK. (Inches) ALUM.	DIMENSIONS (Inches) A (±1")	B (MAX.)	H (±1")	L (±1½")	L1 ①	L2 ①	W (±2")	APPROX. SLOPE	BODY
15	17	13	.064	.060	7	9	6	19	14	16	30	2½ to 1	1 Pc.
18	21	15	.064	.060	7	10	6	23	14	19⅜	36	2½ to 1	1 Pc.
21	24	18	.064	.060	8	12	6	28	18	21¾	42	2½ to 1	1 Pc.
24	28	20	.064	.060	9	14	6	32	18	27½	48	2½ to 1	1 Pc.
30	35	24	.079	.075	10	16	6	39	18	37⅝	60	2½ to 1	1 Pc.
36	42	29	.079	.075	12	18	8	46	24	45⅜	75	2½ to 1	1 Pc.
42	49	33	.109	.105	13	21	9	53	24	54¾	85	2½ to 1	2 Pc.
48	57	38	.109	.105	18	26	12	63	24	68	90	2½ to 1	3 Pc.
54	64	43	.109	.105	18	30	12	70	24	72¾	102	2¼ to 1	3 Pc.
60	71	47	.109*	.105*	18	33	12	77	30	82¼	114	2¼ to 1	3 Pc.
66	77	52	.109*	.105*	18	36	12	77	—	—	126	2 to 1	3 Pc.
72	83	57	.109*	.105*	18	39	12	77	—	—	138	2 to 1	3 Pc.

3" X 1" CORRUGATIONS

EQUIV. DIA. (Inches)	(Inches) SPAN	(Inches) RISE	MIN. THICK. (Inches) STEEL	MIN. THICK. (Inches) ALUM.	DIMENSIONS (Inches) A (±1")	B (MAX.)	H (±1")	L (±1½")	L1 ①	L2 ①	W (±2")	APPROX. SLOPE	BODY
48	53	41	.109	.105	18	26	12	63	24	72¾	90	2½ to 1	2 Pc.
54	60	46	.109	.105	18	30	12	70	30	82¼	102	2 to 1	2 Pc.
60	66	51	.109*	.105*	18	33	12	77	—	—	114	1½ to 1	3 Pc.
66	73	55	.109*	.105*	18	36	12	77	—	—	126	1½ to 1	3 Pc.
72	81	59	.109*	.105*	18	39	12	77	—	—	138	2 to 1	3 Pc.
78	87	63	.109*	.105*	22	38	12	77	—	—	148	1½ to 1	3 Pc.
84	95	67	.109*	.105*	22	34	12	77	—	—	162	1½ to 1	3 Pc.
90	103	71	.109*	.105*	22	38	12	77	—	—	174	1½ to 1	3 Pc.
96	112	75	.109*	.105*	24	40	12	77	—	—	174	1½ to 1	3 Pc.

NOTE: ALL SPLICES TO BE LAP RIVETED OR BOLTED.

* EXCEPT CENTER PANEL SEE GENERAL NOTES

REINFORCED CONCRETE PIPE ARCH

EQUIV. DIA. (Inches)	DIMENSIONS (Inches) ** SPAN	** RISE	T	A	B	C	D	E	APPROX. SLOPE
24	29	18	3	8½	39	33	72	48	3 to 1
30	36	22	3½	9½	50	46	96	60	3 to 1
36	44	27	4	11⅛	60	36	96	72	3 to 1
42	51	31	4½	15 13/16	60	36	96	78	3 to 1
48	58	36	5	21	60	36	96	84	3 to 1
54	65	40	5½	25½	60	36	96	90	3 to 1
60	73	45	6	31	60	36	96	96	3 to 1
72	88	54	7	31	60	39	99	120	2 to 1
84	102	62	8	28½	83	19	102	144	2 to 1

REINFORCED CONCRETE ELLIPTICAL PIPE

EQUIV. DIA. (Inches)	DIMENSIONS (Inches) ** SPAN	** RISE	T	A	B	C	D	E	APPROX. SLOPE
24	30	19	3¼	8½	39	33	72	48	3 to 1
30	38	24	3¾	9½	54	18	72	60	3 to 1
36	45	29	4½	11⅛	60	24	84	72	2½ to 1
42	53	34	5	15¾	60	36	96	78	2½ to 1
48	60	38	5½	21	60	36	96	84	2½ to 1
54	68	43	6	25½	60	36	96	90	2½ to 1
60	76	48	6½	30	60	36	96	96	2½ to 1

**NOMINAL SIZE

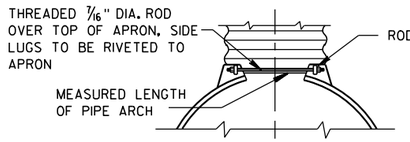

TYPE 2

FOR 17" X 13" THRU 112" X 75" PIPE ARCH

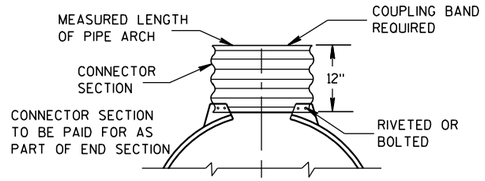

TYPE 3

FOR 64" X 43" THRU 112" X 75" PIPE ARCH

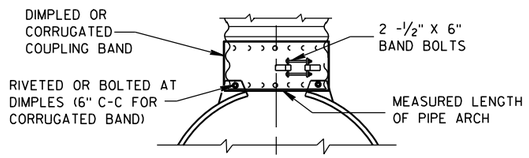

TYPE 5

ALTERNATE FOR:

ALL SIZES CORRUGATED PIPE ARCHES

NOTE: DIMPLED BAND FITS OVER OUTSIDE OF ENDWALL, AND CORRUGATED BAND FITS INSIDE ENDWALL.

CONNECTION DETAILS

GENERAL NOTES

DETAILS OF CONSTRUCTION, MATERIALS AND WORKMANSHIP NOT SHOWN ON THIS DRAWING SHALL CONFORM TO THE PERTINENT REQUIREMENTS OF THE STANDARD SPECIFICATIONS AND THE APPLICABLE SPECIAL PROVISIONS.

CONCRETE APRON ENDWALLS MAY NOT BE USED WITH GALVANIZED STEEL OR ALUMINUM CULVERT PIPE OR VISE VERSA. GALVANIZED STEEL OR ALUMINUM APRON ENDWALLS SHALL NORMALLY BE INSTALLED ON CULVERT PIPE OF THE SAME METAL.

ALL THREE PIECE STEEL APRON ENDWALLS FOR 66" X 51" PIPE ARCH AND LARGER SHALL HAVE 0.109" SIDES AND 0.138" CENTER PANELS. ALL THREE PIECE ALUMINUM APRON ENDWALLS FOR 66" X 51" PIPE ARCH AND LARGER SHALL HAVE 0.105" SIDES AND 0.134" CENTER PANELS. THE WIDTH OF CENTER PANELS SHALL BE GREATER THAN 20 PERCENT OF THE PIPE ARCH PERIMETER.

LAP SEAMS SHALL BE TIGHTLY JOINED BY GALVANIZED RIVETS OR BOLTS FOR STEEL UNITS AND ALUMINUM RIVETS AND BOLTS FOR ALUMINUM UNITS. FOR THE 77" X 52" THROUGH 112" X 75" APRON ENDWALL SIZES, THE REINFORCED EDGES AND CENTER PANEL SEAMS SHALL BE FURTHER REINFORCED WITH GALVANIZED STEEL OR ALUMINUM STIFFENER ANGLES. THE ANGLES SHALL BE ATTACHED BY GALVANIZED NUTS AND BOLTS FOR STEEL UNITS AND ALUMINUM NUTS AND BOLTS FOR ALUMINUM UNITS.

WHERE TWO OR MORE PIPES WITH APRON ENDWALLS ARE LAID ADJACENT TO EACH OTHER, THEY SHALL BE SEPARATED BY A DISTANCE SUFFICIENT TO PROVIDE A MINIMUM CLEARANCE OF 6 INCHES BETWEEN APRON ENDWALLS.

① FOR PIPE ARCH SIZES UP TO 73" X 55" A 180° ROLLED EDGE MAY BE USED INSTEAD OF STEEL ROD REINFORCEMENT. SEE SECTION A-A.

APRON ENDWALLS FOR PIPE ARCH AND ELLIPTICAL PIPE

STATE OF WISCONSIN
DEPARTMENT OF TRANSPORTATION

APPROVED

11/30/94 — DATE

/S/ Rory L. Rhinesmith — CHIEF ROADWAY DEVELOPMENT ENGINEER

FHWA

6

S.D.D. 8 F 2-1

6

S.D.D. 8 F 2-1

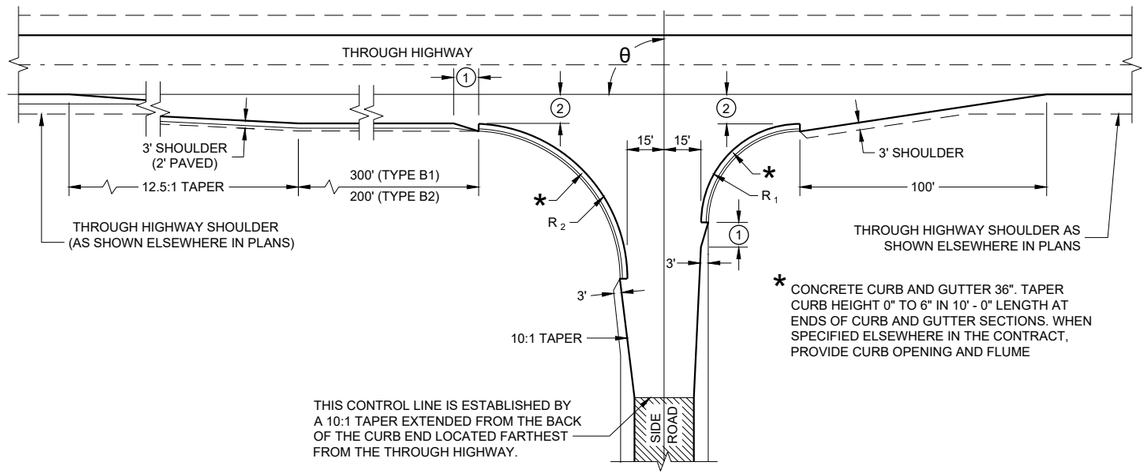

* CONCRETE CURB AND GUTTER 36". TAPER CURB HEIGHT 0" TO 6" IN 10' - 0" LENGTH AT ENDS OF CURB AND GUTTER SECTIONS. WHEN SPECIFIED ELSEWHERE IN THE CONTRACT, PROVIDE CURB OPENING AND FLUME

TYPE "B1" AND "B2"

RADII DIMENSIONS FOR TYPES "B1", "B2", "C" AND "D" INTERSECTIONS

θ	R_1	R_2
65 - 70	35	70
71 - 80	40	70
81 - 90	40	60
91 - 100	50	55
101 - 110	60	45

GENERAL NOTES

DESIGNS MAY BE USED INTERCHANGEABLY IN COMBINATION OR SEPARATELY FOR ANY ONE COMPLETE INTERSECTION DEPENDING UPON INTERSECTION ANGLE AND SURFACING OF EACH APPROACH ROADWAY.

SIDE ROAD SURFACING NOTE

WHEN THE SIDE ROAD IS NOT PRESENTLY PAVED, PAVEMENT SHALL BE PLACED TO THE LIMITS SHOWN UNLESS OTHERWISE PROVIDED IN THE CONTRACT. WHERE THE CONSTRUCTION LIMITS ARE BEYOND THE PAVING LIMITS, CRUSHED AGGREGATE SURFACING SHALL BE PLACED BETWEEN THE PAVING LIMITS AND CONSTRUCTION LIMITS.

WHEN THE SIDE ROAD IS PRESENTLY PAVED, NEW PAVEMENT SHALL BE PLACED TO THE LIMITS OF DESIGN AS SHOWN AND BEYOND, IF NECESSARY, TO MEET EXISTING PAVEMENT.

WHEN THE SIDE ROAD IS THE CONSTRUCTION PROJECT, THE INTERSECTION SURFACING SHALL BE THE SAME AS FOR THE PROJECT.

(1) 10-FT TYPICAL.

(2) 12-FT** PLUS ADDITIONAL WIDTH FOR BIKE LANE IF SHOWN ELSEWHERE IN THE PLAN.

**10-FT MAY BE USED ON TYPE B2 ON RESURFACING PROJECTS IF SPECIFIED IN THE CONTRACT.

(3) BYPASS LANE PAVED SURFACE WIDTH OUTSIDE OF TRAVEL LANE
- ASPHALT = 12-FT PLUS PAVED SHOULDER WIDTH
- PC CONCRETE = 13-FT PLUS PAVED SHOULDER WIDTH

(4) BYPASS LANE PAVED SHOULDER WIDTH = THE GREATER OF 1-FT OR THE PAVED SHOULDER WIDTH OF THE THROUGH HIGHWAY.

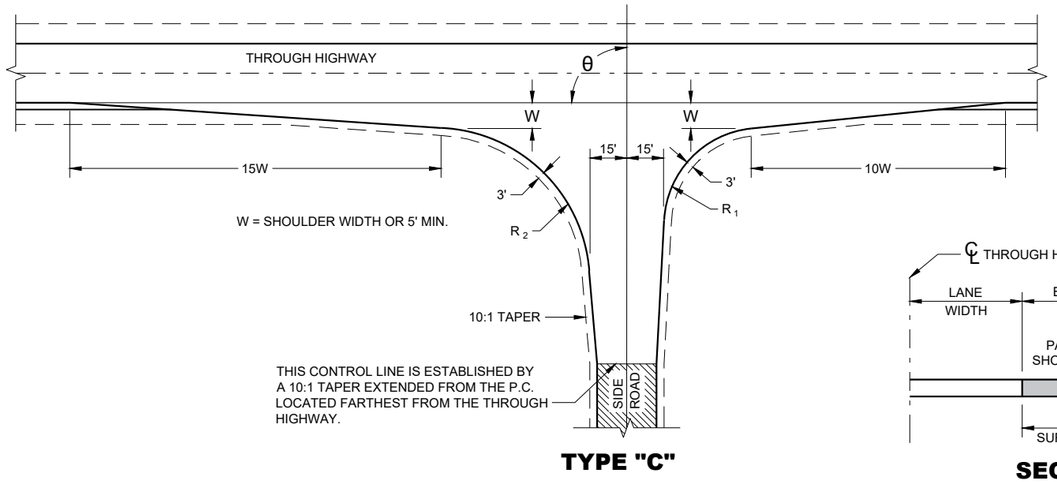

TYPE "C"

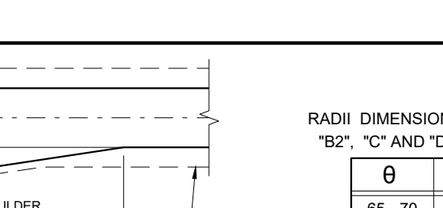

SECTION A - A
(SHOWING BYPASS LANE AND SHOULDER)

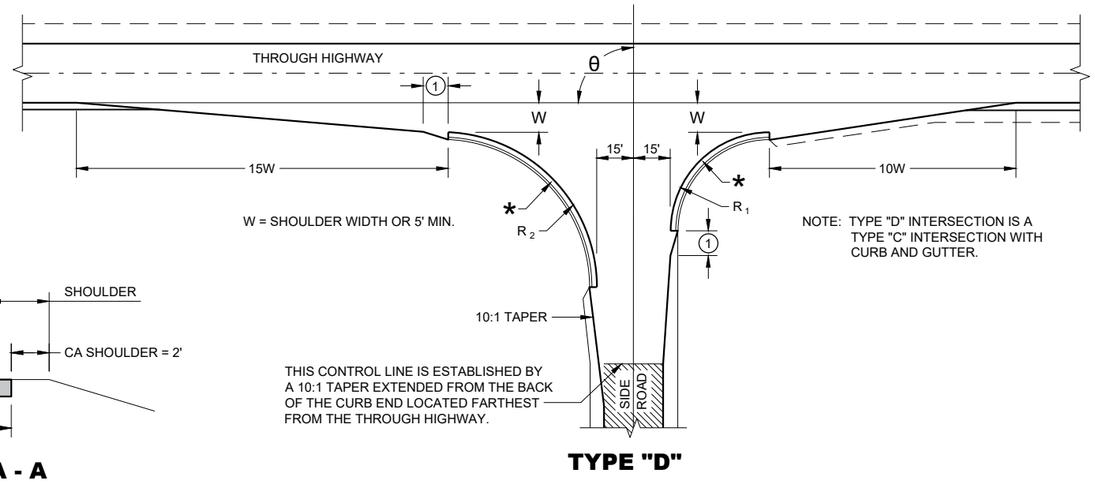

NOTE: TYPE "D" INTERSECTION IS A TYPE "C" INTERSECTION WITH CURB AND GUTTER.

TYPE "D"

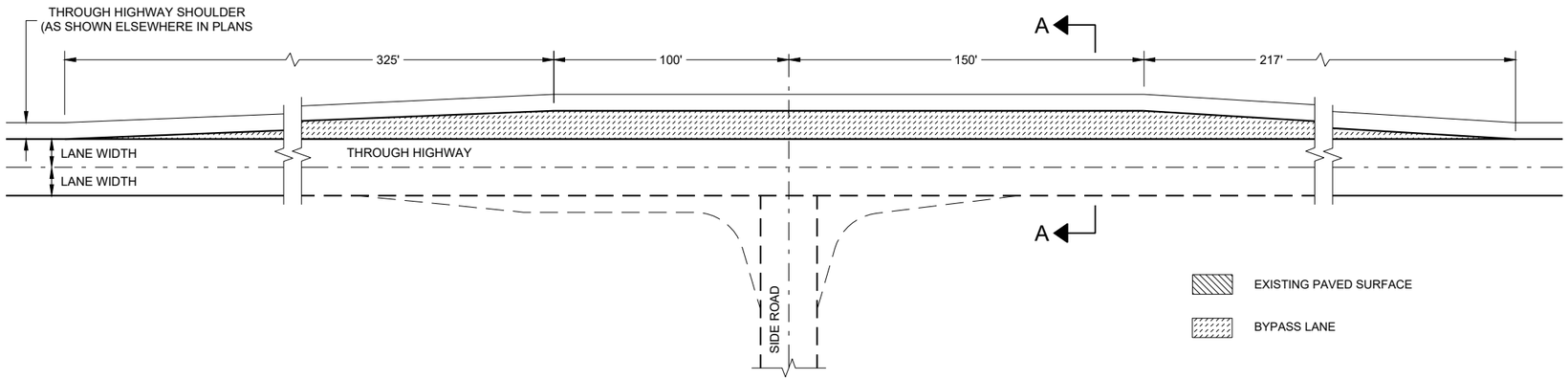

TEE INTERSECTION BYPASS LANE DETAIL

AT GRADE SIDE ROAD INTERSECTION TYPES "B1", "B2", "C", "D" AND TEE INTERSECTION BYPASS LANE

STATE OF WISCONSIN
DEPARTMENT OF TRANSPORTATION

6

SDD 09A01 - 14a

6

SDD 09A01 - 14a

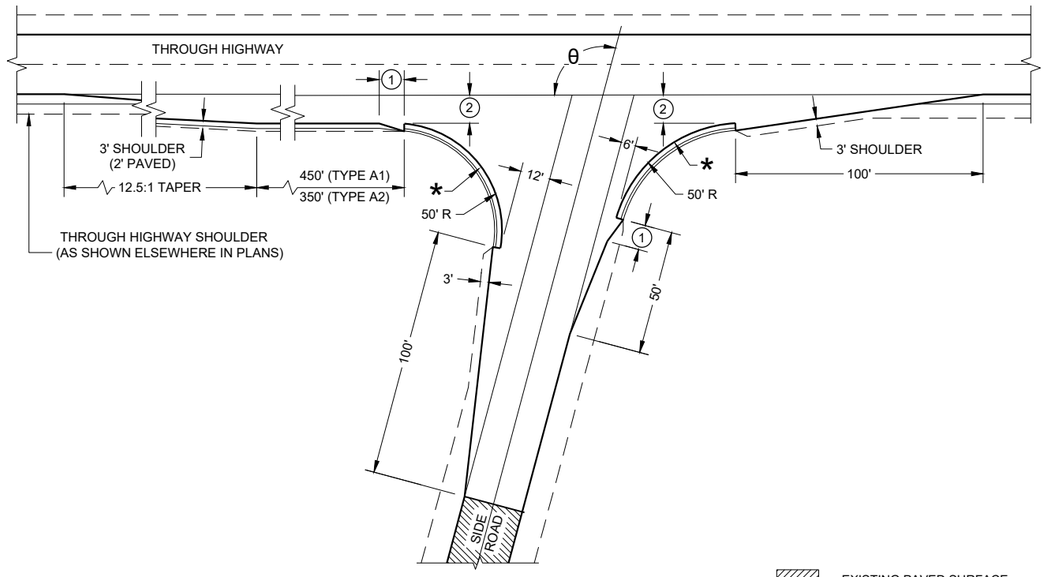

θ = MORE THAN 80°

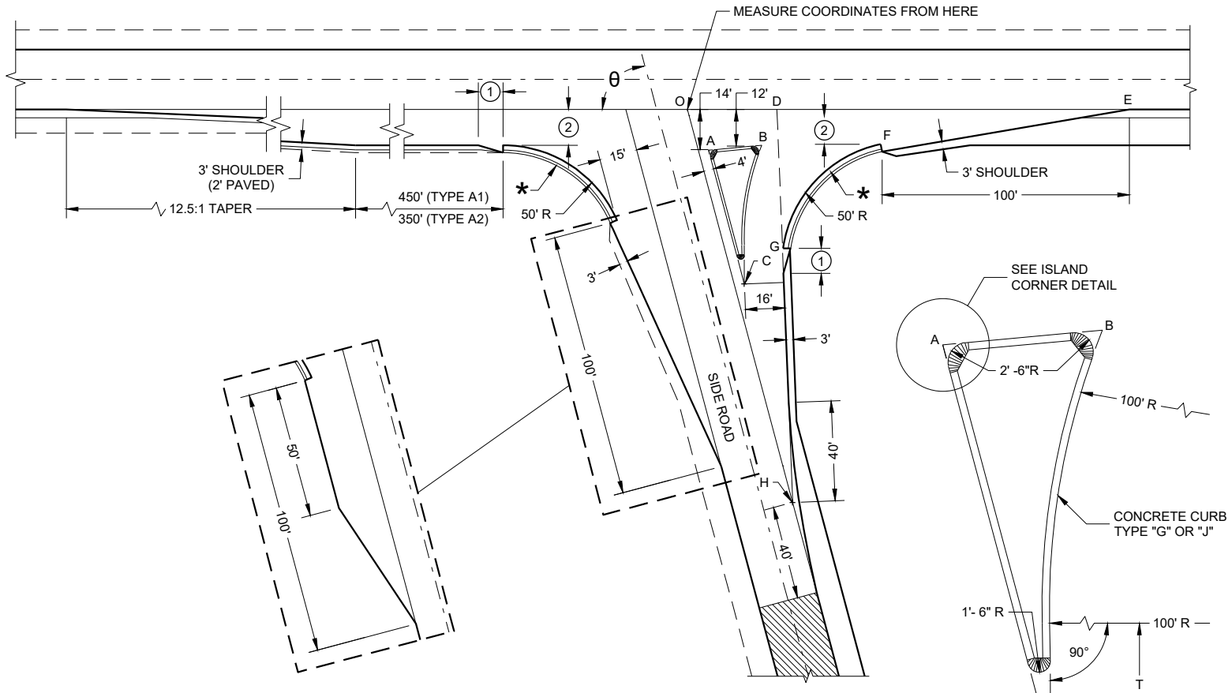

SIDE ROAD WIDENING AND TAPER REQUIRED WHERE THE THROUGH HIGHWAY CARRIES TWO-WAY TRAFFIC
θ = ACUTE ANGLES 70° OR LESS

θ = ACUTE ANGLES 80° OR LESS

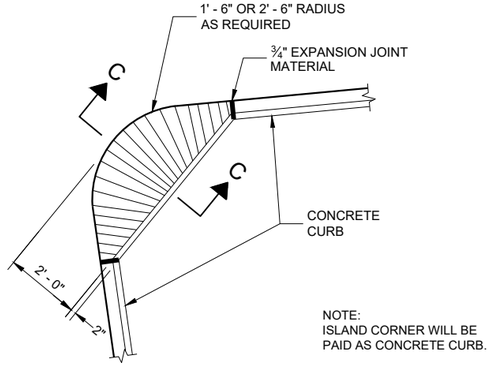

PLAN VIEW

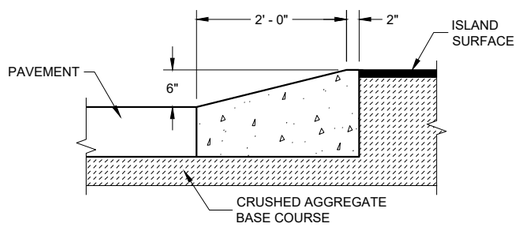

SECTION C - C

ISLAND CORNER DETAIL

(TO BE CONSTUCTED AT ALL ISLAND CORNERS)

TABLE OF DIMENSIONS FOR VARIABLE SIDE ROAD INTERSECTION ANGLES

(INTERPOLATE VALUES FOR ANGLES NOT SHOWN)

ANGLE θ DEGREES	COORDINATES IN FEET (MEASURED FROM POINT 'O') X / Y								LENGTH IN FEET				
	A	B	C	D	E	F	G	H	AB	AC	T	OJ	OH
60	12.7 / -14.0	44.9 / -12.0	46.4 / -72.4	41.9 / 0.0	205.0 / 0.0	104.6 / -12.0	64.0 / -75.5	85.0 / -147.1	32.3	67.4	4.9	85.9	169.9
65	10.9 / -14.0	39.0 / -12.0	37.8 / -71.6	39.4 / 0.0	196.1 / 0.0	95.7 / -12.0	54.1 / -71.5	70.5 / -151.3	28.2	63.6	8.5	80.9	166.9
70	9.4 / -14.0	33.9 / -12.0	29.8 / -70.1	37.4 / 0.0	188.3 / 0.0	87.8 / -12.0	45.6 / -67.5	56.1 / -154.2	24.6	59.7	11.5	76.1	164.1
75	7.9 / -14.0	29.3 / -12.0	22.3 / -67.9	35.7 / 0.0	181.2 / 0.0	80.7 / -12.0	38.2 / -63.4	41.8 / -155.9	21.5	55.8	13.8	71.4	161.4
80	6.5 / -14.0	25.4 / -12.0	15.6 / -65.2	34.4 / 0.0	174.8 / 0.0	74.4 / -12.0	31.8 / -59.3	27.6 / -156.5	18.9	52.0	15.6	66.9	158.9

TYPE 'A1" AND "A2" SIDE ROAD INTERSECTION DETAILS

AT GRADE SIDE ROAD INTERSECTIONS
TYPES "A1" AND "A2"

STATE OF WISCONSIN
DEPARTMENT OF TRANSPORTATION

APPROVED
November 2022 — DATE
/S/ John Jenkins — ROADWAY STANDARDS DEVE ENGINEER
FHWA

SDD 09A01 - 14b

6

SDD 09A01 - 14b

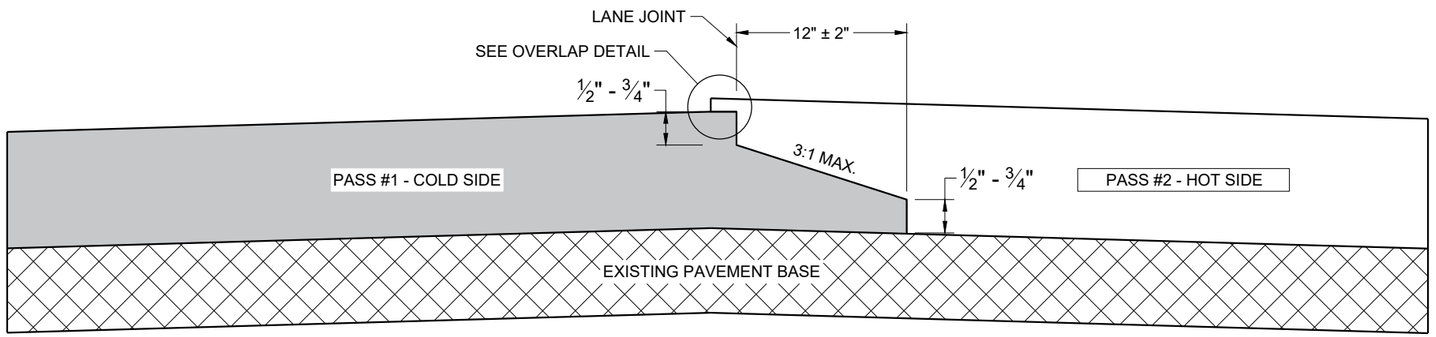

TYPICAL PAVEMENT CROSS SECTION
NOTCHED WEDGE JOINT

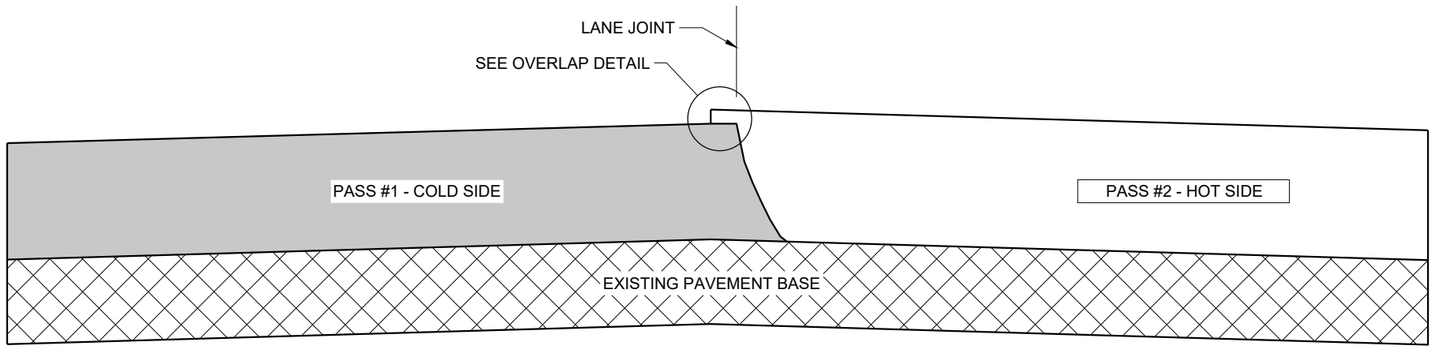

TYPICAL PAVEMENT CROSS SECTION
VERTICAL JOINT

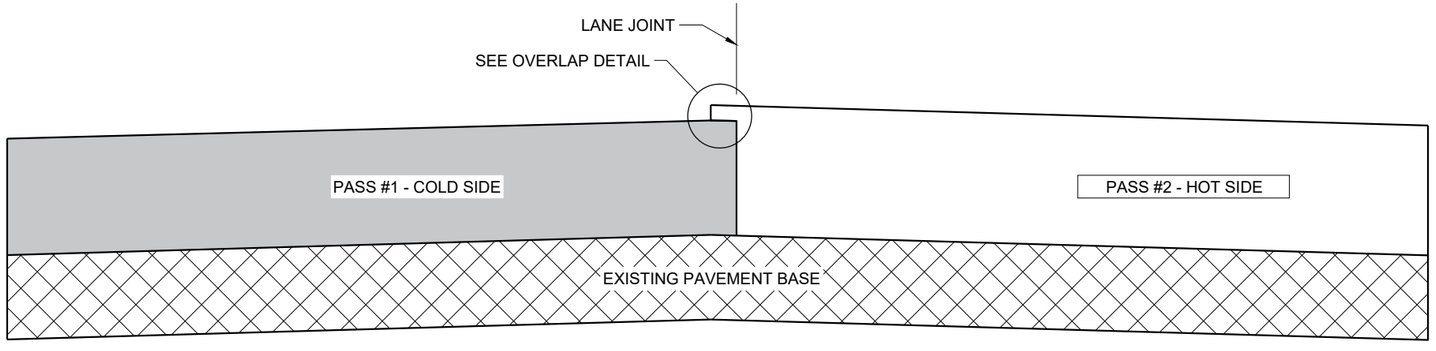

TYPICAL PAVEMENT CROSS SECTION
VERTICAL JOINT (MILLED)

GENERAL NOTES

IN ADDITION TO THE DETAILS PROVIDED IN THIS DRAWING, CONFORM TO STANDARD SPECIFICATION 450.3.2.8 FOR WHEN A NOTCHED WEDGE JOINT IS REQUIRED AND FOR GENERAL JOINT CONSTRUCTION REQUIREMENTS.

FOR ALL LONGITUDINAL JOINTS, ENSURE THE PAVER SCREED OVERLAPS THE PREVIOUSLY PLACED PAVEMENT BY 1" ± 0.5" AND THE HOT SIDE OF THE JOINT REMAINS HIGHER THAN THE COLD SIDE BY APPROXIMATELY 0.1" AFTER FINAL COMPACTION. (IT WILL BE FLUSH WHEN PAVING IN ECHELON.)

ONLY REMOVE THE LONGITUDINAL NOTCHED WEDGE JOINT FOR SMA PAVEMENT OR AS DIRECTED BY THE ENGINEER TO ADDRESS SPECIFIC LENGTHS OF JOINT DAMAGED BY TRAFFIC.

WHEN MILLING BACK OR REMOVING ANY LONGITUDINAL JOINT, LIMIT THE MATERIAL REMOVED TO 2" FROM THE TOP NOTCH OR FROM THE VERTICAL JOINT EDGE ON THE COLD SIDE OF THE JOINT.

USE LONGITUDINAL MILLED JOINT AS PLANS SHOW OR THE AS THE ENGINEER DIRECTS.

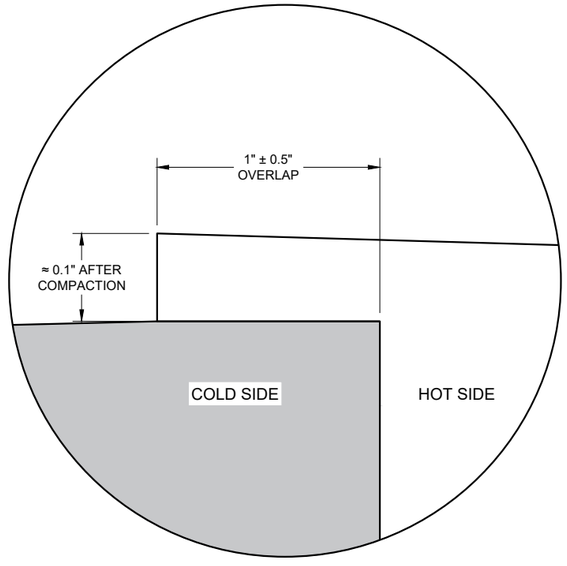

OVERLAP DETAIL (TYPICAL)

6

6

SDD 13C19 - 03

SDD 13C19 - 03

HMA LONGITUDINAL JOINTS

STATE OF WISCONSIN
DEPARTMENT OF TRANSPORTATION

APPROVED
November 2020
DATE

/S/ Steven Hefel
HMA PAVEMENT ENGIN

FHWA

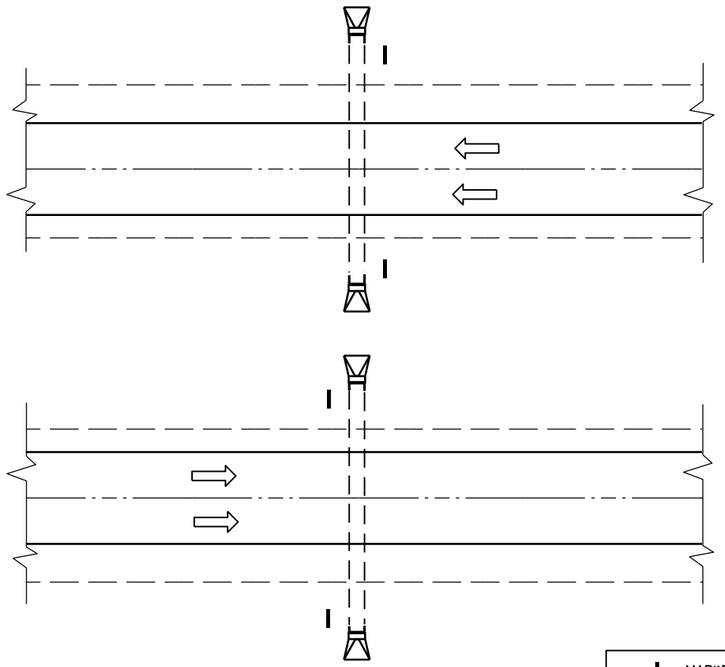

PLAN VIEW

DIVIDED HIGHWAY

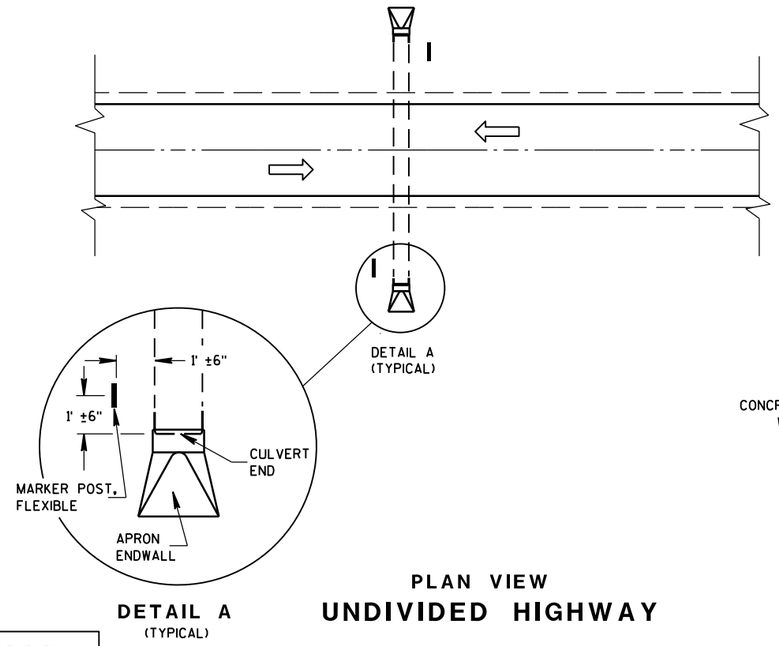

DETAIL A
(TYPICAL)

PLAN VIEW

UNDIVIDED HIGHWAY

MARKER POST, FLEXIBLE

DIRECTION OF TRAFFIC FLOW

GENERAL NOTES

DETAILS OF CONSTRUCTION, MATERIALS AND WORKMANSHIP NOT SHOWN ON THIS DRAWING SHALL CONFORM TO THE PERTINENT REQUIREMENTS OF THE STANDARD SPECIFICATIONS AND THE APPLICABLE SPECIAL PROVISIONS.

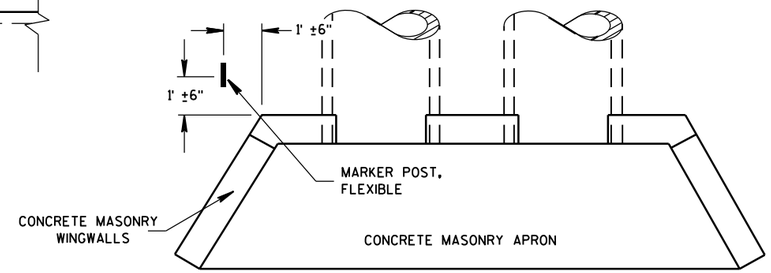

PLAN VIEW

CONCRETE MASONRY ENDWALLS FOR CULVERT PIPE AND PIPE ARCH

FLEXIBLE MARKER POST LOCATION

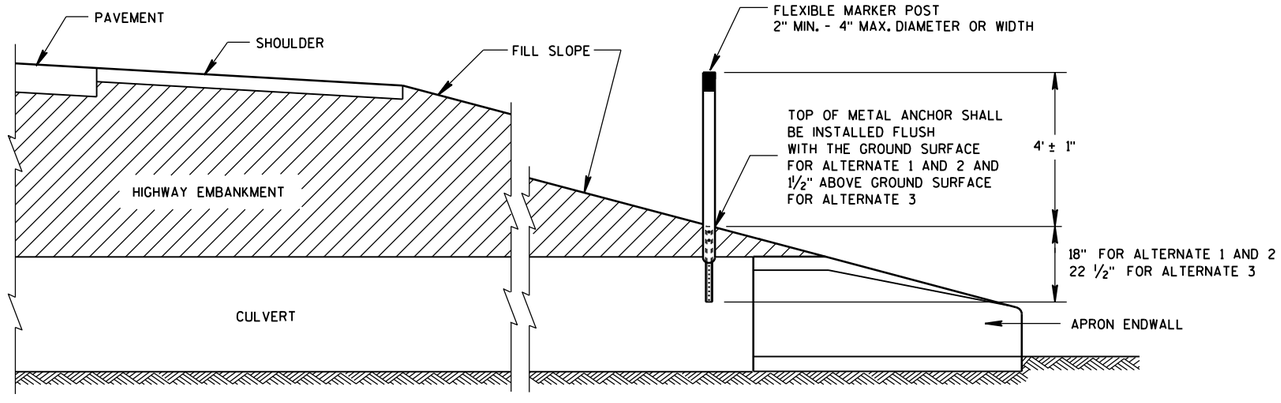

CROSS SECTION

FLEXIBLE MARKER POST

FLEXIBLE MARKER POST
FOR CULVERT END

STATE OF WISCONSIN
DEPARTMENT OF TRANSPOR

6

S.D.D. 15 A 3-2a

6

S.D.D. 15 A 3-2a

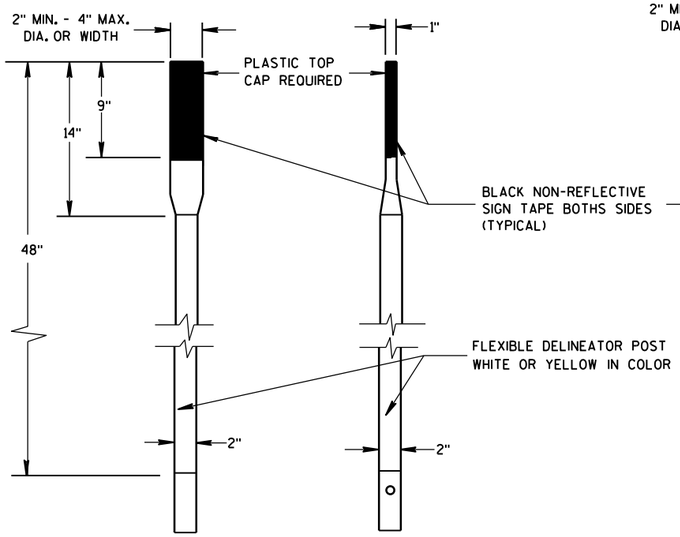

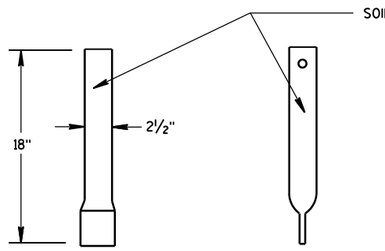

FRONT VIEW SIDE VIEW

ALTERNATE 1

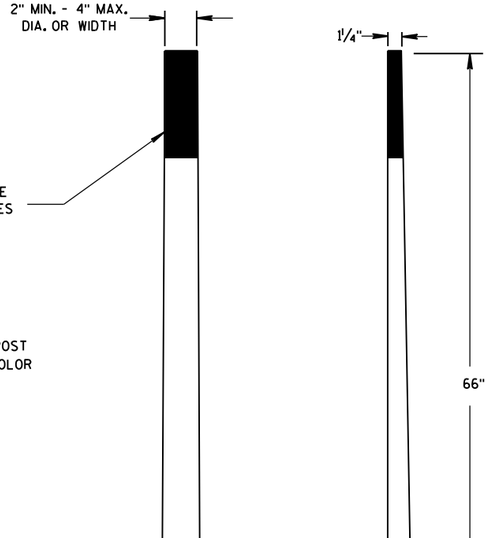

FRONT VIEW SIDE VIEW

ALTERNATE 2

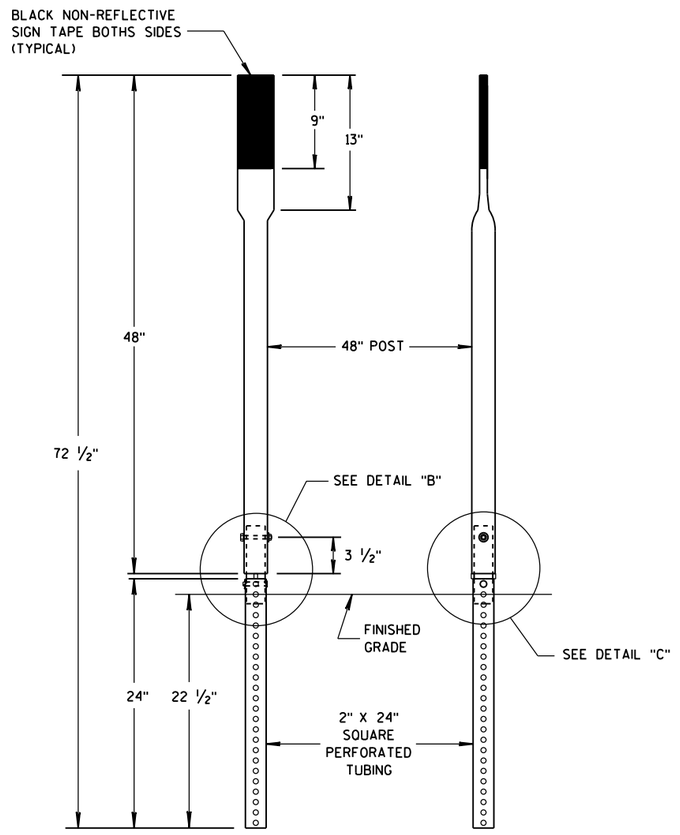

FRONT VIEW SIDE VIEW

ALTERNATE 3

FLEXIBLE MARKER POSTS

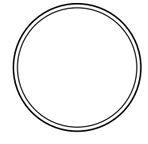

SECTION A-A

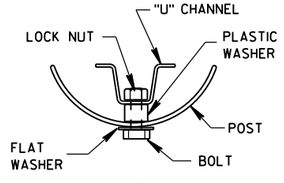

SECTION B-B

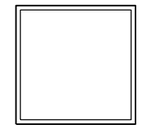

SECTION C-C

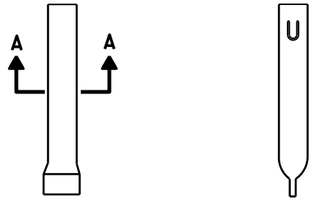

FRONT VIEW SIDE VIEW

ALTERNATE 1

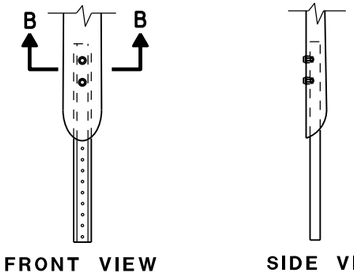

FRONT VIEW SIDE VIEW

ALTERNATE 2

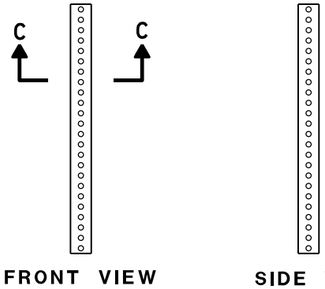

FRONT VIEW SIDE VIEW

ALTERNATE 3

FLEXIBLE MARKER POST ANCHORS

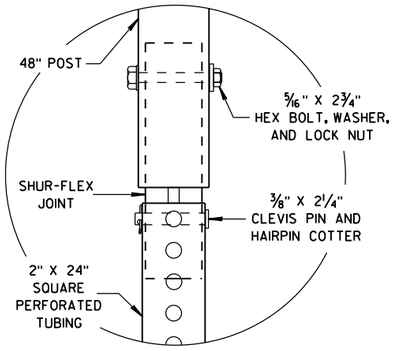

DETAIL B

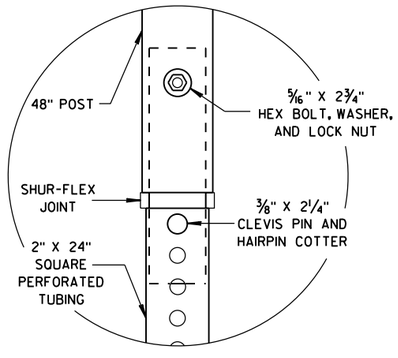

DETAIL C

FLEXIBLE MARKER POST
FOR CULVERT END

STATE OF WISCONSIN
DEPARTMENT OF TRANSPORTATION

APPROVED
10/1/2012 — DATE
/S/ Travis Feltes — STATE TRAFFIC ENGINEER
FHWA

6

S.D.D. 15 A 3-2b

6

S.D.D. 15 A 3-2b

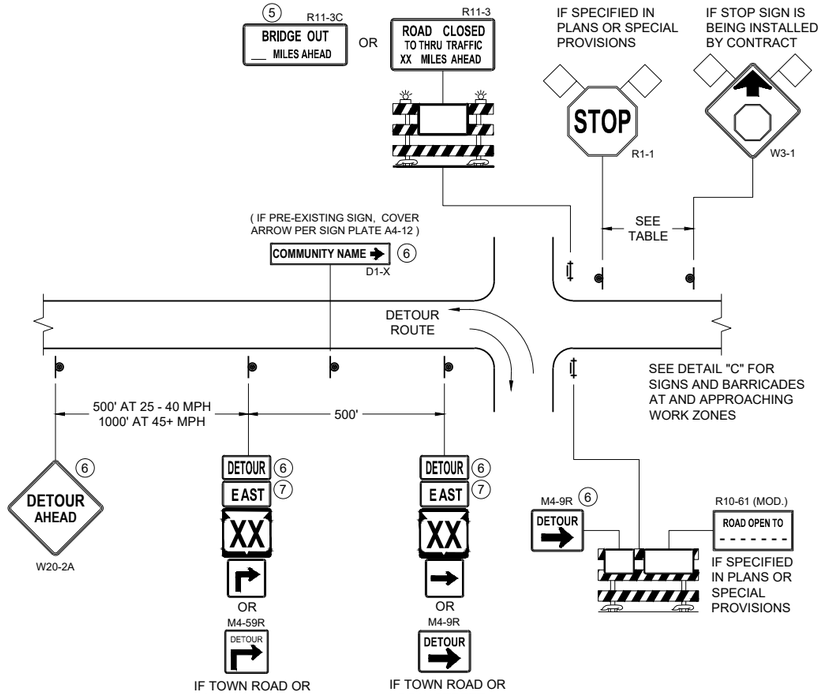

DETAIL A
MAINLINE CLOSURE WITH POSTED DETOUR

WORK ZONE GREATER THAN OR EQUAL TO ½ MILE FROM DETOUR ROUTE (1000 FEET IF URBAN)

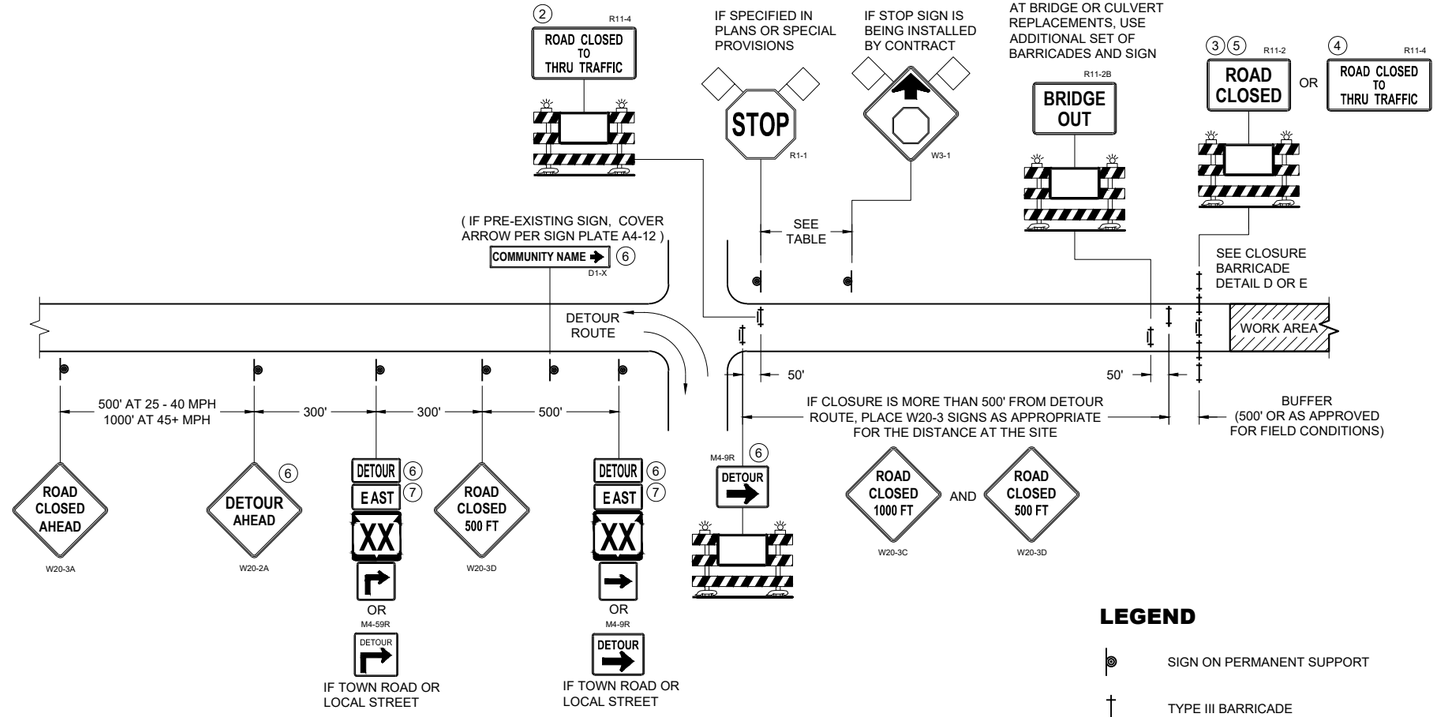

DETAIL B
MAINLINE CLOSURE WITH POSTED DETOUR

WORK ZONE LESS THAN ½ MILE FROM DETOUR ROUTE (1000 FEET IF URBAN)

SPEED LIMIT (MPH)	"STOP AHEAD" ADVANCE WARNING DISTANCE (FT)
25	200
30	200
35	350
40	350
45	500
50	550
55	750

SEE SDD 15C2-SHEET "b" FOR GENERAL NOTES AND FOOTNOTES (1) THROUGH (7)

LEGEND

- SIGN ON PERMANENT SUPPORT
- TYPE III BARRICADE
- TYPE III BARRICADE WITH ATTACHED SIGN
- TYPE "A" WARNING LIGHT (FLASHING)
- WORK AREA
- FLAGS, 16" X 16" MIN. (ORANGE)

DETOUR M4 - 8
EAST M3 - X
XX M1 - 4 OR XX M1 - 6 OR COUNTY X M1 - 5A
M05 - 1 OR M06 - 1

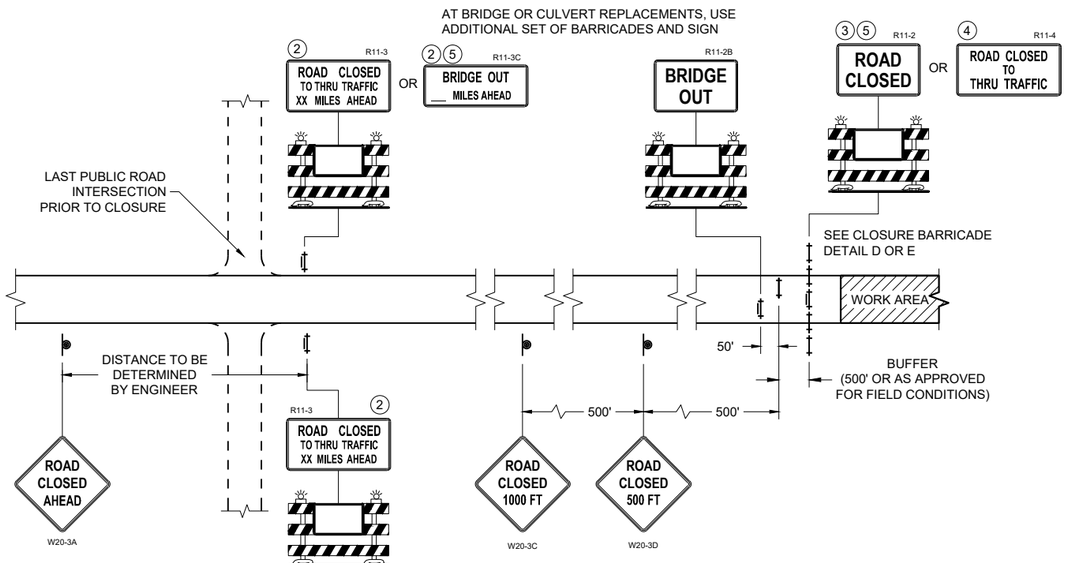

DETAIL C
MAINLINE CLOSURE, NO POSTED DETOUR

BARRICADES AND SIGNS FOR MAINLINE CLOSURES

STATE OF WISCONSIN
DEPARTMENT OF TRANSPORTATION

APPROVED
November 2025 — DATE
/S/ Andrew Heidtke — WORK ZONE ENGINEER

FHWA

6
SDD 15C02-10a

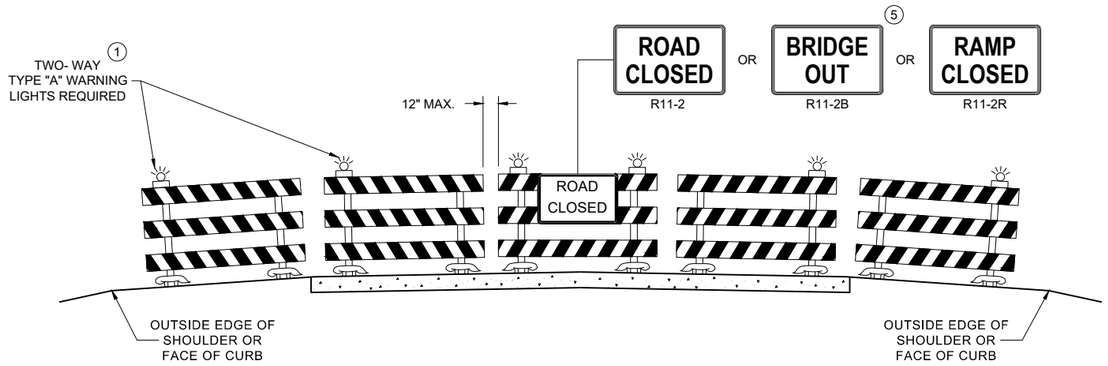

DETAIL D

ROAD CLOSURE BARRICADE DETAIL

APPROACH VIEW

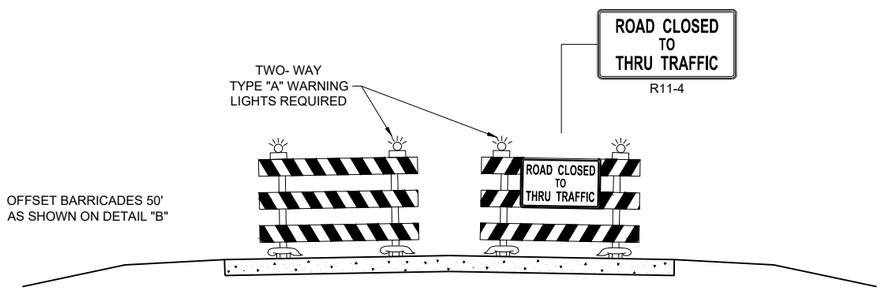

DETAIL E

LANE CLOSURE BARRICADE DETAIL

APPROACH VIEW

SEE SDD 15C2 - SHEET "a" FOR LEGEND

GENERAL NOTES

THE EXACT NUMBER, LOCATION, AND SPACING OF ALL SIGNS AND BARRICADES SHALL BE ADJUSTED TO FIT FIELD CONDITIONS AS APPROVED BY THE ENGINEER.

ANY SIGNS TEMPORARY OR EXISTING, WHICH CONFLICT WITH TRAFFIC CONTROL "IN USE", SHALL BE REMOVED OR COVERED AS NEEDED AND AS APPROVED BY THE ENGINEER.

THE SPACING BETWEEN TRAFFIC CONTROL SIGNS SHOULD BE ADJUSTED TO NOT CONFLICT WITH AND SHOULD PROVIDE A DESIRABLE MINIMUM OF 200 FEET CLEARANCE TO EXISTING SIGNS THAT WILL REMAIN IN PLACE.

BARRICADES THAT MUST BE MOVED FOR A WORK OPERATION SHALL BE IMMEDIATELY RE-ESTABLISHED UPON COMPLETION OF THE OPERATION, OR FOR CONTINUING OPERATIONS, AT THE END OF EACH WORKING DAY.

SIGNS THAT WILL BE IN PLACE LESS THAN 7 CONTINUOUS DAYS AND NIGHTS MAY BE MOUNTED ON PORTABLE SUPPORTS.

ALL TYPE III BARRICADES SHALL HAVE RAILS REFLECTORIZED ON BOTH FACES. STRIPES SHALL BE PROPERLY SLOPED DOWN TOWARD THE TRAFFIC SIDE OR AS SHOWN IN THE ROAD CLOSURE BARRICADE DETAIL "D" FOR FULL ROAD CLOSURES.

TYPE "A" LOW - INTENSITY FLASHING WARNING LIGHTS SHALL BE VISIBLE ON BOTH SIDES OF THE BARRICADE.

PARTIAL NUMBERS ON SIGNS SHALL BE DISPLAYED AS A WHOLE NUMBER(AS NEEDED) FOLLOWED BY A FRACTION. SIGNS SHALL NOT DISPLAY NUMBERS IN DECIMAL FORM.

"WO" AND "MO" SIGNS ARE THE SAME AS "W" AND "M" SIGNS EXCEPT THE BACKGROUND IS ORANGE.

ALL SIGNS SHALL BE 48" X 48" UNLESS OTHERWISE NOTED BELOW:

- R11 - 2 SHALL BE 48" X 30"
- R11 - 3 SHALL, R11 - 4 AND R10 - 61 SHALL BE 60 " X 30"
- M4 - 9 SHALL BE 30" X 24"
- M3 - X SHALL BE 24" X 12" (36" X 18" IF NEEDED TO MATCH EXISTING SIGNS)
- M4 - 8 SHALL BE 24" X 12" (36" X 18" IF NEEDED TO MATCH EXISTING SIGNS)
- M1 - 4, M1 - 5A AND M1 - 6 SHALL BE 24" X 24" (36" X 36" IF NEEDED TO MATCH EXISTING SIGNS)
- MO5 - 1 AND MO6 - 1 SHALL BE 21" X 21" (30" X 30" IF NEEDED TO MATCH EXISTING SIGNS)
- D1 - X SHALL BE AS SHOWN ON SPECIFIC PROJECT SIGNING DETAIL SHEETS.
- R1 - 1 SHALL BE 36" X 36"

SIGNS PLACED ON TYPE III BARRICADES THAT ARE SIZES OTHER THAN 48"X30" SHALL HAVE A CORRUGATED POLYPROPYLENE OR POLYETHYLENE PLASTIC SIGN BASE.

(1) TWO WARNING LIGHTS SHALL BE PROVIDED ON THE CENTER BARRICADE AND A MINIMUM OF ONE WARNING LIGHT SHALL BE PROVIDED ON EACH OF THE OTHER BARRICADES WITHIN THE ROADWAY LIMITS. SPACING OF THE WARNING LIGHTS SHALL BE UNIFORM TO THE EDGE OF ROADWAY AS SHOWN (APPROX. 8 FOOT LIGHT SPACING.

(2) THESE SIGNS AND BARRICADES ARE NOT REQUIRED IF ROAD CLOSURE BEGINS AT AN INTERSECTION.

(3) FOR ROAD CLOSURE WITHOUT LOCAL ACCESS TO PROJECT, SEE ROAD CLOSURE BARRICADE DETAIL "D".

(4) FOR ROAD CLOSURE WITH LOCAL ACCESS TO PROJECT, SEE ROAD CLOSURE BARRICADE DETAIL "E".

(5) FOR BRIDGE OR CULVERT REPLACEMENTS, SUBSTITUTE "BRIDGE OUT" INSTEAD OF "ROAD CLOSED" ON R11 - 2 AND R11 - 3 SIGNS.

(6) INSTALL DETOUR AND COMMUNITY GUIDE SIGNS AND ARROWS ONLY IF SPECIFIED IN THE CONTRACT. IF THERE ARE EXISTING ROUTE MARKER ASSEMBLIES THAT WILL REMAIN IN PLACE, ADJUST THE LOCATION OF THE DETOUR ROUTE SIGNS TO CORRESPOND WITH THE EXISTING ASSEMBLIES. MODIFY EXISTING SIGNS WHERE POSSIBLE. SEE SPECIFIC PROJECT DETOUR SIGNING DETAIL SHEETS. IF DETOUR SIGNS ARE BEING INSTALLED BY OTHERS, PLACE THE CONTRACTED TRAFFIC CONTROL SIGNS TO ALLOW FOR PLACEMENT OF ALL WARNING, DETOUR AND GUIDE SIGNS AS SHOWN.

(7) "EAST" CARDINAL DIRECTION MARKERS AND RIGHT TURN ARROWS ARE SHOWN. USE OTHER CARDINAL DIRECTIONS AND ARROWS AS APPROPRIATE.

BARRICADES AND SIGNS FOR VARIOUS CLOSURES

STATE OF WISCONSIN
DEPARTMENT OF TRANSPORTATION

APPROVED
November 2025 — DATE
/S/ Andrew Heidtke — WORK ZONE ENGINEER
FHWA

6

SDD 15C02-10b

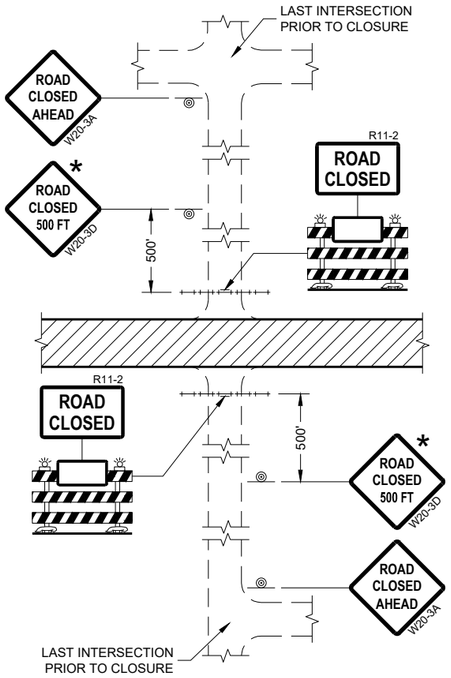

DETAIL 1
(NO ACCESS TO PROJECT)

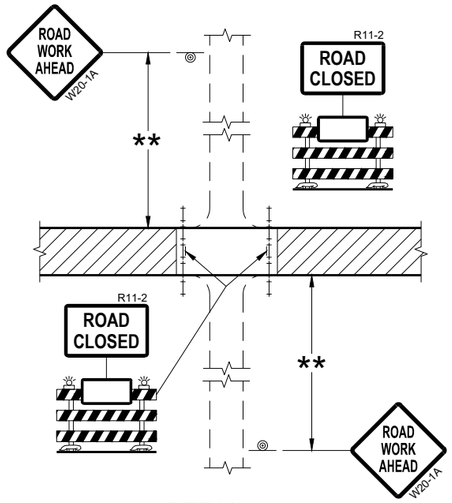

DETAIL 2
(PUBLIC CROSS-TRAFFIC MAINTAINED.
NO ACCESS TO PROJECT)

GENERAL NOTES

THE EXACT NUMBER, LOCATION, AND SPACING OF ALL SIGNS AND BARRICADES SHALL BE ADJUSTED TO FIT FIELD CONDITIONS AS APPROVED BY THE ENGINEER.

ANY SIGNS TEMPORARY OR EXISTING, WHICH CONFLICT WITH TRAFFIC CONTROL "IN USE" SHALL BE REMOVED OR COVERED AS NEEDED AND AS APPROVED BY THE ENGINEER.

THE SPACING BETWEEN TRAFFIC CONTROL SIGNS SHOULD BE ADJUSTED TO NOT CONFLICT WITH AND SHOULD PROVIDE A DESIRABLE MINIMUM OF 200 FEET CLEARANCE (500 FEET DESIRABLE) TO EXISTING SIGNS THAT WILL REMAIN IN PLACE.

IF A "STOP" SIGN MUST BE REMOVED FOR A WORK OPERATION, A TEMPORARY "STOP" SIGN SHALL BE PLACED PRIOR TO THE SIGN REMOVAL, OR A FLAGGER SHALL BE PROVIDED UNTIL THE SIGN IS REESTABLISHED.

BARRICADES THAT MUST BE MOVED FOR A WORK OPERATION SHALL BE IMMEDIATELY REESTABLISHED UPON COMPLETION OF THE OPERATION OR FOR CONTINUING OPERATIONS, AT THE END OF EACH WORKING DAY.

SIGNS THAT WILL BE IN PLACE LESS THAN SEVEN CONTINUOUS DAYS AND NIGHTS MAY BE MOUNTED ON PORTABLE SUPPORTS.

ALL TYPE III BARRICADES SHALL HAVE RAILS REFLECTORIZED ON BOTH FACES. STRIPES SHALL BE PROPERLY SLOPED DOWN TOWARD THE TRAFFIC SIDE OR AS SHOWN IN THE ROAD CLOSURE BARRICADE DETAIL "D" FOR FULL ROAD CLOSURES.

TYPE "A" LOW-INTENSITY FLASHING WARNING LIGHTS SHALL BE VISIBLE ON BOTH SIDES OF THE BARRICADE.

THE R11-2, R11-3, AND R11-4 SIGNS PLACED ON BARRICADES SHALL COVER NO MORE THAN THE TOP RAIL. THE SIGNS SHALL NOT COVER ANY PORTION OF THE MIDDLE OR BOTTOM RAILS.

ALL SIGNS SHALL BE 48" X 48" UNLESS OTHERWISE NOTED BELOW:
R11-2 SHALL BE 48" X 30".
R11-4 AND R11-3 SHALL BE 60" X 30".

* OMIT THE "ROAD CLOSED 500 FT." SIGN IF THE LAST INTERSECTION IS 500 FEET OR LESS FROM THE WORK ZONE.

** 500' MAX. OR AT LAST INTERSECTION, WHICHEVER IS CLOSEST.

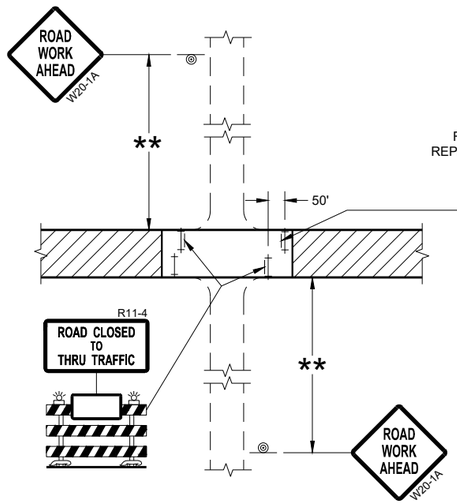

DETAIL 3
(PUBLIC CROSS-TRAFFIC MAINTAINED.
CONTRACTOR, LOCAL BUSINESS AND
RESIDENT ACCESS TO PROJECT)

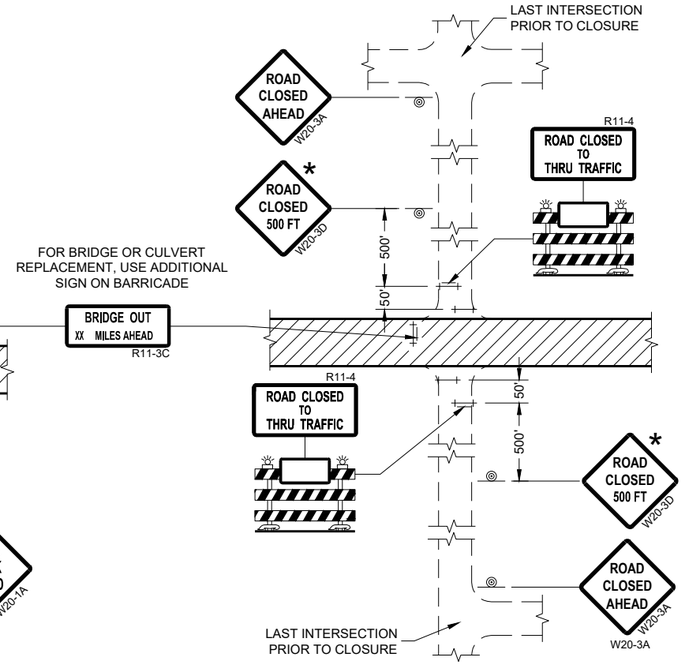

DETAIL 4
(CONTRACTOR, LOCAL BUSINESS AND
RESIDENT ACCESS TO PROJECT)

LEGEND

- SIGN ON PERMANENT SUPPORT
- TYPE III BARRICADE
- TYPE III BARRICADE WITH ATTACHED SIGN
- TYPE "A" WARNING LIGHT (FLASHING)
- WORK AREA

BARRICADES AND SIGNS FOR SIDEROAD CLOSURES

STATE OF WISCONSIN
DEPARTMENT OF TRANSPORTATION

APPROVED
July 2018
DATE

/S/ Andrew Heidtke
WORK ZONE ENGINEE

FHWA

6

SDD 15C03 - 05

GENERAL NOTES

THE EXACT NUMBER, LOCATION, AND SPACING OF ALL SIGNS AND DEVICES SHALL BE ADJUSTED TO FIT FIELD CONDITIONS.

THE SPACING BETWEEN TRAFFIC CONTROL SIGNS SHOULD BE ADJUSTED TO NOT CONFLICT WITH AND SHOULD PROVIDE A MINIMUM OF 200 FEET (500 FEET DESIRABLE) CLEARANCE TO EXISTING SIGNS THAT WILL REMAIN IN PLACE.

ALL SIGNS ARE 48" X 48" UNLESS OTHERWISE NOTED.

SIGNS THAT WILL BE IN PLACE LESS THAN SEVEN CONTINUOUS DAYS AND NIGHTS MAY BE MOUNTED ON PORTABLE SUPPORTS.

IF A "STOP" SIGN MUST BE REMOVED FOR A WORK OPERATION, A TEMPORARY "STOP" SIGN SHALL BE PLACED PRIOR TO THE SIGN REMOVAL, OR A FLAGGER SHALL BE PROVIDED UNTIL THE SIGN IS REESTABLISHED.

* OMIT G20-1 SIGNS IF LENGTH OF WORK AREA IS 2 MILES OR LESS

** PLACE AN ADDITIONAL W20-1A "ROAD WORK AHEAD" SIGN IF WORK AREA WITHIN THE PROJECT IS SEPARATED BY MORE THAN 2 MILES FROM PREVIOUS WORK AREA.

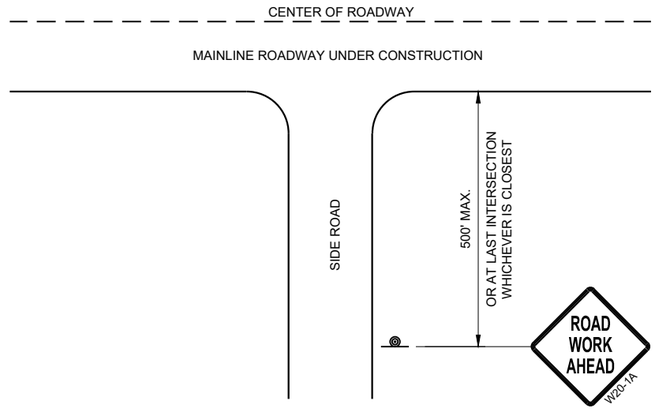

TYPICAL SIDE ROAD APPROACH WARNING SIGN DETAIL

LEGEND

SIGN ON PERMANENT SUPPORT

DIRECTION OF TRAFFIC

WORK AREA

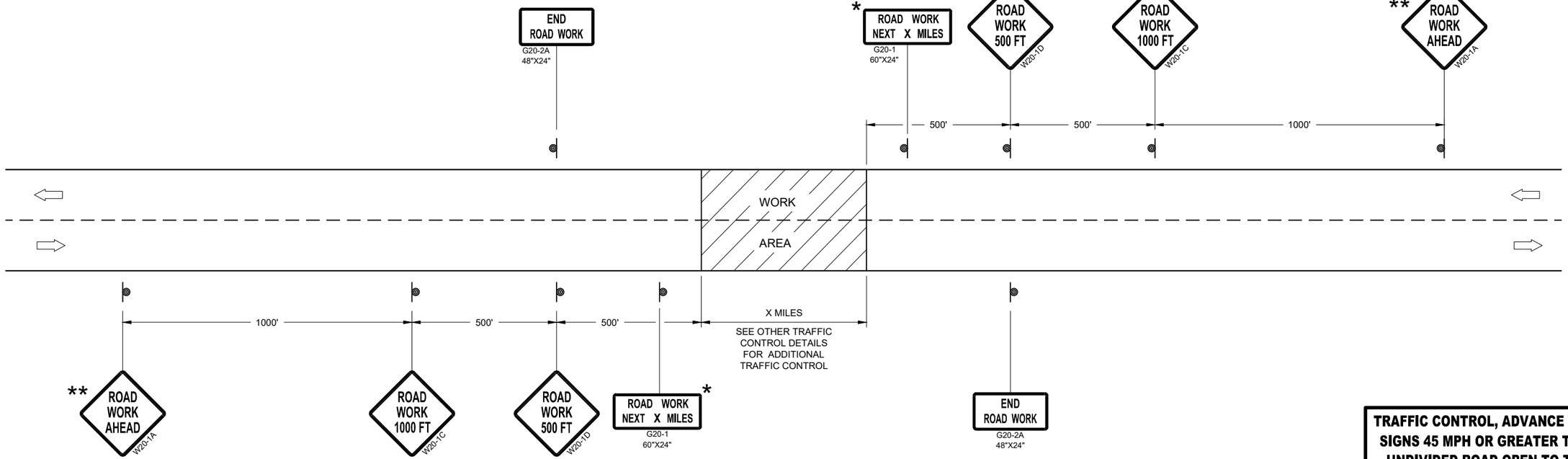

TRAFFIC CONTROL, ADVANCE WARNING SIGNS 45MPH OR GREATER

TRAFFIC CONTROL, ADVANCE WARNING SIGNS 45 MPH OR GREATER TWO-WAY UNDIVIDED ROAD OPEN TO TRAFFIC

STATE OF WISCONSIN
DEPARTMENT OF TRANSPORTATION

APPROVED
July 2018
DATE

/S/ Andrew Heidtke
WORK ZONE ENGINEE

FHWA

6

SDD 15C04 - 05

GENERAL NOTES

(1) REFLECTIVE SHEETING SHALL FOLLOW THE REQUIREMENTS IN THE APPROVED PRODUCTS LISTING FOR SIGN SHEETING.

(2) LOCATION OF WARNING LIGHTS WHEN SHOWN ON THE PLAN.

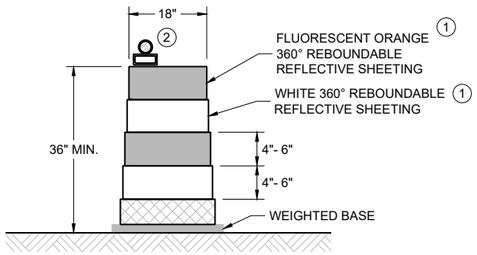

DRUM

BALLAST WIDTHS
RANGE FROM 24"-36"

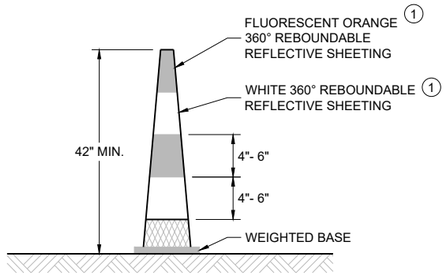

42" CONE

DO NOT USE IN TAPERS
½ SPACING OF DRUMS

BALLAST WIDTHS
RANGE FROM 14"-20"

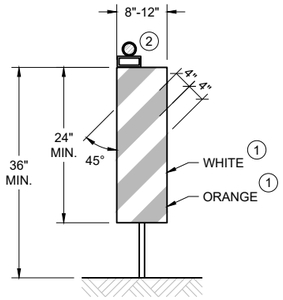

VERTICAL PANEL

THE STRIPES SHALL SLOPE DOWNWARD TO
THE TRAFFIC SIDE FOR CHANNELIZATION.

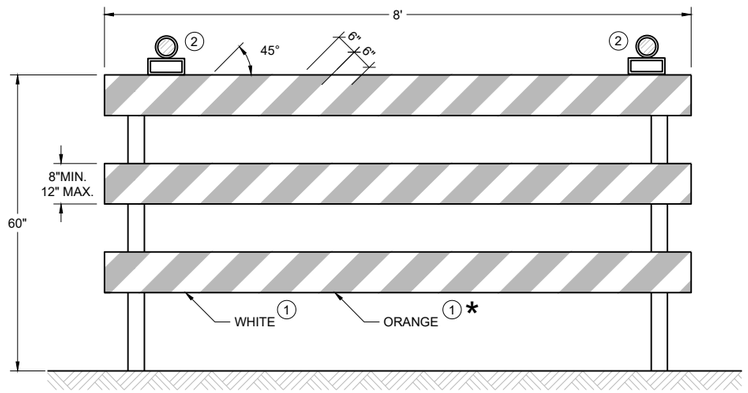

TYPE III BARRICADE

IF SIGN MOUNTED, DO NOT COVER MORE THAN 50% OF THE TOP TWO RAILS OR 33% OF THE TOTAL AREA OF THE THREE RAILS.

* IF USED FOR A PERMANENT APPLICATION USE RED SHEETING.

CHANNELIZING DEVICES
DRUMS, CONES, BARRICADES
AND VERTICAL PANELS

STATE OF WISCONSIN
DEPARTMENT OF TRANSPORTATION

APPROVED

February 2026
DATE

/S/ Andrew Heidtke
WORK ZONE ENGINEER

FHWA

6
SDD 15C11-11b

LEGEND

SIGN ON PORTABLE OR PERMANENT SUPPORT

TEMPORARY PORTABLE RUMBLE STRIP ARRAY

DIRECTION OF TRAFFIC

WORK AREA

FLAGGER, EQUIPPED WITH STOP/SLOW PADDLE FASTENED ON SUPPORT STAFF

GENERAL NOTES

DETAILS OF TRAFFIC CONTROL DEVICES AND INSTALLATION NOT SHOWN ON THIS DRAWING SHALL CONFORM TO THE PERTINENT REQUIREMENTS OF THE STANDARD SPECIFICATIONS, THE SPECIAL PROVISIONS, AND THE MANUAL ON UNIFORM TRAFFIC CONTROL DEVICES.

ALL SIGNS ARE 48" X 48" UNLESS OTHERWISE NOTED.

"WO" SIGNS ARE THE SAME AS "W" SIGNS EXCEPT THE BACKGROUND IS ORANGE.

THE EXACT NUMBER, LOCATION AND SPACING OF ALL SIGNS, DEVICES, AND LOCATION OF ALL FLAGGERS SHALL BE ADJUSTED TO FIT FIELD CONDITIONS AS APPROVED BY THE ENGINEER.

THE FIRST ADVANCE WARNING SIGN SHOULD TYPICALLY BE LOCATED IN ADVANCE OF THE ANTICIPATED TRAFFIC BACKUP OR QUEUE.

WHEN A SIDE ROAD OR RAMP INTERSECTS THE FACILITY ON WHICH THE WORK IS BEING PERFORMED, ADDITIONAL TRAFFIC CONTROLS SHALL BE PROVIDED AS SPECIFIED IN THE PLANS AND/OR THE SPECIAL PROVISIONS OR AS APPROVED BY THE ENGINEER.

FLAGGING

FLAGGERS SHALL BE IN SIGHT OF EACH OTHER OR IN DIRECT COMMUNICATION AT ALL TIMES. THEY SHALL BE EQUIPPED WITH STOP/SLOW PADDLES FASTENED ON SUPPORT STAFFS. WHEN THE FLAGGING OPERATION IS NOT IN EFFECT REMOVE TEMPORARY PORTABLE RUMBLE STRIPS PRIOR TO COVERING OR REMOVING ALL ADVANCE SIGNING.

(1) FOR MOVING WORK OPERATIONS, POST ADDITIONAL W20-7A FLAGGER SIGNS AT APPROXIMATELY 3,500' INTERVALS IN THE MOVING WORK OPERATION OR AS APPROVED BY THE ENGINEER.

(2) SIGN NOT REQUIRED IF FLAGGING OPERATION OCCURS WITHIN A SIGNED ROAD WORK ZONE AREA.

WHEN THE DISTANCE BETWEEN FLAGGERS EXCEEDS 2 MILES, A PILOT CAR IS REQUIRED. WHEN CURVES REDUCE SIGHT DISTANCE BELOW 400', A PILOT CAR IS REQUIRED.

TEMPORARY PORTABLE RUMBLE STRIPS

UTILIZE TEMPORARY PORTABLE RUMBLE STRIPS ON ALL FLAGGING OPERATIONS.

(3) EACH TEMPORARY PORTABLE RUMBLE STRIP ARRAY CONSISTS OF THREE RUMBLE STRIPS PLACED TRANSVERSE ACROSS THE LANE AT THE LOCATIONS SHOWN. WITHIN EACH ARRAY, SPACING BETWEEN RUMBLE STRIPS SHALL BE 15 FEET ON CENTER

ONLY USE TEMPORARY PORTABLE RUMBLE STRIPS FROM THE APPROVED PRODUCTS LIST.

INSTALL TEMPORARY RUMBLE STRIPS PER MANUFACTURER'S RECOMMENDATIONS.

PLACE ADVANCE SIGNING PRIOR TO INSTALLING TEMPORARY RUMBLE STRIPS.

DO NOT INSTALL TEMPORARY PORTABLE RUMBLE STRIPS ON GRAVEL, MILLED SURFACES, OR ASPHALT THAT HAS BEEN PAVED LESS THAN 12 HOURS.

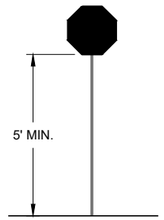

STOP/SLOW PADDLE ON SUPPORT STAFF

SIGN AND TEMPORARY RUMBLE STRIP ARRAY SPACING TABLE

SPEED LIMIT	SPACING "A"
25-30 MPH	200'
35-40 MPH	350'
45-55 MPH	500'

WO3-4

USE OF WO3-4 SIGN IS OPTIONAL. WHEN USED, THIS SIGN SHALL BE LOCATED BETWEEN THE W20-7A AND W20-4A SIGNS, USING SPACING "A".

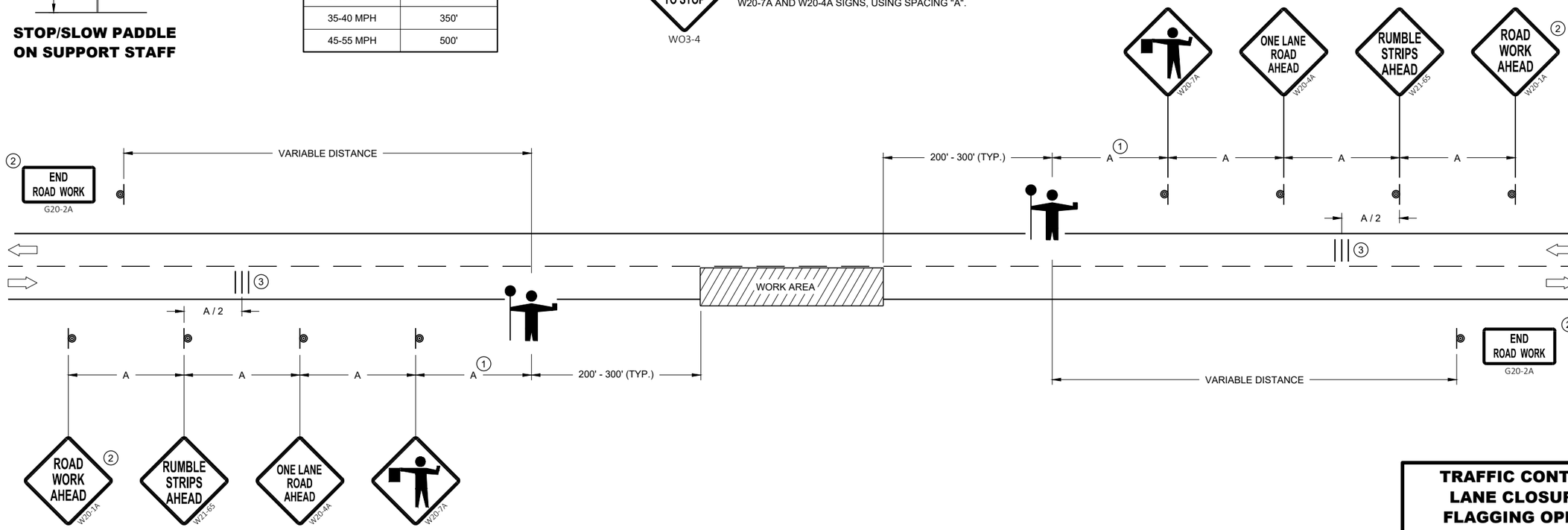

TRAFFIC CONTROL FOR LANE CLOSURE WITH FLAGGING OPERATION

STATE OF WISCONSIN
DEPARTMENT OF TRANSPORTATION

APPROVED
May 2022
DATE

/S/ Andrew Heidtke
WORK ZONE ENGINEER

FHWA

SDD 15C12 - 09a

6

SDD 15C12 - 09a

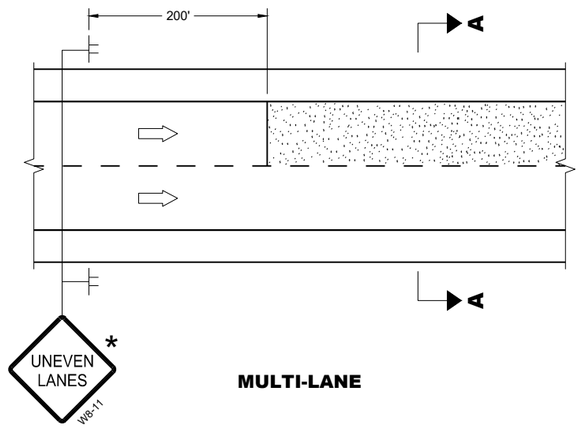

MULTI-LANE

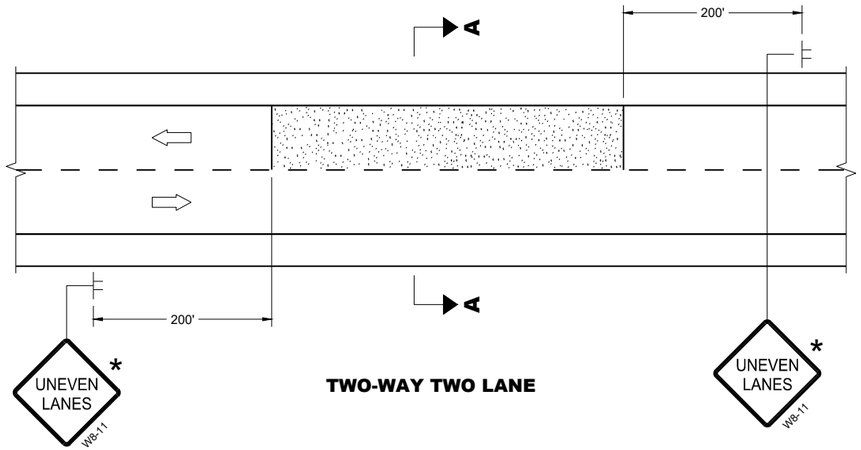

TWO-WAY TWO LANE

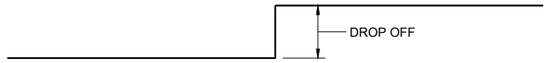

SECTION A - A

OR

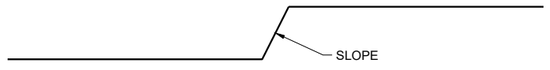

SECTION A - A

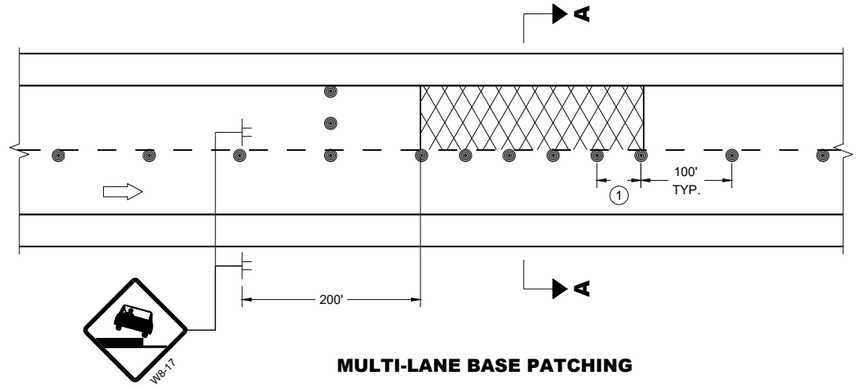

MULTI-LANE BASE PATCHING

ADJACENT LANE DROP-OFFS

GENERAL NOTES

FOR SPOT LOCATIONS USE ENGINEERING JUDGEMENT WHEN PLACING ADDITIONAL SIGNS.

ALL SIGNS ARE 48" X 48" UNLESS OTHERWISE NOTED.

"WO" SIGNS ARE THE SAME AS "W" SIGNS EXCEPT THE BACKGROUND IS ORANGE.

WARNING LIGHTS ARE NOT REQUIRED IF THE LANE CLOSURE IS A DAYTIME ONLY OPERATION.

* IF THE DROP-OFF IS CONTINUOUS ALONG THE PROJECT, PLACE ADDITIONAL SIGNS EVERY 1 MILE AND AFTER EVERY ENTRANCE RAMP.

(1) USE CLOSER SPACING WHEN DELINEATING DROP-OFF.

LEGEND

- SIGN ON TEMPORARY SUPPORT
- TRAFFIC CONTROL DRUM
- TYPE III BARRICADE WITH ATTACHED SIGN
- TYPE "A" WARNING LIGHT (FLASHING)
- DIRECTION OF TRAFFIC
- WORK AREA WITH DROP-OFF
- MILLED SURFACE

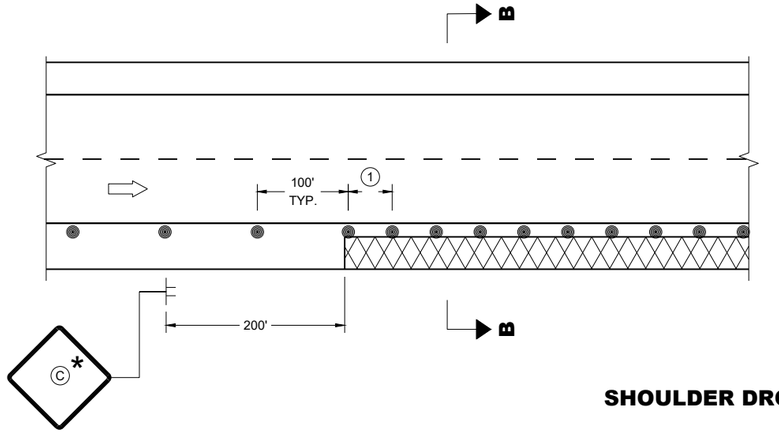

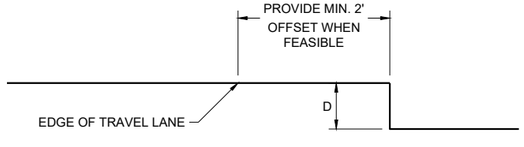

SECTION B - B

SHOULDER DROP-OFFS

D	SIGN (C)
< 2" WITH A SLOPE STEEPER THAN 3:1	LOW SHOULDER WO8-9
2" < 6" WITH A SLOPE STEEPER THAN 3:1	SHOULDER DROP - OFF W8-9A
	PROVIDE A 3:1 OR FLATTER SLOPE OF MATERIAL ADJACENT TO THE PAVEMENT

TRAFFIC CONTROL, DROP-OFF SIGNING

STATE OF WISCONSIN
DEPARTMENT OF TRANSPORTATION

APPROVED
February 2025 — DATE
/S/ Andrew Heidtke — WORK ZONE ENGINEER

FHWA

6
SDD 15D39-03

GENERAL NOTES

DRAWING NOT TO SCALE. ALL SIGNS AND POSTS ON THIS SHEET SHALL BE PAID FOR WITH 'TRAFFIC CONTROL SIGNS' BID ITEM. ALL SIDE ROADS WHICH ARE UNDER CONSTRUCTION OF CURB AND GUTTER AND/OR GRADING SHALL BE ADEQUATELY SIGNED.

ALL SIGNS AND DEVICES SHALL BE IN CONFORMANCE WITH THE WISCONSIN MANUAL OF UNIFORM TRAFFIC CONTROL DEVICES (WMUTCD). SIGN LAYOUTS SHALL BE IN ACCORDANCE WITH THE WISDOT STANDARD SIGN PLATES.

"WO" SIGNS ARE THE SAME AS "W" SIGNS EXCEPT THAT THE BACKGROUND IS ORANGE.

ALL SIGNS ARE 48" X 48" UNLESS OTHERWISE NOTED.

THE EXACT NUMBER, LOCATION AND SPACING OF ALL SIGNS AND DEVICES SHALL BE ADJUSTED TO FIT FIELD CONDITIONS AS DIRECTED BY THE ENGINEER.

ALL SIGNS INAPPROPRIATE TO THE STATUS OF THE CONTROL ZONE, INCLUDING PRE-EXISTING SIGNS IN THE VICINITY, SHALL BE COVERED OR REMOVED AS DIRECTED BY THE ENGINEER.

SEE 15C34 FOR ADDITIONAL TRAFFIC CONTROL SIGNING WHEN CENTERLINE PAVEMENT MAKINGS ARE MISSING. 'DO NOT PASS' SIGNS MUST BE INSTALLED ON THE SAME DAY AS MILLING OPERATIONS.

(1) PLACE SIGNS 350' IN ADVANCE OF MILLED SURFACES AND AT 1 MILE INTERVALS, OR AS DIRECTED BY THE ENGINEER.

(2) PLACE SIGN 200' MIN. FROM INTERSECTION AND 200' MIN. AFTER ADVANCE WARNING SIGN SHOWN IN SDD 15C04.

LEGEND

SIGN ON TEMPORARY SUPPORT

DIRECTION OF TRAFFIC

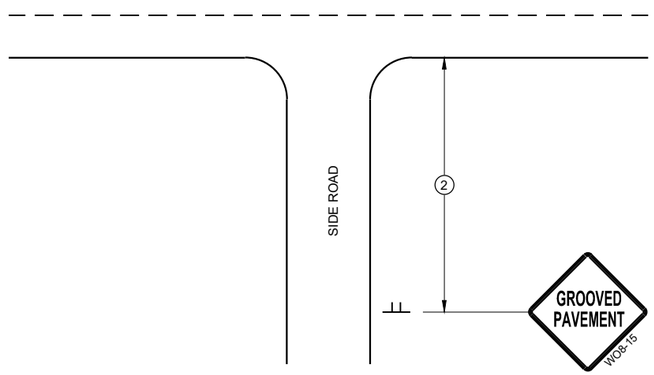

TYPICAL SIDE ROAD APPROACH SIGN DETAIL

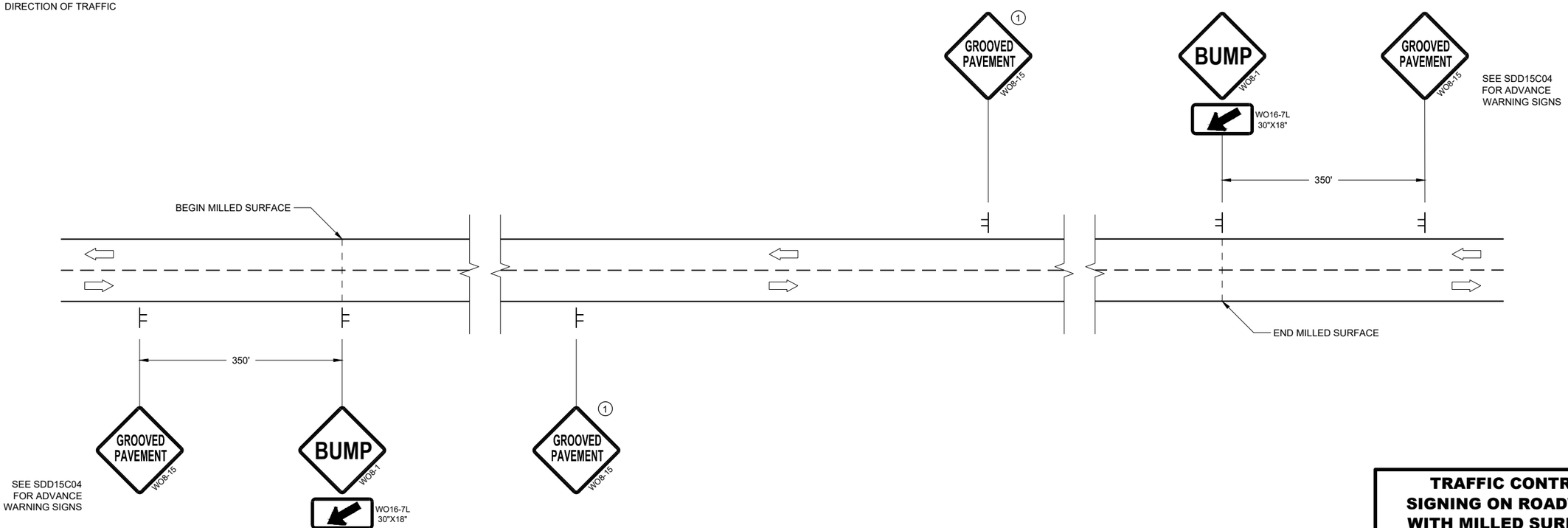

DETAIL FOR SIGNING ON MILLED SURFACES

TRAFFIC CONTROL, SIGNING ON ROADWAYS WITH MILLED SURFACES

STATE OF WISCONSIN
DEPARTMENT OF TRANSPORTATION

APPROVED
February 2020
DATE

/S/ Andrew Heidtke
WORK ZONE ENGINEE

FHWA

6
SDD 15D44 - 02

GENERAL NOTES

DRAWING NOT TO SCALE. ALL SIGNS AND POSTS ON THIS SHEET SHALL BE PAID FOR WITH 'TRAFFIC CONTROL SIGNS' BID ITEM. ALL SIDE ROADS WHICH ARE UNDER CONSTRUCTION OF CURB AND GUTTER AND/OR GRADING SHALL BE ADEQUATELY SIGNED.

ALL SIGNS AND DEVICES SHALL BE IN CONFORMANCE WITH THE WISCONSIN MANUAL OF UNIFORM TRAFFIC CONTROL DEVICES (WMUTCD). SIGN LAYOUTS SHALL BE IN ACCORDANCE WITH THE WISDOT STANDARD SIGN PLATES.

"WO" SIGNS ARE THE SAME AS "W" SIGNS EXCEPT THAT THE BACKGROUND IS ORANGE.

ALL SIGNS ARE 48" X 48" UNLESS OTHERWISE NOTED.

THE EXACT NUMBER, LOCATION AND SPACING OF ALL SIGNS AND DEVICES SHALL BE ADJUSTED TO FIT FIELD CONDITIONS AS DIRECTED BY THE ENGINEER.

ALL SIGNS INAPPROPRIATE TO THE STATUS OF THE CONTROL ZONE, INCLUDING PRE-EXISTING SIGNS IN THE VICINITY, SHALL BE COVERED OR REMOVED AS DIRECTED BY THE ENGINEER.

SEE 15C34 FOR ADDITIONAL TRAFFIC CONTROL SIGNING WHEN CENTERLINE PAVEMENT MAKINGS ARE MISSING. 'DO NOT PASS' SIGNS MUST BE INSTALLED ON THE SAME DAY AS MILLING OPERATIONS.

(1) PLACE SIGNS 350' IN ADVANCE OF CHIP SEALED OR LOOSE GRAVEL SURFACES AND AT 1 MILE INTERVALS, OR AS DIRECTED BY THE ENGINEER.

(2) PLACE SIGN 200' MIN. FROM INTERSECTION AND 200' MIN. AFTER ADVANCE WARNING SIGN SHOWN IN SDD 15C04.

(3) ADD WO8-1 OR WO8-2 SIGN WHEN THE CONDITION IS PRESENT.

LEGEND

SIGN ON TEMPORARY SUPPORT

DIRECTION OF TRAFFIC

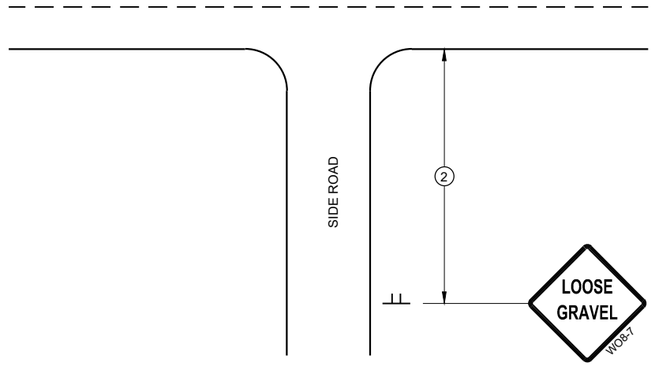

TYPICAL SIDE ROAD APPROACH SIGN DETAIL

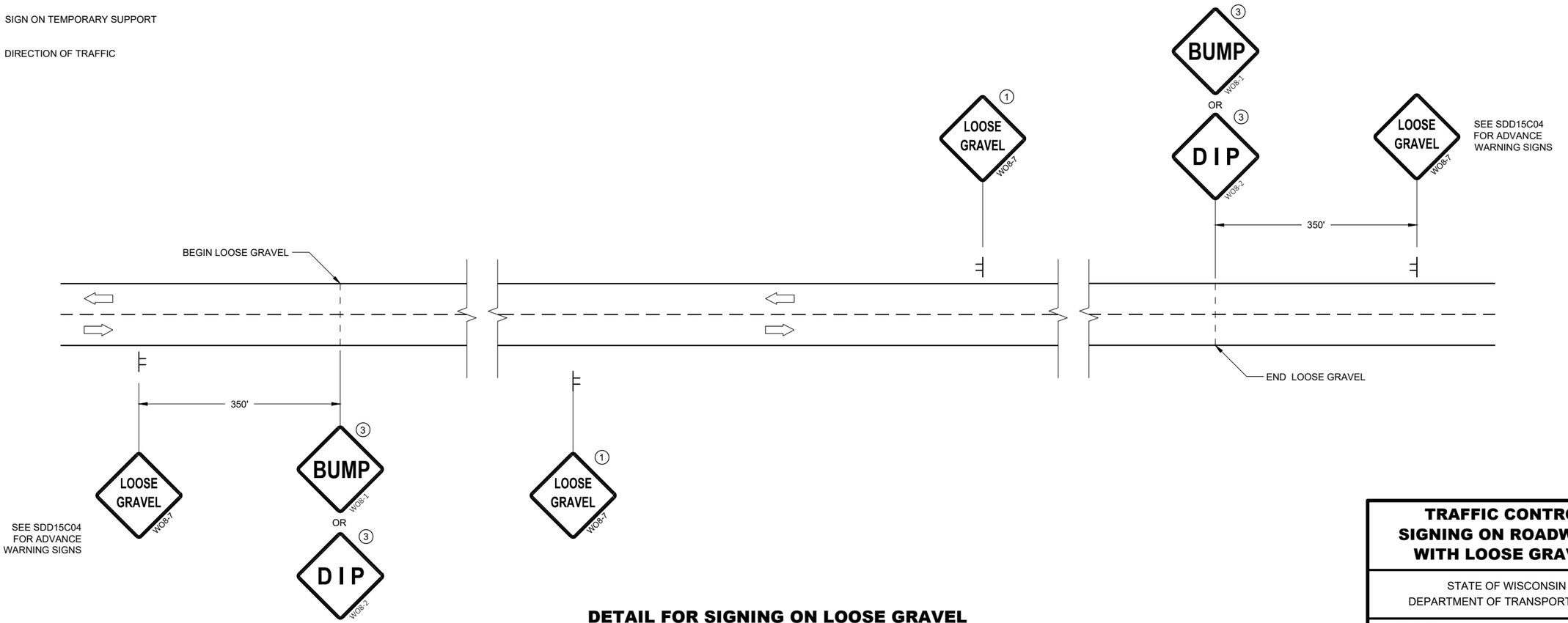

DETAIL FOR SIGNING ON LOOSE GRAVEL OR CHIP SEALED SURFACES

TRAFFIC CONTROL SIGNING ON ROADWAYS WITH LOOSE GRAVEL

STATE OF WISCONSIN
DEPARTMENT OF TRANSPORTATION

APPROVED
February 2021
DATE
/S/ Andrew Heidtke
WORK ZONE ENGINEE

FHWA

6

SDD 15D45 - 03

6

SDD 15D45 - 03

URBAN AREA

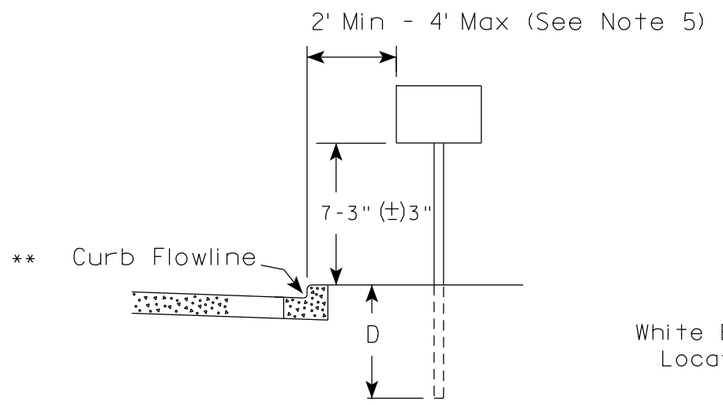

RURAL AREA (See Note 2)

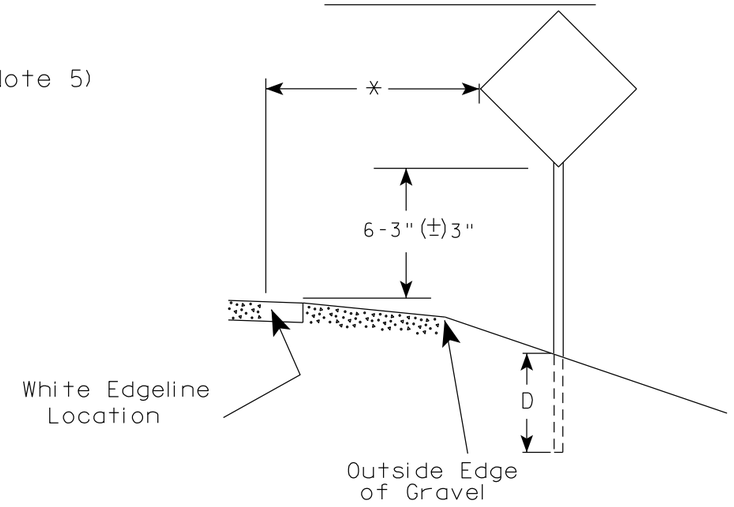

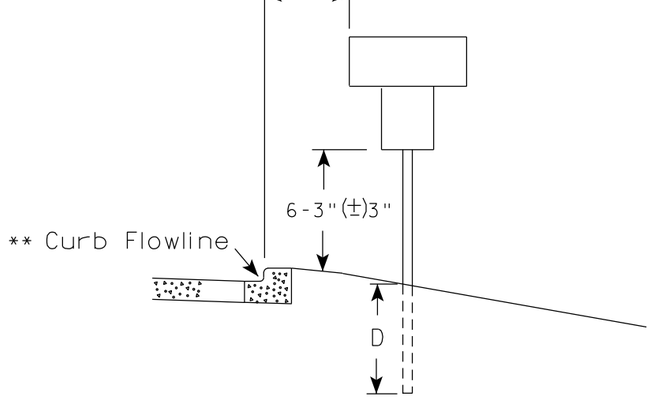

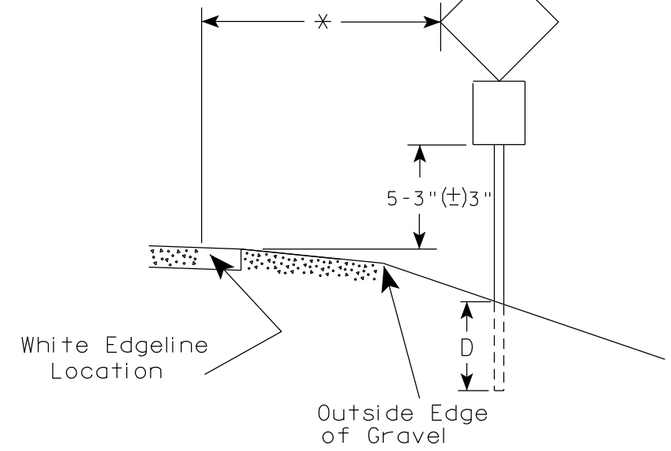

** The existence of curb and gutter does not in itself mandate the vertical clearance illustrated. That height is typically measured where there is sidewalk adjacent to the roadway or parking is permitted. In the absence of sidewalk vertical clearance is measured from the top of the curb. Offset of signs is measured from the flow line.

* 6 feet from edge of a paved shoulder or 12 feet from the edge of pavement (edge line location) or 2 feet from outside edge of gravel, whichever is greater unless directed by project engineer.

GENERAL NOTES

1. Signs wider than 4 feet or 20 sq.ft or larger, shall be mounted on multiple posts. Refer to plate A4-4.
2. If signs are mounted on or behind barrier wall, see A4-10 sign plate.
   The Double Arrow sign (W12-1D) shall be mounted at a height of 2'-3" (±) 3". The Chevron sign (W1-8), Roundabout Chevron panel (R6-4B), Enhanced Reference Markers, Clearance Markers (W5-52), Mile Markers (D10 series), In Road Object Markers (W5-54) & End of Road Markers (W5-56) shall be mounted at a height of 4'-3" (±) 3".
3. For expressways and freeways, mounting height is 7'- 3" (±) 3" or 6'-3" (±) 3" depending upon existence of a sub-sign.
4. Minimum mounting height for signs mounted on traffic signal poles is 5'- 3" (±) 3".
5. Offset distance shall be consistent with existing signs or consistent throughout length of project.
6. Folding signs shall be mounted at a height of 5'-3" (±) 3" or as directd by the Engineer.

POST EMBEDMENT DEPTH

Area of Sign Installation (Sq. Ft.)	D (Min)
20 or Less	4'
Greater than 20	5'

TYPICAL INSTALLATION OF PERMANENT TYPE II SIGNS ON SINGLE POSTS

WISCONSIN DEPT OF TRANSPORTATION

APPROVED Matthew R Rauch
for State Traffic Engineer

DATE 12/6/23 PLATE NO. A4-3.23

PROJECT NO:	HWY:	COUNTY:		SHEET NO: 90	E

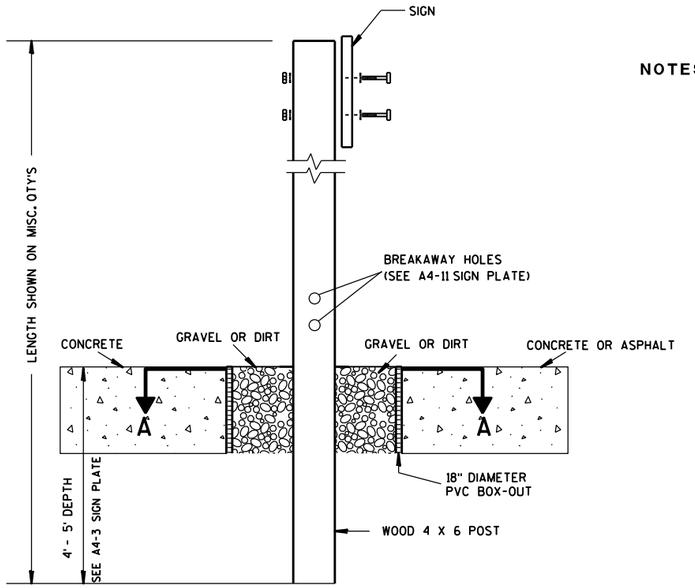

ELEVATION VIEW

DETAIL OF WOOD 4 X 6 SIGN POST IN BOX-OUT

NOTES:
1. ALL MATERIAL TO BE APPROVED BY ENGINEER PRIOR TO INSTALLATION
2. SEE SIGN PLATE A4-8 FOR SIGN HARDWARE REQUIREMENTS
3. 18 INCH X 18 INCH SQUARE BOX-OUTS MAY BE USED FOR INSTALLATIONS IN EXISTING CONCRETE OR ASPHALT LOCATIONS.

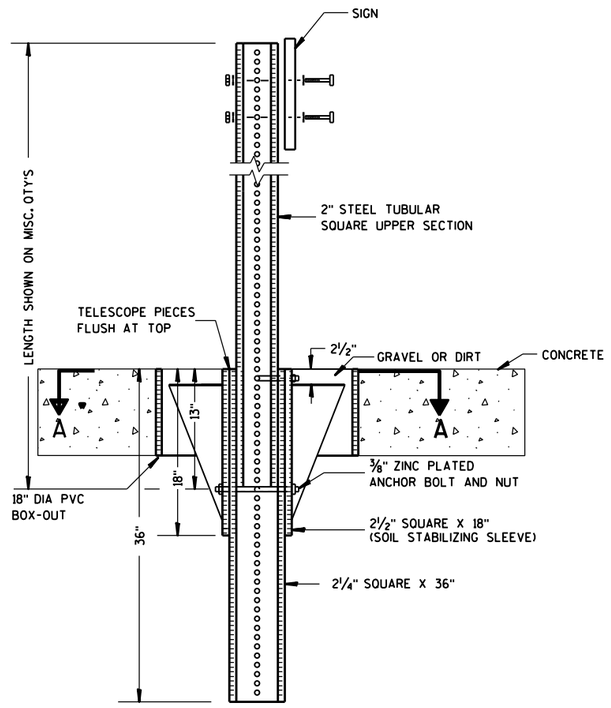

ELEVATION VIEW

DETAIL OF STEEL 2 X 2 SIGN POST IN BOX-OUT

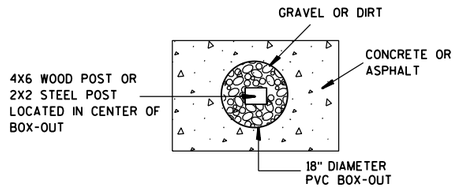

PLAN VIEW

FOR NEW CONCRETE/ASPHALT INSTALLATIONS

SIGN POST BOX-OUTS A4-3B

WISCONSIN DEPT OF TRANSPORTATION

APPROVED Matthew R Rauch
for State Traffic Engineer

DATE 1/27/14 PLATE NO. A4-3B.1

PROJECT NO:	HWY:	COUNTY:		SHEET NO:	E

FILE NAME : C:\CAEFiles\Projects\tr_stdplate\A43B.DGN PLOT DATE : 27-JAN-2014 09:48 PLOT BY : mscsja PLOT NAME : PLOT SCALE : 13.659812:1.000000 WISDOT/CADDS SHEET 42

URBAN AREA

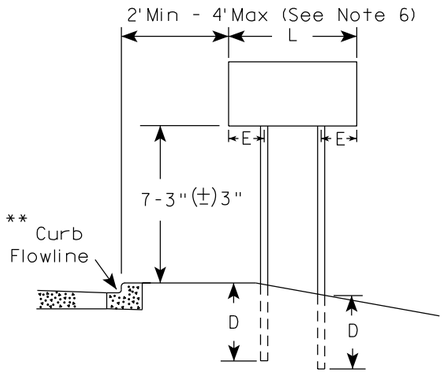

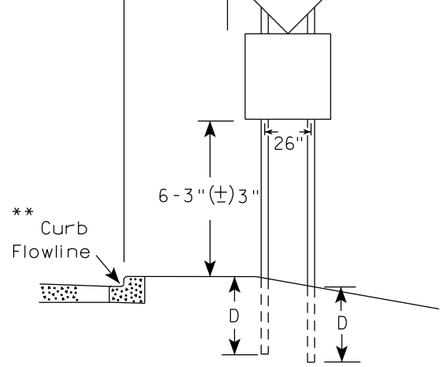

48" DIAMOND WARNING SIGN

RURAL AREA (See Note 3)

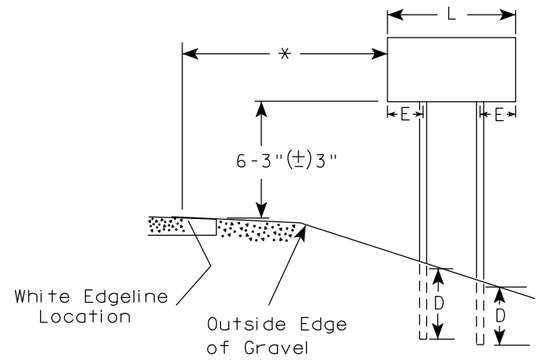

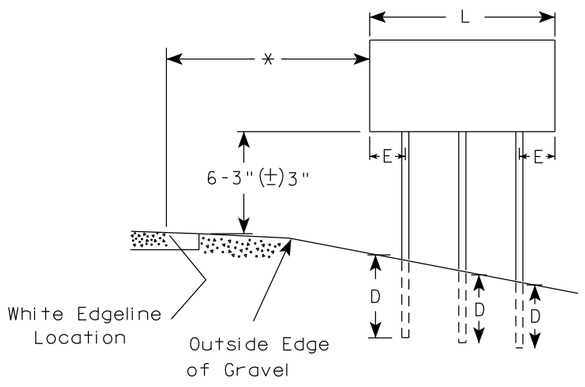

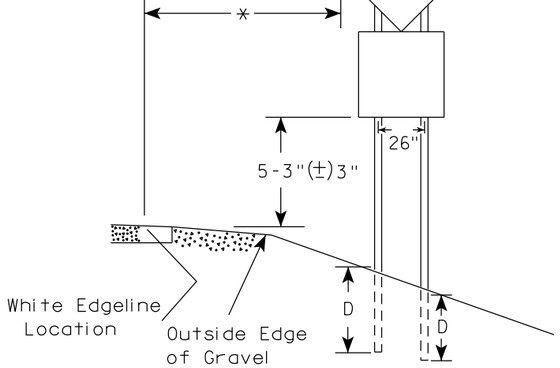

48" DIAMOND WARNING SIGN

SIGN SHAPE OTHER THAN DIAMOND (TWO POSTS REQUIRED)		
	L	E
***	Greater than 48" Less than 60"	12"
	60" to 108"	L/5

SIGN SHAPE OTHER THAN DIAMOND (THREE POSTS REQUIRED)	
L	E
Greater than 108" to 144"	12"

GENERAL NOTES

1. For 3 or 4 post installations, individual post spacing shall be greater than 3'-6".
2. See tables below for required number of posts.
3. For expressways and freeways, mounting height is 7'-3" (±) 3" or 6'-3" (±) 3" depending upon existence of sub-sign.
4. The (±) tolerance for mounting height is 3 inches.
5. J-Assemblies are considered to be one sign for mounting height.
6. Offset distance shall be consistent with existing signs or consistent throughout length of project.
7. Folding signs shall be mounted at a height of 5'-3" (±) 3" or as directed by the engineer.
8. The Double Arrow sign (W12-1) shall be mounted at a height of 2'-3" (±) 3". The Chevron sign (W1-8), Roundabout Chevron panel (R6-4B), Clearance Markers (W5-52), Mile Markers (D10 series), In Road Object Markers (W5-54) & End of Road Markers (W5-56) shall be mounted at a height of 4"-3" (±) 3".

* 6 feet from edge of a paved shoulder or 12 feet from the edge of pavement (edge line location) or 2 feet from outside edge of gravel, whichever is greater unless directed by project engineer.

** The existence of curb and gutter does not in itself mandate the vertical clearance illustrated. That height is typically measured where there is sidewalk adjacent to the roadway or parking is permitted. In the absence of sidewalk vertical clearance is measured from the top of the curb. Offset of signs is measured from the flow line.

*** See A4-3 sign plate for signs 4' or less in width and less than 20 S.F. in area.

POST EMBEDMENT DEPTH

Area of Sign Installation (Sq. Ft.)	D (Min)
20 or Less	4'
Greater than 20	5'

TYPICAL INSTALLATION OF TYPE II SIGNS ON MULTIPLE POSTS

WISCONSIN DEPT OF TRANSPORTATION

APPROVED Matthew R Rauch
for State Traffic Engineer

DATE 12/6/23 PLATE NO. A4-4.16

PROJECT NO:	HWY:	COUNTY:		SHEET NO: 92	E

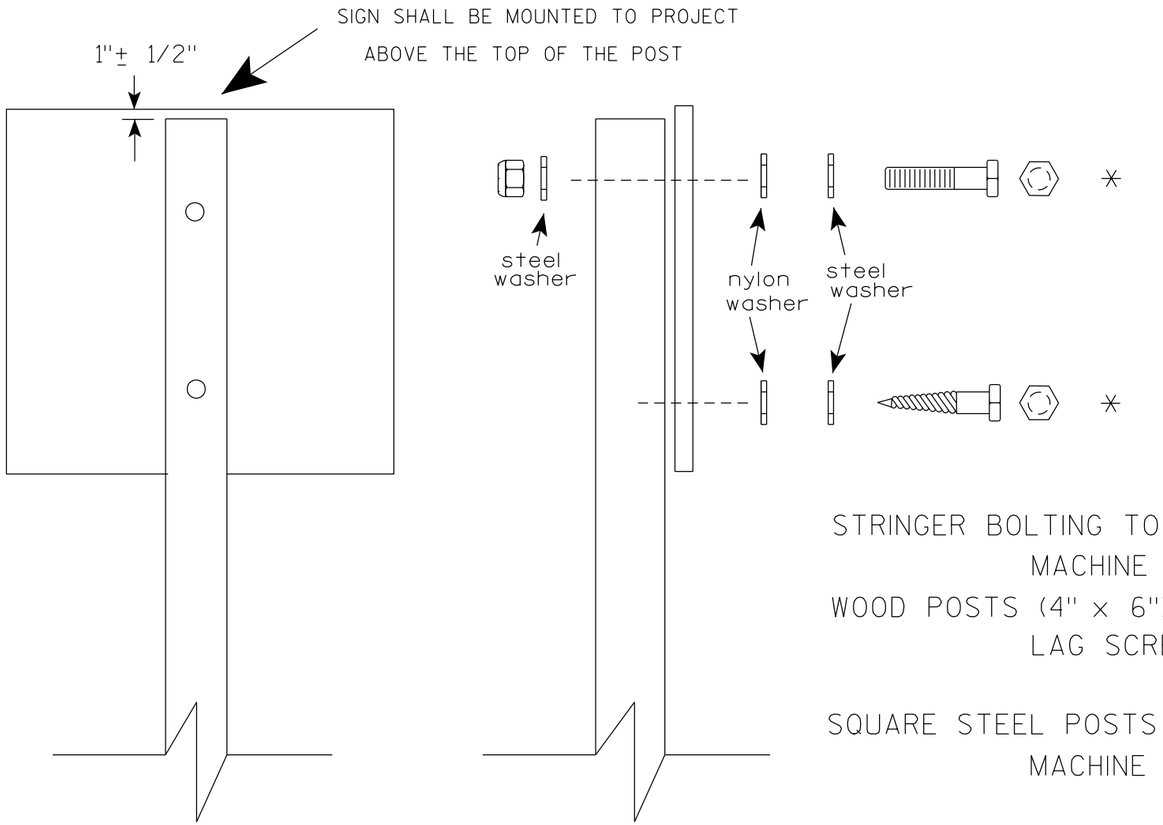

Nuts, bolts and lags used for mounting signs shall have hexagonal heads and shall be either :

a. Hot dip galvanized in accordance with ASTM Designation: A 153, Class D, or SC 3

b. Electro-galvanized in accordance with ASTM Designation : B 633, TYPE III, SC 3.

Threads on bolts and nuts shall be manufactured with sufficient allowance for the cadmium plate or galvanized coating to permit the nuts to run freely on the bolts.

STRINGER BOLTING TO ALUMINUM SIGNS (SEE SIGN PLATE A4-18)

MACHINE BOLTS - 5/16" X 1-3/4" Length w/ lock nuts

WOOD POSTS (4" x 6")

LAG SCREWS - 3/8" X 3" (NO STRINGERS ON BACK OF SIGN)
3/8" X 4" (STRINGERS ON BACK OF SIGN)

SQUARE STEEL POSTS (2" x 2")

MACHINE BOLTS - 3/8" X 3-1/4" Length w/ nuts (NO STRINGER ON BACK OF SIGN)
3/8" X 5" Length w/ nuts (STRINGERS ON BACK OF SIGN)

RIVETS - 9/32" (6605-9-6) BULB-TITE, TRI-FOLD, ALUMINUM BODY/MANDREL
O.D. FLANGE .720-.765 INCH, GRIP RANGE .042-.375 INCH

WASHERS (ALL POSTS) -

1-1/4" O.D. X 3/8" I.D. X 1/16" STEEL
1-1/4" O.D. X 3/8" I.D. X .080 NYLON

* Two different fastening systems are shown for illustration purposes. On any individual sign, either one or the other system shall be used. Actual number of fasteners per sign varies with the sign area, but normally there are two. For a single post installation, all signs greater than 9 sq. ft. require the use of 3 fasteners.

ATTACHMENT OF SIGNS TO POSTS

WISCONSIN DEPT OF TRANSPORTATION

APPROVED Matthew R Rauch
for State Traffic Engineer

DATE 4/1/2020 PLATE NO. A4-8.9

TELESCOPIC TUBING ANCHORS
TWO PIECE SYSTEM

2 ¼ " SQUARE
12 GAUGE
PERFORATED
GALVANIZED FINISH

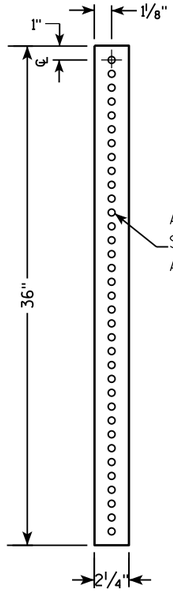

2 ½ " SQUARE
12 GAUGE
OMNI-DIRECTIONAL
PERFORATED
SOIL STABILIZING SLEEVE
GALVANIZED FINISH

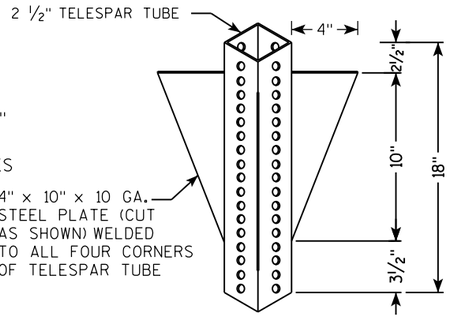

DETAIL OF TUBULAR STEEL SIGN POST
(IN POURED CONCRETE OR ASPHALT)

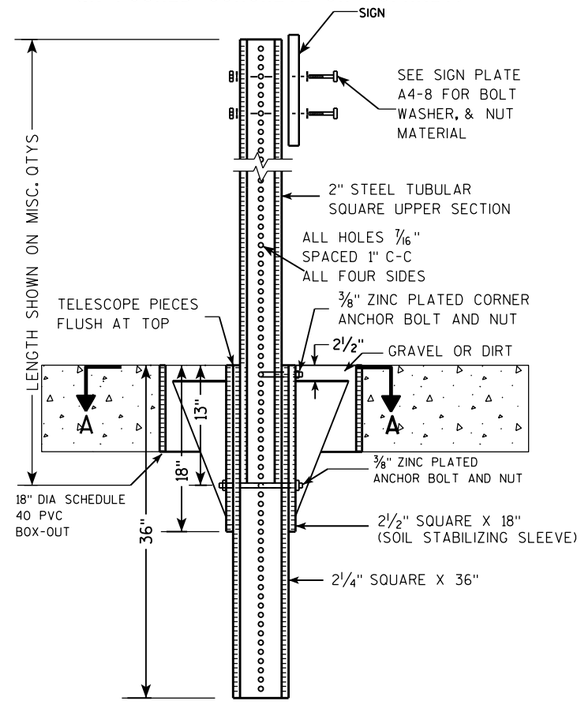

DETAIL OF TUBULAR STEEL SIGN POST
(IN LOCATIONS OTHER THAN POURED CONCRETE OR ASPHALT)

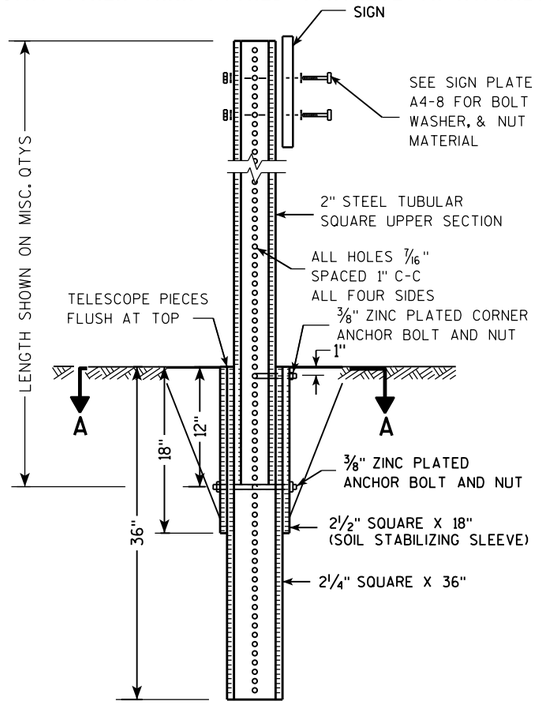

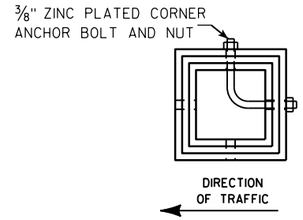

SECTION A-A

Area of Sign Installation (Sq. Ft.)	Number of Required Posts
9 or less	1
Greater than 9 less than or equal to 18	2
Greater than 18 less than or equal to 27	3

Signs wider than 3 feet or larger than 9 sq. ft shall be mounted on multiple posts (see above table).

TUBULAR STEEL
SIGN POST
A4-9

WISCONSIN DEPT OF TRANSPORTATION

APPROVED Matthew R Rauch
for State Traffic Engineer

DATE 2/05/15 PLATE 94 A4-9.9

PROJECT NO:	HWY:	COUNTY:		SHEET NO:	E

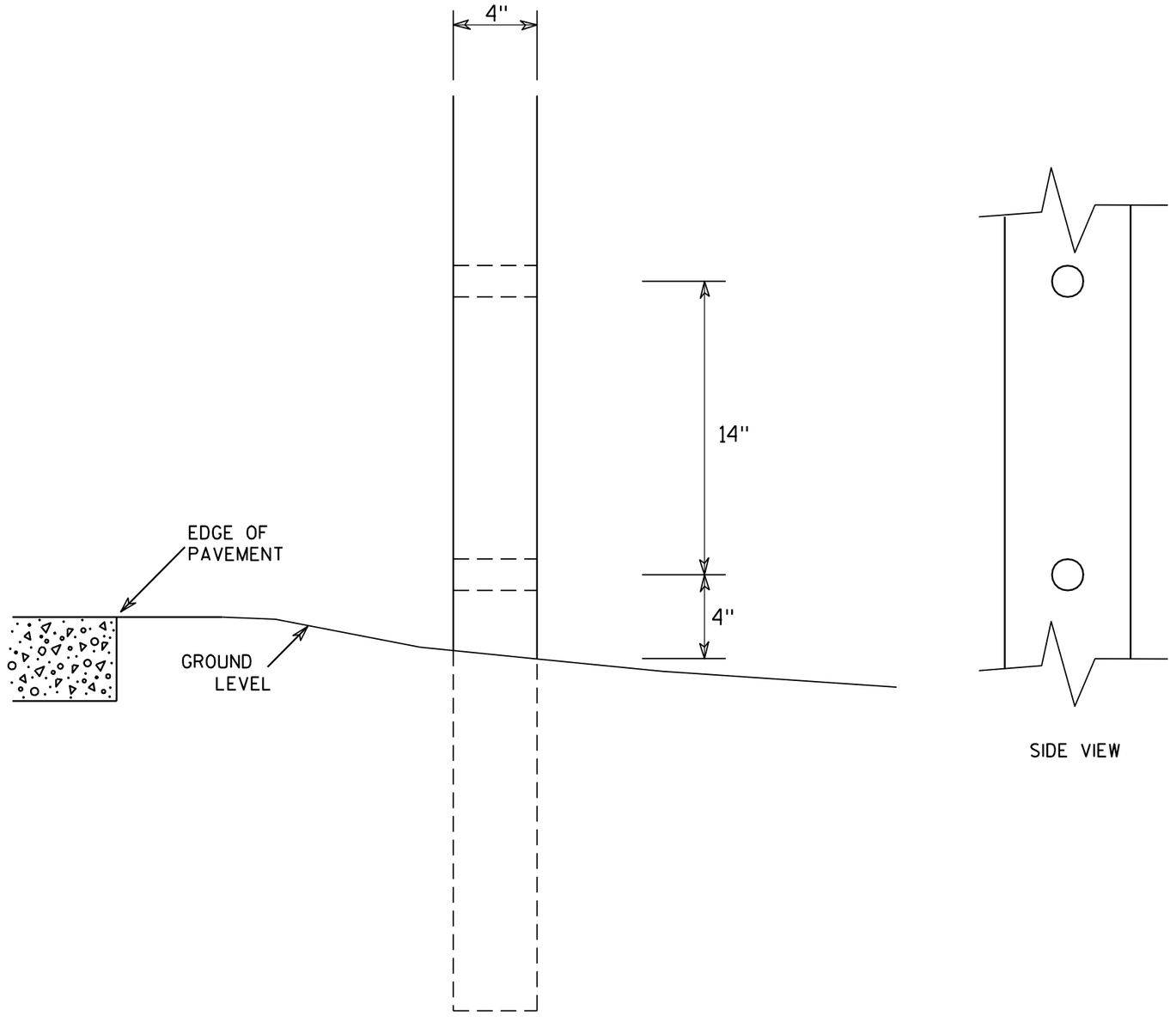

SIDE VIEW

GENERAL NOTES

1. All 4 x 6 Wood Posts shall be modified by having two 1½" diameter holes drilled perpendicular to the roadway centerline.

7

7

4 X 6 WOOD POST MODIFICATIONS

WISCONSIN DEPT OF TRANSPORTATION

APPROVED Chester J Spang
for State Traffic Engineer

DATE 3/27/97 PLATE NO. A4-11.2

PROJECT NO:	HWY:	COUNTY:		SHEET NO: 95	E

BANDING

SINGLE SIGN

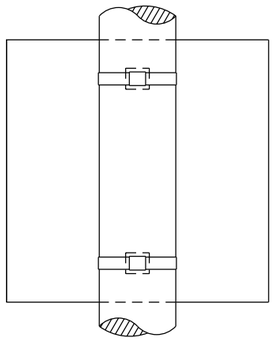

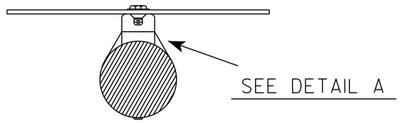

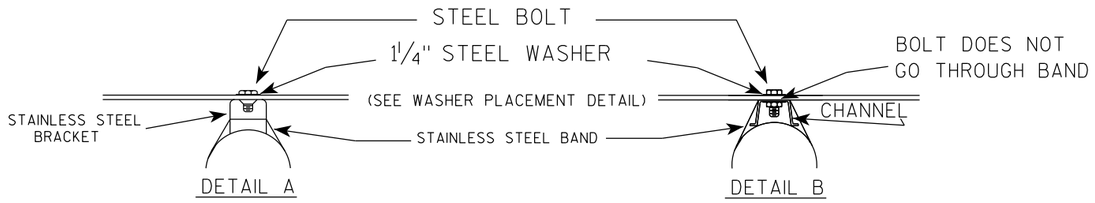

GENERAL NOTES

1. Any sign over 3 feet in width shall use the V-Block banding method. See A5-10 standard plate.
2. Signs 3 feet or greater in height shall have three bracket bands installed. Signs less than 3 feet in height shall have two bracket bands installed.
3. Banding and assembly bracket shall be stainless steel. All bands shall be ¾" in width and 0.025" thickness.
4. ALL SIGN MOUNTING BOLTS AND WASHERS SHALL BE EITHER:
   a. Hot dip or mechanically galvanized in accordance with ASTM Designation: A 153, Class D
   b. Electro-galvanized in accordance with ASTM designation: B 633, Type III, SC 3

"J" ASSEMBLY

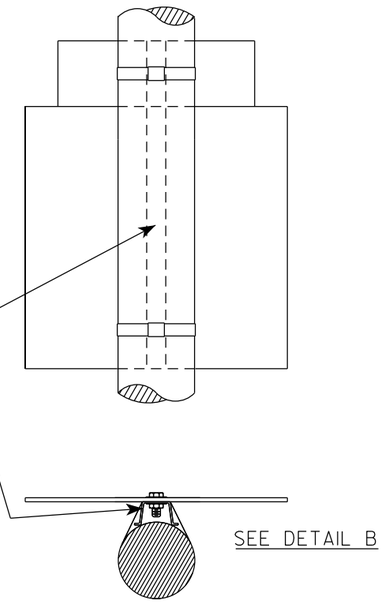

WASHER PLACEMENT

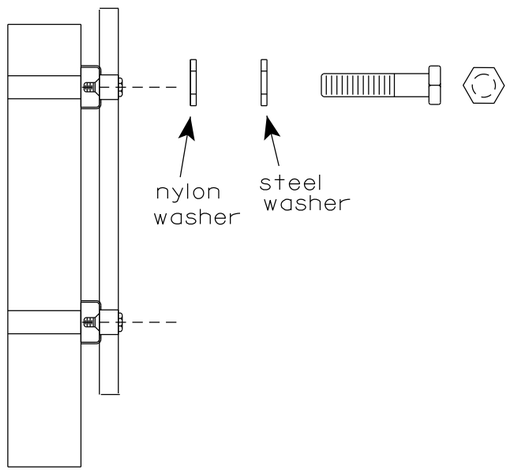

WASHERS (ALL POSTS) -
1-1/4" O.D. X ⅜" I.D. X 1/16" STEEL
1-1/4" O.D. X ⅜" I.D. X .080 NYLON
FOR ALL TYPE H SIGNS

STANDARD SIGN
SIGN BANDING DETAILS

WISCONSIN DEPT OF TRANSPORTATION

APPROVED Matthew R Rauch
for State Traffic Engineer

DATE 6/10/19 PLATE NO. A5-9.4

PROJECT NO:	HWY:	COUNTY:		SHEET NO: 96	E

FILE NAME : C:\CAEfiles\Projects\tr_stdplate\A59.dgn PLOT DATE : 10-JUN 2019 4:10 PLOT BY : mscj9h PLOT NAME : PLOT SCALE : $$.....plotscale.....$$

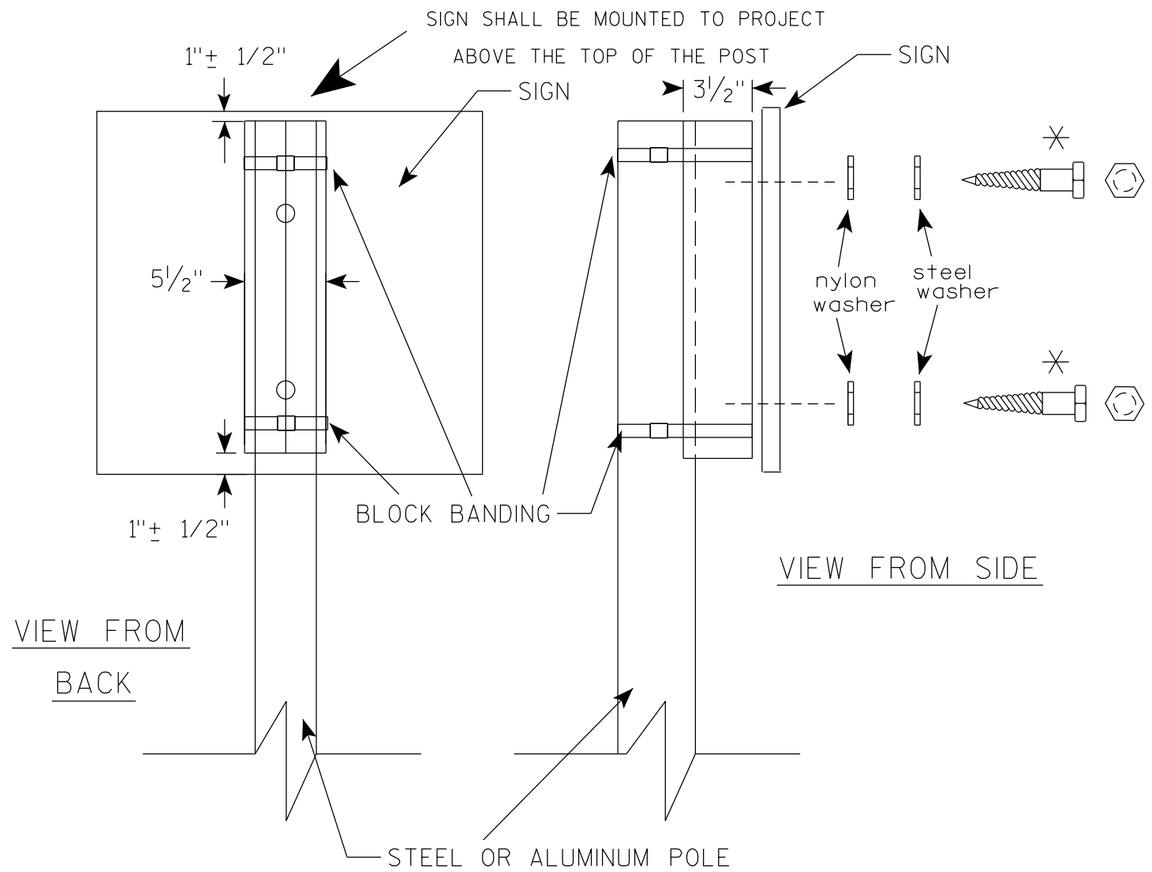

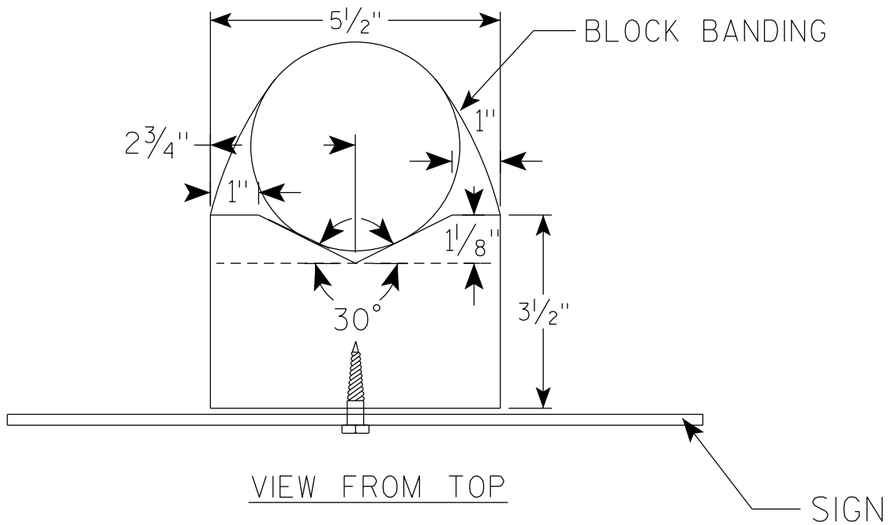

GENERAL NOTES

1. WOOD 4"X6" POST MATERIAL SHALL CONFORM TO 507.2.2 OF THE WisDOT STANDARD SPECIFICATIONS
2. BLOCK BANDING AND CLIPS SHALL BE STAINLESS STEEL, ¾" WIDTH AND 0.025" THICKNESS
3. SIGNS 3' OR GREATER IN HEIGHT SHALL UTILIZE 3 BLOCK BANDS. SIGNS UNDER 3' IN HEIGHT SHALL UTILIZE 2 BLOCK BANDS
4. ACTUAL NUMBER OF FASTENERS PER SIGN VARIES WITH THE SIGN AREA, BUT NORNALLY THERE ARE TWO. FOR SIGNS GREATER THAN 9 S.F. 3 FASTENERS SHALL BE USED.
5. ALL SIGN MOUNTING BOLTS AND WASHERS SHALL BE EITHER:
   a. Hot dip or mechanically galvanized in accordance with ASTM Designation: A 153, Class D
   b. Electro-galvanized in accordance with ASTM Designation : B 633, TYPE III, SC 3
6. ALL BOLTS SHALL HAVE HEXAGONAL HEADS.
7. STEEL WASHERS SHALL BE 1¼" O.D. X ⅜" I.D. X 1/16"
8. NYLON WASHERS SHALL BE 1¼" O.D. X ⅜" I.D. X .080 FOR TYPE H OR TYPE F FACE SIGN

✳ LAG BOLTS SHALL BE ⅜" X 2½"

BLOCK BANDING DETAIL (V-BLOCK OPTION)

WISCONSIN DEPT OF TRANSPORTATION

APPROVED Matthew R Rauch
for State Traffic Engineer

DATE 4/19/2022 PLATE NO. A5-10.3

PROJECT NO:

SHEET NO: 97 E

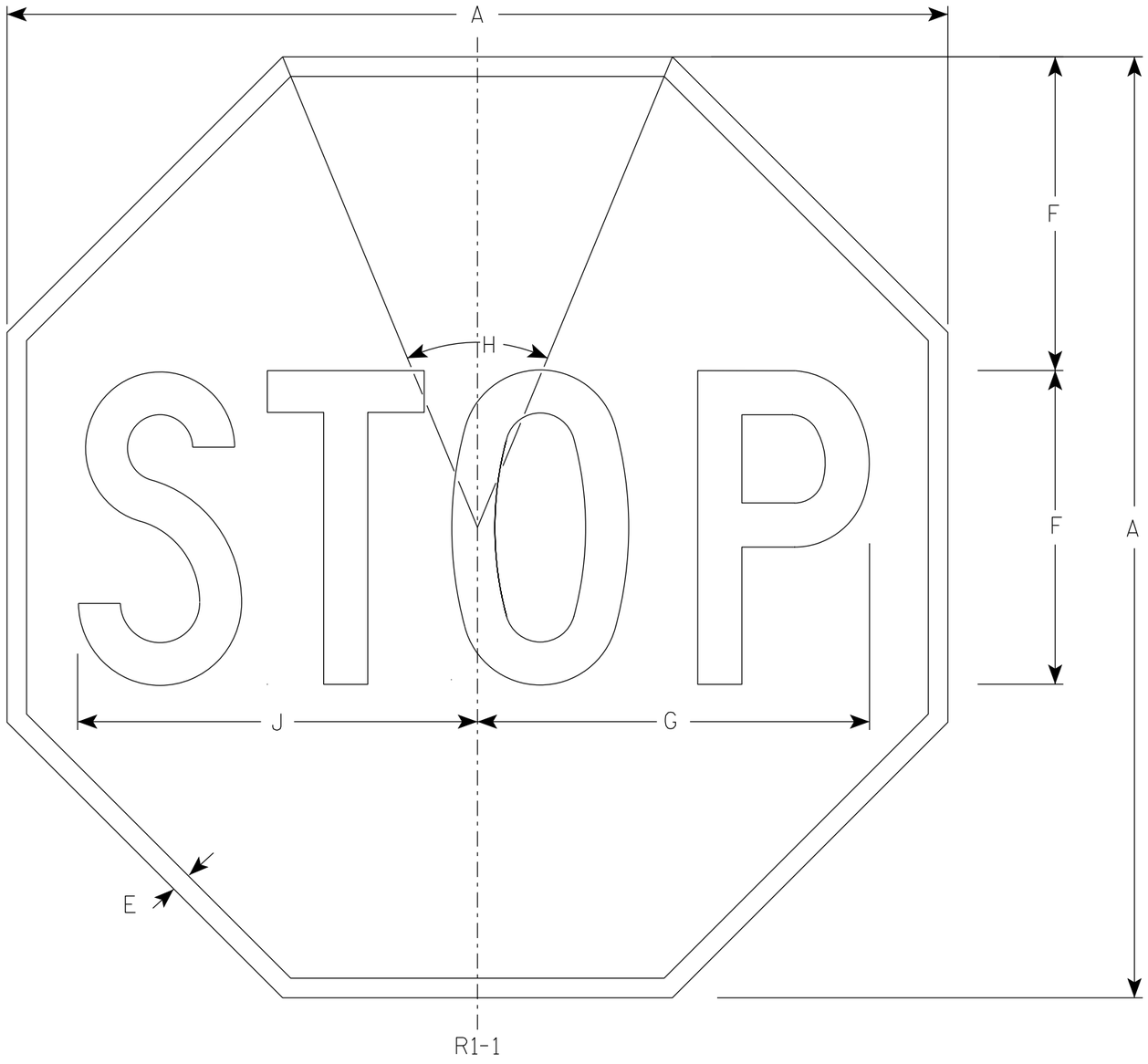

NOTES

1. Sign is Type II - Type H Reflective
2. Color:
   Background - Red
   Message - White
3. Message Series - C

SIZE	A	B	C	D	E	F	G	H	I	J	K	L	M	N	O	P	Q	R	S	T	U	V	W	X	Y	Z	Area sq. ft.
1	30				5/8	10	12 1/2	45°		12 3/4																	5.18
2S	30				5/8	10	12 1/2	45°		12 3/4																	5.18
2M	36				3/4	12	15	45°		15 3/8																	7.46
3	36				3/4	12	15	45°		15 3/8																	7.46
4	48				1	16	20	45°		20 1/2																	13.25
5	48				1	16	20	45°		20 1/2																	13.25
6	18				3/8	6	7 3/4	45°		7 3/4																	1.86

STANDARD SIGN
R1-1

WISCONSIN DEPT OF TRANSPORTATION

APPROVED Matthew R Rauch
for State Traffic Engineer

DATE 7/9/2025 PLATE NO. R1-1.14

PROJECT NO: | HWY: | COUNTY: | SHEET NO: 98 E

7

NOTES

1. Sign is Type II - Type H Reflective
2. Color:
   Background - Red
   Message - White
3. Message Series - C
4. For 30"x30" R1-1 use 18"x6" R1-3P sign
   For 36"x36" R1-1 use 30"x12" R1-3P sign
   For 48"x48" R1-1 use 30"x12" R1-3P sign

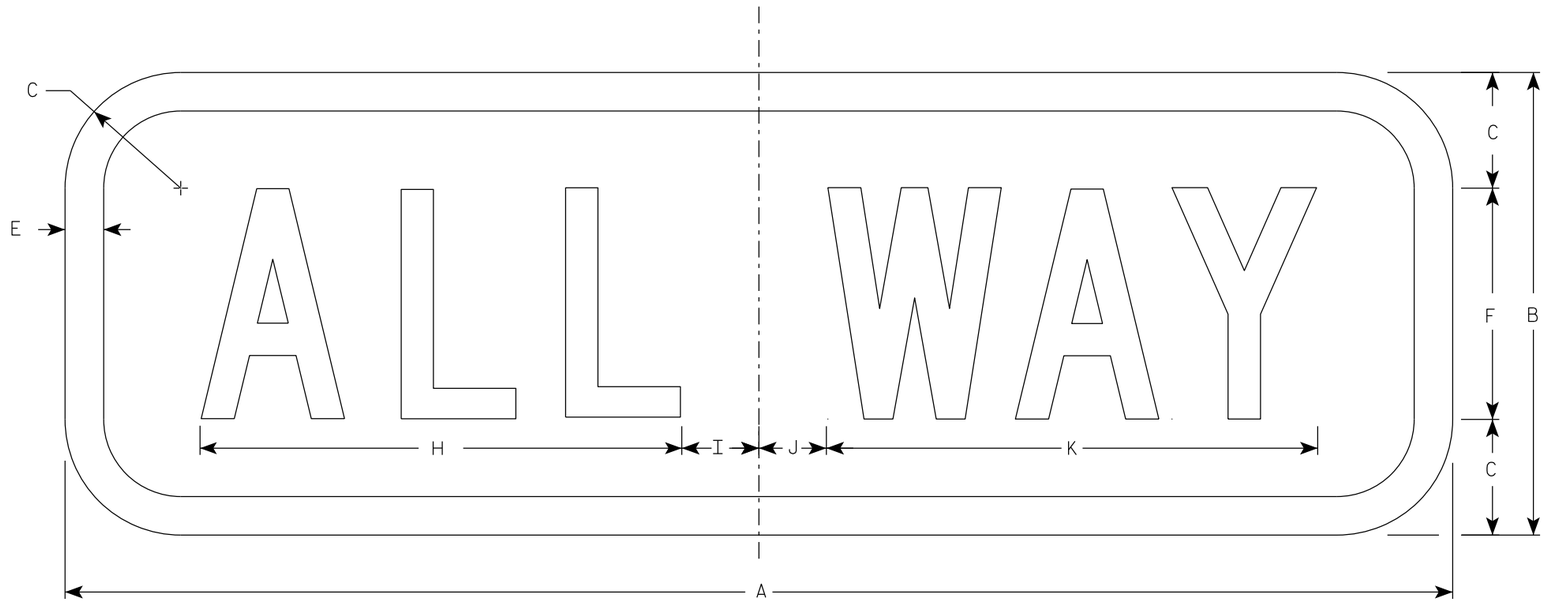

R1-3P

SIZE	A	B	C	D	E	F	G	H	I	J	K	L	M	N	O	P	Q	R	S	T	U	V	W	X	Y	Z	Area sq. ft.
1	18	6	1 ½		½	3		6 ¼	1 ¼	⅞	6 ⅜																0.75
2S	18	6	1 ½		½	3		6 ¼	1 ¼	⅞	6 ⅜																0.75
2M	30	12	1 ½		⅝	6		11	2 ¼	1 ½	11 ¾																2.5
3	30	12	1 ½		⅝	6		11	2 ¼	1 ½	11 ¾																2.5
4	30	12	1 ½		⅝	6		11	2 ¼	1 ½	11 ¾																2.5
5	30	12	1 ½		⅝	6		11	2 ¼	1 ½	11 ¾																2.5

STANDARD SIGN
R1-3P

WISCONSIN DEPT OF TRANSPORTATION

APPROVED Matthew R Rauch
for State Traffic Engineer

DATE 7/9/2025 PLATE NO. R1-3P.5

PROJECT NO: | HWY: | COUNTY: | SHEET NO: 99 E

7 7

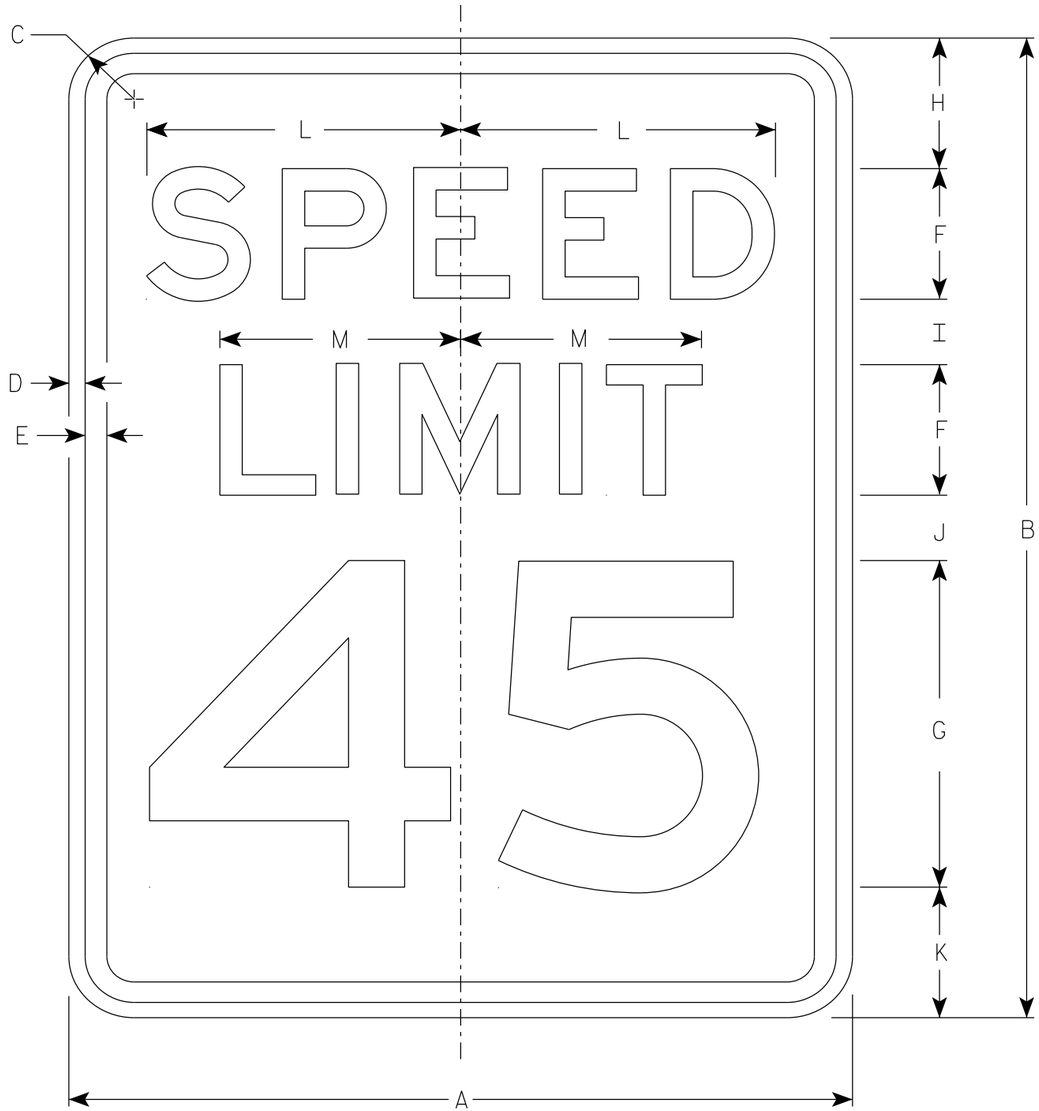

R2-1

NOTES

1. Sign is Type II - Type H Reflective
2. Color:
   Background - White
   Message - Black
3. Message Series - E
4. Substitute appropriate numerals and optically adjust spacing to achieve proper balance.

SIZE	A	B	C	D	E	F	G	H	I	J	K	L	M	N	O	P	Q	R	S	T	U	V	W	X	Y	Z	Area sq. ft.
1	18	24	1 1/2	3/8	1/2	3	8	3	2	2	3	7 1/4	5 1/2														3.0
2S	24	30	1 1/2	3/8	1/2	4	10	3	2 1/4	3 3/8	3 3/8	9 5/8	7 3/8														5.0
2M	30	36	1 7/8	1/2	5/8	5	12	5	2 1/2	2 1/2	4	12	9 1/4														7.5
3	36	48	1 7/8	1/2	5/8	6	14	6	5	5	6	14 3/8	11														12.0
4	36	48	1 7/8	1/2	5/8	6	14	6	5	5	6	14 3/8	11														12.0
5	48	60	3	3/4	1	8	20	6	4 1/2	6 3/4	6 3/4	19 1/4	14 5/8														20.0

STANDARD SIGN
R2-1

WISCONSIN DEPT OF TRANSPORTATION

APPROVED Matthew R Rauch
for State Traffic Engineer

DATE 2/1/23 PLATE NO. R2-1.14

PROJECT NO: | HWY: | COUNTY: | SHEET NO: 100 | E

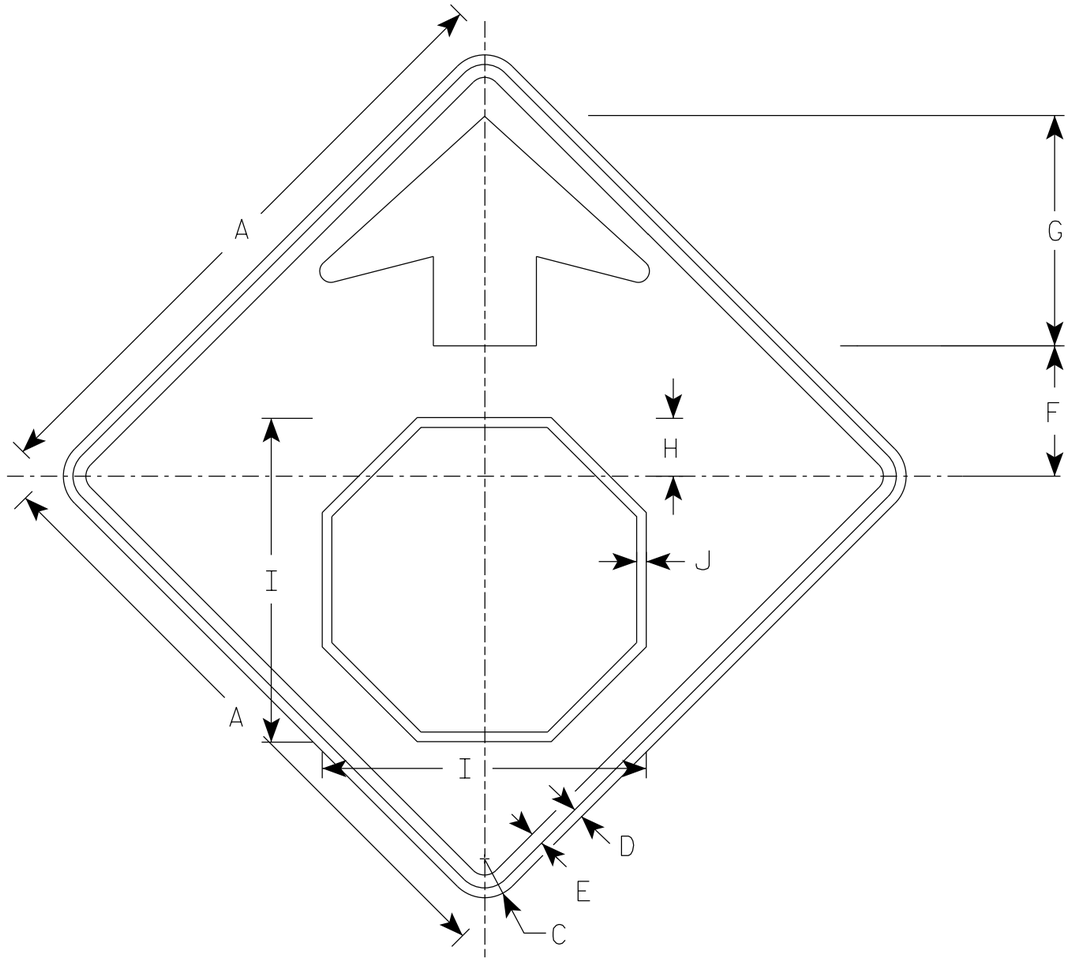

W3-1

NOTES

1. Sign is Type II - Type F Reflective
2. Color:
   Background - Yellow
   Arrow & Border - Black
   Stop Symbol - White Border on Red Background

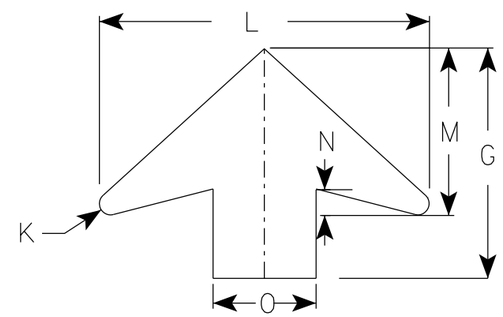

ARROW DETAIL

SIZE	A	B	C	D	E	F	G	H	I	J	K	L	M	N	O	P	Q	R	S	T	U	V	W	X	Y	Z	Area sq. ft.
1	30		1 7/8	1/2	5/8	6 1/4	11 1/4	2 7/8	15 3/4	1/2	1/2	16	8	1 1/4	5												6.25
2S	36		2 1/4	5/8	3/4	7 1/2	13 1/2	3 1/2	19	5/8	5/8	19 1/4	9 3/4	1 5/8	6												9.0
2M	36		2 1/4	5/8	3/4	7 1/2	13 1/2	3 1/2	19	5/8	5/8	19 1/4	9 3/4	1 5/8	6												9.0
3	36		2 1/4	5/8	3/4	7 1/2	13 1/2	3 1/2	19	5/8	5/8	19 1/4	9 3/4	1 5/8	6												9.0
4	48		3	3/4	1	10	17 7/8	4 1/2	25 1/8	3/4	7/8	25 5/8	13	2	8												16.0
5	48		3	3/4	1	10	17 7/8	4 1/2	25 1/8	3/4	7/8	25 5/8	13	2	8												16.0

STANDARD SIGN
W3-1

WISCONSIN DEPT OF TRANSPORTATION

APPROVED Matthew R Rauch
for State Traffic Engineer

DATE 8/17/2023 PLATE NO. W3-1.13

PROJECT NO:

SHEET NO: 101 E

FILE NAME : C:\CAEfiles\Project\tr_stdplate\W31.dgn PLOT DATE : 17-AUG 2023 2:30 PLOT BY : dotc4c

WISDOT/CADDS SHEET 42

7

7

DIVISION 1 - N REEDSBURG RD

STATION	REAL STATION	DISTANCE	AREA (SF)			INCREMENTAL VOL (CY) (UNADJUSTED)			CUMULATIVE VOL (CY)			
			CUT	FILL	ROCK EXC	CUT	FILL	ROCK EXC	CUT	EXPANDED FILL	EXPANDED ROCK	MASS ORDINATE
									1.00	1.30	1.50	
						NOTE 1	NOTE 3		NOTE 1			NOTE 8
16+00.00	1600.00	0.00	34.13	18.88	0.00	0	0	0	0	0	0	0
16+50.00	1650.00	50.00	79.36	4.92	0.00	105	22	0	105	29	0	76
17+00.01	1700.01	50.01	129.43	0.20	0.00	193	5	0	298	35	0	263
17+50.00	1750.00	49.99	295.59	0.00	0.24	393	0	0	691	35	0	656
18+00.00	1800.00	50.00	396.05	0.00	11.86	640	0	11	1331	14	17	1317
18+50.00	1850.00	50.00	473.72	0.00	40.07	805	0	48	2136	-80	89	2216
19+00.00	1900.00	50.00	501.68	0.00	58.93	903	0	92	3039	-259	227	3298
19+50.00	1950.00	50.00	467.08	0.00	50.22	897	0	101	3936	-456	378	4392
20+00.00	2000.00	50.00	504.78	0.31	9.51	900	0	55	4836	-564	461	5400
20+50.00	2050.00	50.00	280.91	0.83	0.00	727	1	9	5563	-580	474	6143
21+00.00	2100.00	50.00	156.82	0.39	0.00	405	1	0	5968	-579	474	6547
21+50.00	2150.00	50.00	255.23	0.58	0.00	382	1	0	6350	-577	474	6927
22+00.00	2200.00	50.00	83.72	0.00	0.00	314	1	0	6664	-576	474	7240
22+49.99	2249.99	49.99	21.87	4.99	0.00	98	5	0	6762	-569	474	7331
23+00.00	2300.00	50.01	1.21	20.12	0.00	21	23	0	6783	-540	474	7323
23+50.00	2350.00	50.00	0.00	57.53	0.00	1	72	0	6784	-446	474	7230
24+00.00	2400.00	50.00	0.00	86.87	0.00	0	134	0	6784	-272	474	7056
24+50.00	2450.00	50.00	0.00	117.19	0.00	0	189	0	6784	-26	474	6810
25+00.00	2500.00	50.00	0.00	108.10	0.00	0	209	0	6784	246	474	6538
25+50.00	2550.00	50.00	0.00	76.35	0.00	0	171	0	6784	468	474	6316
26+00.00	2600.00	50.00	5.37	45.51	0.00	5	113	0	6789	615	474	6174
26+50.00	2650.00	50.00	17.63	26.52	0.00	21	67	0	6810	702	474	6108
27+00.00	2700.00	50.00	28.58	18.73	0.00	43	42	0	6853	757	474	6096
27+50.00	2750.00	50.00	32.64	13.38	0.00	57	30	0	6910	796	474	6114
28+00.00	2800.00	50.00	0.00	20.67	0.00	30	32	0	6940	837	474	6103
28+50.00	2850.00	50.00	0.00	28.92	0.00	0	46	0	6940	897	474	6043
29+00.00	2900.00	50.00	0.00	35.50	0.00	0	60	0	6940	975	474	5965
29+50.00	2950.00	50.00	0.00	39.58	0.00	0	70	0	6940	1066	474	5874
30+00.00	3000.00	50.00	0.00	43.18	0.00	0	77	0	6940	1166	474	5774
30+50.00	3050.00	50.00	5.01	59.54	0.00	5	95	0	6945	1290	474	5655
30+56.01	3056.01	6.01	4.77	94.02	0.00	1	17	0	6946	1312	474	5634
31+00.00	3100.00	43.99	0.00	51.51	0.00	4	119	0	6950	1466	474	5484
31+50.00	3150.00	50.00	0.00	36.17	0.00	0	81	0	6950	1572	474	5378
32+00.00	3200.00	50.00	0.00	27.41	0.00	0	59	0	6950	1648	474	5302
32+50.00	3250.00	50.00	0.00	22.47	0.00	0	46	0	6950	1708	474	5242
33+00.00	3300.00	50.00	0.00	20.20	0.00	0	40	0	6950	1760	474	5190
33+50.00	3350.00	50.00	0.00	18.82	0.00	0	36	0	6950	1807	474	5143
34+00.00	3400.00	50.00	3.10	16.76	0.00	3	33	0	6953	1850	474	5103
34+50.00	3450.00	50.00	6.02	20.32	0.00	8	34	0	6961	1894	474	5067
35+00.00	3500.00	50.00	0.00	17.83	0.00	6	35	0	6967	1940	474	5027
35+50.00	3550.00	50.00	6.53	20.42	0.00	6	35	0	6973	1985	474	4988
36+00.00	3600.00	50.00	5.61	24.85	0.00	11	42	0	6984	2040	474	4944
36+50.00	3650.00	50.00	4.38	24.41	0.00	9	46	0	6993	2100	474	4894
37+00.00	3700.00	50.00	11.40	23.79	0.00	15	45	0	7008	2158	474	4850

NOTES:	
1 - CUT	CUT INCLUDES SALVAGED/UNUSABLE PAVEMENT MATERIAL
3 - FILL	DOES NOT INCLUDE UNUSABLE PAVEMENT EXC VOLUME
8 - MASS ORDINATE	IF MARSH AND EBS TO BE BACKFILLED WITH COMMON OR BORROW: [(CUT - SALVAGED PAVT - EXPANDED MARSH EXC - EXPANDED EBS) - ((FILL - EXPANDED ROCK) * FILL FACTOR)]

9

9

PROJECT NO: 5709-00-70	HWY: NORTH REEDSBURG ROAD	COUNTY: SAUK	EARTHWORK DATA	SHEET 102	E

FILE NAME : T:\PROJECTS\2023\23-2044-1 (WAUZEKA DRIVE)T EXCELSIOR, NORTH REEDSBURG ROAD, NORTHWOODS DRIVE TO STH 23, 5709-00-01\DRAWINGS\N REEDSBURG ROAD EARTHWORK SHEETS.DWG
LAYOUT NAME - 02

PLOT DATE : 5/18/2026 8:18 AM PLOT BY : TYLER BUCHANAN PLOT NAME : PLOT SCALE : 1" = 1'

WISDOT/CADDS SHEET 49

DIVISION 1 - N REEDSBURG RD

STATION	REAL STATION	DISTANCE	AREA (SF)			INCREMENTAL VOL (CY) (UNADJUSTED)			CUMULATIVE VOL (CY)			
			CUT	FILL	ROCK EXC	CUT	FILL	ROCK EXC	CUT	EXPANDED FILL	EXPANDED ROCK	MASS ORDINATE
									1.00	1.30	1.50	
						NOTE 1	NOTE 3		NOTE 1			NOTE 8
37+50.00	3750.00	50.00	3.40	23.97	0.00	14	44	0	7022	2215	474	4807
38+00.00	3800.00	50.00	2.34	20.91	0.00	5	42	0	7027	2270	474	4757
38+50.00	3850.00	50.00	10.42	12.84	0.00	12	31	0	7039	2310	474	4729
38+90.03	3890.03	40.03	20.08	8.41	0.00	23	16	0	7062	2331	474	4731
39+00.00	3900.00	9.97	14.75	9.18	0.00	6	3	0	7068	2335	474	4733
39+50.00	3950.00	50.00	9.07	16.80	0.00	22	24	0	7090	2366	474	4724
40+00.00	4000.00	50.00	7.13	15.75	0.00	15	30	0	7105	2405	474	4700
40+50.00	4050.00	50.00	23.97	11.09	0.00	29	25	0	7134	2438	474	4697
41+00.00	4100.00	50.00	21.84	11.53	0.00	42	21	0	7176	2465	474	4711
41+50.00	4150.00	50.00	25.46	4.23	0.00	44	15	0	7220	2484	474	4736
42+00.00	4200.00	50.00	27.82	3.33	0.00	49	7	0	7269	2493	474	4776
42+50.00	4250.00	50.00	19.83	0.87	0.00	44	4	0	7313	2499	474	4814
43+00.00	4300.00	50.00	19.09	1.76	0.00	36	2	0	7349	2501	474	4848
43+50.00	4350.00	50.00	57.29	0.00	0.00	71	2	0	7420	2504	474	4916

NOTES:	
1 - CUT	CUT INCLUDES SALVAGED/UNUSABLE PAVEMENT MATERIAL
3 - FILL	DOES NOT INCLUDE UNUSABLE PAVEMENT EXC VOLUME
8 - MASS ORDINATE	IF MARSH AND EBS TO BE BACKFILLED WITH COMMON OR BORROW: [(CUT - SALVAGED PAVT - EXPANDED MARSH EXC - EXPANDED EBS) - ((FILL - EXPANDED ROCK) * FILL FACTOR)]

9

9

PROJECT NO: 5709-00-70	HWY: NORTH REEDSBURG ROAD	COUNTY: SAUK	EARTHWORK DATA	SHEET 103	E

DIVISION 1 - N REEDSBURG RD

STATION	REAL STATION	DISTANCE	AREA (SF)			INCREMENTAL VOL (CY) (UNADJUSTED)			CUMULATIVE VOL (CY)			
			CUT	FILL	ROCK EXC	CUT NOTE 1	FILL NOTE 3	ROCK EXC	CUT 1.00 NOTE 1	EXPANDED FILL 1.30	EXPANDED ROCK 1.50	MASS ORDINATE NOTE 8
55+00.00	5500.00	0.00	16.29	0.69	0.00	0	0	0	0	0	0	0
55+50.00	5550.00	50.00	13.10	2.01	0.00	27	2	0	27	3	0	24
56+00.00	5600.00	50.00	9.99	3.16	0.00	21	5	0	48	9	0	39
56+50.00	5650.00	50.00	10.07	4.86	0.00	19	7	0	67	18	0	49
57+00.00	5700.00	50.00	12.21	5.01	0.00	21	9	0	88	30	0	58
57+50.00	5750.00	50.00	10.66	4.49	0.00	21	9	0	109	42	0	67
58+00.00	5800.00	50.00	11.33	3.49	0.00	20	7	0	129	51	0	78
58+50.00	5850.00	50.00	9.42	2.66	0.00	19	6	0	148	59	0	90
59+00.00	5900.00	50.00	8.70	2.96	0.00	17	5	0	165	65	0	100
59+50.00	5950.00	50.00	9.26	3.44	0.00	17	6	0	182	73	0	109
60+00.00	6000.00	50.00	8.66	4.14	0.00	17	7	0	199	82	0	117
60+50.00	6050.00	50.00	9.99	5.88	0.00	17	9	0	216	94	0	122
61+00.00	6100.00	50.00	15.00	6.28	0.00	23	11	0	239	108	0	131
61+50.00	6150.00	50.00	22.16	3.78	0.00	34	9	0	273	120	0	153
62+00.00	6200.00	50.00	22.41	0.00	0.00	41	4	0	314	125	0	189
62+50.00	6250.00	50.00	11.50	4.40	0.00	31	4	0	345	130	0	215
63+00.00	6300.00	50.00	17.49	5.70	0.00	27	9	0	372	142	0	230
63+50.00	6350.00	50.00	3.18	5.92	0.00	19	11	0	391	156	0	235
64+00.00	6400.00	50.00	2.49	7.81	0.00	5	13	0	396	173	0	223
64+50.00	6450.00	50.00	3.77	5.78	0.00	6	13	0	402	190	0	212
65+00.00	6500.00	50.00	4.80	5.47	0.00	8	10	0	410	203	0	207
65+50.00	6550.00	50.00	5.02	7.33	0.00	9	12	0	419	218	0	201
66+00.00	6600.00	50.00	3.94	7.21	0.00	8	13	0	427	235	0	192
66+50.00	6650.00	50.00	2.28	8.01	0.00	6	14	0	433	254	0	180
67+00.00	6700.00	50.00	1.94	9.77	0.00	4	16	0	437	274	0	163
67+50.00	6750.00	50.00	1.13	13.03	0.00	3	21	0	440	302	0	138
68+00.00	6800.00	50.00	0.42	13.58	0.00	1	25	0	441	334	0	107
68+50.00	6850.00	50.00	0.00	13.03	0.00	0	25	0	441	367	0	74
69+00.00	6900.00	50.00	0.00	17.40	0.00	0	28	0	441	403	0	38
69+50.00	6950.00	50.00	0.06	15.98	0.00	0	31	0	441	443	0	-2
70+00.00	7000.00	50.00	10.93	12.75	0.00	10	27	0	451	478	0	-27
70+50.00	7050.00	50.00	6.03	10.28	0.00	16	21	0	467	506	0	-39
71+00.00	7100.00	50.00	7.46	8.08	0.00	12	17	0	479	528	0	-49
71+50.00	7150.00	50.00	2.01	10.11	0.00	9	17	0	488	550	0	-62
72+00.00	7200.00	50.00	0.00	17.03	0.00	2	25	0	490	582	0	-92
72+50.00	7250.00	50.00	2.58	12.66	0.00	2	27	0	492	618	0	-126
73+00.00	7300.00	50.00	13.38	7.96	0.00	15	19	0	507	642	0	-135
73+50.00	7350.00	50.00	59.63	4.08	0.00	68	11	0	575	657	0	-82
74+00.00	7400.00	50.00	32.49	12.46	0.00	85	15	0	660	676	0	-16
74+50.00	7450.00	50.00	1.70	37.62	0.00	32	46	0	692	736	0	-44
75+00.00	7500.00	50.00	0.00	65.96	0.00	2	96	0	694	861	0	-167
75+47.00	7547.00	47.00	0.00	94.63	0.00	0	140	0	694	1043	0	-349
75+50.00	7550.00	3.00	0.00	90.74	0.00	0	10	0	694	1056	0	-362
76+00.00	7600.00	50.00	0.00	76.16	0.00	0	155	0	694	1257	0	-563

NOTES:	
1 - CUT	CUT INCLUDES SALVAGED/UNUSABLE PAVEMENT MATERIAL
3 - FILL	DOES NOT INCLUDE UNUSABLE PAVEMENT EXC VOLUME
8 - MASS ORDINATE	IF MARSH AND EBS TO BE BACKFILLED WITH COMMON OR BORROW: [(CUT - SALVAGED PAVT - EXPANDED MARSH EXC - EXPANDED EBS) - ((FILL - EXPANDED ROCK) * FILL FACTOR)]

9

9

PROJECT NO: 5709-00-70	HWY: NORTH REEDSBURG ROAD	COUNTY: SAUK	EARTHWORK DATA	SHEET 104	E

DIVISION 1 - N REEDSBURG RD

STATION	REAL STATION	DISTANCE	AREA (SF)			INCREMENTAL VOL (CY) (UNADJUSTED)			CUMULATIVE VOL (CY)			
			CUT	FILL	ROCK EXC	CUT NOTE 1	FILL NOTE 3	ROCK EXC	CUT 1.00 NOTE 1	EXPANDED FILL 1.30	EXPANDED ROCK 1.50	MASS ORDINATE NOTE 8
76+50.00	7650.00	50.00	0.00	60.23	0.00	0	126	0	694	1421	0	-727
77+00.00	7700.00	50.00	1.19	31.31	0.00	1	85	0	695	1531	0	-836
77+50.00	7750.00	50.00	9.36	16.67	0.00	10	44	0	705	1589	0	-884
78+00.00	7800.00	50.00	27.07	8.17	0.00	34	23	0	739	1619	0	-880
78+50.00	7850.00	50.00	48.44	3.60	0.00	70	11	0	809	1633	0	-824
79+00.00	7900.00	50.00	63.73	3.39	0.00	104	6	0	913	1641	0	-728
79+50.00	7950.00	50.00	41.46	8.43	0.00	97	11	0	1010	1655	0	-645
80+00.00	8000.00	50.00	13.86	17.50	0.00	51	24	0	1061	1686	0	-625
80+50.00	8050.00	50.00	2.14	36.83	0.00	15	50	0	1076	1751	0	-675
81+00.00	8100.00	50.00	0.00	45.53	0.00	2	76	0	1078	1850	0	-772
81+50.00	8150.00	50.00	0.80	29.98	0.00	1	70	0	1079	1941	0	-862
82+00.00	8200.00	50.00	9.22	13.20	0.00	9	40	0	1088	1993	0	-905
82+50.00	8250.00	50.00	33.78	1.79	0.00	40	14	0	1128	2011	0	-883
83+00.00	8300.00	50.00	50.59	0.08	0.00	78	2	0	1206	2014	0	-808
83+50.00	8350.00	50.00	53.23	0.10	0.00	96	0	0	1302	2014	0	-712
84+00.00	8400.00	50.00	34.22	0.12	0.00	81	0	0	1383	2014	0	-631
84+50.00	8450.00	50.00	0.02	8.93	0.00	32	8	0	1415	2024	0	-609
85+00.00	8500.00	50.00	3.41	3.87	0.00	3	12	0	1418	2040	0	-622
85+50.00	8550.00	50.00	5.62	3.60	0.00	8	7	0	1426	2049	0	-623
86+00.00	8600.00	50.00	2.76	6.29	0.00	8	9	0	1434	2061	0	-627
86+50.00	8650.00	50.00	2.57	6.27	0.00	5	12	0	1439	2076	0	-637
87+00.00	8700.00	50.00	2.27	20.11	0.00	4	24	0	1443	2107	0	-664
87+10.00	8710.00	10.00	3.54	32.19	0.00	1	10	0	1444	2120	0	-676
87+50.00	8750.00	40.00	2.72	10.78	0.00	5	32	0	1449	2162	0	-713
88+00.00	8800.00	50.00	2.70	7.65	0.00	5	17	0	1454	2184	0	-730
88+50.00	8850.00	50.00	0.07	11.83	0.00	3	18	0	1457	2207	0	-750
89+00.00	8900.00	50.00	0.09	14.42	0.00	0	24	0	1457	2239	0	-782
89+50.00	8950.00	50.00	0.04	18.45	0.00	0	30	0	1457	2278	0	-821
90+00.00	9000.00	50.00	0.36	16.11	0.00	0	32	0	1457	2319	0	-862
90+50.00	9050.00	50.00	4.62	7.91	0.00	5	22	0	1462	2348	0	-886
91+00.01	9100.01	50.01	43.46	3.26	0.00	45	10	0	1507	2361	0	-854
91+25.53	9125.53	25.52	54.86	2.03	0.00	46	2	0	1553	2363	0	-810
91+50.00	9150.00	24.47	65.97	0.94	0.00	55	1	0	1608	2365	0	-757
92+00.00	9200.00	50.00	110.51	0.10	0.00	163	1	0	1771	2366	0	-595
92+50.00	9250.00	50.00	168.95	0.15	69.00	259	0	64	2030	2241	96	-211
93+00.00	9300.00	50.00	350.22	0.00	262.53	481	0	307	2511	1643	557	868
93+50.00	9350.00	50.00	381.32	0.00	523.42	677	0	728	3188	223	1649	2965
94+00.00	9400.00	50.00	220.86	0.16	281.02	558	0	745	3746	-1230	2766	4976
94+50.00	9450.00	50.00	220.09	0.32	269.86	408	0	510	4154	-2224	3531	6378
95+00.00	9500.00	50.00	218.78	0.00	245.57	406	0	477	4560	-3154	4247	7714
95+50.00	9550.00	50.00	196.03	0.22	152.52	384	0	369	4944	-3874	4800	8818
96+00.00	9600.00	50.00	169.20	0.57	70.13	338	1	206	5282	-4274	5109	9556
96+50.00	9650.00	50.00	134.50	0.13	15.23	281	1	79	5563	-4427	5228	9990
97+00.00	9700.00	50.00	95.22	0.01	0.00	213	0	14	5776	-4454	5249	10230
97+50.00	9750.00	50.00	81.58	0.24	0.00	164	0	0	5940	-4454	5249	10394
98+00.00	9800.00	50.00	20.81	0.00	0.00	95	0	0	6035	-4454	5249	10489
98+50.00	9850.00	50.00	8.89	2.85	0.00	27	3	0	6062	-4451	5249	10513
99+00.00	9900.00	50.00	13.00	0.15	0.00	20	3	0	6082	-4447	5249	10529
99+50.00	9950.00	50.00	34.24	0.00	0.00	44	0	0	6126	-4447	5249	10573

NOTES:	
1 - CUT	CUT INCLUDES SALVAGED/UNUSABLE PAVEMENT MATERIAL
3 - FILL	DOES NOT INCLUDE UNUSABLE PAVEMENT EXC VOLUME
8 - MASS ORDINATE	IF MARSH AND EBS TO BE BACKFILLED WITH COMMON OR BORROW: [(CUT - SALVAGED PAVT - EXPANDED MARSH EXC - EXPANDED EBS) - ((FILL - EXPANDED ROCK) * FILL FACTOR)]

DIVISION 2 - NORTHWOODS

STATION	REAL STATION	DISTANCE	AREA (SF)			INCREMENTAL VOL (CY) (UNADJUSTED)			CUMULATIVE VOL (CY)			
			CUT	FILL	ROCK EXC	CUT	FILL	ROCK EXC	CUT	EXPANDED FILL	EXPANDED ROCK	MASS ORDINATE
						NOTE 1	NOTE 3		1.00 NOTE 1	1.30	1.50	NOTE 8
301+85.02	30185.02	0.00	44.55	0.31	0.00	0	0	0	0	0	0	0
302+00.00	30200.00	14.98	51.29	0.00	0.00	27	0	0	27	0	0	27
302+50.00	30250.00	50.00	91.99	0.22	0.00	133	0	0	160	0	0	160

DIVISION 3 - DRIVEWAY

STATION	REAL STATION	DISTANCE	AREA (SF)			INCREMENTAL VOL (CY) (UNADJUSTED)			CUMULATIVE VOL (CY)			
			CUT	FILL	ROCK EXC	CUT	FILL	ROCK EXC	CUT	EXPANDED FILL	EXPANDED ROCK	MASS ORDINATE
						NOTE 1	NOTE 3		1.00 NOTE 1	1.30	1.50	NOTE 8
0+00.00	0.00	0.00	9.22	0.00	0.00	0	0	0	0	0	0	0
0+25.00	25.00	25.00	18.68	0.00	0.00	13	0	0	13	0	0	13
0+50.00	50.00	25.00	24.40	0.25	0.00	20	0	0	33	0	0	33
1+00.00	100.00	50.00	132.31	0.28	0.00	145	0	0	178	0	0	178
1+50.00	150.00	50.00	344.29	0.32	0.00	441	1	0	619	1	0	618

DIVISION 4 - ALIGNMENT - DW 93

STATION	REAL STATION	DISTANCE	AREA (SF)			INCREMENTAL VOL (CY) (UNADJUSTED)			CUMULATIVE VOL (CY)			
			CUT	FILL	ROCK EXC	CUT	FILL	ROCK EXC	CUT	EXPANDED FILL	EXPANDED ROCK	MASS ORDINATE
						NOTE 1	NOTE 3		1.00 NOTE 1	1.30	1.50	NOTE 8
0+00.00	0.00	0.00	46.91	0.00	0.00	0	0	0	0	0	0	0
0+25.00	25.00	25.00	133.46	0.00	0.00	84	0	0	84	0	0	84
0+50.00	50.00	25.00	326.97	0.00	0.00	213	0	0	297	0	0	297
0+75.00	75.00	25.00	622.08	0.00	0.00	439	0	0	736	0	0	736

NOTES:	
1 - CUT	CUT INCLUDES SALVAGED/UNUSABLE PAVEMENT MATERIAL
3 - FILL	DOES NOT INCLUDE UNUSABLE PAVEMENT EXC VOLUME
8 - MASS ORDINATE	IF MARSH AND EBS TO BE BACKFILLED WITH COMMON OR BORROW: [(CUT - SALVAGED PAVT - EXPANDED MARSH EXC - EXPANDED EBS) - ((FILL - EXPANDED ROCK) * FILL FACTOR)]

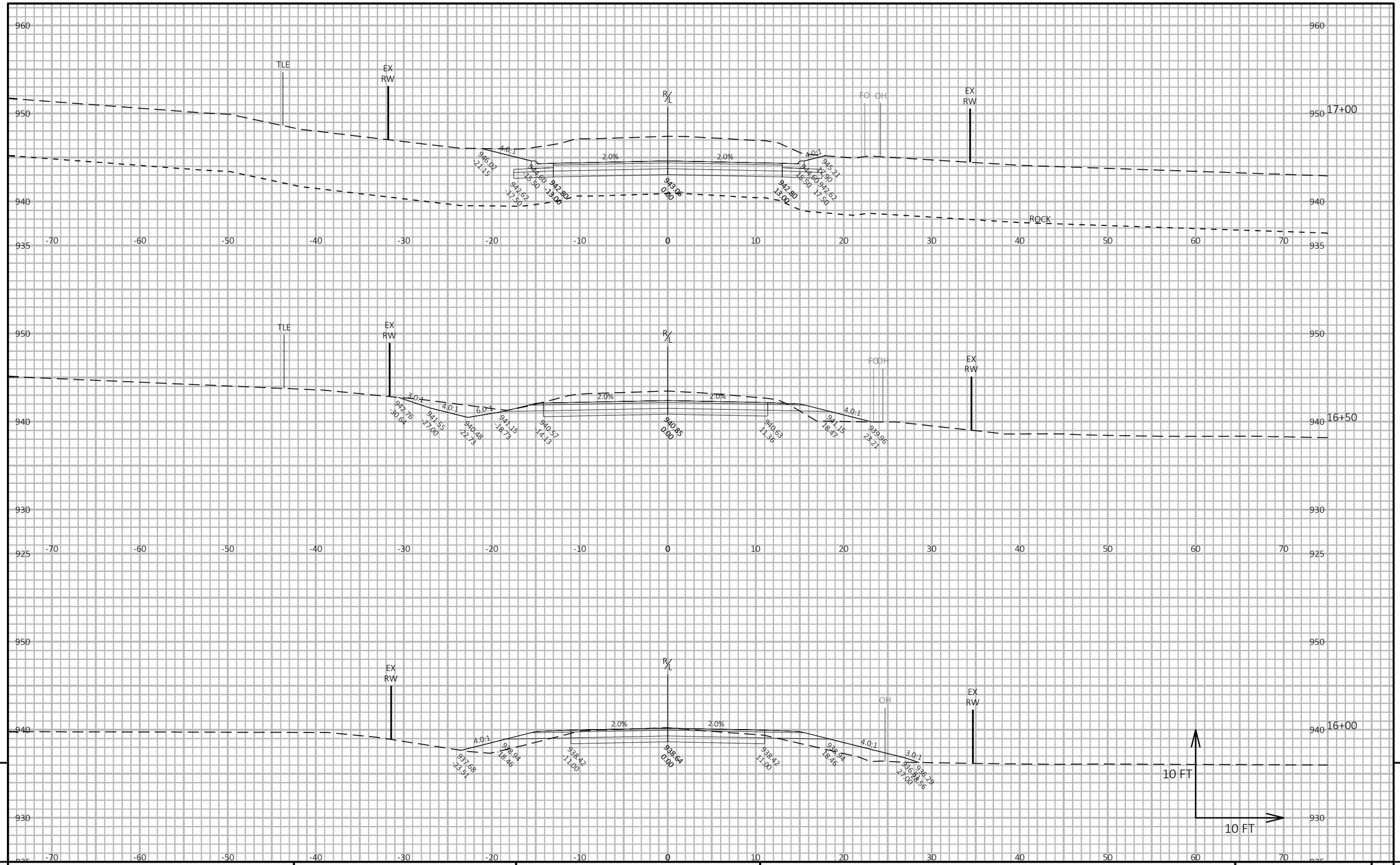

PROJECT NO: 5709-00-70	HWY: NORTH REEDSBURG ROAD	COUNTY: SAUK	CROSS SECTIONS: NORTH REEDSBURG ROAD	SHEET 107	E

FILE NAME : T:\PROJECTS\2023\23-2044-1 (WAUZEKA DRIVE)T EXCELSIOR, NORTH REEDSBURG ROAD, NORTHWOODS DRIVE TO STH 23, 5709-00-01\DRAWINGS\N REEDSBURG ROAD MODEL V2.DWG PLOT DATE : 5/18/2026 8:19 AM PLOT BY : TYLER BUCHANAN PLOT NAME : **PLOT SCALE :** 1 IN:10 FT HORZ. / 1 IN:10 FT VERT.
LAYOUT NAME - XS 1

WISDOT/CADDS SHEET 49

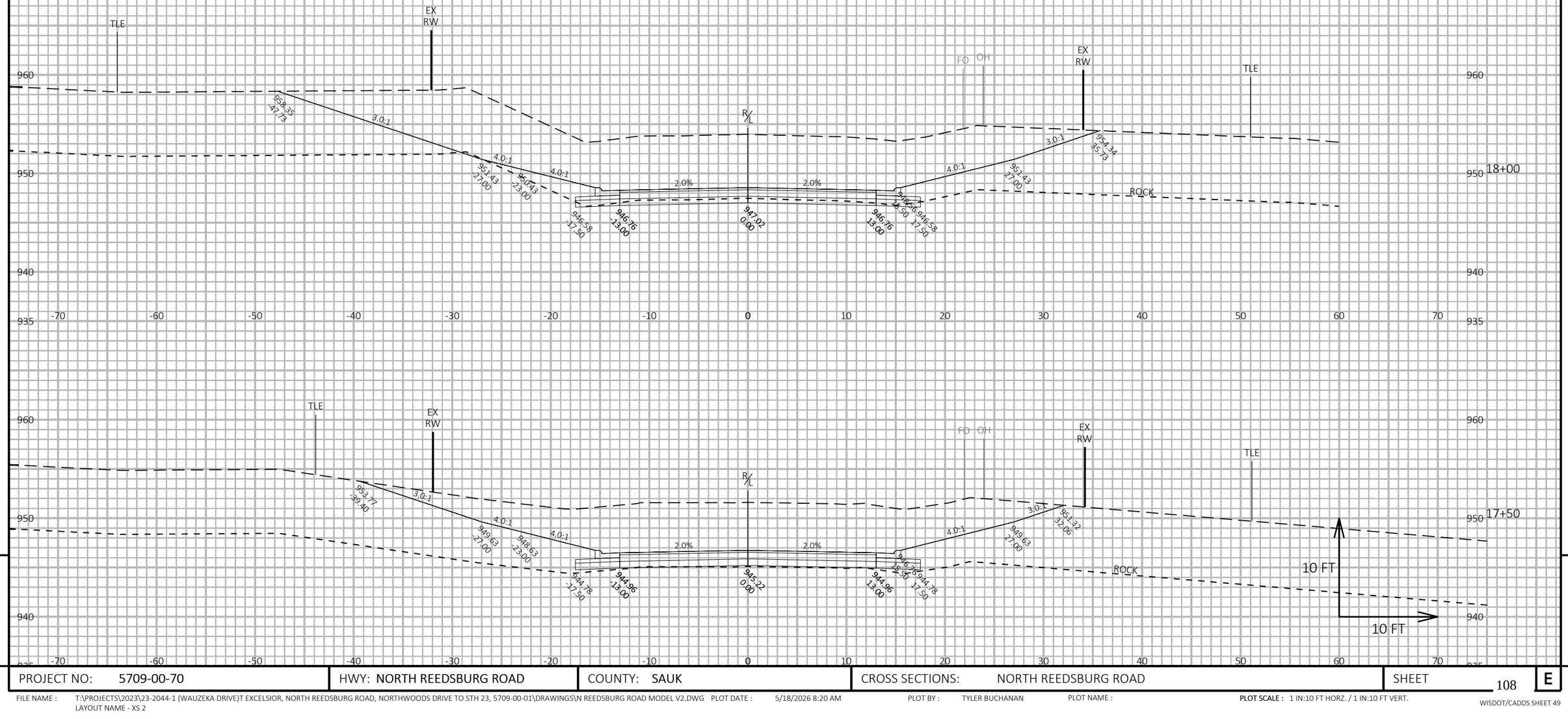

9

9

PROJECT NO: 5709-00-70	HWY: NORTH REEDSBURG ROAD	COUNTY: SAUK	CROSS SECTIONS: NORTH REEDSBURG ROAD	SHEET 108	E

FILE NAME : T:\PROJECTS\2023\23-2044-1 (WAUZEKA DRIVE)T EXCELSIOR, NORTH REEDSBURG ROAD, NORTHWOODS DRIVE TO STH 23, 5709-00-01\DRAWINGS\N REEDSBURG ROAD MODEL V2.DWG PLOT DATE : 5/18/2026 8:20 AM PLOT BY : TYLER BUCHANAN PLOT NAME : **PLOT SCALE :** 1 IN:10 FT HORZ. / 1 IN:10 FT VERT.
LAYOUT NAME - XS 2

WISDOT/CADDS SHEET 49

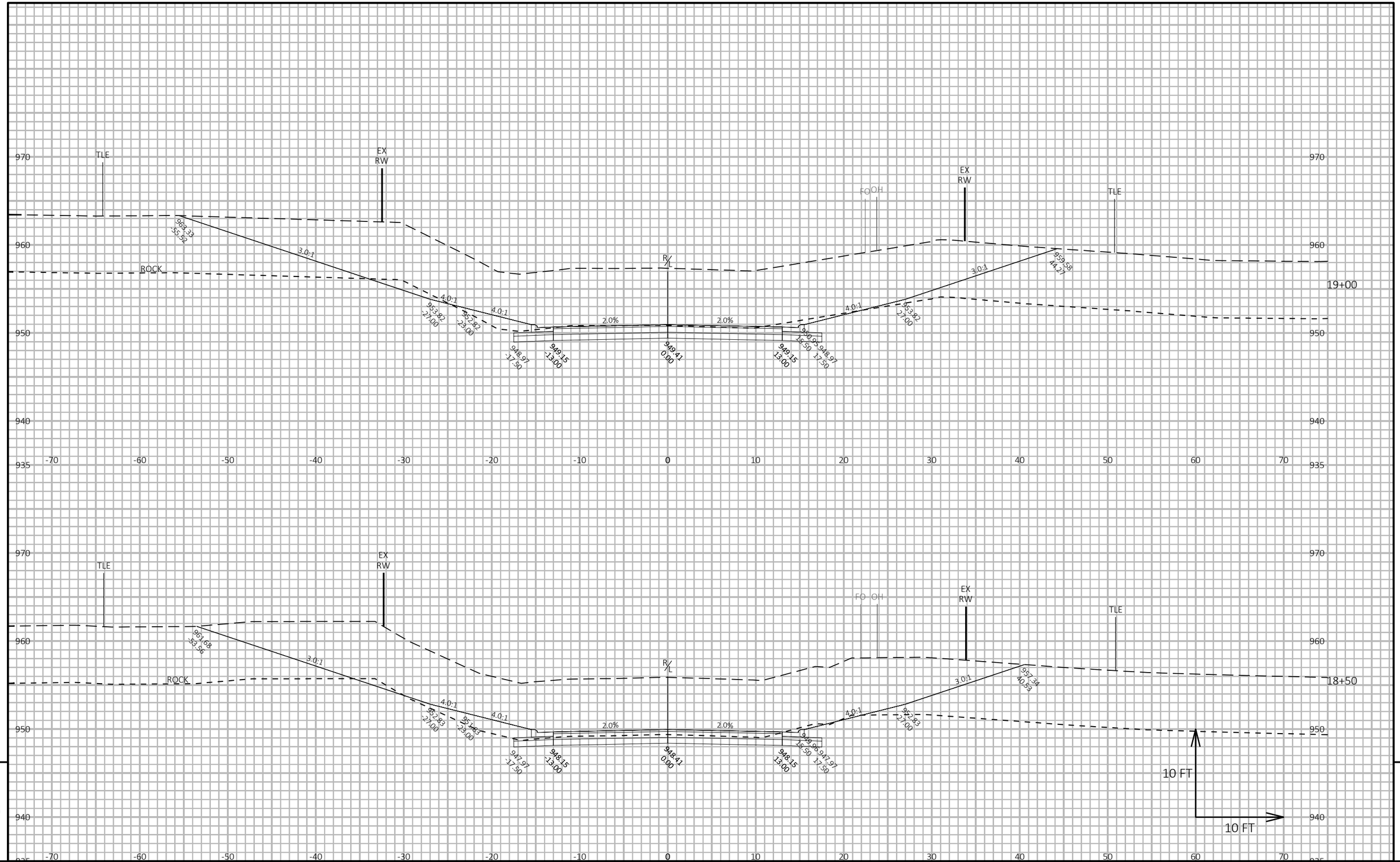

PROJECT NO: 5709-00-70	HWY: NORTH REEDSBURG ROAD	COUNTY: SAUK	CROSS SECTIONS: NORTH REEDSBURG ROAD	SHEET 109 E

FILE NAME : T:\PROJECTS\2023\23-2044-1 (WAUZEKA DRIVE)T EXCELSIOR, NORTH REEDSBURG ROAD, NORTHWOODS DRIVE TO STH 23, 5709-00-01\DRAWINGS\N REEDSBURG ROAD MODEL V2.DWG PLOT DATE : 5/18/2026 8:21 AM PLOT BY : TYLER BUCHANAN PLOT NAME : PLOT SCALE : 1 IN:10 FT HORZ. / 1 IN:10 FT VERT.
LAYOUT NAME - XS 3

WISDOT/CADDS SHEET 49

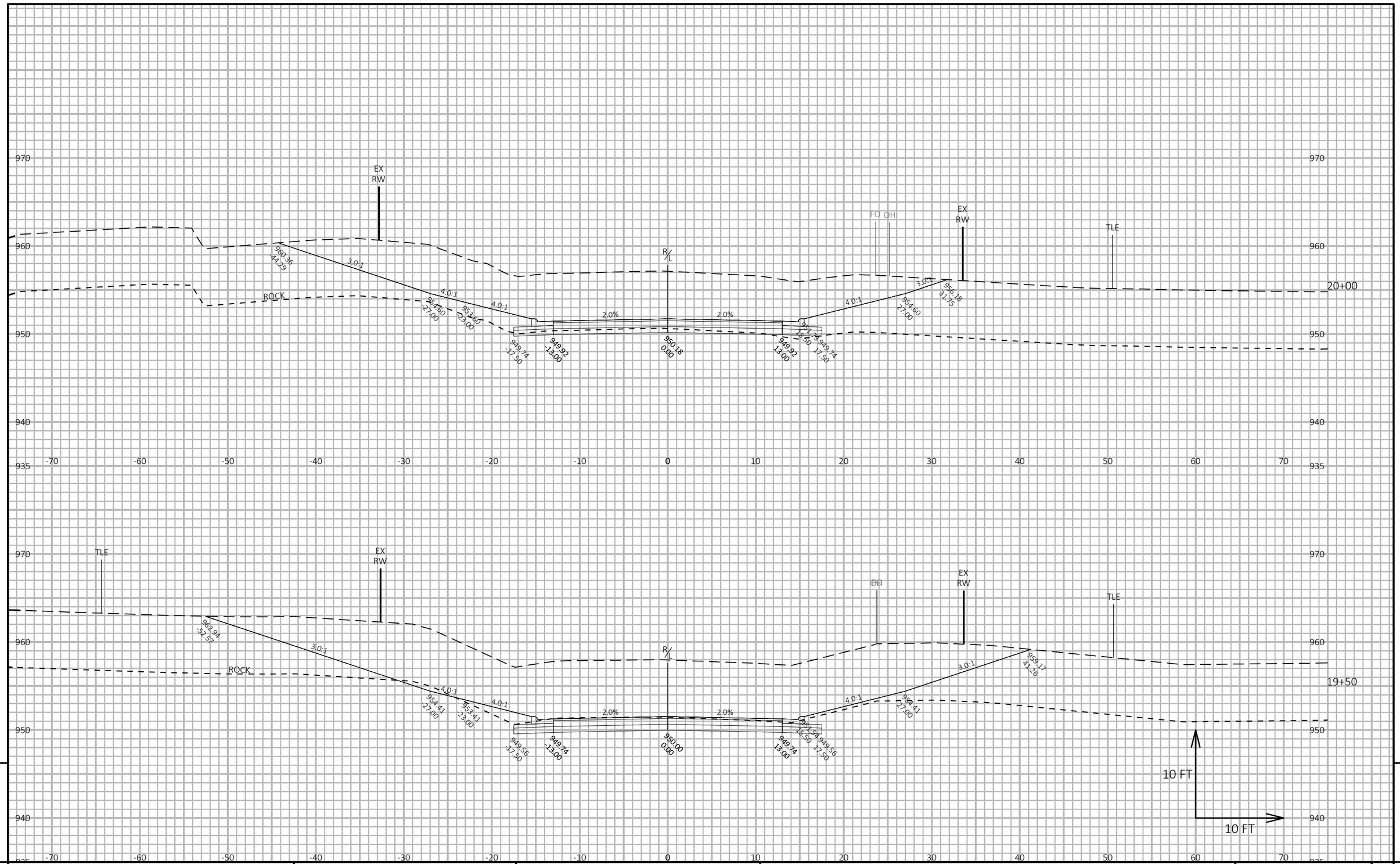

PROJECT NO: 5709-00-70	HWY: NORTH REEDSBURG ROAD	COUNTY: SAUK	CROSS SECTIONS: NORTH REEDSBURG ROAD	SHEET 110	E

FILE NAME : T:\PROJECTS\2023\23-2044-1 (WAUZEKA DRIVE)T EXCELSIOR, NORTH REEDSBURG ROAD, NORTHWOODS DRIVE TO STH 23, 5709-00-01\DRAWINGS\N REEDSBURG ROAD MODEL V2.DWG PLOT DATE : 5/18/2026 8:21 AM PLOT BY : TYLER BUCHANAN PLOT NAME : PLOT SCALE : 1 IN:10 FT HORZ. / 1 IN:10 FT VERT.
LAYOUT NAME - XS 4
WISDOT/CADDS SHEET 49

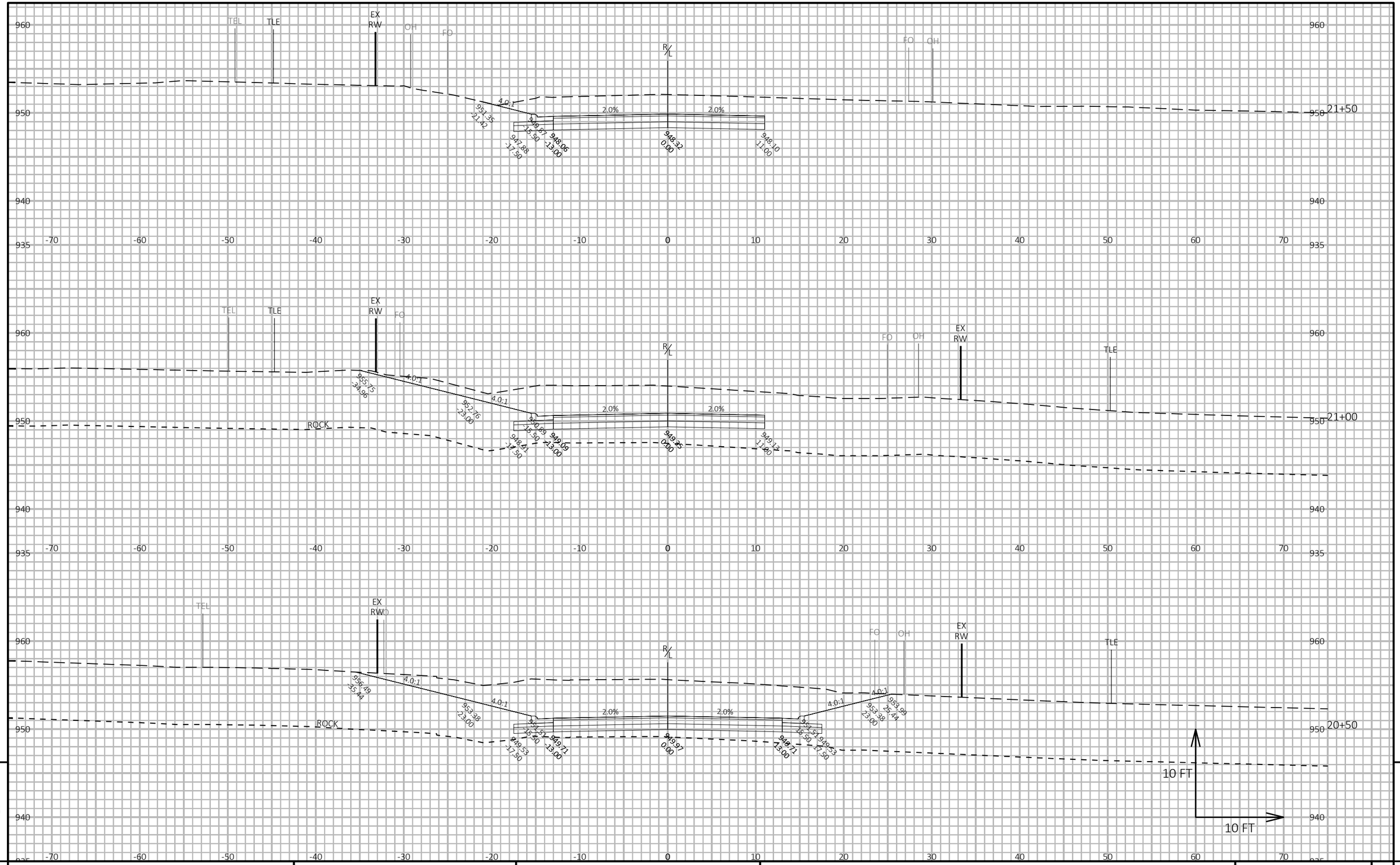

PROJECT NO: 5709-00-70	HWY: NORTH REEDSBURG ROAD	COUNTY: SAUK	CROSS SECTIONS: NORTH REEDSBURG ROAD	SHEET 111	E

FILE NAME : T:\PROJECTS\2023\23-2044-1 (WAUZEKA DRIVE)T EXCELSIOR, NORTH REEDSBURG ROAD, NORTHWOODS DRIVE TO STH 23, 5709-00-01\DRAWINGS\N REEDSBURG ROAD MODEL V2.DWG PLOT DATE : 5/18/2026 8:22 AM PLOT BY : TYLER BUCHANAN PLOT NAME : **PLOT SCALE :** 1 IN:10 FT HORZ. / 1 IN:10 FT VERT.
LAYOUT NAME - XS 5

WISDOT/CADDS SHEET 49

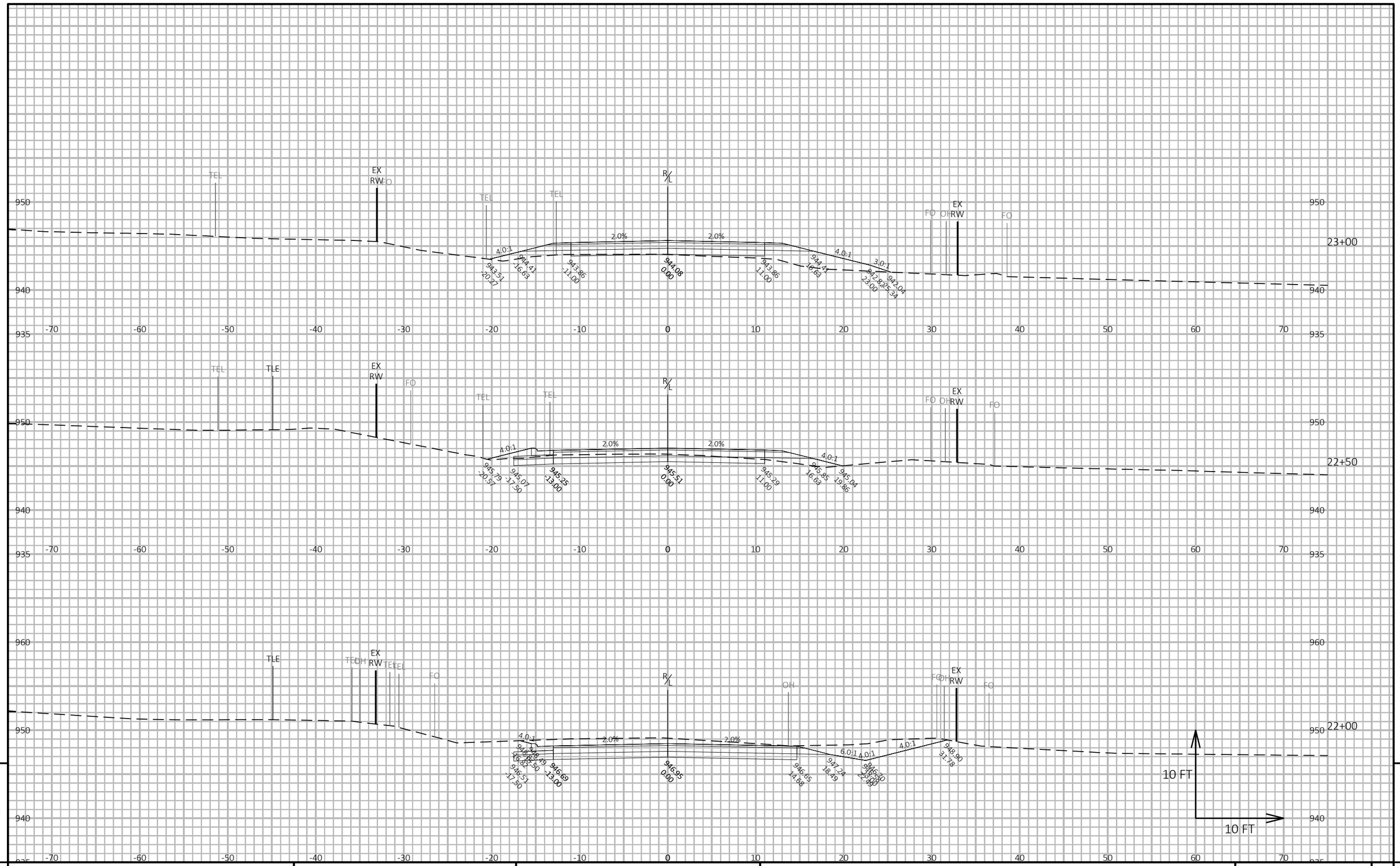

9

9

PROJECT NO: 5709-00-70	HWY: NORTH REEDSBURG ROAD	COUNTY: SAUK	CROSS SECTIONS: NORTH REEDSBURG ROAD	SHEET 112	E

FILE NAME : T:\PROJECTS\2023\23-2044-1 (WAUZEKA DRIVE)T EXCELSIOR, NORTH REEDSBURG ROAD, NORTHWOODS DRIVE TO STH 23, 5709-00-01\DRAWINGS\N REEDSBURG ROAD MODEL V2.DWG PLOT DATE : 5/18/2026 8:23 AM PLOT BY : TYLER BUCHANAN PLOT NAME : **PLOT SCALE :** 1 IN:10 FT HORZ. / 1 IN:10 FT VERT.
LAYOUT NAME - XS 6

WISDOT/CADDS SHEET 49

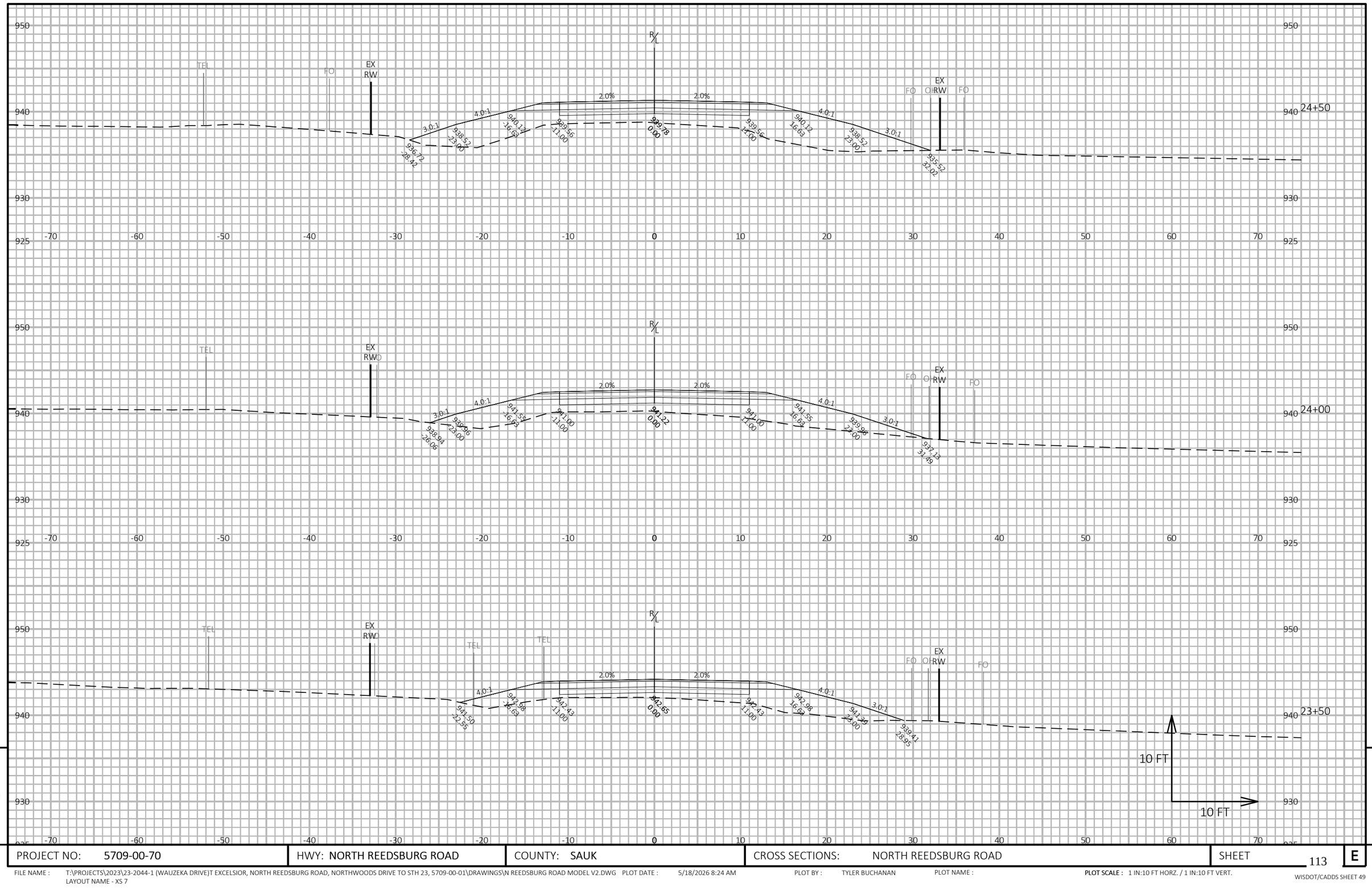

9

9

PROJECT NO: 5709-00-70	HWY: NORTH REEDSBURG ROAD	COUNTY: SAUK	CROSS SECTIONS: NORTH REEDSBURG ROAD	SHEET 113	E

FILE NAME : T:\PROJECTS\2023\23-2044-1 (WAUZEKA DRIVE)T EXCELSIOR, NORTH REEDSBURG ROAD, NORTHWOODS DRIVE TO STH 23, 5709-00-01\DRAWINGS\N REEDSBURG ROAD MODEL V2.DWG PLOT DATE : 5/18/2026 8:24 AM PLOT BY : TYLER BUCHANAN PLOT NAME : **PLOT SCALE :** 1 IN:10 FT HORZ. / 1 IN:10 FT VERT.
LAYOUT NAME - XS 7

WISDOT/CADDS SHEET 49

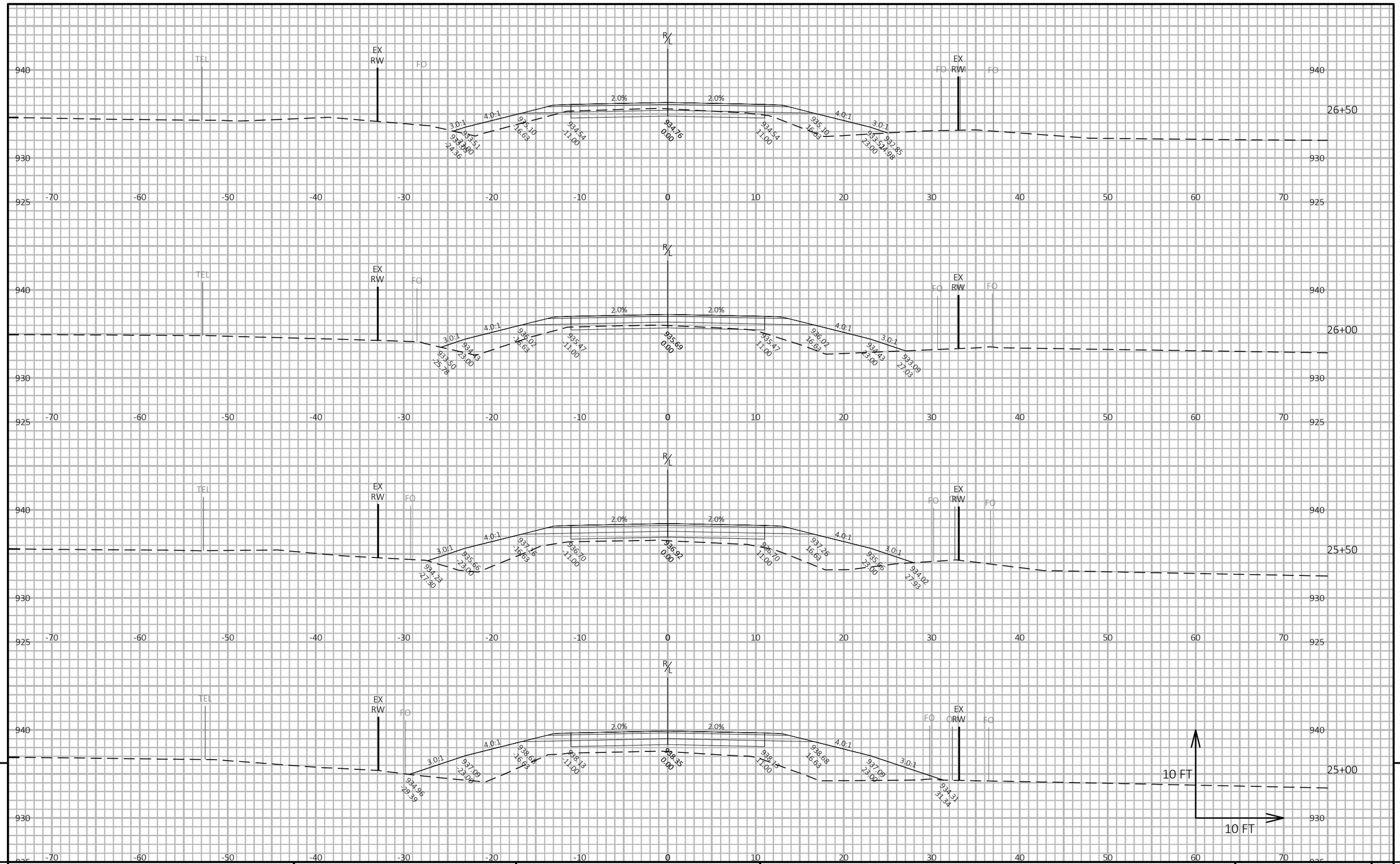

9

9

PROJECT NO: 5709-00-70	HWY: NORTH REEDSBURG ROAD	COUNTY: SAUK	CROSS SECTIONS: NORTH REEDSBURG ROAD	SHEET 114	E

FILE NAME : T:\PROJECTS\2023\23-2044-1 (WAUZEKA DRIVE)T EXCELSIOR, NORTH REEDSBURG ROAD, NORTHWOODS DRIVE TO STH 23, 5709-00-01\DRAWINGS\N REEDSBURG ROAD MODEL V2.DWG PLOT DATE : 5/18/2026 8:25 AM PLOT BY : TYLER BUCHANAN PLOT NAME : **PLOT SCALE :** 1 IN:10 FT HORZ. / 1 IN:10 FT VERT.

LAYOUT NAME - XS 8

WISDOT/CADDS SHEET 49

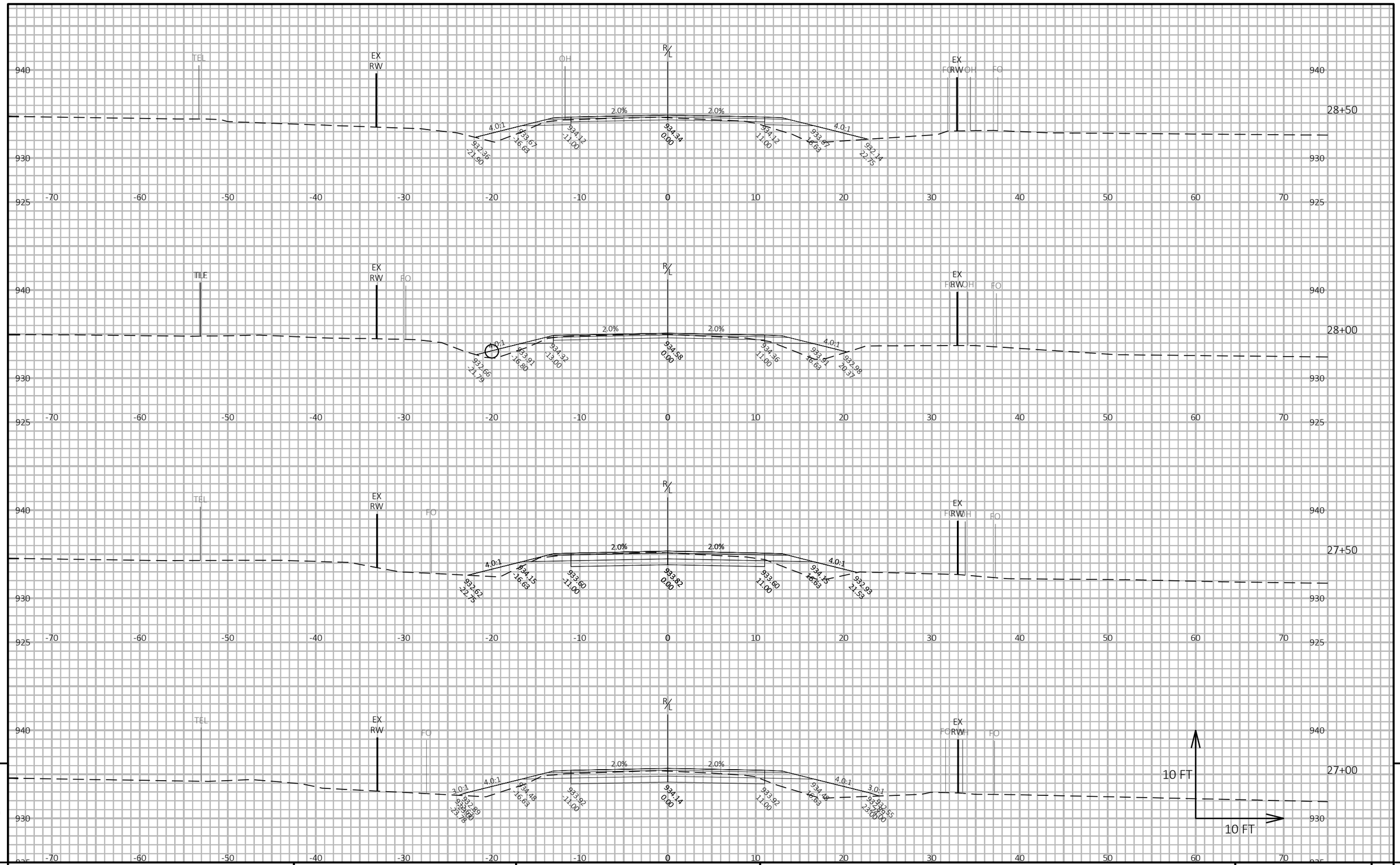

9

9

PROJECT NO: 5709-00-70	HWY: NORTH REEDSBURG ROAD	COUNTY: SAUK	CROSS SECTIONS: NORTH REEDSBURG ROAD	SHEET 115	E

FILE NAME : T:\PROJECTS\2023\23-2044-1 (WAUZEKA DRIVE)T EXCELSIOR, NORTH REEDSBURG ROAD, NORTHWOODS DRIVE TO STH 23, 5709-00-01\DRAWINGS\N REEDSBURG ROAD MODEL V2.DWG PLOT DATE : 5/18/2026 8:26 AM PLOT BY : TYLER BUCHANAN PLOT NAME : **PLOT SCALE :** 1 IN:10 FT HORZ. / 1 IN:10 FT VERT.

LAYOUT NAME - XS 9

WISDOT/CADDS SHEET 49

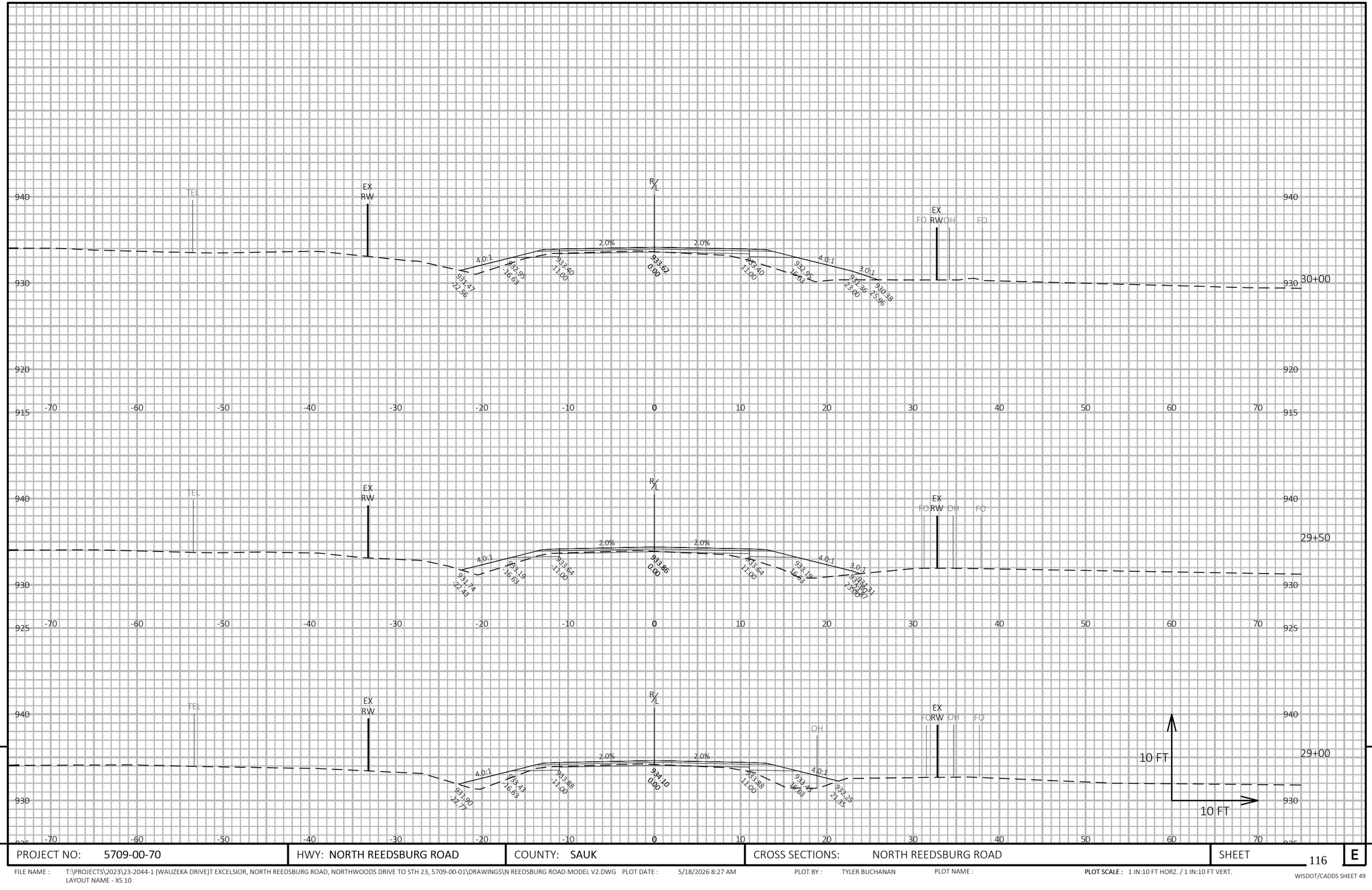

9

9

PROJECT NO: 5709-00-70	HWY: NORTH REEDSBURG ROAD	COUNTY: SAUK	CROSS SECTIONS: NORTH REEDSBURG ROAD	SHEET 116	E

FILE NAME : T:\PROJECTS\2023\23-2044-1 (WAUZEKA DRIVE)T EXCELSIOR, NORTH REEDSBURG ROAD, NORTHWOODS DRIVE TO STH 23, 5709-00-01\DRAWINGS\N REEDSBURG ROAD MODEL V2.DWG PLOT DATE : 5/18/2026 8:27 AM PLOT BY : TYLER BUCHANAN PLOT NAME : **PLOT SCALE :** 1 IN:10 FT HORZ. / 1 IN:10 FT VERT.
LAYOUT NAME - XS 10

WISDOT/CADDS SHEET 49

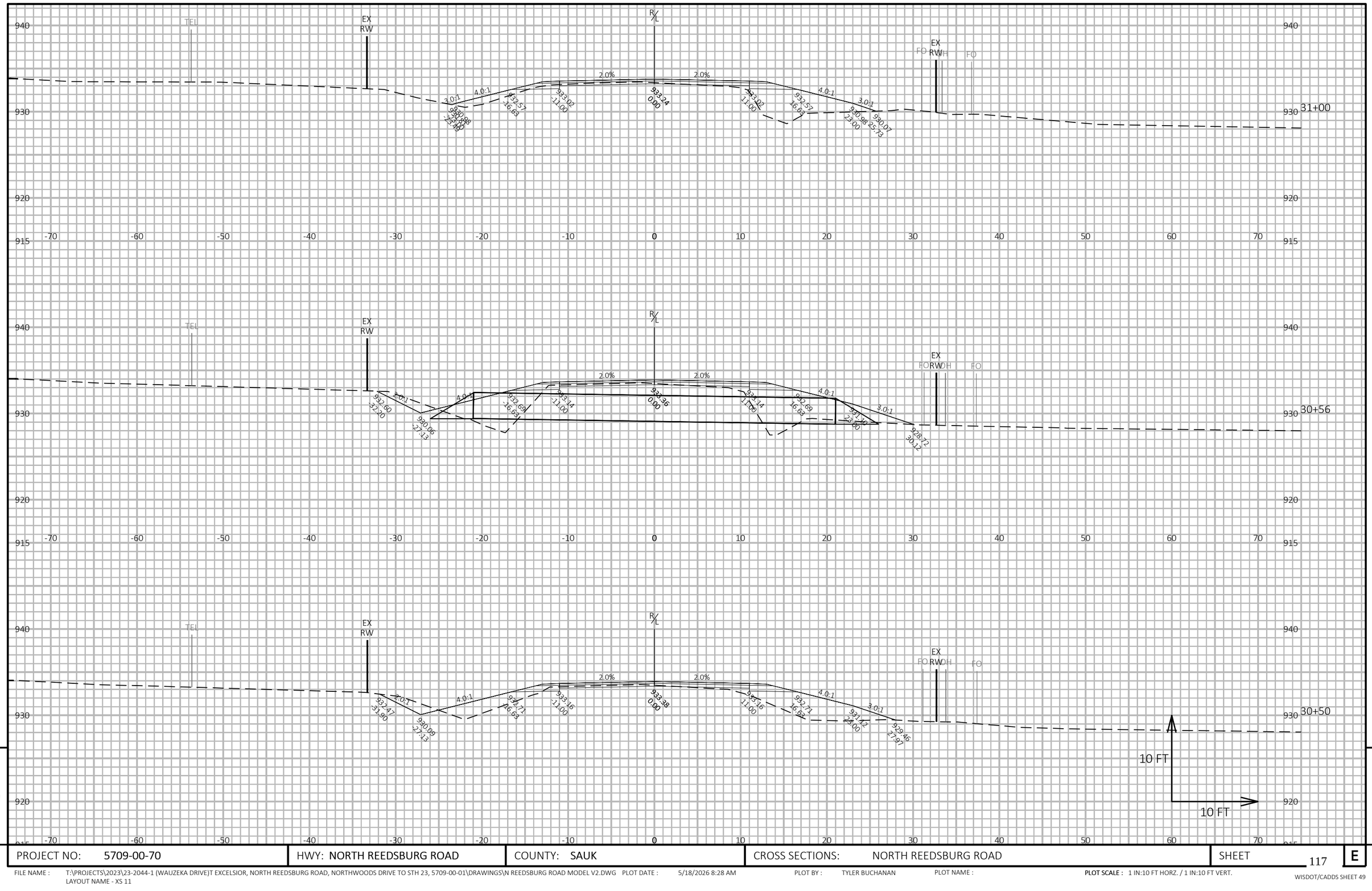

9

9

PROJECT NO: 5709-00-70	HWY: NORTH REEDSBURG ROAD	COUNTY: SAUK	CROSS SECTIONS: NORTH REEDSBURG ROAD	SHEET 117	E

FILE NAME : T:\PROJECTS\2023\23-2044-1 (WAUZEKA DRIVE)T EXCELSIOR, NORTH REEDSBURG ROAD, NORTHWOODS DRIVE TO STH 23, 5709-00-01\DRAWINGS\N REEDSBURG ROAD MODEL V2.DWG PLOT DATE : 5/18/2026 8:28 AM PLOT BY : TYLER BUCHANAN PLOT NAME : **PLOT SCALE :** 1 IN:10 FT HORZ. / 1 IN:10 FT VERT.
LAYOUT NAME - XS 11

WISDOT/CADDS SHEET 49

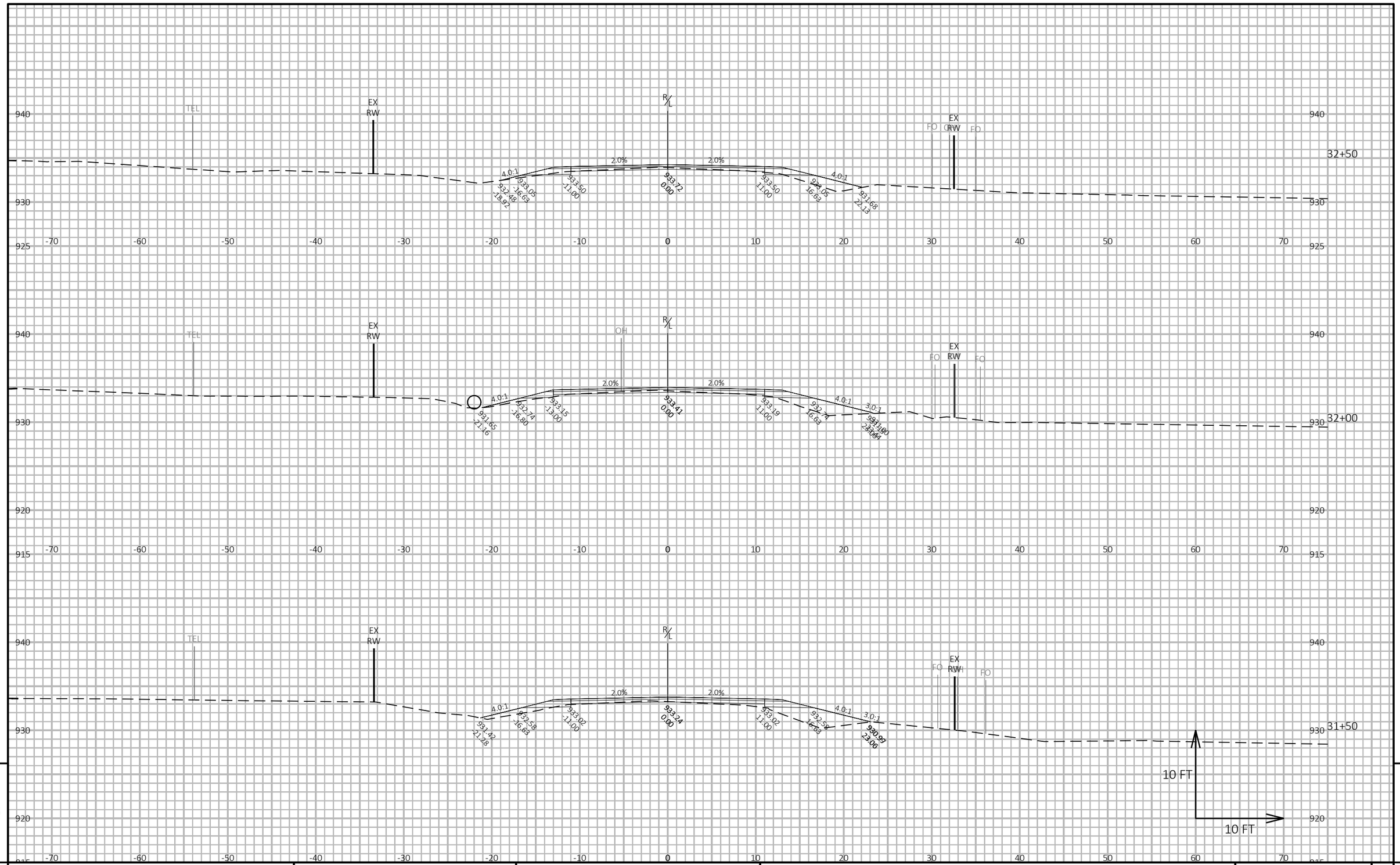

9

9

PROJECT NO: 5709-00-70	HWY: NORTH REEDSBURG ROAD	COUNTY: SAUK	CROSS SECTIONS: NORTH REEDSBURG ROAD	SHEET 118	E

FILE NAME : T:\PROJECTS\2023\23-2044-1 (WAUZEKA DRIVE)T EXCELSIOR, NORTH REEDSBURG ROAD, NORTHWOODS DRIVE TO STH 23, 5709-00-01\DRAWINGS\N REEDSBURG ROAD MODEL V2.DWG PLOT DATE : 5/18/2026 8:28 AM PLOT BY : TYLER BUCHANAN PLOT NAME : **PLOT SCALE :** 1 IN:10 FT HORZ. / 1 IN:10 FT VERT.
LAYOUT NAME - XS 12

WISDOT/CADDS SHEET 49

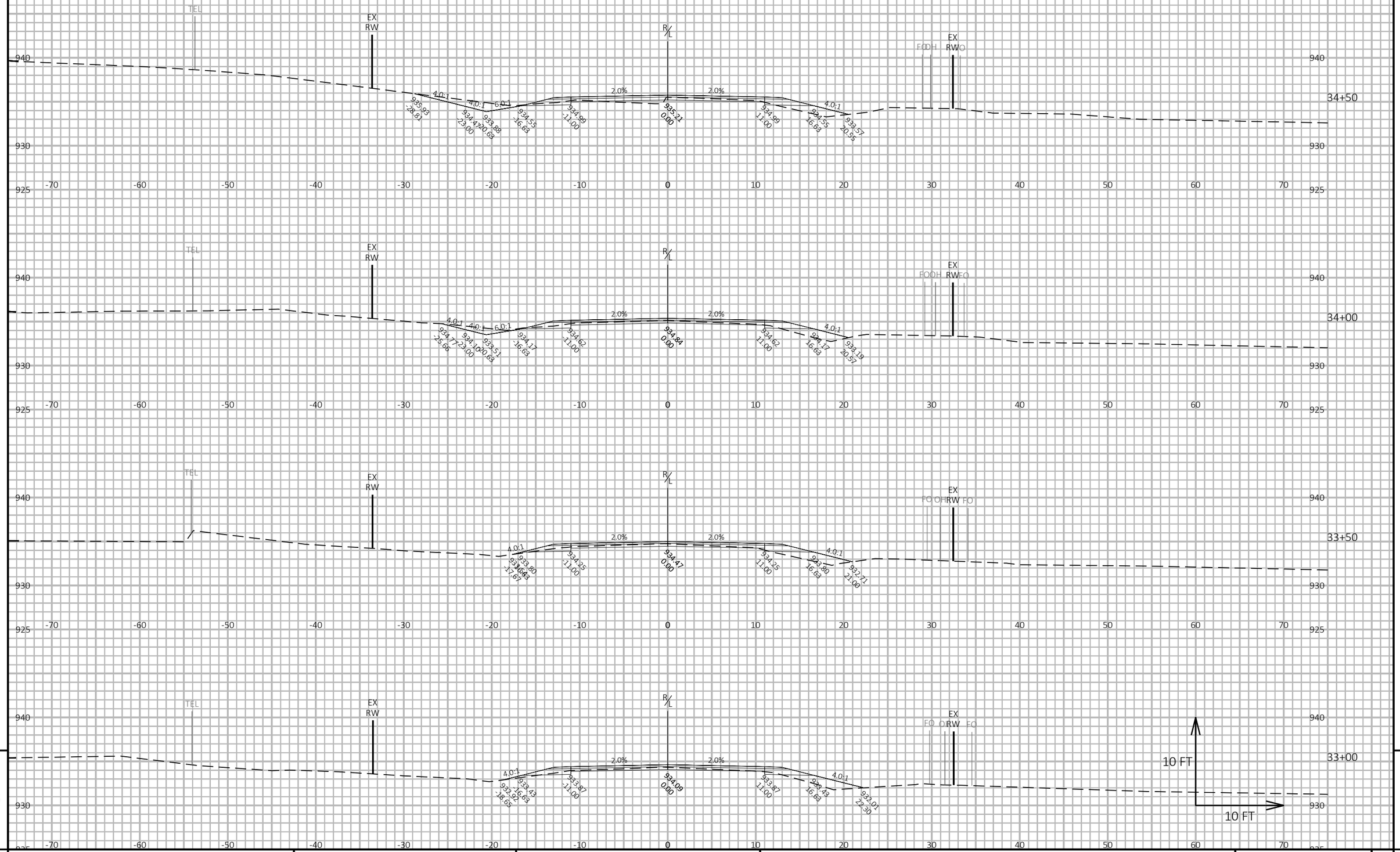

9

9

PROJECT NO: 5709-00-70	HWY: NORTH REEDSBURG ROAD	COUNTY: SAUK	CROSS SECTIONS: NORTH REEDSBURG ROAD	SHEET 119	E

FILE NAME : T:\PROJECTS\2023\23-2044-1 (WAUZEKA DRIVE)T EXCELSIOR, NORTH REEDSBURG ROAD, NORTHWOODS DRIVE TO STH 23, 5709-00-01\DRAWINGS\N REEDSBURG ROAD MODEL V2.DWG PLOT DATE : 5/18/2026 8:29 AM PLOT BY : TYLER BUCHANAN PLOT NAME : **PLOT SCALE :** 1 IN:10 FT HORZ. / 1 IN:10 FT VERT.
LAYOUT NAME - XS 13

WISDOT/CADDS SHEET 49

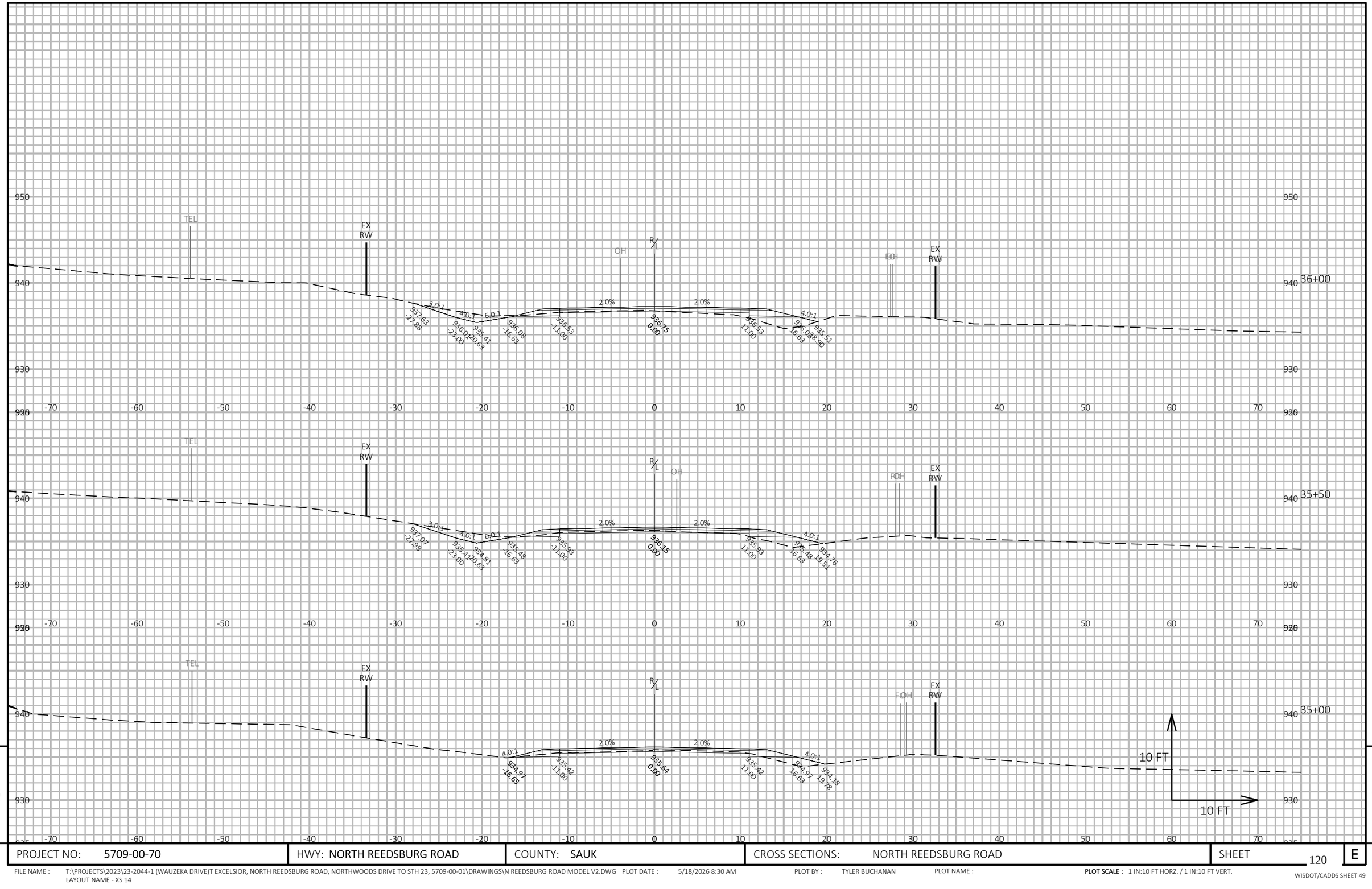

9	PROJECT NO: 5709-00-70	HWY: NORTH REEDSBURG ROAD	COUNTY: SAUK	CROSS SECTIONS: NORTH REEDSBURG ROAD	SHEET 120 E

FILE NAME : T:\PROJECTS\2023\23-2044-1 (WAUZEKA DRIVE)T EXCELSIOR, NORTH REEDSBURG ROAD, NORTHWOODS DRIVE TO STH 23, 5709-00-01\DRAWINGS\N REEDSBURG ROAD MODEL V2.DWG PLOT DATE : 5/18/2026 8:30 AM PLOT BY : TYLER BUCHANAN PLOT NAME : **PLOT SCALE :** 1 IN:10 FT HORZ. / 1 IN:10 FT VERT.
LAYOUT NAME - XS 14

WISDOT/CADDS SHEET 49

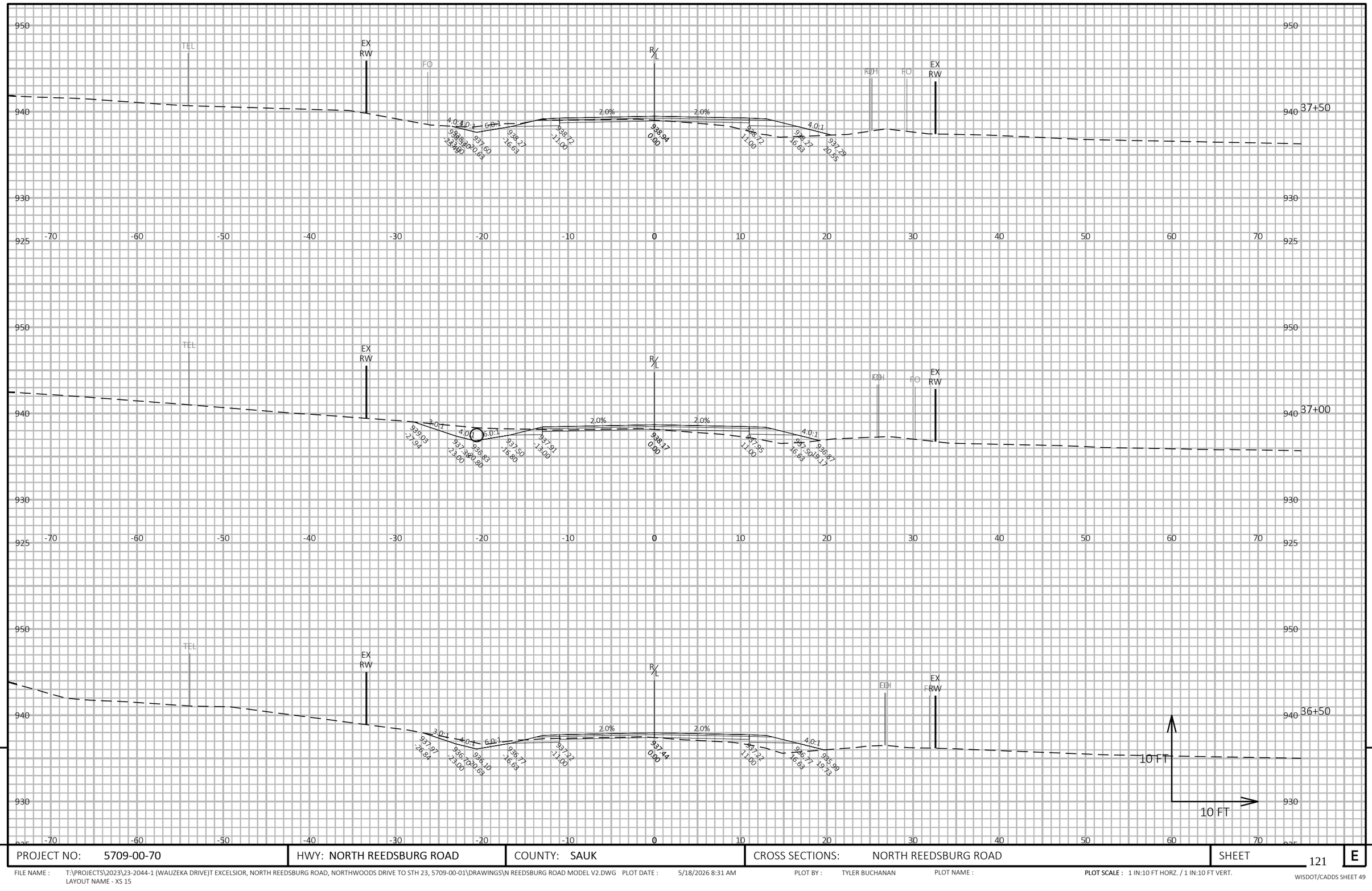

PROJECT NO: 5709-00-70	HWY: NORTH REEDSBURG ROAD	COUNTY: SAUK	CROSS SECTIONS: NORTH REEDSBURG ROAD	SHEET 121 E

FILE NAME : T:\PROJECTS\2023\23-2044-1 (WAUZEKA DRIVE)T EXCELSIOR, NORTH REEDSBURG ROAD, NORTHWOODS DRIVE TO STH 23, 5709-00-01\DRAWINGS\N REEDSBURG ROAD MODEL V2.DWG PLOT DATE : 5/18/2026 8:31 AM PLOT BY : TYLER BUCHANAN PLOT NAME : PLOT SCALE : 1 IN:10 FT HORZ. / 1 IN:10 FT VERT.
LAYOUT NAME - XS 15

WISDOT/CADDS SHEET 49

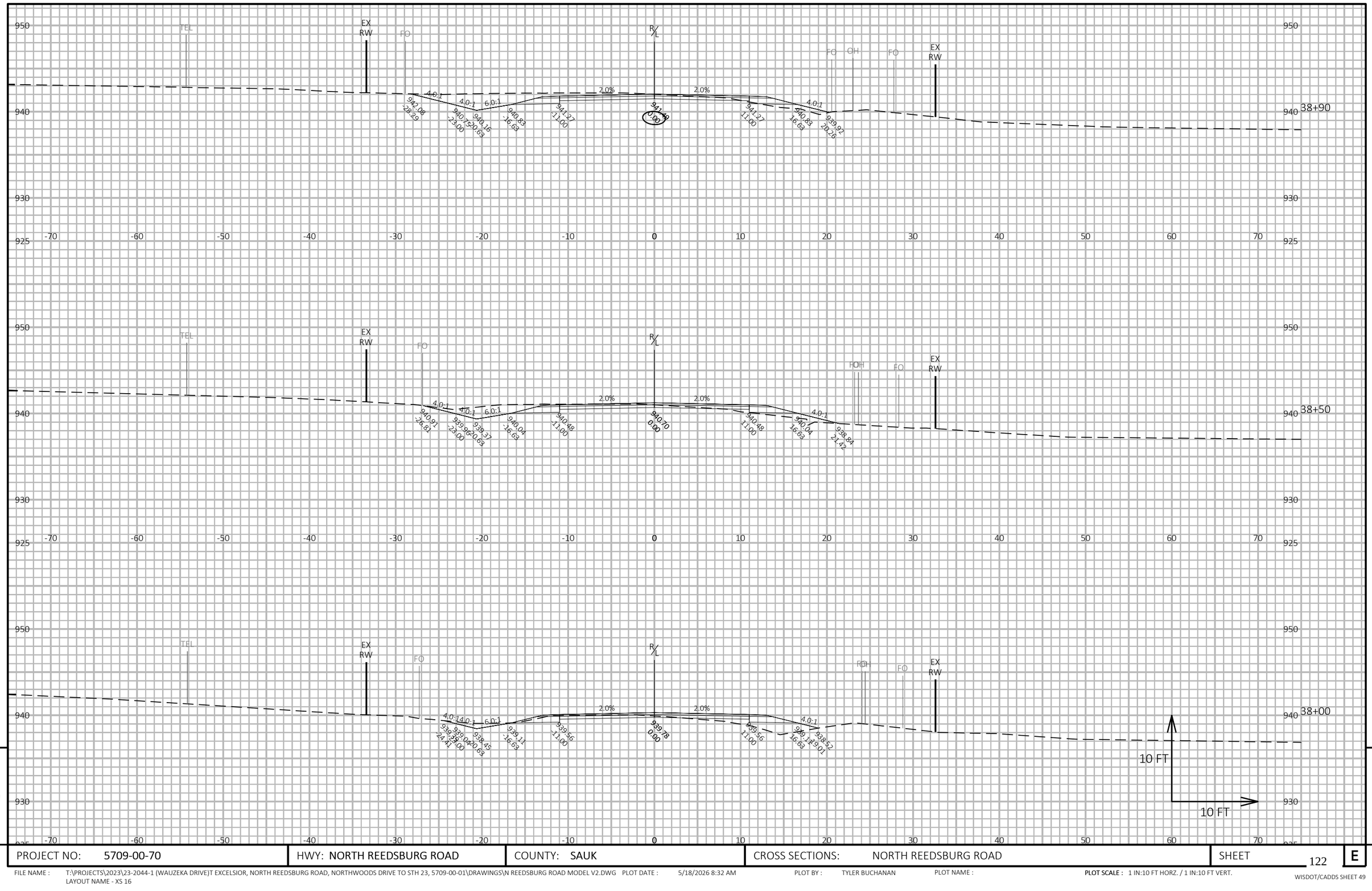

9

9

PROJECT NO: 5709-00-70	HWY: NORTH REEDSBURG ROAD	COUNTY: SAUK	CROSS SECTIONS: NORTH REEDSBURG ROAD	SHEET 122	E

FILE NAME : T:\PROJECTS\2023\23-2044-1 (WAUZEKA DRIVE)T EXCELSIOR, NORTH REEDSBURG ROAD, NORTHWOODS DRIVE TO STH 23, 5709-00-01\DRAWINGS\N REEDSBURG ROAD MODEL V2.DWG PLOT DATE : 5/18/2026 8:32 AM PLOT BY : TYLER BUCHANAN PLOT NAME : **PLOT SCALE :** 1 IN:10 FT HORZ. / 1 IN:10 FT VERT.
LAYOUT NAME - XS 16

WISDOT/CADDS SHEET 49

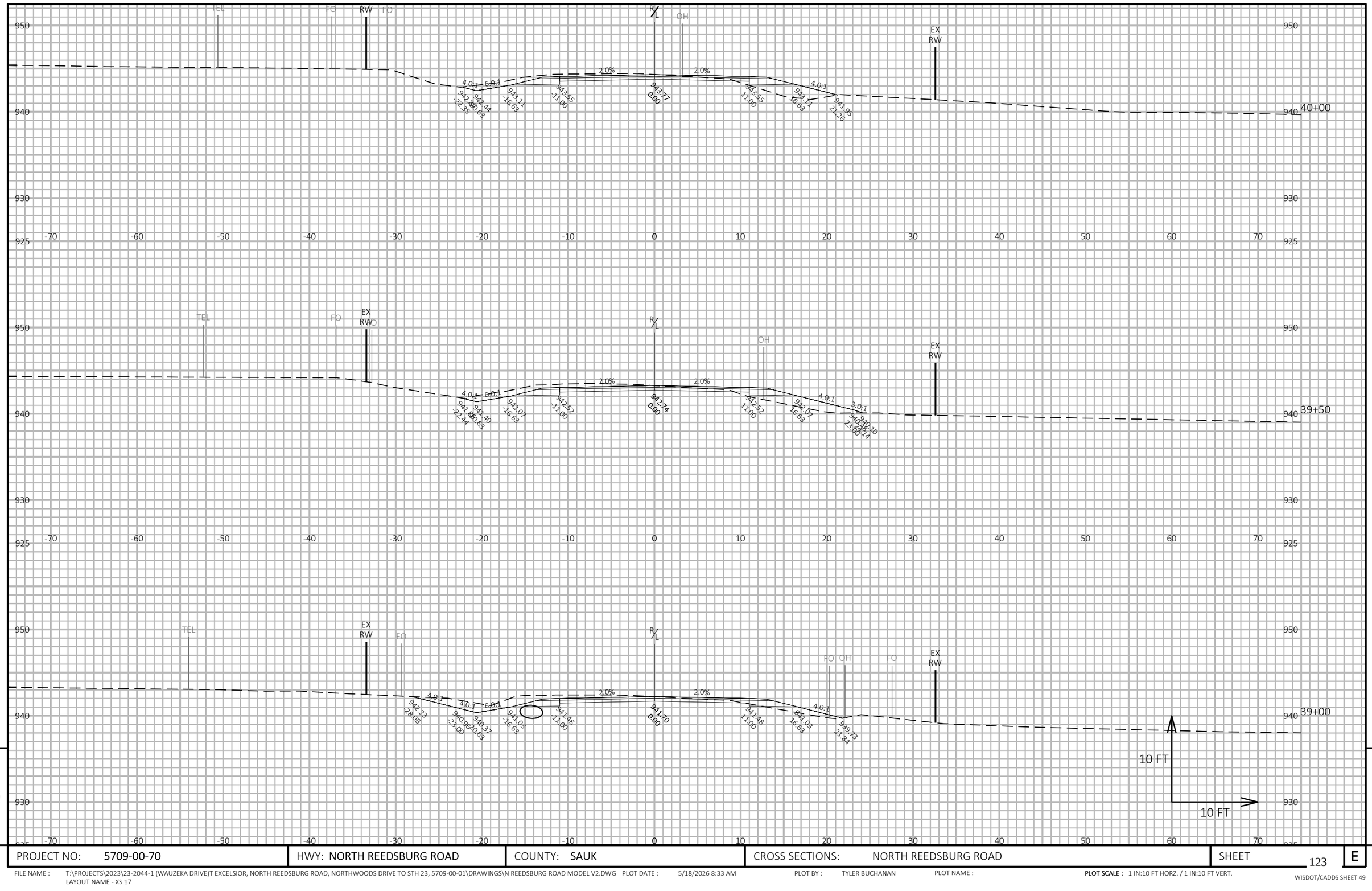

PROJECT NO: 5709-00-70	HWY: NORTH REEDSBURG ROAD	COUNTY: SAUK	CROSS SECTIONS: NORTH REEDSBURG ROAD	SHEET 123	E

FILE NAME : T:\PROJECTS\2023\23-2044-1 (WAUZEKA DRIVE)T EXCELSIOR, NORTH REEDSBURG ROAD, NORTHWOODS DRIVE TO STH 23, 5709-00-01\DRAWINGS\N REEDSBURG ROAD MODEL V2.DWG PLOT DATE : 5/18/2026 8:33 AM PLOT BY : TYLER BUCHANAN PLOT NAME : **PLOT SCALE :** 1 IN:10 FT HORZ. / 1 IN:10 FT VERT.
LAYOUT NAME - XS 17

WISDOT/CADDS SHEET 49

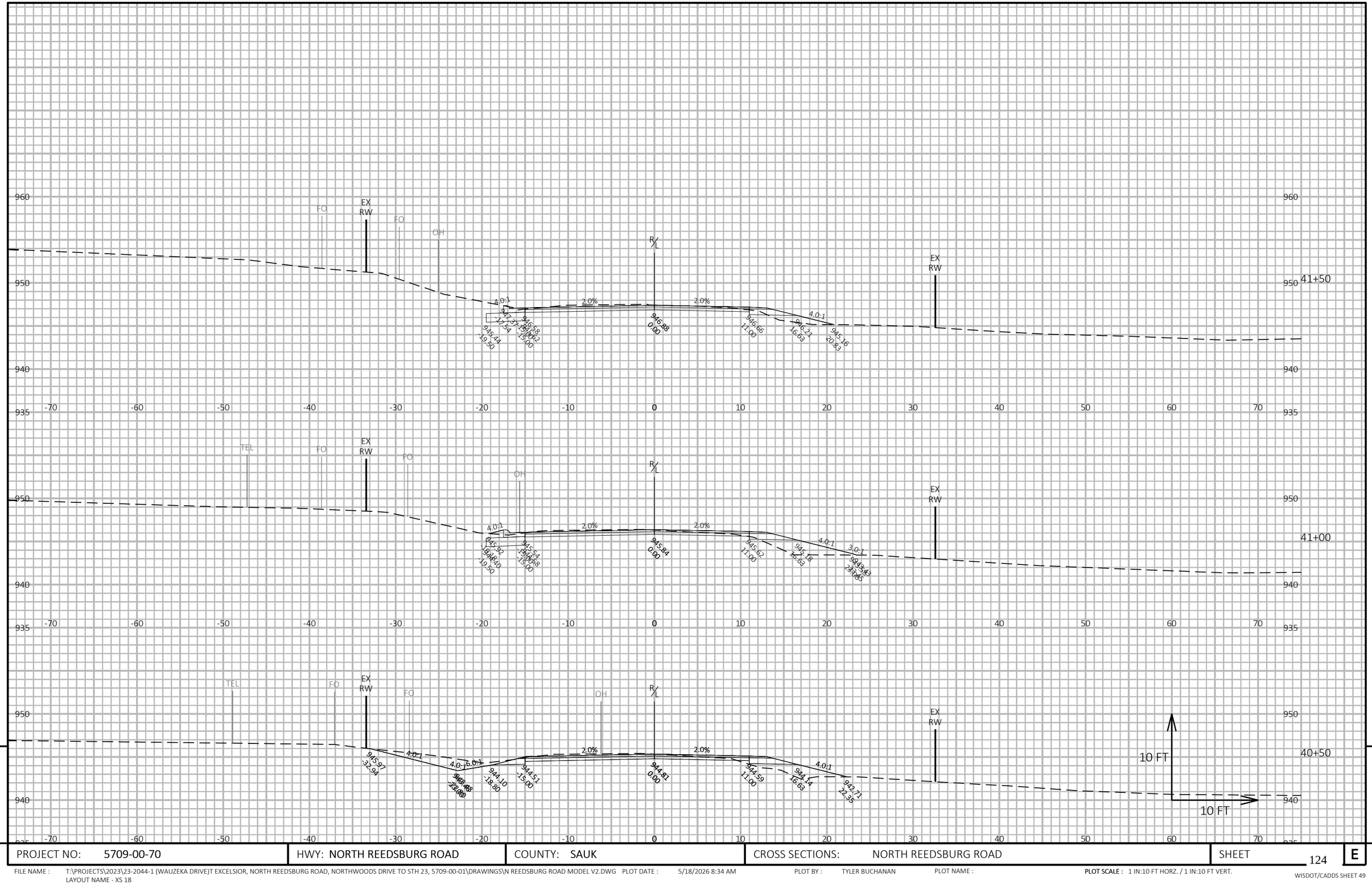

PROJECT NO: 5709-00-70	HWY: NORTH REEDSBURG ROAD	COUNTY: SAUK	CROSS SECTIONS: NORTH REEDSBURG ROAD	SHEET 124 E

FILE NAME : T:\PROJECTS\2023\23-2044-1 (WAUZEKA DRIVE)T EXCELSIOR, NORTH REEDSBURG ROAD, NORTHWOODS DRIVE TO STH 23, 5709-00-01\DRAWINGS\N REEDSBURG ROAD MODEL V2.DWG PLOT DATE : 5/18/2026 8:34 AM PLOT BY : TYLER BUCHANAN PLOT NAME : **PLOT SCALE :** 1 IN:10 FT HORZ. / 1 IN:10 FT VERT.
LAYOUT NAME - XS 18

WISDOT/CADDS SHEET 49

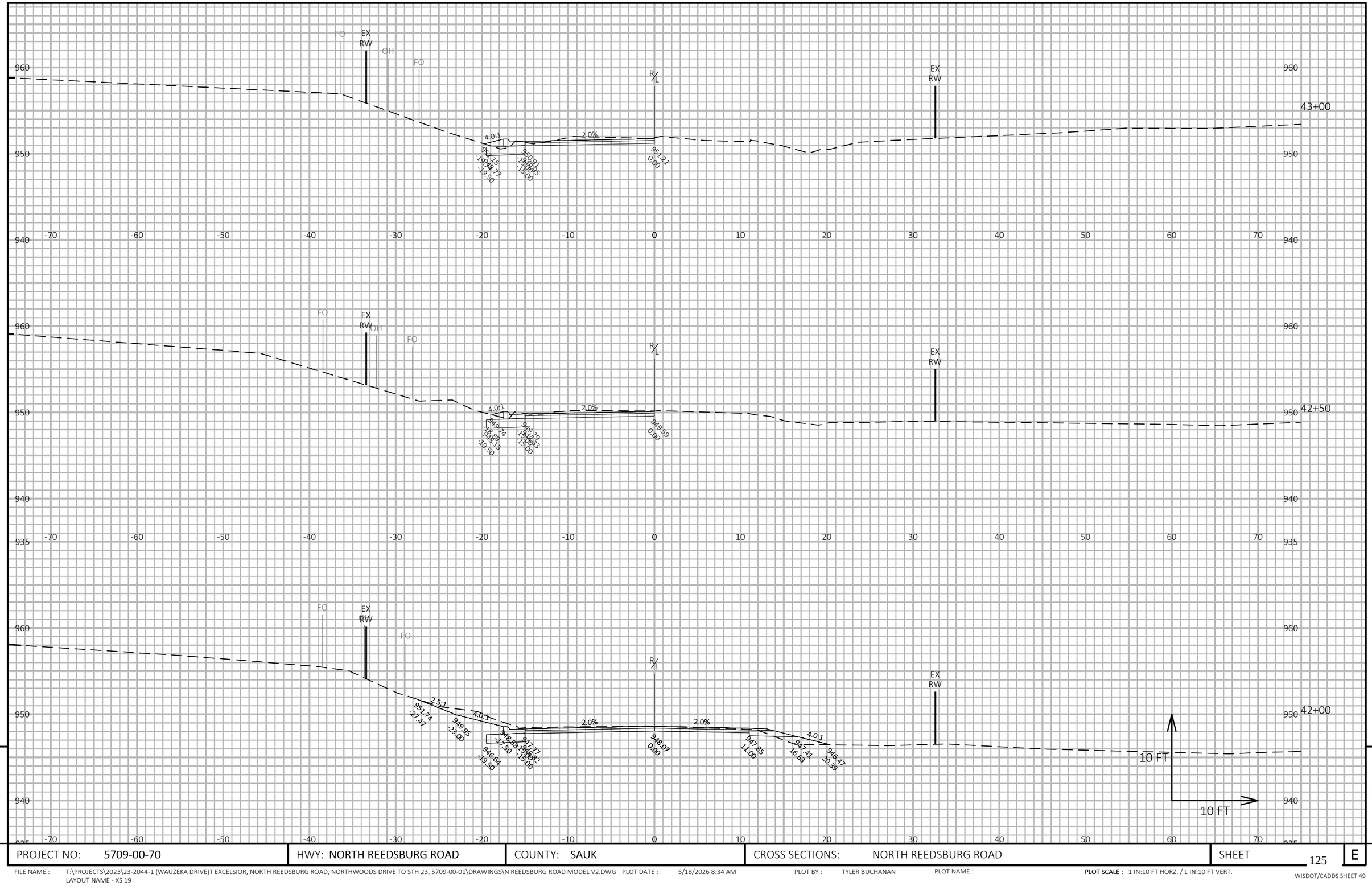

9

9

PROJECT NO: 5709-00-70	HWY: NORTH REEDSBURG ROAD	COUNTY: SAUK	CROSS SECTIONS: NORTH REEDSBURG ROAD	SHEET 125	E

FILE NAME : T:\PROJECTS\2023\23-2044-1 (WAUZEKA DRIVE)T EXCELSIOR, NORTH REEDSBURG ROAD, NORTHWOODS DRIVE TO STH 23, 5709-00-01\DRAWINGS\N REEDSBURG ROAD MODEL V2.DWG PLOT DATE : 5/18/2026 8:34 AM PLOT BY : TYLER BUCHANAN PLOT NAME : **PLOT SCALE :** 1 IN:10 FT HORZ. / 1 IN:10 FT VERT.
LAYOUT NAME - XS 19

WISDOT/CADDS SHEET 49

PROJECT NO: 5709-00-70	HWY: NORTH REEDSBURG ROAD	COUNTY: SAUK	CROSS SECTIONS: NORTH REEDSBURG ROAD	SHEET 126	E

FILE NAME : T:\PROJECTS\2023\23-2044-1 (WAUZEKA DRIVE)T EXCELSIOR, NORTH REEDSBURG ROAD, NORTHWOODS DRIVE TO STH 23, 5709-00-01\DRAWINGS\N REEDSBURG ROAD MODEL V2.DWG PLOT DATE : 5/18/2026 8:35 AM PLOT BY : TYLER BUCHANAN PLOT NAME : **PLOT SCALE :** 1 IN:10 FT HORZ. / 1 IN:10 FT VERT.
LAYOUT NAME - XS 20

WISDOT/CADDS SHEET 49

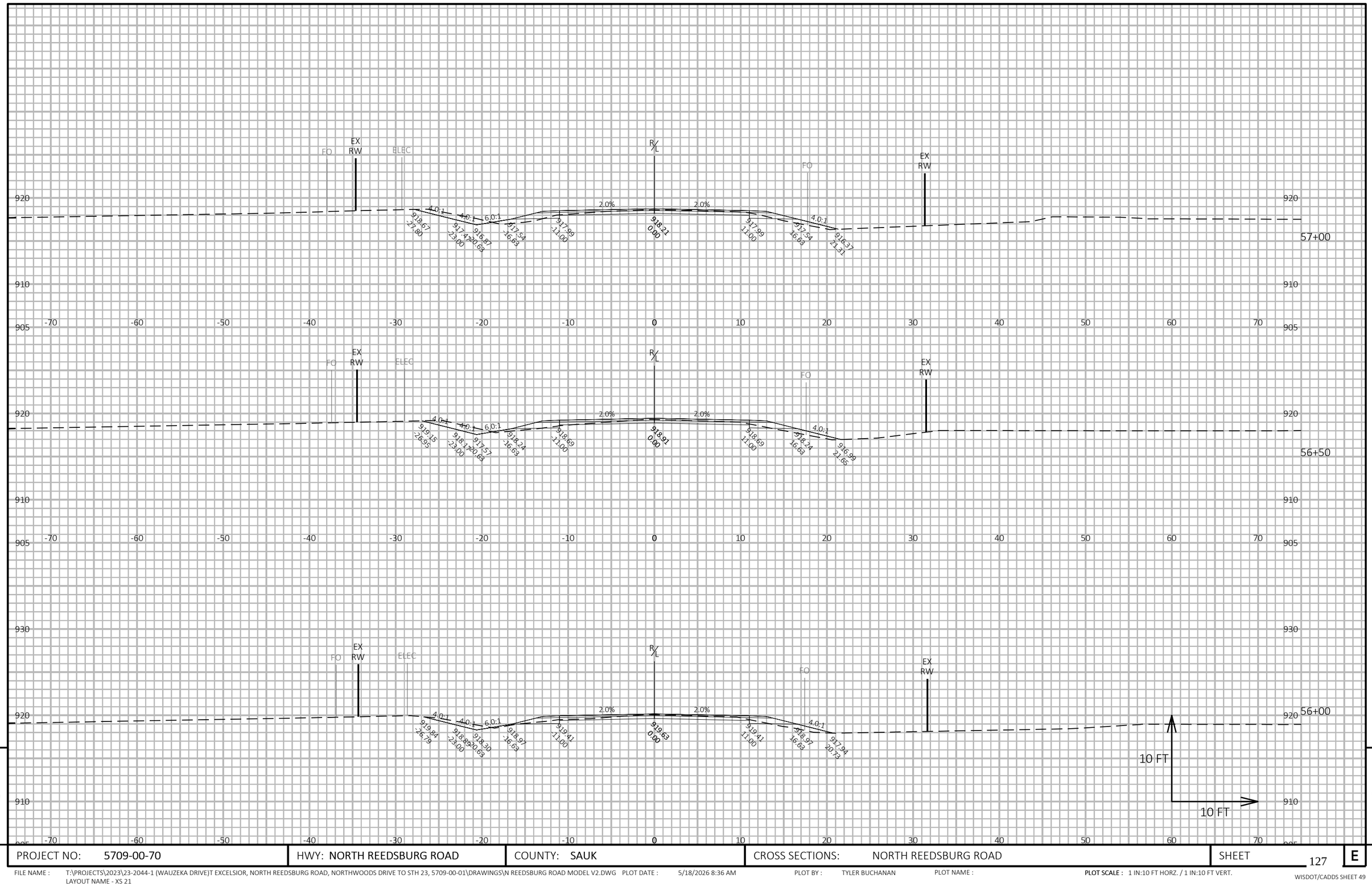

PROJECT NO: 5709-00-70	HWY: NORTH REEDSBURG ROAD	COUNTY: SAUK	CROSS SECTIONS: NORTH REEDSBURG ROAD	SHEET 127	E

FILE NAME : T:\PROJECTS\2023\23-2044-1 (WAUZEKA DRIVE)T EXCELSIOR, NORTH REEDSBURG ROAD, NORTHWOODS DRIVE TO STH 23, 5709-00-01\DRAWINGS\N REEDSBURG ROAD MODEL V2.DWG PLOT DATE : 5/18/2026 8:36 AM PLOT BY : TYLER BUCHANAN PLOT NAME : **PLOT SCALE :** 1 IN:10 FT HORZ. / 1 IN:10 FT VERT.
LAYOUT NAME - XS 21

WISDOT/CADDS SHEET 49

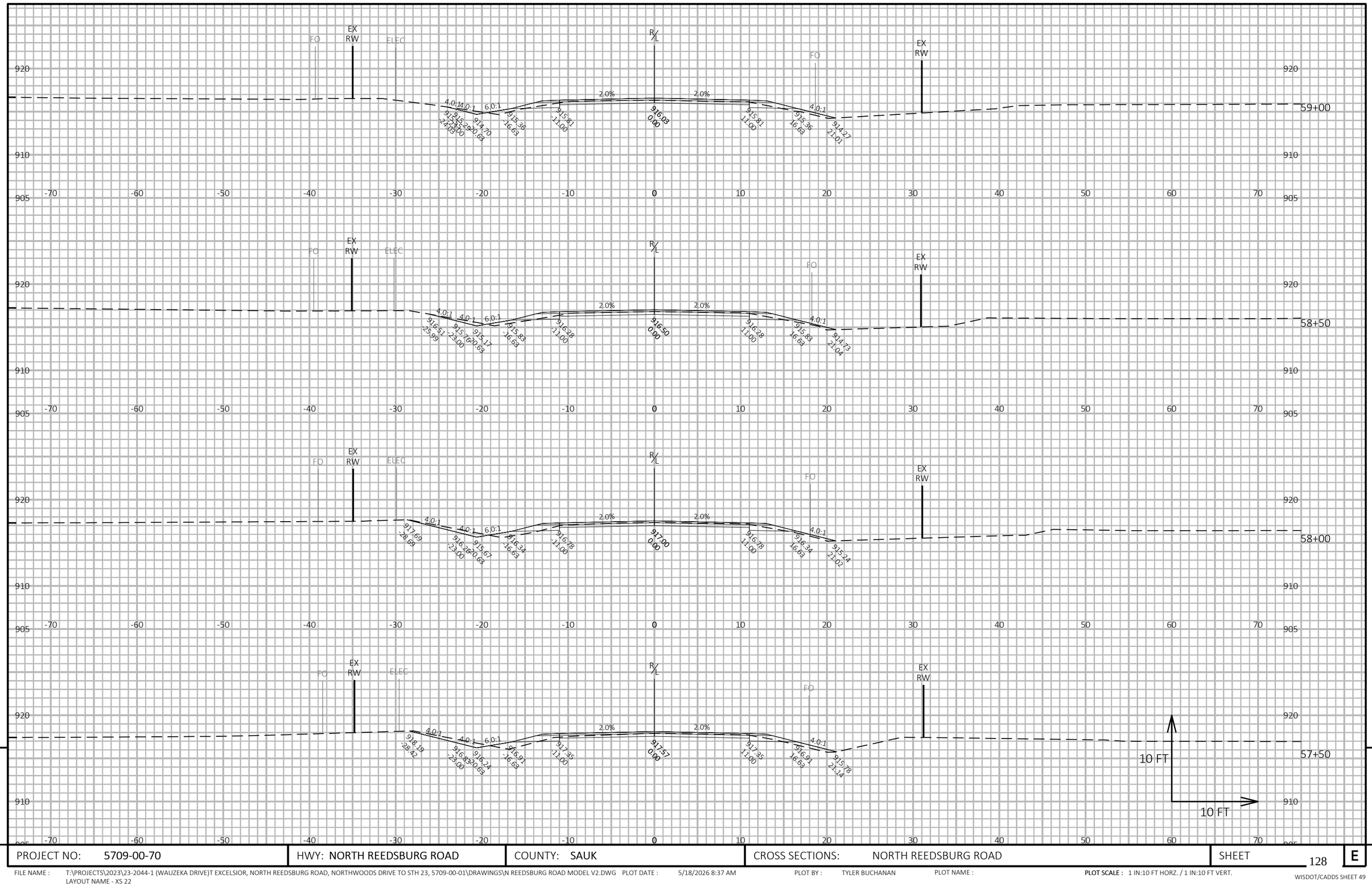

9

9

PROJECT NO: 5709-00-70	HWY: NORTH REEDSBURG ROAD	COUNTY: SAUK	CROSS SECTIONS: NORTH REEDSBURG ROAD	SHEET 128	E

FILE NAME : T:\PROJECTS\2023\23-2044-1 (WAUZEKA DRIVE)T EXCELSIOR, NORTH REEDSBURG ROAD, NORTHWOODS DRIVE TO STH 23, 5709-00-01\DRAWINGS\N REEDSBURG ROAD MODEL V2.DWG PLOT DATE : 5/18/2026 8:37 AM PLOT BY : TYLER BUCHANAN PLOT NAME : **PLOT SCALE :** 1 IN:10 FT HORZ. / 1 IN:10 FT VERT.
LAYOUT NAME - XS 22

9

9

PROJECT NO: 5709-00-70	HWY: NORTH REEDSBURG ROAD	COUNTY: SAUK	CROSS SECTIONS: NORTH REEDSBURG ROAD	SHEET 129	E

FILE NAME : T:\PROJECTS\2023\23-2044-1 (WAUZEKA DRIVE)T EXCELSIOR, NORTH REEDSBURG ROAD, NORTHWOODS DRIVE TO STH 23, 5709-00-01\DRAWINGS\N REEDSBURG ROAD MODEL V2.DWG PLOT DATE : 5/18/2026 8:38 AM PLOT BY : TYLER BUCHANAN PLOT NAME : **PLOT SCALE :** 1 IN:10 FT HORZ. / 1 IN:10 FT VERT.

LAYOUT NAME - XS 23

WISDOT/CADDS SHEET 49

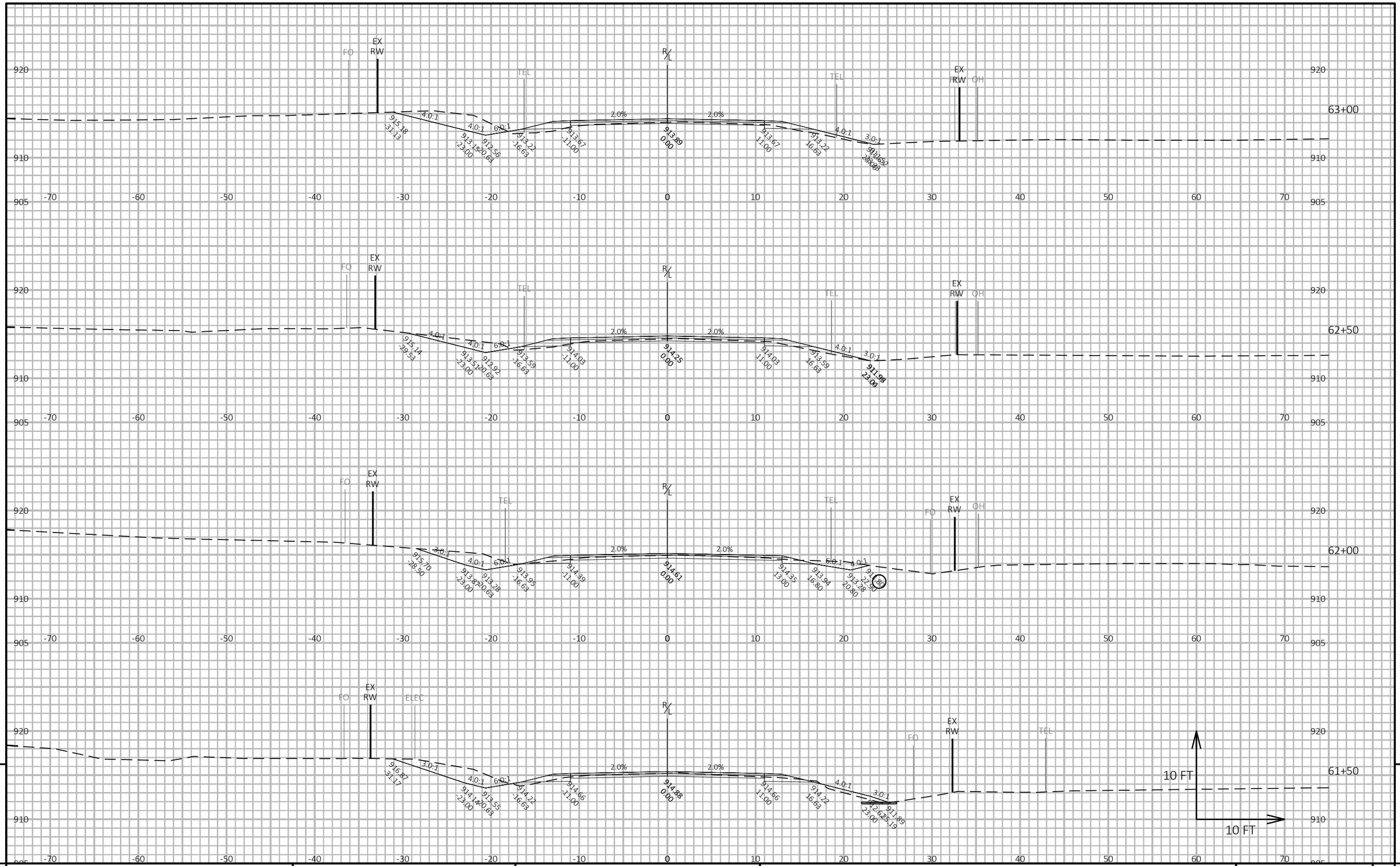

9

9

PROJECT NO: 5709-00-70	HWY: NORTH REEDSBURG ROAD	COUNTY: SAUK	CROSS SECTIONS: NORTH REEDSBURG ROAD	SHEET 130	E

FILE NAME : T:\PROJECTS\2023\23-2044-1 (WAUZEKA DRIVE)T EXCELSIOR, NORTH REEDSBURG ROAD, NORTHWOODS DRIVE TO STH 23, 5709-00-01\DRAWINGS\N REEDSBURG ROAD MODEL V2.DWG PLOT DATE : 5/18/2026 8:39 AM PLOT BY : TYLER BUCHANAN PLOT NAME : **PLOT SCALE :** 1 IN:10 FT HORZ. / 1 IN:10 FT VERT.
LAYOUT NAME - XS 24

WISDOT/CADDS SHEET 49

9

9

PROJECT NO: 5709-00-70	HWY: NORTH REEDSBURG ROAD	COUNTY: SAUK	CROSS SECTIONS: NORTH REEDSBURG ROAD	SHEET 131	E

FILE NAME : T:\PROJECTS\2023\23-2044-1 (WAUZEKA DRIVE)T EXCELSIOR, NORTH REEDSBURG ROAD, NORTHWOODS DRIVE TO STH 23, 5709-00-01\DRAWINGS\N REEDSBURG ROAD MODEL V2.DWG PLOT DATE : 5/18/2026 8:40 AM PLOT BY : TYLER BUCHANAN PLOT NAME : **PLOT SCALE :** 1 IN:10 FT HORZ. / 1 IN:10 FT VERT.
LAYOUT NAME - XS 25

WISDOT/CADDS SHEET 49

PROJECT NO: 5709-00-70	HWY: NORTH REEDSBURG ROAD	COUNTY: SAUK	CROSS SECTIONS: NORTH REEDSBURG ROAD	SHEET 132	E

FILE NAME : T:\PROJECTS\2023\23-2044-1 (WAUZEKA DRIVE)T EXCELSIOR, NORTH REEDSBURG ROAD, NORTHWOODS DRIVE TO STH 23, 5709-00-01\DRAWINGS\N REEDSBURG ROAD MODEL V2.DWG PLOT DATE : 5/18/2026 8:41 AM PLOT BY : TYLER BUCHANAN PLOT NAME : **PLOT SCALE :** 1 IN:10 FT HORZ. / 1 IN:10 FT VERT.
LAYOUT NAME - XS 26

WISDOT/CADDS SHEET 49

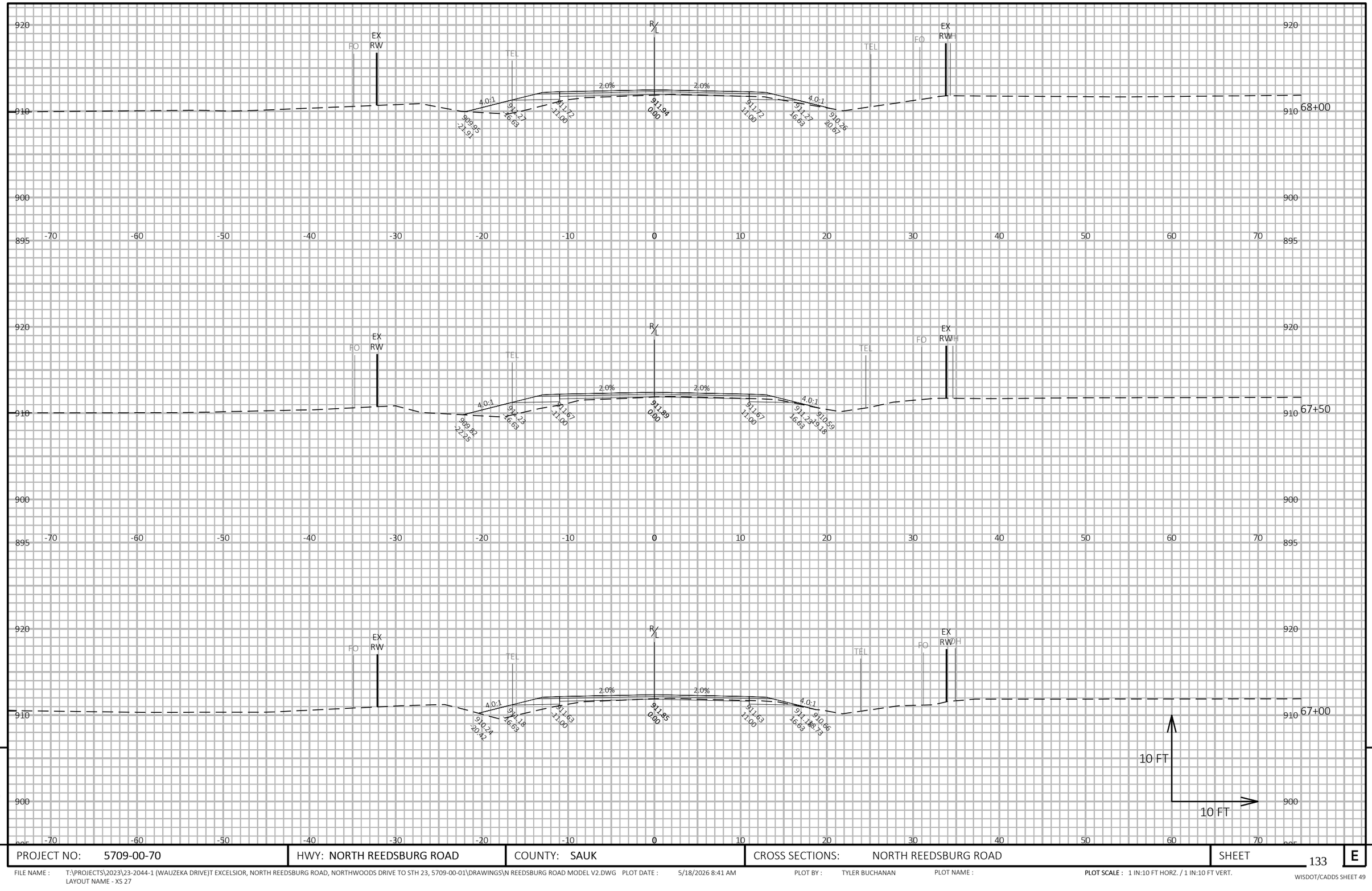

9

9

PROJECT NO: 5709-00-70	HWY: NORTH REEDSBURG ROAD	COUNTY: SAUK	CROSS SECTIONS: NORTH REEDSBURG ROAD	SHEET 133	E

FILE NAME : T:\PROJECTS\2023\23-2044-1 (WAUZEKA DRIVE)T EXCELSIOR, NORTH REEDSBURG ROAD, NORTHWOODS DRIVE TO STH 23, 5709-00-01\DRAWINGS\N REEDSBURG ROAD MODEL V2.DWG PLOT DATE : 5/18/2026 8:41 AM PLOT BY : TYLER BUCHANAN PLOT NAME : **PLOT SCALE :** 1 IN:10 FT HORZ. / 1 IN:10 FT VERT.
LAYOUT NAME - XS 27

WISDOT/CADDS SHEET 49

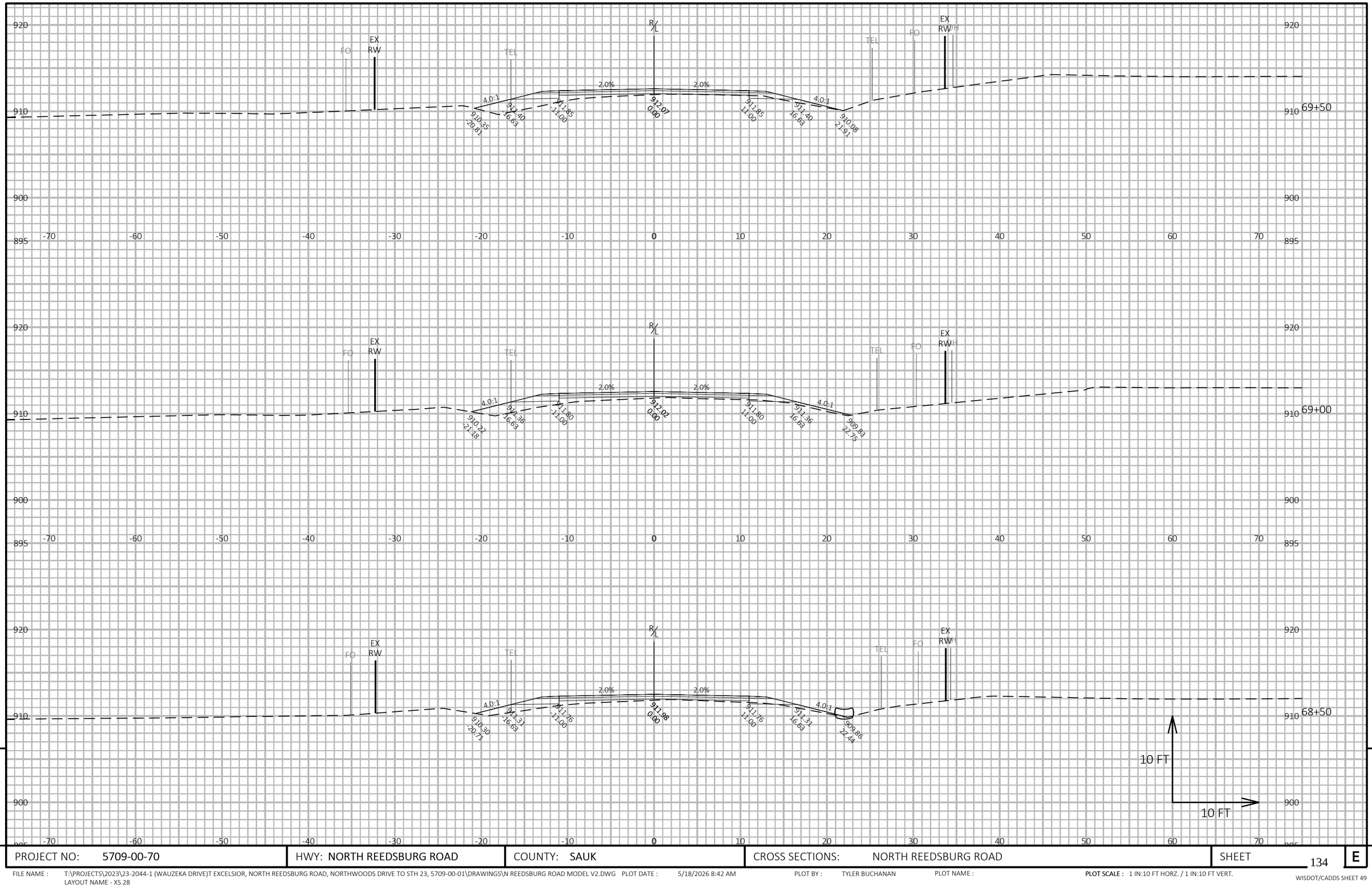

PROJECT NO: 5709-00-70	HWY: NORTH REEDSBURG ROAD	COUNTY: SAUK	CROSS SECTIONS: NORTH REEDSBURG ROAD	SHEET 134	E

FILE NAME : T:\PROJECTS\2023\23-2044-1 (WAUZEKA DRIVE)T EXCELSIOR, NORTH REEDSBURG ROAD, NORTHWOODS DRIVE TO STH 23, 5709-00-01\DRAWINGS\N REEDSBURG ROAD MODEL V2.DWG PLOT DATE : 5/18/2026 8:42 AM PLOT BY : TYLER BUCHANAN PLOT NAME : **PLOT SCALE :** 1 IN:10 FT HORZ. / 1 IN:10 FT VERT.
LAYOUT NAME - XS 28

WISDOT/CADDS SHEET 49

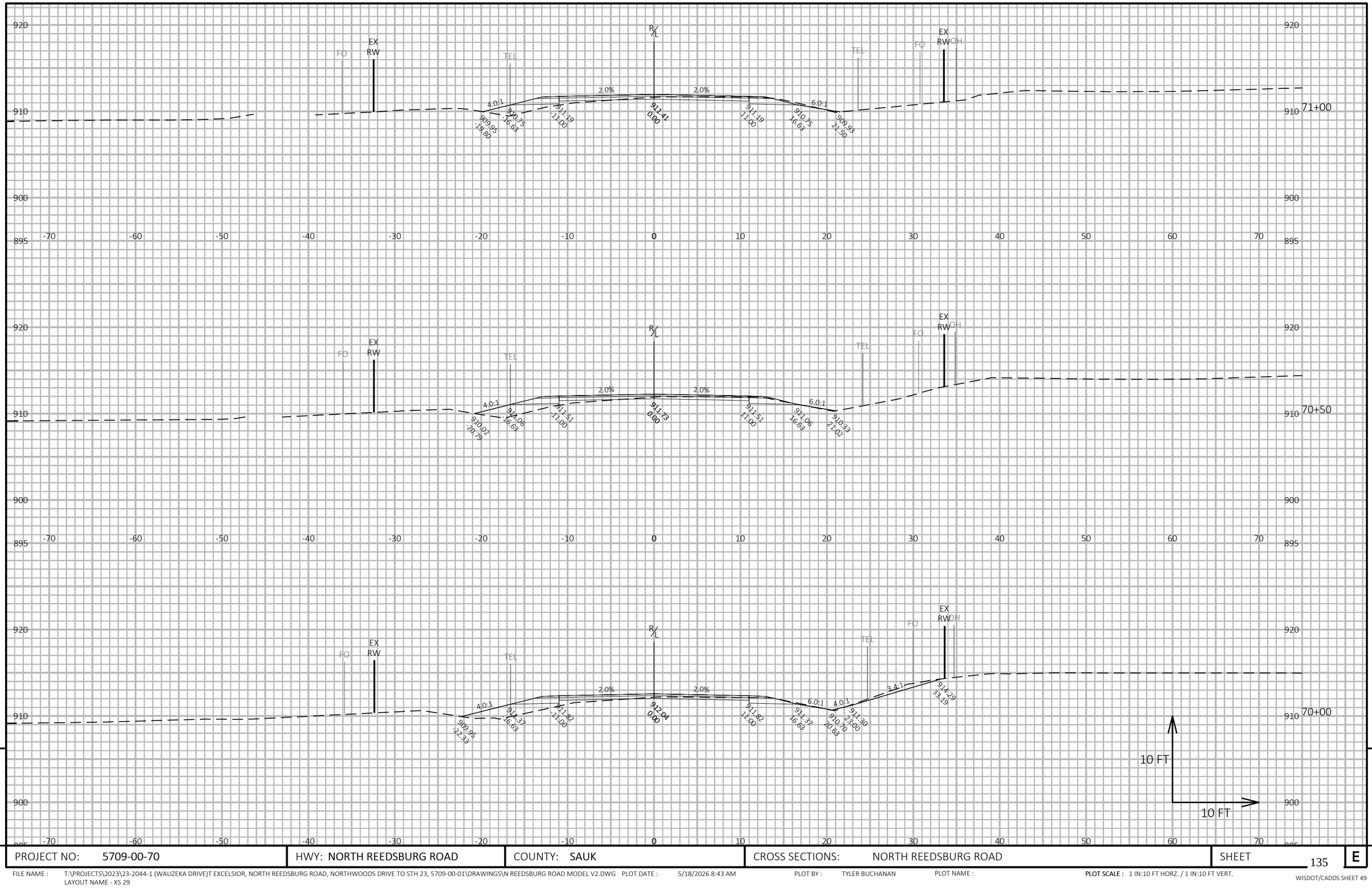

PROJECT NO: 5709-00-70	HWY: NORTH REEDSBURG ROAD	COUNTY: SAUK	CROSS SECTIONS: NORTH REEDSBURG ROAD	SHEET 135 E

FILE NAME : T:\PROJECTS\2023\23-2044-1 (WAUZEKA DRIVE)T EXCELSIOR, NORTH REEDSBURG ROAD, NORTHWOODS DRIVE TO STH 23, 5709-00-01\DRAWINGS\N REEDSBURG ROAD MODEL V2.DWG PLOT DATE : 5/18/2026 8:43 AM PLOT BY : TYLER BUCHANAN PLOT NAME : **PLOT SCALE :** 1 IN:10 FT HORZ. / 1 IN:10 FT VERT.
LAYOUT NAME - XS 29

WISDOT/CADDS SHEET 49

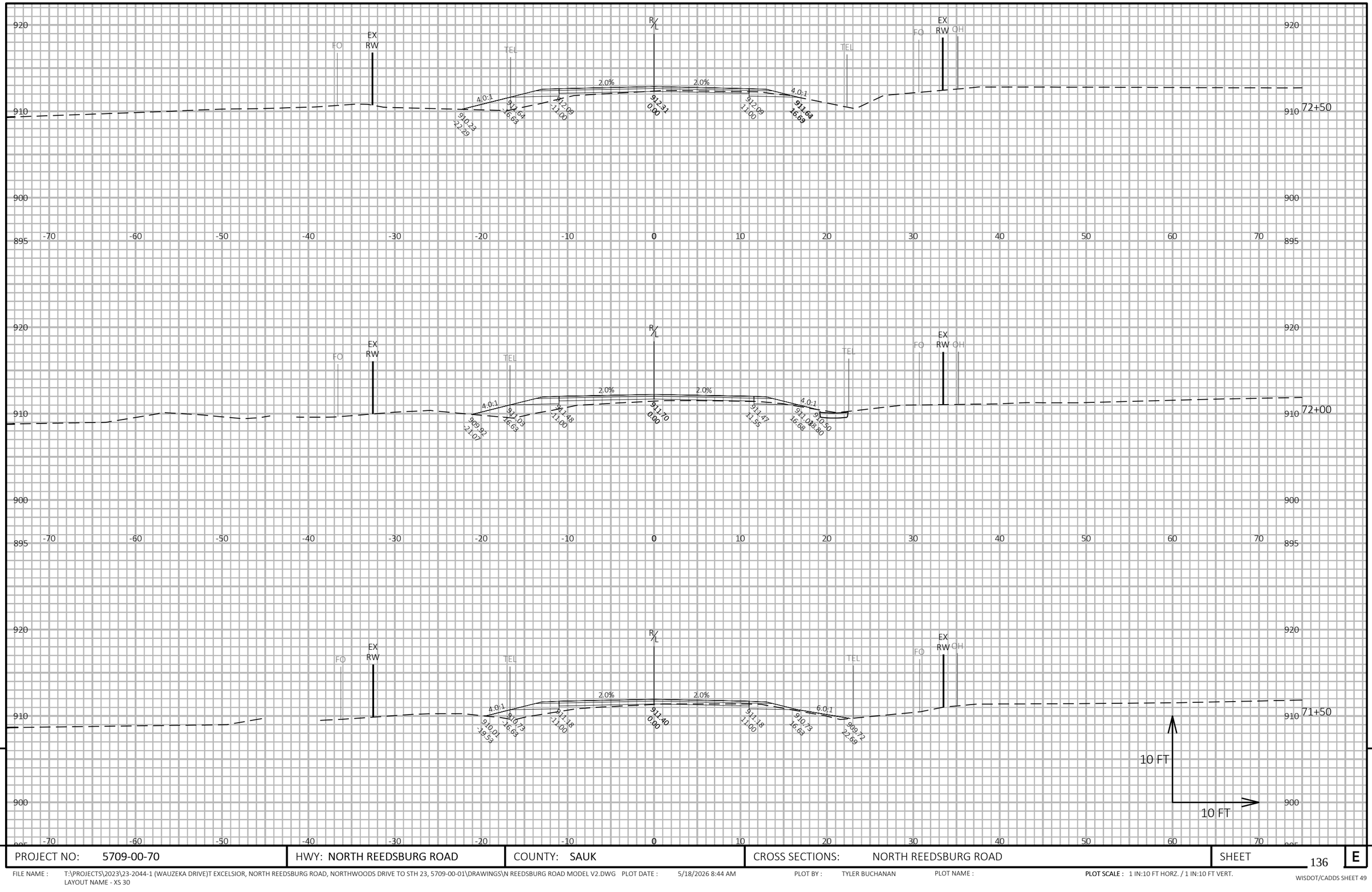

PROJECT NO: 5709-00-70	HWY: NORTH REEDSBURG ROAD	COUNTY: SAUK	CROSS SECTIONS: NORTH REEDSBURG ROAD	SHEET 136	E

FILE NAME : T:\PROJECTS\2023\23-2044-1 (WAUZEKA DRIVE)T EXCELSIOR, NORTH REEDSBURG ROAD, NORTHWOODS DRIVE TO STH 23, 5709-00-01\DRAWINGS\N REEDSBURG ROAD MODEL V2.DWG PLOT DATE : 5/18/2026 8:44 AM PLOT BY : TYLER BUCHANAN PLOT NAME : **PLOT SCALE :** 1 IN:10 FT HORZ. / 1 IN:10 FT VERT.
LAYOUT NAME - XS 30

WISDOT/CADDS SHEET 49

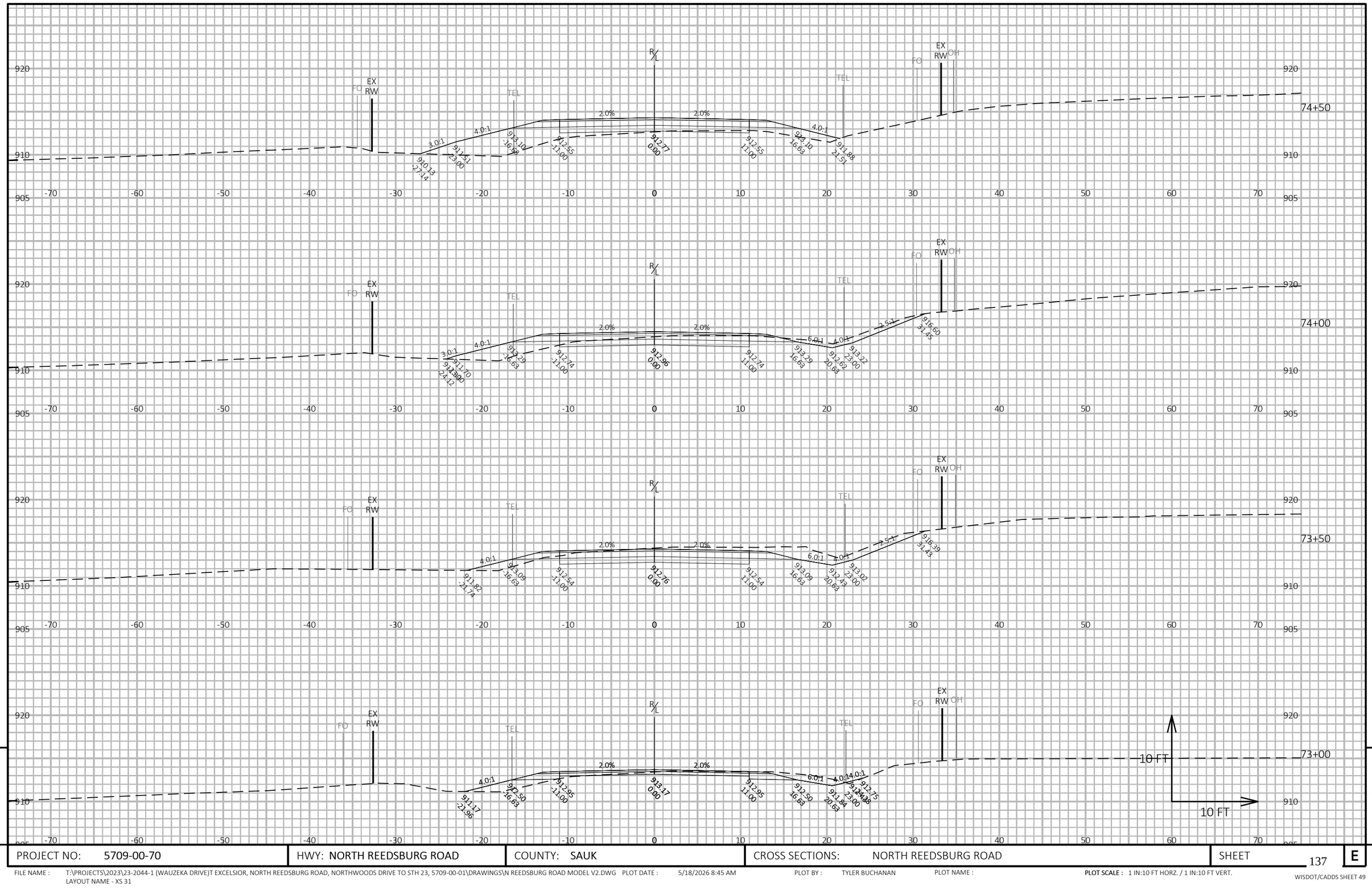

9

9

PROJECT NO: 5709-00-70	HWY: NORTH REEDSBURG ROAD	COUNTY: SAUK	CROSS SECTIONS: NORTH REEDSBURG ROAD	SHEET 137	E

FILE NAME : T:\PROJECTS\2023\23-2044-1 (WAUZEKA DRIVE)T EXCELSIOR, NORTH REEDSBURG ROAD, NORTHWOODS DRIVE TO STH 23, 5709-00-01\DRAWINGS\N REEDSBURG ROAD MODEL V2.DWG PLOT DATE : 5/18/2026 8:45 AM PLOT BY : TYLER BUCHANAN PLOT NAME : **PLOT SCALE :** 1 IN:10 FT HORZ. / 1 IN:10 FT VERT.
LAYOUT NAME - XS 31

WISDOT/CADDS SHEET 49

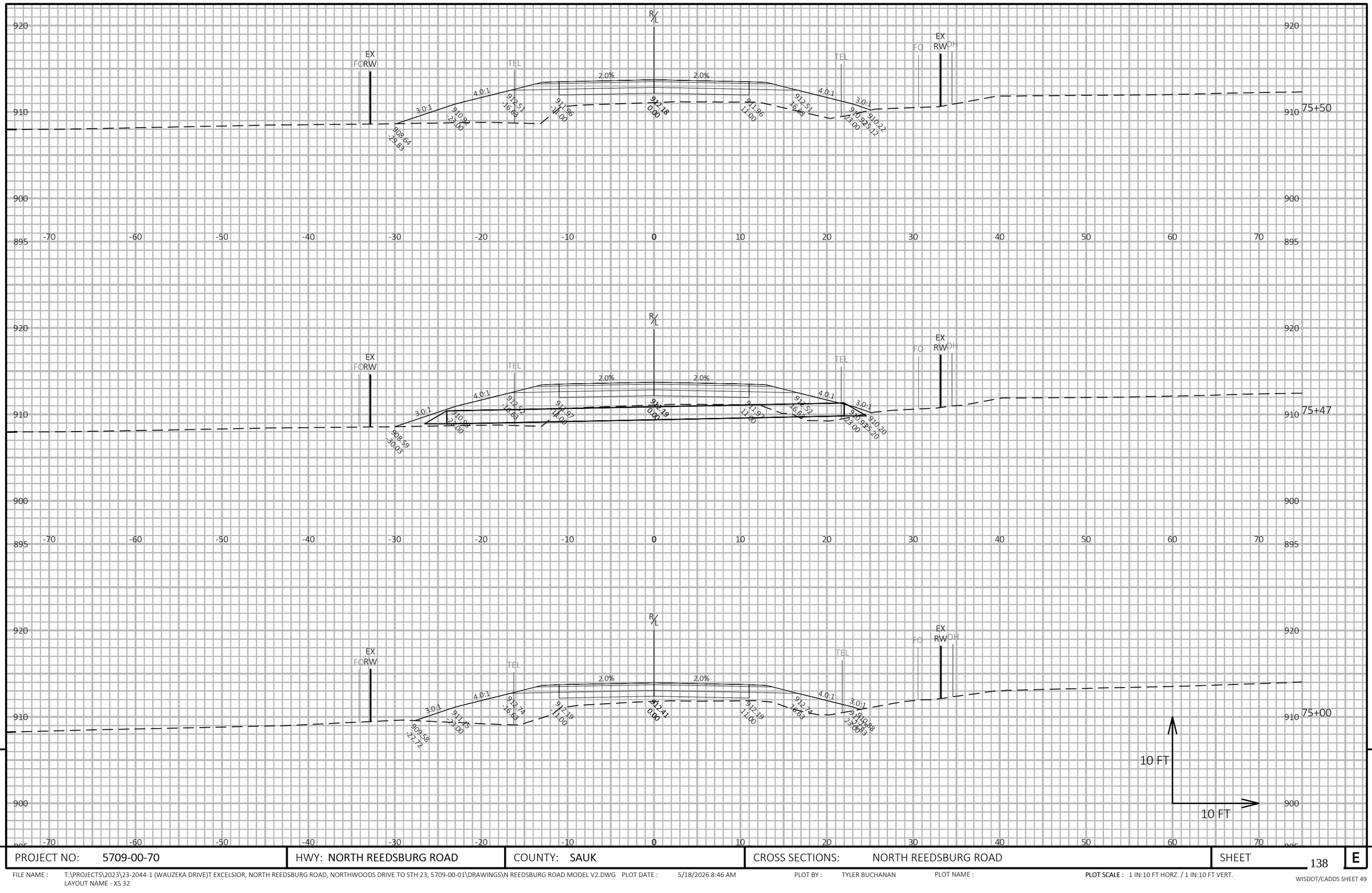

9

9

PROJECT NO: 5709-00-70	HWY: NORTH REEDSBURG ROAD	COUNTY: SAUK	CROSS SECTIONS: NORTH REEDSBURG ROAD	SHEET 138	E

FILE NAME : T:\PROJECTS\2023\23-2044-1 (WAUZEKA DRIVE)T EXCELSIOR, NORTH REEDSBURG ROAD, NORTHWOODS DRIVE TO STH 23, 5709-00-01\DRAWINGS\N REEDSBURG ROAD MODEL V2.DWG PLOT DATE : 5/18/2026 8:46 AM PLOT BY : TYLER BUCHANAN PLOT NAME : **PLOT SCALE :** 1 IN:10 FT HORZ. / 1 IN:10 FT VERT.
LAYOUT NAME - XS 32

WISDOT/CADDS SHEET 49

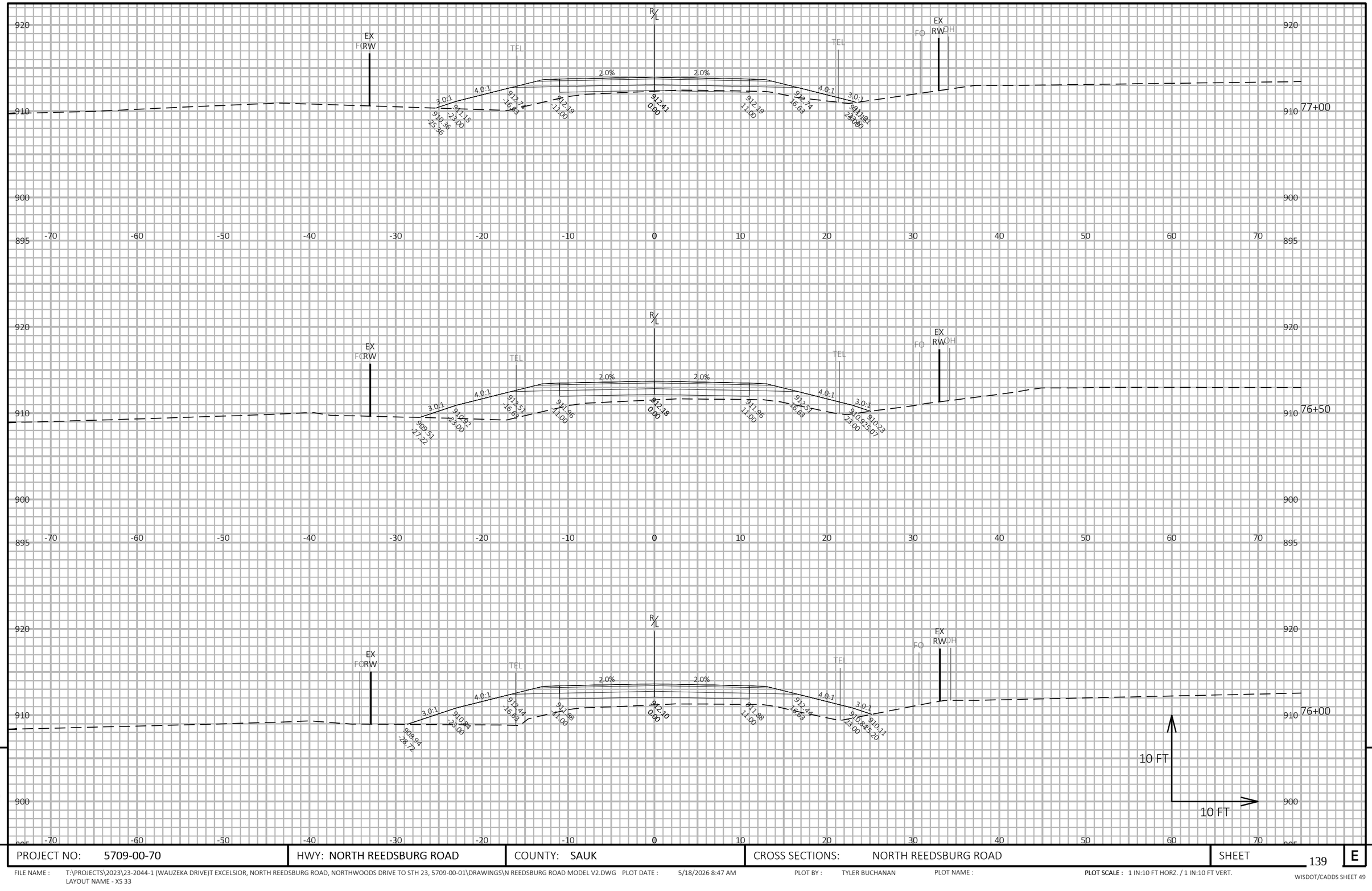

PROJECT NO: 5709-00-70	HWY: NORTH REEDSBURG ROAD	COUNTY: SAUK	CROSS SECTIONS: NORTH REEDSBURG ROAD	SHEET 139	E

FILE NAME : T:\PROJECTS\2023\23-2044-1 (WAUZEKA DRIVE)T EXCELSIOR, NORTH REEDSBURG ROAD, NORTHWOODS DRIVE TO STH 23, 5709-00-01\DRAWINGS\N REEDSBURG ROAD MODEL V2.DWG PLOT DATE : 5/18/2026 8:47 AM PLOT BY : TYLER BUCHANAN PLOT NAME : **PLOT SCALE :** 1 IN:10 FT HORZ. / 1 IN:10 FT VERT.
LAYOUT NAME - XS 33

WISDOT/CADDS SHEET 49

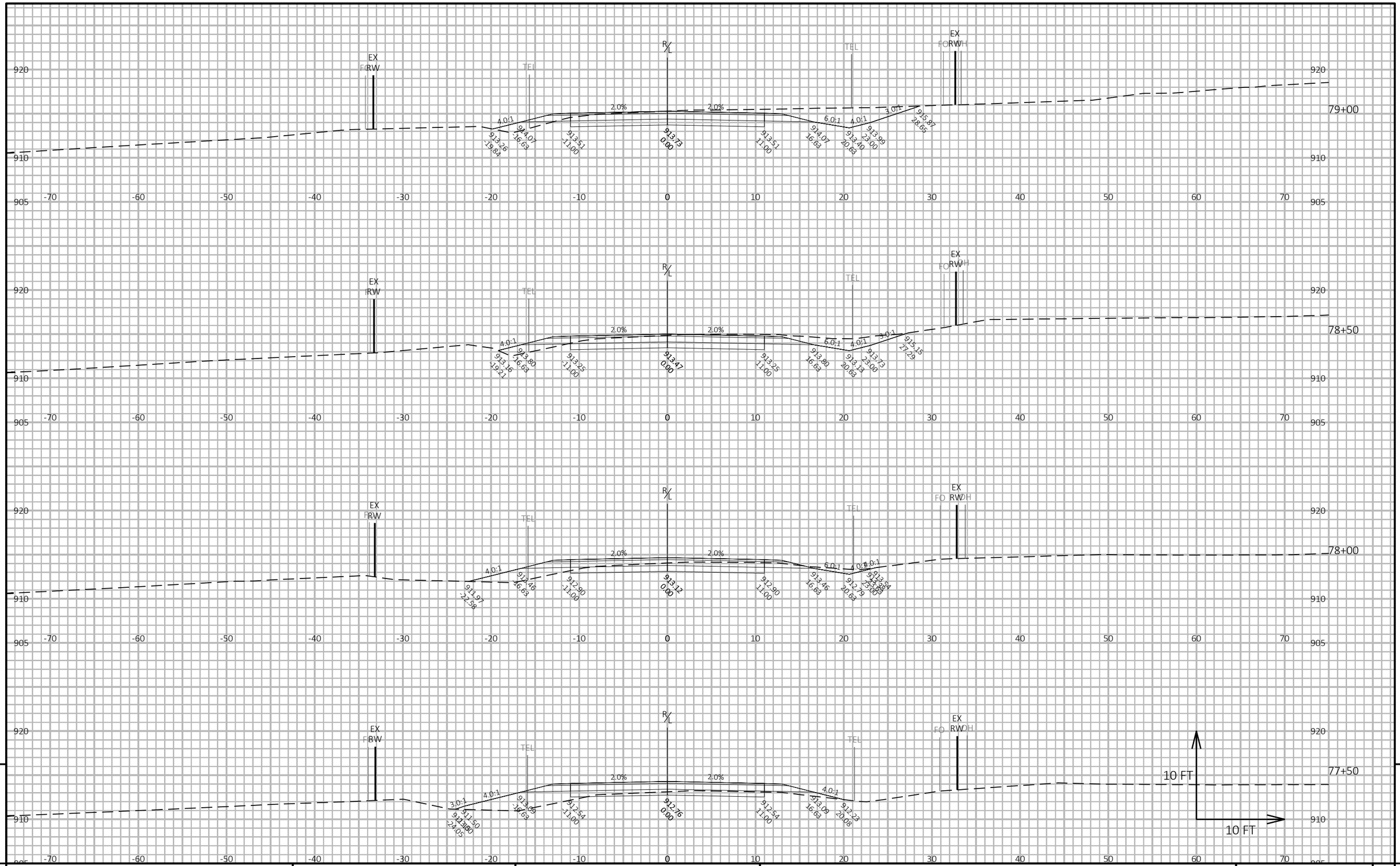

9

9

PROJECT NO: 5709-00-70	HWY: NORTH REEDSBURG ROAD	COUNTY: SAUK	CROSS SECTIONS: NORTH REEDSBURG ROAD	SHEET 140	E

FILE NAME : T:\PROJECTS\2023\23-2044-1 (WAUZEKA DRIVE)T EXCELSIOR, NORTH REEDSBURG ROAD, NORTHWOODS DRIVE TO STH 23, 5709-00-01\DRAWINGS\N REEDSBURG ROAD MODEL V2.DWG PLOT DATE : 5/18/2026 8:48 AM PLOT BY : TYLER BUCHANAN PLOT NAME : **PLOT SCALE :** 1 IN:10 FT HORZ. / 1 IN:10 FT VERT.
LAYOUT NAME - XS 34

WISDOT/CADDS SHEET 49

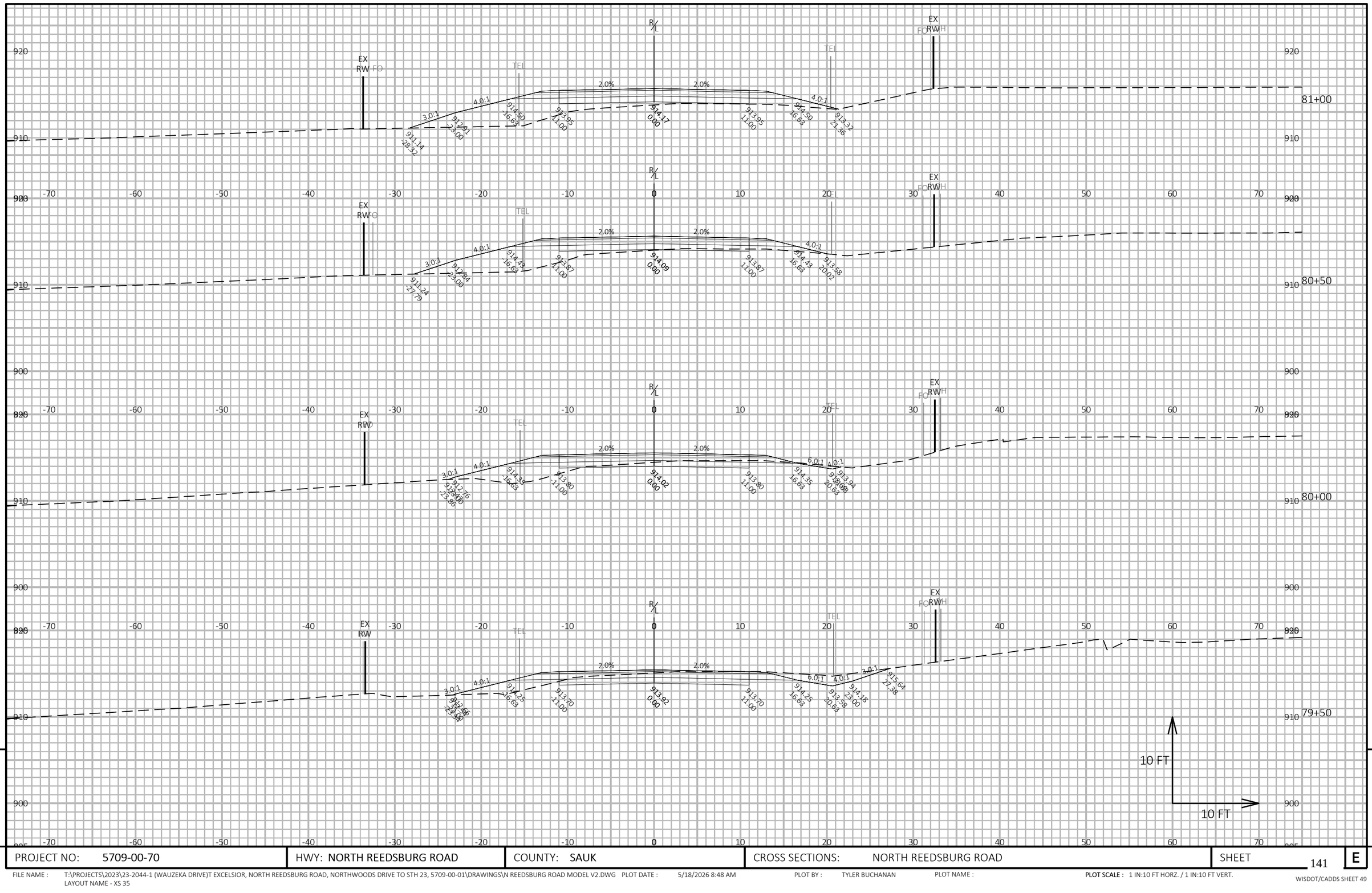

9

9

PROJECT NO: 5709-00-70	HWY: NORTH REEDSBURG ROAD	COUNTY: SAUK	CROSS SECTIONS: NORTH REEDSBURG ROAD	SHEET 141	E

FILE NAME : T:\PROJECTS\2023\23-2044-1 (WAUZEKA DRIVE)T EXCELSIOR, NORTH REEDSBURG ROAD, NORTHWOODS DRIVE TO STH 23, 5709-00-01\DRAWINGS\N REEDSBURG ROAD MODEL V2.DWG PLOT DATE : 5/18/2026 8:48 AM PLOT BY : TYLER BUCHANAN PLOT NAME : **PLOT SCALE :** 1 IN:10 FT HORZ. / 1 IN:10 FT VERT.
LAYOUT NAME - XS 35

WISDOT/CADDS SHEET 49

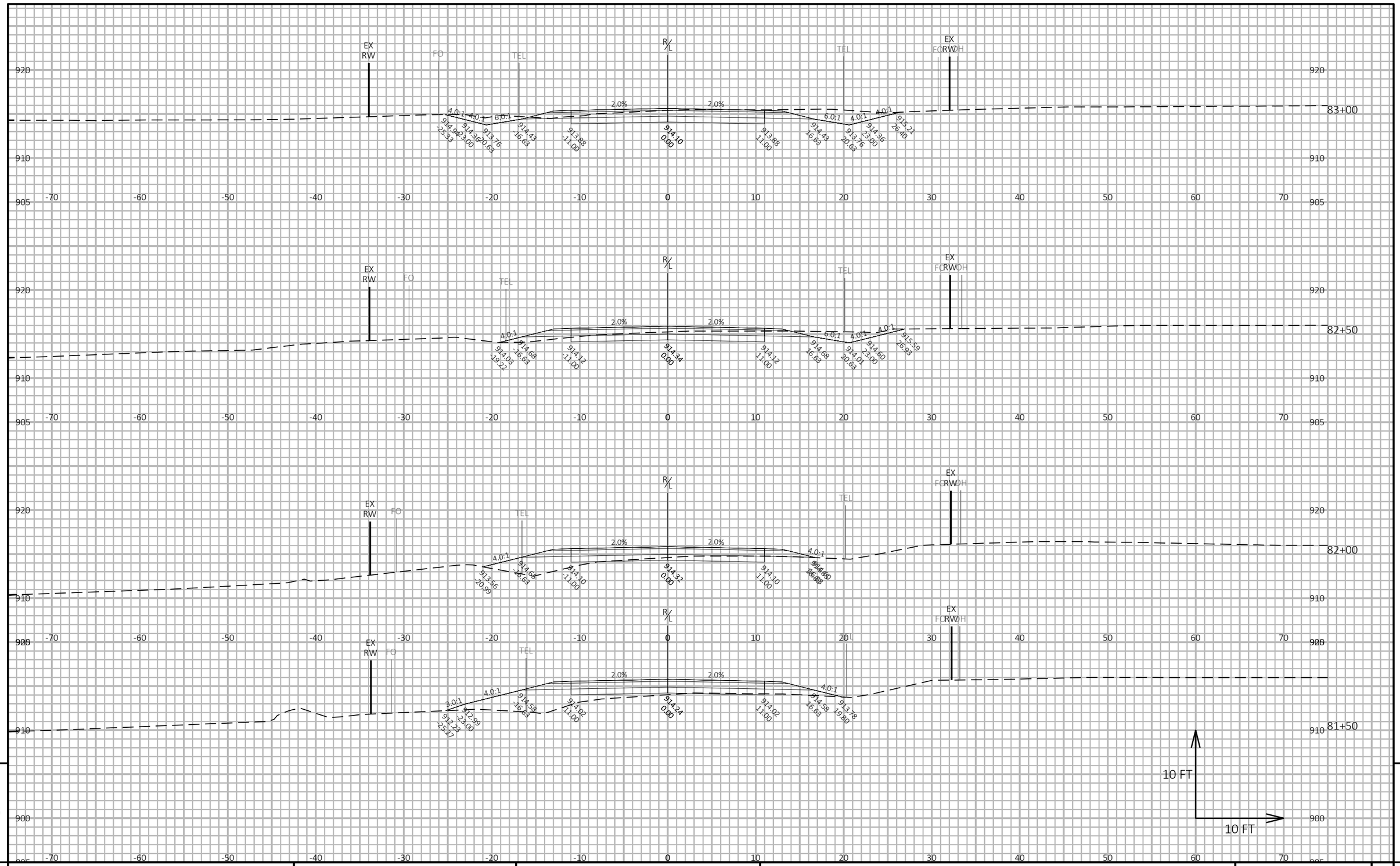

9

9

PROJECT NO: 5709-00-70	HWY: NORTH REEDSBURG ROAD	COUNTY: SAUK	CROSS SECTIONS: NORTH REEDSBURG ROAD	SHEET 142	E

FILE NAME : T:\PROJECTS\2023\23-2044-1 (WAUZEKA DRIVE)T EXCELSIOR, NORTH REEDSBURG ROAD, NORTHWOODS DRIVE TO STH 23, 5709-00-01\DRAWINGS\N REEDSBURG ROAD MODEL V2.DWG PLOT DATE : 5/18/2026 8:49 AM PLOT BY : TYLER BUCHANAN PLOT NAME : **PLOT SCALE :** 1 IN:10 FT HORZ. / 1 IN:10 FT VERT.

LAYOUT NAME - XS 36

WISDOT/CADDS SHEET 49

9

9

PROJECT NO: 5709-00-70	HWY: NORTH REEDSBURG ROAD	COUNTY: SAUK	CROSS SECTIONS: NORTH REEDSBURG ROAD	SHEET 143	E

FILE NAME : T:\PROJECTS\2023\23-2044-1 (WAUZEKA DRIVE)T EXCELSIOR, NORTH REEDSBURG ROAD, NORTHWOODS DRIVE TO STH 23, 5709-00-01\DRAWINGS\N REEDSBURG ROAD MODEL V2.DWG PLOT DATE : 5/18/2026 8:50 AM PLOT BY : TYLER BUCHANAN PLOT NAME : **PLOT SCALE :** 1 IN:10 FT HORZ. / 1 IN:10 FT VERT.
LAYOUT NAME - XS 37

WISDOT/CADDS SHEET 49

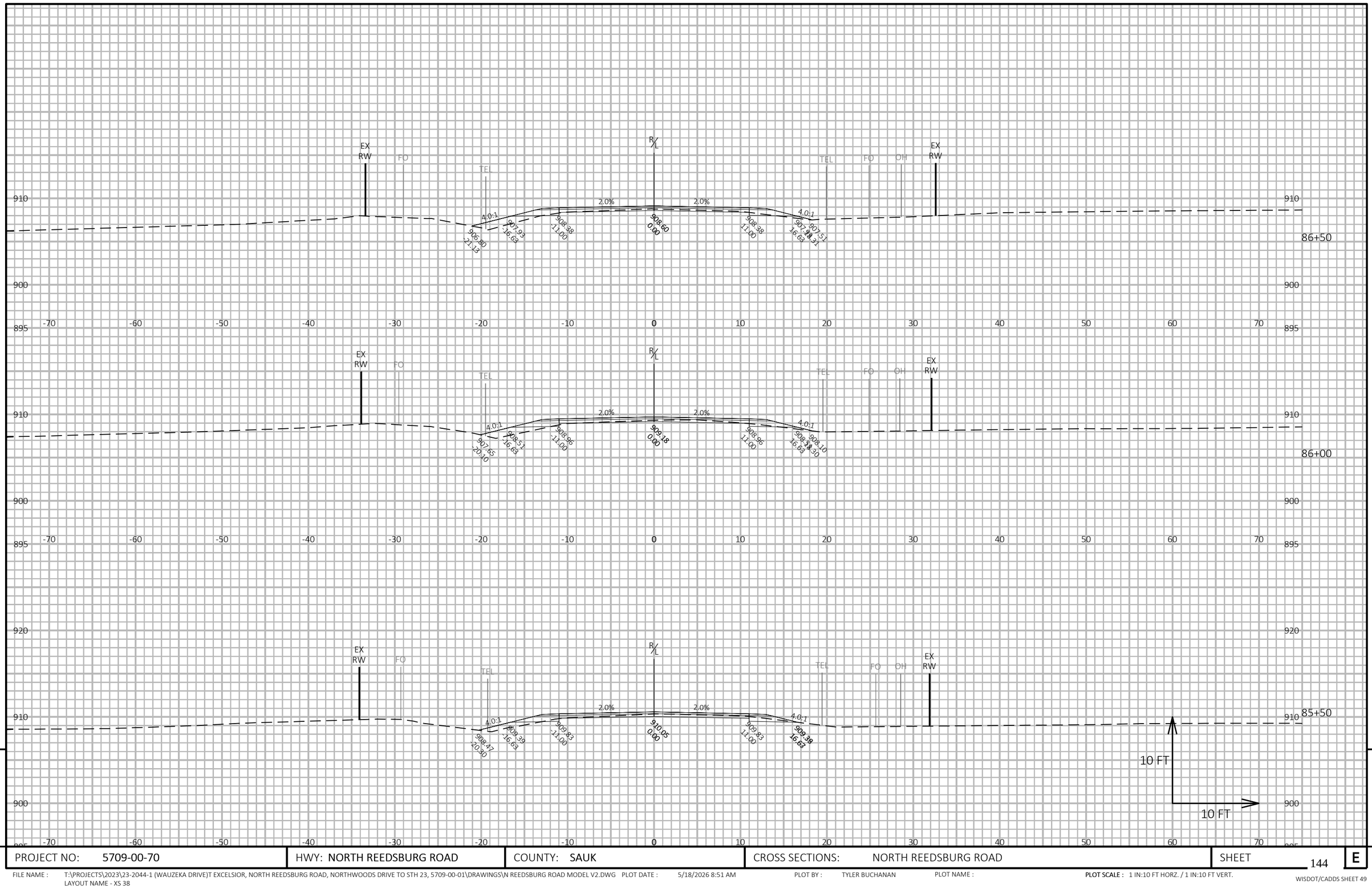

9

9

PROJECT NO: 5709-00-70	HWY: NORTH REEDSBURG ROAD	COUNTY: SAUK	CROSS SECTIONS: NORTH REEDSBURG ROAD	SHEET 144	E

FILE NAME : T:\PROJECTS\2023\23-2044-1 (WAUZEKA DRIVE)T EXCELSIOR, NORTH REEDSBURG ROAD, NORTHWOODS DRIVE TO STH 23, 5709-00-01\DRAWINGS\N REEDSBURG ROAD MODEL V2.DWG PLOT DATE : 5/18/2026 8:51 AM PLOT BY : TYLER BUCHANAN PLOT NAME : **PLOT SCALE :** 1 IN:10 FT HORZ. / 1 IN:10 FT VERT.
LAYOUT NAME - XS 38

WISDOT/CADDS SHEET 49

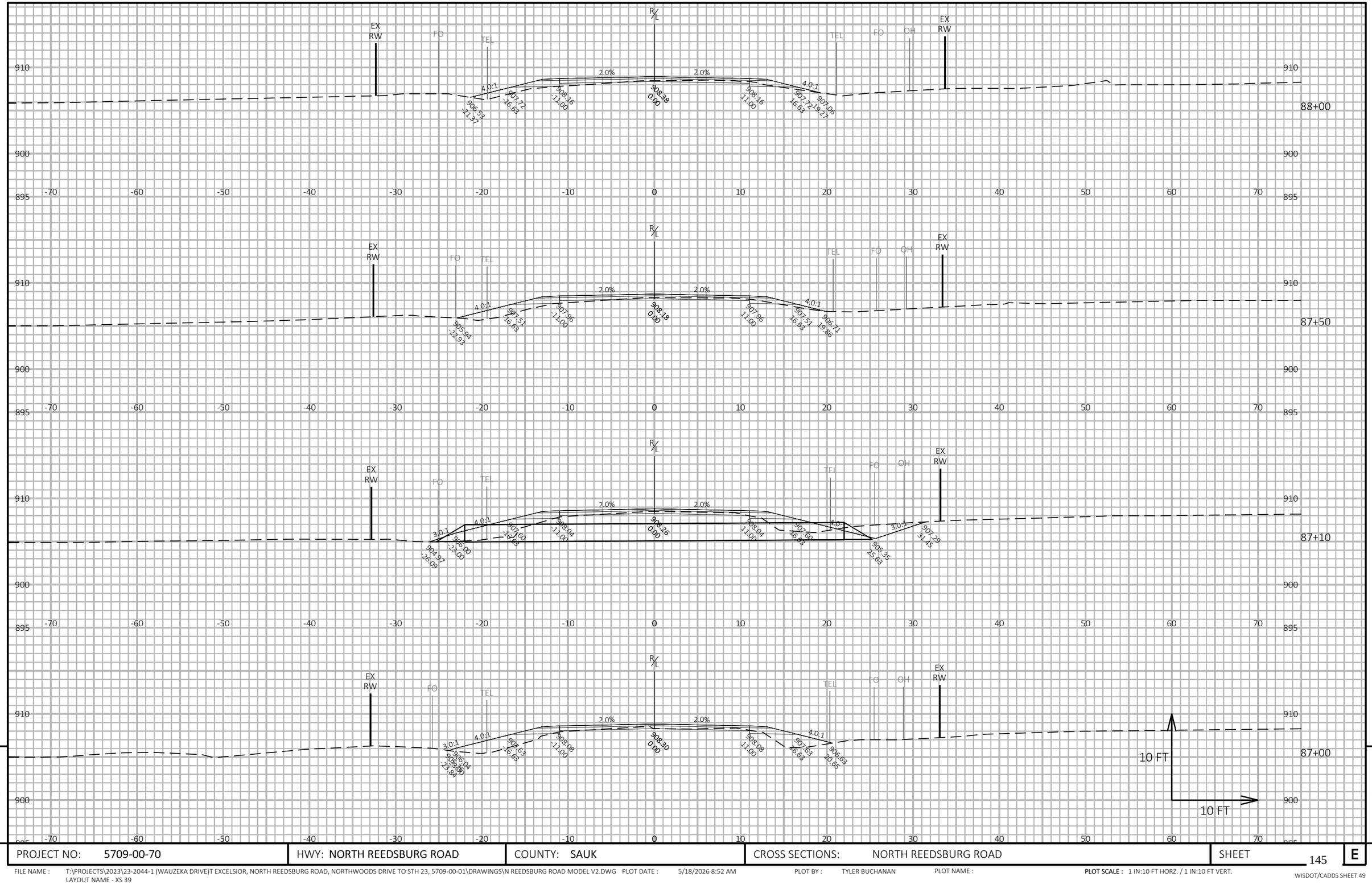

PROJECT NO: 5709-00-70	HWY: NORTH REEDSBURG ROAD	COUNTY: SAUK	CROSS SECTIONS: NORTH REEDSBURG ROAD	SHEET 145	E

FILE NAME : T:\PROJECTS\2023\23-2044-1 (WAUZEKA DRIVE)T EXCELSIOR, NORTH REEDSBURG ROAD, NORTHWOODS DRIVE TO STH 23, 5709-00-01\DRAWINGS\N REEDSBURG ROAD MODEL V2.DWG PLOT DATE : 5/18/2026 8:52 AM PLOT BY : TYLER BUCHANAN PLOT NAME : **PLOT SCALE :** 1 IN:10 FT HORZ. / 1 IN:10 FT VERT.
LAYOUT NAME - XS 39

WISDOT/CADDS SHEET 49

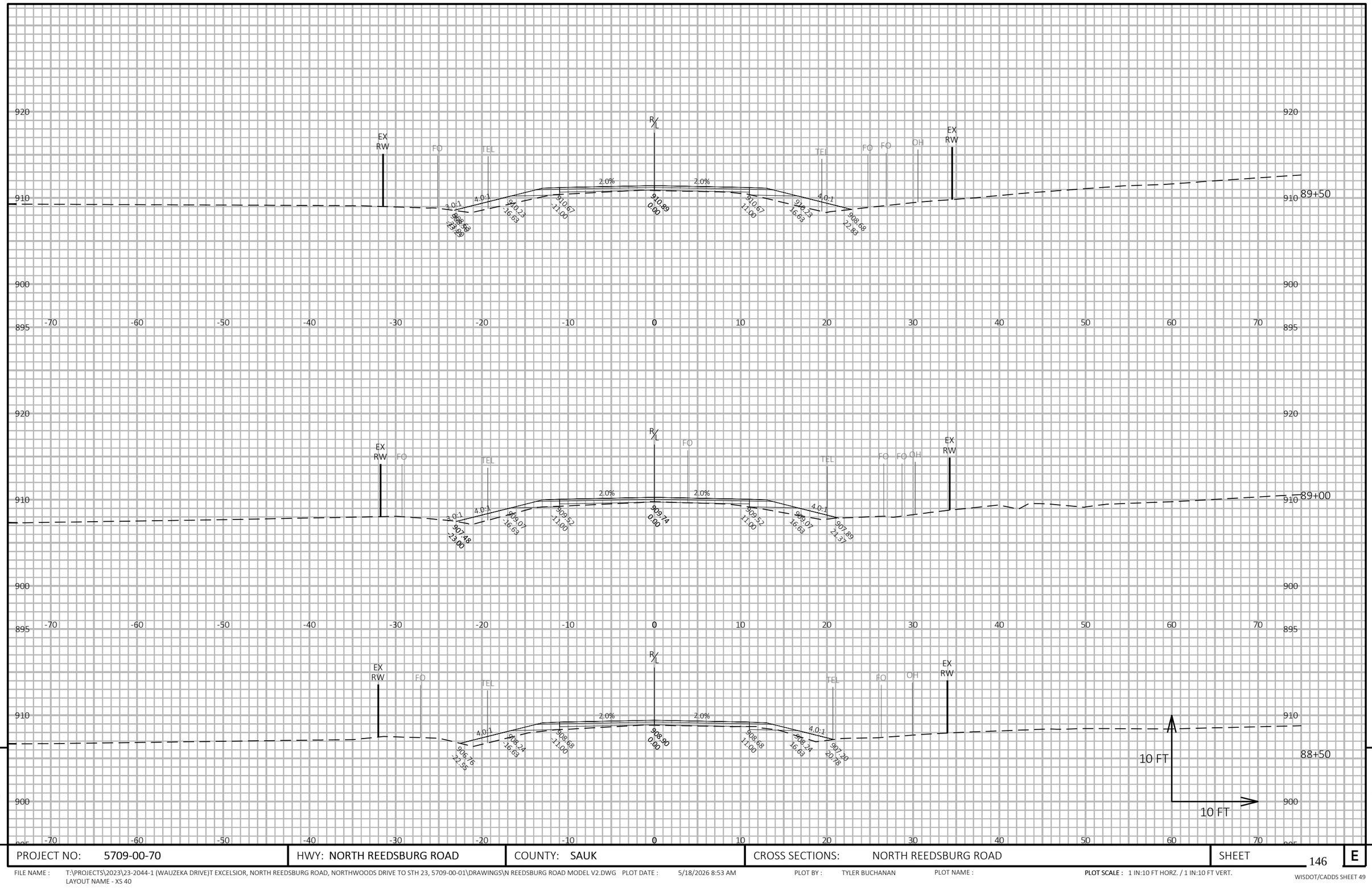

9

9

PROJECT NO: 5709-00-70	HWY: NORTH REEDSBURG ROAD	COUNTY: SAUK	CROSS SECTIONS: NORTH REEDSBURG ROAD	SHEET 146	E

FILE NAME : T:\PROJECTS\2023\23-2044-1 (WAUZEKA DRIVE)T EXCELSIOR, NORTH REEDSBURG ROAD, NORTHWOODS DRIVE TO STH 23, 5709-00-01\DRAWINGS\N REEDSBURG ROAD MODEL V2.DWG PLOT DATE : 5/18/2026 8:53 AM PLOT BY : TYLER BUCHANAN PLOT NAME : **PLOT SCALE :** 1 IN:10 FT HORZ. / 1 IN:10 FT VERT.
LAYOUT NAME - XS 40

WISDOT/CADDS SHEET 49

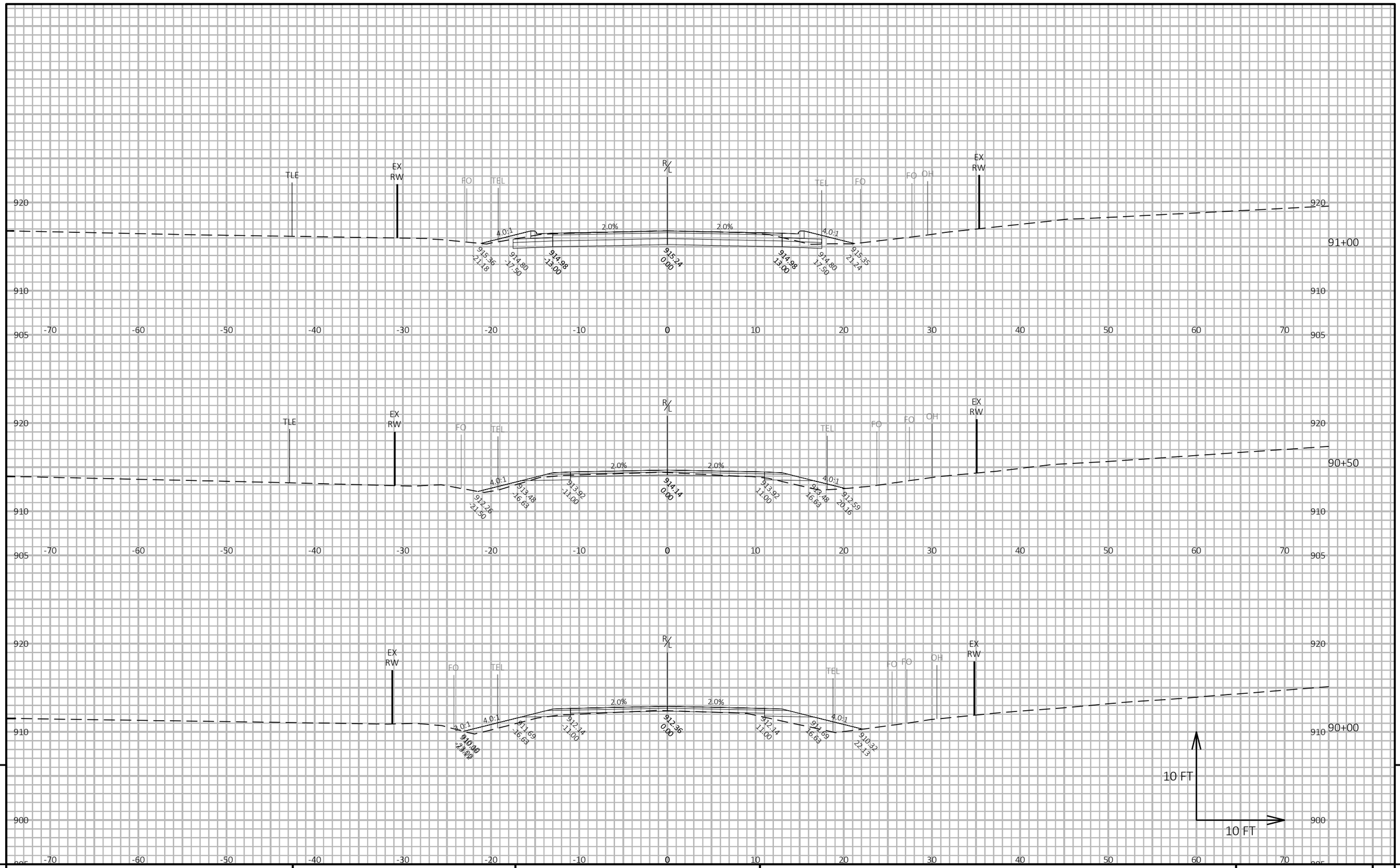

9

9

PROJECT NO: 5709-00-70	HWY: NORTH REEDSBURG ROAD	COUNTY: SAUK	CROSS SECTIONS: NORTH REEDSBURG ROAD	SHEET 147	E

FILE NAME : T:\PROJECTS\2023\23-2044-1 (WAUZEKA DRIVE)T EXCELSIOR, NORTH REEDSBURG ROAD, NORTHWOODS DRIVE TO STH 23, 5709-00-01\DRAWINGS\N REEDSBURG ROAD MODEL V2.DWG PLOT DATE : 5/18/2026 8:54 AM PLOT BY : TYLER BUCHANAN PLOT NAME : **PLOT SCALE :** 1 IN:10 FT HORZ. / 1 IN:10 FT VERT.
LAYOUT NAME - XS 41

WISDOT/CADDS SHEET 49

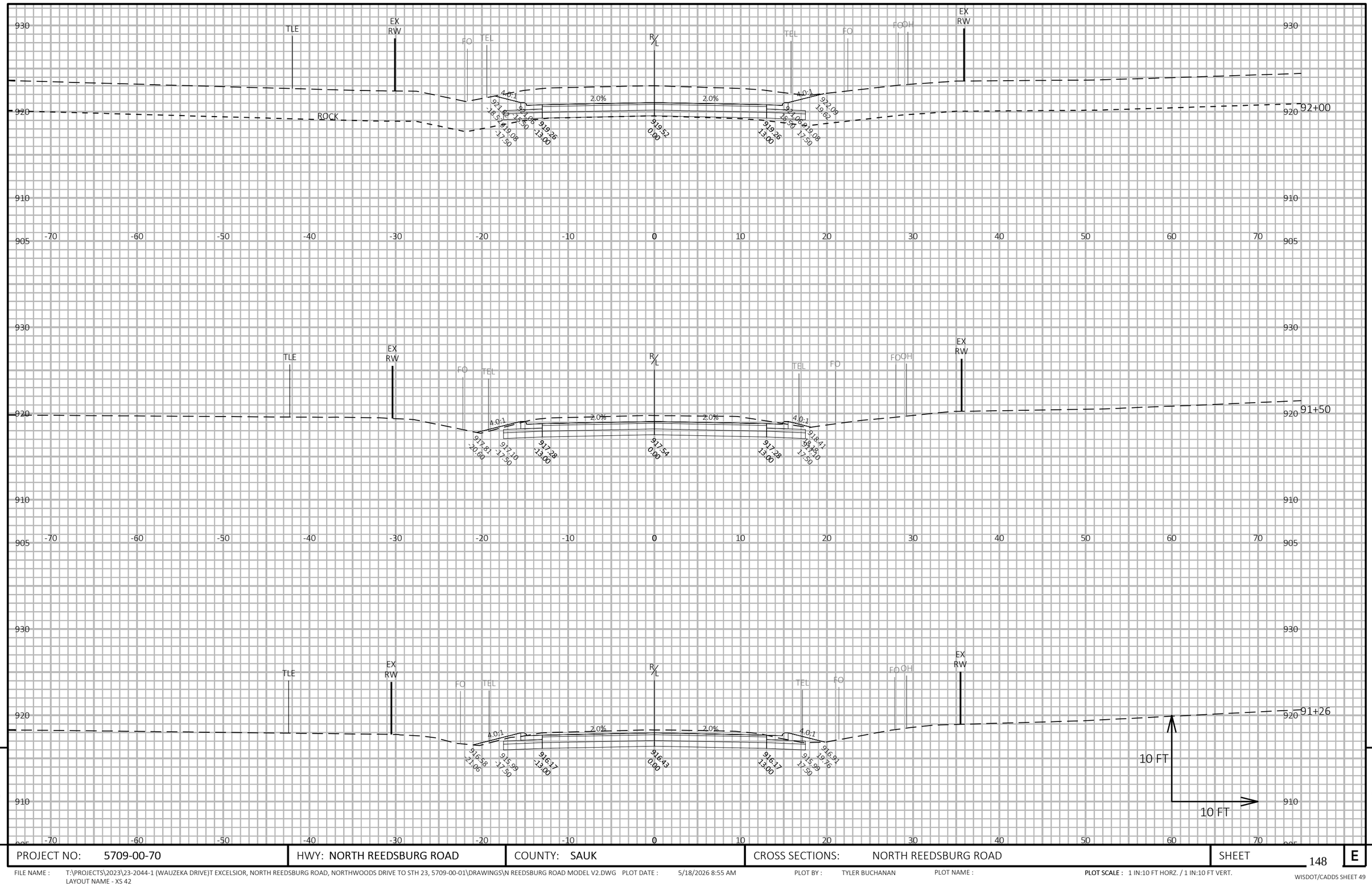

9

9

PROJECT NO: 5709-00-70	HWY: NORTH REEDSBURG ROAD	COUNTY: SAUK	CROSS SECTIONS: NORTH REEDSBURG ROAD	SHEET 148	E

FILE NAME : T:\PROJECTS\2023\23-2044-1 (WAUZEKA DRIVE)T EXCELSIOR, NORTH REEDSBURG ROAD, NORTHWOODS DRIVE TO STH 23, 5709-00-01\DRAWINGS\N REEDSBURG ROAD MODEL V2.DWG PLOT DATE : 5/18/2026 8:55 AM PLOT BY : TYLER BUCHANAN PLOT NAME : **PLOT SCALE :** 1 IN:10 FT HORZ. / 1 IN:10 FT VERT.
LAYOUT NAME - XS 42

WISDOT/CADDS SHEET 49

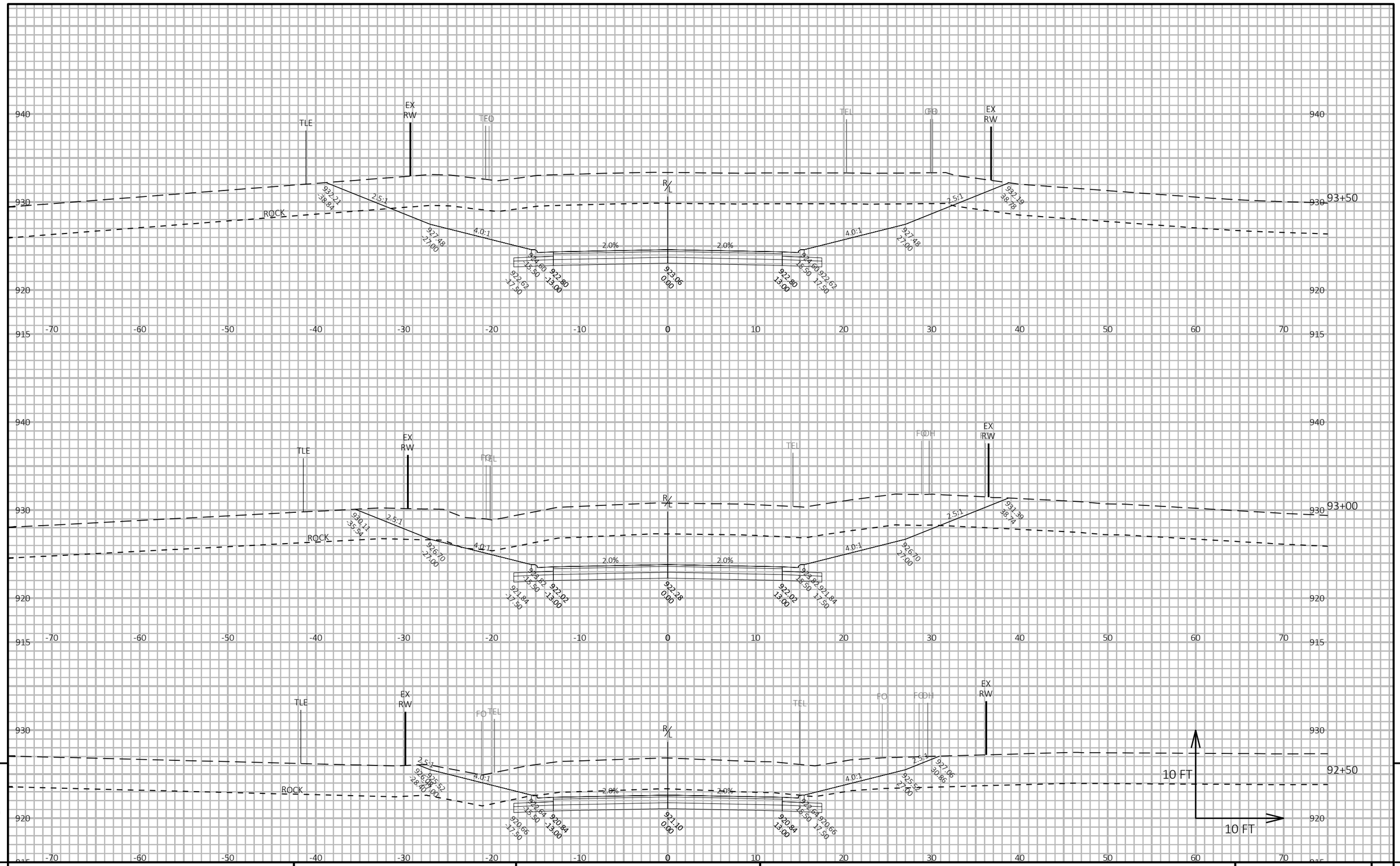

9

9

PROJECT NO: 5709-00-70	HWY: NORTH REEDSBURG ROAD	COUNTY: SAUK	CROSS SECTIONS: NORTH REEDSBURG ROAD	SHEET 149	E

FILE NAME : T:\PROJECTS\2023\23-2044-1 (WAUZEKA DRIVE)T EXCELSIOR, NORTH REEDSBURG ROAD, NORTHWOODS DRIVE TO STH 23, 5709-00-01\DRAWINGS\N REEDSBURG ROAD MODEL V2.DWG PLOT DATE : 5/18/2026 8:55 AM PLOT BY : TYLER BUCHANAN PLOT NAME : **PLOT SCALE :** 1 IN:10 FT HORZ. / 1 IN:10 FT VERT.
LAYOUT NAME - XS 43

WISDOT/CADDS SHEET 49

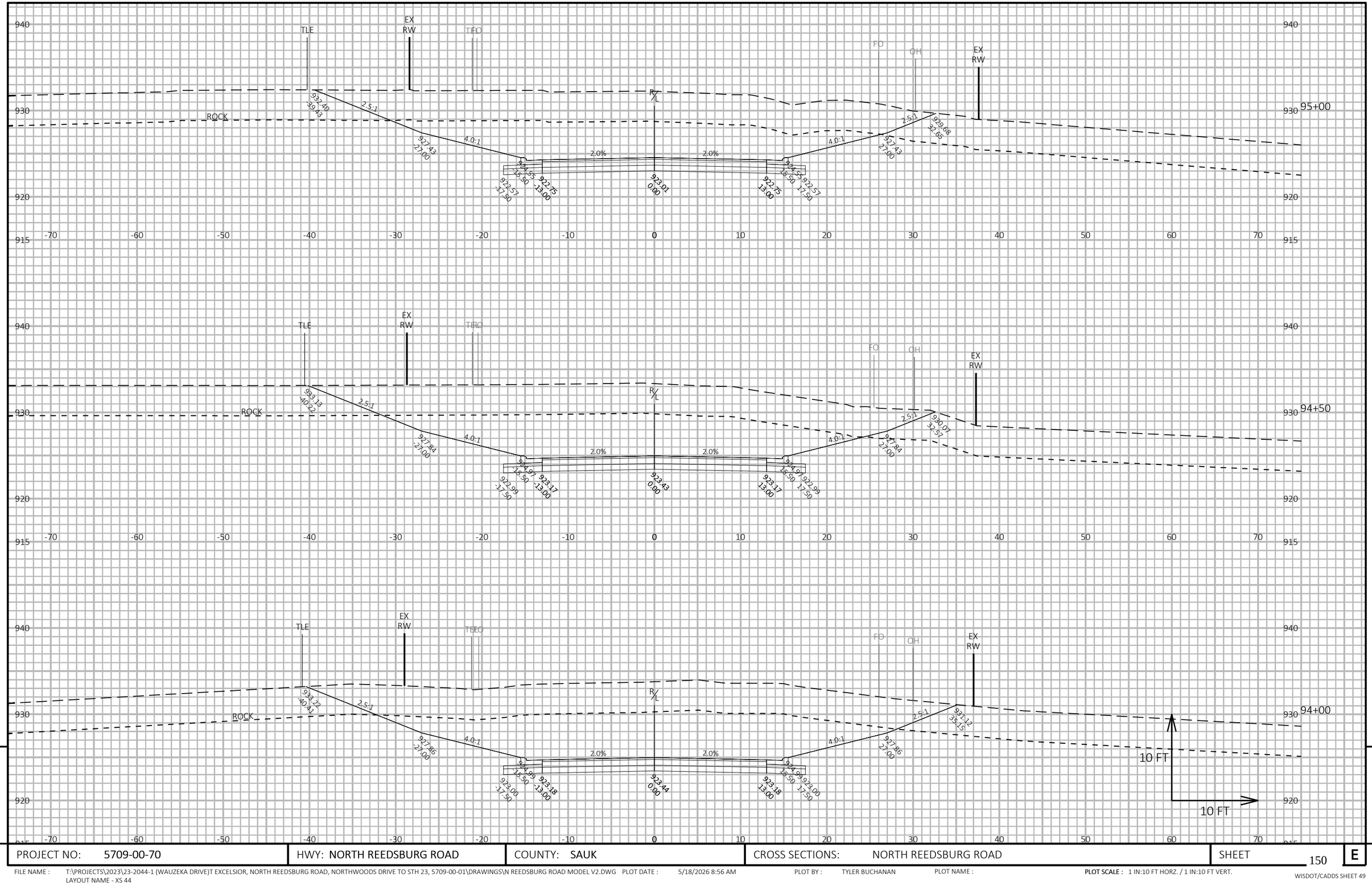

9

9

PROJECT NO: 5709-00-70	HWY: NORTH REEDSBURG ROAD	COUNTY: SAUK	CROSS SECTIONS: NORTH REEDSBURG ROAD	SHEET 150	E

FILE NAME : T:\PROJECTS\2023\23-2044-1 (WAUZEKA DRIVE)T EXCELSIOR, NORTH REEDSBURG ROAD, NORTHWOODS DRIVE TO STH 23, 5709-00-01\DRAWINGS\N REEDSBURG ROAD MODEL V2.DWG PLOT DATE : 5/18/2026 8:56 AM PLOT BY : TYLER BUCHANAN PLOT NAME : **PLOT SCALE :** 1 IN:10 FT HORZ. / 1 IN:10 FT VERT.
LAYOUT NAME - XS 44

WISDOT/CADDS SHEET 49

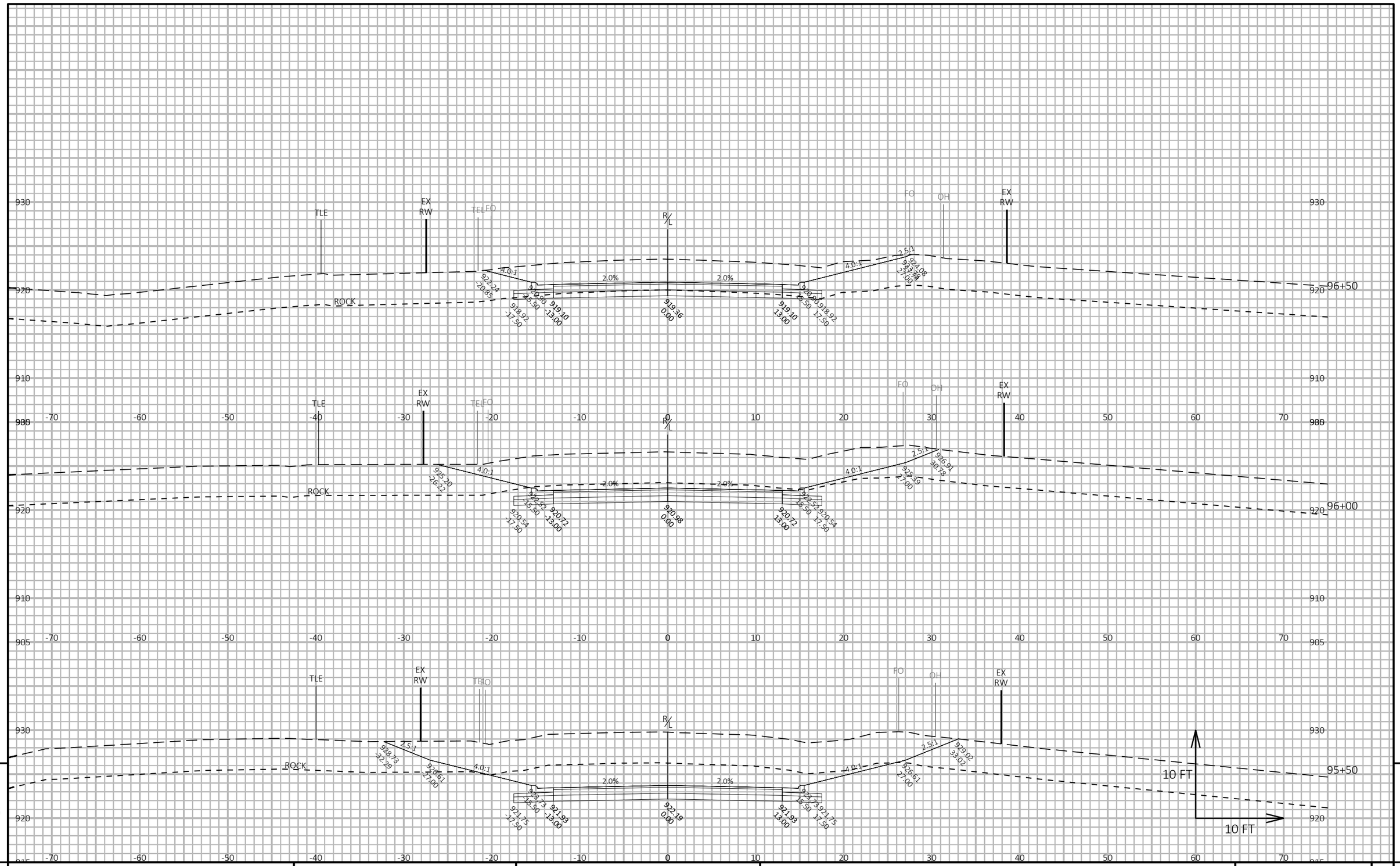

PROJECT NO: 5709-00-70	HWY: NORTH REEDSBURG ROAD	COUNTY: SAUK	CROSS SECTIONS: NORTH REEDSBURG ROAD	SHEET 151	E

FILE NAME : T:\PROJECTS\2023\23-2044-1 (WAUZEKA DRIVE)T EXCELSIOR, NORTH REEDSBURG ROAD, NORTHWOODS DRIVE TO STH 23, 5709-00-01\DRAWINGS\N REEDSBURG ROAD MODEL V2.DWG PLOT DATE : 5/18/2026 8:57 AM PLOT BY : TYLER BUCHANAN PLOT NAME : **PLOT SCALE :** 1 IN:10 FT HORZ. / 1 IN:10 FT VERT.
LAYOUT NAME - XS 45

WISDOT/CADDS SHEET 49

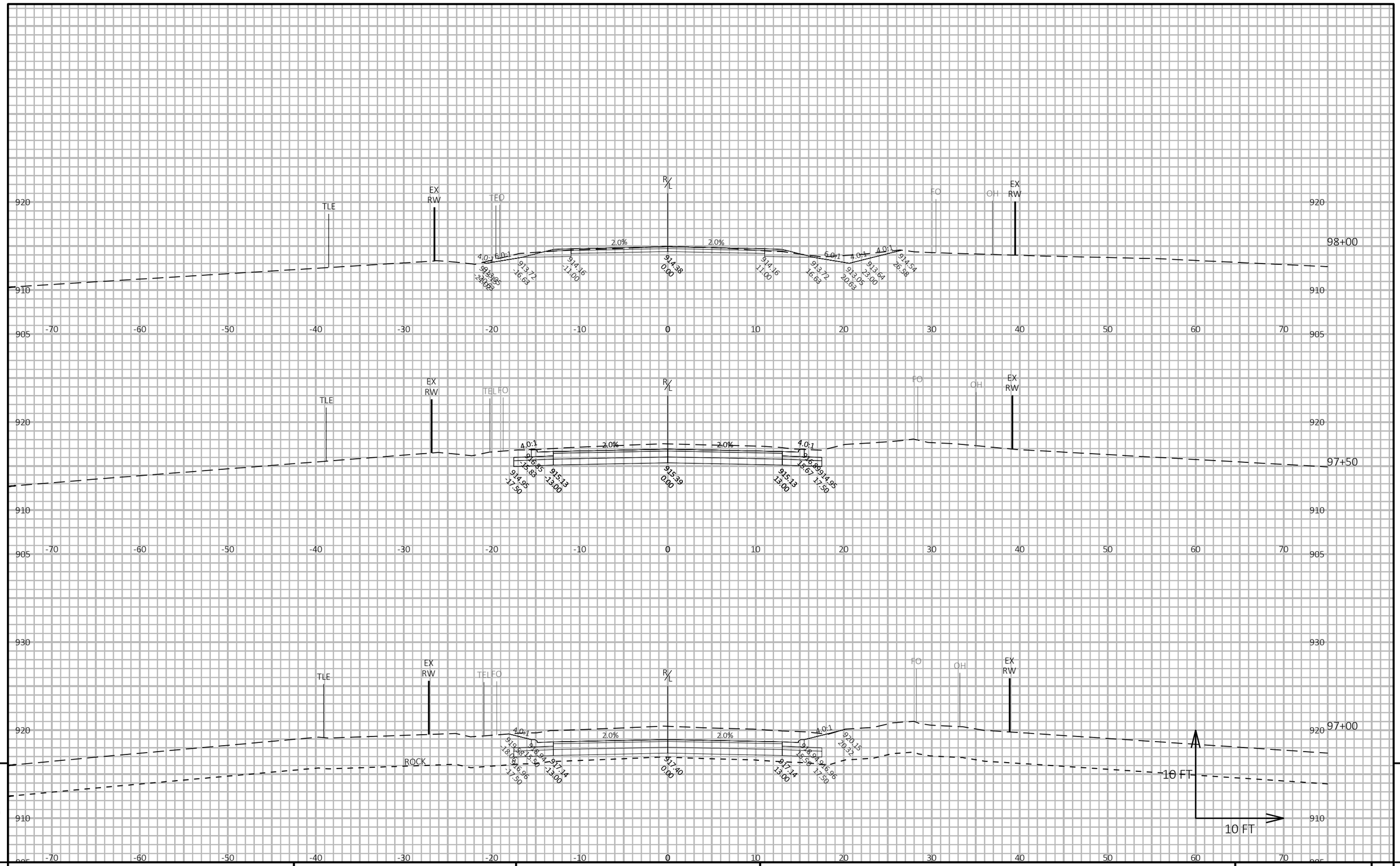

9

9

PROJECT NO: 5709-00-70	HWY: NORTH REEDSBURG ROAD	COUNTY: SAUK	CROSS SECTIONS: NORTH REEDSBURG ROAD	SHEET 152	E

FILE NAME : T:\PROJECTS\2023\23-2044-1 (WAUZEKA DRIVE)T EXCELSIOR, NORTH REEDSBURG ROAD, NORTHWOODS DRIVE TO STH 23, 5709-00-01\DRAWINGS\N REEDSBURG ROAD MODEL V2.DWG PLOT DATE : 5/18/2026 8:58 AM PLOT BY : TYLER BUCHANAN PLOT NAME : **PLOT SCALE :** 1 IN:10 FT HORZ. / 1 IN:10 FT VERT.
LAYOUT NAME - XS 46

WISDOT/CADDS SHEET 49

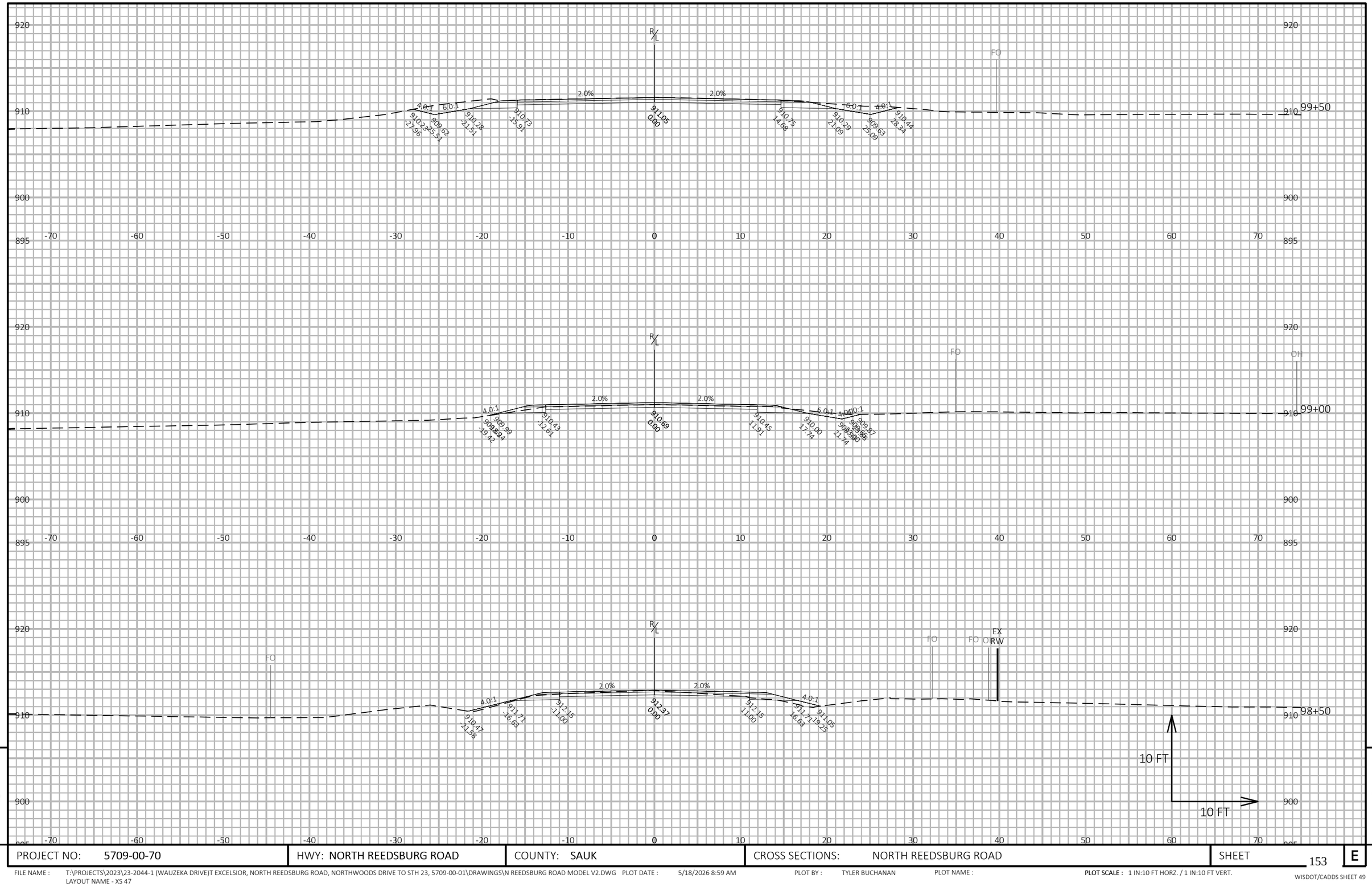

9

9

PROJECT NO: 5709-00-70	HWY: NORTH REEDSBURG ROAD	COUNTY: SAUK	CROSS SECTIONS: NORTH REEDSBURG ROAD	SHEET 153	E

FILE NAME : T:\PROJECTS\2023\23-2044-1 (WAUZEKA DRIVE)T EXCELSIOR, NORTH REEDSBURG ROAD, NORTHWOODS DRIVE TO STH 23, 5709-00-01\DRAWINGS\N REEDSBURG ROAD MODEL V2.DWG PLOT DATE : 5/18/2026 8:59 AM PLOT BY : TYLER BUCHANAN PLOT NAME : **PLOT SCALE :** 1 IN:10 FT HORZ. / 1 IN:10 FT VERT.
LAYOUT NAME - XS 47

WISDOT/CADDS SHEET 49

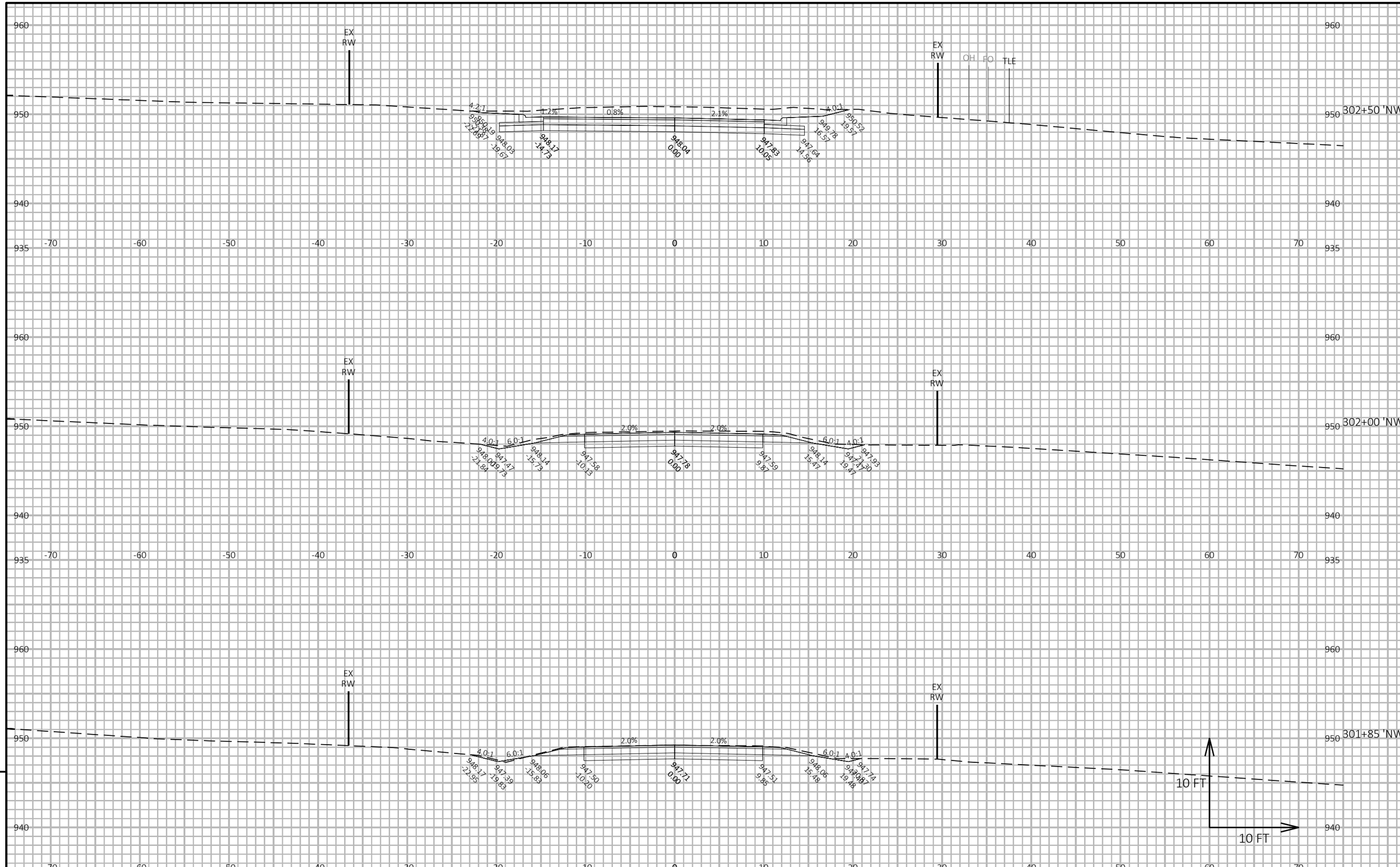

9

9

PROJECT NO: 5709-00-70	HWY: NORTH REEDSBURG ROAD	COUNTY: SAUK	CROSS SECTIONS: NORTHWOODS DRIVE	SHEET 154	E

FILE NAME : T:\PROJECTS\2023\23-2044-1 (WAUZEKA DRIVE)T EXCELSIOR, NORTH REEDSBURG ROAD, NORTHWOODS DRIVE TO STH 23, 5709-00-01\DRAWINGS\N REEDSBURG ROAD MODEL V2.DWG PLOT DATE : 5/18/2026 9:00 AM PLOT BY : TYLER BUCHANAN PLOT NAME : PLOT SCALE : 1 IN:10 FT HORZ. / 1 IN:10 FT VERT.
LAYOUT NAME - XS Northwoods 1

WISDOT/CADDS SHEET 49

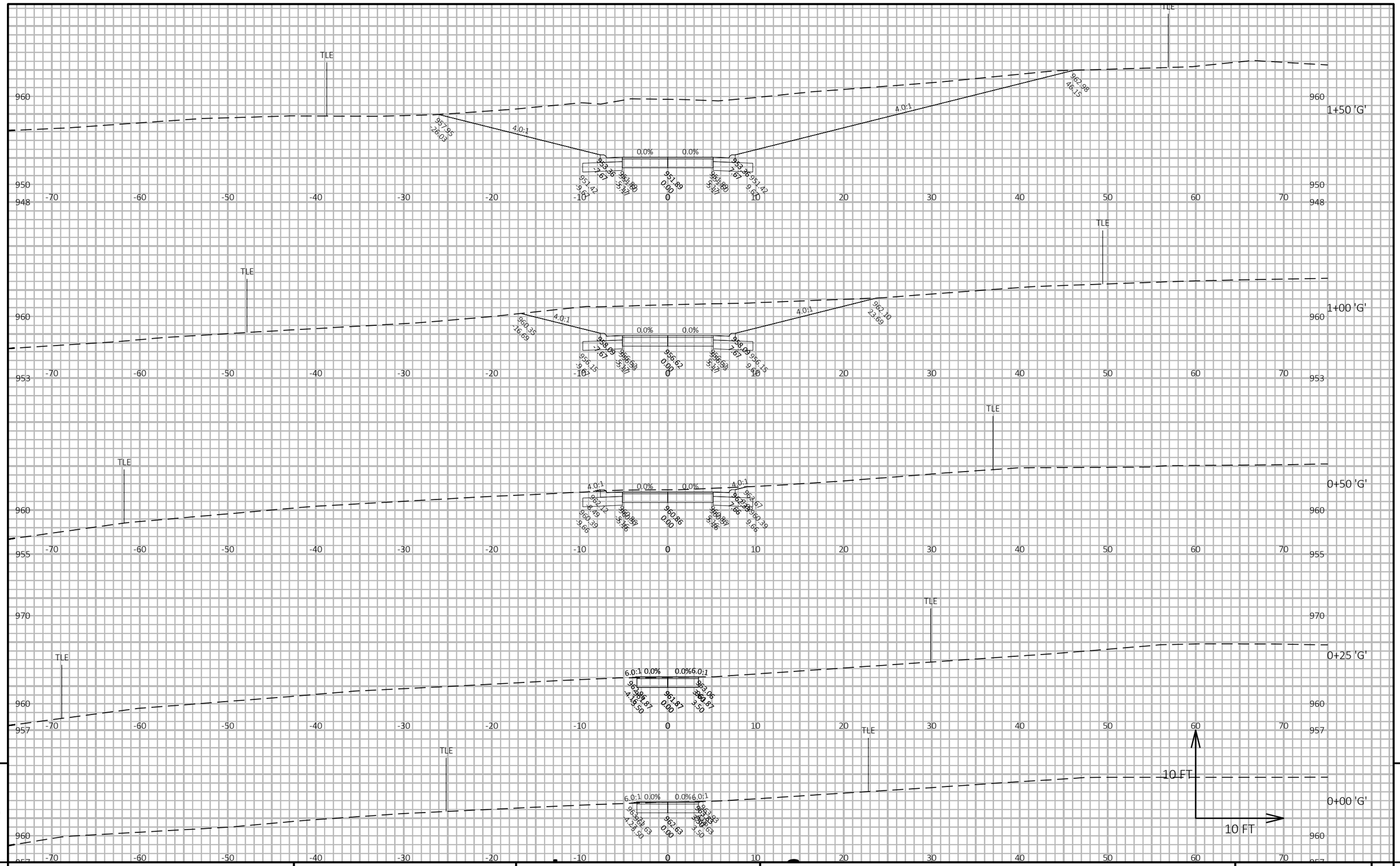

9

9

PROJECT NO: 5709-00-70	HWY: NORTH REEDSBURG ROAD	COUNTY: SAUK	CROSS SECTIONS: DRIVEWAY 20+50	SHEET 155	E

FILE NAME : T:\PROJECTS\2023\23-2044-1 (WAUZEKA DRIVE)T EXCELSIOR, NORTH REEDSBURG ROAD, NORTHWOODS DRIVE TO STH 23, 5709-00-01\DRAWINGS\N REEDSBURG ROAD MODEL V2.DWG PLOT DATE : 5/18/2026 9:01 AM PLOT BY : TYLER BUCHANAN PLOT NAME : **PLOT SCALE :** 1 IN:10 FT HORZ. / 1 IN:10 FT VERT.
LAYOUT NAME - XS DW 20 1

WISDOT/CADDS SHEET 49

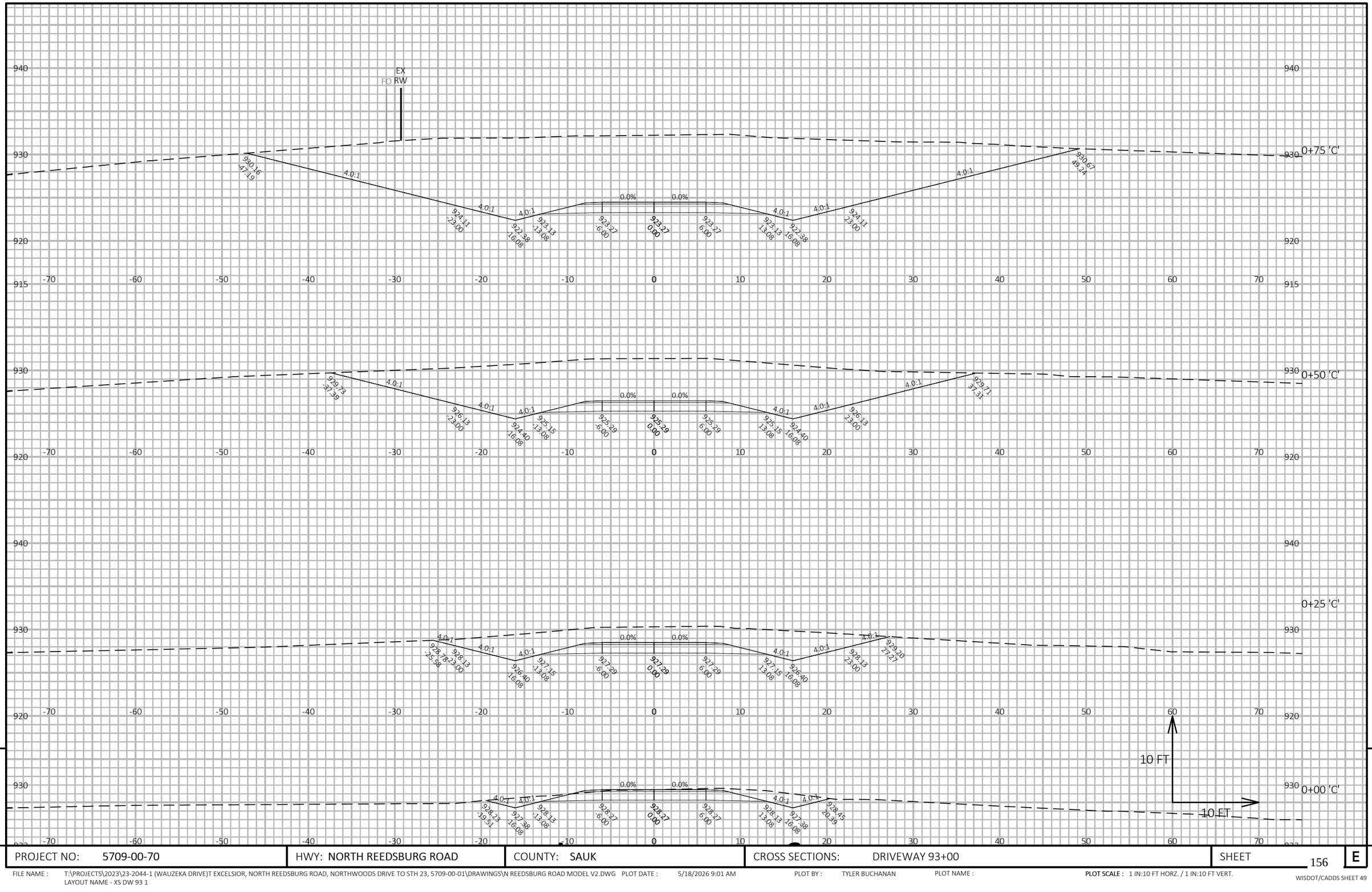

PROJECT NO: 5709-00-70	HWY: NORTH REEDSBURG ROAD	COUNTY: SAUK	CROSS SECTIONS: DRIVEWAY 93+00	SHEET 156 E

FILE NAME : T:\PROJECTS\2023\23-2044-1 (WAUZEKA DRIVE)T EXCELSIOR, NORTH REEDSBURG ROAD, NORTHWOODS DRIVE TO STH 23, 5709-00-01\DRAWINGS\N REEDSBURG ROAD MODEL V2.DWG PLOT DATE : 5/18/2026 9:01 AM PLOT BY : TYLER BUCHANAN PLOT NAME : **PLOT SCALE :** 1 IN:10 FT HORZ. / 1 IN:10 FT VERT.
LAYOUT NAME - XS DW 93 1

WISDOT/CADDS SHEET 49

Notes

Wisconsin Department of Transportation

Dedicated people creating transportation solutions
through innovation and exceptional service.

http://www.dot.wisconsin.gov