SDD 14b24-a Steel Plate Beam Guard Energy Absorbing Terminal

BILL OF MATERIALS

NOTE NO.	DESCRIPTION
1	WOOD BREAKAWAY TERMINAL POST: 5½" X 7½" X 3'-9"
2	STEEL TUBE TS 8" X 6" X 0.188", 6'-0"
4	WOOD BREAKAWAY CRT POST: 6" X 8" X 6'-0"
5	WOOD OFFSET BLOCKS: 6' X 8" X 1'-2"
6	PIPE SLEEVE: 2" X 5 ½" STANDARD PIPE
7	BEARING PLATE
8	BCT CABLE ASSEMBLY
9	CABLE ANCHOR BOX
10	STRUT & YOKE
11	STEEL PLATE BEAM, END PANEL 12 GA.
12	STEEL PLATE BEAM: 12 GA. 13'-6½"
13	IMPACT HEAD
14	0.040" ALUMINUM SHEET WITH REFLECTIVE SHEETING TYPE F PER SECTION 637 OF THE STANDARD SPECIFICATIONS

GENERAL NOTES

FOLLOW MANUFACTURE'S BOLTING RECOMMENDATIONS.

(A) THE SLOPE IN THE AREA BOUNDED BY THE GRADELINE, THE HINGE POINT LINE (HPL), AND THE CLEAR ZONE LIMITS (CZL) SHALL BE 4:1 OR FLATTER.

(B) AFTER FINAL ASSEMBLY, RECHECK CABLE TO BE SURE IT IS TAUT AND HAS NOT RELAXED.

(D) THE TOP OF THE STEEL TUBE ON POSTS 1 AND 2 SHALL NOT BE MORE THAN 3" ABOVE THE FINISH GROUND ELEVATION.

(E) THE CENTER OF THE UPPER 3½" DIAMETER HOLE ON POST 3 THROUGH 8 SHALL BE ¾" ABOVE THE FINISHED GROUND LINE.

(F) ATTACH ALUMINUM SHEET TO E.A.T. HEAD USING 4 STAINLESS STEEL SELF-TAPPING SCREWS. ONE SCREW PER CORNER.

STEEL POSTS SHALL NOT BE ALLOWED FOR USE WITH ENERGY ABSORBING TERMINALS.

DO NOT INSTALL REFLECTORS ON THE FIRST 50 FEET OF THE APPROACH END OF THE ENERGY ABSORBING TERMINAL.

* DO NOT ATTACH BLOCKOUTS TO POSTS 1 AND 2.

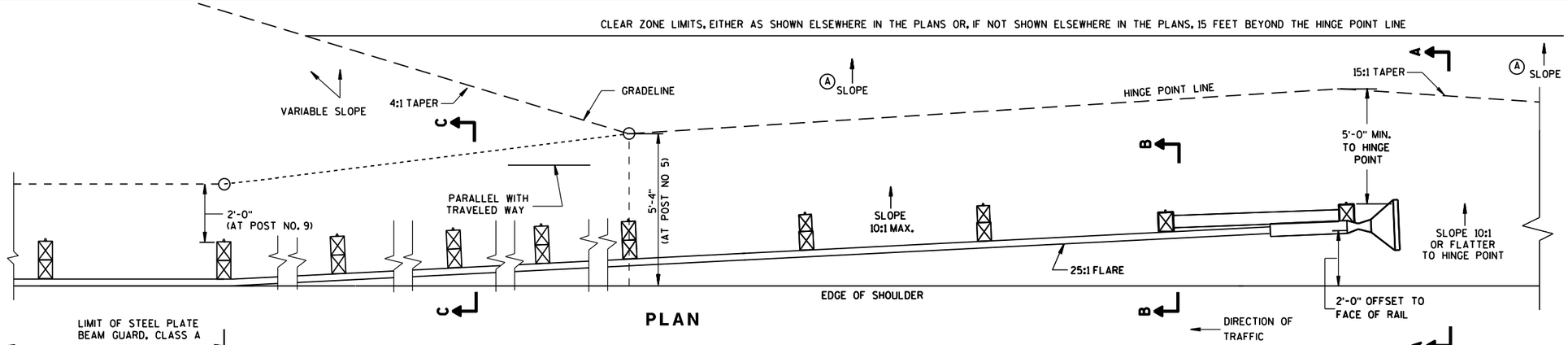

PLAN

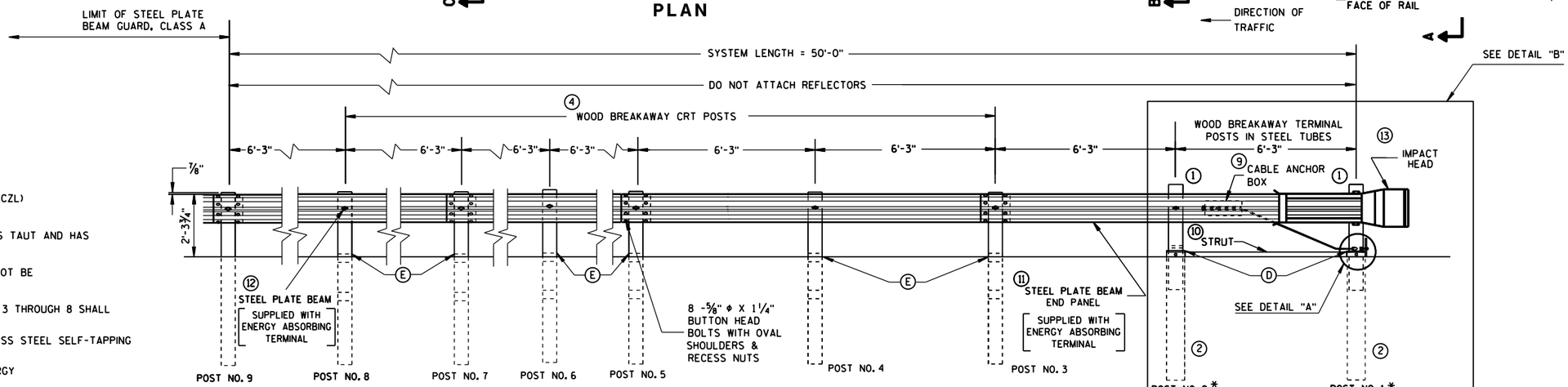

ELEVATION

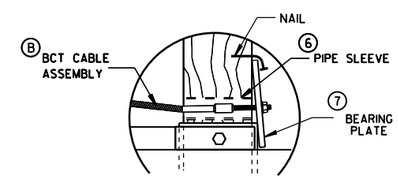

DETAIL "A"

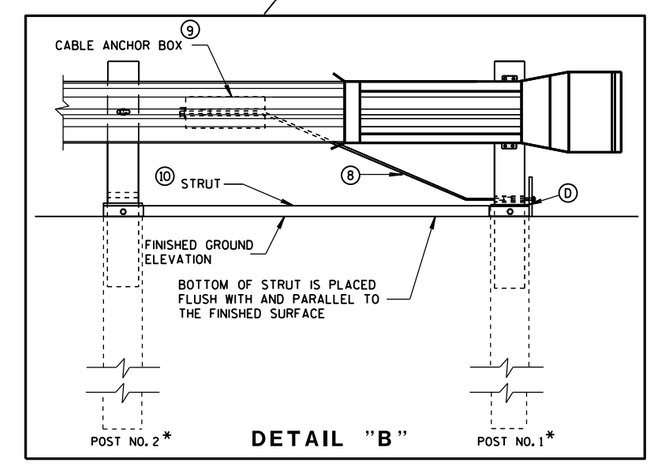

DETAIL "B"

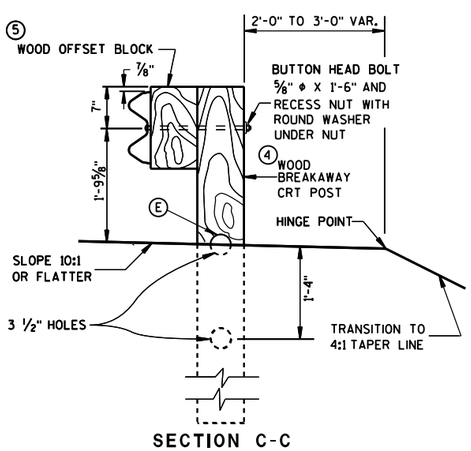

SECTION C-C
TYPICAL AT POST NOS. 6, 8

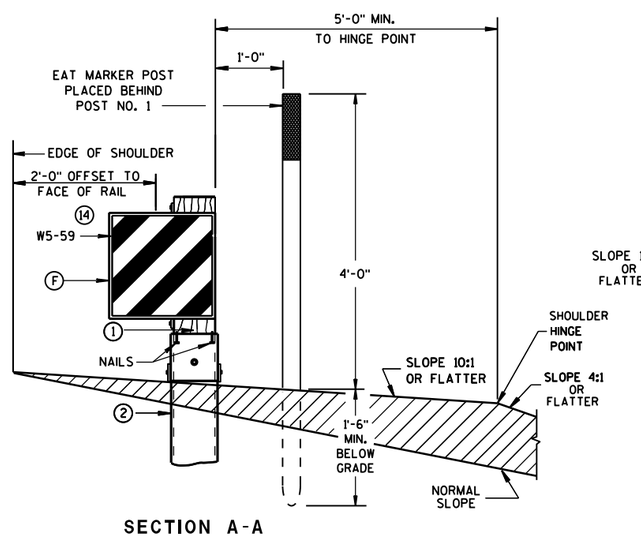

SECTION A-A
TYPICAL AT POST NO. 1*

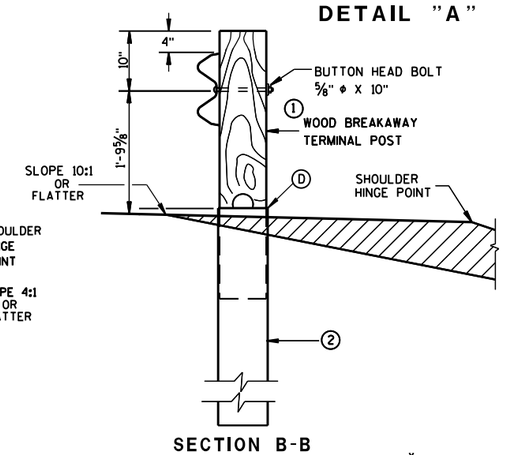

SECTION B-B
TYPICAL AT POST NO. 2*

STEEL PLATE BEAM GUARD ENERGY ABSORBING TERMINAL

STATE OF WISCONSIN
DEPARTMENT OF TRANSPORTATION

6

6

S.D.D. 14 B 24-9a

S.D.D. 14 B 24-9a

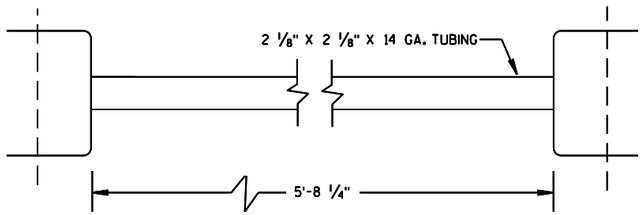

(10) STRUT DETAIL

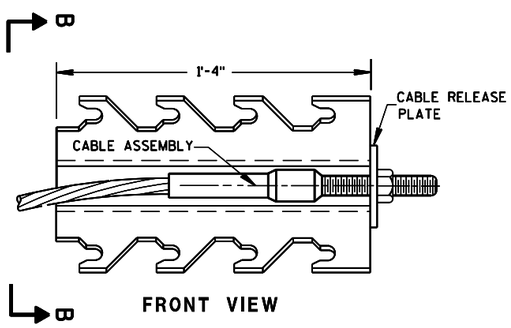

FRONT VIEW

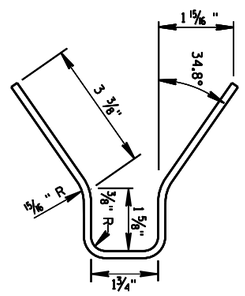

SECTION B-B

(9) CABLE ANCHOR BOX

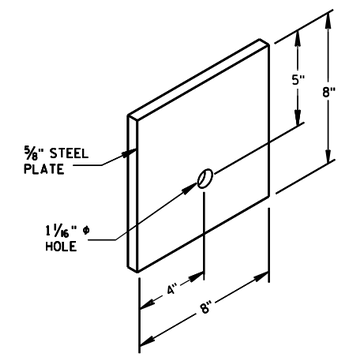

(7) STEEL BEARING PLATE

6

6

S.D.D. 14 B 24-9b

S.D.D. 14 B 24-9b

STEEL PLATE BEAM GUARD
ENERGY ABSORBING TERMINAL

STATE OF WISCONSIN
DEPARTMENT OF TRANSPORTATION

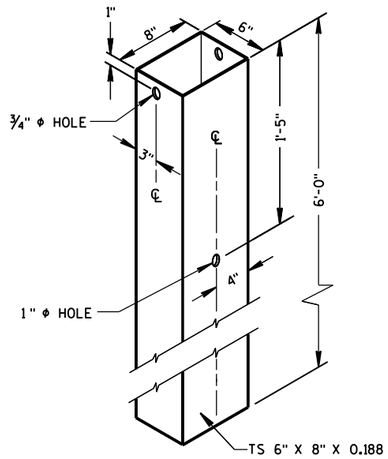

② 72" STEEL TUBE
(POSTS NO. 1-2

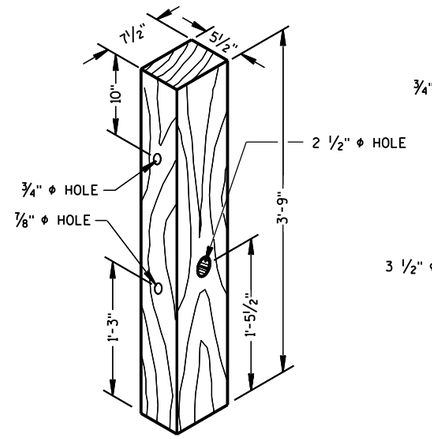

① TERMINAL POST

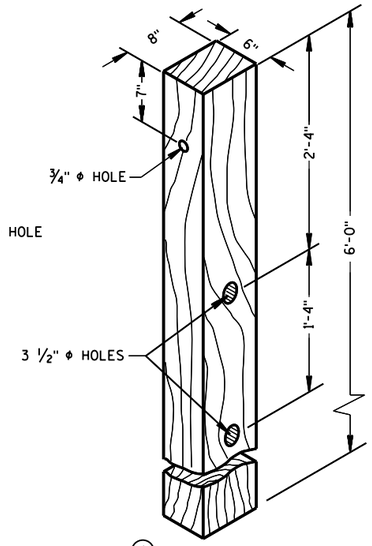

④ CRT POST
(POSTS NO'S 5-8

WOOD BREAKAWAY POSTS

GENERAL NOTES

WHEN ROCK IS ENCOUNTERED DURING EXCAVATION, A 12 INCH DIA. POST HOLE EXTENDING 20 INCHES DEEP INTO THE ROCK MAY BE USED IF APPROVED BY THE ENGINEER. GRANULAR MATERIAL SHALL BE PLACED IN THE BOTTOM OF THE HOLE APPROXIMATELY 2 ½" INCHES DEEP TO PROVIDE DRAINAGE. THE SOIL TUBES SHALL BE FIELD CUT TO LENGTH, PLACED IN THE HOLE AND BACKFILLED WITH ADEQUATELY COMPACTED MATERIAL EXCAVATED FROM THE HOLE.

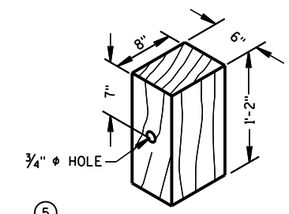

⑤ WOOD OFFSET BLOCK
REQ'D. AT ALL POSTS EXCEPT POST NO'S 1 & 2

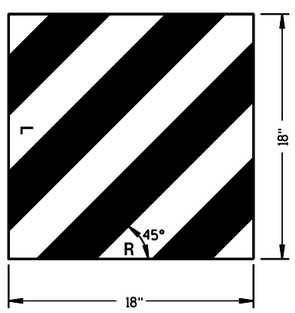

⑭ REFLECTIVE SHEETING DETAILS

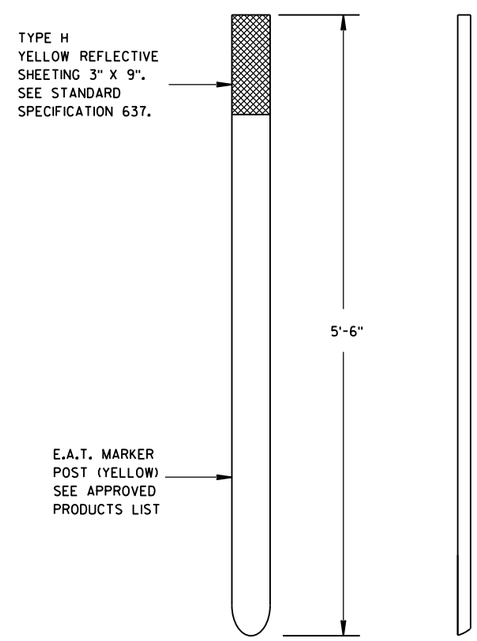

FRONT VIEW SIDE VIEW

E.A.T. MARKER POST

6

6

S.D.D. 14 B 24-9c

S.D.D. 14 B 24-9c

STEEL PLATE BEAM GUARD
ENERGY ABSORBING TERMINAL

STATE OF WISCONSIN
DEPARTMENT OF TRANSPORTATION

APPROVED
June 2017
DATE
FHWA

/S/ Rodney Taylor
ROADWAY STANDARDS DEVELOPMENT
UNIT SUPERVISOR

Steel Plate Beam Guard Energy Absorbing Terminal

References:

FDM 11-45-30
AASHTO Roadside Design Guide

Bid items associated with this drawing:

ITEM NUMBER	DESCRIPTION	UNIT
614.0200	Steel Thrie Beam Structure Approach	LF
614.0300 - 0339	Steel Plate Beam Guard, Class A	LF
614.0370	Steel Plate Beam Guard, Energy Absorbing Terminal	EACH
614.0010	Barrier System Grading Shaping Finishing	EACH

For Grading Project with Beam Guard:

ITEM NUMBER	DESCRIPTION	UNIT
205.0100	Excavation Common	CY
208.0100	Borrow	CY
614.0010	Barrier System Grading Shaping Finishing	EACH
627.0250	Mulching	TON
629.0205	Fertilizer Type A	CWT
625.0500	Salvaged Topsoil	SY
629.0210	Fertilizer Type B	CWT
627.0200	Mulching	SY
630.0100-0199	Seeding (mixture)	LB

For Non-Grading Project with Beam Guard - (Resurfacing plus Beam Guard or Separate Beam Guard Project):

ITEM NUMBER	DESCRIPTION	UNIT
614.0010	Barrier System Grading Shaping Finishing	EACH

Standardized Special Provisions associated with this drawing:

STSP NUMBER	TITLE
NONE	

Other SDDs associated with this drawing:

SDD 14B24 Steel Plate Beam Guard Energy Absorbing Terminal **all sheets** are required.

Caution: The flexibility that the FDM provides for grading EAT terminals is being reviewed. Designers are encouraged to provide recommended grading, the alternative grading provided for in the Roadside Design Guide, or add length to the beam guard run prior to adjusting the grading of the EAT terminal.

Design Notes:

Projects with PSE due August 2011 or later are required to install MGS beam guard (MGS) for new beam guard installations. Some exceptions allowing the installation of new non-MGS beam guard may be granted by Bureau of Project Development (BPD). A few of these exceptions require minimum documentation (e.g. there is no short radius version of MGS designer would need to install non-MGS beam guard). Other exceptions require more documentation and discussion with Bureau of Project Development. Projects on the NHS or subject to FHWA oversight are to review the use of MGS with FHWA.

Use SDD 14B24 sheets "a", "b" and "c" as the standard on new construction and reconstruction projects. Identify the station of the EAT Post No. 1 on the plans. Review drainage and Right-of-Way near EAT early in the design process. Insert cross sections at Posts 1, 5, 9 and at the beginning of approach taper into plan set to make the designer's intent clear to contractor.

Remove Type 1 Terminals, BCT Terminals and Turn-down-end Terminals on improvement projects.

In the area bounded by Roadside Clear Zone, hinge point between posts 1 through 5 of the EAT and Extended Vehicle Runout Path must conform to Clear Zone Requirements in FDM 11-15-1. If it is necessary a 3:1 slope is permissible, but a Clear Runout area beyond the 3:1 slope must be provided.

If it is not possible to get the preferred grading or alternative grading in Figure 8.2 of the 2006 AASHTO Roadside Design Guide, extend Class A Beam Guard beyond the length of need calculations to a location where the preferred or alternative grading for the EAT can be provided.

Eliminating or reducing the amount of earthwork associated with this Standard Detail Drawing may have a significant impact on performance of the system (see caution note above). The earthwork behind the beam

guard posts to the hinge point may be reduced or eliminated on minor 3R, NHS and non-NHS projects, but only if the desirable lateral clearances and tapers cannot be practically achieved because of existing conditions. Provide a 10:1 or flatter slope from the edge of the shoulder to the back of the beam guard posts. When practical, extend the 10:1 slope to the hinge point. On minor 3R, NHS and non-NHS projects the 5-feet to the hinge point at Post 1 may be reduced or eliminated, and the 15:1 taper may be steepened to 4:1, but only if existing conditions preclude using standard design. If the lateral clearances and tapers are nonstandard, provide a special detail showing the proposed non-standard earthwork requirements.

Review Curbed Roadways section of FDM 11-45-30 for installing EAT system near curb. Place note on plans indicating location of driveway curb in front of EAT.

List all items of work and round up the quantities for individual items and note them as “For Bid Information Only.” The table below is the suggested format for the Miscellaneous Quantities Sheet:

Barrier System Grading Shaping Finishing, Item 614.0010

Station Location	Excavation Common*	* Borrow	* Salv. Topsoil	* Fert. Type ---	* Seeding	* Mulching	Each
(Anchorage Post # 1)	C.Y.	C.Y.	S.Y.	CWT.	L.B.	S.Y.	
Sta._____							
Totals							

* Items & Quantities listed for Bid Information Only. Show the quantities and units clearly in the table.

Contact Person:

Erik Emerson (608) 266-2842