SDD 14B25 Steel Plate Beam Guard, Class "A", Over Low Fill Culverts

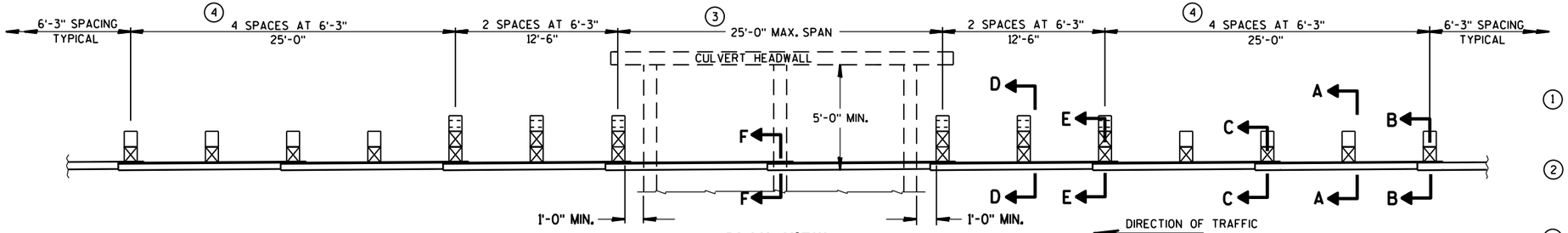

PLAN VIEW

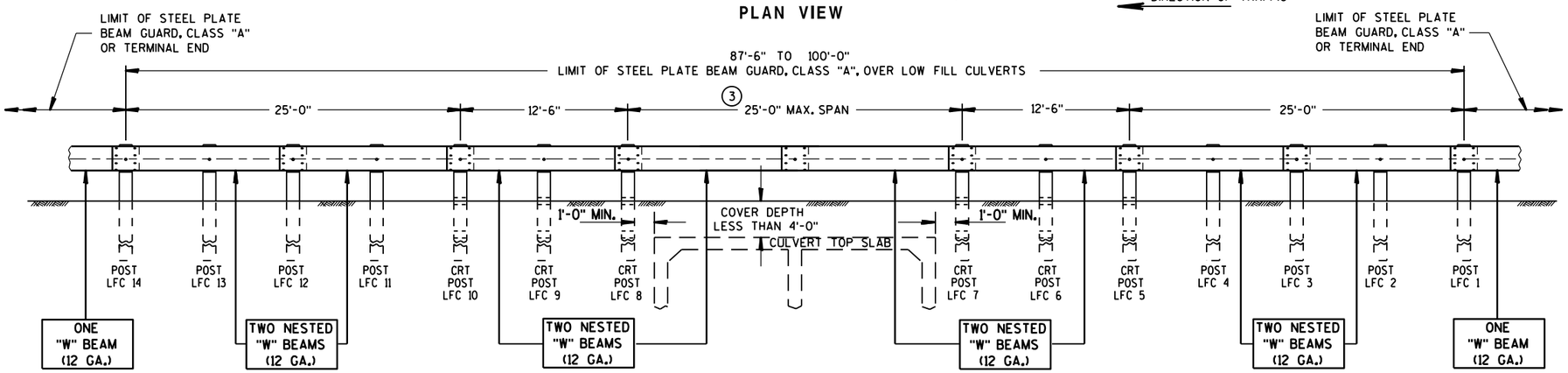

FRONT VIEW

TYPICAL INSTALLATION OF STEEL PLATE BEAM GUARD OVER LOW FILL CULVERTS

GENERAL NOTES

DETAILS OF CONSTRUCTION, MATERIALS AND WORKMANSHIP NOT SHOWN ON THIS DRAWING SHALL CONFORM TO THE PERTINENT REQUIREMENTS OF THE STANDARD SPECIFICATIONS AND THE APPLICABLE SPECIAL PROVISIONS.

1. MAINTAIN THE NESTING OF EACH NESTED PAIR OF "W" BEAM SECTIONS THROUGH SPLICES. ORIENTATE NESTED "W" BEAM SPLICES IN THE DIRECTION OF TRAFFIC AS THE PLAN VIEW SHOWS. SEE S.D.D. 14 B 15 FOR SPLICE INSTALLATION.
2. THE CONTRACTOR MAY USE APPROVED PLASTIC BLOCKOUTS IN LIEU OF WOOD BLOCKOUTS. SEE S.D.D. 14 B 15 FOR TYPICAL BLOCKOUT, SPLICE AND REFLECTOR INSTALLATIONS. USE BOLT SIZES AND LENGTHS AS SHOWN ON THIS DETAIL.
3. PROVIDE 12'-6", 18'-9" AND 25'-0" SPANS ONLY. USE A MAXIMUM OF ONE SPLICE LOCATED ANYWHERE WITHIN THE SPAN SECTION. LOCATE ALL OTHER SPLICES AT BEAM GUARD POSTS.
4. IN THE FIRST AND LAST 25 FOOT SECTIONS (POSTS LFC 1-4 & LFC 11-14), THE CONTRACTOR MAY USE W6 X 9 OR W6 X 8.5 STEEL POSTS WITH NOTCHED PLASTIC BLOCKOUTS OR 6" X 8" WOOD POSTS WITH EITHER WOOD OR PLASTIC BLOCKOUTS. DO NOT MIX STEEL POSTS WITH NOTCHED PLASTIC BLOCKOUTS AND WOOD POSTS WITH EITHER WOOD OR PLASTIC BLOCKOUTS IN THE SAME INSTALLATION.
5. WHERE EXISTING CONDITIONS DO NOT PERMIT THE APPROPRIATE EARTHWORK, THE PLAN TYPICAL SECTIONS OR DETAILS MAY SHOW, OR THE ENGINEER MAY ALLOW, THE REDUCTION OR ELIMINATION OF THE 2 FOOT DISTANCE TO THE HINGE POINT. BUILD AS THE PLAN SHOWS OR ENGINEER DIRECTS. IF THE 2 FOOT DISTANCE TO THE HINGE POINT IS REDUCED OR ELIMINATED, INCREASE THE POST SOIL DEPTH TO 4'-6" OR MORE.

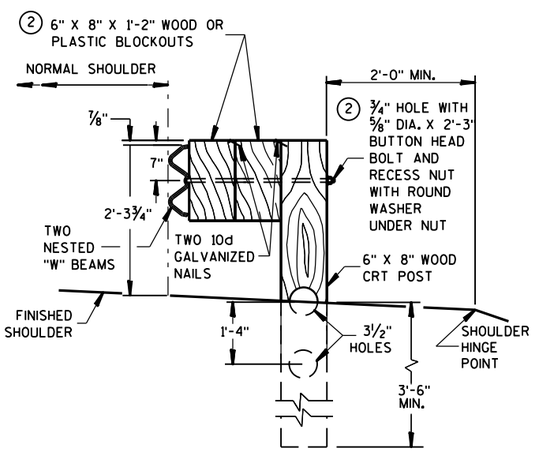

SECTION D-D
TYPICAL CRT POST LFC 6 AND 9

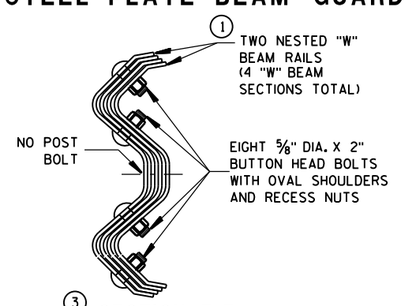

SECTION F-F
BEAM SPLICE IN SPAN OVER CULVERT

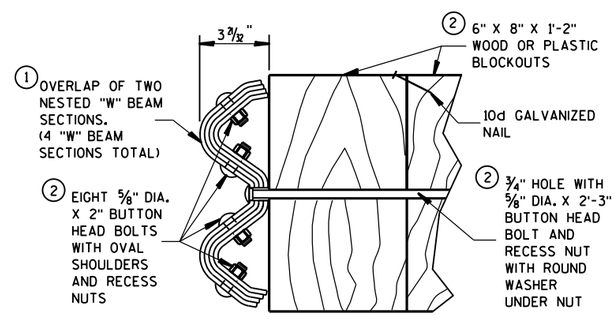

SECTION E-E
TYPICAL CRT POST LFC 5, 7, 8 AND 10

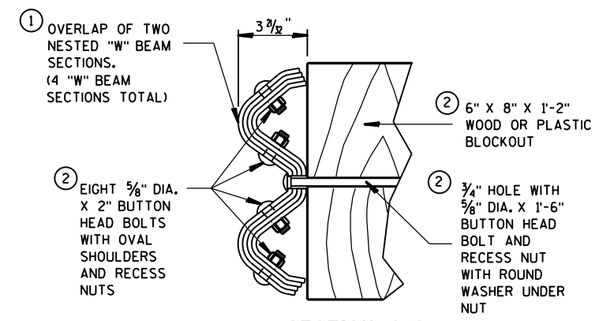

SECTION C-C
TYPICAL AT POSTS LFC 3 AND 12

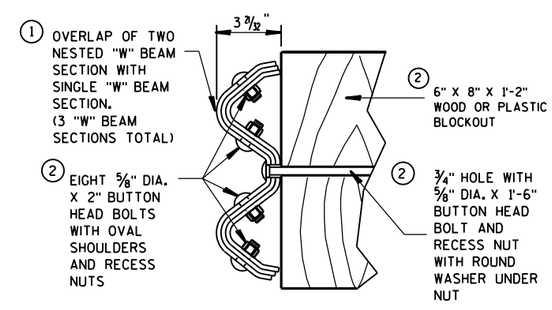

SECTION B-B
TYPICAL AT POSTS LFC 1 AND 14

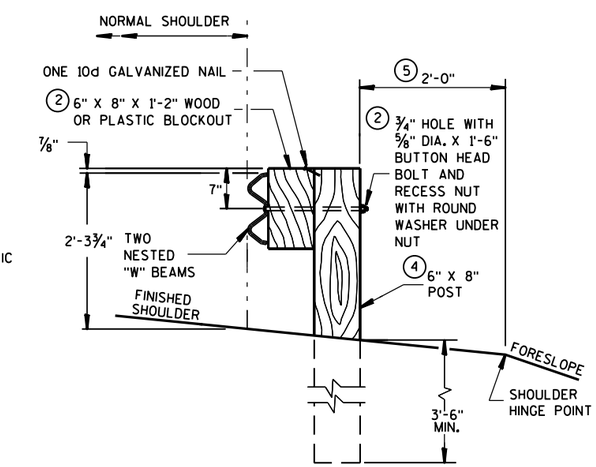

SECTION A-A
TYPICAL AT POST LFC 2,4,11,13

STEEL PLATE BEAM GUARD, CLASS "A", OVER LOW FILL CULVERTS

STATE OF WISCONSIN
DEPARTMENT OF TRANSPORTATION

APPROVED
12/8/00 — DATE
/S/ John Haverberg — CHIEF ROADWAY DEVELOPMENT ENGINEER
FHWA

6
S.D.D. 14 B 25-1

Version 1 | **Standard Detail Drawing 14B25** | *June 19, 2013*

Steel Plate Beam Guard, Class "A", Over Low Fill Culverts

References:

FDM 11-45-30
AASHTO Roadside Design Guide

Bid items associated with this drawing:

ITEM NUMBER	DESCRIPTION	UNIT
614.0340	Steel Plate Beam Guard Over Low-Fill Culverts Class A	LF

Standardized Special Provisions associated with this drawing:

NONE

Other SDDs associated with this drawing:

SDD 14B15 Steel Plate Beam Guard, Class "A", Installation and Elements, Mow Strip Detail is required.

Design Notes:

Projects with PSE due August 2011 or later are required to install MGS beam guard (MGS) for new beam guard installations. Some exceptions allowing the installation of new non-MGS beam guard may be granted by Bureau of Project Development (BPD). A few of these exceptions require minimum documentation (e.g. there is no short radius version of MGS; designer would need to install non-MGS beam guard). Other exceptions require more documentation and discussion with Bureau of Project Development. Projects on the NHS or subject to FHWA oversight are to review the use of MGS with FHWA.

Shallow fill culverts may conflict with posts of standard beam guard. This detail can span distances up to 25 ft. Span lengths larger than 25 feet not acceptable with this detail. If using an odd span length, a field cut rail may be used. Place note in the plan indicate that a field cut is required. Review pipe skew, pipe size, number of pipes and other factors when determining span length.

Proper installation requires post 1 through 14 to be installed shown on front side of SDD. Installing fewer posts will degrade performance.

This detail has a 5 ft working width. The designer should consult with DTID Structures Design Section to make sure the culvert(s) is designed long enough to provide this deflection distance.

Provide 2 ft of grading behind posts. If less grading is provided the barrier system may not operate as intended. Document in DSR when grading is not being provided.

Long span detail is intended to connect to standard beam guard. Directly connecting this detail to stiffer (e.g. half or quarter post spacing) or weak beam guard systems (short radius system) may prevent the long span or the other semi-rigid barrier system from working correctly. At a minimum a 12.5 ft section of class A is required between the long span detail and a section of stiffer or weaker beam guard.

Do not install curb under the long span system. Headwalls should be flush with grading or they may trip a vehicle

Provide individual construction detail drawing for long span installations (see FDM 11-45-30 for more discussion).

Other options to shield or make a hazard traversable may be reviewed. Assistance from BPD, BOS, and regional maintenance staff may be required.

Contact Person:

Erik Emerson (608) 266-2842