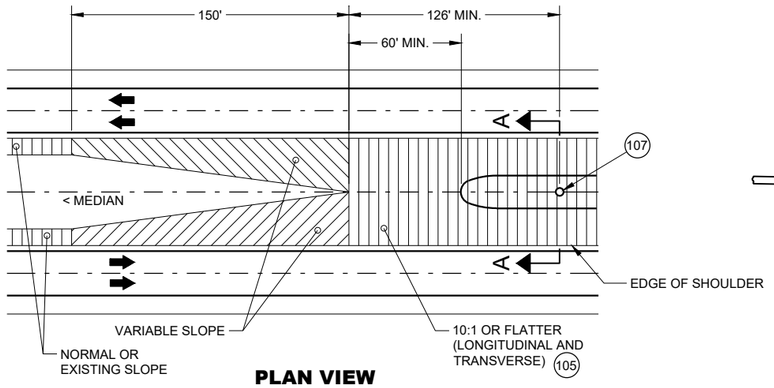

PLAN VIEW
GRADING AT BULLNOSE
(ALL INSTALLATIONS)

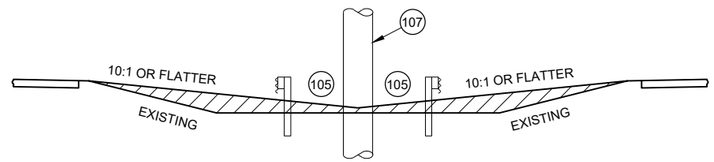

SECTION A -A
MEDIAN GRADING
(ALL INSTALLATIONS)

GENERAL NOTES

THRIE BEAM RAILS MAY NEED TO BE FIELD BENT TO FIT THE LOCATION.

SEE STANDARD DETAIL DRAWINGS 14B26 SHEETS a-h.

IF ROCK IS ENCOUNTERED, REMOVE ROCK TO FULL DEPTH OF POST PLUS 2 ½". MINIMUM DIAMETER OF THE ROCK REMOVAL IS 12" DIAMETER

- E1 UNBENT STANDARD THRIE BEAM RAIL B1 (POST 8 TO POST 10 AND POST 10 TO POST 12)
- E2 SLOTTED THRIE BEAM RAIL E1 (POST 1 TO POST 1)
- E3 SLOTTED THRIE BEAM RAIL B3 (POST 5 TO POST 8)
- E4 SLOTTED THRIE BEAM RAIL E4 (POST 1 TO POST 5)
- 5 BEYOND POST 12: CONSTRUCT STEEL THRIE BEAM - USE UNBENT STANDARD THRIE BEAM RAIL NO. 5.
- 100 DIMENSIONS ARE FROM BACK OF RAIL TO BACK OF RAIL WHERE RAIL IS BOLTED TO POST OR BLOCK.
- 101 U-BOLT CABLE CLIPS (3 PER CABLE) SPACED OUT ON NOSE, TO HOLD CABLE TO BACKSIDE OF THE RAIL.
- 102 NOSE CABLE WITH SWAGGED END BUTTONS.
- 103 NOSE CABLE ANCHOR PLATE (BACKSIDE OF SPLICE).
- 104 THE SLACK IN THE NOSE CABLES SHALL BE EVENLY DISTRIBUTED BETWEEN THE CABLE CLIP FASTENERS AND POST NO. 1 ON EITHER SIDE OF THE NOSE.
- 105 MINIMUM WORKING WIDTH 4' - 2".
- 106 MAX. WIDTH OF SYSTEM IS 14' - 2 ½" MEASURED FROM THE BACK OF RAIL TO BACK OF RAIL WHERE RAIL IS BOLTED TO A POST OR BLOCK.
- 107 FIXED OBJECT OR OTHER HAZARD.
- 108 PLAN IS TO PROVIDE STATION OFFSET TO CENTER OF POST 5 IN PLANS.

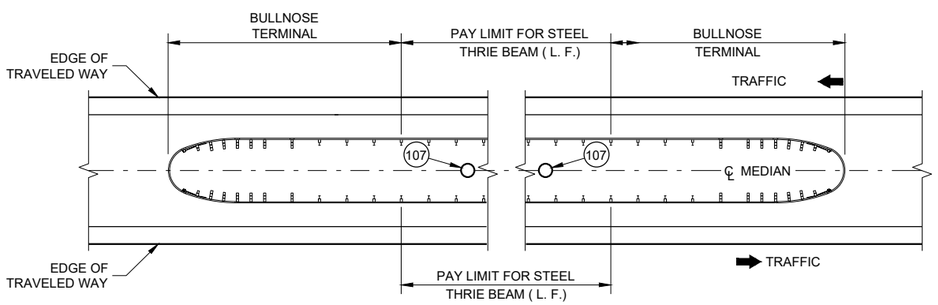

MEDIAN HAZARD PROTECTION PAY LIMITS

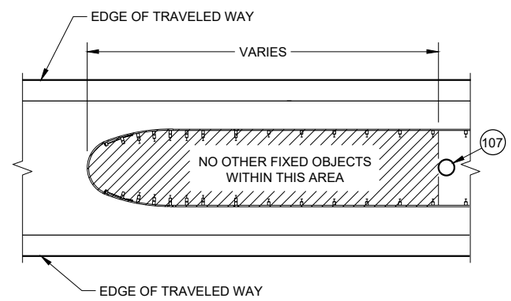

HAZARD FREE AREA
INSIDE BULLNOSE

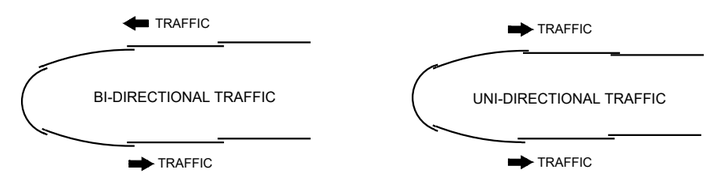

LAPPING DETAIL

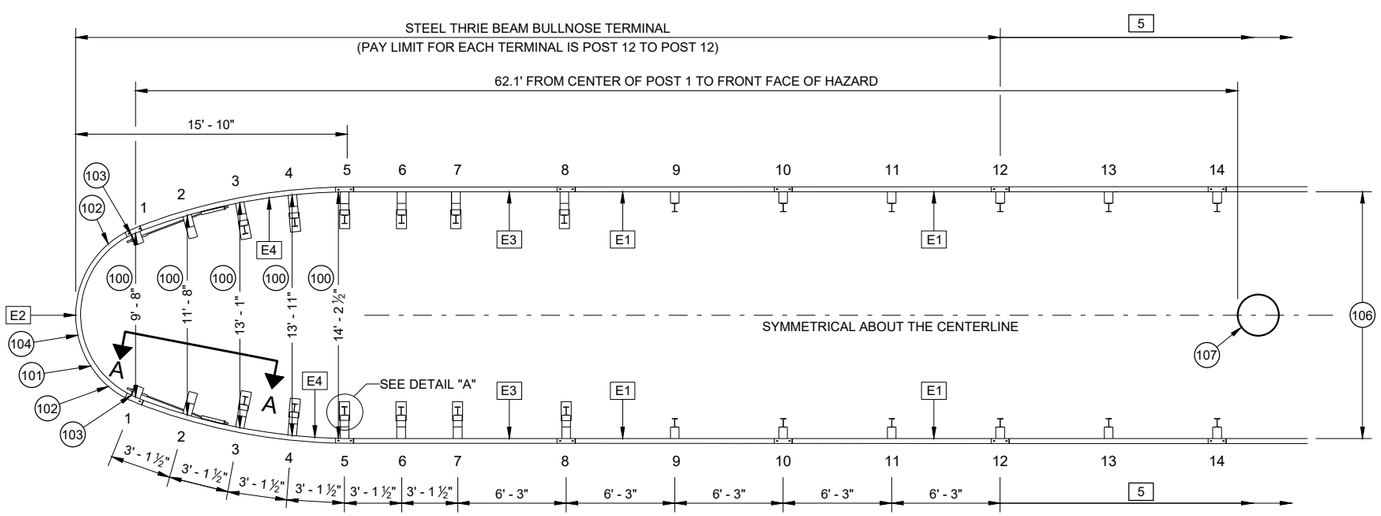

PLAN VIEW
TYPICAL BULLNOSE LAYOUT

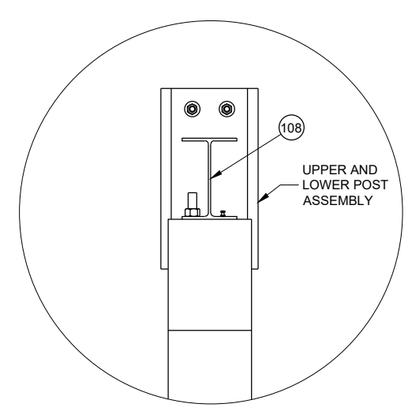

DETAIL "A"

STEEL THRIE BEAM BULLNOSE TERMINAL

STATE OF WISCONSIN
DEPARTMENT OF TRANSPORTATION

6

6

SDD 14B26 - 05a

SDD 14B26 - 05a

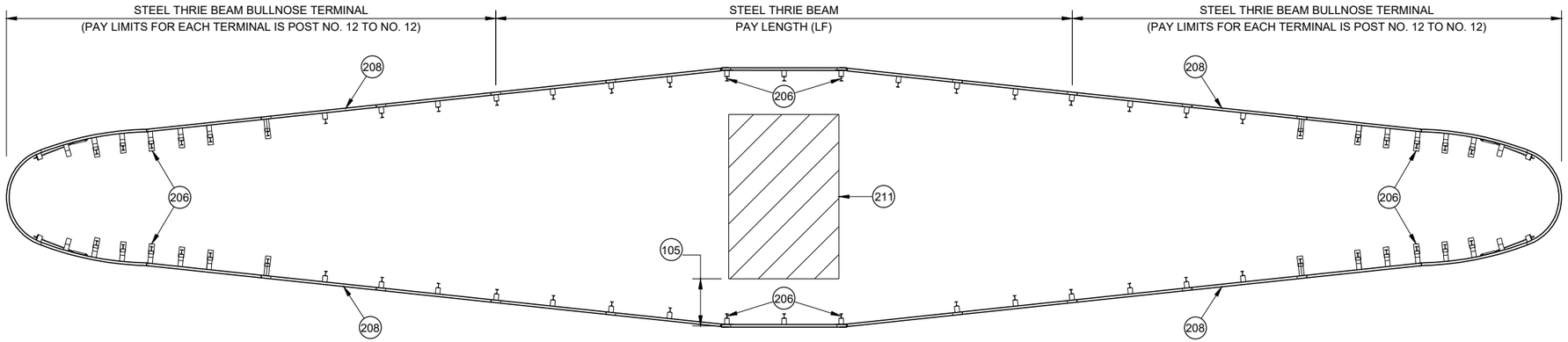

VARIABLE WIDTH BULLNOSE

GENERAL NOTES

200 6' - 3" ASYMMETRICAL 10-GAUGE W-BEAM TO THRIE BEAM GUARD TRANSITION. SEE SDD 14B45 FOR MORE INFORMATION.

201 W-BEAM RAIL. SEE SDD 14B42 FOR MORE INFORMATION.

202 SEE POST NO. 9 AND ALL STEEL THRIE BEAM POST BEYOND DETAIL.

203 SEE SDD 14B42 FOR INSTALLATION INFORMATION.

204 SEE SDD 14B45 FOR INSTALLATION DETAILS. REPLACE ASYMMETRICAL W-BEAM TO THRIE BEAM TRANSITION AND W-BEAM RAIL WITH E1. PAY FOR MODIFIED THRIE BEAM TRANSITION.

205 CONCRETE BARRIER OR BRIDGE RAIL.

206 SEE PLAN FOR STATION AND OFFSET TO CENTER OF POST.

207 SEE PLAN FOR STATION AND OFFSET TO CENTER OF SPLICE.

208 SEE PLAN FOR FLARE RATE.

209 A MINIMUM OF 25 FT OF THRIE BEAM TANGENT BEFORE TRANSITIONING TO BEAM GUARD OR THRIE BEAM TRANSITION.

210 NOT ALL BULLNOSE HARDWARE SHOWN. SEE OTHER SHEETS IN 14B26.

211 WIDER HAZARD TO BE SHIELDED.

212 TRANSITION RAIL HEIGHT TO 31" OVER THE LENGTH OF A 12' - 6" BEAM SECTION.

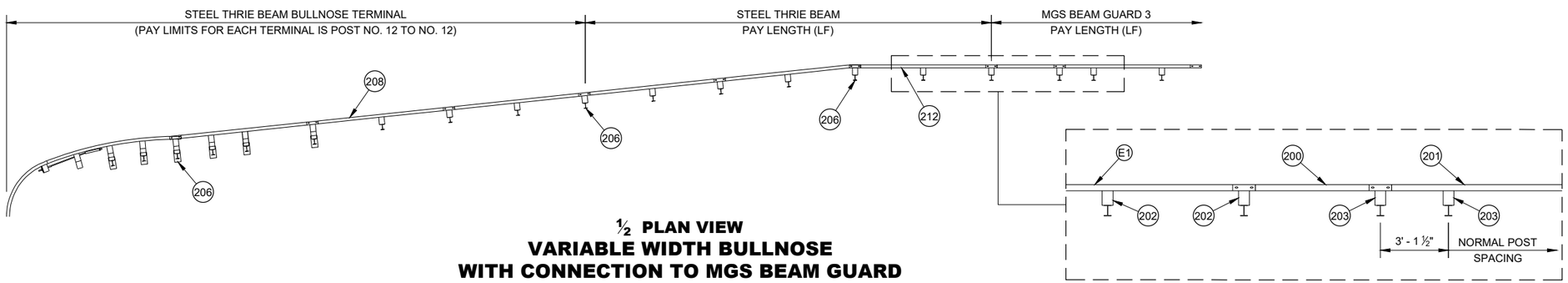

½ PLAN VIEW
VARIABLE WIDTH BULLNOSE
WITH CONNECTION TO MGS BEAM GUARD

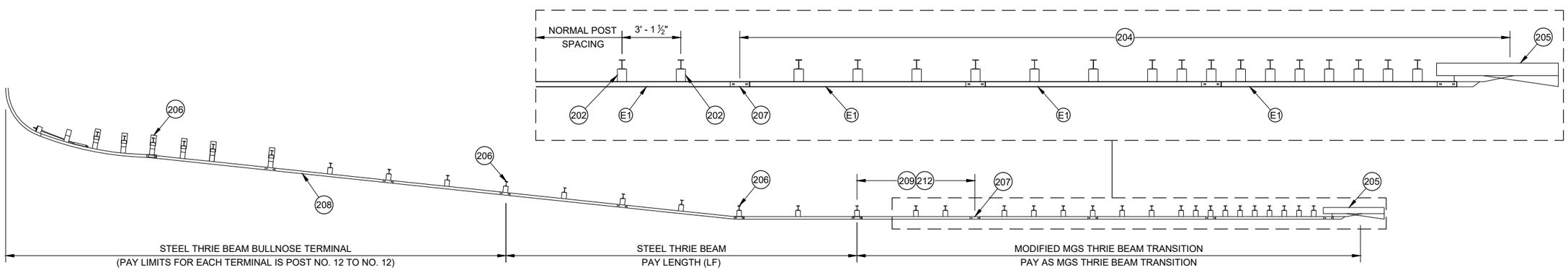

½ PLAN VIEW
VARIABLE WIDTH BULLNOSE
WITH CONNECTION TO RIGID BARRIER

STEEL THRIE BEAM BULLNOSE TERMINAL

STATE OF WISCONSIN
DEPARTMENT OF TRANSPORTATION

6
SDD 14B26 - 05b

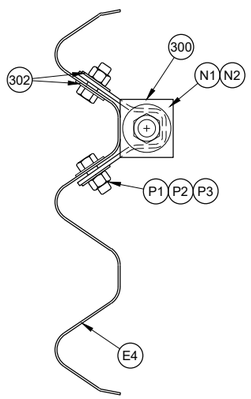

PROFILE VIEW

CABLE ANCHOR ASSEMBLY CONNECTION

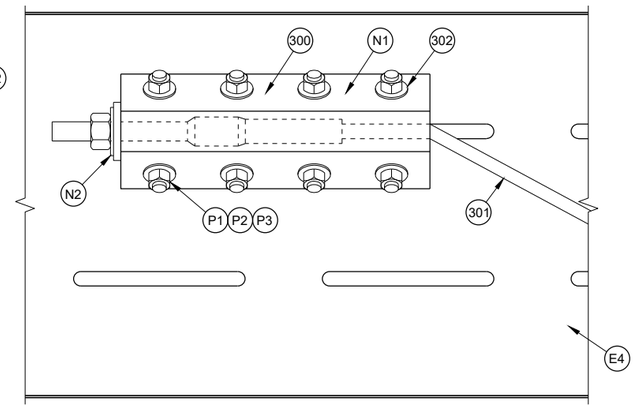

CABLE ANCHOR ASSEMBLY

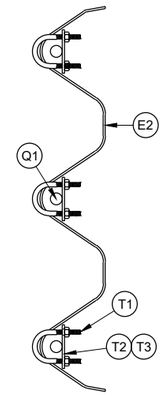

NOSE CABLE RETAINING CLIP

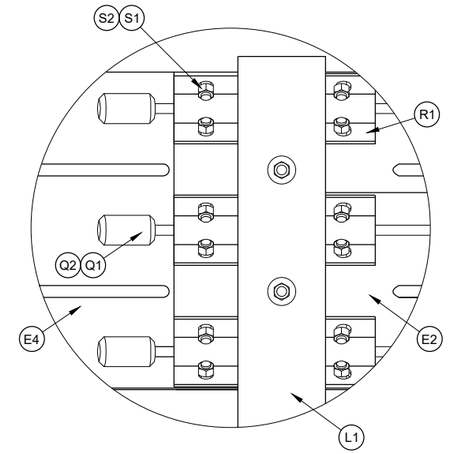

DETAIL "A"

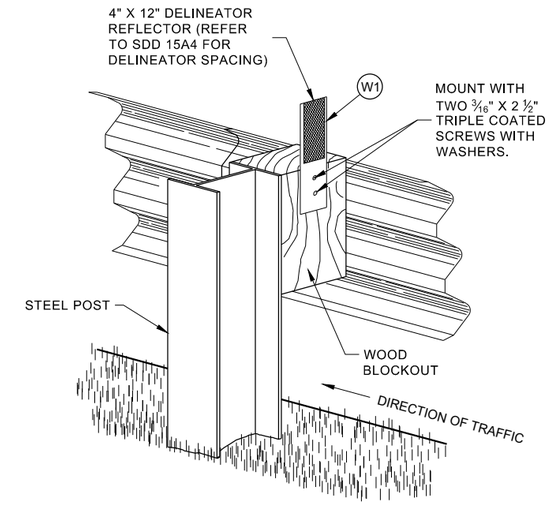

ONE SIDED REFLECTOR DETAIL AND TYPICAL INSTALLATION

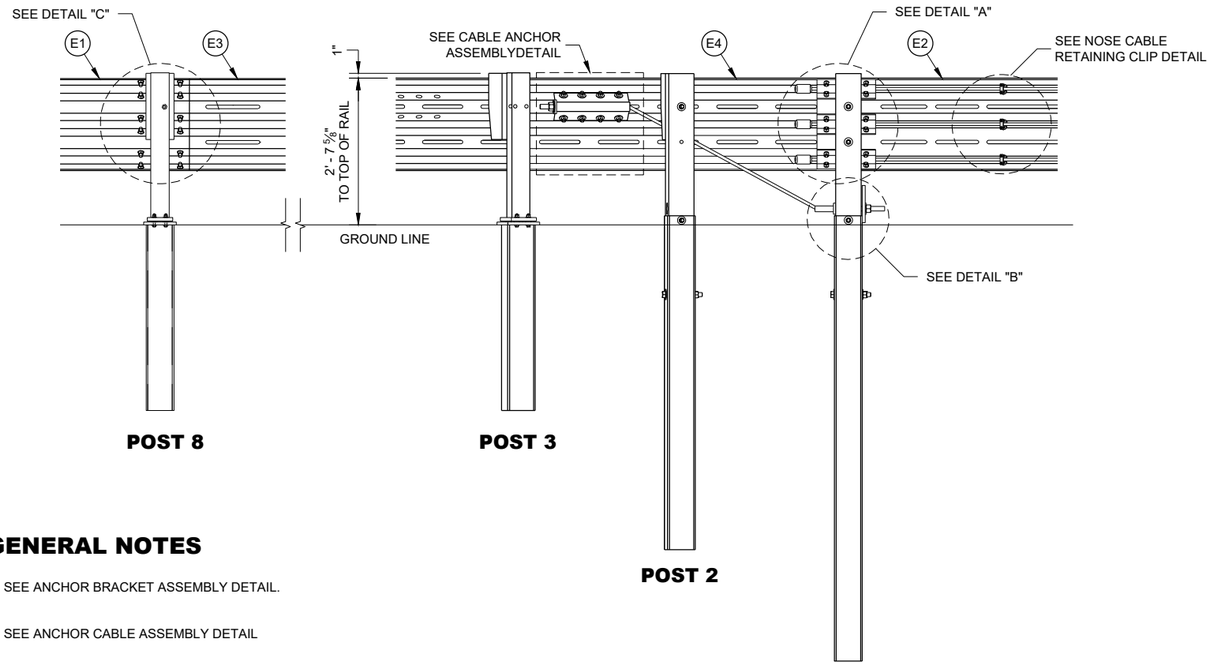

POST 8

POST 3

POST 2

POST 1

CROSS SECTION A - A

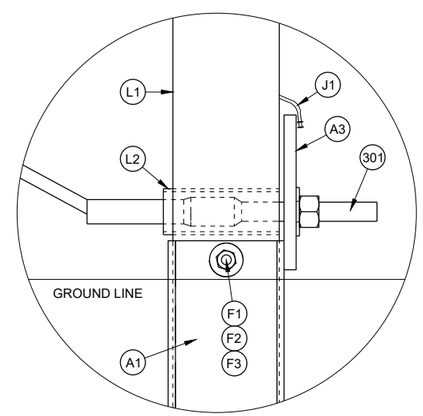

DETAIL "B"

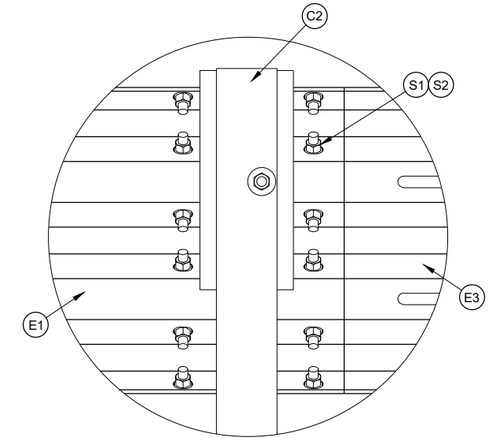

DETAIL "C"
THRIE BEAM SPLICE

GENERAL NOTES

300 SEE ANCHOR BRACKET ASSEMBLY DETAIL.

301 SEE ANCHOR CABLE ASSEMBLY DETAIL

302 ONE WASHER BETWEEN BOLT HEAD AND RAIL AND BETWEEN NUT AND ANCHOR BRACKET ASSEMBLY.

303 ONE WASHER BETWEEN BOLD HEAD AND FOUNDATION TUBE AND BETWEEN NUT AND FOUNDATION TUBE.

STEEL THRIE BEAM BULLNOSE TERMINAL

STATE OF WISCONSIN
DEPARTMENT OF TRANSPORTATION

6

SDD 14B26 - 05c

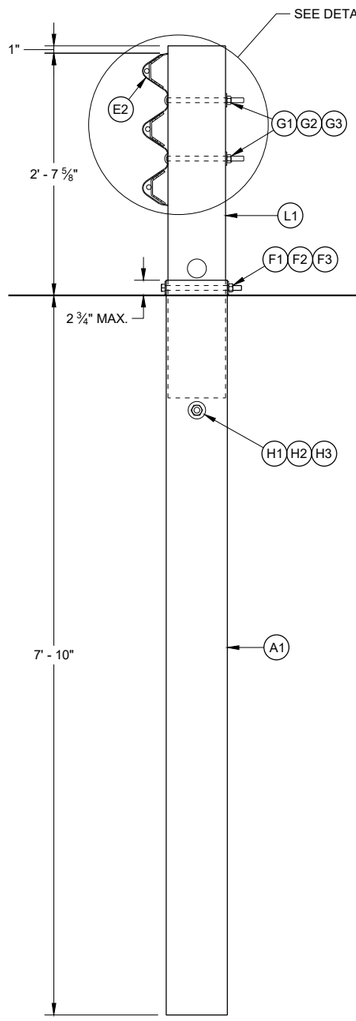

POST NO. 1

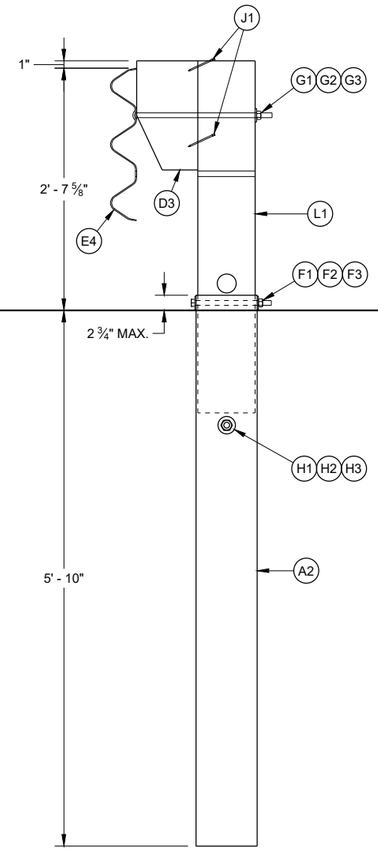

POST NO. 2

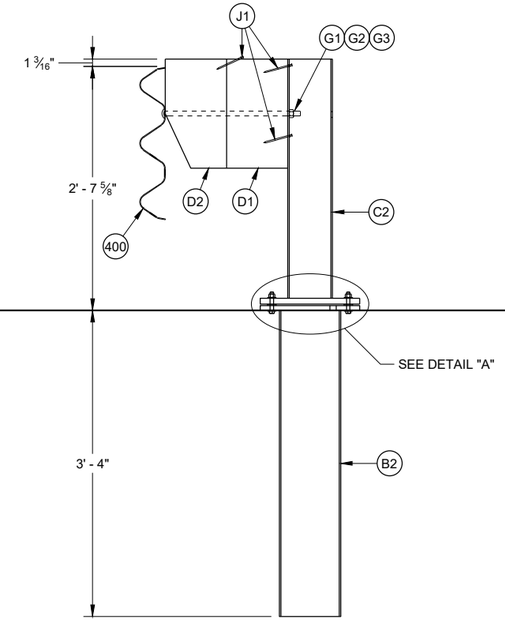

POST NOS. 3-8

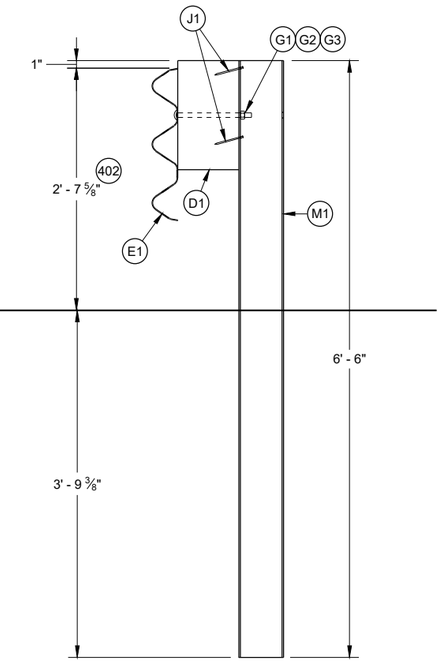

POST NOS. 9 AND ALL STEEL THRIE BEAM POSTS BEYOND

GENERAL NOTES

400 RAIL CAN BE E3 OR E4 DEPENDING ON POST LOCATION.

401 TORQUE BOLD BETWEEN 60-75 FT-LB

402 HEIGHT WILL VARY WITHIN HEIGHT TRANSITION TO OTHER HARDWARE. SEE NOTE 213, SHEET "b".

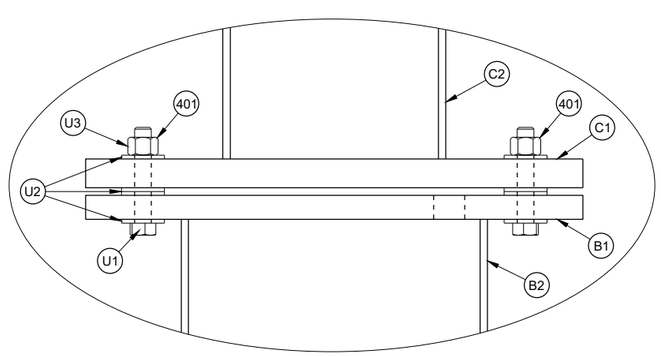

DETAIL "A"

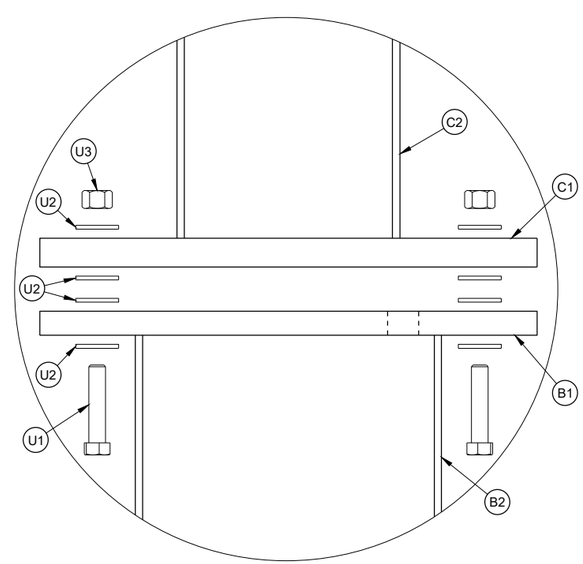

EXPLODED VIEW
DETAIL "A"

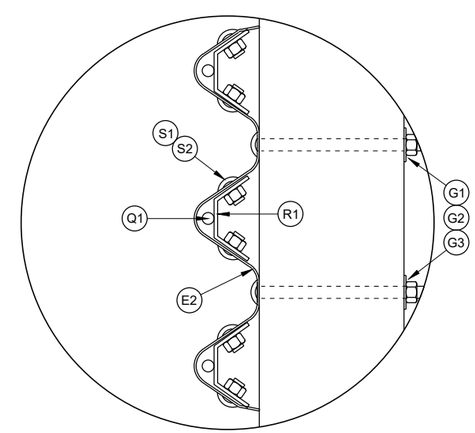

DETAIL "B"

STEEL THRIE BEAM BULLNOSE TERMINAL

STATE OF WISCONSIN
DEPARTMENT OF TRANSPORTATION

6

6

SDD 14B26 - 05d

SDD 14B26 - 05d

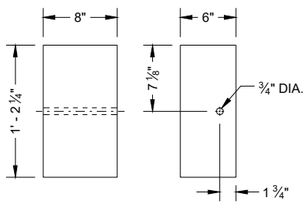

ELEVATION PROFILE
BLOCKOUT (D1)

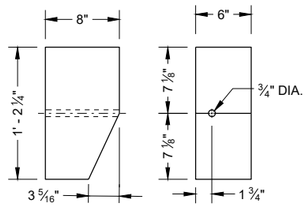

ELEVATION PROFILE
BLOCKOUT (D2)

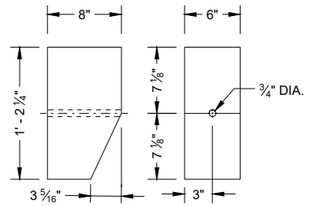

ELEVATION PROFILE
BLOCKOUT (D3)

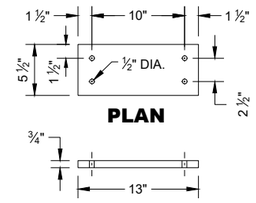

PLAN
PROFILE
UPPER SHEAR PLATE (C1)

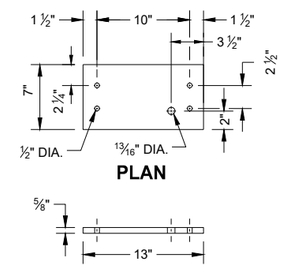

PLAN
PROFILE
LOWER SHEAR PLATE (B1)

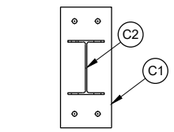

PLAN

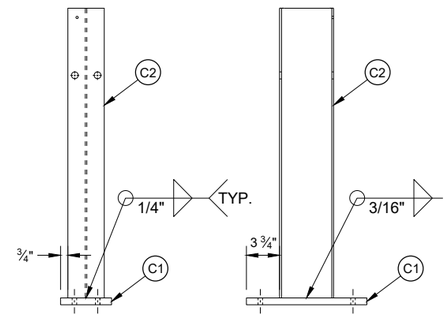

ELEVATION PROFILE
UPPER POST ASSEMBLY

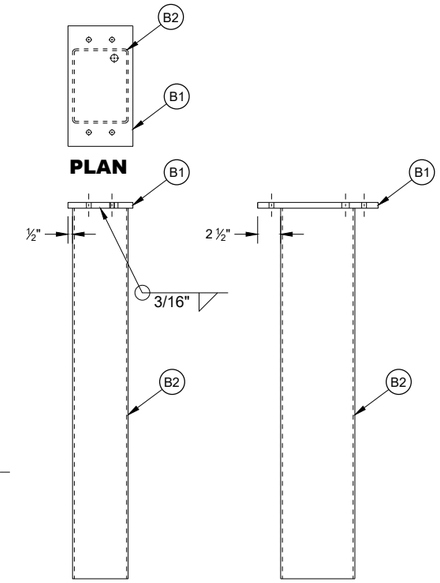

PLAN
ELEVATION PROFILE
LOWER POST ASSEMBLY

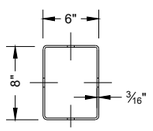

PLAN

PART	LENGTH "X"
A1	8' - 0"
A2	6' - 0"
B2	3' - 4"

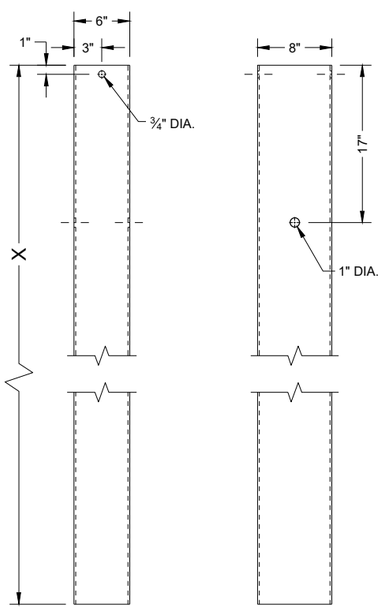

ELEVATION PROFILE
FOUNDATION TUBE

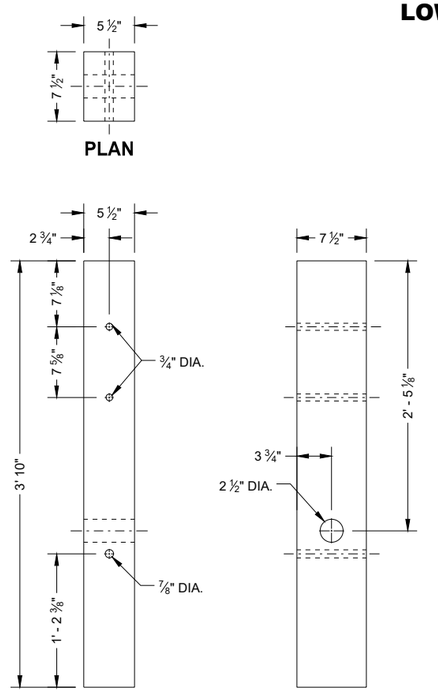

ELEVATION PROFILE
BCT POST (L1)

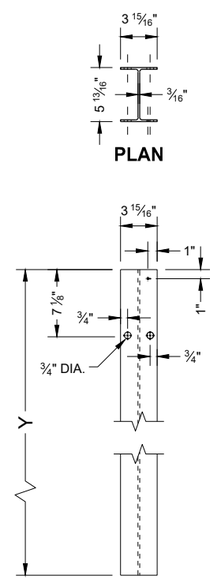

PLAN
ELEVATION
POST

PART	LENGTH "Y"
M1	6' - 6"
M2	5' - 8 5/8"
C2	2' - 7 5/8"

STEEL THRIE BEAM BULLNOSE TERMINAL

STATE OF WISCONSIN
DEPARTMENT OF TRANSPORTATION

6

SDD 14B26 - 05e

6

SDD 14B26 - 05e

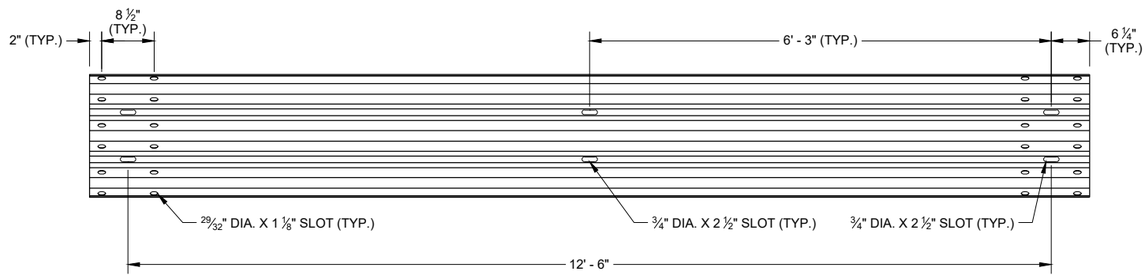

SLOTTED THRIE BEAM RAIL E1

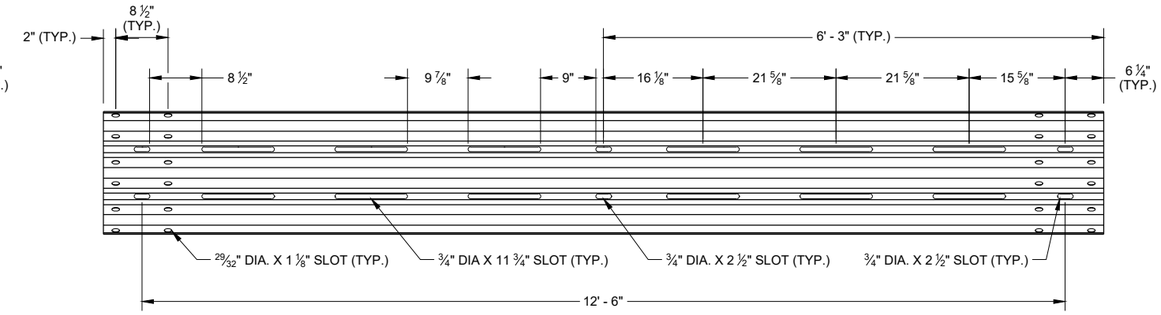

SLOTTED THRIE BEAM RAIL E3

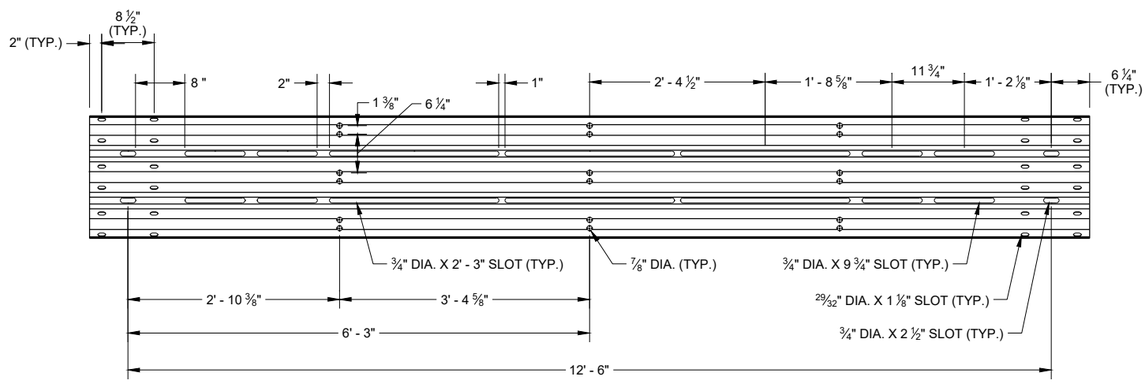

ELEVATION VIEW NON - RADIUSED
SLOTTED THRIE BEAM RAIL E2

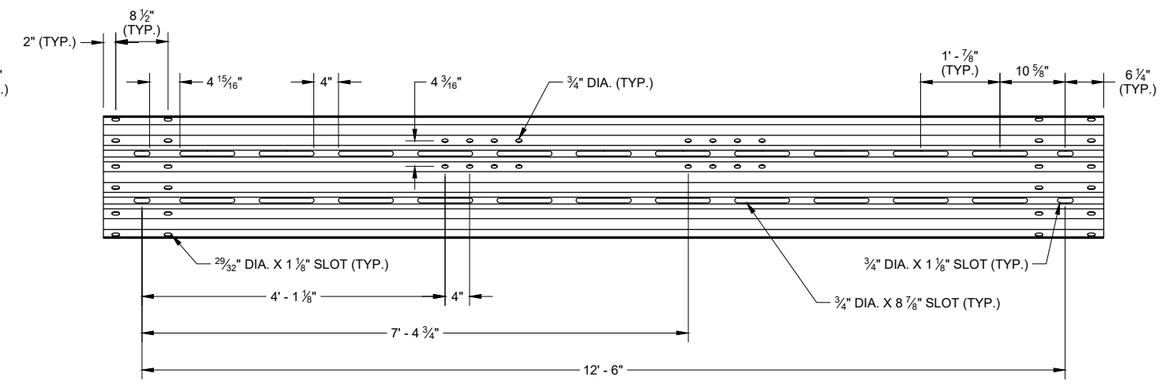

ELEVATION VIEW NON - RADIUSED
SLOTTED THRIE BEAM RAIL E4

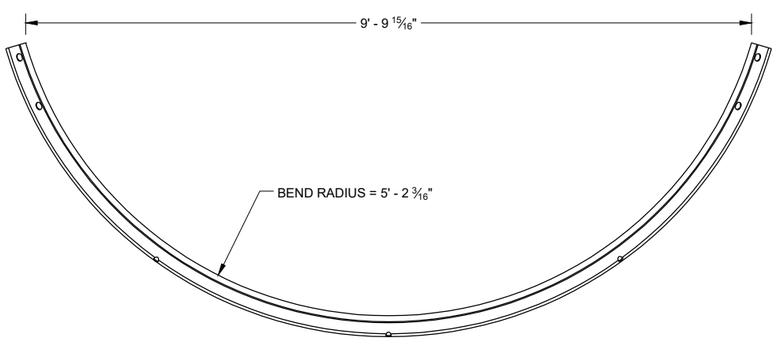

PLAN VIEW
SLOTTED THRIE BEAM RAIL E2

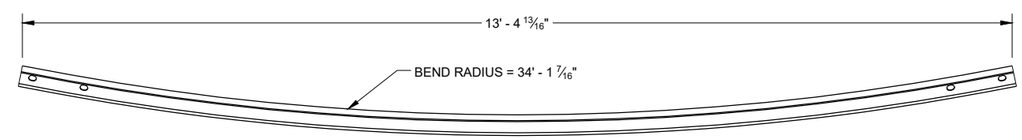

PLAN VIEW
SLOTTED THRIE BEAM RAIL E4

STEEL THRIE BEAM BULLNOSE TERMINAL

STATE OF WISCONSIN
DEPARTMENT OF TRANSPORTATION

6
SDD 14B26 - 05f

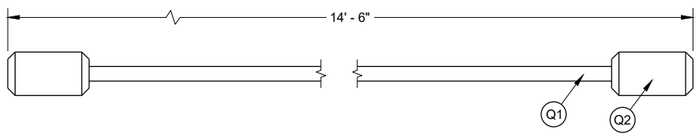

NOSE CABLE AND SWAGE BUTTON

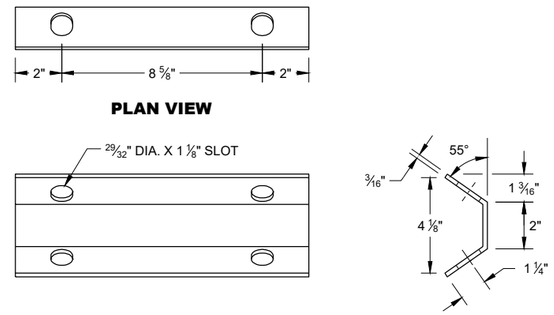

NOSE CABLE ANCHOR (R1)

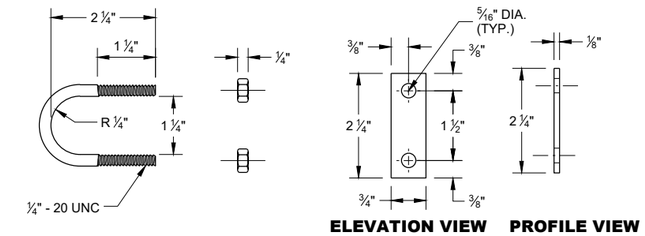

U - BOLT (T1) **U - BOLT NUT (T3)** **U - BOLT PLATE WASHER (T2)**

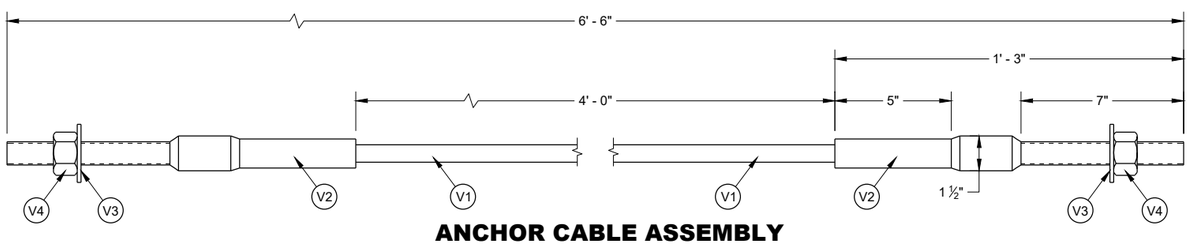

ANCHOR CABLE ASSEMBLY

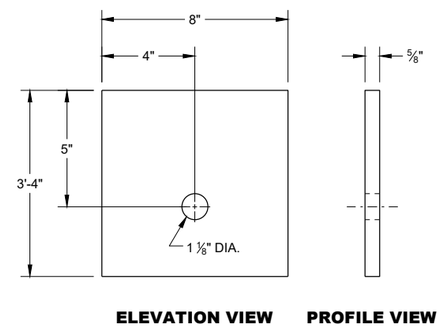

BCT BEARING PLATE (A3)

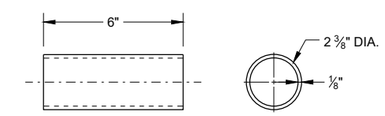

BCT POST SLEEVE (L2)

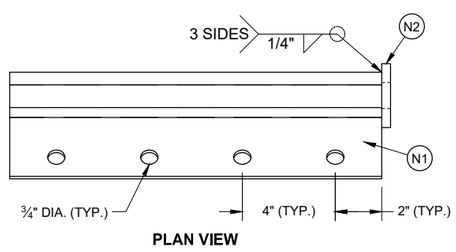

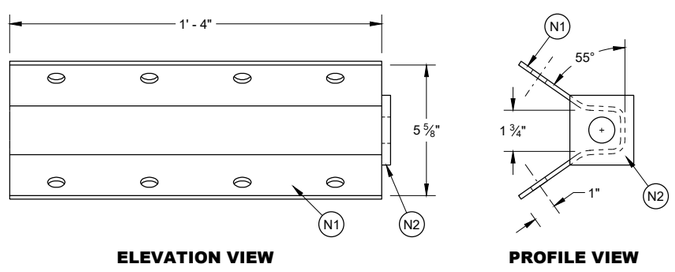

ANCHOR BRACKET ASSEMBLY (N1)

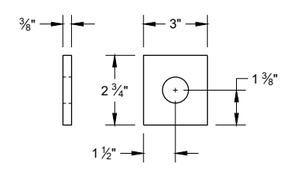

ANCHOR BRACKET END PLATE (N2)

STEEL THRIE BEAM BULLNOSE TERMINAL

STATE OF WISCONSIN
DEPARTMENT OF TRANSPORTATION

6
SDD 14B26 - 05g

BILL OF MATERIALS LIST

PART NUMBER	DESCRIPTION	MATERIAL SPECIFICATION
A1	LONG FOUNDATION TUBE	AASHTO M111/ASTM A123 ASTM A500 GRADE B OR ASTM A-501
A2	FOUNDATION TUBE	AASHTO M111/ASTM A123 ASTM A500 GRADE B OR ASTM A-501
A3	BEARING PLATE AT POST	AASHTO M111/ASTM A123 ASTM A36 MIN STRENGTH 36 KSI, OR ASTM A529 MAX. STRENGTH 50 KSI, OR ASTM A572 MAX. STRENGTH 50 KSI, OR ASTM A709 MAX. STRENGTH 50 KSI, OR ASTM A992 MAX. STRENGTH 50 KSI
B1	LOWER SLIP POST ASSEMBLY - PLATE	AASHTO M111/ASTM A123 ASTM A36 MIN STRENGTH 36 KSI, OR ASTM A529 MAX. STRENGTH 50 KSI, OR ASTM A572 MAX. STRENGTH 50 KSI, OR ASTM A709 MAX. STRENGTH 50 KSI, OR ASTM A992 MAX. STRENGTH 50 KSI
B2	LOWER SLIP POST ASSEMBLY - TUBE	AASHTO M111/ASTM A123 ASTM A500 GRADE B OR ASTM A-501
C1	UPPER SLIP POST ASSEMBLY - PLATE	AASHTO M111/ASTM A123 ASTM A36 MIN STRENGTH 36 KSI, OR ASTM A529 MAX. STRENGTH 50 KSI, OR ASTM A572 MAX. STRENGTH 50 KSI, OR ASTM A709 MAX. STRENGTH 50 KSI, OR ASTM A992 MAX. STRENGTH 50 KSI
C2	UPPER SLIP POST ASSEMBLY - POST	AASHTO M111/ASTM A123 ASTM A6 W6X9 OR W6X8.5 ASTM A36 MIN STRENGTH 36 KSI, OR ASTM A529 MAX. STRENGTH 50 KSI, OR ASTM A572 MAX. STRENGTH 50 KSI, OR ASTM A709 MAX. STRENGTH 50 KSI, OR ASTM A992 MAX. STRENGTH 50 KSI
D1	BLOCK FOR STEEL POST - WOOD	WISDOT SPEC. 614
D2	TAPERED BLOCK FOR STEEL POST - WOOD	WISDOT SPEC. 614
D3	TAPERED BLOCK FOR BCT POST - WOOD	WISDOT SPEC. 614
E1	THRIE BEAM RAIL	AASHTO M180 CLASS A TYPE 2 APPROVED PRODUCER
E2	THRIE BEAM RAIL - SHOP BENT AND PUNCHED	AASHTO M180 CLASS A TYPE 2 APPROVED PRODUCER. INDICATE RADIUS BEAM GUARD IS BENT TO ON THE BACKSIDE OF RAIL. FOLLOW AASHTO M180. MARK RADIUS.
E3	THRIE BEAM RAIL - PUNCHED	AASHTO M180 CLASS A TYPE 2 APPROVED PRODUCER
E4	THRIE BEAM RAIL - SHOP BENT AND PUNCHED	AASHTO M180 CLASS A TYPE 2 APPROVED PRODUCER. INDICATE RADIUS BEAM GUARD IS BENT TO ON THE BACKSIDE OF RAIL. FOLLOW AASHTO M180. MARK RADIUS.
F1	5/8" DIA. HEX HEAD GROUND STRUT AND YOKE BOLT	HOT DIP AASHTO M232 CLASS / ASTM A153 CLASS C / ASTM F2329 C OR MECHANICAL GAL. TO AASHTO M298 CLASS 50 TYPE 1/ ASTM B695 CLASS 50 TYPE 1 UNC HEAVY HEX HEAD ASTM A307 GRADE B OR SAE J429 GRADE 2 OR ASTM F1554 GRADE 36
F2	5/8" DIA. GROUND STRUT AND YOKE BOLT - WASHER	HOT DIP AASHTO M232 CLASS / ASTM A153 CLASS C / ASTM F2329 C OR MECHANICAL GAL. TO AASHTO M298 CLASS 50 TYPE 1/ ASTM B695 CLASS 50 TYPE 1 F436 TYPE 1 (HARDEN WASHER ONLY)
F3	GROUND STRUT AND YOKE BOLT - NUT	HOT DIP AASHTO M232 CLASS / ASTM A153 CLASS C / ASTM F2329 C OR MECHANICAL GAL. TO AASHTO M298 CLASS 50 TYPE 1/ ASTM B695 CLASS 50 TYPE 1 UNC OVER TAP NUTS AS SPECIFIED IN AASHTO 291/ASTM A 563 HEAVY HEX HEAD ASTM A563DH OR SAE J995 GRADE 5
G1	5/8 " DIA. POST BOLT	HOT DIP AASHTO M232 CLASS / ASTM A153 CLASS C / ASTM F2329 C OR MECHANICAL GAL. TO AASHTO M298 CLASS 50 TYPE 1/ ASTM B695 CLASS 50 TYPE 1 F436 TYPE 1 (HARDEN WASHER TYPICALLY USED WITH STEEL POSTS) OR ASTM F844 (UNHARDENED WASHER TYPICALLY USED WITH WOOD)
G2	POST BOLT - WASHER	HOT DIP AASHTO M232 CLASS / ASTM A153 CLASS C / ASTM F2329 C OR MECHANICAL GAL. TO AASHTO M298 CLASS 50 TYPE 1/ ASTM B695 CLASS 50 TYPE 1 F436 TYPE 1 (HARDEN WASHER TYPICALLY USED WITH STEEL POSTS) OR ASTM F844 (UNHARDENED WASHER TYPICALLY USED WITH WOOD)
G3	POST BOLT - NUT	HOT DIP AASHTO M232 CLASS / ASTM A153 CLASS C / ASTM F2329 C OR MECHANICAL GAL. TO AASHTO M298 CLASS 50 TYPE 1/ ASTM B695 CLASS 50 TYPE 1 UNC OVER TAP NUTS AS SPECIFIED IN AASHTO 291/ASTM A 563 AASHTO M180 RECESSED HEAVY HEX HEAD ASTM A563DH OR SAE J995 GRADE 5
H1	7/8" DIA. SOIL TUBE BOLT	HOT DIP AASHTO M232 CLASS / ASTM A153 CLASS C / ASTM F2329 C OR MECHANICAL GAL. TO AASHTO M298 CLASS 50 TYPE 1/ ASTM B695 CLASS 50 TYPE 1 UNC OVER TAP NUTS AS SPECIFIED IN AASHTO 291/ASTM A 563 HEAVY HEX HEAD 7/8" ASTM A563DH OR SAE J995 GRADE 5
H2	SOIL TUBE BOLT - WASHER	HOT DIP AASHTO M232 CLASS / ASTM A153 CLASS C / ASTM F2329 C OR MECHANICAL GAL. TO AASHTO M298 CLASS 50 TYPE 1/ ASTM B695 CLASS 50 TYPE 1 7/8" ASTM F844 TYPE 1 (HARDEN WASHER ONLY)
H3	SOIL TUBE BOLT - NUT	HOT DIP AASHTO M232 CLASS / ASTM A153 CLASS C / ASTM F2329 C OR MECHANICAL GAL. TO AASHTO M298 CLASS 50 TYPE 1/ ASTM B695 CLASS 50 TYPE 1 UNC OVER TAP NUTS AS SPECIFIED IN AASHTO 291/ASTM A 563 HEAVY HEX HEAD 7/8" ASTM A563DH OR SAE J995 GRADE 5
J1	16D DOUBLE HEAD NAIL	ASTM A153 HOT DIPPED CLASS D DOUBLE HEAD ASTM F1667 TYPE 1 STYLE 12 (16 DOUBLE HEADED)
L1	BCT TIMBER POST	WISDOT SPEC. 614 S4S FINISH ON 4 SIDE
L2	BCT POST SLEEVE	AASHTO M111/ASTM A123 2 3/8" OD ASTM 53 GRADE B
M1	W6X8.5 OR W6X9 STEEL POST	AASHTO M111/ASTM A123 ASTM A6 W6X9 OR W6X8.5 ASTM A36 MIN. STRENGTH 36 KSI, OR ASTM A529 MAX. STRENGTH 50 KSI, OR ASTM A572 MAX. STRENGTH 50 KSI, OR ASTM A709 MAX. STRENGTH 50 KSI, OR ASTM A992 MAX. STRENGTH 50 KSI
M2	W6X8.5 OR W6X9 STEEL POST	AASHTO M111/ASTM A123 ASTM A6 W6X9 OR W6X8.5 ASTM A36 MIN. STRENGTH 36 KSI, OR ASTM A529 MAX. STRENGTH 50 KSI, OR ASTM A572 MAX. STRENGTH 50 KSI, OR ASTM A709 MAX. STRENGTH 50 KSI, OR ASTM A992 MAX. STRENGTH 50 KSI
N1	ANCHOR BRACKET	AASHTO M111/ASTM A123 ASTM A36 MIN. STRENGTH 36 KSI, OR ASTM A529 MAX. STRENGTH 50 KSI, OR ASTM A572 MAX. STRENGTH 50 KSI, OR ASTM A709 MAX. STRENGTH 50 KSI, OR ASTM A992 MAX. STRENGTH 50 KSI
N2	ANCHOR BRACKET - BEARING PLATE	AASHTO M111/ASTM A123 ASTM A36 MIN. STRENGTH 36 KSI, OR ASTM A529 MAX. STRENGTH 50 KSI, OR ASTM A572 MAX. STRENGTH 50 KSI, OR ASTM A709 MAX. STRENGTH 50 KSI, OR ASTM A992 MAX. STRENGTH 50 KSI

PART NUMBER	DESCRIPTION	MATERIAL SPECIFICATION
P1	5/8" DIA. ANCHOR BRACKET BOLT	HOT DIP AASHTO M232 CLASS / ASTM A153 CLASS C / ASTM F2329 C OR MECHANICAL GAL. TO AASHTO M298 CLASS 50 TYPE 1/ ASTM B695 CLASS 50 TYPE 1 UNC HEAVY HEX HEAD 5/8" ASTM A307 GRADE B OR SAE J429 GRADE 2 OR ASTM F1554 GRADE 36
P2	ANCHOR BRACKET BOLT - WASHER	HOT DIP AASHTO M232 CLASS / ASTM A153 CLASS C / ASTM F2329 C OR MECHANICAL GAL. TO AASHTO M298 CLASS 50 TYPE 1/ ASTM B695 CLASS 50 TYPE 1 F436 TYPE 1 (HARDEN WASHER ONLY)
P3	SOIL TUBE BOLT - NUT	HOT DIP AASHTO M232 CLASS / ASTM A153 CLASS C / ASTM F2329 C OR MECHANICAL GAL. TO AASHTO M298 CLASS 50 TYPE 1/ ASTM B695 CLASS 50 TYPE 1 UNC OVER TAP NUTS AS SPECIFIED IN AASHTO 291/ASTM A 563 HEAVY HEX HEAD ASTM A563DH OR SAE J995 GRADE 5
Q1	5/8" DIA. NOSE CABLE	6X19 AASTHO M30 / ASTM A741 XIPS INDEPENDENT WIRE CORE (IWRC) PR 6X25 XIPS, IWRC NOMINAL BREAKING STRENGTH OF 41.2 KIPS.
Q2	NOSE CABLE-SWAGE BUTTON	COLD TUFF BUTTON, S-409 SIZE NO. 12 STOCK NUMBER 1040395 OR ANY OTHER SIMILAR SIZED WAGED-GRIP-BUTTON FERRULES. ASTM A576 GRADE 1035 SWAGE FITTING ARE TO BE FIELD SWAGED PER MANUFACTURERS RECOMMENDATION. NOMINAL BREAKING STRENGTH OF 41.2 KIPS.
R1	NOSE CABLE ANCHOR BRACKET	AASHTO M111/ASTM A123 ASTM A36 MIN. STRENGTH 36 KSI, OR ASTM A529 MAX. STRENGTH 50 KSI, OR ASTM A572 MAX. STRENGTH 50 KSI, OR ASTM A709 MAX. STRENGTH 50 KSI, OR ASTM A992 MAX. STRENGTH 50 KSI
S1	5/8" DIA. SPLICE BOLT - BOLT	HOT DIP AASHTO M232 CLASS / ASTM A153 CLASS C / ASTM F2329 C OR MECHANICAL GAL. TO AASHTO M298 CLASS 50 TYPE 1 / ASTM B695 CLASS 50 TYPE 1 UNC AASHTO M180 HEAD ASTM A307 GRADE B OR SAE J429 GRADE 2 OR ASTM F1554 GRADE 36
S2	SPLICE - BOLT NUT	HOT DIP AASHTO M232 CLASS / ASTM A153 CLASS C / ASTM F2329 C OR MECHANICAL GAL. TO AASHTO M298 CLASS 50 TYPE 1 / ASTM B695 CLASS 50 TYPE 1 UNC OVER TAP NUTS AS SPECIFIED IN AASHTO 291/ASTM A 563 AASHTO M180 RECESSED HEAVY HEX HEAD 5/8" ASTM A563DH OR SAE J995 GRADE 5
T1	1/4" DIA. NOSE CABLE - U BOLT	HOT DIP AASHTO M232 CLASS / ASTM A153 CLASS C / ASTM F2329 C OR MECHANICAL GAL. TO AASHTO M298 CLASS 50 TYPE 1 / ASTM B695 CLASS 50 TYPE 1 UNC HEAVY HEX HEAD ASTM A307 GRADE B OR SAE J429 GRADE 2 OR ASTM F1554 GRADE 36
T2	U-BOLT - PLATE WASHER	HOT DIP AASHTO M232 CLASS / ASTM A153 CLASS C / ASTM F2329 C OR MECHANICAL GAL. TO AASHTO M298 CLASS 50 TYPE 1 / ASTM B695 CLASS 50 TYPE 1 F436 TYPE 1 (HARDEN WASHER ONLY)
T3	U-BOLT NUT	HOT DIP AASHTO M232 CLASS / ASTM A153 CLASS C / ASTM F2329 C OR MECHANICAL GAL. TO AASHTO M298 CLASS 50 TYPE 1/ ASTM B695 CLASS 50 TYPE 1 UNC OVER TAP NUTS AS SPECIFIED IN AASHTO 291 / ASTM A 563 HEAVY HEX HEAD ASTM A563DH OR SAE J995 GRADE 5
U1	7/16" DIA. SLIP POST ASSEMBLY - BREAKAWAY BOLT	ASTM A153 OR B695 CLASS 55 OR F2329 UNC FULLY THREADED HEX HEAD TAP BOLT ASTM A449 OR SAE J429 GRADE 5
U2	7/16" DIA. SLIP POST ASSEBLY - BREAKAWAY BOLT - WASHER	ASTM F436 TYPE I (HARDEN TYPICALLY USED WITH STEEL) GALV. AASHTO M111/ASTM A 123 OR GALV. HOT DIP. TO POST BOLT CLASS C / ASTM F2329 OR GALV. MECHANICALLY TO AASHTO M232 CLASS C / ASTM A153 CLASS C / ASTM AASHTO M298 CLASS 50, TYPE 1 / ASTM B695 CLASS 55, F2329
U3	SLIP POST ASSEBLY - BREAKAWAY BOLT - NUT	HOT DIP AASHTO M232 CLASS / ASTM A153 CLASS C / ASTM F2329 C OR MECHANICAL GAL. TO AASHTO M298 CLASS 50 TYPE 1 / STM B695 CLASS 50 TYPE 1 UNC OVER TAP NUTS AS SPECIFIED IN AASHTO 291/ASTM A 563 HEAVY HEX HEAD ASTM A563DH OR SAE J995 GRADE 5
V1	¾" DIA. BCT CABLE	AASHTO M30 / ASTM A741 6X19 INDEPENDENT WIRE CORE (IWRC) IMPROVED PLOW STEEL (IPS), 6X19 INDEPENDENT WIRE CORE (IWRC) IMPROVED PLOW STEEL (IPS) TYPE II OR IIC, CLASS C ZINC COATED MIN BREAKING STRENGTH OF 42.7 KIPS
V2	ANCHOR CABLE-SWAGE FITTING	UNC ASTM A576 GRADE 1035 SWAGE FITTING ARE TO BE FACTORY SWAGED. MIN. BREAKING STRENGTH OF 42.7 KIPS. ASME B30.26 "FORGED, CAST, OR DIE STAMPED WITH THE FOLLOWING IN TO CONNECTION: NAME OF MANUFACTURE OR TRADEMARK OF CONNECTION'S MANUFACTURER, SIZE OR RATED LOAD, GRADE FOR ALLOY EYEBOLTS."
V3	1" DIA. ANCHOR CABLE-WASHER	HOT DIP AASHTO M232 CLASS / ASTM A153 CLASS C / ASTM F2329 C OR MECHANICAL GAL. TO AASHTO M298 CLASS 50 TYPE 1 / ASTM B695 CLASS 50 TYPE 1 F436 TYPE 1 (HARDEN WASHER ONLY)
V4	1" DIA. ANCHOR CABLE-NUT	HOT DIP AASHTO M232 CLASS / ASTM A153 CLASS C / ASTM F2329 C OR MECHANICAL GAL. TO AASHTO M298 CLASS 50 TYPE 1/ ASTM B695 CLASS 50 TYPE 1 UNC OVER TAP NUTS AS SPECIFIED IN AASHTO 291 / ASTM A 563 HEAVY HEX HEAD ASTM A563DH OR SAE J995 GRADE 5
W1	REFLECTOR	SEE SDD 15A4

6

STEEL THRIE BEAM BULLNOSE TERMINAL

STATE OF WISCONSIN
DEPARTMENT OF TRANSPORTATION

APPROVED
November 2022 — DATE
/S/ Rodney Taylor — ROADWAY STANDARDS DEVELOPMENT ENGINEER
FHWA

SDD 14B26 - 05h

Steel Thrie Beam Bullnose Terminal

References:

Standard Spec 614
FDM 11-45-30.3
AASHTO Roadside Design Guide
MwRSF TRP-03-389-20
MwRSF TRP-03-419-19

Bid items associated with this drawing:

ITEM NUMBER	DESCRIPTION	UNIT
614.0010	Barrier System Grading Shaping Finishing	EACH
614.0200	Steel Thrie Beam Structure Approach	LF
614.0220	Steel Thrie Beam Bullnose Terminal	EACH
614.0230	Steel Thrie Beam	LF

Standardized Special Provisions associated with this drawing:

STSP NUMBER	TITLE
NONE	

Other SDDs associated with this drawing:

SDD 14B28 Guardrail Mow Strip

When using Class A:

SDD 14B15 Steel plate beam guard, Class A, Installation and Elements
SDD 14B20 Thrie Beam Structure Approaches

When using MGS:

SDD 14B42 Midwest Guardrail System (MGS) Guardrail
SDD14B45 Midwest Guardrail System (MGS) Thrie Beam Transition

Design Notes:

Steel thrie beam bullnose (i.e. bullnose) passed MASH 2016 crash testing Use this system to protect hazards, such as bridge piers; overhead sign support structures, gaps between twin bridges and gore areas. It can be used to protect unidirectional (between a ramp and the mainline) or bi-directional (median application) traffic from impacting a fixed object.

During a head-on impact, an errant vehicle will stop within the area hazard free area inside the bullnose. Keep the area within the bullnose free of objects. Grade the area within the bullnose to provide stability for the vehicle during impact.

Bullnose can use emulsified asphalt mow strip bid items. Maintenance staff needs to have access to bolts under posts 3 through 8. When using mow strips provide individual construction details.

Avoid placing curb and gutter near a bullnose. If curb and gutter is needed near a bullnose, document why curb and gutter is needed in the DSR. If curb and gutter needed provide driveway curb & gutter.

Grading is critical for vehicles to engage the bullnose and to provide strength to the system. Cut cross sections: at least 210' prior to system, 60' prior to system, post 1, post 5 and at fixed object being protected. More cross sections may be needed to show drainage, or how to blend slopes.

Review drainage and subsurface conflicts (e.g. utilities, drainage structures, rock, foundation, …) near a bullnose early in the design process. Posts for the bullnose are embedded deeper in the ground than standard beam guard posts. This can cause underground conflicts. Drainage issues may require the installation or adjustment of drainage structures.

Provide individual construction details for each bullnose installation in the plan (i.e. construction details)

Thrie beam bullnose may use the Grading and Shaping and Finishing for Barrier Systems Item

Contact Person:

Erik Emerson (608) 266-2842