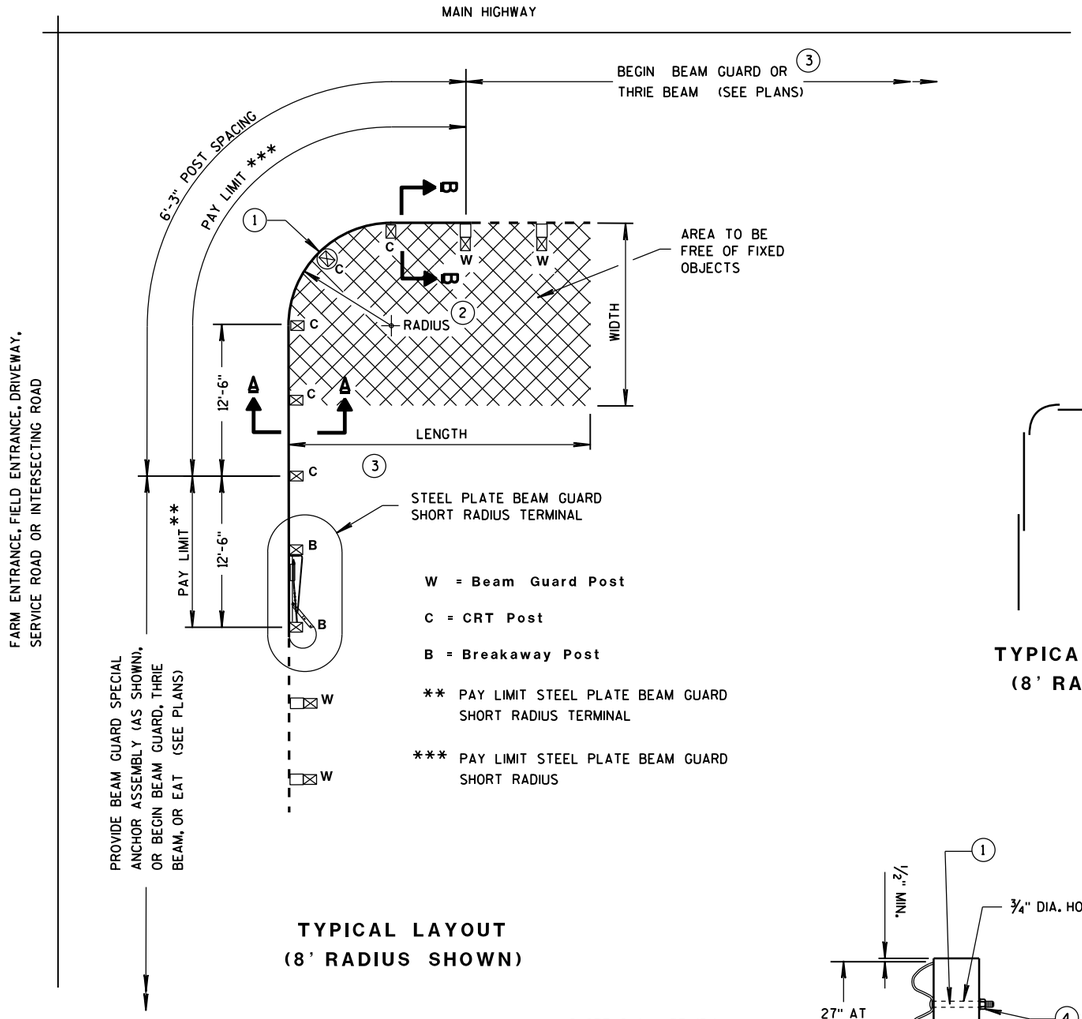

TYPICAL LAYOUT
(8' RADIUS SHOWN)

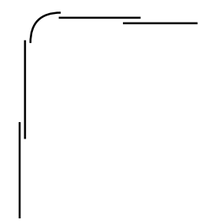

TYPICAL LAP SPLICES
(8' RADIUS SHOWN)

GENERAL NOTES

ALL ANGLES, CHANNELS, AND PLATES SHALL CONFORM TO THE REQUIREMENTS OF ASTM A36 AND THE STRUCTURAL TUBING SHALL CONFORM TO ASTM A 500. WELDING SHALL MEET THE CURRENT REQUIREMENTS OF THE AMERICAN WELDING SOCIETY STRUCTURAL WELDING CODE ANSI/AWS D1.1. ALL STRUCTURAL STEEL SHALL BE GALVANIZED IN ACCORDANCE WITH ASTM A 123. PUNCHING, DRILLING, CUTTING, OR WELDING WILL NOT BE PERMITTED AFTER GALVANIZING. FURNISH AND INSTALL HARDWARE PER STANDARD SPECIFICATION 614.2. UNLESS NOTED OTHERWISE.

SHOP BEND CURVED RAIL SECTIONS.

SEE STANDARD DETAIL DRAWING 14 B 15 FOR OTHER DETAIL.

1. ON THE 8 FOOT RADIUS INSTALLATION, DO NOT INSTALL BUTTON HEAD BOLT AT CENTER CRT POST.
2. RADIUS FROM 8' - 36'. SEE PLAN.
3. HEIGHT TRANSITION MAY BE REQUIRED. SEE PLAN OR PROJECT ENGINEER.
4. 5/8" ø X 1'-6" BUTTON HEAD BOLT AND RECESS NUT WITH ROUND WASHER UNDER NUT.

RADIUS	NUMBER OF CRT POSTS	* NUMBER AND LENGTH OF CURVED RAILS	REQUIRED AREA FREE OF FIXED OBJECTS (LENGTH x WIDTH)
8'	5	1 at 12.5'	25' x 15'
16'	7	1 at 25'	30' x 15'
24'	9	1 at 25' and 1 at 12.5'	40' x 20'
32'	11	2 at 25'	50' x 20'

* THE NUMBER OF RAILS IS BASED ON A 90° INTERSECTION. SEE PLAN FOR NON 90° INSTALLATIONS.

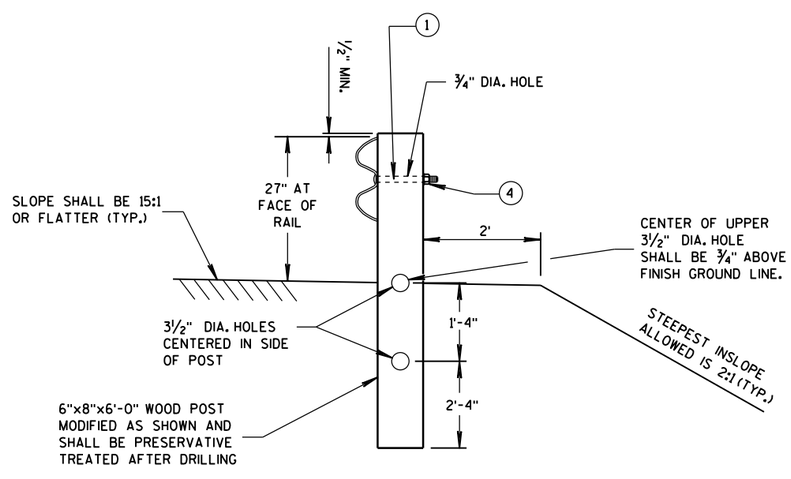

SECTION A-A
(CRT POST)

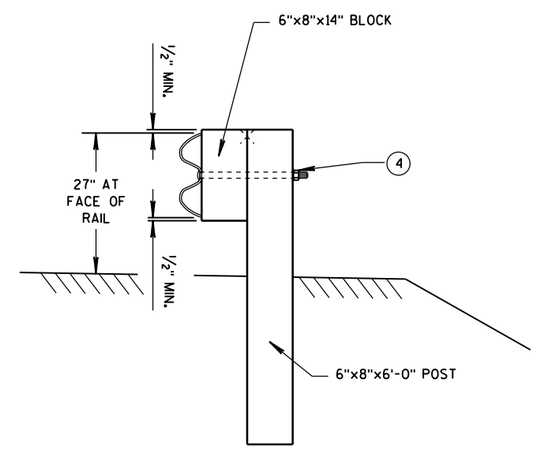

SECTION B-B
(BEAM GUARD POST)

STEEL PLATE BEAM GUARD SHORT RADIUS TERMINAL

STEEL PLATE BEAM GUARD SHORT RADIUS TERMINAL

STATE OF WISCONSIN
DEPARTMENT OF TRANSPORTATION

6
S.D.D. 14 B 27-1a

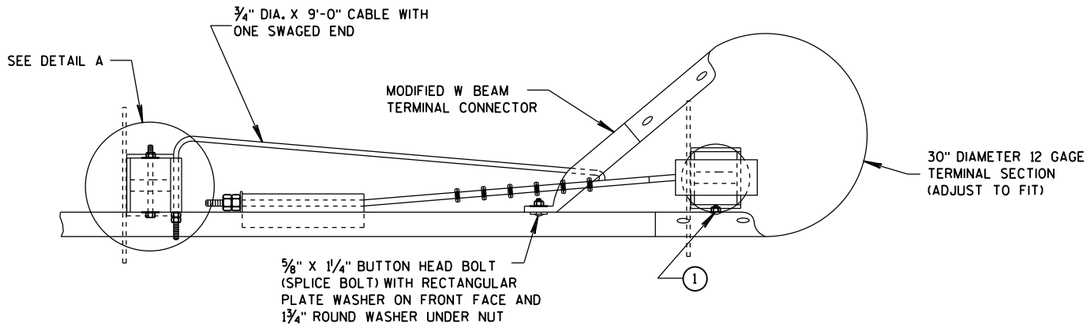

PLAN VIEW

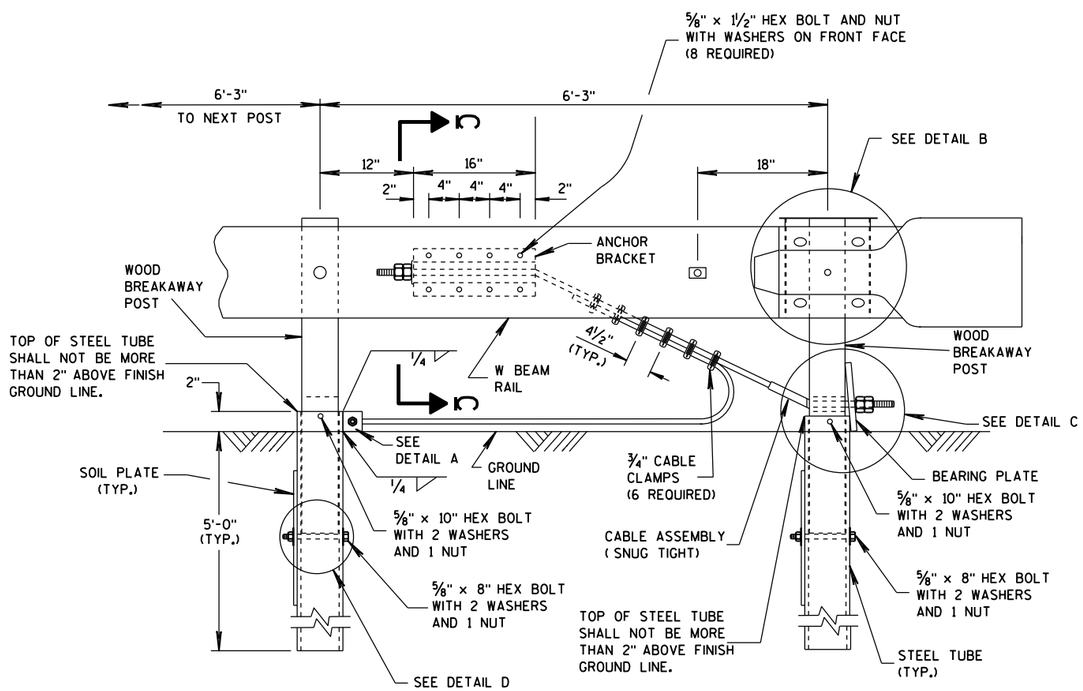

ELEVATION VIEW

GENERAL NOTES

1. ATTACH W BEAM RAIL TO THE STEEL PIPE WITH A 5/8" X 2" BUTTON HEAD BOLT WITH NO WASHER. CONNECTION TO THE POST IS NOT REQUIRED.

   INSTALL GALVANIZED 3/4" (6X19) PREFORMED WIRE OR INDEPENDENT WIRE ROPE CORE CONFORMING TO AASHTO M 30. MANUFACTURE WIRE ROPE OUT OF IMPROVED PLOW STEEL WITH A MINIMUM BREAKING STRENGTH OF 42,800 PSI.

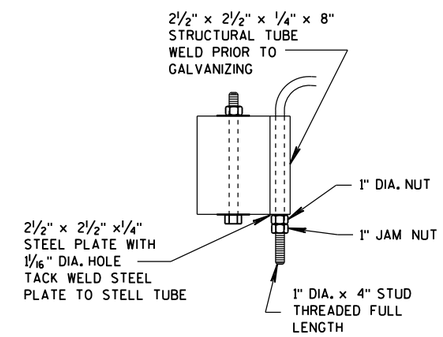

DETAIL A

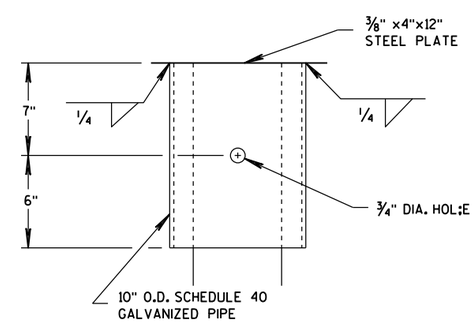

DETAIL B

(BEAM GUARD AND TERMINAL SECTION NOT SHOWN)

STEEL PLATE BEAM GUARD SHORT RADIUS TERMINAL

STEEL PLATE BEAM GUARD SHORT RADIUS TERMINAL

STATE OF WISCONSIN
DEPARTMENT OF TRANSPORTATION

6
S.D.D. 14 B 27-1b

SDD 14b27-c Steel Plate Beam Guard Short Radius Terminal

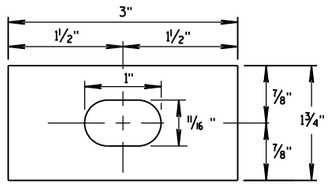

RECTANGULAR PLATE WASHER

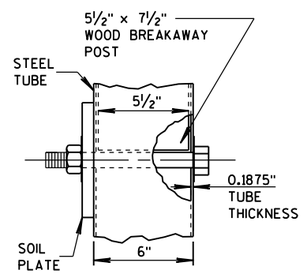

DETAIL D

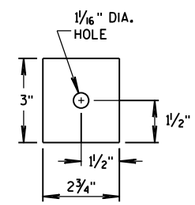

END PLATE

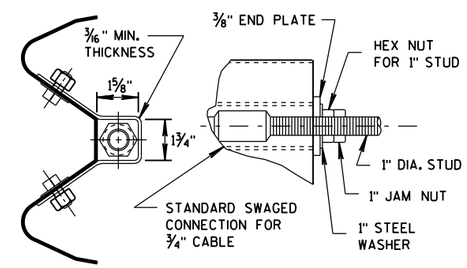

SECTION C-C
(END PLATE REMOVED)

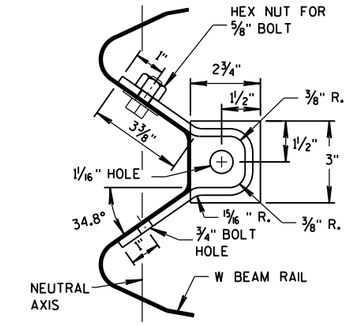

ANCHOR BRACKET

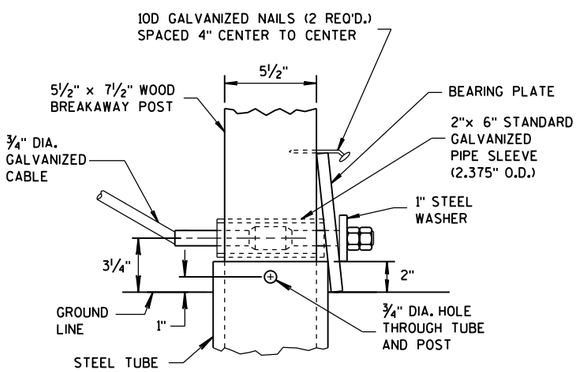

DETAIL C

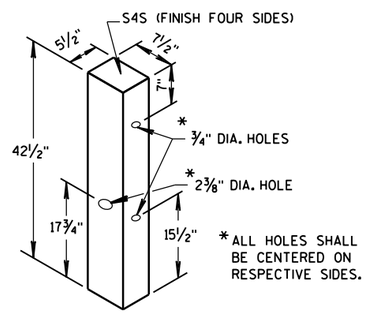

WOOD BREAKAWAY POST

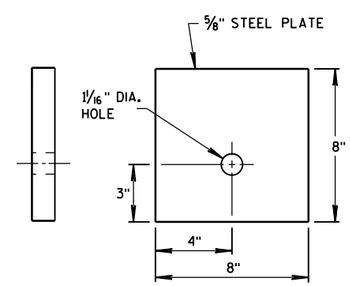

BEARING PLATE

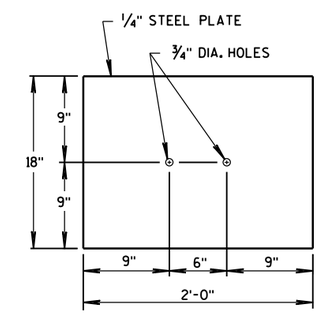

SOIL PLATE

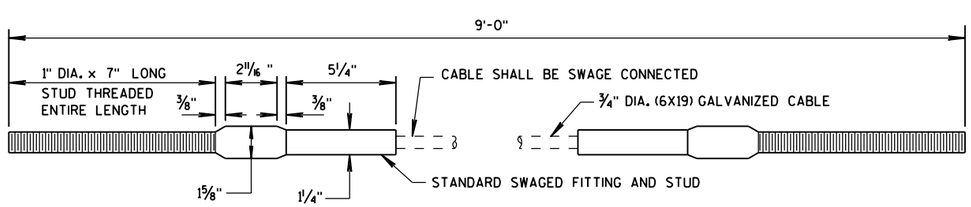

CABLE ASSEMBLY

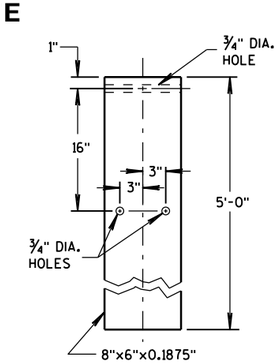

STEEL TUBE

STEEL PLATE BEAM GUARD
SHORT RADIUS TERMINAL

STATE OF WISCONSIN
DEPARTMENT OF TRANSPORTATION

APPROVED

12/18/08	/S/ Jerry H. Zogg
DATE	ROADWAY STANDARDS DEVELOPMENT ENGINEER

FHWA

6

6

S.D.D. 14 B 27-1c

S.D.D. 14 B 27-1c

Steel Plate Beam Guard Short Radius Terminal

References:

FDM 11-45-30
FHWA Technical Advisory T 5040.32 April 13, 1992

Bid items associated with this drawing:

ITEM NUMBER	DESCRIPTION	UNIT
614.0345	Steel Plate Beam Guard Short Radius	LF
614.0390	Steel Plate Beam Guard Short Radius Terminal	EACH

Other SDDs associated with this drawing:

SDD 14B15	Steel Plate Beam Guard, Class "A", Installation and Elements, Mow Strip Detail sheets "a" and "b"
SDD 14B18	Steel Plate Beam Guard, Class "A"
SDD 14B20	Steel Thrie Beam Structure Approach is required to attach beam guard to a parapet or concrete barrier
SDD 14B24	Steel Plate Beam Guard Energy Absorbing Terminal is required if EAT is being used.
SDD 14B27	Steel Plate Beam Guard Short Radius Terminal

Design Notes:

The short radius beam system is NCHRP 230 crash tested. Currently there are no NCHRP 350 short radius systems available. It is recommended that the short radius system be used in areas of low speed (Design speed 45 or less), and low volume areas.

The short radius system is not a desirable alternative in high-speed situations; however, it is typically better that not protecting a hazard. If the short radius system needs to be installed areas of higher speeds (greater than 45 MPH), designers must document use of the short radius system on high speed facilities within the DSR because it is not NCHRP 350 crash tested. Document what alternatives were investigated and why the short radius system was selected.

Short radius system is approved for radius from 8.5’ to 36’. Designers must not use radius outside this range because larger or smaller radiuses have not been crash tested. Use chord length of 6.25 feet to calculate radius required for installation that are not 90 degrees.

Do not install short radius systems behind curb (Note: Curb can significantly degrade the performance of normal beam guard that is NCHRP 350 testing and the Short Radius System is not NCHRP 350 compliant).

If possible, provide some flat or traversable area behind the short radius system because a vehicle will travel behind the barrier system during an impact. This is not a requirement to install the system but is considered a best practice. Site conditions may make this impractical. However, fixed objects must be removed from the areas given on the front side of the SDD.

The short radius system has a maximum rail height of 27” to top of rail. A height transition should be used to transition the height of the rail to the normal beam guard height. Typically, this can be achieved in one rail length. Indicate the need for a height transition in the plan.

There are some situations where a height transition may not be installed. Typically, a height transition would not be installed when there is a space restriction. Some examples would be: when installing just a short radius beam guard terminal on a driveway, it may not be practical to install 12.5 feet of beam guard to get the standard barrier height and then installing the short radius beam guard terminal. Another example is when a bridge is so close to the short radius system that it is not possible to install the 12.5 feet of beam guard between the short radius system and the thrie beam transition. Document in DSR why the height transition is not being used for each installation of the short radius system.

The short radius beam guard terminal has not been crash tested and should be used only on field entrances, driveways and low speed roadways (posted 35 mph or less). On intersecting roadways of higher speeds, uses beam guard, and/or EAT.

Designers must note the radius, length of installation, number of CRT posts for each installation and if a short radius terminal is being used within the plan.

Contact Person:

Erik Emerson (608) 266-2842