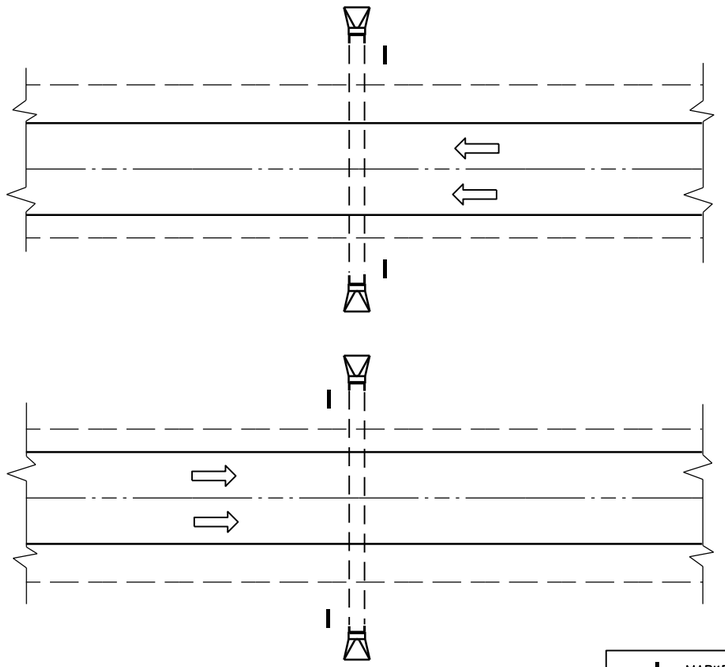

PLAN VIEW

DIVIDED HIGHWAY

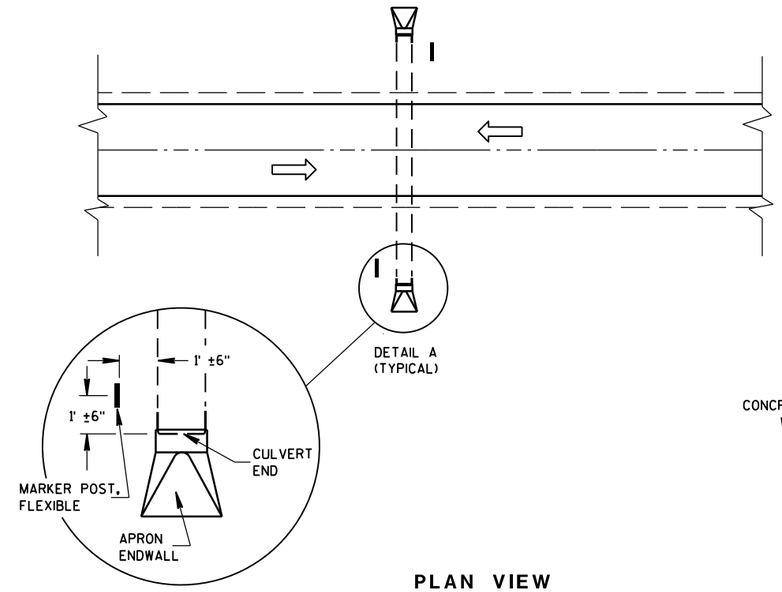

DETAIL A
(TYPICAL)

PLAN VIEW

UNDIVIDED HIGHWAY

MARKER POST, FLEXIBLE

DIRECTION OF TRAFFIC FLOW

GENERAL NOTES

DETAILS OF CONSTRUCTION, MATERIALS AND WORKMANSHIP NOT SHOWN ON THIS DRAWING SHALL CONFORM TO THE PERTINENT REQUIREMENTS OF THE STANDARD SPECIFICATIONS AND THE APPLICABLE SPECIAL PROVISIONS.

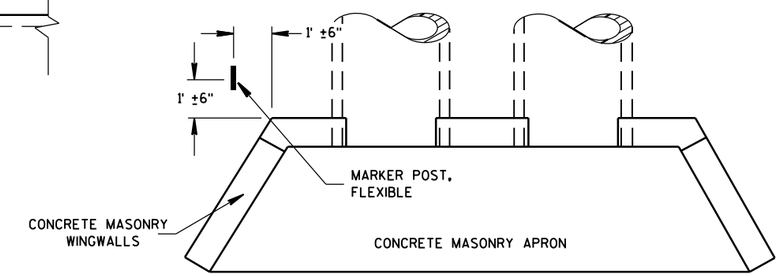

PLAN VIEW

CONCRETE MASONRY ENDWALLS FOR CULVERT PIPE AND PIPE ARCH

FLEXIBLE MARKER POST LOCATION

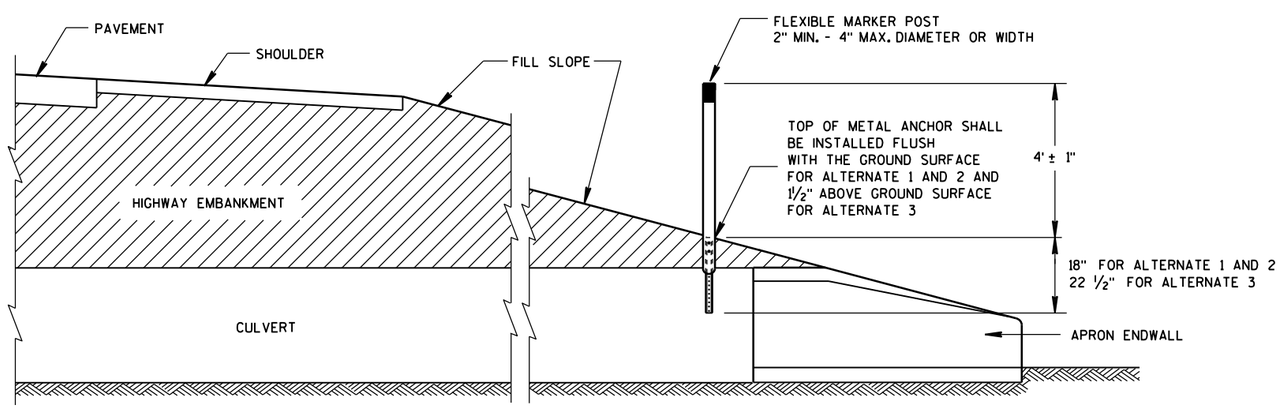

CROSS SECTION

FLEXIBLE MARKER POST

FLEXIBLE MARKER POST FOR CULVERT END

STATE OF WISCONSIN
DEPARTMENT OF TRANSPORTATION

SDD 15a3-b Flexible Marker Post for Culvert End

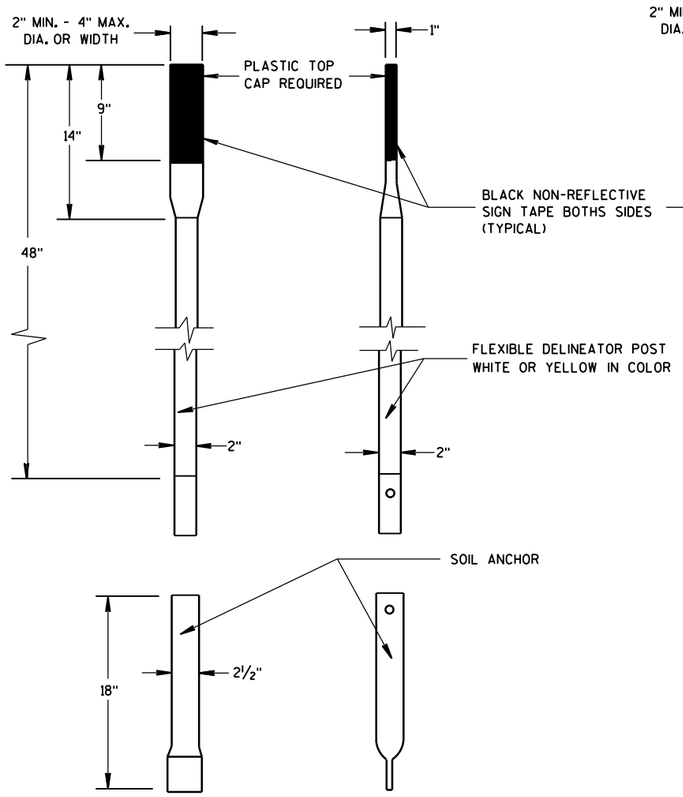

FRONT VIEW SIDE VIEW

ALTERNATE 1

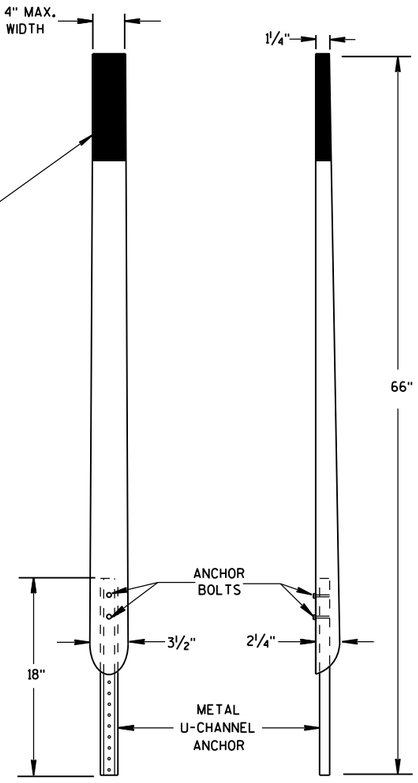

FRONT VIEW SIDE VIEW

ALTERNATE 2

FLEXIBLE MARKER POSTS

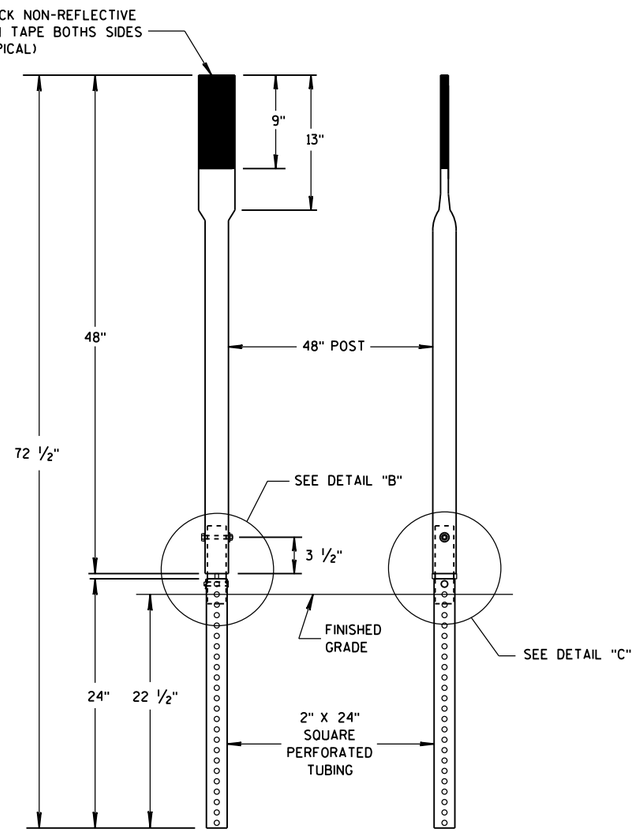

FRONT VIEW SIDE VIEW

ALTERNATE 3

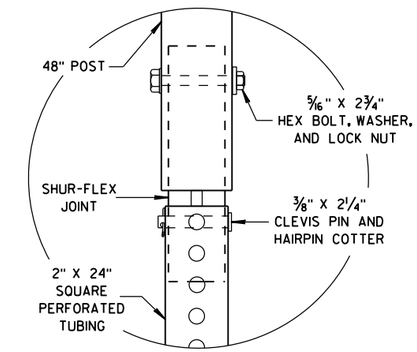

DETAIL B

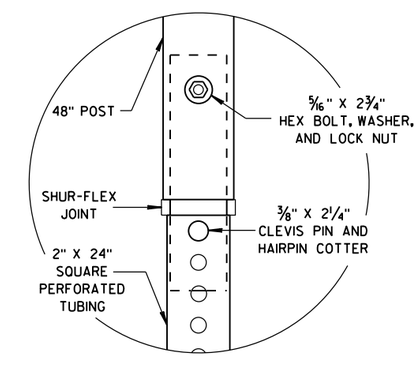

DETAIL C

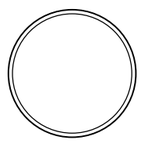

SECTION A-A

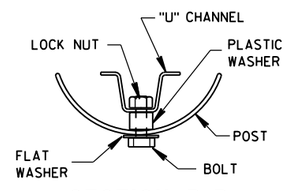

SECTION B-B

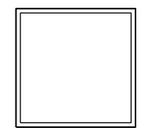

SECTION C-C

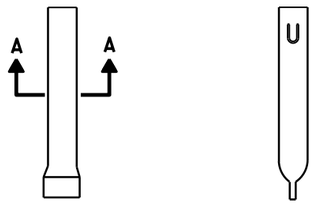

FRONT VIEW SIDE VIEW

ALTERNATE 1

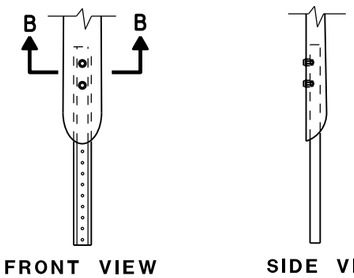

FRONT VIEW SIDE VIEW

ALTERNATE 2

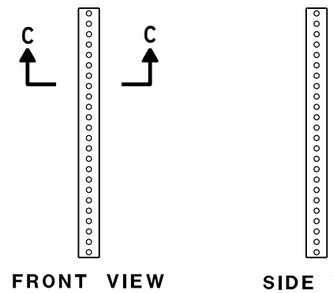

FRONT VIEW SIDE VIEW

ALTERNATE 3

FLEXIBLE MARKER POST ANCHORS

FLEXIBLE MARKER POST
FOR CULVERT END

STATE OF WISCONSIN
DEPARTMENT OF TRANSPORTATION

APPROVED
10/1/2012 /S/ Travis Feltes
DATE STATE TRAFFIC ENGINEER OF DESIGN
FHWA

6

6

S.D.D. 15 A 3-2b

S.D.D. 15 A 3-2b

Flexible Marker Post for Culvert End

References:

FDM 11-15-1
FDM 11-45-30

Bid items associated with this drawing:

ITEM NUMBER	DESCRIPTION	UNIT
633.5200	Markers Culvert End	EACH

Standardized Special Provisions associated with this drawing:

STSP NUMBER	TITLE
NONE	

Other SDDs associated with this drawing:

SDD 8F1	Apron Endwalls for Culvert Pipe
SDD 8F2	Apron Endwalls for Pipe Arch and Elliptical Pipe
SDD 8F3	Details for Pipe Cattle Pass, Concrete Endwalls and Steps
SDD 8F7	Steel Apron Endwalls for Culvert Pipe and Pipe Arch Side Drains Sloped Section
SDD 8F8	Sloped Steel Endwalls for Culvert Pipe and Pipe Arch Cross Drains
SDD 8F10	Concrete Masonry Endwalls for Culvert Pipe and Pipe Arch

Design Notes:

This SDD should be used to mark non-hazardous perpendicular culverts within the clear zone or hazardous perpendicular drainage features or cattle passes installed beyond the clear zone. Review FDM 11-45.30.6. The primary function of the marker post is to spot culvert ends for maintenance and survey personnel. Do not use this to mark driveway culvert ends or underdrain outfall ends.

Review FDM 11-45-30 and FDM 11-45-30.6 for roadside design options for hazardous perpendicular drainage features and cattle pass.

Contact Person:

Roadway Design: Erik Emerson (608) 266-2842, Flexible Delineator: Matt Rauch (608) 246-5305