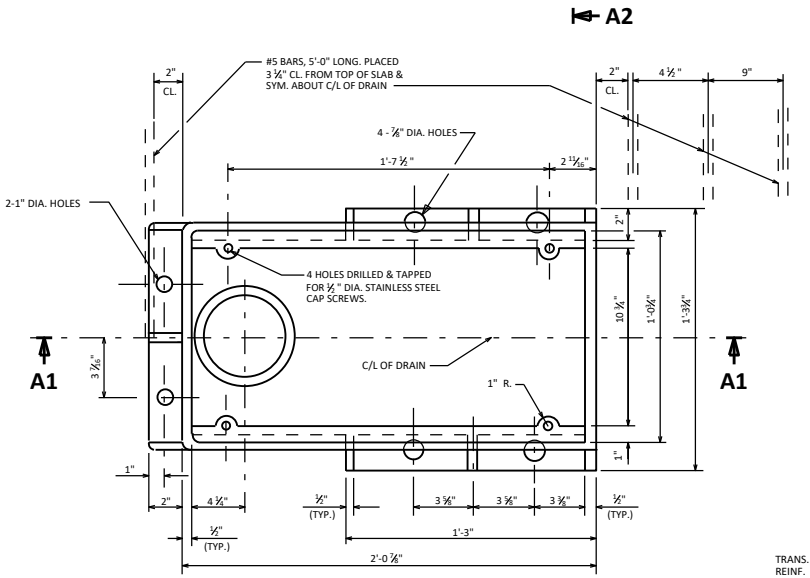

PLAN

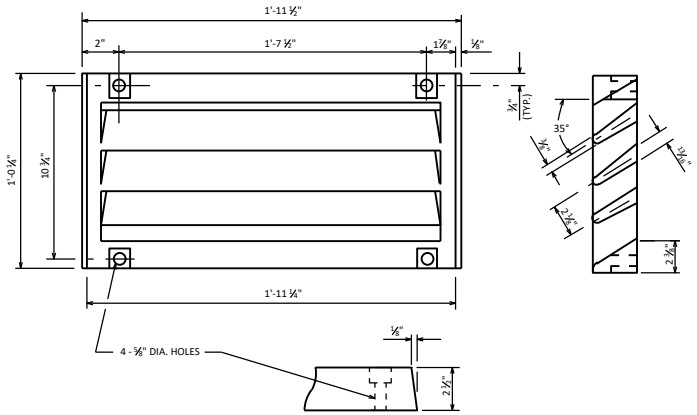

GRATE CASTING DETAIL

ATTACH GRATE TO FRAME FOR SHIPMENT

NOTES

ALL MATERIAL FOR TYPE "GC" CASTING, EXCLUDING GRATE HOLD DOWN SCREWS, SHALL BE GRAY IRON CONFORMING TO ASTM A48, CLASS 30. (APPROXIMATE WEIGHT = 225#)

MATERIAL FOR BRACKETS SHALL CONFORM TO ASTM A36.

ALL MATERIAL FOR FLOOR DRAINS TO BE INCLUDED IN THE BID ITEM "FLOOR DRAINS TYPE GC".

ALL MATERIAL FOR DOWNSPOUTS, DOWNSPOUT CONNECTIONS, AND BRACKETS TO BE INCLUDED IN THE BID ITEM "DOWNSPOUT 6-INCH".

ALTERNATE BRACKETS ARE NOT ALLOWED.

◪ FLANGED 6" DIA. DOWNSPOUTS SHALL BE REINFORCED THERMOSETTING RESIN PIPE (RTRP) OR GALVANIZED STANDARD PIPE CONFORMING TO ASTM A53.

DESIGNER NOTE

ON THE PRESTRESSED GIRDER SHEET, SHOW LOCATION OF HOLES FOR BRACKET ANCHORAGE FROM TOP/BOTTOM AND END OF GIRDER.

TRANS. AND LONGIT. SLAB BAR REINF. TO BE CUT A MAX. OF 1" CL. FROM DRAIN FRAME. DISPLACE BARS WHERE POSSIBLE.

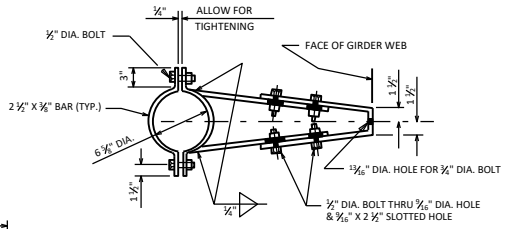

BRACKET DETAIL

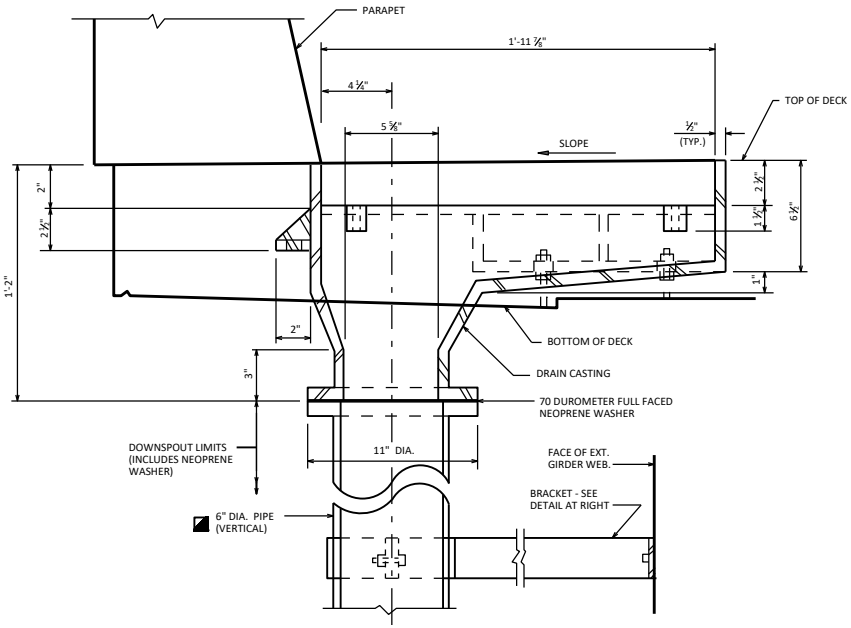

SECTION A1

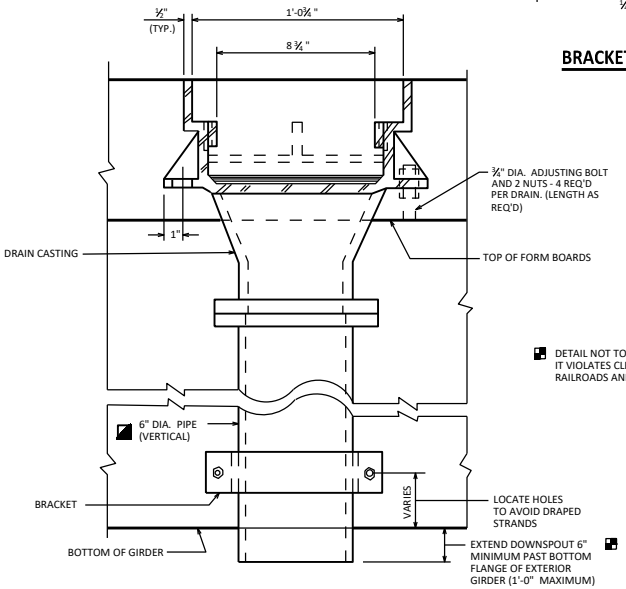

◪ DETAIL NOT TO BE USED OVER RAILROADS BECAUSE IT VIOLATES CLEARANCE REQUIREMENTS. CONTACT RAILROADS AND HARBORS SECTION FOR GUIDANCE.

SECTION A2

FLOOR DRAIN TYPE 'GC'

BUREAU OF STRUCTURES

APPROVED: *Laura Shadewald*

DATE: 1-20

STANDARD 29.01

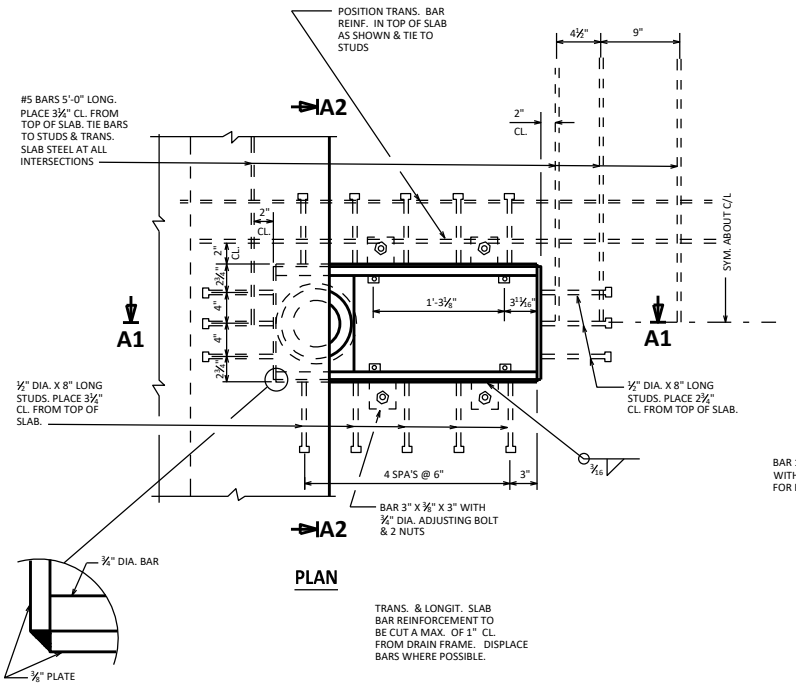

PLAN

TRANS. & LONGIT. SLAB BAR REINFORCEMENT TO BE CUT A MAX. OF 1" CL. FROM DRAIN FRAME. DISPLACE BARS WHERE POSSIBLE.

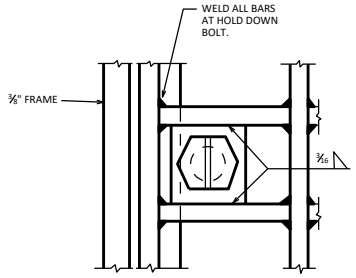

PART PLAN

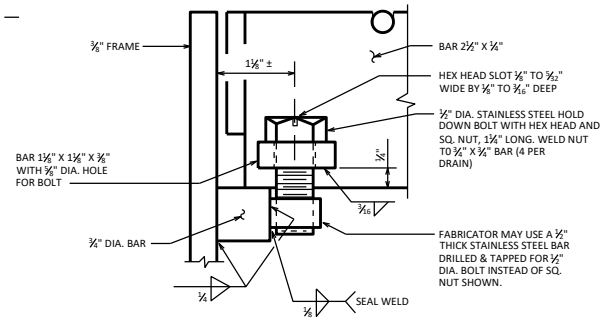

SECTION AT HOLD DOWN BOLT

NOTES

ALL DRAIN MATERIAL INCLUDING GRATE, EXCLUDING PIPE & GRATE HOLD DOWN BOLTS, SHALL BE ASTM A36 STEEL.

MATERIAL FOR BRACKETS SHALL CONFORM TO ASTM A36.

ALTERNATE BRACKETS ARE NOT ALLOWED.

ALL STEEL SHALL BE GALVANIZED. WELDS SHALL BE MADE WITH LOW HYDROGEN ELECTRODES.

ALL MATERIAL FOR FLOOR DRAINS TO BE INCLUDED IN THE BID ITEM "FLOOR DRAINS TYPE H".

ALL MATERIAL FOR DOWNSPOUTS, DOWNSPOUT CONNECTIONS, AND BRACKETS TO BE INCLUDED IN THE BID ITEM "DOWNSPOUT 6-INCH".

SEAL WELD INSIDE OF DRAIN.

PRIOR TO GALVANIZING A NO. 6 BLAST CLEANING IS REQ'D.

◪ FLANGED 6" DIA. DOWNSPOUTS SHALL BE REINFORCED THERMOSETTING RESIN PIPE (RTRP) OR GALVANIZED STANDARD PIPE CONFORMING TO ASTM A53.

DESIGNER NOTE

ON THE PRESTRESSED GIRDER SHEET, SHOW LOCATION OF HOLES FOR BRACKET ANCHORAGE FROM TOP/BOTTOM AND END OF GIRDER.

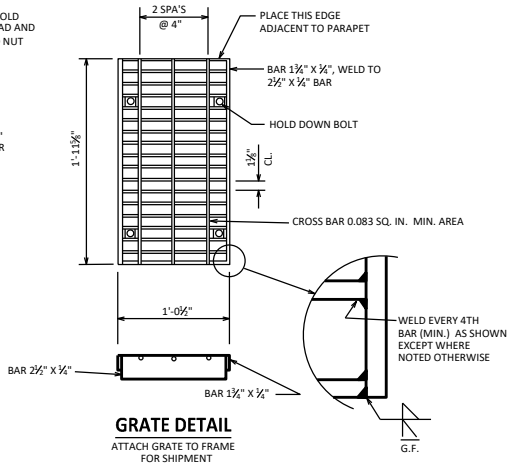

GRATE DETAIL

ATTACH GRATE TO FRAME FOR SHIPMENT

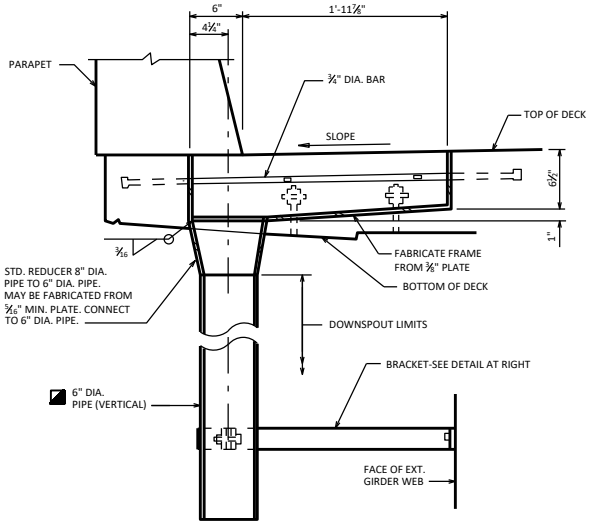

SECTION A1

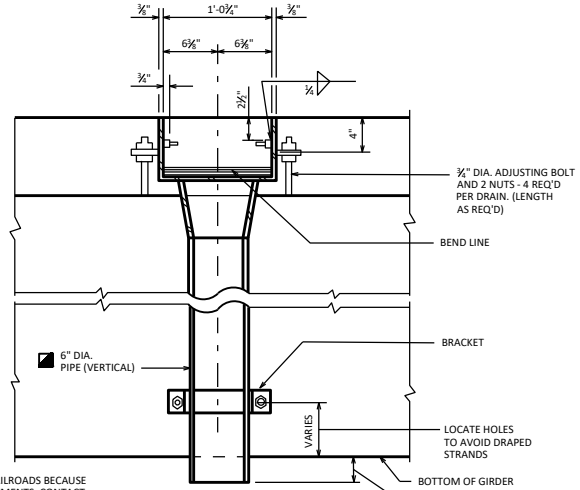

◪ DETAIL NOT TO BE USED OVER RAILROADS BECAUSE IT VIOLATES CLEARANCE REQUIREMENTS. CONTACT RAILROADS AND HARBORS SECTION FOR GUIDANCE.

SECTION A2

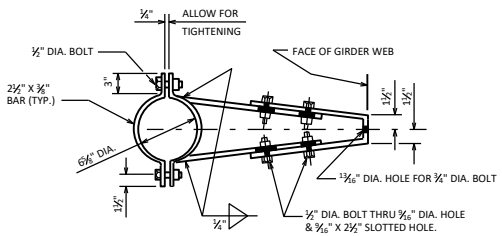

BRACKET DETAIL

FLOOR DRAIN TYPE 'H'

BUREAU OF STRUCTURES

APPROVED: *Laura Shadewald*

DATE: 1-20

STANDARD 29.02

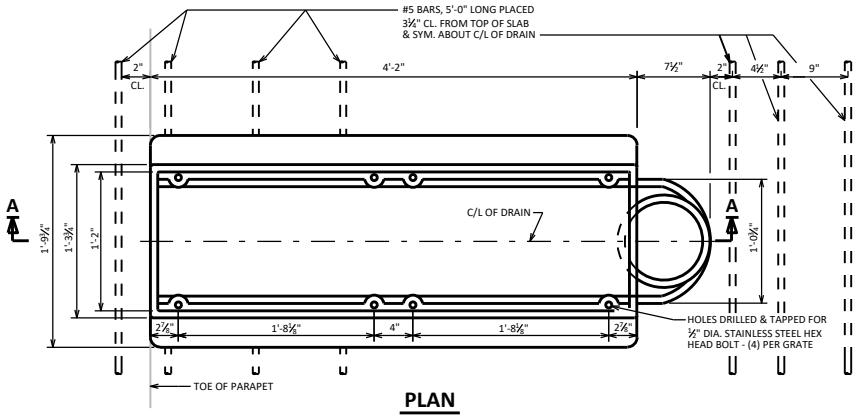

PLAN

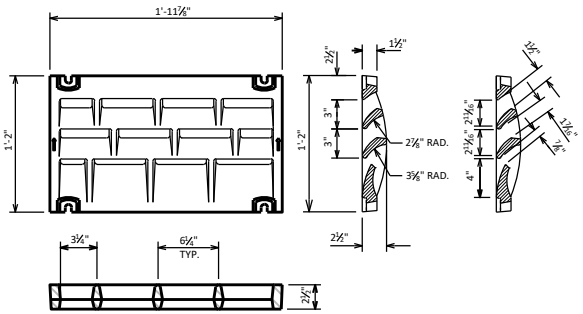

GRATE CASTING DETAILS

ATTACH GRATES TO FRAME FOR SHIPMENT

NOTES

ALL MATERIAL FOR TYPE "WF" CASTING AND 8" DIA. CONNECTION PIPE, EXCLUDING GRATE HOLD DOWN SCREWS, SHALL BE GRAY IRON CONFORMING TO ASTM A48, CLASS 30.

MATERIAL FOR BRACKETS SHALL CONFORM TO ASTM A36.

ALTERNATE BRACKETS ARE NOT ALLOWED.

ALL MATERIAL FOR FLOOR DRAINS TO BE INCLUDED IN THE BID ITEM "FLOOR DRAINS TYPE WF".

ALL MATERIAL FOR DOWNSPOUTS, DOWNSPOUT CONNECTIONS, AND BRACKETS TO BE INCLUDED IN THE BID ITEM "DOWNSPOUT 8-INCH".

◪ 8" DIA. DOWNSPOUTS SHALL BE REINFORCED THERMOSETTING RESIN PIPE (RTRP).

⊕ TRANSVERSE & LONGITUDINAL SLAB BAR REINFORCEMENT TO BE CUT A MAXIMUM OF 1" CLEAR FROM DRAIN FRAME. DISPLACE BARS WHERE POSSIBLE.

DESIGNER NOTE

ON THE PRESTRESSED GIRDER SHEET, SHOW LOCATION OF HOLES FOR BRACKET ANCHORAGE FROM TOP/BOTTOM AND END OF GIRDER.

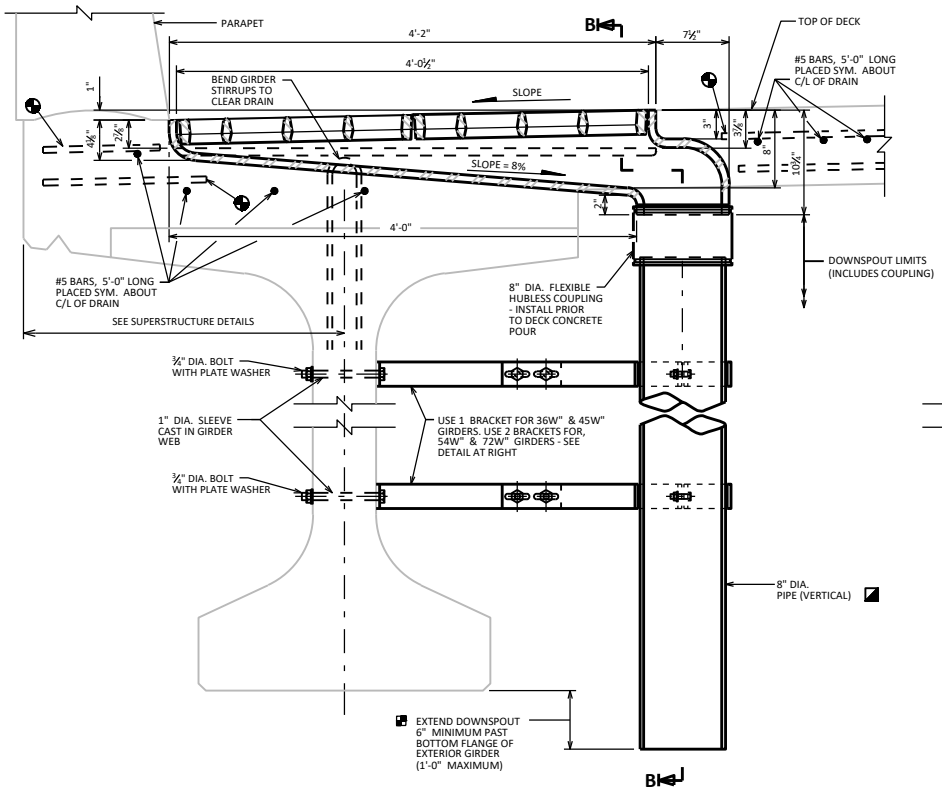

SECTION A-A

◪ DETAIL NOT TO BE USED OVER RAILROADS BECAUSE IT VIOLATES CLEARANCE REQUIREMENTS. CONTACT RAILROADS AND HARBORS SECTION FOR GUIDANCE.

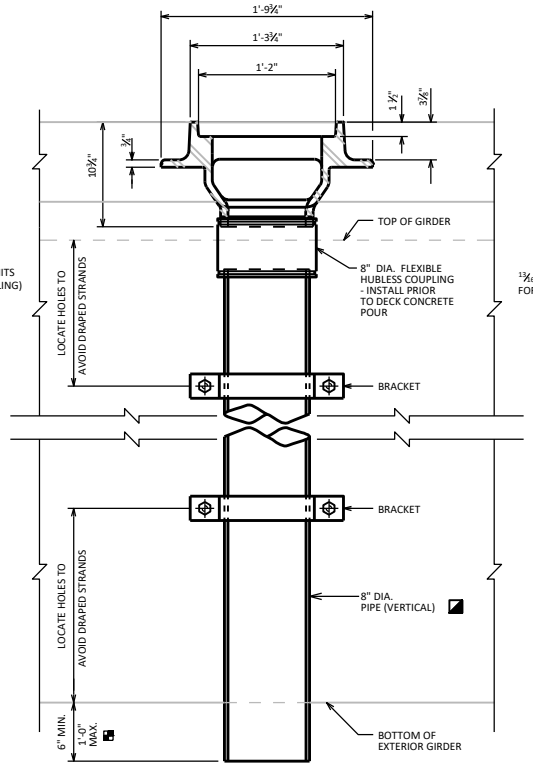

SECTION B-B

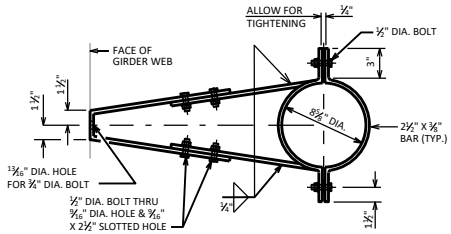

BRACKET DETAIL

FLOOR DRAIN TYPE 'WF'

WISCONSIN DEPARTMENT OF TRANSPORTATION
BUREAU OF STRUCTURES

APPROVED: *Laura Shadewald*

DATE: 1-20

STANDARD 29.03