Table of Contents

5.1 Factors Governing Bridge Costs 2
5.2 Economic Span Lengths 4
5.3 Contract Unit Bid Prices 5
5.4 Bid Letting Cost Data 9
5.4.1 2005 Year End Structure Costs 9
5.4.2 2006 Year End Structure Costs 11
5.4.3 2007 Year End Structure Costs 12
5.4.4 2008 Year End Structure Costs 14
5.4.5 2009 Year End Structure Costs 16

5.1 Factors Governing Bridge Costs

Bridge costs are tabulated based on the bids received for all bridges let to contract. While these costs indicate some trends, they do not reflect all the factors that affect the final bridge cost. Each bridge has its own conditions which affect the cost at the time a contract is let. Some factors governing bridge costs are:

1. Location - rural or urban, or remote regions
2. Type of crossing
3. Type of superstructure
4. Skew of bridge
5. Bridge on horizontal curve
6. Type of foundation
7. Type and height of piers
8. Depth and velocity of water
9. Type of abutment
10. Ease of falsework erection
11. Need for special equipment
12. Need for maintaining traffic during construction
13. Limit on construction time
14. Complex forming costs and design details
15. Span arrangements, beam spacing, etc.

Figure 5.2-1 shows the economic span lengths of various type structures based on average conditions. Refer to Chapter 17 for discussion on selecting the type of superstructure.

Annual unit bridge costs are included in this chapter. The area of bridge is from back to back of abutments and out to out of the concrete superstructure. Costs are based only on the bridges let to contract during the period. In using these cost reports exercise care when a small number of bridges are reported as these costs may not be representative.

In these reports prestressed girder costs are grouped together because there is a small cost difference between girder sizes. Refer to unit costs. Concrete slab costs are also grouped together for this reason.

No costs are shown for rolled steel sections as these structures are not built very often. They have been replaced with prestressed girders which are usually more economical. The cost of plate girders is used to estimate rolled section costs.

For structures over a railroad, use the costs of grade separation structures. Costs vary considerably for railroad structures over a highway due to different railroad specifications.

Note: Current costs are given in English units.

5.2 Economic Span Lengths

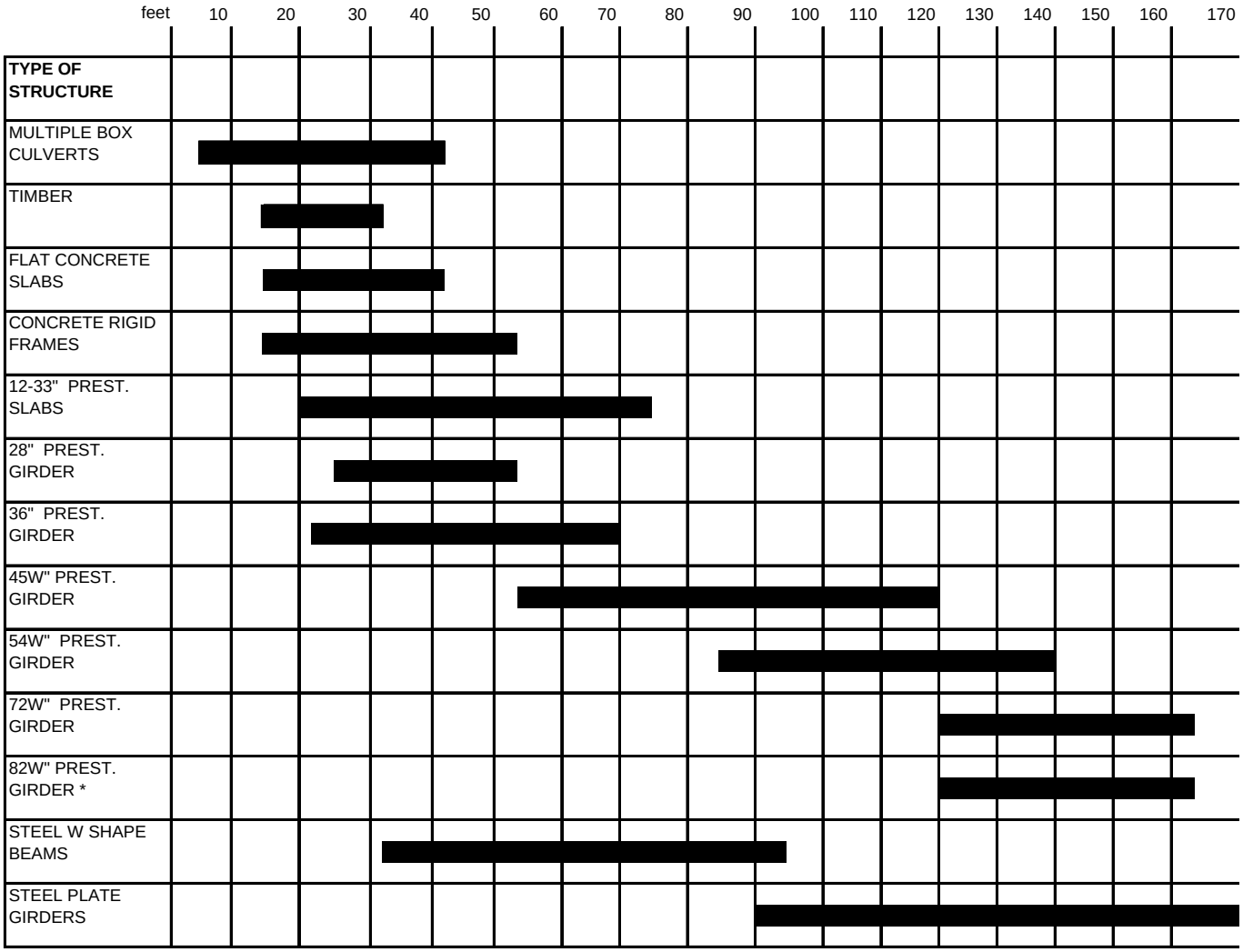

*Currently there is a moratorium on the use of 82W" prestressed girders in Wisconsin

Figure 5.2-1
Economic Span Lengths

5.3 Contract Unit Bid Prices

Item No.	Bid Item	Unit	Cost
206.6000.S	Temporary Shoring	SF	13.85
210.0100	Backfill Structure	CY	12.87
311.0115	Breaker Run	CY	20.22
502.0100	Concrete Masonry Bridges	CY	436.88
303.0115	Pit Run	CY	9.63
502.1100	Concrete Masonry Seal	CY	144.70
502.2000	Compression Joint Sealer Preformed Elastomeric (width)	LF	86.54
502.3100	Expansion Device (structure) (LS)	LF	137.78
SPV	Expansion Device Modular (structure) (LS)	LF	602.34
502.3100	Protective Surface Treatment	SY	2.31
502.6500	Protective Coating Clear	GAL	57.50
503.0128	Prestressed Girder Type I 28-Inch	LF	168.63
503.0136	Prestressed Girder Type I 36-Inch	LF	129.32
503.0145	Prestressed Girder Type I 45-Inch	LF	114.57
503.0146	Prestressed Girders Type I 45W-Inch	LF	168.83
503.0154	Prestressed Girder Type I 54-Inch	LF	184.00
503.0155	Prestressed Girder Type I 54W-Inch	LF	178.23
503.0170	Prestressed Girder Type I 70-Inch	LF	163.79
503.0172	Prestressed Girders Type I 72W-Inch	LF	268.99
503.0182	Prestressed Girder Type I 82W-Inch	LF	185.00
504.0100	Concrete Masonry Culverts	CY	501.69
504.0500	Concrete Masonry Retaining Walls	CY	411.50
505.0405	Bar Steel Reinforcement HS Bridges	LB	0.87
506.2605	Bar Steel Reinforcement HS Culverts	LB	0.66
506.2610	Bar Steel Reinforcement HS Retaining Walls	LB	0.96
506.3005	Bar Steel Reinforcement HS Coated Bridges	LB	0.82
506.3010	Bar Steel Reinforcement HS Coated Culverts	LB	--
506.3015	Bar Steel Reinforcement HS Coated Retaining Walls	LB	--
506.0105	Structural Carbon Steel	LB	3.58
506.0605	Structural Steel HS	LB	1.52
506.2605	Bearing Pads Elastomeric Non-Laminated	EACH	86.31
506.2610	Bearing Pads Elastomeric Laminated	EACH	631.16
506.3005	Welded Shear Stud Connectors 7/8 x 4-Inch	EACH	2.77
506.3010	Welded Shear Stud Connectors 7/8 x 5-Inch	EACH	3.00
506.3015	Welded Shear Stud Connectors 7/8 x 6-Inch	EACH	3.12
506.3020	Welded Shear Stud Connectors 7/8 x 7-Inch	EACH	3.00
506.3025	Welded Shear Stud Connectors 7/8 x 8-Inch	EACH	2.95
506.4000	Steel Diaphragms (structure)	EACH	467.15
506.5000	Bearing Assemblies Fixed (structure)	EACH	792.93
506.6000	Bearing Assemblies Expansion (structure)	EACH	1279.47
507.0200	Treated Lumber and Timber	MBM	6225.00
508.1600	Piling Treated Timber Delivered	LF	20.00
510.2005	Preboring Cast-in-Place Concrete Piling	LF	158.00
510.3021	Piling CIP Concrete Delivered and Driven 10 ¾ x 0.219-Inch	LF	28.07

510.3030	Piling CIP Concrete Delivered and Driven 10 ¾ x 0.25-Inch	LF	20.39
510.3040	Piling CIP Concrete Delivered and Driven 10 ¾ x 0.365-Inch	LF	25.59
510.3050	Piling CIP Concrete Delivered and Driven 10 ¾ x 0.5-Inch	LF	--
510.3023	Piling CIP Concrete Delivered and Driven 12 ¾ x 0.219-Inch	LF	36.74
510.3033	Piling CIP Concrete Delivered and Driven 12 ¾ x 0.25-Inch	LF	35.93
510.3043	Piling CIP Concrete Delivered and Driven 12 ¾ x 0.375-Inch	LF	36.81
510.3053	Piling CIP Concrete Delivered and Driven 12 ¾ x 0.5-Inch	LF	--
510.3024	Piling CIP Concrete Delivered and Driven 14 x 0.219-Inch	LF	--
510.3034	Piling CIP Concrete Delivered and Driven 14 x 0.25-Inch	LF	35.11
510.3044	Piling CIP Concrete Delivered and Driven 14 x 0.375-Inch	LF	40.96
510.3054	Piling CIP Concrete Delivered and Driven 14 x 0.5-Inch	LF	35.00
510.3026	Piling CIP Concrete Delivered and Driven 16 x 0.219-Inch	LF	--
510.3036	Piling CIP Concrete Delivered and Driven 16 x 0.25-Inch	LF	--
510.3046	Piling CIP Concrete Delivered and Driven 16 x 0.375-Inch	LF	--
510.3056	Piling CIP Concrete Delivered and Driven 16 x 0.5-Inch	LF	56.60
511.2105	Piling Steel Delivered and Driven HP 10-Inch x 42 LB	LF	29.74
511.2110	Piling Steel Delivered and Driven HP 12-Inch x 53 LB	LF	38.98
511.2115	Piling Steel Delivered and Driven HP 12-Inch x 74 LB	LF	38.77
511.2120	Piling Steel Delivered and Driven HP 14-Inch x 73 LB	LF	35.08
511.3000	Pile Points	EACH	85.74
511.6000	Piling Steel Preboring	LF	78.34
512.1000	Piling Steel Sheet Temporary	SF	12.14
513.4050	Railing Tubular Type F (structure) (LS)	LF	95.22
513.4052 or 3	Railing Tubular Type F- (4 or 5) Modified (structure) (LS)	LF	141.02
513.4055	Railing Tubular Type H (structure) (LS)	LF	62.50
513.7050	Railing Steel Type W (structure) (LS)	LF	85.96
513.4060	Railing Tubular Type M (structure) (LS)	LF	171.19
513.4065	Railing Tubular Type PF (structure) (LS)	LF	43.76
00000	Concrete Railing, “Texas Rail”	LF	234.85
00000	Concrete Parapet, Type ‘LF’ & ‘A’ (estimate)	LF	80.00
513.7005	Railing Steel Type C1 (structure) (LS)	LF	168.42
513.7010	Railing Steel Type C2 (structure) (LS)	LF	105.00
513.7015	Railing Steel Type C3 (structure) (LS)	LF	127.66
513.7020	Railing Steel Type C4 (structure) (LS)	LF	--
513.7025	Railing Steel Type C5 (structure) (LS)	LF	151.00
513.7030	Railing Steel Type C6 (structure) (LS)	LF	175.89
514.0445	Floor Drains Type GC	EACH	1166.67
514.2625	Downspouts 6-Inch	LF	--
516.0500	Rubberized Membrane Waterproofing	SY	28.47
604.0400	Slope Paving Concrete	SY	36.05

604.0500	Slope Paving Crushed Aggregate	SY	17.05
604.0600	Slope Paving Select Crushed Material	SY	17.55
606.0300	Riprap Heavy	CY	40.29
606.0200	Riprap Medium	CY	40.43
606.0500	Grouted Riprap Light	CY	60.00
606.0600	Grouted Riprap Medium	CY	101.96
606.0700	Grouted Riprap Heavy	CY	92.99
612.0106	Pipe Underdrain 6-Inch	LF	6.54
612.0206	Pipe Underdrain Unperforated 6-Inch	LF	10.56
612.0406	Pipe Underdrain Wrapped 6-Inch	LF	8.11
616.0205	Fence Chain Link 5-FT	LF	44.92
616.0206	Fence Chain Link 6-FT	LF	19.12
616.0208	Fence Chain Link 8-FT	LF	--
645.0105	Geotextile Fabric Type C	SY	2.16
645.0111	Geotextile Fabric Type DF Schedule A	SY	2.77
645.0120	Geotextile Fabric Type HR	SY	2.71
652.0125	Conduit Rigid Metallic 2-Inch	LF	13.43
652.0135	Conduit Rigid Metallic 3-Inch	LF	30.00
652.0225	Conduit Rigid Nonmetallic Schedule 40 2-Inch	LF	6.00
652.0235	Conduit Rigid Nonmetallic Schedule 40 3-Inch	LF	4.31
SPV.0165	Concrete Staining (structure)	SF	1.36
SPV.0165	Concrete Staining Multi-Color (structure)	SF	2.04
SPV.0165	Anti-Graffiti Coating	SF	1.30
SPV.0165	Architectural Surface Treatment	SF	8.84

Table 5.3-1

Contract Unit Bid Prices for New Structures

Item No.	Bid Item	Unit	Cost
455.0___	Asphaltic Material _____	TON	451.00
460.1___	HMA Pavement Type ____	TON	23.60
502.5002	Masonry Anchors Type L No. 4 Bars	EACH	10.43
502.5005	Masonry Anchors Type L No. 5 Bars	EACH	18.07
502.5010	Masonry Anchors Type L No. 6 Bars	EACH	30.96
502.5015	Masonry Anchors Type L No. 7 Bars	EACH	50.00
502.5020	Masonry Anchors Type L No. 8 Bars	EACH	29.19
502.5025	Masonry Anchors Type L No. 9 Bars	EACH	39.25
502.6102	Masonry Anchors Type S ½-Inch	EACH	11.00
502.6105	Masonry Anchors Type S 5/8-Inch	EACH	15.45
502.6110	Masonry Anchors Type S ¾-Inch	EACH	10.96
502.6115	Masonry Anchors Type S 7/8-Inch	EACH	--
502.6120	Masonry Anchors Type S 1-Inch	EACH	12.00
505.0904	Bar Couplers No. 4	EACH	19.00
505.0905	Bar Couplers No. 5	EACH	13.39
505.0906	Bar Couplers No. 6	EACH	16.00
505.0907	Bar Couplers No. 7	EACH	14.57
505.0908	Bar Couplers No. 8	EACH	19.73
505.0909	Bar Couplers No. 9	EACH	12.00
509.0301	Preparation Decks Type 1	SY	85.95
509.0302	Preparation Decks Type 2	SY	85.95
509.0500	Cleaning Decks	SY	13.05
509.1000	Joint Repair	SY	449.73
509.1200	Curb Repair	LF	29.95
509.1500	Concrete Surface Repair	SF	161.78
509.2000	Full-Depth Deck Repair	SY	240.46
509.2500	Concrete Masonry Overlay Decks	CY	552.88
	Structure Repainting (Sand Blasting) ***Group of items***	SF	8.87
	Structure Repainting (Power Tooling) ***Group of items***	SF	4.31
	Epoxy Overlay (actual bid item is being worked on)	SF	3.99

Table 5.3-2

Contract Unit Bid Prices for Rehab Structures

5.4 Bid Letting Cost Data

This section includes past information on bid letting costs per structure type. Values are presented by structure type and include: number of structures, total area, total cost, superstructure cost per square foot and total cost per square foot.

5.4.1 2005 Year End Structure Costs

Structure Type	No. of Bridges	Total Area (Sq. Ft.)	Total Costs	Super. Only Cost Per Square Foot	Cost per Square Foot
Prestressed Concrete Girders	36	427,627	27,984,030	39.51	65.44
Reinf. Conc. Slabs (All But A5)	48	152,215	10,707,339	38.59	70.34
Reinf. Conc. Slabs (A5 Abuts)	36	54,583	5,112,320	44.51	93.66
Prestressed Box Girders	2	3,582	471,911	78.88	131.75
Steel Plate Girder	1	18,119	2,439,964	104.88	134.66
Arch Structure	2	17,062	3,297,909	0	193.29
Post-Tensioned Slab	1	16,643	1,512,908	35.95	89.29

Table 5.4-1
Stream Crossing Structures

Structure Type	No. of Bridges	Total Area (Sq. Ft.)	Total Costs	Super. Only Cost Per Square Foot	Cost per Square Foot
Prestressed Concrete Girders	23	318,918	22,709,977	61.49	71.21
Steel Plate Girders	2	27,585	3,689,778	107.10	133.76

Table 5.4-2
Grade Separation Structures

Box Culverts	No. of Culverts	Cost per Lin. Ft.
Single Cell	16	1,326.71
Twin Cell	11	880.03
Triple Cell	0	0
Aluminum	1	3,043.00

Table 5.4-3
Box Culverts

Railroad Bridge	Cost per Sq. Ft.
None this Year	

Table 5.4-4
Railroad Bridge

Retaining Walls	No. of Bridges	Total Area (Sq. Ft.)	Total Costs	Cost per Square Foot
MSE Walls	13	30,189	74,958	24.68
Modular Walls	0	0	0	0
Concrete Walls	9	20,445	3,125,863	152.89
Panel Walls	5	43,069	2,762,167	64.13

Table 5.4-5
Retaining Walls

5.4.2 2006 Year End Structure Costs

Structure Type	No. of Bridges	Total Area (Sq. Ft.)	Total Costs	Super Only Cost Per Square Foot	Cost per Square Foot
Prestressed Concrete Girders	24	453,000	35,249,963	51.45	77.81
Reinforced Concrete Slabs (All But A5)	39	63,984	5,211,526	47.76	81.50
Reinf. Conc. Slab (A5 Abuts)	37	66,675	5,174,920	40.95	77.61
Prestressed Box Girders	4	12,761	1,804,149	62.28	141.38

Table 5.4-6
Stream Crossing Structures

Structure Type	No. of Bridges	Total Area (Sq. Ft.)	Total Costs	Super. Only Cost Per Square Foot	Cost per Square Foot
Prestressed Concrete Girders	24	167,899	13,544,510	60.12	80.67
Steel Plate Girders	2	28,782	6,572,494	142.68	228.35
Reinf. Conc. Slabs (All But A5)	6	20,316	1,732,386	43.02	85.27
Reinf. Conc. Slabs (A5 Abuts)	4	5,979	605,133	44.08	101.21

Table 5.4-7
Grade Separation Structures

Box Culverts	No. of Culverts	Cost per Lin. Ft.
Single Cell	9	885.72
Twin Cell	6	1,805.23
Triple Cell	0	0
Aluminum	0	0

Table 5.4-8
Box Culverts

Bascule Bridge	Cost per Sq. Ft.
B-15-23	388.85

Table 5.4-9
Bascule Bridge

Retaining Walls	No. of Bridges	Total Area (Sq. Ft.)	Total Costs	Cost per Square Foot
MSE Walls	7	6,102	343,147	56.25
Modular Walls	0	0	0	0
Concrete Walls	7	15,848	1,059,081	66.83
Panel Walls	16	25,907	2,908,492	112.07

Table 5.4-10
Retaining Walls

5.4.3 2007 Year End Structure Costs

Structure Type	No. of Bridges	Total Area (Sq. Ft.)	Total Costs	Super. Only Cost Per Square Foot	Cost per Square Foot
Prestressed Concrete Girders	248	529,222	44,292,799	43.38	83.69
Reinf. Conc. Slabs (All But A5)	50	133,565	14,226,156	47.96	98.98
Reinf. Conc. Slabs (A5 Abuts)	24	40,309	4,286,494	47.85	92.14
Prestressed Box Girders	3	11,522	1,350,270	68.84	117.19

Table 5.4-11
Stream Crossing Structures

Structure Type	No. of Bridges	Total Area (Sq. Ft.)	Total Costs	Super. Only Cost Per Square Foot	Cost per Square Foot
Prestressed Concrete Girders	24	218,501	16,506,445	55.79	75.54
Steel Plate Girders	1	32,000	4,959,856	122.43	155.00
Reinf. Conc. Slabs (All But A5)	2	9,738	709,168	32.77	72.82
Reinf. Conc. Slabs (A5 Abuts)	1	1,944	226,433	47.81	116.46

Table 5.4-12
Grade Separation Structures

Box Culverts	No. of Culverts	Cost per Lin. Ft.
Single Cell	5	1,168.00
Twin Cell	9	1,000.00
Triple Cell	1	3,832.00
Precast Box	1	894.00

Table 5.4-13
Box Culverts

Pedestrian Bridge	Cost per Sq. Ft.
B-13-605	154.34
B-45-96	443.41

Table 5.4-14
Pedestrian Bridges

Retaining Walls	No. of Bridges	Total Area (Sq. Ft.)	Total Costs	Cost per Square Foot
MSE Walls	6	14,133	752,236	53.23
Modular Walls	0	0	0	0
Concrete Walls	6	21,376	1,254,180	58.67
Panel Walls	0	0	0	0

Table 5.4-15
Retaining Walls

5.4.4 2008 Year End Structure Costs

Structure Type	No. of Bridges	Total Area (Sq. Ft.)	Total Costs	Super. Only Cost per Square Foot	Cost per Square Foot
Prestressed Concrete Girders	27	354,319	37,636,697	56.00	106.00
Reinf. Conc. Slabs (All But A5)	28	29,381	3,892,609	45.00	98.50
Reinf. Conc. Slabs (A5 Abuts)	20	19,900	2,529,658	53.50	127.00
Prestressed Box Girders	1	762	106,847	109.00	140.00

Table 5.4-16
Stream Crossing Structures

Structure Type	No. of Bridges	Total Area (Sq. Ft.)	Total Costs	Super. Only Cost per Square Foot	Cost per Square Foot
Prestressed Concrete Girders	68	617,067	52,412,539	64.50	85.00
Steel Plate Girders	0	--	--	--	--
Reinf. Conc. Slabs (All But A5)	2	23,777	2,769,953	58.50	116.50
Reinf. Conc. Slabs (A5 Abuts)	0	--	--	--	--

Table 5.4-17
Grade Separation Structures

Box Culverts	No. of Culverts	Cost per Lin. Ft.
Single Cell	7	1,059.00
Twin Cell	15	1,914.00
Triple Cell	0	--
Aluminum	0	--

Table 5.4-18
Box Culverts

Pedestrian Bridges	Cost per Sq. Ft.
None this Year	--

Table 5.4-19
Pedestrian Bridges

Railroad Bridges	Cost per Sq. Ft.
None this Year	--

Table 5.4-20
Railroad Bridges

Bascule Bridge	Cost per Sq. Ft.
None this Year	--

Table 5.4-21
Bascule Bridges

Retaining Walls	No. of Bridges	Total Area (Sq. Ft.)	Total Costs	Cost per Square Foot
MSE Walls	4	14,292	520,912	36.50
Modular Walls	0	--	--	--
Concrete Walls	14	23,572	2,572,658	108.00
Panel Walls	5	11,939	782,972	65.50

Table 5.4-22
Retaining Walls

5.4.5 2009 Year End Structure Costs

Structure Type	No. of Bridges	Total Area (Sq. Ft.)	Total Costs	Super. Only Cost Per Square Foot	Cost per Square Foot
Prestressed Concrete Girders	27	225,572	23,546,996	54.77	104.39
Reinf. Conc. Slabs (All but A5)	39	108,422	11,214,819	46.46	103.44
Reinf. Conc. Slabs (A5 Abuts)	32	58,049	6,312,845	51.00	108.75
Prestressed Box Girders	0				

Table 5.4-23
Stream Crossing Structures

Structure Type	No. of Bridges	Total Area (Sq. Ft.)	Total Costs	Super. Only Cost Per Square Foot	Cost per Square Foot
Prestressed Concrete Girders	124	776,329	67,163,261	50.71	86.51
Steel Plate Girders	2	21,725	4,038,011	114.36	185.87
Reinf. Conc. Slabs (All but A5)	0				
Reinf. Conc. Slabs (A5 Abuts)	0				
Steel I-Beam	4	34,227	3,454,905	58.22	100.94
Arch Structures	2	4,750	1,637,760	0	344.79
Pedestrian Stuctures	1	2,286	1,712,743	0	749.23

Table 5.4-24
Grade Separation Structures

Box Culverts	No. of Culverts	Cost per Lin. Ft.
Single Cell	16	1,470.36
Twin Cell	11	2,331.10
Triple Cell	1	6,922.41
Pipe	2	1,072.73

Table 5.4-25
Box Culverts

Pedestrian Bridges	Cost per Sq. Ft.
None this Year	--

Table 5.4-26
Pedestrian Bridges

Railroad Bridges	Cost per Sq. Ft.
None this Year	--

Table 5.4-27
Railroad Bridges

Bascule Bridge	Cost per Sq. Ft.
None this Year	--

Table 5.4-28
Bascule Bridges

Retaining Walls	No. of Bridges	Total Area (Sq. Ft.)	Total Costs	Cost per Square Foot
MSE Walls	26	103,486	5,460,180	52.76
Modular Walls	0			
Concrete Walls	6	25,025	1,109,328	44.33
Panel Walls	2	5,873	863,092	146.96
Pile Walls	5	168,403	2,930,175	17.40

Table 5.4-29
Retaining Walls

Table of Contents

6.1 Approvals, Distribution and Work Flow 5
6.2 Preliminary Plans 8
6.2.1 Structure Survey Report 8
6.2.2 Preliminary Layout 9
6.2.2.1 General 9
6.2.2.2 Basic Considerations 14
6.2.2.3 Requirements of Drawing 15
6.2.2.3.1 Plan View 15
6.2.2.3.2 Elevation View 17
6.2.2.3.3 Cross-Section View 17
6.2.2.3.4 Other Requirements 18
6.2.2.4 Utilities 20
6.2.3 Distribution of Exhibits 20
6.2.3.1 Federal Highway Administration (FHWA). 20
6.2.3.2 Coast Guard 22
6.2.3.3 Regions 22
6.2.3.4 Utilities 22
6.2.3.5 Other Agencies 22
6.3 Final Plans 23
6.3.1 General Requirements 23
6.3.1.1 Drawing Size 23
6.3.1.2 Scale 23
6.3.1.3 Line Thickness 23
6.3.1.4 Lettering and Dimensions 23
6.3.1.5 Notes 23
6.3.1.6 Standard Insert Drawings 24
6.3.1.7 Abbreviations 24
6.3.1.8 Nomenclature and Definitions 25
6.3.2 Plan Sheets 25
6.3.2.1 General Plan (Sheet 1) 26
6.3.2.1.1 Plan notes for New Bridge Construction 28
6.3.2.1.2 Plan Notes for Bridge Rehabilitation 29

6.3.2.2 Subsurface Exploration 30
6.3.2.3 Abutments 30
6.3.2.4 Piers 31
6.3.2.5 Superstructure 32
6.3.2.5.1 All Structures.....32
6.3.2.5.2 Steel Structures 33
6.3.2.5.3 Railing and Parapet Details 34
6.3.3 Miscellaneous Information.....34
6.3.3.1 Bill of Bars 34
6.3.3.2 Box Culverts 34
6.3.3.3 Miscellaneous Structures 35
6.3.3.4 Standard Drawings 35
6.3.3.5 Insert Sheets 36
6.3.3.6 Change Orders and Maintenance Work 36
6.3.3.7 Bench Marks.....36
6.3.4 Checking Plans 36
6.3.4.1 Items to be Destroyed When Construction is Completed (Group A) 37
6.3.4.2 Items to be Destroyed when Plans are Completed (Group B) 37
6.3.5 Processing Plans.....39
6.4 Computation of Quantities 40
6.4.1 Excavation for Structures Bridges (Structure) 40
6.4.2 Backfill Granular or Backfill Structure.....40
6.4.3 Concrete Masonry Bridges.....40
6.4.4 Prestressed Girder Type I (28-Inch; 36-Inch; 36W-Inch; 45W-Inch; 54W-Inch; 72W-Inch, 82W-Inch) 41
6.4.5 Bar Steel Reinforcement HS Bridges or Bar Steel Reinforcement HS Coated Bridges41
6.4.6 Structural Steel Carbon or Structural Steel HS 41
6.4.7 Bearing Pads Elastomeric Non-Laminated or Bearing Pads Elastomeric Laminated or Bearing Assemblies Fixed (Structure) or Bearing Assemblies Expansion (Structure) 41
6.4.8 Piling Test Treated Timber (Structure) 41
6.4.9 Piling CIP Concrete Delivered and Driven ___-Inch, Piling Steel Delivered and Driven ___ -Inch 41
6.4.10 Preboring CIP Concrete Piling or Steel Piling 42
6.4.11 Railing Steel Type (Structure) or Railing Tubular Type (Structure).....42

6.4.12 Slope Paving Concrete or Slope Paving Crushed Aggregate or Slope Paving Select Crushed Material 42
6.4.13 Riprap Medium, Riprap Heavy or Grouted Riprap, Riprap Light 42
6.4.14 Pile Points 42
6.4.15 Floordrains Type GC or Floordrains Type H 42
6.4.16 Cofferdams (Structure) 42
6.4.17 Rubberized Membrane Waterproofing 42
6.4.18 Expansion Device (Structure) 42
6.4.19 Electrical Work 42
6.4.20 Conduit Rigid Metallic __-Inch or Conduit Rigid Nonmetallic Schedule 40 -Inch 43
6.4.21 Preparation Decks Type 1 or Preparation Decks Type 2 43
6.4.22 Cleaning Decks 43
6.4.23 Joint Repair 43
6.4.24 Concrete Surface Repair 43
6.4.25 Full-Depth Deck Repair 43
6.4.26 Concrete Masonry Overlay Decks 43
6.4.27 Removing Old Structure STA. XX + XX.XX 43
6.4.28 Anchor Assemblies for Steel Plate Beam Guard 43
6.4.29 Steel Diaphragms (Structure) 43
6.4.30 Welded Stud Shear Connectors X -Inch 43
6.4.31 Concrete Masonry Seal 44
6.4.32 Geotextile Fabric Type 44
6.4.33 Masonry Anchors Type L No. Bars 44
6.4.34 Piling Steel Sheet Permanent Delivered or Piling Steel Sheet Permanent Driven 44
6.4.35 Piling Steel Sheet Temporary 44
6.4.36 Temporary Shoring 44
6.4.37 Concrete Masonry Deck Patching 44
6.4.38 Sawing Pavement Deck Preparation Areas 44
6.4.39 Removing Bearings 44
6.5 Production of Bridge Plans by Consultants, Regional Offices and Other Agencies 45
6.5.1 Approvals, Distribution, and Work Flow 45
6.5.2 Preliminary Plan Requirements 46
6.5.3 Final Plan Requirements 48
6.5.4 Design Aids & Specifications 49

6.5.5 Processing Consultant Prepared Bridge Plans 49

- Soil Bearing Pressure
- Pile Type and Capacity (see 6.3.2.1)

Ratings

Live Load:

Design Loading: HL-93

Inventory Rating Factor: RF = X.XX

Operating Rating Factor: RF = X.XX

Wisconsin Standard Permit Vehicle (Wis-SPV)

(See Chapter 45 – Bridge Rating (45.8.2) for additional information)

Hydraulic Data

Base Flood

- 100 Year Discharge
- Stream Velocity
- 100 Year Highwater Elevation
- Q_2 & Q_2 Elevation (Based on new structure opening)
- Waterway Area
- Drainage Area
- Scour Critical

Overtopping Flood OR (Overtopping N/A, for Floods > the 100 Year Flood)

- Overtopping Frequency
- Overtopping Elevation
- Overtopping Discharge

5. Show traffic data. Give traffic count, data and highway for each highway on grade separation or interchange structure.

6.2.2.4 Utilities

In urban areas, public and private utilities generally have their facilities such as sewers, water cables, pipes, ducts, etc., underground, or at river crossings, in the streambed.

If these facilities cannot be relocated, they may interfere with the most economical span arrangement. The preferred location of light poles is at the abutments or piers.

Overhead power lines may cause construction problems or maintenance inspection problems. Verify if they exist and notify Utilities & Access Management Unit (Bureau of Tech. Services) to have them removed.

It is the general policy to not place utilities on the structure. The Utilities & Access Management Unit approves all utility applications and determines whether utilities are placed on the structures or can be accommodated some other way. Refer all requests to them. Also see Chapter 18 of the FDM and Chapter 4 of "*WisDOT Guide to Utility Coordination*".

6.2.3 Distribution of Exhibits

6.2.3.1 Federal Highway Administration (FHWA).

FHWA memorandums "Implementing Guidance-Project Oversight under Section 1305 of the Transportation Equity Act for the 21st Century (TEA-21) of 1998" dated August 20, 1998, and "Project Oversight Unusual Bridges and Structures" dated November 13, 1998, indicate that **FHWA Headquarters Bridge Division or the Division Office must review and approve preliminary plans for unusual bridges and structures on the following projects:**

1. Projects on the Interstate System
2. Projects on the National Highway System (NHS) but not on the Interstate System, unless it is determined by FHWA and WisDOT that the responsibilities can be assumed by WisDOT
3. Projects on non-NHS Federal-aid highways, and eligible projects on public roads which are not Federal-aid highways if WisDOT determines that it is not appropriate for WisDOT to assume the responsibilities

Technical assistance is also available upon request for projects/structures that are not otherwise subject to FHWA oversight.

Unusual bridges have the following characteristics:

- Difficult or unique foundation problems
- New or complex designs with unique operational or design features
- Exceptionally long spans
- Design procedures that depart from currently recognized acceptable practices

Examples of unusual bridges:

- Cable-stayed
- Suspension
- Arch
- Segmental concrete
- Movable
- Truss
- Bridges types that deviate from AASHTO bridge design standards or AASHTO guide specifications for highway bridges
- Major bridges using load and resistance factor design specifications
- Bridges using a three-dimensional computer analysis
- Bridges with spans exceeding 350 feet

Examples of unusual structures:

- Tunnels
- Geotechnical structures featuring new or complex wall systems or ground improvement systems
- Hydraulic structures that involve complex stream stability countermeasures, or designs or design techniques that are atypical or unique

Timing of submittals is an important consideration for FHWA approval and assistance, therefore, **FHWA should be involved as early as possible.**

The following preliminary documents should be submitted electronically (PDF format) to FHWA:

1. Preliminary plans (Type, Size and Location)
2. Bridge/structures related environmental concerns and suggested mitigation measures
3. Studies of bridge types and span arrangements
4. Approach bridge span layout plans and profile sheets
5. Controlling vertical and horizontal clearance requirements

6. Roadway geometry

7. Design specifications used

8. Special design criteria

9. Cost estimates

10. Hydraulic and scour design studies/reports showing scour predictions and related mitigation measures

11. Geotechnical studies/reports

12. Information on substructure and foundation types

Note: Much of this information may be covered by the submittal of a Structure Type Selection Report.

6.2.3.2 Coast Guard

Current permit application guides published by the 2nd or 9th Coast Guard District should be followed. For Federal Aid projects, applicants must furnish two copies of the Final Environmental Impact Statement accepted by the lead agency. The Regional Office will also forward Water Quality Certification obtained from the Department of Natural Resources.

6.2.3.3 Regions

One print of all preliminary drawings is sent to the Regional Office involved, for their review. For structures financed partially or wholly by a county, city, village or township, their approval should be obtained by the Regional Office and approval notice forwarded to the Bureau of Structures.

6.2.3.4 Utilities

For all structures which involve a railroad, four prints of the preliminary drawing are submitted to the Utilities & Access Management Unit for submission to the railroad company for approval.

If private or public utilities wish to make application to attach their facilities (water, and sewer mains, ducts, cables, etc.) to the structure, they must apply to the Utilities & Access Management Unit for approval.

6.2.3.5 Other Agencies

One set of preliminary plans (preliminary layout, plan & profile, and contour map) for stream crossing bridges are forwarded to the Department of Natural Resources for comment, in accordance with the cooperative agreement between the Department of Transportation and the Department of Natural Resources. (See Chapter 8.0).

4. Grade Line

   Same requirements as specified for preliminary plan.

5. Design and Traffic Data

   Same requirements as specified for preliminary plan plus show Design Specifications as: AASHTO LRFD Spec. 2007.

6. Hydraulic Information, if Applicable

7. Foundations

   Give soil/rock bearing capacity or pile capacity.

   Example for General Plan sheet: Abutments to be supported on HP 10 x 42 steel piling with a required driving resistance of 180 tons * per pile as determined by the Modified Gates Dynamic Equation. Estimated 50' long.

   *The factored axial resistance of piles in compression used for design is the required driving resistance multiplied by a resistance factor of 0.5 using modified Gates to determine driven pile capacity.

   Repeat the note above on each substructure sheet, except the asterisk (*) and subsequent explanation of factored design resistance need not appear on individual substructure sheets.

   See Table 11.3-5 for typical maximum driving resistance values.

8. Estimated Quantities

   a. Enter bid items and quantities as they appear, and in the order in which they appear in the "Schedule of Bid Items" of the Standard Specifications. Put items not provided for at the bottom of the list. Enter quantities for each part of the structure, (superstructure, each abutment, each pier) under a separate column with a grand total.

      Quantities are to be bid under items for the Structure Type and not by the "B" or "C" numbers. For example, concrete for a multi-cell box culvert exceeding a total length of 20 feet is to be bid under item Concrete Masonry Culverts. As another example, a bridge having a length less than 20 feet would be given a "C" number; however, the concrete bid item is Concrete Masonry Bridges.

   b. For incidental items to be furnished for which there is no bid item, and compensation is not covered by the Standard Specifications or Special Provisions, note on the plans the most closely related bid item that is to include the cost in the price bid per unit of item. As an example, the cost of concrete inserts is to be included in the price bid per cubic yard of concrete masonry.

9. General Notes

   A standard list of notes is given in 6.3.2.1.1 and 6.3.2.1.2. Use the notes in this table that apply to the structure drawn on the plans.

10. List of Drawings

    Each sheet is numbered sequentially beginning with 1 for the first sheet. Give the sheet number and title of sheet.

11. Bench Marks

    Give the location, description and elevation of the nearest bench mark.

12. Title Block

    Fill in all data for the Title Block except the signature. The title of this sheet is "General Plan". Use the line below the structure number to describe the type of crossing. (Example: STH 15 SB over Fox River). For Design Spec. use AASHTO and year. If LRFD specs. are used, use AASHTO LRFD and year.

13. Professional Seal

    All final bridge plans prepared by Consultants or Governmental Agencies shall be professionally sealed, signed, and dated on the general plan sheet.

    This is not required for WisDOT prepared plans, as they are covered elsewhere.

6.3.2.1.1 Plan notes for New Bridge Construction

1. Drawings shall not be scaled. Bar Steel Reinforcement shall be embedded 2” clear unless otherwise shown or noted.

2. All field connections shall be made with 3/4” diameter friction type high-tensile strength bolts unless shown or noted otherwise.

3. Slab falsework shall be supported on piles or the substructure unless an alternate method is approved by the Engineer.

4. The first or first two digits of the bar mark signifies the bar size.

5. The slope of the fill in front of the abutments shall be covered with heavy riprap and geotextile fabric Type ‘HR’ to the extent shown on sheet 1 and in the abutment details.

6. The slope of the fill in front of the abutments shall be covered with slope paving material to the extent shown on sheet 1 and in the abutment details.

7. The stream bed in front of the abutment shall be covered with riprap as shown on this sheet and in the abutment details.

8. The existing stream bed shall be used as the upper limits of excavation at the piers.

9. The existing ground line shall be used as the upper limits of excavation at the piers.

10. The finished graded section shall be the upper limits of excavation for structures.

11. The upper limits of excavation for structures for the abutments shall be the bottom of slope protection.

12. Within the length of the box all spaces excavated and not occupied by the new structure shall be backfilled with Structure Backfill to the elevation and section existing prior to excavation within the length of the culvert.

13. At the backface of abutment all volume which cannot be placed before abutment construction and is not occupied by the new structure shall be backfilled with structure backfill.

14. Concrete inserts to be furnished by the utility company and placed by the contractor. Cost of placing inserts shall be included in the bid price for concrete masonry.

15. Prestressed Girder Bridges - The haunch concrete quantity is based on the average haunch shown on the Prestressed Girder Details sheet, which is the maximum haunch quantity for which the Contractor will be paid.

6.3.2.1.2 Plan Notes for Bridge Rehabilitation

1. Dimensions shown are based on the original structure plans.

2. All concrete removal not covered with a concrete overlay shall be defined by a 1 inch deep saw cut.

3. Utilize existing bar steel reinforcement where shown and extend 24 bar diameters into new work, unless specified otherwise.

4. Concrete expansion bolts and inserts to be furnished and placed by the contractor under the bid price for concrete masonry.

5. At "Curb Repair" expose existing reinforcement a minimum of 1 1/2” clear.

6. Existing floor drains to remain in place. Remove top of deck in drain area as directed by the Field Engineer to allow placing and sloping of 1 1/2” concrete overlay.

7. Expansion joint assembly, including anchor studs and hardware shall be paid for in the lump sum price bid as "Expansion Device B-_____” or “Expansion Device Modular B- _____”.

8. Clean and fill existing longitudinal and transverse cracks with penetrating epoxy as directed by the Field Engineer.

9. Variations to the new grade line over 1/4" must be submitted by the Field Engineer to the Structures Design Section for review.

10. The contractor shall supply a new name plate in accordance with Section 502.3.11 of the Standard Specifications and the standard detail drawings. Name plate to show original construction year.

6.3.2.2 Subsurface Exploration

This sheet is initiated by the Geotechnical Engineer. The following information is required on the sheet. Bridge details are not drawn by the Geotechnical Engineer.

1. Plan View

   Show a plan layout of structure with survey lines, reference lines, pier and abutment locations and location of borings and probings plotted to scale.

   On box culvert structure plans, show three profile lines of the existing ground elevations (along the centerline and outer walls of the box). Scale the information for these lines from the site contour map that is a part of the structure survey report.

2. Elevation

   Show a centerline profile of existing ground elevation.

   Show only substructure units at proper elevation w/no elevations shown. Also show the pile lengths.

   Show the kind of material, its located depth, and the blow count of the split spoon sampler for each boring. Give the blow count at about 5 foot intervals or where there is a significant change in material.

6.3.2.3 Abutments

Use as many sheets as necessary to show details clearly. Show all bar steel required using standard notations; solid lines lengthwise and solid dots in cross section. Give dimensions for a skewed abutment to a reference line which passes through the intersection for the longitudinal structural reference line and centerline of bearing of the abutment. Give the dimension, from centerline of bearing to backface of abutment along the longitudinal reference line and the offset distance if on a skew. Show the skew angle.

If there is piling, show a complete footing layout giving piling dimensions tied to the reference line. Number all the piles. Give the type of piling, length and required driving resistance. Show a welded field splice for cast in place concrete or steel H piles.

Bridge seats for steel bearings and laminated elastomeric bearings are level within the limits of the bearing plate. Slope the bearing area utilizing non-laminated elastomeric bearings if the slope of the bottom of girder exceeds 1%. Slope the bridge seat between bearings 1" from front face of backwall to front face of abutment. Give all beam seat elevations.

1. Plan View

    a. Place a keyed construction joint near the center of the abutment if the length of the body wall exceeds 50 feet. Make the keyway as large as feasible and extend the horizontal bar steel through the joint.

    b. Dimension wings in a direction parallel and perpendicular to the wing centerline.

    c. Dimension angle between wing and body if that angle is different from the skew angle of the abutment.

2. Elevation

    a. Give beam seat, wing (front face and wing tip), and footing elevations to the nearest .01 of a foot.

    b. Give vertical dimension of wing.

3. Wing Elevation

4. Body Section

    Place an optional keyed construction joint in the parapet at the bridge seat elevation if there is a parapet.

5. Wing Sections

6. Bar Steel Listing and Detail

Use the following views where necessary:

7. Pile Plan & Splice Detail

8. View Showing Limits of Excavation and Backfill

9. Special Details for Utilities

10. Drainage Details

6.3.2.4 Piers

Use as many sheets as necessary to show all details clearly. One sheet may show several piers if only the height, elevations and other minor details are different.

Give dimensions for a skewed pier to a reference line which passes through the intersection of the longitudinal structural reference line and the pier centerline. Show the skew angle. Dimension the centerline spacing of superstructure girders.

1. Plan View

Show dimensions, footings, cap steps, beam spacings and skew angle.

2. Elevation

   Show dimensions and elevations. Show lengths of all columns for clarity. Give the elevation of the bottom of footings and beam seats. Refer to abutments for detailing bridge seats. Dimension all bar steel and stirrups.

3. Footing Plan

   Show dimensions for pile spacing, pile numbers and reinforcing steel in footing.

4. Bar Steel Listing and Details

5. Pile Splice Detail (If different from abutment only).

6. Cross Section thru Column and Pier Cap

   Detail anchor bolts between reinforcing bars to provide clearance. Long steel bridges may require more clearance. This allows an erection tolerance for the structural steel so that the bar steel is not pierced by the anchor bolts if the bearing is shifted.

6.3.2.5 Superstructure

Use as many sheets as are necessary to show all details clearly. Standard insert sheets are available to show many standard details. The title, project number, and a few basic dimensions are added to these standard sheets.

6.3.2.5.1 All Structures

1. Show the cross-section of roadway, plan view and related details, elevation of typical girder or girders, details of girders, and other details not shown on standard insert sheets. All drawings are to be fully dimensioned and show such sections and views as needed to detail the superstructure completely.

2. For girder bridges:
   Show the total dead load deflections, including composite dead load (without future wearing surface loads) acting on the composite section, at tenth points of each span. For standard bridges without raised sidewalks, the parapet/railing and median weights should be distributed equally to all girders and one deflection value given for all girders. Raised sidewalk weights, along with corresponding parapet/railing weights, should be applied to the supporting girders, only, and separate deflection values given for interior and exterior girders. When raised sidewalks are utilized, median weight should be distributed to interior girders. See Chapter 17 – Superstructure – General for proper dead load distribution. For prestressed concrete girders, the dead load deflection reported does not include the weight of the girder. See Chapter 24 – Steel Girder Structures for camber and blocking, top of steel elevation and deflection reporting criteria.

For slab bridges:
Provide camber values at the tenth points of all spans. The camber is based on 3 times the deflection of the slab, only. For multi-span bridges, the deflection calculations are based on a continuous span structure since the falsework supports the bridge until the concrete slab has cured.

Deflection and camber values are to be reported to the nearest 0.1 inch.

3. For girder structures, provide finished grade top of deck elevations for each girder line at the tenth points of all spans. Show the top of deck elevations at the outside edge of deck at tenth points. If staged construction, include tenth point elevations along the construction joint. For slab structures, provide the finished grade elevations at the centerline and/or crown and edge of slab at tenth points.

4. Decks of uniform thickness are used on all girders. Variations in thickness are achieved by haunching the deck over each girder. Haunches are formed off the top of the top flange. See the standards for details. In general the minimum haunch depth along the edge of girder is to be 1 1/4" although 2" is recommended to allow for construction tolerances. Haunch depth is the distance from the bottom of the concrete deck to the top of the top flange.

5. Provide a paving notch at each end of all structures for rigid approach pavements. See standard for details.

6. If the structure contains conduit for a deck lighting system, place the conduit in the concrete parapet. Place expansion devices on conduit which passes through structure expansion joints.

7. Show the bar steel reinforcement in the slab, curb, and sidewalk with the transverse spacing and all bars labeled. Show the direction and amount of roadway crown.

8. On bridges with a median curb and left turn lane, water may be trapped at the curb due to the grade slope and crown slope. If this is the case, make the cross slope flat to minimize the problem. Existing pavers cannot adjust to a variable crown line.

9. On structures with modular joints consider cover plates for the back of parapets when aesthetics are a consideration.

6.3.2.5.2 Steel Structures

1. Show the diaphragm connections on steel girders. Show the spacing of rail posts on the plan view.

2. Show a steel framing plan for all steel girders. Show the spacing of diaphragms.

3. On the elevation view of steel girders show dimension, material required, field and shop splice locations, stiffener spacing, shear connector spacing, and any other information necessary to construct the girder. In additional views show the field splice details and any other detail that is necessary.

4. Show the size and location of all weld types with the proper symbols except for butt welds. Requirements for butt welds are covered by A.W.S. Specifications.

5. See Chapter 24 – Steel Girder Structures for camber and blocking, top of steel elevation and deflection reporting criteria.

6. Existing flange and web sizes should be shown to facilitate the sizing of bolts on Rehabilitation Plans.

6.3.2.5.3 Railing and Parapet Details

Standard drawings are maintained by the Structures Development Section showing railing and parapet details. Add the details and dimensions to these drawings that are unique to the structure being detailed. Compute the length along the slope of grade line rather than the horizontal dimension.

6.3.3 Miscellaneous Information

6.3.3.1 Bill of Bars

Show a complete bill of bar steel reinforcement for each unit of the structure. Place this bill on the sheet to which the bars pertain. If the abutments or piers are similar, only one bar list is needed for each type of unit.

Give each bar or group of bars a different mark if they vary in size, length, or location in a unit. Each bar list is to show the mark, number of bars, length, location and detail for each bar. Give bar lengths to the nearest 1” and segment lengths of bent bars to the nearest 1/2”. Show all bar bends and hooks in detail.

Identify all bars with a letter indicating the unit in which the bar is placed - A for abutment, P for pier, S for superstructure. Where units are multiple, each unit should have a different letter. Next use a one or two digit number to sequentially number the bars in a unit. P1008 indicates bar number 08 is a size number 10 bar located in a Pier.

Use a Bar Series Table where a number of bars the same size and spacing vary in length is a uniform progression. Use only one mark for all these bars and put the average length in the table.

Refer to the Standard drawings in Chapter 9.0 for more information on reinforcing bars such as minimum bend diameter, splice lengths, bar supports, etc.

When a bridge is constructed in stages, show the bar quantities for each stage. This helps the contractor with storage and retrieval during construction.

6.3.3.2 Box Culverts

Detail plans for box culverts are to be fully dimensioned and have sectional drawings needed to detail the structure completely. The following items are to be shown when necessary:

1. Plan View
2. Longitudinal section
3. Section thru box
4. Wing elevations
5. Section thru wings
6. Section thru cutoff wall
7. Vertical construction joint
8. Bar steel clearance details
9. Header details
10. North point, Bench mark, Quantities
11. Bill of bars, Bar details
12. General notes, List of drawings, Rip rap layout
13. Inlet nose detail on multiple cell boxes
14. Corner details

Bid items are excavation, concrete masonry, bar steel and rip rap. Non bid items are membrane waterproofing, filler and expansion bolts. In lieu of showing a contour map, show profile grade lines as described for Subsurface Exploration sheet.

See the standard details for box culverts for the requirements on vertical construction joints, apron and cutoff walls, longitudinal construction joints, and optional construction joints.

Show name plate location on plan view and on wing detail.

6.3.3.3 Miscellaneous Structures

Detail plans for other structures such as retaining walls, sign bridges, pedestrian bridges, and erosion control structures are to be detailed with the same requirements as previously mentioned.

6.3.3.4 Standard Drawings

Standard drawings are maintained and furnished by the Structures Development Section. These drawings show the common types of details required on the contract plans.

6.3.3.5 Insert Sheets

These sheets are maintained by the Structures Development Section and are used in the contract plans to show standard details.

6.3.3.6 Change Orders and Maintenance Work

These plans are drawn on full size sheets.

6.3.3.7 Bench Marks

Bench mark caps are shown on all bridges and larger culverts. Locate the caps on a horizontal surface flush with the concrete. Show the location in close proximity to the Name Plate.

6.3.4 Checking Plans

Upon completion of the design and drafting of plans for a structure, the final plans are usually checked by one person. Dividing plans checking between two or more Checkers for any one structure leads to errors many times. The plans are checked for compliance with the approved preliminary drawing, design, sufficiency and accuracy of details, dimensions, elevations, and quantities. Generally the information shown on the preliminary plan is to be used on the final plans. Revisions may be made to footing sizes and elevations, pile lengths, dimensions, girder spacing, column shapes, and other details not determined at the preliminary stage. Any major changes from the preliminary plan are to be approved by the Chief Bridge Design Engineer.

Give special attention to unique details and unusual construction problems. Take nothing for granted on the plans.

The Checkers check the final plans against the Engineer's design and sketches to be sure all information is shown correctly. The Engineer prepares all sketches and notations not covered by standard drawings. A good Checker checks what is shown and noted on the plan and also checks to see if any essential details, dimensions, or notation have been omitted. Check the final plan Bid Items for conformity with those scheduled in the WisDOT Standard Specifications for Highway and Structure Construction.

The Checker makes an independent Bill of Bars list to be sure the detailer has not omitted any bars when checking the quantity of bar steel.

Avoid making minor revisions in details or dimensions that have very little effect on cost, appearance, or adequacy of the completed structure. Check grade and bridge seat elevations and all dimensions to the required tolerances. The Checkers make all corrections, revisions, and notations on a print of the plan and return it to the Plan Preparer. The Plan Preparer back checks all marks made by the checker before changing. Any disagreements are resolved with the supervisor.

Common complaints received from field people are dimension errors, small details crowded on a drawing, lettering is too small, and reinforcing bar length or quantity errors.

After the plans are completed, the items in the survey folder are separated into the following groups by the Structures Design Unit Supervisor or plans checker:

6.3.4.1 Items to be Destroyed When Construction is Completed (Group A)

1. Miscellaneous correspondence and Transmittal letters
2. Preliminary drawings and computations
3. Prints of soil borings and plan profile sheets
4. Quantity computations and bill of bars
5. Shop steel quantity computations*
6. Design checker's computations
7. Designer Computations and computer runs of non-complex structures on non state maintained structures.
8. Layout sheets
9. Elevation runs and bridge geometrics
10. *Falsework plans*
11. Miscellaneous Test Report
12. Photographs of Bridge Rehabs

* These items are added to the packet during construction.

6.3.4.2 Items to be Destroyed when Plans are Completed (Group B)

1. All "void" material
2. All copies except one of preliminary drawings
3. Extra copies of plan and profile sheets
4. Preliminary computer design runs

Items in Group A should be placed together and labeled. Items in Group B should be discarded.

The following items are part of the Data Management System for Structures. The location is shown for all items that need to be completed in order to properly manage the Structure data either by Structures Design personnel for in-house projects or consultants for their designs. Data for filing that is generated outside the Bureau of Structures should be sent to the Structures Development Section.

1. Structure Inventory Form (Available on DOTNET) - New Bridge File – Data for this form is completed by the preliminary designer and plans checker. It is submitted to the Structures Development Section for entry into the File.

2. Load Rating Input File - Permits File - The designers submit an electronic copy of the input data for load rating the structure to the Structures Development Section. It is located for internal use at //H32751/rating.

3. Designer Computations and Inventory Superstructure Design Run (Substructure computer runs as determined by the Engineer) - **HSI – The designers record design, inventory, operating ratings and maximum vehicle weights on the plans and place into the scanned folder.

4. Pile Driving Reports - HSI - Structures Development Section scans reports into HSI.

5. Shop Drawings for Steel Bridges, Sign Bridges, Prestressed Girders, High Mast Poles, Retaining Walls, Floor Drains, Railings and all Steel Joints - HSI - Metals Fabrication & Inspection Unit or other source sends to the Structures Development Section to scan all data into HSI.

6. Mill Tests, Heat Numbers and Shop Inspection Reports for all Steel Main Members - HSI - Metals Fabrication & Inspection Unit sends electronic files data into HSI.

7. Hydraulic and Scour Computations, Contour Maps and Site Report - HSI - Data is placed into scanned folder by Preliminary Structures & Hydraulics Unit.

8. Subsurface Exploration Report - HSI - Report is placed into scanned folder by Preliminary Structures & Hydraulics Unit or electronic copies are loaded from Geotechnical files.

9. Structure Survey Report - HSI - Report is placed into scanned folder by Preliminary Structures & Hydraulics Unit.

10. As Built Plans - HSI - At bid letting, the printers place a digital image of plans in a computer folder and send to the Structures Development Section where the plan sheets are labeled and placed in HSI. As Built plans will replace bid letting plans when available and will be scanned by the Structures Development Section.

11. Inspection Reports - New Bridge File - The Structures Maintenance Section loads a copy of the following Inspection Reports into the New Bridge File.

Initial	Underwater (UW-Probe/Visual
Routine Visual	Movable
Fracture Critical	Damage
In-Depth	Interim
Underwater (UW)-Dive	Posted
Underwater (UW)-Surv	

Table 6.3-2
Various Inspection Reports

** HSI – Highway Structures Information System – The electronic file where bridge data is stored for future use.

6.3.5 Processing Plans

1. Before P.S. & E. Process

   File plans in plan drawers by county for consultant work, or

   Maintain plans as PDF on E-plan server.

2. At P.S. & E. Processing

   Prepare plans for bid letting process.

3. After Structure Construction

   Any data in Design Folder is scanned and placed with bridge plans.

   Original plan sheets and Design Folders are discarded.

6.4 Computation of Quantities

When the final drafting and checking is completed, the Engineering Specialist and checker are to prepare individual quantity calculations for the bid items listed on the plans. The following instructions apply to the computation on quantities.

Be neat and orderly with the work. Divide the work into units that are repetitive such as footings, columns, and girders. Label all items with a clear description. Use sketches for clarity. These computations may be examined by others in future years so make them understandable.

One of the most common errors made in quantity computation is computing only half of an item which is symmetrical about a centerline and forgetting to double the result.

Staged Construction - On projects where there is staged construction that will involve two construction seasons the following quantities should be split to match the staging to aid the contractor/fabricator: Concrete Masonry, Bar Steel Reinforcement, Structural Steel and Bar Couplers. The other items are not significant enough to justify separating.

Following is a list of commonly used bridge quantities. Be sure to use the appropriate item and avoid using incidental items as this is too confusing for the contractor and project manager. Items such as Incentive Strength Concrete Structures, Construction Staking Structure Layout, etc. should not be included on the structure plans.

A column with the title “Bid Item Number” should be the first column for the “Total Estimated Quantities” table shown in the plans. The numbers in this column will be the numbers associated with the bid items as found in the Standard Specification, STSP, and/or Special Provisions.

6.4.1 Excavation for Structures Bridges (Structure)

This is a lump sum bid item. The limits of excavation are shown in the chapter in the manual which pertains to the structural item, abutments, piers, retaining walls, box culverts, etc.

The limits of excavation made into solid rock are the neat line of the footing.

6.4.2 Backfill Granular or Backfill Structure

Backfill Granular and Backfill Structure are bid in units of cubic yard. The pay limits and quantity computations of backfill at abutments are shown in Chapter 12.

6.4.3 Concrete Masonry Bridges

Show the total quantity to the nearest cubic yard. Show unit quantities to the nearest 0.1 cubic yard adjusted so the total of the unit quantities equals the total quantity. In computing quantities no deduction is made for metal reinforcement, floor drains, conduits and chamfers less than 2”. Flanges of steel and prestressed girders projecting into the slab are deducted.

Deduct the volume of pile heads into footings and through seals for all piling except steel H sections. Deduct the actual volume displaced for precast concrete and cast-in-place concrete piling.

Consider the concrete parapet railing on abutment wing walls as part of the concrete volume of the abutment.

6.4.4 Prestressed Girder Type I (28-Inch; 36-Inch; 36W-Inch; 45W-Inch; 54W-Inch; 72W-Inch, 82W-Inch)

Record the total length of prestressed girders to the nearest 1 foot.

6.4.5 Bar Steel Reinforcement HS Bridges or Bar Steel Reinforcement HS Coated Bridges

Record this quantity to the nearest 10 lbs. Designate if bar steel is coated. Include the bar steel in C.I.P. concrete piling in bar steel quantities.

6.4.6 Structural Steel Carbon or Structural Steel HS

See 24.2.4.

6.4.7 Bearing Pads Elastomeric Non-Laminated or Bearing Pads Elastomeric Laminated or Bearing Assemblies Fixed (Structure) or Bearing Assemblies Expansion (Structure)

Record as separate item with quantity required. Bid as Each.

6.4.8 Piling Test Treated Timber (Structure)

Record this quantity as a lump sum item. Estimate the pile lengths by examining the subsurface exploration sheet and the Site Investigation Report. Give the length and location of test piles in a footnote. Do not use this quantity for steel piling or concrete cast-in-place piling.

6.4.9 Piling CIP Concrete Delivered and Driven ___-Inch, Piling Steel Delivered and Driven ___ -Inch

Record this quantity in feet for Steel and C.I.P. types of piling delivered and driven. Timber piling are Bid as separate items, delivered and driven. Pile lengths are computed to the nearest 5.0 foot at each location, unless a more exact length is known due to well defined shallow rock, etc..

The length of foundation piling driven includes the length through any seal and embedment into the footing. The quantity delivered is the same as quantity driven. For trestle piling the amount of piling driven is the penetration below ground surface.

Oil field pipe is allowed as an alternate on all plans unless a note is added in the General Notes stating it is not allowed on that specific project.

6.4.10 Preboring CIP Concrete Piling or Steel Piling

Record the type, quantity in feet. Calculate to the nearest lineal foot per pile location.

6.4.11 Railing Steel Type (Structure) or Railing Tubular Type (Structure)

Record the type, quantity is a Lump Sum.

6.4.12 Slope Paving Concrete or Slope Paving Crushed Aggregate or Slope Paving Select Crushed Material

Record this quantity to the nearest square yard. Deduct the area occupied by columns or other elements of substructure units.

6.4.13 Riprap Medium, Riprap Heavy or Grouted Riprap, Riprap Light

Record this quantity to the nearest 5 cubic yards.

6.4.14 Pile Points

When recommended in soils report. Bid as each.

6.4.15 Floordrains Type GC or Floordrains Type H

Record the type and number of drains. Bid as Each.

6.4.16 Cofferdams (Structure)

Lump Sum

6.4.17 Rubberized Membrane Waterproofing

Record the quantity to the nearest square yard.

6.4.18 Expansion Device (Structure)

Record this quantity in lump sum.

6.4.19 Electrical Work

Refer to Standard Construction Specifications for bid items.

6.4.20 Conduit Rigid Metallic __-Inch or Conduit Rigid Nonmetallic Schedule 40 -Inch

Record this quantity in feet.

6.4.21 Preparation Decks Type 1 or Preparation Decks Type 2

Estimate Type 2 Deck Preparation as 40% of Type 1 Deck Preparation. Record this quantity to the nearest square yard. Use 2" for depth of each Preparation, compute concrete quantity and add to Concrete Masonry Overlay Decks.

6.4.22 Cleaning Decks

Record this quantity to the nearest square yard.

6.4.23 Joint Repair

Record this quantity to the nearest square yard.

6.4.24 Concrete Surface Repair

Record this quantity to the nearest square foot.

6.4.25 Full-Depth Deck Repair

Record this quantity to the nearest square yard.

6.4.26 Concrete Masonry Overlay Decks

Record this quantity to the nearest cubic yard. Estimate the quantity by using a thickness measured from the existing ground concrete surface to the plan gradeline. Calculate the minimum overlay thickness and add ½" for variations in the deck surface. Provide this average thickness on the plan, as well. Usually 1" of deck surface is removed by grinding.

6.4.27 Removing Old Structure STA. XX + XX.XX

Covers the entire or partial removal of an existing structure. Bid as Lump Sum.

6.4.28 Anchor Assemblies for Steel Plate Beam Guard

Attachment assembly for Beam Guard at the termination of concrete parapets. Bid as each.

6.4.29 Steel Diaphragms (Structure)

In span diaphragms used on bridges with prestressed girders. Bid as each.

6.4.30 Welded Stud Shear Connectors X -Inch

Total number of shear connectors with the given diameter. Bid as each.

6.4.31 Concrete Masonry Seal

Seal concrete bid to the nearest cubic yard. Whenever a concrete seal is shown on the plans, then “Cofferdams (Structure)” is also to be a bid item.

6.4.32 Geotextile Fabric Type

List type of fabric. Type HR is used in conjunction with Heavy Riprap. Bid in square yards.

6.4.33 Masonry Anchors Type L No. Bars

Used when anchoring reinforcing bars into concrete. Bid as each.

6.4.34 Piling Steel Sheet Permanent Delivered or Piling Steel Sheet Permanent Driven

Record this quantity to the nearest square foot for the area of wall below cutoff.

6.4.35 Piling Steel Sheet Temporary

This quantity is used when the designer determines that retention of earth is necessary during excavation and soil forces require the design of steel sheet piling.

Record this quantity to the nearest square foot for the area below the retained grade and one foot above the retained grade.

Following is a list of commonly used STSP’s and Bureau of Structures Special Provisions.

6.4.36 Temporary Shoring

This quantity is used when earth retention may be required and the method chosen is the contractor’s option.

Bid as square foot of exposed surface as shown on the plans.

6.4.37 Concrete Masonry Deck Patching

(Deck preparation areas) x 2” deck thickness.

6.4.38 Sawing Pavement Deck Preparation Areas

Use 10 lineal feet per S.Y. of Preparation Decks.

6.4.39 Removing Bearings

Used to remove existing bearings for replacement with new expansion or fixed bearing assemblies. Bid as each.

6.5 Production of Bridge Plans by Consultants, Regional Offices and Other Agencies

The need for structures is determined during the Preliminary Site Survey and recorded in the Concept Definition or Work Study Report. On Federal (FHWA) or State Aid Projects completed Structure Survey Reports and plans are submitted to the Structures Design Section with a copy forwarded to the Regional Office for approval prior to construction. Structure and project numbers are assigned by the Regional Offices. In preparation of the structural plans, the appropriate specifications and details recommended by the Structures Design Section are to be used. If the consultant elects to modify or use details other than recommended, approval is required prior to their incorporation into the final plans.

On all Federal or State Aid Projects involving Maintenance work, the Concept Definition or Work Study Report, the preliminary and final bridge reconstruction plans shall be submitted to the Structures Design Section for review.

6.5.1 Approvals, Distribution, and Work Flow

Consultant	Meet with Regional Office and/or local units of government to determine need.
	Prepare Structure Survey Report including recommendation of structure type.
Geotechnical Consultant	Make site investigation and prepare Site Investigation Report.
Consultant	Prepare Preliminary Plan documents including scour computations for spread footings and/or shallow pile foundations. Record scour critical code on preliminary plans. Refer to Chapter 8, Appendix 8-D.
	Forward preliminary plans to the Structures Design Section for review and processing with a copy to the Regional Office.
Structures Design Section	Record Bridge and project numbers.
	Review hydraulics for Stream Crossings.
	Review Preliminary Plan.
	If a railroad is involved, send copies of preliminary plans to the Railroad.
	If navigable waterway is crossed, a permit drawing to construct bridge is sent to Coast Guard. If Federal aid is involved preliminary plans are sent to Federal Highway Administration for approval.
	Return preliminary plans and comments from Structures Design Section and other

	appropriate agencies to Consultant with a copy to the Regional Office.
	Forward Preliminary Plan and Hydraulic Data to DNR.
Consultant	Modify preliminary plan as required.
	Prepare and complete final design and plans for the specified structure.
	Write unusual special provisions.
	Send copies of final plans and special provisions to the Structures Design Section.
Structures Design Section	Review final plans.
	If a railroad is involved, send copies of final plans to Rails & Harbors Section.
	Return comments to Consultant with copy to Regional Office.
Consultant	Modify final plans and specifications as required.
	Send final plan originals to Structures Design Section.
	Send applicable Structure Inventory Data form to Structures Design Section. These forms are available on DTID Network.
Structures Design Section	Review final plan originals.
	Sign final originals.
	Write standard Special Provisions and send plan originals to Bureau of Project Development.
Bureau of Project Development	Prepare final approved bridge plans for pre-Development contract administration.

Table 6.5-1
Approvals, Distribution and Work Flow

6.5.2 Preliminary Plan Requirements

The Consultant prepares the Structure Survey Report for the improvement. Three types of Structure Survey Reports are available at the Regional Offices and listed in 6.2.1 of this Chapter. Preliminary layout requirements are given in 6.2.2. The Preliminary Plan exhibits are as follows:

1. Structure Survey Report.

2. Preliminary Drawings.

3. Log Borings shown on the Subsurface Exploration Drawing which must be submitted now and can be included with the Final Plans.

4. Evaluation Report of Borings with Values for End Bearing and/or Skin Friction.

5. Contour Map.

6. Typical Section for Roadway Approaches.

7. Plan and Profile of Approach Roadways.

8. Hydraulic Report (see Chapter 8.0) is required for Stream Crossing Structures.

9. County Map showing Location of New and/or Existing Structures.

10. Any other information or Drawings which may influence Location, Layout or Design of Structure.

The above information is also required for Box Culverts except that a separate preliminary drawing is usually not prepared unless the Box Culvert has large wings or other unique features.

The type of structure is usually determined by the local unit of government and the Regional Office. However, Bureau of Structures personnel review the structure type and may recommend that other types be considered. In this regard it is extremely important that preliminary designs be coordinated to avoid delays and unnecessary expense in plan preparation.

If the final approach roadways are unpaved, detail protective armor angles at the roadway ends of bridge decks/slabs as shown on Standard 28.1.

The distribution of Preliminary Plan exhibits in addition to those required by the Regional Office is as follows:

Structure Type	Bureau of Structures	DNR	FHWA
Stream Crossings	2	1	
Grade Separation	2		
Railroad Crossings	4**		
Special Types, (lift, moveable, cost greater than $10,000,000	4	1*	4

Table 6.5-2
Preliminary Plan Exhibit Distribution List

* Only for Stream Crossings

** Requires 4 copies for each railroad crossed

The Structures Design Section coordinates the internal review and outside agency review of plans and reports. The approved Preliminary Plans with revisions and/or recommendations are returned to the Consultant. The Preliminary Plan may be incorporated as the Final Plan lead sheet unless there is a change in structure type.

6.5.3 Final Plan Requirements

The guidelines and requirements for Final Plan preparation are given in 6.3. The following exhibits are included as part of the Final Plans:

1. Final Drawings. If final drawings are produced using Computer Aided Design and Drafting, contact the Structures Design Section for additional guidelines and requirements.

   For all highway structures provide the maximum vehicle weight that can be safely carried based on the procedure and vehicle configuration provided in the Bridge Rating Chapter 45.0.

2. Design and Quantity Computations

3. Special Provisions covering unique items not in the Standard Specifications such as Electrical Equipment, New Proprietary Products, etc. (The Structures Design Section provides Special Provisions for regularly used items).

The distribution of Final Plan exhibits in addition to those required by the Regional Office is as follows:

Structure Type	Bureau of Structures	FHWA
Stream Crossings	2	
Grade Separations	2	
Railroad Crossings	2**	
Special Types	2	4

Table 6.5-3
Final Plan Exhibit Distribution List

** Requires 2 copies for each railroad crossed.

On Federal or State Aid projects the contracts are let and awarded by the Wisconsin Department of Transportation. Shop drawing review and fabrication inspection are generally done by the Metals Fabrication and Inspection Unit. However, in some cases the consultant may check the shop drawings and an outside agency may inspect the fabrication. The Consultant contract specifies the scope of the work to be performed by the Consultant. Construction supervision and final acceptance of the project are provided by the State.

6.5.4 Design Aids & Specifications

The following items are available for assistance in the preparation of structure plans on the department internet sites:

https://on.dot.wi.gov/dtid_bos/extranet/structures/LRFD/index.htm

Bridge Manual
Highway Structures Information System (HSI)
Insert sheets
Standard details
Posted bridge map
Standard bridge CADD files
Structure survey reports and check lists
Structure costs
Structure Special Provisions

http://www.dot.wisconsin.gov/business/engrserv/index.htm

Facilities Development Manual
Standard Specifications for Highway and Structures Construction
Construction and Materials Manual

Additional information is available on the AASHTO and AREMA websites listed below:

http://bridges.transportation.org

http://www.arema.org

6.5.5 Processing Consultant Prepared Bridge Plans

The distribution of Preliminary Plan exhibits in addition to those required by the District is as follows:

1. Person Establishing Consultant Packet
    a. Place items received from Regional Office in Packet.
    b. Items placed in manila folder
        i. Structure Survey Report
        ii. Hydraulic computations
    c. Give to Consultant Plan Checker

2. Consultant Plan Checker

    a. Design Packet will be stored with Consultant data.

    b. Items placed in manila folder are:

        i. Design Computations – State Maintained Bridges only OR Complex Bridge on Local System.

        ii. Subsurface Report (Report may be on file but designers use this printed copy).

        iii. Pile Driving Reports

    c. All other material will be placed in Packet outside Folder.

3. Process Packet

4. Structures Development Section

    a. At end of Calendar Year, list of Constructed Bridges will be published. (Could be March of following year).

    b. Process items in Manila Folder into PDF file within the Project Electronic Folder. Verify scanning. Store in HSI.

    c. Discard all material in Project Packet. Recycle Packet.

    d. Archive & Delete replaced bridge from HSI.

    e. Archive & Delete Rating folder for replaced bridge.

    f. Create new Rating Folder for new Bridge.

    g. If State maintained bridge, delete old bridge from Permit Rating File.

    h. Discard plan sheets for new bridge located in Structures Design Section flat files.

    i. On steel bridges verify shop plans are in HSI.

5. Processing Culverts

    a. Change Year end run to determine completed Projects, include C, P, B & S numbers.

    b. Process like bridge where required.

    c. Delete old culvert card if replaced.

6. Future Consultant Load Rating
    a. Provide access to Rating Programs on Extranet.
        i. Show Input screen
        ii. Provide Help menu for Input
        iii. Designate Folder location for Input screens

This page intentionally left blank.

Table of Contents

9.1 General 2
9.2 Concrete 3
9.3 Reinforcement Bars 4
9.3.1 Development Length and Lap Splices for Deformed Bars 5
9.3.2 Bends and Hooks for Deformed Bars....6
9.3.3 Bill of Bars 7
9.3.4 Bar Series....7
9.4 Steel....9
9.5 Miscellaneous Metals....11
9.6 Timber....12
9.7 Miscellaneous Materials....13
9.8 Painting 15
9.9 Bar Tables and Figures....17

9.1 General

The *Wisconsin Standard Specifications for Highway and Structure Construction* (hereafter referred to as *Standard Specifications*) contains references to *ASTM Specifications* or *AASHTO Material Specifications* which provide required properties and testing standards for materials used in highway structures. The service life of a structure is dependent upon the quality of the materials used in its construction as well as the method of construction. This chapter highlights applications of materials for highway structures and their properties.

In cases where proprietary products are experimentally specified, special provisions are written which provide material properties and installation procedures. Manufacturer's recommendations for materials, preparation and their assistance during installation may also be specified.

Materials that are proposed for incorporation into highway structure projects performed under the jurisdiction of the Wisconsin Department of Transportation (WisDOT) may be approved or accepted by a variety of procedures:

- Laboratory testing of materials that are submitted or samples randomly selected.
- Inspection and/or testing at the source of fabrication or manufacture.
- Inspection and/or testing in the field by WisDOT regional personnel.
- Manufacturer's certificate of compliance and/or manufacturer's certified report of test or analysis, either as sole documentation for acceptance or as supplemental documentation.
- Inspection, evaluation and testing in the normal course of project administration of material specifications.
- Some products are on approved lists or from fabricators, manufacturers, and certified sources approved by WisDOT. Lists of approved suppliers, products, and certified sources are located at www.atwoodsystems.com/materials.

The *Wisconsin Construction and Materials Manual* (CMM) contains a description of procedures for material testing and acceptance requirements in Chapter 45, Section 25. Materials, unless otherwise permitted by the specifications, cannot be incorporated in the project until tested and approved by the proper authority.

9.2 Concrete

Concrete is used in many highway structures throughout Wisconsin. Some structure types are composed entirely of concrete, while others have concrete members. Different concrete compressive strengths (f'_c) are used in design and depend on the structure type or the location of the member. Compressive strengths are verified by cylinder tests done on concrete samples taken in the field. The *Standard Specifications* describe the requirements for concrete in Section 501.

Some of the concrete structure types/members and their design strengths for new projects are:

- Decks, Diaphragms, Overlays, Curbs, Parapets, Medians, Sidewalks and Concrete Slab Bridges (f'_c = 4 ksi)
- Other cast-in-place structures such as Culverts, Cantilever Retaining Walls and Substructure units (f'_c = 3.5 ksi)
- Other types of Retaining Walls (f'_c - values as specified in Chapter 14)
- Prestressed "I" girders (f'_c = 6 to 8 ksi)
- Prestressed "Slab and Box" sections (f'_c = 5 ksi)
- Prestressed Deck Panels (f'_c = 6 ksi)

Grade "E" concrete (Low Slump Concrete) is used in overlays for decks and slabs as stated in Section 509.2.

The modulus of elasticity of concrete, E_c , is a function of the unit weight of concrete and its compressive strength **LRFD [5.4.2.4]**. For a unit weight of 0.150 kcf, the modulus of elasticity is:

f'_c = 3.5 ksi ; E_c = 3600 ksi

f'_c = 4 ksi ; E_c = 3800 ksi

For prestressed concrete members, the value for E_c is based on studies in the field and is calculated as shown in 19.3.3.8.

The modulus of rupture for concrete, f_r, is a function of the concrete strength and is described in **LRFD [5.4.2.6]**. The coefficient of thermal expansion for normal weight concrete is 6 x 10^{-6} in/in/°F per **LRFD [5.4.2.2]**.

Air entraining admixture is added to concrete to provide durability for exposure to freeze and thaw conditions. Other concrete admixtures used are set retarding and water reducing admixtures. These are covered in Section 501 of the *Standard Specifications.*

9.3 Reinforcement Bars

Reinforced concrete structures and concrete members are designed using Grade 60 deformed bar steel with a minimum yield strength of 60 ksi. The modulus of elasticity, E_s , for steel reinforcing is 29,000 ksi. Reinforcement may be epoxy coated and this is determined by its location in the structure as described below. Adequate concrete cover and epoxy coating of reinforcement contribute to the durability of the reinforced concrete structure. The *Standard Specifications* describe the requirements for steel reinforcement and epoxy coating in Section 505.

Epoxy coated bars shall be used for both top and bottom reinforcement on all new decks, deck replacements and concrete slab superstructures. They shall be used in other superstructure elements such as curbs, parapets, medians, sidewalks, diaphragms and pilasters. Some of the bars in prestressed girders are epoxy coated and are specified in the Chapter 19 - Standards.

Use epoxy coated bar steel on all piers detailed with expansion joints and on all piers at grade separations. Use epoxy coated bars down to the top of the footing elevation.

At all abutments, epoxy coated bars shall be used for parapets on wing walls. For A3/A4 abutments use epoxy coated bars for the paving block and the abutment backwall, and for A1(fixed) coat the dowel bars. For all abutments use epoxy coated bars in the wing walls.

Welding of bar steel is not permitted unless approved by the Bureau of Structures or used in an approved butt splice as stated in Section 505.3.3.3 of the *Standard Specifications*. Test results indicate that the fatigue life of steel reinforcement is reduced by welding to them. Supporting a deck joint by welding attachments to the bar steel is not permitted. The bar steel mat does not provide adequate stiffness to support deck joints or similar details during the slab pour and maintain the proper joint elevations.

The minimum and maximum spacing of reinforcement, and spacing between bar layers is provided in **LRFD [5.10.3.1, 5.10.3.2]**. Use minimum and maximum values shown on Standards where provided.

Bridge plans show the quantity of bar steel required for the structure. Details are not provided for bar chairs or other devices necessary to support the reinforcement during the placement of the concrete. This information is covered by the *Standard Specifications* in Section 505.3.4 and these devices are part of the bid quantity.

Reinforcement for shrinkage and temperature stresses shall be provided near surfaces of concrete as stated in **LRFD [5.10.8]**.

When determining the anchorage requirements for bars, consider the bar size, the development length for straight bars and the development length for standard hooks. Note in Table 9.9-1 and Table 9.9-2 that smaller bars require considerably less development length than larger bars and the development length is also less if the bar spacing is 6 inches or more. By detailing smaller bars to get the required area and providing a spacing of 6 inches or more, less steel is used. Bar hooks can reduce the required bar development lengths, however the hooks may cost more to fabricate. In cases such as footings for columns or

Table of Contents

11.1 General 4
11.1.1 Overall Design Process 4
11.1.2 Foundation Type Selection 4
11.1.3 Cofferdams 6
11.1.4 Vibration Concerns 6
11.2 Shallow Foundations 7
11.2.1 General 7
11.2.2 Footing Design Considerations 7
11.2.2.1 Minimum Footing Depth 7
11.2.2.1.1 Scour Vulnerability 8
11.2.2.1.2 Frost Protection 8
11.2.2.1.3 Unsuitable Ground Conditions 9
11.2.2.2 Tolerable Movement of Substructures Founded on Shallow foundations 9
11.2.2.3 Location of Ground Water Table 10
11.2.2.4 Sloping Ground Surface 10
11.2.3 Settlement Analysis 10
11.2.4 Overall Stability 11
11.2.5 Footings on Engineered Fills 12
11.2.6 Construction Considerations 13
11.3 Deep Foundations 14
11.3.1 Driven Piles 14
11.3.1.1 Conditions Involving Short Pile Lengths 14
11.3.1.2 Pile Spacing 15
11.3.1.3 Battered Piles 15
11.3.1.4 Corrosion Loss 16
11.3.1.5 Pile Points 16
11.3.1.6 Preboring 17
11.3.1.7 Seating 17
11.3.1.8 Pile Embedment in Footings 17
11.3.1.9 Pile-Supported Footing Depth 18
11.3.1.10 Splices 18
11.3.1.11 Painting 18

11.3.1.12 Selection of Pile Types 18
11.3.1.12.1 Timber Piles 19
11.3.1.12.2 Concrete Piles 19
11.3.1.12.2.1 Driven Cast-In-Place Concrete Piles 20
11.3.1.12.2.2 Precast Concrete Piles 22
11.3.1.12.3 Steel Piles 22
11.3.1.12.3.1 H-Piles 23
11.3.1.12.3.2 Pipe Piles 24
11.3.1.12.3.3 Oil Field Piles 24
11.3.1.12.4 Pile Bents 25
11.3.1.13 Tolerable Movement of Substructures Founded on Driven Piles 25
11.3.1.14 Resistance Factors 25
11.3.1.15 Bearing Resistance 27
11.3.1.15.1 Shaft Resistance 29
11.3.1.15.2 Point Resistance 32
11.3.1.15.3 Group Capacity 33
11.3.1.16 Lateral Load Resistance 33
11.3.1.17 Other Design Considerations 34
11.3.1.17.1 Downdrag Load 34
11.3.1.17.2 Uplift Resistance 35
11.3.1.17.3 Pile Setup and Relaxation 35
11.3.1.17.4 Drivability Analysis 36
11.3.1.17.5 Scour 39
11.3.1.17.6 Typical Pile Resistance Values 39
11.3.1.18 Construction Considerations 41
11.3.1.18.1 Pile Hammers 41
11.3.1.18.2 Driving Formulas 43
11.3.1.18.3 Field Testing 44
11.3.1.18.3.1 Installation of Test Piles 45
11.3.1.18.3.2 Static Load Tests 45
11.3.2 Drilled Shafts 46
11.3.2.1 General 46
11.3.2.2 Resistance Factors 47
11.3.2.3 Bearing Resistance 49

11.3.2.3.1 Shaft Resistance 49
11.3.2.3.2 Point Resistance 50
11.3.2.3.3 Group Capacity 50
11.3.2.4 Lateral Load Resistance 50
11.3.2.5 Other Considerations 50
11.3.3 Micropiles 51
11.3.3.1 General 51
11.3.3.2 Design Guidance 51
11.3.4 Augered Cast-In-Place Piles 51
11.3.4.1 General 51
11.3.4.2 Design Guidance 52
11.4 References 53
11.5 Design Examples 55

11.1 General

11.1.1 Overall Design Process

The overall foundation support design process requires an iterative collaboration to provide cost-effective constructible substructures. Input is required from multiple disciplines including, but not limited to, structural and geotechnical design. For a typical bridge design, the following four steps are required (see 6.2):

1. Structure Survey Report (SSR) – This design step results in a very preliminary evaluation of the structure type and approximate location of substructure units, including a preliminary layout plan.

2. Site Investigation Report – Based on the Structure Survey Report, a site investigation is required, including test borings to determine foundation requirements. A hydraulic analysis is also performed at this time, if required, to assess scour potential and maximum scour depth. The Site Investigation Report and Subsurface Exploration Drawing are used to identify known constraints that would affect the foundations in regard to type, location or size and includes foundation recommendations to support detailed structural design. Certain structure sites/types may require the preliminary structure plans (Step 3) prior to initiating the geotechnical site investigation. One example of this is a multi-span structure over water. See 6.2 for more information.

3. Preliminary Structure Plans – This design step involves preparation of a general plan, elevation, span arrangement, typical section and cost estimate for the new bridge structure. The Site Investigation Report is used to identify possible poor foundation conditions and may require modification of the structure geometry and span arrangement. This step may require additional geotechnical input, especially if substructure locations must be changed.

4. Final Contract Plans for Structures – This design step culminates in final plans, details, special provisions and cost estimates for construction. The Subsurface Exploration sheets are part of the Final Contract Plans. Unless design changes are required at this step, additional geotechnical input is not typically required to prepare foundation details for the Final Contract Plans.

11.1.2 Foundation Type Selection

The following items need to be assessed to select site-specific foundation types:

- Magnitude and direction of loading.
- Depth to suitable bearing material.
- Potential for liquefaction, undermining or scour.
- Frost potential.

Foundations without piles (spread footings) should be given consideration at sites where pile penetrations of less than 10 feet are anticipated. The economics of the following two alternatives should be investigated:

5. Design for a shallow foundation founded at a depth where the foundation material is adequate. Embed the footing 6 inches into sound rock for lateral stability.

6. Excavate to an elevation where foundation material is adequate, and backfill to the bottom of footing elevation with suitable granular material or concrete.

If a substructure unit is located in a stream, consideration should be given to the effects of the anticipated stream bed scour when selecting the footing type. Pile length computations should not incorporate pile resistance developed within the scour zone. The pile cross section should also be checked to ensure it can withstand the driving necessary to penetrate through the anticipated scour depth and reach design capacity plus the frictional capacity within the scour zone.

11.3.1.2 Pile Spacing

Arbitrary pile spacing rules specifying maximums and minimums are extensively used in foundation design. Proper spacing is dependent upon length, size, shape and surface texture of piles, as well as soil characteristics. A wide spacing of piles reduces heaving and possible uplifting of the pile, damage by tension due to heaving and the possibility of crushing from soil compression. Wider spacing more readily permits the tips of later-driven piles in the group to reach the same depths as the first piles and result in more even bearing and settlement. Large horizontal pressures are created when driving in relatively uncompressible strata, and damage may occur to piles already driven if piles are too closely spaced. In order to account for this, a minimum center-to-center spacing of 2.5 times the pile diameter is often required. LRFD [10.7.1.2] calls for a center-to-center pile spacing of not less than 2’-6” or 2.5 pile diameters (widths).

WisDOT policy item:

WisDOT’s minimum pile spacing is 2’-6” or 2.5 pile diameters, whichever is greater. For displacement piles located within cofferdams, or with estimated lengths ≥ 100 ft., the minimum pile spacing is 3.0 pile diameters. WisDOT’s maximum pile spacing is 8’-0”, based on abutment or pier structural designs.

See Chapter 13 – Piers for criteria on battered piles in cofferdams. The distance from the side of any pile to the nearest edge of footing shall not be less than 9”. Piles shall project at least 6” into the footings.

11.3.1.3 Battered Piles

Battered piles are used to resist large lateral loads or when there is insufficient lateral soil resistance within the initial 4 to 5 pile diameters of embedment. Battered piles are frequently used in combination with vertical piles. The lateral resistance of battered piling is a function of the vertical load applied to the pile group. Since the sum of the forces at the pile head must equal zero, increasing the number of battered piles does not necessarily increase the

lateral load capacity of the pile group. Both the lateral passive resistance of the soil above the footing as well as the sliding resistance developed at the base of footing are generally neglected in design. See the standard details for further guidance when battered piles are used.

Piles are typically battered at 1 horizontal to 4 vertical. Hammer efficiencies must be reduced when piles are battered. Where negative skin friction loads are anticipated, battered piles should not be considered.

11.3.1.4 Corrosion Loss

Piling should be designed with sufficient corrosion resistance to assure a minimum design life of 75 years. Experience indicates that corrosion is not a practical problem for steel piles driven in natural soil, due primarily to the absence of oxygen in the soil. However, in fill material at or above the water table, moderate corrosion may occur and protection may be required. Concrete piles are prone to deterioration from exposure to excess concentrations of sulfate and/or chloride. Special consideration (including thicker pile shells, heavier pile sections, painting and concrete encasement) should be given to permanent steel piling that is used in areas of northern Wisconsin which are inhabited by corrosion causing bacteria (see FDM Procedure 13-1-15). Typically, WisDOT does not increase pile sections or heavier pile sections to provide corrosion protection outside of these areas.

At potentially corrosive sites, encasement by cast-in-place concrete can provide the required protection for piles extending above the ground surface. All exposed piling should be painted.

11.3.1.5 Pile Points

A study was conducted on the value of pile tips (pile points) on steel piles when driving into rock. The results indicated that there was very little penetration difference between the piles driven with pile points and those without. The primary advantages for specifying pile points are for penetrating or displacing boulders, or driving through dense granular materials and hardpan layers. Piling can generally be driven faster and in straighter alignment when points are used.

Conical pile points have also been used for round, steel piling (friction and point-bearing) in certain situations. These points can also be flush-welded if deemed necessary.

Standard details for pile points are available from the approved suppliers that are listed in WisDOT's current Product Acceptability List (PAL).

Pile points and preboring are sometimes confused. They are not interchangeable. Pile points can be used to help drive piles through soil that has gravel and/or cobbles or presents other difficult driving conditions. They can also be used to get a good 'bite' when ending piles on sloping bedrock surfaces. Points cannot be used to ensure that piles penetrate into competent bedrock. They may assist in driving through weathered zones of rock or soft rock but will generally not be effective when penetration into hard rock is desired.

following equation, neglecting the contribution of the steel shell to resist compression: **LRFD [Equation 5.7.4.4-3]**.

$$P_u \leq P_r = \phi P_n$$

Where:

$$P_n = 0.80(0.85 f'_c (A_g - A_{st}) + f_y A_{st}$$

Where:

P_u	=	Factored axial force effect (kips)
P_r	=	Factored axial resistance without flexure (kips)
ϕ	=	Resistance factor
P_n	=	Nominal axial resistance without flexure (kips)
A_g	=	Gross area of concrete pile section (inches^2)
A_{st}	=	Total area of longitudinal reinforcement (inches^2)
f_y	=	Specified yield strength of reinforcement (ksi)
f'_c	=	Concrete compressive strength (ksi)

For cast-in-place concrete piles with steel shell and no steel reinforcement bars, A_{st} equals zero and the above equation reduces to the following.

$$P_n = 0.68 f'_c A_g$$

A resistance factor, ϕ, of 0.75 is used to compute the factored structural axial resistance capacity, as specified in **LRFD [5.5.4.2.1]**. For CIP piling there are no reinforcing ties, however the steel shell acts to confine concrete similar to ties.

$$P_r = 0.51 f_c A_g$$

For piles subject to large lateral loads, the structural pile capacity must also be checked for shear and combined stress against flexure and compression.

Piles subject to uplift must also be checked for tension resistance.

A value of 4 ksi is the minimum value required by specification, while the 3.5 ksi plan value used for bridge substructures helps to ensure adequate substructure massiveness. Pile capacities are maximums, based on an assumed concrete compressive strength of 3.5 ksi. The allowable concrete design strength of 3.5 ksi is based on construction difficulties and

unknowns of placement, as well as consistency with plan value. The Geotechnical Site Investigation Report must be used as a guide in determining the actual nominal geotechnical resistance capacity of the pile.

Any structural strength contribution associated with the steel shell is neglected in driven CIP concrete pile design. Therefore, environmentally corrosive sites do not affect driven CIP concrete pile designs. An exception is that CIP should not be used for exposed pile bents in corrosive environments as shown in the *Facilities Development Manual,* Procedure 13-1-15.

Based on the above equation, current WisDOT practice is to design driven cast-in-place concrete pile for a factored (ultimate structural) axial compression resistance of as shown in Table 11.3-5. See 6.3.2.1 for the typical style of plan notes showing axial resistance as well as required driving resistance on plans. **If less than the maximum axial resistance is required by design, state only the required corresponding driving resistance on the plans.** The minimum shell thickness is 0.219 inches for straight steel tube and 0.1793 inches for fluted steel shells, unless otherwise noted in the Geotechnical Site Investigation Report and stated in the project plans. Exposed piling (e.g. open pile bents) should not be less than 12 inches in diameter.

The minimum allowable wall thickness of steel shells is 0.219 inches for driven cast-in-place concrete pile. Where cobbles or other difficult driving conditions are present, the minimum wall thickness should be increased to 0.25 inches or thicker to facilitate driving without damaging the pile. When difficult driving conditions are anticipated, a drivability analysis should be completed.

Driven cast-in-place concrete pile is generally the most favorable displacement pile type since inspection of the steel shell is possible prior to concrete placement and more reliable control of concrete placement is attainable.

11.3.1.12.2.2 Precast Concrete Piles

Precast concrete pile can be divided into two primary types – reinforced concrete piles and prestressed concrete piles. These piles have parallel or tapered sides and are usually of rectangular or round cross section. Since the piles are usually cast in a horizontal position, the round cross section is not common because of the difficulty involved in filling a horizontal cylindrical form. Because of the somewhat variable subsurface conditions in Wisconsin and the need for variable length piles, these piles are currently not used in Wisconsin.

11.3.1.12.3 Steel Piles

Steel pile generally consists of either H-pile or pipe pile types. Both open-end and closed-end pipe pile are used. Pipe pile may be left open or filled with concrete, and can also have a structural shape inserted into the concrete. Open-end pipe pile can be socketed into bedrock with preboring.

Steel pile is typically top driven at the pile butt. However, closed-end pipe pile can also be bottom driven with a mandrel. Mandrels are generally not used in Wisconsin.

Steel pile can be used in friction, point-bearing, a combination of both or rock-socketed piles. One advantage of steel pile is the ease of splicing or cutting to accommodate differing final constructed lengths.

Steel pile should not be used for exposed pile bents in corrosive environments as show in the *Facilities Development Manual, Procedure 13.1.15*.

The nominal (ultimate) structural compressive resistance of steel piles is designed in accordance with **LRFD [10.7.3.13.1]** as either noncomposite or composite sections. Composite sections include concrete-filled pipe pile and steel pile that is encased in concrete. The nominal structural compressive resistance for noncomposite and composite steel pile is further specified in **LRFD [6.9.4 and 6.9.5]**, respectively. The effective length of horizontally unsupported steel pile is determined in accordance with **LRFD [10.7.3.13.4]**. Resistance factors for the structural compression limit state are specified in **LRFD [6.5.4.2]**.

WisDOT policy item:

It is WisDOT policy to specify a yield strength of 50 ksi for steel H-piles. Although 50 ksi is specified, the structural pile design shall use a yield strength of 36 ksi. The specified yield strength of 50 ksi may be used when performing drivability analyses. For steel pipe piles, 36 ksi shall be used for pile design and drivability analyses.

11.3.1.12.3.1 H-Piles

Steel piles are generally used for point-bearing piles and typically employ what is known as the HP-section (often called H-piles for brevity). Steel H-piles are rolled sections with wide flanges such that the depth of the section and the width of the flanges are approximately equal. The cross-sectional area and volume displacement are relatively small and as a result, H-piles can be driven through compact granular materials and slightly into soft rock. Also, steel piles have little or no effect in causing ground swelling or raising of adjacent piles. Because of the small volume of H-piles, they are considered “non-displacement” piling.

H-piles are available in many sizes and lengths. Unspliced pile lengths up to 140 feet and spliced pile lengths up to 230 feet have been driven. Typical pile lengths range from 40 to 120 feet. Common H-pile sizes vary between 10 and 14 inches.

The current WisDOT practice is to design driven H-piles for a factored (ultimate structural) axial compression resistance as shown in Table 11.3-5. These values are based on $\phi_c = 0.5$ for severe driving conditions **LRFD [6.5.4.2]**. See 6.3.2.1 for the typical style of plan notes showing axial resistance as well as required driving resistance on plans. **If less than the maximum axial resistance is required by design, state only the required corresponding driving resistance on the plans.**

Since granular soil is largely incompressible, the principal action at the tip of the pile is lateral displacement of soil particles. Although it is an accepted fact that steel piles develop extremely high loads per pile when driven to point-bearing on rock, some misconceptions still remain that H-piles cannot function as friction piles. Load tests indicate that steel H-piles can function quite satisfactorily as friction piles in sand, sand-clay, silt-and-sand or hard clay. However, they will typically drive to greater depths than displacement piles. The surface area

for pile frictional computations is considered to be the projected "box area" of the H-pile and not the actual steel surface area.

In compact sand, there is not significant reduction in intergranular space and no increase in free water; thus, shaft resistance is not decreased by water lubrication during driving. The pressure of the sand grains against the pile is approximately the same during driving as it is after driving is stopped. The resulting shaft resistance may be an important source of load-carrying capacity.

Clay is compressible to a far greater degree than sand or gravel. As the solid particles are pressed into closer contact with each other and water is squeezed out of the voids, only small frictional resistance to driving is generated because of the lubricating action of the free water. However, after driving is completed, the lateral pressure against the pile increases due to dissipation of the pore water pressures. This causes the fine clay particles to increase adherence to the comparatively rough surface of the pile. Load is transferred from the pile to the soil by the resulting strong adhesive bond. In many types of clay, this bond is stronger than the shearing resistance of the soil.

In hard, stiff clays containing a low percentage of voids and pore water, the compressibility is small. As a result, the amount of displacement and compression required to develop the pile's full capacity are correspondingly small. As an H-pile is driven into stiff clay, the soil trapped between the flanges and web usually becomes very hard due to the compression and is carried down with it. This trapped soil acts as a plug and the pile also acts as a displacement pile.

In cases where loose soil is encountered, considerably longer point-bearing steel piles are required to carry the same load as relatively short displacement-type piles. This is because a displacement-type pile, with its larger cross section, produces more compaction as it is driven through materials such as soft clays or loose organic silt.

WisDOT policy item:

To estimate required non-displacement pile lengths in design, WisDOT reduces the static geotechnical point resistance by 33 percent.

11.3.1.12.3.2 Pipe Piles

Pipe piles consist of seamless, welded or spiral welded steel pipes in diameters ranging from 7-3/4 to 24 inches. Other sizes are available, but they are not commonly used. Typical wall thicknesses range from 0.375-inch to 0.75-inch, with wall thicknesses of up to 1.5 inches possible. Pipe piles should be specified by grade with reference to ASTM A 252.

Pipe piles may be driven either open or closed end. If the end bearing capacity from the full pile toe area is required, the pile toe should be closed with a flat plate or a conical tip.

11.3.1.12.3.3 Oil Field Piles

The oil industry uses a very high quality pipe in their drilling operations. Every piece is tested for conformance to their standards. Oil field pipe is accepted as a point-bearing alternative to

The goal of the drivability study is to evaluate the potential for excessive driving stresses and to determine that the pile/soil system during driving will result in reasonable blow counts. The drivability study is not intended to evaluate the ultimate pile capacity or establish plan lengths. If the wave equation is used to set driving criteria, then contact the Bureau of Technical Services, Foundation and Pavement Unit to discuss the proper procedures.

11.3.1.17.5 Scour

During design, estimated pile lengths are increased to compensate for scour loss. The scour depth is estimated and used to compute the estimated shaft resistance that is lost over the scour depth (exposed pile length). The required pile length is then increased to compensate for the resistance capacity that is lost due to scour. The pile length is increased based on the following equation:

$$R_{n} = R_{n\text{-stat}} + R_{n\text{-scour}}$$

Where:

R_n	=	Nominal shaft resistance capacity, adjusted for scour effect (tons)
$R_{n\text{-stat}}$	=	Nominal shaft resistance based on static analysis, without scour consideration (tons)
$R_{n\text{-scour}}$	=	Nominal shaft resistance lost (negative value) over the exposed pile length due to scour (tons)

WisDOT policy item:

If there is potential for scour at a site, it is WisDOT policy to account for the loss of pile resistance from the material within the scour depth. The designer must not include any resistance provided by this material when determining the nominal pile resistance. Since the material within the scour depth may be present during pile driving operations, the additional resistance provided by this material shall be included when determining the required driving resistance. The designer should also consider minimum pile tip elevation requirements.

11.3.1.17.6 Typical Pile Resistance Values

Table 11.3-5 shows the typical pile resistance values for several pile types utilized by the Department. The table shows the Nominal Axial Compression Resistance (Pn), which is a function of the pile materials, the Factored Axial Compression Resistance (Pr), which is a function of the construction procedures, and the Required Driving Resistance, which is a function of the method used to measure pile capacity during installation. The bridge designer uses the Factored Axial Compression Resistance to determine the number and spacing of the piles. The Required Driving Resistance is placed on the plans. See 6.3.2.1-7 for details regarding plan notes.

Pile Size	Shell Thickness (inches)	Concrete or Steel Area (A_g or A_s) (in^2)	Nominal Axial Compression Resistance (Pn) (tons) (2)(3)(6)	Resistance Factor (ϕ)	Factored Axial Compression Resistance (Pr) (tons) (4)	Resistance Factor φ_{dyn}	Required Driving Resistance (Rn_{dyn}) (tons) (5)
Cast in Place Piles							
10 ¾“	0.219	83.5	99.4	0.75	55(8)	0.5	110
10 ¾“	0.250	82.5	98.2	0.75	65(8)	0.5	130
10 ¾“	0.365	78.9	93.8	0.75	75	0.5	150
10 ¾“	0.500	74.7	88.8	0.75	75(9)	0.5	150
12 ¾”	0.250	118.0	140.4	0.75	80(8)	0.5	160
12 ¾”	0.375	113.1	134.6	0.75	105	0.5	210
12 ¾”	0.500	108.4	129.0	0.75	105(9)	0.5	210
14”	0.250	143.1	170.3	0.75	85(8)	0.5	170
14”	0.375	137.9	164.1	0.75	120	0.5	240
14”	0.500	132.7	158.0	0.75	120(9)	0.5	240
H-Piles							
10 x 42	NA(1)	12.4	310.0	0.50	90(10)	0.5	180
12 x 53	NA(1)	15.5	387.5	0.50	110(10)	0.5	220
14 x 73	NA(1)	21.4	535.0	0.50	125(10)	0.5	250

Table 11.3-5
Typical Pile Resistance Values

Notes

1. NA – not applicable
2. For CIP Piles: Pn = 0.8 (0.85 * f’c * Ag + fy * As) **LRFD [5.5.4.2.1]**. Neglecting the steel shell, equation reduces to 0.68 * f’c * Ag.

   f’c = compressive strength of concrete = 3,500 psi

3. For H-Piles: Pn = 0.66^{λ} * Fy * As (λ = 0 for piles embedded below the substructure)

   fy = yield strength of steel = 50,000 psi

4. Pr = ϕ * Pn

   ϕ = 0.75 (**LRFD [5.5.4.2.1]** for axial compression concrete)

   ϕ = 0.50 (**LRFD [6.5.4.2]** for axial steel, for difficult driving conditions)

5. The Required Driving Resistance is the lesser of the following:

   - $Rn_{dyn} = Pr / \varphi_{dyn}$

     φ_{dyn} = 0.5 (**LRFD [Table 10.5.5.2.3-1]** for construction driving criteria using modified Gates dynamic formula)

   - The maximum allowable driving stress based on 90 percent of the specified yield stress = 35,000 psi for CIP piles and 50,000 psi for H-Piles

6. Values for Axial Compression Resistance are calculated assuming the pile is fully supported. Piling not in the ground acts as an unbraced column. Calculations verify that the pile values given in Table 11.3-5 are valid for open pile bents within the limitations described in 13.2.2. Cases of excessive scour require the piling to be analyzed as unbraced columns above the point of streambed fixity.

7. If less than the maximum axial resistance, P_r, is required by design, state only the required corresponding driving resistance on the plans.

8. The Factored Axial Compression Resistance is controlled by the maximum allowable driving resistance based on 90 percent of the specified yield stress of steel rather than concrete capacity.

9. Values were rounded up to the value above so as to not penalize the capacity of the thicker walled pile of the same diameter. (Wisconsin is conservative in not considering the pile shell in the calculation of the Factored Axial Compression Resistance.)

10. Pr values given for H-Piles are representative of past Departmental experience (rather than Pn x ø) and are used to avoid problems associated with overstressing during driving. These Pr values result in driving stresses much less than 90 percent (46%-58%) of the specified yield stress. If other H-Piles are utilized that are not shown in the table, driving stresses should be held to approximately this same range.

11.3.1.18 Construction Considerations

Construction considerations generally include selection of pile hammers, use of driving formulas and installation of test piles, when appropriate, as described below.

11.3.1.18.1 Pile Hammers

Pile driving hammers are generally powered by compressed air, steam pressure or diesel units. The diesel hammer, a self-contained unit, is the most popular due to its compactness and adoption in most construction codes. Also, the need for auxiliary power is eliminated and the operation cost is nominal. Vibratory and sonic type hammers are employed in special cases where speed of installation is important and/or noise from impact is prohibited. The vibrating hammers convert instantly from a pile driver to a pile extractor by merely tensioning the lift line.

Pile hammers are raised and allowed to fall either by gravity or with the assistance of power. If the fall is due to gravity alone, the hammer is referred to as single-acting. The single-acting hammer is suitable for all types of soil but is most effective in penetrating heavy clays. The major disadvantage is the slow rate of driving due to the relatively slow rate of blows from 50 to 70 per minute. Wisconsin construction specifications call for a minimum hammer weight depending on the required final bearing value of the pile being driven. In order to avoid damage to the pile, the fall of the gravity hammer is limited to 10 feet.

If power is added to the downward falling hammer, the hammer is referred to as double-acting. This type of hammer works best in sandy soil but also performs well in clay. Double-acting hammers deliver 100 to 250 blows per minute, which increases the rate of driving considerably over the single-acting hammers. Wisconsin construction specifications call for a rated minimum energy of 15 percent of the required bearing of the pile. A rapid succession of blows at a high velocity can be extremely inefficient, as the hammer bounces on heavy piles.

Differential-acting hammers overcome the deficiencies found with both single- and double-acting hammers by incorporating higher frequency of blows and more efficient transfer of energy. The steam cycle, which is different from that of any other hammer, makes the lifting area under the piston independent of the downward thrusting area above the piston. Sufficient force can be applied for lifting and accelerating these parts without affecting the dead weight needed to resist the reaction of the downward acceleration force. The maximum delivered energy per blow is the total weight of the hammer plus the weight of the downward steam force times the length of the stroke.

The contractor's selection of the pile hammer is generally dependent on the following:

- The hammer weight and rated energy are selected on the basis of supplying the maximum driving force without damaging the piles.
- The hammer types dictated by the construction specification for the given pile type.
- The hammer types available to the contractor.
- Special situations, such as sites adjacent to existing buildings, that require consideration of vibrations generated from the driving impact or noise levels. In these instances, reducing the hammer size or choosing a double-acting hammer may be preferred over a single-acting hammer. Impact hammers typically cause less ground vibration than vibratory hammers.

- The subsurface conditions at the site.
- The required final resistance capacity of the pile.

WisDOT specifications require the heads of all piling to be protected by caps during driving. The pile cap serves to protect the pile, as well as modulate the blows from the hammer which helps eliminate large inefficient hammer forces. When penetration-per-blow is used as the driving criteria, constant cap-block material characteristics are required. The cap-block characteristics are also assumed to be constant for all empirical formula computations to determine the rate of penetration equivalent to a particular dynamic resistance.

11.3.1.18.2 Driving Formulas

Formulas used to estimate the bearing capacity of piles are of four general types – empirical, static, dynamic and wave equation.

Empirical formulas are based upon tests under limited conditions and are not suggested for general use.

Static formulas are based on soil stresses and try to equate shaft resistance and point resistance to the load-bearing capacity of the piles.

Dynamic pile driving formulas assume that the kinetic energy imparted by the pile hammer is equal to the nominal pile resistance plus the energy lost during driving, starting with the following relationship:

$$\text{Energy input} = \text{Energy used} + \text{Energy lost}$$

The energy used equals the driving resistance multiplied by the pile movement. Thus, by knowing the energy input and estimating energy losses, driving resistance can be calculated from observed pile movement. Numerous dynamic formulas have been proposed. They range from the simpler Engineering News Record (ENR) Formula to the more complex Hiley Formula. A modified Engineering News Formula was previously used by WisDOT to determine pile resistance capacity during installation. All new designs shall use the modified Gates or WAVE equation for determining the required driving resistance.

The following modified FHWA-Gates Formula is used by WisDOT:

$$R_R = \varphi_{dyn} R_{ndr} = \varphi_{dyn}\left(0.875\left(E_d\right)^{0.5} \log_{10}\left(10/s\right) - 50\right)$$

Where:

R_R = Factored pile resistance (tons)

φ_{dyn} = Resistance factor = 0.5 **LRFD [Table 10.5.5.2.3-1]**

R_{ndr} = Nominal pile resistance measured during pile driving (tons)

E_d = Energy delivered by the hammer per blow (lb-foot)

s = Average penetration in inches per blow for the final 10 blows (inches/blow)

Because of the difficulty of evaluating the many energy losses involved with pile driving, these dynamic formulas can only approximate pile driving resistance. These approximate results can be used as a safe means of determining pile length and bearing requirements. Despite the obvious limitations, the dynamic pile formulas take into account the best information available and have considerable utility to the engineer in securing reasonably safe and uniform results over the entire project.

The wave equation can be used to set driving criteria to achieve a specified pile bearing capacity (contact the Bureau of Technical Services, Geotechnical Unit prior to using the wave equation to set the driving criteria). The wave equation is based upon the theory of longitudinal wave transmission. This theory, proposed by Saint Venant a century ago, did not receive widespread use until the advent of computers due to its complexity. The wave equation can predict impact stresses in a pile during driving and estimate static soil resistance at the time of driving by solving a series of simultaneous equations. An advantage of this method is that it can accommodate any pile shape, as well as any distribution of pile shaft resistance and point resistance. The effect of the hammer and cushion block can be included in the computations.

Dynamic monitoring is performed by a Pile Driving Analyzer (PDA). WisDOT uses the PDA to evaluate the driving criteria, which is set by a wave equation analysis, and in an advisory capacity for evaluating if sufficient pile penetration is achieved, if pile damage has occurred or if the driving system is performing satisfactorily.

The PDA provides a method of dynamic pile testing both for pile design and construction control. Testing is accomplished during pile installation by attaching reusable strain transducers and accelerometers directly on the pile. Piles can be tested while being driven or during restrike. The instrumentation mounted on the pile allows the measurement of force and acceleration signals for each hammer blow. This data is transmitted to a small field computer for processing and recording on a magnetic data tape for a permanent record. Data is also fed into an oscilloscope to observe the dynamic response of the pile to driving. Calculations made by the computer based upon one-dimensional wave mechanics provide an immediate printout of maximum stresses in the pile, energy transmitted to the pile and a prediction of the nominal axial resistance of the pile for each hammer impact. Monitoring of the force and velocity wave traces with the oscilloscope during driving also enables detection of any structural pile damage that may have occurred. Printouts of selected force and velocity wave traces are also made to provide additional testing documentation. The PDA can be used on all types of driven piles with any impact type of pile-driving hammer but is most often used for displacement piles.

11.3.1.18.3 Field Testing

Test piles are employed at a project site for two purposes:

- For test driving, to determine the length of pile required prior to placing purchasing orders.

- For load testing, to verify actual pile capacity versus design capacity for nominal axial resistance.

11.3.1.18.3.1 Installation of Test Piles

Test piles are not required for spliceable types of piles. Previous experience indicates that contractors typically order total plan quantities for cast-in-place or steel H-piling in 60-foot lengths. The contractor uses one of the driven structure piles as a test pile at each designated location.

Test piling should be driven near the location of a soil boring where the soil characteristics are known and representative of the most unfavorable conditions at the site. The test pile must be exactly the same type and dimension as the piles to be used in the construction and installed by the same equipment and manner of driving. A penetration record is kept for every 1 foot of penetration for the entire length of pile. This record may be used as a guide for future pile driving on the project. Any subsequent pile encountering a smaller resistance is considered as having a smaller nominal resistance capacity than the test pile.

11.3.1.18.3.2 Static Load Tests

A pile load test is usually conducted to furnish information to the geotechnical engineer to develop design criteria or to obtain test data to substantiate nominal resistance capacity for piles. A load test is the only reliable method of determining the nominal bearing resistance of a single pile, but it is expensive and can be quite time consuming. The decision to embark on an advance test program is based upon the scope of the project and the complexities of the foundation conditions. Such test programs on projects with large numbers of displacement piling often result in substantial savings in foundation costs, which can more than offset the test program cost. WisDOT has only performed a limited number of pile load tests on similar type projects.

Pile load testing generally involves the application of a direct axial load to a single vertical pile. However, load testing can involve uplift or axial tension tests, lateral tests applied horizontally, group tests or a combination of these applied to battered piles. Most static test loads are applied with hydraulic jacks reacting against either a stable loaded platform or a test frame anchored to reaction piles.

The basic information to be developed from the pile load test is usually the deflection of the pile head under the test load. Movement of the head is caused by elastic deformation of the piles and the soil. Soil deformation may cause undue settlement and must be guarded against. The amount of deformation is the significant value to be obtained from load tests, rather than the total downward movement of the pile head. Load tests are typically performed by loading to a given deflection value.

It is impractical to test every pile on a project. Therefore, test results can be applied to other piles or pile groups providing that the following conditions exist:

- The other piles are of the same type, material and size as the test piles.
- Subsoil conditions are comparable to those at the test pile locations.
- Installation methods and equipment used are the same as, or comparable to, those used for the test piles.
- Piles are driven to the same penetration depth or resistance or both as the test piles to compensate for variations in the vertical position and density of the bearing strata.

11.3.2 Drilled Shafts

11.3.2.1 General

Drilled shafts are generally large diameter, cast-in-place, open ended, cased concrete piles which are designed to carry extremely heavy loads. Drilled shafts can be the most economical foundation alternative at sites where foundation loads are carried to bearing on dense strata or bedrock. They are also cost effective in water crossings with very shallow bedrock, where cofferdams are difficult or expensive to construct, and where high overturning moments must be resisted.

Drilled shafts are installed by removing soil and rock using drilling methods or other excavation techniques and constructing the foundation element in the excavated hole. The excavated hole may be supported using temporary or permanent casing, drilling slurry or other methods. The hole is then filled with a reinforcement cage and cast-in-place concrete. Drilled shafts are non-displacement elements since the soil volume required for the element is physically removed prior to installation. Thus the effective normal stress adjacent to the pile remains unchanged or is reduced (due to expansion of the soil into the hole before insertion/construction of the load bearing element), and the soil properties and pore water pressure adjacent to the foundation elements are not significantly impacted.

Because drilled shafts do not require a hammer for installation and do not displace the soil, they typically have much less impact on adjacent structures. Depending on the excavation technique used, they can penetrate significant obstructions. Because the method of construction often allows a decrease in the effective stress immediately adjacent to and beneath the tip of the foundation element, the resistance developed will often be less than an equivalently sized driven pile.

Drilled shafts are generally considered fixed to the substructure unit if the reinforcing steel from the shaft is fully developed within the substructure unit.

Drilled shafts vary in diameter from approximately 2.5 to 10 feet. Drilled shafts with diameters greater than 6 feet are generally referred to as piers. Shafts may be designed to transfer load to the bearing stratum through side friction, point-bearing or a combination of both. The drilled shaft may be cased or uncased, depending on the subsurface conditions and depth of bearing.

Drilled shafts have been used on only a small number of structures in Wisconsin. For unusual site conditions, the use of drilled shafts may be advantageous. Design

methodologies for drilled shafts can be found in FHWA Publication IF-99-025, *Drilled Shafts: Construction Procedures and Design Methods*.

Strength limit states for drilled shafts are evaluated in the same way as for driven piles. Drivability is not required to be evaluated. The structural resistance of drilled shafts is evaluated in accordance with **LRFD [5.7 and 5.8]**. This includes evaluation of axial resistance, combined axial and flexure, shear and buckling. It is noted that the critical load case for combined axial and flexure may be a load case that results in the minimum axial load or tension.

11.3.2.2 Resistance Factors

Resistance factors for drilled shafts are presented in Table 11.3-6 and are selected based on the method used to determine the nominal (ultimate) resistance capacity of the drilled shaft. The design intent is to adjust the resistance factor based on the reliability of the method used to determine the nominal shaft resistance. As with driven piles, the selection of a geotechnical resistance factor should be based on the intended method of resistance verification in the field. Because of the cost and difficulty associated with testing drilled shafts, much more reliance is placed on static analysis methods.

Condition/Resistance Determination Method				Resistance Factor
Static Analysis – Used in Design Phase	Nominal Resistance of Single-Drilled Shaft in Axial Compression, φ_{stat}	Shaft Resistance in Clay	Alpha Method	0.45
		Point Resistance in Clay	Total Stress	0.40
		Shaft Resistance in Sand	Beta Method	0.55
		Point Resistance in Sand	O'Neill and Reese	0.50
		Shaft Resistance in IGMs	O'Neill and Reese	0.60
		Point Resistance in IGMs	O'Neill and Reese	0.55
		Shaft Resistance in Rock	Horvath and Kenney O'Neill and Reese	0.55
			Carter and Kulhawy	0.50
		Point Resistance in Rock	Canadian Geotech. Soc. Pressuremeter Method O'Neill and Reese	0.50
	Block Failure, φ_{bl}	Clay		0.55
	Uplift Resistance of Single-Drilled Shaft, φ_{up}	Clay	Alpha Method	0.35
		Sand	Beta Method	0.45
		Rock	Horvath and Kenney Carter and Kulhawy	0.40
	Group Uplift Resistance, φ_{ug}	Sand and Clay		0.45
	Horizontal Geotechnical Resistance of Single Shaft or Pile Group	All Soil Types and Rock		1.0

Table 11.3-6

Geotechnical Resistance Factors for Drilled Shafts **LRFD [Table 10.5.5.2.4-1]**

For drilled shafts, the base geotechnical resistance factors in Table 11.3-6 assume groups containing two to four shafts, which are slightly redundant. For groups containing at least four elements, the base geotechnical resistance factors in Table 11.3-6 should be increased by 20%. WisDOT generally uses 4 or more shafts per substructure unit.

WisDOT policy item:

WisDOT policy requires a multi-column bent to be designed as a redundant rigid frame. Hence when a bent contains at least 4 columns then the resistance factors in Table 11.3-6 should be increased by 20 percent.

Resistance factors for structural design of drilled shafts are obtained from **LRFD [5.5.4.2.1]**.

11.3.2.3 Bearing Resistance

Most drilled shafts provide geotechnical resistance in both end bearing and side friction. Because the rate at which side friction mobilizes is usually much higher than the rate at which end bearing mobilizes, past design practice has been to ignore either end bearing for shafts with significant sockets into the bearing stratum or to ignore skin friction for shafts that do not penetrate significantly into the bearing stratum. This makes evaluation of the geotechnical resistance slightly more complex, because in most cases it is not suitable to simply add the nominal (ultimate) end bearing resistance and the nominal side friction resistance in order to obtain the nominal axial geotechnical resistance.

When computing the nominal geotechnical resistance, consideration must be given to the anticipated construction technique and the level of construction control. If it is anticipated to be difficult to adequately clean out the bottom of the shafts due to the construction technique or subsurface conditions, the end bearing resistance may not be mobilized until very large deflections have occurred. Similarly, if construction techniques or subsurface conditions result in shaft walls that are very smooth or smeared with drill cuttings, side friction may be far less than anticipated.

Because these resistances mobilize at different rates, it may be more appropriate to add the ultimate end bearing to that portion of the side resistance remaining at the end of bearing failure. Or it may be more appropriate to add the ultimate side resistance to that portion of the end bearing mobilized at side resistance failure. Note that consideration of deflection, which is a service limit state, may control over the axial geotechnical resistance since displacements required to mobilize the ultimate end bearing can be excessive. More detailed discussion of design parameters is provided in Appendices C and D of FHWA Publication IF-99-025, *Drilled Shafts: Construction Procedures and Design Methods*.

11.3.2.3.1 Shaft Resistance

The shaft resistance is estimated by summing the friction developed in each stratum. When drilled shafts are socketed in rock, the shaft resistance that is developed in soil is generally ignored to satisfy strain compatibility. The following analysis methods are typically used to compute the static shaft resistance in soil and rock:

- Alpha method for cohesive soil, as specified in **LRFD [10.8.3.5.1]**
- Beta method (β-method) for cohesionless soil, as specified in **LRFD [10.8.3.5.2]**
- Horvath and Kenny method for rock, as specified in **LRFD [10.8.3.5.4]**

11.3.2.3.2 Point Resistance

The following analysis methods are typically used to compute the static shaft resistance in soil:

- Alpha method for cohesive soil, as specified in **LRFD [10.8.3.5.1]**
- Beta method (β-method) for cohesionless soil, as specified in **LRFD [10.8.3.5.2]**

The ultimate unit point resistance of a drilled shaft in intact or tightly jointed rock is computed as 2.5 times the unconfined compressive strength of the rock. For rock containing open or filled joints, the geomechanics RMR system is used to characterize the rock, and the ultimate point resistance in rock can be computed as specified in **LRFD [10.8.3.5.4c]**.

11.3.2.3.3 Group Capacity

For drilled shaft groups bearing in cohesive soils or ending in a strong layer overlying a weaker layer, the axial resistance is determined using the same approach as used for driven piles. For drilled shaft groups in cohesionless soil, a group efficiency factor is applied to the ultimate resistance of a single drilled shaft. The group efficiency factor is a function of the center-to-center shaft spacing and is linearly interpolated between a value of 0.65 at a center-to-center spacing of 2.5 shaft diameters and a value of 1.0 at a center-to-center spacing of 6.0 shaft diameters. This reduction is more than for driven piles at similar spacing, because construction of drilled shafts tends to loosen the soil between the shafts rather than densify it as with driven piles.

11.3.2.4 Lateral Load Resistance

Because drilled shafts are made of reinforced concrete, the lateral analysis should consider the nonlinear variation of bending stiffness with respect to applied bending moment. At small applied moments, the reinforced concrete section performs elastically based on the size of the section and the modulus of elasticity of the concrete. At larger moments, the concrete cracks in tension and the stiffness drops significantly.

11.3.2.5 Other Considerations

Detailing of the reinforcing steel in a drilled shaft must consider the constructability of the shaft. The reinforcing cages must be stiff enough to resist bending during handling and concrete placement. In addition, the spaces between reinforcement bars must be kept large enough to permit easy flow of the concrete from the center of shaft to the outside of shaft. These two requirements will generally force the use of larger, more widely spaced longitudinal and transverse reinforcement bars than would be used in the design of an above-grade column. In addition, when using hooked bars to tie the shaft to the foundation, consideration must also be given to concrete placement requirements and temporary casing removal requirements.

11.3.3 Micropiles

11.3.3.1 General

In areas of restricted access, close proximity to settlement sensitive existing structures or difficult geology, micropiles may be considered when determining the recommended foundation type. Although typically more expensive than driven pile, constructability considerations may warrant selection of micropiles as the preferred foundation type. A micropile is constructed by drilling a borehole with drill casing, placing reinforcement and grouting the hole. Micropiles are installed by methods that cause minimal disturbance to adjacent structures, soil and the environment. They can be installed in areas with restricted access and vertical clearance. Drill casing permits installation in poor ground conditions. Micropiles are installed with the same type of equipment that is used for ground anchor and grouting projects. Micropiles can be either vertical or battered.

Micropiles are used for structural support of new structures, underpinning existing structures, scour protection and seismic retrofit at existing structures. Micropiles are also used to create a reinforced soil mass for ground stabilization.

With a micropile's smaller cross-sectional area, the pile design is more frequently governed by structural and stiffness considerations. Due to the small pile diameter, point resistance is usually disregarded for design. Steel casing for micropiles is commonly delivered in 5 to 20 foot long flush-joint threaded sections. The casing is typically 5.5 to 12 inches in diameter, with yield strength of 80 ksi. Grout is mixed neat with a water/cement ratio on the order of 0.45 and an unconfined compressive strength of 4 to 6 ksi. Grade 60, 90 and 150 single reinforcement bars are generally used with centralizers.

Grout/ground bond capacity varies directly with the method of placement and pressure used to place the grout. Common methods include grout placement under gravity head, grout placement under low pressure as temporary drill steel is removed and grout placement under high pressure using a packer and regrout tube. Some regrout tubes are equipped to allow regrouting multiple times to increase pile capacity.

11.3.3.2 Design Guidance

Micropiles shall be designed using an Allowable Stress Design approach until an LRFD approach has been developed and approved by the AASHTO Bridge Subcommittee. The design of micropiles shall be done in accordance with FHWA Publication SA-97-070, *Micropile Design and Construction Guidelines Implementation Manual*. When site-specific load tests are performed, the factor of safety can be reduced from 2.5 to 2.0 to determine the allowable axial compressive load capacity of the micropile. The reduction in factor of safety is consistent with the 2005 update to the FHWA guidelines for micropile design.

11.3.4 Augered Cast-In-Place Piles

11.3.4.1 General

Augered cast-in-place (ACIP) piles are installed by drilling a hole with a hollow stem auger. When the auger reaches a design depth (elevation) or given torque, sand-cement grout or

concrete is pumped through the hollow-stem auger while the auger is withdrawn from the ground. Reinforcement steel can be placed while the grout is still fluid. A single reinforcement bar can also be installed inside the hollow stem auger before the auger is extracted. ACIP piles are installed by methods that cause minimal disturbance to adjacent structures, soil and the environment. They can also be installed in areas with restricted access and vertical clearance. Temporary casing is not required. In many situations, these foundation systems can be constructed more quickly and less expensively than other deep foundation alternatives.

ACIP piles are generally available in 12- to 36-inch diameters and typically extend to depths of 60 to 70 feet. In some cases, ACIP piles have been installed to depths of more than 100 feet. The torque capacity of the drilling equipment may limit the available penetration depth of ACIP piles, especially in stiff to hard cohesive soil. Typical Wisconsin bridge contractors do not own the necessary equipment to install this type of pile.

ACIP piles may be more economical; however, there is a greater inherent risk in their installation from the quality control standpoint. There is currently no method available to determine pile capacity during construction of ACIP piles. WisDOT does not generally use this pile type unless there are very unusual design/site requirements.

11.3.4.2 Design Guidance

In the future, the FHWA will distribute a Geotechnical Engineering Circular that will provide design and construction guidance for ACIP piles. WisDOT plans to reassess the use of ACIP piles at that time.

11.4 References

1. State of Wisconsin, Department of Transportation. *Standard Specifications for Highway and Structure Construction*.

2. American Association of State Highway and Transportation Officials. *Standard Specifications for Highway Bridges*.

3. American Association of State Highway and Transportation Officials. *AASHTO LRFD Bridge Design Specifications*.

4. Armour, T., P. Groneck, J. Keeley and S. Sharma. *Micropile Design and Construction Guidelines, Implementation Manual*. FHWA Publication SA-97-070. June 2000.

5. Chellis, R.D. *Pile Foundations*. McGraw Hill. 1961.

6. Hannigan, P.J., G.G. Goble, G. E. Likins and F. Rausche. *Design and Construction of Driven Pile Foundations – Volumes 1 and 2*. FHWA Publication NHI-05-042. 2006.

7. Kimmerling, R.E., R.C. Bachus, P.W. Mayne, J.A. Scheider and T.E. Zettler. *Geotechnical Engineering Circular No. 6: Shallow Foundations*. FHWA Publication SA-02-054. September 2002.

8. Lagrasse, P.F., J.D. Schall and E.V. Richardson. *Hydraulic Engineering Circular No. 20: Stream Stability at Highway Structures*, 3rd Edition. FHWA Publication NHI 01-002. March 2001.

9. Lagrasse, P.F., L.W. Zevenbergen, J.D. Schall and P.E. Clopper. *Hydraulic Engineering Circular No. 23: Bridge Scour and Stream Instability Countermeasures, Experience, Selection, and Design Guidance*, 2nd Edition. FHWA Publication NHI 01-003. March 2001.

10. Leonards, G.A. *Foundation Engineering*. McGraw Hill. 1962.

11. Michael Baker Jr., Inc. *LRFD for Highway Bridge Substructures and Earth Retaining Structures*. FHWA Publication NHI-05-095. Revised October 2006.

12. *Micropile Design and Construction Reference Manual*. FHWA Publication NHI-05-039. 2005.

13. O'Neil, M.W. and L.C. Reese. *Drilled Shafts: Construction Procedures and Design Methods*. FHWA Publication IF-99-025. August 1999.

14. O'Neil, M.W., F.C. Townsend, K.M. Hassan, A. Butler and P.S. Chan. *Load Transfer for Drilled Shafts in Intermediate Geomaterials*. FHWA Publication RD-95-172. November 1996.

15. Richardson, E.V. and S.R. Davis. *Hydraulic Engineering Circular No. 18: Evaluating Scour at Bridges*, 4th Edition. FHWA Publication NHI 01-001. May 2001.

16. Sabatini, P.J. et al. *Geotechnical Engineering Circular No. 5: Evaluation of Soil and Rock Properties*. FHWA Publication IF-02-034. April 2002.

17. Terzaghi, K. and R.B. Peck. *Soil Mechanics in Engineering Practice*, 2nd Edition. Wiley. 1967.

18. Tschebotrarioff, G.P. *Foundations, Retaining and Earth Structures*, 2nd Edition. McGraw Hill. 1973.

11.5 Design Examples

WisDOT will provide design examples.

This section will be expanded later when the design examples are available.

This page intentionally left blank.

Table of Contents

12.1 General 3
12.2 Abutment Types 5
12.2.1 Full-Retaining 5
12.2.2 Semi-Retaining 6
12.2.3 Sill 7
12.2.4 Spill-Through or Open 7
12.2.5 Pile-Encased 8
12.2.6 Special Designs 8
12.3 Types of Abutment Support 9
12.3.1 Piles or Drilled Shafts 9
12.3.2 Spread Footings 10
12.4 Abutment Wing Walls 11
12.4.1 Wing Wall Length 11
12.4.1.1 Wings Parallel to Roadway 11
12.4.1.2 Wings Not Parallel to Roadway and Equal Slopes 12
12.4.2 Wing Wall Loads 14
12.4.3 Wing Wall Parapets 15
12.5 Abutment Depths, Excavation and Construction 16
12.5.1 Abutment Depths 16
12.5.2 Abutment Excavation 16
12.6 Abutment Drainage and Backfill 18
12.6.1 Abutment Drainage 18
12.6.2 Abutment Backfill Material 18
12.7 Selection of Standard Abutment Types 20
12.8 Abutment Design Loads and Other Parameters 23
12.8.1 Application of Abutment Design Loads 23
12.8.2 Load Modifiers and Load Factors 26
12.8.3 Live Load Surcharge 27
12.8.4 Other Abutment Design Parameters 28
12.8.5 Abutment and Wing Wall Design in Wisconsin 29
12.8.6 Horizontal Pile Resistance 29
12.9 Abutment Body Details 31

12.9.1 Construction Joints 31
12.9.2 Beam Seats 32
12.10 Timber Abutments 34
12.11 Bridge Approach Design and Construction Practices 35

removed by the roadway contractor. A semi-retaining or full-retaining abutment placed on fill is considered a unique problem by the design engineer, and limits of excavation must be set accordingly. Construction sequence and type of fill material are considered when setting excavation limits. Slopes greater than 1.5 horizontal to 1 vertical are difficult to construct and generally are not specified. It is sometimes advantageous to have the roadway contractor place extra fill that later must be excavated by the bridge contractor, because the overburden aids in compaction and reduces subsequent settlement.

Lateral limits of excavation are not defined in the *Standard Specifications*. The contractor must excavate whatever is necessary within the right-of-way for the placement of the forms.

12.6 Abutment Drainage and Backfill

This section describes abutment design considerations related to drainage and backfill. The abutment drainage and backfill must be designed and detailed properly to prevent undesirable loads from being applied to the abutment.

12.6.1 Abutment Drainage

Abutment drainage is necessary to prevent hydrostatic pressure and frost pressure. Hydrostatic pressure, including both soil and water, can amount to an equivalent fluid unit weight of soil of 85 pcf. Frost action, which can occur in silty backfill, may result in extremely high pressures. On high abutments, these pressures will produce a very large force which could result in structural damage or abutment movement if not accounted for in the design.

To prevent these additional pressures on abutments, it is necessary to drain away whatever water accumulates behind the body and wings. This is accomplished using a pervious granular fill on the inside face of the abutment. Pipe underdrain must be provided to drain the fill located behind the abutment body and wings. For rehabilitation of structures, provide plan details to replace inadequate underdrain systems.

Past experience indicates that sill abutments are not capable of withstanding hydrostatic pressure on their full height without leaking.

Semi-retaining and full-retaining abutments generally will be overstressed or may slide if subject to large hydrostatic or frost pressures unless accounted for in the design. Therefore, “Pipe Underdrain Wrapped 6-inch” is required behind all abutments. This pipe underdrain is used behind the abutment and outside the abutment to drain the water away. It is best to place the pipe underdrain at the bottom of footing elevation as per standards. However, if it is not possible to discharge the water to a lower elevation, the pipe underdrain should be placed higher.

Pipe underdrains and weepholes may discharge water during freezing temperatures. In urban areas, this may create a problem due to the accumulation of flow and ice on sidewalks.

12.6.2 Abutment Backfill Material

All abutments and wings shall utilize “Backfill Structure” to facilitate drainage. The limits for calculating the material quantity are as shown in Figure 12.6-1. This sketch should not be included on the contract plans.

Table of Contents

13.1 General 3
13.1.1 Pier Type and Configuration 3
13.1.2 Bottom of Footing Elevation 3
13.1.3 Pier Construction 4
13.2 Pier Types 5
13.2.1 Multi-Column Piers 5
13.2.2 Pile Bents 6
13.2.3 Pile Encased Piers 7
13.2.4 Solid Single Shaft / Hammerheads 7
13.2.5 Aesthetics 8
13.3 Location 9
13.4 Loads on Piers 10
13.4.1 Dead Loads 10
13.4.2 Live Loads 10
13.4.3 Vehicular Braking Force 11
13.4.4 Wind Loads 11
13.4.4.1 Wind Load on Superstructure 12
13.4.4.2 Wind Load Applied Directly to Substructure 12
13.4.4.3 Wind Load on Vehicles 13
13.4.4.4 Vertical Wind Load 13
13.4.5 Uniform Temperature Forces 13
13.4.6 Force of Stream Current 16
13.4.6.1 Longitudinal Force 16
13.4.6.2 Lateral Force 16
13.4.7 Buoyancy 17
13.4.8 Ice 17
13.4.8.1 Force of Floating Ice and Drift 18
13.4.8.2 Force Exerted by Expanding Ice Sheet 19
13.4.9 Centrifugal Force 19
13.4.10 Extreme Event Collision Loads 20
13.5 Load Application 22

13.5.1 Loading Combinations....22
13.5.2 Expansion Piers....22
13.5.3 Fixed Piers....23
13.6 Multi-Column Pier and Cap Design....24
13.7 Hammerhead Pier Cap Design....25
13.7.1 Draw the Idealized Truss Model....26
13.7.2 Solve for the Member Forces....27
13.7.3 Check the Size of the Bearings....28
13.7.4 Design Tension Tie Reinforcement....29
13.7.5 Check the Compression Strut Capacity....30
13.7.6 Check the Tension Tie Anchorage....33
13.7.7 Provide Crack Control Reinforcement....33
13.8 General Pier Cap Information....34
13.9 Column / Shaft Design....35
13.9.1 Tapered Columns of Concrete and Timber....36
13.10 Pile Bent and Pile Encased Pier Analysis....37
13.11 Footing Design....38
13.11.1 General Footing Considerations....38
13.11.2 Isolated Spread Footings....39
13.11.3 Isolated Pile Footings....41
13.11.4 Continuous Footings....43
13.11.5 Seals and Cofferdams....44
13.12 Quantities....46
13.13 Appendix A – Pier Details....47
13.14 Appendix B – Pile Encased Pier Construction....49
13.15 Design Examples....50

13.2 Pier Types

The pier types most frequently used in Wisconsin are:

- Multi-column piers (Standards for Multi-Columned Pier and for Multi-Columned Pier – Type 2)
- Pile bents (Standard for Pile Bent)
- Pile encased piers (Standard for Pile Encased Pier)
- Solid single shaft / hammerheads (Standards for Hammerhead Pier and for Hammerhead Pier – Type 2)

Design loads shall be calculated and applied to the pier in accordance with 13.4 and 13.5. The following sections discuss requirements specific to each of the four common pier types.

13.2.1 Multi-Column Piers

Multi-column piers, as shown in Standard for Multi-Columned Pier, are the most commonly used pier type for grade separation structures. Refer to 13.6 for analysis guidelines.

A minimum of three columns shall be provided to ensure redundancy should a vehicular collision occur. If the pier cap cantilevers over the outside columns, a square end treatment is preferred over a rounded end treatment for constructability. WisDOT has traditionally used round columns. Column spacing for this pier type is limited to a maximum of 25'.

Multi-column piers are also used for stream crossings. They are especially suitable where a long pier is required to provide support for a wide bridge or for a bridge with a severe skew angle.

Continuous or isolated footings may be specified for multi-column piers. The engineer should determine estimated costs for both footing configurations and choose the more economical configuration. Where the clear distance between isolated footings would be less than 4'-6", a continuous footing shall be specified.

A variation of the multi-column pier in Standard for Multi-Columned Pier is produced by omitting the cap and placing a column under each girder. This detail has been used for steel girders with girder spacing greater than 12'. This configuration is treated as a series of single column piers. The engineer shall consider any additional forces that may be induced in the superstructure cross frames at the pier if the pier cap is eliminated. The pier cap may not be eliminated for piers in the floodplain, or for continuous slab structures which need the cap to facilitate replacement of the slab during future rehabilitation.

See Standard for Highway Over Railroad Design Requirements for further details on piers supporting bridges over railways.

13.2.2 Pile Bents

Pile bents are most commonly used for small to intermediate stream crossings.

Pile bents shall not be used to support structures over roadways or railroads due to their susceptibility to severe damage should a vehicular collision occur.

For pile bents, pile sections shall be limited to 12” or 14” steel HP piles, or 12¾” or 14” diameter cast-in-place reinforced concrete piles with steel shells spaced at a minimum center-to-center spacing of 3’. A minimum of five piles per pier shall be used on pile bents. When a satisfactory design cannot be developed with one of these pile sections at the minimum spacing, another pier type should be selected. The outside piles shall be battered 2” per foot, and the inside piles shall be driven vertically.

Because of the minimum pile spacing, the superstructure type used with pile bents is generally limited to cast-in-place concrete slabs, prestressed girders and steel girders with spans under 70’ and precast, prestressed box girders less than 21” in height.

To ensure that pile bents are capable of resisting the lateral forces resulting from floating ice and debris or expanding ice, the maximum distance from the top of the pier cap to the stable streambed elevation, including scour, is limited to:

- 15’ for 12” piles or 12¾” diameter piles
- 20’ for 14” piles or 14” diameter piles

The minimum longitudinal reinforcing steel in cast-in-place piles with steel shells is 6-#7 bars in 12” piles and 8-#7 bars in 14” piles. The piles are designed as columns fixed from rotation in the plane of the pier at the top and at some point below streambed.

All bearings supporting a superstructure utilizing pile bents shall be fixed bearings or semi-expansion.

Pile bents shall meet the following criteria:

- If the water velocity, Q_{100}, is greater than 7 ft/sec, the quantity of the 100-year flood shall be less than 12,000 ft^3/sec.
- If the streambed consists of unstable material, the velocity of the 100-year flood shall not exceed 9 ft/sec.

Pile bents may only be specified where the structure is located within Area 3, as shown in the *Facilities Development Manual, Procedure 13-1-15*, Figure 1 and where the piles are not exposed to water with characteristics that are likely to cause accelerated corrosion.

The minimum cap size shall be 3’ wide by 3’-6” deep and the piles shall be embedded into the cap a minimum of 2’-0.

WisDOT policy item:

The following values for wind applied directly to substructures, WS, may be used for all bridges:

- 0.040 ksf, transverse (along axis of substructure unit)
- 0.040 ksf, longitudinal (normal to axis of substructure unit)

Both forces shall be applied simultaneously.

13.4.4.3 Wind Load on Vehicles

As specified in **LRFD [3.8.1.3]** the wind force on vehicles, WL, is applied 6 ft. above the roadway. The longitudinal component shall be applied at the bearing elevation, and the transverse component shall be applied at its actual elevation.

WisDOT policy item:

The following values for wind on live load, WL, may be used for all bridges:

- 0.100 klf, transverse
- 0.040 klf, longitudinal

Both forces shall be applied simultaneously.

13.4.4.4 Vertical Wind Load

As specified in **LRFD [3.8.2]** an overturning vertical wind force, WS, shall be applied to limit states that do not involve wind on live load. A vertical upward wind force of 0.020 ksf times the out-to-out width of the bridge deck shall be considered a longitudinal line load. This lineal force shall be applied at the windward ¼ point of the deck, which causes the largest upward force at the windward fascia girder.

13.4.5 Uniform Temperature Forces

Temperature changes in the superstructure cause it to expand and contract along its longitudinal axis. These length changes induce forces in the substructure units based upon the fixity of the bearings, as well as the location and number of substructure units. The skew angle of the pier shall be considered when determining the temperature force components.

In determining the temperature forces, TU, applied to each substructure unit, the entire bridge superstructure length between expansion joints is considered. In all cases, there is a neutral point on the superstructure which does not move due to temperature changes. All temperature movements will then emanate outwards or inwards from this neutral point. This point is determined by assuming a neutral point. The sum of the expansion forces and fixed pier forces on one side of the assumed neutral point is then equated to the sum of the

expansion forces and fixed pier forces on the other side of the assumed neutral point. Maximum friction coefficients are assumed for expansion bearings on one side of the assumed neutral point and minimum coefficients are assumed on the other side to produce the greatest unbalanced force for the fixed pier(s) on one side of the assumed neutral point. The maximum and minimum coefficients are then reversed to produce the greatest unbalanced force for the pier(s) on the other side of the assumed neutral point. For semi-expansion abutments, the assumed minimum friction coefficient is 0.06 and the maximum is 0.10. For laminated elastomeric bearings, the force transmitted to the pier is the shear force generated in the bearing due to temperature movement. Example E27-1.8 illustrates the calculation of this force. Other expansion bearing values can be found in Chapter 27 – Bearings. When writing the equation to balance forces, one can set the distance from the fixed pier immediately to one side of the assumed neutral point as 'X' and the fixed pier immediately to the other side as (Span Length – 'X'). This is illustrated in Figure 13.4-1.

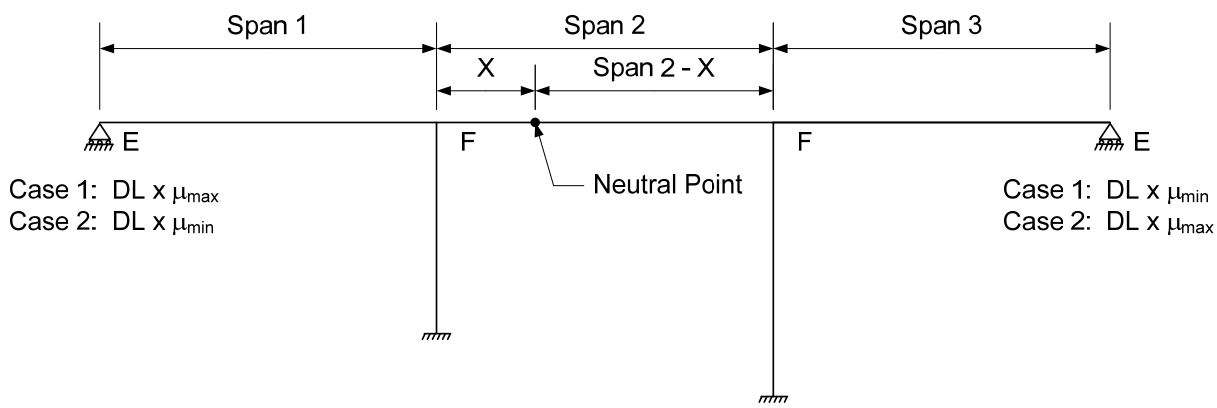

$$\text{Case1: } \sum DL \times \mu_{max} + \sum \frac{3EI\alpha TX}{144h^3} = \sum \frac{3EI\alpha T(\text{Span}\,2 - X)}{144h^3} + \sum DL \times \mu_{min}$$

(Lt. Abutment) (Pier 1) (Pier 2) (Rt. Abutment)

Figure 13.4-1
Neutral Point Location with Multiple Fixed Piers

As used in Figure 13.4-1:

E	=	Column or shaft modulus of elasticity (ksi)
I	=	Column or shaft moment of inertia about longitudinal axis of the pier (in^4)
α	=	Superstructure coefficient of thermal expansion (ft/ft/°F)
T	=	Temperature change of superstructure (°F)

WisDOT policy item:

If the pier is approximately aligned with the direction of the ice flow, only the first design case as specified in **LRFD [3.9.2.4]** shall be investigated due to the unknowns associated with the friction angle defined in the second design case.

A longitudinal force equal to F shall be combined with a transverse force of 0.15F

Both the longitudinal and transverse forces act simultaneously at the pier nose.

If the pier is located such that its longitudinal axis is skewed to the direction of the ice flow, the ice force on the pier shall be applied to the projected pier width and resolved into components. In this condition, the transverse force to the longitudinal axis of the pier shall be a minimum of 20% of the total force.

WisDOT exception to AASHTO:

Based upon the pier geometry in the Standards, the ice loadings of **LRFD [3.9.4]** and **LRFD [3.9.5]** shall be ignored.

13.4.8.2 Force Exerted by Expanding Ice Sheet

Expansion of an ice sheet, resulting from a temperature rise after a cold wave, can develop considerable force against abutting structures. This force can result if the sheet is restrained between two adjacent bridge piers or between a bluff type shore and bridge pier. The force direction is therefore transverse to the direction of stream flow.

Force from ice sheets depends upon ice thickness, maximum rate of air-temperature rise, extent of restraint of ice and extent of exposure to solar radiation. In the absence of more precise information, estimate an ice thickness and use a force of 8.0 ksf.

It is not necessary to design all bridge piers for expanding ice. If one side of a pier is exposed to sunlight and the other side is in the shade along with the shore in the pier vicinity, consider the development of pressure from expanding ice. If the central part of the ice is exposed to the sun's radiation, consider the effect of solar energy, which causes the ice to expand.

13.4.9 Centrifugal Force

Centrifugal force, CE, is specified in **LRFD [3.6.3]** and is included in the pier design for structures on horizontal curves. The lane load portion of the HL-93 loading is neglected in the computation of the centrifugal force.

The centrifugal force is taken as the product of the axle weights of the design truck or tandem and the factor, C, given by the following equation:

$$C = \frac{4}{3}\frac{v^2}{gR}$$

Where:

V = Highway design speed (ft/sec)

g = Gravitational acceleration = 32.2 (ft/sec^2)

R = Radius of curvature of travel lane (ft)

The multiple presence factors specified in **LRFD [3.6.1.1.2]** shall apply to centrifugal force.

Centrifugal force is assumed to act radially and horizontally 6' above the roadway surface. The point 6' above the roadway surface is measured from the centerline of roadway. The design speed may be determined from the Wisconsin *Facilities Development Manual*, Chapter 11. It is not necessary to consider the effect of superelevation when centrifugal force is used, because the centrifugal force application point considers superelevation.

13.4.10 Extreme Event Collision Loads

WisDOT exception to AASHTO:

LRFD [3.6.5] for vehicular collision force, CT, shall be followed as stated except:

LRFD [3.6.5.1] and **LRFD [3.6.5.2]** shall be considered equal alternatives, meaning that protecting the pier and designing the pier for the 400 kip static force are each equally acceptable. The bridge design engineer should work with the roadway engineer to determine which alternative is preferred.

WisDOT policy item:

Unless protected by a TL-5 barrier, embankment or adequate offset, the pier columns/shaft, *only*, shall be strengthened to comply with **LRFD [3.6.5]**. For a multi-column pier the minimum size column shall be 3x5 ft rectangular or 4 ft diameter (consider clearance issues and/or the wide cap required when using 4 ft diameter columns). Hammerhead pier shafts are considered adequately sized.

The vertical reinforcement for the columns/shaft shall be the greater of what is required by design (not including the Extreme Event II loading) or a minimum of 1.5% of the gross concrete section (total cross section without deduction for rustications less than or equal to 1-1/2" deep) to address the collision force for the 3x5 ft rectangular and 4 ft diameter columns. The 1.5% minimum for 15 sq. ft. may be prorated down to 1% minimum for sections with at least a 30 sq. ft. cross sectional area.

For the 3x5 ft rectangular columns, use double #5 stirrups spaced at 6" vertically as a minimum. For the 4 ft diameter columns, use #4 spiral reinforcement (smooth bars) spaced vertically at 6" as a minimum. Hammerhead pier shafts shall have, as a minimum, the horizontal reinforcement as shown on the Standards.

13.10 Pile Bent and Pile Encased Pier Analysis

WisDOT policy item:

Only the Strength I limit state need be utilized for determining the pile configuration required for open pile bents and pile encased piers. Longitudinal forces are not considered due to fixed or semi-expansion abutments being required for these pier types.

The distribution of dead load to the pile bents and pile encased piers is in accordance with 17.2.9. Live load is distributed according to 17.2.10.

WisDOT policy item:

Dynamic load allowance, IM, is included for determining the pile loads in pile bents, but not for piling in pile encased piers.

The pile force in the outermost, controlling pile is equal to:

$$P_n = \frac{F}{n} + \frac{M}{S}$$

Where:

F = Total factored vertical load (kips)

n = Number of piles

M = Total factored moment about pile group centroid (kip-ft)

S = Section modulus of pile group (ft^3), equal to:

$$\left(\frac{\sum d^2}{c}\right)$$

In which:

d = Distance of pile from pile group centroid

c = Distance from outermost pile to pile group centroid

See Standard for Pile Bent for details. See Standard for Pile Encased Pier for details.

13.11 Footing Design

13.11.1 General Footing Considerations

There are typical concepts to consider when designing and detailing both spread footings and pile footings.

For multi-columned piers:

- Each footing for a given pier should be the same dimension along the length of the bridge.
- Each footing for a given pier should be the same thickness.
- Footings within a given pier need not be the same width.
- Footings within a given pier may have variable reinforcement.
- Footings within a given pier may have a different number of piles. Exterior footings should only have fewer piles than an interior footing if the bridge is unlikely to be widened in the future. An appropriate cap span layout will usually lend itself to similar footing/pile configurations.
- Heavier piles, especially if primarily end bearing piles, can be more economical.

For hammerhead piers:

- Make as many seals the same size as reasonable to facilitate cofferdam re-use.
- Seal thickness can vary from pier to pier.
- Footing dimensions, reinforcement and pile configuration can vary from pier to pier.
- Heavier piles, especially if primarily end bearing piles, can be more economical.

WisDOT exception to AASHTO:

Crack control, as defined in **LRFD [5.7.3.4]** shall not be considered for pier isolated spread footings, isolated pile footings and continuous footings.

Shrinkage and temperature reinforcement, as defined in **LRFD [5.10.8]** shall not be considered for side faces of any buried footings.

Table of Contents

17.1 Design Method 3
17.1.1 Design Requirements 3
17.1.2 Rating Requirements 3
17.1.2.1 Standard Permit Design Check 3
17.2 LRFD Requirements 4
17.2.1 General 4
17.2.2 WisDOT Policy Items 4
17.2.3 Limit States 4
17.2.3.1 Strength Limit State 5
17.2.3.2 Service Limit State 5
17.2.3.3 Fatigue Limit State 5
17.2.3.4 Extreme Event Limit State 6
17.2.4 Design Loads 6
17.2.4.1 Dead Loads 6
17.2.4.2 Traffic Live Loads 8
17.2.4.2.1 Design Truck 8
17.2.4.2.2 Design Tandem 9
17.2.4.2.3 Design Lane 9
17.2.4.2.4 Double Truck 9
17.2.4.2.5 Fatigue Truck 10
17.2.4.2.6 Live Load Combinations 10
17.2.4.3 Multiple Presence Factor 11
17.2.4.4 Dynamic Load Allowance 12
17.2.4.5 Pedestrian Loads 12
17.2.5 Load Factors 13
17.2.6 Resistance Factors 13
17.2.7 Distribution of Loads for Slab Structures 14
17.2.8 Distribution of Loads for Girder Structures 24
17.2.9 Distribution of Dead Load to Substructure Units 37
17.2.10 Distribution of Live Loads to Substructure Units 37
17.2.11 Composite Section Properties 39

17.2.12 Allowable Live Load Deflection 40
17.2.13 Actual Live Load Deflection 40
17.3 Selection of Structure Type 42
17.3.1 Alternate Structure Types 42
17.4 Superstructure Types 44
17.5 Design of Slab on Girders 47
17.5.1 General 47
17.5.2 Two-Course Deck Construction 47
17.5.3 Reinforcing Steel for Deck Slabs on Girders 48
17.5.3.1 Transverse Reinforcement 48
17.5.3.2 Longitudinal Reinforcement 54
17.5.3.3 Empirical Design of Slab on Girders 58
17.6 Cantilever Slab Design 60
17.6.1 Rail Loading for Slab Structures 67
17.6.2 WisDOT Overhang Design Practices 67
17.7 Construction Joints 72
17.8 Bridge Deck Protective Systems 73
17.9 Bridge Approaches 74
17.10 Design of Precast Prestressed Concrete Deck Panels 75
17.10.1 General 75
17.10.2 Deck Panel Design 75
17.10.3 Transverse Reinforcement for Cast-in-Place Concrete on Deck Panels 77
17.10.3.1 Longitudinal Reinforcement 78
17.10.4 Details 78

The distance from the centerline of the girder to the design section is computed in accordance with **LRFD [4.6.2.1.6]**. For steel beams, this distance is equal to one-quarter of the flange width from the centerline of support. For prestressed concrete girders, this distance is equal to the values presented in Figure 17.5-1.

Transverse reinforcing steel requirements (bar size and spacing) are determined for both positive moment requirements and negative moment requirements, and the same reinforcing steel is used in both the top and bottom of slab. Figure 17.5-1 shows bar locations and clearances.

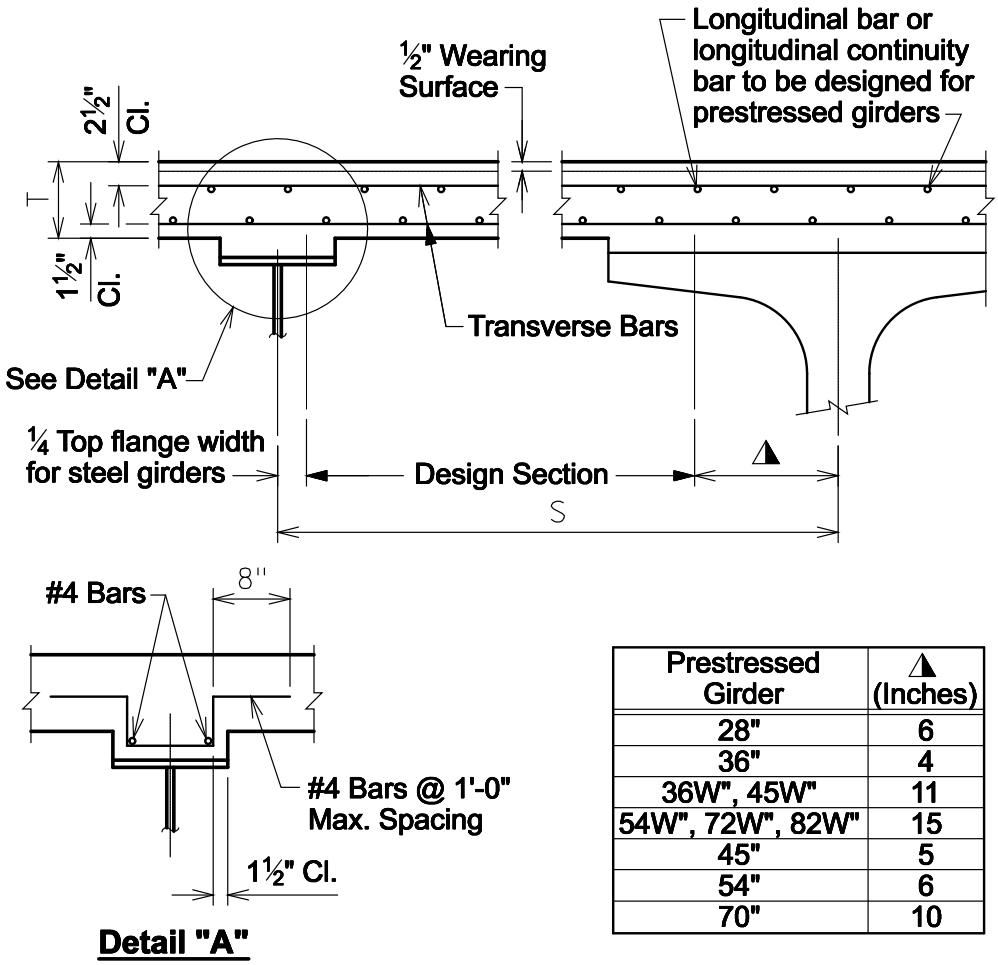

Prestressed Girder	◭ (Inches)
28"	6
36"	4
36W", 45W"	11
54W", 72W", 82W"	15
45"	5
54"	6
70"	10

Figure 17.5-1
Transverse Section Thru Slab on Girders

For skews of 20° and under, place transverse bars along the skew. For skews greater than 20°, place transverse bars perpendicular to the girders.

Detail ”A", as presented in Figure 17.5-1, should be used for decks when shear connectors extend less than 2 inches into the slab on steel girder bridges or 3 inches on prestressed concrete girder bridges.

Several transverse reinforcing steel tables are provided in this chapter. The reinforcing steel in Table 17.5-1 and Table 17.5-2 does not account for deck overhangs. However, the minimum amount of reinforcing steel required in the deck overhangs is presented in various design tables in 17.6.

The reinforcement shown in Table 17.5-1 and Table 17.5-2 is based on both the Strength I requirement and crack control requirement.

Crack control was checked in accordance with **LRFD [5.7.3.4]**. The bar spacing cannot exceed the value from the following formula:

$$s \le \frac{700(\gamma)}{\beta_s f_s} - 2d_c$$

Where:

$$\beta_s = 1 + \frac{d_c}{0.7(h - d_c)}$$

γ	=	0.75 for decks
β_s	=	Ratio of flexural strain at the extreme tension face to the strain at the centroid of the reinforcement layer nearest the tension face
f_s	=	Tensile stress in reinforcement at the service limit state (ksi)
d_c	=	Top concrete cover less ½ inch wearing surface plus ½ bar diameter or bottom concrete cover plus ½ bar diameter (inches)
h	=	Slab depth minus ½ inch wearing surface (inches)

WisDOT policy item:

The thickness of the sacrificial ½-inch wearing surface shall not be included in the calculation of d_c.

Table 17.5-1 and Table 17.5-2 were developed for specified values of the distance from the centerline of girder to the design section for negative moment. Those specified values – 0, 3, 6, 9, 12 and 18 inches – were selected to match values used in **AASHTO [Table A4-1]**. For a girder in which the distance from the centerline of girder to the design section for negative moment is not included in Table 17.5-1 and Table 17.5-2, the engineer may interpolate between the closest two values in the tables or can use the more conservative of the two values.

17.6.1 Rail Loading for Slab Structures

For concrete slab superstructures, the designer is required to consider the rail loading and provide adequate transverse reinforcing steel, accordingly. The top transverse slab reinforcement for both concrete parapet and steel railing type "M" or "W" are shown on the Standard Details.

17.6.2 WisDOT Overhang Design Practices

WisDOT policy item:

Current design practice in Wisconsin limits the standard slab overhang length to 3'-7", measured from the centerline of the exterior girder to the edge of the slab. A 4'-0" overhang is allowed for some wide flange prestressed concrete girders (54W", 72W", 82W"). A 4'-6" overhang may be used where a curved roadway is placed on straight girders at the discretion of the designer. The total overhang when a cantilevered sidewalk is used is limited to 5'-0", measured from the centerline of the exterior girder to the edge of the sidewalk. A minimum of 6" from the edge of the top flange to the edge of the deck should be provided, with 9" preferred.

The overhang length has been limited to prevent rotation of the girder and bending of the girder web during construction caused by the eccentric load from the cantilevered forming brackets. The upper portion of these brackets attaches to the girder top flange, and the lower portion bears against the girder web. If the girder rotates or the web bends at the bracket bearing point, the end of the bracket will move downward because of bracket rotation. If the rails supporting the paving machine are located near the end of the bracket, the paving machine will move downward more than the girder and the anticipated profile grade line will not be achieved. Factors affecting girder rotation are diaphragm spacing, stiffness, connections and girder torsional stiffness. Factors affecting web bending are stiffener spacing and web thickness. Do not place a note or detail on the plan for exterior girder bracing required by the contractor as this is covered by the specs.

In the following tables, the slab thickness, "t", is the slab thickness between interior girders. The area of steel shown in the following tables is the controlling value from Design Case 1, 2 or 3. The value shown is the larger area of steel required at the front face of the barrier or at the design section. Girder Type 1 shall include steel girders and the following prestressed girders; 28-inch, 36-inch, 36W-inch, 45W-inch. Prestressed girders used for rehabilitation projects, 45-inch, 54-inch and 70-inch, shall also be considered to be Girder Type 1. Girder Type 2 shall include the following prestressed girders; 54W-inch, 72W-inch and 82W-inch.

If the area of reinforcing steel required in the overhang is greater than the area of reinforcing steel provided by the standard transverse reinforcement over the interior girders, reinforcement must be added to satisfy the overhang design requirements. The amount of reinforcement that must be added in the overhang is the amount required to satisfy the overhang design requirement minus the amount provided by the standard transverse reinforcement over the interior girders. This additional reinforcement should be carried for the bar development length past the first interior girder centerline. The reinforcement shall be placed as detailed in Figure 17.6-8. Use either a number 4 or 5 bar to satisfy this

requirement. The additional bar shall be placed at one or two times the standard transverse bar spacing as required.

Effective Overhang (Feet)	Deck Thickness Between Girders, "t" (Inches)						
	8	8.5	9	9.5	10	10.5	11
1.75	0.706	0.651	0.607	0.57	0.538	0.511	0.514
2.00	0.723	0.668	0.622	0.583	0.55	0.519	0.509
2.25	0.739	0.682	0.634	0.594	0.559	0.527	0.505
2.50	0.754	0.694	0.644	0.601	0.565	0.534	0.507
2.75	0.766	0.704	0.652	0.609	0.572	0.54	0.512
3.00	0.777	0.713	0.66	0.615	0.577	0.544	0.516
3.25	0.786	0.72	0.666	0.62	0.582	0.548	0.519
3.50	0.795	0.727	0.671	0.625	0.586	0.552	0.522
3.75	0.826	0.748	0.676	0.629	0.589	0.555	0.524
4.00	0.928	0.835	0.727	0.668	0.613	0.571	0.527

Table 17.6-2

Reinforcing Steel (in^2/ft) for Cantilever Deck Slabs with Sloped Face Concrete Parapets
Girder Type 1

Effective Overhang (Feet)	Deck Thickness Between Girders, "t" (Inches)						
	8	8.5	9	9.5	10	10.5	11
1.25	0.724	0.669	0.623	0.584	0.550	0.520	0.509
1.5	0.724	0.669	0.623	0.584	0.550	0.520	0.509
1.75	0.724	0.669	0.623	0.584	0.550	0.520	0.509
2	0.724	0.669	0.623	0.584	0.550	0.520	0.509
2.25	0.699	0.644	0.599	0.561	0.553	0.531	0.510
2.5	0.695	0.642	0.597	0.559	0.545	0.546	0.525
2.75	0.692	0.639	0.594	0.556	0.535	0.549	0.540
3	0.690	0.637	0.593	0.555	0.525	0.539	0.553
3.25	0.688	0.635	0.592	0.553	0.522	0.528	0.543

Table 17.6-3

Reinforcing Steel (in^2/ft) for Cantilever Deck Slabs with Sloped Face Concrete Parapets
Girder Type 2

Table of Contents

19.1 Introduction 3
19.1.1 Pretensioning 3
19.1.2 Post-Tensioning 3
19.2 Basic Principles 4
19.3 Pretensioned Member Design 7
19.3.1 Design Strengths 7
19.3.2 Loading Stages 8
19.3.2.1 Prestress Transfer 8
19.3.2.2 Losses 8
19.3.2.2.1 Elastic Shortening 8
19.3.2.2.2 Time-Dependent Losses 9
19.3.2.2.3 Fabrication Losses 9
19.3.2.3 Service Load 10
19.3.2.3.1 I-Girder 10
19.3.2.3.2 Box Girder 10
19.3.2.4 Factored Flexural Resistance 11
19.3.2.5 Fatigue Limit State 11
19.3.3 Design Procedure 11
19.3.3.1 I-Girder Member Spacing 12
19.3.3.2 Box Girder Member Spacing 12
19.3.3.3 Dead Load 12
19.3.3.4 Live Load 13
19.3.3.5 Live Load Distribution 13
19.3.3.6 Dynamic Load Allowance 13
19.3.3.7 Deck Design 13
19.3.3.8 Composite Section 14
19.3.3.9 Design Stress 15
19.3.3.10 Prestress Force 15
19.3.3.11 Service Limit State 16
19.3.3.12 Raised, Draped or Partially Debonded Strands 17
19.3.3.12.1 Raised Strand Patterns 18
19.3.3.12.2 Draped Strand Patterns 18

19.3.3.12.3 Partially Debonded Strand Patterns....20
19.3.3.13 Strength Limit State....21
19.3.3.13.1 Factored Flexural Resistance....21
19.3.3.13.2 Minimum Reinforcement....24
19.3.3.14 Non-prestressed Reinforcement....25
19.3.3.15 Horizontal Shear Reinforcement....25
19.3.3.16 Web Shear Reinforcement....27
19.3.3.17 Continuity Reinforcement....30
19.3.3.18 Camber and Deflection....33
19.3.3.18.1 Prestress Camber....34
19.3.3.18.2 Dead Load Deflection....37
19.3.3.18.3 Residual Camber....37
19.3.4 Deck Forming....37
19.3.4.1 Equal-Span Continuous Structures....39
19.3.4.2 Unequal Spans or Curve Combined With Tangent....39
19.3.5 Construction Joints....40
19.3.6 Strand Types....40
19.3.7 Construction Dimensional Tolerances....40
19.3.8 Prestressed Girder Sections....40
19.3.8.1 Pretensioned I-Girder Standard Strand Patterns....45
19.3.9 Precast, Prestressed Slab and Box Sections Post-Tensioned Transversely....45
19.3.9.1 Available Slab and Box Sections and Maximum Span Lengths....46
19.3.9.2 Overlays....47
19.3.9.3 Mortar Between Precast, Prestressed Slab and Box Sections....47
19.4 Field Adjustments of Pretensioning Force....48
19.5 References....50
19.6 Design Examples....51

19.3.3.4 Live Load

The HL-93 live load shall be used for all new bridges. Refer to section 17.2.4.2 for a detailed description of the HL-93 live load, including the design truck, design tandem, design lane, and double truck.

19.3.3.5 Live Load Distribution

The live load distribution factors shall be computed as specified in **LRFD [4.6.2.2]** and as summarized in Table 17.2-7. The moment and shear distribution factors are determined using equations that consider girder spacing, span length, deck thickness, the number of girders, skew and the longitudinal stiffness parameter. Separate shear and moment distribution factors are computed for interior and exterior girders. The applicability ranges of the distribution factors shall also be considered. If the applicability ranges are not satisfied, then conservative assumptions must be made based on sound engineering judgment.

WisDOT policy item:

The typical cross section for prestressed adjacent box girders shall be type "g" as illustrated in **LRFD [Table 4.6.2.2.1-1]**. The connection between the adjacent box girders shall be considered to be only enough to prevent relative vertical displacement at the interface.

The St. Venant torsional inertia, J, for adjacent box beams with voids may be calculated as specified for closed thin-walled sections in accordance with **LRFD [C4.6.2.2.1]**.

The value of poisson's ratio shall be taken as 0.2 in accordance with **LRFD [5.4.2.5]**.

The beam spacing, S, in **LRFD [Table 4.6.2.2b-1]** shall be equal to the beam width plus the space between adjacent box sections.

See 17.2.8 for additional information regarding live load distribution.

19.3.3.6 Dynamic Load Allowance

The dynamic load allowance, IM, is given by **LRFD [3.6.2]**. Dynamic load allowance equals 33% for all live load limit states except the fatigue limit state and is not applied to pedestrian loads or the lane load portion of the HL-93 live load. See 17.2.4.3 for further information regarding dynamic load allowance.

19.3.3.7 Deck Design

The design of concrete decks on prestressed concrete girders is based on **LRFD [4.6.2.1]**. Moments from truck wheel loads are distributed over a width of deck which spans perpendicular to the girders. This width is known as the distribution width and is given by **LRFD [Table 4.6.2.1.3-1]**. See 17.5 for further information regarding deck design.

19.3.3.8 Composite Section

The effective flange width is the width of the deck slab that is to be taken as effective in composite action for determining resistance for all limit states. The effective flange width, in accordance with **LRFD [4.6.2.6]**, is equal to the tributary width of the girder for interior girders. For exterior girders, it is equal to on half the effective flange width of the adjacent interior girder plus the overhang width. The effective flange width shall be determined for both interior and exterior beams.

For box beams, the composite flange area for an interior multi-beam is taken as the width of the member by the effective thickness of the floor. Minimum concrete overlay thickness is 3". The composite flange for the exterior member consists of the curb and the floor over that particular edge beam. Additional information on box girders may be found in 17.4.

Since the deck concrete has a lower strength than the girder concrete, it also has a lower modulus of elasticity. Therefore, when computing composite section properties, the effective flange width (as stated above) must be reduced by the ratio of the modulus of elasticity of the deck concrete divided by the modulus of elasticity of the girder concrete.

WisDOT exception to AASHTO:

WisDOT uses the formulas shown below to determine E_c for prestressed girder design. For 6 ksi girder concrete, E_c is 5,500 ksi, and for 4 ksi deck concrete, E_c is 4,125 ksi. The E_c value of 5,500 ksi for 6 ksi girder concrete strength was determined from deflection studies. These equations are used in place of those presented in **LRFD [5.4.2.4]** for the following calculations: strength, section properties, and deflections due to externally applied dead and live loads.

For slab concrete strength other than 4 ksi, E_c is calculated from the following formula:

$$E_c = \frac{4{,}125\sqrt{f'_c}}{\sqrt{4}} \text{ (ksi)}$$

For girder concrete strengths other than 6 ksi, E_c is calculated from the following formula:

$$E_c = \frac{5{,}500\sqrt{f'_c}}{\sqrt{6}} \text{ (ksi)}$$

WisDOT policy item:

WisDOT uses the equation presented in **LRFD [5.4.2.4]** (and shown below) to calculate the modulus of elasticity at the time of release using the specified value of f'ci. This value of E_i is used for loss calculations and for girder camber due to prestress forces and girder self weight.

$$E_c = 33{,}000 \cdot K_1 \cdot w_c^{1.5} \sqrt{f'_{ci}}$$

Where:

P_c = Permanent net compressive force normal to the shear plane (kips)

P_c shall include the weight of the deck, haunch, parapets, and future wearing surface. A conservative assumption that may be considered is to set $P_c = 0.0$.

The nominal interface shear resistance, V_{ni}, shall not exceed the lesser of:

$$V_{ni} \le K_1 f'_c A_{cv} \quad \text{or} \quad V_{ni} \le K_2 A_{cv}$$

Where:

K_1 = Fraction of concrete strength available to resist interface shear as specified in **LRFD [5.8.4.3]**. This value shall be taken as 0.3 for WisDOT standard girders with a cast-in-place deck (dim.)

K_2 = Limiting interface shear resistance as specified in **LRFD [5.8.4.3]**. This value shall be taken as 1.8 ksi for WisDOT standard girders with a cast-in-place deck

WisDOT policy item:

The stirrups that extend into the deck slab presented on the Standards are considered adequate to satisfy the minimum reinforcement requirements of **LRFD [5.8.4.4]**

19.3.3.16 Web Shear Reinforcement

Web shear reinforcement consists of placing conventional reinforcement perpendicular to the axis of the I-girder. Web shear reinforcement shall be designed by **LRFD [5.8.3.4]** using the Strength I limit state for WisDOT standard girders. WisDOT prefers girders with spacing symmetrical about the midspan in order to simplify design and fabrication. The designer is encouraged to simplify the stirrup arrangement as much as possible. For vertical stirrups, the required area of web shear reinforcement is given by the following equation:

$$A_v \ge \frac{(V_n - V_c)s}{f_y d_v \cot\theta} \quad \left(\text{or } 0.0316\sqrt{f'_c}\,\frac{b_v s}{f_y} \text{ minimum}\right)$$

Where:

A_v = Area of transverse reinforcement within distance, s (in^2)

V_n = Nominal shear resistance (kips)

V_c = Nominal shear resistance provided by tensile stress in the concrete (kips)

s	=	Spacing of transverse reinforcement (in)
f_y	=	Specified minimum yield strength of transverse reinforcement (ksi)
d_v	=	Effective shear depth as determined in **LRFD [5.8.2.9]** (in)
b_v	=	Minimum web width within depth, d_v

$\cot\theta$ shall be taken as follows:

- When $V_{ci} < V_{cw}$, $\cot\theta = 1.0$
- When $V_{ci} > V_{cw}$, $\cot\theta = 1.0 + 3\left(\frac{f_{pc}}{\sqrt{f'_c}}\right) \leq 1.8$

$$V_u = 1.25DC + 1.5DW + 1.75(LL + IM)$$
$$V_n = V_u / \phi$$

Where:

V_u		Strength I Limit State shear force (kips)
ϕ	=	0.90 per **LRFD [5.5.4.2.1]**

See 17.2 for further information regarding load combinations.

Per **LRFD [5.8.3.4.3]**, determine V_c as the minimum of either V_{ci} or V_{cw} given by:

$$V_{cw} = (0.06\sqrt{f'_c} + 0.30f_{pc})b_v d_v + V_p$$

$$V_{ci} = 0.02\sqrt{f'_c}b_v d_v + V_d + \frac{V_i M_{cre}}{M_{max}} \geq 0.06\sqrt{f'_c}b_v d$$

Where:

f_{pc}	=	Compressive stress in concrete, after all prestress losses, at centroid of cross section resisting externally applied loads or at the web-flange junction when the centroid lies within the flange. (ksi) In a composite member, f_{pc} is the resultant compressive stress at the centroid of the composite section, or at the web-flange junction, due to both prestress and moments resisted by the member acting alone.
V_d	=	Shear force at section due to unfactored dead loads (kips)
V_i	=	Factored shear force at section due to externally applied loads

occurring simultaneously with M_{max} (kips)

M_{cre} = Moment causing flexural cracking at the section due to externally applied loads (k-in)

M_{max} = Maximum factored moment at section due to externally applied loads (k-in)

$$V_i = V_u - V_d$$

$$M_{cre} = S_c\left(f_r + f_{cpe} - \frac{12M_{dnc}}{S_{nc}}\right)$$

$$M_{max} = M_u - M_{dnc}$$

Where:

S_c = Section modulus for the extreme tensile fiber of the composite section where the stress is caused by externally applied loads (in^3)

S_{nc} = Section modulus for the extreme tensile fiber of the noncomposite section where the stress is caused by externally applied loads (in^3)

f_{cpe} = Compressive stress in concrete due to effective prestress forces only, after all prestress losses, at the extreme tensile fiber of the section where the stress is caused by externally applied loads (ksi)

M_{dnc} = Total unfactored dead load moment acting on the noncomposite section (k-ft)

f_r = Modulus of rupture of concrete. Shall be $= 0.24\sqrt{f'_c}$ (ksi)

For a composite section, V_{ci} corresponds to shear at locations of accompanying flexural stress. V_{cw} corresponds to shear at simple supports and points of contraflexure. The critical computation for V_{cw} is at the centroid for composite girders.

Set the vertical component of the draped strands, V_p, equal to 0.0 when calculating V_n, as per **LRFD [5.8.3.3]**. This vertical component helps to reduce the shear on the concrete section. The actual value of V_p should be used when calculating V_{cw}. However, the designer may make the conservative assumption to neglect V_p for all shear resistance calculations.

WisDOT policy item:

Based on past performance, the upper limit for web reinforcement spacing, s_{max}, per **LRFD [5.8.2.7]** will be reduced to 18 inches.

The web reinforcement spacing shall not exceed the maximum permitted spacing determined as:

- If $\upsilon_u < 0.125f'_c$, then $s_{max} = 0.8d_v \leq 18"$
- If $\upsilon_u \geq 0.125f'_c$, then $s_{max} = 0.4d_v \leq 12"$

Where:

$$\upsilon_u = \frac{V_u - \phi V_p}{\phi b_v d_v}$$ per **LRFD [5.8.2.9]**.

The nominal shear resistance, $V_c + V_s$, is limited by the following:

$$V_c + \frac{A_v f_y d_v \cot\theta}{s} \leq 0.25f'_c b_v d_v$$

Reinforcement in the form of vertical stirrups is required at the extreme ends of the girder. The stirrups are designed to resist 4% of the total prestressing force at transfer at a unit stress of 20 ksi and are placed within h/4 of the girder end, where h is the total girder depth. For a distance of 1.5d from the ends of the beams, reinforcement shall be placed to confine the prestressing steel in the bottom flange. The reinforcement shall be shaped to enclose the strands, shall be a #3 bar or greater and shall be spaced at less than or equal to 6". Note that the reinforcement shown on the Standard Details sheets satisfies these requirements.

Welded wire fabric may be used for the vertical reinforcement. It must be deformed wire with a minimum size of D16.

Per **LRFD [5.8.3.5]**, at the inside edge of the bearing area to the section of critical shear, the longitudinal reinforcement on the flexural tension side of the member shall satisfy:

$$A_s f_y + A_{ps} f_{ps} \geq \left(\frac{V_u}{\phi} - 0.5V_s\right)\cot\theta$$

In the above equation, $\cot\theta$ is as defined in the V_c discussion above, and V_s is the shear reinforcement resistance at the section considered. Any lack of full reinforcement development shall be accounted for. Note that the reinforcement shown on the Standard Detail sheets satisfies these requirements.

19.3.3.17 Continuity Reinforcement

The design of non-prestressed reinforcement for negative moment at the support is based on the Strength I limit state requirements of **LRFD [5.7.3]**:

$$M_u = 1.25DC + 1.50DW + 1.75(LL + IM)$$

LRFD [5.5.4.2] allows a ϕ factor equal to 0.9 for tension-controlled reinforced concrete sections such as the bridge deck.

The continuity reinforcement consists of mild steel reinforcement in the deck in the negative moment region over the pier. Consider both the non-composite and the superimposed dead loads and live loads for the Strength I design of the continuity reinforcement in the deck.

Moment resistance is developed in the same manner as shown in 19.3.3.13.1 for positive moments, except that the bottom girder flange is in compression and the deck is in tension. The moment resistance is formed by the couple resulting from the compression force in the bottom flange and the tension force from the longitudinal deck steel. Consider A_s to consist of the longitudinal deck steel present in the deck slab effective flange width as determined in 19.3.3.8. The distance, d_p, is taken from the bottom of the girder flange to the center of the longitudinal deck steel.

WisDOT exception to AASHTO:

Composite sections formed by WisDOT standard prestressed concrete girders shall be considered to be tension-controlled for the design of the continuity reinforcement. The ε_t check, as specified in **LRFD [5.7.2.1]**, is not required, and $\phi = 0.9$.

WisDOT policy item:

New bridge designs shall consider only the top mat of longitudinal deck steel when computing the continuity reinforcement capacity.

Based on the location of the neutral axis, the bottom flange compressive force may behave as either a rectangle or a T-section. On WisDOT standard prestressed girders, if the depth of the compression block, a, falls within the varying width of the bottom flange, the compression block acts as an idealized T-section. In this case, the width, b, shall be taken as the bottom flange width, and the width, b_w, shall be taken as the bottom flange width at the depth "a". During T-section behavior, the depth, h_f, shall be taken as the depth of the bottom flange of full width, b. See Figure 19.3-4 for details. Ensure that the deck steel is adequate to satisfy $M_r \geq M_u$.

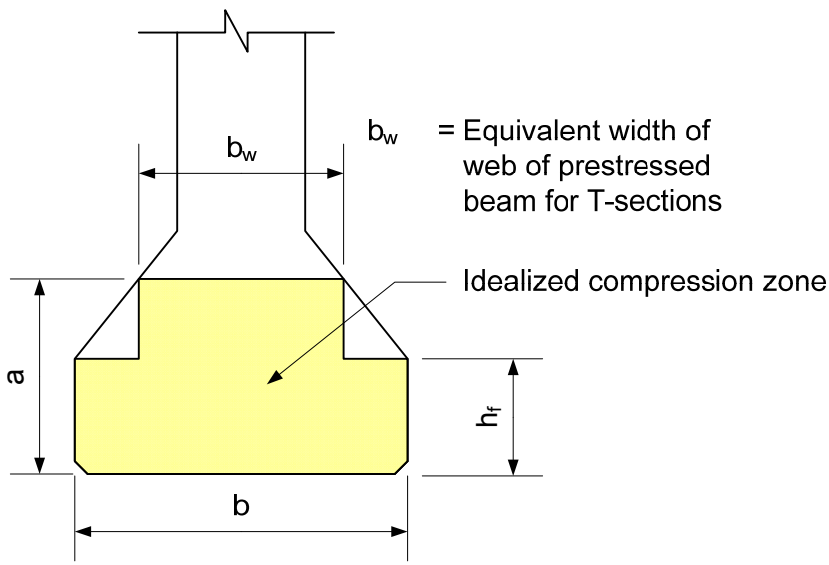

Figure 19.3-4
T-Section Compression Flange Behavior

The continuity reinforcement should also be checked to ensure that it meets the crack control provisions of **LRFD [5.7.3.4]**. This check shall be performed assuming severe exposure conditions. Only the superimposed loads shall be considered for the Service and Fatigue requirements.

The concrete between the abutting girder ends is usually of a much lesser strength than that of the girders. However, tests[1] have shown that, due to lateral confinement of the diaphragm concrete, the girder itself fails in ultimate negative compression rather than failure in the material between its ends. Therefore the ultimate compressive stress, f'_c, of the girder concrete is used in place of that of the diaphragm concrete.

This assumption has only a slight effect on the computed amount of reinforcement, but it has a significant effect on keeping the compression force within the bottom flange.

The continuity reinforcement shall conform to the Fatigue provisions of **LRFD [5.5.3]**.

The transverse spacing of the continuity reinforcement is usually taken as the whole or fractional spacing of the D bars as given in 17.5.3.2. Grade 60 bar steel is used for continuity reinforcement. Required development lengths for deformed bars are given in Chapter 9 – Materials.

WisDOT exception to AASHTO:

The continuity reinforcement is not required to be anchored in regions of the slab that are in compression at the strength limit state as stated in **LRFD [5.14.1.4.8]**. The following locations shall be used as the cut off points for the continuity reinforcement:

28" Girder		
Girder Spacing	Single Span	2 Equal Spans
6’-0”	54	60
6’-6”	54	58
7’-0”	52	56
7’-6”	50	54
8’-0”	50	54
8’-6”	48	52
9’-0”	48	50
9’-6”	46	50
10’-0”	44	48
10’-6”	44	48
11’-0”	42	46
11’-6”	42	46
12’-0”	42	44

36" Girder		
Girder Spacing	Single Span	2 Equal Spans
6’-0”	72	78
6’-6”	70	76
7’-0”	70	74
7’-6”	68	72
8’-0”	66	70
8’-6”	64	68
9’-0”	62	68
9’-6”	60	64
10’-0”	60	64
10’-6”	58	62
11’-0”	58	60
11’-6”	50	60
12’-0”	48	58

36W" Girder		
Girder Spacing	Single Span	2 Equal Spans
6’-0”	98	104
6’-6”	96	102
7’-0”	94	100
7’-6”	92	98
8’-0”	88	96
8’-6”	86	94
9’-0”	84	92
9’-6”	82	88
10’-0”	80	86
10’-6”	78	84
11’-0”	76	82
11’-6”	74	80
12’-0”	72	78

45W" Girder		
Girder Spacing	Single Span	2 Equal Spans
6’-0”	116	124
6’-6”	114	122
7’-0”	112	118
7’-6”	108	116
8’-0”	106	114
8’-6”	102	110
9’-0”	100	108
9’-6”	98	104
10’-0”	94	102
10’-6”	94	100
11’-0”	90	98
11’-6”	88	96
12’-0”	86	92

Table 19.3-1
Maximum Span Length vs. Girder Spacing

54W" Girder		
Girder Spacing	Single Span	2 Equal Spans
6'-0"	132	140
6'-6"	128	136
7'-0"	126	134
7'-6"	124	132
8'-0"	122	130
8'-6"	118	126
9'-0"	116	124
9'-6"	114	120
10'-0"	112	118
10'-6"	110	116
11'-0"	108	114
11'-6"	106	112
12'-0"	102	110

72W" Girder		
Girder Spacing	Single Span	2 Equal Spans
6'-0"	160*	168*
6'-6"	158*	168*
7'-0"	154*	164*
7'-6"	152	162*
8'-0"	150	158*
8'-6"	146	154*
9'-0"	144	152
9'-6"	140	148
10'-0"	138	146
10'-6"	136	144
11'-0"	132	140
11'-6"	130	138
12'-0"	128	134

82W" Girder		
Girder Spacing	Single Span	2 Equal Spans
6'-0"	174*	184*
6'-6"	170*	180*
7'-0"	168*	178*
7'-6"	164*	174*
8'-0"	162*	172*
8'-6"	158*	168*
9'-0"	156*	164*
9'-6"	152	162*
10'-0"	150	158*
10'-6"	148	156*
11'-0"	144	152
11'-6"	142	150
12'-0"	140	146

Table 19.3-2
Maximum Span Length vs. Girder Spacing

* For lateral stability during lifting these girder lengths may require pick-up point locations greater than distance d (girder depth) from the ends of the girder. The designer shall assume that the pick-up points will be at the 1/10 points from the end of the girder and provide extra non-prestressed steel in the top flange, if required, and check the concrete strength near the lift location based on f'_{ci}. A note should be placed on the girder details sheet to reflect that

the girder was analyzed for a potential lift at the 1/10 point. Due to difficulty manufacturing, transporting and erecting excessively long (those marked with an asterisk) prestressed girders, consideration should be given to utilizing an extra pier to minimize use of such girders. Steel girders may be considered if the number of piers can be reduced enough to offset the higher costs associated with a steel superstructure.

19.3.8.1 Pretensioned I-Girder Standard Strand Patterns

The standard strand patterns presented in the Standard Details were developed to eliminate some of the trial and error involved in the strand pattern selection process. These standard strand patterns should be used whenever possible, with a straight strand arrangement preferred over a draped strand arrangement. The designer is responsible for ensuring that the selected strand pattern meets all LRFD requirements.

Section 19.3.3 discusses the key parts of the design procedure, and how to effectively use the standard strand patterns along with Table 19.3-1 and Table 19.3-2.

The amount of drape allowed is controlled by the girder size and the 2" clearance from center of strand to top of girder. See the appropriate Standard Girder Details for guidance on draping.

19.3.9 Precast, Prestressed Slab and Box Sections Post-Tensioned Transversely

These sections may be used for skews up to 30° with the transverse post-tensioning ducts placed along the skew. Skews over 30° are not recommended, but if absolutely required the transverse post-tensioning ducts should be placed perpendicular to the prestressed sections. Also for skews over 30° a more refined method of analysis should be used such as a two-dimensional grid analysis or a finite element analysis.

WisDOT policy item:

These sections may be used on all off-system bridges and for on-system bridges with ADT ≤ 300. The maximum skew for these types of bridges shall be 30°. Variations to these requirements require prior written approval by the WisDOT BOS Development Section.

Details for transverse post-tensioning are shown on the Standard for Prestressed Slab and Box Girder Sections as well as Prestressed Slab and Box Girder Details. Post-tensioning ducts shall be placed along the skew. Each post-tensioning duct contains three ½" diameter strands which produce a total post-tensioning force per duct of 86.7 kips. Post-tensioning ducts are located at each end of the beams (slab or box section), at the ¼ point and the ¾ point of the beams, and at 10-foot maximum spacing between the ¼ and ¾ points.

Precast slab or box sections are subject to high chloride ion exposure because of longitudinal cracking that sometimes occurs between the boxes or from drainage on the fascia girders when an open steel railing system is used. To reduce permeability the concrete mix is required to contain fly ash as stated in 503.2.2 of the Standard Specifications except that the amount of portland cement replaced with fly ash shall be in a range of 20 to 25 percent. Also an entrained air content of 8% air, +/- 1.5% is required.

When these sections are in contact with water for 5-year flood events or less, the sections must be cast solid for long term durability. When these sections are in contact with water for the 100-year flood event or less, any voids in the section must be cast with a non-water-absorbing material.

Table 19.3-3 provides approximate span limitations for pretensioned slab and box sections as a function of section depth and roadway width. It also gives the section properties associated with these members. Criteria for developing these tables are shown below Table 19.3-3.

19.3.9.1 Available Slab and Box Sections and Maximum Span Lengths

Precasters have forms available to make six precast pre-stressed box sections ranging in depth from 12” to 42”. Each section can be made in widths of 36” and 48”, but 48” is more efficient and is the preferred width. Typical box section information is shown in the Standard Details.

Table 19.3-3 shows available section depths and section properties and maximum span length. The maximum span lengths are based on 21, 0.6” diameter strands (18 for 12” section) and HL93 loading. All sections have voids except the 12” deep section.

	Section No.	Section Depth (inches)	Section Area, A, (in^2)	Moment of Inertia, I, (in^4)	Section Modulus, S, (in^3)	Torsional Inertia, J, (in^4)	Max. Span (ft)
3’-0” Section Width	1	12	432	5,184	864	16,796	24
	2	17	435	14,036	1,651	26,110	44
	3	21	475	25,012	2,382	43,161	52
	4	27	548	49,417	3,660	73,829	64
	5	33	608	83,434	5,057	109,192	72
	6	42	698	155,317	7,396	168,668	82
4’-0” Section Width	1	12	576	6,912	1,152	23,419	24
	2	17	555	18,606	2,189	40,962	44
	3	21	595	32,942	3,137	68,601	50
	4	27	668	64,187	4,755	119,322	64
	5	33	728	107,204	6,497	178,965	76
	6	42	818	196,637	9,364	281,253	92

Table 19.3-3
Box Girder Section Properties and Maximum Span Length

Table based on:

- HL93 loading and AASHTO LRFD Bridge Design Specifications

- Interior girder of a simple span structure
- f'_c = 5 ksi and f'_{ci} = 4.25 ksi
- 0.5 or 0.6” dia., low relaxation prestressing strands at $0.75f'_s$
- f'_s = 270.0 ksi
- 2” min. concrete overlay (which doesn’t contribute to stiffness of section)
- Assumed M rail weight distributed evenly to all girder sections
- 30° skew used to compute diaphragm weight
- 1 ½” of mortar between sections
- Post-tensioning diaphragms located as stated in 19.3.9
- 30’-0” minimum clear bridge width (ten 3’-0” sections, eight 4’-0” sections)

19.3.9.2 Overlays

There are three types of overlays that can be used on these structures.

1. Concrete Overlay, Grade E or C
2. Asphaltic Overlay with Waterproofing Membrane
3. Modified Mix Asphalt

19.3.9.3 Mortar Between Precast, Prestressed Slab and Box Sections

These sections are typically set 1 ½” apart and the space between sections is filled with a mortar mix prior to post-tensioning the sections transversely. Post-tensioning is not allowed until the mortar has cured for at least 48 hours.

19.4 Field Adjustments of Pretensioning Force

When strands are tensioned in open or unheated areas during cold weather they are subject to loss due to change in temperature. This loss can be compensated for by noting the change in temperature of the strands between tensioning and initial set of the concrete. For purposes of uniformity the strand temperature at initial concrete set is taken as 80°F.

Minor changes in temperature have negligible effects on the prestress force, therefore only at strand temperatures of 50°F and lower are increases in the tensioning force made.

Since plan prestress forces are based on 75% of the ultimate for low relaxation strands it is necessary to utilize the AASHTO allowable of temporarily overstressing up to 80% to provide for the losses associated with fabrication.

The following example outlines these losses and shows the elongation computations which are used in conjunction with jack pressure gages to control the tensioning of the strands.

Computation for Field Adjustment of Prestress Force

Known:

22 - 1/2", 7 wire low relaxation strands, A_{ps} = 0.1531 in^2

P_{pj} = 710.2 kips (jacking force from plan)

T_1 = 40°F (air temperature at strand tensioning)

T_2 = 80°F (concrete temperature at initial set)

L = 300' = 3,600" (distance from anchorage to reference point)

L_1 = 240' = 2,880" (length of cast segment)

E_p = 29,000 ksi (of prestressing tendons, sample tested from each spool)

C = 0.0000065 (coefficient of thermal expansion for steel, per degree F.)

COMPUTE:

jacking force per strand = P_{pj} = 710.2/22 = 32.3 kips

DL_1 = PL/AE = 32.3 x 3600/(0.1531 x 29,000) = 26.1"

Initial Load of 1.5 Kips to set the strands

DL_2 = 1.5 x 3600/(0.1531 x 29000) = 1.22"

DL_3 = Slippage in Strand Anchors = 0.45" (Past Experience)

DL_4 = Movement in Anchoring Abutments = 0.25" (Past Experience)

Table of Contents

24.1 Introduction 5
24.1.1 Types of Steel Girder Structures 5
24.1.2 Structural Action of Steel Girder Structures 5
24.1.3 Fundamental Concepts of Steel I-Girders 5
24.2 Materials 11
24.2.1 Bars and Plates 12
24.2.2 Rolled Sections 12
24.2.3 Threaded Fasteners 12
24.2.3.1 Bolted Connections 13
24.2.4 Quantity Determination 14
24.3 Design Specification and Data 15
24.3.1 Specifications 15
24.3.2 Resistance 15
24.3.3 References for Horizontally Curved Structures 15
24.3.4 Design Considerations for Skewed Supports 15
24.4 Design Considerations 19
24.4.1 Design Loads 19
24.4.1.1 Dead Load 19
24.4.1.2 Traffic Live Load 20
24.4.1.3 Pedestrian Live Load 20
24.4.1.4 Temperature 20
24.4.1.5 Wind 20
24.4.2 Minimum Depth-to-Span Ratio 20
24.4.3 Live Load Deflections 21
24.4.4 Uplift and Pouring Diagram 21
24.4.5 Bracing 22
24.4.5.1 Intermediate Diaphragms and Cross Frames 22
24.4.5.2 End Diaphragms 24
24.4.5.3 Lower Lateral Bracing 24
24.4.6 Girder Selection 24
24.4.6.1 Rolled Girders 24
24.4.6.2 Plate Girders 25
24.4.7 Welding 27

24.4.8 Camber and Blocking 31
24.4.9 Expansion Hinges 32
24.5 Repetitive Loading and Toughness Considerations 33
24.5.1 Fatigue Strength 33
24.5.2 Charpy V-Notch Impact Requirements 34
24.5.3 Non-Redundant Type Structures 34
24.6 Design Approach - Steps in Design 36
24.6.1 Obtain Design Criteria 36
24.6.2 Select Trial Girder Section 37
24.6.3 Compute Section Properties 38
24.6.4 Compute Dead Load Effects 39
24.6.5 Compute Live Load Effects 39
24.6.6 Combine Load Effects 40
24.6.7 Check Section Property Limits 40
24.6.8 Compute Plastic Moment Capacity 41
24.6.9 Determine If Section is Compact or Noncompact 41
24.6.10 Design for Flexure – Strength Limit State 41
24.6.11 Design for Shear 41
24.6.12 Design Transverse Intermediate Stiffeners and/or Longitudinal Stiffeners 42
24.6.13 Design for Flexure – Fatigue and Fracture 42
24.6.14 Design for Flexure – Service Limit State 42
24.6.15 Design for Flexure – Constructibility Check 42
24.6.16 Check Wind Effects on Girder Flanges 43
24.6.17 Draw Schematic of Final Steel Girder Design 43
24.6.18 Design Bolted Field Splices 43
24.6.19 Design Shear Connectors 43
24.6.20 Design Bearing Stiffeners 43
24.6.21 Design Welded Connections 43
24.6.22 Design Diaphragms, Cross-Frames and Lateral Bracing 44
24.6.23 Determine Deflections, Camber, and Elevations 44
24.7 Composite Design 45
24.7.1 Composite Action 45
24.7.2 Values of n for Composite Design 45
24.7.3 Composite Section Properties 46

24.7.4 Computation of Stresses 46
24.7.4.1 Non-composite Stresses 46
24.7.4.2 Composite Stresses 46
24.7.5 Shear Connectors 47
24.7.6 Continuity Reinforcement 48
24.8 Field Splices 50
24.8.1 Location of Field Splices 50
24.8.2 Splice Material 50
24.8.3 Design 50
24.8.3.1 Obtain Design Criteria 50
24.8.3.1.1 Section Properties Used to Compute Stresses 50
24.8.3.1.2 Constructability 51
24.8.3.2 Compute Flange Splice Design Loads 52
24.8.3.2.1 Factored Loads 52
24.8.3.2.2 Section Properties 52
24.8.3.2.3 Factored Stresses 52
24.8.3.2.4 Controlling Flange 53
24.8.3.2.5 Flange Splice Design Forces 53
24.8.3.3 Design Flange Splice Plates 53
24.8.3.3.1 Yielding and Fracture of Splice Plates 54
24.8.3.3.2 Block Shear 54
24.8.3.3.3 Net Section Fracture 56
24.8.3.3.4 Fatigue of Splice Plates 56
24.8.3.3.5 Control of Permanent Deformation 56
24.8.3.4 Design Flange Splice Bolts 56
24.8.3.4.1 Shear Resistance 56
24.8.3.4.2 Slip Resistance 57
24.8.3.4.3 Bolt Spacing 57
24.8.3.4.4 Bolt Edge Distance 57
24.8.3.4.5 Bearing at Bolt Holes 57
24.8.3.5 Compute Web Splice Design Loads 57
24.8.3.5.1 Girder Shear Forces at the Splice Location 58
24.8.3.5.2 Web Moments and Horizontal Force Resultant 58
24.8.3.6 Design Web Splice Plates 59

24.8.3.6.1 Shear Yielding of Splice Plates 60
24.8.3.6.2 Fracture and Block Shear Rupture of the Web Splice Plates 60
24.8.3.6.3 Flexural Yielding of Splice Plates 61
24.8.3.6.4 Fatigue of Splice Plates 61
24.8.3.7 Design Web Splice Bolts 61
24.8.3.7.1 Shear in Web Splice Bolts 61
24.8.3.7.2 Bearing Resistance at Bolt Holes 62
24.8.3.8 Schematic of Final Splice Configuration 63
24.9 Bearing Stiffeners 65
24.9.1 Plate Girders 65
24.9.2 Rolled Beams 65
24.9.3 Design 65
24.9.3.1 Projecting Width 65
24.9.3.2 Bearing Resistance 66
24.9.3.3 Axial Resistance 67
24.9.3.4 Effective Column Section 67
24.10 Transverse Intermediate Stiffeners 69
24.10.1 Proportions 70
24.10.2 Moment of Inertia 70
24.11 Longitudinal Stiffeners 73
24.11.1 Projecting Width 74
24.11.2 Moment of Inertia 74
24.11.3 Radius of Gyration 75
24.12 Construction 77
24.12.1 Web Buckling 78
24.12.2 Deck Placement Analysis 79
24.13 Painting 86
24.14 Floor Systems 87
24.15 Box Girders 88
24.16 Design Example 90

24.4.6.2 Plate Girders

Basic cross-section proportion limits for flanges of steel I-girders are specified in **LRFD [6.10.2.2]**. The limits apply to both tension and compression flanges. The minimum width of flanges, b_f, is specified as:

$$b_f \geq D/6$$

Where:

D = Web depth

This limit is a lower limit, and flange widths should not be set based on this limit. Practical size flanges should easily satisfy this limitation based on satisfaction of other design criteria. Fabricators prefer that flange widths never be less than 12” to prevent distortion and cupping of the flanges during welding, which sets a practical lower limit.

Composite design has led to a significant reduction in the size of compression flanges in regions of positive flexure as economical composite girders normally have smaller top flanges than bottom flanges. In regions of positive flexure during deck placement, more than half the web is typically in compression. As a result, maximum moments generated during the deck-casting sequence, coupled with top compression flanges that are too narrow, can lead to out-of-plane distortions of the compression flanges and web during construction. The following relationship from **LRFD [C6.10.3.4]** is a suggested guideline on the minimum top compression flange width, b_{fc}, that should be provided in these regions to help minimize potential problems in these cases:

$$b_{fc} \geq L/85$$

Where:

L = Length of the girder shipping piece

Satisfaction of this simple guideline can also help ensure that individual field sections will be stable for handling both in the fabrication shop and in the field. Adherence to this guideline can also facilitate erection without any required special stiffening trusses or falsework. It is recommended that the above two equations be used to establish a minimum required top-flange width in regions of positive flexure in composite girders.

As a practical matter, fabricators order flange material from wide plate, typically between 72” and 96” wide. They either weld the shop splices in the individual flanges after cutting them to width or they weld the different thickness plates together to form one wide plate and then strip the individual flanges. In the latter case, the individual flange widths must be kept constant within an individual shipping piece, which is preferred. Changing of flange widths at shop splices should be avoided if at all possible. Stripping the individual flanges from a single wide plate allows for fewer weld starts and stops and results in only one set of run-on and run-off tabs. It is estimated that up to 35% of the labor required to join the flanges can be saved by specifying changes in thickness rather than width within a field section.

A fabricator will generally order plate with additional width and length for cutting tolerance, sweep tolerance and waste. Waste is a particular concern when horizontally curved flanges are cut curved. The engineer should give some consideration as to how the material might be ordered and spliced; a fabricator can always be consulted for assistance. Flanges should be sized (including width, thickness and length) so that plates can be ordered and spliced with minimal waste. *AASHTO/NSBA Steel Bridge Collaboration*, "Guidelines for Design for Constructibility, G12.1" (2003) is a free publication available from AASHTO which contains some specific recommendations and illustrative examples related to this issue.

The following additional guidelines are used for plate girder design and detailing:

1. Maximum change in flange plate thickness is 1" and preferably less.

2. The thinner plate is not less than 1/2 the thickness of the thicker flange plate.

3. Plate thicknesses are given in the following increments:

4. 1/16" up to 1"

5. 1/8" between 1" and 2"

6. 1/4" above 2"

7. Minimum plate size on the top flange of a composite section in the positive moment region is variable depending on the depth of web, but not less than 12" x ¾" for web depths less than or equal to 66" and 14" x ¾" for web depths greater than 66". Thinner plates become wavy and require extra labor costs to straighten within tolerances.

8. For plate girder flange widths, use 2" increments.

9. For plate girder web depths, use 3" increments.

10. Changes in plate widths or depths are to follow recommended standard transition distances and/or radii. The minimum size flange plates of 16" x 1 1/2" at the point of maximum negative moment and 16" x 1" for the bottom flange at the point of maximum positive moment are recommended for use on plate girders. The use of a minimum flange width on plate girders is necessary to maintain adequate stiffness in the girder so it can be fabricated, transported and erected. Deeper web plates with small flanges may use less steel, but they create problems during fabrication and construction. However, flange sizes on plate girders with web depths 48" or less may be smaller.

11. Flange plate sizes are detailed based on recommended maximum span lengths given in Table 24.4-1 for parallel flanged girders. The most economical girder is generally the one having the least total weight but is determined by comparing material costs and welding costs for added stiffener details. Plates over 60'-90' (depending on thickness and material) are difficult to obtain, and butt splices are detailed to limit flange plates to these lengths or less. It is better to detail more flange butt splices than required and leave the decision to utilize them up to the fabricator. All butt splices are made optional to the extent of available lengths, and payment is based on

the plate sizes shown on the plans. As previously described, detail flange plates to the same width and vary the thicknesses. This allows easier fabrication when cutting plate widths. Change widths, if necessary, only at field splices.

12. Minimum web thickness is 7/16" for girder depths less than or equal to 60". An economical web thickness usually has a few transverse stiffeners. Refer to 24.10 for transverse stiffener requirements. Due to fatigue problems, use of longitudinal stiffeners for plate girders is not encouraged.

24.4.7 Welding

Welding design details shall conform to current requirements of *Bridge Welding Code: AASHTO/AWS-D1.5*. Weld details are not shown on the plans but are specified by using standard symbols as given on Figure 24.4-2 and Figure 24.4-3. Weld sizes are based on the size required due to stress or the minimum size for plate thicknesses being connected.

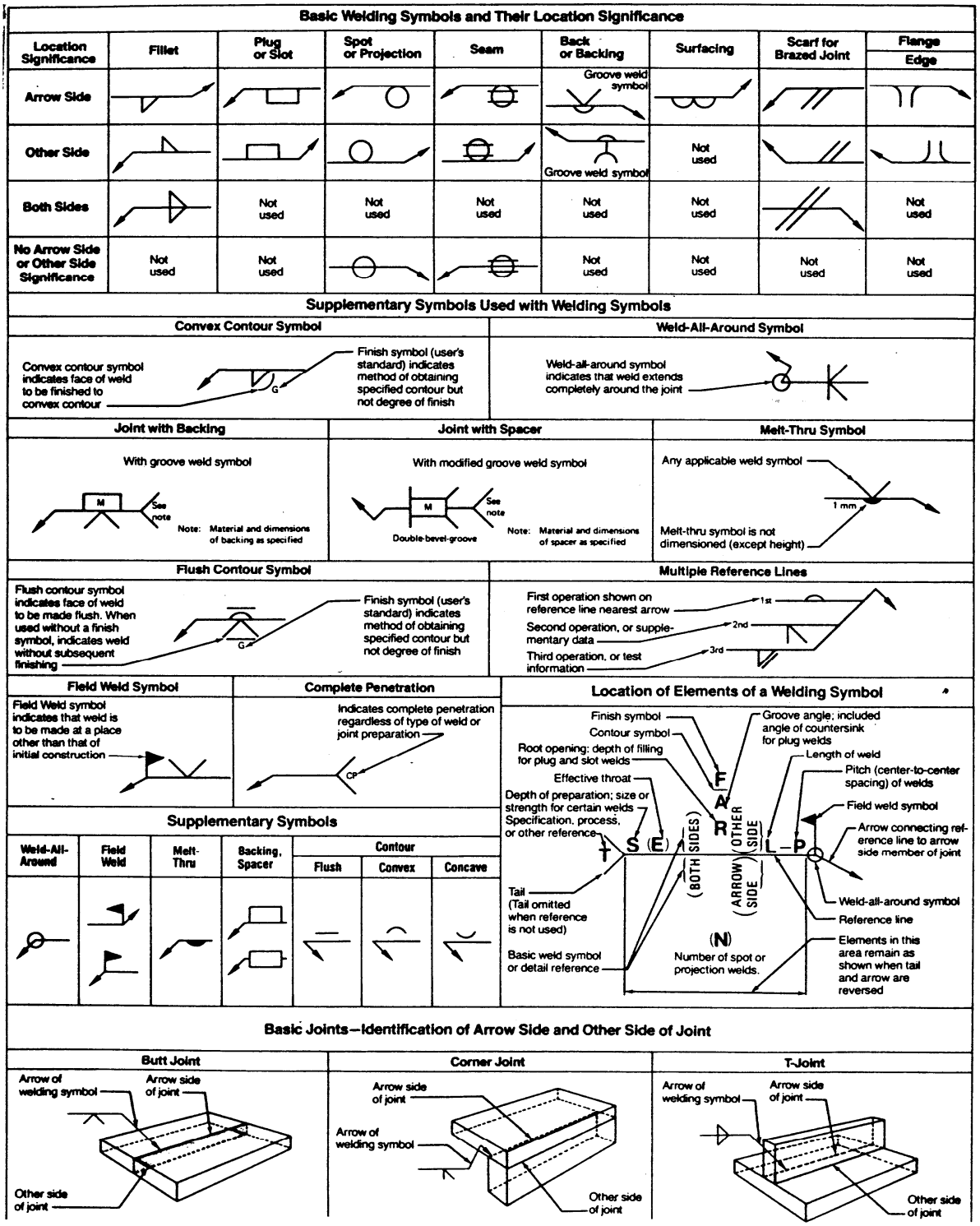

Figure 24.4-2
Basic Welding Symbols

24.6.4 Compute Dead Load Effects

The girder must be designed to resist the dead load effects, as well as the other load effects. Various types of dead loads and their corresponding load factors are described in 17.2.4 and 17.2.5.

For the steel girder, the dead load per unit length varies due to the change in plate sizes. The moments and shears due to the weight of the steel girder can be computed using analysis software. Since the actual plate sizes are entered as input, the moments and shears are computed based on the actual, varying plate sizes.

Distribution of dead load to the girders is described in 17.2.8.

The stiffness of the composite section is used for determining live load and composite dead load moments and shears. When computing live load values, the composite section is based on n, and when computing composite dead load values, the composite section is based on 3n. Non-composite dead load moments and shears are computed based on the stiffness of the non-composite steel section.

24.6.5 Compute Live Load Effects

The girder must also be designed to resist the live load effects. The live load consists of an HL-93 loading. Similar to the dead load, the live load moments and shears for an HL-93 loading can be obtained from an analysis computer program.

For all limit states other than fatigue and fracture, the dynamic load allowance, IM, is 0.33. However, it is important to note that the dynamic load allowance is applied only to the design truck or tandem. The dynamic load allowance is not applied to pedestrian loads or to the design lane load.

Live load distribution factors must be computed as specified in **LRFD [4.6.2.2]**, as shown in Table 24.6-1.

WisDOT Policy Item

For beams with variable moment of inertia, the longitudinal stiffness parameter, Kg (**LRFD [4.6.2.2.1-1]**), shall be based on a weighted average of properties, over the entire length of the bridge.

In addition to computing the live load distribution factors, their ranges of applicability must also be checked. If they are not satisfied, then conservative assumptions must be made based on sound engineering judgment. Additional information about distribution of live load to the girders is presented in 17.2.8.

For skewed bridges, WisDOT does not consider skew correction factors for moment.

Live Load Distribution Factor	AASHTO LRFD Reference
Moments in Interior Beams	**LRFD [Table 4.6.2.2.2b-1]**
Moments in Exterior Beams	**LRFD [C4.6.2.2.2d]** and **LRFD [Table 4.6.2.2.2d-1]**
Moment Reduction for Skew	Not Applicable for WisDOT
Shear in Interior Beams	**LRFD [Table 4.6.2.2.3a-1]**
Shear in Exterior Beams	**LRFD [C4.6.2.2.2d]** and **LRFD [Table 4.6.2.2.3b-1]**
Shear Correction for Skew	**LRFD [Table 4.6.2.2.3c-1]**

Table 24.6-1
Live Load Distribution Factors

24.6.6 Combine Load Effects

The next step is to combine the load effects for each of the applicable limit states. Load effects are combined in accordance with **LRFD [Table 3.4.1-1]** and **LRFD [Table 3.4.1-2]**.

After combining load effects, the next ten design steps consist of verifying the structural adequacy of the steel girder using appropriate sections of *AASHTO LRFD*. For steel girder designs, specification checks are generally performed at the following locations:

- Span tenth points
- Locations of plate transitions
- Locations of stiffener spacing transitions

However, it should be noted that the maximum moment within a span may not necessarily occur at any of the above locations.

Check the loads of the interior and exterior members to see if one or both members are to be designed.

24.6.7 Check Section Property Limits

Several checks are required to ensure that the proportions of the girder section are within specified limits, as presented in **LRFD [6.10.2]**. The first section proportion check relates to the web slenderness, and the second set of section proportion checks relate to the general proportions of the section.

24.7 Composite Design

24.7.1 Composite Action

Composite action is present in steel girder superstructures when the steel beams or girders feature shear connectors which are embedded within the concrete slab. The shear connectors prevent slip and vertical separation between the bottom of the slab and the top of the steel member. Unless temporary shoring is used, the steel members deflect under the dead load of the wet concrete before the shear connectors become effective. However, since temporary shoring is not used in Wisconsin, composite action applies only to live loads and to portions of dead load placed after the concrete deck has hardened.

In the positive moment region, the concrete deck acts in compression and the composite section includes the slab concrete. However, in the negative moment region, the concrete deck acts in tension and the composite section includes the bar steel reinforcement in the slab.

As previously described, for LRFD, Wisconsin places shear connectors in both the positive and negative moment regions of continuous steel girder bridges, and both regions are considered composite in analysis and design computations. Negative flexure concrete deck reinforcement is considered in the section property calculations. Do not, however, add shear studs in the negative moment region if none exist on rehabilitation projects. Likewise, do not add additional studs in the positive moment region if shear connectors are provided and were designed for shear (not slab anchors on approx. 4'-0" spacing). If adequate shear connector embedment into the deck is not achieved, additional reinforcement should be provided as per Figure 17.5-1.

24.7.2 Values of n for Composite Design

The effective composite concrete slab is converted to an equivalent steel area by dividing by n. For f'_c = 4 ksi, use n = 8.

f'_c	=	Minimum ultimate compressive strength of the concrete slab at 28 days
n	=	Ratio of modulus of elasticity of steel to that of concrete

The actual calculation of creep stresses in composite girders is theoretically complex and not necessary for the design of composite girders. Instead, a simple approach has been adopted for design in which a modular ratio appropriate to the duration of the load is used to compute the corresponding elastic section properties. As specified in **LRFD [6.10.1.1.1b]**, for transient loads applied to the composite section, the so-called ″short-term″ modular ratio, n, is used. However, for permanent loads applied to the composite section, the so-called ″long-term″ modular ratio, 3n, is used. The short-term modular ratio is based on the initial tangent modulus, E_c, of the concrete, while the long-term modular ratio is based on an effective apparent modulus, E_c/k, to account for the effects of creep. In U.S. practice, a value of k equal to 3 has been accepted as a reasonable value.

24.7.3 Composite Section Properties

The minimum effective slab thickness is equal to the nominal slab thickness minus 1/2" for wearing surface. The maximum effective slab width is defined in **LRFD [4.6.2.6]**.

24.7.4 Computation of Stresses

24.7.4.1 Non-composite Stresses

For non-composite sections, flexural stresses are computed using only non-composite (steel-only) section properties, as follows:

$$f_b = \frac{\text{DLM (DC1)}}{\text{S(steel only)}} + \frac{\text{DLM (DC2 \& DW)}}{\text{S(steel only)}} + \frac{\text{LLM (Traffic)}}{\text{S(steel only)}} + \frac{\text{LLM (Pedestrian)}}{\text{S(steel only)}}$$

24.7.4.2 Composite Stresses

For composite sections, flexural stresses in the steel girder subjected to positive flexure are computed using appropriate non-composite (steel-only) and composite section properties, as follows:

$$f_b = \frac{\text{DLM (DC1)}}{\text{S(steel only)}} + \frac{\text{DLM (DC2 \& DW)}}{\text{S(composite,3n)}} + \frac{\text{LLM (Traffic)}}{\text{S(composite,n)}} + \frac{\text{LLM (Pedestrian)}}{\text{S(composite,n)}}$$

For composite sections, flexural stresses in the concrete deck subjected to positive flexure are computed as follows:

$$f_b = \frac{\text{DLM(DC2 + DW)}}{\text{S(composite,n)}} + \frac{\text{LLM(Traffic)}}{\text{S(composite,n)}} + \frac{\text{LLM(Pedestrian)}}{\text{S(Composite,n)}}$$

Where:

f_b	=	Computed steel flexural stress
DLM	=	Dead lead moment
LLM	=	Live load moment
S	=	Elastic section modulus
DC1	=	DC dead load resisted by the steel section only (for example, steel girder, concrete deck, concrete haunch, cross-frames and stiffeners)
DC2	=	DC dead load resisted by the composite section (for example, concrete parapets)
DW	=	Dead load due to future wearing surface and utilities

24.7.5 Shear Connectors

Refer to Standard for Plate Girder Details for shear connector details. Three shop or field welded 7/8" diameter studs at a length of 5" are placed on the top flange. The studs are equally spaced with a minimum clearance of 1 1/2" from the edge of the flange. On girders having thicker haunches where stud embedment is less than 2" into the slab, longer studs should be used to obtain the minimum embedment of 2".

Connectors which fall on the flange field splice plates should be repositioned near the ends of the splice plate. The maximum spacing of shear connectors is 2'. Connector spacings should begin a minimum of 9" from the centerline of abutments.

To determine the locations of shear connectors along the length of the girder, two general requirements must be satisfied:

- Spacing (or pitch) requirements governed by fatigue, as presented in **LRFD [6.10.10.1]**
- Number of connector requirements governed by strength, as presented in **LRFD [6.10.10.4]**

For the fatigue limit state, the pitch, p, of the shear connectors must satisfy the following equation:

$$p \leq \frac{nZ_r}{V_{sr}}$$

Where:

N	=	Number of shear connectors in a cross section
V_{sr}	=	Horizontal fatigue shear range per unit length (kips/in.)
Z_r	=	Shear fatigue resistance of an individual shear connector determined as specified in **LRFD [6.10.10.2]** (kips)

When computing the value for V_{sr}, the maximum value of composite moment of inertia in the span can be used.

For the strength limit state, the minimum number of required shear connectors, n, is computed for a given region according to the following equation:

$$n = \frac{P}{Q_r}$$

Where:

P	=	Total nominal shear force determined as specified in **LRFD [6.10.10.4.2]**

(kips)

Q_r = Factored shear resistance of one shear connector (kips)

The given regions over which the required number of shear connectors is distributed are defined based on the point of maximum moment due to live load plus dynamic load allowance. This value is used because it applies to the composite section and is easier to locate than a maximum of the sum of all the moments acting on the composite section.

In most cases, the connector spacing (using three connectors per row) based on fatigue requirements is more than adequate for the strength design requirements. However for relatively long spans, additional shear connectors may be required to satisfy the strength design requirements.

In addition to the above general requirements, special shear connector requirements at points of permanent load contraflexure are presented in **LRFD [6.10.10.3]**.

Additional information and equations used for LRFD design of shear connectors are presented in **LRFD [6.10.10]**. In addition, a design example for shear connectors is also provided in this *Bridge Manual*.

24.7.6 Continuity Reinforcement

For continuous steel girder bridges, continuity reinforcement in the concrete deck must be considered in regions of negative flexure, as specified in **LRFD [6.10.1.7]**. Continuity reinforcement consisting of small bars with close spacing is intended to control concrete deck cracking.

If the longitudinal tensile stress in the concrete deck due to either the factored construction loads or the Service II load combination exceeds ϕf_r, then the following continuity reinforcement requirements must be satisfied:

- The total cross-sectional area of the longitudinal reinforcement in the deck shall be greater than or equal to one percent of the total cross-sectional area of the concrete deck.
- The required reinforcement shall be placed in two layers uniformly distributed across the deck width, with two-thirds being in the top layer and one-third in the bottom layer.
- The specified minimum yield strength, fy, of the reinforcing steel shall not be less than 60 ksi.
- The size of the reinforcement bars shall not exceed No. 6 bars.
- The spacing of the reinforcement bars shall not exceed 12 inches.

Tables 17.5-3 and 17.5-4 meet the criteria specified above.

In computing ϕf_r, f_r shall be taken as the modulus of rupture of the concrete (see **LRFD [5.4.2.6]**) and ϕ shall be taken as 0.90, which is the appropriate resistance factor for concrete in tension (see **LRFD [5.5.4.2.1]**). The longitudinal stresses in the concrete deck are computed as specified in **LRFD [6.10.1.1.1d]**. Superimposed dead loads and live loads are considered to be resisted by the composite section using the short-term modular ratio, n. Non-composite dead loads are supported by the girders alone.

Terminate the continuity reinforcement at the point of non-composite dead load contraflexure plus a development length. The bars are lapped to No. 4 bars.

For non-composite slabs in the negative moment region (on rehabilitation projects), extend the longitudinal reinforcement in Tables 17.5-3 and 17.5-4 a development length beyond the first shear connectors.

24.8 Field Splices

24.8.1 Location of Field Splices

Field splices shall be placed at the following locations whenever it is practical:

- At or near a point of dead load contraflexure for continuous spans
- Such that the maximum rolling length of the flange plates is not exceeded, thus eliminating one or more butt splices
- At a point where the fatigue in the net section of the base metal is minimized
- Such that section lengths between splices are limited to 120', unless special conditions govern

24.8.2 Splice Material

For homogeneous girders, the splice material is the same as the members being spliced. Generally, 3/4" diameter high strength A325 bolted friction-type connectors are used unless the proportions of the structure warrant larger diameter bolts.

24.8.3 Design

The following is a general description of the basic steps required for field splice design. These procedures and the accompanying equations are described in greater detail in **LRFD [6.13.6]**.

24.8.3.1 Obtain Design Criteria

The first design step is to identify the appropriate design criteria. This includes defining material properties, identifying relevant superstructure information and determining the splice location based on the criteria presented in 24.8.1.

Resistance factors used for field splice design are as presented in 17.2.6.

When calculating the nominal slip resistance of a bolt in a slip-critical connection, the value of the surface condition factor, K_s, shall be taken as follows:

- For structures that are to be painted, use Ks = 0.33.
- For unpainted, blast-cleaned steel or steel with organic zinc paint, use Ks = 0.50.

Where a section changes at a splice, the smaller of the two connected sections should be used in the design, as specified in **LRFD [6.13.6.1.1]**.

24.8.3.1.1 Section Properties Used to Compute Stresses

The section properties used to compute stresses are described in **LRFD [6.10.1.1.1]**.

The modular ratio, n, is computed as follows:

$$n := \frac{E_s}{E_c}$$

Where:

E_s = Modulus of elasticity of steel (ksi)

E_c = Modulus of elasticity of concrete (ksi)

$E_s = 29000$ ksi **LRFD [6.4.1]**

$E_c := 33000 \cdot K_1 \cdot \left(w_c^{1.5}\right) \cdot \sqrt{f'_c}$ **LRFD [5.4.2.4]**

Where:

K_1 = Correction factor for source of aggregate to be taken as 1.0 unless determined by physical test, and as approved by the authority of jurisdiction. For WisDOT, K_1 = 1.0.

w_c = Unit weight of concrete (kcf)

f'_c = Specified compressive strength of concrete (ksi)

$w_c = 0.150$ kcf **LRFD [Table 3.5.1-1 & C3.5.1]**

$f'_c = 4.0$ ksi **LRFD [Table 5.4.2.1-1 & 5.4.2.1]**

$K_1 := 1$ **LRFD [5.4.2.4]**

$E_c := 33000 \cdot K_1 \cdot \left(w_c^{1.5}\right) \cdot \sqrt{f'_c}$ $\boxed{E_c = 3834}$ ksi

$n := \frac{E_s}{E_c}$ $\boxed{n = 7.6}$ **LRFD [6.10.1.1.1b]**

Therefore, use: $n := 8$

The effective flange width is computed as follows (Chapter 17.2.11):

For interior beams, the effective flange width is taken as the least of:

1. 12.0 times the average thickness of the slab, plus the greater of web thickness or one-half the width of the top flange of the girder:

This is no longer a valid criteria, however it has been left in place to avoid changing the entire example at this time.

$$W_{eff1} := \frac{12 \cdot t_s + \frac{14}{2}}{12}$$ $W_{eff1} = 9.08$ ft

2. The average spacing of adjacent beams:

$W_{eff2} := S$ $W_{eff2} = 9.75$ ft

Therefore, the effective flange width is:

$W_{effflange} := \min(W_{eff1}, W_{eff2})$ $W_{effflange} = 9.08$ ft

or

$W_{effflange} \cdot 12 = 109.00$ in

Based on Table 17.5-3 of Chapter 17 for a 9" deck and 9'-9" girder spacing, the top mat longitudinal continuity reinforcement bar size and spacing is #6 bars at 7.5" spacing. The area of the top mat longitudinal continuity deck reinforcing steel in the negative moment region is computed below for the effective flange width. For the section properties in Table E24-1.3-3, the location of the centroid of the top mat longitudinal reinforcement is conservatively taken as one-half the structural slab thickness or 8.5" / 2 = 4.25".

$$A_{deckreinf} := 1 \times 0.44 \cdot \frac{W_{effflange} \cdot 12}{7.5}$$ $A_{deckreinf} = 6.39$ in^2

For this design example, the slab haunch is 3.75 inches throughout the length of the bridge. That is, the bottom of the slab is located 3.75 inches above the top of the web (for construction, it is measured from the top of the top flange). For this design example, this distance is used in computing the location of the centroid of the slab. However, the area of the haunch is conservatively not considered in the section properties for this example.

Based on the trial plate sizes shown in Figure E24-1.2-1, the noncomposite and composite section properties for Region A, B, and C are computed as shown in the following tables **LRFD [6.6.1.2.1, 6.10.5.1, 6.10.4.2.1]**. The distance to the centroid is measured from the bottom of the girder.

Table of Contents

45.1 General 3
45.2 Bridge Inspections 4
45.2.1 Condition of Bridge Members 4
45.3 Load Rating Methodologies 6
45.3.1 General Assumptions 6
45.3.2 Load and Resistance Factor Rating (LRFR) Method 7
45.3.2.1 Limit States 10
45.3.2.2 Load Factors 10
45.3.2.3 Resistance Factors 11
45.3.2.4 Condition Factor: ϕ_C 11
45.3.2.5 System Factor: ϕ_S 11
45.3.2.6 Design Load Rating 12
45.3.2.6.1 Design Load Rating Live Load 12
45.3.2.7 Legal Load Rating 12
45.3.2.7.1 Legal Load Rating Live Load 12
45.3.2.7.2 Legal Load Rating Load Posting Equation 12
45.3.2.8 Permit Load Rating 13
45.3.2.8.1 Permit Load Rating Live Load 13
45.3.3 Load Factor Rating (LFR) Method 13
45.3.3.1 Live Loads 14
45.3.3.2 Load Factors 14
45.4 Bridge Posting 16
45.4.1 Posting Live Loads 20
45.4.2 Posting Signage 22
45.5 Material Strengths and Properties 23
45.5.1 Reinforcing Steel 23
45.5.2 Concrete 23
45.5.3 Prestressed Steel Strands 24
45.5.4 Structural Steel 25
45.6 Wisconsin Standard Permit Vehicle Design Check 26
45.7 Overweight Trip Permits 27
45.7.1 General Information 27

45.7.2 Annual Trip Permit Information....27
45.7.3 Single Trip Permit Information....28
45.8 Load Rating Documentation....29
45.8.1 Load Rating Summary Sheet....29
45.8.2 Load Rating on Plans....29
45.9 Standard Permit Vehicle Moments....32
45.10 References....34
45.11 Rating Examples....35

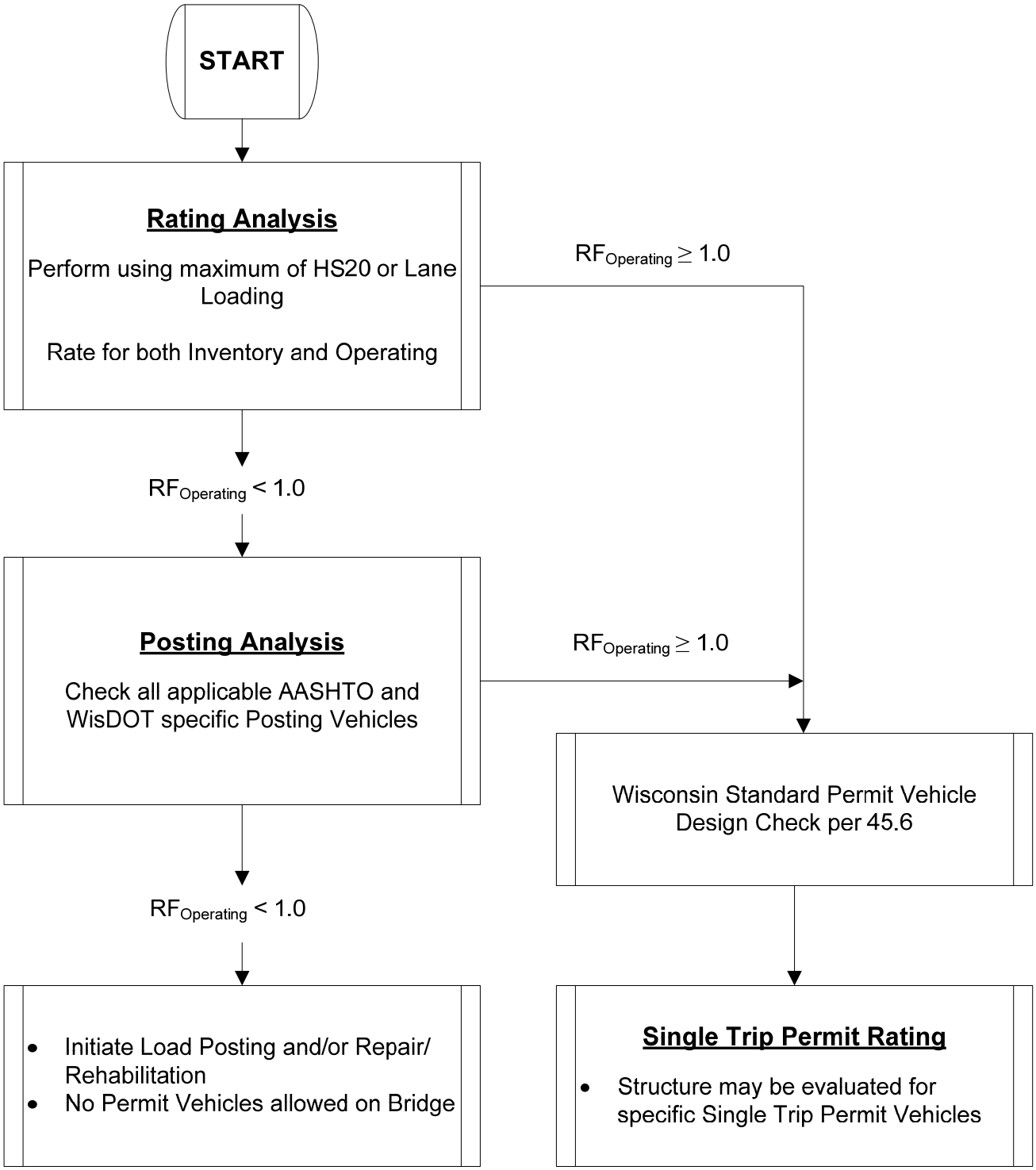

Figure 45.3-2
Load Factor Rating Flow Chart

45.4 Bridge Posting

A bridge should be capable of carrying a minimum gross live load weight of three tons at the Inventory level. Bridges not capable of carrying a minimum gross live load weight of three tons at the Operating level must be closed. When deciding whether to close or post a bridge, consider the volume of traffic, the character of traffic, the likelihood of overweight vehicles and the enforceability of weight posting.

In certain cases, a concrete bridge need not be posted for restricted loading when it has been carrying its design level traffic for an appreciable length of time and shows no distress. This general rule may apply to bridges for which details of the reinforcement are not known but it should be used with caution. In 1974, the *AASHTO Interim Specifications Bridges* made a number of significant changes in the design of reinforced concrete. Load factor design, bar steel development lengths and elimination of the old bond stress concept were some of the changes. One reason for these changes was to make sure that an overloaded concrete structure failed by yielding of the reinforcing in bending and not by a sudden concrete shear or bond failure. Thus, concrete bridges designed prior to 1974, when approaching their ultimate loading, may not exhibit a ductile failure (i.e. bending failure). However, if the load rating engineer chooses not to post, the structure shall be inspected at a interval not to exceed six months for signs of distress until such time as the bridge is either strengthened or replaced. In lieu of frequent inspections or posting, a bridge may be load tested to determine its capacity.

The State Bridge Maintenance Engineer has the authority to post a bridge and must issue the approval to post any State bridge.

WisDOT policy items:

Multiple lane distribution factors using operating load factors are used for determining bridge capacities for posting and annual permits for bridge widths 18'-0" or larger. Single lane distribution factors using operating load factors are used for bridge widths less than 18'-0" and for single trip permits.

However, for specialized annual permit vehicles in Figure 45.4-3, always use a single lane distribution factor and an operating load factor, regardless of bridge width.

A bridge is posted for the lowest restricted weight limit of the standard posting vehicles. If the RF≥1.0 for a given vehicle at the operating level, then a posting will not be required for that particular vehicle. If the RF<1.0 for a given vehicle at the operating level, then the bridge shall be posted. To calculate the capacity, in tons, on a bridge for a given posting vehicle utilizing LFR, multiply the RF by the gross vehicle weight in tons. To calculate the posting load for a bridge analyzed with LRFR, refer to 45.3.2.7.2.

Also, for State Trunk Highway Bridges, current WisDOT policy is to post structures with a Wisconsin Standard Permit Vehicle (Wis-SPV) rating of 120 kips or less utilizing a single lane distribution factor.

When the lane-type load model (see Figure 45.4-4) governs the load rating, the equivalent truck weight for use in calculating a safe load capacity for the bridge shall be taken as 40 tons as is specified in **LRFR [6.4.4.4]**.

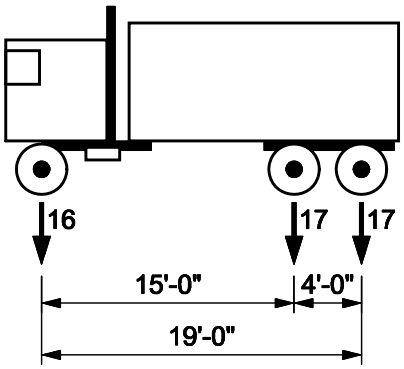

Indicated concentrations are axle loads in kips.

Type 3 Unit Weight = 50 Kips (25 tons)

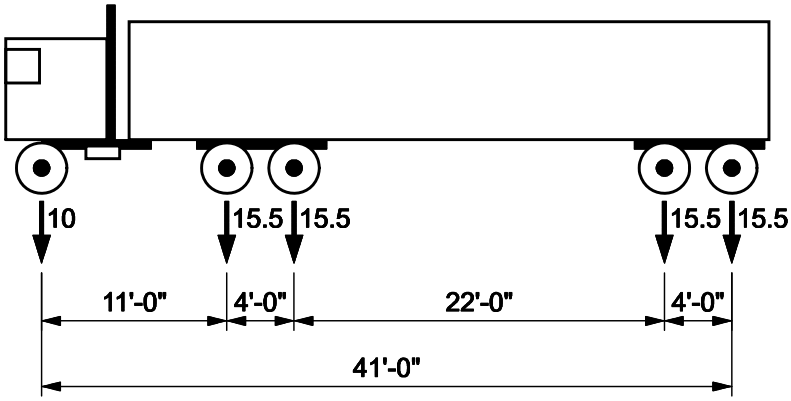

Type 3S2 Unit Weight = 72 Kips (36 tons)

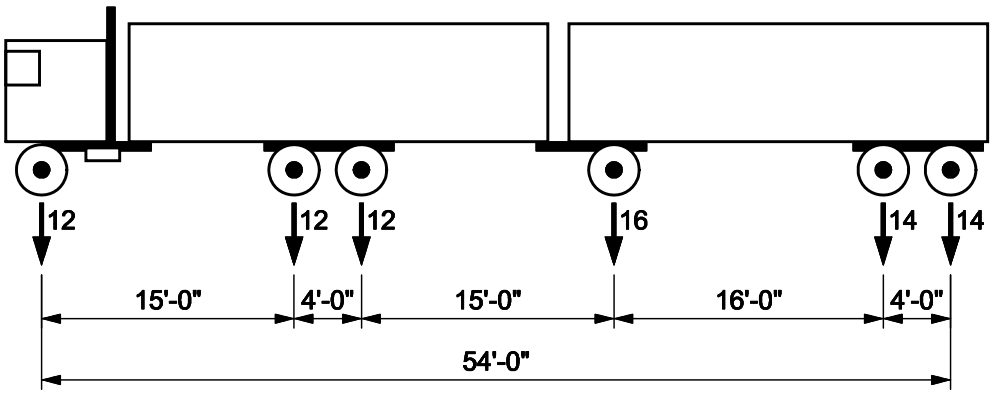

Type 3-3 Unit Weight = 80 Kips (40 tons)

Figure 45.4-1
AASHTO Commercial Vehicles

Indicated concentrations are axle loads in kips.

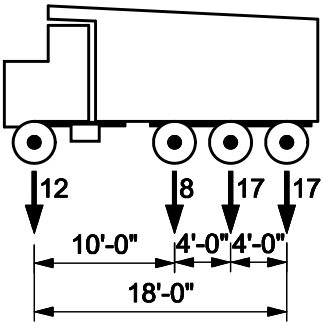

Type SU4 Unit Weight = 54 Kips (27 tons)

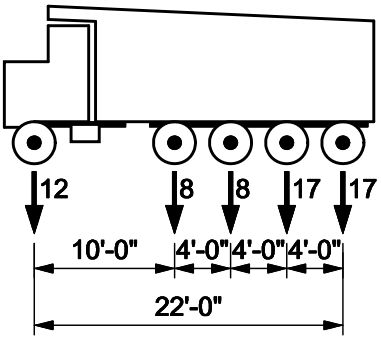

Type SU5 Unit Weight = 62 Kips (31 tons)

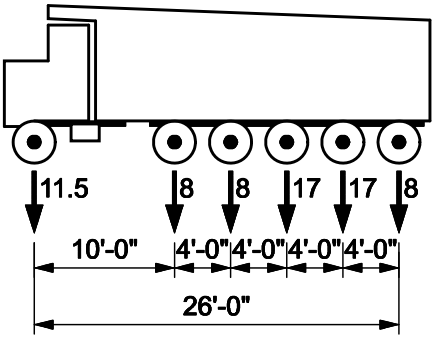

Type SU6 Unit Weight = 69.5 Kips (34.75 tons)

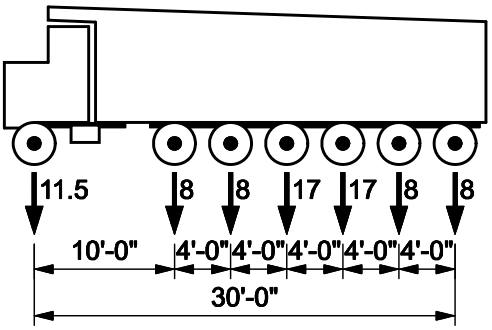

Type SU7 Unit Weight = 77.5 Kips (38.75 tons)

Figure 45.4-2
AASHTO Specialized Hauling Vehicles

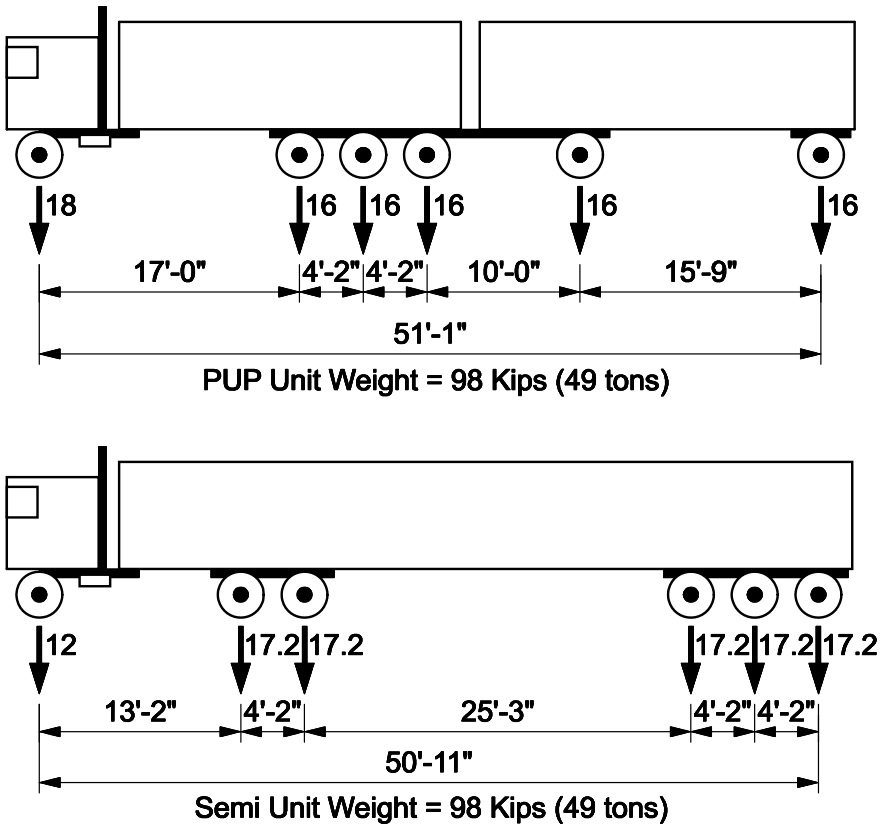

Figure 45.4-3
WisDOT Specialized Annual Permit Vehicles

45.4.1 Posting Live Loads

The live load to be used in the rating formula for posting considerations should be any of the three typical AASHTO Commercial Vehicles (Type 3, Type 3S2, Type 3-3) shown in Figure 45.4-1, any of the four AASHTO Specialized Hauling Vehicles (SU4, SU5, SU6, SU7) shown in Figure 45.4-2, the Wisconsin Standard Permit Vehicle shown in Figure 45.6-1, or in certain cases the specialized annual permit vehicles shown in Figure 45.4-3.

As stated in **LRFR [6.4.4.2.1]**, for spans up to 200', only the vehicle shall be considered present in the lane for positive moments. It is unnecessary to place more than one vehicle in a lane for spans up to 200' because the load factors provided have been modeled for this possibility. For spans 200' in length or greater, the AASHTO Type 3-3 truck multiplied by 0.75 shall be analyzed combined with a lane load as shown in Figure 45.4-4. The lane load shall be taken as 0.2 klf in each lane and shall only be applied to those portions of the span(s) where the loading effects add to the vehicle load effects.

Also, for negative moments and reactions at interior supports, a lane load of 0.2 klf combined with two AASHTO Type 3-3 trucks multiplied by 0.75 shall be used. The trucks should be heading in the same direction and should be separated by 30 ft as shown in Figure 45.4-4. There are no span length limitations for this negative moment requirement.

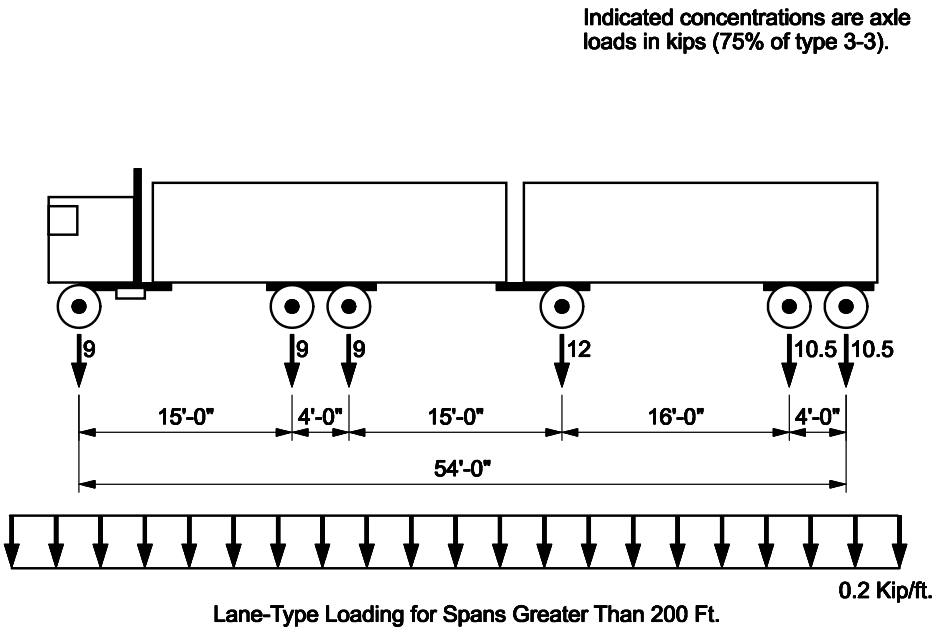

Figure 45.4-4
Lane Type Legal Load Models

45.4.2 Posting Signage

Current WisDOT policy is to post State bridges for only one tonnage capacity. Bridges which cannot carry the maximum weight for the vehicles described in 45.4.1 using Operating Rating criteria are posted with one of the standard signs, shown in Figure 45.4-5 showing the bridge capacity for the governing vehicle, which should conform to the requirements of the *Manual for Uniform Traffic Control Devices (MUTCD)*.

In the past, local bridges were occasionally posted with the signs shown in Figure 45.4-6 using the H20, Type 3 and Type 3S2 vehicles. The H20 represented the two-axle vehicle, the Type 3 represented the three-axle vehicle and the Type 3S2 represented the combination vehicle. This practice is not encouraged by WisDOT and is generally not allowed for State owned structures, except with permission from the State Bridge Engineer.

WEIGHT LIMIT 10 TONS	BRIDGE CLOSED

Figure 45.4-5
Standard Signs Used for Posting Bridges

WEIGHT LIMIT 2 AXLE VEHICLES 15 TONS 3 AXLE VEHICLES 20 TONS COMBINATION VEHICLES 30 TONS	WEIGHT LIMIT 2 AXLE VEHICLES 14 TONS 3 AXLE VEHICLES 18 TONS COMBINATION VEHICLES 28 TONS	WEIGHT LIMIT 2 AXLE VEHICLES 14 TONS 3 AXLE VEHICLES 18 TONS COMBINATION VEHICLES 28 TONS

Figure 45.4-6
Historic Load Posting Signs

45.5 Material Strengths and Properties

Material properties shall be as stated in AASHTO LRFR or as stated in this chapter. Often when rating a structure without a complete set of plans, material properties are unknown. The following section can be used as a guideline for the rating engineer when dealing with structures with unknown material properties. If necessary, material testing may be needed to analyze a structure.

45.5.1 Reinforcing Steel

The allowable unit stresses and yield strengths for reinforcing steel can be found in Table 45.3-1. When the condition of the steel is unknown, they may be used without reduction. Note that Wisconsin started to use Grade 40 bar steel about 1955-1958; this should be noted on the plans.

Reinforcing Steel Grade	Inventory Allowable (psi)	Operating Allowable (psi)	Minimum Yield Point (psi)
Unknown	18,000	25,000	33,000
Structural Grade	19,800	27,000	36,000
Grade 40 (Intermediate)	20,000	28,000	40,000
Grade 60	24,000	36,000	60,000

Table 45.5-1
Yield Strength of Reinforcing Steel

45.5.2 Concrete

The following are the maximum allowable unit stresses in concrete in pounds per square inch (see Table 45.5-2). Note that the “Year Built” column may be used if concrete strength is not available from the structure plans.

Year Built	Inventory Allowable (psi)	Operating Allowable (psi)	Compressive Strength (F'c) (psi)	Modular Ratio
Before 1959	1000	1500	2500	12
1959 and later	1400	1900	3500	10
For all non-prestressed slabs 1975 and later	1600	2400	4000	8
Prestressed girders before 1964 and all prestressed slabs	2000	3000	5000	6
1964 and later for prestressed girders	2400	3000	6000	5

Table 45.5-2
Minimum Compressive Strengths of Concrete

45.5.3 Prestressed Steel Strands

Table 45.5-3 contains values for uncoated Seven-Wire Stressed-Relieved and Low Relaxation Strands:

Year Built	Grade	Nominal Diameter of Strand (In)	Nominal Steel Area of Strand (In^2)	Yield Strength (psi)	Breaking Strength (psi)
Prior To 1963	250	$^7/_{16}$ (0.438)	0.108	213,000	250,000
Prior To 1963	250	½ (0.500)	0.144	212,500	250,000
1963 To Present	270	½ (0.500)	0.153	229,000	270,000
1973 To Present	270 Low Relaxation	½ (0.500)	0.153	242,500	270,000
1995 to Present	270 Low Relaxation	$^9/_{16}$ (0.600)	0.217	242,500	270,000

Table 45.5-3
Tensile Strength of Prestressing Strands

The "Year Built" column is for informational purposes only. The actual diameter of strand and grade should be obtained from the structure plans. If an option is given on the structure plans to use either stress relieved or low relaxation strand, or $^{7}/_{16}$" or $^{1}/_{2}$" diameter strand, consult the shop drawings for the new structure to see which option was exercised. If the shop drawings are not available, assume the option which gives the lowest operating rating was used.

45.5.4 Structural Steel

The **LRFR [Table D.6-1]** gives allowable stresses for steel based on year of construction or known type of steel. For newer bridges refer to AASHTO design specifications.

Steel Type		AASHTO Designation	ASTM Designation	Minimum Tensile Strength, Fu (psi)	Minimum Yield Strength, Fy (psi)
Unknown Steel	Built prior to 1905			52,000	26,000
	1905 to 1936			60,000	30,000
	1936 to 1963				33,000
	After 1963				36,000
Carbon Steel		M 94 (1961)	A 7 (1967)	60,000	33,000
Nickel Steel		M 96 (1961)	A 8 (1961)	90,000	55,000
Silicon Steel	up to 1-1/8" thick	M 95 (1961)	A 94	75,000	50,000
	1-1/8" to 2" thick		A 94	72,000	47,000
	2" to 4" thick		A 94 (1966)	70,000	45,000
Low Alloy Steel			A441	75,000	50,000

Table 45.5-4
Minimum Yield Strength Values for Common Steel Types

45.6 Wisconsin Standard Permit Vehicle Design Check

For any bridge design (new or rehabilitation) or bridge re-rate, the Wisconsin Standard Permit Vehicle (Wis-SPV) shall be analyzed. For LRFR bridge analysis, the requirements of 45.3.2.8.1 for lane loading shall be considered along with the Wis-SPV, where applicable.

When performing this design check for the Wis-SPV, the vehicle shall be evaluated for single-lane (single trip permit) distribution assuming that the vehicle is mixing with normal traffic and that the full dynamic load allowance is utilized. For this rating, future wearing surface shall be considered. The engineer shall check to ensure the design (new or rehabilitation) has a minimum capacity to carry a gross vehicle load of 190 kips. Load distribution for this check is based on the interior strip or interior girder and the distribution factors given in 17.2.7, 17.2.8, or 18.4.5.1 where applicable.

If this check fails, then the engineer is required to adjust the design until the bridge can safely handle a minimum gross vehicle load of 190 kips.

Also note, as stated in the footnote of **LRFR [Table 6-6]**, when using a single-lane LRFD distribution factor, the 1.2 multiple presence factor should be divided out from the distribution factor equations.

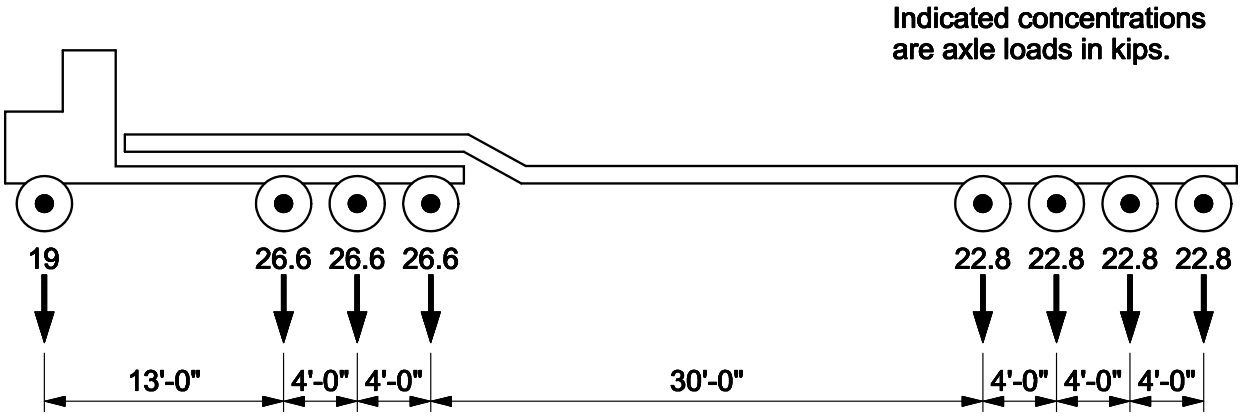

Figure 45.6-1
Wisconsin Standard Permit Vehicle (Wis-SPV)

45.7 Overweight Trip Permits

45.7.1 General Information

The load effects produced by the Wis-SPV were designed to completely envelope effects produced by all possible annual permit vehicle configurations. In addition, the Wis-SPV attempts to represent the truck most frequently used to carry loads requiring a single trip permit. However, in the case of single trip permits, each bridge on a State route is analyzed for the vehicle submitted by the trucking company prior to issuance of the specific permit, so it is not necessary, or feasible, for the Wis-SPV to envelope all possible single trip permit vehicles.

For overweight trip permit analysis, load distribution is based on the distribution factors given in 17.2.7, 17.2.8 or 18.4.5.1, where applicable. The analysis is done at the operating rating level.

45.7.2 Annual Trip Permit Information

Annual permits are only allowable for non-divisible loads such as machines, self-propelled vehicles, mobile homes, etc. They are usually valid for unlimited trips over the period of one year. The permit vehicle may mix in the traffic stream and move at normal speeds without any restrictions. Multi-lane distribution is used in the analysis.

The maximum annual permit weight is 170,000 lbs. and is subject to the axle weight limitations specified in Table 45.7-1.

Axle Configuration	Load (Pounds)
Single Axle	20,000 (2 Tires)
Single Axle	30,000 (3 Tires)
2-Axle Tandem	55,000
3-Axle Tandem	70,000
4-Axle Tandem	80,000

Table 45.7-1
Allowable Axle Weights for Annual Permits

A tandem axle is considered to be any group of two, three or four axles in which the centers of successive axles of the group are between 3’-6” and 6’-0”. If the spacing between any combination of single axles or tandem axle groups is less than 18’-0” the gross load of the combinations must be reduced. There is a length limitation of 50’-0” for single vehicles and 75’-0” for vehicle combinations.

Refer to the Division of Motor Vehicles (DMV) website for more information.

http://www.dot.wisconsin.gov/business/carriers/osowgeneral.htm

45.7.3 Single Trip Permit Information

Non-divisible loads which exceed the annual permit restrictions may be moved by the issuance of a single trip permit.

When a single trip permit is issued, the applicant is required to indicate on the permit the origin and destination of the trip and the highways that are to be used. Another permit is needed for local roads. Each Single Trip Permit vehicle is individually analyzed by WisDOT for all structures that it encounters on the designated permit route.

The load distribution is based on single lane distribution. This is used because these permit loads are infrequent and are likely the only heavy loads on the structure during the crossing. The analysis is done at the operating level.

In special cases the dynamic load allowance (or impact for LFR) may be neglected provided that the maximum vehicle speed can be reduced to 5 MPH prior to crossing the bridge. Also, if some cases, the truck may be escorted across the bridge with no other vehicles allowed on the bridge during the crossing. If this is the case, then the live load factor can be reduced from 1.5 to 1.15 as shown in Table 45.3-3. It is recommended that the truck be centered on the bridge if it is being escorted with no other vehicles allowed on the bridge during the crossing.

45.8 Load Rating Documentation

45.8.1 Load Rating Summary Sheet

After the structure has been load rated, the WisDOT Bridge Load Rating Summary Form shall be completed and utilized as a cover sheet for the load rating calculations (see Figure 45.8-1). This form may be obtained from the Bureau of Structures or is available on the following website:

http://on.dot.wi.gov/dtid_bos/extranet/structures/LRFD/PlanSubmittalIndex.htm

Instructions for completing the form are as follows:

1. Check what method was used to rate the bridge in the space provided.
2. Enter all data for all items corresponding to the vehicle type. Capacities for the posting vehicles do not have to be calculated if the Operating rating factor is greater than 1.0 for the HL-93 (LRFR) or the HS20 (LFR).
3. The rating for the Wis-SPV is always required and should be given on the rating sheet for both a multi-lane distribution and a single-lane distribution. Make sure not to include the future wearing surface in these calculations. All reported ratings are based on current conditions and do not reflect future wearing surfaces.
4. For the Operating rating, enter the lowest rating for each appropriate vehicle type, subject to the above requirements.
5. For the controlling element, make sure to enter the element (Slab, deck girder, lower truss chord, etc.) as well as the check (moment, shear, etc).
6. Be specific in describing where the controlling rating is located. For example, for girder bridges, enter the controlling span, girder-line, and location within the span (Ex. Span 2, G3, midspan).
7. For the live load distribution factor, enter the DF for the controlling element. Be sure to specify if it is a shear DF or a moment DF.
8. Enter all additional remarks as required to clarify the load capacity calculations and, if necessary, recommend posting signage.
9. It is necessary for the responsible engineer to sign and seal the form in the space provided.

45.8.2 Load Rating on Plans

The plans shall contain the following rating information:

- Inventory Load Rating – The plans shall have either the HS value of the inventory rating if using LFR or the rating factor for the HL-93 if using LRFR. This rating shall

be based on the current conditions of the bridge at the point when the construction is complete and shall not use the future wearing surface.

- Operating Load Rating – The plans shall have either the HS value of the operating rating if using LFR or the rating factor for the HL-93 if using LRFR. This rating shall be based on the current conditions of the bridge at the point when the construction is complete and shall not use the future wearing surface.

- Wis-SPV – The plans shall also contain the results of the Wis-SPV analysis utilizing single-lane (single trip permit) distribution and assuming that the vehicle is mixing with normal traffic and that the full dynamic load allowance is utilized. This rating shall be based on the current conditions of the bridge at the point when the construction is complete and shall not use the future wearing surface. The recorded rating for this is the total allowable vehicle weight rounded down to the nearest 10 kips. If the value exceeds 250 kips, limit the plan value to 250 kips.

WISCONSIN DEPARTMENT OF TRANSPORTATION
BRIDGE LOAD RATING SUMMARY

EXISTING BRIDGE DATA (WHEN APPLICABLE)

Bridge Number:		Last Rating Date:	
Span Type:		Last Inspection Date:	
Span Material:		Inspector:	
Design Loading:		Overburden Depth:	
Inventory Rating:		Section Loss (SL):	
Operating Rating:		SL Description:	

BRIDGE LOAD RATING SUMMARY

Rating Method:
☐ LRFR
☐ LFR

Rating Vehicle: ☐ HL-93 ☐ HS20 ☐ User Defined (Describe in Remarks)

Rating Factors:		Controlling Element	Controlling Location	Live Load Distribution Factor
Inventory				
Operating				

Wisconsin Standard Permit Vehicle (Wis-SPV)

	MVW (kips)	Controlling Element	Controlling Location	Live Load Distribution Factor
Single Lane (w/o PWB)				
Multi-Lane (w/o PWB)				

Posting Vehicle Type *	Vehicle GVW (Kips)	Operating Rating (Kips)	Controlling Element / Controlling Check	Controlling Location	Live Load Distribution Factor
Type 3	50				
Type 3S2	72				
Type 3-3	80				
SU4	54				
SU5	62				
SU6	69.5				
SU7	77.5				
Intermediary Lumber Pup	98				
Intermediary Lumber Semi	98				

* Posting Vehicle Analysis (Run only when HL-93 Operating RF < 1.0 or when HS20 Operating RF < 1.0)

Remarks / Recommendations:

Load Rating Engineer

Name:

Date:

PE Stamp Here

Figure 45.8-1
Bridge Load Rating Summary Form

45.9 Standard Permit Vehicle Moments

Live Load Moments in Foot-Kips per Wheel Line without Impact					
	Span Tenth Points				
Span (Feet)	0.1	0.2	0.3	0.4	0.5
24	71.5	118.0	155.6	178.3	182.4
28	88.6	149.5	191.6	223.0	228.0
32	104.7	180.5	230.8	260.2	273.6
36	121.2	208.6	271.5	310.3	319.2
40	137.0	240.9	311.8	354.1	364.8
44	154.3	271.0	352.8	398.7	409.1
48	173.1	299.1	390.6	446.2	454.6
52	191.0	333.9	430.1	484.3	498.8
56	202.4	359.3	468.2	534.8	547.1
60	241.3	403.5	507.4	573.7	589.5
64	267.7	455.2	562.6	616.8	636.7
68	301.2	506.5	630.3	678.6	683.6
72	329.3	561.1	697.9	746.3	734.6
76	360.1	611.4	765.0	825.7	796.9
80	390.0	667.2	839.0	909.0	869.5
84	426.5	729.2	916.3	994.3	948.4
88	454.9	778.5	985.5	1071.2	1034.5
92	482.5	834.1	1053.6	1155.2	1117.6
96	517.8	889.3	1119.6	1238.8	1201.7
100	543.9	941.4	1197.7	1321.8	1285.2
104	578.5	996.1	1268.4	1404.6	1375.2
108	603.4	1053.4	1342.2	1479.5	1460.8
112	637.3	1099.1	1415.7	1556.5	1543.5
116	662.7	1159.5	1484.0	1640.2	1625.8
120	694.2	1209.0	1549.5	1721.1	1707.9
124	727.5	1257.6	1614.8	1801.7	1789.6
128	750.0	1316.6	1679.8	1882.0	1871.0
132	782.0	1371.2	1745.7	1962.0	1952.1
136	814.5	1411.0	1822.8	2041.8	2037.4

Table 45.9-1

190 KIP Standard Permit Vehicle Live Load Moments on Longitudinal Girders of One Span

Live Load Moments in Foot-Kips per Wheel Line without Impact						
	Span Tenth Points					
Span (Feet)	0.3	0.4	0.5	0.6	0.7	1.0
24	131.3	141.0	139.0	128.2	96.4	-104.4
28	162.5	181.2	175.8	153.5	115.5	-146.7
32	197.6	213.7	210.6	184.7	141.8	-207.7
36	235.2	255.2	250.2	221.4	168.8	-260.5
40	268.5	288.5	284.8	254.8	196.1	-315.8
44	306.2	329.6	319.9	284.3	223.6	-364.9
48	343.0	372.1	359.7	314.0	249.4	-408.1
52	377.7	405.9	394.6	351.4	273.6	-445.9
56	416.8	452.1	435.3	386.9	301.5	-479.8
60	452.3	485.3	472.0	416.6	333.5	-510.8
64	485.2	528.6	512.7	454.5	369.5	-537.6
68	545.0	573.8	553.5	506.3	410.8	-561.0
72	599.0	629.3	594.3	553.7	452.5	-584.4
76	663.1	694.2	643.8	613.3	494.8	-602.2
80	731.0	761.9	701.9	670.9	539.8	-623.2
84	800.5	831.9	768.7	738.2	589.5	-639.5
88	864.1	903.3	835.8	802.8	633.2	-655.4
92	926.3	974.1	903.2	865.1	680.4	-670.2
96	988.9	1046.9	980.8	928.1	722.9	-680.2
100	1061.2	1120.6	1059.7	991.5	777.4	-713.5
104	1129.3	1195.7	1138.9	1055.5	825.1	-757.6
108	1202.0	1263.7	1210.4	1118.0	877.4	-799.3
112	1275.3	1334.1	1279.6	1189.6	930.5	-842.1
116	1343.7	1411.6	1349.2	1256.4	979.1	-885.6
120	1410.1	1487.4	1422.1	1321.0	1025.7	-926.9
124	1476.8	1563.6	1500.3	1385.9	1072.7	-967.2
128	1543.7	1640.4	1578.9	1451.0	1120.2	-1008.7
132	1611.1	1717.9	1657.6	1516.7	1168.5	-1050.9
136	1678.8	1795.7	1736.6	1582.7	1224.2	-1092.2

Table 45.9-2

190 KIP Standard Permit Vehicle Live Load Moments on Longitudinal Girders of Two Equal Length Spans Constant Moment of Inertia

45.10 References

1. *Final Report on Full-Scale Bridge Testing* by E. G. Burdette and D. W. Goodpasture, Department of Civil Engineer, University of Tennessee, 1971.

2. *The AASHTO Road Test*, Report 4 Bridge Research by the Highway Research Board, Washington, D.C. 1962.

3. *Standard Specifications for Highway Bridges* by American Association of State Highway and Transportation Officials.

4. *AASHTO LRFD Bridge Design Specifications* by American Association of State Highway and Transportation Officials, 2006.

5. Manual *for Condition Evaluation and Load and Resistance Factor Rating (LRFR) of Highway Bridges* by American Association of State Highway and Transportation Officials, 2003.

6. *Structure Inspection Manual* by Wisconsin Department of Transportation, 2003.

7. *Reinforced Concrete Design* by C. K. Wang and C. G. Salmon.

8. *Plastic Design of Steel Frames* by Lynn S. Beedle.

9. National Cooperative Highway Research Program Report 312.

10. National Cooperative Highway Research Program Project 12-63.

11. *Post-Tensioning Manual* by Post-Tensioning Institute.

12. Wisconsin Statutes, Vol. 4, Chapter 348.

13. *Summary of Motor Vehicle Size and Weight Regulations in Wisconsin* by Dept. of Transportation, Division of Motor Vehicles.

45.11 Rating Examples

E45-1 Three Span Reinforced Concrete Slab Rating – LRFR

E45-2 Single Span PS I-Girder Bridge Rating – LRFR

E45-3 Two Span PS I-Girder Bridge (Continuity Reinforcement Only) Rating – LRFR

E45-4 Two-Span Continuous Steel Plate Girder Rating - LRFR

This page intentionally left blank.

E45-2.3 Composite Girder Section Properties

Calculate the effective flange width in accordance with 17.2.11 and **LRFD [4.6.2.6]**:

$b_{eff} := S \cdot 12$ $\boxed{b_{eff} = 90.00}$ in

The effective width, b_{eff}, must be adjusted by the modular ratio, n, to convert to the same concrete material (modulus) as the girder.

$b_{eadj} := \frac{b_{eff}}{n}$ $\boxed{b_{eadj} = 58.46}$ in

Calculate the composite girder section properties:

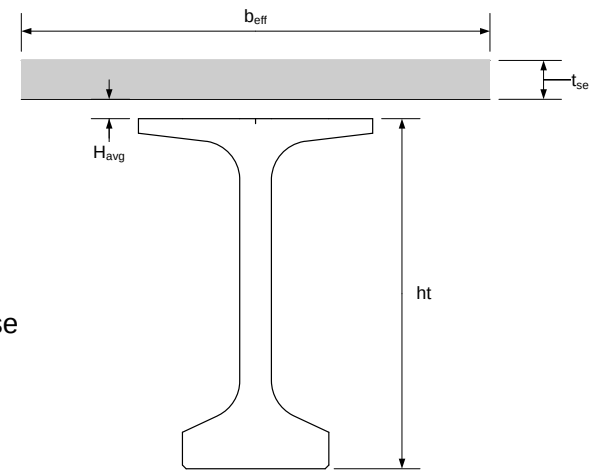

effective slab thickness; $\boxed{t_{se} = 7.50}$ in

effective slab width; $\boxed{b_{eadj} = 58.46}$ in

haunch thickness; $\boxed{H_{avg} = 2.00}$ in

total height; $h_c := ht + H_{avg} + t_{se}$

$\boxed{h_c = 81.50}$ in

$\boxed{n = 1.540}$

Note: The area of the concrete haunch is not included in the calculation of the composite section properties.

Component	Ycg	A	AY	AY^2	I	$I+AY^2$
Deck	77.75	438	34089	2650458	2055	2652513
Girder	34.87	915	31906	1112564	656426	1768990
Haunch	73	0	0	0	0	0
Summation		1353	65996			4421503

$\Sigma A := 1353$ in^2

$\Sigma AY := 65996$ in^4

$\Sigma IplusAYsq := 4421503$ in^4

$y_{cgb} := \frac{-\Sigma AY}{\Sigma A}$ $\boxed{y_{cgb} = -48.8}$ in

$y_{cgt} := ht + y_{cgb}$ $\boxed{y_{cgt} = 23.2}$ in

$A_{cg} := \Sigma A$ $\boxed{A_{cg} = 1353}$ in^2

$I_{cg} := \Sigma IplusAYsq - A_{cg} \cdot y_{cgb}^2$ $\boxed{I_{cg} = 1202381}$ in^4

$S_{cgt} := \frac{I_{cg}}{y_{cgt}}$ $\boxed{S_{cgt} = 51777}$ in^3

$S_{cgb} := \frac{I_{cg}}{y_{cgb}}$ $\boxed{S_{cgb} = -24650}$ in^3

E45-2.4 Dead Load Analysis - Interior Girder

Dead load on non-composite (DC_1):

weight of 72W girders $\boxed{w_g = 0.953}$ klf

weight of 2-in haunch

$w_h := \left(\frac{H_{avg}}{12}\right) \cdot \left(\frac{b_{tf}}{12}\right) \cdot (w_c)$ $\boxed{w_h = 0.100}$ klf

weight of diaphragms $\boxed{w_D := 0.006}$ klf

weight of slab

$w_d := \left(\frac{t_s}{12}\right) \cdot (S) \cdot (w_c)$ $\boxed{w_d = 0.750}$ ksf

$DC_1 := w_g + w_h + w_D + w_d$ $\boxed{DC_1 = 1.809}$ klf

$V_{DC1} := \frac{DC_1 \cdot L}{2}$ $\boxed{V_{DC1} = 132}$ kips

$M_{DC1} := \frac{DC_1 \cdot L^2}{8}$ $\boxed{M_{DC1} = 4820}$ kip-ft

The unfactored live load load moments (per lane including impact) are listed below (values are in kip-ft). Note that the impact factor is applied only to the truck portion of the HL-93 loads. A separate analysis run will be required if results without impact are desired.

Unfactored Live Load + Impact Moments per Lane (kip-ft)		
Tenth Point	Truck Pair	Truck + Lane
0.5	--	-921
0.6	--	-1106
0.7	--	-1290
0.8	-1524	-1474
0.9	-2046	-1845
1	-3318	-2517

The unfactored live load moments per lane are calculated by applying the appropriate distribution factor to the controlling moment. For the interior girder:

$g_i = 0.619$

$M_{LL} = g_i \cdot (-3317.97)$ $\boxed{M_{LL} = -2055}$ kip-ft

E45-3.10 Composite Girder Section Properties

Calculate the effective flange width in accordance with Chapter 17.2.11.

The effective flange width is calculated as the minimum of the following two values:

$w_e := S \cdot 12$ $\boxed{w_e = 90.00}$ in

The effective width, w_e, must be adjusted by the modular ratio, $n = 1.54$, to convert to the same concrete material (modulus) as the girder.

$w_{eadj} := \frac{w_e}{n}$ $\boxed{w_{eadj} = 58.46}$ in

Calculate the composite girder section properties:

effective slab thickness; $t_{se} = 7.50$ in

effective slab width; $w_{eadj} = 58.46$ in

haunch thickness; $h = 2.0$ in

total height; $h_c := ht + h + t_{se}$

$h_c = 63.50$ in

$n = 1.540$

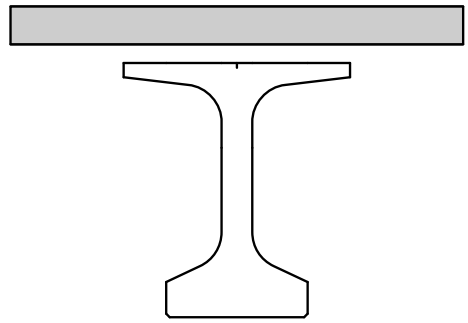

Note: The area of the concrete haunch is not included in the calculation of the composite section properties.

Component	Ycg	A	AY	AY^2	I	$I+AY^2$
Deck	59.75	438	26197	1565294	2055	1567349
Girder	26.3	798	20987	551969	321049	873018
Haunch	55	0	0	0	0	0
Summation		1236	47185			2440367

$\Sigma A := 1236$ in^2

$\Sigma AY := 47185$ in^4

$\Sigma IplusAYsq := 2440367$ in^4

$y_{cgb} := \frac{-\Sigma AY}{\Sigma A}$ $y_{cgb} = -38.2$ in

$y_{cgt} := ht + y_{cgb}$ $y_{cgt} = 15.8$ in

$A_{cg} := \Sigma A$ in^2

$I_{cg} := \Sigma IplusAYsq - A_{cg} \cdot y_{cgb}^2$ $I_{cg} = 639053$ in^4

Deck:

The effective flange width is computed as follows .

For interior beams, the effective flange width is calculated as per **LRFD [4.6.2.6]**:

1. 12.0 times the average thickness of the slab, plus the greater of web thickness or one-half the width of the top flange of the girder:

$$b_{eff2} := \frac{12 \cdot t_s + \frac{14}{2}}{12}$$

This is no longer a valid criteria, however it has been left in place to avoid changing the entire example at this time.

$b_{eff2} = 9.08$ ft

2. The average spacing of adjacent beams:

$b_{eff3} := S$ $b_{eff3} = 9.75$ ft

Therefore, the effective flange width is:

$b_{effflange} := \min(b_{eff2}, b_{eff3})$ $b_{effflange} = 9.08$ ft

or

$b_{effflange} \cdot 12 = 109.00$ in

For this design example, the slab haunch is 3.5 inches throughout the length of the bridge. That is, the bottom of the slab is located 3.5 inches above the top of the web The area of the haunch is conservatively not considered in the section properties for this example.

Based on the plate sizes shown in Figure E453.1-4, the noncomposite and composite section properties for the positive moment region are computed as shown in the following table. The distance to the centroid is measured from the bottom of the girder.

Positive Moment Region Section Properties						
Section	**Area, A (Inches^2)**	**Centroid, d (Inches)**	**A*d (Inches^3)**	**I_o (Inches^4)**	**A*y^2 (Inches^4)**	**I_{total} (Inches^4)**
Girder only:						
Top flange	10.500	55.250	580.1	0.5	8441.1	8441.6
Web	27.000	27.875	752.6	6561.0	25.8	6586.8
Bottom flange	12.250	0.438	5.4	0.8	8576.1	8576.9
Total	49.750	26.897	1338.1	6562.3	17043.0	23605.3
Composite (3n):						
Girder	49.750	26.897	1338.1	23605.3	12293.9	35899.2
Slab	38.604	62.875	2427.2	232.4	15843.4	16075.8
Total	88.354	42.617	3765.3	23837.7	28137.3	51975.0
Composite (n):						
Girder	49.750	26.897	1338.1	23605.3	31511.0	55116.2
Slab	115.813	62.875	7281.7	697.3	13536.3	14233.6
Total	165.563	52.064	8619.8	24302.5	45047.3	69349.8
Section	**y_{botgdr} (Inches)**	**y_{topgdr} (Inches)**	**$y_{topslab}$ (Inches)**	**S_{botgdr} (Inches^3)**	**S_{topgdr} (Inches^3)**	**$S_{topslab}$ (Inches^3)**
Girder only	26.897	28.728	---	877.6	821.7	---
Composite (3n)	42.617	13.008	24.508	1219.6	3995.5	2120.7
Composite (n)	52.064	3.561	15.061	1332.0	19474.0	4604.5

Table E45-4.2-1
Positive Moment Region Section Properties

Similarly, the noncomposite and composite section properties for the negative moment region are computed as shown in the following table. The distance to the centroid is measured from the bottom of the girder **LRFD [6.6.1.2.1, 6.10.5.1, 6.10.4.2.1]**.

For the strength limit state, since the deck concrete is in tension in the negative moment region, the deck reinforcing steel contributes to the composite section properties and the deck concrete does not. However, per 45.3.1, only the top longitudinal mat of steel is used for rating purposes. Per the design example, the amount of longitudinal steel within the effective slab area is 6.39 in^2. This number will be used for the calculations below.