GRE

PROJECT ID: 9269-00-14

WITH:

COUNTY: BROWN

JANUARY 2022

ORDER OF SHEETS

TOTAL SHEETS = 230

STATE OF WISCONSIN
DEPARTMENT OF TRANSPORTATION

PLAN OF PROPOSED IMPROVEMENT

V HOWARD, MARLEY STREET

MILLWOOD COURT - CTH C

LOC STR
BROWN COUNTY

STATE PROJECT	FEDERAL PROJECT	
	PROJECT	CONTRACT
9269-00-14	WISC 2022124	1

STATE PROJECT NUMBER

9269-00-14

PROJECT LOCATION

24

N

DESIGN DESIGNATION

A.A.D.T.	2022	=	5100
A.A.D.T.	2042	=	7600
D.H.V.		=	950
D.D.		=	50/50
T.		=	5.0%
DESIGN SPEED		=	40 MPH
ESALS		=	720,000

BEGIN PROJECT
STA . 65+25
Y = 591680.231
X = 59346.571

R 18 E | R 19 E | R 20 E

END PROJECT
STA. 101+00

T 25 N

T 24 N

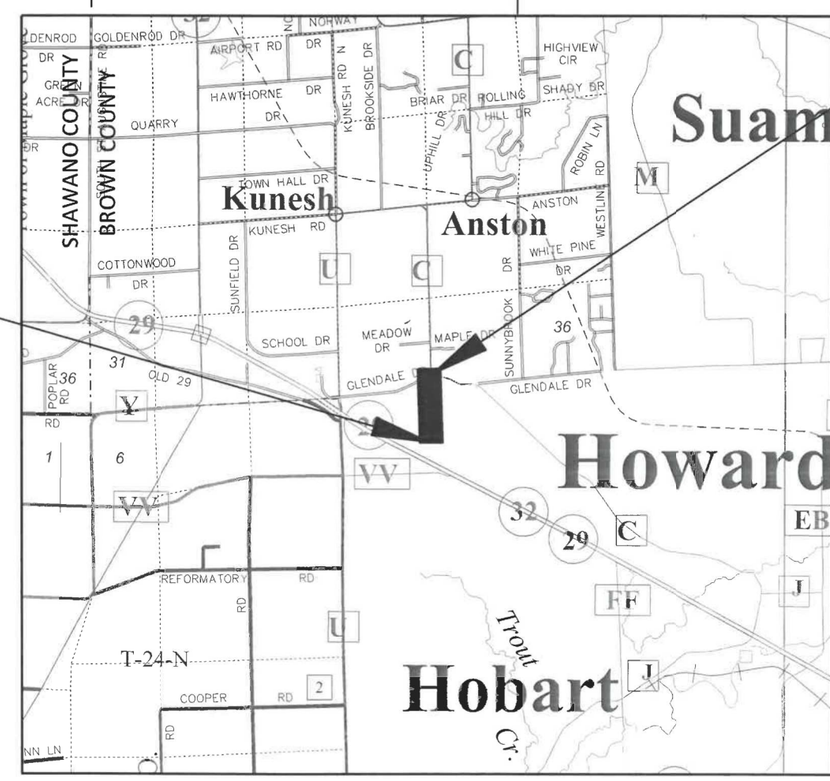

LAYOUT

SCALE 0 — 2 MI

TOTAL NET LENGTH OF CENTERLINE = 0.677 Mi.

HORIZONTAL POSITIONS SHOWN ON THIS PLAN ARE WISCONSIN COORDINATE REFERENCE SYSTEM (WISCRS), BROWN COUNTY, NAD83 (2011), IN U.S. SURVEY FEET. POSITIONS SHOWN ARE GRID COORDINATES, GRID BEARINGS, AND GRID DISTANCES. GRID DISTANCES ARE THE SAME AS GROUND DISTANCES. ELEVATIONS ARE REFERENCED TO NAVD 88 (2012). GPS DERIVED ELEVATIONS ARE BASED ON GEOID 12B.

CONVENTIONAL SYMBOLS

PLAN
- CORPORATE LIMITS
- PROPERTY LINE
- LOT LINE
- LIMITED HIGHWAY EASEMENT
- EXISTING RIGHT OF WAY
- PROPOSED OR NEW R/W LINE
- SLOPE INTERCEPT
- REFERENCE LINE (300'EB')
- EXISTING CULVERT
- PROPOSED CULVERT (Box or Pipe)
- COMBUSTIBLE FLUIDS (CAUTION)
- MARSH AREA
- WOODED OR SHRUB AREA

PROFILE
- GRADE LINE
- ORIGINAL GROUND
- MARSH OR ROCK PROFILE (To be noted as such) (ROCK)
- SPECIAL DITCH (LABEL)
- GRADE ELEVATION (95.36)
- CULVERT (Profile View)

UTILITIES
- ELECTRIC (E)
- FIBER OPTIC (FO)
- GAS (G)
- SANITARY SEWER (SAN)
- STORM SEWER (SS)
- TELEPHONE (T)
- WATER (W)
- UTILITY PEDESTAL
- POWER POLE
- TELEPHONE POLE

ACCEPTED FOR
BROWN COUNTY

7-15-21
DATE — COUNTY ENGINEERING MANAGER

ORIGINAL PLANS PREPARED BY

AYRES

WISCONSIN PHILLIP J. VERVILLE III E36336 GREEN BAY, WI PROFESSIONAL ENGINEER

7/14/21
(Date)

STATE OF WISCONSIN
DEPARTMENT OF TRANSPORTATION

PREPARED BY

Surveyor	AYRES
Designer	AYRES
Project Manager	MATTHEW TERNES
Regional Supervisor	DANIEL SEGERSTROM

APPROVED FOR THE DEPARTMENT

DATE: 07/26/2021 (Signature)

E

2

GENERAL NOTES

THE LOCATIONS OF EXISTING AND PROPOSED UTILITY INSTALLATIONS AS SHOWN ON THE PLAN ARE APPROXIMATE. THERE MAY BE OTHER INSTALLATIONS WITHIN THE PROJECT AREA THAT ARE NOT SHOWN.

THE CONTRACTOR SHALL NOTIFY DIGGERS HOTLINE AND AFFECTED UTILITIES PRIOR TO THE START OF WORK.

A VERTICAL SAW JOINT IS REQUIRED WHERE NEW HMA PAVEMENT MEETS EXISTING HMA PAVEMENT.

ALL TIES ON THIS PLAN ARE HORIZONTAL UNLESS DESCRIBED OTHERWISE.

RADIUS POINTS, UNLESS OTHERWISE NOTED, ARE TO FACE OF CURB.

CURVE DATA IS BASED ON ARC DEFINITION.

BEARINGS SHOWN ON THE PLAN ARE TRUE BEARINGS.

PROPERTY LINES SHOWN ARE APPROXIMATE.

CONCRETE DEPTH ON ALL CURB RAMPS SHALL BE 6-INCH.

REMOVAL OF ANY MESH OR REINFORCEMENT FOUND IN CONCRETE PAVEMENT SHALL BE INCIDENTAL TO THE REMOVING PAVEMENT ITEM.

MAINTAIN DRIVING SURFACE TO ALL PROPERTY OWNERS WITH BASE AGGREGATE DENSE 1 1/4-INCH.

THE EXACT LOCATIONS OF PRIVATE ENTRANCES ARE TO BE DETERMINED IN THE FIELD BY THE ENGINEER. ALL DRIVEWAYS ARE TO BE REPLACED IN KIND UNLESS OTHERWISE DIRECTED BY THE ENGINEER OR AS SHOWN ON THE PLANS. BASE AGGREGATE DENSE 1 1/4-INCH WILL BE USED UNDER ALL DRIVEWAYS.

SAW CUT ASPHALTIC AND CONCRETE DRIVEWAYS AND/OR PARKING LOTS AT THE MATCHLINE AS SHOWN ON THE PLAN DETAILS OR AS DIRECTED BY THE ENGINEER.

PRIOR TO ORDERING DRAINAGE PIPES AND STRUCTURES, VERIFY RELATED DRAINAGE INFORMATION IN THE PLAN AND PROVIDE DOCUMENTATION TO THE ENGINEER.

INLET AND DISCHARGE ELEVATIONS FOR DRAINAGE STRUCTURES SHOWN ON THE PLAN MAY BE ADJUSTED BY THE ENGINEER TO FIT FIELD CONDITIONS.

TEMPORARY STORAGE OF ANY EXCAVATED MATERIAL WILL NOT BE PERMITTED IN WETLANDS, FLOODWAY OR FLOODPLAIN OF ANY WETLANDS.

PLACE EROSION CONTROL DEVICES IN SEQUENCE WITH CONSTRUCTION OPERATIONS OR AS DETERMINED BY THE ENGINEER. EROSION CONTROL FEATURES ARE SHOWN AT APPROXIMATE LOCATIONS, WITH EXACT LOCATIONS TO BE DETERMINED BY THE ENGINEER.

NO TREES OR SHRUBS SHALL BE REMOVED WITHOUT APPROVAL BY THE ENGINEER.

STATIONING, DISTANCES, AND OFFSETS FOR SIGNS AND TRAFFIC CONTROL DEVICES SHOWN IN THE PLANS ARE APPROXIMATE. EXACT LOCATIONS ARE DETERMINED BY THE ENGINEER.

RESHAPE AND SEEDING OF ANY PREVIOUSLY GRASSED AREAS WHICH ARE DISTURBED BY OPERATIONS OUTSIDE OF THE ENGINEER DETERMINED CONSTRUCTION LIMITS ARE INCIDENTAL TO THE CONTRACT.

ORDER OF SECTION 2 SHEETS

GENERAL NOTES & CONTACTS
TYPICAL SECTIONS
CONSTRUCTION DETAILS
PLAN GRADES
PLAN OFFSETS
CURB RAMP DETAILS
EROSION CONTROL
STORM SEWER
PAVEMENT MARKING
ALIGNMENT DIAGRAM

STANDARD ABBREVIATIONS

ABUT	ABUTMENT
AC	ACRE
AGG	AGGREGATE
AH	AHEAD
ET AL	AND OTHERS
BK	BACK
BLDG	BUILDING
BLK	BLOCK
BR	BRIDGE
CB	CATCH BASIN
C/L	CENTERLINE
Δ	CENTRAL ANGLE OR DELTA
CE	COMMERCIAL ENTRANCE
CONC	CONCRETE
CPCA	CULVERT PIPE CORRUGATED ALUMINUM
CPCS	CULVERT PIPE CORRUGATED STEEL
CTH	COUNTY TRUNK HIGHWAY
CR	CREEK
CP	CULVERT PIPE
C & G	CURB AND GUTTER
D	DEGREE OF CURVE
DNV	DESIGN HOURLY VOLUME
DIA	DIAMETER
DWY	DRIVEWAY
E	EAST
X	EAST COORDINATE
EB	EASTBOUND
EL OR ELEV	ELEVATION
ENT	ENTRANCE
ESALS	EQUIVALENT SINGLE AXLE LOAD
EXIST	EXISTING
F-F	FACE TO FACE
FE	FIELD ENTRANCE
FG	FINISHED GRADE
FT	FOOT
INL	INLET
INV	INVERT
IP	IRON PIPE OR PIN
LT	LEFT
L	LENGTH OF CURVE
LIN. FT OR FT.	LINEAL FOOT
MH	MANHOLE
N/C	NORMAL CROWN
NW OR N/W	NORMAL WATER
N	NORTH
Y	NORTH COORDINATE
NB	NORTHBOUND
PT	POINT
PCC	POINT OF COMPOUND CURVE
PC	POINT OF CURVATURE
PI	POINT OF INTERSECTION
PRC	POINT OF REVERSE CURVATURE
POC	POINT ON CURVE
POT	POINT OF TANGENT
R/L	REFERENCE LINE
REBAR	REINFORCED BAR
REQ'D.	REQUIRED
R/W	RIGHT OF WAY
R	RADIUS
S	SOUTH
SB	SOUTHBOUND
STH	STATE TRUNK HIGHWAY
STA	STATION
SS	STORM SEWER
SE	SUPERELEVATION
SURF	SURFACE
T	TANGENT
TYP	TYPICAL
WB	WESTBOUND

UTILITY CONTACTS

COMMUNICATION LINE

NSIGHT
ATTN: RICK VINCENT
450 SECURITY BLVD.
PO BOX 17079
GREEN BAY, WI 54307-9079
PHONE: 920-617-7316
EMAIL: rick.vincent@nsight.com

CHARTER COMMUNICATIONS
ATTN: VINCE ALBIN
3520 DESTINATION DR
APPLETON, WI 54915
PHONE: 920-831-9249
EMAIL: vince.albin@charter.com

BROWN COUNTY
ATTN: DAVID PEKAH
111 N JEFFERSON STREET
GREEN BAY, WI 54301
PHONE: 920-448-4031
EMAIL: David.Pekah@browncountywi.gov

ELECTRICITY & GAS/PETROLUM

WISCONSIN PUBLIC SERVICE
ATTN: ROBERT SMITH
700 N. ADAMS STREET
PO BOX 19001
GREEN BAY, WI 54307-9001
PHONE: 920-617-5284
EMAIL: robert.smith@wisconsinpublicservice.com

SANITARY SEWER & WATER

VILLAGE OF HOWARD
ATTN: MIKE KASTER
1336 CORNELL RD
GREEN BAY, WI 54313
PHONE: 920-434-4060
EMAIL: kaster@villageofhoward.com

SANITARY SEWER

VILLAGE OF PULASKI
ATTN: JOEL VAN LANNEN
585 EAST GLENBROOK DRIVE
PULASKI, WI 54162
PHONE: 920-822-8618
CELL: 920-609-2443
EMAIL: jvanlannen@villageofpulaski.org

NEW WATER
ATTN: ROB REINHART
2231 N. QUINCY STREET
GREEN BAY, WI 54302-1248
PHONE: 920-438-1035
EMAIL: rreinhart@newwater.us

PITTSFIELD SANITARY DISTRICT
ATTN: DAVID TAUSCHER
4682 ANSTON ROAD
GREEN BAY, WI 54303
PHONE: 920-785-0902
EMAIL: davidtauscher@hotmail.com

DIGGERS HOTLINE
Dial 811 or (800)242-8511
www.DiggersHotline.com

* NON-MEMBER OF DIGGERS HOTLINE

PROJECT CONTACTS

WISCONSIN DEPARTMENT OF NATURAL RESOURCES
NORTHEAST REGION HEADQUARTERS
ATTN: JIM DOPERALSKI JR.
2984 SHAWANO AVENUE
PO BOX 10488
GREEN BAY, WI 54307-0448
PHONE: 920-412-0165
EMAIL: james.doperalski@wisconsin.gov

WIS. DEPT OF TRANSPORTATION
NORTHEAST REGION - PRIMARY CONTACT
ATTN: MATTHEW TERNES-PROJECT MANAGER
944 VANDERPERRON WAY
PO BOX 28080
GREEN BAY, WI 54324-0080
PHONE:920-366-3028
EMAIL:matthew.ternes@dot.wi.gov

AYRES ASSOCIATES
ATTN: PHIL VERVILLE III
3376 PACKERLAND DRIVE
ASHWAUBENON, WI 54115
PHONE: 920-327-7822
EMAIL: Vervillep@ayresassociates.com

BROWN COUNTY SURVEYOR
ATTN: RYAN L. DUCKART, PLS
PO BOX 23600
GREEN BAY, WI 54305-3600
920-448-4493
Ryan.Duckart@browncountywi.gov

2

RUNOFF COEFFICIENT TABLE

	HYDROLOGIC SOIL GROUP											
	A			B			C			D		
	SLOPE RANGE (PERCENT)			SLOPE RANGE (PERCENT)			SLOPE RANGE (PERCENT)			SLOPE RANGE (PERCENT)		
LAND USE:	0-2	2-6	6 & OVER	0-2	2-6	6 & OVER	0-2	2-6	6 & OVER	0-2	2-6	6 & OVER
ROW CROPS	.08 .22	.16 .30	.22 .38	.12 .26	.20 .34	.27 .44	.15 .30	.24 .37	.33 .50	.19 .34	.28 .41	.38 .56
MEDIAN STRIP-TURF	.19 .24	.20 .26	.24 .30	.19 .25	.22 .28	.26 .33	.20 .26	.23 .30	.30 .37	.20 .27	.25 .32	.30 .40
SIDE SLOPE-TURF			.25 .32			.27 .34			.28 .36			.30 .38
PAVEMENT:												
ASPHALT	.70 - .95											
CONCRETE	.80 - .95											
BRICK	.70 - .80											
DRIVES, WALKS	.75 - .85											
ROOFS	.75 - .95											
GRAVEL ROADS, SHOULDERS	.40 - .60											

TOTAL AREA EXPECTED TO BE DISTURBED BY CONSTRUCTION ACTIVITIES = 10.8 ACRES
SOIL GROUP C

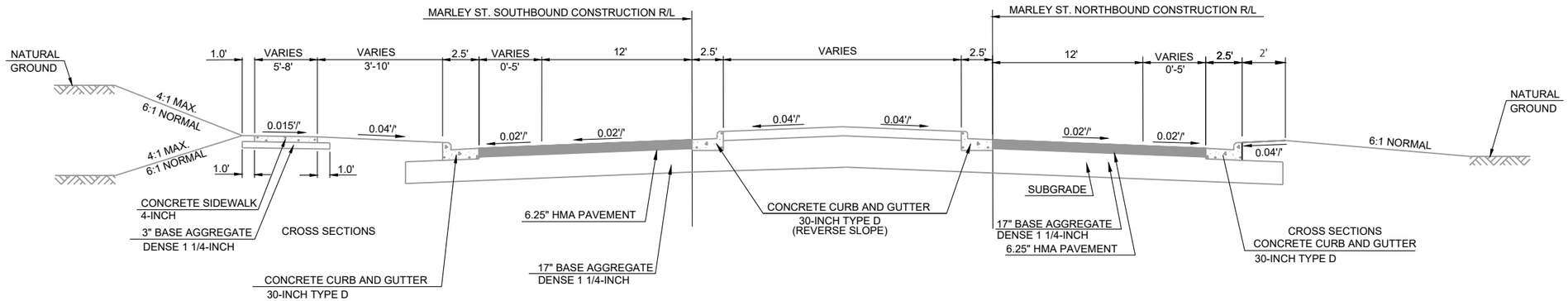

EXISTING TYPICAL SECTION FOR MARLEY STREET

STA. 64+25'NB' - STA. 65+25'NB'

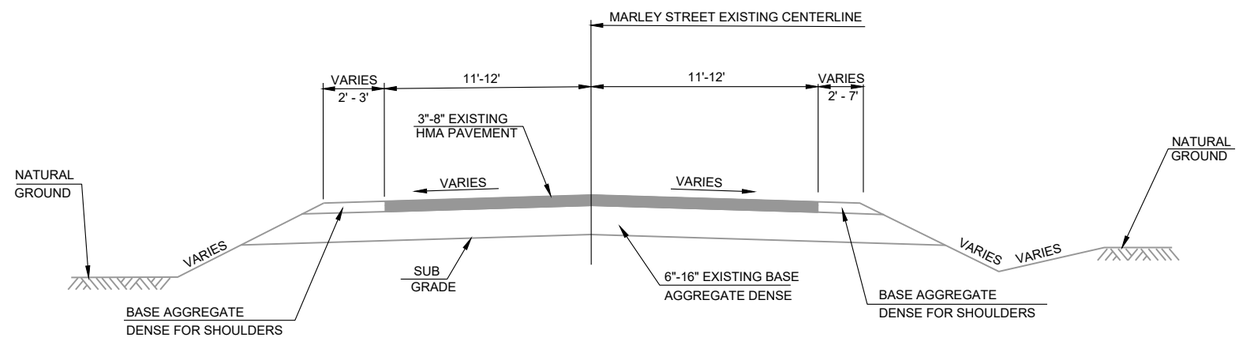

EXISTING TYPICAL SECTION FOR MARLEY STREET

STA. 65+25'NB' - STA. 101+00'NB'

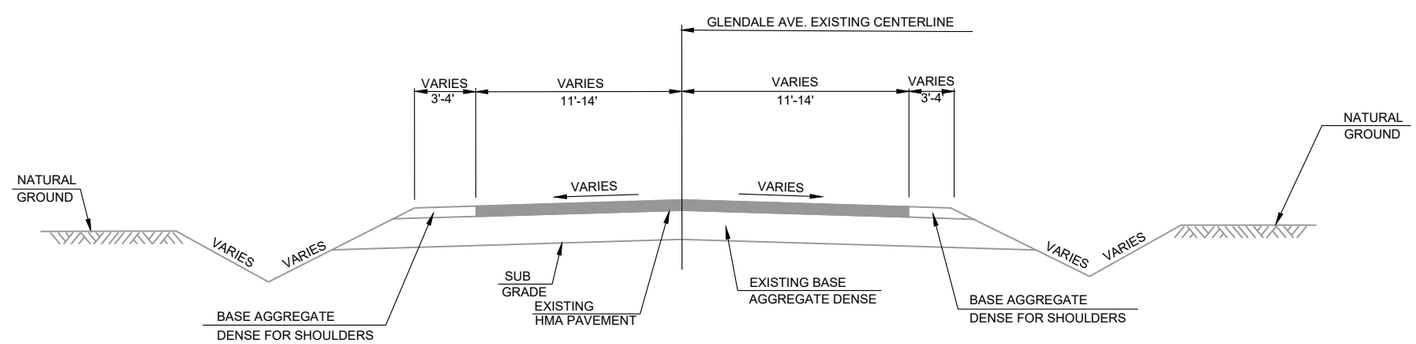

EXISTING TYPICAL SECTION FOR CTH C/GLENDALE AVENUE

STA. 201+25'GL' - STA. 212+50'GL'

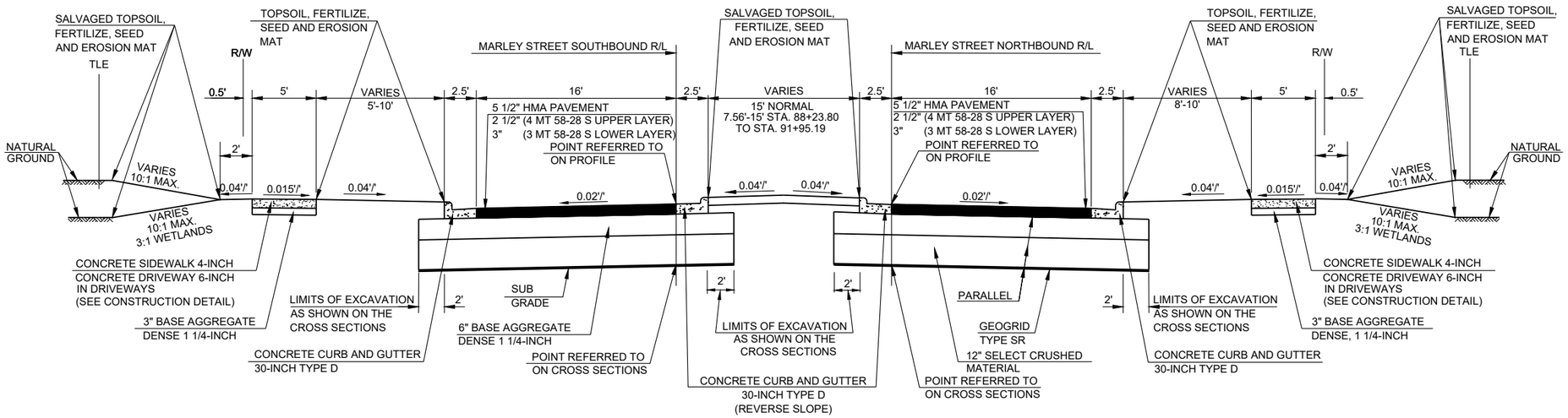

TYPICAL FINISHED CROSS SECTION FOR MARLEY STREET

STA. 65+25'NB' - STA. 67+59.69'NB'
STA. 71+76.54'NB' - STA. 74+80.96'NB'
STA. 80+06.82'NB' - STA. 91+95.19'NB'

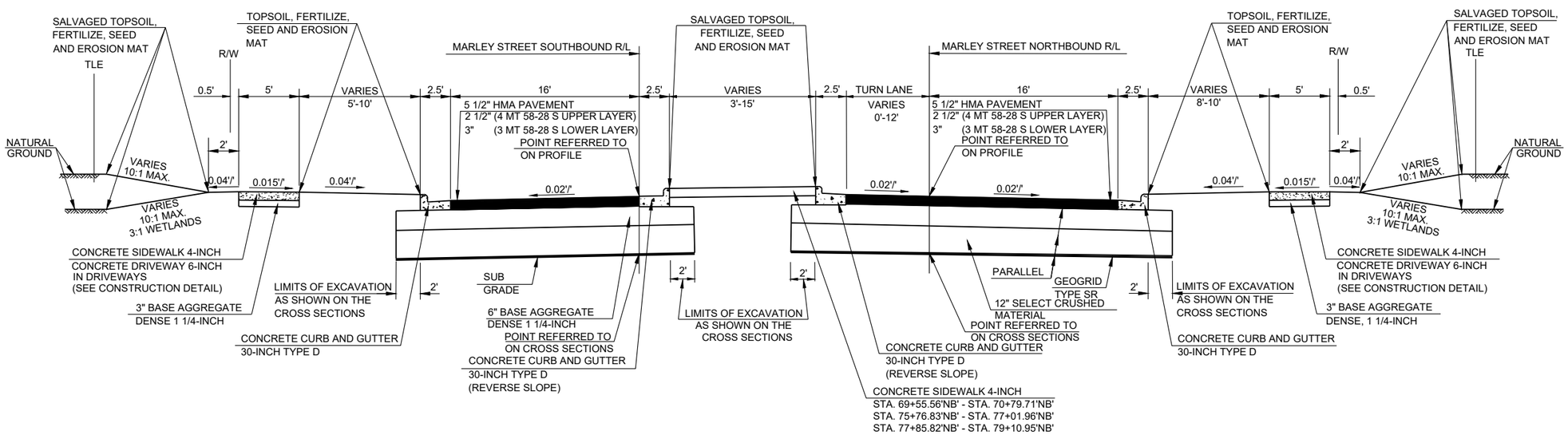

TYPICAL FINISHED CROSS SECTION FOR MARLEY STREET

STA. 67+59.69'NB' - STA. 71+76.54'NB'
STA. 74+80.96'NB' - STA. 80+06.82'NB'

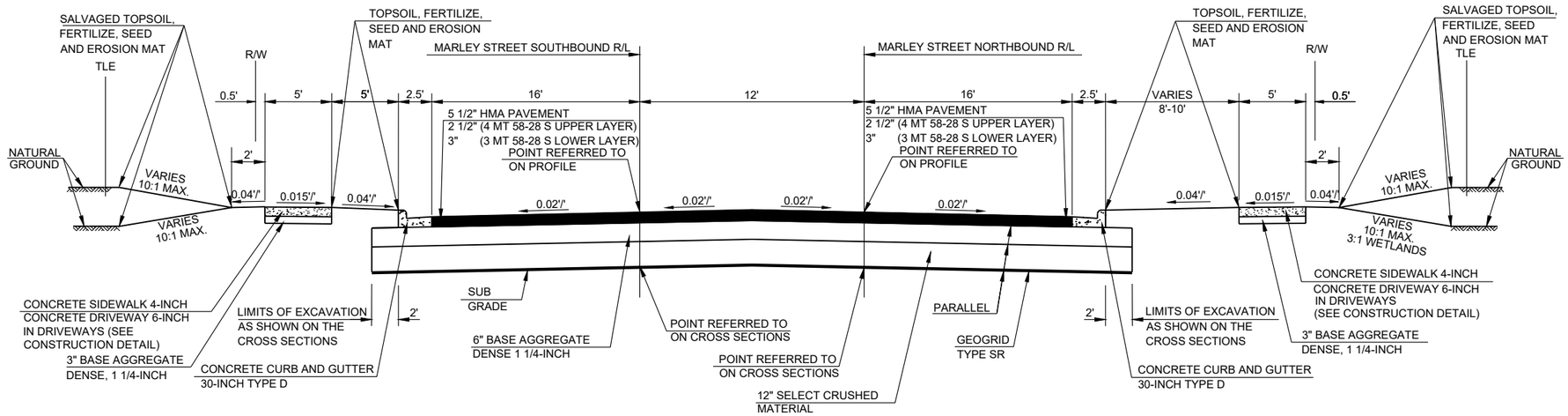

TYPICAL FINISHED CROSS SECTION FOR MARLEY STREET

STA. 92+00 - STA. 95+44.86

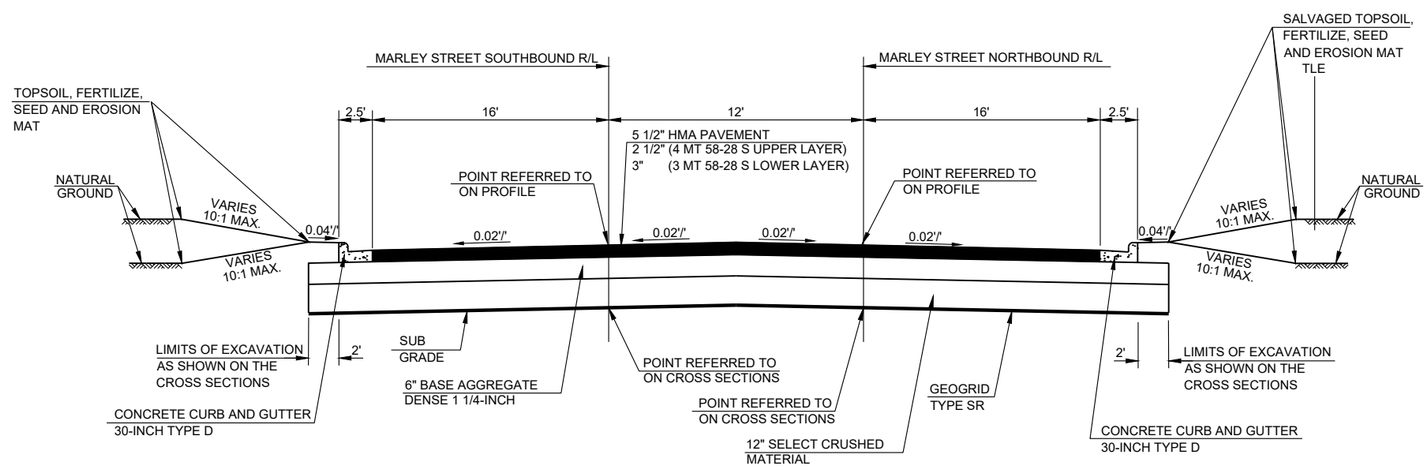

TYPICAL FINISHED CROSS SECTION FOR MARLEY STREET

STA. 95+44.86 - STA. 97+50

PROJECT NO: 9269-00-14	HWY: MARLEY STREET	COUNTY: BROWN	TYPICAL SECTIONS	SHEET 5	E

FILE NAME : I:\45\450490 MARLEY STREET\C3D\SHEETSPLAN\020301 TS.DWG
LAYOUT NAME - 020303 ts
PLOT DATE : 11/11/2021 10:53 AM PLOT BY : GARNICA, BRANDON PLOT NAME : PLOT SCALE : 1 IN:200 FT
WISDOT/CADDS SHEET 42

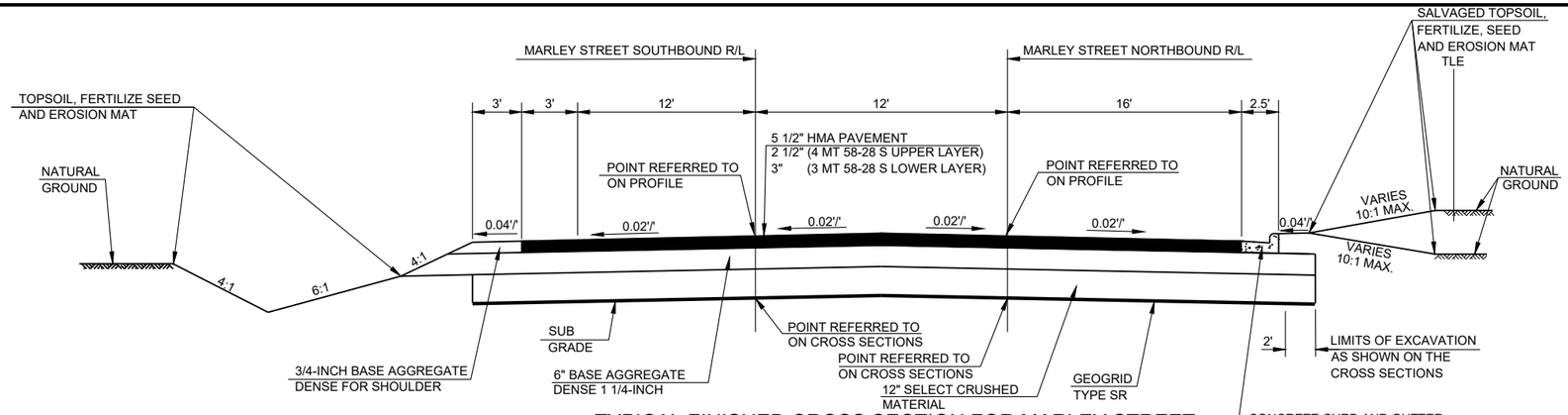

TYPICAL FINISHED CROSS SECTION FOR MARLEY STREET

STA. 97+50'NB' - STA. 98+84.50'NB'

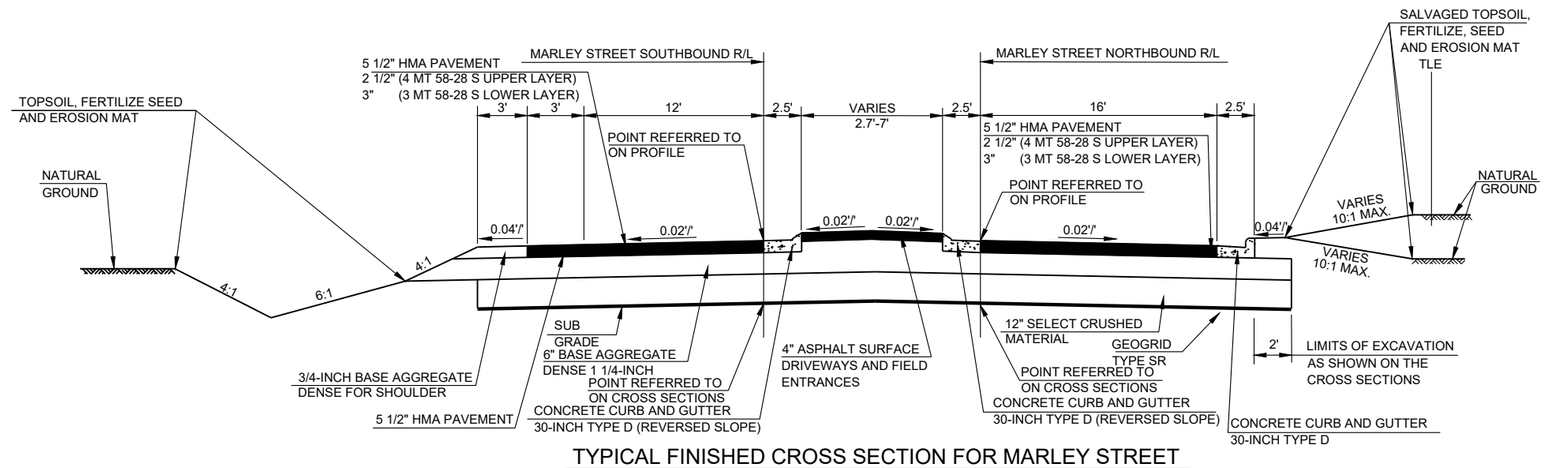

TYPICAL FINISHED CROSS SECTION FOR MARLEY STREET

STA. 98+84.50'NB' - STA. 99+94.42'NB'

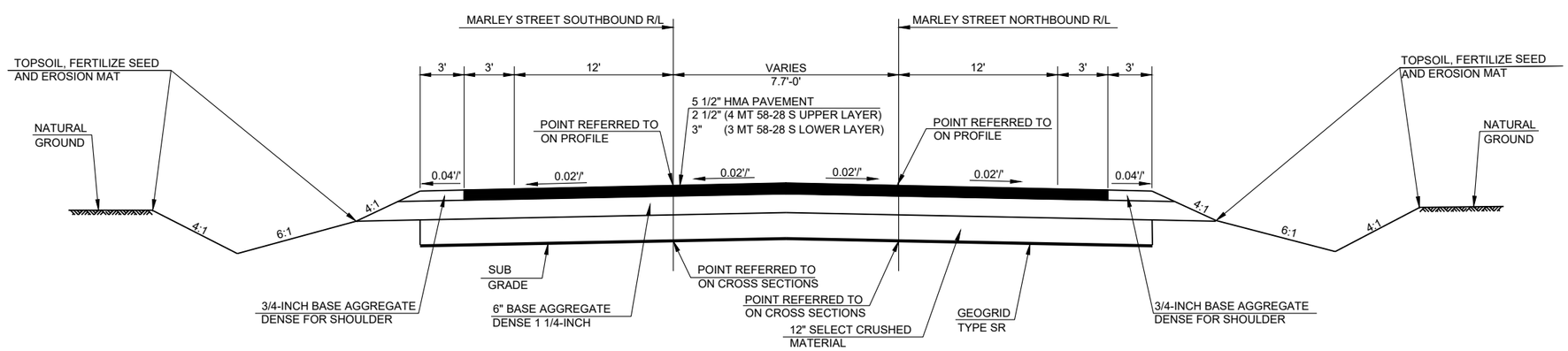

TYPICAL FINISHED CROSS SECTION FOR MARLEY STREET

STA. 99+94.42'NB' - STA. 101+00.00'NB'

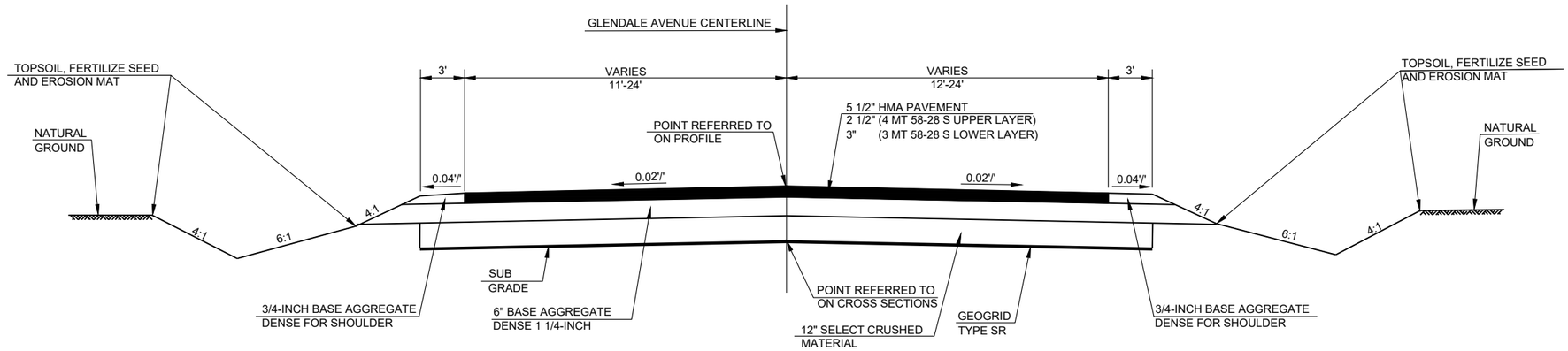

TYPICAL FINISHED CROSS SECTION FOR GLENDALE AVENUE

STA. 201+24.78'GL' - STA. 205+01.50'GL'
STA. 211+75'GL' LT. - STA. 212+50'GL' LT.
STA. 211+90'GL' RT. - STA. 212+50'GL' RT.

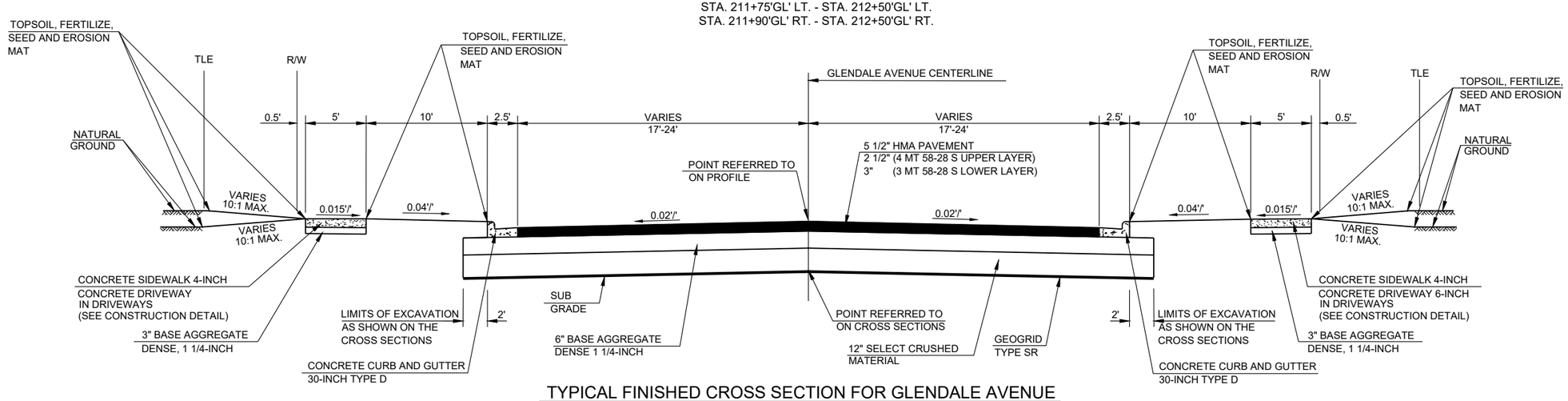

TYPICAL FINISHED CROSS SECTION FOR GLENDALE AVENUE

STA. 205+01.50'GL' LT. - STA. 211+75.00'GL' LT.
STA. 205+01.50'GL' RT. - STA. 211+90.00'GL' RT.

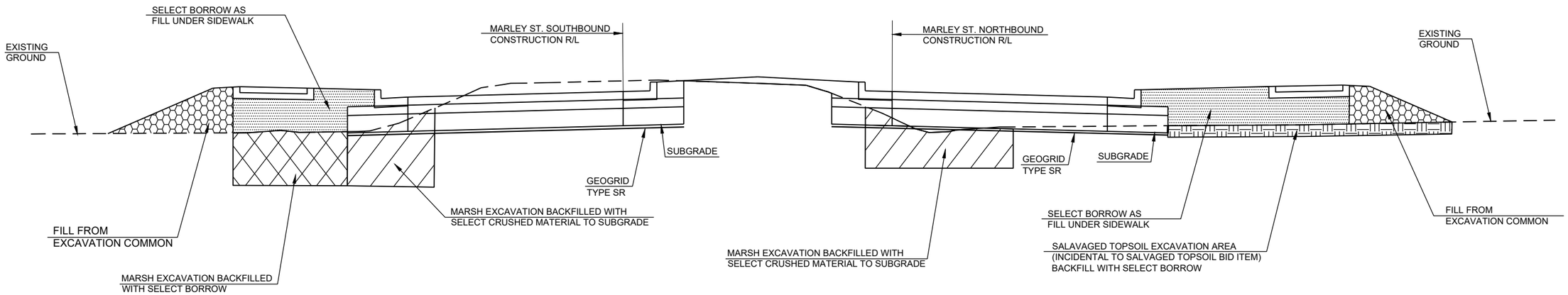

DETAIL FOR EXCAVATION AND BACKFILL

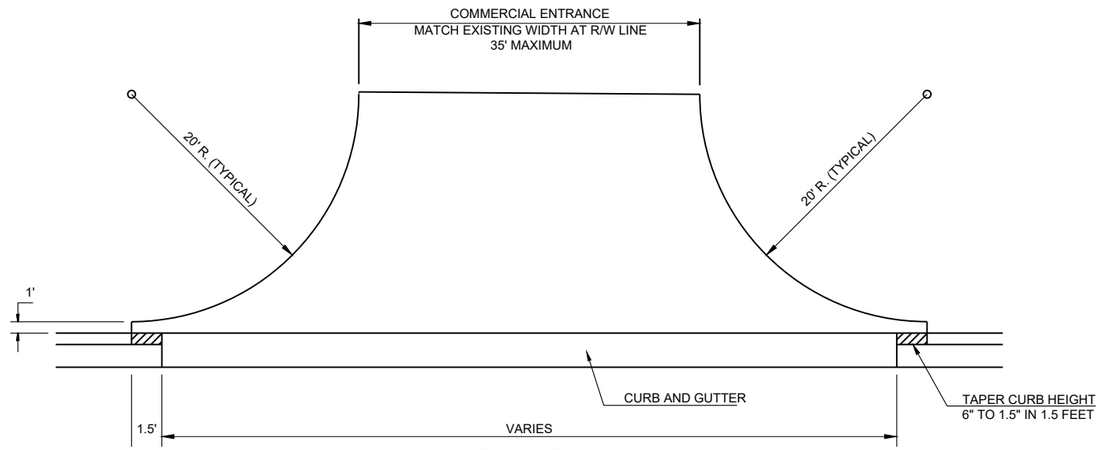

PLAN VIEW

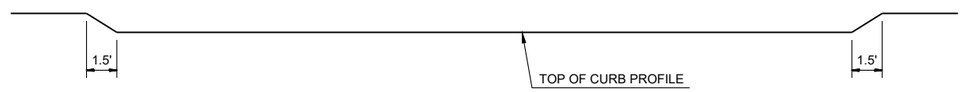

PROFILE VIEW

COMMERCIAL ENTRANCES

NOTES:

NON-PAVED DRIVEWAYS SHALL CONSIST OF 6" OF BASE AGGREGATE DENSE.

RESIDENTIAL ENTRANCE ASPHALTIC DRIVEWAYS SHALL CONSIST OF 6" BASE AGGREGATE DENSE AND 3" OF ASPHALTIC PAVEMENT.

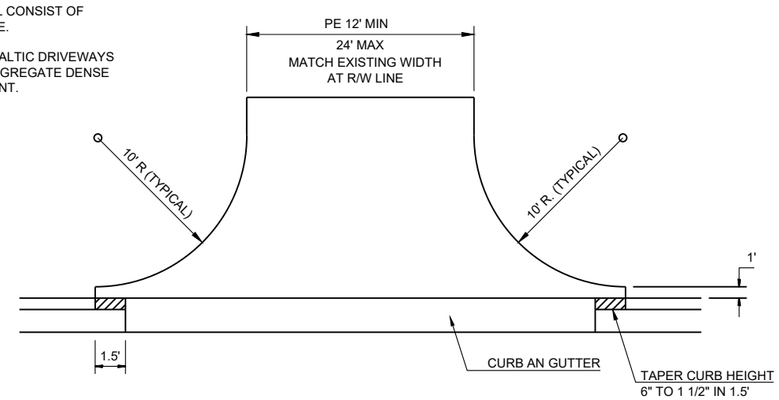

PRIVATE ENTRANCES

RURAL DRIVEWAYS WITH CURB AND GUTTER

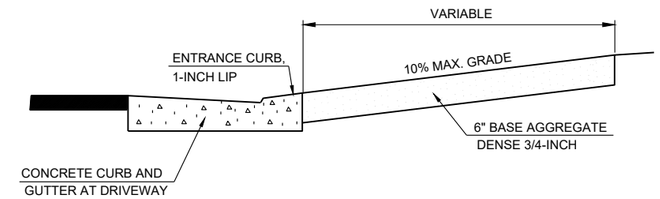

TYPICAL LONGITUDINAL SECTION AT
CRUSHED AGGREGATE SURFACE PRIVATE ENTRANCES
(REPLACE IN KIND)

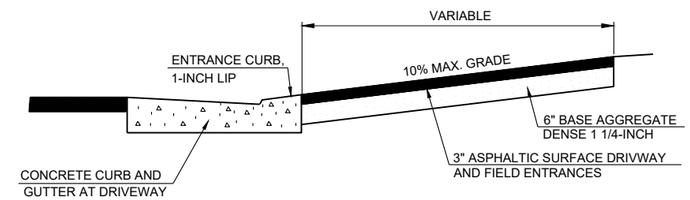

TYPICAL LONGITUDINAL SECTION AT
ASPHALTIC CONCRETE PAVEMENT PRIVATE ENTRANCES
(REPLACE IN KIND)

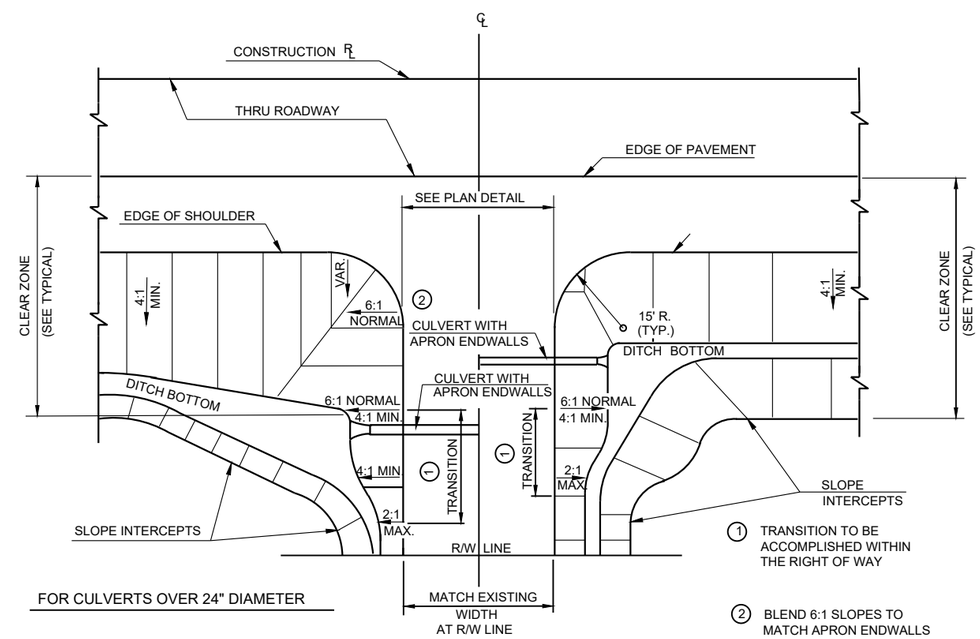

PLAN VIEW

FOR CULVERTS 24" DIAMETER OR LESS

ENTRANCE GRADING DETAIL

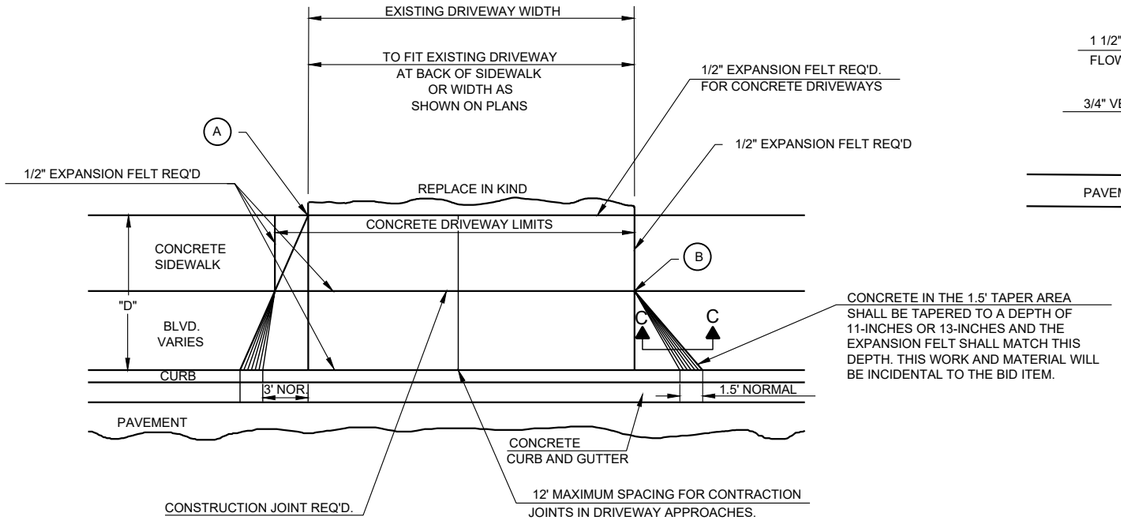

PLAN VIEW

(A) WHEN "D" IS 13' OR LESS, ALIGN TAPER WITH BACK OF SIDEWALK

(B) WHEN "D" IS GREATER THAN 13', ALIGN TAPER WITH FRONT OF SIDEWALK

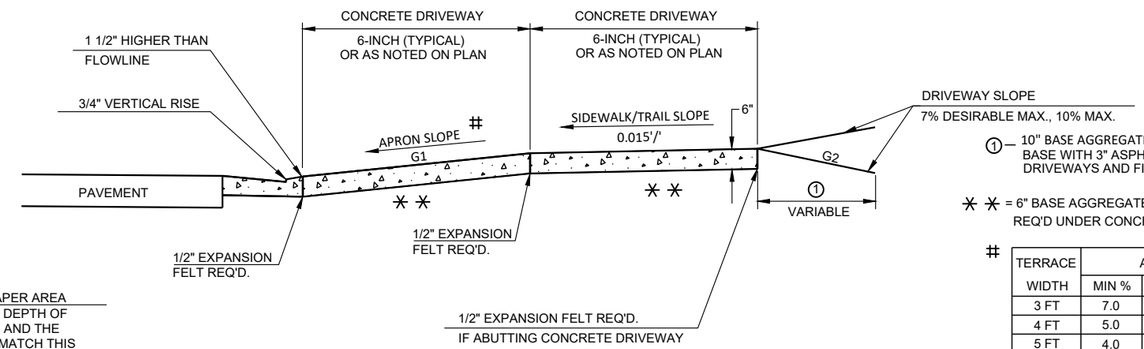

(1) – 10" BASE AGGREGATE DENSE 1 1/4-INCH BASE WITH 3" ASPHALTIC SURFACE DRIVEWAYS AND FIELD ENTRANCES

✳✳ = 6" BASE AGGREGATE DENSE 1 1/4-INCH REQ'D UNDER CONCRETE DRIVEWAY

TYPICAL SIDEWALK SECTION

#

TERRACE	APRON SLOPE (G1)		
WIDTH	MIN %	DESIRABLE %	MAX %
3 FT	7.0	8.5	9.0
4 FT	5.0	7.0	9.0
5 FT	4.0	7.0	9.0
6 FT	4.0	7.0	9.0
7 FT	3.5	7.0	9.0
8 FT	3.0	7.0	9.0
9 FT	3.0	7.0	9.0
10 FT	3.0	7.0	9.0

NOTE: ALGEBRAIC DIFFERENCE BETWEEN TANGENT GRADES G1 & G2 TO NOT EXCEED 15%

DEPRESS SIDEWALK PROFILE IF DRIVEWAY APRON EXCEEDS MAX SLOPE

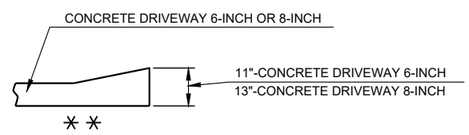

✳✳

SECTION C-C

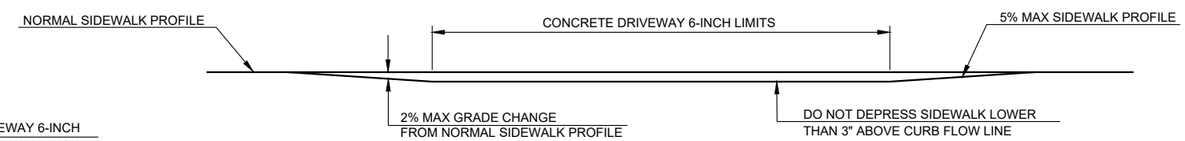

DEPRESSED SIDEWALK PROFILE DETAIL

DRIVEWAY ENTRANCE DETAIL WITH SIDEWALK, CURB AND GUTTER

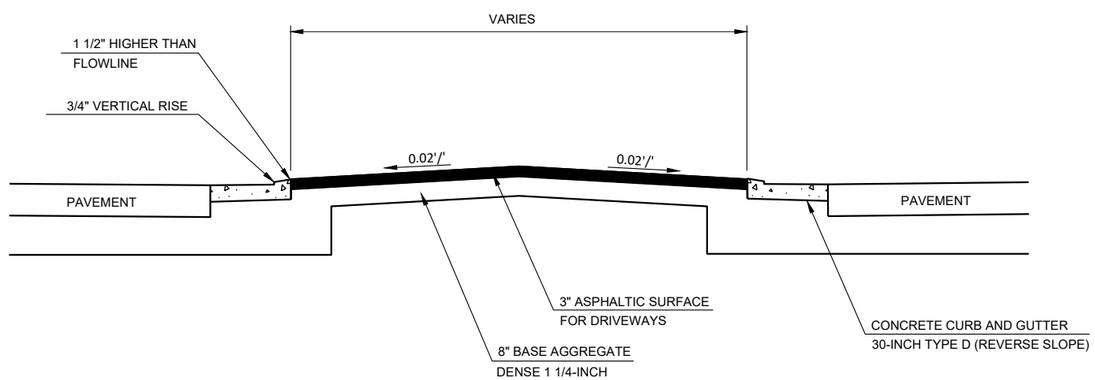

ASPHALTIC SURFACE FOR DRIVEWAYS MEDIAN DETAIL

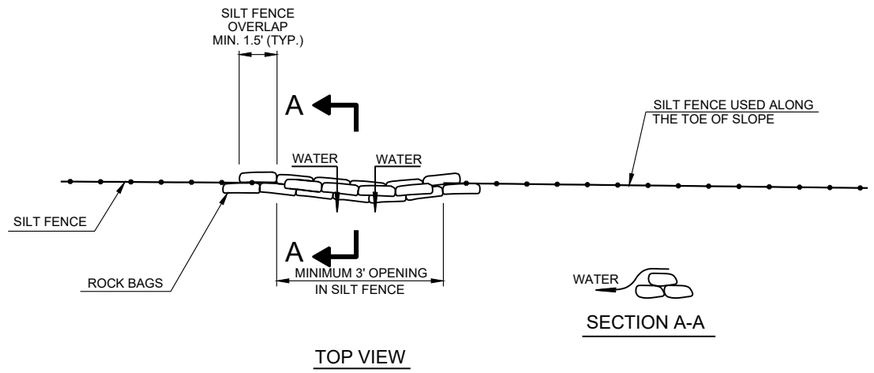

ROCK BAGS USED FOR SILT FENCE RELIEF DETAIL

PAID AS ROCK BAGS

(SEE MISCELLANEOUS QUANTITIES FOR LOCATIONS)

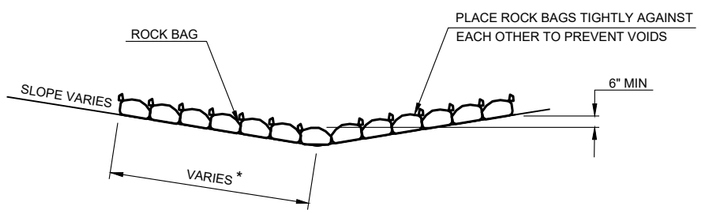

SIDE VIEW (SINGLE LAYER)

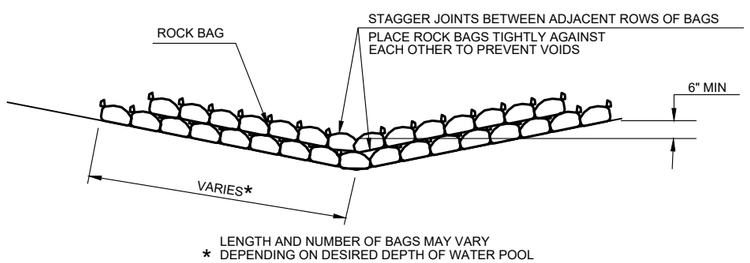

SIDE VIEW (MULTIPLE LAYER)

ROCK BAGS DITCH CHECK

PAID AS ROCK BAGS

(SEE MISCELLANEOUS QUANTITIES FOR LOCATIONS)

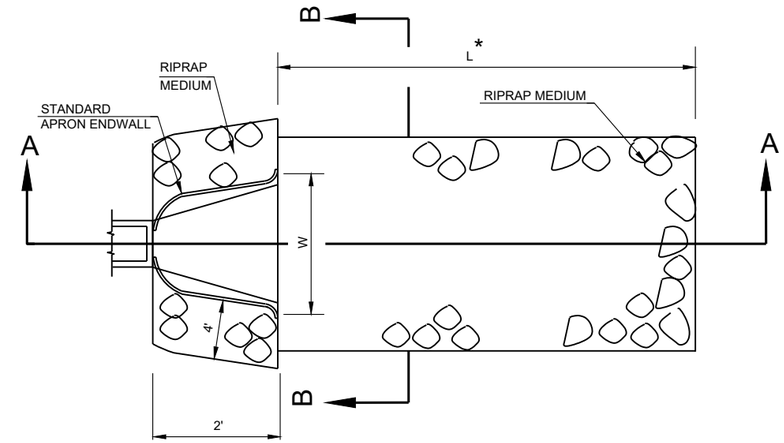

* L = 3 TIMES DIAMETER (NORMAL) OR 10' MIN. OR AS DIRECTED BY THE ENGINEER

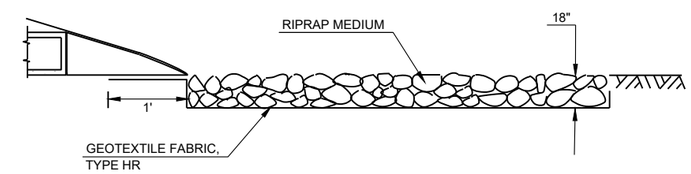

SECTION A-A

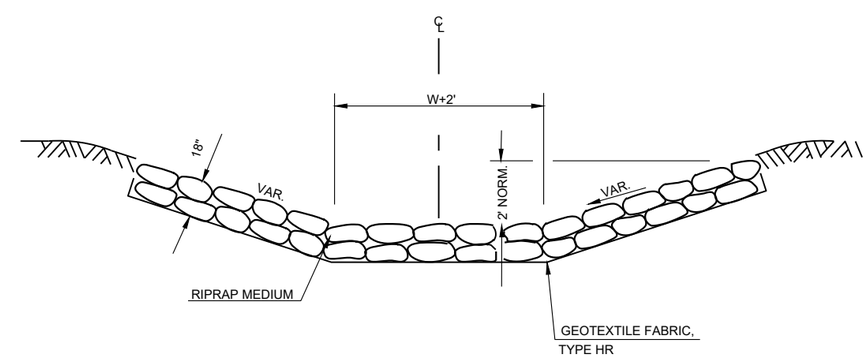

SECTION B-B

RIPRAP MEDIUM AND GEOTEXTILE FABRIC DETAIL AT APRON ENDWALLS

(SEE MISCELLANEOUS QUANTITIES FOR LOCATIONS)

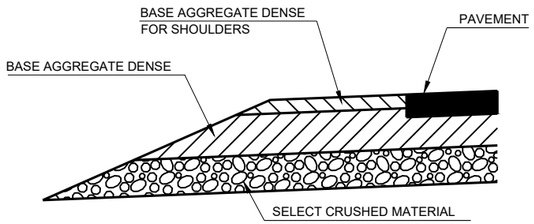

SECTION A-A

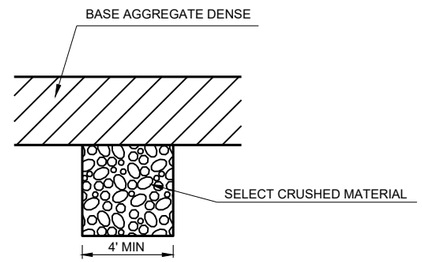

SECTION B-B

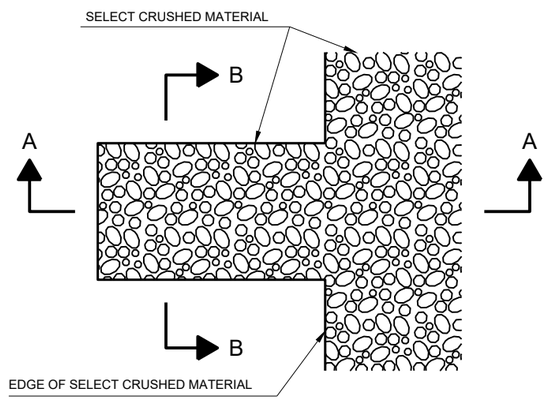

DETAIL FOR FRENCH DRAINS

STA. 97+50'NB' - STA. 101+00'NB' LT.

DRAINS ARE TO BE CONSTRUCTED AT LEAST EVERY 250' AND AT EACH SAG VERTICAL CURVE IN THE PROFILE. LOCATIONS TO BE DETERMINED IN THE FIELD BY THE ENGINEER. EXCAVATION REQUIRED TO CONSTRUCT FRENCH DRAINS SHALL BE CONSIDERED INCIDENTAL TO THE ITEM "SELECT CRUSHED MATERIAL".

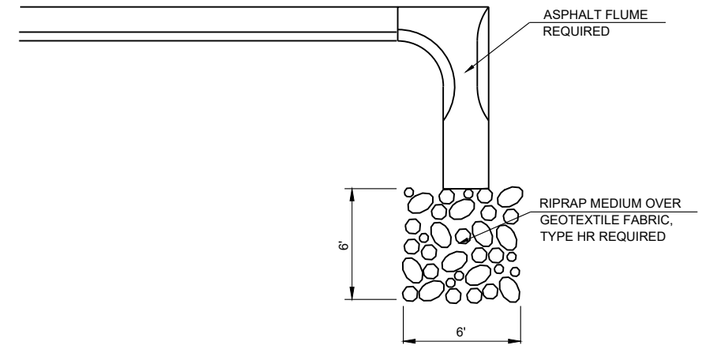

RIPRAP MEDIUM AT ASPHALT FLUME

(SEE MISCELLANEOUS QUANTITIES FOR LOCATION)

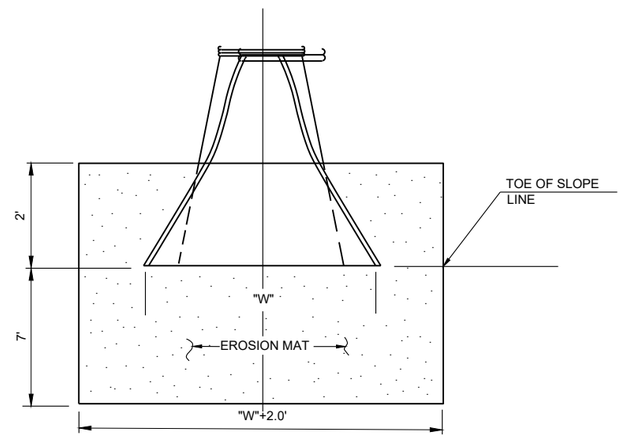

EROSION MAT AT END OF PIPE

(CONCRETE OR METAL)

(SEE MISCELLANEOUS QUANTITIES FOR LOCATIONS)

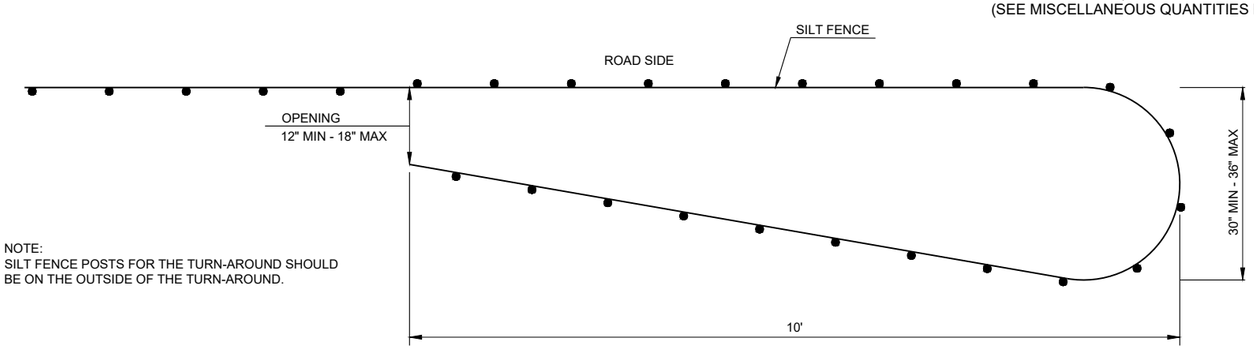

NOTE:
SILT FENCE POSTS FOR THE TURN-AROUND SHOULD BE ON THE OUTSIDE OF THE TURN-AROUND.

PLAN VIEW

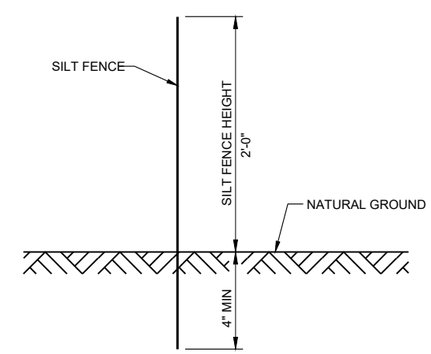

SIDE VIEW

SILT FENCE TURN-AROUND DETAIL

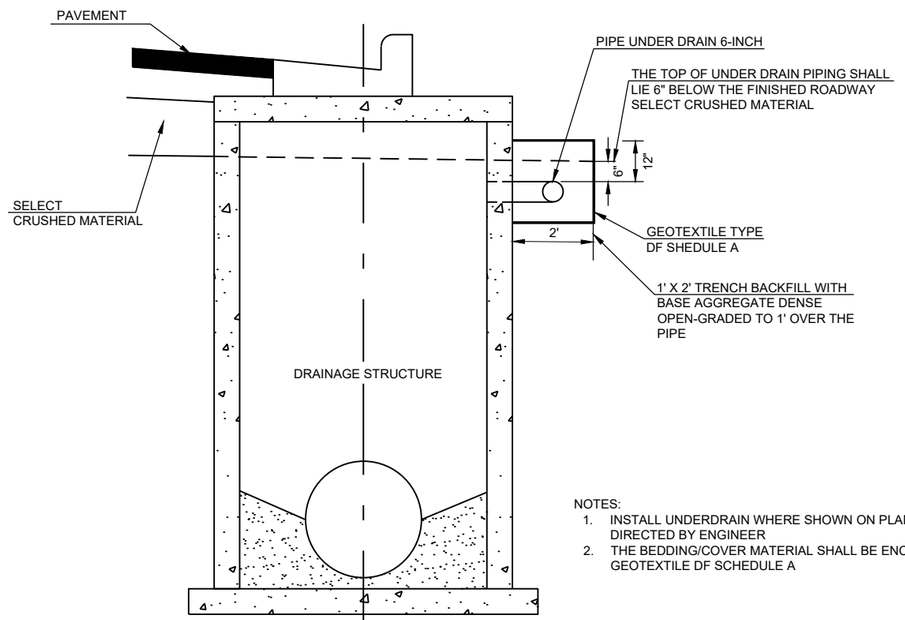

SECTION A-A

NOTES:
1. INSTALL UNDERDRAIN WHERE SHOWN ON PLANS AND/OR AS DIRECTED BY ENGINEER
2. THE BEDDING/COVER MATERIAL SHALL BE ENCASED WITH GEOTEXTILE DF SCHEDULE A

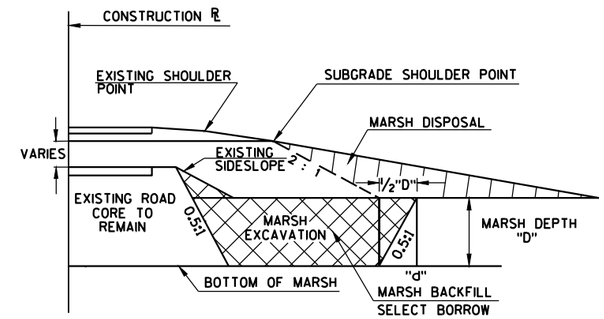

NOTE: BACKFILL QUANTITIES COMPUTED FROM POINT "d" TO COMPENSATE FOR PROBABLE DISPLACED MARSH AREA.

TYPICAL SECTION-MARSH EXCAVATION

STA. 201+75'GL' - STA. 204+25'GL'

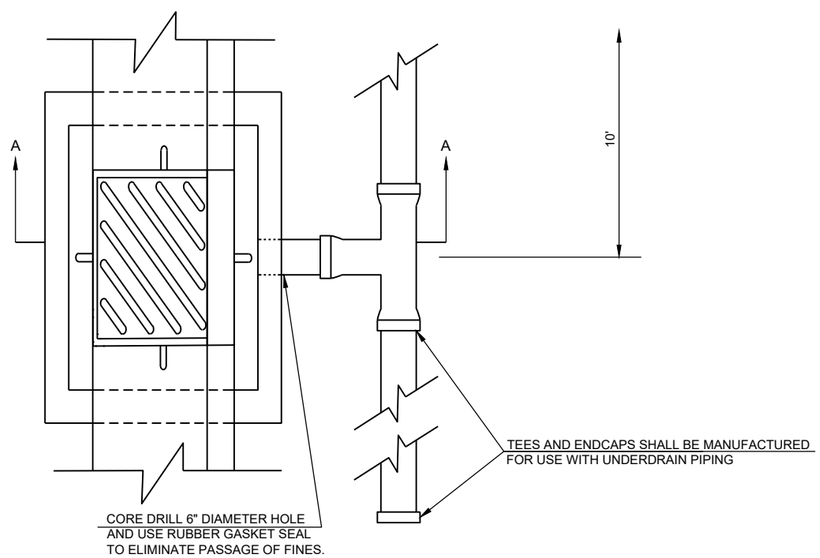

UNDERDRAIN DETAIL

(SEE MISCELLANEOUS QUANTITIES FOR LOCATIONS)

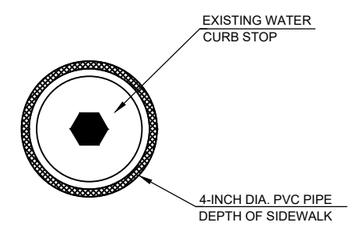

NOTE:
COST OF PVC PIPE IS INCIDENTAL TO ITEMS OF CONCRETE SIDEWALK

DETAIL FOR WATER CURB STOP IN SIDEWALK

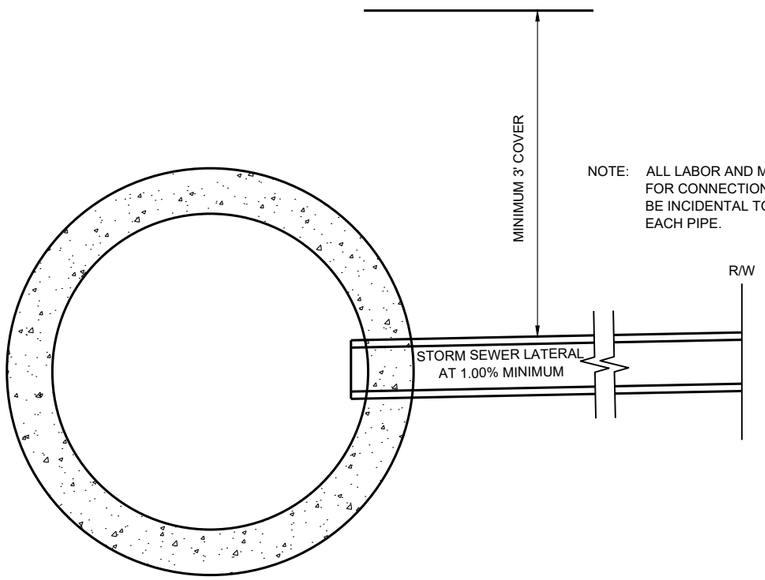

NOTE: ALL LABOR AND MATERIALS NECESSARY FOR CONNECTION TO STORM SEWER SHALL BE INCIDENTAL TO THE BID ITEM OF EACH PIPE.

STORM SEWER LATERAL DETAIL

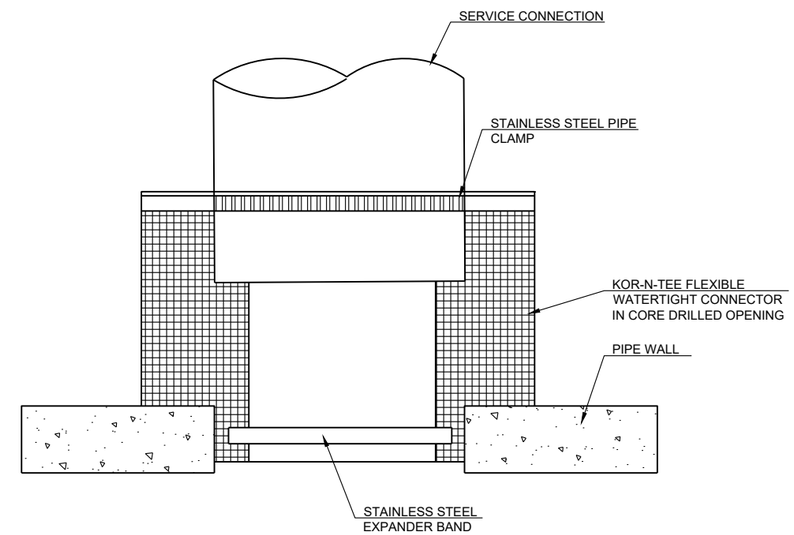

STORM SEWER LATERAL INSTALLATION

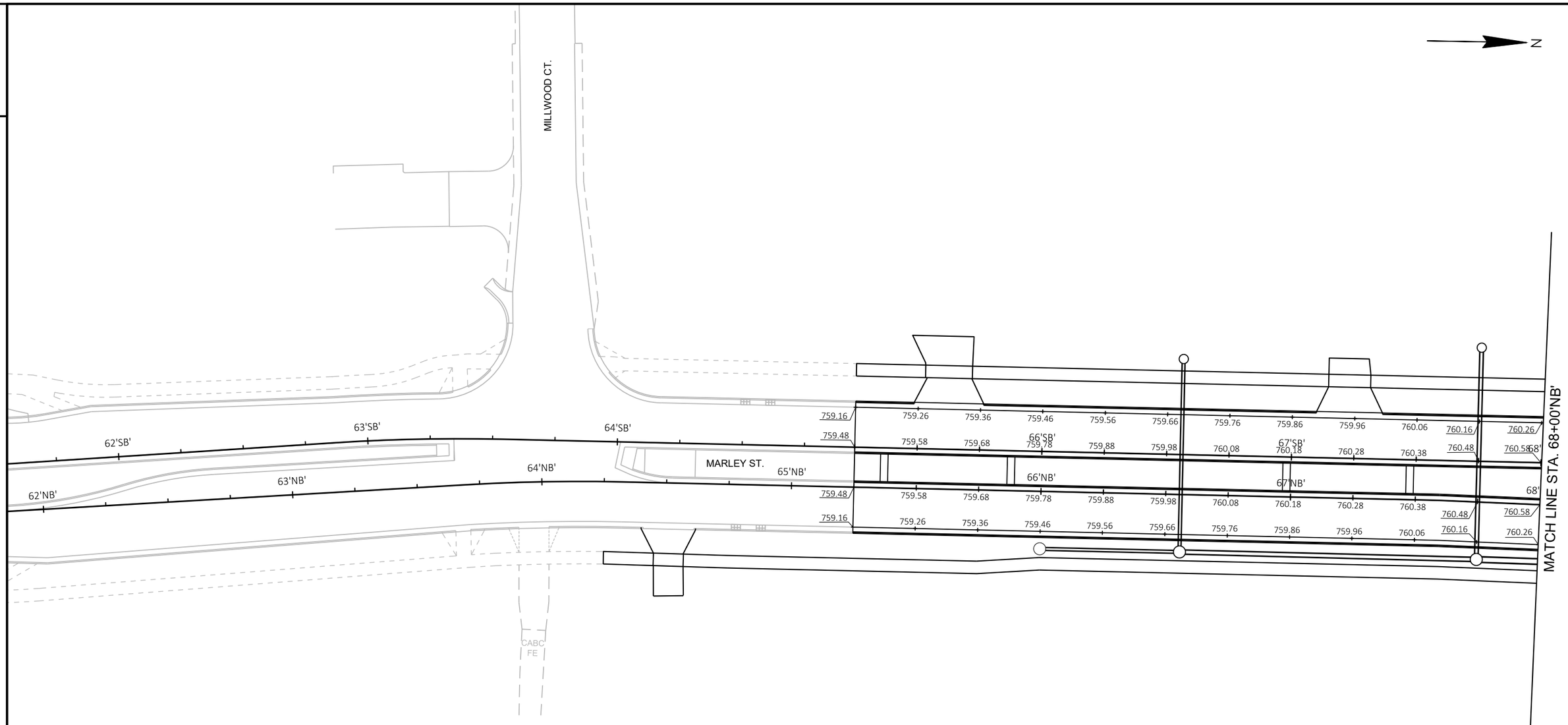
N
MILLWOOD CT.
MARLEY ST.
62'SB'
63'SB'
64'SB'
65'NB'
64'NB'
63'NB'
62'NB'
66'SB'
67'SB'
66'NB'
67'NB'
68'
759.16
759.26
759.36
759.46
759.56
759.66
759.76
759.86
759.96
760.06
760.16
760.26
759.48
759.58
759.68
759.78
759.88
759.98
760.08
760.18
760.28
760.38
760.48
760.58
MATCH LINE STA. 68+00'NB'
CABC
FE

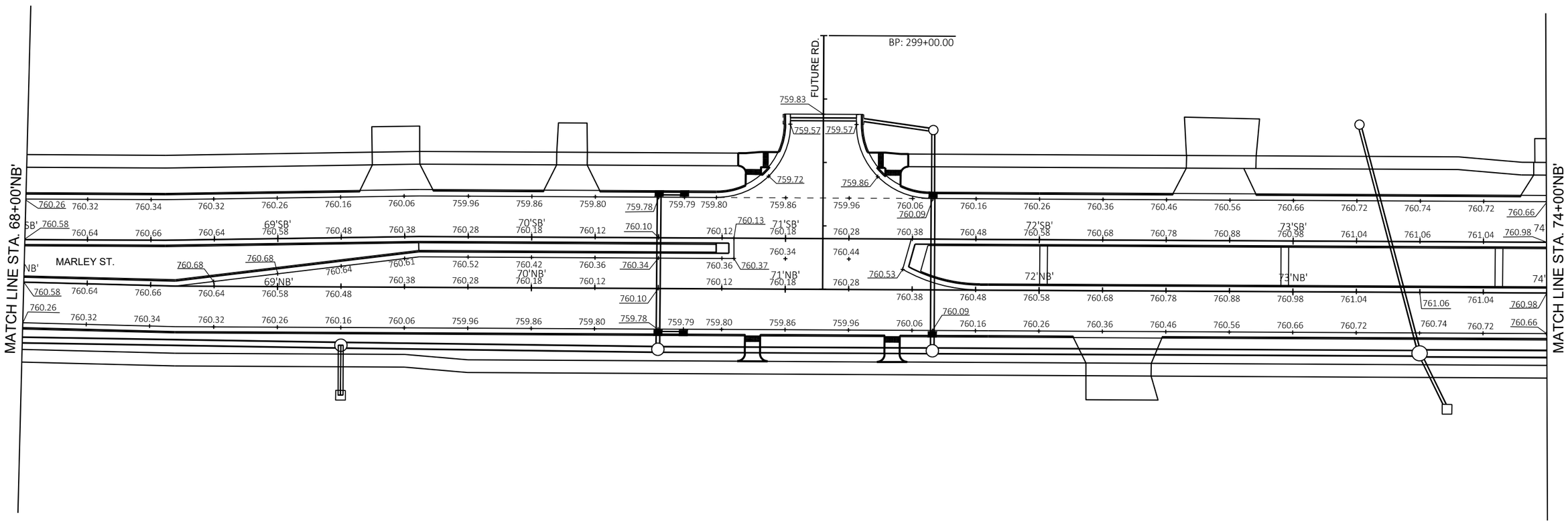
N
BP: 299+00.00
FUTURE RD.
MATCH LINE STA. 68+00'NB'
MATCH LINE STA. 74+00'NB'
MARLEY ST.
759.83
759.57
759.57
759.72
759.86
69'SB'
70'SB'
71'SB'
72'SB'
73'SB'
69'NB'
70'NB'
71'NB'
72'NB'
73'NB'

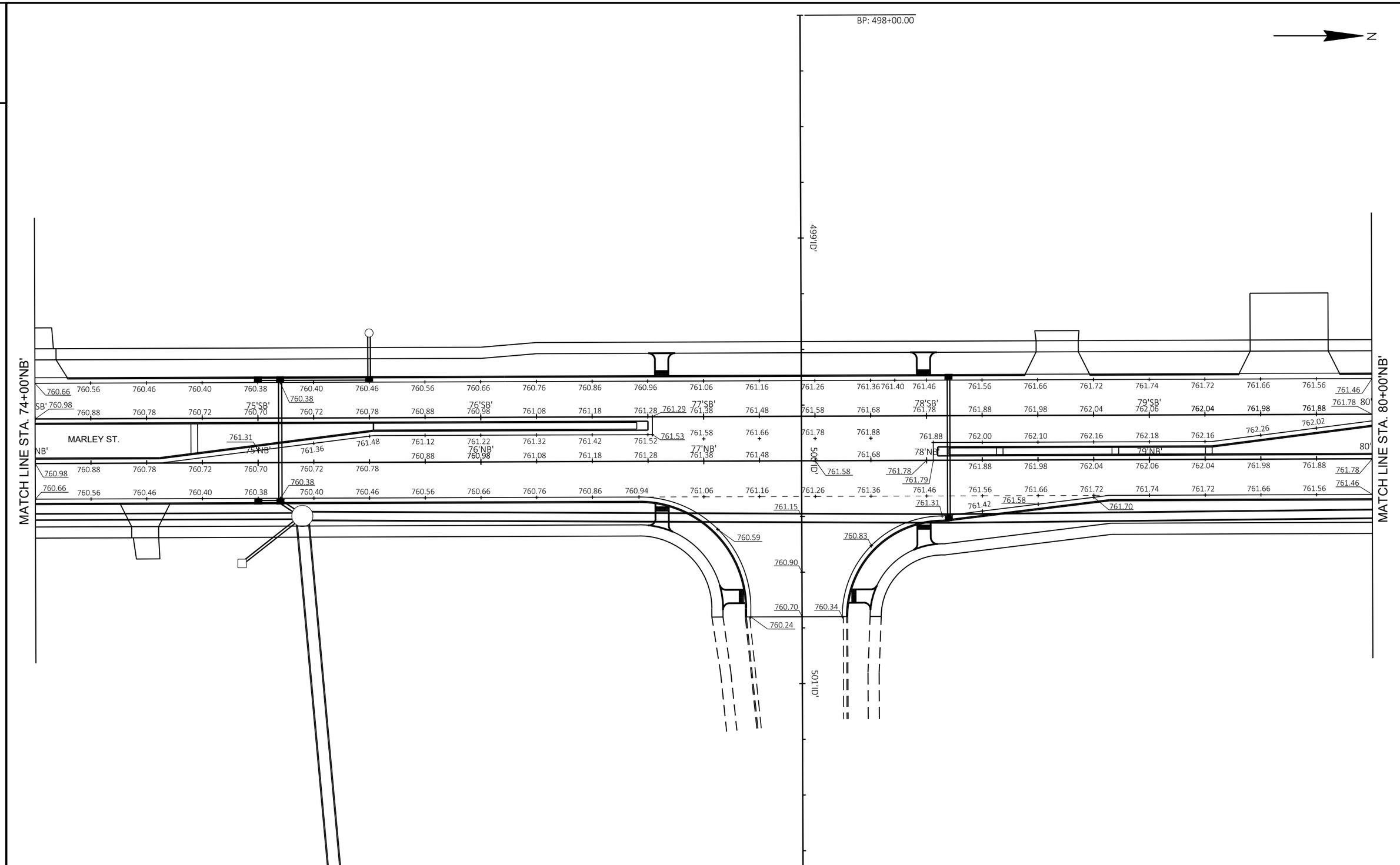

PROJECT NO: 9269-00-14	HWY: MARLEY STREET	COUNTY: BROWN	PLAN GRADES	SHEET 17	E

FILE NAME : I:\45\450490 MARLEY STREET\C3D\SHEETSPLAN\021203 GR.DWG
LAYOUT NAME - 021203 gr
PLOT DATE : 11/11/2021 10:55 AM
PLOT BY : GARNICA, BRANDON
PLOT NAME :
PLOT SCALE : 1 IN:40 FT

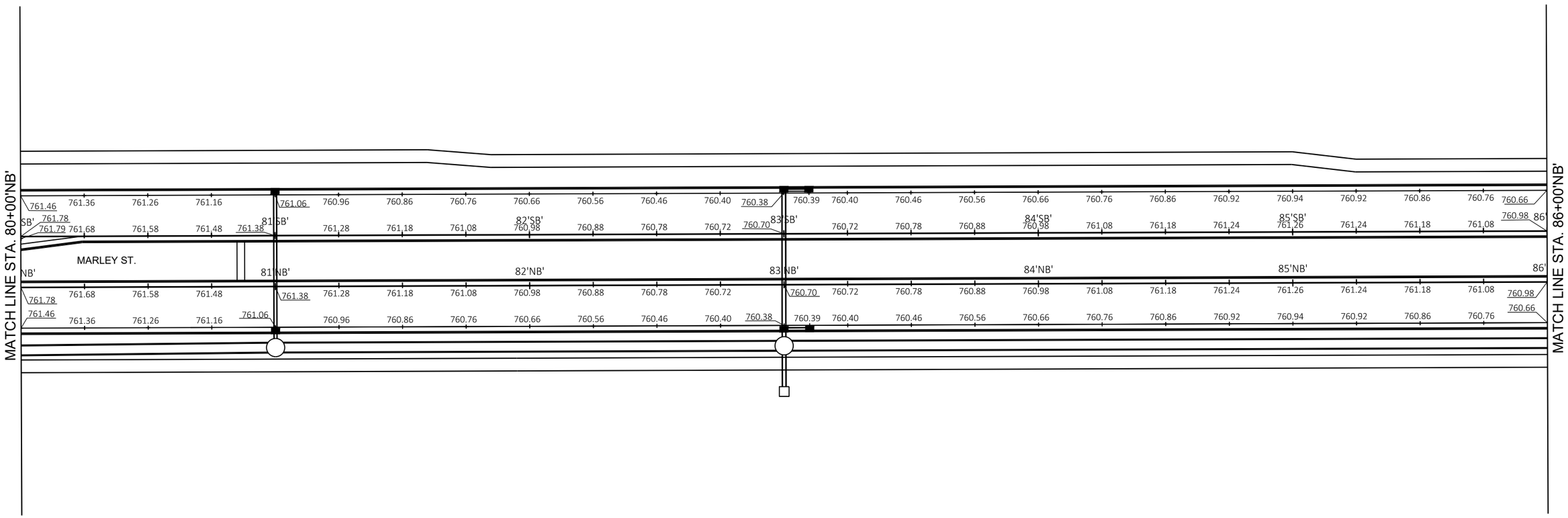
N
MATCH LINE STA. 80+00'NB'
MATCH LINE STA. 86+00'NB'
MARLEY ST.
81'SB'
82'SB'
83'SB'
84'SB'
85'SB'
81'NB'
82'NB'
83'NB'
84'NB'
85'NB'
761.46 761.36 761.26 761.16 761.06 760.96 760.86 760.76 760.66 760.56 760.46 760.40 760.38 760.39 760.40 760.46 760.56 760.66 760.76 760.86 760.92 760.94 760.92 760.86 760.76 760.66
761.78 761.68 761.58 761.48 761.38 761.28 761.18 761.08 760.98 760.88 760.78 760.72 760.70 760.72 760.78 760.88 760.98 761.08 761.18 761.24 761.26 761.24 761.18 761.08 760.98

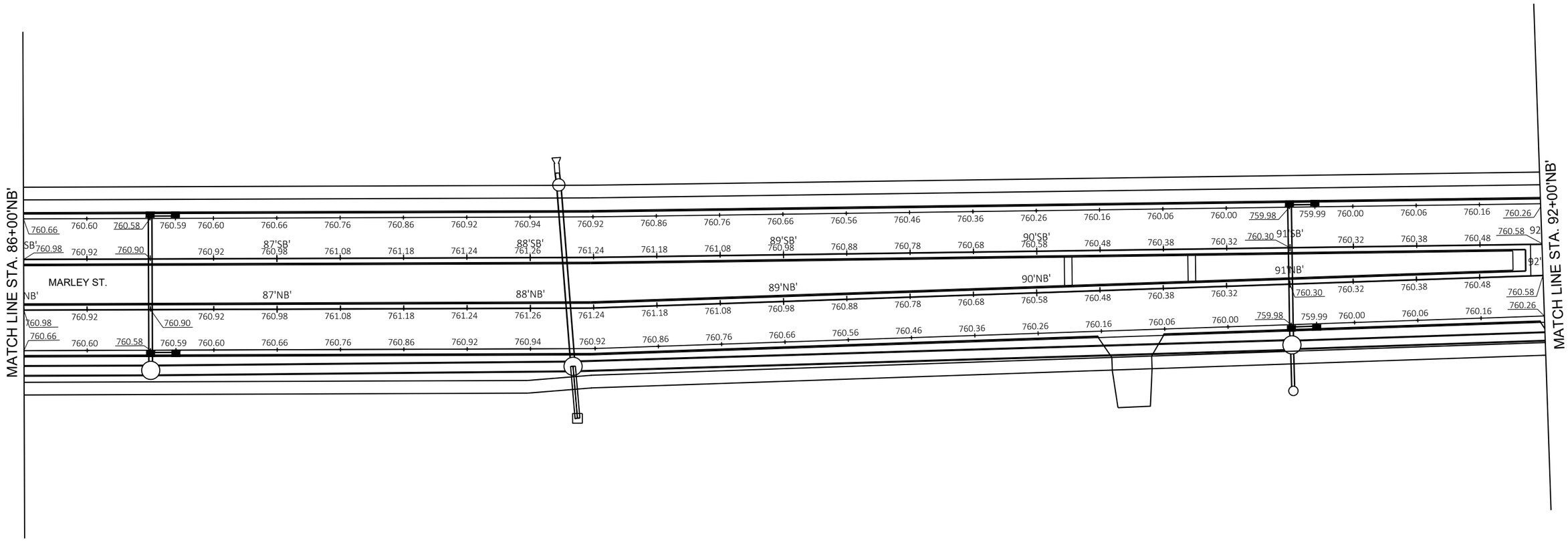

PROJECT NO: 9269-00-14	HWY: MARLEY STREET	COUNTY: BROWN	PLAN GRADES	SHEET 19	E

FILE NAME : I:\45\450490 MARLEY STREET\C3D\SHEETSPLAN\021205 GR.DWG
LAYOUT NAME - 021205 gr
PLOT DATE : 11/11/2021 10:56 AM
PLOT BY : GARNICA, BRANDON
PLOT NAME :
PLOT SCALE : 1 IN:40 FT
WISDOT/CADDS SHEET 42

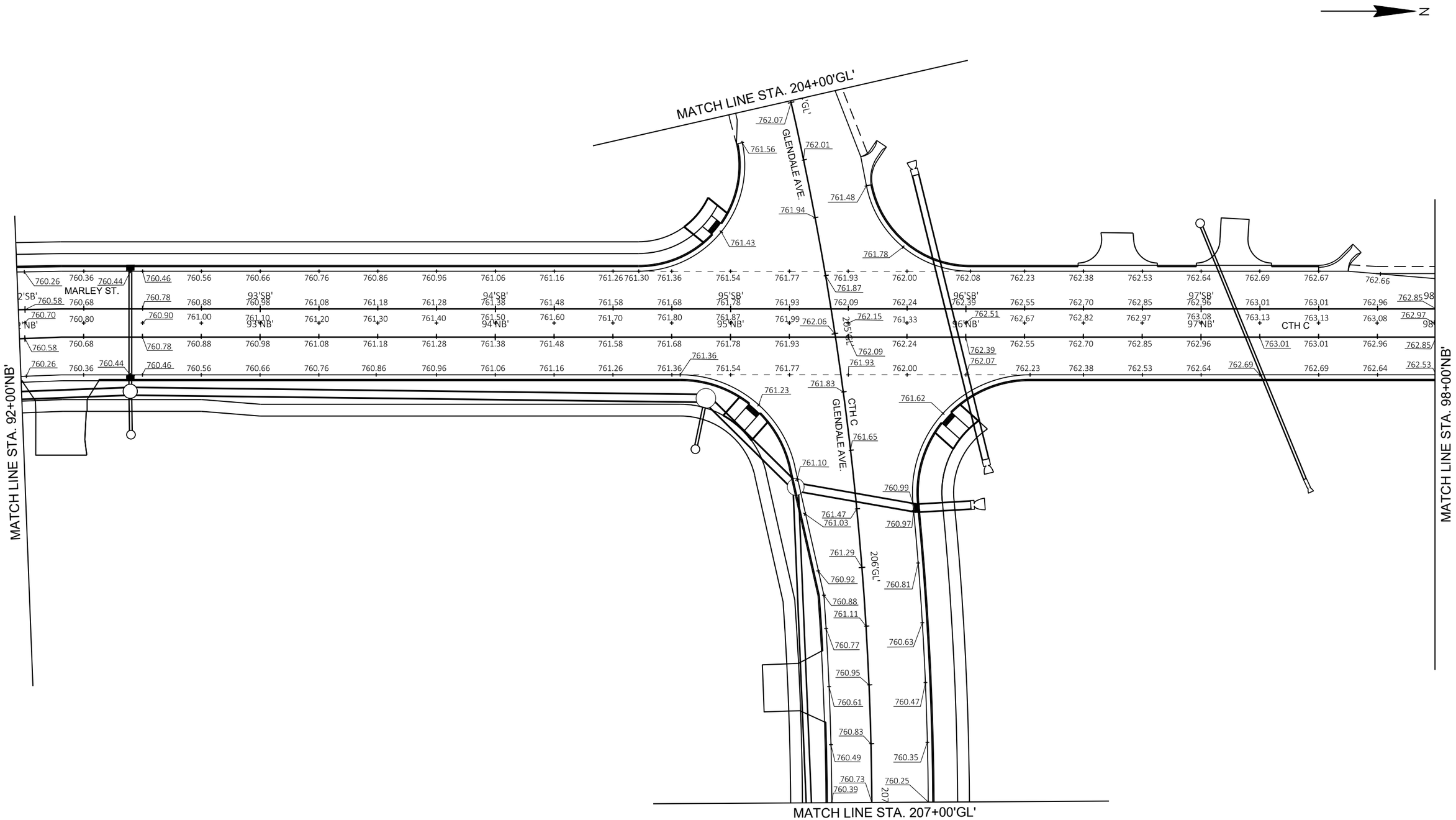

PROJECT NO: 9269-00-14	HWY: MARLEY STREET	COUNTY: BROWN	PLAN GRADES	SHEET 20	E

FILE NAME : I:\45\450490 MARLEY STREET\C3D\SHEETSPLAN\021206 GR.DWG
LAYOUT NAME - 021206 gr
PLOT DATE : 11/11/2021 10:57 AM PLOT BY : GARNICA, BRANDON PLOT NAME : PLOT SCALE : 1 IN:40 FT
WISDOT/CADDS SHEET 42

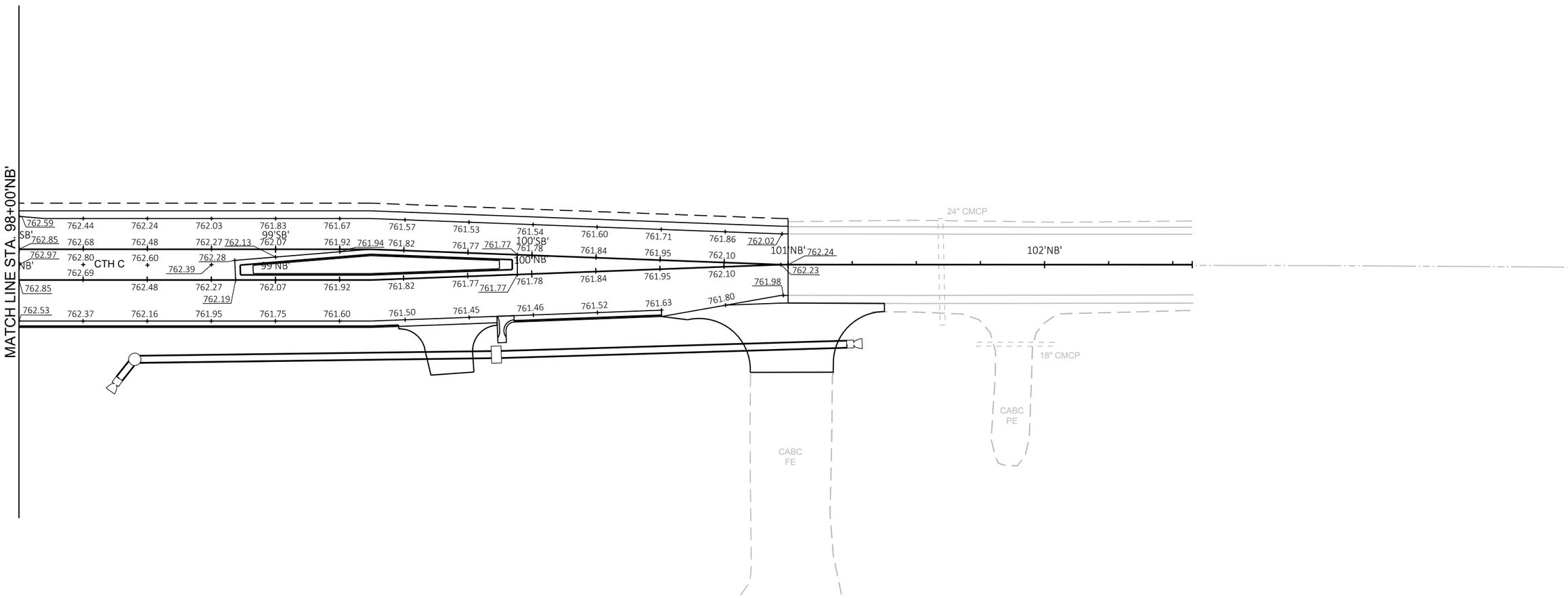

PROJECT NO: 9269-00-14	HWY: MARLEY STREET	COUNTY: BROWN	PLAN GRADES	SHEET 21	E

FILE NAME : I:\45\450490 MARLEY STREET\C3D\SHEETSPLAN\021207 GR.DWG
LAYOUT NAME - 021207 gr
PLOT DATE : 11/12/2021 10:05 AM
PLOT BY : VERVILLE, PHILLIP
PLOT NAME :
PLOT SCALE : 1 IN:40 FT

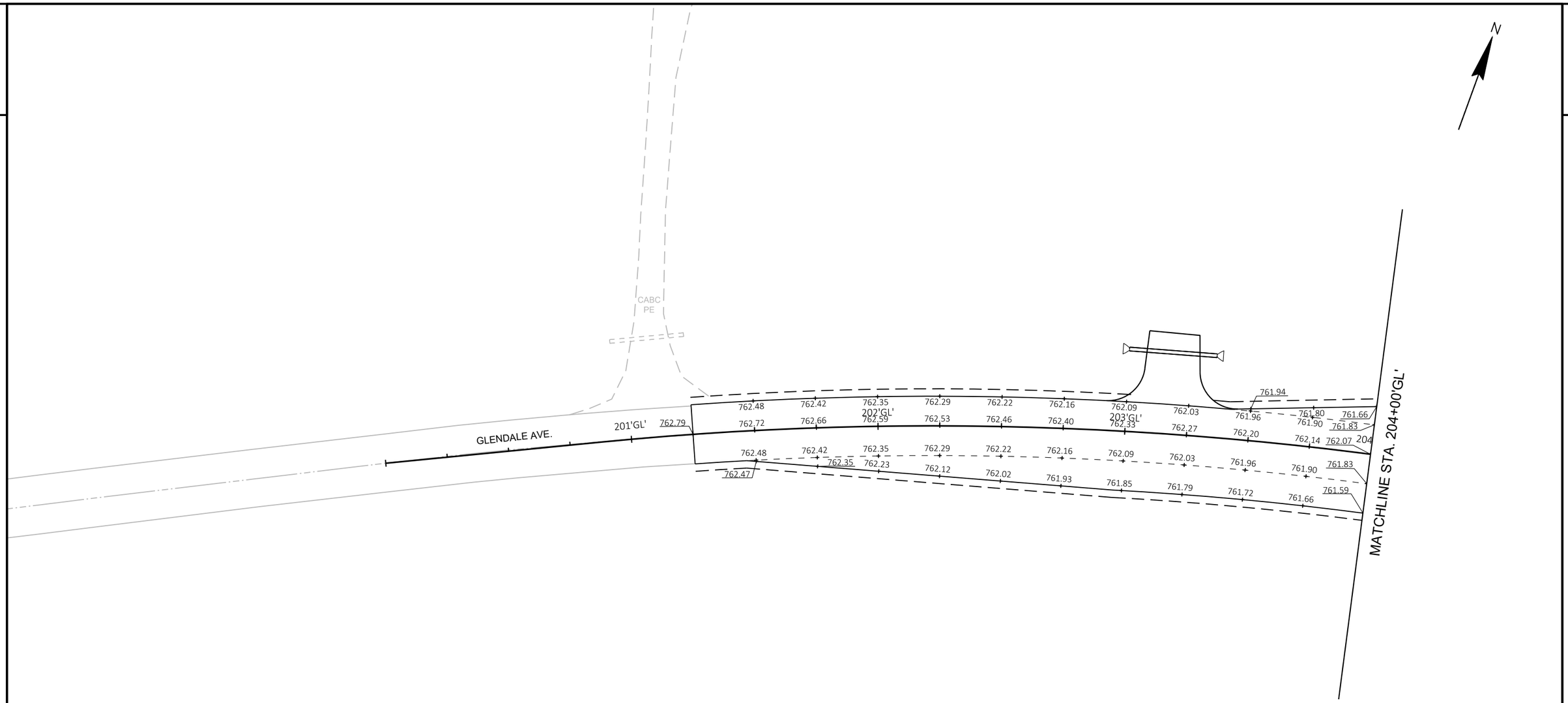

PROJECT NO: 9269-00-14	HWY: MARLEY STREET	COUNTY: BROWN	PLAN GRADES	SHEET 22	E

FILE NAME : I:\45\450490 MARLEY STREET\C3D\SHEETSPLAN\021208 GR.DWG
LAYOUT NAME - 021208 gr
PLOT DATE : 11/11/2021 10:58 AM
PLOT BY : GARNICA, BRANDON
PLOT NAME :
PLOT SCALE : 1 IN:40 FT
WISDOT/CADDS SHEET 42

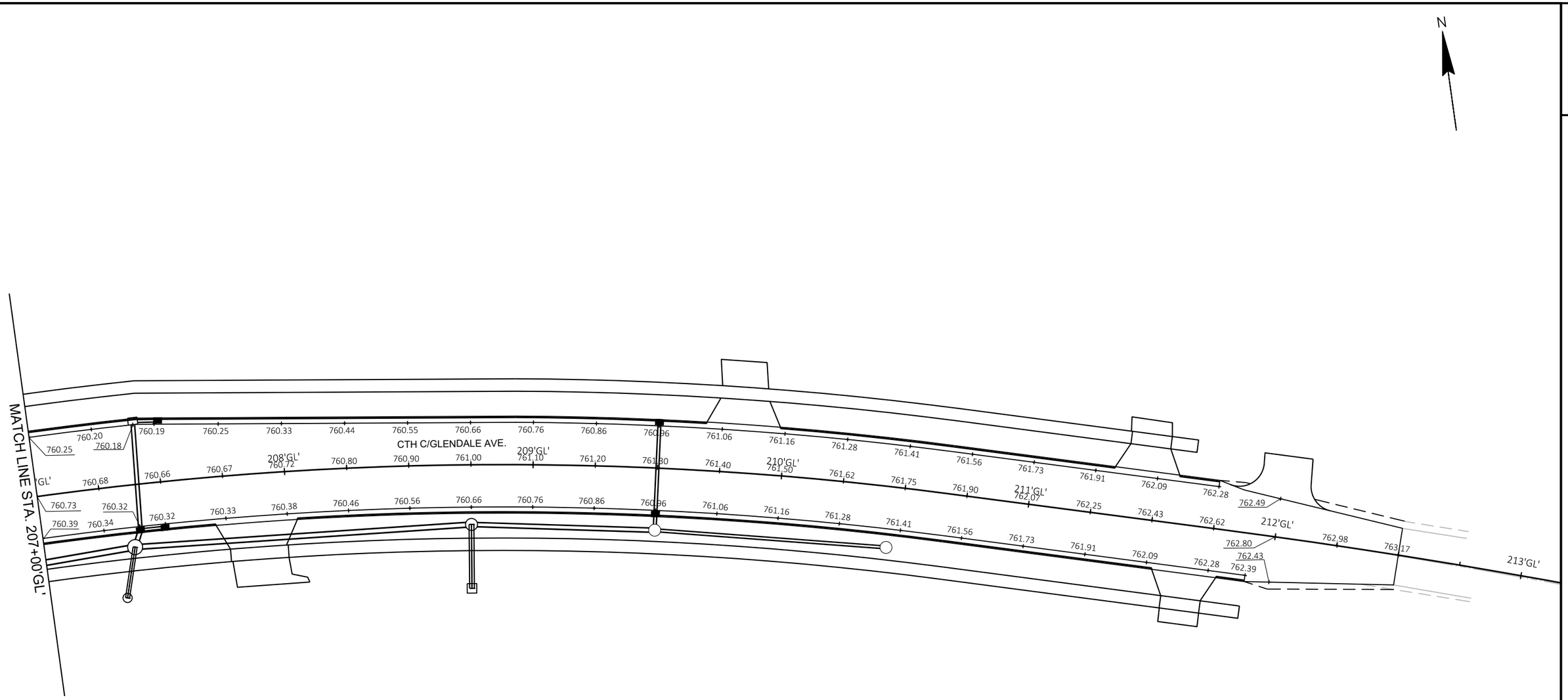

PROJECT NO: 9269-00-14	HWY: MARLEY STREET	COUNTY: BROWN	PLAN GRADES	SHEET 23	E

FILE NAME : I:\45\450490 MARLEY STREET\C3D\SHEETSPLAN\021209 GR.DWG
LAYOUT NAME - 021209 gr
PLOT DATE : 11/11/2021 10:58 AM
PLOT BY : GARNICA, BRANDON
PLOT NAME :
PLOT SCALE : 1 IN:40 FT

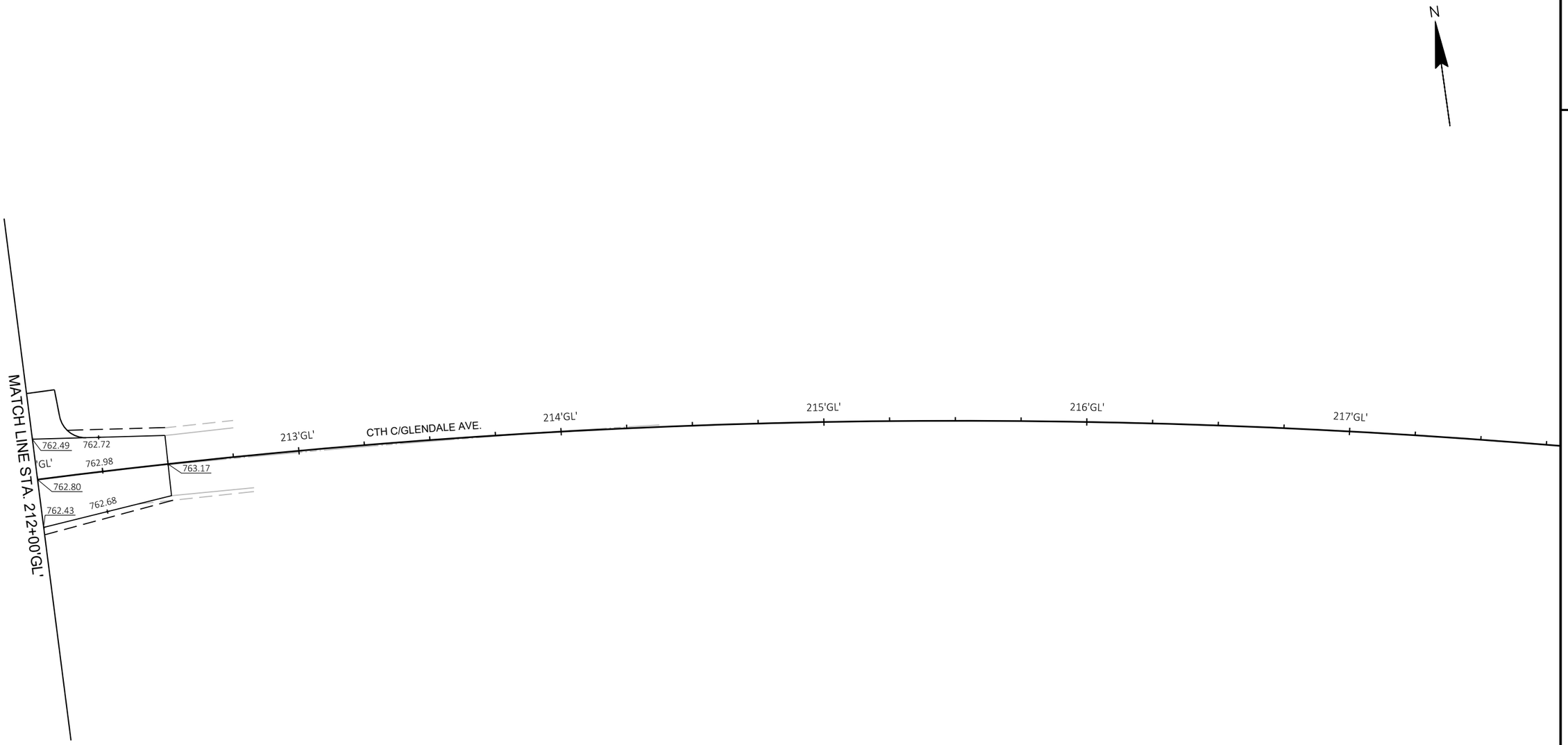

PROJECT NO: 9269-00-14	HWY: MARLEY STREET	COUNTY: BROWN	PLAN GRADES	SHEET 24	E

FILE NAME : I:\45\450490 MARLEY STREET\C3D\SHEETSPLAN\021210 GR.DWG
LAYOUT NAME - 021210 gr
PLOT DATE : 11/11/2021 10:58 AM
PLOT BY : GARNICA, BRANDON
PLOT NAME :
PLOT SCALE : 1 IN:40 FT
WISDOT/CADDS SHEET 42

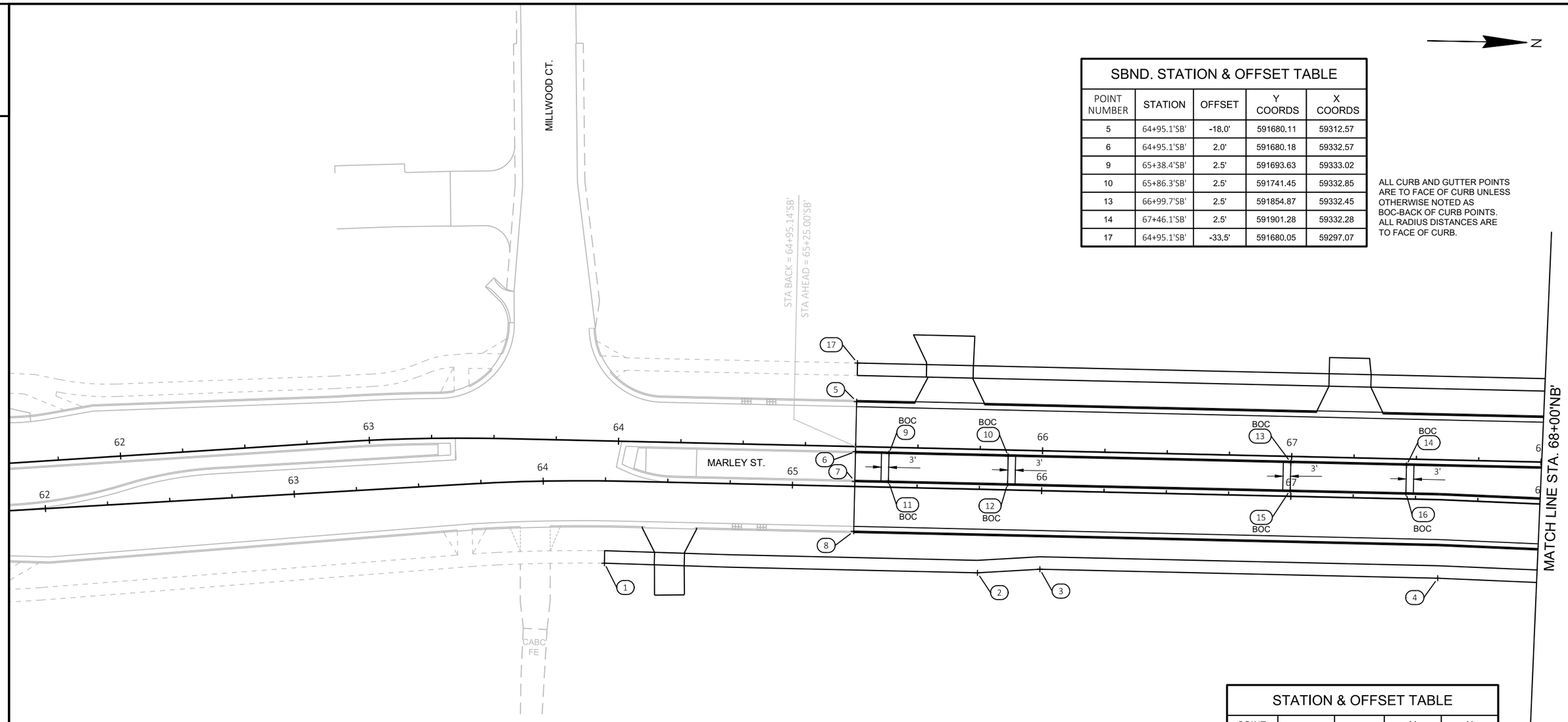

SBND. STATION & OFFSET TABLE

POINT NUMBER	STATION	OFFSET	Y COORDS	X COORDS
5	64+95.1'SB'	-18.0'	591680.11	59312.57
6	64+95.1'SB'	2.0'	591680.18	59332.57
9	65+38.4'SB'	2.5'	591693.63	59333.02
10	65+86.3'SB'	2.5'	591741.45	59332.85
13	66+99.7'SB'	2.5'	591854.87	59332.45
14	67+46.1'SB'	2.5'	591901.28	59332.28
17	64+95.1'SB'	-33.5'	591680.05	59297.07

ALL CURB AND GUTTER POINTS ARE TO FACE OF CURB UNLESS OTHERWISE NOTED AS BOC-BACK OF CURB POINTS. ALL RADIUS DISTANCES ARE TO FACE OF CURB.

STATION & OFFSET TABLE

POINT NUMBER	STATION	OFFSET	Y COORDS	X COORDS
1	64+25.0'NB'	33.0	591580.66	59379.96
2	65+75.0'NB'	33.5	591730.35	59379.89
3	66+00.0'NB'	31.5	591755.34	59377.80
4	67+60.3'NB'	31.5	591914.99	59377.23
7	65+25.0'NB'	-2.0	591680.23	59344.57
11	65+38.4'NB'	-2.5	591693.67	59344.02
12	65+86.3'NB'	-2.5	591741.49	59343.85
15	66+99.7'NB'	-2.5	591854.91	59343.44
16	67+46.1'NB'	-2.5	591901.32	59343.28

SBND. STATION & OFFSET TABLE				
POINT NUMBER	STATION	OFFSET	Y COORDS	X COORDS
23	69+55.5'SB'	6.0'	592110.75	59333.03
24	70+72.7'SB'	6.0'	592227.88	59332.62
25	70+79.7'SB'	8.0'	592234.89	59334.59
32	73+82.6'SB'	-2.5'	592537.83	59343.01
33	69+55.5'SB'	5.5'	592110.75	59332.53
34	69+55.4'SB'	2.5'	592110.65	59329.54
35	70+72.7'SB'	-18.0'	592227.78	59308.62
36	70+91.8'SB'	-25.9'	592246.85	59300.64
37	70+99.7'SB'	-45.0'	592254.70	59281.52
38	70+72.7'SB'	-45.0'	592227.70	59281.62

SBND. STATION & OFFSET TABLE				
POINT NUMBER	STATION	OFFSET	Y COORDS	X COORDS
39	70+99.7'SB'	-49.0'	592254.68	59277.51
40	70+72.7'SB'	2.0'	592227.86	59328.62
41	70+79.7'SB'	0.0'	592234.86	59326.59
42	71+51.1'SB'	2.0'	592306.21	59328.34
43	71+49.5'SB'	0.0'	592304.68	59326.34
44	72+03.2'SB'	2.5'	592358.36	59328.65
45	72+95.2'SB'	2.5'	592450.38	59328.32
46	73+82.6'SB'	2.5'	592537.77	59328.01
47	71+29.7'SB'	-49.0'	592284.68	59277.40
48	71+29.7'SB'	-45.0'	592284.70	59281.41

SBND. STATION & OFFSET TABLE				
POINT NUMBER	STATION	OFFSET	Y COORDS	X COORDS
49	71+56.7'SB'	-45.0'	592311.70	59281.32
50	71+37.6'SB'	-25.9'	592292.67	59300.48
51	71+56.7'SB'	-18.0'	592311.79	59308.32
52	73+65.0'SB'	-33.5'	592520.02	59292.07
53	73+90.0'SB'	-31.5'	592545.03	59293.98
54	71+56.1'SB'	2.5'	592311.26	59328.82
57	70+77.7'SB'	2.0'	592232.86	59328.60
58	70+77.7'SB'	6.0'	592232.88	59332.60
59	69+56.7'SB'	-33.5'	592010.70	59295.89
60	69+55.7'SB'	-33.5'	592110.07	59293.55

N

ALL CURB AND GUTTER POINTS ARE TO FACE OF CURB UNLESS OTHERWISE NOTED AS BOC-BACK OF CURB POINTS. EOP-EDGE OF PAVEMENT

ALL RADIUS DISTANCES ARE TO FACE OF CURB.

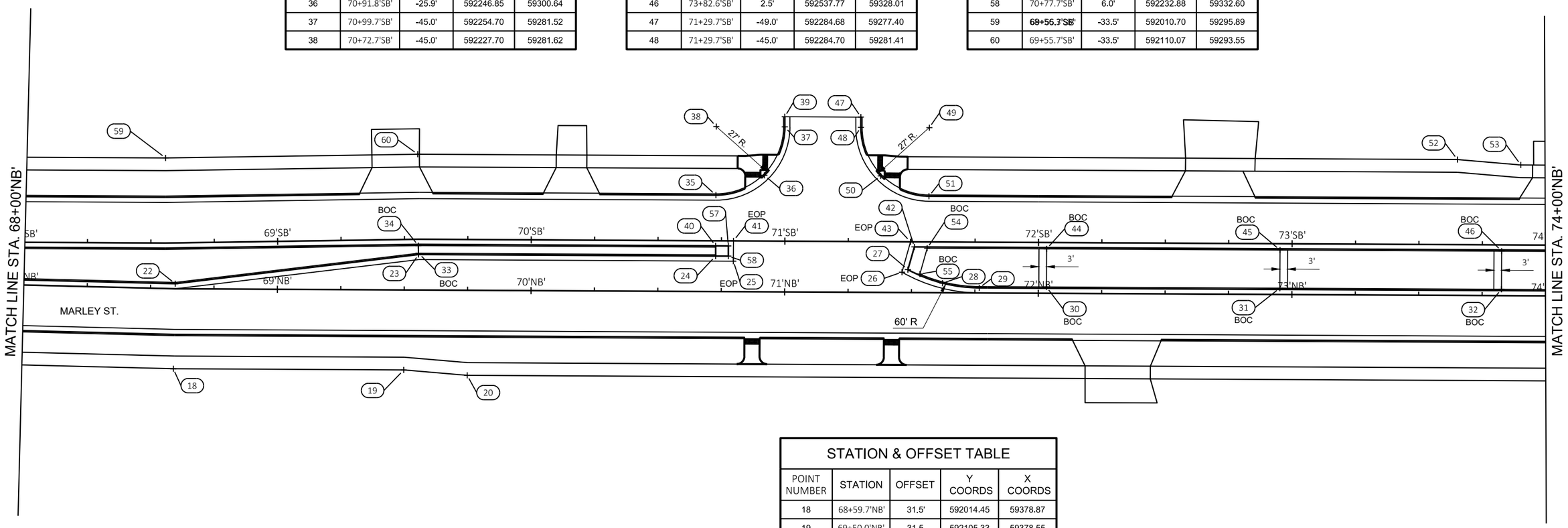

STATION & OFFSET TABLE				
POINT NUMBER	STATION	OFFSET	Y COORDS	X COORDS
18	68+59.7'NB'	31.5'	592014.45	59378.87
19	69+50.0'NB'	31.5	592105.33	59378.55
20	69+75.0'NB'	33.5	592130.33	59380.46
22	68+59.7'NB'	-2.0	592014.92	59345.38
26	71+46.2'NB'	-8.0	592301.40	59338.33
27	71+48.6'NB'	-9.0	592303.75	59337.33
28	71+62.2'NB'	-3.8	592317.41	59342.52
29	71+76.7'NB'	-2.0	592331.92	59344.24
30	72+03.2'NB'	-2.5	592358.42	59343.65
31	72+95.2'NB'	-2.5	592450.44	59343.32
32	73+82.6'NB'	-2.5	592537.83	59343.01
55	71+53.3'NB'	-7.3	592308.47	59339.02

SBND. STATION & OFFSET TABLE

POINT NUMBER	STATION	OFFSET	Y COORDS	X COORDS
67	75+93.2'SB'	-31.5'	592748.20	59293.26
69	74+69.9'SB'	2.5'	592625.07	59327.70
70	74+72.9'SB'	2.5'	592628.07	59327.69
74	76+70.0'SB'	2.5'	592825.15	59326.98
75	76+70.0'SB'	2.0'	592825.15	59326.48
76	76+75.0'SB'	2.0'	592830.15	59326.46
81	76+77.0'SB'	0.0'	592832.14	59324.46
82	76+10.8'SB'	-18.0'	592765.84	59306.69
83	76+25.0'SB'	-33.5'	592780.02	59291.14

N

ALL CURB AND GUTTER POINTS ARE TO FACE OF CURB UNLESS OTHERWISE NOTED AS BOC-BACK OF CURB POINTS. EOP-EDGE OF PAVEMENT

ALL RADIUS DISTANCES ARE TO FACE OF CURB.

NBND. STATION & OFFSET TABLE

POINT NUMBER	STATION	OFFSET	Y COORDS	X COORDS
119	78+82.0'NB'	18.0'	593037.28	59361.72
120	78+82.9'NB'	33.5'	593038.26	59377.22
121	78+83.2'NB'	-5.5'	593038.43	59338.22
122	78+86.2'NB'	-5.5'	593041.43	59338.21
123	78+83.2'NB'	-2.5'	593038.44	59341.22
124	78+86.2'NB'	-2.5'	593041.44	59341.21
125	79+25.2'NB'	-5.5'	593080.34	59338.07
127	76+70.9'NB'	66.0'	592826.33	59410.48
128	78+06.9'NB'	70.0'	592962.35	59413.99

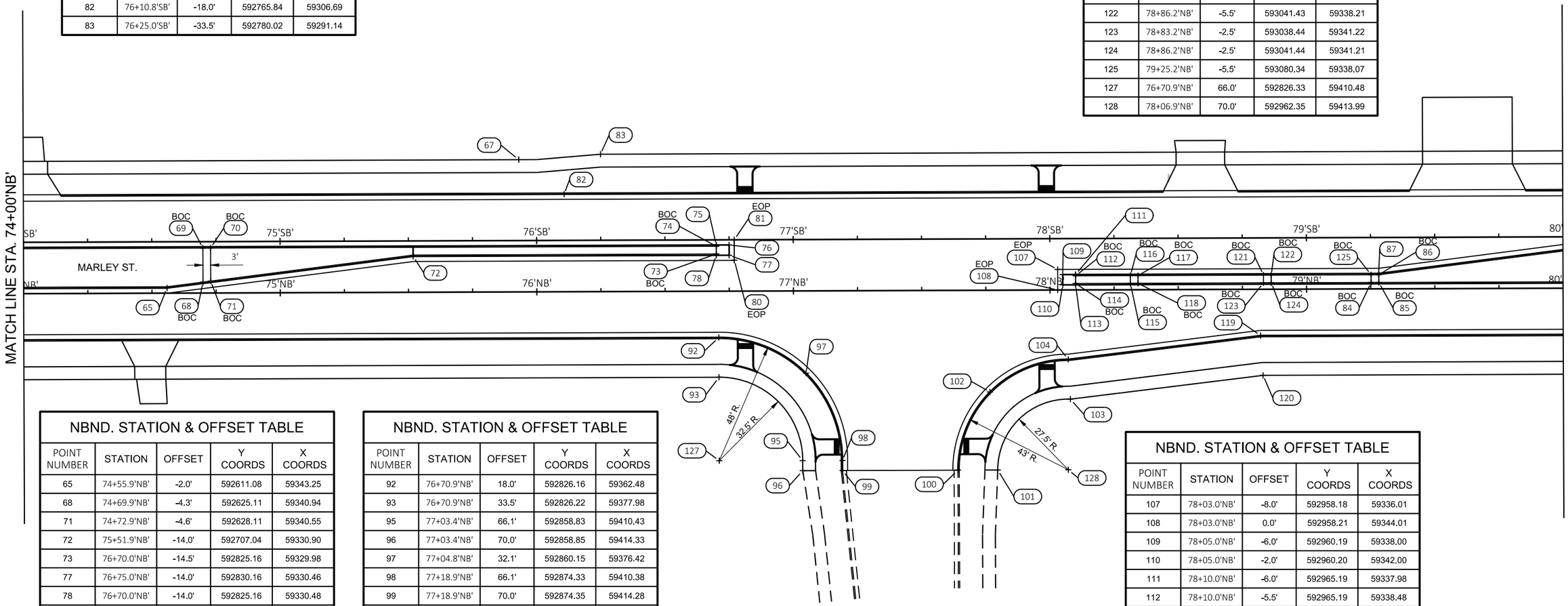

NBND. STATION & OFFSET TABLE

POINT NUMBER	STATION	OFFSET	Y COORDS	X COORDS
65	74+55.9'NB'	-2.0'	592611.08	59343.25
68	74+69.9'NB'	-4.3'	592625.11	59340.94
71	74+72.9'NB'	-4.6'	592628.11	59340.55
72	75+51.9'NB'	-14.0'	592707.04	59330.90
73	76+70.0'NB'	-14.5'	592825.16	59329.98
77	76+75.0'NB'	-14.0'	592830.16	59330.46
78	76+70.0'NB'	-14.0'	592825.16	59330.48
80	76+77.0'NB'	-12.1'	592832.17	59332.37
84	79+25.2'NB'	-2.5'	593080.36	59341.07
85	79+28.2'NB'	-2.5'	593083.36	59341.06
86	79+28.2'NB'	-5.5'	593083.34	59338.06
87	79+28.1'NB'	-6.0'	593083.31	59337.56

NBND. STATION & OFFSET TABLE

POINT NUMBER	STATION	OFFSET	Y COORDS	X COORDS
92	76+70.9'NB'	18.0'	592826.16	59362.48
93	76+70.9'NB'	33.5'	592826.22	59377.98
95	77+03.4'NB'	66.1'	592858.83	59410.43
96	77+03.4'NB'	70.0'	592858.85	59414.33
97	77+04.8'NB'	32.1'	592860.15	59376.42
98	77+18.9'NB'	66.1'	592874.33	59410.38
99	77+18.9'NB'	70.0'	592874.35	59414.28
100	77+63.9'NB'	70.0'	592919.35	59414.15
101	77+79.4'NB'	70.0'	592934.85	59414.09
102	77+76.5'NB'	39.6'	592931.83	59383.70
103	78+07.8'NB'	42.5'	592963.17	59386.50
104	78+07.0'NB'	27.0'	592962.31	59370.99

NBND. STATION & OFFSET TABLE

POINT NUMBER	STATION	OFFSET	Y COORDS	X COORDS
107	78+03.0'NB'	-8.0'	592958.18	59336.01
108	78+03.0'NB'	0.0'	592958.21	59344.01
109	78+05.0'NB'	-6.0'	592960.19	59338.00
110	78+05.0'NB'	-2.0'	592960.20	59342.00
111	78+10.0'NB'	-6.0'	592965.19	59337.98
112	78+10.0'NB'	-5.5'	592965.19	59338.48
113	78+10.0'NB'	-2.0'	592965.20	59341.98
114	78+10.0'NB'	-2.5'	592965.20	59341.48
115	78+31.3'NB'	-2.5'	592986.53	59341.41
116	78+31.3'NB'	-5.5'	592986.52	59338.41
117	78+34.3'NB'	-5.5'	592989.52	59338.39
118	78+34.3'NB'	-2.5'	592989.53	59341.39

N

ALL CURB AND GUTTER POINTS ARE TO FACE OF CURB UNLESS OTHERWISE NOTED AS BOC-BACK OF CURB POINTS. EOP-EDGE OF PAVEMENT

ALL RADIUS DISTANCES ARE TO FACE OF CURB.

SBND. STATION & OFFSET TABLE				
POINT NUMBER	STATION	OFFSET	Y COORDS	X COORDS
130	81+60.0'SB'	-33.5'	593315.02	59289.23
131	81+85.0'SB'	-31.5'	593340.02	59291.14
132	85+00.0'SB'	-31.5'	593655.02	59290.02
133	85+25.0'SB'	-28.5'	593680.03	59292.93
300	80+88.0'SB'	2.5'	593243.15	59325.49

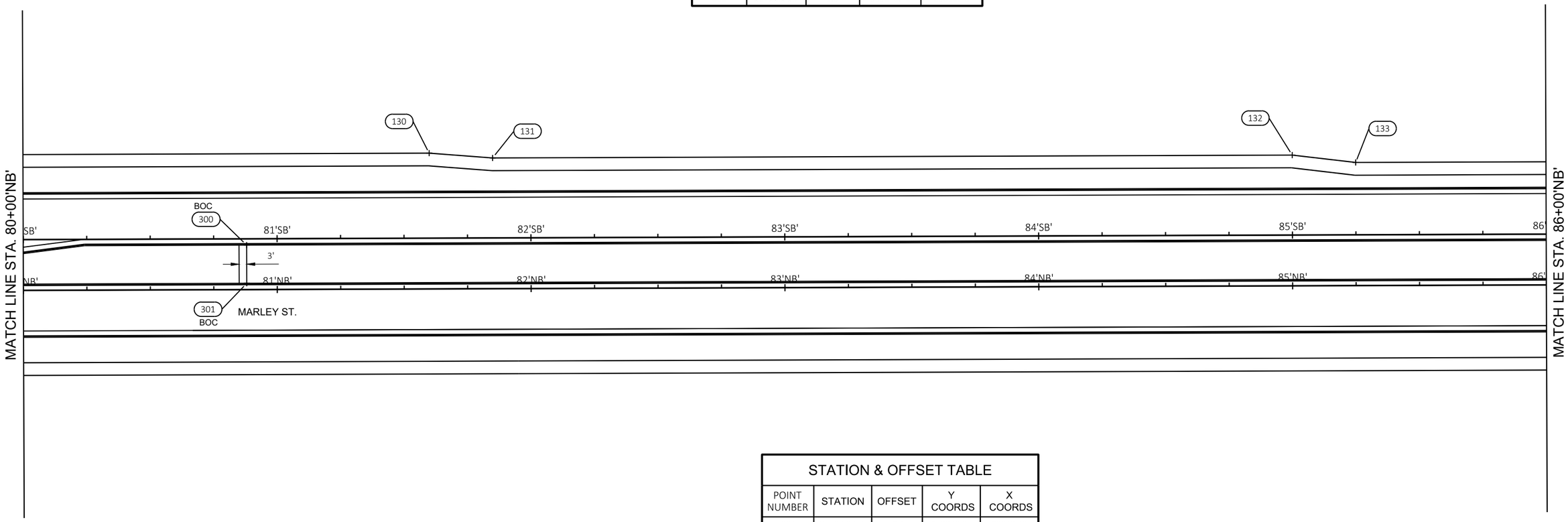

STATION & OFFSET TABLE				
POINT NUMBER	STATION	OFFSET	Y COORDS	X COORDS
301	80+88.0'NB'	-2.5	593243.20	59340.49

SBND. STATION & OFFSET TABLE				
POINT NUMBER	STATION	OFFSET	Y COORDS	X COORDS
134	88+23.8'SB'	-28.5'	593978.64	59291.86
139	88+23.8'SB'	2.0'	593978.91	59322.36
142	90+13.8'SB'	2.5'	594168.97	59320.24
143	90+59.6'SB'	2.5'	594214.74	59319.61
144	88+23.9'SB'	-18.0'	593978.82	59302.36
146	91+87.9'SB'	2.0'	594343.03	59317.34
148	91+92.9'SB'	2.0'	594348.03	59317.27
149	91+87.9'SB'	2.5'	594343.04	59317.84
152	91+94.9'SB'	0.0'	594350.00	59315.24

N

ALL CURB AND GUTTER POINTS ARE TO FACE OF CURB UNLESS OTHERWISE NOTED AS BOC-BACK OF CURB POINTS. EOP-EDGE OF PAVEMENT

ALL RADIUS ARE TO FACE OF CURB.

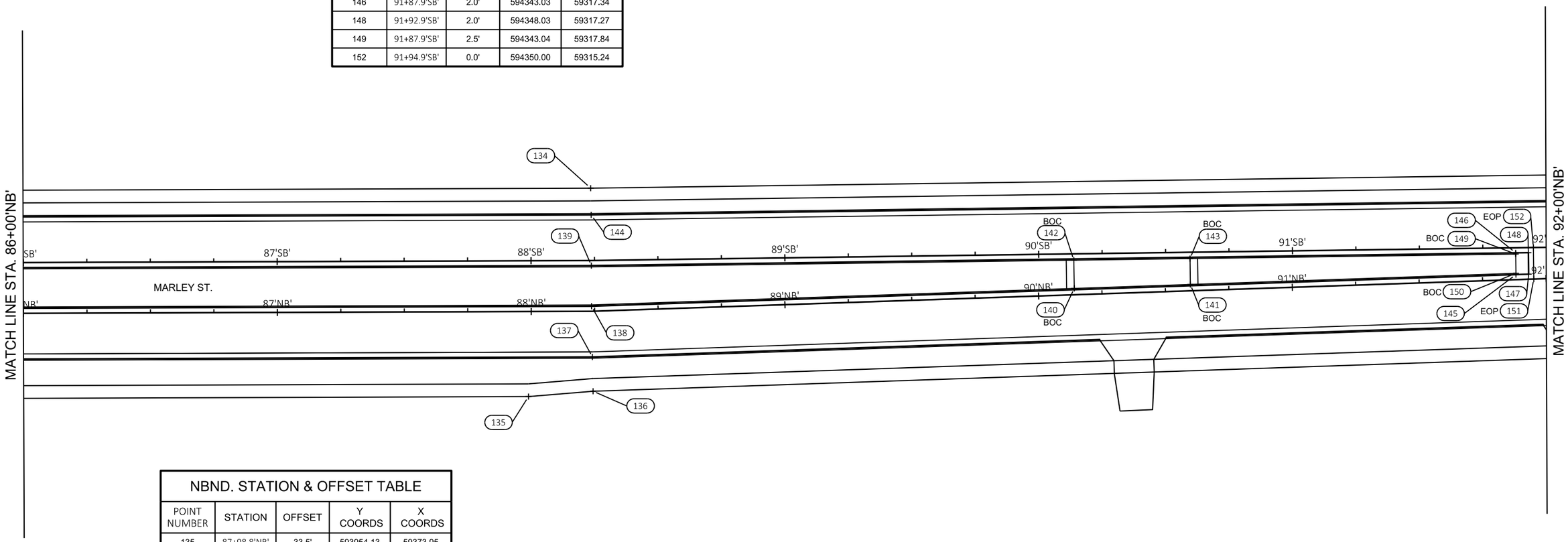

NBND. STATION & OFFSET TABLE				
POINT NUMBER	STATION	OFFSET	Y COORDS	X COORDS
135	87+98.8'NB'	33.5'	593954.13	59373.95
136	88+23.8'NB'	18.0'	593979.56	59371.86
137	88+23.8'NB'	31.5'	593979.31	59358.36
138	88+23.8'NB'	-2.0'	593978.97	59338.36
140	90+14.1'NB'	-2.5'	594169.12	59331.35
141	90+59.9'NB'	-2.5'	594214.88	59329.79
145	91+88.2'NB'	-2.0'	594343.15	59325.90
147	91+93.2'NB'	-2.0'	594348.15	59325.73
150	91+88.2'NB'	-2.5'	594343.14	59325.40
151	91+95.2'NB'	0.0'	594350.18	59327.66

ALL CURB AND GUTTER POINTS ARE TO FACE OF CURB
UNLESS OTHERWISE NOTED AS BOC-BACK OF CURB POINTS.
EOP-EDGE OF PAVEMENT

ALL RADIUS ARE TO FACE OF CURB.

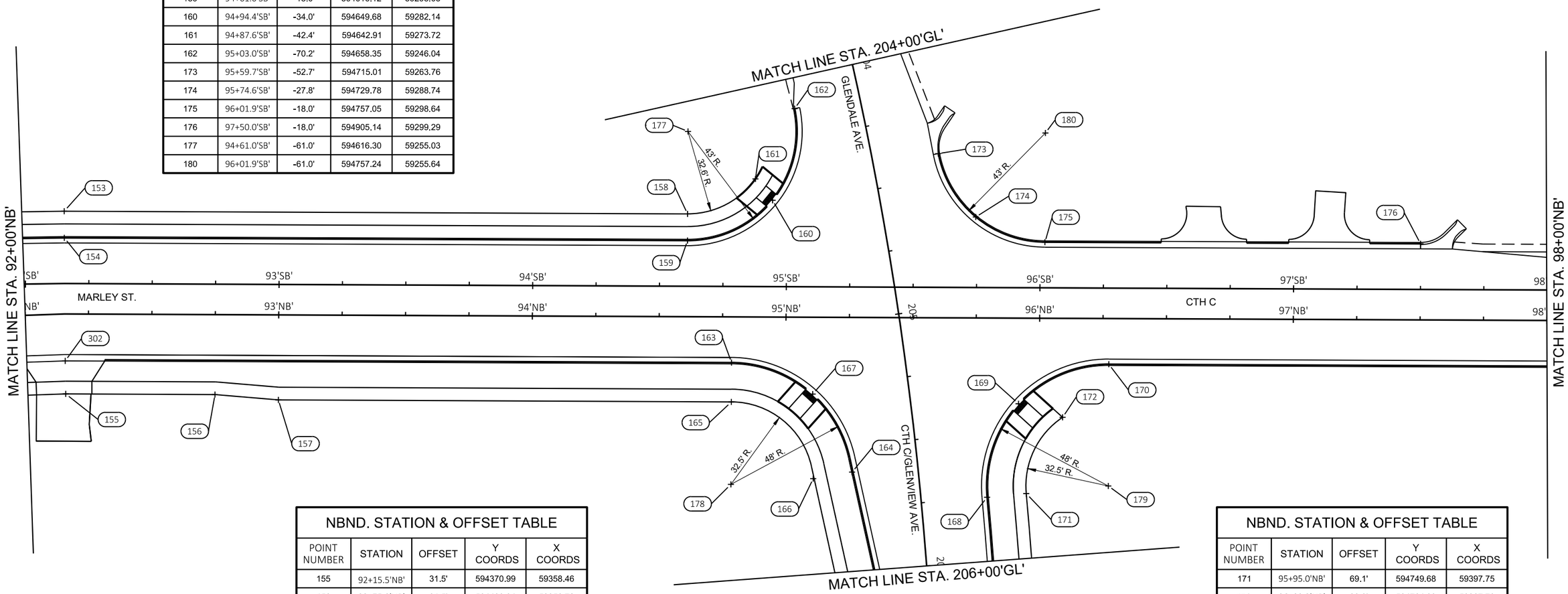

SBND. STATION & OFFSET TABLE

POINT NUMBER	STATION	OFFSET	Y COORDS	X COORDS
153	92+15.4'SB'	-28.5'	594370.39	59286.46
154	92+15.4'SB'	-18.0'	594370.44	59296.96
158	94+61.0'SB'	-28.5'	594616.16	59287.53
159	94+61.0'SB'	-18.0'	594616.12	59298.03
160	94+94.4'SB'	-34.0'	594649.68	59282.14
161	94+87.6'SB'	-42.4'	594642.91	59273.72
162	95+03.0'SB'	-70.2'	594658.35	59246.04
173	95+59.7'SB'	-52.7'	594715.01	59263.76
174	95+74.6'SB'	-27.8'	594729.78	59288.74
175	96+01.9'SB'	-18.0'	594757.05	59298.64
176	97+50.0'SB'	-18.0'	594905.14	59299.29
177	94+61.0'SB'	-61.0'	594616.30	59255.03
180	96+01.9'SB'	-61.0'	594757.24	59255.64

NBND. STATION & OFFSET TABLE

POINT NUMBER	STATION	OFFSET	Y COORDS	X COORDS
155	92+15.5'NB'	31.5'	594370.99	59358.46
156	92+75.0'NB'	31.5'	594429.84	59358.72
157	93+00.0'NB'	33.5'	594454.83	59360.83
163	94+78.6'NB'	18.0'	594633.48	59346.11
164	95+26.3'NB'	61.0'	594681.02	59389.28
165	94+78.6'NB'	33.5'	594633.41	59361.61
166	95+11.0'NB'	63.6'	594665.69	59391.85
167	95+10.6'NB'	30.3'	594665.49	59358.53
168	95+79.6'NB'	70.6'	594734.24	59399.18
169	95+91.8'NB'	33.7'	594746.64	59362.34
170	96+27.4'NB'	18.0'	594782.25	59346.75

NBND. STATION & OFFSET TABLE

POINT NUMBER	STATION	OFFSET	Y COORDS	X COORDS
171	95+95.0'NB'	69.1'	594749.68	59397.75
172	96+09.2'NB'	39.0'	594764.03	59367.70
178	94+78.6'NB'	66.0'	594633.27	59394.11
179	96+27.4'NB'	66.0'	594782.04	59394.75
302	92+15.9'NB'	18.5'	594370.79	59345.46

N

ALL CURB AND GUTTER POINTS ARE TO FACE OF CURB
UNLESS OTHERWISE NOTED AS
BOC-BACK OF CURB
EOP-EDGE OF PAVEMENT

ALL RADIUS ARE TO FACE OF CURB.

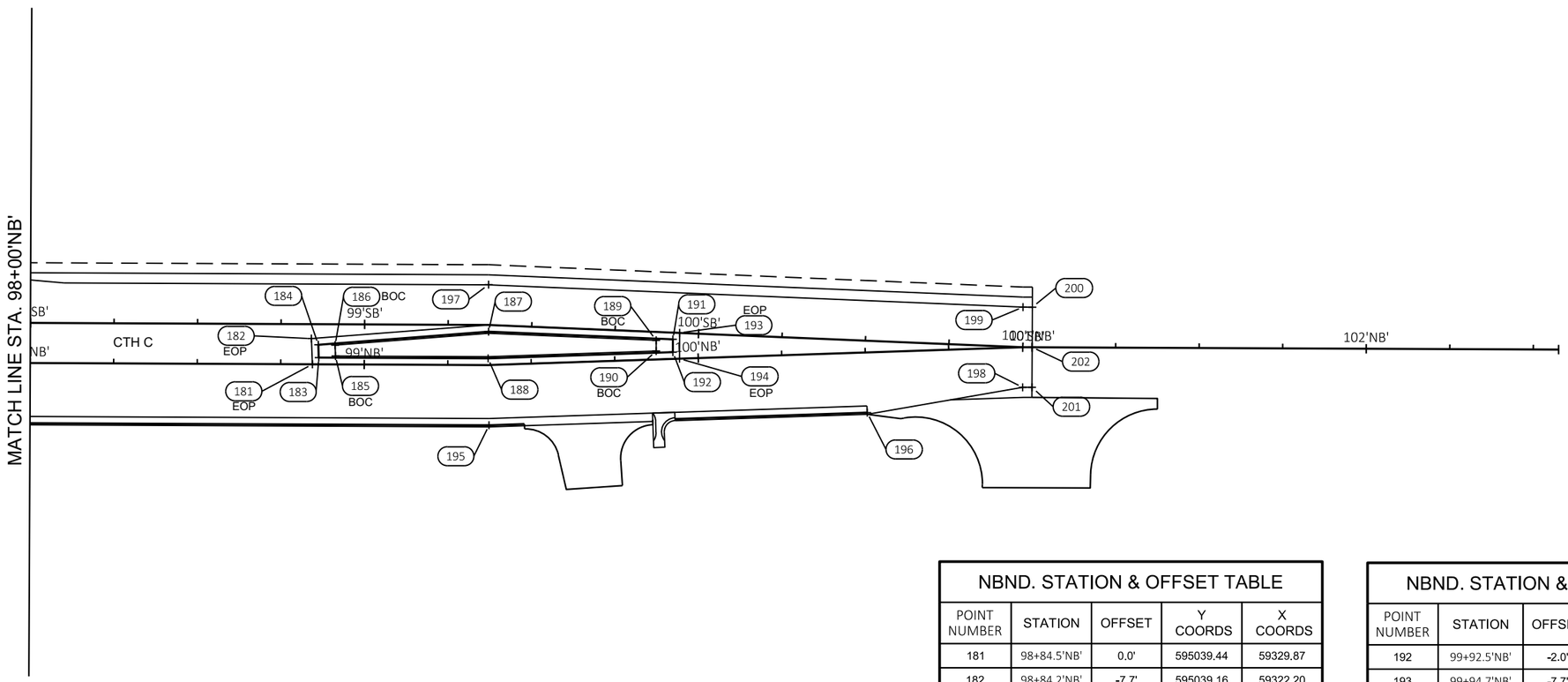

NBND. STATION & OFFSET TABLE

POINT NUMBER	STATION	OFFSET	Y COORDS	X COORDS
181	98+84.5'NB'	0.0'	595039.44	59329.87
182	98+84.2'NB'	-7.7'	595039.16	59322.20
183	98+86.4'NB'	-2.0'	595041.37	59327.88
184	98+86.2'NB'	-5.8'	595041.23	59324.04
185	98+91.4'NB'	-2.5'	595046.35	59327.40
186	98+91.2'NB'	-5.7'	595046.23	59324.16
187	99+37.1'NB'	-10.0'	595092.18	59320.11
188	99+37.1'NB'	-2.0'	595092.03	59328.10
189	99+87.6'NB'	-5.7'	595142.35	59322.70
190	99+87.5'NB'	-2.5'	595142.34	59325.93
191	99+92.6'NB'	-5.9'	595147.35	59322.41

NBND. STATION & OFFSET TABLE

POINT NUMBER	STATION	OFFSET	Y COORDS	X COORDS
192	99+92.5'NB'	-2.0'	595147.34	59326.26
193	99+94.7'NB'	-7.7'	595149.36	59320.49
194	99+94.4'NB'	0.0'	595149.33	59328.20
195	99+37.1'NB'	-18.0'	595092.32	59348.10
196	100+50.0'NB'	18.0'	595205.50	59344.34
197	99+37.1'NB'	-24.0'	595092.17	59306.06
198	100+97.2'NB'	12.0'	595252.03	59336.79
199	100+97.2'NB'	-12.0'	595252.14	59312.79
200	101+00.0'NB'	-12.0'	595254.93	59312.80
201	101+00.0'NB'	12.0'	595254.83	59336.80
202	101+00.0'NB'	0.0'	595254.88	59324.80

ALL CURB AND GUTTER POINTS ARE TO FACE OF CURB UNLESS OTHERWISE NOTED AS BOC-BACK OF CURB POINTS. EOP-EDGE OF PAVEMENT

ALL RADIUS ARE TO FACE OF CURB.

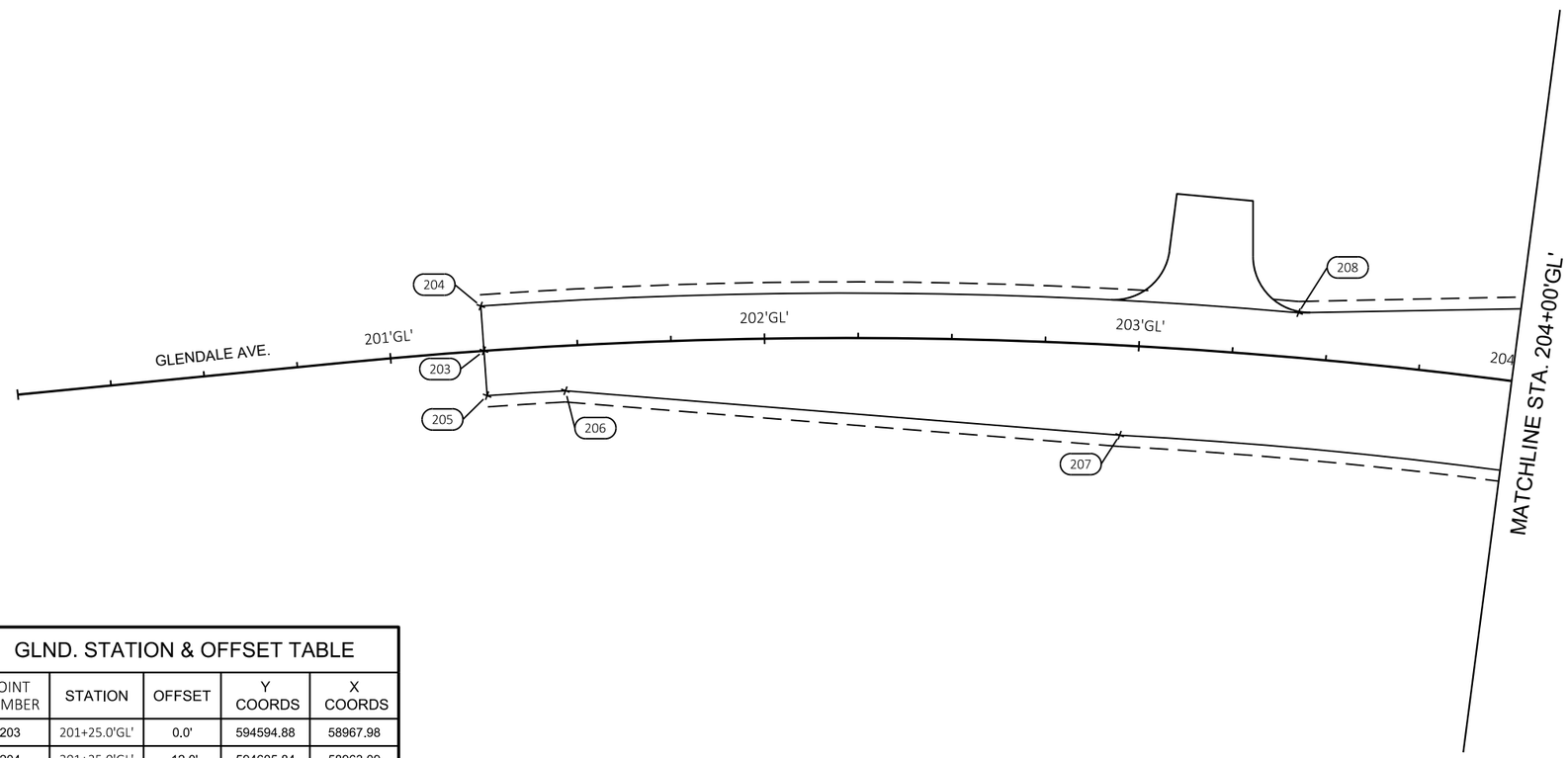

GLND. STATION & OFFSET TABLE				
POINT NUMBER	STATION	OFFSET	Y COORDS	X COORDS
203	201+25.0'GL'	0.0'	594594.88	58967.98
204	201+25.0'GL'	-12.0'	594605.84	58963.09
205	201+25.0'GL'	12.0'	594583.92	58972.87
206	201+46.2'GL'	12.0'	594592.32	58992.08
207	202+96.2'GL'	24.0'	594631.76	59135.19
208	203+41.7'GL'	-12.0'	594678.84	59168.88

2

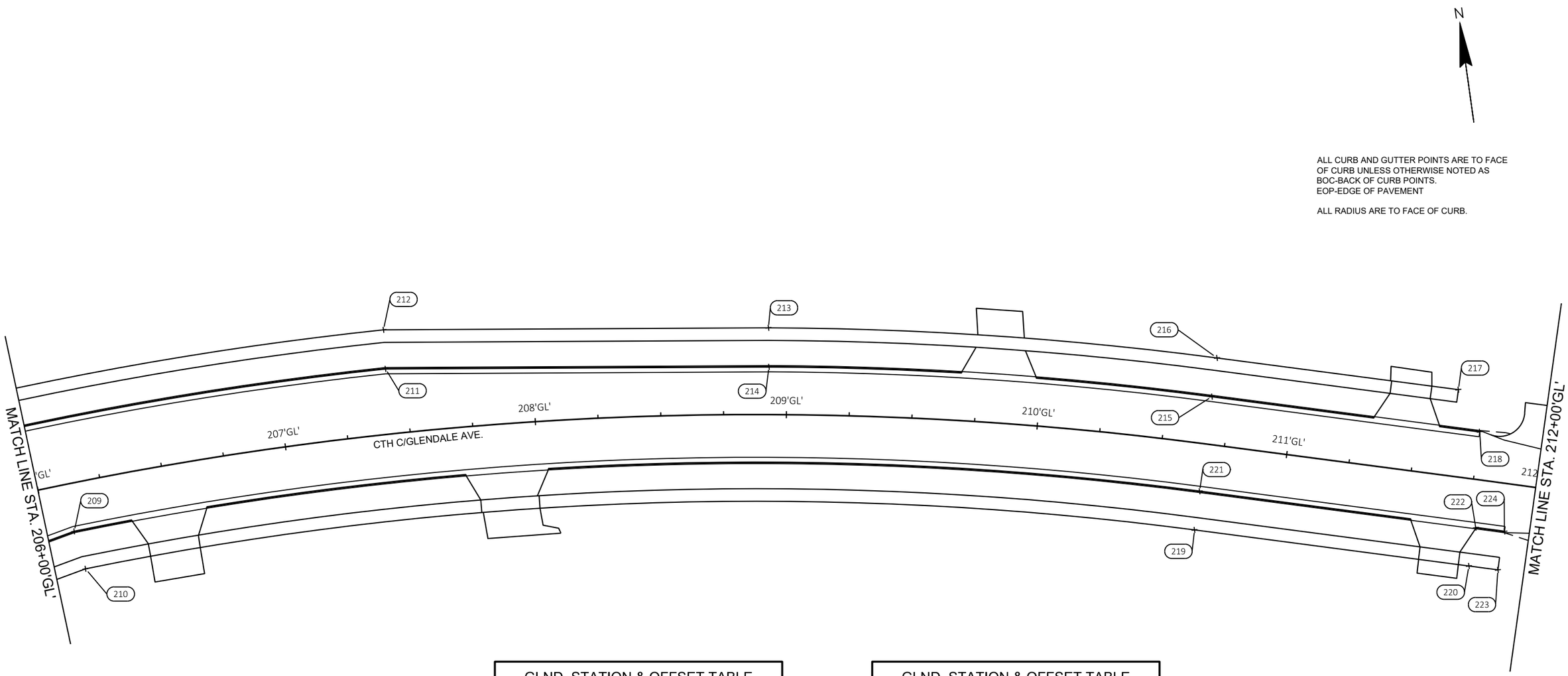

GLND. STATION & OFFSET TABLE

POINT NUMBER	STATION	OFFSET	Y COORDS	X COORDS
209	206+10.8'GL'	19.00	594692.22	59438.31
210	206+12.2'GL'	34.50	594676.84	59440.73
211	207+42.9'GL'	-26.00	594739.58	59569.81
212	207+43.7'GL'	-41.50	594755.05	59571.10
213	208+92.8'GL'	-34.50	594735.17	59723.09
214	208+93.0'GL'	-19.00	594719.78	59721.20
215	210+67.5'GL'	-19.00	594684.26	59894.38
216	210+67.5'GL'	-34.50	594699.21	59898.45
217	211+64.4'GL'	-34.50	594673.76	59991.95
218	211+75.0'GL'	-19.00	594656.02	59998.11
219	210+67.5'GL'	34.50	594632.63	59880.33

GLND. STATION & OFFSET TABLE

POINT NUMBER	STATION	OFFSET	Y COORDS	X COORDS
220	211+77.7'GL'	34.50	594603.69	59986.66
221	210+67.5'GL'	19.00	594647.59	59884.40
222	211+78.4'GL'	19.02	594618.44	59991.38
223	211+89.5'GL'	34.52	594600.59	59997.88
224	211+90.0'GL'	19.02	594615.38	60002.51

ALL CURB AND GUTTER POINTS ARE TO FACE OF CURB UNLESS OTHERWISE NOTED AS BOC-BACK OF CURB POINTS.
EOP-EDGE OF PAVEMENT

ALL RADIUS ARE TO FACE OF CURB.

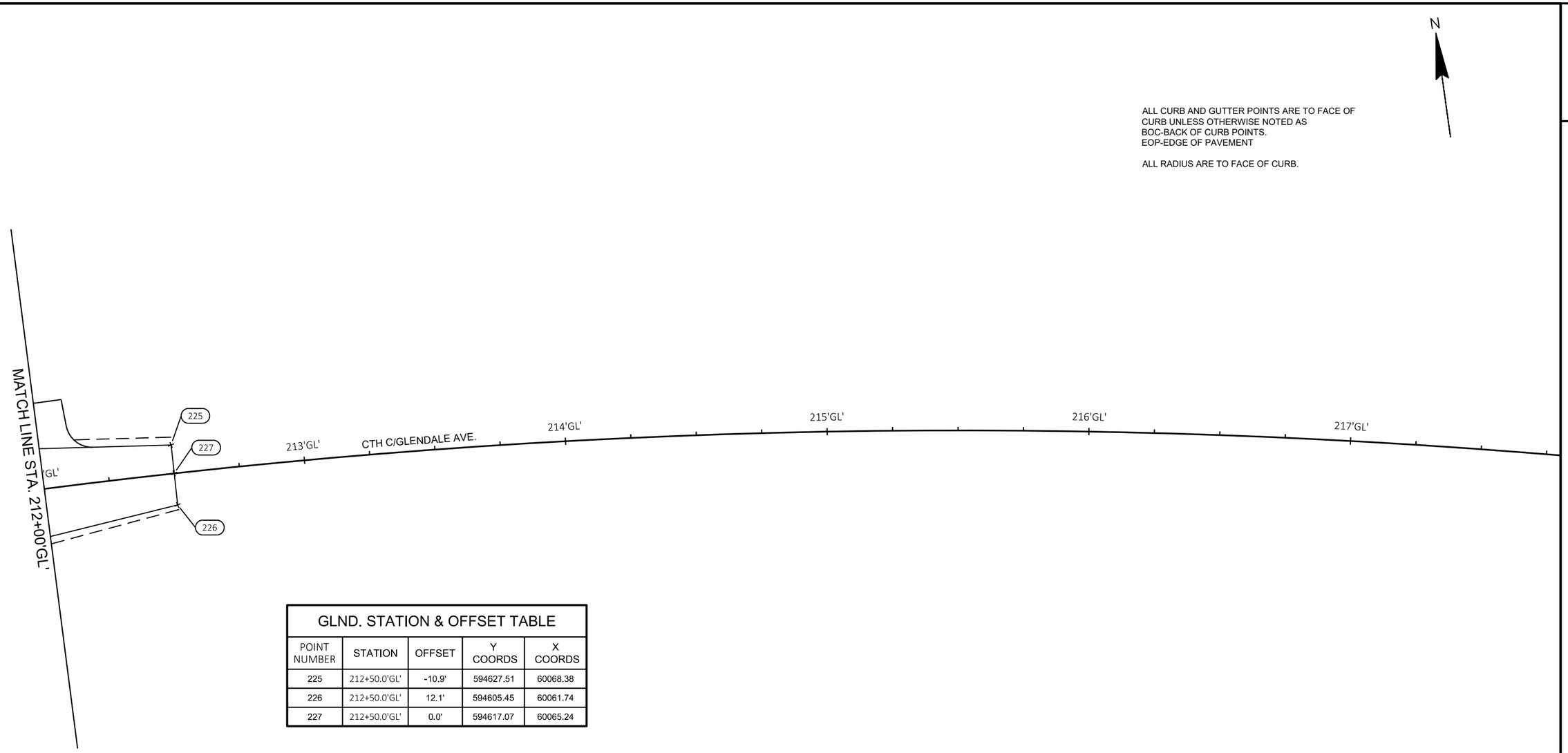

GLND. STATION & OFFSET TABLE

POINT NUMBER	STATION	OFFSET	Y COORDS	X COORDS
225	212+50.0'GL'	-10.9'	594627.51	60068.38
226	212+50.0'GL'	12.1'	594605.45	60061.74
227	212+50.0'GL'	0.0'	594617.07	60065.24

2

MARLEY STREET CURB RAMP				
POINT	STATION	OFFSET	Y COORDS	X COORDS
400	70+71.2 'SB'	-33.5 LT	592226.24	59293.12
401	70+71.2 'SB'	-28.5 LT	592226.25	59298.12
402	70+81.2 'SB'	-33.5 LT	592236.24	59293.08
403	70+81.2 'SB'	-28.5 LT	592236.25	59298.08
404	70+84.2 'SB'	-33.5 LT	592239.24	59293.07
405	70+84.2 'SB'	-28.3 LT	592239.26	59298.24
406	70+84.2 'SB'	-25.5 LT	592239.27	59301.07
407	70+84.2 'SB'	-21.1 LT	592239.28	59305.45
408	70+90.2 'SB'	-34.0 LT	592245.24	59292.55
409	70+93.1 'SB'	-34.0 LT	592248.08	59292.54
410	70+90.2 'SB'	-28.0 LT	592245.26	59298.55
411	70+90.2 'SB'	-25.1 LT	592245.27	59301.45
412	70+93.0 'SB'	-28.0 LT	592248.09	59298.54
413	70+96.8 'SB'	-34.0 LT	592251.84	59292.53

LEGEND

- LIMITS OF CONCRETE SIDEWALK 6-INCH
- LEVEL LANDING AREA
- DETECTABLE WARNING FIELD (2' X 6')

N

FUTURE ROAD

MARLEY STREET CURB RAMP				
POINT	STATION	OFFSET	Y COORDS	X COORDS
414	71+32.6 'SB'	-34.0 LT	592287.63	59292.40
415	71+36.4 'SB'	-28.0 LT	592291.43	59298.39
416	71+36.4 'SB'	-34.0 LT	592291.43	59292.39
417	71+39.2 'SB'	-34.0 LT	592294.24	59292.38
418	71+39.2 'SB'	-28.0 LT	592294.26	59298.38
419	71+39.2 'SB'	-25.1 LT	592294.27	59301.28
420	71+45.2 'SB'	-33.5 LT	592300.24	59292.86
421	71+45.2 'SB'	-28.3 LT	592300.26	59298.02
422	71+45.2 'SB'	-25.5 LT	592300.27	59300.86
423	71+45.2 'SB'	-21.1 LT	592300.28	59305.23
424	71+48.2 'SB'	-33.5 LT	592303.24	59292.85
425	71+48.2 'SB'	-28.5 LT	592303.25	59297.85
426	71+63.2 'SB'	-33.5 LT	592318.24	59292.79
427	71+63.2 'SB'	-28.5 LT	592318.25	59297.79

2

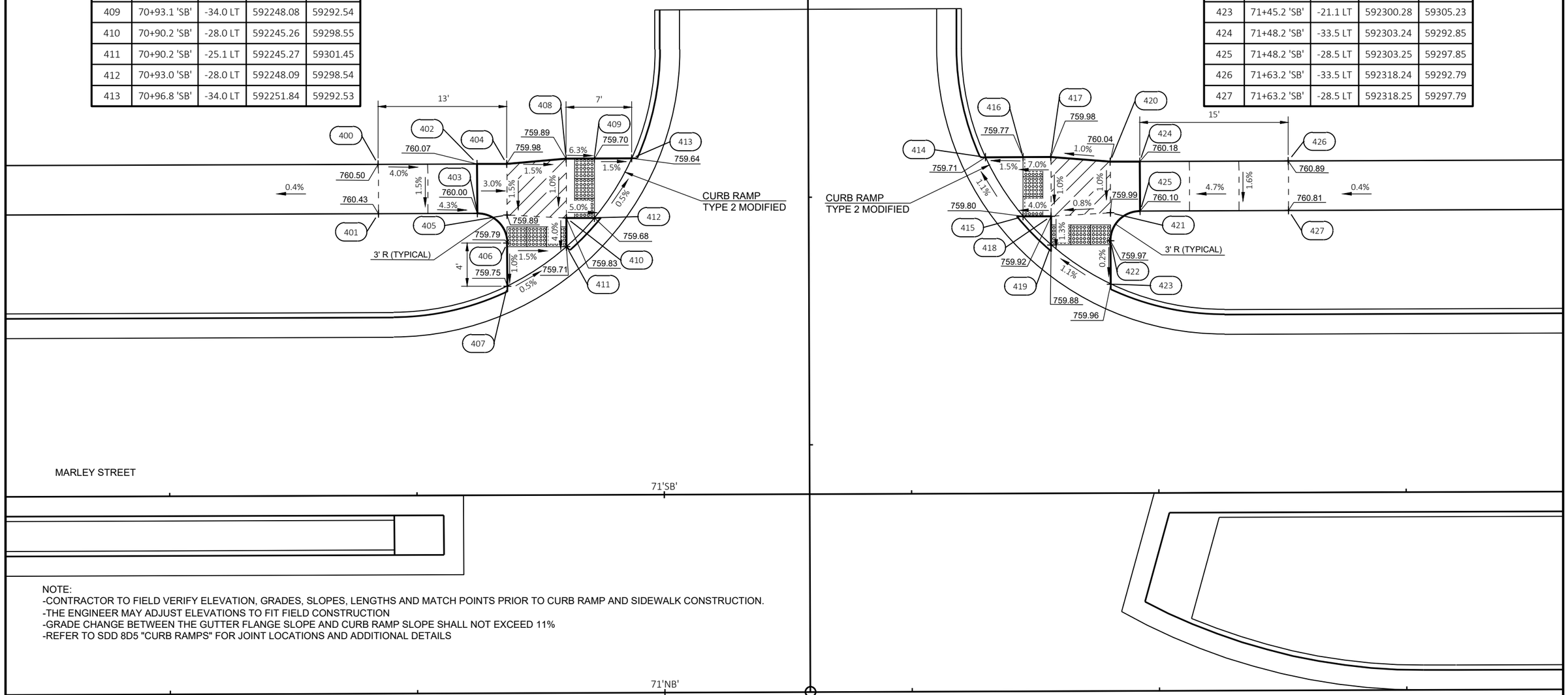

NOTE:
-CONTRACTOR TO FIELD VERIFY ELEVATION, GRADES, SLOPES, LENGTHS AND MATCH POINTS PRIOR TO CURB RAMP AND SIDEWALK CONSTRUCTION.
-THE ENGINEER MAY ADJUST ELEVATIONS TO FIT FIELD CONSTRUCTION
-GRADE CHANGE BETWEEN THE GUTTER FLANGE SLOPE AND CURB RAMP SLOPE SHALL NOT EXCEED 11%
-REFER TO SDD 8D5 "CURB RAMPS" FOR JOINT LOCATIONS AND ADDITIONAL DETAILS

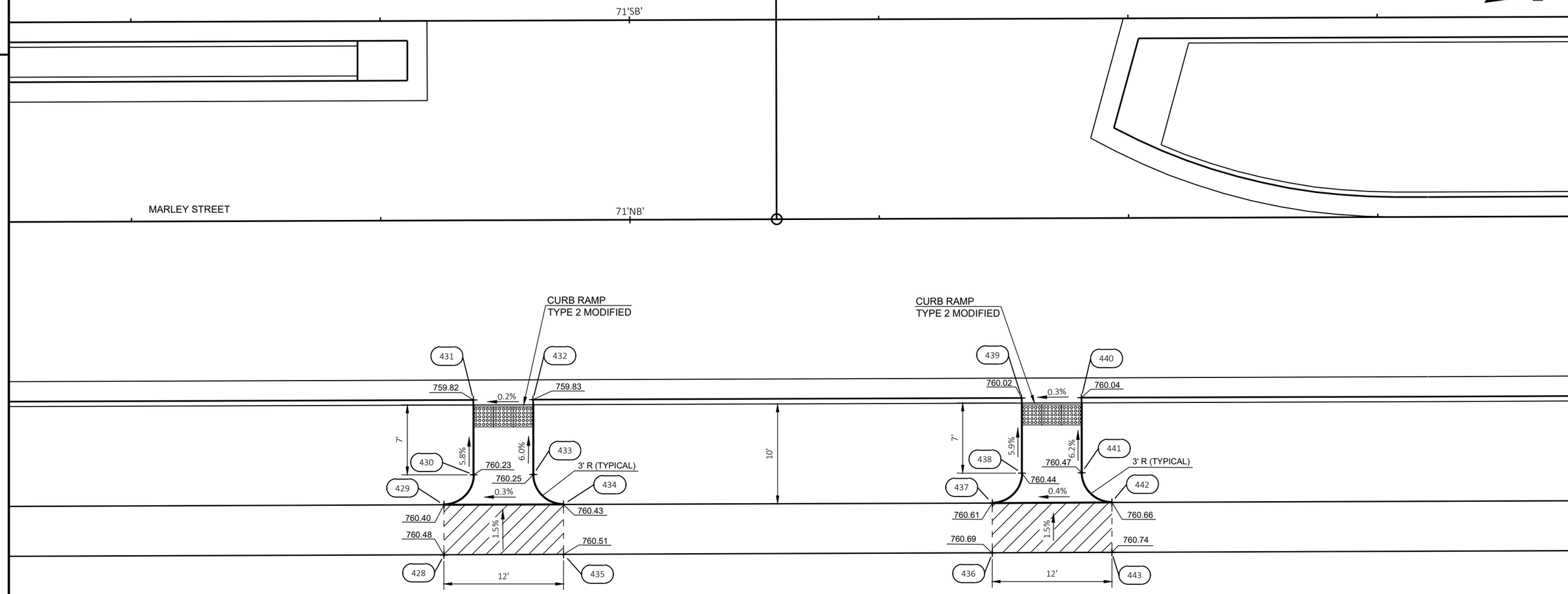

LEGEND

- LIMITS OF CONCRETE SIDEWALK 6-INCH
- LEVEL LANDING AREA
- DETECTABLE WARNING FIELD (2' X 6')

MARLEY STREET CURB RAMP				
POINT	STATION	OFFSET	Y COORDS	X COORDS
428	70+81.2 'NB'	33.5 RT	592236.55	59380.08
429	70+81.2 'NB'	28.5 RT	592236.53	59375.08
430	70+84.2 'NB'	25.5 RT	592239.52	59372.07
431	70+84.2 'NB'	18.0 RT	592239.49	59364.57
432	70+90.2 'NB'	18.0 RT	592245.49	59364.55
433	70+90.2 'NB'	25.5 RT	592245.52	59372.05
434	70+93.2 'NB'	28.5 RT	592248.53	59375.04
435	70+93.2 'NB'	33.5 RT	592248.55	59380.04

MARLEY STREET CURB RAMP				
POINT	STATION	OFFSET	Y COORDS	X COORDS
436	71+36.2 'NB'	33.5 RT	592291.55	59379.89
437	71+36.2 'NB'	28.5 RT	592291.53	59374.89
438	71+39.2 'NB'	25.5 RT	592294.52	59371.89
439	71+39.2 'NB'	18.0 RT	592294.49	59364.38
440	71+45.2 'NB'	18.0 RT	592300.49	59364.36
441	71+45.2 'NB'	25.5 RT	592300.52	59371.87
442	71+48.2 'NB'	28.5 RT	592303.53	59374.85
443	71+48.2 'NB'	33.5 RT	592303.54	59379.85

NOTE:
-CONTRACTOR TO FIELD VERIFY ELEVATION, GRADES, SLOPES, LENGTHS AND MATCH POINTS PRIOR TO CURB RAMP AND SIDEWALK CONSTRUCTION.
-THE ENGINEER MAY ADJUST ELEVATIONS TO FIT FIELD CONSTRUCTION
-GRADE CHANGE BETWEEN THE GUTTER FLANGE SLOPE AND CURB RAMP SLOPE SHALL NOT EXCEED 11%
-REFER TO SDD 8D5 "CURB RAMPS" FOR JOINT LOCATIONS AND ADDITIONAL DETAILS

LEGEND

- LIMITS OF CONCRETE SIDEWALK 6-INCH
- LEVEL LANDING AREA
- DETECTABLE WARNING FIELD (2' X 6')

N

MARLEY STREET CURB RAMP				
POINT	STATION	OFFSET	Y COORDS	X COORDS
444	76+75.2 'SB'	-33.5 LT	592830.27	59290.96
445	76+75.2 'SB'	-28.5 LT	592830.29	59295.96
446	76+78.2 'SB'	-25.5 LT	592833.30	59298.95
447	76+78.2 'SB'	-18.5 LT	592833.32	59305.95
448	76+84.2 'SB'	-18.5 LT	592839.32	59305.93
449	76+84.2 'SB'	-25.5 LT	592839.30	59298.93
450	76+87.2 'SB'	-28.5 LT	592842.29	59295.92
451	76+87.2 'SB'	-33.5 LT	592842.27	59290.92

MARLEY STREET CURB RAMP				
POINT	STATION	OFFSET	Y COORDS	X COORDS
452	77+92.8 'SB'	-33.5 LT	592947.77	59290.54
453	77+92.8 'SB'	-28.5 LT	592947.79	59295.54
454	77+95.8 'SB'	-25.5 LT	592950.80	59298.53
455	77+95.8 'SB'	-18.5 LT	592950.82	59305.53
456	78+01.8 'SB'	-18.5 LT	592956.82	59305.51
457	78+01.8 'SB'	-25.5 LT	592956.80	59298.51
458	78+04.8 'SB'	-28.5 LT	592959.79	59295.50
459	78+04.8 'SB'	-33.5 LT	592959.77	59290.50

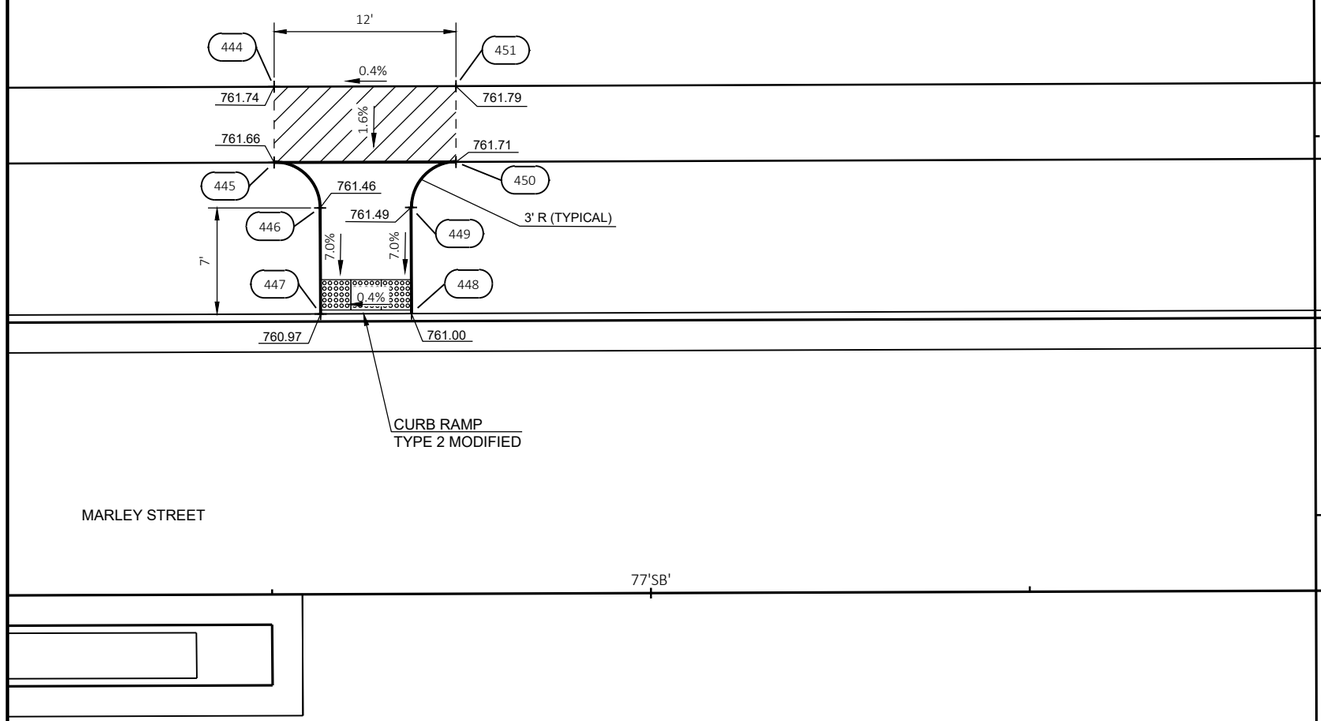

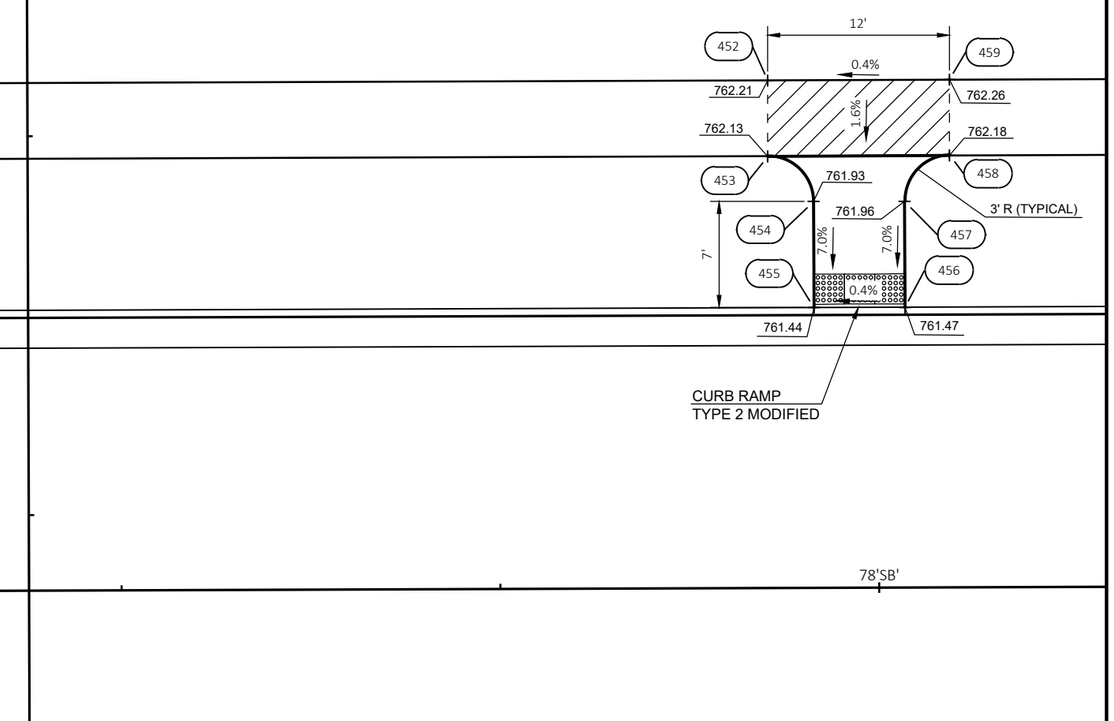

NOTE:
-CONTRACTOR TO FIELD VERIFY ELEVATION, GRADES, SLOPES, LENGTHS AND MATCH POINTS PRIOR TO CURB RAMP AND SIDEWALK CONSTRUCTION.
-THE ENGINEER MAY ADJUST ELEVATIONS TO FIT FIELD CONSTRUCTION
-GRADE CHANGE BETWEEN THE GUTTER FLANGE SLOPE AND CURB RAMP SLOPE SHALL NOT EXCEED 11%
-REFER TO SDD 8D5 "CURB RAMPS" FOR JOINT LOCATIONS AND ADDITIONAL DETAILS

2

NOTE:
-CONTRACTOR TO FIELD VERIFY ELEVATION, GRADES, SLOPES, LENGTHS AND MATCH POINTS PRIOR TO CURB RAMP AND SIDEWALK CONSTRUCTION.
-THE ENGINEER MAY ADJUST ELEVATIONS TO FIT FIELD CONSTRUCTION
-GRADE CHANGE BETWEEN THE GUTTER FLANGE SLOPE AND CURB RAMP SLOPE SHALL NOT EXCEED 11%
-REFER TO SDD 8D5 "CURB RAMPS" FOR JOINT LOCATIONS AND ADDITIONAL DETAILS

LEGEND

- LIMITS OF CONCRETE SIDEWALK 6-INCH
- LEVEL LANDING AREA
- DETECTABLE WARNING FIELD (2' X 6')

N

2

MARLEY STREET CURB RAMP				
POINT	STATION	OFFSET	Y COORDS	X COORDS
460	76+74.4 'NB'	33.7 RT	592829.72	59378.15
461	76+74.9 'NB'	28.7 RT	592830.24	59373.18
462	76+78.2 'NB'	25.7 RT	592833.55	59370.19
463	76+78.2 'NB'	20.4 RT	592833.53	59364.85
464	76+78.2 'NB'	19.1 RT	592833.53	59363.53
465	76+84.2 'NB'	20.4 RT	592839.53	59364.85
466	76+84.2 'NB'	29.0 RT	592839.56	59373.38
467	76+84.0 'NB'	36.3 RT	592839.36	59380.70
468	76+86.0 'NB'	31.7 RT	592841.36	59376.12
469	77+02.1 'NB'	57.0 RT	592857.53	59401.37
470	77+06.9 'NB'	55.6 RT	592862.33	59399.97
471	77+09.8 'NB'	57.8 RT	592865.22	59402.13
472	77+17.7 'NB'	57.8 RT	592873.09	59402.11
473	77+18.3 'NB'	63.8 RT	592873.78	59408.10
474	77+17.6 'NB'	63.8 RT	592873.09	59408.10
475	77+11.4 'NB'	63.8 RT	592866.82	59408.13
476	77+08.4 'NB'	66.8 RT	592863.83	59411.14
477	77+03.4 'NB'	66.8 RT	592858.83	59411.16

MARLEY STREET CURB RAMP				
POINT	STATION	OFFSET	Y COORDS	X COORDS
478	77+79.5 'NB'	67.5 RT	592934.95	59411.61
479	77+74.5 'NB'	67.1 RT	592929.97	59411.17
480	77+71.5 'NB'	63.8 RT	592926.97	59407.91
481	77+66.2 'NB'	63.8 RT	592921.59	59407.93
482	77+64.8 'NB'	63.8 RT	592920.28	59407.94
483	77+66.2 'NB'	57.8 RT	592921.59	59401.93
484	77+74.8 'NB'	57.8 RT	592930.22	59401.90
485	77+77.5 'NB'	56.1 RT	592932.93	59400.18
486	77+82.0 'NB'	58.2 RT	592937.45	59402.30
487	77+95.9 'NB'	44.8 RT	592951.28	59388.82
488	77+93.9 'NB'	40.2 RT	592949.26	59384.24
489	77+95.8 'NB'	37.4 RT	592951.09	59381.47
490	77+95.8 'NB'	29.0 RT	592951.06	59373.02
491	78+01.8 'NB'	27.8 RT	592957.06	59371.82
492	78+01.7 'NB'	29.0 RT	592957.05	59373.02
493	78+01.8 'NB'	34.6 RT	592957.08	59378.58
494	78+04.9 'NB'	37.6 RT	592960.27	59381.56
495	78+05.2 'NB'	42.5 RT	592960.59	59386.55

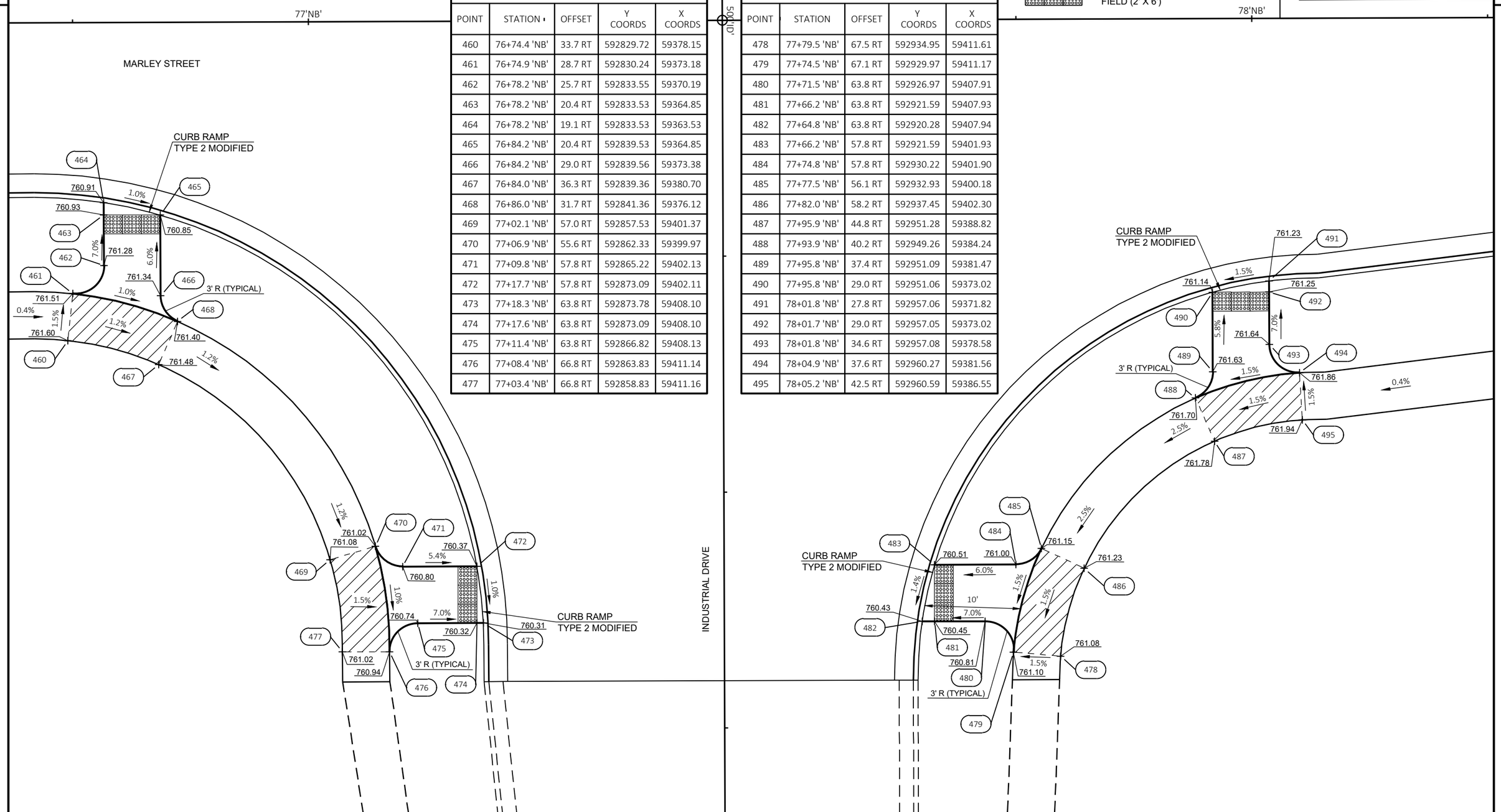

PROJECT NO: 9269-00-14	HWY: MARLEY STREET	COUNTY: BROWN	CURB RAMP DETAILS	SHEET 38	E

FILE NAME : I:\45\450490 MARLEY STREET\C3D\SHEETSPLAN\021301 CR.DWG
LAYOUT NAME - 021304 cr
PLOT DATE : 11/12/2021 1:58 PM
PLOT BY : ROWELL, ANDREW
PLOT NAME :
PLOT SCALE : 1 IN:10 FT
WISDOT/CADDS SHEET 42

MARLEY STREET CURB RAMP				
POINT	STATION	OFFSET	Y COORDS	X COORDS
496	94+61.6 'SB'	-28.5 LT	594616.84	59287.53
497	94+61.7 'SB'	-23.5 LT	594616.93	59292.53
498	94+71.4 'SB'	-30.2 LT	594626.66	59285.84
499	94+73.0 'SB'	-25.5 LT	594628.25	59290.58
500	94+80.3 'SB'	-34.9 LT	594635.50	59281.26
501	94+84.2 'SB'	-31.6 LT	594639.48	59284.52
502	94+84.0 'SB'	-38.1 LT	594639.30	59278.01
503	94+88.0 'SB'	-35.0 LT	594643.25	59281.13
504	94+91.9 'SB'	-31.9 LT	594647.12	59284.30
505	94+95.7 'SB'	-36.5 LT	594650.93	59279.68
506	94+91.8 'SB'	-39.7 LT	594647.07	59276.50
507	94+88.0 'SB'	-42.9 LT	594643.24	59273.24
508	94+90.4 'SB'	-47.3 LT	594645.72	59268.90
509	94+94.4 'SB'	-44.0 LT	594649.68	59272.17

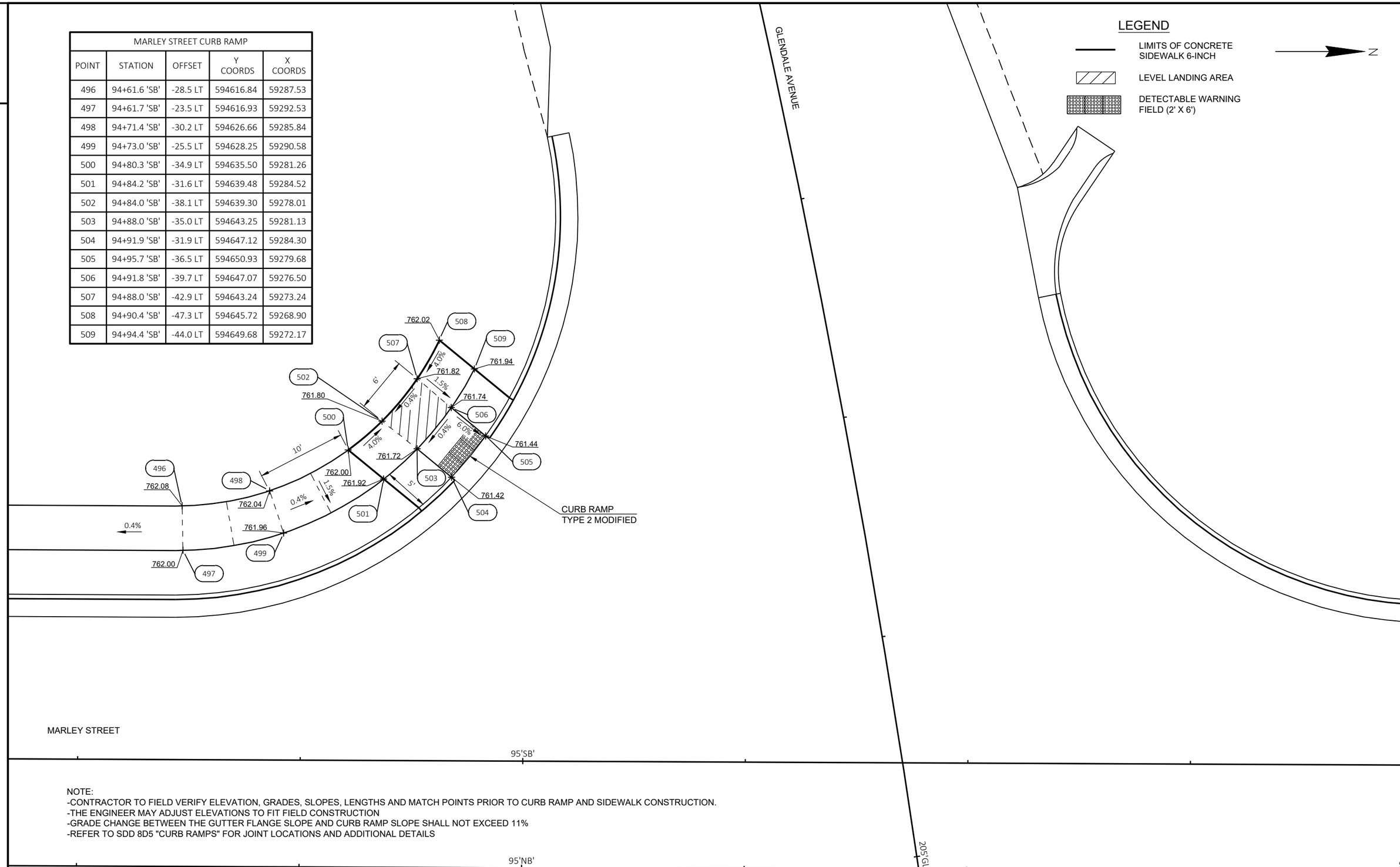

NOTE:
-CONTRACTOR TO FIELD VERIFY ELEVATION, GRADES, SLOPES, LENGTHS AND MATCH POINTS PRIOR TO CURB RAMP AND SIDEWALK CONSTRUCTION.
-THE ENGINEER MAY ADJUST ELEVATIONS TO FIT FIELD CONSTRUCTION
-GRADE CHANGE BETWEEN THE GUTTER FLANGE SLOPE AND CURB RAMP SLOPE SHALL NOT EXCEED 11%
-REFER TO SDD 8D5 "CURB RAMPS" FOR JOINT LOCATIONS AND ADDITIONAL DETAILS

2

NOTE:
-CONTRACTOR TO FIELD VERIFY ELEVATION, GRADES, SLOPES, LENGTHS AND MATCH POINTS PRIOR TO CURB RAMP AND SIDEWALK CONSTRUCTION.
-THE ENGINEER MAY ADJUST ELEVATIONS TO FIT FIELD CONSTRUCTION
-GRADE CHANGE BETWEEN THE GUTTER FLANGE SLOPE AND CURB RAMP SLOPE SHALL NOT EXCEED 11%
-REFER TO SDD 8D5 "CURB RAMPS" FOR JOINT LOCATIONS AND ADDITIONAL DETAILS

LEGEND

LIMITS OF CONCRETE SIDEWALK 6-INCH

LEVEL LANDING AREA

DETECTABLE WARNING FIELD (2' X 6')

N

2

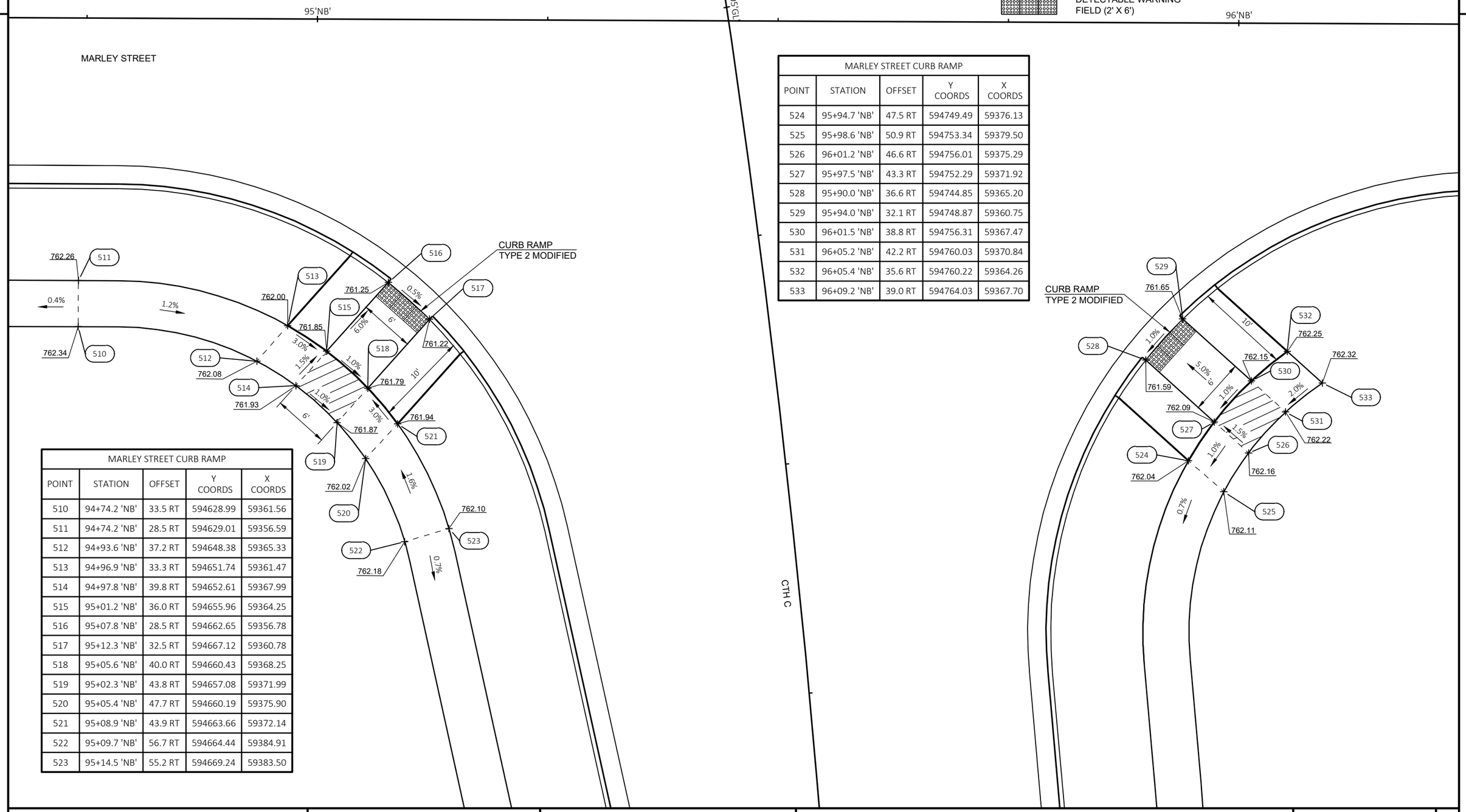

MARLEY STREET CURB RAMP				
POINT	STATION	OFFSET	Y COORDS	X COORDS
524	95+94.7 'NB'	47.5 RT	594749.49	59376.13
525	95+98.6 'NB'	50.9 RT	594753.34	59379.50
526	96+01.2 'NB'	46.6 RT	594756.01	59375.29
527	95+97.5 'NB'	43.3 RT	594752.29	59371.92
528	95+90.0 'NB'	36.6 RT	594744.85	59365.20
529	95+94.0 'NB'	32.1 RT	594748.87	59360.75
530	96+01.5 'NB'	38.8 RT	594756.31	59367.47
531	96+05.2 'NB'	42.2 RT	594760.03	59370.84
532	96+05.4 'NB'	35.6 RT	594760.22	59364.26
533	96+09.2 'NB'	39.0 RT	594764.03	59367.70

MARLEY STREET CURB RAMP				
POINT	STATION	OFFSET	Y COORDS	X COORDS
510	94+74.2 'NB'	33.5 RT	594628.99	59361.56
511	94+74.2 'NB'	28.5 RT	594629.01	59356.59
512	94+93.6 'NB'	37.2 RT	594648.38	59365.33
513	94+96.9 'NB'	33.3 RT	594651.74	59361.47
514	94+97.8 'NB'	39.8 RT	594652.61	59367.99
515	95+01.2 'NB'	36.0 RT	594655.96	59364.25
516	95+07.8 'NB'	28.5 RT	594662.65	59356.78
517	95+12.3 'NB'	32.5 RT	594667.12	59360.78
518	95+05.6 'NB'	40.0 RT	594660.43	59368.25
519	95+02.3 'NB'	43.8 RT	594657.08	59371.99
520	95+05.4 'NB'	47.7 RT	594660.19	59375.90
521	95+08.9 'NB'	43.9 RT	594663.66	59372.14
522	95+09.7 'NB'	56.7 RT	594664.44	59384.91
523	95+14.5 'NB'	55.2 RT	594669.24	59383.50

PROJECT NO: 9269-00-14	HWY: MARLEY STREET	COUNTY: BROWN	CURB RAMP DETAILS	SHEET 40	E

2

NOTE:

TYPE A INLET PROTECTION IS REQUIRED FOR ALL INLETS AFTER INSTALLATION AND BEFORE CURB PLACEMENT.
AFTER CURB PLACEMENT INSTALL TYPE B, C, OR D INLET PROTECTION.
(SEE MISCELLANEOUS QUANTITIES)

LEGEND

- EROSION MAT URBAN CLASS I, TYPE B
- EROSION MAT CLASS I, TYPE B
- SILT FENCE
- SLOPE INTERCEPT
- SURFACE WATER FLOW
- INLET PROTECTION
- CULVERT PIPE CHECK
- ROCK BAGS
- ASPH — ASPHALTIC FLUME
- RIPRAP MEDIUM

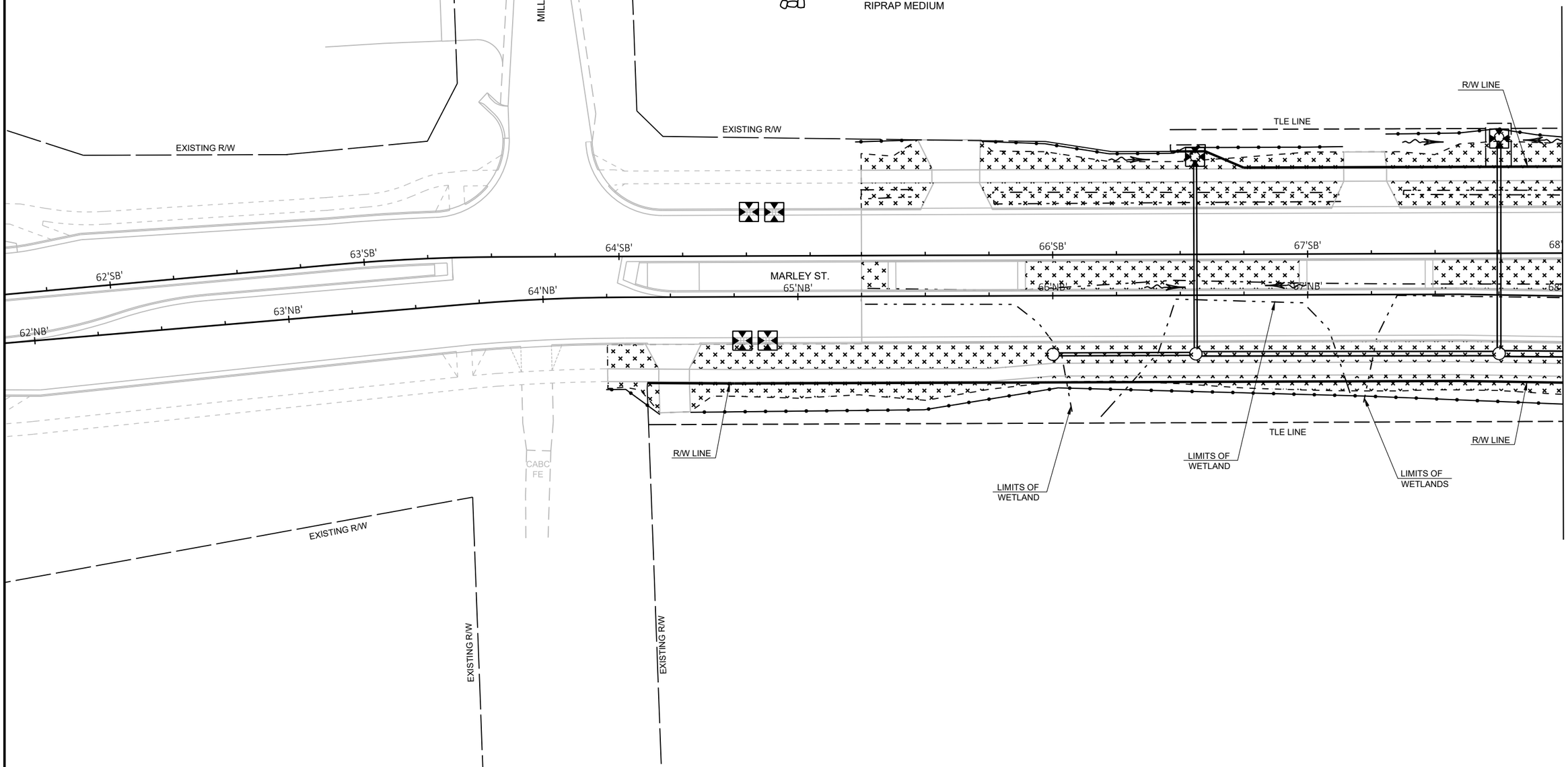

2

PROJECT NO: 9269-00-14	HWY: MARLEY STREET	COUNTY: BROWN	EROSION CONTROL	SHEET 41	E

FILE NAME : I:\45\450490 MARLEY STREET\C3D\SHEETSPLAN\022001 EC.DWG
LAYOUT NAME - 022001 ec
PLOT DATE : 11/11/2021 11:16 AM PLOT BY : VERVILLE, PHILLIP PLOT NAME : PLOT SCALE : 1 IN:40 FT

2

NOTE:

TYPE A INLET PROTECTION IS REQUIRED FOR ALL INLETS AFTER INSTALLATION AND BEFORE CURB PLACEMENT.
AFTER CURB PLACEMENT INSTALL TYPE B, C, OR D INLET PROTECTION.
(SEE MISCELLANEOUS QUANTITIES)

N

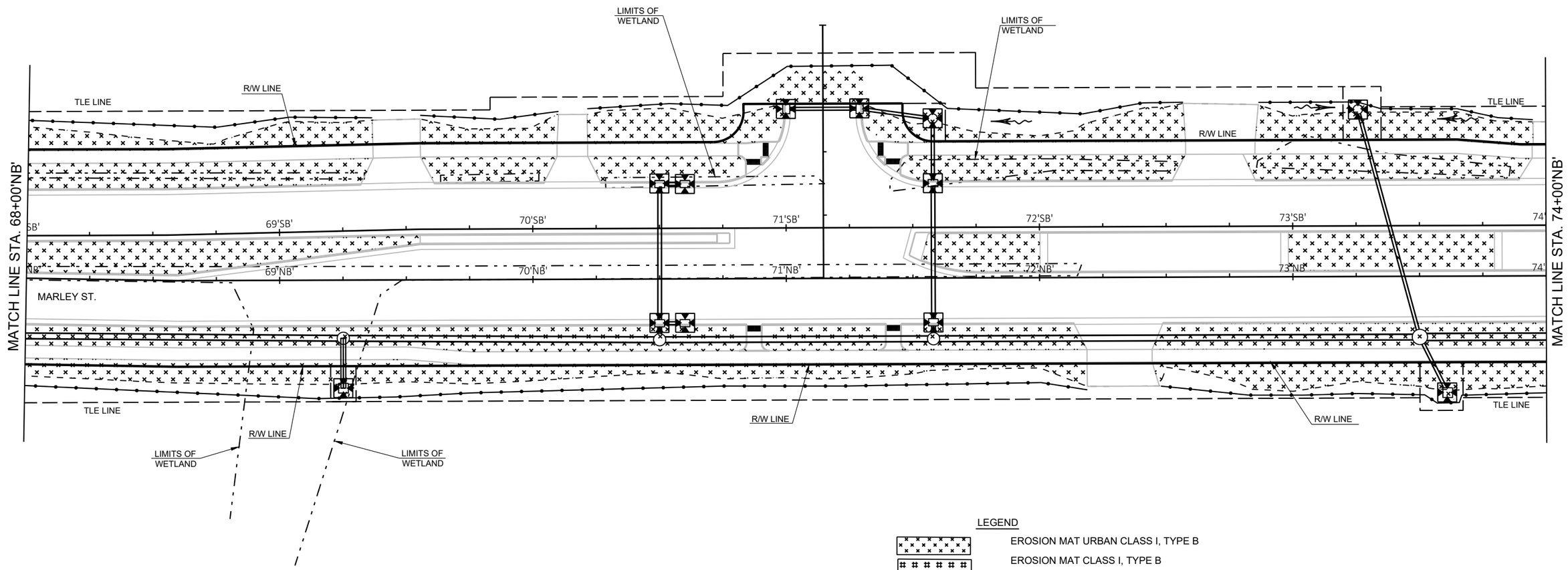

LEGEND

- EROSION MAT URBAN CLASS I, TYPE B
- EROSION MAT CLASS I, TYPE B
- SILT FENCE
- SLOPE INTERCEPT
- SURFACE WATER FLOW
- INLET PROTECTION
- CULVERT PIPE CHECK
- ROCK BAGS
- ASPHALTIC FLUME
- RIPRAP MEDIUM

PROJECT NO: 9269-00-14	HWY: MARLEY STREET	COUNTY: BROWN	EROSION CONTROL	SHEET 42	E

2

NOTE:

TYPE A INLET PROTECTION IS REQUIRED FOR ALL INLETS AFTER INSTALLATION AND BEFORE CURB PLACEMENT.
AFTER CURB PLACEMENT INSTALL TYPE B, C, OR D INLET PROTECTION.
(SEE MISCELLANEOUS QUANTITIES)

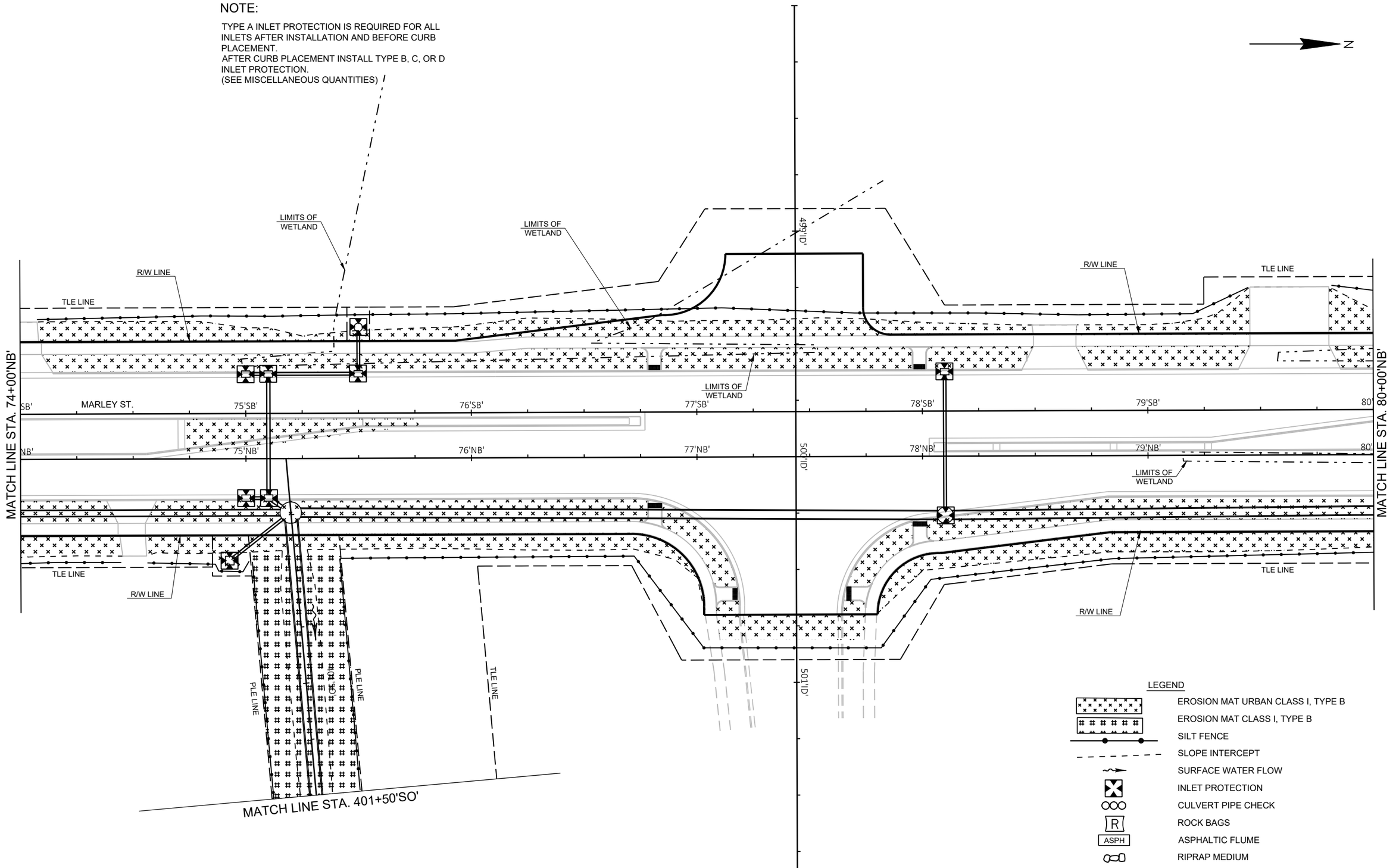

2

PROJECT NO: 9269-00-14	HWY: MARLEY STREET	COUNTY: BROWN	EROSION CONTROL	SHEET 43	E

2

NOTE:

TYPE A INLET PROTECTION IS REQUIRED FOR ALL INLETS AFTER INSTALLATION AND BEFORE CURB PLACEMENT.
AFTER CURB PLACEMENT INSTALL TYPE B, C, OR D INLET PROTECTION.
(SEE MISCELLANEOUS QUANTITIES)

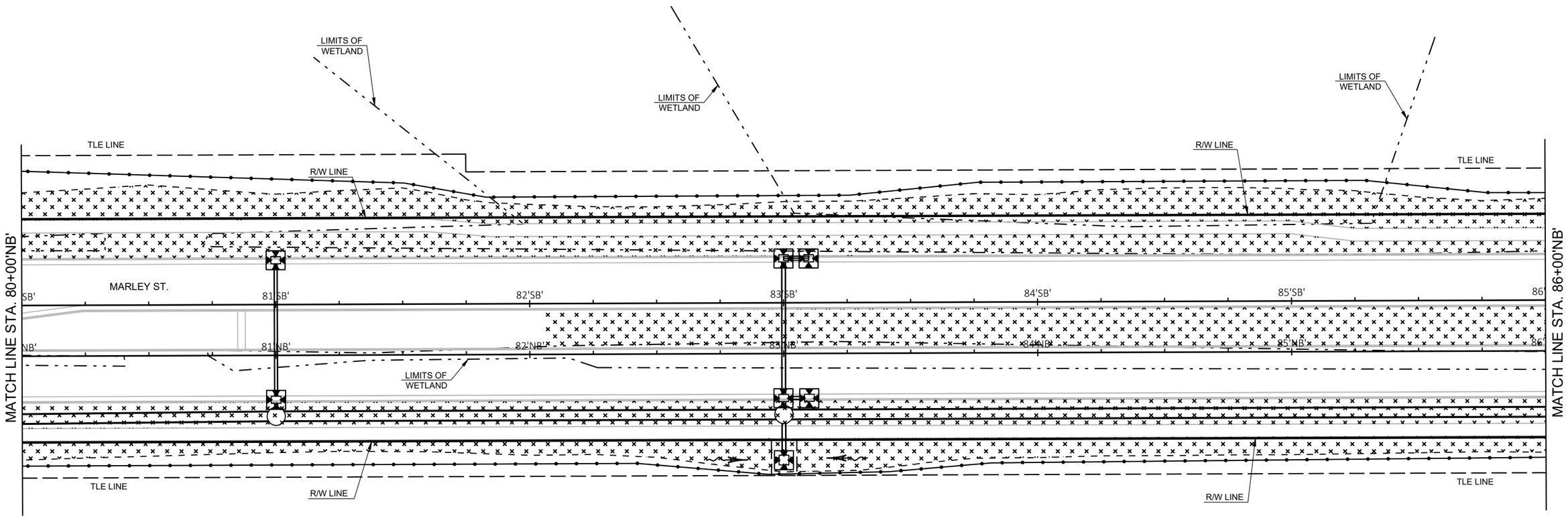

LEGEND

- EROSION MAT URBAN CLASS I, TYPE B
- EROSION MAT CLASS I, TYPE B
- SILT FENCE
- SLOPE INTERCEPT
- SURFACE WATER FLOW
- INLET PROTECTION
- CULVERT PIPE CHECK
- ROCK BAGS
- ASPHALTIC FLUME
- RIPRAP MEDIUM

PROJECT NO: 9269-00-14	HWY: MARLEY STREET	COUNTY: BROWN	EROSION CONTROL	SHEET 44	E

2

NOTE:

TYPE A INLET PROTECTION IS REQUIRED FOR ALL INLETS AFTER INSTALLATION AND BEFORE CURB PLACEMENT.
AFTER CURB PLACEMENT INSTALL TYPE B, C, OR D INLET PROTECTION.
(SEE MISCELLANEOUS QUANTITIES)

N

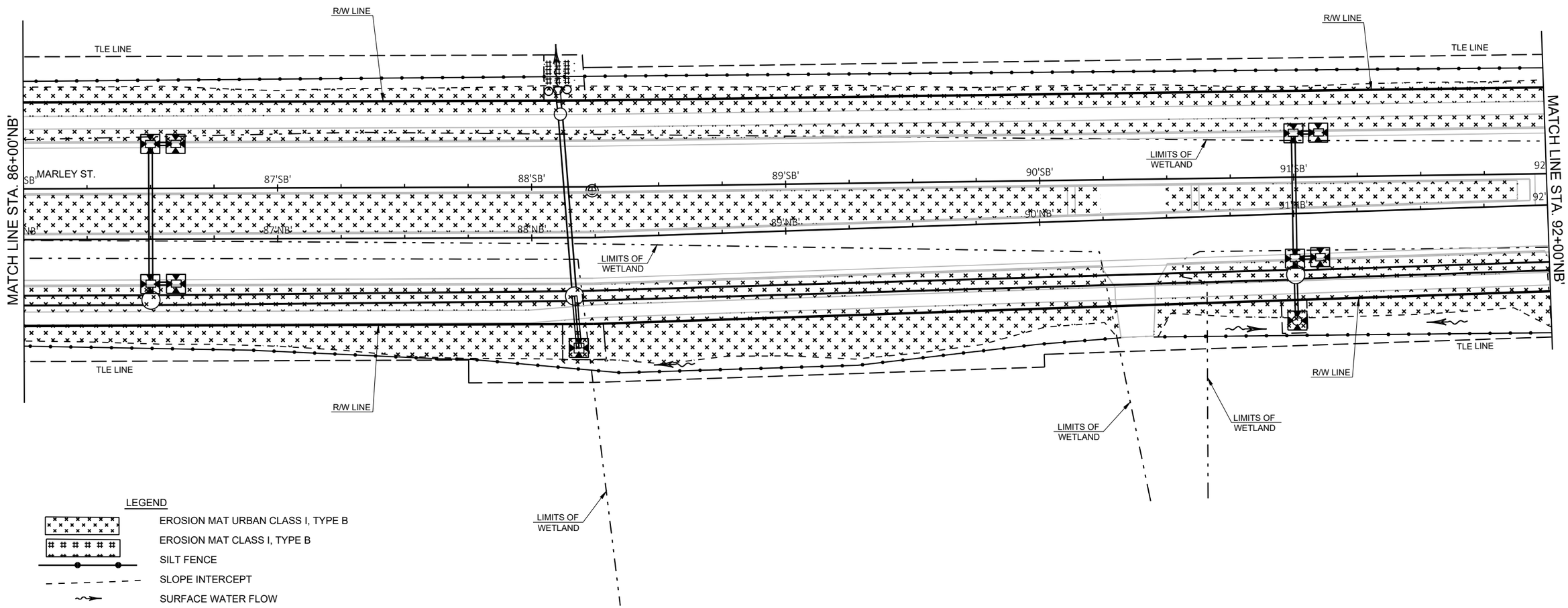

LEGEND

- EROSION MAT URBAN CLASS I, TYPE B
- EROSION MAT CLASS I, TYPE B
- SILT FENCE
- SLOPE INTERCEPT
- SURFACE WATER FLOW
- INLET PROTECTION
- CULVERT PIPE CHECK
- ROCK BAGS
- ASPHALTIC FLUME
- RIPRAP MEDIUM

PROJECT NO: 9269-00-14	HWY: MARLEY STREET	COUNTY: BROWN	EROSION CONTROL	SHEET 45	E

FILE NAME : I:\45\450490 MARLEY STREET\C3D\SHEETSPLAN\022001 EC.DWG
LAYOUT NAME - 022005 ec
PLOT DATE : 11/11/2021 11:17 AM PLOT BY : VERVILLE, PHILLIP PLOT NAME : PLOT SCALE : 1 IN:40 FT

2

LEGEND

- EROSION MAT URBAN CLASS I, TYPE B
- EROSION MAT CLASS I, TYPE B
- SILT FENCE
- SLOPE INTERCEPT
- SURFACE WATER FLOW
- INLET PROTECTION
- CULVERT PIPE CHECK
- ROCK BAGS
- ASPHALTIC FLUME
- RIPRAP MEDIUM

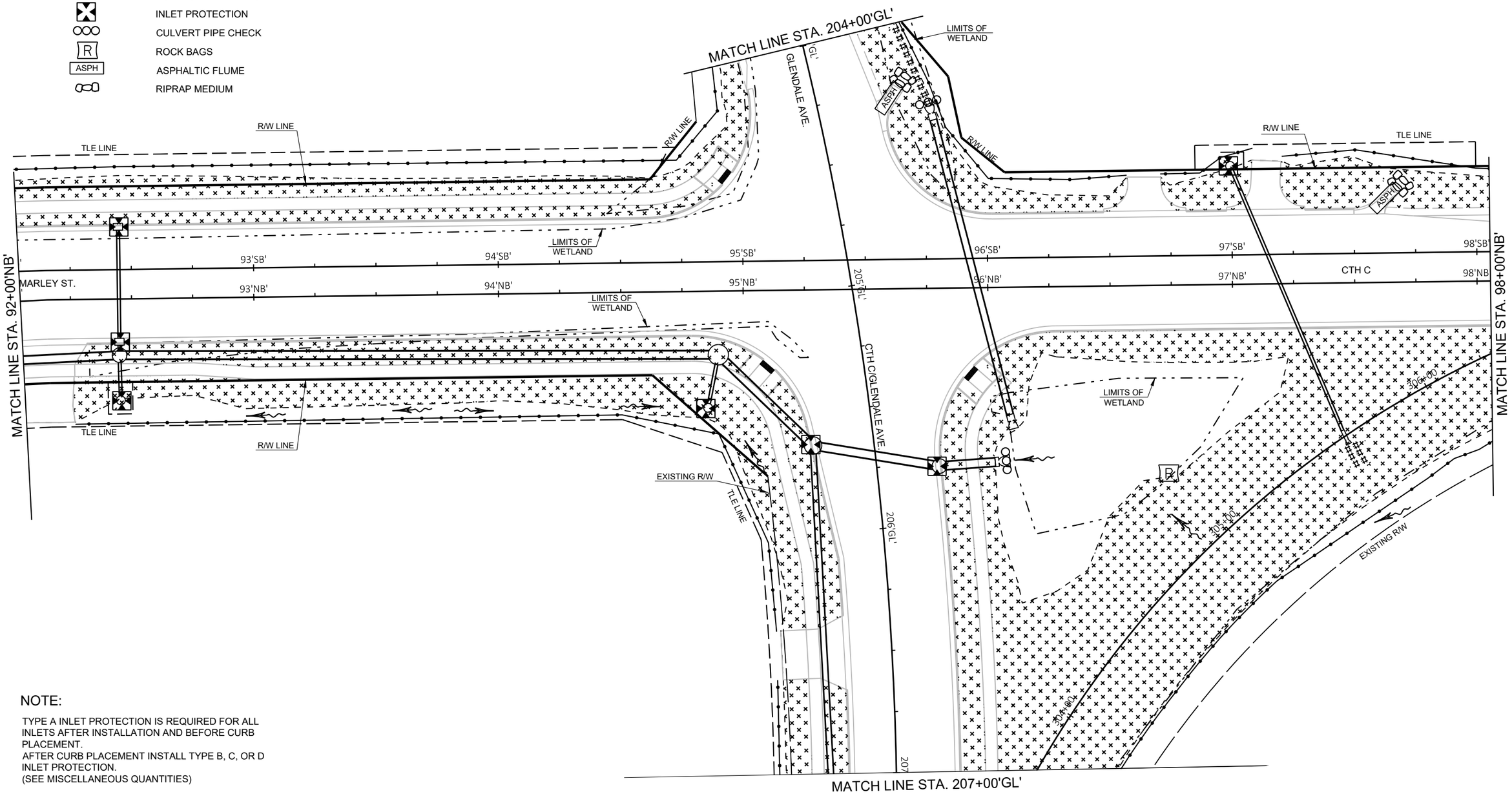

NOTE:

TYPE A INLET PROTECTION IS REQUIRED FOR ALL INLETS AFTER INSTALLATION AND BEFORE CURB PLACEMENT.
AFTER CURB PLACEMENT INSTALL TYPE B, C, OR D INLET PROTECTION.
(SEE MISCELLANEOUS QUANTITIES)

PROJECT NO: 9269-00-14	HWY: MARLEY STREET	COUNTY: BROWN	EROSION CONTROL	SHEET 46	E

FILE NAME : I:\45\450490 MARLEY STREET\C3D\SHEETSPLAN\022001 EC.DWG
LAYOUT NAME - 022006 ec
PLOT DATE : 11/12/2021 2:17 PM
PLOT BY : SEIBERT, CHELSEA
PLOT NAME :
PLOT SCALE : 1 IN:40 FT
WISDOT/CADDS SHEET 42

2

NOTE:

TYPE A INLET PROTECTION IS REQUIRED FOR ALL INLETS AFTER INSTALLATION AND BEFORE CURB PLACEMENT.
AFTER CURB PLACEMENT INSTALL TYPE B, C, OR D INLET PROTECTION.
(SEE MISCELLANEOUS QUANTITIES)

N

2

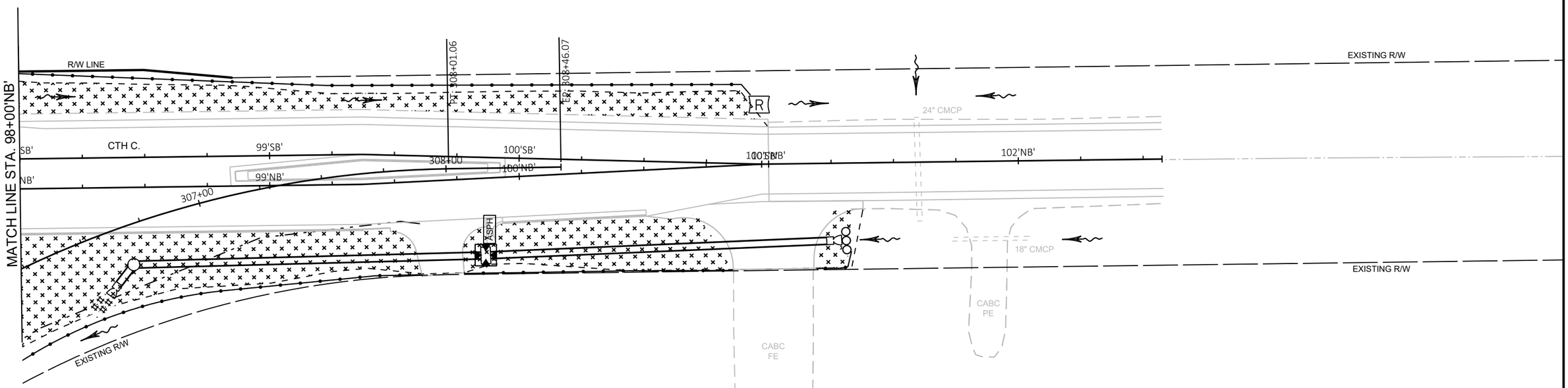

LEGEND

- EROSION MAT URBAN CLASS I, TYPE B
- EROSION MAT CLASS I, TYPE B
- SILT FENCE
- SLOPE INTERCEPT
- SURFACE WATER FLOW
- INLET PROTECTION
- CULVERT PIPE CHECK
- ROCK BAGS
- ASPHALTIC FLUME
- RIPRAP MEDIUM

PROJECT NO: 9269-00-14	HWY: MARLEY STREET	COUNTY: BROWN	EROSION CONTROL	SHEET 47	E

2

NOTE:

TYPE A INLET PROTECTION IS REQUIRED FOR ALL INLETS AFTER INSTALLATION AND BEFORE CURB PLACEMENT.
AFTER CURB PLACEMENT INSTALL TYPE B, C, OR D INLET PROTECTION.
(SEE MISCELLANEOUS QUANTITIES)

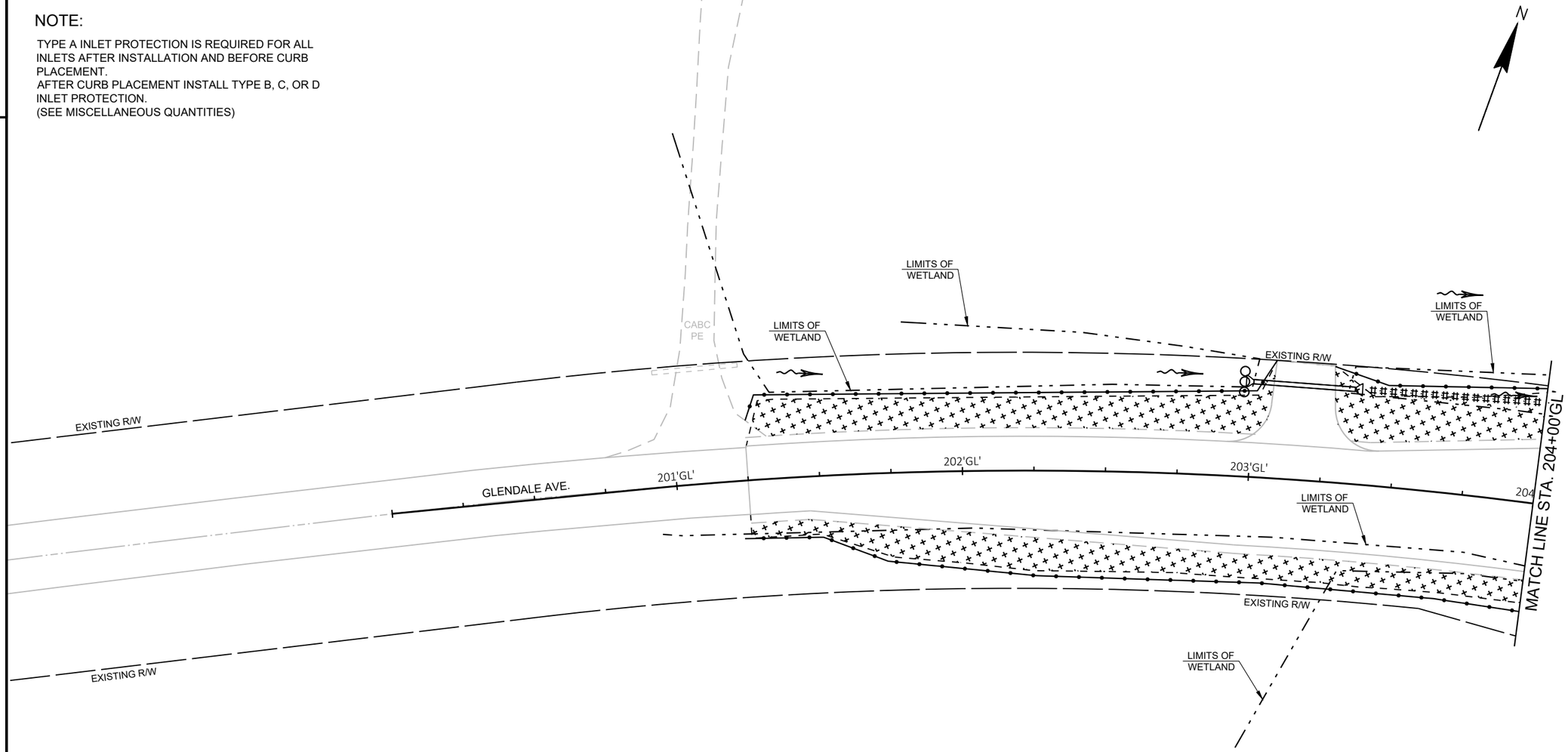

LEGEND

- EROSION MAT URBAN CLASS I, TYPE B
- EROSION MAT CLASS I, TYPE B
- SILT FENCE
- SLOPE INTERCEPT
- SURFACE WATER FLOW
- INLET PROTECTION
- CULVERT PIPE CHECK
- R — ROCK BAGS
- ASPH — ASPHALTIC FLUME
- RIPRAP MEDIUM

2

PROJECT NO: 9269-00-14	HWY: MARLEY STREET	COUNTY: BROWN	EROSION CONTROL	SHEET 48	E

FILE NAME : I:\45\450490 MARLEY STREET\C3D\SHEETSPLAN\022001 EC.DWG
LAYOUT NAME - 022008 ec
PLOT DATE : 11/11/2021 11:18 AM PLOT BY : VERVILLE, PHILLIP PLOT NAME : PLOT SCALE : 1 IN:40 FT
WISDOT/CADDS SHEET 42

NOTE:

TYPE A INLET PROTECTION IS REQUIRED FOR ALL INLETS AFTER INSTALLATION AND BEFORE CURB PLACEMENT.
AFTER CURB PLACEMENT INSTALL TYPE B, C, OR D INLET PROTECTION.
(SEE MISCELLANEOUS QUANTITIES)

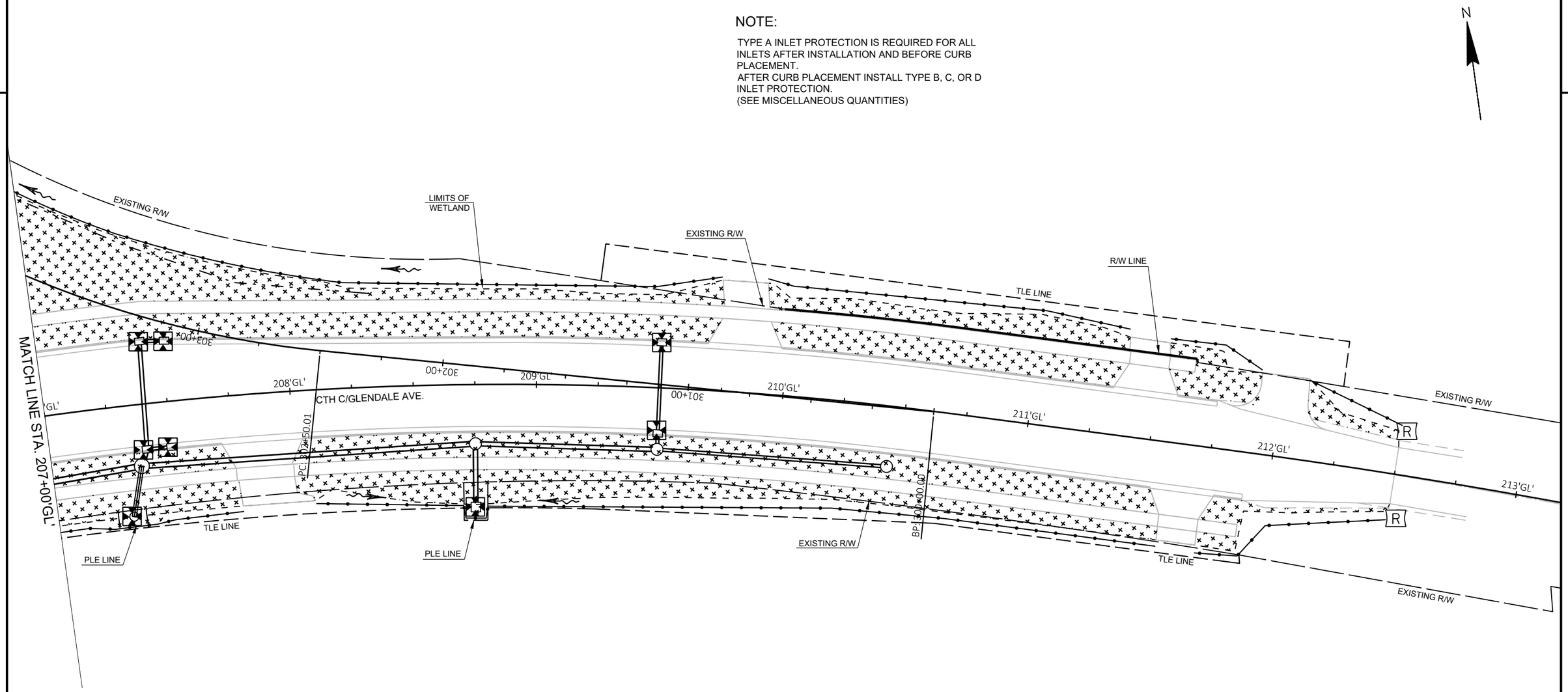

LEGEND

- EROSION MAT URBAN CLASS I, TYPE B
- EROSION MAT CLASS I, TYPE B
- SILT FENCE
- SLOPE INTERCEPT
- SURFACE WATER FLOW
- INLET PROTECTION
- CULVERT PIPE CHECK
- ROCK BAGS
- ASPHALTIC FLUME
- RIPRAP MEDIUM

PROJECT NO: 9269-00-14	HWY: MARLEY STREET	COUNTY: BROWN	EROSION CONTROL	SHEET 49	E

2

NOTE:

TYPE A INLET PROTECTION IS REQUIRED FOR ALL INLETS AFTER INSTALLATION AND BEFORE CURB PLACEMENT.
AFTER CURB PLACEMENT INSTALL TYPE B, C, OR D INLET PROTECTION.
(SEE MISCELLANEOUS QUANTITIES)

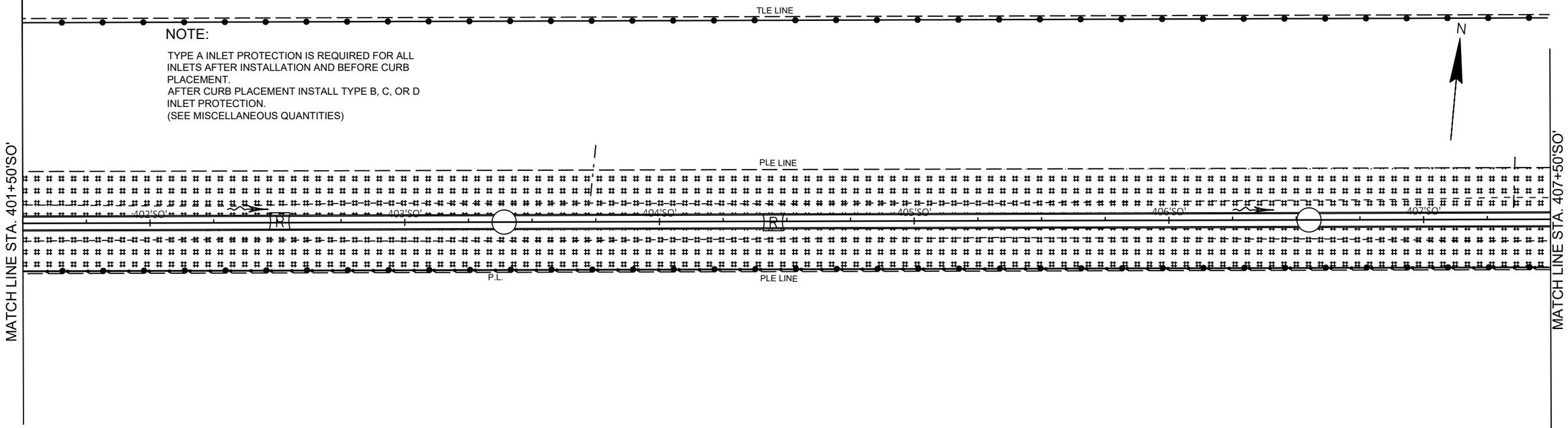

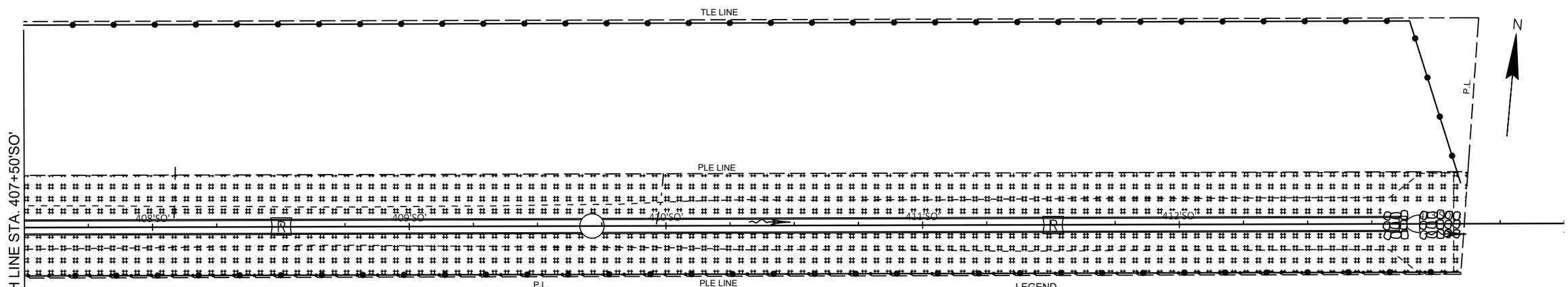

LEGEND

- EROSION MAT URBAN CLASS I, TYPE B
- EROSION MAT CLASS I, TYPE B
- SILT FENCE
- SLOPE INTERCEPT
- SURFACE WATER FLOW
- INLET PROTECTION
- CULVERT PIPE CHECK
- ROCK BAGS
- ASPHALTIC FLUME
- RIPRAP MEDIUM

PROJECT NO: 9269-00-14	HWY: MARLEY STREET	COUNTY: BROWN	EROSION CONTROL	SHEET 50	E

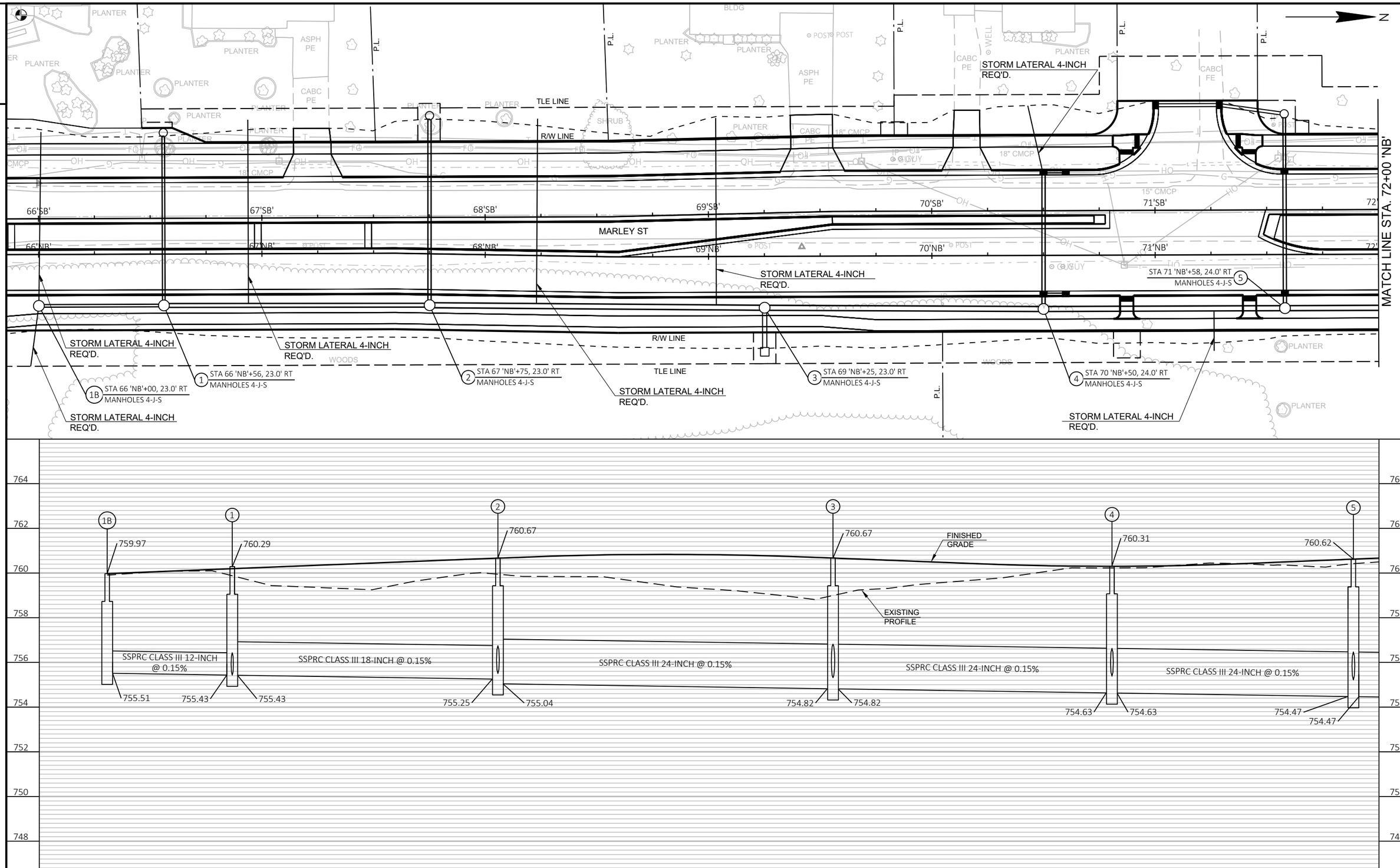

PROJECT NO: 9269-00-14	HWY: MARLEY STREET	COUNTY: BROWN	STORM SEWER	SHEET 51	E

FILE NAME : I:\45\450490 MARLEY STREET\C3D\SHEETSPLAN\022501 SS.DWG
LAYOUT NAME - 022501 ss
PLOT DATE : 11/12/2021 11:49 AM
PLOT BY : SEIBERT, CHELSEA
PLOT NAME :
PLOT SCALE : 1 IN:40 FT

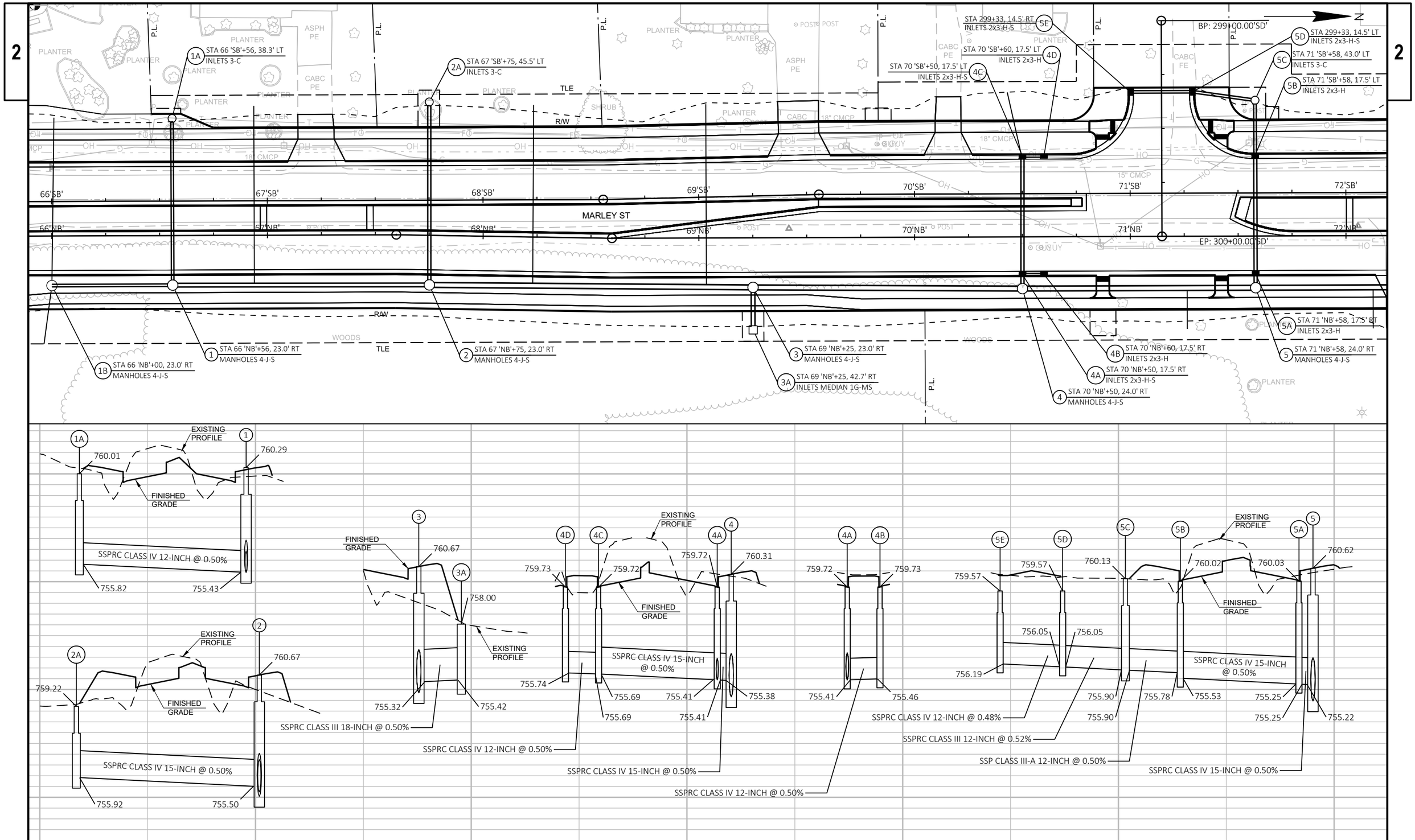

PROJECT NO: 9269-00-14	HWY: MARLEY STREET	COUNTY: BROWN	STORM SEWER	SHEET 52	E

FILE NAME : I:\45\450490 MARLEY STREET\C3D\SHEETSPLAN\022501 SS-LEADS.DWG
LAYOUT NAME - 022502 ss
PLOT DATE : 11/12/2021 11:50 AM
PLOT BY : SEIBERT, CHELSEA
PLOT NAME :
PLOT SCALE : 1 IN:40 FT

2

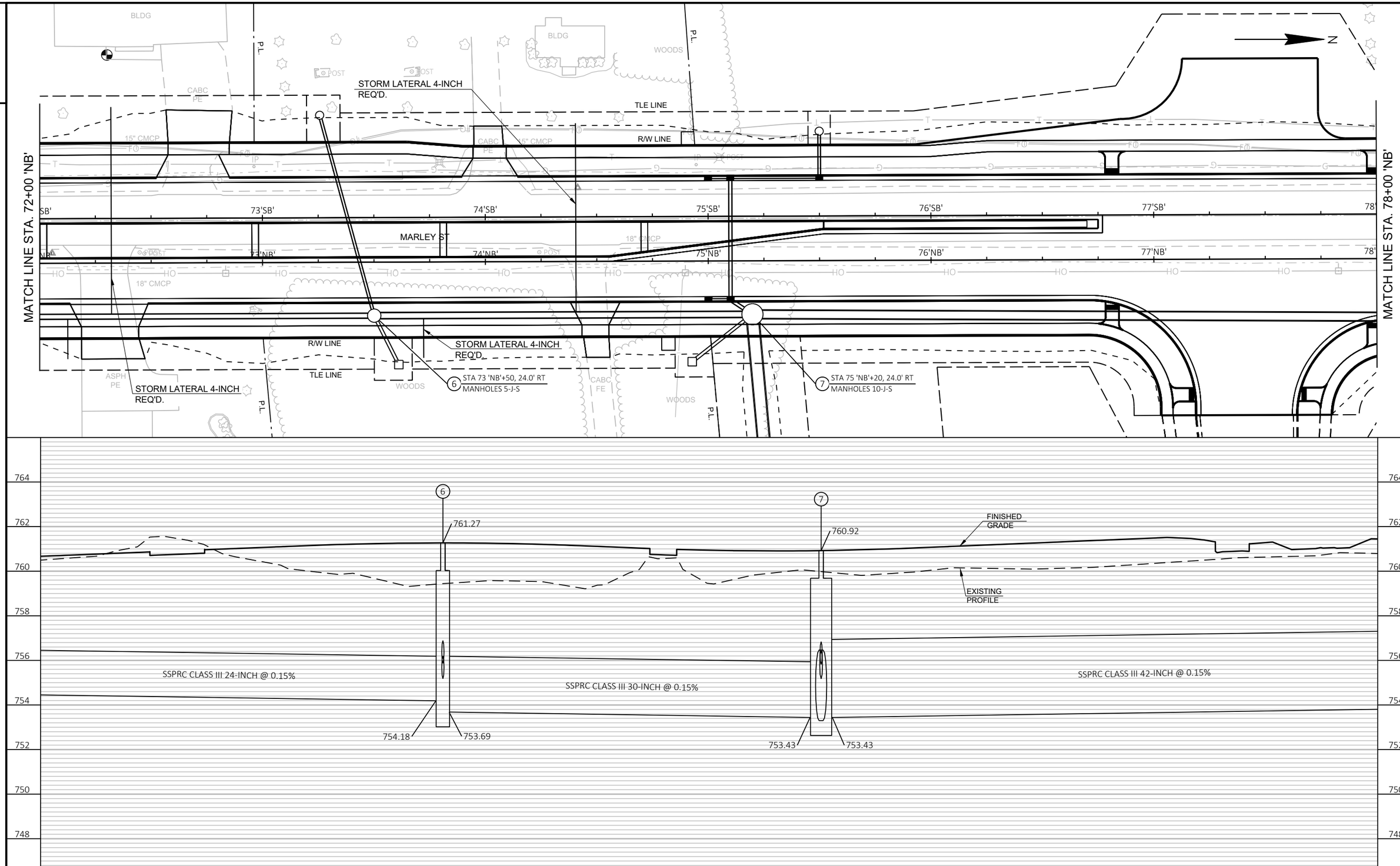

PROJECT NO: 9269-00-14	HWY: MARLEY STREET	COUNTY: BROWN	STORM SEWER	SHEET 53	E

FILE NAME : I:\45\450490 MARLEY STREET\C3D\SHEETSPLAN\022501 SS.DWG
LAYOUT NAME - 022503 ss
PLOT DATE : 11/12/2021 11:50 AM
PLOT BY : SEIBERT, CHELSEA
PLOT NAME :
PLOT SCALE : 1 IN:40 FT
WISDOT/CADDS SHEET 41

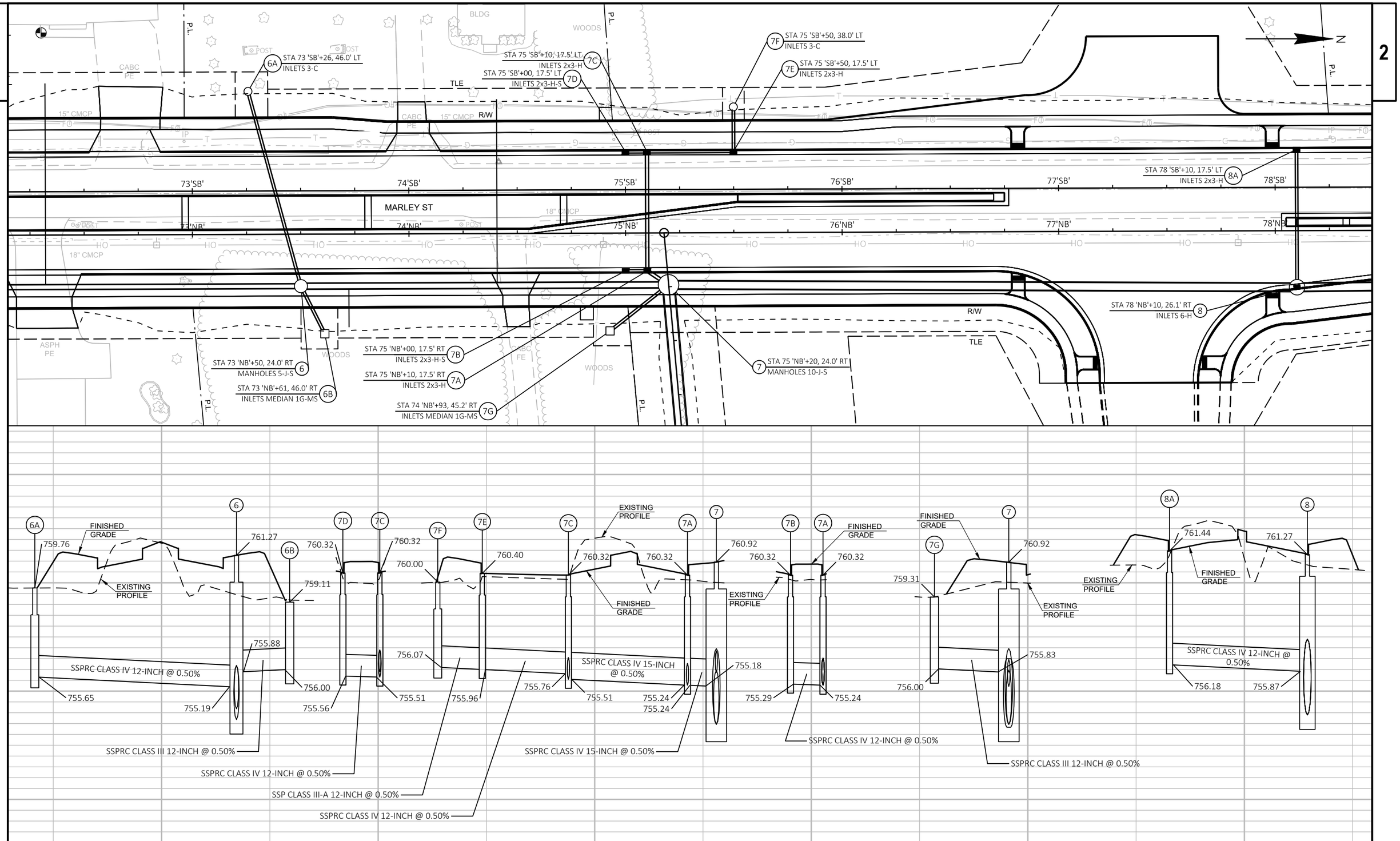

PROJECT NO: 9269-00-14	HWY: MARLEY STREET	COUNTY: BROWN	STORM SEWER	SHEET 54	E

FILE NAME : I:\45\450490 MARLEY STREET\C3D\SHEETSPLAN\022501 SS-LEADS.DWG
LAYOUT NAME - 022504 ss
PLOT DATE : 11/12/2021 11:50 AM
PLOT BY : SEIBERT, CHELSEA
PLOT NAME :
PLOT SCALE : 1 IN:40 FT

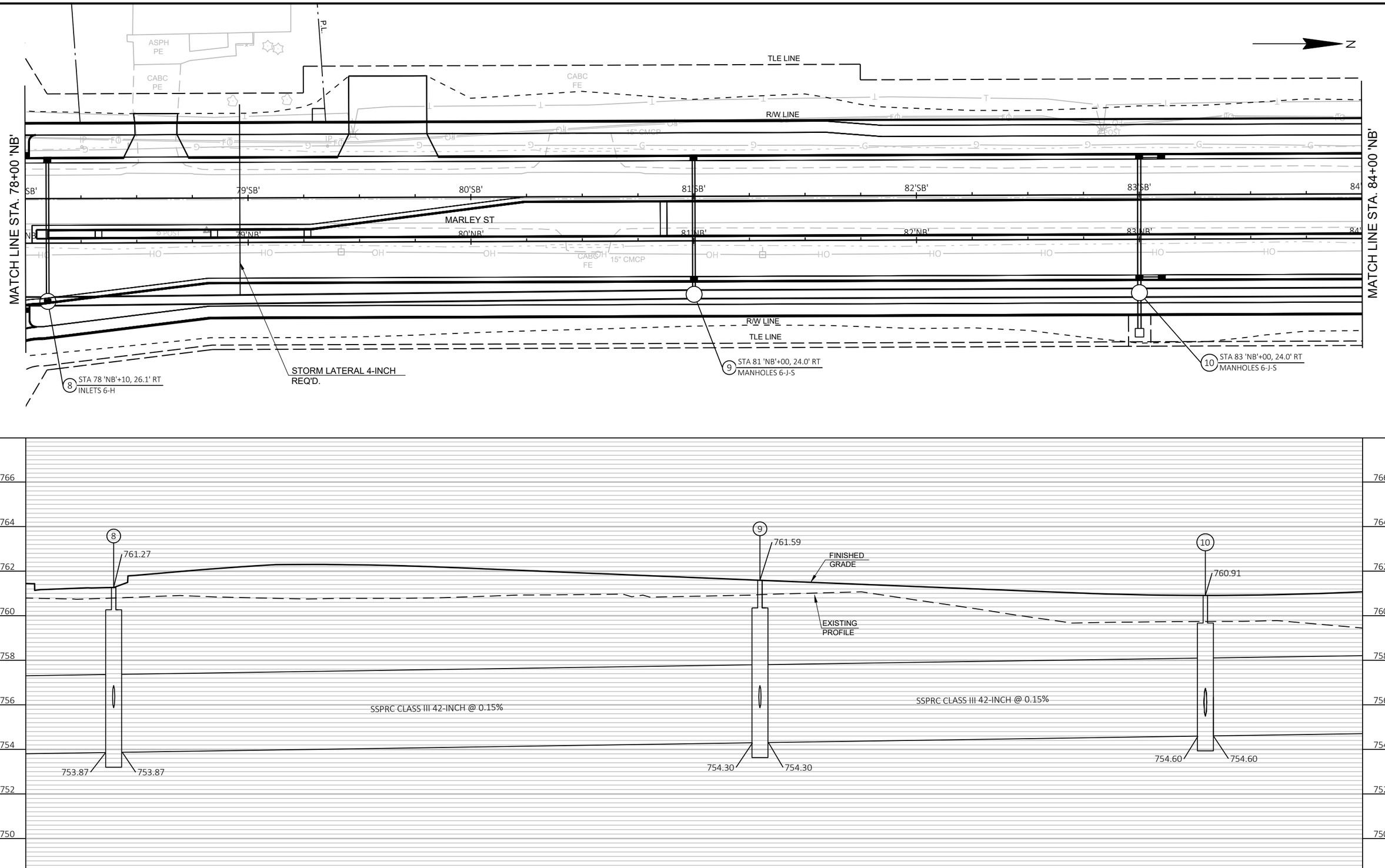
N
TLE LINE
R/W LINE
ASPH PE
CABC PE
CABC FE
P.L.
15" CMCP
MARLEY ST
79'SB'
80'SB'
81'SB'
82'SB'
83'SB'
79'NB'
80'NB'
81'NB'
82'NB'
83'NB'
MATCH LINE STA. 78+00 'NB'
MATCH LINE STA. 84+00 'NB'
STORM LATERAL 4-INCH REQ'D.
8 STA 78 'NB'+10, 26.1' RT INLETS 6-H
9 STA 81 'NB'+00, 24.0' RT MANHOLES 6-J-S
10 STA 83 'NB'+00, 24.0' RT MANHOLES 6-J-S
766
764
762
760
758
756
754
752
750
761.27
761.59
760.91
FINISHED GRADE
EXISTING PROFILE
SSPRC CLASS III 42-INCH @ 0.15%
753.87
754.30
754.60

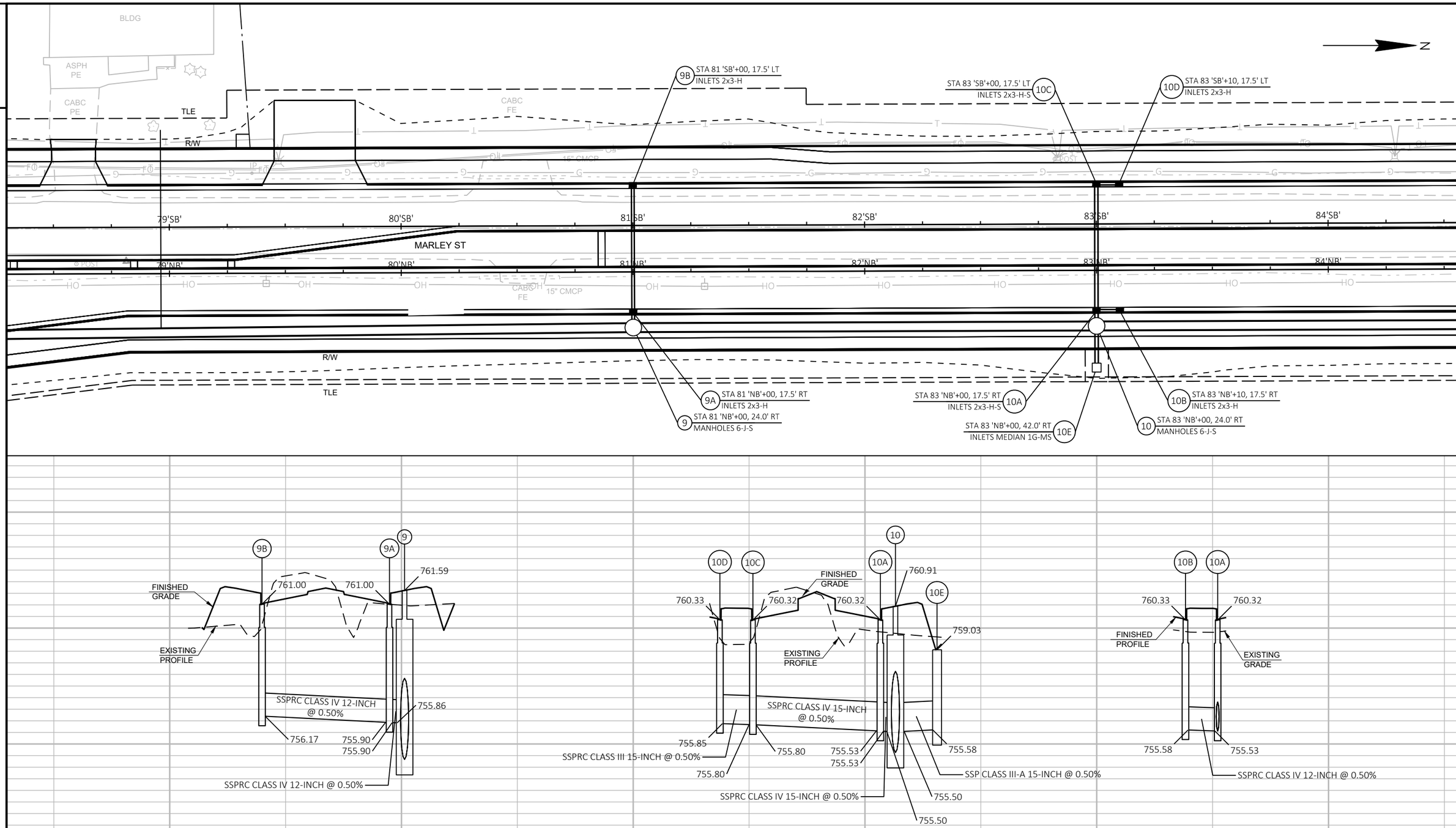

PROJECT NO: 9269-00-14	HWY: MARLEY STREET	COUNTY: BROWN	STORM SEWER	SHEET 56	E

FILE NAME : I:\45\450490 MARLEY STREET\C3D\SHEETSPLAN\022501 SS-LEADS.DWG
LAYOUT NAME - 022506 ss
PLOT DATE : 11/12/2021 11:50 AM PLOT BY : SEIBERT, CHELSEA PLOT NAME : PLOT SCALE : 1 IN:40 FT

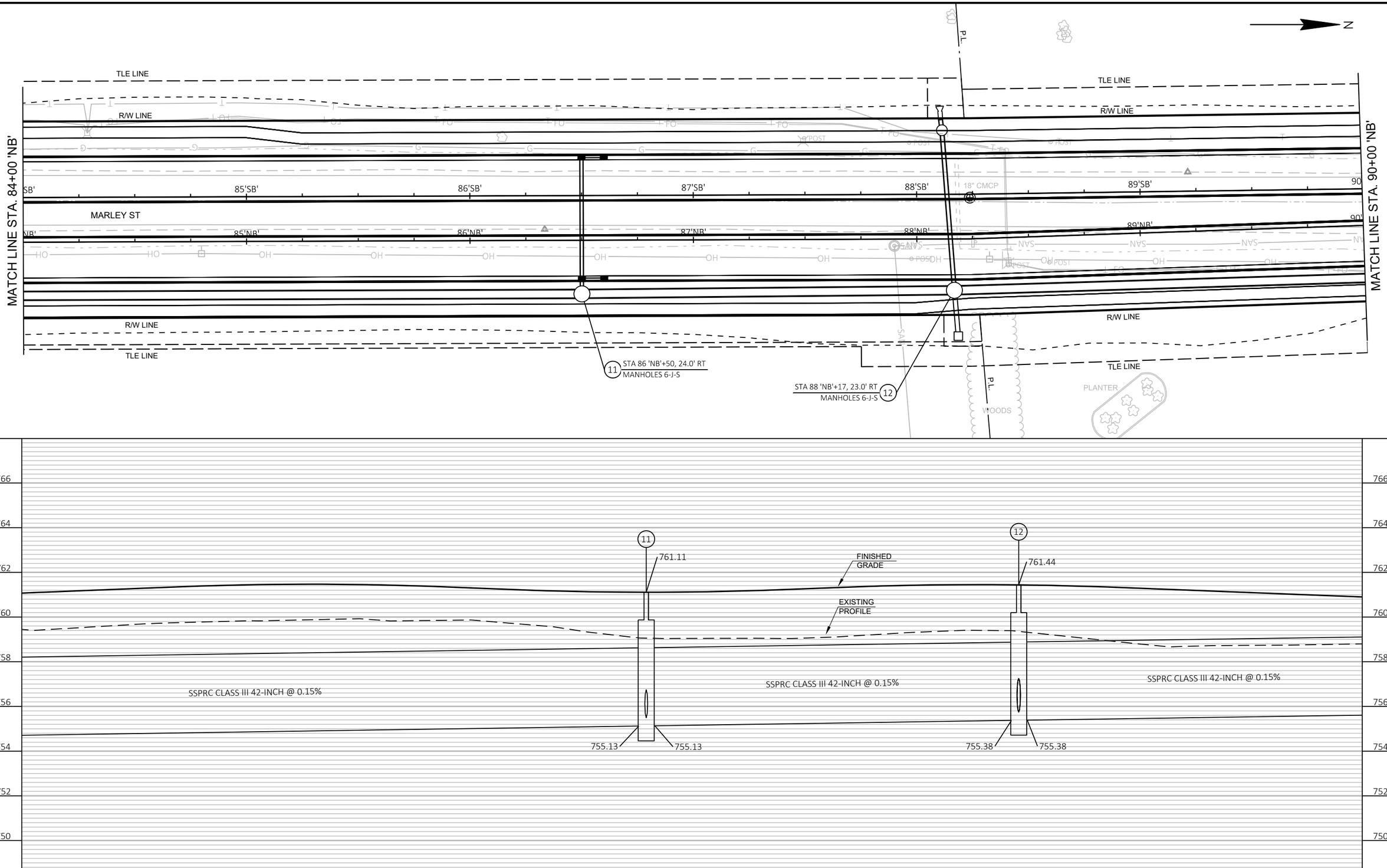

PROJECT NO: 9269-00-14	HWY: MARLEY STREET	COUNTY: BROWN	STORM SEWER	SHEET 57	E

FILE NAME : I:\45\450490 MARLEY STREET\C3D\SHEETSPLAN\022501 SS.DWG
LAYOUT NAME - 022507 ss
PLOT DATE : 11/12/2021 11:51 AM
PLOT BY : SEIBERT, CHELSEA
PLOT NAME :
PLOT SCALE : 1 IN:40 FT

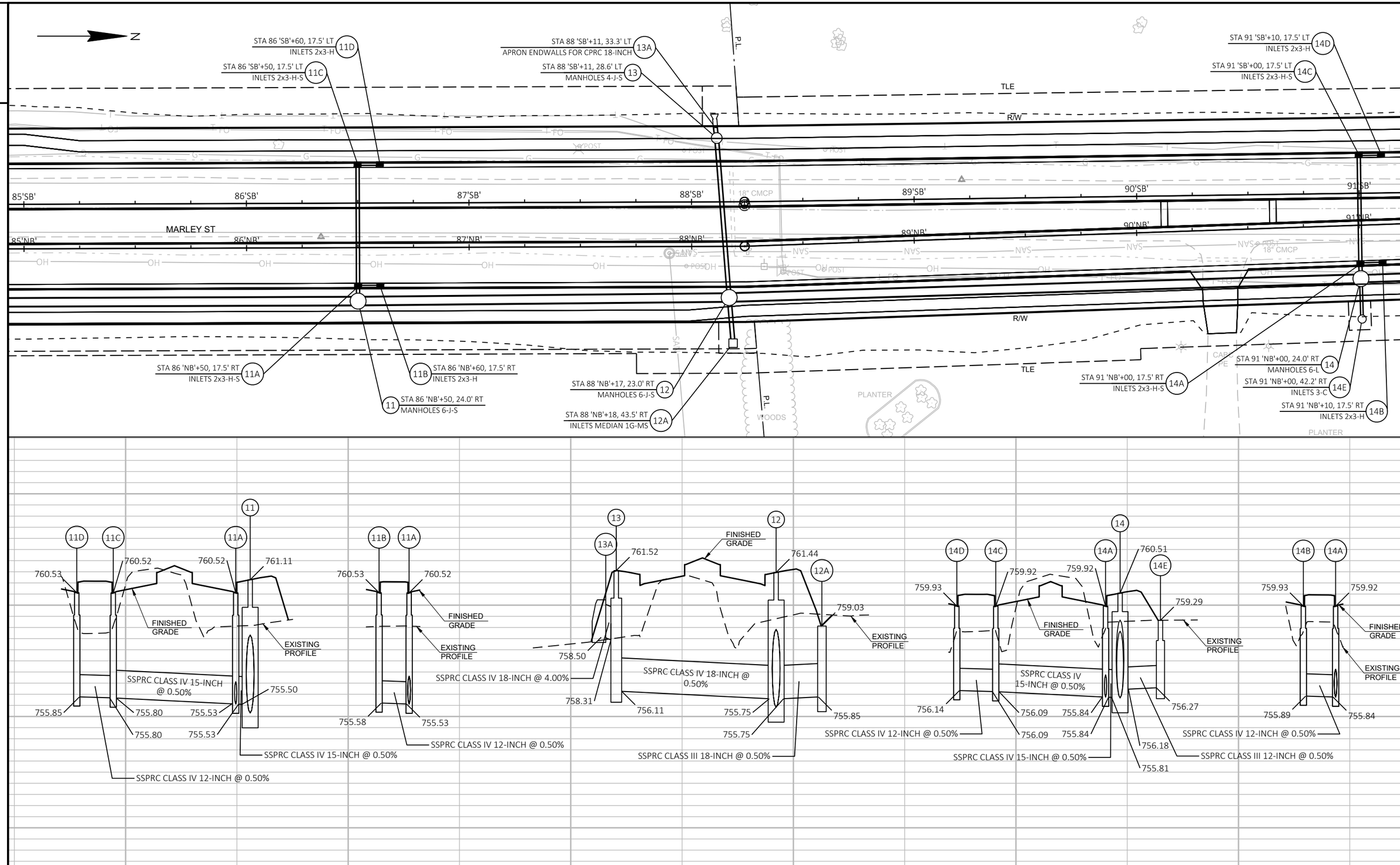

PROJECT NO: 9269-00-14	HWY: MARLEY STREET	COUNTY: BROWN	STORM SEWER	SHEET 58	E

FILE NAME : I:\45\450490 MARLEY STREET\C3D\SHEETSPLAN\022501 SS-LEADS.DWG
LAYOUT NAME - 022508 ss
PLOT DATE : 11/12/2021 11:51 AM PLOT BY : SEIBERT, CHELSEA PLOT NAME : PLOT SCALE : 1 IN:40 FT

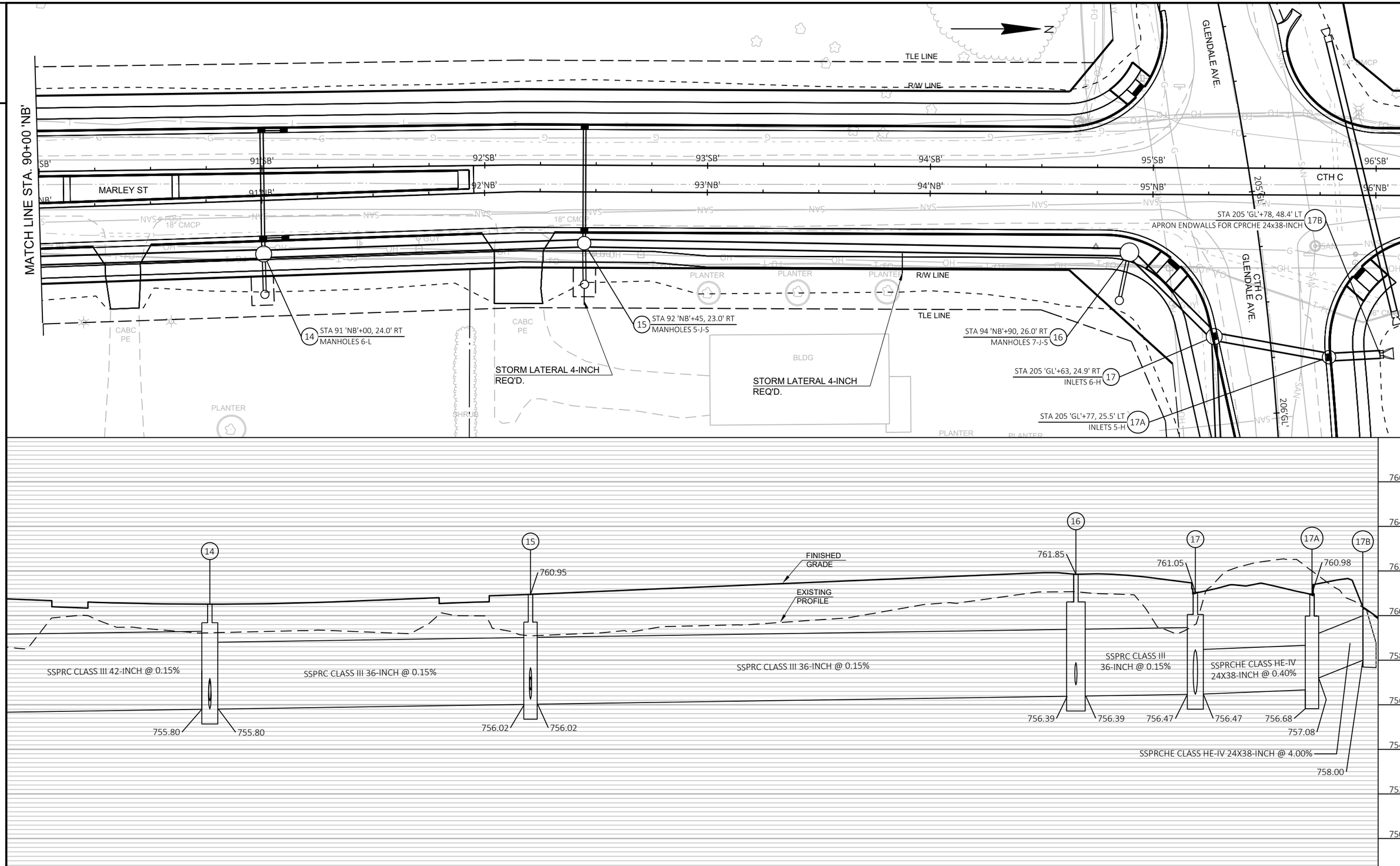
MATCH LINE STA. 90+00 'NB'
MARLEY ST
TLE LINE
R/W LINE
GLENDALE AVE.
CTH C
91'SB'
92'SB'
93'SB'
94'SB'
95'SB'
96'SB'
91'NB'
92'NB'
93'NB'
94'NB'
95'NB'
96'NB'
205'GL'
206'GL'
18" CMCP
24" CMCP
PLANTER
CABC PE
SHRUB
BLDG
STA 91 'NB'+00, 24.0' RT
MANHOLES 6-L
14
STA 92 'NB'+45, 23.0' RT
MANHOLES 5-J-S
15
STA 94 'NB'+90, 26.0' RT
MANHOLES 7-J-S
16
STA 205 'GL'+63, 24.9' RT
INLETS 6-H
17
STA 205 'GL'+77, 25.5' LT
INLETS 5-H
17A
STA 205 'GL'+78, 48.4' LT
APRON ENDWALLS FOR CPRCHE 24x38-INCH
17B
STORM LATERAL 4-INCH REQ'D.
STORM LATERAL 4-INCH REQ'D.
N
FINISHED GRADE
EXISTING PROFILE
760.95
761.85
761.05
760.98
SSPRC CLASS III 42-INCH @ 0.15%
SSPRC CLASS III 36-INCH @ 0.15%
SSPRC CLASS III 36-INCH @ 0.15%
SSPRC CLASS III 36-INCH @ 0.15%
SSPRCHE CLASS HE-IV 24X38-INCH @ 0.40%
SSPRCHE CLASS HE-IV 24X38-INCH @ 4.00%
755.80
755.80
756.02
756.02
756.39
756.39
756.47
756.47
756.68
757.08
758.00
766
764
762
760
758
756
754
752
750

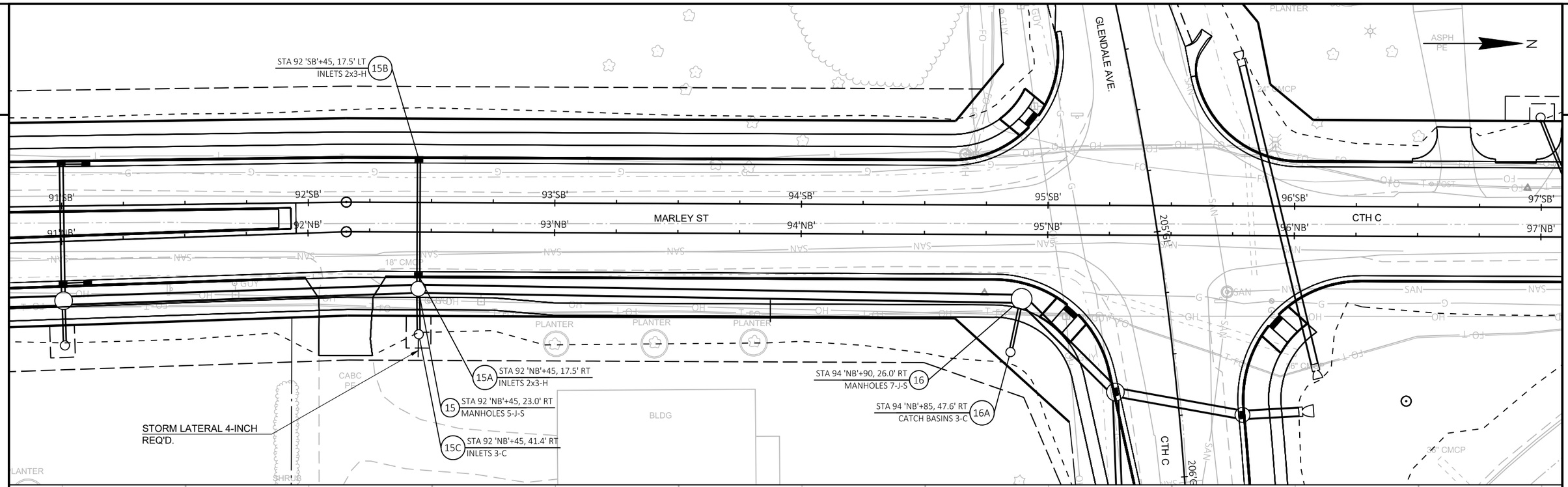

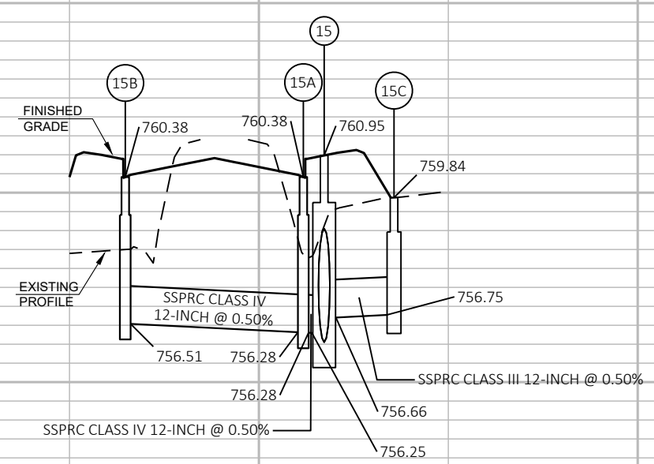

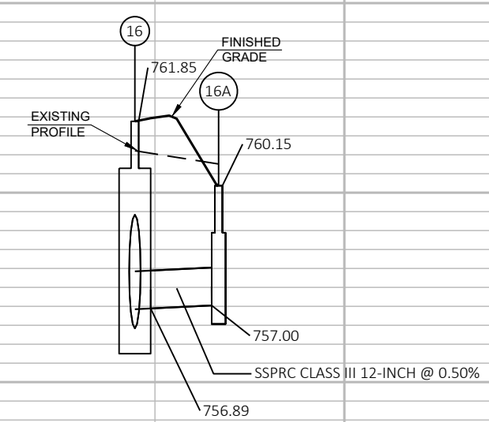

PROJECT NO: 9269-00-14	HWY: MARLEY STREET	COUNTY: BROWN	STORM SEWER	SHEET 60	E

FILE NAME : I:\45\450490 MARLEY STREET\C3D\SHEETSPLAN\022501 SS-LEADS.DWG
LAYOUT NAME - 022510 ss
PLOT DATE : 11/12/2021 11:51 AM PLOT BY : SEIBERT, CHELSEA PLOT NAME : PLOT SCALE : 1 IN:40 FT

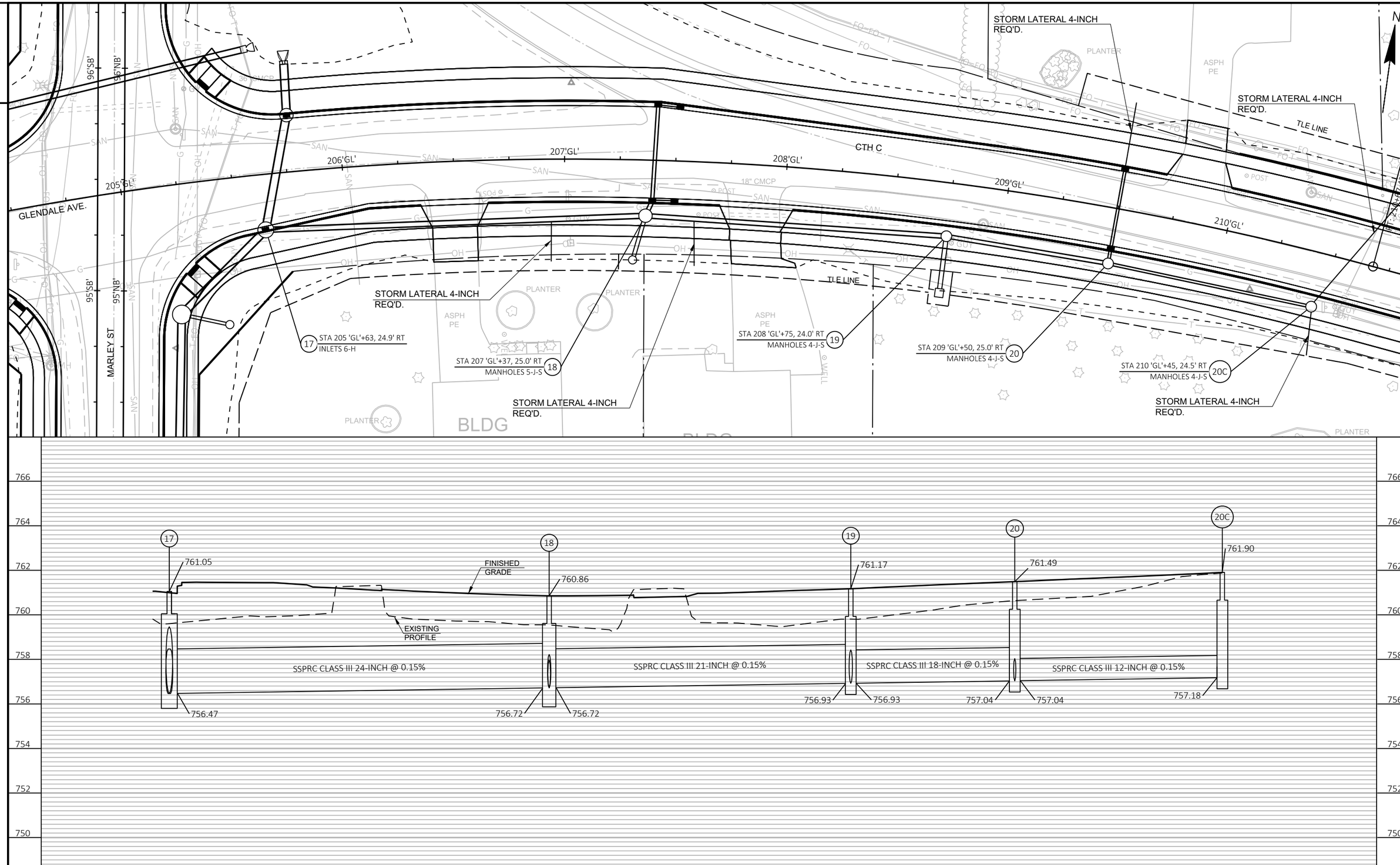

PROJECT NO: 9269-00-14	HWY: MARLEY STREET	COUNTY: BROWN	STORM SEWER	SHEET 61	E

FILE NAME : I:\45\450490 MARLEY STREET\C3D\SHEETSPLAN\022501 SS.DWG
LAYOUT NAME - 022511 ss
PLOT DATE : 11/12/2021 11:52 AM
PLOT BY : SEIBERT, CHELSEA
PLOT NAME :
PLOT SCALE : 1 IN:40 FT
WISDOT/CADDS SHEET 41

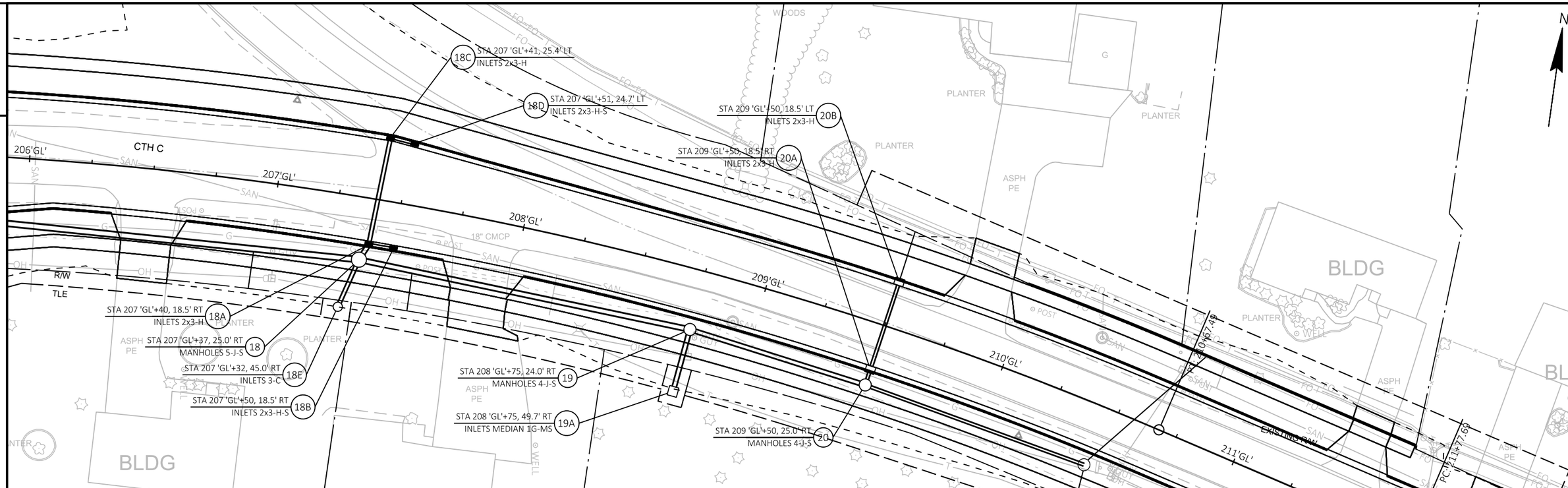

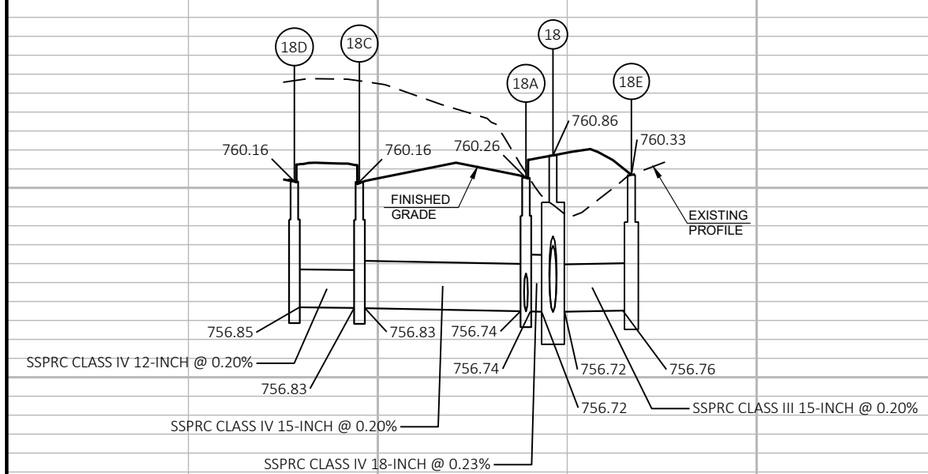

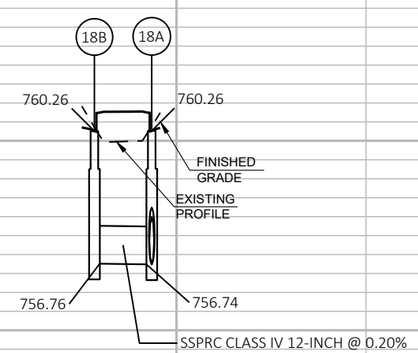

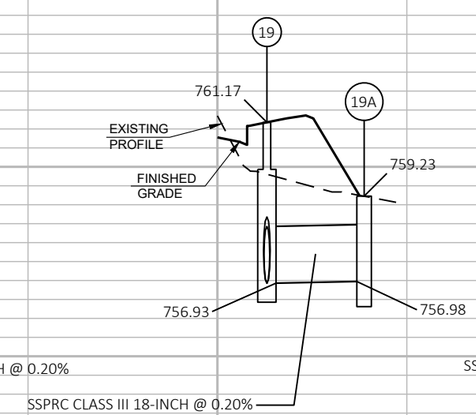

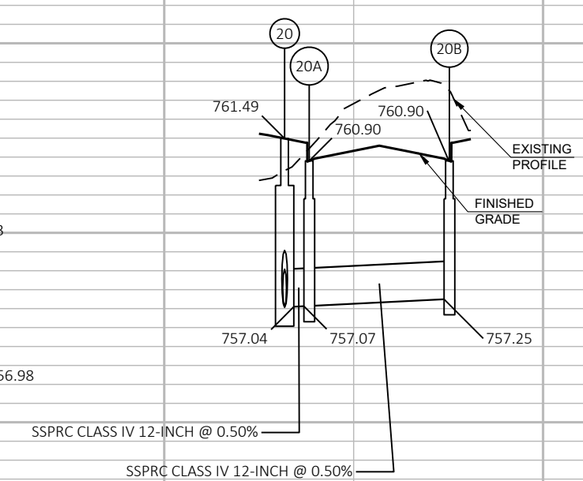

PROJECT NO: 9269-00-14	HWY: MARLEY STREET	COUNTY: BROWN	STORM SEWER	SHEET 62	E

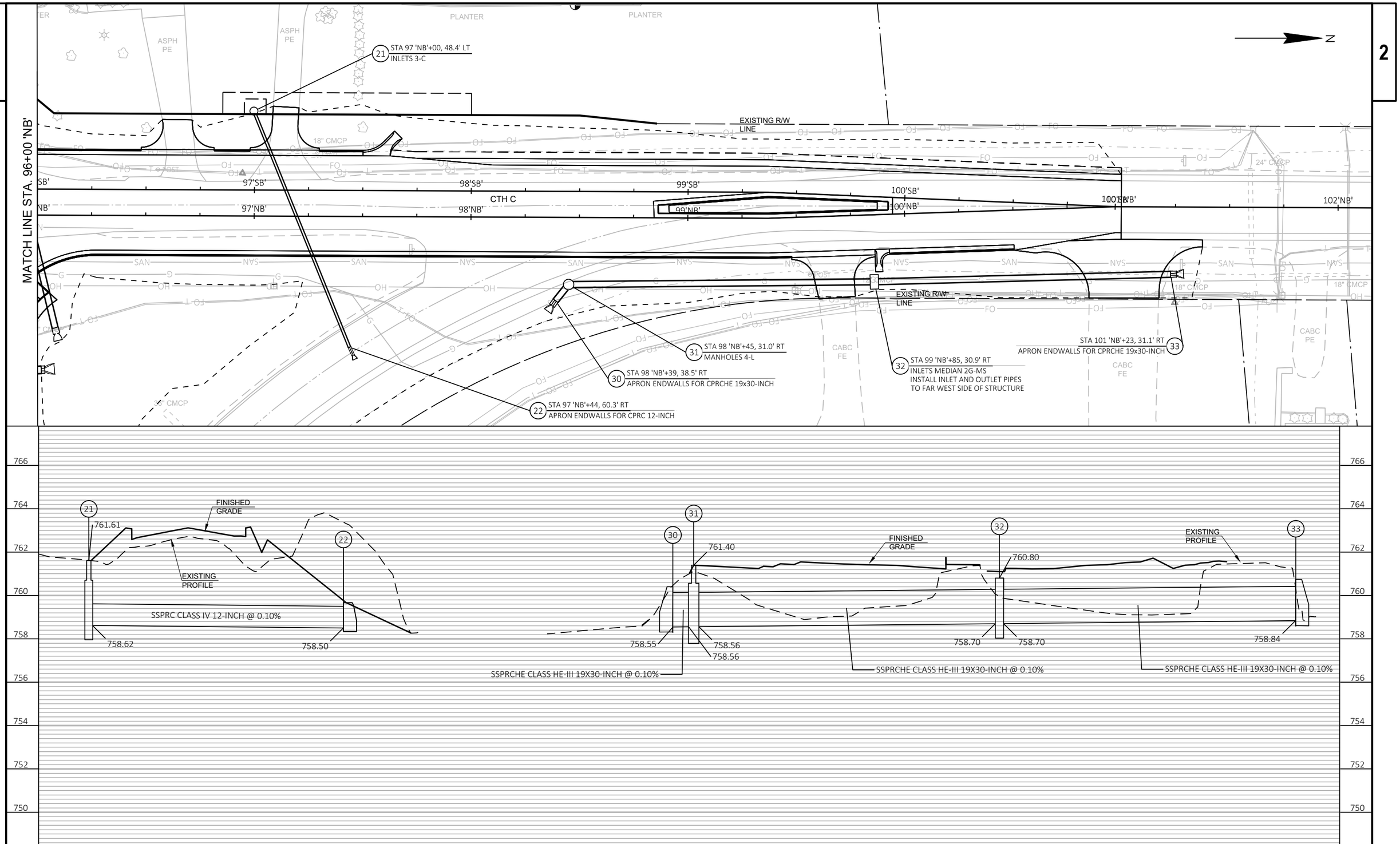

PROJECT NO: 9269-00-14	HWY: MARLEY STREET	COUNTY: BROWN	STORM SEWER	SHEET 63	E

FILE NAME : I:\45\450490 MARLEY STREET\C3D\SHEETSPLAN\022501 SS.DWG
LAYOUT NAME - 022513 ss
PLOT DATE : 11/12/2021 11:52 AM PLOT BY : SEIBERT, CHELSEA PLOT NAME : PLOT SCALE : 1 IN:40 FT

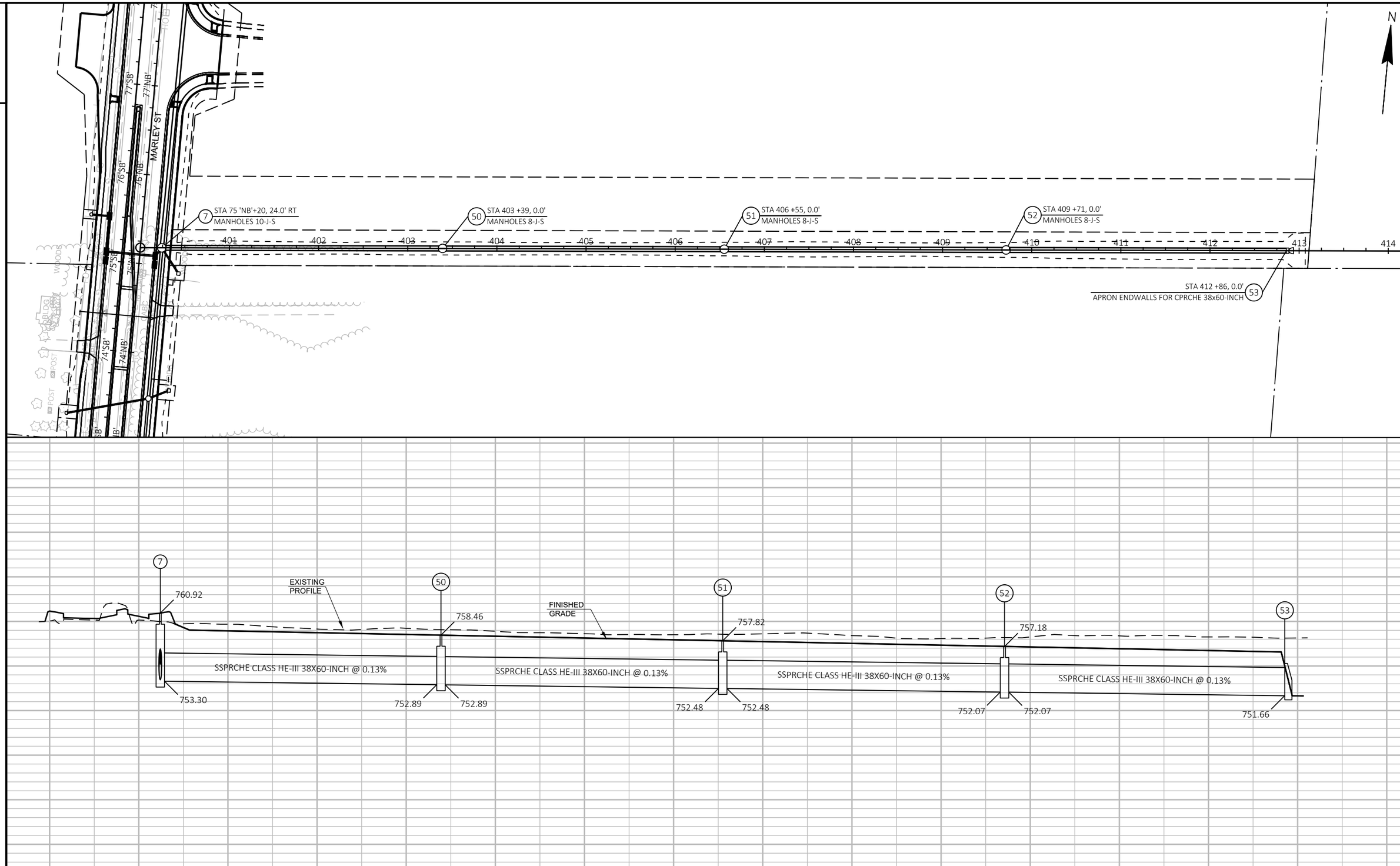

PROJECT NO: 9269-00-14	HWY: MARLEY STREET	COUNTY: BROWN	STORM SEWER	SHEET 64	E

FILE NAME : I:\45\450490 MARLEY STREET\C3D\SHEETSPLAN\022501 SS-LEADS.DWG
LAYOUT NAME - 022514 ss
PLOT DATE : 11/12/2021 11:52 AM
PLOT BY : SEIBERT, CHELSEA
PLOT NAME :
PLOT SCALE : 1 IN:100 FT

2

LEGEND

- (A) MARKING LINE EPOXY 4-INCH (YELLOW)
- (B) MARKING LINE EPOXY 4-INCH (DOUBLE YELLOW)
- (C) MARKING LINE EPOXY 4-INCH (WHITE)
- (D) MARKING LINE EPOXY 8-INCH (WHITE)
- (E) MARKING ARROW EPOXY (WHITE)
- (F) MARKING WORD EPOXY (WHITE)
- (G) MARKING CURB EPOXY (YELLOW)
- (H) MARKING STOP LINE EPOXY 18-INCH (WHITE)
- (I) MARKING ISLAND NOSE EPOXY (YELLOW)
- (J) MARKING CROSSWALK EPOXY TRANSVERSE LINE 6-INCH (WHITE)
- (K) MARKING DIAGONAL EPOXY 12-INCH (YELLOW)

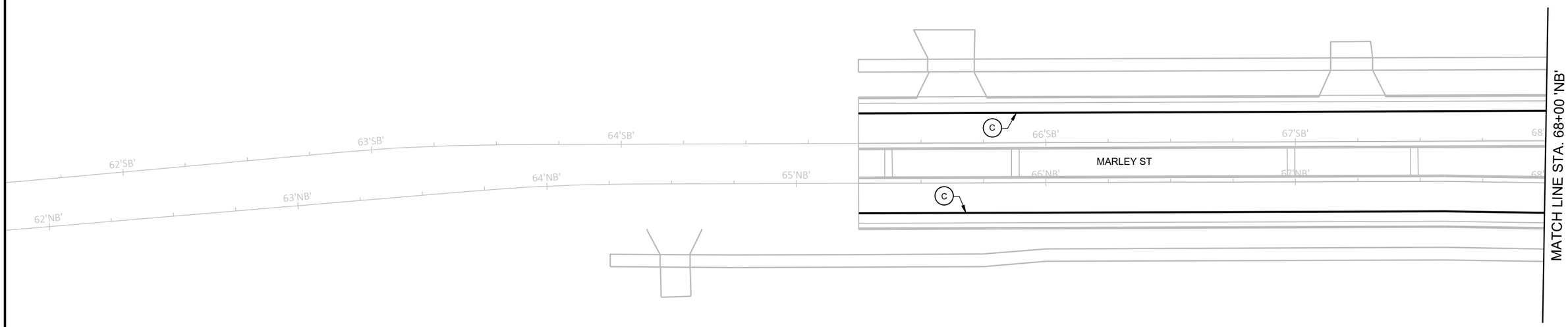

2

PROJECT NO: 9269-00-14	HWY: MARLEY STREET	COUNTY: BROWN	PAVEMENT MARKING	SHEET 65	E

FILE NAME : I:\45\450490 MARLEY STREET\C3D\SHEETSPLAN\024501 PM.DWG
LAYOUT NAME - 024501 pm
PLOT DATE : 11/5/2021 5:13 PM PLOT BY : ROWELL, ANDREW PLOT NAME : PLOT SCALE : 1 IN:40 FT
WISDOT/CADDS SHEET 42

2

LEGEND

- (A) MARKING LINE EPOXY 4-INCH (YELLOW)
- (B) MARKING LINE EPOXY 4-INCH (DOUBLE YELLOW)
- (C) MARKING LINE EPOXY 4-INCH (WHITE)
- (D) MARKING LINE EPOXY 8-INCH (WHITE)
- (E) MARKING ARROW EPOXY (WHITE)
- (F) MARKING WORD EPOXY (WHITE)
- (G) MARKING CURB EPOXY (YELLOW)
- (H) MARKING STOP LINE EPOXY 18-INCH (WHITE)
- (I) MARKING ISLAND NOSE EPOXY (YELLOW)
- (J) MARKING CROSSWALK EPOXY TRANSVERSE LINE 6-INCH (WHITE)
- (K) MARKING DIAGONAL EPOXY 12-INCH (YELLOW)

N

2

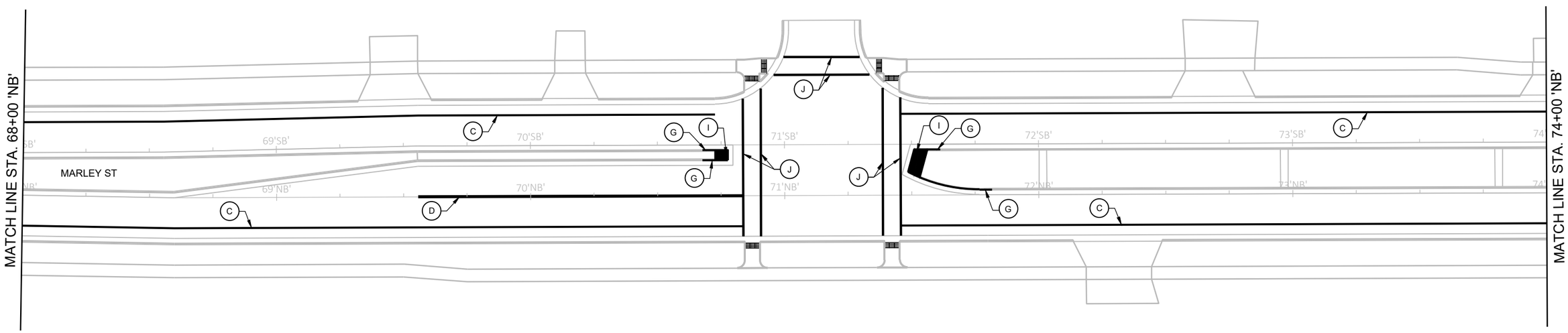

PROJECT NO: 9269-00-14	HWY: MARLEY STREET	COUNTY: BROWN	PAVEMENT MARKING	SHEET 66	E

FILE NAME : I:\45\450490 MARLEY STREET\C3D\SHEETSPLAN\024501 PM.DWG
LAYOUT NAME - 024502 pm
PLOT DATE : 11/5/2021 5:13 PM
PLOT BY : ROWELL, ANDREW
PLOT NAME :
PLOT SCALE : 1 IN:40 FT
WISDOT/CADDS SHEET 42

2

LEGEND

- (A) MARKING LINE EPOXY 4-INCH (YELLOW)
- (B) MARKING LINE EPOXY 4-INCH (DOUBLE YELLOW)
- (C) MARKING LINE EPOXY 4-INCH (WHITE)
- (D) MARKING LINE EPOXY 8-INCH (WHITE)
- (E) MARKING ARROW EPOXY (WHITE)
- (F) MARKING WORD EPOXY (WHITE)
- (G) MARKING CURB EPOXY (YELLOW)
- (H) MARKING STOP LINE EPOXY 18-INCH (WHITE)
- (I) MARKING ISLAND NOSE EPOXY (YELLOW)
- (J) MARKING CROSSWALK EPOXY TRANSVERSE LINE 6-INCH (WHITE)
- (K) MARKING DIAGONAL EPOXY 12-INCH (YELLOW)

N

2

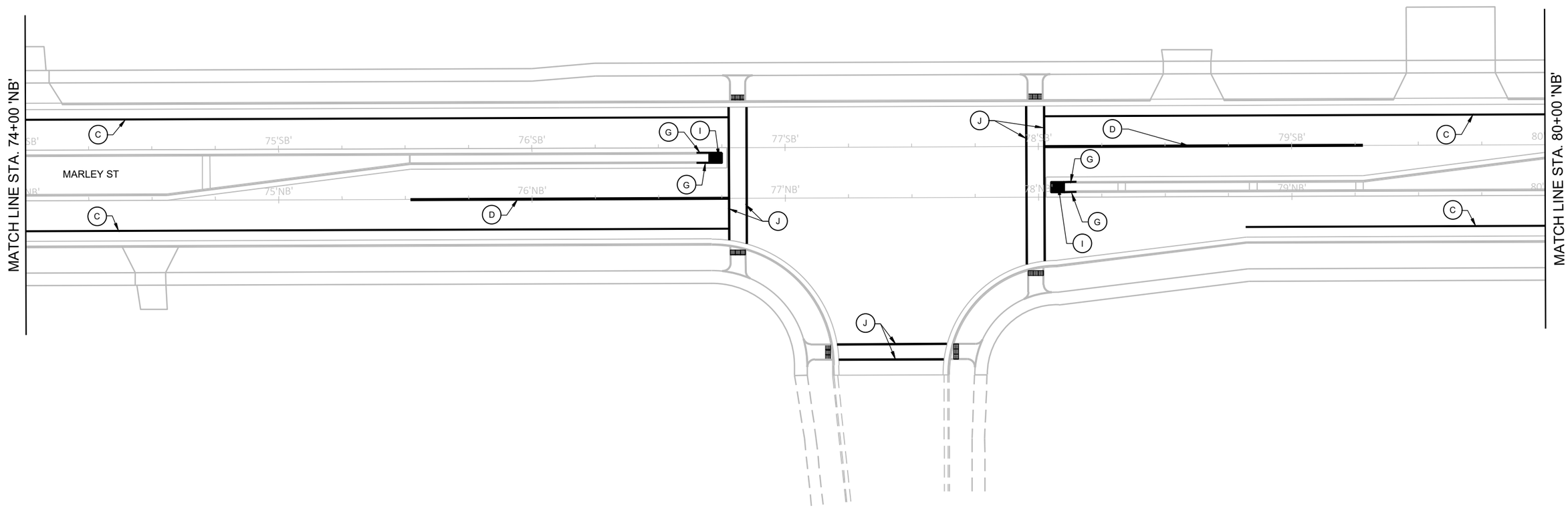

PROJECT NO: 9269-00-14	HWY: MARLEY STREET	COUNTY: BROWN	PAVEMENT MARKING	SHEET 67	E

FILE NAME : I:\45\450490 MARLEY STREET\C3D\SHEETSPLAN\024501 PM.DWG
LAYOUT NAME - 024503 pm
PLOT DATE : 11/5/2021 5:13 PM
PLOT BY : ROWELL, ANDREW
PLOT NAME :
PLOT SCALE : 1 IN:40 FT
WISDOT/CADDS SHEET 42

2

LEGEND

- (A) MARKING LINE EPOXY 4-INCH (YELLOW)
- (B) MARKING LINE EPOXY 4-INCH (DOUBLE YELLOW)
- (C) MARKING LINE EPOXY 4-INCH (WHITE)
- (D) MARKING LINE EPOXY 8-INCH (WHITE)
- (E) MARKING ARROW EPOXY (WHITE)
- (F) MARKING WORD EPOXY (WHITE)
- (G) MARKING CURB EPOXY (YELLOW)
- (H) MARKING STOP LINE EPOXY 18-INCH (WHITE)
- (I) MARKING ISLAND NOSE EPOXY (YELLOW)
- (J) MARKING CROSSWALK EPOXY TRANSVERSE LINE 6-INCH (WHITE)
- (K) MARKING DIAGONAL EPOXY 12-INCH (YELLOW)

N

2

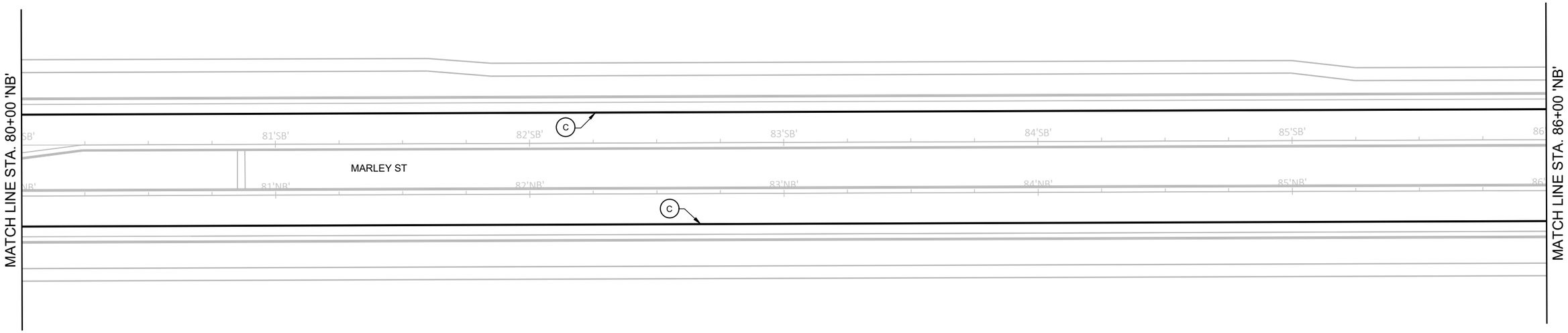

PROJECT NO: 9269-00-14	HWY: MARLEY STREET	COUNTY: BROWN	PAVEMENT MARKING	SHEET 68	E

FILE NAME : I:\45\450490 MARLEY STREET\C3D\SHEETSPLAN\024501 PM.DWG
LAYOUT NAME - 024504 pm
PLOT DATE : 11/5/2021 5:13 PM
PLOT BY : ROWELL, ANDREW
PLOT NAME :
PLOT SCALE : 1 IN:40 FT
WISDOT/CADDS SHEET 42

2

LEGEND

- (A) MARKING LINE EPOXY 4-INCH (YELLOW)
- (B) MARKING LINE EPOXY 4-INCH (DOUBLE YELLOW)
- (C) MARKING LINE EPOXY 4-INCH (WHITE)
- (D) MARKING LINE EPOXY 8-INCH (WHITE)
- (E) MARKING ARROW EPOXY (WHITE)
- (F) MARKING WORD EPOXY (WHITE)
- (G) MARKING CURB EPOXY (YELLOW)
- (H) MARKING STOP LINE EPOXY 18-INCH (WHITE)
- (I) MARKING ISLAND NOSE EPOXY (YELLOW)
- (J) MARKING CROSSWALK EPOXY TRANSVERSE LINE 6-INCH (WHITE)
- (K) MARKING DIAGONAL EPOXY 12-INCH (YELLOW)

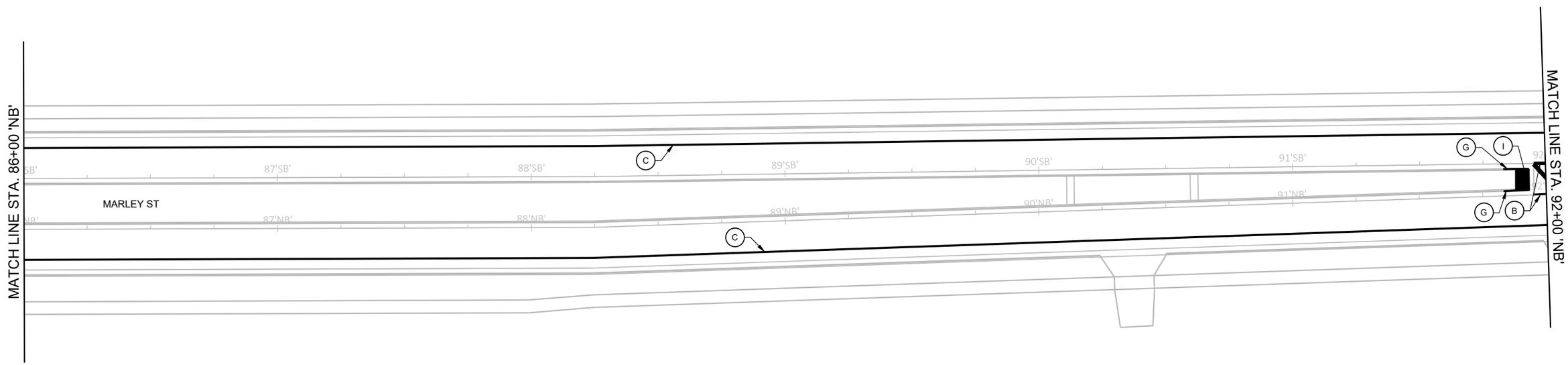

2

PROJECT NO: 9269-00-14	HWY: MARLEY STREET	COUNTY: BROWN	PAVEMENT MARKING	SHEET 69	E

FILE NAME : I:\45\450490 MARLEY STREET\C3D\SHEETSPLAN\024501 PM.DWG
LAYOUT NAME - 024505 pm
PLOT DATE : 11/5/2021 5:13 PM
PLOT BY : ROWELL, ANDREW
PLOT NAME :
PLOT SCALE : 1 IN:40 FT
WISDOT/CADDS SHEET 42

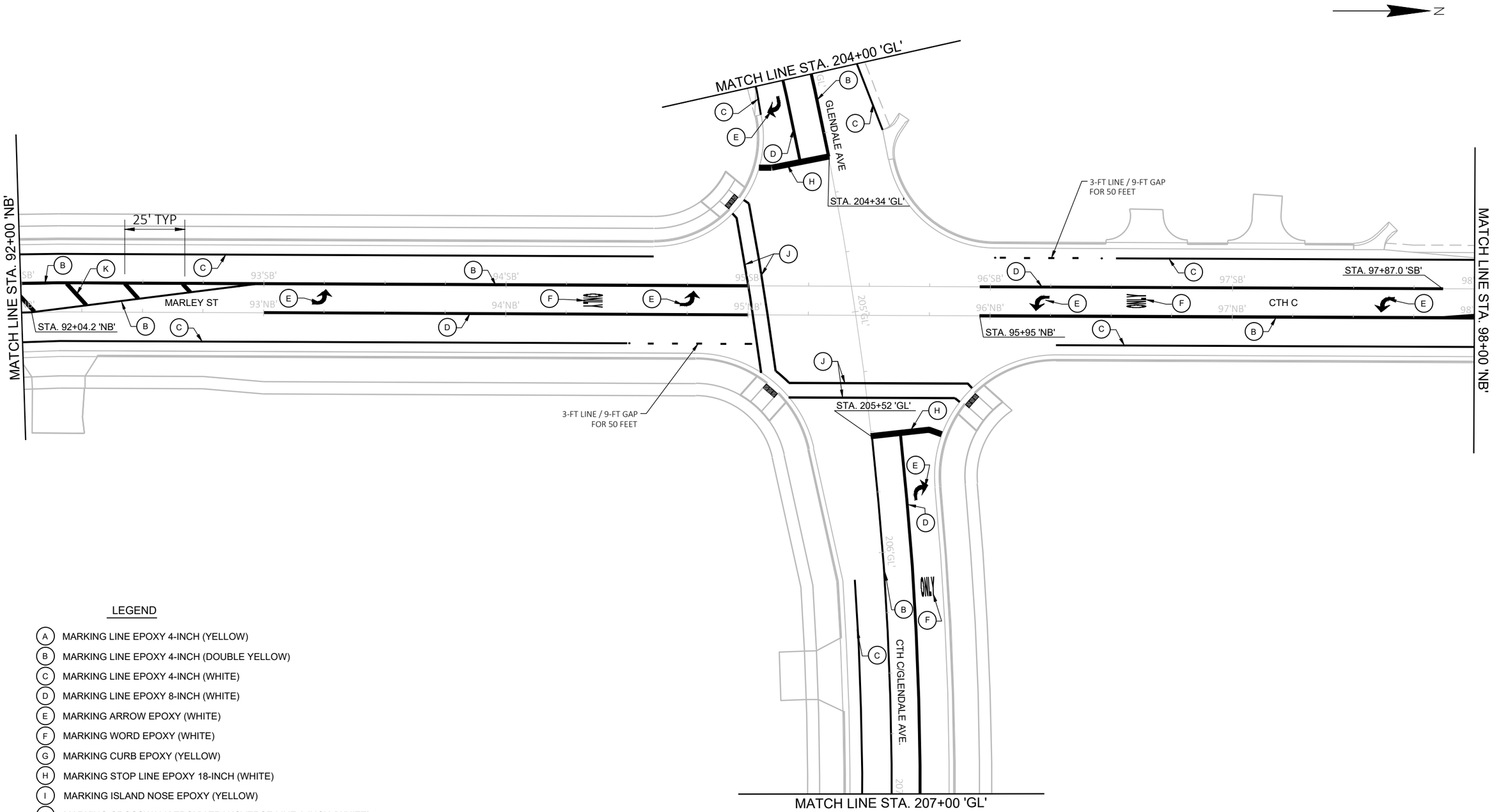

LEGEND

- (A) MARKING LINE EPOXY 4-INCH (YELLOW)
- (B) MARKING LINE EPOXY 4-INCH (DOUBLE YELLOW)
- (C) MARKING LINE EPOXY 4-INCH (WHITE)
- (D) MARKING LINE EPOXY 8-INCH (WHITE)
- (E) MARKING ARROW EPOXY (WHITE)
- (F) MARKING WORD EPOXY (WHITE)
- (G) MARKING CURB EPOXY (YELLOW)
- (H) MARKING STOP LINE EPOXY 18-INCH (WHITE)
- (I) MARKING ISLAND NOSE EPOXY (YELLOW)
- (J) MARKING CROSSWALK EPOXY TRANSVERSE LINE 6-INCH (WHITE)
- (K) MARKING DIAGONAL EPOXY 12-INCH (YELLOW)

2

LEGEND

- (A) MARKING LINE EPOXY 4-INCH (YELLOW)
- (B) MARKING LINE EPOXY 4-INCH (DOUBLE YELLOW)
- (C) MARKING LINE EPOXY 4-INCH (WHITE)
- (D) MARKING LINE EPOXY 8-INCH (WHITE)
- (E) MARKING ARROW EPOXY (WHITE)
- (F) MARKING WORD EPOXY (WHITE)
- (G) MARKING CURB EPOXY (YELLOW)
- (H) MARKING STOP LINE EPOXY 18-INCH (WHITE)
- (I) MARKING ISLAND NOSE EPOXY (YELLOW)
- (J) MARKING CROSSWALK EPOXY TRANSVERSE LINE 6-INCH (WHITE)
- (K) MARKING DIAGONAL EPOXY 12-INCH (YELLOW)

N

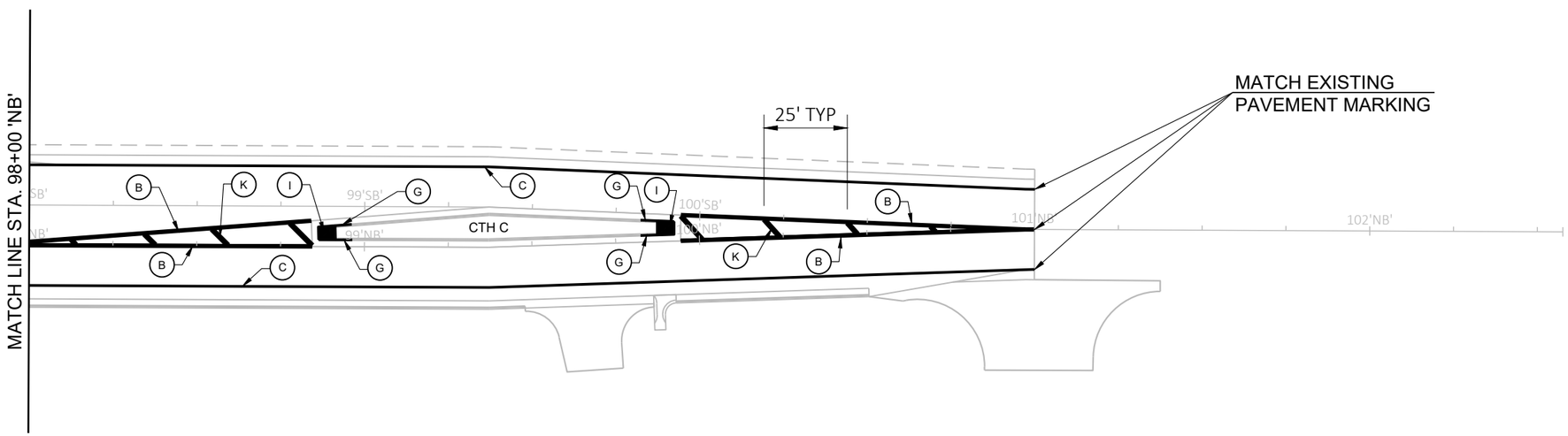

PROJECT NO: 9269-00-14	HWY: MARLEY STREET	COUNTY: BROWN	PAVEMENT MARKING	SHEET 71	E

FILE NAME : I:\45\450490 MARLEY STREET\C3D\SHEETSPLAN\024501 PM.DWG
LAYOUT NAME - 024507 pm
PLOT DATE : 11/12/2021 2:01 PM
PLOT BY : SEIBERT, CHELSEA
PLOT NAME :
PLOT SCALE : 1 IN:40 FT
WISDOT/CADDS SHEET 42

2

LEGEND

- (A) MARKING LINE EPOXY 4-INCH (YELLOW)
- (B) MARKING LINE EPOXY 4-INCH (DOUBLE YELLOW)
- (C) MARKING LINE EPOXY 4-INCH (WHITE)
- (D) MARKING LINE EPOXY 8-INCH (WHITE)
- (E) MARKING ARROW EPOXY (WHITE)
- (F) MARKING WORD EPOXY (WHITE)
- (G) MARKING CURB EPOXY (YELLOW)
- (H) MARKING STOP LINE EPOXY 18-INCH (WHITE)
- (I) MARKING ISLAND NOSE EPOXY (YELLOW)
- (J) MARKING CROSSWALK EPOXY TRANSVERSE LINE 6-INCH (WHITE)
- (K) MARKING DIAGONAL EPOXY 12-INCH (YELLOW)

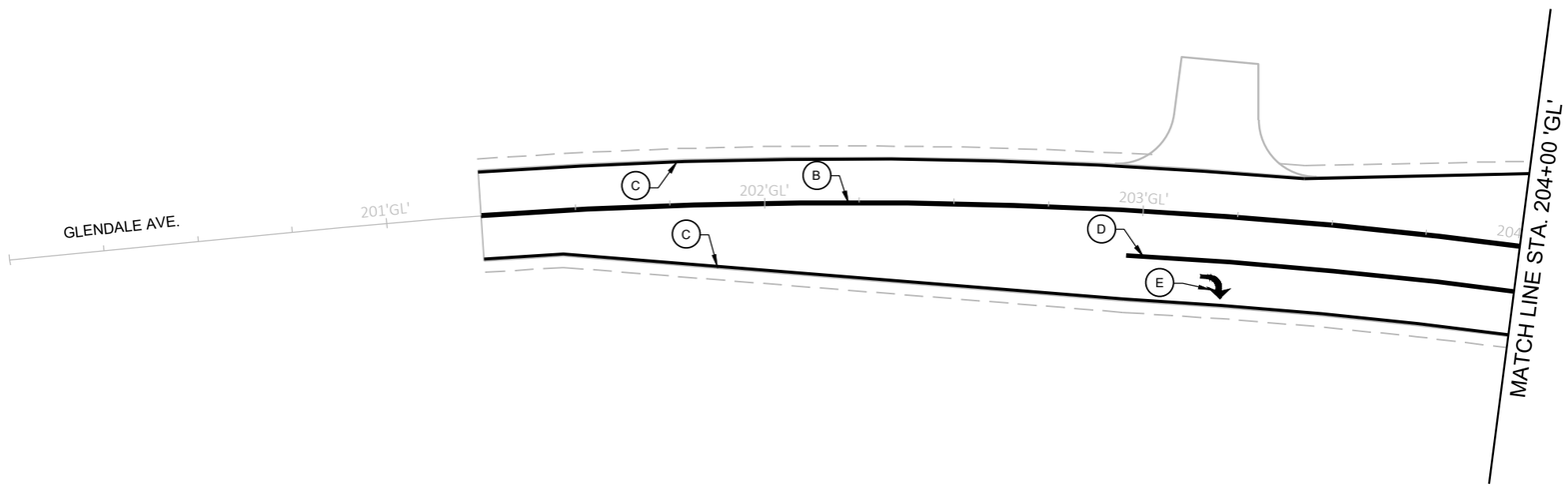

2

PROJECT NO: 9269-00-14	HWY: MARLEY STREET	COUNTY: BROWN	PAVEMENT MARKING	SHEET 72	E

FILE NAME : I:\45\450490 MARLEY STREET\C3D\SHEETSPLAN\024501 PM.DWG
LAYOUT NAME - 024508 pm
PLOT DATE : 11/5/2021 5:13 PM
PLOT BY : ROWELL, ANDREW
PLOT NAME :
PLOT SCALE : 1 IN:40 FT
WISDOT/CADDS SHEET 42

LEGEND

- (A) MARKING LINE EPOXY 4-INCH (YELLOW)
- (B) MARKING LINE EPOXY 4-INCH (DOUBLE YELLOW)
- (C) MARKING LINE EPOXY 4-INCH (WHITE)
- (D) MARKING LINE EPOXY 8-INCH (WHITE)
- (E) MARKING ARROW EPOXY (WHITE)
- (F) MARKING WORD EPOXY (WHITE)
- (G) MARKING CURB EPOXY (YELLOW)
- (H) MARKING STOP LINE EPOXY 18-INCH (WHITE)
- (I) MARKING ISLAND NOSE EPOXY (YELLOW)
- (J) MARKING CROSSWALK EPOXY TRANSVERSE LINE 6-INCH (WHITE)
- (K) MARKING DIAGONAL EPOXY 12-INCH (YELLOW)

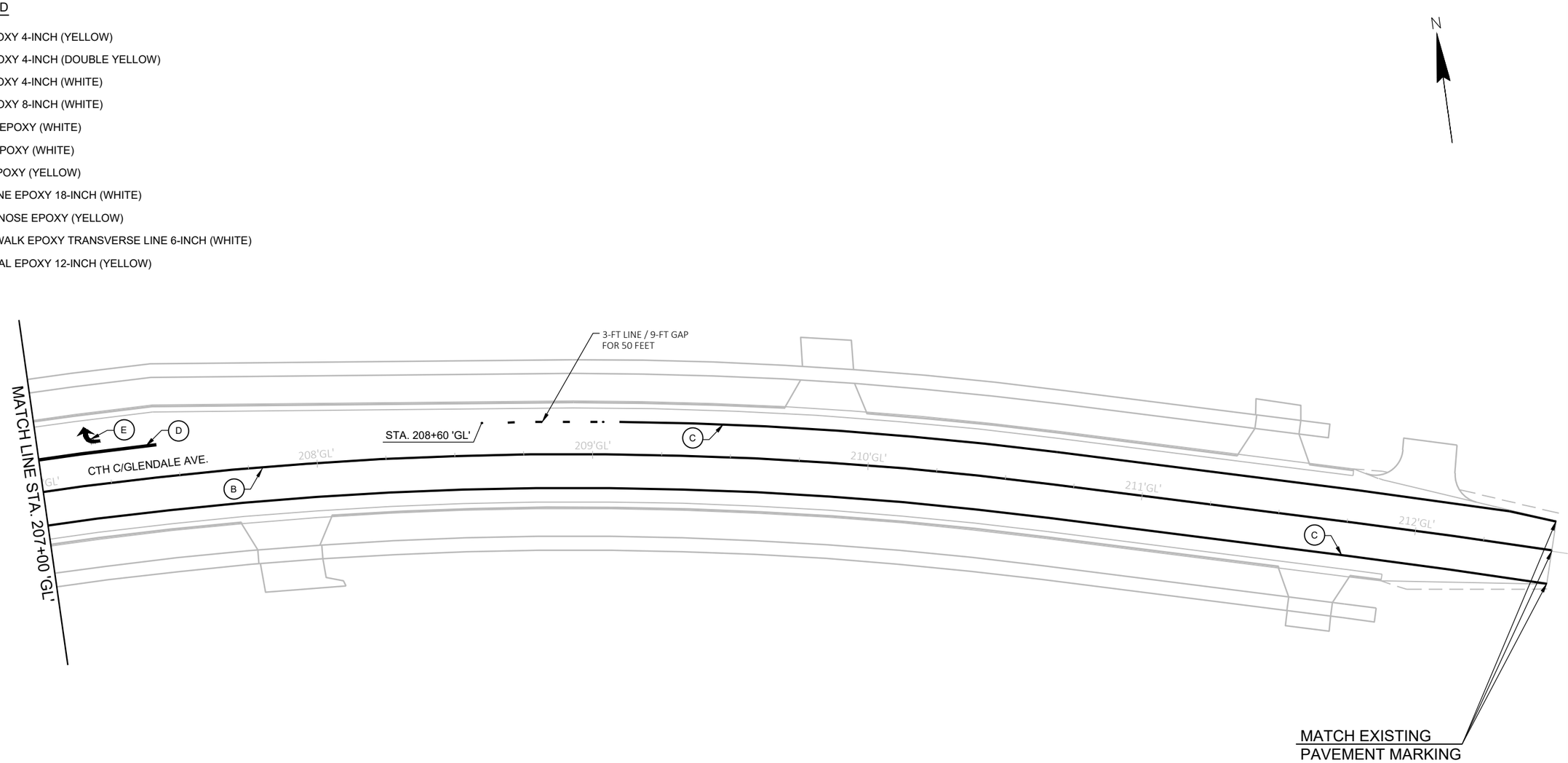

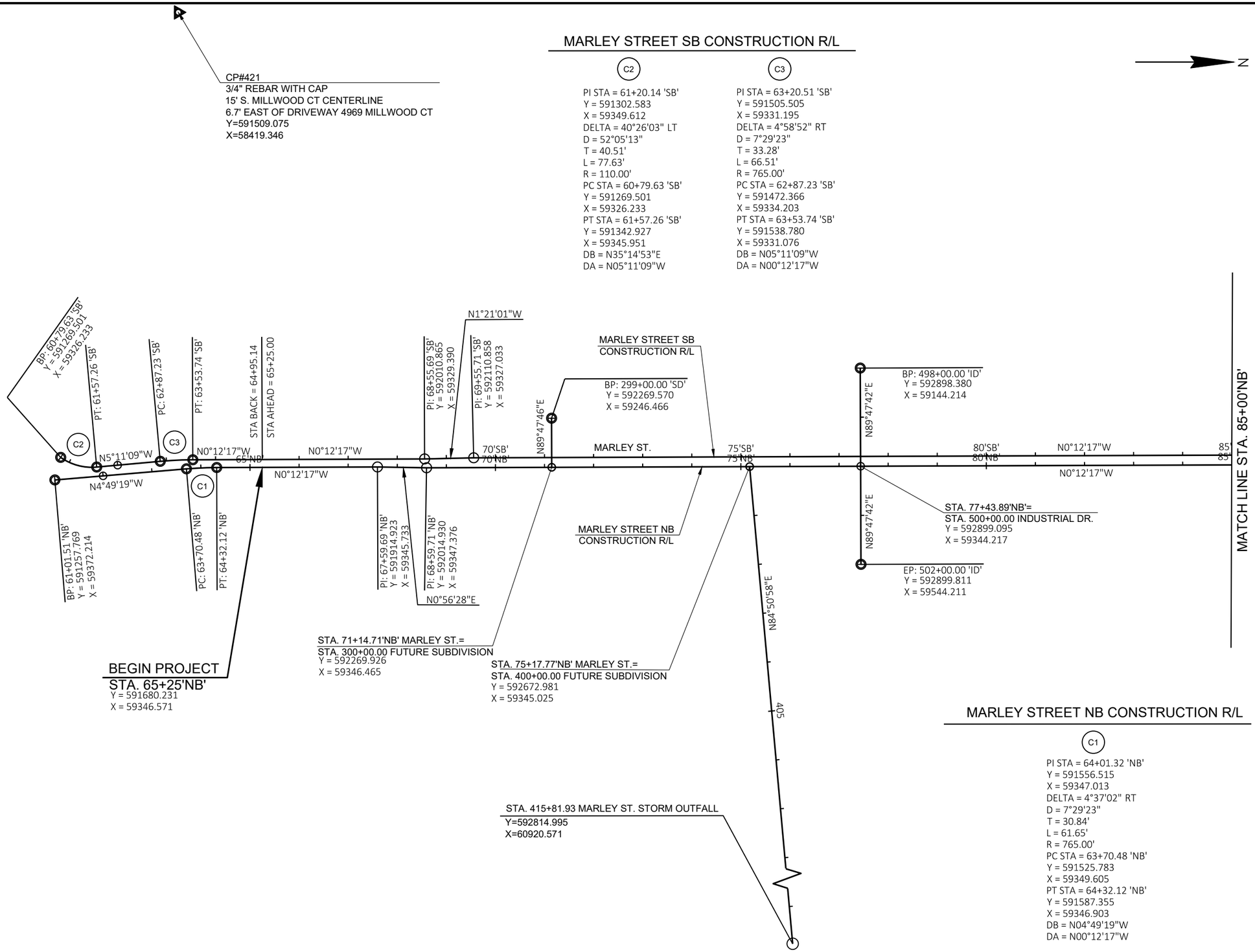

MARLEY STREET SB CONSTRUCTION R/L

C2

PI STA = 61+20.14 'SB'
Y = 591302.583
X = 59349.612
DELTA = 40°26'03" LT
D = 52°05'13"
T = 40.51'
L = 77.63'
R = 110.00'
PC STA = 60+79.63 'SB'
Y = 591269.501
X = 59326.233
PT STA = 61+57.26 'SB'
Y = 591342.927
X = 59345.951
DB = N35°14'53"E
DA = N05°11'09"W

C3

PI STA = 63+20.51 'SB'
Y = 591505.505
X = 59331.195
DELTA = 4°58'52" RT
D = 7°29'23"
T = 33.28'
L = 66.51'
R = 765.00'
PC STA = 62+87.23 'SB'
Y = 591472.366
X = 59334.203
PT STA = 63+53.74 'SB'
Y = 591538.780
X = 59331.076
DB = N05°11'09"W
DA = N00°12'17"W

MARLEY STREET NB CONSTRUCTION R/L

C1

PI STA = 64+01.32 'NB'
Y = 591556.515
X = 59347.013
DELTA = 4°37'02" RT
D = 7°29'23"
T = 30.84'
L = 61.65'
R = 765.00'
PC STA = 63+70.48 'NB'
Y = 591525.783
X = 59349.605
PT STA = 64+32.12 'NB'
Y = 591587.355
X = 59346.903
DB = N04°49'19"W
DA = N00°12'17"W

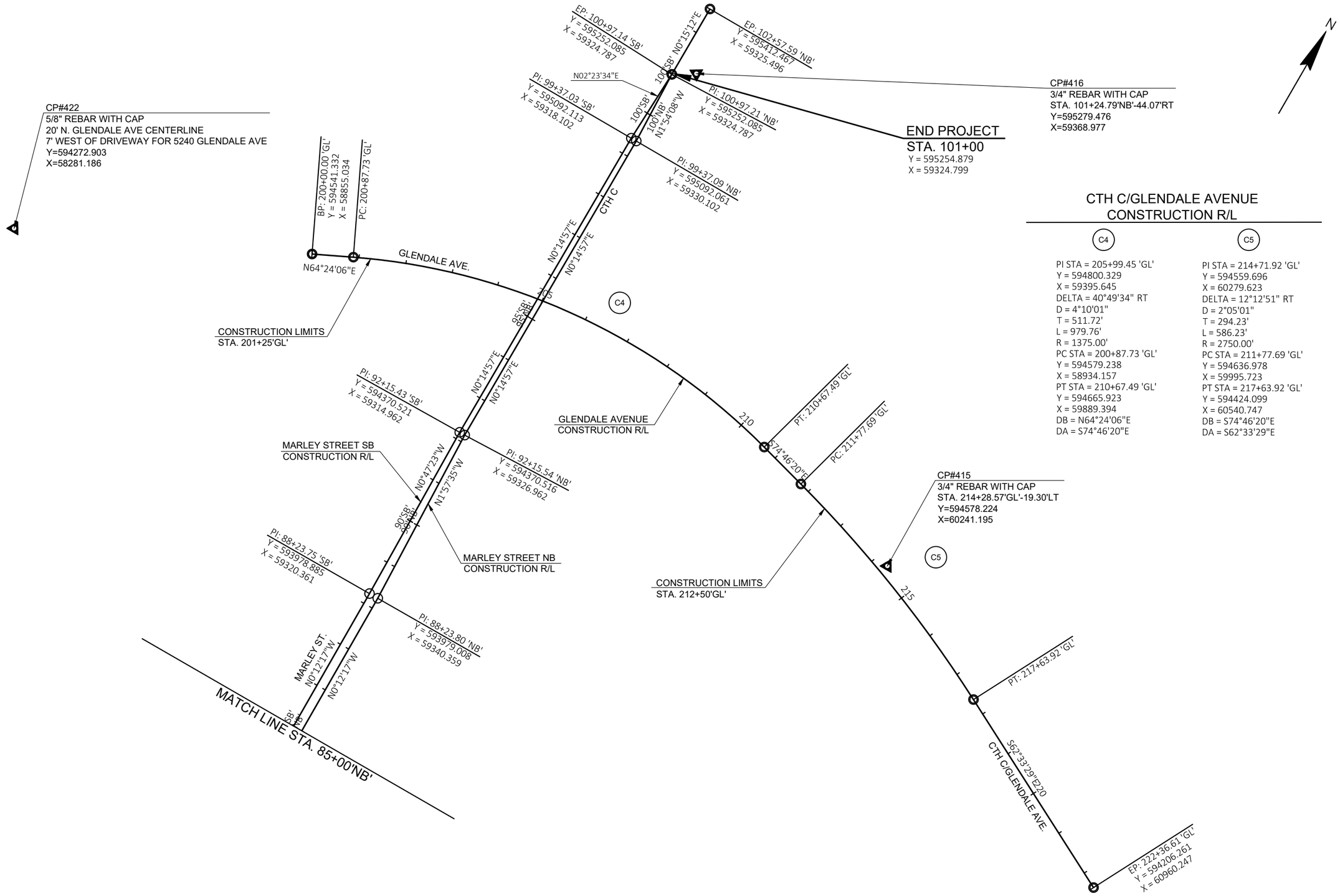

CTH C/GLENDALE AVENUE CONSTRUCTION R/L

C4

PI STA = 205+99.45 'GL'
Y = 594800.329
X = 59395.645
DELTA = 40°49'34" RT
D = 4°10'01"
T = 511.72'
L = 979.76'
R = 1375.00'
PC STA = 200+87.73 'GL'
Y = 594579.238
X = 58934.157
PT STA = 210+67.49 'GL'
Y = 594665.923
X = 59889.394
DB = N64°24'06"E
DA = S74°46'20"E

C5

PI STA = 214+71.92 'GL'
Y = 594559.696
X = 60279.623
DELTA = 12°12'51" RT
D = 2°05'01"
T = 294.23'
L = 586.23'
R = 2750.00'
PC STA = 211+77.69 'GL'
Y = 594636.978
X = 59995.723
PT STA = 217+63.92 'GL'
Y = 594424.099
X = 60540.747
DB = S74°46'20"E
DA = S62°33'29"E

Estimate Of Quantities

9269-00-14

Line	Item	Item Description	Unit	Total	Qty
0002	201.0105	Clearing	STA	12.000	12.000
0004	201.0120	Clearing	ID	190.000	190.000
0006	201.0205	Grubbing	STA	12.000	12.000
0008	201.0220	Grubbing	ID	190.000	190.000
0010	203.0100	Removing Small Pipe Culverts	EACH	21.000	21.000
0012	204.0100	Removing Concrete Pavement	SY	450.000	450.000
0014	204.0110	Removing Asphaltic Surface	SY	4,680.000	4,680.000
0016	204.0245	Removing Storm Sewer (size) 01. 12-Inch	LF	43.000	43.000
0018	204.0291.S	Abandoning Sewer	CY	1.500	1.500
0020	205.0100	Excavation Common	CY	27,425.000	27,425.000
0022	205.0400	Excavation Marsh	CY	3,775.000	3,775.000
0024	208.1100	Select Borrow	CY	7,480.000	7,480.000
0026	213.0100	Finishing Roadway (project) 01. 9269-00-14	EACH	1.000	1.000
0028	305.0110	Base Aggregate Dense 3/4-Inch	TON	125.000	125.000
0030	305.0120	Base Aggregate Dense 1 1/4-Inch	TON	10,900.000	10,900.000
0032	310.0115	Base Aggregate Open-Graded	CY	96.000	96.000
0034	312.0110	Select Crushed Material	TON	31,330.000	31,330.000
0036	416.0160	Concrete Driveway 6-Inch	SY	660.000	660.000
0038	455.0605	Tack Coat	GAL	1,400.000	1,400.000
0040	460.2000	Incentive Density HMA Pavement	DOL	4,090.000	4,090.000
0042	460.6223	HMA Pavement 3 MT 58-28 S	TON	3,480.000	3,480.000
0044	460.6224	HMA Pavement 4 MT 58-28 S	TON	2,910.000	2,910.000
0046	465.0120	Asphaltic Surface Driveways and Field Entrances	TON	175.000	175.000
0048	465.0315	Asphaltic Flumes	SY	30.000	30.000
0050	521.1018	Apron Endwalls for Culvert Pipe Steel 18-Inch	EACH	2.000	2.000
0052	521.3118	Culvert Pipe Corrugated Steel 18-Inch	LF	36.000	36.000
0054	522.1012	Apron Endwalls for Culvert Pipe Reinforced Concrete 12-Inch	EACH	1.000	1.000
0056	522.1018	Apron Endwalls for Culvert Pipe Reinforced Concrete 18-Inch	EACH	1.000	1.000
0058	522.2419	Culvert Pipe Reinforced Concrete Horizontal Elliptical Class HE-IV 19x30-Inch	LF	124.000	124.000
0060	522.2619	Apron Endwalls for Culvert Pipe Reinforced Concrete Horizontal Elliptical 19x30-Inch	EACH	4.000	4.000
0062	522.2624	Apron Endwalls for Culvert Pipe Reinforced Concrete Horizontal Elliptical 24x38-Inch	EACH	1.000	1.000
0064	522.2638	Apron Endwalls for Culvert Pipe Reinforced Concrete Horizontal Elliptical 38x60-Inch	EACH	1.000	1.000
0066	601.0411	Concrete Curb & Gutter 30-Inch Type D	LF	13,220.000	13,220.000
0068	602.0405	Concrete Sidewalk 4-Inch	SF	35,680.000	35,680.000
0070	602.0415	Concrete Sidewalk 6-Inch	SF	1,270.000	1,270.000
0072	602.0515	Curb Ramp Detectable Warning Field Natural Patina	SF	180.000	180.000
0074	603.8000	Concrete Barrier Temporary Precast Delivered	LF	25.000	25.000
0076	603.8125	Concrete Barrier Temporary Precast Installed	LF	25.000	25.000
0078	606.0200	Riprap Medium	CY	30.000	30.000
0080	608.0312	Storm Sewer Pipe Reinforced Concrete Class III 12-Inch	LF	370.000	370.000
0082	608.0315	Storm Sewer Pipe Reinforced Concrete Class III 15-Inch	LF	39.000	39.000
0084	608.0318	Storm Sewer Pipe Reinforced Concrete Class III 18-Inch	LF	186.000	186.000
0086	608.0321	Storm Sewer Pipe Reinforced Concrete Class III 21-Inch	LF	136.000	136.000
0088	608.0324	Storm Sewer Pipe Reinforced Concrete Class III 24-Inch	LF	746.000	746.000
0090	608.0330	Storm Sewer Pipe Reinforced Concrete Class III 30-Inch	LF	170.000	170.000
0092	608.0336	Storm Sewer Pipe Reinforced Concrete Class III 36-Inch	LF	442.000	442.000
0094	608.0342	Storm Sewer Pipe Reinforced Concrete Class III 42-Inch	LF	1,581.000	1,581.000
0096	608.0412	Storm Sewer Pipe Reinforced Concrete Class IV 12-Inch	LF	668.000	668.000
0098	608.0415	Storm Sewer Pipe Reinforced Concrete Class IV 15-Inch	LF	500.000	500.000

Estimate Of Quantities

9269-00-14

Line	Item	Item Description	Unit	Total	Qty
0100	608.0418	Storm Sewer Pipe Reinforced Concrete Class IV 18-Inch	LF	158.000	158.000
0102	608.2319	Storm Sewer Pipe Reinforced Concrete Horizontal Elliptical Class HE-III 19x30-Inch	LF	288.000	288.000
0104	608.2338	Storm Sewer Pipe Reinforced Concrete Horizontal Elliptical Class HE-III 38x60-Inch	LF	1,261.000	1,261.000
0106	608.2424	Storm Sewer Pipe Reinforced Concrete Horizontal Elliptical Class HE-IV 24x38-Inch	LF	76.000	76.000
0108	611.0535	Manhole Covers Type J-Special	EACH	22.000	22.000
0110	611.0545	Manhole Covers Type L	EACH	2.000	2.000
0112	611.0612	Inlet Covers Type C	EACH	10.000	10.000
0114	611.0624	Inlet Covers Type H	EACH	27.000	27.000
0116	611.0639	Inlet Covers Type H-S	EACH	12.000	12.000
0118	611.0642	Inlet Covers Type MS	EACH	8.000	8.000
0120	611.2004	Manholes 4-FT Diameter	EACH	11.000	11.000
0122	611.2005	Manholes 5-FT Diameter	EACH	3.000	3.000
0124	611.2006	Manholes 6-FT Diameter	EACH	5.000	5.000
0126	611.2007	Manholes 7-FT Diameter	EACH	1.000	1.000
0128	611.2008	Manholes 8-FT Diameter	EACH	3.000	3.000
0130	611.3003	Inlets 3-FT Diameter	EACH	10.000	10.000
0132	611.3230	Inlets 2x3-FT	EACH	36.000	36.000
0134	611.3901	Inlets Median 1 Grate	EACH	6.000	6.000
0136	611.3902	Inlets Median 2 Grate	EACH	1.000	1.000
0138	612.0106	Pipe Underdrain 6-Inch	LF	600.000	600.000
0140	618.0100	Maintenance And Repair of Haul Roads (project) 01. 9269-00-14	EACH	1.000	1.000
0142	619.1000	Mobilization	EACH	1.000	1.000
0144	620.0300	Concrete Median Sloped Nose	SF	480.000	480.000
0146	621.0100	Landmark Reference Monuments	EACH	4.000	4.000
0148	623.0200	Dust Control Surface Treatment	SY	15,000.000	15,000.000
0150	624.0100	Water	MGAL	125.000	125.000
0152	625.0100	Topsoil	SY	14,675.000	14,675.000
0154	625.0500	Salvaged Topsoil	SY	22,000.000	22,000.000
0156	627.0200	Mulching	SY	12,500.000	12,500.000
0158	628.1504	Silt Fence	LF	14,500.000	14,500.000
0160	628.1520	Silt Fence Maintenance	LF	29,000.000	29,000.000
0162	628.1905	Mobilizations Erosion Control	EACH	12.000	12.000
0164	628.1910	Mobilizations Emergency Erosion Control	EACH	8.000	8.000
0166	628.2004	Erosion Mat Class I Type B	SY	7,200.000	7,200.000
0168	628.2008	Erosion Mat Urban Class I Type B	SY	24,700.000	24,700.000
0170	628.7005	Inlet Protection Type A	EACH	56.000	56.000
0172	628.7010	Inlet Protection Type B	EACH	17.000	17.000
0174	628.7015	Inlet Protection Type C	EACH	27.000	27.000
0176	628.7020	Inlet Protection Type D	EACH	12.000	12.000
0178	628.7555	Culvert Pipe Checks	EACH	35.000	35.000
0180	628.7560	Tracking Pads	EACH	5.000	5.000
0182	628.7570	Rock Bags	EACH	100.000	100.000
0184	629.0210	Fertilizer Type B	CWT	27.000	27.000
0186	630.0120	Seeding Mixture No. 20	LB	610.000	610.000
0188	630.0140	Seeding Mixture No. 40	LB	390.000	390.000
0190	630.0500	Seed Water	MGAL	710.000	710.000
0192	642.5001	Field Office Type B	EACH	1.000	1.000
0194	643.0300	Traffic Control Drums	DAY	4,500.000	4,500.000
0196	643.0420	Traffic Control Barricades Type III	DAY	2,052.000	2,052.000

9269-00-14

Line	Item	Item Description	Unit	Total	Qty
0198	643.0705	Traffic Control Warning Lights Type A	DAY	4,104.000	4,104.000
0200	643.0900	Traffic Control Signs	DAY	2,592.000	2,592.000
0202	643.1050	Traffic Control Signs PCMS	DAY	42.000	42.000
0204	643.5000	Traffic Control	EACH	1.000	1.000
0206	645.0111	Geotextile Type DF Schedule A	SY	558.000	558.000
0208	645.0120	Geotextile Type HR	SY	60.000	60.000
0210	645.0220	Geogrid Type SR	SY	27,700.000	27,700.000
0212	646.1020	Marking Line Epoxy 4-Inch	LF	12,260.000	12,260.000
0214	646.3020	Marking Line Epoxy 8-Inch	LF	1,125.000	1,125.000
0216	646.5020	Marking Arrow Epoxy	EACH	8.000	8.000
0218	646.5120	Marking Word Epoxy	EACH	3.000	3.000
0220	646.6120	Marking Stop Line Epoxy 18-Inch	LF	70.000	70.000
0222	646.7120	Marking Diagonal Epoxy 12-Inch	LF	90.000	90.000
0224	646.7420	Marking Crosswalk Epoxy Transverse Line 6-Inch	LF	895.000	895.000
0226	646.8120	Marking Curb Epoxy	LF	90.000	90.000
0228	646.8220	Marking Island Nose Epoxy	EACH	7.000	7.000
0230	650.4000	Construction Staking Storm Sewer	EACH	85.000	85.000
0232	650.4500	Construction Staking Subgrade	LF	4,655.000	4,655.000
0234	650.5000	Construction Staking Base	LF	4,655.000	4,655.000
0236	650.5500	Construction Staking Curb Gutter and Curb & Gutter	LF	13,220.000	13,220.000
0238	650.6000	Construction Staking Pipe Culverts	EACH	2.000	2.000
0240	650.9000	Construction Staking Curb Ramps	EACH	15.000	15.000
0242	650.9910	Construction Staking Supplemental Control (project) 01. 9269-00-14	LS	1.000	1.000
0244	650.9920	Construction Staking Slope Stakes	LF	6,313.000	6,313.000
0246	690.0150	Sawing Asphalt	LF	373.000	373.000
0248	690.0250	Sawing Concrete	LF	5.000	5.000
0250	740.0440	Incentive IRI Ride	DOL	2,668.000	2,668.000
0252	ASP.1T0A	On-the-Job Training Apprentice at $5.00/HR	HRS	2,000.000	2,000.000
0254	ASP.1T0G	On-the-Job Training Graduate at $5.00/HR	HRS	1,320.000	1,320.000
0256	SPV.0035	Special 01. Excavation Waste	CY	26,900.000	26,900.000
0258	SPV.0060	Special 01. Manholes 10-FT Diameter	EACH	1.000	1.000
0260	SPV.0060	Special 02. Inlets 5-FT Diameter	EACH	1.000	1.000
0262	SPV.0060	Special 03. Inlets 6-FT Diameter	EACH	2.000	2.000
0264	SPV.0060	Special 04. Adjusting Fiber Optic Handhole	EACH	2.000	2.000
0266	SPV.0090	Special 01. Storm Lateral 4-Inch	LF	879.000	879.000

3

CLEARING AND GRUBBING

STATION	TO	STATION	LOCATION	201.0105 CLEARING STA	201.0120 CLEARING ID	201.0205 GRUBBING STA	201.0220 GRUBBING ID
64+00	-	76+00	MARLEY ST	12		12	
86+00	-	86+25	MARLEY ST	-	24	-	24
93+00	-	94+00	MARLEY ST	-	10	-	10
96+00	-	98+00	MARLEY ST	-	90	-	90
209+00	-	212+00	GLENDALE AVE	-	66	-	66
			TOTALS	12	190	12	190

REMOVING CONCRETE PAVEMENT

STATION	TO	STATION	LOCATION	204.0100 REMOVING CONCRETE PAVEMENT SY
95+75	-	97+75	MARLEY ST	450
			TOTAL	450

REMOVING STORM SEWER

STATION	TO	STATION	LOCATION	204.0291.S ABANDONING SEWER CY	204.0245.01 REMOVING STORM SEWER (SIZE) (01. 12-INCH) LF
64+78	-	65+07	MARLEY ST NB, RT	1	-
65+07	-	65+40	MARLEY ST NB, RT	-	33
65+16	-	65+33	MARLEY ST SB, LT	0.5	-
65+33	-	65+43	MARLEY ST SB, LT	-	10
	-		TOTALS	1.5	43

3

REMOVING SMALL PIPE CULVERTS

STATION	LOCATION	203.0100 REMOVING SMALL PIPE CULVERTS EACH	REMARKS
65+62	MARLEY ST NB, LT	1	28 LF, 15" CMCP
67+25	MARLEY ST SB, LT	1	26 LF, 18" CMCP
69+46	MARLEY ST SB, LT	1	35 LF, 18" CMCP
70+15	MARLEY ST SB, LT	1	28 LF, 18" CMCP
71+25	MARLEY ST SB, LT	1	26 LF, 15" CMCP
72+30	MARLEY ST NB, RT	1	32 LF, 18" CMCP
72+67	MARLEY ST SB, LT	1	26 LF, 15" CMCP
74+02	MARLEY ST SB, LT	1	28 LF, 15" CMCP
74+46	MARLEY ST NB, RT	1	26 LF, 18" CMCP
80+50	MARLEY ST SB, LT	1	40 LF, 15" CMCP
80+50	MARLEY ST NB, RT	1	35 LF, 15" CMCP
88+18	MARLEY ST NB, C/L	1	37 LF, 18" CMCP
90+38	MARLEY ST NB, RT	1	24 LF, 18" CMCP
92+15	MARLEY ST NB, RT	1	24 LF, 18" CMCP
95+83	MARLEY ST NB, C/L	1	57 LF, 24" CMCP
97+14	MARLEY ST SB, LT	1	30 LF, 18" CMCP
99+67	MARLEY ST NB, RT	1	28 LF, 12" CMCP
101+00	MARLEY ST NB, RT	1	50 LF, 18" CMCP
203+18	GLENDALE AVE, LT	1	25 LF, 18" CMCP
205+34	GLENDALE AVE, C/L	1	80 LF, 36" CMCP
304+80	CTH C, C/L	1	55 LF, 36" CMCP
	TOTAL	21	

REMOVING ASPHALTIC SURFACE

STATION	TO	STATION	LOCATION	204.0110 REMOVING ASPHALTIC SURFACE SY	REMARKS
65+25	-	88+00	MARLEY ST	-	**
88+00	-	95+75	MARLEY ST	1,040	**
95+75	-	101+00	MARLEY ST	400	**
201+25	-	204+70	GLENDALE AVE	840	**
205+20	-	212+50	GLENDALE AVE	1,040	**
303+00	-	306+50	CTH C	1,360	
			TOTAL	4,680	

NOTE: CONCRETE PAVEMENT LOCATED UNDER EXISTING ASPHALT BETWEEN 95+75 AND 97+75.
**SEWER AND WATER UTILITY INSTALLATION EXPECTED TO REMOVE PORTIONS OF EXISTING PAVEMENT

BASE AGGREGATE DENSE AND SELECT CRUSHED MATERIAL

STATION	TO	STATION	LOCATION	305.0110 BASE AGGREGATE DENSE 3/4-INCH TON	305.0120 BASE AGGREGATE DENSE 1 1/4-INCH TON	* 312.0110 SELECT CRUSHED MATERIAL TON	624.0100 WATER MGAL
65+25	-	71+15	MARLEY ST	-	1230	2110	12.3
71+15	-	77+41	MARLEY ST	-	1580	2770	15.8
77+41	-	91+95	MARLEY ST	-	3380	5930	33.8
91+95	-	101+00	MARLEY ST	40	1660	3030	16.6
201+25		204+70	GLENDALE AVE	70	590	1120	5.9
204+70	-	212+50	GLENDALE AVE	15	1440	2260	14.4
			DRIVEWAYS & MEDIAN OPENINGS	-	620	-	6.2
			MAINTAIN PROPERTY ACCESS	-	400	-	-
			DUST CONTROL	-	-	-	20.0
			TOTALS	125	10,900	17,220	125.0

* - ADDITIONAL QUANTITIES SHOWN ELSEWHERE

3

EARTHWORK SUMMARY

Division	From/To Station	Location	Excavation Common (1) (item #205.0100) Cut	Excavation Common (1) (item #205.0100) EBS (2)	Unusable Pavement Material (3)	Marsh Excavation (item #205.0400) (4)	Salvaged Topsoil Excavation (5)	Unexpanded Fill (6)	Unexpanded Select Borrow Fill (7)	Expanded Fill Factor 1.43	Expanded Select Borrow Backfill Factor 1.20	Expanded Salvaged Topsoil Backfill Factor 1.20	Expanded Marsh Backfill Select Factor 1.50	Expanded Marsh Backfill Select Factor 1.10	Expanded EBS Backfill Factor 1.10	Mass Ordinate +/- (8)	Waste (Item # SPV.0035.01) (9)	Select Borrow (item #208.1100) (10)	* Select Crushed Material (TON) (11)
1	64+25 - 101+00	Marley Street	14,440	0	339	3,516	1,300	1,985	2,582	2,839	3,098	1,560	2,079	1,462	0	11,262	14,778	6,737	2,560
2	201+25 - 212+50	Glendale Avenue	5,004	0	334	259	0	415	295	593	354	0	389	0	0	4,077	4,336	743	0
3	303+50 - 306+41	Existing CTH C	1,344	0	172	0	0	16	0	23	0	0	0	0	0	1,149	1,149	0	0
4	400+60 - 413+07	Storm Outfall	637	0	0	0	0	0	0	0	0	0	0	0	0	637	637	0	0
5		Undistributed	0	6,000	0	0	0	0	0	0	0	0	0	0	6,600	6,000	6,000	0	11,550
		Totals	21,425	6,000	845	3,775	1,300	2,416	2,877	3,455	3,452	1,560	2,468	1,462	6,600	23,125	26,900	7,480	14,110
Total Common Excavation				27,425															

1) Common Excavation is the sum of the Cut and EBS Excavation columns. Item number 205.0100.
2) EBS Excavation to be backfilled with Select Crushed Material.
3) Unusable Pavement Material is included in Cut
4) Marsh Excavation under proposed roadway to be backfilled with Item 312.0110 Select Crushed. Marsh Excavation outside of proposed roadway to be backfilled with Item 208.1100 Select Borrow. (See Construction Detail)
5) Area used for backfill quantity calculation only. Excavation for Salvaged Topsoil incidental to Item 625.0500 Salvaged Topsoil. Excavation area will be backfilled with Item 208.1100 Select Borrow. (See Construction Detail)
6) Fill areas to be backfilled with cut material from the roadway. These areas are located from back of sidewalk to slope intercept. (See Construction Detail)
7) Select Borrow Fill areas to be backfilled with Item 208.1100 Select Borrow. (See Construction Detail)
8) Mass Ordinate = Cut + EBS - Unusable Pavement Material - Expanded Fill. The Mass Ordinate + or - Qty calculated for the Division. Plus quantity indicates an excess of material within the Division. Minus indicates a shortage of material within the Division.
9) Waste = Excess Mass Ordinate + EBS + Marsh Excavation (Item # SPV.0035.01)
10) Select Borrow = Expanded Select Borrow Backfill + Expanded Salvaged Topsoil Backfill + Expanded Marsh Backfill Select Borrow
11) Select Crushed Material = Expanded Marsh Backfill Select Crushed + Expanded EBS Backfill
* Additional quantities shown elsewhere

3

HMA PAVEMENT

STATION	TO	STATION	LOCATION	455.0605 TACK COAT GAL	460.6223 HMA PAVEMENT 3 MT 58-28 S TON	460.6224 HMA PAVEMENT 4 MT 58-28 S TON
65+25	-	71+15	MARLEY ST	173	430	360
71+15	-	77+41	MARLEY ST	208	520	430
77+41	-	91+95	MARLEY ST	406	1,010	840
91+95	-	101+00	MARLEY ST	283	700	590
201+25		204+70	GLENDALE AVE	108	270	230
205+20		212+50	GLENDALE AVE	223	550	460
			TOTALS	1,400	3,480	2,910

ASPHALTIC FLUMES

STATION	LOCATION	465.0315 SY
204+33	GLENDALE AVE, LT	10
97+60	MARLEY ST NB, LT	10
99+85	MARLEY ST NB, RT	10
	TOTAL	30

ASPHALTIC SURFACE DRIVEWAYS AND FIELD ENTRANCES

STATION	LOCATION	465.0120 TON	REMARKS
64+50	MARLEY ST NB, RT	3	
65+62	MARLEY ST SB, LT	5	
65+62	MARLEY ST SB, RT	6	MEDIAN
67+25	MARLEY ST SB, RT	5	MEDIAN
69+50	MARLEY ST SB, LT	4	
72+25	MARLEY ST NB, RT	5	
72+25	MARLEY ST NB, LT	20	MEDIAN
74+25	MARLEY ST NB, LT	25	MEDIAN
78+60	MARLEY ST NB, LT	4	MEDIAN
80+00	MARLEY ST SB, RT	32	MEDIAN
90+36	MARLEY ST NB, LT	5	MEDIAN
96+70	MARLEY ST SB, LT	5	
97+15	MARLEY ST SB, LT	5	
99+50	MARLEY ST NB, LT	14	MEDIAN
203+20	GLENDALE AVE, LT	13	
206+50	GLENDALE AVE, RT	4	
207+85	GLENDALE AVE, RT	5	
209+80	GLENDALE AVE, LT	4	
211+45	GLENDALE AVE, LT	2	
211+65	GLENDALE AVE, RT	2	
212+00	GLENDALE AVE, LT	7	
	TOTAL	175	

CONCRETE ITEMS

STATION	TO	STATION	LOCATION	416.0160 CONCRETE DRIVEWAY 6-INCH SY	601.0411 CONCRETE CURB & GUTTER 30-INCH TYPE D LF	602.0405 CONCRETE SIDEWALK 4-INCH SF	602.0415 CONCRETE SIDEWALK 6-INCH SF	602.0515 CURB RAMP DETECTABLE WARNING FIELD NATURAL PATINA SF	620.0300 CONCRETE MEDIAN SLOPED NOSE SF
64+95	-	71+15	MARLEY ST	-	2,350	6,520	180	36	60
71+15	-	77+41	MARLEY ST	-	2,300	5,660	390	72	160
77+41	-	95+45	MARLEY ST	-	6,410	17,070	530	60	145
95+45	-	101+00	MARLEY ST	-	890	650	170	12	115
205+50	-	211+85	GLENDALE AVE	-	1,270	5,780	-	-	-
64+50			MARLEY ST, RT	27	-	-	-	-	-
65+62			MARLEY ST, LT	39	-	-	-	-	-
67+25			MARLEY ST, LT	34	-	-	-	-	-
69+50			MARLEY ST, LT	38	-	-	-	-	-
70+15			MARLEY ST, LT	26	-	-	-	-	-
72+25			MARLEY ST, RT	49	-	-	-	-	-
72+75			MARLEY ST, LT	49	-	-	-	-	-
74+00			MARLEY ST, LT	26	-	-	-	-	-
74+50			MARLEY ST, RT	26	-	-	-	-	-
78+59			MARLEY ST, LT	28	-	-	-	-	-
79+50			MARLEY ST, LT	64	-	-	-	-	-
90+36			MARLEY ST, RT	28	-	-	-	-	-
92+25			MARLEY ST, RT	37	-	-	-	-	-
206+50			GLENDALE AVE, RT	40	-	-	-	-	-
208+00			GLENDALE AVE, RT	44	-	-	-	-	-
209+75			GLENDALE AVE, LT	39	-	-	-	-	-
211+50			GLENDALE AVE, LT	33	-	-	-	-	-
211+65			GLENDALE AVE, RT	33	-	-	-	-	-
			TOTALS	660	13,220	35,680	1,270	180	480

3

3

CULVERT PIPES AND APRON ENDWALLS

STATION	LOCATION	521.1018 APRON ENDWALLS FOR CULVERT PIPE STEEL 18-INCH EACH	521.3118 CULVERT PIPE CORRUGATED STEEL 18-INCH LF	STEEL THICKNESS INCHES	522.2419 CULVERT PIPE REINFORCED CONCRETE HORIZONTAL ELLIPTICAL CLASS HE-IV 19X30-INCH LF	* 522.2619 APRON ENDWALLS FOR CULVERT PIPE REINFORCED CONCRETE HORIZONTAL ELLIPTICAL 19X30-INCH EACH	END OF PIPE STATION/OFFSET INLET	END OF PIPE STATION/OFFSET OUTLET	END OF PIPE ELEVATION INLET	END OF PIPE ELEVATION OUTLET
95+90	MARLEY ST NB LT	-	-	-	124	2	95+78.7, 68.8' LT	96+08.4, 52' RT	758.42	758.30
203+20	GLENDALE AVE, LT	2	36	0.064	-	-	-	-	759.20	759.00
	TOTALS	2	36		124	2				

* - ADDITIONAL QUANTITIES SHOWN ELSEWHERE

APRON ENDWALLS FOR CULVERT PIPE REINFORCED CONCRETE

STRUCTURE	STATION	OFFSET	LOCATION	522.1012 12-INCH EACH	522.1018 18-INCH EACH	* 522.2619 HORIZONTAL ELLIPTICAL 19X30-INCH EACH	522.2624 HORIZONTAL ELLIPTICAL 24X38-INCH EACH	522.2638 HORIZONTAL ELLIPTICAL 38X60-INCH EACH
13A	88+10	33.3' LT	MARLEY ST -SB	-	1	-	-	-
22	97+44	60.3' RT	MARLEY ST -NB	1	-	-	-	-
30	98+39	38.5' RT	MARLEY ST -NB	-	-	1	-	-
33	101+23	31.1' RT	MARLEY ST -NB	-	-	1	-	-
17B	205+78	48.3' RT	GLENDALE AVE	-	-	-	1	-
53	412+86	0.0' RT	STORM OUTLET	-	-	-	-	1
			TOTALS	1	1	2	1	1

* - ADDITIONAL QUANTITIES SHOWNS ELSEWHERE

UNDERDRAIN

STATION	LOCATION	310.0115 BASE AGGREGATE OPEN-GRADED CY	612.0106 PIPE UNDERDRAIN 6-INCH LF	645.0111 GEOTEXTILE TYPE DF SCHEDULE A SY	REMARKS
70+55	MARLEY ST - NB, RT	5	30	29	4A - 4B
70+55	MARLEY ST - SB, LT	5	30	29	4C - 4D
71+58	MARLEY ST - NB, RT	3	20	19	5A
71+58	MARLEY ST - SB, LT	3	20	19	5B
75+05	MARLEY ST - NB, RT	5	30	29	7B - 7A
75+05	MARLEY ST - SB, LT	5	30	29	7D - 7C
75+50	MARLEY ST - SB, LT	3	20	19	7E
78+10	MARLEY ST - SB, LT	3	20	19	8A
81+00	MARLEY ST - NB, RT	3	20	19	9A
81+00	MARLEY ST - SB, LT	3	20	19	9B
83+05	MARLEY ST - NB, RT	5	30	29	10A - 10B
83+05	MARLEY ST - SB, LT	5	30	29	10C - 10D
86+55	MARLEY ST - NB, RT	5	30	29	11A - 11B
86+55	MARLEY ST - SB, LT	5	30	29	11C - 11D
91+05	MARLEY ST - NB, RT	5	30	29	14A - 14B
91+05	MARLEY ST - SB, LT	5	30	29	14C - 14D
92+45	MARLEY ST - NB, RT	3	20	19	15A
92+45	MARLEY ST - SB, LT	3	20	19	15B
95+79	MARLEY ST - NB, RT	3	20	19	17A
205+63	GLENDALE AVE, RT	3	20	19	17
207+45	GLENDALE AVE, RT	5	30	29	18A - 18B
207+46	GLENDALE AVE, LT	5	30	29	18C - 18D
209+50	GLENDALE AVE, RT	3	20	19	20A
209+50	GLENDALE AVE, LT	3	20	1	20B
	TOTALS	96	600	558	

3

3

STORM SEWER PIPES

FROM	-	TO	LOCATION	STORM SEWER PIPE REINFORCED CONCRETE														REMARKS
				608.0312 CLASS III 12-INCH LF	608.0315 CLASS III 15-INCH LF	608.0318 CLASS III 18-INCH LF	608.0321 CLASS III 21-INCH LF	608.0324 CLASS III 24-INCH LF	608.0330 CLASS III 30-INCH LF	608.0336 CLASS III 36-INCH LF	608.0342 CLASS III 42-INCH LF	608.0412 CLASS IV 12-INCH LF	608.0415 CLASS IV 15-INCH LF	608.0418 CLASS IV 18-INCH LF	608.2319 HORIZONTAL ELLIPTICAL CLASS HE-III 19X30-INCH LF	608.2338 HORIZONTAL ELLIPTICAL CLASS HE-III 38X60-INCH LF	608.2424 HORIZONTAL ELLIPTICAL CLASS HE-IV 24X38-INCH LF	
1	-	2	MARLEY ST - NB	-	-	119	-	-	-	-	-	-	-	-	-	-	-	-
1A	-	1	MARLEY ST - NB	-	-	-	-	-	-	-	-	77	-	-	-	-	-	-
1B	-	1	MARLEY ST - NB	56	-	-	-	-	-	-	-	-	-	-	-	-	-	-
2	-	3	MARLEY ST - NB	-	-	-	-	150	-	-	-	-	-	-	-	-	-	-
2A	-	2	MARLEY ST - NB	-	-	-	-	-	-	-	-	-	85	-	-	-	-	-
3	-	4	MARLEY ST - NB	-	-	-	-	125	-	-	-	-	-	-	-	-	-	-
3	-	3A	MARLEY ST - NB	-	-	20	-	-	-	-	-	-	-	-	-	-	-	-
4	-	5	MARLEY ST - NB	-	-	-	-	108	-	-	-	-	-	-	-	-	-	-
4A	-	4	MARLEY ST - NB	-	-	-	-	-	-	-	-	-	7	-	-	-	-	-
4B	-	4A	MARLEY ST - NB	-	-	-	-	-	-	-	-	10	-	-	-	-	-	-
4C	-	4A	MARLEY ST - NB	-	-	-	-	-	-	-	-	-	55	-	-	-	-	-
4D	-	4C	MARLEY ST - SB	-	-	-	-	-	-	-	-	10	-	-	-	-	-	-
5	-	6	MARLEY ST - NB	-	-	-	-	192	-	-	-	-	-	-	-	-	-	-
5A	-	5	MARLEY ST - NB	-	-	-	-	-	-	-	-	-	7	-	-	-	-	-
5B	-	5A	MARLEY ST - NB	-	-	-	-	-	-	-	-	-	55	-	-	-	-	-
5C	-	5B	MARLEY ST - SB	25	-	-	-	-	-	-	-	-	-	-	-	-	-	-
5D	-	5C	MARLEY ST - NB	29	-	-	-	-	-	-	-	-	-	-	-	-	-	-
5E	-	5D	MARLEY ST - NB	29	-	-	-	-	-	-	-	-	-	-	-	-	-	-
6	-	7	MARLEY ST - NB	-	-	-	-	-	170	-	-	-	-	-	-	-	-	-
6	-	6B	MARLEY ST - NB	25	-	-	-	-	-	-	-	-	-	-	-	-	-	-
6A	-	6	MARLEY ST - NB	-	-	-	-	-	-	-	-	93	-	-	-	-	-	-
7	-	50	MARLEY ST - NB	-	-	-	-	-	-	-	-	-	-	-	-	315	-	-
7B	-	7A	MARLEY ST - NB	-	-	-	-	-	-	-	-	10	-	-	-	-	-	-
7A	-	7	MARLEY ST - NB	-	-	-	-	-	-	-	-	-	12	-	-	-	-	-
7D	-	7C	MARLEY ST - SB	-	-	-	-	-	-	-	-	10	-	-	-	-	-	-
7C	-	7A	MARLEY ST - NB	-	-	-	-	-	-	-	-	-	55	-	-	-	-	-
7E	-	7C	MARLEY ST - SB	-	-	-	-	-	-	-	-	40	-	-	-	-	-	-
7F	-	7E	MARLEY ST - SB	21	-	-	-	-	-	-	-	-	-	-	-	-	-	-
7G	-	7	MARLEY ST - NB	34	-	-	-	-	-	-	-	-	-	-	-	-	-	-
8	-	7	MARLEY ST - NB	-	-	-	-	-	-	-	290	-	-	-	-	-	-	-
8A	-	8	MARLEY ST - NB	-	-	-	-	-	-	-	-	64	-	-	-	-	-	-
9	-	8	MARLEY ST - NB	-	-	-	-	-	-	-	290	-	-	-	-	-	-	-
9A	-	9	MARLEY ST - NB	-	-	-	-	-	-	-	-	6	-	-	-	-	-	-
9B	-	9A	MARLEY ST - NB	-	-	-	-	-	-	-	-	55	-	-	-	-	-	-
10	-	9	MARLEY ST - NB	-	-	-	-	-	-	-	200	-	-	-	-	-	-	-

3

STORM SEWER PIPES (CONTINUED)

FROM	-	TO	LOCATION	STORM SEWER PIPE REINFORCED CONCRETE														REMARKS
				608.0312 CLASS III 12-INCH LF	608.0315 CLASS III 15-INCH LF	608.0318 CLASS III 18-INCH LF	608.0321 CLASS III 21-INCH LF	608.0324 CLASS III 24-INCH LF	608.0330 CLASS III 30-INCH LF	608.0336 CLASS III 36-INCH LF	608.0342 CLASS III 42-INCH LF	608.0412 CLASS IV 12-INCH LF	608.0415 CLASS IV 15-INCH LF	608.0418 CLASS IV 18-INCH LF	608.2319 HORIZONTAL ELLIPTICAL CLASS HE-III 19X30-INCH LF	608.2338 HORIZONTAL ELLIPTICAL CLASS HE-III 38X60-INCH LF	608.2424 HORIZONTAL ELLIPTICAL CLASS HE-IV 24X38-INCH LF	
10E	-	10	MARLEY ST - NB	-	18	-	-	-	-	-	-	-	-	-	-	-	-	-
10A	-	10	MARLEY ST - NB	-	-	-	-	-	-	-	-	-	7	-	-	-	-	-
10B	-	10A	MARLEY ST - NB	-	-	-	-	-	-	-	-	10	-	-	-	-	-	-
10C	-	10A	MARLEY ST - NB	-	-	-	-	-	-	-	-	-	55	-	-	-	-	-
10D	-	10C	MARLEY ST - SB	-	-	-	-	-	-	-	-	10	-	-	-	-	-	-
11	-	10	MARLEY ST - NB	-	-	-	-	-	-	-	350	-	-	-	-	-	-	-
11A	-	11	MARLEY ST - NB	-	-	-	-	-	-	-	-	-	7	-	-	-	-	-
11B	-	11A	MARLEY ST - NB	-	-	-	-	-	-	-	-	10	-	-	-	-	-	-
11C	-	11A	MARLEY ST - NB	-	-	-	-	-	-	-	-	-	55	-	-	-	-	-
11D	-	11C	MARLEY ST - SB	-	-	-	-	-	-	-	-	10	-	-	-	-	-	-
12	-	11	MARLEY ST - NB	-	-	-	-	-	-	-	167	-	-	-	-	-	-	-
12A	-	12	MARLEY ST - NB	-	-	21	-	-	-	-	-	-	-	-	-	-	-	***
13	-	12	MARLEY ST - NB	-	-	-	-	-	-	-	-	-	-	72	-	-	-	***
13A	-	13	MARLEY ST - SB	-	-	-	-	-	-	-	-	-	-	5	-	-	-	***
14	-	12	MARLEY ST - NB	-	-	-	-	-	-	-	284	-	-	-	-	-	-	***
14A	-	14	MARLEY ST - NB	-	-	-	-	-	-	-	-	-	7	-	-	-	-	***
14B	-	14A	MARLEY ST - NB	-	-	-	-	-	-	-	-	10	-	-	-	-	-	***
14C	-	14A	MARLEY ST - NB	-	-	-	-	-	-	-	-	-	49	-	-	-	-	***
14D	-	14C	MARLEY ST - SB	-	-	-	-	-	-	-	-	10	-	-	-	-	-	***
14E	-	14	MARLEY ST - NB	18	-	-	-	-	-	-	-	-	-	-	-	-	-	***
15	-	14	MARLEY ST - NB	-	-	-	-	-	-	144	-	-	-	-	-	-	-	***
15A	-	15	MARLEY ST - NB	-	-	-	-	-	-	-	-	6	-	-	-	-	-	***
15B	-	15A	MARLEY ST - NB	-	-	-	-	-	-	-	-	47	-	-	-	-	-	***
15C	-	15	MARLEY ST - NB	18	-	-	-	-	-	-	-	-	-	-	-	-	-	***
15	-	16	MARLEY ST - NB	-	-	-	-	-	-	245	-	-	-	-	-	-	-	***
16	-	17	MARLEY ST - NB	-	-	-	-	-	-	53	-	-	-	-	-	-	-	***
16A	-	16	MARLEY ST - NB	22	-	-	-	-	-	-	-	-	-	-	-	-	-	***
17	-	18	MARLEY ST - NB	-	-	-	-	171	-	-	-	-	-	-	-	-	-	***
17A	-	17	MARLEY ST - NB	-	-	-	-	-	-	-	-	-	-	-	-	-	53	***
17B	-	17A	MARLEY ST - NB	-	-	-	-	-	-	-	-	-	-	-	-	-	23	***
18	-	19	MARLEY ST - NB	-	-	-	136	-	-	-	-	-	-	-	-	-	-	***
18A	-	18	GLENDALE AVE	-	-	-	-	-	-	-	-	-	-	7	-	-	-	***
18B	-	18A	GLENDALE AVE	-	-	-	-	-	-	-	-	10	-	-	-	-	-	***
18C	-	18A	GLENDALE AVE	-	-	-	-	-	-	-	-	-	44	-	-	-	-	***
18D	-	18C	GLENDALE AVE	-	-	-	-	-	-	-	-	10	-	-	-	-	-	***

3

3

STORM SEWER PIPES (CONTINUED)

FROM	-	TO	LOCATION	STORM SEWER PIPE REINFORCED CONCRETE														REMARKS
				608.0312 CLASS III 12-INCH LF	608.0315 CLASS III 15-INCH LF	608.0318 CLASS III 18-INCH LF	608.0321 CLASS III 21-INCH LF	608.0324 CLASS III 24-INCH LF	608.0330 CLASS III 30-INCH LF	608.0336 CLASS III 36-INCH LF	608.0342 CLASS III 42-INCH LF	608.0412 CLASS IV 12-INCH LF	608.0415 CLASS IV 15-INCH LF	608.0418 CLASS IV 18-INCH LF	608.2319 HORIZONTAL ELLIPTICAL CLASS HE-III 19X30-INCH LF	608.2338 HORIZONTAL ELLIPTICAL CLASS HE-III 38X60-INCH LF	608.2424 HORIZONTAL ELLIPTICAL CLASS HE-IV 24X38-INCH LF	
18E	-	18	GLENDALE AVE	-	21	-	-	-	-	-	-	-	-	-	-	-	-	***
19A	-	19	GLENDALE AVE	-	-	26	-	-	-	-	-	-	-	-	-	-	-	***
19	-	20	GLENDALE AVE	-	-	-	-	-	-	-	-	-	-	74	-	-	-	***
20A	-	20	GLENDALE AVE	-	-	-	-	-	-	-	-	6	-	-	-	-	-	***
20B	-	20A	GLENDALE AVE	-	-	-	-	-	-	-	-	37	-	-	-	-	-	***
20C	-	20	GLENDALE AVE	93	-	-	-	-	-	-	-	-	-	-	-	-	-	***
21	-	22	MARLEY ST - NB	-	-	-	-	-	-	-	-	117	-	-	-	-	-	***
30	-	31	MARLEY ST - NB	-	-	-	-	-	-	-	-	-	-	-	10	-	-	***
31	-	32	MARLEY ST - NB	-	-	-	-	-	-	-	-	-	-	-	141	-	-	***
32	-	33	MARLEY ST - NB	-	-	-	-	-	-	-	-	-	-	-	137	-	-	***
50	-	51	STORM OUTLET	-	-	-	-	-	-	-	-	-	-	-	-	316	-	-
51	-	52	STORM OUTLET	-	-	-	-	-	-	-	-	-	-	-	-	316	-	-
52	-	53	STORM OUTLET	-	-	-	-	-	-	-	-	-	-	-	-	314	-	-
			TOTALS	370	39	186	136	746	170	442	1,581	668	500	158	288	1,261	76	

*** TRACER WIRE REQUIRED

STORM LATERALS

STATION		LOCATION	STORM LATERAL 4-INCH SPV.0090.01 LF
65+96	RT	MARLEY ST - NB	27
66+01	LT	MARLEY ST - NB	77
66+94	LT	MARLEY ST - NB	82
68+23	LT	MARLEY ST - NB	83
69+03	LT	MARLEY ST - NB	83
70+43	LT	MARLEY ST - NB	30
71+26	RT	MARLEY ST - NB	18
72+12	RT	MARLEY ST - NB	18
72+32	LT	MARLEY ST - NB	93
73+72	RT	MARLEY ST - NB	18
74+40	LT	MARLEY ST - NB	85
78+97	LT	MARLEY ST - NB	85
92+45	RT	MARLEY ST - NB	8
93+88	RT	MARLEY ST - NB	9
206+94	RT	GLENDALE AVE	18
207+59	RT	GLENDALE AVE	21
209+50	LT	GLENDALE AVE	29
210+48	RT	GLENDALE AVE	21
210+78	LT	GLENDALE AVE	74
		TOTAL	879

NOTE: LOCATIONS SUBJECT TO CHANGE BASED ON FIELD CONDITIONS

3

STORM SEWER STRUCTURES

				MANHOLE COVERS		INLET COVERS				MANHOLES						INLETS						
				611.0535	611.0545	611.0612	611.0624	611.0639	611.0642	611.2004	611.2005	611.2006	611.2007	611.2008	SPV.0060.01	611.3003	SPV.0060.02	SPV.0060.03	611.3230	611.3901	611.3902	
										4-FT	5-FT	6-FT	7-FT	8-FT	10-FT	3-FT	5-FT	6-FT		MEDIAN 1	MEDIAN 2	
				TYPE J-SPECIAL	TYPE L	TYPE C	TYPE H	TYPE H-S	TYPE MS	DIAMETER	DIAMETER	DIAMETER	DIAMETER	DIAMETER	DIAMETER	DIAMETER	DIAMETER	DIAMETER	2X3-FT	GRATE	GRATE	
STRUCTURE	STATION	OFFSET	LOCATION	EACH	EACH	EACH	EACH	EACH	EACH	EACH	EACH	EACH	EACH	EACH	EACH	EACH	EACH	EACH	EACH	EACH	EACH	REMARKS
1	66+56	23.0' RT	MARLEY ST -NB	1	-	-	-	-	-	1	-	-	-	-	-	-	-	-	-	-	-	
1A	66+56	38.3' LT	MARLEY ST -SB	-	-	1	-	-	-	-	-	-	-	-	-	1	-	-	-	-	-	
1B	66+00	23.0' RT	MARLEY ST -NB	1	-	-	-	-	-	1	-	-	-	-	-	-	-	-	-	-	-	
2	67+75	23.0' RT	MARLEY ST -NB	1	-	-	-	-	-	1	-	-	-	-	-	-	-	-	-	-	-	
2A	67+75	45.5' LT	MARLEY ST -SB	-	-	1	-	-	-	-	-	-	-	-	-	1	-	-	-	-	-	
3	69+25	23.0' RT	MARLEY ST -NB	1	-	-	-	-	-	1	-	-	-	-	-	-	-	-	-	-	-	
3A	69+25	42.7' RT	MARLEY ST -NB	-	-	-	-	-	1	-	-	-	-	-	-	-	-	-	-	1	-	
4	70+50	24.0' RT	MARLEY ST -NB	1	-	-	-	-	-	1	-	-	-	-	-	-	-	-	-	-	-	
4A	70+50	17.5' RT	MARLEY ST -NB	-	-	-	-	1	-	-	-	-	-	-	-	-	-	-	1	-	-	
4B	70+60	17.5' RT	MARLEY ST -NB	-	-	-	1	-	-	-	-	-	-	-	-	-	-	-	1	-	-	
4C	70+50	17.5' LT	MARLEY ST -SB	-	-	-	-	1	-	-	-	-	-	-	-	-	-	-	1	-	-	
4D	70+60	17.5' LT	MARLEY ST -NB	-	-	-	1	-	-	-	-	-	-	-	-	-	-	-	1	-	-	
5	71+58	24.0' RT	MARLEY ST -NB	1	-	-	-	-	-	1	-	-	-	-	-	-	-	-	-	-	-	
5A	71+58	17.5' RT	MARLEY ST -NB	-	-	-	1	-	-	-	-	-	-	-	-	-	-	-	1	-	-	
5B	71+58	17.5' LT	MARLEY ST -SB	-	-	-	1	-	-	-	-	-	-	-	-	-	-	-	1	-	-	
5C	71+58	43.0' LT	MARLEY ST -SB	-	-	1	-	-	-	-	-	-	-	-	-	1	-	-	-	-	-	
5D	299+33	14.5' LT	FUTURE RD	-	-	-	1	-	-	-	-	-	-	-	-	-	-	-	1	-	-	
5E	299+33	14.5' RT	FUTURE RD	-	-	-	1	-	-	-	-	-	-	-	-	-	-	-	1	-	-	
6	73+50	24.0' RT	MARLEY ST -NB	1	-	-	-	-	-	-	1	-	-	-	-	-	-	-	-	-	-	
6A	73+26	46.0' LT	MARLEY ST -SB	-	-	1	-	-	-	-	-	-	-	-	-	1	-	-	-	-	-	
6B	73+61	46.0' RT	MARLEY ST -NB	-	-	-	-	-	1	-	-	-	-	-	-	-	-	-	-	1	-	
7	75+20	24.0' RT	MARLEY ST -NB	1	-	-	-	-	-	-	-	-	-	-	1	-	-	-	-	-	-	
7A	75+10	17.5' RT	MARLEY ST -NB	-	-	-	1	-	-	-	-	-	-	-	-	-	-	-	1	-	-	
7B	75+00	17.5' RT	MARLEY ST -NB	-	-	-	-	1	-	-	-	-	-	-	-	-	-	-	1	-	-	
7C	75+10	17.5' LT	MARLEY ST -SB	-	-	-	1	-	-	-	-	-	-	-	-	-	-	-	1	-	-	
7D	75+00	17.5' LT	MARLEY ST -SB	-	-	-	-	1	-	-	-	-	-	-	-	-	-	-	1	-	-	
7E	75+50	17.5' LT	MARLEY ST -SB	-	-	-	1	-	-	-	-	-	-	-	-	-	-	-	1	-	-	
7F	75+50	38.0' LT	MARLEY ST -SB	-	-	1	-	-	-	-	-	-	-	-	-	1	-	-	-	-	-	
7G	74+93	45.2' RT	MARLEY ST -NB	-	-	-	-	-	1	-	-	-	-	-	-	-	-	-	-	1	-	
8	78+10	26.1' RT	MARLEY ST -NB	-	-	-	1	-	-	-	-	-	-	-	-	-	-	1	-	-	-	
8A	78+10	17.5' LT	MARLEY ST -SB	-	-	-	1	-	-	-	-	-	-	-	-	-	-	-	1	-	-	
9	81+00	24.0' RT	MARLEY ST -NB	1	-	-	-	-	-	-	-	1	-	-	-	-	-	-	-	-	-	
9A	81+00	17.5' RT	MARLEY ST -NB	-	-	-	1	-	-	-	-	-	-	-	-	-	-	-	1	-	-	
9B	81+00	17.5' LT	MARLEY ST -SB	-	-	-	1	-	-	-	-	-	-	-	-	-	-	-	1	-	-	
10	83+00	24.0' RT	MARLEY ST -NB	1	-	-	-	-	-	-	-	1	-	-	-	-	-	-	-	-	-	
10A	83+00	17.5' RT	MARLEY ST -NB	-	-	-	-	1	-	-	-	-	-	-	-	-	-	-	1	-	-	
10B	83+10	17.5' RT	MARLEY ST -NB	-	-	-	1	-	-	-	-	-	-	-	-	-	-	-	1	-	-	
10C	83+00	17.5' LT	MARLEY ST -SB	-	-	-	-	1	-	-	-	-	-	-	-	-	-	-	1	-	-	
10D	83+10	17.5' LT	MARLEY ST -SB	-	-	-	1	-	-	-	-	-	-	-	-	-	-	-	1	-	-	
10E	83+00	42.0' RT	MARLEY ST -NB	-	-	-	-	-	1	-	-	-	-	-	-	-	-	-	-	1	-	

3

STORM SEWER STRUCTURES (CONTINUED)

				MANHOLE COVERS		INLET COVERS				MANHOLES						INLETS						
STRUCTURE	STATION	OFFSET	LOCATION	611.0535 TYPE J-SPECIAL EACH	611.0545 TYPE L EACH	611.0612 TYPE C EACH	611.0624 TYPE H EACH	611.0639 TYPE H-S EACH	611.0642 TYPE MS EACH	611.2004 4-FT DIAMETER EACH	611.2005 5-FT DIAMETER EACH	611.2006 6-FT DIAMETER EACH	611.2007 7-FT DIAMETER EACH	611.2008 8-FT DIAMETER EACH	SPV.0060.01 10-FT DIAMETER EACH	611.3003 3-FT DIAMETER EACH	SPV.0060.02 5-FT DIAMETER EACH	SPV.0060.03 6-FT DIAMETER EACH	611.3230 2X3-FT EACH	611.3901 MEDIAN 1 GRATE EACH	611.3902 MEDIAN 2 GRATE EACH	REMARKS
11	86+50	24.0' RT	MARLEY ST -NB	1	-	-	-	-	-	-	-	1	-	-	-	-	-	-	-	-	-	
11A	86+50	17.5' RT	MARLEY ST -NB	-	-	-	-	1	-	-	-	-	-	-	-	-	-	-	1	-	-	
11B	86+60	17.5' RT	MARLEY ST -NB	-	-	-	1	-	-	-	-	-	-	-	-	-	-	-	1	-	-	
11C	86+50	17.5' LT	MARLEY ST -SB	-	-	-	-	1	-	-	-	-	-	-	-	-	-	-	1	-	-	
11D	86+60	17.5' LT	MARLEY ST -SB	-	-	-	1	-	-	-	-	-	-	-	-	-	-	-	1	-	-	
12	88+17	23.0' RT	MARLEY ST -NB	1	-	-	-	-	-	-	-	1	-	-	-	-	-	-	-	-	-	
12A	88+18	43.5' RT	MARLEY ST -NB	-	-	-	-	-	1	-	-	-	-	-	-	-	-	-	-	1	-	
13	88+11	28.6' LT	MARLEY ST -SB	1	-	-	-	-	-	1	-	-	-	-	-	-	-	-	-	-	-	
14	91+00	24.0' RT	MARLEY ST -NB	-	1	-	-	-	-	-	-	1	-	-	-	-	-	-	-	-	-	
14A	91+00	17.5' RT	MARLEY ST -NB	-	-	-	-	1	-	-	-	-	-	-	-	-	-	-	1	-	-	
14B	91+10	17.5' RT	MARLEY ST -NB	-	-	-	1	-	-	-	-	-	-	-	-	-	-	-	1	-	-	
14C	91+00	17.5' LT	MARLEY ST -SB	-	-	-	-	1	-	-	-	-	-	-	-	-	-	-	1	-	-	
14D	91+10	17.5' LT	MARLEY ST -SB	-	-	-	1	-	-	-	-	-	-	-	-	-	-	-	1	-	-	
14E	91+00	42.2' RT	MARLEY ST -NB	-	-	1	-	-	-	-	-	-	-	-	-	1	-	-	-	-	-	
15	92+45	23.0' RT	MARLEY ST -SB	1	-	-	-	-	-	-	1	-	-	-	-	-	-	-	-	-	-	
15A	92+45	17.5' RT	MARLEY ST -NB	-	-	-	1	-	-	-	-	-	-	-	-	-	-	-	1	-	-	
15B	92+45	17.5' LT	MARLEY ST -SB	-	-	-	1	-	-	-	-	-	-	-	-	-	-	-	1	-	-	
15C	92+45	41.4' RT	MARLEY ST -NB	-	-	1	-	-	-	-	-	-	-	-	-	1	-	-	-	-	-	
16	94+90	26.0' RT	MARLEY ST -NB	1	-	-	-	-	-	-	-	-	1	-	-	-	-	-	-	-	-	
16A	94+85	47.6' RT	MARLEY ST -NB	-	-	1	-	-	-	-	-	-	-	-	-	1	-	-	-	-	-	
17	205+63	25.2' RT	GLENDALE AVE	-	-	-	1	-	-	-	-	-	-	-	-	-	-	1	-	-	-	
17A	95+80	72.7' RT	MARLEY ST -NB	-	-	-	1	-	-	-	-	-	-	-	-	-	1	-	-	-	-	
18	207+37	25.0' RT	GLENDALE AVE	1	-	-	-	-	-	-	1	-	-	-	-	-	-	-	-	-	-	
18A	207+40	18.5' RT	GLENDALE AVE	-	-	-	1	-	-	-	-	-	-	-	-	-	-	-	1	-	-	
18B	207+50	18.5' RT	GLENDALE AVE	-	-	-	-	1	-	-	-	-	-	-	-	-	-	-	1	-	-	
18C	207+41	25.4' LT	GLENDALE AVE	-	-	-	1	-	-	-	-	-	-	-	-	-	-	-	1	-	-	
18D	207+51	24.7' LT	GLENDALE AVE	-	-	-	-	1	-	-	-	-	-	-	-	-	-	-	1	-	-	
18E	207+32	45.0' RT	GLENDALE AVE	-	-	1	-	-	-	-	-	-	-	-	-	1	-	-	-	-	-	
19	208+75	24.0' RT	GLENDALE AVE	1	-	-	-	-	-	1	-	-	-	-	-	-	-	-	-	-	-	
19A	208+75	49.7' RT	GLENDALE AVE	-	-	-	-	-	1	-	-	-	-	-	-	-	-	-	-	1	-	
20	209+50	25.0' RT	GLENDALE AVE	1	-	-	-	-	-	1	-	-	-	-	-	-	-	-	-	-	-	
20A	209+50	18.5' RT	GLENDALE AVE	-	-	-	1	-	-	-	-	-	-	-	-	-	-	-	1	-	-	
20B	209+50	18.5' LT	GLENDALE AVE	-	-	-	1	-	-	-	-	-	-	-	-	-	-	-	1	-	-	
20C	210+45	24.5' RT	GLENDALE AVE	1	-	-	-	-	-	1	-	-	-	-	-	-	-	-	-	-	-	
21	97+00	48.4' LT	MARLEY ST - NB	-	-	1	-	-	-	-	-	-	-	-	-	1	-	-	-	-	-	
31	98+45	31.0' RT	MARLEY ST - NB	-	1	-	-	-	-	1	-	-	-	-	-	-	-	-	-	-	-	
32	99+85	31.0' RT	MARLEY ST -NB	-	-	-	-	-	2	-	-	-	-	-	-	-	-	-	-	-	1	**
50	403+39	0.0' RT	STORM OUTLET	1	-	-	-	-	-	-	-	-	-	1	-	-	-	-	-	-	-	
51	406+55	0.0' RT	STORM OUTLET	1	-	-	-	-	-	-	-	-	-	1	-	-	-	-	-	-	-	
52	409+71	0.0' RT	STORM OUTLET	1	-	-	-	-	-	-	-	-	-	1	-	-	-	-	-	-	-	
			TOTALS	22	2	10	27	12	8	11	3	5	1	3	1	10	1	2	36	6	1	

** INSTALL SINGLE SLOPE GRATE ON 6:1 SIDE SLOPE. INSTALL INLET AND OUTLET PIPES TO FAR WEST SIDE OF STRUCTURE.

3

RIPRAP MEDIUM

STATION	LOCATION	606.0200 RIPRAP MEDIUM CY	645.0120 GEOTEXTILE TYPE HR SY	REMARKS
204+33	GLENDALE AVE, LT	5	15	FLUME
97+60	MARLEY ST, LT	5	15	FLUME
412+80	STORM OUTFALL	5	10	DITCH LINING BEFORE ENDWALL
413+00	STORM OUTFALL	17	35	ENDWALL DISCHARGE
UNDISTRIBUTED	PROJECT	8	15	
	TOTAL	30	60	

LANDMARK REFERENCE MONUMENTS

STATION	LOCATION	621.0100 LANDMARK REFERENCE MONUMENTS EACH	REMARKS
88+24	MARLEY ST	4	SECTION CONER
	TOTALS	4	

DUST CONTROL SURFACE TREATMENT

STATION	LOCATION	623.0200 DUST CONTROL SURFACE TREATMENT SY
UNDISTRIBUTED	PROJECT	15,000
	TOTAL	15,000

LANDSCAPING

STATION	TO	STATION	LOCATION	625.0100 TOPSOIL SY	625.0500 SALVAGED TOPSOIL SY	627.0200 MULCHING SY	628.2004 EROSION MAT CLASS I TYPE B SY	628.2008 EROSION MAT URBAN CLASS I TYPE B SY	629.0210 FERTILIZER TYPE B CWT	630.0120 SEEDING MIXTURE NO. 20 LB	630.0140 SEEDING MIXTURE NO. 40 LB	630.0500 SEED WATER MGAL
64+95	-	71+15	MARLEY ST	1,193	1,357	-	-	2,550	2	-	46	57
71+15	-	77+41	MARLEY ST	1,260	1,420	-	-	2,680	2	-	48	60
77+41	-	95+45	MARLEY ST	2,896	5,243	-	6	8,139	6	-	147	196
95+45	-	101+00	MARLEY ST	1,360	-	-	10	1,360	1	-	25	31
201+25	-	204+00	GLENDALE AVE	645	-	-	110	645	0.5	-	12	14
205+75	-	212+50	GLENDALE AVE	1,985	-	-	-	1,985	1	-	36	45
300+92	-	307+89	CTH C	2,400		-	-	2,400	1.5	65	-	54
400+40	-	413+10	STORM OUTLET	-	13,980	-	5,625	-	1.5	152	-	127
UNDISTRIBUTED			WASTE SITE	-	-	10,000	-	-	6.5	270	-	-
UNDISTRIBUTED			PROJECT	2,936	-	2,500	1,449	4,941	5	123	76	126
			TOTALS	14,675	22,000	12,500	7,200	24,700	27.0	610	390	710

3

3

SILT FENCE

STATION	TO	STATION	LOCATION	628.1504 SILT FENCE LF	628.1520 SILT FENCE MAINTENANCE LF
64+95	-	71+15	MARLEY ST	1,475	2,950
71+15	-	77+41	MARLEY ST	1,240	2,480
77+41	-	95+45	MARLEY ST	3,685	7,370
95+45	-	101+00	MARLEY ST	995	1,990
201+25	-	204+00	GLENDALE AVE	560	1,120
205+75	-	212+50	GLENDALE AVE	880	1,760
300+92	-	307+89	CTH C, RT	670	1,340
400+46	-	413+07	STORM OUTLET	2,600	5,200
UNDISTRIBUTED			WASTE SITE	1,200	2,400
UNDISTRIBUTED			PROJECT	1,195	2,390
			TOTAL	14,500	29,000

EROSION CONTROL MOBILIZATION

LOCATION	628.1905 MOBILIZATIONS EROSION CONTROL EACH	628.1910 MOBILIZATIONS EMERGENCY EROSION CONTROL EACH
MARLEY ST	9	6
GLENDALE	3	2
TOTALS	12	8

CULVERT PIPE CHECKS

STATION	LOCATION	628.7555 CULVERT PIPE CHECKS EACH
88+11	MARLEY ST, LT	3
96+02	MARLEY ST, RT	7
96+10	MARLEY ST, RT	5
101+32	MARLEY ST, RT	5
203+00	GLENDALE AVE, LT	3
205+79	GLENDALE AVE, LT	5
UNDISTRIBUTED	PROJECT	7
	TOTAL	35

3

TRACKING PADS

STATION	LOCATION	628.7560 TRACKING PADS EACH	REMARKS
65+25	MARLEY ST	1	
101+00	MARLEY ST	1	
208+00	GLENDALE AVE	1	
212+50	GLENDALE AVE	1	USED DURING CTH C CLOSURE
UNDISTRIBUTED	WASTE SITE	1	
	TOTAL	5	

ROCK BAGS

STATION	LOCATION	628.7570 ROCK BAGS EACH
100+95	MARLEY ST, LT	15
212+50	GLENDALE AVE, LT & RT	30
UNDISTRIBUTED	WASTE SITE	30
UNDISTRIBUTED	PROJECT	25
	TOTAL	100

3

INLET PROTECTION

STRUCTURE NUMBER	LOCATION	628.7005 TYPE A EACH	628.7010 TYPE B EACH	628.7015 TYPE C EACH	628.7020 TYPE D EACH
1A	MARLEY ST, LT	1	1	-	-
2A	MARLEY ST, LT	1	1	-	-
3A	MARLEY ST, RT	1	1	-	-
4A	MARLEY ST, RT	1	-	-	1
4B	MARLEY ST, RT	1	-	1	-
4C	MARLEY ST, LT	1	-	-	1
4D	MARLEY ST, LT	1	-	1	-
5A	MARLEY ST, RT	1	-	1	-
5B	MARLEY ST, LT	1	-	1	-
5C	MARLEY ST, LT	1	1	-	-
5D	FUTURE RD, LT	1	-	1	-
5E	FUTURE RD, RT	1	-	1	-
6A	MARLEY ST, LT	1	1	-	-
6B	MARLEY ST, RT	1	1	-	-
7A	MARLEY ST, RT	1	-	1	-
7B	MARLEY ST, RT	1	-	-	1
7C	MARLEY ST, LT	1	-	1	-
7D	MARLEY ST, LT	1	-	-	1
7E	MARLEY ST, LT	1	-	1	-
7F	MARLEY ST, LT	1	1	-	-
7G	MARLEY ST, RT	1	1	-	-
8	MARLEY ST, RT	1	-	1	-
8A	MARLEY ST, LT	1	-	1	-
9A	MARLEY ST, RT	1	-	1	-
9B	MARLEY ST, LT	1	-	1	-
10A	MARLEY ST, RT	1	-	-	1
10B	MARLEY ST, RT	1	-	1	-
10C	MARLEY ST, LT	1	-	-	1
10D	MARLEY ST, LT	1	-	1	-
10E	MARLEY ST, RT	1	1	-	-
11A	MARLEY ST, RT	1	-	-	1
11B	MARLEY ST, RT	1	-	1	-
11C	MARLEY ST, LT	1	-	-	1
11D	MARLEY ST, LT	1	-	1	-
12A	MARLEY ST, RT	1	1	-	-
14A	MARLEY ST, RT	1	-	-	1
14B	MARLEY ST, RT	1	-	1	-
14C	MARLEY ST, LT	1	-	-	1
14D	MARLEY ST, LT	1	-	1	-
14E	MARLEY ST, RT	1	1	-	-

INLET PROTECTION (CONTINUED)

STRUCTURE NUMBER	LOCATION	628.7005 TYPE A EACH	628.7010 TYPE B EACH	628.7015 TYPE C EACH	628.7020 TYPE D EACH
15A	MARLEY ST, RT	1	-	1	-
15B	MARLEY ST, LT	1	-	1	-
15C	MARLEY ST, RT	1	1	-	-
16A	MARLEY ST, RT	1	1	-	-
17	GLENDALE AVE, RT	1	-	1	-
17A	GLENDALE AVE, LT	1	-	1	-
18A	GLENDALE AVE, RT	1	-	1	-
18B	GLENDALE AVE, RT	1	-	-	1
18C	GLENADALE AVE, LT	1	-	1	-
18D	GLENADALE AVE, LT	1	-	-	1
18E	GLENADALE AVE, RT	1	1	-	-
19A	GLENADALE AVE, RT	1	1	-	-
20A	GLENADALE AVE, RT	1	-	1	-
20B	GLENADALE AVE, LT	1	-	1	-
21	MARLEY ST, LT	1	1	-	-
32	MARLEY ST, RT	1	1	-	-
	TOTALS	56	17	27	12

GEOGRID TYPE SR

STATION	TO	STATION	LOCATION	645.0220 GEOGRID TYPE SR SY	REMARKS
64+95	-	71+15	MARLEY ST	3,650	
71+15	-	77+41	MARLEY ST	4,300	
77+41	-	95+45	MARLEY ST	11,300	
95+45	-	101+00	MARLEY ST	3,550	
201+25	-	204+00	GLENDALE AVE	1,450	
205+75	-	212+50	GLENDALE AVE	3,450	
			TOTALS	27,700	

3

3

TRAFFIC CONTROL SUMMARY

LOCATION	APPROXIMATE SERVICE DAYS	643.0300 TRAFFIC CONTROL DRUMS NO. IN SERVICE	643.0300 TRAFFIC CONTROL DRUMS DAY	643.0420 TRAFFIC CONTROL BARRICADES TYPE III NO. IN SERVICE	643.0420 TRAFFIC CONTROL BARRICADES TYPE III DAY	643.0705 TRAFFIC CONTROL WARNING LIGHTS TYPE A NO. IN SERVICE	643.0705 TRAFFIC CONTROL WARNING LIGHTS TYPE A DAY	643.0900 TRAFFIC CONTROL SIGNS NO. IN SERVICE	643.0900 TRAFFIC CONTROL SIGNS DAY	643.1050 TRAFFIC CONTROL SIGNS PCMS NO. IN SERVICE	643.1050 TRAFFIC CONTROL SIGNS PCMS DAY	643.5000 TRAFFIC CONTROL EACH	603.8000 CONCRETE BARRIER TEMPORARY PRECAST DELIVERED LF	603.8125 CONCRETE BARRIER TEMPORARY PRECAST INSTALLED LF	REMARKS
MARLEY STREET	7	-	-	-	-	-	-	-	-	2	14	1	-	-	ADVANCED WARNING FOR MARLEY STREET CLOSURE
MARLEY STREET/CONNECTION ROAD	180	-	-	2	360	4	720	3	540	-	-	-	-	-	ROAD CLOSED 0.5 MILES AHEAD - SEE BARRICADES AND SIGNS FOR MAINLINE CLOSURES DETAIL C
MARLEY STREET SOUTH LIMITS	180	-	-	2	360	4	720	3	540	-	-	-	-	-	SEE BARRICADES AND SIGNS FOR MAINLINE CLOSURES DETAIL C/E
MARLEY STREET/CTH C	180	-	-	2	360	4	720	1	180	-	-	-	-	-	SEE BARRICADES AND SIGNS FOR MAINLINE CLOSURES DETAIL E
GLENDALE AVE/CTH C	180	-	-	2	360	4	720	1	180	-	-	-	-	-	SEE BARRICADES AND SIGNS FOR MAINLINE CLOSURES DETAIL E
GLENDALE AVE WEST LIMITS	180	-	-	2	360	4	720	3	540	-	-	-	-	-	SEE BARRICADES AND SIGNS FOR SIDEROAD CLOSURES DETAIL 4
CTH C NORTH AND EAST LIMITS	180	-	-	-	-	-	-	2	360	-	-	-	-	-	ROAD WORK AHEAD
CTH C	7	-	-	-	-	-	-	-	-	2	14	-	-	-	ADVANCED WARNING FOR CTH C CLOSURE
CTH C/CTH FF	21	-	-	2	42	4	84	1	21	-	-	-	-	-	ROAD CLOSED 2.5 MILES AHEAD - SEE BARRICADES AND SIGNS FOR MAINLINE CLOSURES DETAIL A
CTH C/GLENDALE AVENUE EAST	21	-	-	2	42	4	84	3	63	-	-	-	-	-	ROAD CLOSED 0.4 MILES AHEAD - SEE BARRICADES AND SIGNS FOR MAINLINE CLOSURES DETAIL C
CTH C EAST LIMITS	21	-	-	2	42	4	84	3	63	-	-	-	-	-	SEE BARRICADES AND SIGNS FOR MAINLINE CLOSURES DETAIL C/E
CTH C NORTH LIMITS	21	-	-	2	42	4	84	1	21	-	-	-	-	-	SEE BARRICADES AND SIGNS FOR MAINLINE CLOSURES DETAIL E
CTH C/MAPLE DRIVE	21	-	-	2	42	4	84	3	63	-	-	-	-	-	SEE BARRICADES AND SIGNS FOR MAINLINE CLOSURES DETAIL C/E
CTH C/CTH U	21	-	-	2	42	4	84	1	21	-	-	-	-	-	ROAD CLOSED 1.7 MILES AHEAD - SEE BARRICADES AND SIGNS FOR MAINLINE CLOSURES DETAIL A
UNDISTRIBUTED	180	25	4,500	-	-	-	-	-	-	-	14	-	25	25	CONCRETE BARRIER INTENDED TO CLOSE ROAD AT HOWARD-PITTSFIELD BOUNDARY
	TOTALS		4,500		2,052		4,104		2,592		42	1	25	25	

PAVEMENT MARKING

STATION	TO	STATION	LOCATION	646.1020 MARKING LINE EPOXY 4-INCH WHITE LF	646.1020 MARKING LINE EPOXY 4-INCH YELLOW LF	646.3020 MARKING LINE EPOXY 8-INCH LF	646.5020 MARKING ARROW EPOXY EACH	646.5120 MARKING WORD EPOXY EACH	646.6120 MARKING STOP LINE EPOXY 18-INCH LF	646.7120 MARKING DIAGONAL EPOXY 12-INCH LF	646.7420 MARKING CROSSWALK EPOXY TRANSVERSE LINE 6-INCH LF	646.8120 MARKING CURB EPOXY LF	646.8220 MARKING ISLAND NOSE EPOXY EACH	REMARKS
65+25	-	68+00	MARLEY ST	550	-	-	-	-	-	-	-	-	-	
68+00	-	74+00	MARLEY ST	1,040	-	125	-	-	-	-	292	40	2	
74+00	-	80+00	MARLEY ST	865	-	250	-	-	-	-	314	20	2	
80+00	-	91+95	MARLEY ST	2,390	-	-	-	-	-	-	-	10	1	
91+95	-	98+00	MARLEY ST	915	1,240	400	4	2	--	40	-	-	-	
98+00	-	101+50	MARLEY ST	610	970	-	-	-	-	50	-	20	2	
201+25	-	204+00	GLENDALE AVE	555	550	100	1	-	-	-	-	-	-	
204+00	-	207+00	GLENDALE AVE	125	410	205	2	1	70	-	289	-	-	INCLUDES ALL CROSSWALK AT INTERSECTION
207+00	-	207+00	GLENDALE AVE	940	1,100	45	1	-	-	-	-	-	-	
			SUBTOTALS	7,990	4,270	1,125	8	3	70	90	895	90	7	
			TOTALS	12,260		1,125	8	3	70	90	895	90	7	

3

3

CONSTRUCTION STAKING

STATION	TO	STATION	LOCATION	650.4000 STORM SEWER EACH	650.4500 SUBGRADE LF	650.5000 BASE LF	650.5500 CURB GUTTER AND CURB & GUTTER LF	650.6000 PIPE CULVERTS EACH	650.9000 CURB RAMPS EACH	650.9910.01 SUPPLEMENTAL CONTROL (9269-00-14) LS	650.9920 SLOPE STAKES LF
64+25	-	71+15	MARLEY ST	11	590	590	2,350	-	3	-	690
71+15	-	77+41	MARLEY ST	17	626	626	2,300	-	6	-	626
77+41	-	95+45	MARLEY ST	31	1804	1,804	6,410	-	5	-	1,804
95+45	-	101+00	MARLEY ST	6	555	555	890	2	1	-	555
201+25	-	204+73	GLENDALE AVE	-	348	348	-	-	-	-	348
205+18	-	212+50	GLENDALE AVE	16	732	732	1,270	-	-	-	732
303+50	-	306+41	CTH C	-	-	-	-	-	-	-	291
400+40	-	413+07	STORM OUTLET	4	-	-	-	-	-	-	1,267
PROJECT				-	-	-	-	-	-	1	-
			TOTALS	85	4,655	4,655	13,220	2	15	1	6,313

SAWING

STATION	LOCATION	690.0150 SAWING ASPHALT LF	690.0250 SAWING CONCRETE LF	REMARKS
64+50	MARLEY ST NB, RT	12	-	
65+25	MARLEY ST	48	5	SOUTH PROJECT LIMITS - MARLEY ST
65+62	MARLEY ST SB, LT	25	-	
69+50	MARLEY ST SB, LT	19	-	
72+25	MARLEY ST NB, RT	29	-	
96+70	MARLEY ST SB, LT	14	-	
97+15	MARLEY ST SB, LT	12	-	
101+00	MARLEY ST NB	24	-	NORTH PROJECT LIMITS - MARLEY ST
201+25	GLENDALE AVE	24	-	WEST PROJECT LIMITS - GLENDALE AVE
203+20	GLENDALE AVE, LT	21	-	
206+50	GLENDALE AVE, RT	20	-	
207+85	GLENDALE AVE, RT	29	-	
209+80	GLENDALE AVE, LT	19	-	
211+45	GLENDALE AVE, LT	17	-	
211+65	GLENDALE AVE, RT	16	-	
212+00	GLENDALE AVE, LT	20	-	
212+50	GLENDALE AVE	24	-	EAST PROJECT LIMITS - GLENDALE AVE
	TOTALS	373	5	

ADJUSTING FIBER OPTIC HANDHOLE

CATEGORY	STATION	LOCATION	SPV.0060.04 EACH
0020	80+67	MARLEY ST, LT	1
0020	94+71	MARLEY ST, LT	1
		TOTAL	2

3

TRANSPORTATION PROJECT PLAT NO: 9269-00-14-4.01 AMENDMENT NO:1 - AMENDS UTILITY NUMBERS 50 AND 51 OF TRANSPORTATION PLAT NO: 9269-00-14-4.01 RECORDED AS DOC. 2944553, IN VOLUME 1 ON PAGE 225

PART OF LOT 1, VOLUME 39, CERTIFIED SURVEY MAPS, PAGE 141, MAP #5946, DOC. NO. 1705394, LOT 2, VOLUME 36, CERTIFIED SURVEY MAPS, PAGE 245, MAP #5545, DOC. NO. 1580135, AND LOT 1, VOLUME 39, CERTIFIED SURVEY MAPS, PAGE 153, MAP #5950, DOC. NO. 1706256, BEING IN PART OF THE SOUTHWEST ¼ OF THE NORTHWEST ¼, IN SECTION 2, AND PART OF LOT 1, VOLUME 37, CERTIFIED SURVEY MAPS, PAGE 95, MAP #5625, DOC. NO. 1605767, AND LOT 1, VOLUME 55, CERTIFIED SURVEY MAPS, PAGE 46, MAP #7936, DOC. NO. 2435434, BEING IN AND INCLUDING PART OF THE SOUTHEAST ¼ OF THE NORTHEAST ¼, IN SECTION 3, T24N, R19E, VILLAGE OF HOWARD, BROWN COUNTY, WISCONSIN.

RELOCATION ORDER - BROWN COUNTY CTH VV - (MILLWOOD COURT TO CTH C)

TO PROPERLY ESTABLISH, LAY OUT, WIDEN, ENLARGE, EXTEND, CONSTRUCT, RECONSTRUCT, IMPROVE, OR MAINTAIN A PORTION OF THE HIGHWAY DESIGNATED ABOVE, BROWN COUNTY DEEMS IT NECESSARY TO RELOCATE OR CHANGE SAID HIGHWAY AND ACQUIRE CERTAIN LANDS AND INTERESTS OR RIGHTS IN LANDS FOR THE ABOVE NAMED PROJECT.

TO EFFECT THIS CHANGE, PURSUANT TO AUTHORITY GRANTED UNDER SECTION 83.07 AND 83.08, WISCONSIN STATUTES, THE COUNTY OF BROWN HEREBY ORDERS THAT:

1. THAT PORTION OF SAID HIGHWAY AS SHOWN ON THIS PLAT IS LAID OUT AND ESTABLISHED TO THE LINES AND WIDTHS AS SO SHOWN FOR THE ABOVE NAMED PROJECT.
2. THE LANDS OR INTERESTS OR RIGHTS IN LANDS AS SHOWN ON THIS PLAT ARE REQUIRED BY THE COUNTY FOR THE ABOVE PROJECT AND SHALL BE ACQUIRED IN THE NAME OF THE BROWN COUNTY, PURSUANT TO THE PROVISIONS OF SECTIONS 83.07 AND 83.08, WISCONSIN STATUTES.

SCHEDULE OF LANDS & INTERESTS REQUIRED

PARCEL NUMBER	OWNER(S)	INTEREST REQUIRED	NEW R/W ACRES	EXISTING R/W ACRES	TOTAL R/W ACRES	PLE ACRES	PLE ACRES (UTILITIES)	TLE ACRES
1	FRANK T. SLEIK III AND MICHELE M. SLEIK	FEE, PLE & TLE	0.144	------	0.144	0.003	------	0.195
2	LEONARD L. MADISON AND EUNICE D. MADISON	FEE, PLE & TLE	0.085	------	0.085	------	0.003	0.092
3	LELAND HILL AND JENNIFER STACHURA	FEE, PLE & TLE	0.058	------	0.058	0.014	0.001	0.053
4	SCOTT D. LOCK AND MICHELLE RAE KORNTVED	FEE, PLE & TLE	0.044	------	0.044	0.007	0.001	0.063
6	DANIEL A. WERNER	FEE, PLE & TLE	0.038	------	0.038	0.005	0.001	0.076
7	JIMIDA 2 LLC	FEE & TLE	0.037	------	0.037	------	------	0.029
8	KENDRA GONNERING	FEE, PLE & TLE	0.025	------	0.025	------	0.001	0.043
9	DEBRA K. FREY	FEE, PLE & TLE	0.029	------	0.029	------	0.001	0.040
10	JERRY GIESE AND DONALEE GIESE	FEE, PLE & TLE	0.021	------	0.021	0.004	------	0.032
11	JERRY GIESE AND DONALEE GIESE	FEE, PLE & TLE	0.024	------	0.024	0.001	------	0.032

OWNER'S NAMES ARE SHOWN FOR REFERENCE PURPOSES ONLY AND ARE SUBJECT TO CHANGE PRIOR TO THE TRANSFER OF LAND INTERESTS TO THE COUNTY.

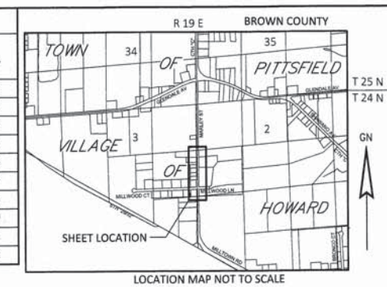

LOCATION MAP NOT TO SCALE

2967855
VOLUME: 1
PAGE: 241
CHERYL BERKEN
BROWN COUNTY
REGISTER OF DEEDS
GREEN BAY, WI
RECORDED ON
07/15/2021 03:45 PM
REC FEE: 25.00
PAGES: 1

RESERVED FOR REGISTER OF DEEDS
PROJECT NUMBER 9269-00-14-4.01
AMENDMENT NO: 1

R/W CURVE TABLE

CURVE	LENGTH	RADIUS	LONG CHORD	LONG CHORD BEARING
C1	18.85'	12.00'	16.97'	N45°11'35"W
C2	18.85'	12.00'	16.97'	N44°47'44"E

0 50 100
SCALE, FEET

POINT TABLE

POINT NAME	Y COORDS	X COORDS
IP 1000	591801.413	59289.806
IP 1001	592138.380	59303.789
IP 1002	592238.455	59303.391
IP 1003	592451.359	59302.782
IP 1004	592649.774	59301.908
IP 1005	592454.355	59367.221
IP 1006	592159.991	59368.402

SEE SHEET 3 OF 3 OF DOC. NO. 2944553 FOR DETAILS OF PLE-UTILITIES AREAS

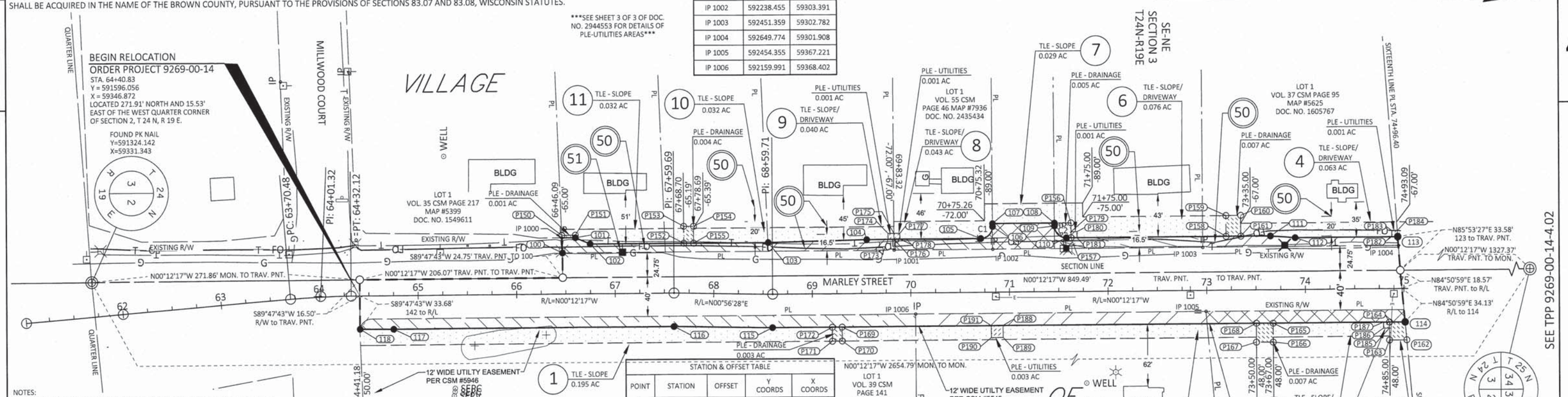

NOTES:
POSITIONS SHOWN ON THIS PLAT ARE WISCONSIN COUNTY COORDINATES, BROWN COUNTY ZONE, NAD83(2011), IN U.S. SURVEY FEET. VALUES ARE GRID COORDINATES, GRID BEARINGS, AND GRID DISTANCES. GRID DISTANCES MAY BE USED AS GROUND DISTANCES.

RIGHT-OF-WAY BOUNDARIES ARE DEFINED WITH COURSES OF THE PERIMETER OF THE HIGHWAY LANDS REFERENCED TO THE U.S. PUBLIC LAND SURVEY SYSTEM OR OTHER "SURVEYS" OF PUBLIC RECORD.

EXISTING HIGHWAY RIGHT-OF-WAY HEREIN IS BASED ON THE FOLLOWING POINTS OF REFERENCE:

EXISTING HIGHWAY RIGHT-OF-WAY FOR MARLEY STREET SHOWN HEREIN BASED ON DEDICATION SHOWN ON VOLUME 39 OF CERTIFIED SURVEY MAPS, ON PAGE 141, MAP NO. 5946, DOCUMENT NO. 1705394, VOLUME 36 OF CERTIFIED SURVEY MAPS, ON PAGE 245, MAP NO. 5545, DOCUMENT NO. 1580135, VOLUME 37 OF CERTIFIED SURVEY MAPS, ON PAGE 95, MAP NO. 5625, DOCUMENT NO. 1605767, AND VOLUME 55 OF CERTIFIED SURVEY MAPS, ON PAGE 46, MAP NO. 7936, DOCUMENT NO. 2435434.

REFER TO THE TITLE SHEET AND ACCOMPANYING SHEET, RECORDED AS SHEETS 2 OF 3 AND 3 OF 3 OF DOC. NO. 2944553 FOR ADDITIONAL INFORMATION.

PI STA = 64+01.32
DELTA = 4°37'02"
D = 7°29'23"
T = 30.84'
L = 61.65'
R = 765.00'
PC STA = 63+70.48
PT STA = 64+32.12

MILLWOOD LANE

STATION & OFFSET TABLE

POINT	STATION	OFFSET	Y COORDS	X COORDS
100	66+46.89 'NB'	-41.25'LT	591801.976	59304.886
IP1000	66+46.38 'NB'	-56.44'LT	591801.409	59289.697
101	66+60.00 'NB'	-56.44'LT	591815.028	59289.649
102	66+75.00 'NB'	-50.00'LT	591830.051	59296.036
103	68+54.62 'NB'	-51.91'LT	592010.689	59295.391
104	69+55.61 'NB'	-54.00'LT	592110.631	59293.035
105	70+71.32 'NB'	-54.00'LT	592226.341	59292.621
106	70+83.32 'NB'	-66.00'LT	592238.298	59280.578
107	70+83.32 'NB'	-69.00'LT	592238.287	59277.578
108	71+46.10 'NB'	-69.00'LT	592301.072	59277.353
109	71+46.10 'NB'	-66.00'LT	592301.083	59280.353
110	71+58.10 'NB'	-54.00'LT	592313.126	59292.310
111	73+65.00 'NB'	-54.00'LT	592520.020	59291.571
112	73+90.00 'NB'	-52.00'LT	592545.027	59293.482
113	74+94.11 'NB'	-52.00'LT	592649.139	59293.110
114	75+00.94 'NB'	34.00'RT	592656.276	59379.085
115	68+59.71 'NB'	34.00'RT	592014.711	59381.377
116	67+60.03 'NB'	34.00'RT	591914.705	59379.734
117	64+74.95 'NB'	34.00'RT	591630.300	59380.750
118	64+40.83 'NB'	33.68'RT	591596.177	59380.550

STATION & OFFSET TABLE

POINT	STATION	OFFSET	Y COORDS	X COORDS
P150	66+46.29 'NB'	-59.00'LT	591801.313	59287.138
P151	66+60.00 'NB'	-59.00'LT	591815.019	59287.089
P152	67+69.00 'NB'	-50.20'LT	591925.047	59295.697
P153	67+68.66 'NB'	-67.19'LT	591924.987	59278.697
P154	67+78.65 'NB'	-67.39'LT	591934.987	59278.661
P155	67+78.99 'NB'	-50.40'LT	591935.047	59295.661
P156	71+63.00 'NB'	-69.00'LT	592317.967	59277.293
P157	71+63.00 'NB'	-54.00'LT	592318.021	59292.293
P158	73+20.00 'NB'	-54.00'LT	592475.020	59291.732
P159	73+20.00 'NB'	-75.00'LT	592474.945	59270.732
P160	73+35.00 'NB'	-75.00'LT	592489.945	59270.679
P161	73+35.00 'NB'	-54.00'LT	592490.020	59291.678
P162	75+02.50 'NB'	52.00'RT	592657.898	59397.080
P163	74+85.00 'NB'	52.00'RT	592640.395	59397.142
P164	74+85.00 'NB'	34.00'RT	592640.331	59379.142
P165	73+67.00 'NB'	34.00'RT	592522.338	59379.564
P166	73+67.00 'NB'	53.00'RT	592522.405	59398.564
P167	73+50.00 'NB'	53.00'RT	592505.407	59398.624
P168	73+50.00 'NB'	34.00'RT	592505.339	59379.624
P169	69+30.00 'NB'	34.00'RT	592085.337	59381.124
P170	69+30.00 'NB'	48.00'RT	592085.387	59395.124
P171	69+20.00 'NB'	48.00'RT	592075.387	59395.160
P172	69+20.00 'NB'	34.00'RT	592075.337	59381.160

STATION & OFFSET TABLE

POINT	STATION	OFFSET	Y COORDS	X COORDS
P173	69+77.32 'NB'	-54.00'LT	592132.341	59292.957
P174	69+77.32 'NB'	-60.00'LT	592132.320	59286.957
P175	69+83.32 'NB'	-60.00'LT	592138.320	59286.936
P176	69+83.32 'NB'	-54.00'LT	592138.341	59292.936
P177	69+89.32 'NB'	-60.00'LT	592144.320	59286.914
P178	69+89.32 'NB'	-54.00'LT	592144.341	59292.914
P179	71+63.00 'NB'	-60.00'LT	592317.999	59286.293
P180	71+69.00 'NB'	-60.00'LT	592323.999	59286.271
P181	71+69.00 'NB'	-54.00'LT	592324.021	59292.271
P182	74+88.11 'NB'	-52.00'LT	592643.141	59293.132
P183	74+88.11 'NB'	-58.00'LT	592643.119	59287.132
P184	74+93.70 'NB'	-58.00'LT	592648.708	59287.112
P185	74+85.00 'NB'	40.00'RT	592640.352	59385.142
P186	74+79.00 'NB'	40.00'RT	592634.352	59385.164
P187	74+79.00 'NB'	34.00'RT	592634.331	59379.164
P188	70+93.22 'NB'	34.00'RT	592248.552	59380.542
P189	70+93.22 'NB'	46.00'RT	592248.595	59392.541
P190	70+81.22 'NB'	46.00'RT	592236.595	59392.584
P191	70+81.22 'NB'	34.00'RT	592236.552	59380.584

SCHEDULE OF UTILITIES & INTERESTS REQUIRED

UTILITY NUMBER	OWNER(S)	INTEREST REQUIRED
50	NSIGHT	RELEASE
51	WISCONSIN PUBLIC SERVICE - ELECTRIC	RELEASE

R/W COURSE TABLE

COURSE	BEARING	DISTANCE	COURSE	BEARING	DISTANCE
100-IP1000	S87° 51' 47"W	15.20'	108-109	N89° 47' 42"E	3.00'
IP1000-101	N00° 12' 17"W	13.62'	109-110	SEE CURVE C2	
101-102	N23° 02' 00"E	16.32'	110-111	N00° 12' 17"W	206.90'
102-103	N00° 12' 17"W	180.64'	111-112	N04° 22' 11"E	25.08'
103-104	N01° 21' 02"W	99.97'	112-113	N00° 12' 17"W	104.11'
104-105	N00° 12' 17"W	115.71'	114-115	S00° 12' 17"E	641.57'
105-106	SEE CURVE C1		115-116	S00° 56' 28"W	100.02'
106-107	S89° 47' 42"W	3.01'	116-117	S00° 12' 17"E	284.41'
107-108	N00° 12' 17"W	62.79'	117-118	S00° 20' 06"W	34.12'

50 NSIGHT
VOL. 1121, PG. 278, DOC. NO. 812272 - PARCELS 10 & 11
VOL. 1121, PG. 279, DOC. NO. 812273 JACKET 16176, IMAGE 22, DOC. NO. 1227804 - PARCEL 9
VOL. 1121, PG. 273, DOC. NO. 812267 - PARCEL 8
JACKET 16176, IMAGE 21, DOC. NO. 1227803 -PARCELS 7 & 8
VOL. 1121, PG. 274, DOC. NO. 812268 -PARCEL 7
VOL. 1121, PG. 293, DOC. NO. 812287 JACKET 16177, IMAGE 01, DOC. NO. 1227820 - PARCEL 6
VOL. 1121, PG. 274, DOC. NO. 812268 JACKET 16176, IMAGE 44, DOC. NO. 1227819 - PARCEL 4

51 WISCONSIN PUBLIC SERVICE
NO RECORD EASEMENT - PARCEL 11

WISCONSIN JACOB S. JENSEN S-2961 SURING, WI LAND SURVEYOR

I, JACOB S. JENSEN, PROFESSIONAL LAND SURVEYOR, HEREBY CERTIFY THAT IN FULL COMPLIANCE WITH THE PROVISIONS OF SECTION 84.095 OF THE WISCONSIN STATUTES AND UNDER THE DIRECTION OF THE COUNTY OF BROWN, I HAVE SURVEYED AND MAPPED THIS TRANSPORTATION PROJECT PLAT 9269-00-14-4.01 AMENDMENT NO:1 AND THAT SUCH PLAT CORRECTLY REPRESENTS ALL EXTERIOR BOUNDARIES OF THE SURVEYED LAND.

JACOB S. JENSEN — JUNE 28, 2021 DATE
REGISTRATION NUMBER: S-2961

THIS PLAT AND RELOCATION ORDER ARE APPROVED FOR THE VILLAGE OF HOWARD.

AYRES

MICHAEL L. PASTER, P.E. — 6/30/21 DATE
DIRECTOR OF ENGINEERING

FILE NAME : I:\45\450490 MARLEY STREET\C3D\RW\4.01.DWG
APPRAISAL PLAT DATE : _____
PLOT DATE : JANUARY 22, 2021 PLOT BY : JENSEN, JACOB PLOT NAME : PLOT SCALE : 1"=100'
4.01 9269-00-14-4.01

BROWN COUNTY HIGHWAY DEPARTMENT
TRANSPORTATION PROJECT PLAT TITLE SHEET

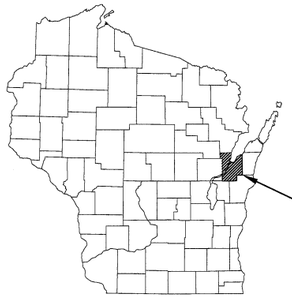

PROJECT LOCATION

PROJECT NO. 9269-00-14

MILLWOOD COURT - CTH C

CTH VV
BROWN COUNTY

END PROJECT
STA. 98+96.53
Y = 595051.498
X = 59329.925
LOCATED 1580.78' SOUTH AND 3.37' WEST OF THE WEST QUARTER CORNER OF SECTION 35, T 25 N, R 19 E.

R 19 E

R 20 E

T 25 N

T 24 N

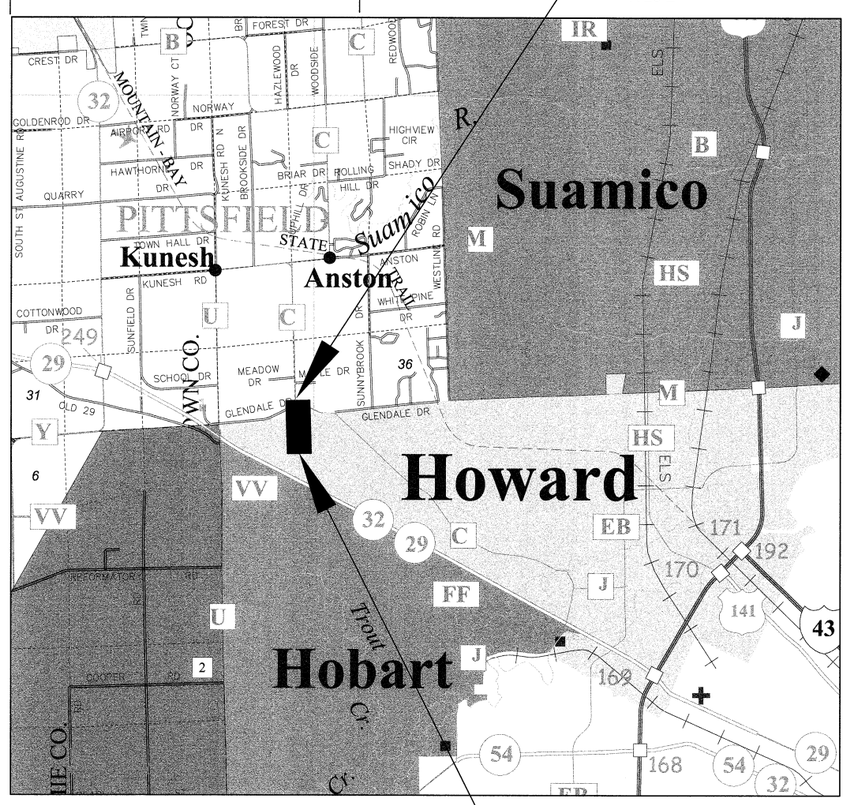

BEGIN PROJECT
STA . 64+40.83
Y = 591596.056
X = 59346.872
LOCATED 271.91' NORTH AND 15.53' EAST OF THE WEST QUARTER CORNER OF SECTION 2, T 24 N, R 19 E.

LAYOUT
SCALE 0 2.0 MI

GN

CONVENTIONAL SYMBOLS

SECTION LINE
QUARTER LINE
SIXTEENTH LINE
NEW REFERENCE LINE
NEW R/W LINE
EXISTING R/W LINE
PROPERTY LINE
LOT, TIE & OTHER MINOR LINES
CORPORATE LIMITS
UNDERGROUND FACILITY (COMMUNICATIONS, ELECTRIC, ETC) — W (TYPE)
FEE ACQUISITION AREA (HATCHING VARIES BY OWNER)
TEMPORARY LIMITED EASEMENT AREA
EASEMENT AREA (HIGHWAY, PERMANENT LIMITED, OR RESTRICTED DEVELOPMENT)
TRANSMISSION STRUCTURES
BUILDING
GEODETIC SURVEY MONUMENT
SIXTEENTH CORNER MONUMENT

SECTION CORNER
NOTATION FOR COMBUSTABLE FLUIDS — CAUTION
NOTATION FOR HIGH VOLTAGE TRANSMISSION LINES — CAUTION
BRIDGE

R/W MONUMENT
NON-MONUMENTED R/W POINT
FOUND IRON PIN
VALVE (GAS, WATER, ETC.) — (TYPE)
SIGN
OFF-PREMISE SIGN — I-25 — SIGN
PARCEL NUMBER — 25
UTILITY NUMBER — 40

	COMPENSABLE	NON-COMPENSABLE
ELECTRIC POLE		
TELEPHONE POLE		
PEDESTAL (LABEL TYPE) (TV, TEL, ELEC, ETC.)		

ACCESS CONTROLLED BY ACQUISITION
NO ACCESS (BY STATUTORY AUTHORITY)
ACCESS RESTRICTED (BY PREVIOUS PROJECT OR CONTROL)
NEW ACCESS (NEW HIGHWAY)

CONVENTIONAL ABBREVIATIONS

ACCESS RIGHTS	AR	POINT OF COMPOUND CURVE	PCC
ACRES	AC	POINT OF INTERSECTION	PI
AHEAD	AH	POINT OF BEGINNING	POB
ALUMINUM	ALUM	POINT OF CURVATURE	PC
AND OTHERS	ET AL	PROPERTY LINE	PL
BACK	BK	RECORDED AS	(100')
BLOCK	BLK	REFERENCE LINE	R/L
BUILDING	BLDG	REMAINING	REM
CENTERLINE	C/L	RIGHT	RT
CERTIFIED SURVEY MAP	CSM	RIGHT OF WAY	R/W
CONCRETE	CONC	SECTION	SEC
COUNTY	CO	SEPTIC VENT	SEPV
COUNTY TRUNK HIGHWAY	CTH	SQUARE FEET	SF
DISTANCE	DIST	STATE TRUNK HIGHWAY	STH
CORNER	COR	STATION	STA
DOCUMENT NUMBER	DOC	SUBDIVISION	SUBD
EASEMENT	EASE	TANGENT	TAN
EXISTING	EX	TELEPHONE PEDESTAL	TP
GAS VALVE	GV	TEMPORARY LIMITED EASEMENT	TLE
GRID NORTH	GN	TRANSPORTATION PROJECT PLAT	TPP
HIGHWAY EASEMENT	HE	UNITED STATES HIGHWAY	USH
HOUSE	HSE	VOLUME	V
IDENTIFICATION	ID		
LAND CONTRACT	LC		
LEFT	LT		
MONUMENT	MON		
NATIONAL GEODETIC SURVEY	NGS		
NUMBER	NO		
OUTLOT	OL		
PAGE	P		
POINT OF TANGENCY	PT		
PERMANENT LIMITED EASEMENT	PLE		

CURVE DATA

LONG CHORD	LC
LONG CHORD BEARING	LCB
RADIUS	R
DEGREE OF CURVE	D
CENTRAL ANGLE OR DELTA	
LENGTH OF CURVE	L
TANGENT	T
DIRECTION AHEAD	DA
DIRECTION BACK	DB

CONVENTIONAL UTILITY SYMBOLS

WATER	W
GAS	G
TELEPHONE	T
OVERHEAD TRANSMISSION LINES	OH
ELECTRIC	E
CABLE TELEVISION	TV
FIBER OPTIC	FO
SANITARY SEWER	SAN
STORM SEWER	SS

NOTES:
POSITIONS SHOWN ON THIS PLAT ARE WISCONSIN COUNTY COORDINATES, BROWN, NAD83 (2011). IN THE U.S. SURVEY FEET. VALUES SHOWN ARE GRID COORDINATES, GRID BEARINGS, AND GRID DISTANCES. GRID DISTANCES MAY BE USED AS GROUND DISTANCES.

ALL NEW RIGHT-OF-WAY MONUMENTS WILL BE TYPE 2 (TYPICALLY 3/4" X 24" CAPPED IRON REBAR), UNLESS OTHERWISE NOTED, AND WILL BE PLACED PRIOR TO THE COMPLETION OF THE PROJECT.

ALL RIGHT-OF-WAY LINES DEPICTED IN THE NON-ACQUISITION AREAS ARE INTENDED TO RE-ESTABLISH EXISTING RIGHT-OF-WAY LINES AS DETERMINED FROM PREVIOUS PROJECTS, OTHER RECORDED DOCUMENTS, OR FROM CENTERLINE OF EXISTING PAVEMENTS.

RIGHT-OF-WAY BOUNDARIES ARE DEFINED WITH COURSES OF THE PERIMETER OF THE HIGHWAY LANDS REFERENCED TO THE U.S. PUBLIC LAND SURVEY SYSTEM OR OTHER "SURVEYS" OF PUBLIC RECORD.

EXISTING ACCESS CONTROL ALONG MARLEY STREET

FOR CURRENT ACCESS CONTROL INFORMATION CONTACT BROWN COUNTY.

PARCEL IDENTIFICATION NUMBERS MAY NOT POINT TO ALL AREAS OF ACQUISITION, AS NOTED ON THE SCHEDULE OF LANDS & INTERESTS REQUIRED.

DIMENSIONING FOR THE NEW RIGHT-OF-WAY IS MEASURED ALONG AND PERPENDICULAR TO THE NEW REFERENCE LINES.

A TEMPORARY LIMITED EASEMENT (TLE)IS A RIGHT FOR CONSTRUCTION PURPOSES, AS DEFINED HEREIN, INCLUDING THE RIGHT TO OPERATE NECESSARY EQUIPMENT THEREON, THE RIGHT OF INGRESS AND EGRESS, AS LONG AS REQUIRED FOR SUCH PUBLIC PURPOSE, INCLUDING THE RIGHT TO PRESERVE, PROTECT, REMOVE, OR PLANT THEREON ANY VEGETATION THAT THE HIGHWAY AUTHORITIES MAY DEEM DESIRABLE. ALL (TLEs) ON THIS PLAT EXPIRE AT THE COMPLETION OF THE CONSTRUCTION PROJECT FOR WHICH THIS INSTRUMENT IS GIVEN.

A PERMANENT LIMITED EASEMENT (PLE) FOR THE RIGHT TO CONSTRUCT AND MAINTAIN STORM SEWER, INCLUDING FOR SUCH PURPOSE THE RIGHT TO OPERATE THE NECESSARY EQUIPMENT THEREON AND THE RIGHT OF INGRESS AND EGRESS AS LONG AS REQUIRED FOR SUCH PUBLIC PURPOSE, INCLUDING THE RIGHT TO PRESERVE, PROTECT, REMOVE OR PLANT THEREON ANY VEGETATION THAT THE HIGHWAY AUTHORITIES MAY DEEM NECESSARY TO DESIRABLE, BUT WITHOUT PREJUDICE TO THE OWNER'S RIGHT TO MAKE OR CONSTRUCT IMPROVEMENTS ON SAID LANDS OR TO FLATTEN THE SLOPES, PROVIDING SAID ACTIVITIES WILL NOT IMPAIR OR OTHERWISE ADVERSELY AFFECT THE HIGHWAY FACILITIES WITHIN THE RIGHT OF WAY.

A PERMANENT LIMITED EASEMENT (PLE) FOR THE RIGHT TO CONSTRUCT, INSTALL, OPERATE, MAINTAIN, REPAIR, REPLACE, REMOVE AND EXTEND UNDERGROUND UTILITY FACILITIES NEEDED FOR ELECTRIC, GAS, AND COMMUNICATION PURPOSES, INCLUDING FOR SUCH PURPOSE THE RIGHT TO OPERATE THE NECESSARY EQUIPMENT THEREON AND THE RIGHT OF INGRESS AND EGRESS AS LONG AS REQUIRED FOR SUCH PUBLIC PURPOSE, INCLUDING THE RIGHT TO PRESERVE, PROTECT, REMOVE OR PLANT THEREON ANY VEGETATION THAT THE UTILITY AUTHORITIES MAY DEEM NECESSARY TO DESIRABLE, BUT WITHOUT PREJUDICE TO THE OWNER'S RIGHT TO MAKE OR CONSTRUCT IMPROVEMENTS ON SAID LANDS OR TO FLATTEN THE SLOPES, PROVIDING SAID ACTIVITIES WILL NOT IMPAIR OR OTHERWISE ADVERSELY AFFECT THE UTILITY FACILITIES WITHIN THE EASEMENT.

PROPERTY LINES SHOWN ON THIS PLAT ARE DRAWN FROM DATA DERIVED FROM MAPS AND DOCUMENTS OF PUBLIC RECORD AND/OR EXISTING OCCUPATIONAL LINES. THIS PLAT MAY NOT BE A TRUE REPRESENTATION OF EXISTING PROPERTY LINES, EXCLUDING RIGHT-OF-WAY, AND SHOULD NOT BE USED AS A SUBSTITUTE FOR AN ACCURATE FIELD SURVEY.

EXISTING HIGHWAY RIGHT-OF-WAY HEREIN IS BASED ON THE FOLLOWING POINTS OF REFERENCE:

EXISTING HIGHWAY RIGHT-OF-WAY FOR MARLEY STREET SHOWN HEREIN BASED ON DEDICATION SHOWN ON VOLUME 39 OF CERTIFIED SURVEY MAPS, ON PAGE 141, MAP NO. 5946, DOCUMENT NO. 1705394, VOLUME 36 OF CERTIFIED SURVEY MAPS, ON PAGE 245, MAP NO. 5545, DOCUMENT NO. 1580135, VOLUME 37 OF CERTIFIED SURVEY MAPS, ON PAGE 95, MAP NO. 5625, DOCUMENT NO. 1605767, AND VOLUME 55 OF CERTIFIED SURVEY MAPS, ON PAGE 46, MAP NO. 7936, DOCUMENT NO. 2435434.

EXISTING HIGHWAY RIGHT-OF-WAY FOR GLENDALE AVENUE SHOWN HEREIN BASED ON DEDICATION SHOWN ON VOLUME 44 OF CERTIFIED SURVEY MAPS, ON PAGE 205, DOCUMENT NO. 1925185, VOLUME 40 OF CERTIFIED SURVEY MAPS, ON PAGE 265, DOCUMENT NO. 1749287 AND VOLUME 56 OF CERTIFIED SURVEY MAPS, ON PAGE 279, DOCUMENT NO. 2528885.

PROJECT NUMBER 9269-00-14-4.01
SHEET 2 OF 3
AMENDMENT NO:

TRANSPORTATION PROJECT PLAT NO: 9269-00-14-4.01
EXTENSION SHEET

RELOCATION ORDER - BROWN COUNTY CTH VV - (MILLWOOD COURT TO CTH C)

GN

NOTES:
POSITIONS SHOWN ON THIS PLAT ARE WISCONSIN COUNTY COORDINATES, BROWN COUNTY ZONE, NAD83(2011), IN U.S. SURVEY FEET. VALUES ARE GRID COORDINATES, GRID BEARINGS, AND GRID DISTANCES. GRID DISTANCES MAY BE USED AS GROUND DISTANCES.

4

PARCEL 9 PLE FOR UTILITIES TABLE		
COURSE	BEARING	DISTANCE
104-P173	N00° 12' 17"W	21.71'
P173-P174	S89° 47' 43"W	6.00'
P174-P175	N00° 12' 17"W	6.00'
P175-P176	N89° 47' 43"E	6.00'
P176-P173	S00° 12' 17"E	6.00'

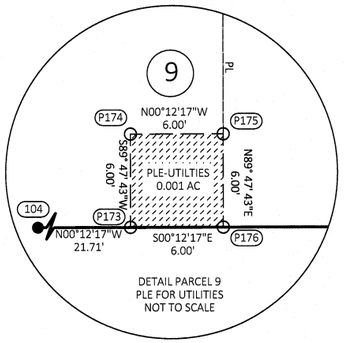

DETAIL PARCEL 9
PLE FOR UTILITIES
NOT TO SCALE

PARCEL 8 PLE FOR UTILITIES TABLE		
COURSE	BEARING	DISTANCE
104-P176	N00° 12' 17"W	27.71'
P176-P175	S89° 47' 43"W	6.00'
P175-P177	N00° 12' 17"W	6.00'
P177-P178	N89° 47' 43"E	6.00'
P178-P176	S00° 12' 17"E	6.00'

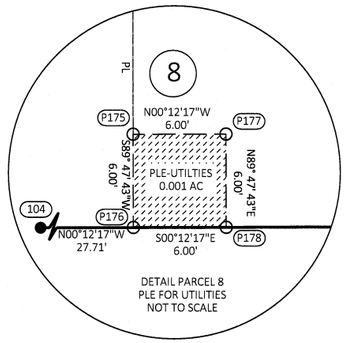

DETAIL PARCEL 8
PLE FOR UTILITIES
NOT TO SCALE

PARCEL 6 PLE FOR UTILITIES TABLE		
COURSE	BEARING	DISTANCE
110-P157	N00° 12' 17"W	4.90'
P157-P179	S89° 47' 43"W	6.00'
P179-P180	N00° 12' 17"W	6.00'
P180-P181	N89° 47' 43"E	6.00'
P181-P157	S00° 12' 17"E	6.00'

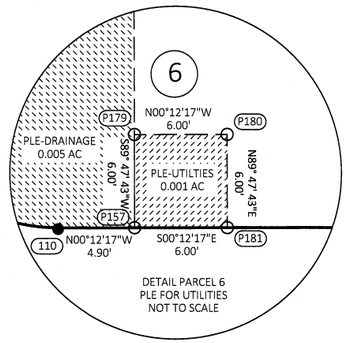

DETAIL PARCEL 6
PLE FOR UTILITIES
NOT TO SCALE

PARCEL 4 PLE FOR UTILITIES TABLE		
COURSE	BEARING	DISTANCE
113-P182	S00° 12' 17"E	6.00'
P182-P183	S89° 47' 43"W	6.00'
P183-P184	N00° 12' 17"W	5.59'
P184-113	N85° 53'27"E	6.01'

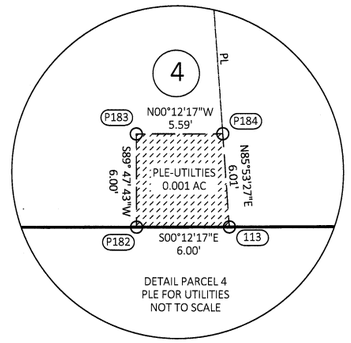

DETAIL PARCEL 4
PLE FOR UTILITIES
NOT TO SCALE

PARCEL 3 PLE FOR UTILITIES TABLE		
COURSE	BEARING	DISTANCE
114-P164	S00° 12' 17"E	15.95'
P164-P185	N89° 47' 43"E	6.00'
P185-P186	S00° 12' 17"E	6.00'
P186-P187	S89° 47' 43"W	6.00'
P187-P164	N00° 12' 17"W	6.00'

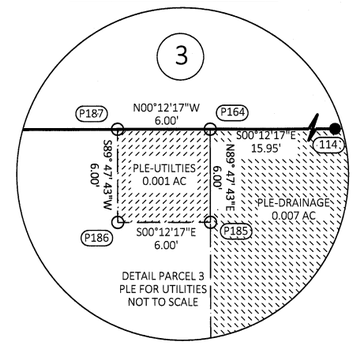

DETAIL PARCEL 3
PLE FOR UTILITIES
NOT TO SCALE

PARCEL 2 PLE FOR UTILITIES TABLE		
COURSE	BEARING	DISTANCE
114-P188	S00° 12' 17"E	407.73'
P188-P189	N89° 47' 43"E	12.00'
P189-P190	S00° 12' 17"E	12.00'
P190-P191	S89° 47' 43"W	12.00'
P191-P188	N00° 12' 17"W	12.00'

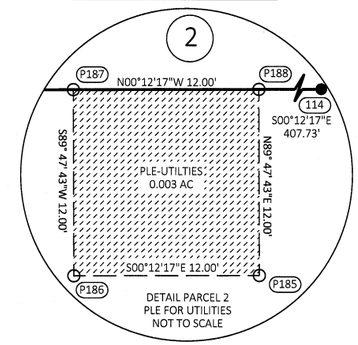

DETAIL PARCEL 2
PLE FOR UTILITIES
NOT TO SCALE

4

STATION & OFFSET TABLE				
POINT	STATION	OFFSET	Y COORDS	X COORDS
100	66+46.89 'NB'	-41.25'LT	591801.976	59304.886
IP1000	66+46.38 'NB'	-56.44'LT	591801.409	59289.697
101	66+60.00 'NB'	-56.44'LT	591815.028	59289.649
102	66+75.00 'NB'	-50.00'LT	591830.051	59296.036
103	68+54.62 'NB'	-51.91'LT	592010.689	59295.391
104	69+55.61 'NB'	-54.00'LT	592110.631	59293.035
105	70+71.32 'NB'	-54.00'LT	592226.341	59292.621
106	70+83.32 'NB'	-66.00'LT	592238.298	59280.578
107	70+83.32 'NB'	-69.00'LT	592238.287	59277.578
108	71+46.10 'NB'	-69.00'LT	592301.072	59277.353
109	71+46.10 'NB'	-66.00'LT	592301.083	59280.353
110	71+58.10 'NB'	-54.00'LT	592313.126	59292.310
111	73+65.00 'NB'	-54.00'LT	592520.020	59291.571
112	73+90.00 'NB'	-52.00'LT	592545.027	59293.482
113	74+94.11 'NB'	-52.00'LT	592649.139	59293.110
114	75+00.94 'NB'	34.00'RT	592656.276	59379.085
115	68+59.71 'NB'	34.00'RT	592014.711	59381.377
116	67+60.03 'NB'	34.00'RT	591914.705	59379.734
117	64+74.95 'NB'	34.00'RT	591630.300	59380.750
118	64+40.83 'NB'	33.68'RT	591596.177	59380.550

STATION & OFFSET TABLE				
POINT	STATION	OFFSET	Y COORDS	X COORDS
P150	66+46.29 'NB'	-59.00'LT	591801.313	59287.138
P151	66+60.00 'NB'	-59.00'LT	591815.019	59287.089
P152	67+69.00 'NB'	-50.20'LT	591925.047	59295.697
P153	67+68.66 'NB'	-67.19'LT	591924.987	59278.697
P154	67+78.65 'NB'	-67.39'LT	591934.987	59278.661
P155	67+78.99 'NB'	-50.40'LT	591935.047	59295.661
P156	71+63.00 'NB'	-69.00'LT	592317.967	59277.293
P157	71+63.00 'NB'	-54.00'LT	592318.021	59292.293
P158	73+20.00 'NB'	-54.00'LT	592475.020	59291.732
P159	73+20.00 'NB'	-75.00'LT	592474.945	59270.732
P160	73+35.00 'NB'	-75.00'LT	592489.945	59270.679
P161	73+35.00 'NB'	-54.00'LT	592490.020	59291.678
P162	75+02.50 'NB'	52.00'RT	592657.898	59397.080
P163	74+85.00 'NB'	52.00'RT	592640.395	59397.142
P164	74+85.00 'NB'	34.00'RT	592640.331	59379.142
P165	73+67.00 'NB'	34.00'RT	592522.338	59379.564
P166	73+67.00 'NB'	53.00'RT	592522.405	59398.564
P167	73+50.00 'NB'	53.00'RT	592505.407	59398.624
P168	73+50.00 'NB'	34.00'RT	592505.339	59379.624
P169	69+30.00 'NB'	34.00'RT	592085.337	59381.124
P170	69+30.00 'NB'	48.00'RT	592085.387	59395.124
P171	69+20.00 'NB'	48.00'RT	592075.387	59395.160
P172	69+20.00 'NB'	34.00'RT	592075.337	59381.160

STATION & OFFSET TABLE				
POINT	STATION	OFFSET	Y COORDS	X COORDS
P173	69+77.32 'NB'	-54.00'LT	592132.341	59292.957
P174	69+77.32 'NB'	-60.00'LT	592132.320	59286.957
P175	69+83.32 'NB'	-60.00'LT	592138.320	59286.936
P176	69+83.32 'NB'	-54.00'LT	592138.341	59292.936
P177	69+89.32 'NB'	-60.00'LT	592144.320	59286.914
P178	69+89.32 'NB'	-54.00'LT	592144.341	59292.914
P179	71+63.00 'NB'	-60.00'LT	592317.999	59286.293
P180	71+69.00 'NB'	-60.00'LT	592323.999	59286.271
P181	71+69.00 'NB'	-54.00'LT	592324.021	59292.271
P182	74+88.11 'NB'	-52.00'LT	592643.141	59293.132
P183	74+88.11 'NB'	-58.00'LT	592643.119	59287.132
P184	74+93.70 'NB'	-58.00'LT	592648.708	59287.112
P185	74+85.00 'NB'	40.00'RT	592640.352	59385.142
P186	74+79.00 'NB'	40.00'RT	592634.352	59385.164
P187	74+79.00 'NB'	34.00'RT	592634.331	59379.164
P188	70+93.22 'NB'	34.00'RT	592248.552	59380.542
P189	70+93.22 'NB'	46.00'RT	592248.595	59392.541
P190	70+81.22 'NB'	46.00'RT	592236.595	59392.584
P191	70+81.22 'NB'	34.00'RT	592236.552	59380.584

R/W CURVE TABLE				
CURVE	LENGTH	RADIUS	LONG CHORD	LONG CHORD BEARING
C1	18.85'	12.00'	16.97'	N45°11'35"W
C2	18.85'	12.00'	16.97'	N44°47'44"E

PARCEL 4 PLE TABLE		
COURSE	BEARING	DISTANCE
110-P158	N00° 12' 17"W	161.90'
P158-P159	S89° 47' 43"W	21.00'
P159-P160	N00° 12' 17"W	15.00'
P160-P161	N89° 47' 43"E	21.00'
P161-P158	S00° 12' 17"E	15.00'

PARCEL 3 PLE TABLE			PARCEL 3 PLE TABLE		
COURSE	BEARING	DISTANCE	COURSE	BEARING	DISTANCE
114-P162	N84°50'59"E	18.07'	114-P165	S00° 12' 17"E	133.94'
P162-P163	S00° 12' 17"E	17.50'	P165-P166	N89° 47' 43"E	19.00'
P163-P164	S89° 47' 43"W	18.00'	P166-P167	S00° 12' 17"E	17.00'
P164-114	N00° 12' 17"W	15.95'	P167-P168	S89° 47' 43"W	19.00'
			P168-P165	N00° 12' 17"W	17.00'

PARCEL 2 PLE TABLE		
COURSE	BEARING	DISTANCE
114-P169	S00° 12' 17"E	570.94'
P169-P170	N89° 47' 43"E	14.00'
P170-P171	S00° 12' 17"E	10.00'
P171-P172	S89° 47' 43"W	14.00'
P172-P169	N00° 12' 17"W	10.00'

PARCEL 6 PLE TABLE		
COURSE	BEARING	DISTANCE
108-P156	N00° 12' 17"W	16.89'
P156-P157	N89° 47' 43"E	15.00'
P157-110	S00° 12' 17"E	4.90'
110-109	SEE CURVE C2	
109-108	S89° 51' 58"W	3.00'

PARCEL 10 PLE TABLE		
COURSE	BEARING	DISTANCE
102-P152	N00°12'17"W	95.00'
P152-P153	S89° 47' 43"W	17.00'
P153-P154	N00° 12' 17"W	10.00'
P154-P155	N89° 47' 43"E	17.00'
P155-P152	S00° 12' 17"E	10.00'

PARCEL 11 PLE TABLE		
COURSE	BEARING	DISTANCE
100-IP1000	S87° 51' 47"W	15.20'
IP1000-P150	S87° 51' 47"W	2.56'
P150-P151	N00° 12' 17"W	13.71'
P151-101	N89° 47' 43"E	2.56'
101-IP1000	S00° 12' 17"E	13.62'

AYRES

REFER TO THE TITLE SHEET, RECORDED AS SHEET 2 OF 3 OF THIS DOCUMENT FOR ADDITIONAL INFORMATION.

PROJECT NUMBER 9269-00-14-4.01
SHEET 3 OF 3
AMENDMENT NO:

FILE NAME : I:\45\450490 MARLEY STREET\C3D\RW\4.01.DWG
APPRAISAL PLAT DATE : _____

PLOT DATE : JANUARY 22, 2021 PLOT BY : BOSTEDT, JILL PLOT NAME : PLOT SCALE : 1"=100'

_____

TRANSPORTATION PROJECT PLAT NO: 9269-00-14-4.02 AMENDMENT NO:1 - AMENDS PARCEL 12 OF TRANSPORTATION PLAT NO: 9269-00-14-4.02 RECORDED AS DOC. 2945073, IN VOLUME 1 ON PAGE 228

BEING IN AND INCLUDING PART OF THE NORTHWEST ¼ OF THE NORTHWEST ¼, IN SECTION 2, AND BEING IN AND INCLUDING PART OF THE NORTHEAST ¼ OF THE NORTHEAST ¼, IN SECTION 3, T24N, R19E, VILLAGE OF HOWARD, BROWN COUNTY, WISCONSIN.

RELOCATION ORDER - BROWN COUNTY CTH VV - (MILLWOOD COURT TO CTH C)

TO PROPERLY ESTABLISH, LAY OUT, WIDEN, ENLARGE, EXTEND, CONSTRUCT, RECONSTRUCT, IMPROVE, OR MAINTAIN A PORTION OF THE HIGHWAY DESIGNATED ABOVE, VILLAGE OF HOWARD DEEMS IT NECESSARY TO RELOCATE OR CHANGE SAID HIGHWAY AND ACQUIRE CERTAIN LANDS AND INTERESTS OR RIGHTS IN LANDS FOR THE ABOVE NAMED PROJECT.

TO EFFECT THIS CHANGE, PURSUANT TO AUTHORITY GRANTED UNDER SECTION 61.34 (3), (3M), AND 61.36, WISCONSIN STATUTES, THE VILLAGE OF HOWARD HEREBY ORDERS THAT:

1. THAT PORTION OF SAID HIGHWAY AS SHOWN ON THIS PLAT IS LAID OUT AND ESTABLISHED TO THE LINES AND WIDTHS AS SO SHOWN FOR THE ABOVE NAMED PROJECT.
2. THE LANDS OR INTERESTS OR RIGHTS IN LANDS AS SHOWN ON THIS PLAT ARE REQUIRED BY THE COUNTY FOR THE ABOVE PROJECT AND SHALL BE ACQUIRED IN THE NAME OF THE VILLAGE OF HOWARD, PURSUANT TO THE PROVISIONS OF SECTIONS 61.34 (3), (3M), AND 61.36, WISCONSIN STATUTES.

SCHEDULE OF LANDS & INTERESTS REQUIRED

PARCEL NUMBER	OWNER(S)	INTEREST REQUIRED	NEW R/W ACRES	EXISTING R/W ACRES	TOTAL R/W ACRES	PLE ACRES	PLE ACRES (UTILITIES)	TLE ACRES
12	VILLAGE OF HOWARD	FEE, PLE & TLE	0.680	------	0.680	1.181	0.350	2.200
13	ROBERT L. VANDER VELDEN AND BEVERLY J. VANDER VELDEN	FEE, PLE & TLE	0.364	------	0364	0.009	------	0.547
14	ROBERT L. VANDER VELDEN AND BEVERLY J. VANDER VELDEN REVOCABLE TRUST	FEE, PLE & TLE	0.027	------	0.027	------	0.001	0.035

OWNER'S NAMES ARE SHOWN FOR REFERENCE PURPOSES ONLY AND ARE SUBJECT TO CHANGE PRIOR TO THE TRANSFER OF LAND INTERESTS TO THE COUNTY.

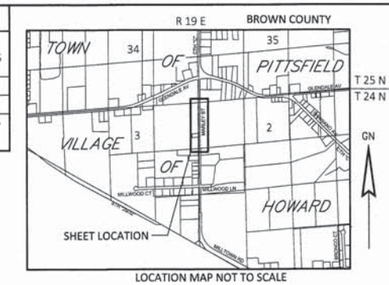

LOCATION MAP NOT TO SCALE

2967856
VOLUME: 1
PAGE: 242
CHERYL BERKEN
BROWN COUNTY
REGISTER OF DEEDS
GREEN BAY, WI
RECORDED ON
07/15/2021 03:45 PM
REC FEE: 25.00
PAGES: 1

RESERVED FOR REGISTER OF DEEDS
PROJECT NUMBER 9269-00-14-4.02
AMENDMENT NO: 1

R/W CURVE TABLE

CURVE	LENGTH	RADIUS	LONG CHORD	LONG CHORD BEARING
C3	43.35'	27.00'	38.84'	N44°12'27"W
C4	18.85'	12.00'	16.97'	N44°47'43"E
C5	43.35'	27.00'	38.84'	S44°12'29"E
C6	50.33'	32.00'	45.30'	S44°51'17"W
C7	24.88'	15.00'	22.12'	S42°41'41"E
C8	31.46'	20.00'	28.31'	S44°51'17"W

PARCEL 13 PLE TABLE

COURSE	BEARING	DISTANCE
200-P250	N00° 12' 17"W	50.89'
P250-P251	S89° 47' 43"W	15.00'
P251-P252	N00° 12' 17"W	10.00'
P252-P253	N89° 47' 43"E	15.00'
P253-P250	S00° 12' 17"E	10.00'

PARCEL 14 PLE FOR UTILITIES TABLE

COURSE	BEARING	DISTANCE
206-P268	N00° 12' 17"W	143.12'
P268-P269	S89° 47' 43"W	6.00'
P269-P270	N00° 12' 17"W	5.59'
P270-P271	N85°53'27"E	6.01'
P271-P268	S00° 12' 17"E	6.00'

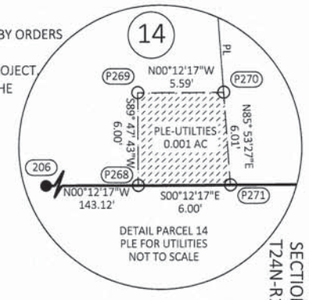

PARCEL 12 PLE TABLE

COURSE	BEARING	DISTANCE
216-P265	N00° 12' 17"W	40.15'
P265-P266	N84° 50' 57"E	1276.59'
P266-P267	S01° 00' 57"E	40.11'
P267-216	S84° 50' 59"W	1277.16'

PARCEL 13 PLE TABLE

COURSE	BEARING	DISTANCE
P254-P255	S89° 47' 43"W	18.00'
P255-P256	N00° 12' 17"W	15.13'
P256-207	N85° 53' 51"E	18.04'
207-P254	S00° 12' 17"E	16.36'

SCHEDULE OF UTILITIES & INTERESTS REQUIRED

UTILITY NUMBER	OWNER(S)	INTEREST REQUIRED
50	NSIGHT	RELEASE
55	GREEN BAY METROPOLITAN SEWERAGE DISTRICT	RELEASE

0 50 100
SCALE, FEET

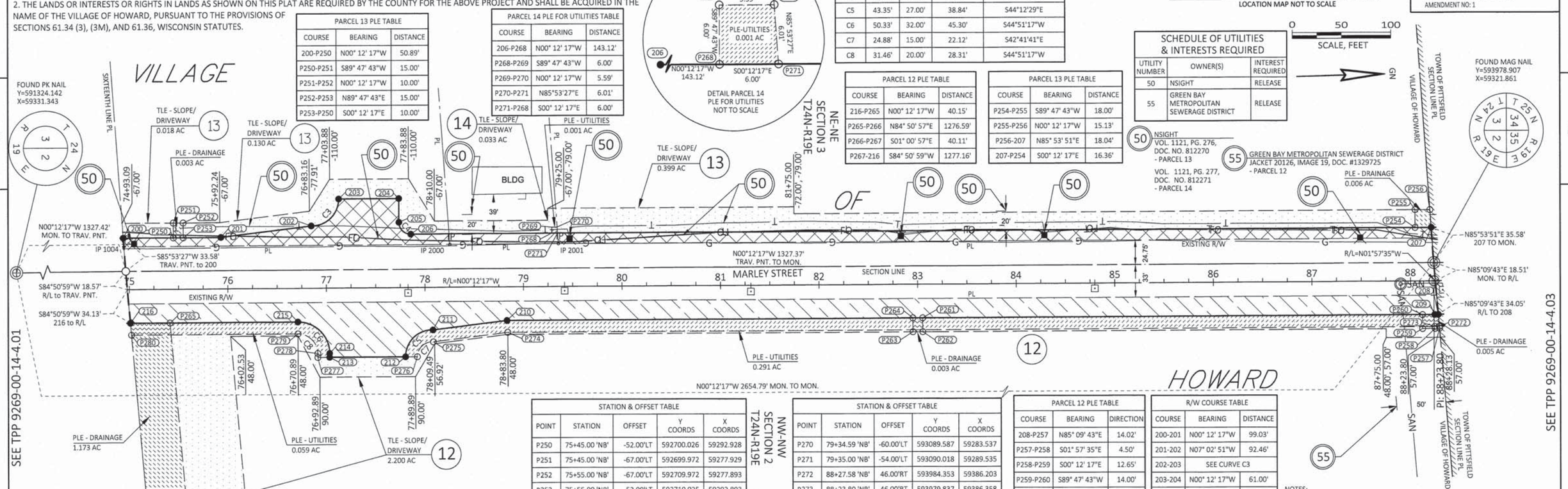

STATION & OFFSET TABLE

POINT	STATION	OFFSET	Y COORDS	X COORDS
200	74+94.11 'NB'	-52.00'LT	592649.139	59293.110
201	75+93.14 'NB'	-52.00'LT	592748.167	59292.756
202	76+84.94 'NB'	-63.02'LT	592839.930	59281.412
203	77+12.88 'NB'	-90.00'LT	592867.773	59254.329
204	77+73.88 'NB'	-90.00'LT	592928.773	59254.111
205	77+73.88 'NB'	-66.00'LT	592928.859	59278.111
206	77+85.88 'NB'	-54.00'LT	592940.902	59290.068
207	88+21.35 'NB'	-54.00'LT	593976.361	59286.370
208	88+26.98 'NB'	34.00'RT	593983.340	59374.231
209	88+23.80 'NB'	34.00'RT	593979.611	59374.359
210	78+83.00 'NB'	34.00'RT	593038.331	59377.721
211	78+07.83 'NB'	43.02'RT	592963.189	59387.005
212	77+79.89 'NB'	70.00'RT	592935.346	59414.089
213	77+02.89 'NB'	70.00'RT	592858.346	59414.364
214	77+02.89 'NB'	66.07'RT	592858.332	59410.430
215	76+70.89 'NB'	34.00'RT	592826.218	59378.478
216	75+00.94 'NB'	34.00'RT	592656.276	59379.085

STATION & OFFSET TABLE

POINT	STATION	OFFSET	Y COORDS	X COORDS
P250	75+45.00 'NB'	-52.00'LT	592700.026	59292.928
P251	75+45.00 'NB'	-67.00'LT	592699.972	59277.929
P252	75+55.00 'NB'	-67.00'LT	592709.972	59277.893
P253	75+55.00 'NB'	-52.00'LT	592710.025	59292.893
P254	88+05.00 'NB'	-54.00'LT	593960.006	59286.428
P255	88+05.00 'NB'	-72.00'LT	593959.942	59268.428
P256	88+20.12 'NB'	-72.00'LT	593975.071	59268.374
P257	88+27.68 'NB'	48.00'RT	593984.522	59388.199
P258	88+23.80 'NB'	48.00'RT	593980.023	59388.353
P259	88+12.00 'NB'	48.00'RT	593967.378	59388.398
P260	88+12.00 'NB'	34.00'RT	593967.328	59374.403
P261	83+05.00 'NB'	34.00'RT	593460.328	59376.213
P262	83+05.00 'NB'	48.00'RT	593460.378	59390.213
P263	82+95.00 'NB'	48.00'RT	593450.378	59390.249
P264	82+95.00 'NB'	34.00'RT	593450.328	59376.249
P265	75+41.09 'NB'	34.00'RT	592696.425	59378.942
P266	76+51.16 'NB'	1305.84'RT	592811.033	60650.380
P267	76+11.05 'NB'	1306.41'RT	592770.924	60651.091
P268	79+29.00 'NB'	-54.00'LT	593084.018	59289.557
P269	79+29.00 'NB'	-60.00'LT	593083.996	59283.557

POINT TABLE

POINT NAME	Y COORDS	X COORDS
IP 1004	592649.774	59301.908
IP 2000	592980.553	59300.765
IP 2001	593090.797	59300.386

STATION & OFFSET TABLE

POINT	STATION	OFFSET	Y COORDS	X COORDS
P270	79+34.59 'NB'	-60.00'LT	593089.587	59283.537
P271	79+35.00 'NB'	-54.00'LT	593090.018	59289.535
P272	88+27.58 'NB'	46.00'RT	593984.353	59386.203
P273	88+23.80 'NB'	46.00'RT	593979.837	59386.358
P274	78+83.72 'NB'	46.00'RT	593039.090	59389.718
P275	78+08.20 'NB'	55.06'RT	592963.605	59399.045
P276	77+91.89 'NB'	70.00'RT	592947.345	59414.047
P277	76+90.89 'NB'	70.00'RT	592846.346	59414.407
P278	76+90.89 'NB'	66.04'RT	592846.332	59410.448
P279	76+70.89 'NB'	46.00'RT	592826.260	59390.478
P280	75+01.98 'NB'	46.00'RT	592657.357	59391.081

PARCEL 12 PLE TABLE

COURSE	BEARING	DIRECTION
208-P257	N85° 09' 43"E	14.02'
P257-P258	S01° 57' 35"E	4.50'
P258-P259	S00° 12' 17"E	12.65'
P259-P260	S89° 47' 43"W	14.00'
P260-209	N00° 12' 17"W	12.28'
209-208	N01° 57' 35"W	3.73'

PARCEL 12 PLE TABLE

COURSE	BEARING	DISTANCE
209-P261	S00° 12' 17"E	519.29'
P261-P262	N89° 47' 43"E	14.00'
P262-P263	S00° 12' 17"E	10.00'
P263-P264	S89° 47' 43"W	14.00'
P264-P261	N00° 12' 17"W	10.00'

R/W COURSE TABLE

COURSE	BEARING	DISTANCE
200-201	N00° 12' 17"W	99.03'
201-202	N07° 02' 51"W	92.46'
202-203	SEE CURVE C3	
203-204	N00° 12' 17"W	61.00'
204-205	N89° 47' 43"E	24.00'
205-206	SEE CURVE C4	
206-207	N00° 12' 17"W	1035.47'
208-209	S01° 57' 35"E	3.73'
209-210	S00° 12' 17"E	941.29'
210-211	S07° 02' 38"E	75.71'
211-212	SEE CURVE C5	
212-213	S00° 12' 17"E	77.00'
213-214	S89° 47' 43"W	3.93'
214-215	SEE CURVE C6	
215-216	S00° 12' 17"E	169.94'

PARCEL 12 PLE FOR UTILITIES TABLE

COURSE	BEARING	DIRECTION
216-215	N00° 12' 17"W	169.94'
215-214	SEE CURVE C6	
214-213	N89°47'43"E	3.93'
213-P277	S00° 12' 17"E	12.00'
P277-P278	S89°47'43"W	3.96'
P278-P279	SEE CURVE C8	
P279-P280	S00° 12' 17"E	168.90'
P280-216	S84°50'59"W	12.04'

PARCEL 12 PLE FOR UTILITIES TABLE

COURSE	BEARING	DIRECTION
208-P272	N85° 09' 43"E	12.02'
P272-P273	S01° 57' 35"E	4.50'
P273-P274	S00° 12' 17"E	940.75'
P274-P275	S00°02'38"E	76.06'
P275-P276	SEE CURVE C7	
P276-212	S00° 12' 17"E	12.00'
212-211	SEE CURVE C5	
211-210	N00°02'38"W	75.71'
210-209	N00° 12' 17"W	941.29'
209-208	S01° 57' 35"E	3.73'

NOTES:
POSITIONS SHOWN ON THIS PLAT ARE WISCONSIN COUNTY COORDINATES, BROWN COUNTY ZONE, NAD83(2011), IN U.S. SURVEY FEET. VALUES ARE GRID COORDINATES, GRID BEARINGS, AND GRID DISTANCES. GRID DISTANCES MAY BE USED AS GROUND DISTANCES.

RIGHT-OF-WAY BOUNDARIES ARE DEFINED WITH COURSES OF THE PERIMETER OF THE HIGHWAY LANDS REFERENCED TO THE U.S. PUBLIC LAND SURVEY SYSTEM OR OTHER "SURVEYS" OF PUBLIC RECORD.

EXISTING HIGHWAY RIGHT-OF-WAY HEREIN IS BASED ON THE FOLLOWING POINTS OF REFERENCE:

EXISTING HIGHWAY RIGHT-OF-WAY FOR MARLEY STREET SHOWN HEREIN BASED ON DEDICATION SHOWN ON ALTA SURVEY DATED JULY 3, 2012 BY MAU & ASSOCIATES AND FOUND MONUMENTATION.

REFER TO THE TITLE SHEET, RECORDED AS SHEET 2 OF 3 IN VOLUME 1, PAGES 225-227, AS DOCUMENT NO. 2944553 FOR ADDITIONAL INFORMATION.

WISCONSIN JACOB S. JENSEN S-2961 SURING, WI LAND SURVEYOR

I, JACOB S. JENSEN, PROFESSIONAL LAND SURVEYOR, HEREBY CERTIFY THAT IN FULL COMPLIANCE WITH THE PROVISIONS OF SECTION 84.095 OF THE WISCONSIN STATUTES AND UNDER THE DIRECTION OF THE VILLAGE OF HOWARD, BROWN COUNTY, WISCONSIN, I HAVE SURVEYED AND MAPPED THIS TRANSPORTATION PROJECT PLAT 9269-00-14-4.02 AMENDMENT NO:1 AND THAT SUCH PLAT CORRECTLY REPRESENTS ALL EXTERIOR BOUNDARIES OF THE SURVEYED LAND.

JACOB S. JENSEN — JUNE 28, 2021 DATE
REGISTRATION NUMBER: S-2961

THIS PLAT AND RELOCATION ORDER ARE APPROVED FOR THE VILLAGE OF HOWARD.

AYRES

MICHAEL J. KASTER, P.E. — 6/30/21 DATE
DIRECTOR OF ENGINEERING

FILE NAME : I:\45\450490 MARLEY STREET\C3D\RW\4.02.DWG
APPRAISAL PLAT DATE : FEBRUARY 12, 2021
PLOT DATE : JANUARY 22, 2021 PLOT BY : JENSEN, JACOB PLOT NAME : PLOT SCALE : 1"=100'
9269-00-14-4.02

TRANSPORTATION PROJECT PLAT NO: 9269-00-14-4.03

PART OF LOT 1, VOLUME 44, CERTIFIED SURVEY MAPS, PAGE 205, MAP #6637, DOC. NO. 1925185, BEING IN AND INCLUDING PART OF THE SOUTHEAST ¼ OF THE SOUTHEAST ¼, IN SECTION 34, T25N, R19E, TOWN OF PITTSFIELD, BROWN COUNTY, WISCONSIN.

RELOCATION ORDER - BROWN COUNTY CTH VV - (MILLWOOD COURT TO CTH C)

TO PROPERLY ESTABLISH, LAY OUT, WIDEN, ENLARGE, EXTEND, CONSTRUCT, RECONSTRUCT, IMPROVE, OR MAINTAIN A PORTION OF THE HIGHWAY DESIGNATED ABOVE, TOWN OF PITTSFIELD DEEMS IT NECESSARY TO RELOCATE OR CHANGE SAID HIGHWAY AND ACQUIRE CERTAIN LANDS AND INTERESTS OR RIGHTS IN LANDS FOR THE ABOVE NAMED PROJECT.

TO EFFECT THIS CHANGE, PURSUANT TO AUTHORITY GRANTED UNDER SECTION 60.50 AND 82.12, WISCONSIN STATUTES, THE TOWN OF PITTSFIELD HEREBY ORDERS THAT:

1. THAT PORTION OF SAID HIGHWAY AS SHOWN ON THIS PLAT IS LAID OUT AND ESTABLISHED TO THE LINES AND WIDTHS AS SO SHOWN FOR THE ABOVE NAMED PROJECT.
2. THE LANDS OR INTERESTS OR RIGHTS IN LANDS AS SHOWN ON THIS PLAT ARE REQUIRED BY THE COUNTY FOR THE ABOVE PROJECT AND SHALL BE ACQUIRED IN THE NAME OF THE TOWN OF PITTSFIELD, PURSUANT TO THE PROVISIONS OF SECTIONS 60.50 AND 82.12, WISCONSIN STATUTES.

SCHEDULE OF LANDS & INTERESTS REQUIRED

PARCEL NUMBER	OWNER(S)	INTEREST REQUIRED	NEW R/W ACRES	EXISTING R/W ACRES	TOTAL R/W ACRES	PLE ACRES	TLE ACRES
16	JAMES R. WARD AND VICTORIA M. WARD	FEE & TLE	0.245	------	0.245	------	0.193
17	THE ZEGERS FAMILY TRUST	FEE, PLE & TLE	0.074	------	0.074	0.002	0.025

OWNER'S NAMES ARE SHOWN FOR REFERENCE PURPOSES ONLY AND ARE SUBJECT TO CHANGE PRIOR TO THE TRANSFER OF LAND INTERESTS TO THE COUNTY.

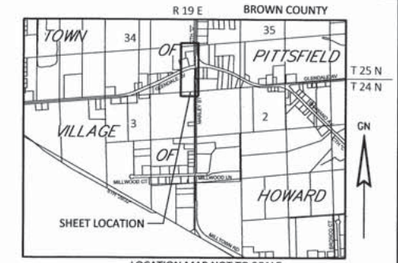

LOCATION MAP NOT TO SCALE

0 50 100
SCALE, FEET

2945074
VOLUME: 1
PAGE: 229
CHERYL BERKEN
BROWN COUNTY
REGISTER OF DEEDS
GREEN BAY, WI
RECORDED ON
02/16/2021 02:31 PM
REC FEE: 25.00
PAGES: 1

RESERVED FOR REGISTER OF DEEDS
PROJECT NUMBER 9269-00-14-4.03
AMENDMENT NO:___

SCHEDULE OF UTILITIES & INTERESTS REQUIRED

UTILITY NUMBER	OWNER(S)	INTEREST REQUIRED
50	NSIGHT	RELEASE

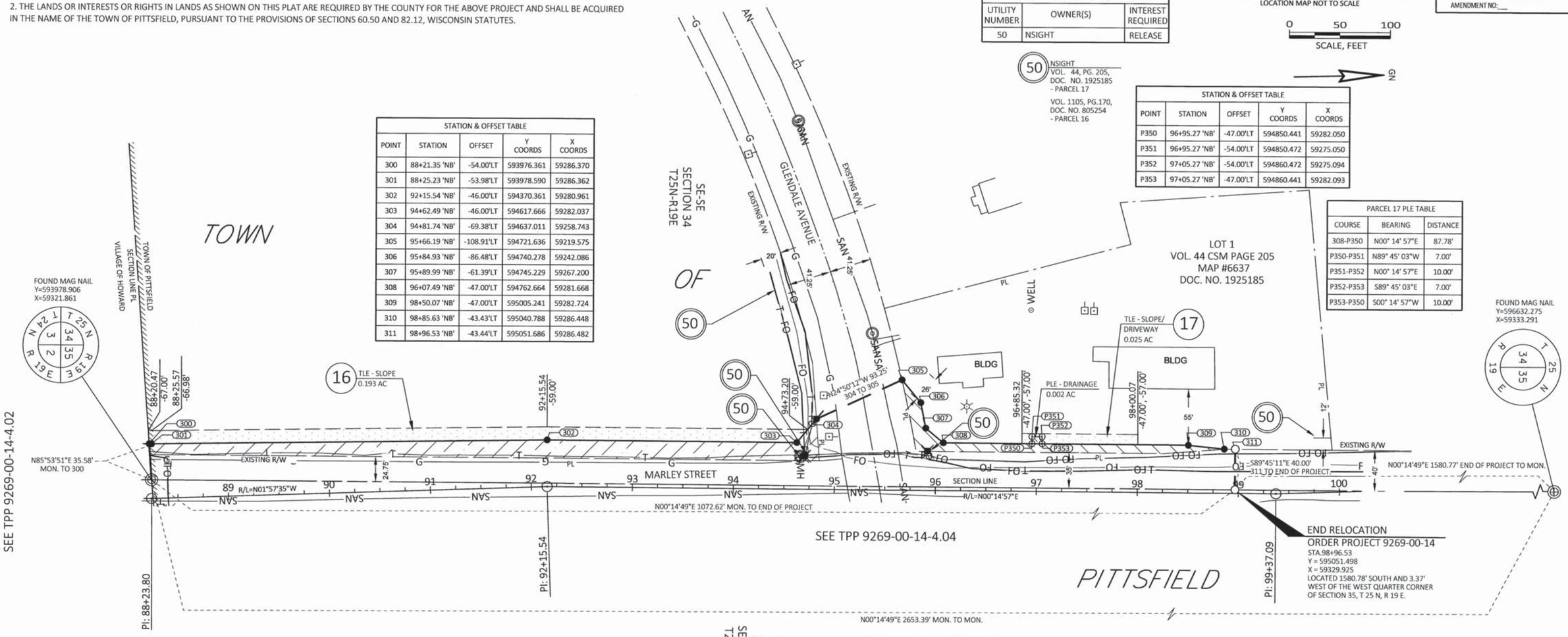

STATION & OFFSET TABLE				
POINT	STATION	OFFSET	Y COORDS	X COORDS
300	88+21.35 'NB'	-54.00'LT	593976.361	59286.370
301	88+25.23 'NB'	-53.98'LT	593978.590	59286.362
302	92+15.54 'NB'	-46.00'LT	594370.361	59280.961
303	94+62.49 'NB'	-46.00'LT	594617.666	59282.037
304	94+81.74 'NB'	-69.38'LT	594637.011	59258.743
305	95+66.19 'NB'	-108.91'LT	594721.636	59219.575
306	95+84.93 'NB'	-86.48'LT	594740.278	59242.086
307	95+89.99 'NB'	-61.39'LT	594745.229	59267.200
308	96+07.49 'NB'	-47.00'LT	594762.664	59281.668
309	98+50.07 'NB'	-47.00'LT	595005.241	59282.724
310	98+85.63 'NB'	-43.43'LT	595040.788	59286.448
311	98+96.53 'NB'	-43.44'LT	595051.686	59286.482

STATION & OFFSET TABLE				
POINT	STATION	OFFSET	Y COORDS	X COORDS
P350	96+95.27 'NB'	-47.00'LT	594850.441	59282.050
P351	96+95.27 'NB'	-54.00'LT	594850.472	59275.050
P352	97+05.27 'NB'	-54.00'LT	594860.472	59275.094
P353	97+05.27 'NB'	-47.00'LT	594860.441	59282.093

PARCEL 17 PLE TABLE		
COURSE	BEARING	DISTANCE
308-P350	N00° 14' 57"E	87.78'
P350-P351	N89° 45' 03"W	7.00'
P351-P352	N00° 14' 57"E	10.00'
P352-P353	S89° 45' 03"E	7.00'
P353-P350	S00° 14' 57"W	10.00'

R/W COURSE TABLE		
COURSE	BEARING	DISTANCE
300-301	N00° 12' 17"W	2.23'
301-302	N00° 47' 23"W	391.81'
302-303	N00° 14' 57"E	247.31'
303-304	N50° 17' 29"W	30.28'
305-306	N50° 22' 14"E	29.23'
306-307	N78° 50' 48"E	25.60'
307-308	N39° 41' 16"E	22.66'
308-309	N00° 14' 57"E	242.58'
309-310	N05° 58' 54"E	35.74'
310-311	N00° 10' 36"E	10.90'

NOTES:
POSITIONS SHOWN ON THIS PLAT ARE WISCONSIN COUNTY COORDINATES, BROWN COUNTY ZONE, NAD83(2011), IN U.S. SURVEY FEET. VALUES ARE GRID COORDINATES, GRID BEARINGS, AND GRID DISTANCES. GRID DISTANCES MAY BE USED AS GROUND DISTANCES.

RIGHT-OF-WAY BOUNDARIES ARE DEFINED WITH COURSES OF THE PERIMETER OF THE HIGHWAY LANDS REFERENCED TO THE U.S. PUBLIC LAND SURVEY SYSTEM OR OTHER "SURVEYS" OF PUBLIC RECORD.

EXISTING HIGHWAY RIGHT-OF-WAY HEREIN IS BASED ON THE FOLLOWING POINTS OF REFERENCE:

EXISTING HIGHWAY RIGHT-OF-WAY FOR MARLEY STREET SHOWN HEREIN BASED ON DEDICATION SHOWN ON VOLUME 44 OF CERTIFIED SURVEY MAPS, ON PAGE 205, DOCUMENT NO. 1925185.

EXISTING HIGHWAY RIGHT-OF-WAY FOR GLENDALE AVENUE SHOWN HEREIN BASED ON DEDICATION SHOWN ON VOLUME 44 OF CERTIFIED SURVEY MAPS, ON PAGE 205, DOCUMENT NO. 1925185.

REFER TO THE TITLE SHEET, RECORDED AS SHEET 2 OF 3 IN VOLUME 1, PAGES 225-227, AS DOCUMENT NO. 2944553 FOR ADDITIONAL INFORMATION.

WISCONSIN JACOB S. JENSEN S-2961 SURING, WI LAND SURVEYOR

I, JACOB S. JENSEN, PROFESSIONAL LAND SURVEYOR, HEREBY CERTIFY THAT IN FULL COMPLIANCE WITH THE PROVISIONS OF SECTION 84.095 OF THE WISCONSIN STATUTES AND UNDER THE DIRECTION OF THE TOWN OF PITTSFIELD, BROWN COUNTY, WISCONSIN, I HAVE SURVEYED AND MAPPED THIS TRANSPORTATION PROJECT PLAT 9269-00-14-4.03 AND THAT SUCH PLAT CORRECTLY REPRESENTS ALL EXTERIOR BOUNDARIES OF THE SURVEYED LAND.

JACOB S. JENSEN
REGISTRATION NUMBER: S-2961
FEBRUARY 12, 2021
DATE

AYRES

THIS PLAT AND RELOCATION ORDER ARE APPROVED FOR THE TOWN OF PITTSFIELD.

KEITH DENEYS
CHAIRPERSON
2/15/21
DATE

FILE NAME : I:\45\450490 MARLEY STREET\C3D\RW\4.03.DWG
APPRAISAL PLAT DATE : FEBRUARY 12, 2021
PLOT DATE : JANUARY 22, 2021 PLOT BY : BOSTEDT, JILL PLOT NAME : PLOT SCALE : 1"=100'
9269-00-14-4.03

TRANSPORTATION PROJECT PLAT NO: 9269-00-14-4.04 AMENDMENT NO:1 - REMOVES UTILITY NUMBER 55 AND CREATES UTILITY NUMBER 56 OF TRANSPORTATION PLAT NO: 9269-00-14-4.04 RECORDED AS DOC. 2945075, IN VOLUME 1 ON PAGE 230

PART OF LOTS 1 AND 2, VOLUME 40, CERTIFIED SURVEY MAPS, PAGE 265, MAP #6122, DOC. NO. 1749287, PART OF LOT 1, VOLUME 56, CERTIFIED SURVEY MAPS, PAGE 279, MAP #8130, DOC. NO. 2528885, BEING IN AND INCLUDING PART OF THE SOUTHWEST ¼ OF THE SOUTHWEST ¼, IN SECTION 35, T25N, R19E, TOWN OF PITTSFIELD, BROWN COUNTY, WISCONSIN.

RELOCATION ORDER - BROWN COUNTY CTH VV - (MILLWOOD COURT TO CTH C)

TO PROPERLY ESTABLISH, LAY OUT, WIDEN, ENLARGE, EXTEND, CONSTRUCT, RECONSTRUCT, IMPROVE, OR MAINTAIN A PORTION OF THE HIGHWAY DESIGNATED ABOVE, TOWN OF PITTSFIELD DEEMS IT NECESSARY TO RELOCATE OR CHANGE SAID HIGHWAY AND ACQUIRE CERTAIN LANDS AND INTERESTS OR RIGHTS IN LANDS FOR THE ABOVE NAMED PROJECT.

TO EFFECT THIS CHANGE, PURSUANT TO AUTHORITY GRANTED UNDER SECTION 60.50 AND 82.12, WISCONSIN STATUTES, THE TOWN OF PITTSFIELD HEREBY ORDERS THAT:

1. THAT PORTION OF SAID HIGHWAY AS SHOWN ON THIS PLAT IS LAID OUT AND ESTABLISHED TO THE LINES AND WIDTHS AS SO SHOWN FOR THE ABOVE NAMED PROJECT.
2. THE LANDS OR INTERESTS OR RIGHTS IN LANDS AS SHOWN ON THIS PLAT ARE REQUIRED BY THE COUNTY FOR THE ABOVE PROJECT AND SHALL BE ACQUIRED IN THE NAME OF THE TOWN OF PITTSFIELD, PURSUANT TO THE PROVISIONS OF SECTIONS 0.50 AND 82.12, WISCONSIN STATUTES.

SCHEDULE OF LANDS & INTERESTS REQUIRED

PARCEL NUMBER	OWNER(S)	INTEREST REQUIRED	NEW R/W ACRES	EXISTING R/W ACRES	TOTAL R/W ACRES	PLE ACRES	TLE ACRES
18	SCOTT M. ASCHER AND PATTY S. ASCHER	FEE, PLE & TLE	0.087	------	0.087	0.003	0.167
19	ALLEN J. SIGL AND AUDREY SIGL	FEE, PLE & TLE	0.052	------	0.052	0.005	0.145
21	JEFF NARGES	TLE	------	------	------	------	0.021
22	JAY L. MEYERS AND DONNA A. MEYERS	PLE & TLE	------	------	------	0.003	0.063
23	JEREMY L. MAJORS AND ALYSSA R. MAJORS	TLE	------	------	------	------	0.025
24	TODD M. SAYEN	FEE & TLE	0.012	------	0.012	------	0.035
26	GARRET GOODMAN AND HELENE GOODMAN	FEE & TLE	0.003	------	0.003	------	0.051

OWNER'S NAMES ARE SHOWN FOR REFERENCE PURPOSES ONLY AND ARE SUBJECT TO CHANGE PRIOR TO THE TRANSFER OF LAND INTERESTS TO THE COUNTY.

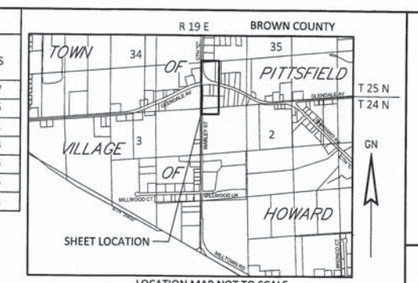

LOCATION MAP NOT TO SCALE

2967857
VOLUME: 1
PAGE: 243
CHERYL BERKEN
BROWN COUNTY
REGISTER OF DEEDS
GREEN BAY, WI
RECORDED ON
07/15/2021 03:45 PM
REC FEE: 25.00
PAGES: 1

RESERVED FOR REGISTER OF DEEDS
PROJECT NUMBER 9269-00-14-4.04
AMENDMENT NO: 1

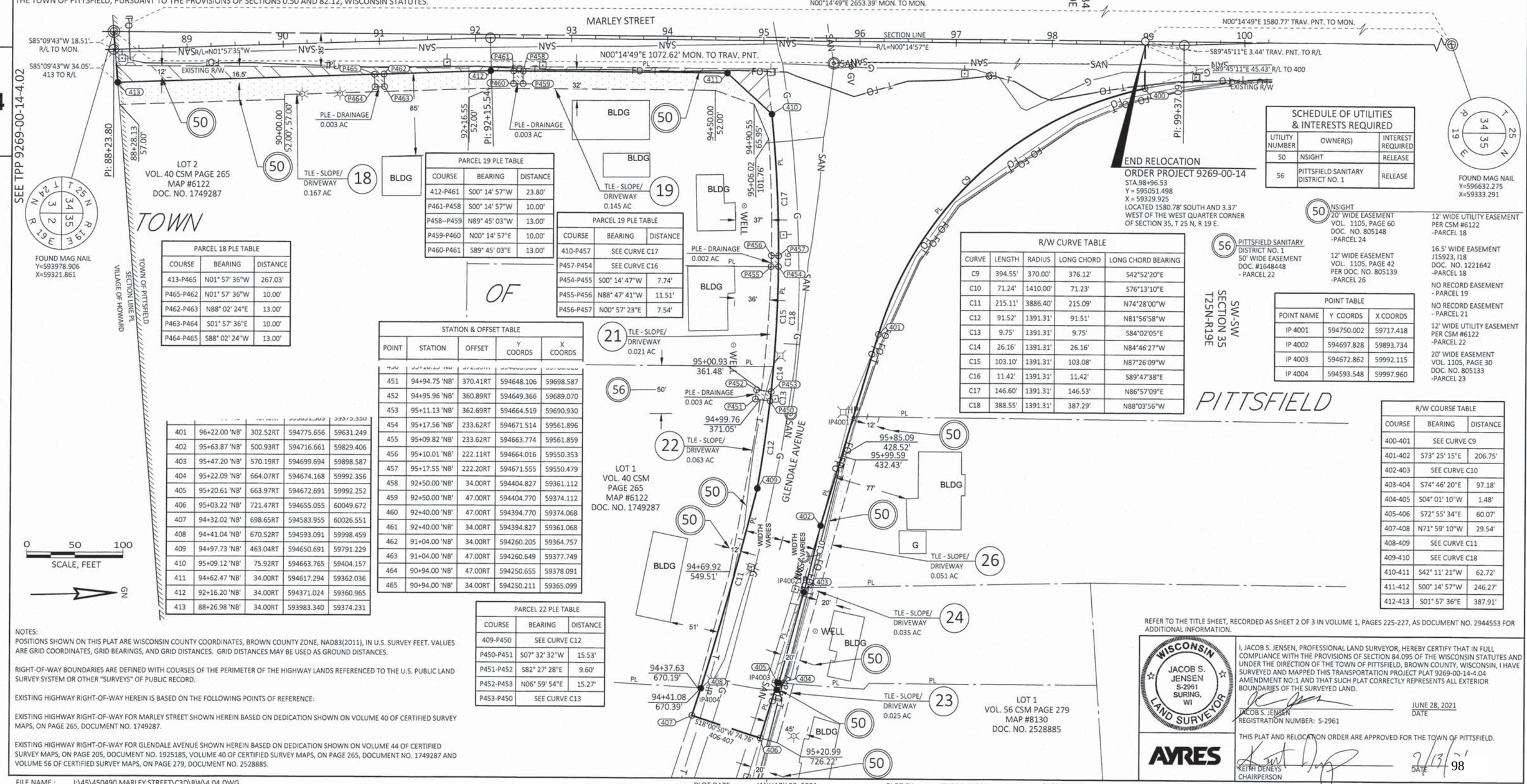

SCHEDULE OF UTILITIES & INTERESTS REQUIRED

UTILITY NUMBER	OWNER(S)	INTEREST REQUIRED
50	NSIGHT	RELEASE
56	PITTSFIELD SANITARY DISTRICT NO. 1	RELEASE

50 NSIGHT
20' WIDE EASEMENT
VOL. 1105, PAGE 60
DOC. NO. 805148
-PARCEL 24

12' WIDE EASEMENT
VOL. 1105, PAGE 42
PER DOC. NO. 805139
-PARCEL 26

56 PITTSFIELD SANITARY DISTRICT NO. 1
50' WIDE EASEMENT
DOC. #1648448
- PARCEL 22

12' WIDE UTILITY EASEMENT PER CSM #6122 -PARCEL 18

16.5' WIDE EASEMENT J15923, I18 DOC. NO. 1221642 -PARCEL 18

NO RECORD EASEMENT - PARCEL 19

NO RECORD EASEMENT - PARCEL 21

12' WIDE UTILITY EASEMENT PER CSM #6122 -PARCEL 22

20' WIDE EASEMENT VOL. 1105, PAGE 30 DOC. NO. 805133 -PARCEL 23

PARCEL 18 PLE TABLE

COURSE	BEARING	DISTANCE
413-P465	N01° 57' 36"W	267.03'
P465-P462	N01° 57' 36"W	10.00'
P462-P463	N88° 02' 24"E	13.00'
P463-P464	S01° 57' 36"E	10.00'
P464-P465	S88° 02' 24"W	13.00'

PARCEL 19 PLE TABLE

COURSE	BEARING	DISTANCE
412-P461	S00° 14' 57"W	23.80'
P461-P458	S00° 14' 57"W	10.00'
P458--P459	N89° 45' 03"W	13.00'
P459-P460	N00° 14' 57"E	10.00'
P460-P461	S89° 45' 03"E	13.00'

PARCEL 19 PLE TABLE

COURSE	BEARING	DISTANCE
410-P457	SEE CURVE C17	
P457-P454	SEE CURVE C16	
P454-P455	S00° 14' 47"W	7.74'
P455-P456	N88° 47' 41"W	11.51'
P456-P457	N00° 57' 23"E	7.54'

R/W CURVE TABLE

CURVE	LENGTH	RADIUS	LONG CHORD	LONG CHORD BEARING
C9	394.55'	370.00'	376.12'	S42°52'20"E
C10	71.24'	1410.00'	71.23'	S76°13'10"E
C11	215.11'	3886.40'	215.09'	N74°28'00"W
C12	91.52'	1391.31'	91.51'	N81°56'58"W
C13	9.75'	1391.31'	9.75'	S84°02'05"E
C14	26.16'	1391.31'	26.16'	N84°46'27"W
C15	103.10'	1391.31'	103.08'	N87°26'09"W
C16	11.42'	1391.31'	11.42'	S89°47'38"E
C17	146.60'	1391.31'	146.53'	N86°57'09"E
C18	388.55'	1391.31'	387.29'	N88°03'56"W

POINT TABLE

POINT NAME	Y COORDS	X COORDS
IP 4001	594750.002	59717.418
IP 4002	594697.828	59893.734
IP 4003	594672.862	59992.115
IP 4004	594593.548	59997.960

STATION & OFFSET TABLE

POINT	STATION	OFFSET	Y COORDS	X COORDS
450	95+16.15 'NB'	372.59RT	594663.580	59708.028
451	94+94.75 'NB'	370.41RT	594648.106	59698.587
452	94+95.96 'NB'	360.89RT	594649.366	59689.070
453	95+11.13 'NB'	362.69RT	594664.519	59690.930
454	95+17.56 'NB'	233.62RT	594671.514	59561.896
455	95+09.82 'NB'	233.62RT	594663.774	59561.859
456	95+10.01 'NB'	222.11RT	594664.016	59550.353
457	95+17.55 'NB'	222.20RT	594671.555	59550.479
458	92+50.00 'NB'	34.00RT	594404.827	59361.112
459	92+50.00 'NB'	47.00RT	594404.770	59374.112
460	92+40.00 'NB'	47.00RT	594394.770	59374.068
461	92+40.00 'NB'	34.00RT	594394.827	59361.068
462	91+04.00 'NB'	34.00RT	594260.205	59364.757
463	91+04.00 'NB'	47.00RT	594260.649	59377.749
464	90+94.00 'NB'	47.00RT	594250.655	59378.091
465	90+94.00 'NB'	34.00RT	594250.211	59365.099
400	96+10.15 'NB'	372.59RT	594663.580	59708.028
401	96+22.00 'NB'	302.52RT	594775.656	59631.249
402	95+63.87 'NB'	500.93RT	594716.661	59829.406
403	95+47.20 'NB'	570.19RT	594699.694	59898.587
404	95+22.09 'NB'	664.07RT	594674.168	59992.356
405	95+20.61 'NB'	663.97RT	594672.691	59992.252
406	95+03.22 'NB'	721.47RT	594655.055	60049.672
407	94+32.02 'NB'	698.65RT	594583.955	60026.551
408	94+41.04 'NB'	670.52RT	594593.091	59998.459
409	94+97.73 'NB'	463.04RT	594650.691	59791.229
410	95+09.12 'NB'	75.92RT	594663.765	59404.157
411	94+62.47 'NB'	34.00RT	594617.294	59362.036
412	92+16.20 'NB'	34.00RT	594371.024	59360.965
413	88+26.98 'NB'	34.00RT	593983.340	59374.231

PARCEL 22 PLE TABLE

COURSE	BEARING	DISTANCE
409-P450	SEE CURVE C12	
P450-P451	S07° 32' 32"W	15.53'
P451-P452	S82° 27' 28"E	9.60'
P452-P453	N06° 59' 54"E	15.27'
P453-P450	SEE CURVE C13	

R/W COURSE TABLE

COURSE	BEARING	DISTANCE
400-401	SEE CURVE C9	
401-402	S73° 25' 15"E	206.75'
402-403	SEE CURVE C10	
403-404	S74° 46' 20"E	97.18'
404-405	S04° 01' 10"W	1.48'
405-406	S72° 55' 34"E	60.07'
407-408	N71° 59' 10"W	29.54'
408-409	SEE CURVE C11	
409-410	SEE CURVE C18	
410-411	S42° 11' 21"W	62.72'
411-412	S00° 14' 57"W	246.27'
412-413	S01° 57' 36"E	387.91'

NOTES:
POSITIONS SHOWN ON THIS PLAT ARE WISCONSIN COUNTY COORDINATES, BROWN COUNTY ZONE, NAD83(2011), IN U.S. SURVEY FEET. VALUES ARE GRID COORDINATES, GRID BEARINGS, AND GRID DISTANCES. GRID DISTANCES MAY BE USED AS GROUND DISTANCES.

RIGHT-OF-WAY BOUNDARIES ARE DEFINED WITH COURSES OF THE PERIMETER OF THE HIGHWAY LANDS REFERENCED TO THE U.S. PUBLIC LAND SURVEY SYSTEM OR OTHER "SURVEYS" OF PUBLIC RECORD.

EXISTING HIGHWAY RIGHT-OF-WAY HEREIN IS BASED ON THE FOLLOWING POINTS OF REFERENCE:

EXISTING HIGHWAY RIGHT-OF-WAY FOR MARLEY STREET SHOWN HEREIN BASED ON DEDICATION SHOWN ON VOLUME 40 OF CERTIFIED SURVEY MAPS, ON PAGE 265, DOCUMENT NO. 1749287.

EXISTING HIGHWAY RIGHT-OF-WAY FOR GLENDALE AVENUE SHOWN HEREIN BASED ON DEDICATION SHOWN ON VOLUME 44 OF CERTIFIED SURVEY MAPS, ON PAGE 205, DOCUMENT NO. 1925185, VOLUME 40 OF CERTIFIED SURVEY MAPS, ON PAGE 265, DOCUMENT NO. 1749287 AND VOLUME 56 OF CERTIFIED SURVEY MAPS, ON PAGE 279, DOCUMENT NO. 2528885.

REFER TO THE TITLE SHEET, RECORDED AS SHEET 2 OF 3 IN VOLUME 1, PAGES 225-227, AS DOCUMENT NO. 2944553 FOR ADDITIONAL INFORMATION.

WISCONSIN JACOB S. JENSEN S-2961 SURING, WI LAND SURVEYOR

I, JACOB S. JENSEN, PROFESSIONAL LAND SURVEYOR, HEREBY CERTIFY THAT IN FULL COMPLIANCE WITH THE PROVISIONS OF SECTION 84.095 OF THE WISCONSIN STATUTES AND UNDER THE DIRECTION OF THE TOWN OF PITTSFIELD, BROWN COUNTY, WISCONSIN, I HAVE SURVEYED AND MAPPED THIS TRANSPORTATION PROJECT PLAT 9269-00-14-4.04 AMENDMENT NO:1 AND THAT SUCH PLAT CORRECTLY REPRESENTS ALL EXTERIOR BOUNDARIES OF THE SURVEYED LAND.

JACOB S. JENSEN — JUNE 28, 2021
REGISTRATION NUMBER: S-2961 — DATE

THIS PLAT AND RELOCATION ORDER ARE APPROVED FOR THE TOWN OF PITTSFIELD.

AYRES

KEITH DENEYS — 2/13/21
CHAIRPERSON — DATE

FILE NAME : I:\45\450490 MARLEY STREET\C3D\RW\4.04.DWG
APPRAISAL PLAT DATE : FEBRUARY 12, 2021

PLOT DATE : JANUARY 22, 2021 PLOT BY : JENSEN, JACOB PLOT NAME : PLOT SCALE : 1"=100'

9269-00-14-4.04

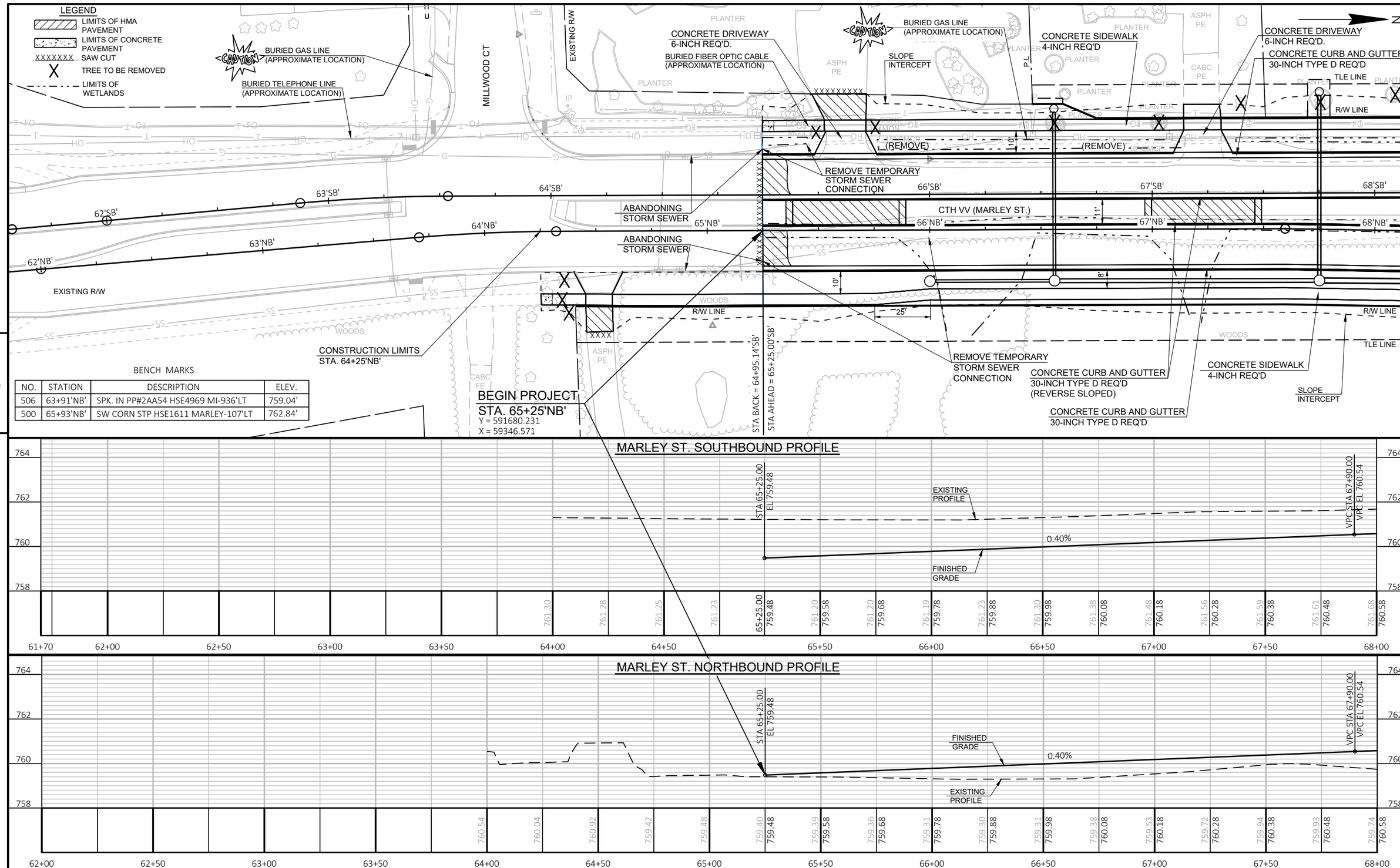

PROJECT NO: 9269-00-14	HWY: MARLEY STREET	COUNTY: BROWN	PLAN AND PROFILE	SHEET 99	E

FILE NAME : I:\45\450490 MARLEY STREET\C3D\SHEETSPLAN\050101 PP.DWG
LAYOUT NAME - 050101 pp
PLOT DATE : 11/11/2021 10:18 AM PLOT BY : GARNICA, BRANDON PLOT NAME : PLOT SCALE : 1 IN:40 FT
WISDOT/CADDS SHEET 44

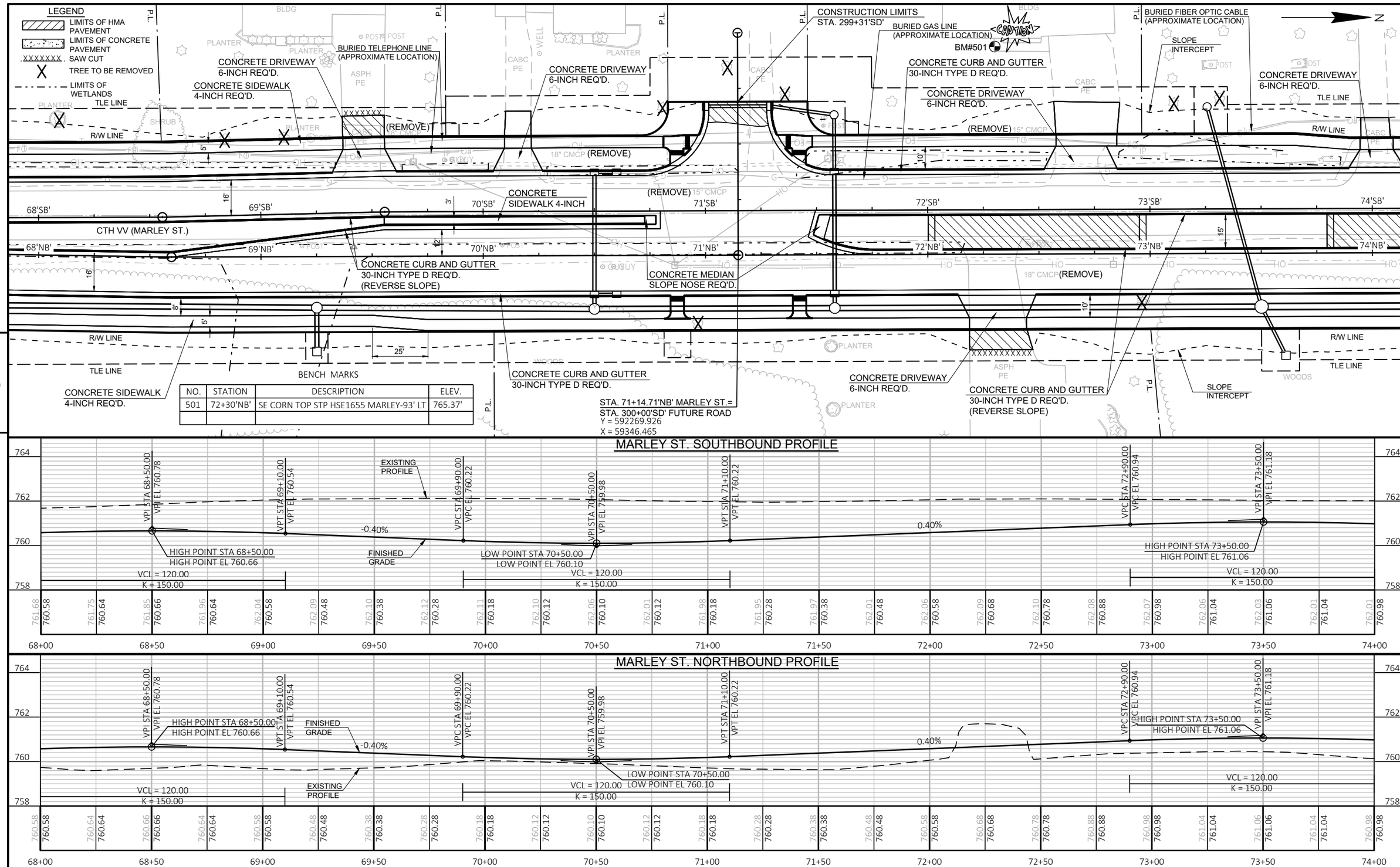

NO.	STATION	DESCRIPTION	ELEV.
501	72+30'NB'	SE CORN TOP STP HSE1655 MARLEY-93' LT	765.37'

PROJECT NO: 9269-00-14	HWY: MARLEY STREET	COUNTY: BROWN	PLAN AND PROFILE	SHEET 100	E

FILE NAME : I:\45\450490 MARLEY STREET\C3D\SHEETSPLAN\050101 PP.DWG
LAYOUT NAME - 050102 pp
PLOT DATE : 11/11/2021 10:18 AM
PLOT BY : GARNICA, BRANDON
PLOT NAME :
PLOT SCALE : ##########
WISDOT/CADDS SHEET 44

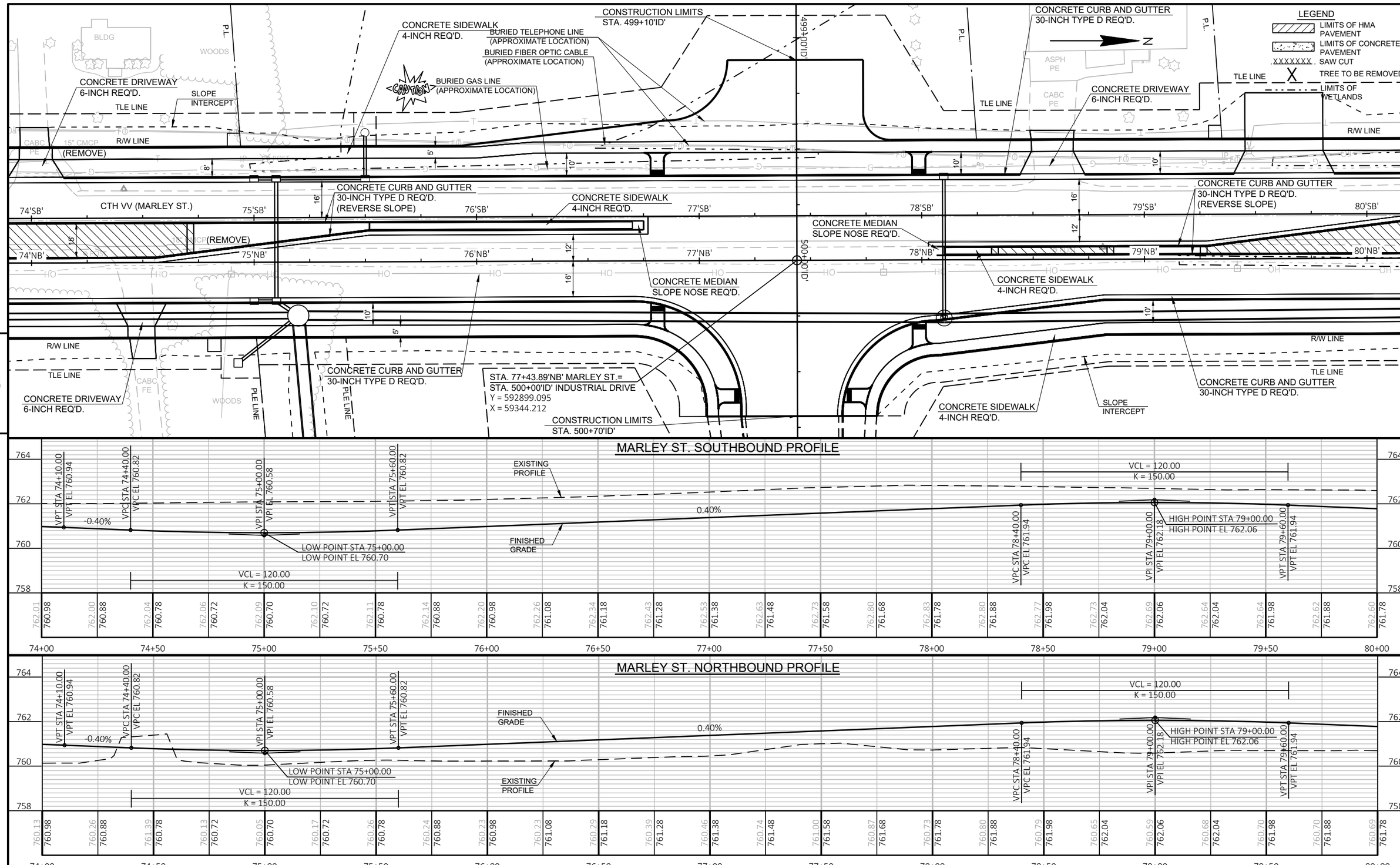

PROJECT NO: 9269-00-14	HWY: MARLEY STREET	COUNTY: BROWN	PLAN AND PROFILE	SHEET 101	E

FILE NAME : I:\45\450490 MARLEY STREET\C3D\SHEETSPLAN\050101 PP.DWG
LAYOUT NAME - 050103 pp
PLOT DATE : 11/11/2021 10:18 AM PLOT BY : GARNICA, BRANDON PLOT NAME : PLOT SCALE : ##########
WISDOT/CADDS SHEET 44

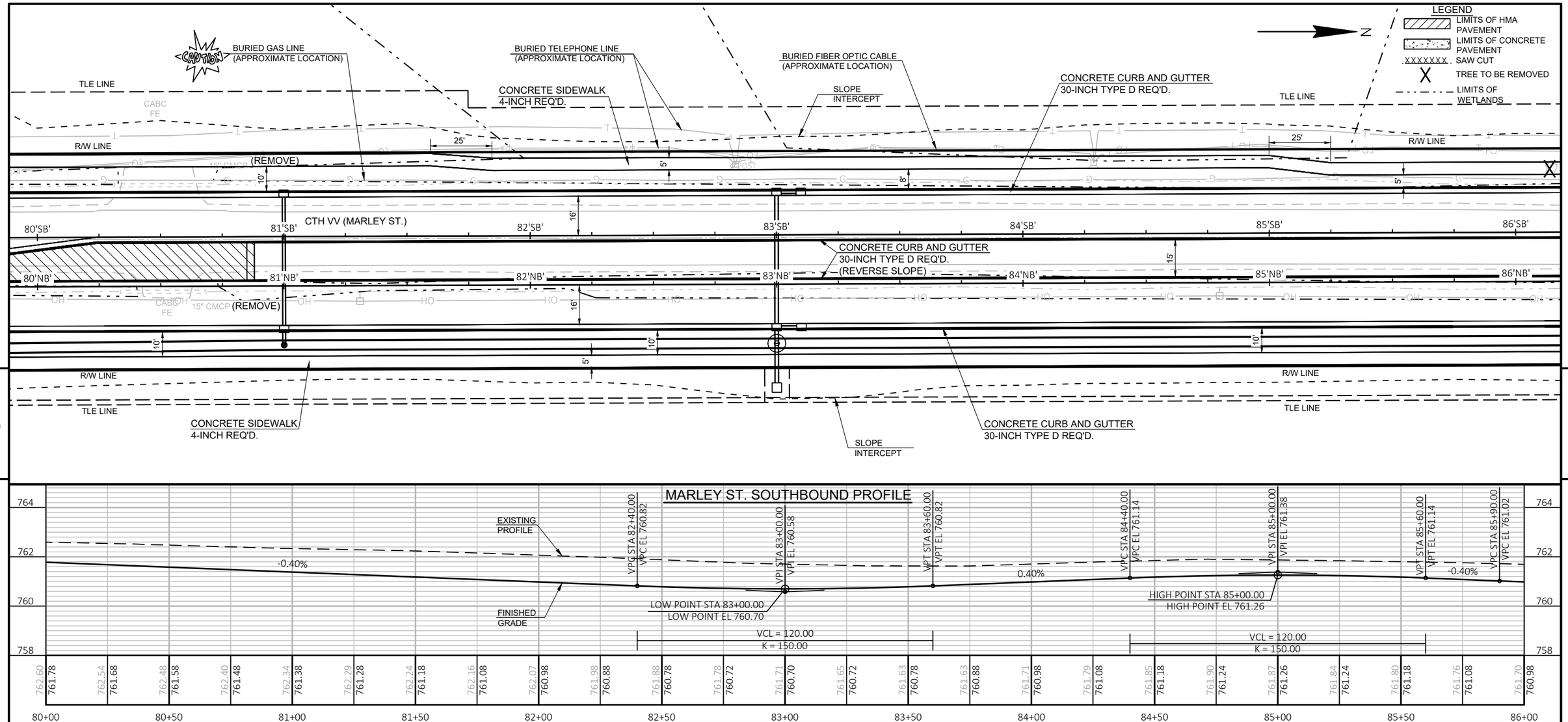

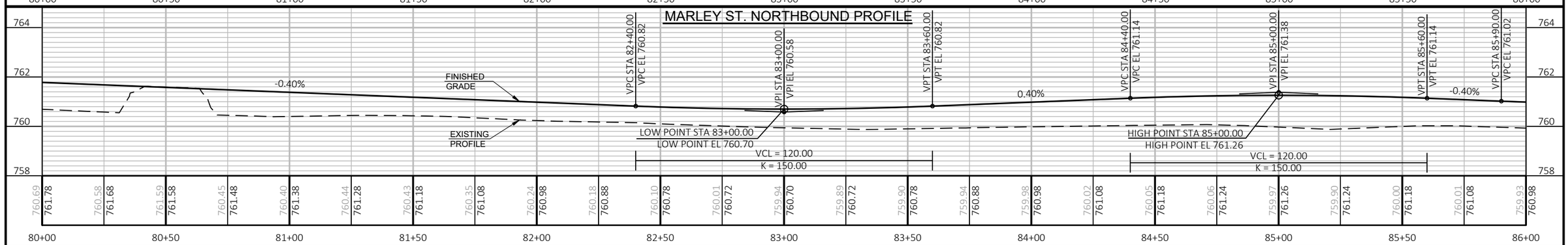

PROJECT NO: 9269-00-14	HWY: MARLEY STREET	COUNTY: BROWN	PLAN AND PROFILE	SHEET 102	E

FILE NAME : I:\45\450490 MARLEY STREET\C3D\SHEETSPLAN\050101 PP.DWG
LAYOUT NAME - 050104 pp
PLOT DATE : 11/11/2021 10:18 AM PLOT BY : GARNICA, BRANDON PLOT NAME : PLOT SCALE : ##########

LEGEND

- LIMITS OF HMA PAVEMENT
- LIMITS OF CONCRETE PAVEMENT
- SAW CUT
- TREE TO BE REMOVED
- LIMITS OF WETLANDS

BENCH MARKS

NO.	STATION	DESCRIPTION	ELEV.
502	90+09'NB'	NW CORN STP HSE1822 MARLEY-196'RT	764.43'

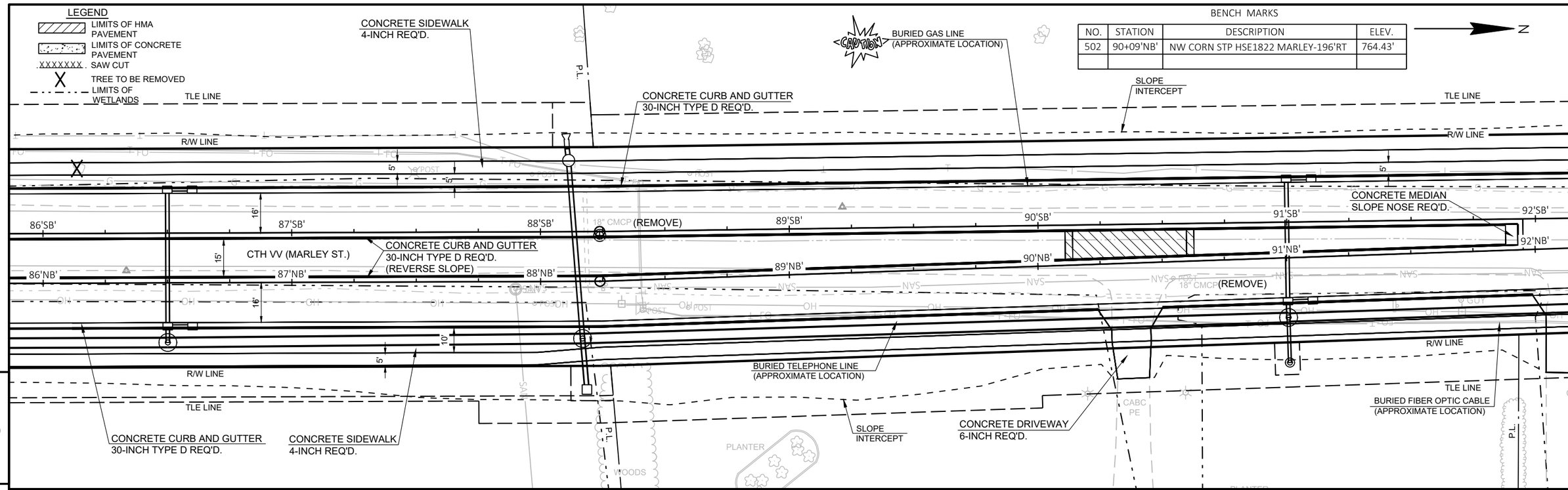

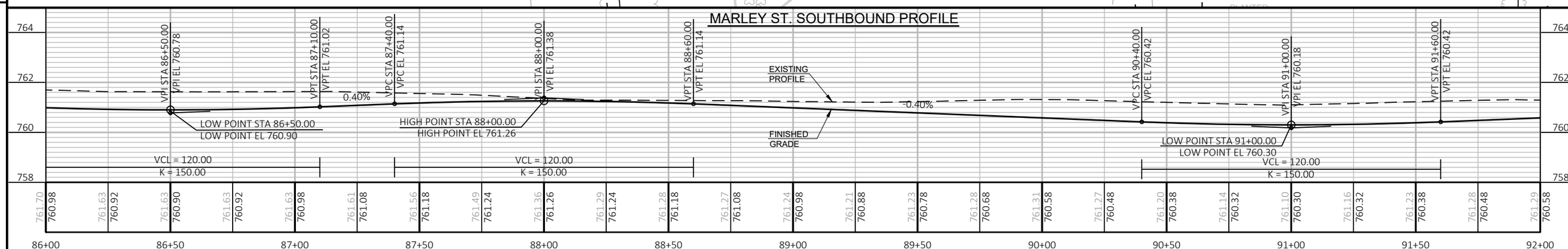

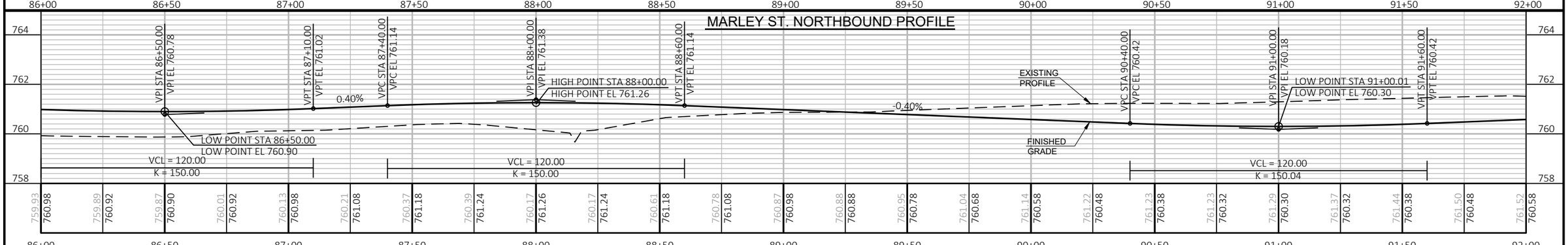

PROJECT NO: 9269-00-14	HWY: MARLEY STREET	COUNTY: BROWN	PLAN AND PROFILE	SHEET 103	E

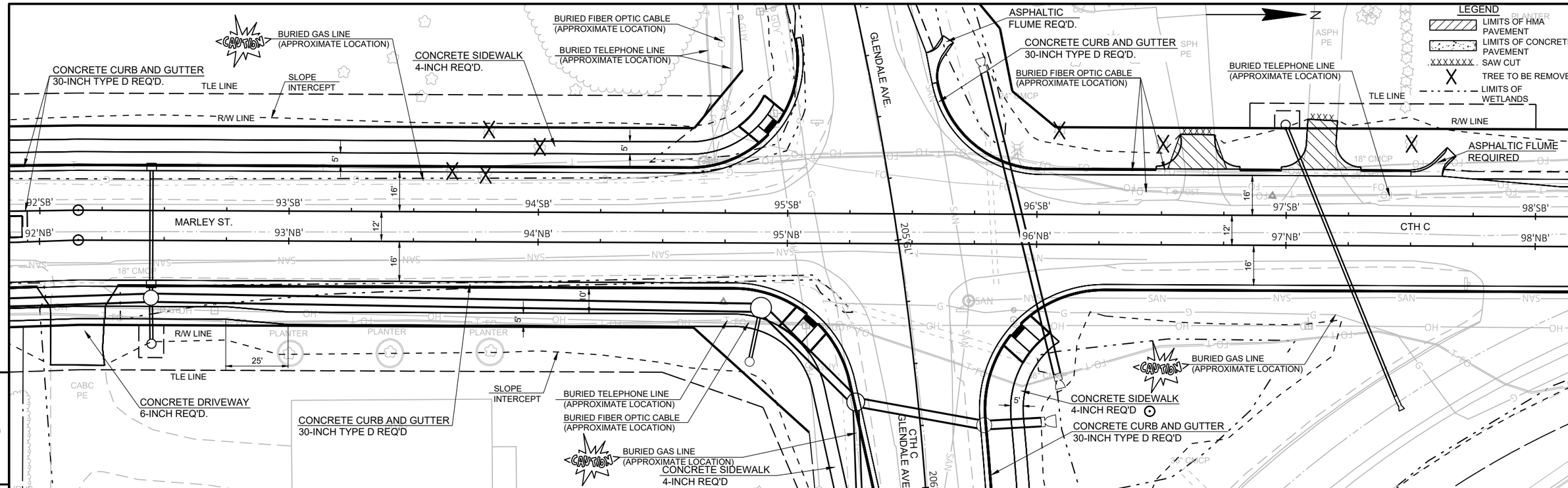

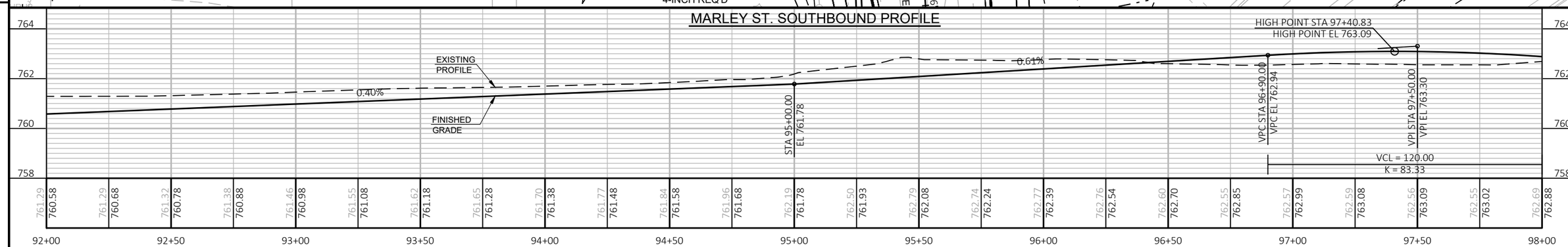

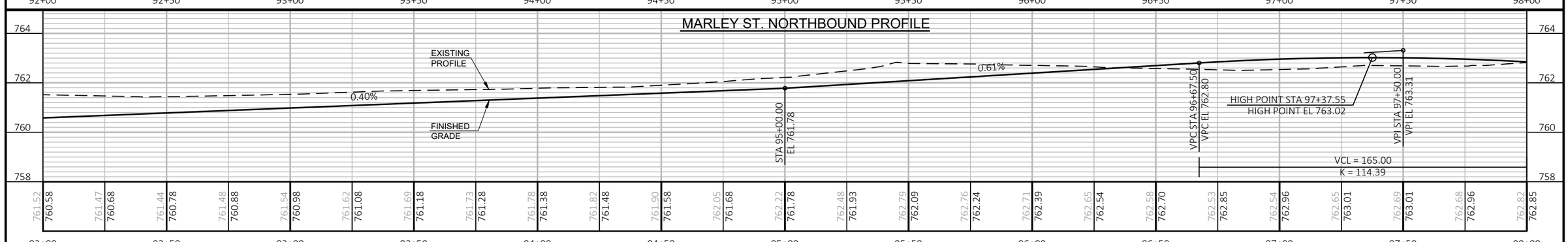

PROJECT NO: 9269-00-14	HWY: MARLEY STREET	COUNTY: BROWN	PLAN AND PROFILE	SHEET 104	E

LEGEND

- LIMITS OF HMA PAVEMENT
- LIMITS OF CONCRETE PAVEMENT
- SAW CUT
- TREE TO BE REMOVED
- LIMITS OF WETLANDS

BENCH MARKS

NO.	STATION	DESCRIPTION	ELEV.
504	98+48'NB'	NE CORN STP BARN1887 MARLEY-98'RT	762.49'

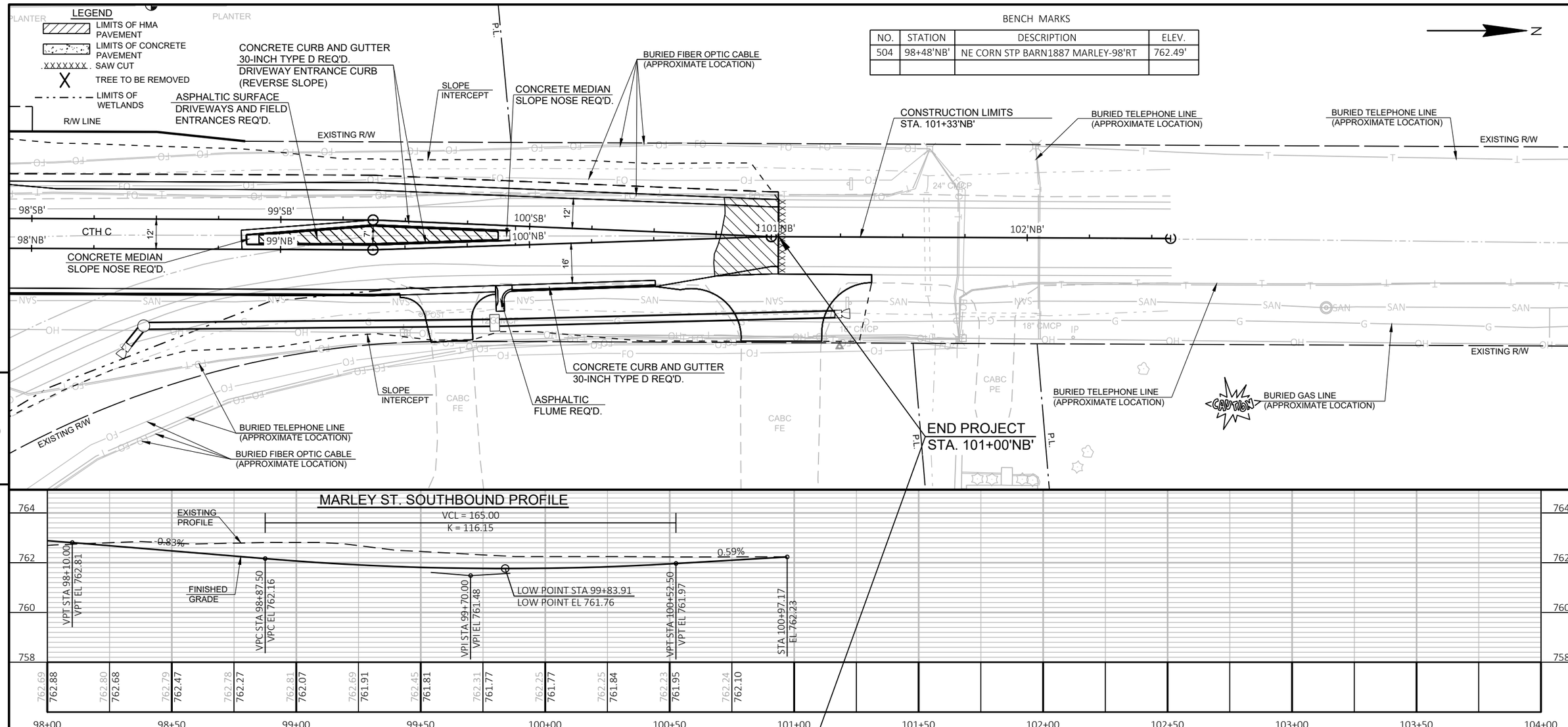

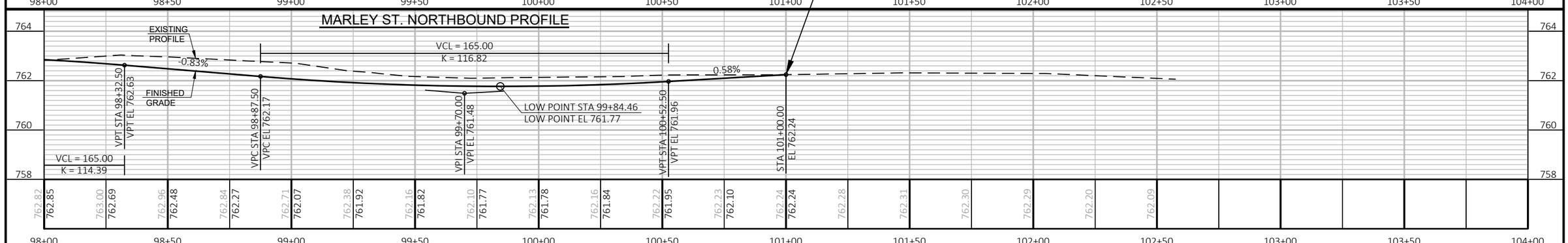

PROJECT NO: 9269-00-14	HWY: MARLEY STREET	COUNTY: BROWN	PLAN AND PROFILE	SHEET 105	E

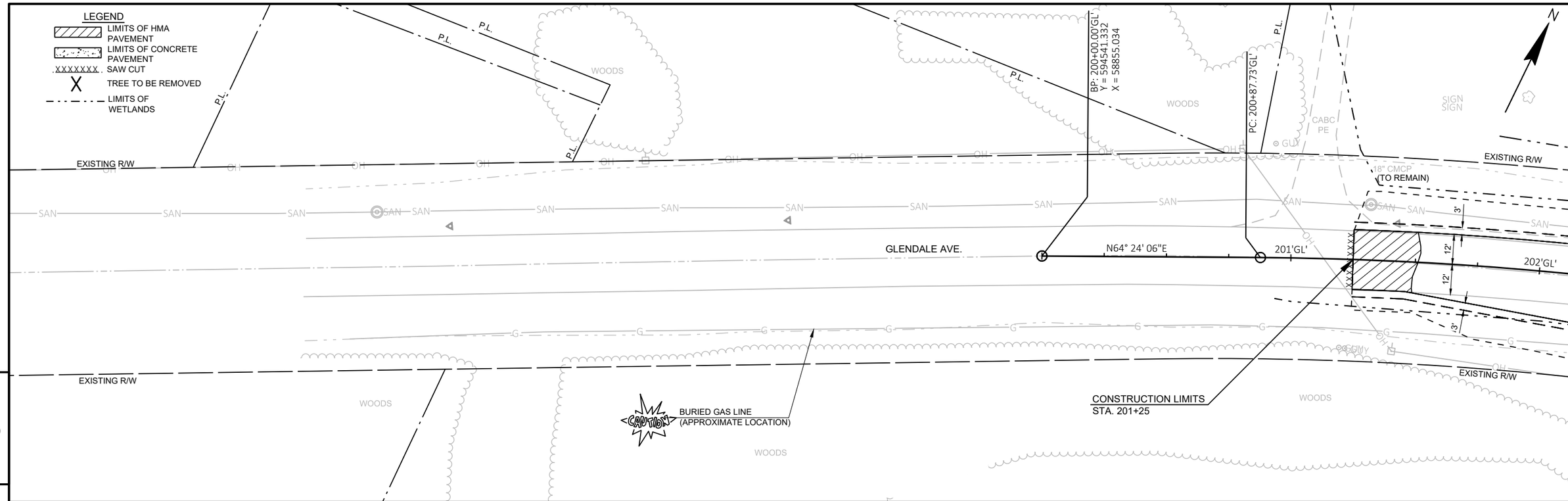

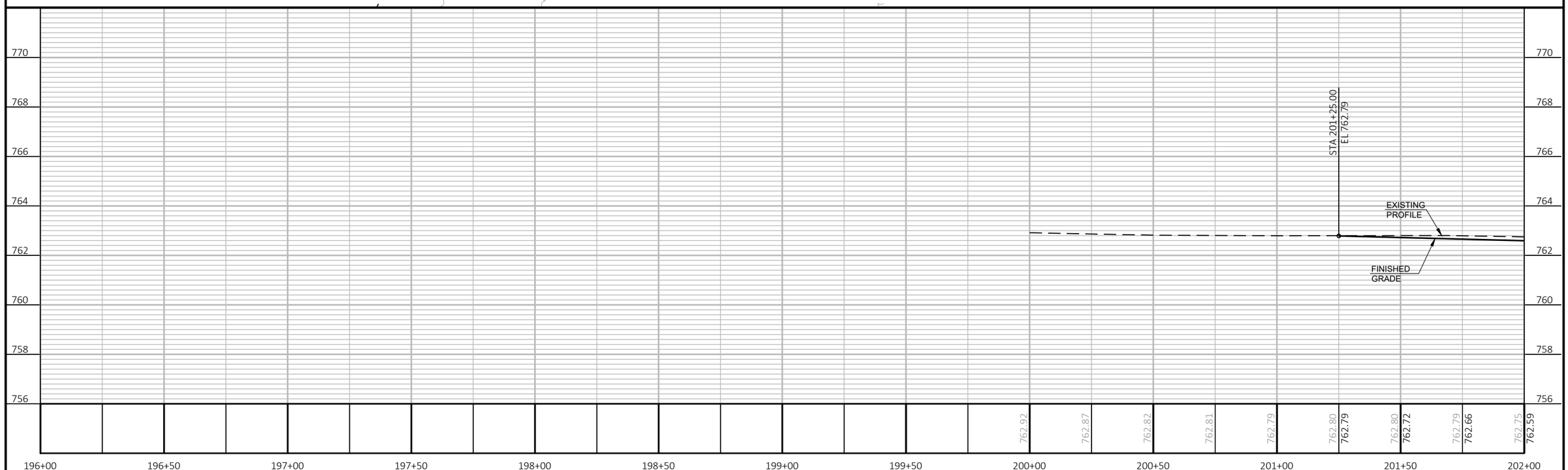

PROJECT NO: 9269-00-14	HWY: MARLEY STREET	COUNTY: BROWN	PLAN AND PROFILE: PLAN AND PROFILE	SHEET 106	E

FILE NAME : I:\45\450490 MARLEY STREET\C3D\SHEETSPLAN\050101 PP.DWG
LAYOUT NAME - 050108 pp
PLOT DATE : 11/11/2021 10:19 AM
PLOT BY : GARNICA, BRANDON
PLOT NAME :
PLOT SCALE : 1 IN:40 FT

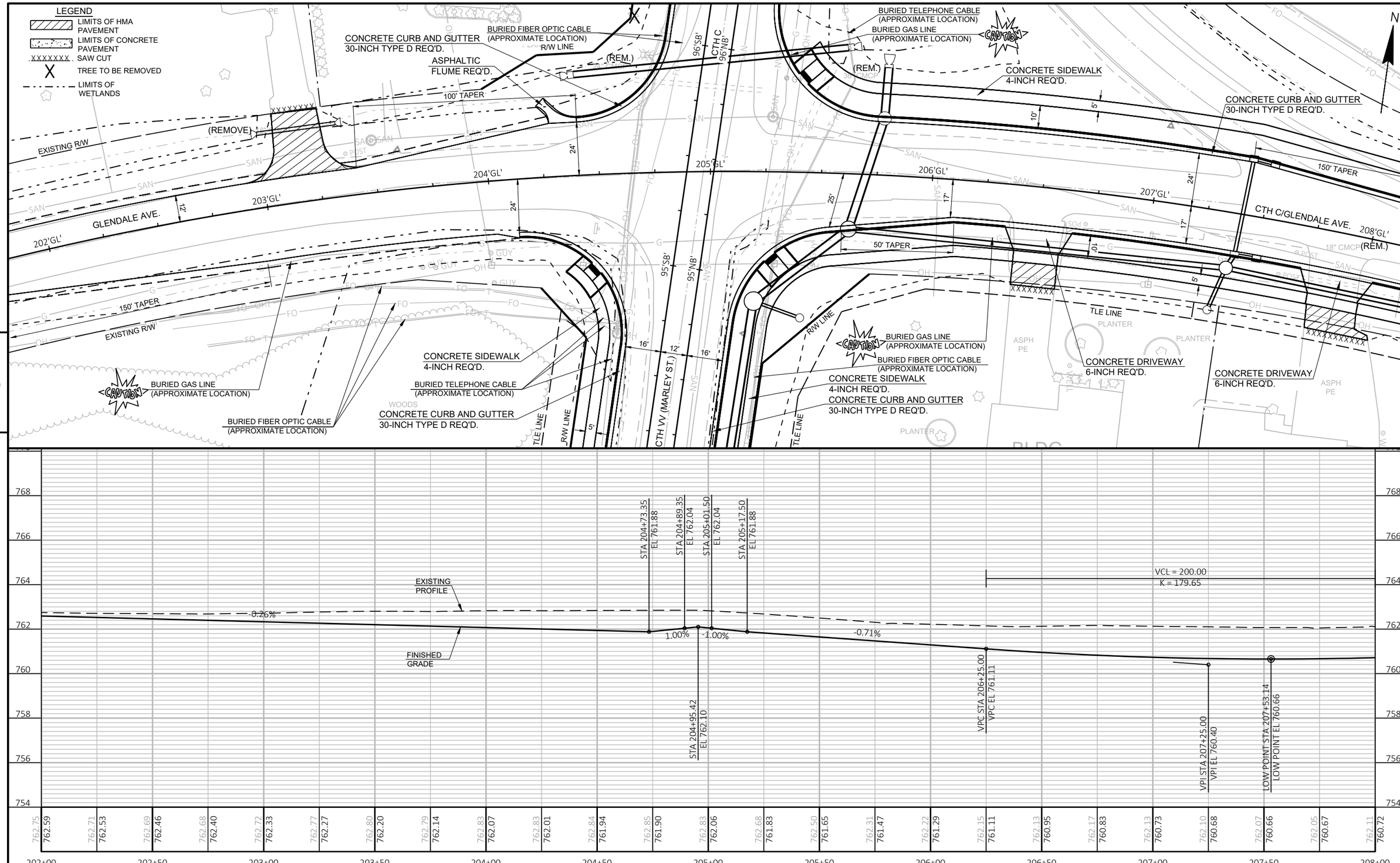

PROJECT NO: 9269-00-14	HWY: MARLEY STREET	COUNTY: BROWN	PLAN AND PROFILE: PLAN AND PROFILE	SHEET 107	E

FILE NAME : I:\45\450490 MARLEY STREET\C3D\SHEETSPLAN\050101 PP.DWG
LAYOUT NAME - 050109 pp
PLOT DATE : 11/11/2021 10:19 AM
PLOT BY : GARNICA, BRANDON
PLOT NAME :
PLOT SCALE : 1 IN:40 FT
WISDOT/CADDS SHEET 44

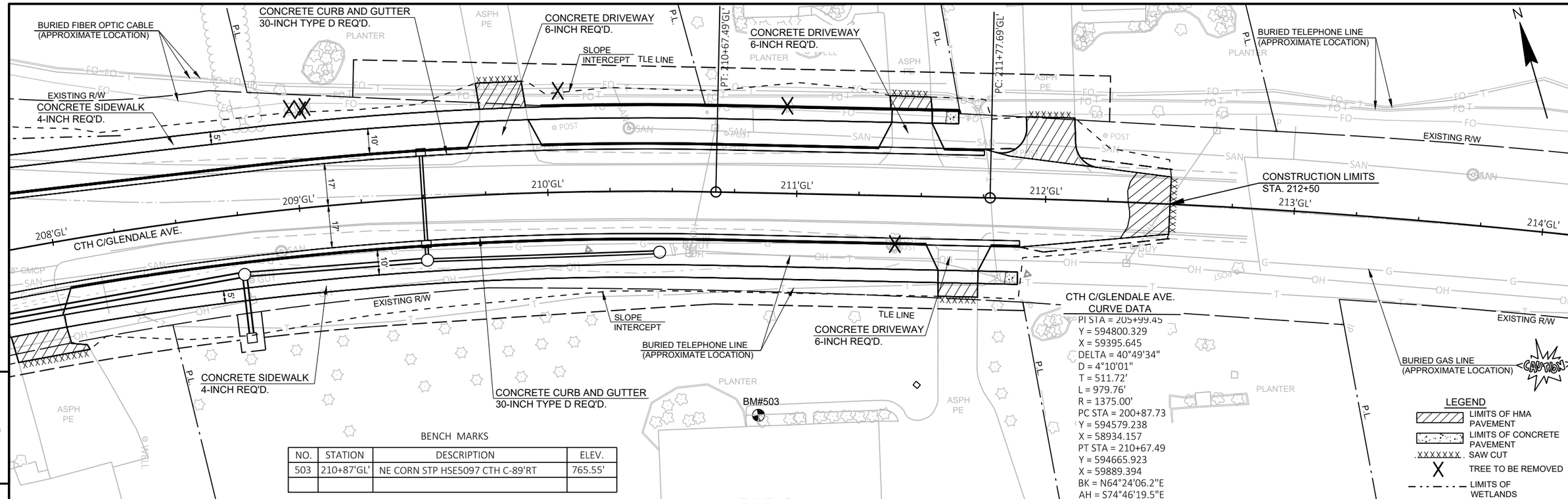

BENCH MARKS

NO.	STATION	DESCRIPTION	ELEV.
503	210+87'GL'	NE CORN STP HSE5097 CTH C-89'RT	765.55'

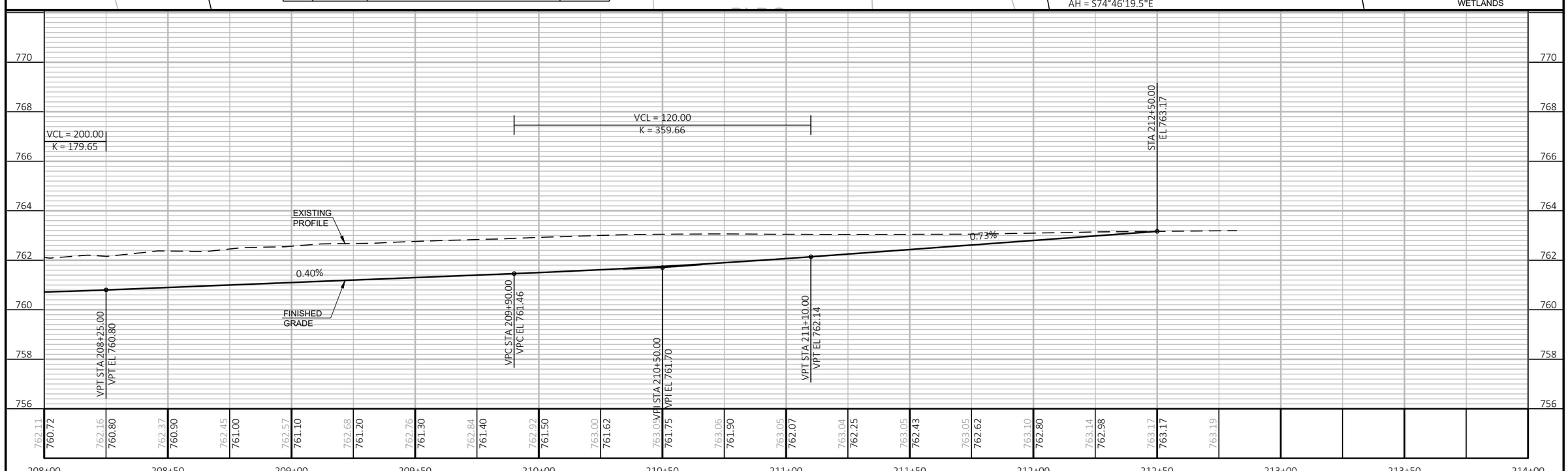

PROJECT NO: 9269-00-14	HWY: MARLEY STREET	COUNTY: BROWN	PLAN AND PROFILE: PLAN AND PROFILE	SHEET 108	E

Standard Detail Drawing List

08A05-19A	INLET COVERS TYPE A, H, A-S, H-S & Z
08A05-19B	INLET COVERS TYPE B, B-A, C, MS, MS-A, & WM
08A05-19D	INLET COVER TYPE BW, MANHOLE COVERS, TYPE K, J, J-S, L & M
08B09-02	MANHOLES 3-FT, 4-FT, 5-FT, 6-FT, 7-FT AND 8-FT DIAMETER
08C06-02	INLETS 3-FT AND 4-FT DIAMETER
08C07-02	INLETS 2X2-FT, 2X2.5-FT, 2X3-FT AND 2.5X3-FT
08C08-02	INLETS MEDIAN 1 AND 2 GRATE
08D01-22A	CONCRETE CURB & GUTTER
08D01-22B	CONCRETE CURB, TIES AND CURB AND GUTTER APPLICATIONS
08D04-05	CONCRETE SURFACE DRAINS & ASPHALTIC FLUMES
08D05-20A	CURB RAMPS TYPES 1 AND 1-A
08D05-20B	CURB RAMPS TYPES 2 AND 3
08D05-20C	CURB RAMPS TYPES 4A AND 4A1
08D05-20D	CURB RAMPS TYPE 4B AND 4B1
08D05-20E	CURB RAMPS TYPES 5, 6, 7A, 7B & 8
08D05-20F	CURB RAMPS RADIAL DETECTABLE WARNING FIELD APPLICATIONS
08D05-20G	CURB RAMPS RECTANGULAR AND RADIAL DETECTABLE WARNING PLATES
08E09-06	SILT FENCE
08E10-02	INLET PROTECTION TYPE A, B, C AND D
08E14-01	TRACKING PAD
08E15-01	CULVERT PIPE CHECK
08F01-11	APRON ENDWALLS FOR CULVERT PIPE
08F02-01	APRON ENDWALLS FOR PIPE ARCH AND ELLIPTICAL PIPE
08F04-07	JOINT TIES FOR CONCRETE PIPE AND CONCRETE COLLAR DETAIL
11B02-02	CONCRETE MEDIAN NOSE
13C19-03	HMA LONGITUDINAL JOINTS
14B07-15A	CONCRETE BARRIER TEMPORARY PRECAST, 12'-6"
14B07-15B	CONCRETE BARRIER TEMPORARY PRECAST, 12'-6"
14B07-15C	CONCRETE BARRIER TEMPORARY PRECAST, 12'-6"
14B07-15D	CONCRETE BARRIER TEMPORARY PRECAST, 12'-6"
14B07-15E	CONCRETE BARRIER TEMPORARY PRECAST, 12'-6"
14B07-15F	CONCRETE BARRIER TEMPORARY PRECAST, 12'-6"
14B07-15G	CONCRETE BARRIER TEMPORARY PRECAST, 12'-6"
14B07-15H	CONCRETE BARRIER TEMPORARY PRECAST, 12'-6"
14B07-15I	CONCRETE BARRIER TEMPORARY PRECAST, 12'-6"
15C02-08A	BARRICADES AND SIGNS FOR MAINLINE CLOSURES
15C02-08B	BARRICADES AND SIGNS FOR VARIOUS CLOSURES
15C03-05	BARRICADES AND SIGNS FOR SIDEROAD CLOSURES
15C07-15B	PAVEMENT MARKING WORDS
15C07-15C	PAVEMENT MARKING ARROWS
15C08-20A	LONGITUDINAL MARKING (MAINLINE)
15C08-20B	PAVEMENT MARKING (TURN LANES)
15C08-20C	PAVEMENT MARKING (TURN LANES)
15C11-09B	CHANNELIZING DEVICES DRUMS, CONES, BARRICADES AND VERTICAL PANELS
16A01-07	LANDMARK REFERENCE MONUMENTS AND COVERS

6

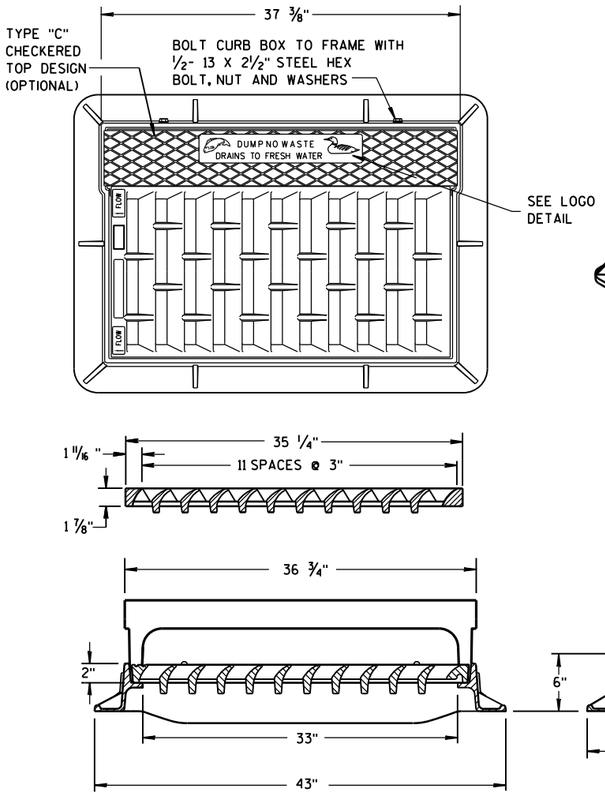

NOTE:
GRATE IS REVERSIBLE.

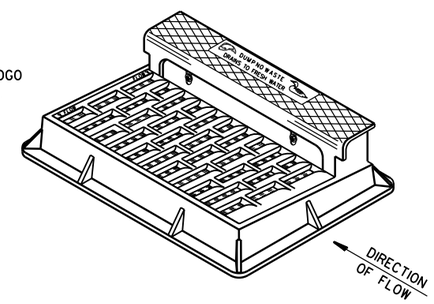

NOTE: CURB BOX HEIGHT ADJUSTABLE 6" TO 9"

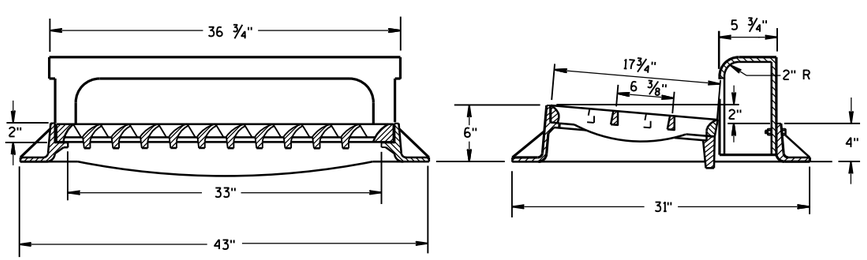

TYPE "H"

NOTE: EITHER CASTING IS ACCEPTABLE

1 1/8" DIAGONAL BARS WITH 1 5/8" OPENINGS

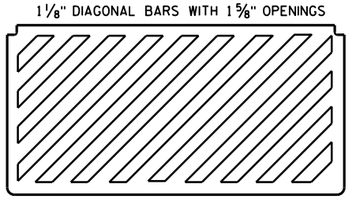

SPECIAL GRATE FOR TYPE "H" COVER

(MEASURES 35 1/4" X 17 3/4" X 2")

(NOTED AS TYPE H-S ON DRAINAGE TABLE)

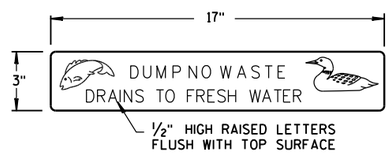

LOGO DETAIL

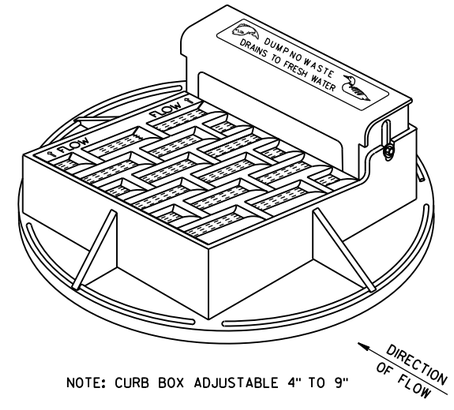

NOTE: CURB BOX ADJUSTABLE 4" TO 9"

NOTE:
GRATE IS REVERSIBLE.

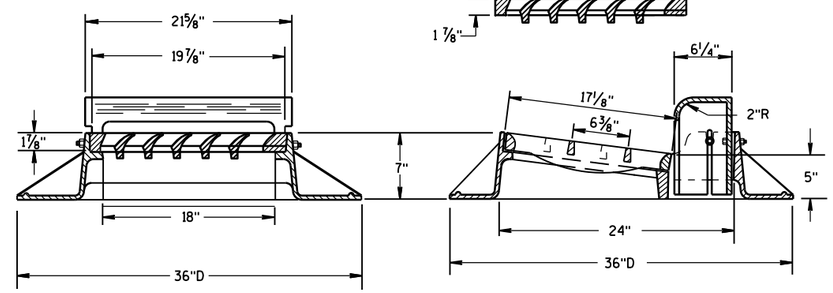

TYPE "A"

GENERAL NOTES

DETAILS OF CONSTRUCTION, MATERIALS AND WORKMANSHIP NOT SHOWN ON THIS DRAWING SHALL CONFORM TO THE PERTINENT REQUIREMENTS OF THE STANDARD SPECIFICATIONS AND THE APPLICABLE SPECIAL PROVISIONS.

DETAIL DRAWINGS FOR PROPOSED ALTERNATE DESIGNS FOR CATCH BASIN, MANHOLE AND INLET COVERS SHALL BE SUBMITTED TO THE ENGINEER FOR APPROVAL PROVIDING THAT SUCH ALTERNATE DESIGNS MAKE PROVISION FOR EQUIVALENT CAPACITY AND STRENGTH.

ROUND FRAMES AND COVERS SHALL HAVE CONTINUOUSLY MACHINED BEARING SURFACES TO PREVENT ROCKING AND RATTLING.

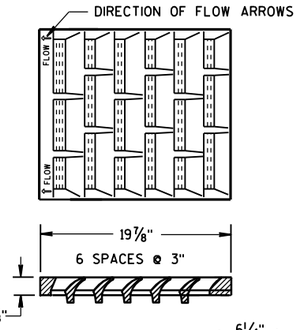

1" DIAGONAL BARS WITH 1 1/2" OPENINGS

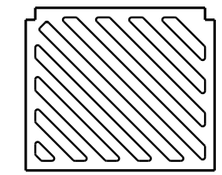

SPECIAL GRATE FOR TYPE "A" COVER

(MEASURES 19 3/4" X 17" X 1 7/8")

(NOTED AS TYPE A-S ON DRAINAGE TABLE)

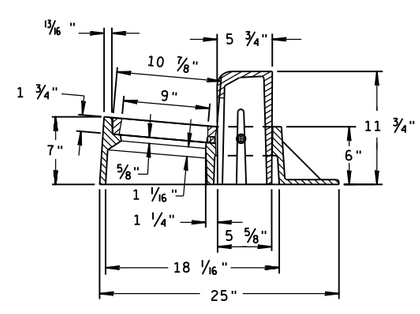

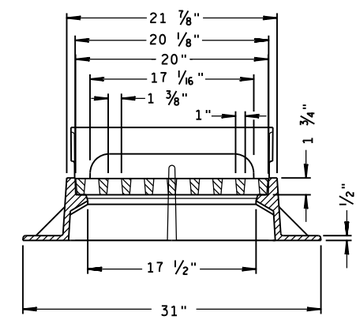

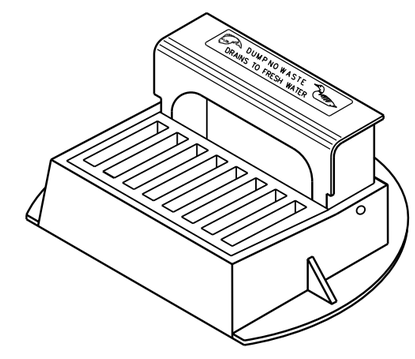

TYPE "Z"

INLET COVERS
TYPE A, H, A-S, H-S & Z

STATE OF WISCONSIN
DEPARTMENT OF TRANSPORTATION

APPROVED
11-27-13 /S/ Jerry H. Zogg
DATE ROADWAY STANDARDS DEVELOPMENT ENGINEER
FHWA

6

S.D.D. 8 A 5-19a

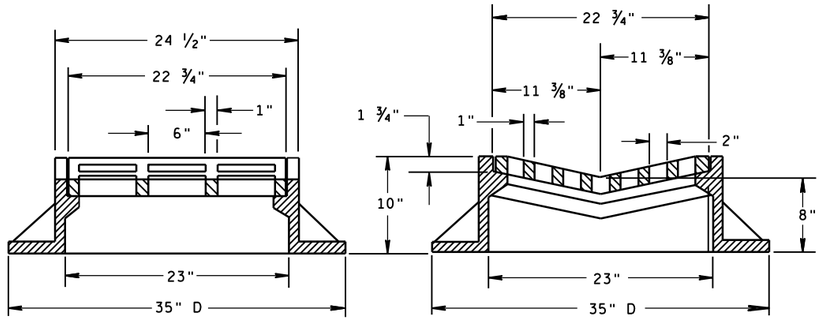

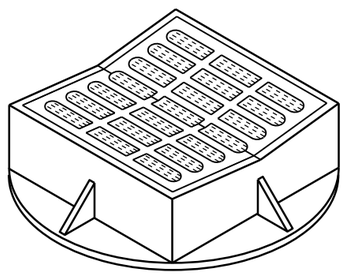

TYPE "B"

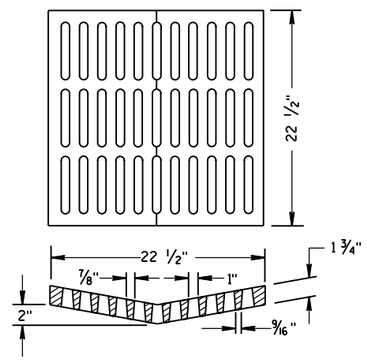

ALTERNATIVE GRATE FOR TYPE "B" COVER

USE WHERE PEDESTRIAN OR BICYCLE TRAFFIC IS POSSIBLE.

NOTED AS TYPE B-A ON THE DRAINAGE TABLE

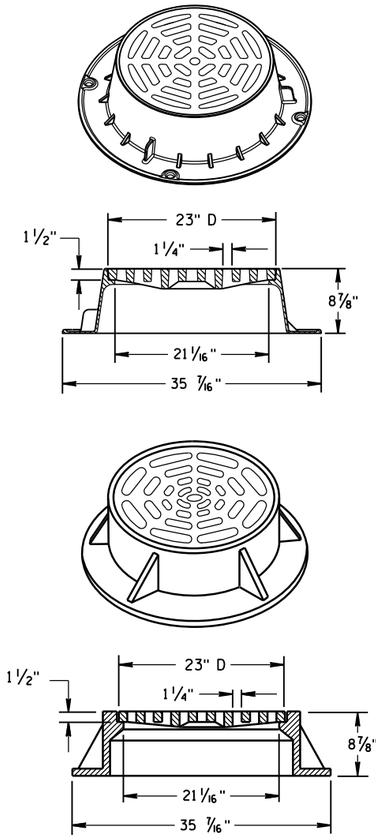

TYPE "C"

NOTE: EITHER CASTING IS ACCEPTABLE

GENERAL NOTES

DETAILS OF CONSTRUCTION, MATERIALS AND WORKMANSHIP NOT SHOWN ON THIS DRAWING SHALL CONFORM TO THE PERTINENT REQUIREMENTS OF THE STANDARD SPECIFICATIONS AND THE APPLICABLE SPECIAL PROVISIONS.

DETAIL DRAWINGS FOR PROPOSED ALTERNATE DESIGNS FOR CATCH BASIN, MANHOLE AND INLET COVERS SHALL BE SUBMITTED TO THE ENGINEER FOR APPROVAL PROVIDING THAT SUCH ALTERNATE DESIGNS MAKE PROVISION FOR EQUIVALENT CAPACITY AND STRENGTH.

ROUND FRAMES AND COVERS SHALL HAVE CONTINUOUSLY MACHINED BEARING SURFACES TO PREVENT ROCKING AND RATTLING.

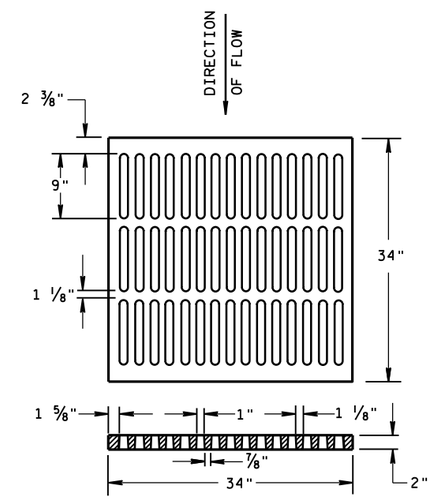

ALTERNATIVE TYPE "MS"

USE WHERE PEDESTRIAN OR BICYCLE TRAFFIC IS PERMITTED

NOTED AS TYPE MS-A ON THE DRAINAGE TABLE

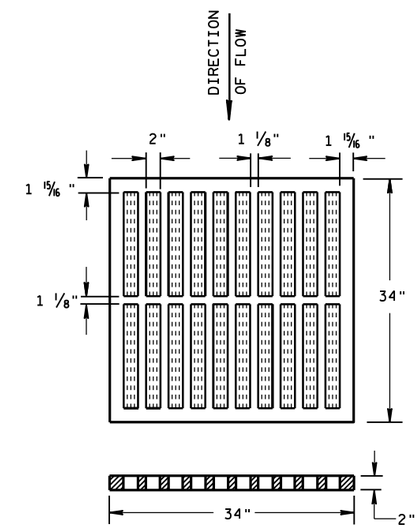

TYPE "MS"

USE ON FREEWAYS AND EXPRESSWAYS

NOTED AS TYPE MS ON DRAINAGE TABLE

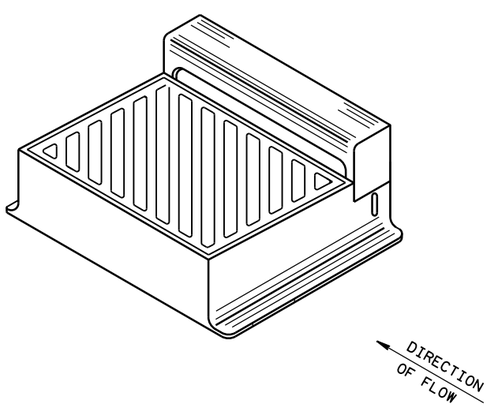

DIAGONAL SLOTS, SHALL BE ORIENTED TO THE DIRECTION OF FLOW AS ILLUSTRATED. GRATES ARE MANUFACTURED TO BE REVERSIBLE.

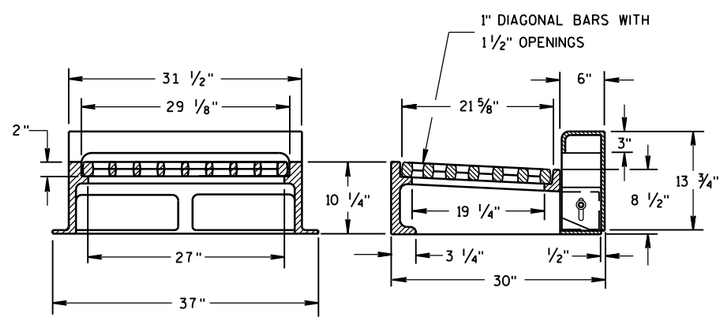

NOTE: CURB BOX HEIGHT ADJUSTABLE 6" TO 9"

TYPE "WM"

6

6

S.D.D. 8 A 5-19b

S.D.D. 8 A 5-19b

INLET COVERS
TYPE B, B-A, C,
MS, MS-A, & WM

STATE OF WISCONSIN
DEPARTMENT OF TRANSPORTATION

APPROVED

11/27/2013 — DATE

/S/ Jerry H. Zogg — ROADWAY STANDARDS DEVELOPMENT ENGINEER

FHWA

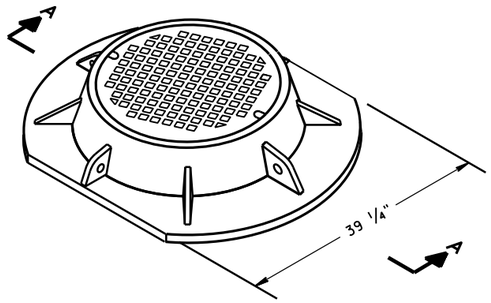

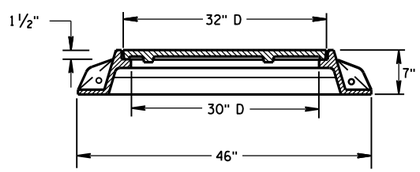

SECTION A-A
TYPE "K"

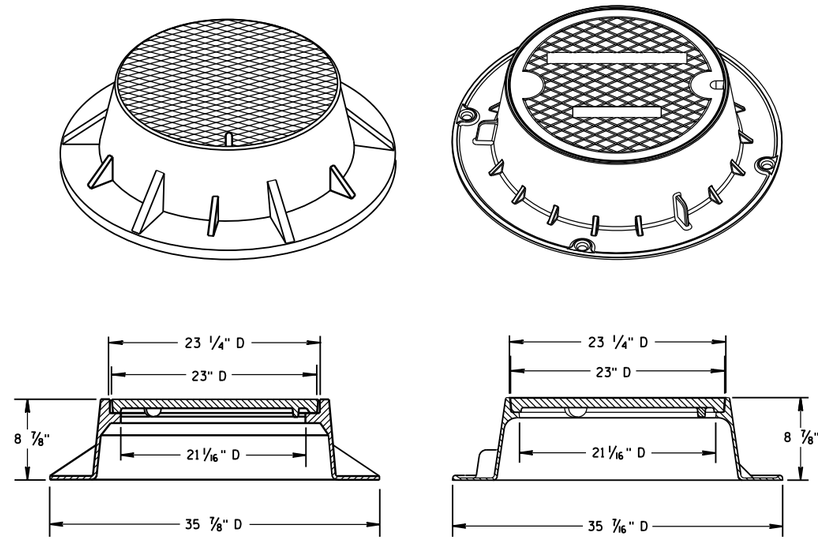

TYPE "J"
NOTE: EITHER CASTING IS ACCEPTABLE

GENERAL NOTES

DETAILS OF CONSTRUCTION, MATERIALS AND WORKMANSHIP NOT SHOWN ON THIS DRAWING SHALL CONFORM TO THE PERTINENT REQUIREMENTS OF THE STANDARD SPECIFICATIONS AND THE APPLICABLE SPECIAL PROVISIONS.

DETAIL DRAWINGS FOR PROPOSED ALTERNATE DESIGNS FOR MANHOLE COVERS SHALL BE SUBMITTED TO THE ENGINEER FOR APPROVAL PROVIDING THAT SUCH ALTERNATE DESIGNS MAKE PROVISION FOR EQUIVALENT CAPACITY AND STRENGTH.

ROUND FRAMES AND COVERS SHALL HAVE CONTINUOUSLY MACHINED BEARING SURFACES TO PREVENT ROCKING AND RATTLING.

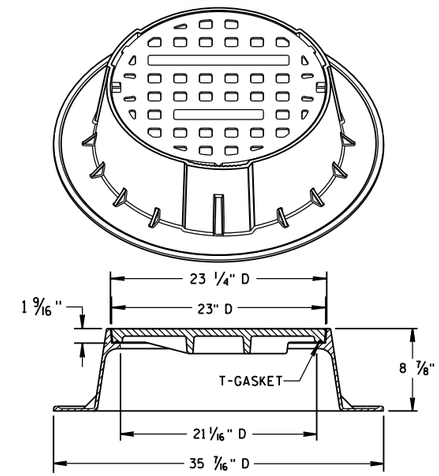

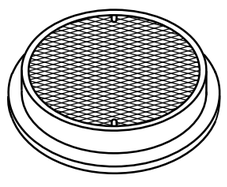

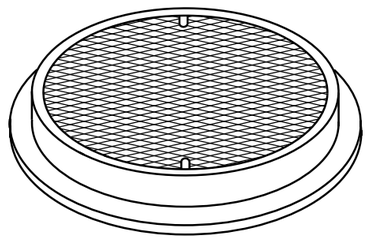

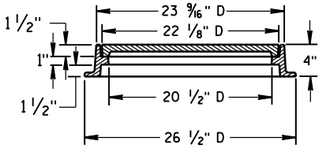

TYPE "L"

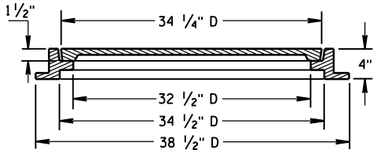

TYPE "M"

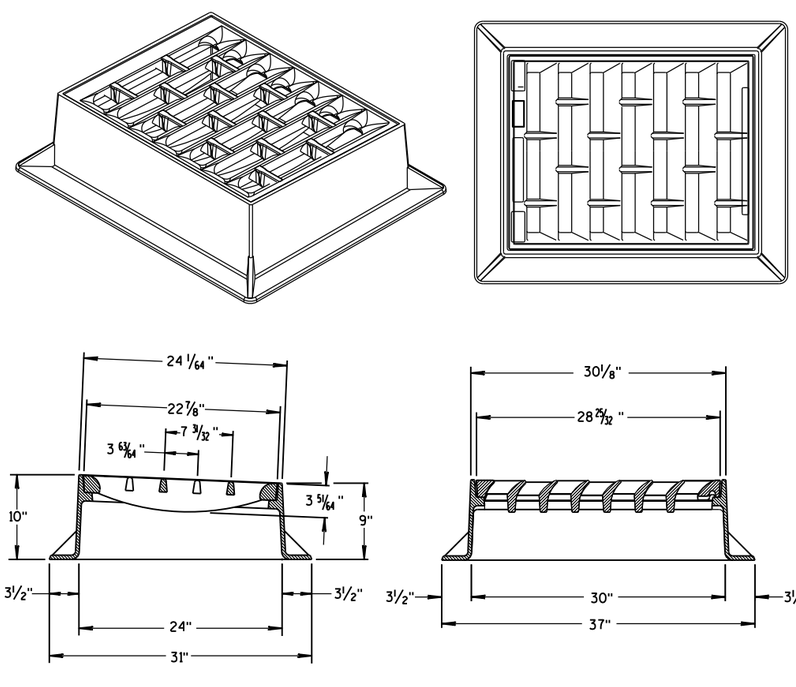

INLET COVER TYPE "BW"

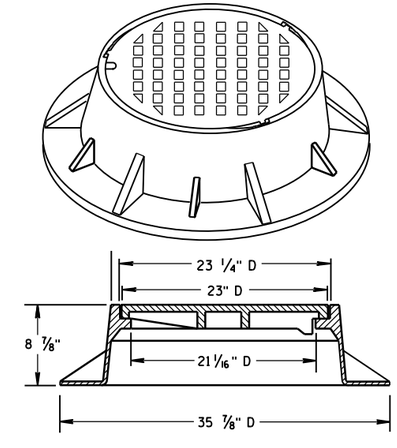

TYPE "J" SPECIAL
TYPE "B" NON-ROCKING SELF-SEAL LID
(NOTED AS TYPE J-S ON THE DRAINAGE TABLE)
NOTE: EITHER CASTING IS ACCEPTABLE

INLET COVER TYPE BW MANHOLE COVERS, TYPE K, J, J-S, L & M	
STATE OF WISCONSIN DEPARTMENT OF TRANSPORTATION	
APPROVED 11/27/2013 DATE FHWA	/S/ Jerry H. Zogg ROADWAY STANDARDS DEVELOPMENT ENGINEER

6

6

S.D.D. 8 A 5-19d

S.D.D. 8 A 5-19d

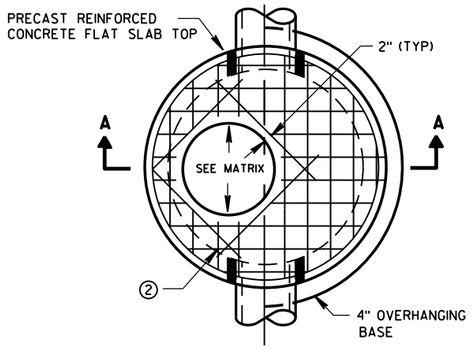

PLAN VIEW CIRCULAR OPENING

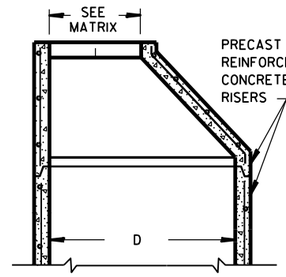

OPTIONAL PRECAST REINFORCED CONCRETE ECCENTRIC TOP

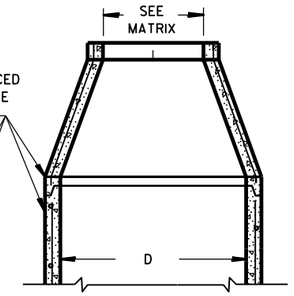

OPTIONAL PRECAST REINFORCED CONCRETE CONCENTRIC TOP

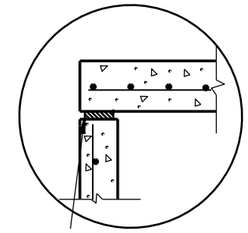

TOP WITH PLAIN END JOINT

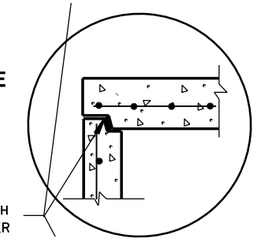

JOINTS TO BE SEALED WITH A BUTYL RUBBER SEAL PER SEALANT MANUFACTURERS RECOMMENDATIONS CONFORMING TO ASTM C990 (TYP)

TOP WITH TONGUE AND GROOVE JOINT

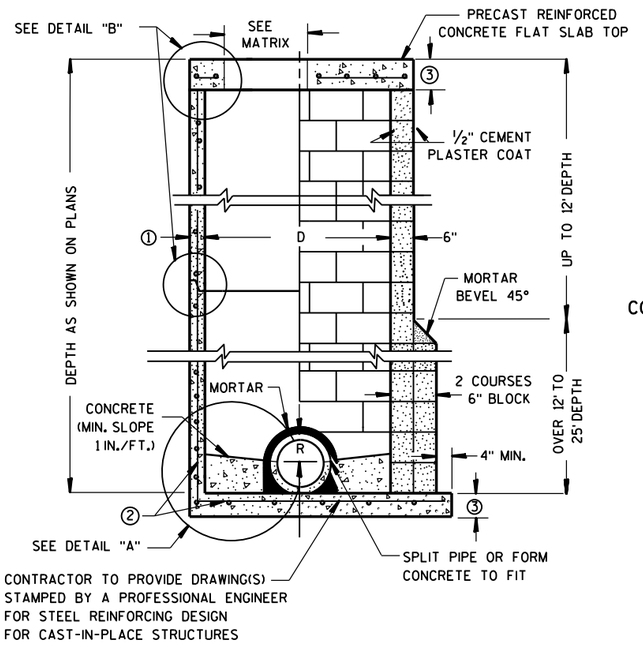

PRECAST REINFORCED CONCRETE WITH MONOLITHIC BASE

CONCRETE BLOCK WITH CAST-IN-PLACE OR PRECAST REINFORCED CONCRETE BASE ②

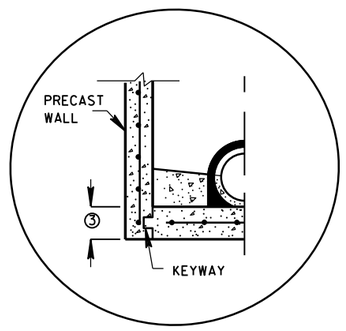

PRECAST REINFORCED CONCRETE WITH INTEGRAL BASE OPTION

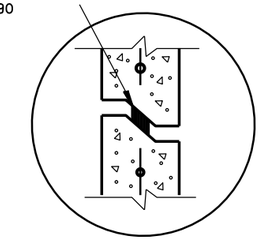

RISER WITH TONGUE AND GROOVE JOINT

DETAIL "B"

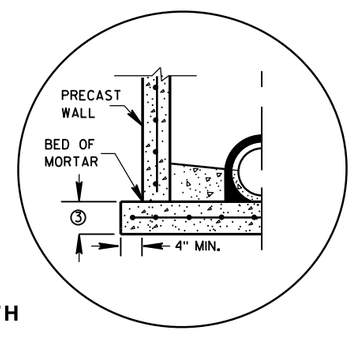

SEPARATE PRECAST REINFORCED CONCRETE BASE OPTION

DETAIL "A"

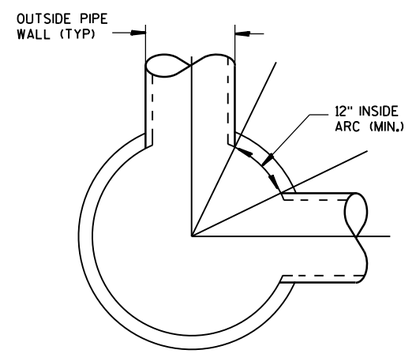

DETAIL "C"

GENERAL NOTES

DETAILS OF CONSTRUCTION, MATERIALS AND WORKMANSHIP NOT SHOWN ON THIS DRAWING SHALL CONFORM TO THE PERTINENT REQUIREMENTS OF THE STANDARD SPECIFICATIONS AND THE APPLICABLE SPECIAL PROVISIONS.

UNLESS OTHERWISE AUTHORIZED IN WRITING BY THE ENGINEER, THE CONTRACTOR SHALL NOT ORDER AND DELIVER PRECAST MANHOLE UNITS REQUIRED FOR THE PROJECT UNTIL A LIST OF SIZES IS FURNISHED BY THE ENGINEER.

DETAILED DRAWINGS FOR PROPOSED ALTERNATE DESIGNS FOR UNDERGROUND DRAINAGE STRUCTURES SHALL BE SUBMITTED TO THE ENGINEER FOR APPROVAL PROVIDING THAT SUCH ALTERNATE DESIGNS MAKE PROVISION FOR EQUIVALENT CAPACITY AND STRENGTH.

ALL DRAINAGE STRUCTURES ARE DESIGNATED ON THE PLANS AS "MANHOLES 3X3-L", "CATCH BASINS 4-B", "INLETS 2X3-H", ETC. THE FIRST NUMBERS DESIGNATE THE SIZE OF THE STRUCTURE, AND THE FOLLOWING LETTER DESIGNATES THE TYPE OF COVER TO BE USED TO COMPRISE THE COMPLETE UNIT.

BASES SHALL BE PLACED ON A BED OF MATERIAL AT LEAST 6 INCHES IN DEPTH, WHICH MEETS THE REQUIREMENTS OF FOUNDATION BACKFILL. THIS BEDDING SHALL BE COMPACTED AND PROVIDE UNIFORM SUPPORT FOR THE ENTIRE AREA OF THE BASE.

PRECAST REINFORCED CONE TOPS (ECCENTRIC OR CONCENTRIC) OR PRECAST REINFORCED FLAT SLAB TOPS MAY BE USED ON CONCRETE BLOCK STRUCTURES.

ECCENTRIC CONE TOPS MAY BE USED ON ALL STRUCTURES, AND CONCENTRIC CONE TOPS SHALL BE USED ONLY ON STRUCTURES 5 FEET OR LESS IN DEPTH, UNLESS OTHERWISE DIRECTED BY THE ENGINEER.

STEPS MEETING AASHTO M199 AND THE FOLLOWING REQUIREMENTS SHALL BE INSTALLED IN ALL STRUCTURES OVER 5 FEET IN DEPTH: 16 INCH C-C MAXIMUM SPACING; PROJECT A MINIMUM CLEAR DISTANCE OF 4 INCHES FROM THE WALL AT THE POINT OF EMBEDMENT; MINIMUM LENGTH OF 10 INCHES; MINIMUM WALL EMBEDMENT OF 3 INCHES. FERROUS METAL STEPS NOT PAINTED OR TREATED TO RESIST CORROSION SHALL HAVE A MINIMUM CROSS SECTIONAL DIMENSION OF 1 INCH.

STEPS OF APPROVED POLYPROPYLENE PLASTIC COATED REINFORCEMENT BAR ARE ACCEPTABLE. REINFORCING BAR MUST BE A MINIMUM OF ½" AND MEET THE REQUIREMENTS OF ASTM A615.

CERTIFICATION SHALL BE PROVIDED THAT INSTALLED STEPS WHEN TESTED IN ACCORDANCE WITH SECTION 10 OF AASHTO T280 CAN WITHSTAND A VERTICAL LOAD OF 800 LBS. AND A HORIZONTAL LOAD OF 400 LBS.

ALL BAR STEEL REINFORCEMENT SHALL BE EMBEDDED 2 INCHES CLEAR UNLESS OTHERWISE SHOWN OR NOTED.

CONCRETE BLOCK WILL NOT BE PERMITED FOR STRUCTURES GREATER THAN 4 FEET IN DIAMETER.

PRECAST REINFORCED RISERS SHALL HAVE A TONGUE AND GROOVE JOINT WITH TONGUE UP OR DOWN.

ALL PRECAST MANHOLE UNITS SHALL CONFORM TO THE PERTINENT REQUIREMENTS OF AASHTO DESIGNATION M 199.

4" OVERHANGING BASES ARE REQUIRED FOR ALL CONCRETE BLOCK INSTALLATIONS. 4" OVERHANG IS REQUIRED WHEN SEPARATE PRECAST BASE IS PROVIDED. OVERHANG IS NOT REQUIRED ON PRECAST STRUCTURES WITH AN INTEGRAL OR MONOLITHIC BASE.

FOR ADDITIONAL CONFIGURATIONS, MAINTAIN A MINIMUM OF 12 INCHES AS MEASURED FROM THE INSIDE OF THE STRUCTURE WALL BETWEEN THE OUTSIDE PIPE WALLS OF ADJACENT PIPES. SEE DETAIL "C".

① MINIMUM WALL THICKNESS SHALL BE 4 INCHES FOR 3-FT, 5 INCHES FOR 4-FT, 6 INCHES FOR 5-FT, 7 INCHES FOR 6-FT, 8 INCHES FOR 7-FT AND 9 INCHES FOR 8-FT DIAMETER PRECAST MANHOLES.

② FOR PRECAST MANHOLES PROVIDE REINFORCING STEEL IN ACCORDANCE TO AASHTO M199.

③ PRECAST FLAT SLAB TOPS AND BASES WITH A DIAMETER OF 48" AND LESS SHALL HAVE A MINIMUM THICKNESS OF 6". PRECAST FLAT SLAB TOPS AND BASES WITH A DIAMETER LARGER THAN 48" SHALL HAVE A MINIMUM THICKNESS OF 8".

MANHOLE COVER OPENING MATRIX

MANHOLE COVER TYPE	C	ALL J'S	K	L	M
OPENING SIZE (FT)					
2 DIA.	X	X		X	
3 DIA.			X		X

PIPE MATRIX

MANHOLE SIZE	MAXIMUM INSIDE PIPE DIAMETER FOR TWO PIPES	
	180° SEPARATION (IN)	90° SEPARATION (IN)
3-FT	15	12
4-FT	24	18
5-FT	36	24
6-FT	42	36
7-FT	48	36
8-FT	60	42

MANHOLES 3-FT, 4-FT, 5-FT, 6-FT, 7-FT AND 8-FT DIAMETER

STATE OF WISCONSIN
DEPARTMENT OF TRANSPORTATION

APPROVED
Sept., 2016 — DATE
/S/ Rodney Taylor — ROADWAY STANDARDS DEVELOPMENT UNIT SUPERV
FHWA

6

S.D.D. 8 B 9-2

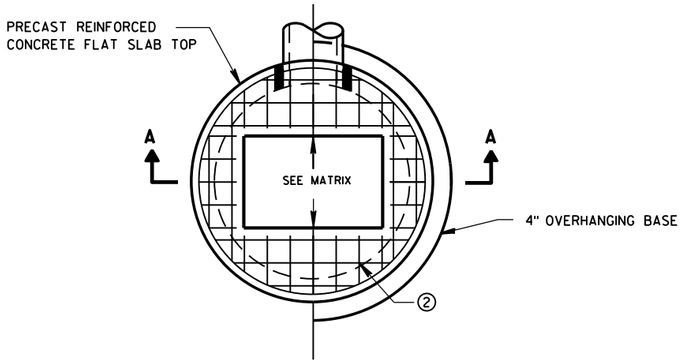

PLAN VIEW RECTANGULAR OPENING

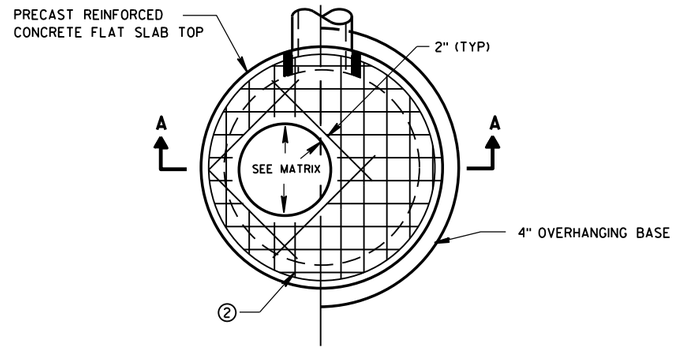

PLAN VIEW CIRCULAR OPENING

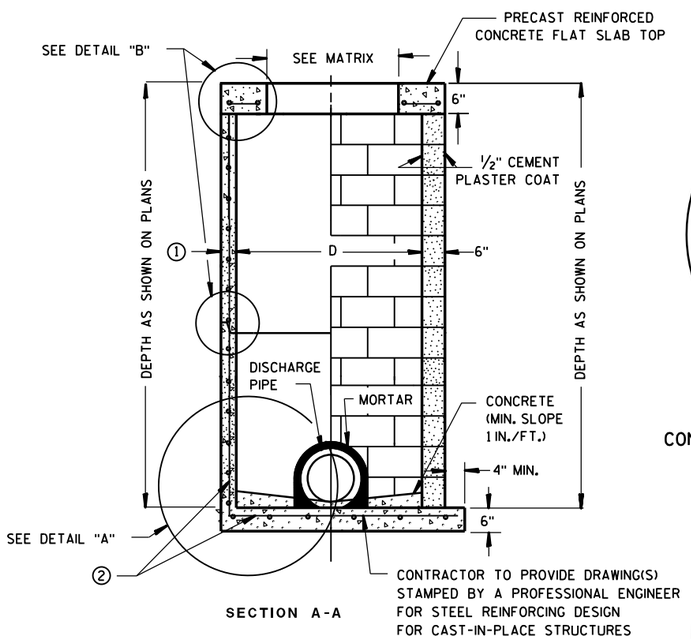

SECTION A-A

PRECAST REINFORCED CONCRETE WITH MONOLITHIC BASE

CONCRETE BLOCK WITH CAST-IN-PLACE OR PRECAST REINFORCED CONCRETE BASE ②

CIRCULAR INLETS W/ FLAT TOP

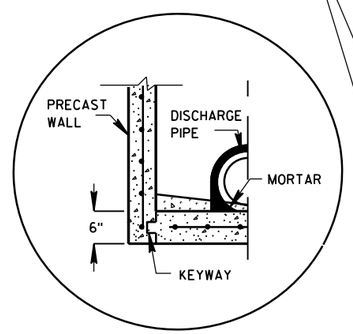

PRECAST REINFORCED CONCRETE WITH INTEGRAL BASE OPTION

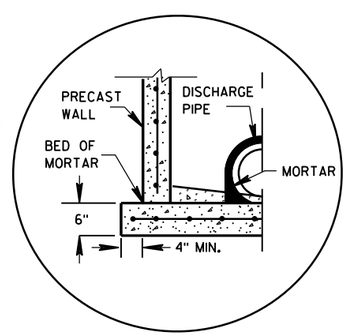

SEPARATE PRECAST REINFORCED CONCRETE BASE OPTION

DETAIL "A"

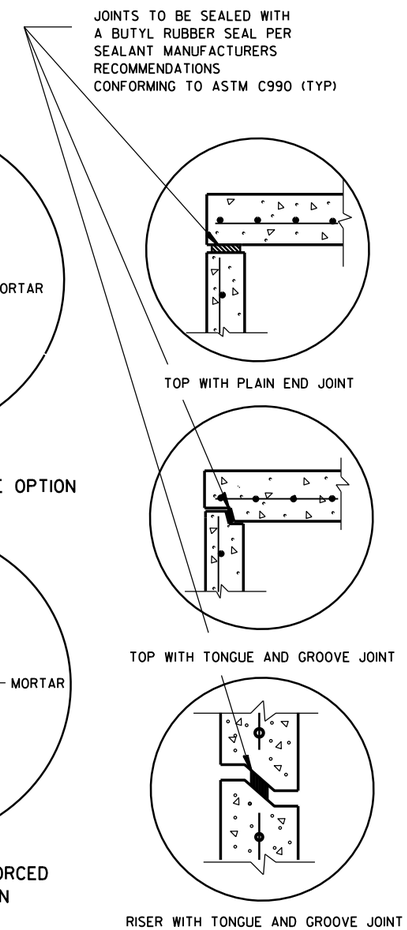

DETAIL "B"

GENERAL NOTES

DETAILS OF CONSTRUCTION, MATERIALS AND WORKMANSHIP NOT SHOWN ON THIS DRAWING SHALL CONFORM TO THE PERTINENT REQUIREMENTS OF THE STANDARD SPECIFICATIONS AND THE APPLICABLE SPECIAL PROVISIONS.

UNLESS OTHERWISE AUTHORIZED IN WRITING BY THE ENGINEER, THE CONTRACTOR SHALL NOT ORDER AND DELIVER PRECAST INLET UNITS REQUIRED FOR THE PROJECT UNTIL A LIST OF SIZES IS FURNISHED BY THE ENGINEER.

DETAILED DRAWINGS FOR PROPOSED ALTERNATE DESIGNS FOR UNDERGROUND DRAINAGE STRUCTURES SHALL BE SUBMITTED TO THE ENGINEER FOR APPROVAL PROVIDING THAT SUCH ALTERNATE DESIGNS MAKE PROVISION FOR EQUIVALENT CAPACITY AND STRENGTH.

ALL DRAINAGE STRUCTURES ARE DESIGNATED ON THE PLANS AS "MANHOLES 3X3-L", "CATCH BASINS 4-B", "INLETS 2X3-H", ETC. THE FIRST NUMBERS DESIGNATE THE SIZE OF THE STRUCTURE, AND THE FOLLOWING LETTER DESIGNATES THE TYPE OF COVER TO BE USED TO COMPRISE THE COMPLETE UNIT.

BASES SHALL BE PLACED ON A BED OF MATERIAL AT LEAST 6 INCHES IN DEPTH, WHICH MEETS THE REQUIREMENTS OF FOUNDATION BACKFILL. THIS BEDDING SHALL BE COMPACTED AND PROVIDE UNIFORM SUPPORT FOR THE ENTIRE AREA OF THE BASE.

ALL BAR STEEL REINFORCEMENT SHALL BE EMBEDDED 2 INCHES CLEAR UNLESS OTHERWISE SHOWN OR NOTED.

ALL PRECAST INLET UNITS SHALL CONFORM TO THE PERTINENT REQUIREMENTS OF AASHTO DESIGNATION M199.

PRECAST REINFORCED RISERS SHALL HAVE A TONGUE AND GROOVE JOINT WITH TONGUE UP OR DOWN.

4" OVERHANGING BASES ARE REQUIRED FOR ALL CONCRETE BLOCK INSTALLATIONS. 4" OVERHANG IS REQUIRED WHEN SEPARATE PRECAST BASE IS PROVIDED. OVERHANG IS NOT REQUIRED ON PRECAST STRUCTURES WITH AN INTEGRAL OR MONOLITHIC BASE.

FOR ADDITIONAL CONFIGURATIONS, MAINTAIN A MINIMUM OF 12 INCHES AS MEASURED FROM THE INSIDE OF THE STRUCTURE WALL BETWEEN THE OUTSIDE PIPE WALLS OF ADJACENT PIPES. SEE DETAIL "C".

① MINIMUM WALL THICKNESS SHALL BE 4-IN FOR 3-FT DIAMETER AND 5-IN FOR 4-FT DIAMETER PRECAST INLETS.

② FOR PRECAST CATCH BASINS PROVIDE REINFORCING STEEL IN ACCORDANCE TO AASHTO M199.

INLET COVER OPENING MATRIX

	INLET COVER TYPE	ALL A'S	ALL B'S	BW	C	F	ALL H'S	S	T	V	WM	Z
INLET SIZE	OPENING SIZE (FT)											
3-FT	2 DIA.				X							X
	2X2	X	X					X		X		
4-FT	2 DIA.				X							X
	2X2	X	X					X		X		
	2X2.5			X				X	X	X	X	
	2X3						X					
	2.5X3					X						

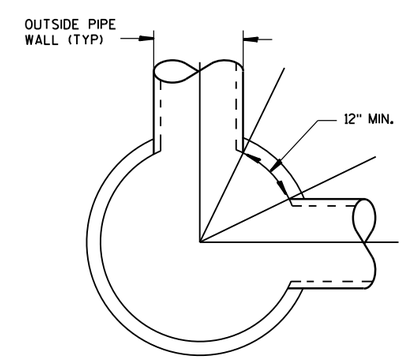

DETAIL "C"

PIPE MATRIX

INLET SIZE	MAXIMUM INSIDE PIPE DIAMETER FOR TWO PIPES	
	180° SEPARATION (IN)	90° SEPARATION (IN)
3-FT	15	12
4-FT	24	18

INLETS 3-FT AND 4-FT DIAMETER

INLETS 3-FT
AND 4-FT DIAMETER

STATE OF WISCONSIN
DEPARTMENT OF TRANSPORTATION

APPROVED
Sept., 2016 — /S/ Rodney Taylor
DATE — ROADWAY STANDARDS DEVELOPMENT UNIT SUPERVISOR
FHWA

6

6

S.D.D. 8 C 6-2

S.D.D. 8 C 6-2

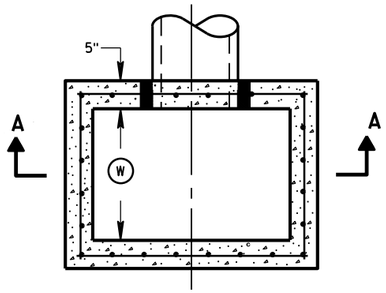

PLAN VIEW

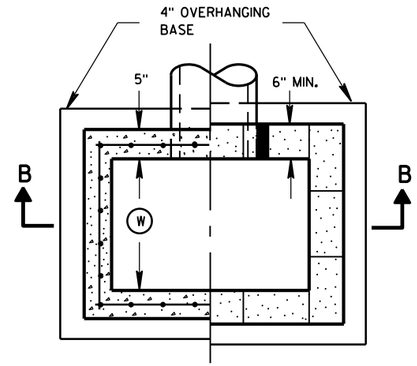

PLAN VIEW

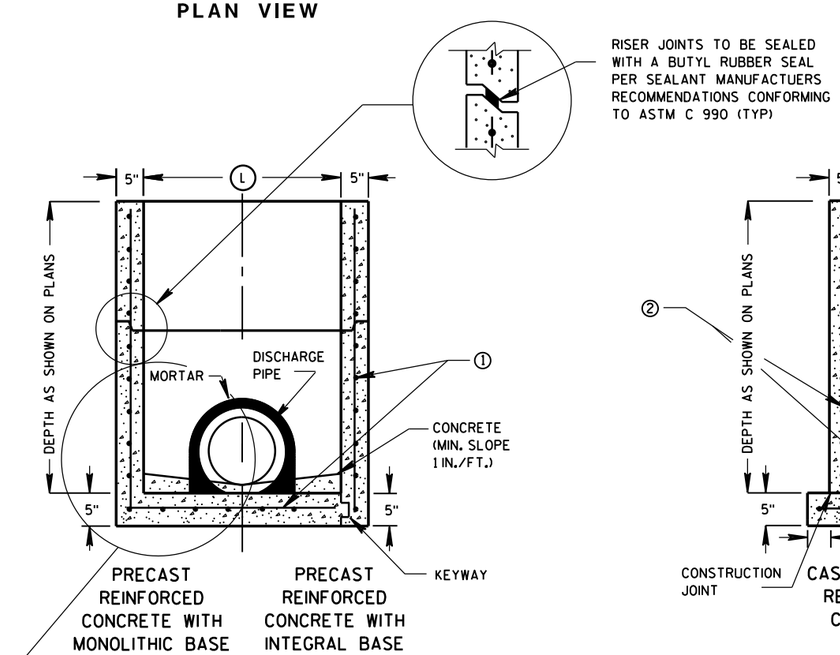

SECTION A-A

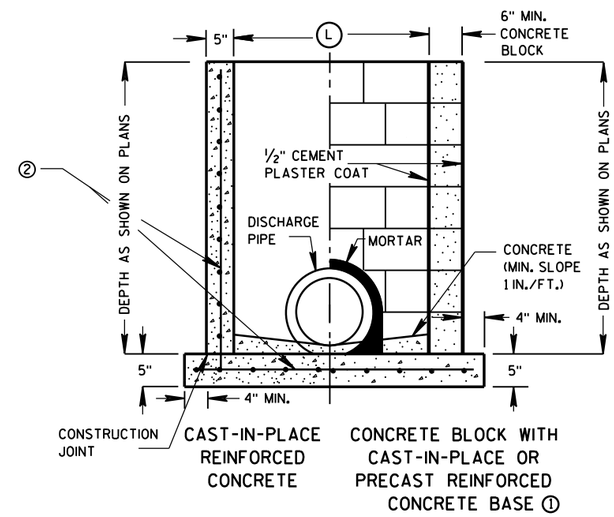

SECTION B-B

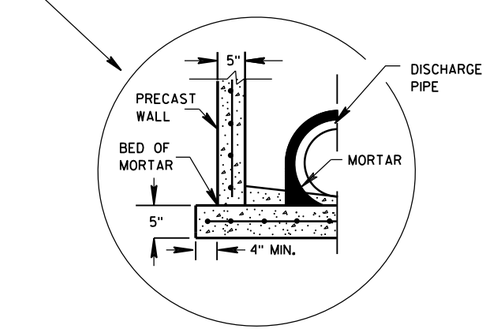

SEPARATE PRECAST REINFORCED CONCRETE BASE OPTION

GENERAL NOTES

DETAILS OF CONSTRUCTION, MATERIALS AND WORKMANSHIP NOT SHOWN ON THIS DRAWING SHALL CONFORM TO THE PERTINENT REQUIREMENTS OF THE STANDARD SPECIFICATIONS AND THE APPLICABLE SPECIAL PROVISIONS.

UNLESS OTHERWISE AUTHORIZED IN WRITING BY THE ENGINEER, THE CONTRACTOR SHALL NOT ORDER AND DELIVER PRECAST INLET UNITS REQUIRED FOR THE PROJECT UNTIL A LIST OF SIZES IS FURNISHED BY THE ENGINEER.

DETAILED DRAWINGS FOR PROPOSED ALTERNATE DESIGNS FOR UNDERGROUND DRAINAGE STRUCTURES SHALL BE SUBMITTED TO THE ENGINEER FOR APPROVAL PROVIDING THAT SUCH ALTERNATE DESIGNS MAKE PROVISION FOR EQUIVALENT CAPACITY AND STRENGTH.

ALL PRECAST INLET UNITS SHALL CONFORM TO THE PERTINENT REQUIREMENTS OF ASTM C 913.

ALL DRAINAGE STRUCTURES ARE DESIGNATED ON THE PLANS AS "MANHOLES 3X3-L", "CATCH BASINS 4-B", "INLETS 2X3-H", ETC. THE FIRST NUMBERS DESIGNATES THE SIZE OF THE STRUCTURE, AND THE FOLLOWING LETTER DESIGNATES THE TYPE OF COVER TO BE USED TO COMPRISE THE COMPLETE UNIT.

BASES SHALL BE PLACED ON A BED OF MATERIAL AT LEAST 6 INCHES IN DEPTH, WHICH MEETS THE REQUIREMENTS OF FOUNDATION BACKFILL. THIS BEDDING SHALL BE COMPACTED AND PROVIDE UNIFORM SUPPORT FOR THE ENTIRE AREA OF THE BASE.

ALL BAR STEEL REINFORCEMENT SHALL BE EMBEDDED 2 INCHES CLEAR UNLESS OTHERWISE SHOWN OR NOTED.

PRECAST REINFORCED RISERS SHALL HAVE A TONGUE AND GROOVE JOINT WITH TONGUE UP OR DOWN.

4" OVERHANGING BASES ARE REQUIRED FOR CAST-IN-PLACE REINFORCED CONCRETE AND CONCRETE BLOCK INSTALLATIONS.
4" OVERHANG IS REQUIRED WHEN SEPARATE PRECAST BASE IS PROVIDED.
OVERHANG IS NOT REQUIRED ON PRECAST STRUCTURES WITH AN INTEGRAL OR MONOLITHIC BASE.

MAXIMUM INSIDE PIPE DIAMETER DETERMINED BY 3 INCH CLEARANCE ON EACH SIDE OF THE OUTSIDE WALL OF THE PIPE. SEE DETAIL "A". ASSUMES PIPE ENTERS PERPENDICULAR TO THE STRUCTURE.

① FOR PRECAST INLETS PROVIDE REINFORCING STEEL IN ACCORDANCE TO ASTM C 913.

② CONTRACTOR TO PROVIDE DRAWING(S) STAMPED BY A PROFESSIONAL ENGINEER FOR STEEL REINFORCING DESIGN FOR CAST-IN-PLACE STRUCTURES.

INLET COVER MATRIX

INLET SIZE		INLET COVER TYPE	ALL A'S	ALL B'S	BW	F	ALL H'S	S	T	V	WM
	WIDTH Ⓦ (FT)	LENGTH Ⓛ (FT)									
2X2-FT	2	2	X	X				X		X	
2X2.5-FT	2	2.5			X			X	X	X	X
2X3-FT	2	3					X				
2.5X3-FT	2.5	3				X					

PIPE MATRIX

INLET SIZE	MAXIMUM INSIDE PIPE DIAMETER	
	WIDTH (IN)	LENGTH (IN)
2X2-FT	12	12
2X2.5-FT	12	18
2X3-FT	12	24
2.5X3-FT	18	24

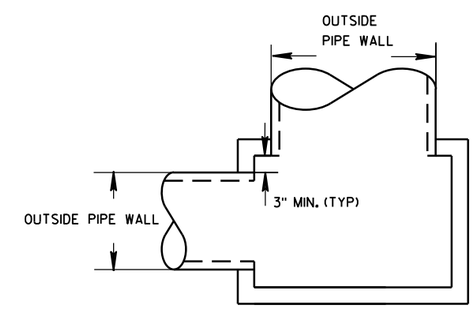

DETAIL "A"

INLETS 2X2-FT, 2X2.5-FT, 2X3-FT AND 2.5X3-FT

INLETS 2X2-FT, 2X2.5-FT, 2X3-FT AND 2.5X3-FT

STATE OF WISCONSIN
DEPARTMENT OF TRANSPORTATION

APPROVED
Sept., 2016 — DATE
/S/ Rodney Taylor
ROADWAY STANDARDS D IT
UNIT SUPERVIS
FHWA

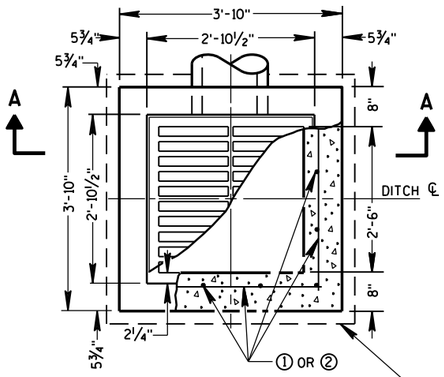

PLAN VIEW

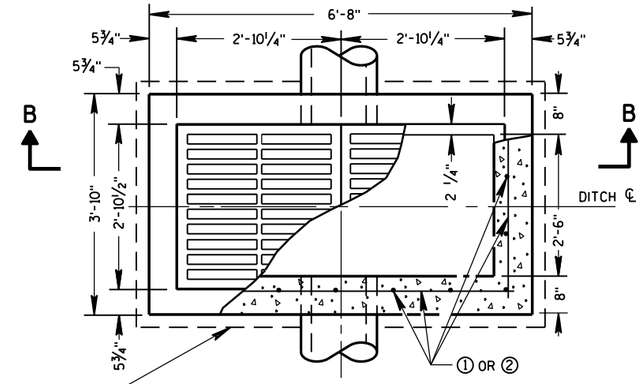

PLAN VIEW

4" OVERHANGING BASE ON REINFORCED CAST-IN-PLACE CONCRETE INLETS

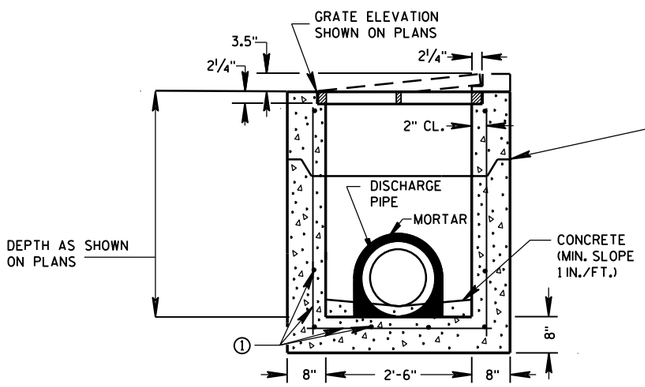

PRECAST REINFORCED CONCRETE SECTION A-A

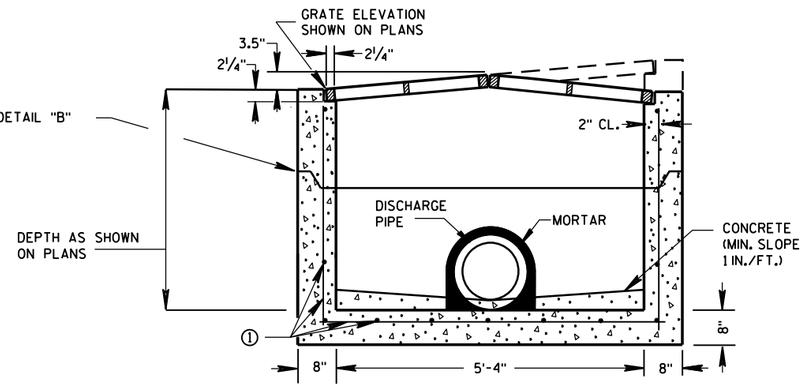

PRECAST REINFORCED CONCRETE SECTION B-B

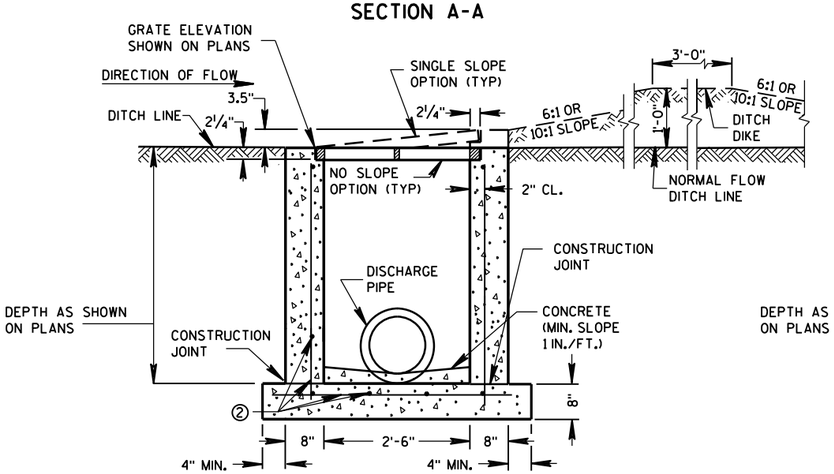

REINFORCED CAST-IN-PLACE CONCRETE SECTION A-A

INLETS MEDIAN 1 GRATE

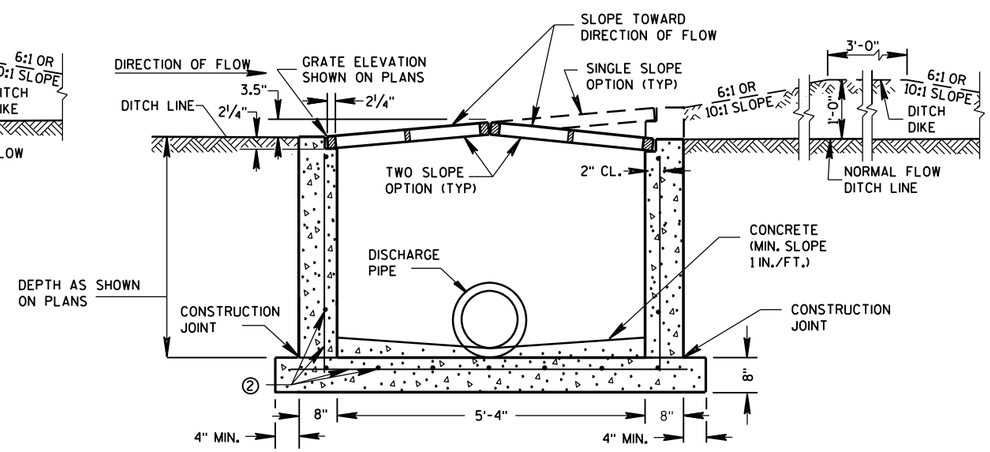

REINFORCED CAST-IN-PLACE CONCRETE SECTION B-B

INLETS MEDIAN 2 GRATE

GENERAL NOTES

DETAILS OF CONSTRUCTION, MATERIALS AND WORKMANSHIP NOT SHOWN ON THIS DRAWING SHALL CONFORM TO THE PERTINENT REQUIREMENTS OF THE STANDARD SPECIFICATIONS AND THE APPLICABLE SPECIAL PROVISIONS.

UNLESS OTHERWISE AUTHORIZED IN WRITING BY THE ENGINEER, THE CONTRACTOR SHALL NOT ORDER AND DELIVER PRECAST INLET UNITS REQUIRED FOR THE PROJECT UNTIL A LIST OF SIZES IS FURNISHED BY THE ENGINEER.

DETAILED DRAWINGS FOR PROPOSED ALTERNATE DESIGNS FOR INLETS WHICH MAY INCLUDE PRECAST REINFORCED CONCRETE INLETS, SHALL BE SUBMITTED TO THE ENGINEER FOR APPROVAL PROVIDING THAT SUCH ALTERNATE DESIGNS MAKE PROVISION FOR EQUIVALENT CAPACITY AND STRENGTH.

ALL MEDIAN INLETS ARE DESIGNATED ON THE PLANS AS "INLETS, 1G-MS", ETC. THE FIRST NUMBER AND LETTER DESIGNATE THE TYPE OF STRUCTURE, AND THE FOLLOWING LETTERS DESIGNATE THE TYPE OF COVER TO BE USED TO COMPRISE THE COMPLETE UNIT.

BASES SHALL BE PLACED ON A BED OF MATERIAL AT LEAST 6 INCHES IN DEPTH, WHICH MEETS THE REQUIREMENTS OF FOUNDATION BACKFILL. THIS BEDDING SHALL BE COMPACTED AND PROVIDE UNIFORM SUPPORT FOR THE ENTIRE AREA OF THE BASE.

ALL BAR STEEL REINFORCEMENT SHALL BE EMBEDDED 2 INCHES CLEAR UNLESS OTHERWISE SHOWN OR NOTED.

PRECAST REINFORCED RISERS SHALL HAVE A TONGUE AND GROOVE JOINT WITH TONGUE UP OR DOWN.

ALL PRECAST INLET UNITS SHALL CONFORM TO THE PERTINENT REQUIREMENTS OF ASTM C 913.

MAXIMUM INSIDE PIPE DIAMETER DETERMINED BY 3" CLEARANCE ON EACH SIDE OF THE OUTSIDE WALL OF THE PIPE. SEE DETAIL "A". ASSUMES PIPE ENTERS PERPENDICULAR TO THE STRUCTURE.

① FOR PRECAST INLETS PROVIDE REINFORCING STEEL IN ACCORDANCE TO ASTM C 913.

② CONTRACTOR TO PROVIDE DRAWING(S) STAMPED BY A PROFESSIONAL ENGINEER FOR STEEL REINFORCING DESIGN FOR CAST-IN-PLACE STRUCTURES.

PIPE MATRIX

	MAXIMUM INSIDE PIPE DIAMETER	
INLET SIZE	WIDTH (IN)	LENGTH (IN)
1 GRATE	18	18
2 GRATE	18	42

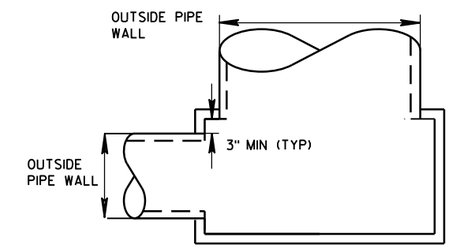

DETAIL "A"

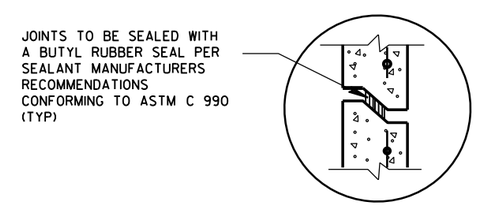

DETAIL "B"

INLETS MEDIAN 1 AND 2 GRATE

STATE OF WISCONSIN
DEPARTMENT OF TRANSPORTATION

APPROVED
Sept., 2016 — DATE
/S/ Rodney Taylor — ROADWAY STANDARDS UNIT SUPERVI ENT
FHWA

6

S.D.D. 8 C 8-2

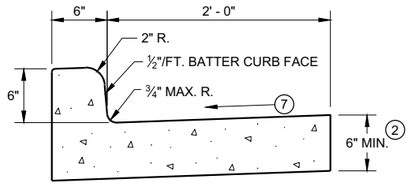

TYPES A(1) & D

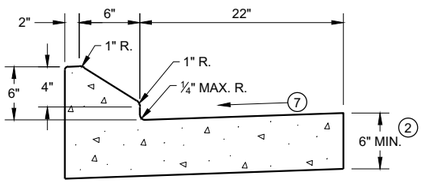

6" SLOPED CURB TYPES G(1) & J

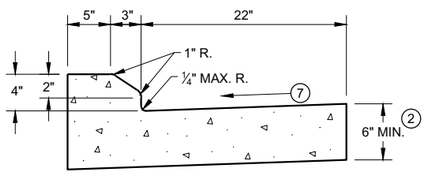

4" SLOPED CURB TYPES G(1) & J

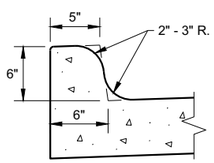

TYPES K(1) & L
(OPTIONAL CURB SHAPE)

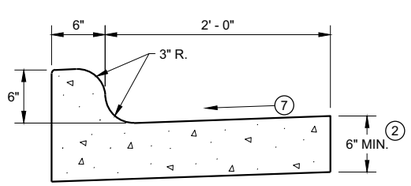

TYPES K(1) & L

CONCRETE CURB AND GUTTER 30"

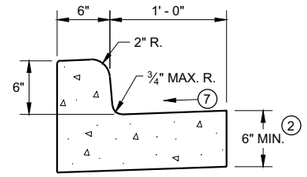

TYPES A(1) & D

CONCRETE CURB AND GUTTER 18"

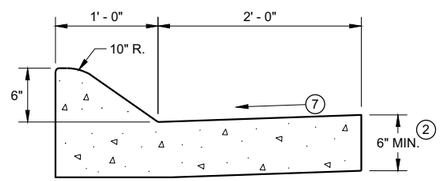

6" SLOPED CURB TYPES A(1) & D

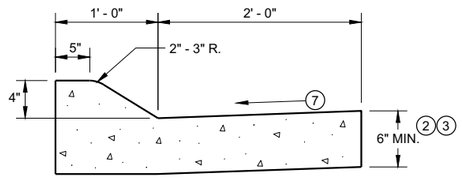

4" SLOPED CURB TYPES A(1) & D

CONCRETE CURB AND GUTTER 36"

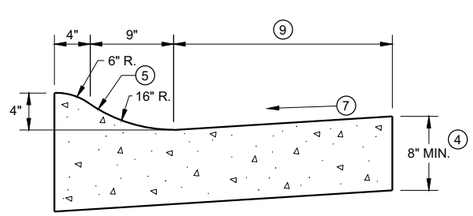

4" SLOPED CURB TYPES R(1) & T

TBT & TBTT	X
30"	22"
36"	28"

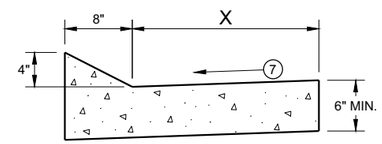

TYPES TBT & TBTT(1)

CONCRETE CURB AND GUTTER

GENERAL NOTES

DETAILS OF CONSTRUCTION AND WORKMANSHIP NOT SHOWN ON THIS DRAWING SHALL CONFORM TO THE PERTINENT REQUIREMENTS OF THE CONTRACT.

PAVEMENT TIES AND TIE BARS SHALL BE EPOXY COATED IN CONFORMANCE WITH SUBSECTION 505.2.6.2 OF THE STANDARD SPECIFICATIONS.

INTEGRAL CURB AND GUTTER SHALL CONFORM TO THE DETAILS SHOWN FOR CONCRETE CURB AND GUTTER INCLUDING THE TRANSVERSE GUTTER SLOPE.

UNLESS OTHERWISE SHOWN ON THE TYPICAL CROSS SECTIONS, THE BASE AGGREGATE AND COMMON EXCAVATION LIMITS ARE 2' - 0" BEHIND THE BACK OF CURBS.

1. TIE BARS ARE REQUIRED FOR CURB AND GUTTERS TYPES A, G, K, R, AND TBTT.
2. THE BOTTOM OF CURB AND GUTTER MAY BE CONSTRUCTED EITHER LEVEL OR PARALLEL TO THE SLOPE OF THE SUBGRADE OR BASE AGGREGATE PROVIDED A 6" MINIMUM GUTTER THICKNESS IS MAINTAINED.
3. USE 8" MINIMUM GUTTER THICKNESS WHEN USED WITH AN ADJACENT CONCRETE TRUCK APRON PLACED BEHIND BACK OF CURB.
4. THE BOTTOM OF CURB AND GUTTER MAY BE CONSTRUCTED EITHER LEVEL OR PARALLEL TO THE SLOPE OF THE SUBGRADE OR BASE AGGREGATE PROVIDED A 8" MINIMUM GUTTER THICKNESS IS MAINTAINED.
5. UNLESS OTHERWISE NOTED, FOR STAKING PURPOSES THE FACE OF CURB IS 6" FROM THE BACK OF CURB.
6. WHEN REVERSE SLOPE GUTTER IS REQUIRED, THE LOCATION(S) WILL BE SHOWN ELSEWHERE IN THE PLAN.
7. USE 4% GUTTER CROSS SLOPE UNLESS OTHERWISE NOTED IN THE PLANS.
8. INCLUDE LONGITUDINAL JOINT AND TIE BARS ALONG LANE EDGE WHEN CONCRETE PANEL WIDTH EXCEEDS THE MAXIMUM WIDTH PER TABLE BELOW. LONGITUDINAL JOINT(S) ARE NOT ALLOWED WITHIN TRAFFIC LANES AND BIKE LANES. LONGITUDINAL JOINT MAY BE SAWED.
9. CONCRETE CURB AND GUTTER 4-INCH SLOPED 30-INCH TYPE "R" AND "T" = 17 INCHES
   CONCRETE CURB AND GUTTER 4-INCH SLOPED 36-INCH TYPE "R" AND "T" = 23 INCHES

PAVEMENT THICKNESS AND MAXIMUM CONCRETE PANEL WIDTH TABLE

PAVEMENT THICKNESS	MAXIMUM PANEL WIDTH
LESS THAN 10"	12'
10" & ABOVE	15'

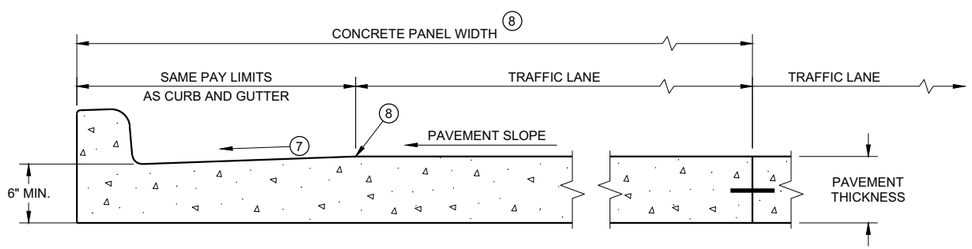

PARTIAL SECTION OF PAVEMENT *
WITH INTEGRAL CURB AND GUTTER

* BIKE LANE IS NOT SHOWN

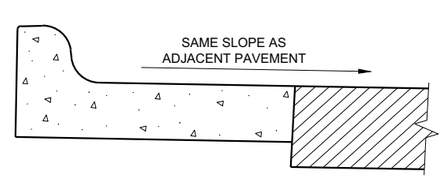

REVERSE SLOPE GUTTER(6)
(TYPICAL FOR ALL CURB & GUTTER TYPES)

CONCRETE CURB AND GUTTER

STATE OF WISCONSIN
DEPARTMENT OF TRANSPORTAT

6

SDD 08D01 - 22a

6

SDD 08D01 - 22a

GENERAL NOTES

DETAILS OF CONSTRUCTION AND WORKMANSHIP NOT SHOWN ON THIS DRAWING SHALL CONFORM TO THE PERTINENT REQUIREMENTS OF THE CONTRACT.

PAVEMENT TIES AND TIE BARS SHALL BE EPOXY COATED IN CONFORMANCE WITH SUBSECTION 505.2.6.2 OF THE STANDARD SPECIFICATIONS.

UNLESS OTHERWISE SHOWN ON THE TYPICAL CROSS SECTIONS, THE BASE AGGREGATE AND COMMON EXCAVATION LIMITS ARE 2' - 0" BEHIND THE BACK OF CURBS.

(1) TIE BARS ARE REQUIRED FOR CURB AND GUTTERS TYPES A, G, K, R, AND TBTT.

(2) THE BOTTOM OF CURB AND GUTTER MAY BE CONSTRUCTED EITHER LEVEL OR PARALLEL TO THE SLOPE OF THE SUBGRADE OR BASE AGGREGATE PROVIDED A 6" MINIMUM GUTTER THICKNESS IS MAINTAINED.

(9) REFER TO SDD 08D18 AND 08D19 FOR ADDITIONAL DRIVEWAY ENTRANCE CURB DETAILS.

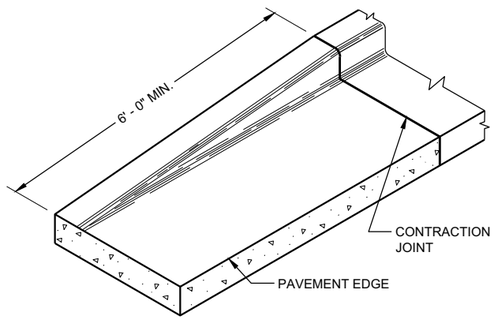

END SECTIONCURB AND GUTTER

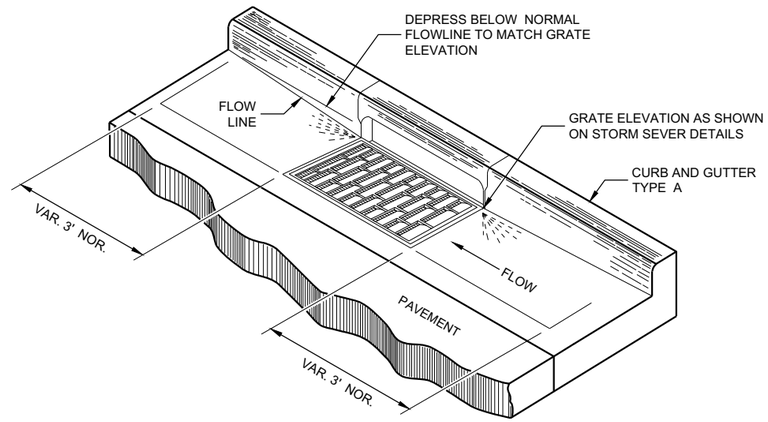

DETAIL OF CURB AND GUTTER AT INLETS
(TYPICAL H INLET COVER SHOWN)

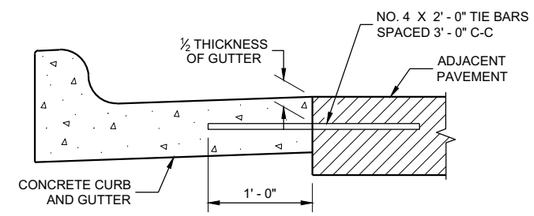

TYPICAL TIE BAR LOCATION (1)

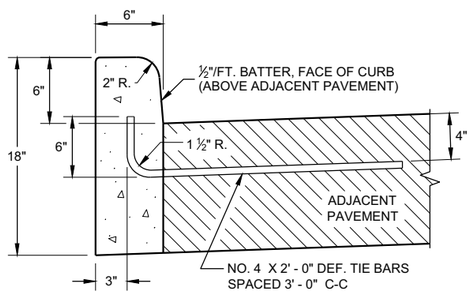

TYPES A (1) & D

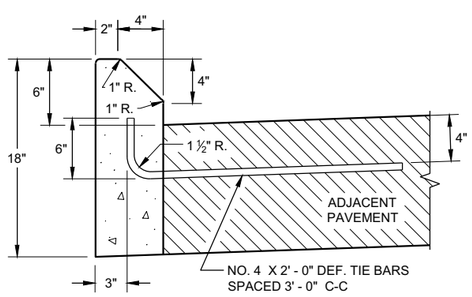

TYPES G (1) & J

CONCRETE CURB

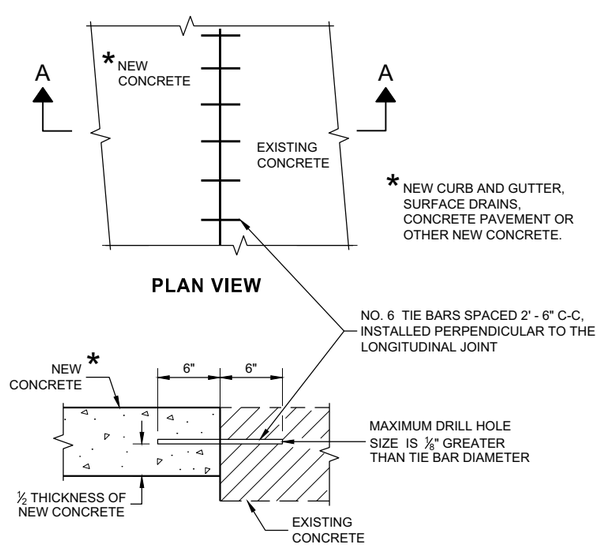

PLAN VIEW

SECTION A - A

TIE BARS DRILLED INTO EXISTING PAVEMENT

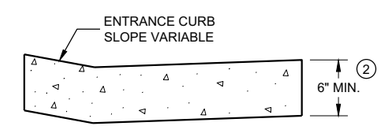

DRIVEWAY ENTRANCE CURB (9)
(WHEN DIRECTED BY THE ENGINEER)

6

6

SDD 08D01 - 22b

SDD 08D01 - 22b

CONCRETE CURB, TIES AND CURB AND GUTTER APPLICATIONS

STATE OF WISCONSIN
DEPARTMENT OF TRANSPORTATION

APPROVED
February 2021 — DATE
/S/ Rodnery Taylor — ROADWAY STANDARDS DEVE ENGINEER
FHWA

GENERAL NOTES

DETAILS OF CONSTRUCTION, MATERIALS AND WORKMANSHIP NOT SHOWN ON THIS DRAWING SHALL CONFORM TO PERTINENT REQUIREMENTS OF THE STANDARD SPECIFICATIONS AND APPLICABLE SPECIAL PROVISIONS.

WELDED STEEL WIRE FABRIC SHALL BE IN ACCORDANCE WITH AASHTO SPECIFICATION M55.

① JOINTS SHALL BE 1/8 TO 1/4 INCH WIDE BY 1 1/2 INCHES DEEP AND SPACED AT UNIFORM INTERVALS OF APPROXIMATELY 4 FEET.

② GEOTEXTILE FABRIC TYPE "R" SHALL UNDERLAY THE FULL LENGTH AND WIDTH OF THE CONCRETE SURFACE DRAIN AND RIPRAP.

③ CONCRETE SURFACE DRAIN WITHOUT CURB AND GUTTER MAY BE USED ON BACKSLOPES WHEN SPECIFIED

ASPHALTIC FLUME

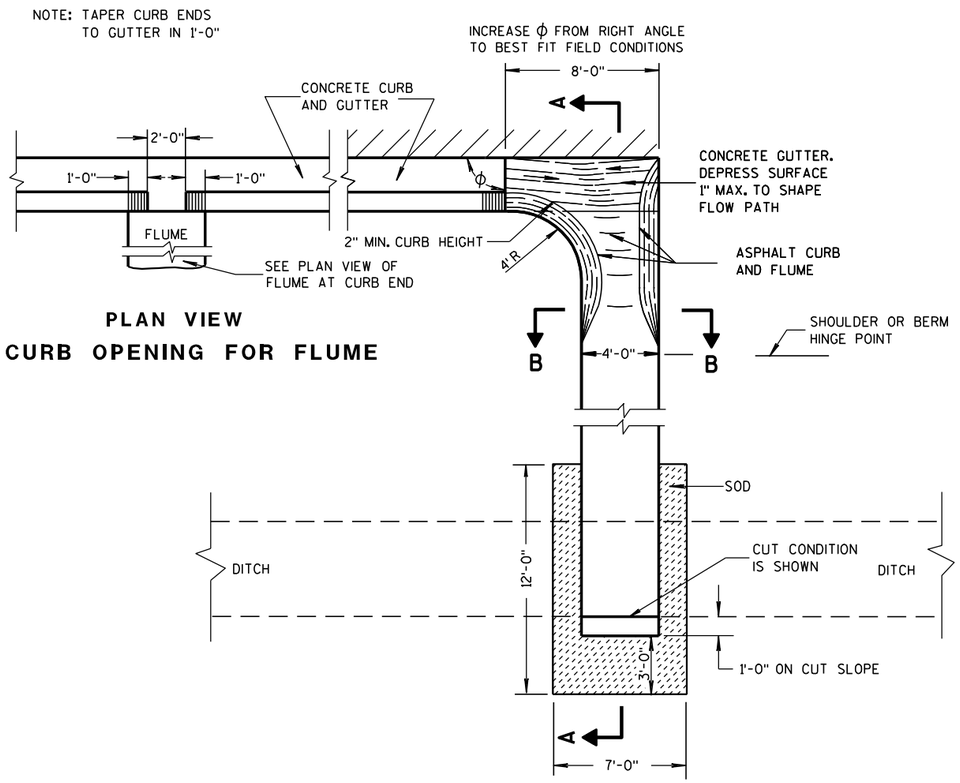

PLAN VIEW
CURB OPENING FOR FLUME

PLAN VIEW
FLUME AT CURB END

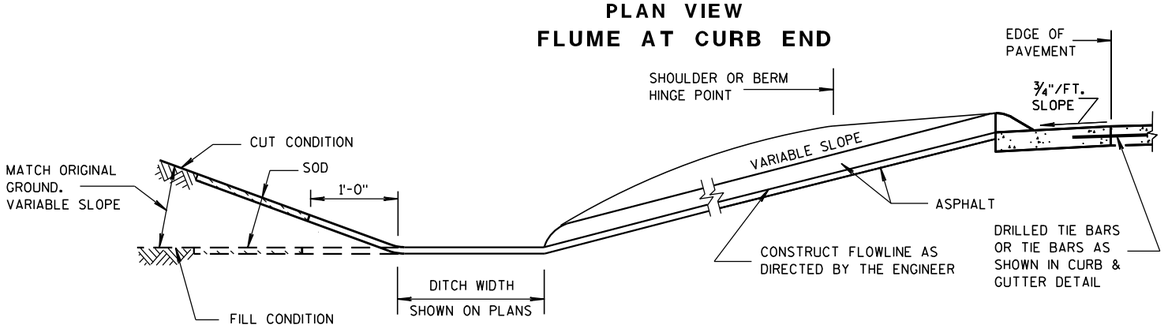

SECTION A-A

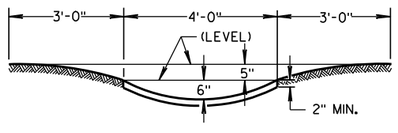

SECTION B-B

③ CONCRETE SURFACE DRAIN

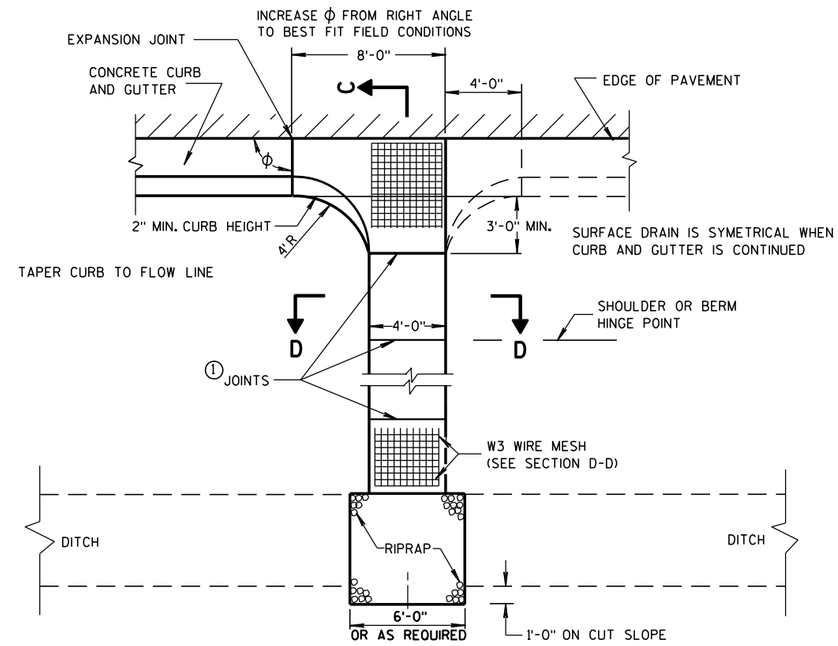

PLAN VIEW

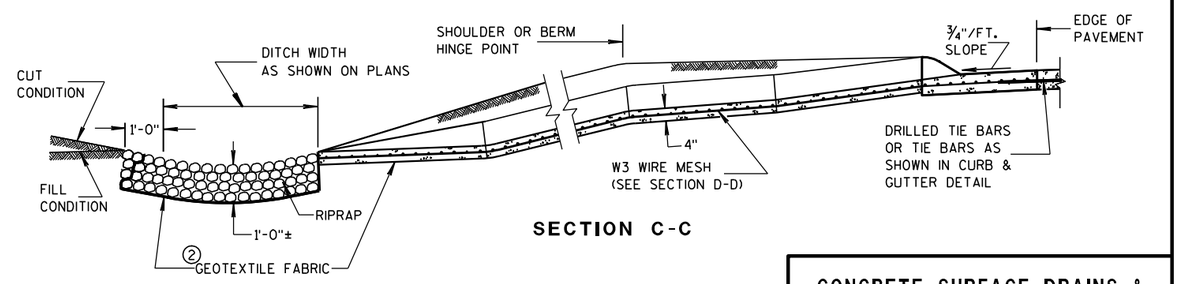

SECTION C-C

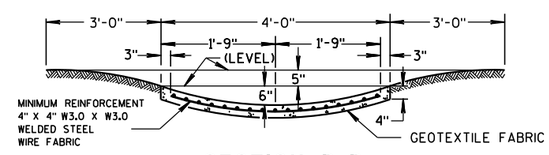

SECTION D-D

CONCRETE SURFACE DRAINS & ASPHALTIC FLUMES

STATE OF WISCONSIN
DEPARTMENT OF TRANSPORTATION

APPROVED
9-4-08 /S/ Jerry H. Zogg
DATE ROADWAY STANDARDS ENGINEER MENT
FHWA

6

6

S.D.D. 8 D 4-5

S.D.D. 8 D 4-5

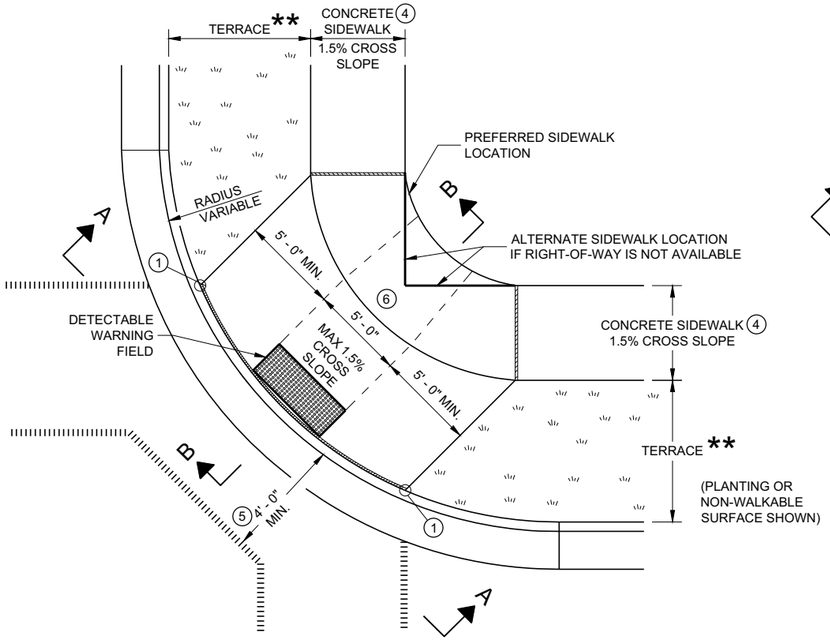

PLAN VIEW

CURB RAMP TYPE 1

(CENTER OF CORNER RADIUS)

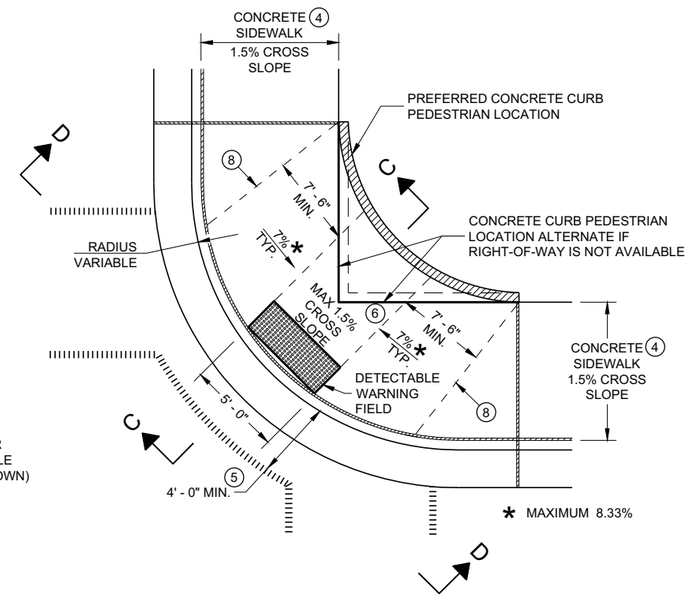

PLAN VIEW

CURB RAMP TYPE 1 - A

(NO TERRACE)

GENERAL NOTES

AVOID PLACING DRAINAGE STRUCTURES, JUNCTION BOXES OR OTHER OBSTRUCTIONS IN FRONT OF RAMP ACCESS AREAS.

DETAILS OF CONSTRUCTION, MATERIALS AND WORKMANSHIP NOT SHOWN ON THIS DRAWING SHALL CONFORM TO THE PERTINENT REQUIREMENTS OF THE STANDARD SPECIFICATIONS AND THE APPLICABLE SPECIAL PROVISIONS.

WHEN NECESSARY, THE SIDEWALK ELEVATION MAY BE LOWERED TO MEET THE HIGH POINT ON THE RAMP.

TYPE 1 CURB RAMPS SHALL HAVE A NORMAL SIDEWALK APRON AND CURB ON BOTH SIDES OF RAMP.

DETECTABLE WARNING FILED SHALL BE MEASURED AND PAID BY THE SQUARE FOOT AS "CURB RAMP DETECTABLE WARNING FIELD". THE CONCRETE PEDESTRIAN CURB, IF NEEDED, SHALL BE MEASURED AND PAID BY THE LINEAR FOOT AS "CONCRETE CURB PEDESTRIAN". CONCRETE SIDEWALK IN THE CURB RAMP AREA SHALL BE MEASURED AND PAID BY THE SQUARE FOOT AS CONCRETE SIDEWALK, INCLUDING THE AREA UNDER THE DETECTABLE WARNING FIELD.

SELECT CURB RAMP DETECTABLE WARNING FIELD MATERIALS AND DEVICES FROM THE DEPARTMENT'S APPROVED MATERIALS LIST. THE COLOR OF THE DETECTABLE WARNING FIELD IS SPECIFIED ELSEWHERE AND IS INCIDENTAL TO THE BID ITEM OF "CURB RAMP DETECTABLE WARNING FIELD"

DETECTABLE WARNING FIELDS THAT ARE INSTALLED AS A GROUP OR SIDE BY SIDE, SHALL BE FROM THE SAME MANUFACTURER.

SURFACE TEXTURE OF THE RAMP SHALL BE OBTAINED BY COARSE BROOMING TRANSVERSE TO THE SLOPE OF THE RAMP.

1. THIS POINT IS AN EXTENSION OF OUTSIDE EDGE OF APPROACHING SIDEWALK WHERE IT MEETS THE BACK OF CONCRETE CURB. POINT LOCATION MAY BE ADJUSTED TO ALIGN WITH BEGINNING OF FULL-HEIGHT CURB IF THIS DISTANCE IS SHORT.
2. GRADE CHANGE BETWEEN GUTTER FLAG SLOPE AND THE CURB RAMP SLOPE SHALL NOT EXCEED 11%. MAXIMUM GUTTER FLAG SLOPE IS 4%. PROVIDE LONGITUDINAL DRAINAGE AROUND CURB AND AWAY FROM CURB RAMP. NO VERTICAL LIPS OR DISCONTINUITIES GREATER THAN ¼ - INCH ARE ALLOWED. SLOPE OF CURB HEAD OPENING SHALL MATCH THE RAMP SLOPE, MINIMALLY 1.5% AND NOT TO EXCEED 7%. WHEN ADJACENT TO 1.5% LANDING, CONSTRUCT CURB HEAD OPENING AT 1.5% IN THE DIRECTION OF PEDESTRIAN TRAVEL.
3. MAXIMUM 8.33% CURB RAMP SLOPE IS ALLOWABLE WITH FLATTENED GUTTER FLAG SLOPE AND NOT TO EXCEED 11% GRADE CHANGE.
4. ±0.5% CONSTRUCTION TOLERANCE IN SIDEWALK CROSS SLOPE. THE SIDEWALK CROSS SLOPE SHALL NOT EXCEED 2% WITHOUT PRIOR APPROVAL FROM THE ENGINEER.
5. PROVIDE A LEVEL LANDING IN THE STREET AND GUTTER AREA (2% MAXIMUM SLOPE IN ANY DIRECTION). WHEN THE GUTTER SLOPE EXCEEDS 2%, CONSTRUCT THE LEVEL LANDING IN THE STREET AREA.
6. PROVIDE A LEVEL LANDING (MAXIMUM 2% SLOPE) IN ANY DIRECTION OF PEDESTRIAN TRAVEL. STANDARD LEVEL LANDING SIZE IS 5 FEET BY 5 FEET.
8. PROVIDE GRADE BREAK PERPENDICULAR TO DIRECTION OF WHEELCHAIR TRAVEL.

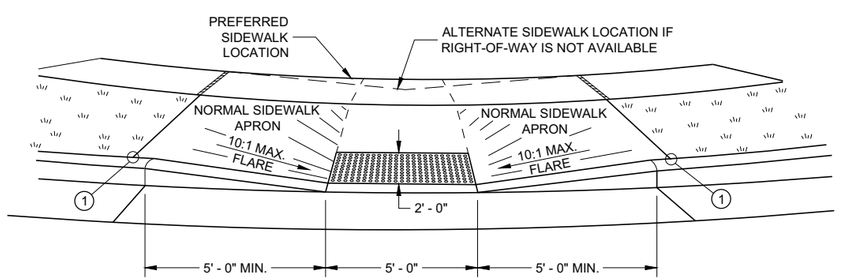

VIEW A - A FOR TYPE 1

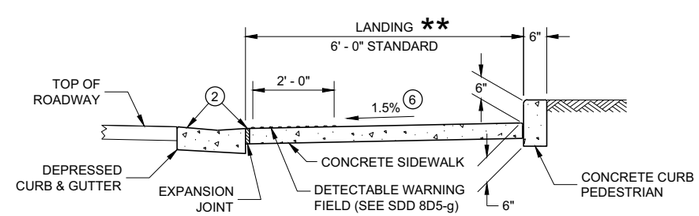

SECTION C - C FOR TYPE 1 - A

LEGEND

- ½" EXPANSION JOINT SIDEWALK
- CONTRACTION JOINT FIELD LOCATED
- PAVEMENT MARKING CROSSWALK (WHITE)

** WIDTH SHOWN ELSEWHERE IN THE PLANS

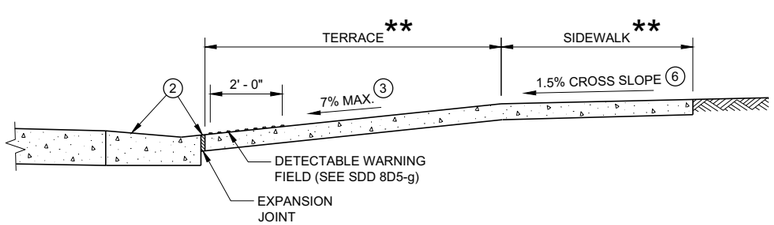

SECTION B - B FOR TYPE 1

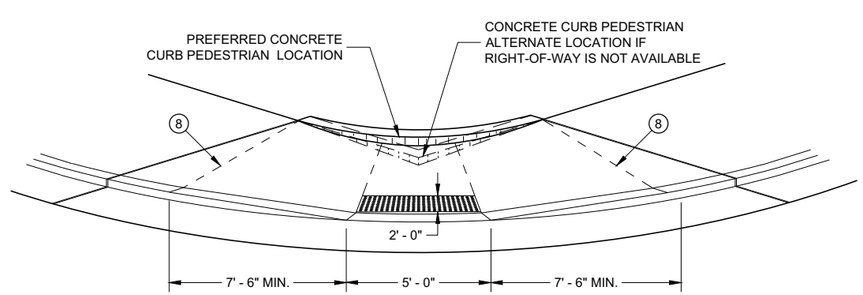

VIEW D - D FOR TYPE 1 - A

CURB RAMPS TYPE 1 AND 1-A

STATE OF WISCONSIN
DEPARTMENT OF TRANSPORTATION

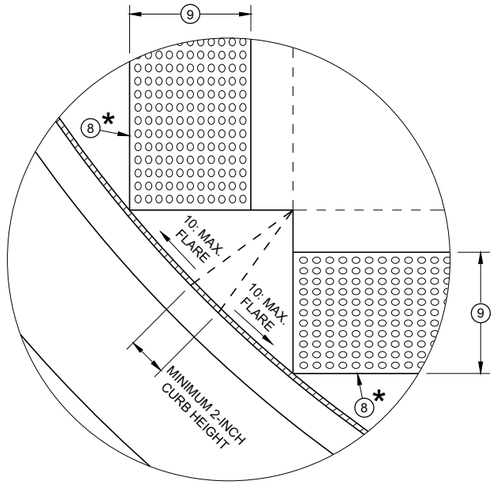

DETAIL A

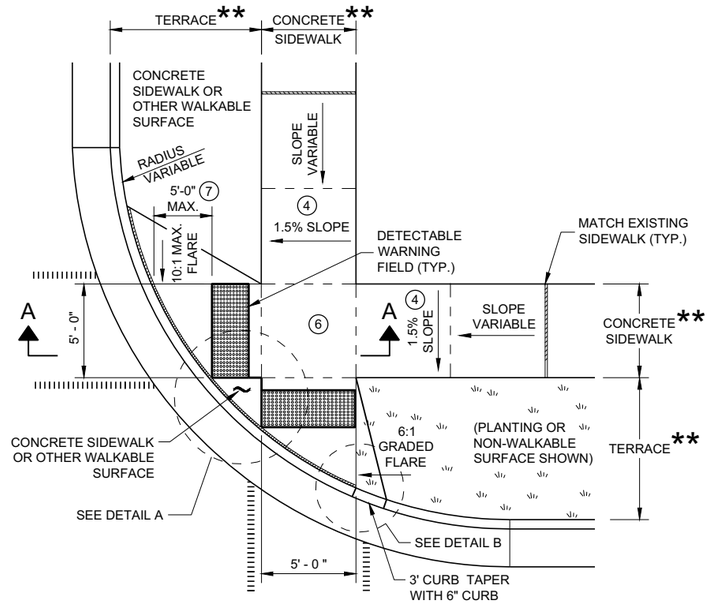

PLAN VIEW
CURB RAMP TYPE 2
(CENTER OF CORNER RADIUS)

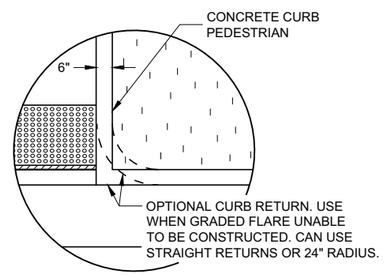

DETAIL B

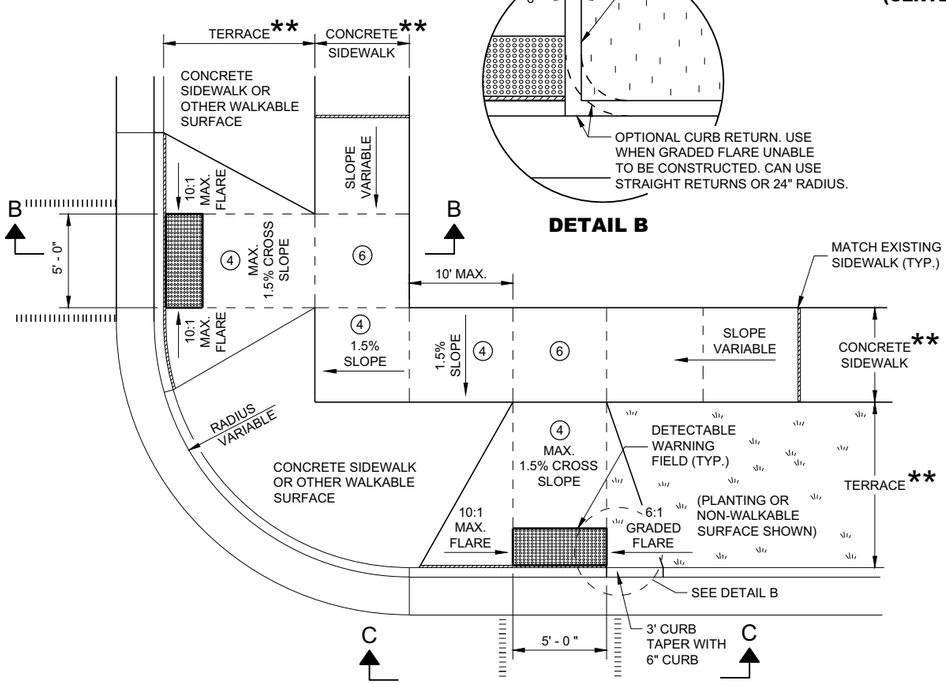

PLAN VIEW
CURB RAMP TYPE 3
(OUTSIDE OF CROSSWALK AREA)

GENERAL NOTES

AVOID PLACING DRAINAGE STRUCTURES, JUNCTION BOXES OR OTHER OBSTRUCTIONS IN FRONT OF RAMP ACCESS AREAS.

DETAILS OF CONSTRUCTION, MATERIALS AND WORKMANSHIP NOT SHOWN ON THIS DRAWING SHALL CONFORM TO THE PERTINENT REQUIREMENTS OF THE STANDARD SPECIFICATIONS AND THE APPLICABLE SPECIAL PROVISIONS.

DETECTABLE WARNING FIELDS THAT ARE INSTALLED AS A GROUP OR SIDE BY SIDE SHALL BE FROM THE SAME MANUFACTURER.

(2) GRADE CHANGE BETWEEN GUTTER FLAG SLOPE AND THE CURB RAMP SLOPE SHALL NOT EXCEED 11%. MAXIMUM GUTTER FLAG SLOPE IS 4%. PROVIDE LONGITUDINAL DRAINAGE AROUND CURB AND AWAY FROM CURB RAMP. NO VERTICAL LIPS OR DISCONTINUITIES GREATER THAN ¼ - INCH ARE ALLOWED. SLOPE OF CURB HEAD OPENING SHALL MATCH THE RAMP SLOPE, MINIMALLY 1.5% AND NOT TO EXCEED 7%. WHEN ADJACENT TO 1.5% LANDING, CONSTRUCT CURB HEAD OPENING AT 1.5% IN THE DIRECTION OF PEDESTRIAN TRAVEL.

(3) AN 8.33% CURB RAMP SLOPE IS ALLOWABLE WITH FLATTENED GUTTER FLAG SLOPE (2.67% OR LESS) AND NOT TO EXCEED 11% GRADE CHANGE.

(4) ±0.5% CONSTRUCTION TOLERANCE IN SIDEWALK CROSS SLOPE. THE SIDEWALK CROSS SLOPE SHALL NOT EXCEED 2% WITHOUT PRIOR APPROVAL FROM THE ENGINEER.

(6) PROVIDE A LEVEL LANDING (MAXIMUM 2% SLOPE) IN ANY DIRECTION OF PEDESTRIAN TRAVEL. STANDARD LEVEL LANDING SIZE IS 5 FEET X 5 FEET.

(7) WHEN GRADE BREAK DISTANCE EXCEEDS 5 FEET, USE RADIAL DETECTABLE WARNING FIELD PER SDD 8D5-f.

(8) PROVIDE GRADE BREAK PERPENDICULAR TO DIRECTION OF WHEELCHAIR TRAVEL.

(9) WHEN DISTANCE IS LESS THAN 6' - 0", IT MAY BE DIFFICULT TO ACHIEVE A 7% SLOPE OR FLATTER ALONG THE RAMP. REDUCE CURB HEIGHT IN TRIANGLE AREA TO ACHIEVE 7% SLOPE OR FLATTER ON RAMP. CONSTRUCT 2-INCH MINIMUM CURB HEIGHT BETWEEN 10:1 FLARES.

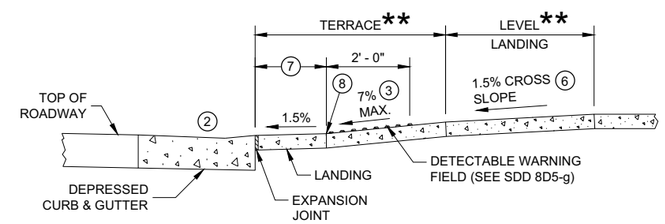

SECTION A - A FOR TYPE 2

* MAXIMUM 2.0% SLOPE IN ALL DIRECTIONS IN FRONT OF GRADE BREAK

** WIDTH SHOWN ELSEWHERE IN THE PLANS

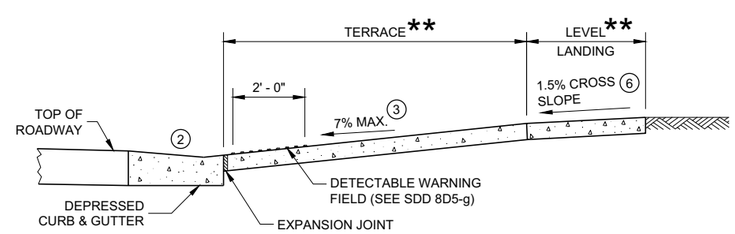

SECTION B - B FOR TYPE 3

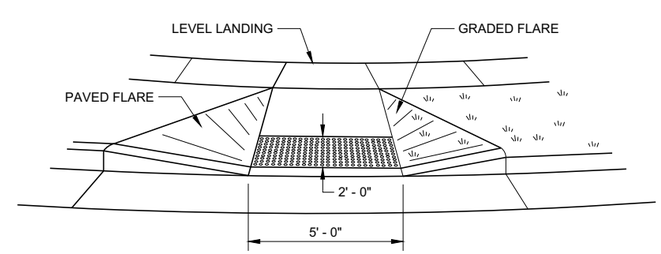

VIEW C - C FOR TYPE 3

LEGEND

- ½" EXPANSION JOINT SIDEWALK
- CONTRACTION JOINT SIDEWALK
- PAVEMENT MARKING CROSSWALK (WHITE)

CURB RAMPS TYPE 2 AND 3

STATE OF WISCONSIN
DEPARTMENT OF TRANSPORTA

6

SDD 08D05 - 20b

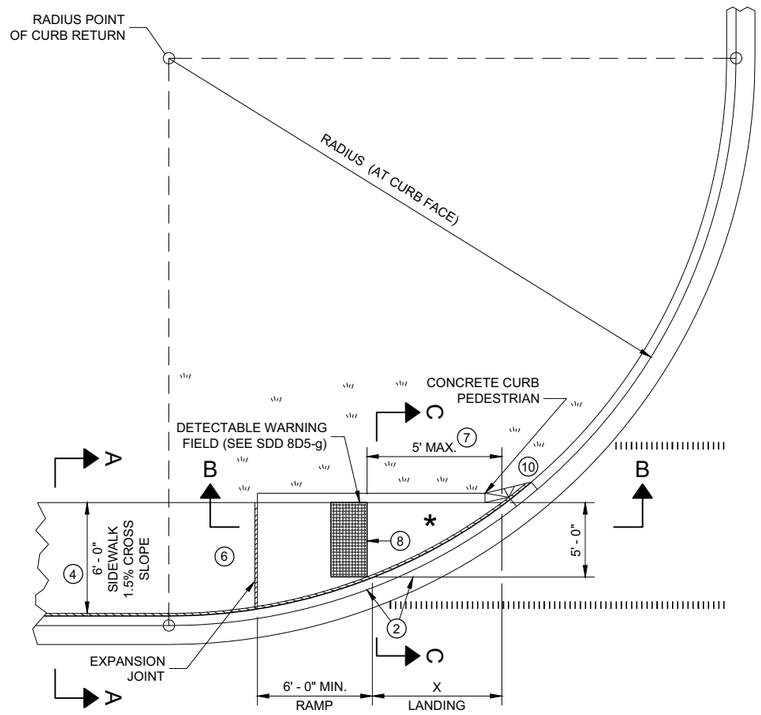

PLAN VIEW
CURB RAMP TYPE 4A

RADIUS (AT CURB FACE)	X
10 FEET	4' - 7"
15 FEET	6' - 5½"

INTERMEDIATE RADII CAN BE INTERPOLATED

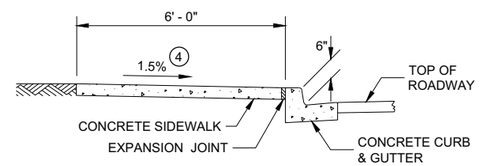

SECTION A - A FOR TYPE 4A

GENERAL NOTES

AVOID PLACING DRAINAGE STRUCTURES, JUNCTION BOXES OR OTHER OBSTRUCTIONS IN FRONT OF RAMP ACCESS AREAS.

DETAILS OF CONSTRUCTION, MATERIALS AND WORKMANSHIP NOT SHOWN ON THIS DRAWING SHALL CONFORM TO THE PERTINENT REQUIREMENTS OF THE STANDARD SPECIFICATIONS AND THE APPLICABLE SPECIAL PROVISIONS.

DETECTABLE WARNING FIELDS THAT ARE INSTALLED AS A GROUP OR SIDE BY SIDE, SHALL BE FROM THE SAME MANUFACTURER.

(2) GRADE CHANGE BETWEEN GUTTER FLAG SLOPE AND THE CURB RAMP SLOPE SHALL NOT EXCEED 11%. MAXIMUM GUTTER FLAG SLOPE IS 4%. PROVIDE LONGITUDINAL DRAINAGE AROUND CURB AND AWAY FROM CURB RAMP. NO VERTICAL LIPS OR DISCONTINUITIES GREATER THAN ¼ - INCH ARE ALLOWED. SLOPE OF CURB HEAD OPENING SHALL MATCH THE RAMP SLOPE, MINIMALLY 1.5% AND NOT TO EXCEED 7%. WHEN ADJACENT TO 1.5% LANDING, CONSTRUCT CURB HEAD OPENING AT 1.5% IN THE DIRECTION OF PEDESTRIAN TRAVEL.

(3) AN 8.33% CURB RAMP SLOPE IS ALLOWABLE WITH FLATTENED GUTTER FLAG SLOPE AND NOT TO EXCEED 11% GRADE CHANGE.

(4) ±0.5% CONSTRUCTION TOLERANCE IN SIDEWALK CROSS SLOPE. THE SIDEWALK CROSS SLOPE SHALL NOT EXCEED 2% WITHOUT PRIOR APPROVAL FROM THE ENGINEER.

(6) PROVIDE A LEVEL LANDING (MAXIMUM 2% SLOPE) IN ANY DIRECTION OF PEDESTRIAN TRAVEL. STANDARD LEVEL LANDING SIZE IS 5 FEET BY 5 FEET.

(7) WHEN THIS GRADE BREAK DISTANCE EXCEEDS 5 FEET, USE RADIAL DETECTABLE WARNING FIELD PER SDD 8D5-f.

(8) PROVIDE GRADE BREAK PERPENDICULAR TO DIRECTION OF WHEELCHAIR TRAVEL.

(10) INSTALL TRANSITION NOSE (INCIDENTAL TO OTHER PAY ITEMS). DO NOT MARK TRANSITION NOSE.

LEGEND

- ½" EXPANSION JOINT SIDEWALK
- CONTRACTION JOINT SIDEWALK
- PAVEMENT MARKING CROSSWALK (WHITE)

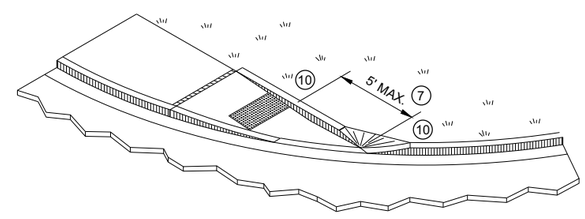

ISOMETRIC VIEW FOR TYPE 4A

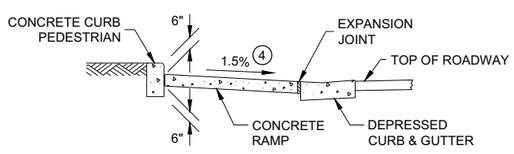

SECTION C - C FOR TYPE 4A

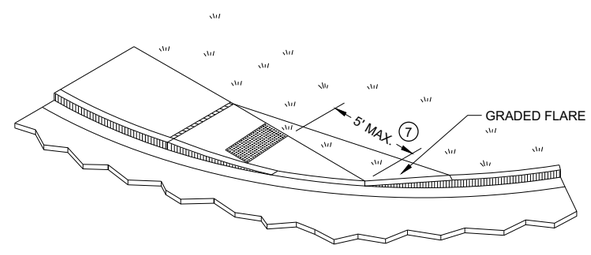

ISOMETRIC VIEW FOR TYPE 4A1

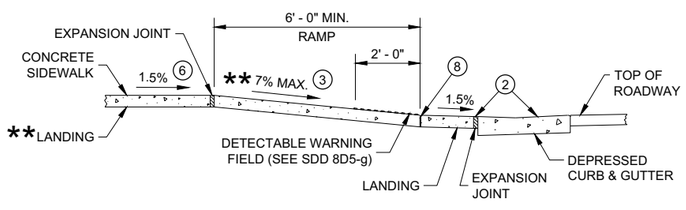

** IF RAMP SLOPE IS LESS THAN 5.0%, THEN NO ADJACENT UPHILL LANDING IS REQUIRED

SECTION B - B FOR TYPE 4A AND TYPE 4A1

* MAXIMUM 2.0% SLOPE IN ALL DIRECTIONS IF FRONT OF GRADE BREAK

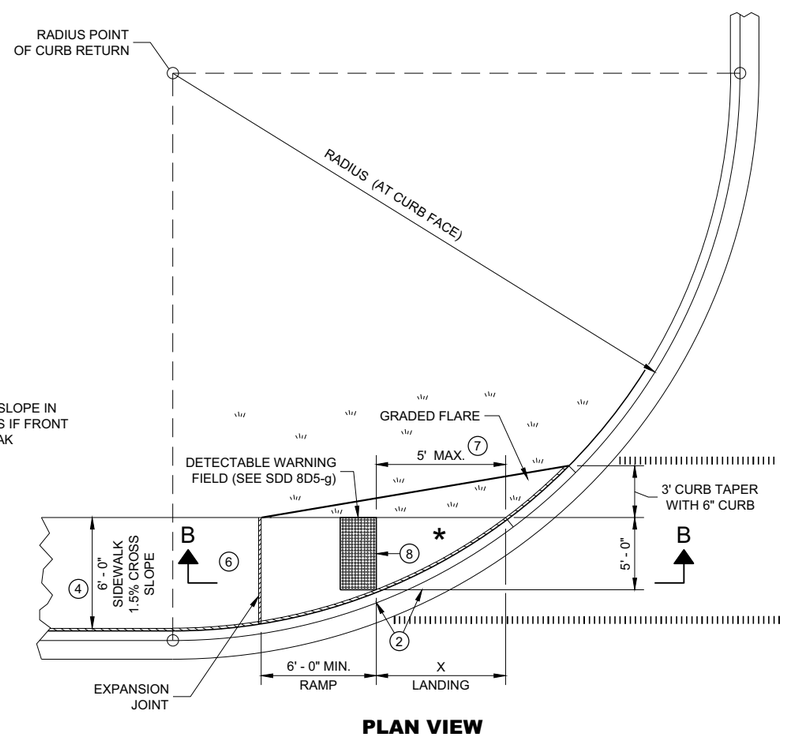

PLAN VIEW
CURB RAMP TYPE 4A1

CURB RAMPS
TYPE 4A AND 4A1

STATE OF WISCONSIN
DEPARTMENT OF TRANSPORTATION

6

SDD 08D05 - 20c

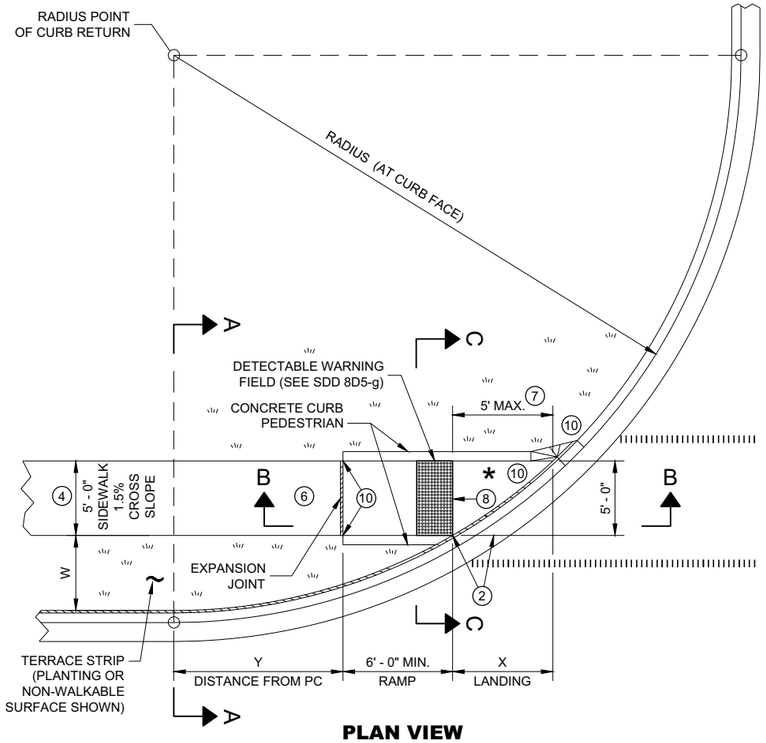

PLAN VIEW

CURB RAMP TYPE 4B

RADIUS (AT CURB FACE)	W = 3' - 0"		W = 4' - 0"		W = 5' - 0"		W = 6' - 0"		W = 7' - 0"		W = 8' - 0"		W = 9' - 0"		W = 10' - 0"	
	X	Y	X	Y	X	Y	X	Y	X	Y	X	Y	X	Y	X	Y
10 FEET	2' - 10 ¼"	0' - 5"	2' - 1"	1' - 4 ½"	1' - 5"	2' - 1"	0' - 10"	2' - 7 ½"	0' - 3 ¼"	3' - 0 ¼"						
15 FEET	4' - 6 ¾"	2' - 1 ¾"	3' - 9"	3' - 5 ¾"	3' - 1 ¼"	4' - 6"	2' - 6 ¾"	5' - 4 ½"	2' - 1"	6' - 1"	1' - 8"	6' - 8 ½"	1' - 3 ¼"	7' - 2 ½"	0' - 10 ¾"	7' - 7 ¼"
20 FEET	5' - 9 ¾"	3' - 6 ½"	4' - 11 ½"	5' - 1 ¾"	4' - 3 ¼"	6' - 5 ½"	3' - 8 ¾"	7' - 7"	3' - 3"	8' - 6 ½"	2' - 10"	9' - 4 ½"	2' - 5 ½"	10' - 1 ¼"	2' - 1 ¼"	10' - 9"
30 FEET			6' - 9 ¼"	7' - 11 ¼"	6' - 0 ¼"	9' - 8"	5' - 5"	11' - 1 ¾"	4' - 10 ¾"	12' - 5 ¾"	4' - 5 ½"	13' - 7 ¾"	4' - 0 ¾"	14' - 8 ½"	3' - 8 ½"	15' - 8 ¼"
40 FEET									6' - 1 ¾"	15' - 8 ½"	5' - 8"	17' - 2"	5' - 3"	18' - 5 ¾"	4' - 10 ¾"	19' - 8 ¼"
50 FEET															5' - 10 ¼"	23' - 2"

INTERMEDIATE RADII CAN BE INTERPOLATED
DIMENSION "Y" IS CALCULATED BASED ON 6'-0" RAMP LENGTH
DIMENSION "X" IS CALCULATED BASED ON 5'-0" SIDEWALK WIDTH

LEGEND

- ½" EXPANSION JOINT SIDEWALK
- CONTRACTION JOINT SIDEWALK
- PAVEMENT MARKING CROSSWALK (WHITE)

GENERAL NOTES

AVOID PLACING DRAINAGE STRUCTURES, JUNCTION BOXES OR OTHER OBSTRUCTIONS IN FRONT OF RAMP ACCESS AREAS.

DETAILS OF CONSTRUCTION, MATERIALS AND WORKMANSHIP NOT SHOWN ON THIS DRAWING SHALL CONFORM TO THE PERTINENT REQUIREMENTS OF THE STANDARD SPECIFICATIONS AND THE APPLICABLE SPECIAL PROVISIONS.

DETECTABLE WARNING FIELDS THAT ARE INSTALLED AS A GROUP OR SIDE BY SIDE, SHALL BE FROM THE SAME MANUFACTURER.

(2) GRADE CHANGE BETWEEN GUTTER FLAG SLOPE AND THE CURB RAMP SLOPE SHALL NOT EXCEED 11%. MAXIMUM GUTTER FLAG SLOPE IS 4%. PROVIDE LONGITUDINAL DRAINAGE AROUND CURB AND AWAY FROM CURB RAMP. NO VERTICAL LIPS OR DISCONTINUITIES GREATER THAN ¼ - INCH ARE ALLOWED. SLOPE OF CURB HEAD OPENING SHALL MATCH THE RAMP SLOPE, MINIMALLY 1.5% AND NOT TO EXCEED 7%. WHEN ADJACENT TO 1.5% LANDING, CONSTRUCT CURB HEAD OPENING AT 1.5% IN THE DIRECTION OF PEDESTRIAN TRAVEL.

(3) AN 8.33% CURB RAMP SLOPE IS ALLOWABLE WITH FLATTENED GUTTER FLAG SLOPE AND NOT TO EXCEED 11% GRADE CHANGE.

(4) ±0.5% CONSTRUCTION TOLERANCE IN SIDEWALK CROSS SLOPE. THE SIDEWALK CROSS SLOPE SHALL NOT EXCEED 2% WITHOUT PRIOR APPROVAL FROM THE ENGINEER.

(6) PROVIDE A LEVEL LANDING (MAXIMUM 2% SLOPE) IN ANY DIRECTION OF PEDESTRIAN TRAVEL. STANDARD LEVEL LANDING SIZE IS 5 FEET BY 5 FEET.

(7) WHEN THIS GRADE BREAK DISTANCE EXCEEDS 5 FEET, USE RADIAL DETECTABLE WARNING FIELD PER SDD 8D5-f.

(8) PROVIDE GRADE BREAK PERPENDICULAR TO DIRECTION OF WHEELCHAIR TRAVEL.

(10) INSTALL TRANSITION NOSE (INCIDENTAL TO OTHER PAY ITEMS). DO NOT MARK TRANSITION NOSE.

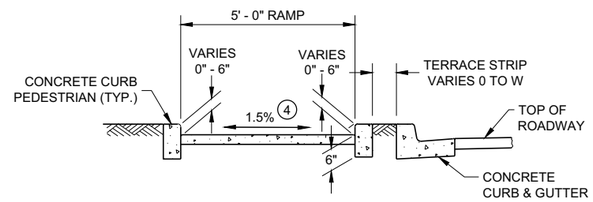

SECTION C - C FOR TYPE 4B

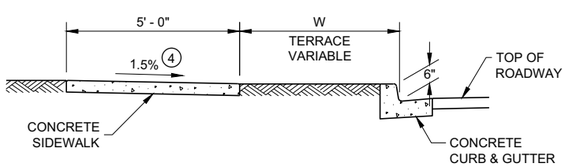

SECTION A - A FOR TYPE 4B

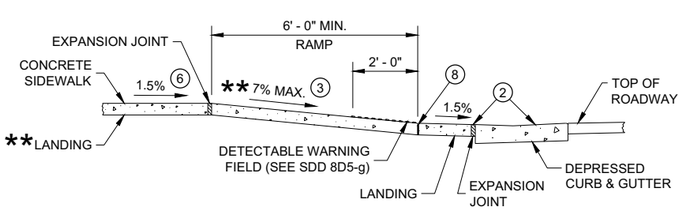

** IF RAMP SLOPE IS LESS THAN 5.0%, THEN NO ADJACENT UPHILL LANDING IS REQUIRED

SECTION B - B FOR TYPE 4B AND TYPE 4B1

* MAXIMUM 2.0% SLOPE IN ALL DIRECTIONS IF FRONT OF GRADE BREAK

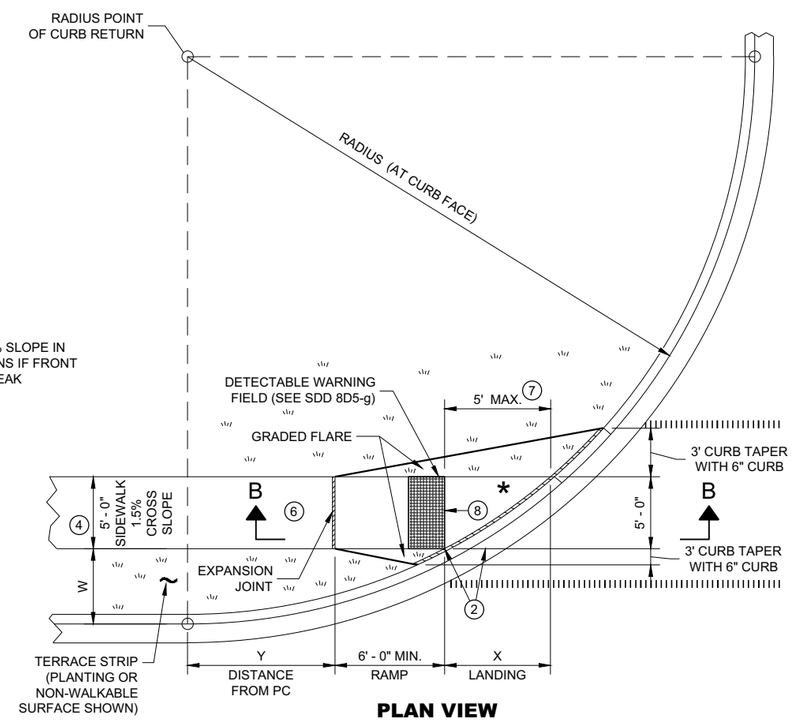

PLAN VIEW

CURB RAMP TYPE 4B1

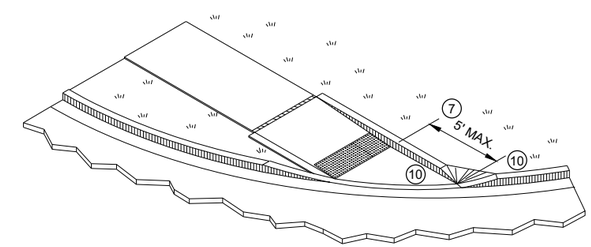

ISOMETRIC VIEW FOR TYPE 4B

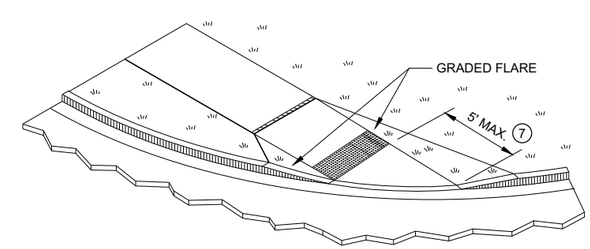

ISOMETRIC VIEW FOR TYPE 4B1

CURB RAMPS TYPE 4B AND 4B1

STATE OF WISCONSIN
DEPARTMENT OF TRANSPORTATION

6

SDD 08D05 - 20d

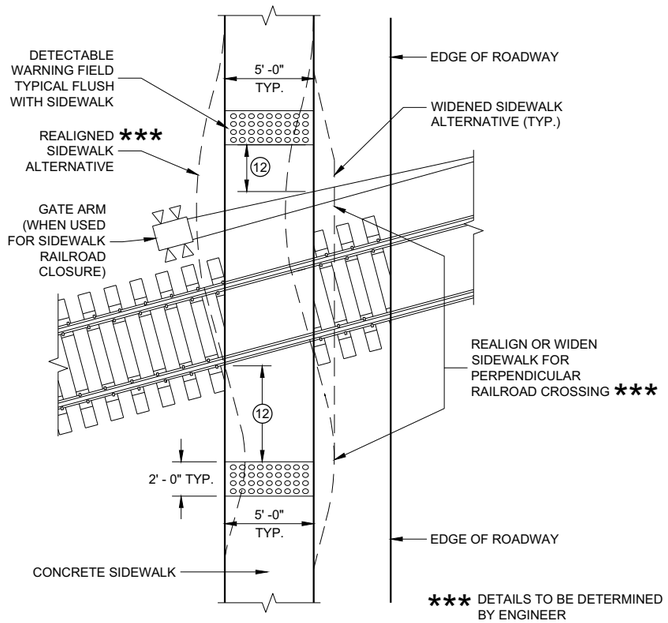

CURB RAMP TYPE 8

DETECTABLE WARNINGS AT RAILROAD CROSSING

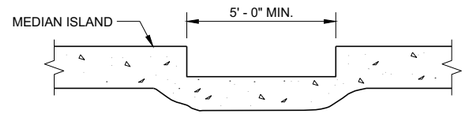

SECTION A - A FOR TYPE 5

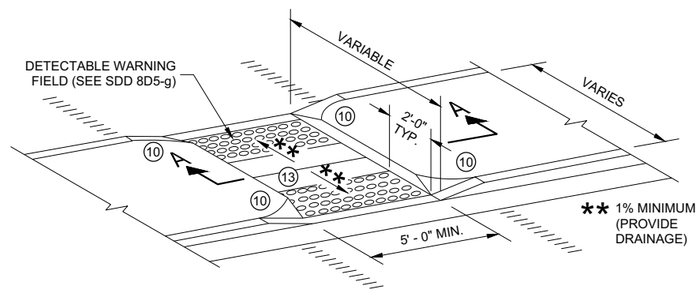

CURB RAMP TYPE 5

MEDIAN ISLAND NON-ELEVATED PEDESTRIAN CROSSING

GENERAL NOTES

AVOID PLACING DRAINAGE STRUCTURES, JUNCTION BOXES OR OTHER OBSTRUCTIONS IN FRONT OF RAMP ACCESS AREAS.

DETAILS OF CONSTRUCTION, MATERIALS AND WORKMANSHIP NOT SHOWN ON THIS DRAWING SHALL CONFORM TO THE PERTINENT REQUIREMENTS OF THE STANDARD SPECIFICATIONS AND THE APPLICABLE SPECIAL PROVISIONS.

SIDEWALK CROSS SLOPE SHALL NOT EXCEED 2%.

DETECTABLE WARNING FIELDS THAT ARE INSTALLED AS A GROUP OR SIDE BY SIDE, SHALL BE FROM THE SAME MANUFACTURER.

(2) GRADE CHANGE BETWEEN GUTTER FLAG SLOPE AND THE CURB RAMP SLOPE SHALL NOT EXCEED 11%. MAXIMUM GUTTER FLAG SLOPE IS 4%. PROVIDE LONGITUDINAL DRAINAGE AROUND CURB AND AWAY FROM CURB RAMP. NO VERTICAL LIPS OR DISCONTINUITIES GREATER THAN ¼ - INCH ARE ALLOWED. SLOPE OF CURB HEAD OPENING SHALL MATCH THE RAMP SLOPE, MINIMALLY 1.5% AND NOT TO EXCEED 7%. WHEN ADJACENT TO 1.5% LANDING, CONSTRUCT CURB HEAD OPENING AT 1.5% IN THE DIRECTION OF PEDESTRIAN TRAVEL.

(3) AN 8.33% CURB RAMP SLOPE IS ALLOWABLE WITH FLATTENED GUTTER FLAG SLOPE AND NOT TO EXCEED 11% GRADE CHANGE.

(4) ±0.5% CONSTRUCTION TOLERANCE IN SIDEWALK CROSS SLOPE. THE SIDEWALK CROSS SLOPE SHALL NOT EXCEED 2% WITHOUT PRIOR APPROVAL FROM THE ENGINEER.

(6) PROVIDE A LEVEL LANDING (MAXIMUM 2% SLOPE) IN ANY DIRECTION OF PEDESTRIAN TRAVEL. STANDARD LEVEL LANDING SIZE IS 5 FEET BY 5 FEET.

(10) INSTALL TRANSITION NOSE (INCIDENTAL TO OTHER PAY ITEMS). DO NOT MARK TRANSITION NOSE.

(11) SLOPE SIDEWALK TOWARD LANDING AS SHOWN WHERE THERE IS NO TERRACE OR WHERE THE TERRACE WIDTH IS LESS THAN 6 FEET WIDE.

(12) THE EDGE OF THE DETECTABLE WARNING FIELD NEAREST TO A RAILROAD CROSSING SHALL BE 1.5 FEET ±0.1' FROM THE FACE OF THE GATE ARM IF THE GATE ARM EXTENDS ACROSS THE SIDEWALK. WHERE THERE IS NO PEDESTRIAN GATE, THE EDGE OF THE DETECTABLE WARNING FIELD NEAREST TO THE RAILROAD CROSSING SHALL BE 15 FEET FROM THE NEAREST RAIL.

(13) DO NOT INSTALL DETECTABLE WARNING FIELDS AT THE EDGES OF STEET-LEVEL PEDESTRIAN REFUGE ISLANDS IF A MINIMUM 2 FOOT CONCRETE SURFACE WITHOUT DETECTABLE WARNINGS (MEASURED IN THE DIRECTION OF PEDESTRIAN TRAVEL) CANNOT BE ACHIEVED.

LEGEND

- ½" EXPANSION JOINT SIDEWALK
- CONTRACTION JOINT FIELD LOCATED
- PAVEMENT MARKING CROSSWALK (WHITE)

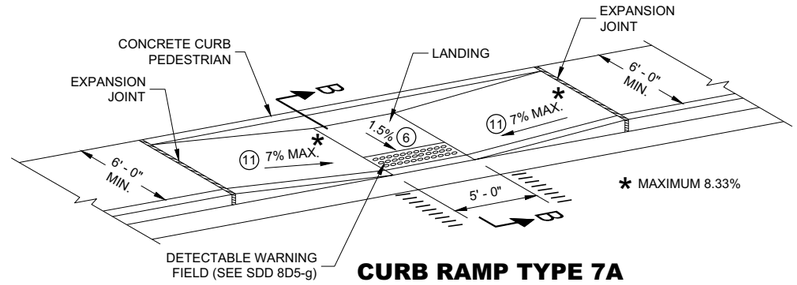

CURB RAMP TYPE 7A

MID BLOCK CROSSING

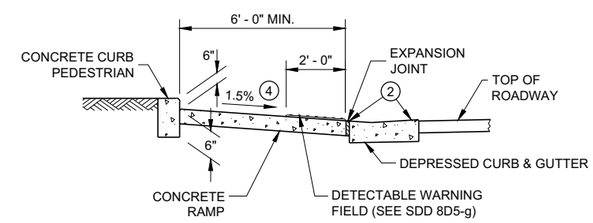

SECTION B - B FOR TYPE 7A

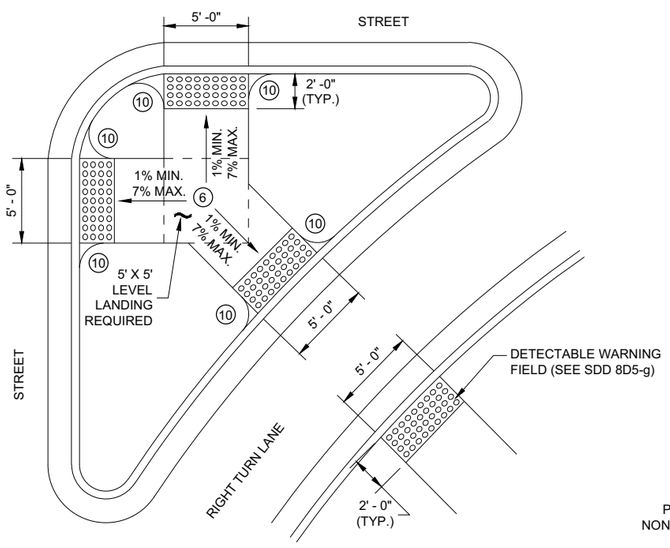

CURB RAMP TYPE 6

DETECTABLE WARNING AT ISLANDS

REFER TO GENERAL NOTES (2) AND (3) FOR ALL ISLAND CURB RAMPS

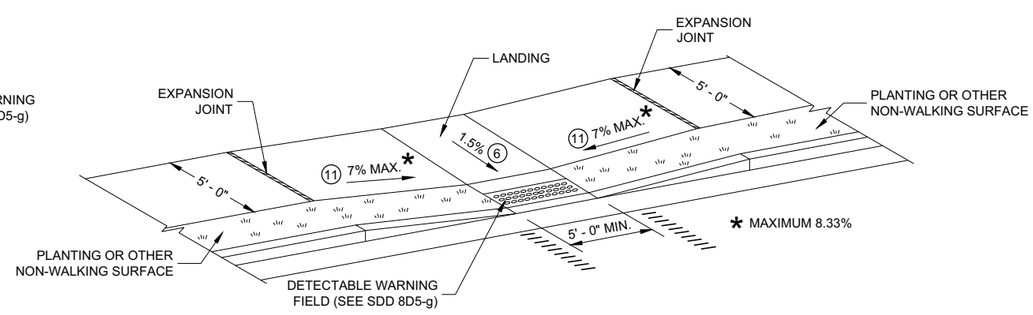

CURB RAMP TYPE 7B

MID BLOCK CROSSING

NOTE: THESE PARALLEL AND PARALLEL/PERPENDICULAR CURB RAMPS MAY BE USED AT INTERSECTIONS AND MID BLOCK LOCATIONS.

CURB RAMPS TYPE 5, 6, 7A, 7B & 8

STATE OF WISCONSIN
DEPARTMENT OF TRANSPORTAT

6

SDD 08D05 - 20e

RADIAL DETECTABLE WARNING FIELD PLACEMENT WHEN 5 FOOT GRADE BREAK DISTANCE PER SDD 8D5-c IS EXCEEDED

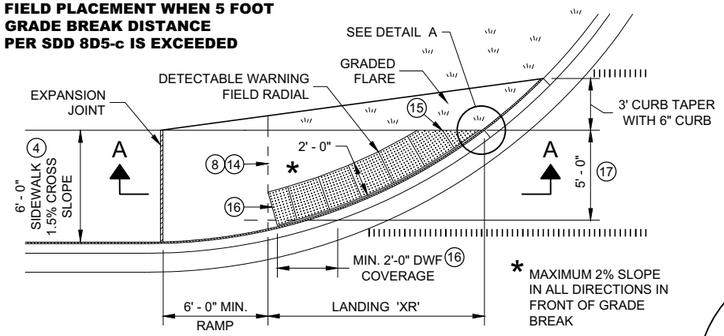

PLAN VIEW

CURB RAMP TYPE 4A1

(GRADE BREAK DISTANCE GREATER THAN 5 FEET)

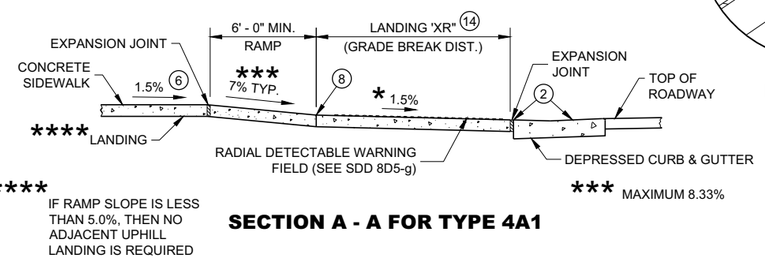

SECTION A - A FOR TYPE 4A1

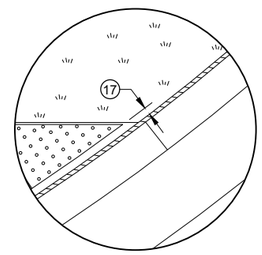

DETAIL A

LEGEND

- ½" EXPANSION JOINT SIDEWALK
- CONTRACTION JOINT SIDEWALK
- PAVEMENT MARKING CROSSWALK (WHITE)

GENERAL NOTES

AVOID PLACING DRAINAGE STRUCTURES, JUNCTION BOXES OR OTHER OBSTRUCTIONS IN FRONT OF RAMP ACCESS AREAS.

DETAILS OF CONSTRUCTION, MATERIALS AND WORKMANSHIP NOT SHOWN ON THIS DRAWING SHALL CONFORM TO THE PERTINENT REQUIREMENTS OF THE STANDARD SPECIFICATIONS AND THE APPLICABLE SPECIAL PROVISIONS.

DETECTABLE WARNING FIELDS THAT ARE INSTALLED AS A GROUP OR SIDE BY SIDE, SHALL BE FROM THE SAME MANUFACTURER.

APPLY RADIAL DETECTABLE WARNING PLACEMENT SIMILARLY FOR TYPE 4A AND 4A1 CURB RAMPS AND SIMILARLY FOR TYPE 4B AND 4B1 CURB RAMPS. TYPE 4A AND 4B CURB RAMPS ARE NOT SHOWN.

REFER TO SDD 8D5-g FOR ADDITIONAL RADIAL PLATE REQUIREMENTS.

FIELD CUTS AT INTERMEDIATE JOINTS WITHIN THE RADIAL DETECTABLE WARNING FILED ARE PROHIBITED.

DETERMINE FINAL RADIAL WARNING FIELD CONFIGURATION AD ITS INDIVIDUAL PLATE LOCATIONS. PERFORM PRE-LAYOUT PRIOR TO PLACEMENT IN PLASTIC CONCRETE. FOLLOW MANUFACTURER'S PRODUCT LIST AND INSTALLATION RECOMMENDATIONS.

(2) GRADE CHANGE BETWEEN GUTTER FLAG SLOPE AND THE CURB RAMP SLOPE SHALL NOT EXCEED 11%. MAXIMUM GUTTER FLAG SLOPE IS 4%. PROVIDE LONGITUDINAL DRAINAGE AROUND CURB AND AWAY FROM CURB RAMP. NO VERTICAL LIPS OR DISCONTINUITIES GREATER THAN ¼ - INCH ARE ALLOWED. SLOPE OF CURB HEAD OPENING SHALL MATCH THE RAMP SLOPE, MINIMALLY 1.5% AND NOT TO EXCEED 7%. WHEN ADJACENT TO 1.5% LANDING, CONSTRUCT CURB HEAD OPENING AT 1.5% IN THE DIRECTION OF PEDESTRIAN TRAVEL.

(3) AN 8.33% CURB RAMP SLOPE IS ALLOWABLE WITH FLATTENED GUTTER FLAG SLOPE AND NOT TO EXCEED 11% GRADE CHANGE.

(4) ±0.5% CONSTRUCTION TOLERANCE IN SIDEWALK CROSS SLOPE. THE SIDEWALK CROSS SLOPE SHALL NOT EXCEED 2% WITHOUT PRIOR APPROVAL FROM THE ENGINEER.

(6) PROVIDE A LEVEL LANDING (MAXIMUM 2% SLOPE) IN ANY DIRECTION OF PEDESTRIAN TRAVEL. STANDARD LANDING SIZE IS 5 FEET BY 5 FEET.

(8) PROVIDE GRADE BREAK PERPENDICULAR TO DIRECTION OF WHEELCHAIR TRAVEL.

(14) CONSULT ENGINEER IF GRADE BREAK LOCATION (END OF LANDING DIMENSION "XR") REQUIRES FIELD ADJUSTMENT WHEN ESTABLISHING FINAL RADIAL DETECTABLE WARNING FIELD LOCATION.

(15) FIELD SAW CUTS ALONG RADIAL DETECTABLE WARNING PLATES WILL BE NECESSARY TO MATCH EACH CURB RAMP EDGE. AVOID CUTTING THROUGH DOMES WHENEVER POSSIBLE. MAKE FIELD CUTS TRUE TO LINE AND WITHIN ⅛" DEVIATION. SMOOTH EDGES OF FIELD CUT PLATES.

(16) USE 1' X 2" RECTANGULAR END PLATE AT END OF TYPE 4A1 RAMP AND PROVIDE MINIMUM 2' - 0" DETECTABLE WARNING FIELD COVERAGE (IN DIRECTION OF PEDESTRIAN TRAVEL) ALONG THE ENTIRE CURB RAMP WIDTH.

(17) A MAXIMUM 3 INCH CONCRETE BORDER WITH IS ALLOWABLE IN FROM OF RADIAL DETECTABLE WARNING FIELD FOR CONSTRUCTABILITY PURPOSES. CONCRETE BORDER WIDTH MAY VARY UP TO 1 INCH.

RADIAL DETECTABLE WARNING FIELD PLACEMENT WHEN 5 FOOT GRADE BREAK DISTANCE PER SDD 8D5-d IS EXCEEDED

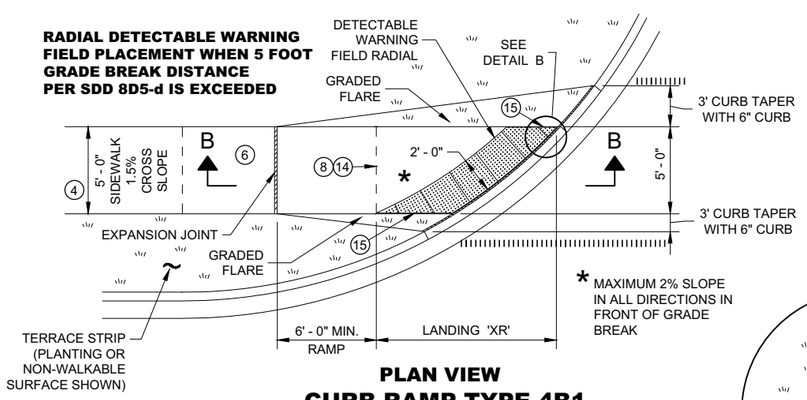

PLAN VIEW

CURB RAMP TYPE 4B1

(GRADE BREAK DISTANCE GREATER THAN 5 FEET)

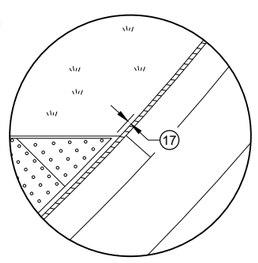

DETAIL B

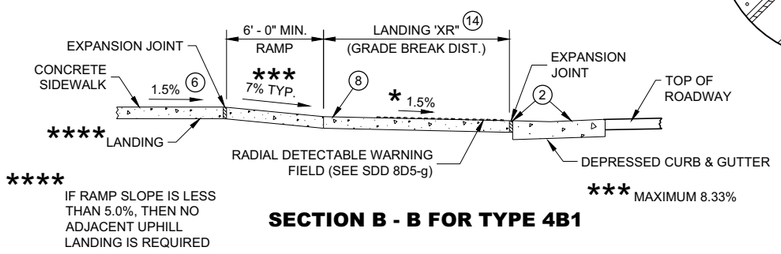

SECTION B - B FOR TYPE 4B1

RADIAL DETECTABLE WARNING FIELD PLACEMENT WHEN 5 FOOT GRADE BREAK DISTANCE PER SDD 8D5-b IS EXCEEDED

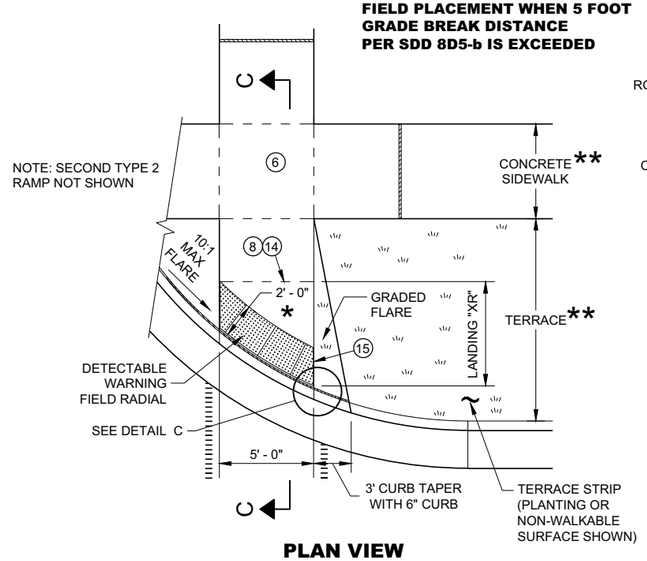

PLAN VIEW

CURB RAMP TYPE 2

(GRADE BREAK DISTANCE GREATER THAN 5 FEET)

(ON LINE WITH SIDEWALK)

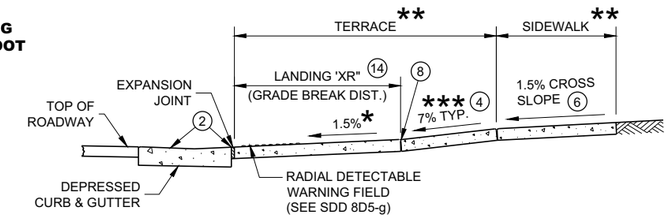

SECTION C - C FOR TYPE 2

* MAXIMUM 2% SLOPE IN ALL DIRECTIONS IN FRONT OF GRADE BREAK

** WIDTH SHOWN ELSEWHERE IN THE PLANS

*** MAXIMUM 8.33%

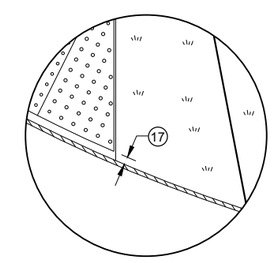

DETAIL C

CURB RAMPS
RADIAL DETECTABLE WARNING FIELD APPLICATIONS

STATE OF WISCONSIN
DEPARTMENT OF TRANSPORTAT

6

SDD 08D05 - 20f

	MIN.	MAX.
A	1.6"	2.4"
B	0.65"	1.5"
C	*	*
D	0.9"	1.4"

* THE C DIMENSION IS 50% TO 65% OF THE D DIMENSION.

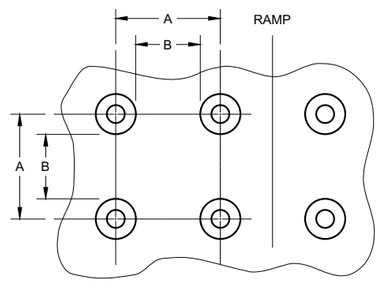

PLAN VIEW

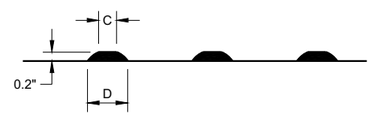

ELEVATION VIEW

TRUNCATED DOMES
DETECTABLE WARNING PATTERN DETAIL

GENERAL NOTES

DETECTABLE WARNING FIELDS THAT ARE INSTALLED AT A CURB RAMP SHALL BE FROM THE SAME MANUFACTURER.

PLACE ALL DETECTABLE WARNING FIELD SYSTEMS IN ACCORDANCE TO THE MANUFACTURER'S RECOMMENDATION.

FIELD CUTS AT INTERMEDIATE JOINTS WITHIN THE RADIAL DETECTABLE WARNING FILED ARE PROHIBITED.

DETERMINE FINAL RADIAL WARNING FIELD CONFIGURATION AND ITS INDIVIDUAL PLATE LOCATIONS. PERFORM PRE-LAYOUT PRIOR TO PLACEMENT IN PLASTIC CONCRETE. FOLLOW MANUFACTURER'S PRODUCT LIST AND INSTALLATION RECOMMENDATIONS.

FOR RADIAL DETECTABLE WARNING FIELD APPLICATIONS WHERE STANDARD RADIAL PLATES ARE NOT AVAILABLE AT AN INTERSECTION CURB RADIUS, A COMBINATION OF SQUARE OR RECTANGULAR PLATES AND RADIAL PLATES MAY BE USED TO FORM RADIAL CONFIGURATION. RADIAL WEDGE PLATES IN COMBINATION WITH SQUARE PLATES ARE ALSO ACCEPTABLE. FOLLOW MANUFACTURER'S RECOMMENDATIONS.

REFER TO CONTRACT AND STANDARD SPECIFICATIONS FOR FIELD CUTTING REQUIREMENTS.

DO NOT EMBED IN CONCRETE ANY FIELD-CUT PLATES WITH CUT EDGES SHORTER THAN 6 INCHES. CONSULT WITH MANUFACTURER FOR RE-DRILLING AND ANCHORING REQUIREMENTS OF FIELD-CUT PLATES.

(15) FIELD SAW CUTS ALONG RADIAL DETECTABLE WARNING PLATES WILL BE NECESSARY TO MATCH EACH CURB RAMP EDGE. AVOID CUTTING THROUGH DOMES WHENEVER POSSIBLE. MAKE FIELD CUTS TRUE TO LINE AND WITHIN ⅛" DEVIATION. SMOOTH EDGES OF FIELD CUT PLATES.

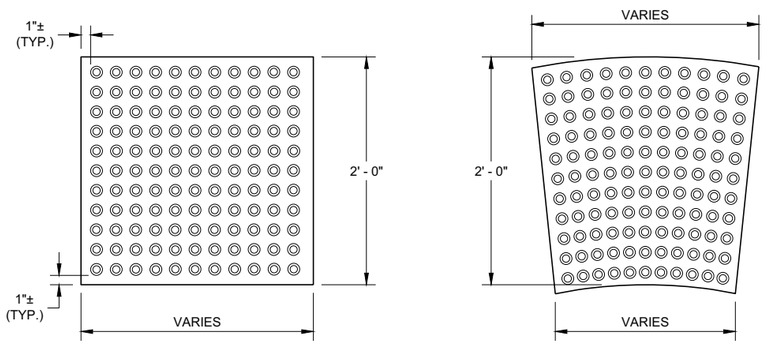

RECTANGULAR PLATES **RADIAL PLATES**

PLAN VIEW
DETECTABLE WARNING FIELDS (TYPICAL)

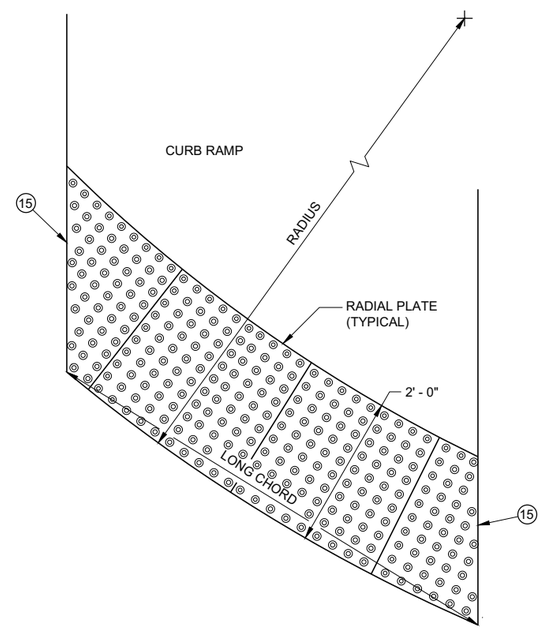

PLAN VIEW
RADIAL DETECTABLE WARNING FIELD ATTRIBUTES

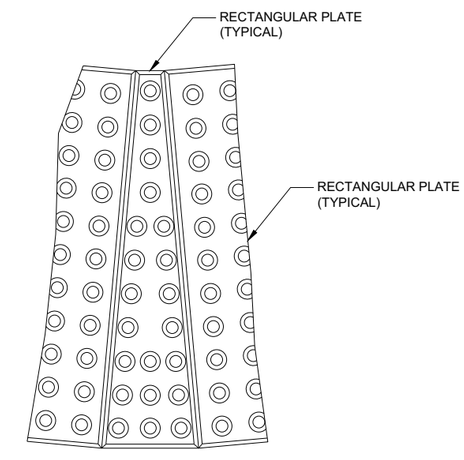

PLAN VIEW
RADIAL WEDGE PLATE CONNECTION DETAIL

6

6

SDD 08D05 - 20g

SDD 08D05 - 20g

CURB RAMPS RECTANGULAR AND RADIAL DETECTABLE WARNING PLATES

STATE OF WISCONSIN
DEPARTMENT OF TRANSPORTATION

APPROVED
May 2019 — DATE
/S/ Rodney Taylor — ROADWAY STANDARDS DEVE UNIT SUPERVISOR

FHWA

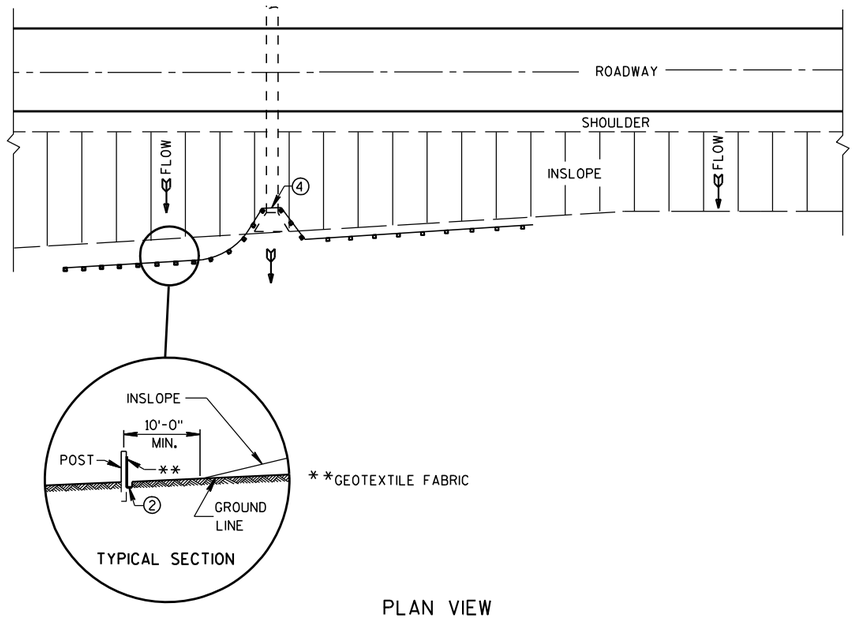

PLAN VIEW

TYPICAL APPLICATION OF SILT FENCE

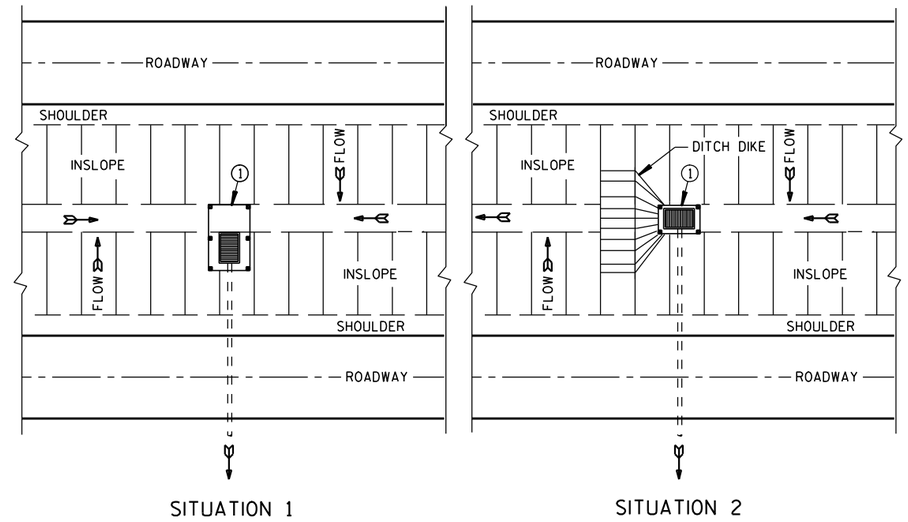

PLAN VIEW

SILT FENCE AT MEDIAN SURFACE DRAINS

GENERAL NOTES

DETAILS OF CONSTRUCTION NOT SHOWN ON THIS DRAWING SHALL CONFORM TO THE PERTINENT REQUIREMENTS OF THE STANDARD SPECIFICATIONS AND APPLICABLE SPECIAL PROVISIONS.

① HORIZONTAL BRACE REQUIRED WITH 2" X 4" WOODEN FRAME OR EQUIVALENT AT TOP OF POSTS.

② FOR MANUAL INSTALLATIONS THE TRENCH SHALL BE A MINIMUM OF 4" WIDE & 6" DEEP TO BURY AND ANCHOR THE GEOTEXTILE FABRIC. FOLD MATERIAL TO FIT TRENCH AND BACKFILL & COMPACT TRENCH WITH EXCAVATED SOIL.

③ WOOD POSTS SHALL BE A MINIMUM SIZE OF 1⅛" X 1⅛" OF OAK OR HICKORY.

④ SILT FENCE TO EXTEND ACROSS THE TOP OF THE PIPE.

⑤ CONSTRUCT SILT FENCE FROM A CONTINUOUS ROLL IF POSSIBLE BY CUTTING LENGTHS TO AVOID JOINTS. IF A JOINT IS NECESSARY USE ONE OF THE FOLLOWING TWO METHODS; A) OVERLAP THE END POSTS AND TWIST, OR ROTATE, AT LEAST 180 DEGREES. B) HOOK THE END OF EACH SILT FENCE LENGTH.

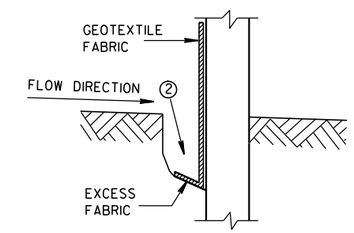

TRENCH DETAIL

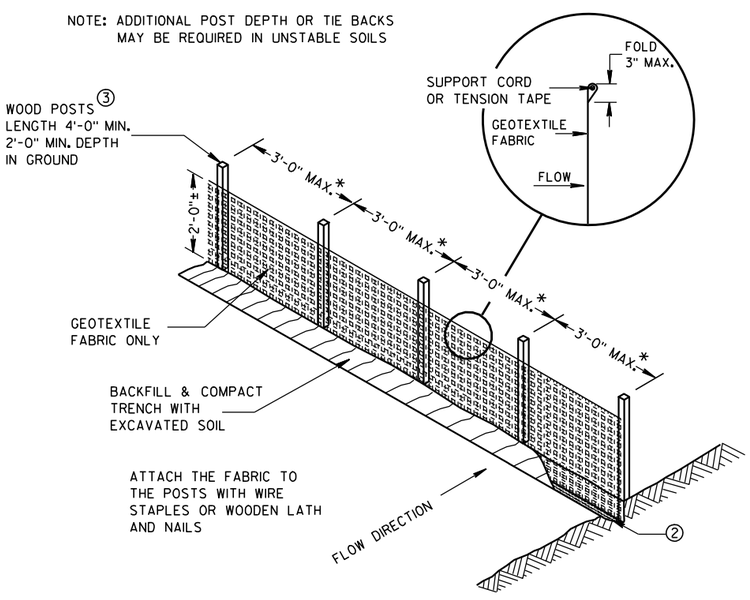

*NOTE: 8'-0" POST SPACING ALLOWED IF A WOVEN GEOTEXTILE FABRIC IS USED.

SILT FENCE

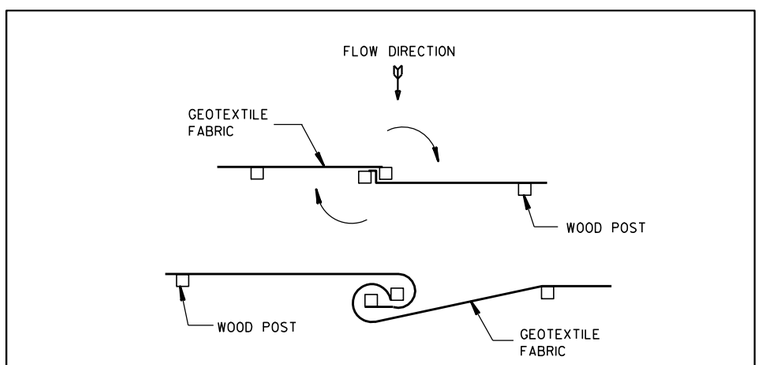

TWIST METHOD

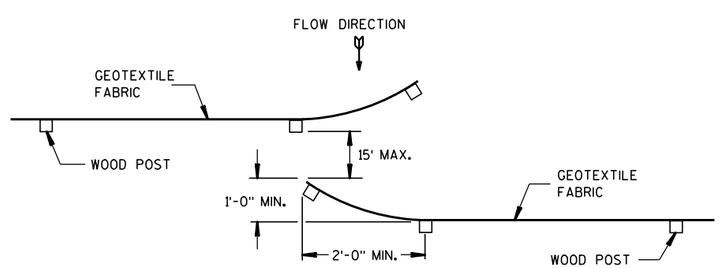

HOOK METHOD

JOINING TWO LENGTHS OF SILT FENCE ⑤

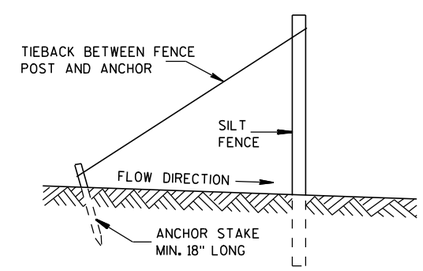

SILT FENCE TIE BACK

(WHEN REQUIRED BY THE ENGINEER)

SILT FENCE
STATE OF WISCONSIN DEPARTMENT OF TRANSPORTATION
APPROVED 4-29-05 DATE — /S/ Beth Cann-- CHIEF ROADWAY DEVELOP ENGINEER FHWA

6

6

S.D.D. 8 E 9-6

S.D.D. 8 E 9-6

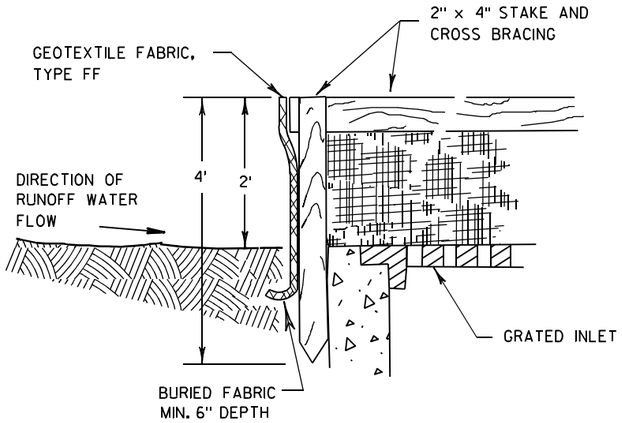

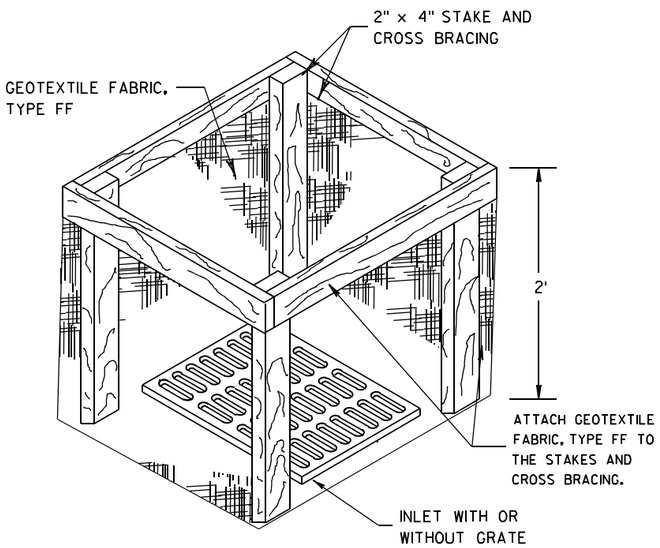

INLET PROTECTION, TYPE A

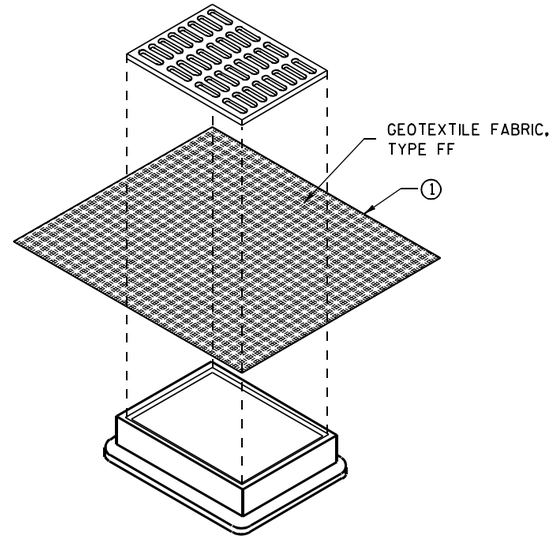

INLET PROTECTION, TYPE B
(WITHOUT CURB BOX)

(CAN BE INSTALLED IN ANY INLET WITHOUT A CURB BOX)

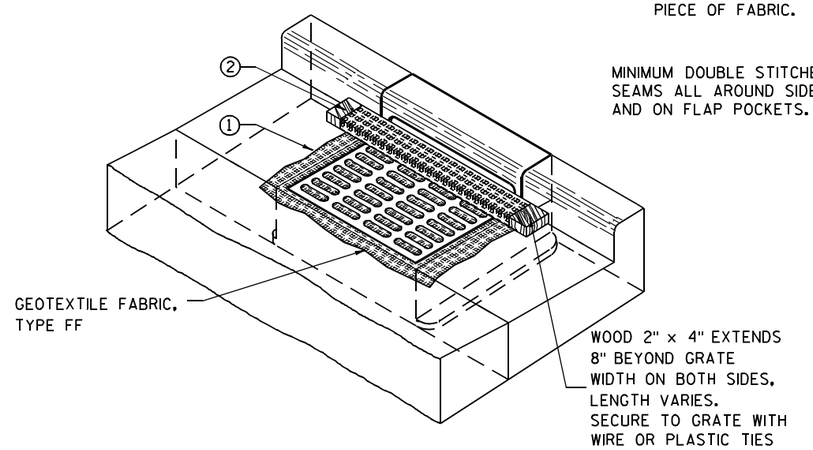

INLET PROTECTION, TYPE C (WITH CURB BOX)

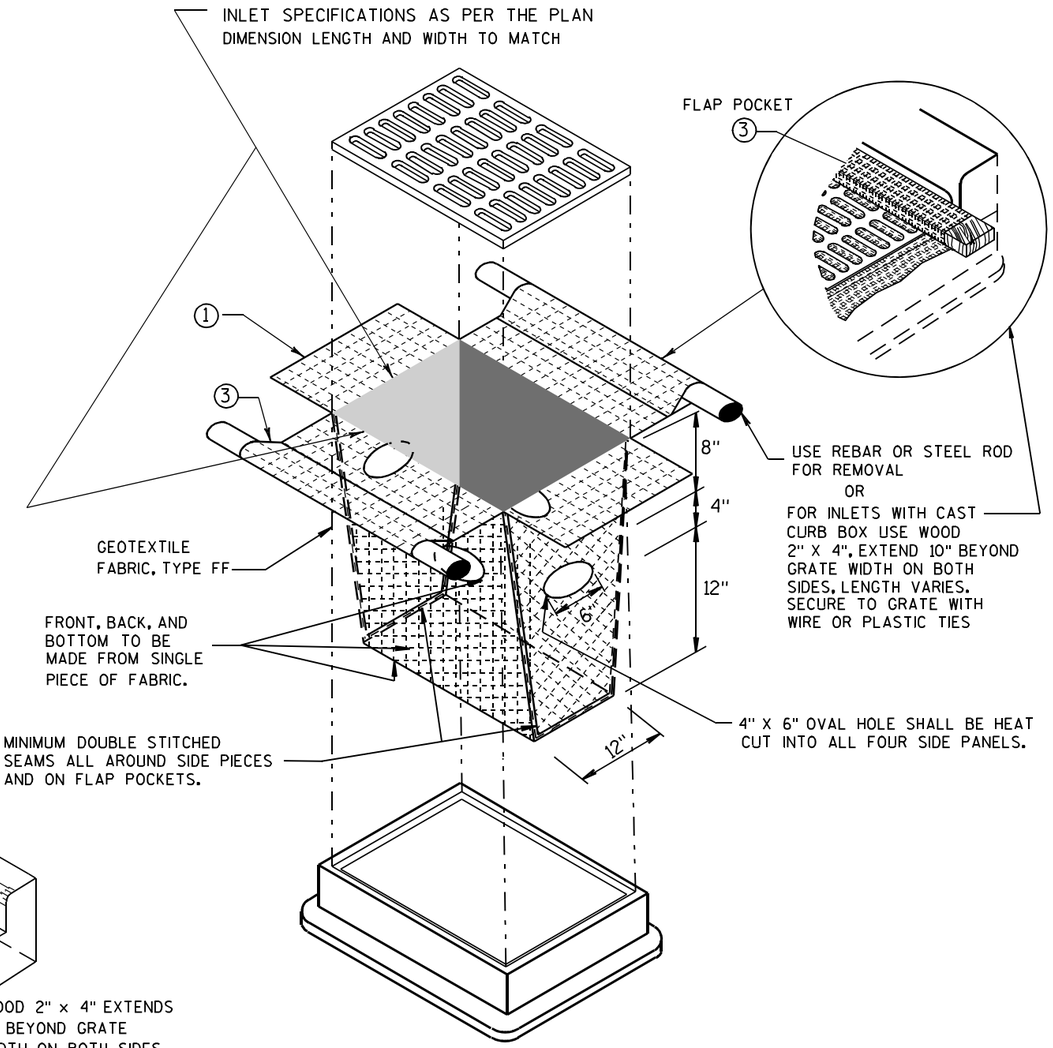

INLET PROTECTION, TYPE D

(CAN BE INSTALLED IN ANY INLET TYPE WITH
OR WITHOUT A CURB BOX AS PER NOTE ②)

GENERAL NOTES

INLET PROTECTION DEVICES SHALL BE MAINTAINED OR REPLACED AT THE DIRECTION OF THE ENGINEER.

MANUFACTURED ALTERNATIVES APPROVED AND LISTED ON THE DEPARTMENT'S EROSION CONTROL PRODUCT ACCEPTABILITY LIST MAY BE SUBSTITUTED.

WHEN REMOVING OR MAINTAINING INLET PROTECTION, CARE SHALL BE TAKEN SO THAT THE SEDIMENT TRAPPED ON THE GEOTEXTILE FABRIC DOES NOT FALL INTO THE INLET. ANY MATERIAL FALLING INTO THE INLET SHALL BE REMOVED IMMEDIATELY.

① FINISHED SIZE, INCLUDING FLAP POCKETS WHERE REQUIRED, SHALL EXTEND A MINIMUM OF 10" AROUND THE PERIMETER TO FACILITATE MAINTENANCE OR REMOVAL.

② FOR INLET PROTECTION, TYPE C (WITH CURB BOX), AN ADDITIONAL 18" OF FABRIC IS WRAPPED AROUND THE WOOD AND SECURED WITH STAPLES. THE WOOD SHALL NOT BLOCK THE ENTIRE HEIGHT OF THE CURB BOX OPENING.

③ FLAP POCKETS SHALL BE LARGE ENOUGH TO ACCEPT WOOD 2X4.

INSTALLATION NOTES

TYPE B & C

TRIM EXCESS FABRIC IN THE FLOW LINE TO WITHIN 3" OF THE GRATE.

THE CONTRACTOR SHALL DEMONSTRATE A METHOD OF MAINTENANCE, USING A SEWN FLAP, HAND HOLDS OR OTHER METHOD TO PREVENT ACCUMULATED SEDIMENT FROM ENTERING THE INLET.

TYPE D

DO NOT INSTALL INLET PROTECTION TYPE D IN INLETS SHALLOWER THAN 30", MEASURED FROM THE BOTTOM OF THE INLET TO THE TOP OF THE GRATE.

TRIM EXCESS FABRIC IN THE FLOW LINE TO WITHIN 3" OF THE GRATE.

THE INSTALLED BAG SHALL HAVE A MINIMUM SIDE CLEARANCE, BETWEEN THE INLET WALLS AND THE BAG, MEASURED AT THE BOTTOM OF THE OVERFLOW HOLES, OF 3". WHERE NECESSARY THE CONTRACTOR SHALL CINCH THE BAG, USING PLASTIC ZIP TIES, TO ACHIEVE THE 3" CLEARANCE. THE TIES SHALL BE PLACED AT A MAXIMUM OF 4" FROM THE BOTTOM OF THE BAG.

INLET PROTECTION
TYPE A, B, C, AND D

STATE OF WISCONSIN
DEPARTMENT OF TRANSPORTATION

APPROVED
10/16/02 — DATE
/S/ Beth Cannon — CHIEF ROADWAY DEVELOPMENT ENGINEER
FHWA

6

S.D.D. 8 E 10-2

GENERAL NOTES

DETAILS OF CONSTRUCTION, MATERIALS AND WORKMANSHIP NOT SHOWN ON THIS DRAWING SHALL CONFORM TO THE PERTINENT REQUIREMENTS OF THE STANDARD SPECIFICATIONS AND THE APPLICABLE SPECIAL PROVISIONS.

TRACKING PAD SHALL BE INSPECTED DAILY. DEFICIENT AREAS SHALL BE REPAIRED OR REPLACED IMMEDIATELY.

TRACKING PAD TO BE REMOVED AFTER CONSTRUCTION IS COMPLETED.

TRACKING PAD SHALL BE THE FULL WIDTH OF THE EGRESS POINT.

SURFACE WATER MUST BE PREVENTED FROM PASSING THROUGH THE TRACKING PAD. FLOWS SHALL BE DIVERTED AWAY, AROUND OR CONVEYED UNDER THE TRACKING PAD.

CULVERT PIPE OR OTHER BMP USED TO DIVERT WATER AWAY, AROUND OR UNDER THE TRACKING PAD SHALL BE DESIGNED TO CONVEY THE 2 YEAR - 24 HOUR EVENT.

THE COST OF ADDITIONAL BMP TO DIVERT WATER ARE INCIDENTAL TO THE TRACKING PAD BID ITEM.

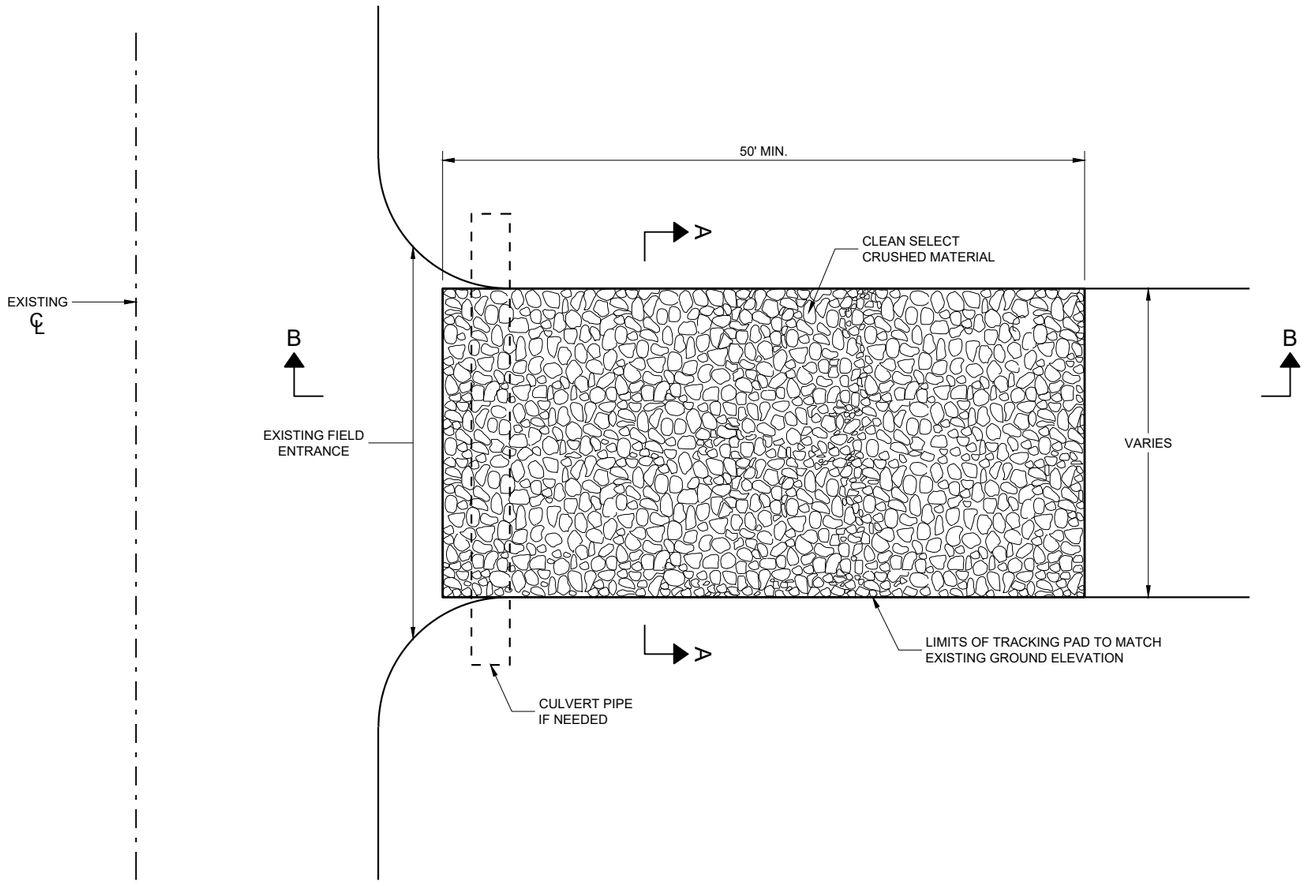

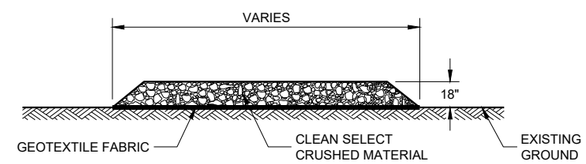

SECTION A - A

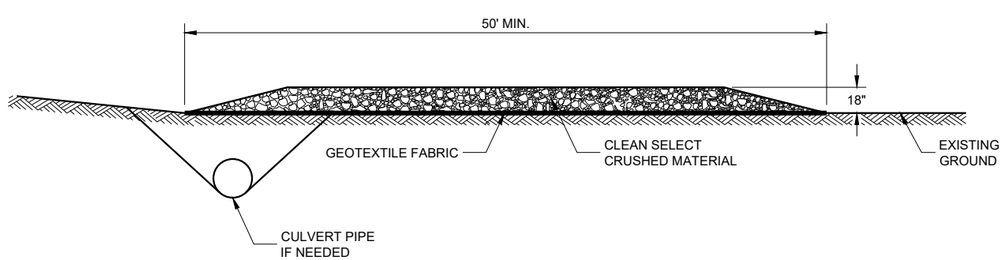

SECTION B - B

TRACKING PAD

STATE OF WISCONSIN
DEPARTMENT OF TRANSPORTATION

APPROVED
3/24/2011 — DATE
/S/ Jerry H. Zogg — ROADWAY STANDARDS DEVE ENGINEER
FHWA

6

6

SDD 08E14 - 01

SDD 08E14 - 01

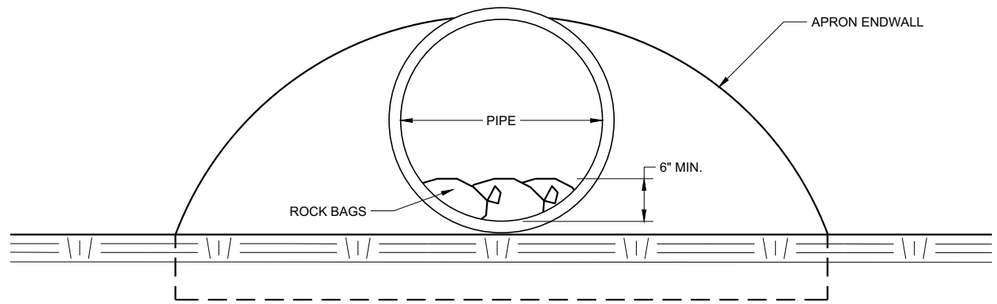

END VIEW

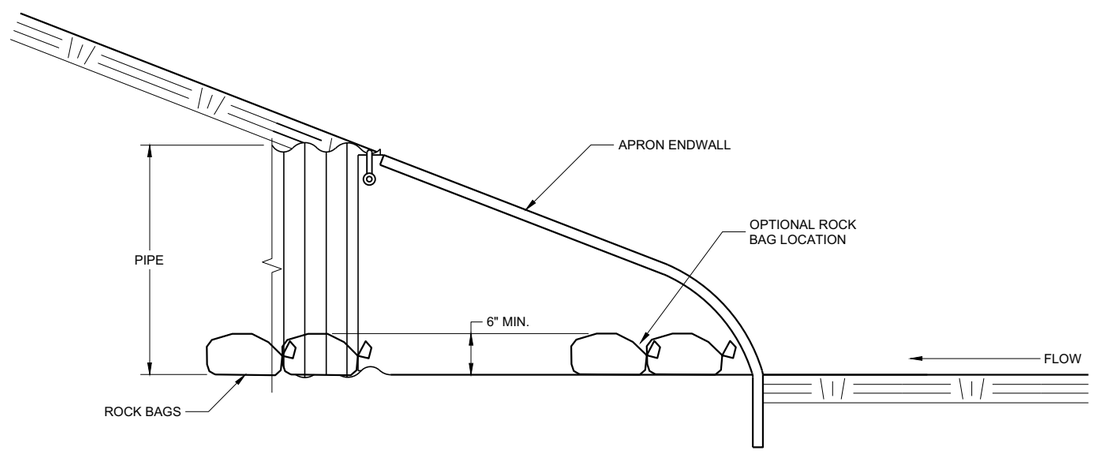

SIDE VIEW

CULVERT PIPE CHECK

(INSTALL ON INLET END ONLY)

CULVERT PIPE CHECK

STATE OF WISCONSIN
DEPARTMENT OF TRANSPORTATION

APPROVED
May 2019 — DATE
/S/ Daniel Schave — EROSION CONTROL ENGI
FHWA

6

6

SDD 08E15 - 01

SDD 08E15 - 01

METAL APRON ENDWALLS

PIPE DIA. (IN.)	MIN. THICK. (Inches) STEEL	MIN. THICK. (Inches) ALUM.	DIMENSIONS (Inches) A (±1")	B (MAX.)	H (±1")	L (±1 1/2")	L1 ①	L2 ①	W (±2")	APPROX. SLOPE	BODY
12	.064	.060	6	6	6	21	12	17 1/2	24	2 1/2 to 1	1 Pc.
15	.064	.060	7	8	6	26	14	21 3/4	30	2 1/2 to 1	1 Pc.
18	.064	.060	8	10	6	31	15	28 1/4	36	2 1/2 to 1	1 Pc.
21	.064	.060	9	12	6	36	18	29 5/8	42	2 1/2 to 1	1 Pc.
24	.064	.075	10	13	6	41	18	37 1/4	48	2 1/2 to 1	1 Pc.
30	.079	.075	12	16	8	51	18	52 1/4	60	2 1/2 to 1	1 Pc.
36	.079	.105	14	19	9	60	24	59 3/4	72	2 1/2 to 1	2 Pc.
42	.109	.105	16	22	11	69	24	75 5/8	84	2 1/2 to 1	2 Pc.
48	.109	.105	18	27	12	78	24	81	90	2 1/4 to 1	3 Pc.
54	.109	.105	18	30	12	84	30	85 1/2	102	2 1/4 to 1	3 Pc.
60	.109×	.105×	18	33	12	87	—	—	114	2 to 1	3 Pc.
66	.109×	.105×	18	36	12	87	—	—	120	2 to 1	3 Pc.
72	.109×	.105×	18	39	12	87	—	—	126	2 to 1	3 Pc.
78	.109×	.105×	18	42	12	87	—	—	132	1 1/2 to 1	3 Pc.
84	.109×	.105×	18	45	12	87	—	—	138	1 1/2 to 1	3 Pc.
90	.109×	.105×	18	37	12	87	—	—	144	1 1/2 to 1	3 Pc.
96	.109×	.105×	18	35	12	87	—	—	150	1 1/2 to 1	3 Pc.

× EXCEPT CENTER PANEL
SEE GENERAL NOTES

REINFORCED CONCRETE APRON ENDWALLS

PIPE DIA. (IN.)	DIMENSIONS (Inches) T	A	B	C	D	E	G	APPROX. SLOPE
12	2	4	24	48 7/8	72 7/8	24	2	3 to 1
15	2 1/4	6	27	46	73	30	2 1/4	3 to 1
18	2 1/2	9	27	46	73	36	2 1/2	3 to 1
21	2 3/4	9	36	37 1/2	73 1/2	42	2 3/4	3 to 1
24	3	9 1/2	43 1/2	30	73 1/2	48	3	3 to 1
27	3 1/4	10 1/2	49 1/2	24	73 1/2	54	3 1/4	3 to 1
30	3 1/2	12	54	19 3/4	73 1/2	60	3 1/2	3 to 1
36	4	15	63	34 3/4	97 3/4	72	4	3 to 1
42	4 1/2	21	63	35	98	78	4 1/2	3 to 1
48	5	24	72	26	98	84	5	3 to 1
54	5 1/2	27	65	*33 1/4-**35	*98 1/4-**100	90	5 1/2	2 2/5 to 1
60	6	*30-**35	60	39	99	96	5	2 to 1
66	6 1/2	*24-**30	*72-**78	*21-**27	99	102	5 1/2	2 to 1
72	7	*24-**36	78	21	99	108	6	2 to 1
78	7 1/2	*24-**36	78	21	99	114	6 1/2	2 to 1
84	8	36	90 1/2	21	111 1/2	120	6 1/2	1 1/2 to 1
90	8 1/2	41	87 1/2	24	111 1/2	132	6 1/2	1 1/2 to 1

*MINIMUM
**MAXIMUM

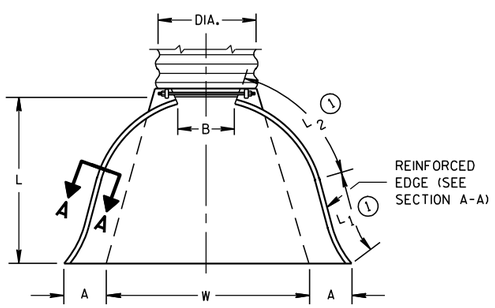

PLAN VIEW

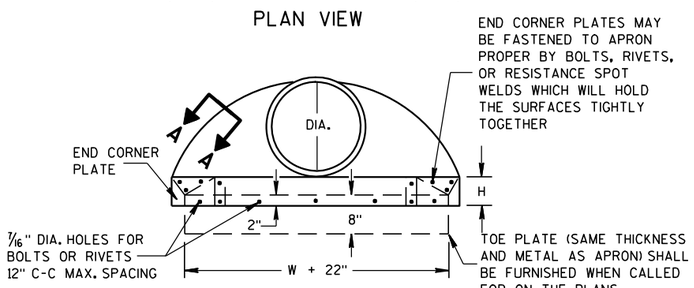

END VIEW

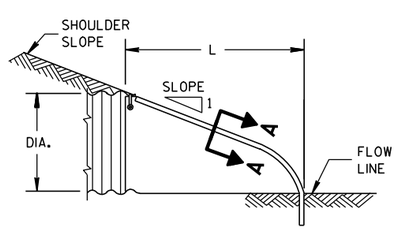

SIDE ELEVATION

METAL ENDWALLS

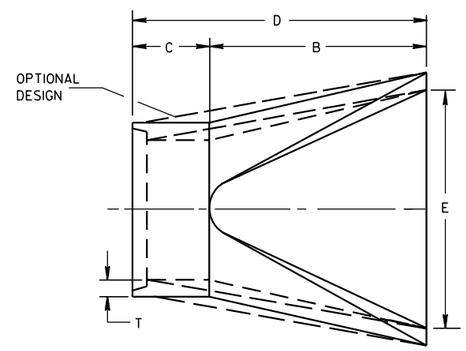

PLAN

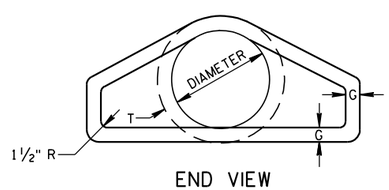

END VIEW

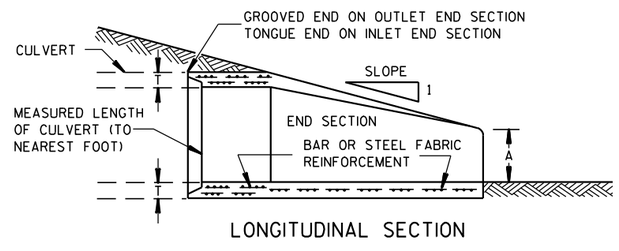

LONGITUDINAL SECTION

CONCRETE ENDWALLS

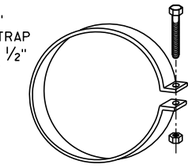

ALTERNATE FOR TYPE 1 CONNECTION

END SECTION CONNECTOR STRAP

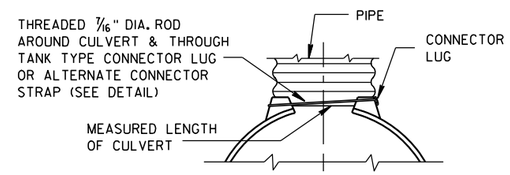

TYPE 1
FOR 12" THRU 24" CORR. PIPE

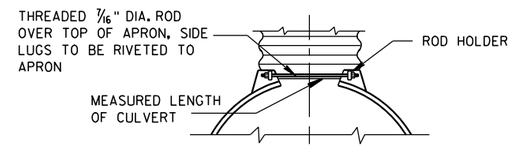

TYPE 2
FOR 30" THRU 96" CORR. PIPE

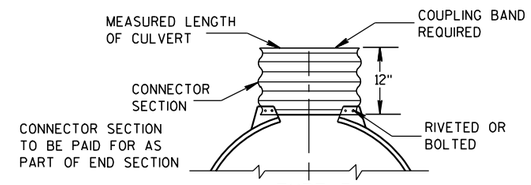

TYPE 3
FOR 42" THRU 96" CORR. PIPE

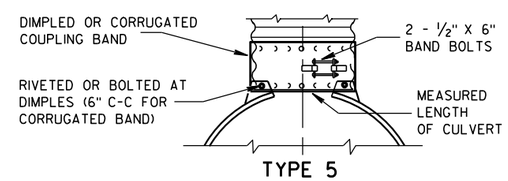

TYPE 5
ALTERNATE FOR:
ALL SIZES CORRUGATED CIRCULAR PIPE

NOTE: DIMPLED BAND FITS OVER OUTSIDE OF ENDWALL, AND CORRUGATED BAND FITS INSIDE ENDWALL. DIMPLED BAND MAY BE USED WITH HELICALLY CORRUGATED PIPE.

FOR CIRCUMFERENTIALLY CORRUGATED PIPE USE ENDWALL CONNECTION DETAILS 1, 2, 3 OR 5 AS APPLICABLE.

FOR HELICALLY CORRUGATED PIPE USE ENDWALL CONNECTION DETAILS 1, 2 OR 5.

FOR HELICALLY CORRUGATED PIPES WITH TWO CIRCUMFERENTIAL CORRUGATIONS AT EACH END USE ENDWALL CONNECTION DETAILS 1, 2 OR 3.

CONNECTION DETAILS

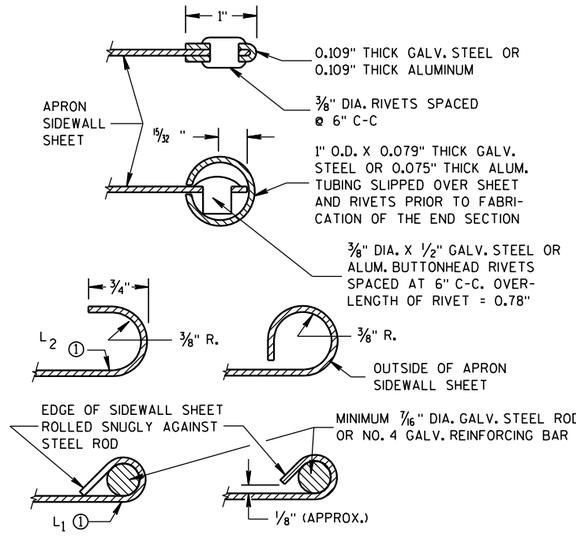

SECTION A-A

GENERAL NOTES

DETAILS OF CONSTRUCTION, MATERIALS AND WORKMANSHIP NOT SHOWN ON THIS DRAWING SHALL CONFORM TO THE PERTINENT REQUIREMENTS OF THE STANDARD SPECIFICATIONS AND THE APPLICABLE SPECIAL PROVISIONS.

CONCRETE CULVERT ENDWALLS MAY NOT BE USED WITH GALVANIZED STEEL OR ALUMINUM CULVERT PIPE OR VISE VERSA. GALVANIZED STEEL OR ALUMINUM ENDWALLS SHALL NORMALLY BE INSTALLED ON CULVERT PIPE OF THE SAME METAL.

ALL THREE PIECE STEEL APRON ENDWALLS FOR 60" DIAMETER PIPE AND LARGER SHALL HAVE 0.109" SIDES AND 0.138" CENTER PANELS. ALL THREE PIECE ALUMINUM APRON ENDWALLS FOR 60" DIAMETER PIPE AND LARGER SHALL HAVE 0.105" SIDES AND 0.134" CENTER PANELS. THE WIDTH OF CENTER PANELS SHALL BE GREATER THAN 20 PERCENT OF THE PIPE PERIMETER.

LAP SEAMS SHALL BE TIGHTLY JOINED BY GALVANIZED RIVETS OR BOLTS FOR STEEL UNITS AND ALUMINUM RIVETS AND BOLTS FOR ALUMINUM UNITS. FOR THE 60" THROUGH 96" DIAMETER APRON ENDWALL SIZES, THE REINFORCED EDGES AND CENTER PANEL SEAMS SHALL BE FURTHER REINFORCED WITH GALVANIZED STEEL OR ALUMINUM STIFFENER ANGLES. THE ANGLES SHALL BE ATTACHED BY GALVANIZED NUTS AND BOLTS FOR STEEL UNITS AND ALUMINUM NUTS AND BOLTS FOR ALUMINUM UNITS.

WHERE TWO OR MORE PIPES WITH APRON ENDWALLS ARE LAID ADJACENT TO EACH OTHER, THEY SHALL BE SEPARATED BY A DISTANCE SUFFICIENT TO PROVIDE A MINIMUM CLEARANCE OF 6 INCHES BETWEEN APRON ENDWALLS.

① FOR PIPE SIZES UP TO 60" DIAMETER, A 180° ROLLED EDGE MAY BE USED INSTEAD OF STEEL ROD REINFORCEMENT. SEE SECTION A-A.

APRON ENDWALLS FOR CULVERT PIPE

STATE OF WISCONSIN
DEPARTMENT OF TRANSPORTATION

APPROVED
11/30/94 — DATE
/S/ Rory L. Rhinesmith — CHIEF ROADWAY DEVELOPMENT ENGINEER
FHWA

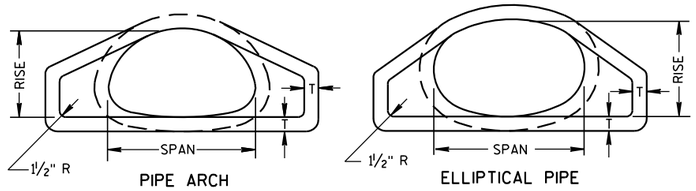

END VIEW

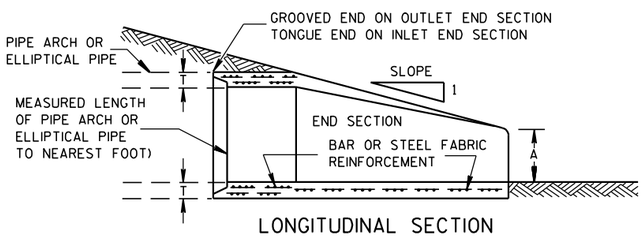

LONGITUDINAL SECTION

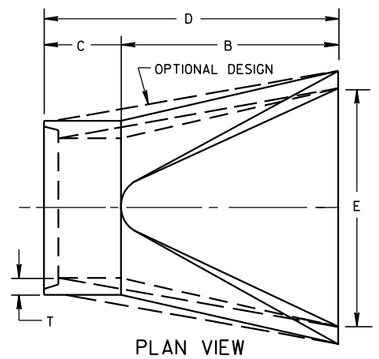

PLAN VIEW

CONCRETE ENDWALLS

2- ⅔" X ½" CORRUGATIONS														
EQUIV. DIA. (Inches)	(Inches)		MIN. THICK. (Inches)		DIMENSIONS (Inches)							APPROX. SLOPE	BODY
	SPAN	RISE	STEEL	ALUM.	A (±1")	B (MAX.)	H (±1")	L (±1½")	L1 ①	L2 ①	W (±2")		
15	17	13	.064	.060	7	9	6	19	14	16	30	2½ to 1	1 Pc.
18	21	15	.064	.060	7	10	6	23	14	19⅜	36	2½ to 1	1 Pc.
21	24	18	.064	.060	8	12	6	28	18	21¾	42	2½ to 1	1 Pc.
24	28	20	.064	.060	9	14	6	32	18	27½	48	2½ to 1	1 Pc.
30	35	24	.079	.075	10	16	6	39	18	37⅝	60	2½ to 1	1 Pc.
36	42	29	.079	.075	12	18	8	46	24	45⅜	75	2½ to 1	1 Pc.
42	49	33	.109	.105	13	21	9	53	24	54¾	85	2½ to 1	2 Pc.
48	57	38	.109	.105	18	26	12	63	24	68	90	2½ to 1	3 Pc.
54	64	43	.109	.105	18	30	12	70	24	72¾	102	2¼ to 1	3 Pc.
60	71	47	.109*	.105*	18	33	12	77	30	82¼	114	2¼ to 1	3 Pc.
66	77	52	.109*	.105*	18	36	12	77	—	—	126	2 to 1	3 Pc.
72	83	57	.109*	.105*	18	39	12	77	—	—	138	2 to 1	3 Pc.

3" X 1" CORRUGATIONS														
EQUIV. DIA. (Inches)	(Inches)		MIN. THICK. (Inches)		DIMENSIONS (Inches)							APPROX. SLOPE	BODY
	SPAN	RISE	STEEL	ALUM.	A (±1")	B (MAX.)	H (±1")	L (±1½")	L1 ①	L2 ①	W (±2")		
48	53	41	.109	.105	18	26	12	63	24	72¾	90	2½ to 1	2 Pc.
54	60	46	.109	.105	18	30	12	70	30	82¼	102	2 to 1	2 Pc.
60	66	51	.109*	.105*	18	33	12	77	—	—	114	1½ to 1	3 Pc.
66	73	55	.109*	.105*	18	36	12	77	—	—	126	1½ to 1	3 Pc.
72	81	59	.109*	.105*	18	39	12	77	—	—	138	2 to 1	3 Pc.
78	87	63	.109*	.105*	22	38	12	77	—	—	148	1½ to 1	3 Pc.
84	95	67	.109*	.105*	22	34	12	77	—	—	162	1½ to 1	3 Pc.
90	103	71	.109*	.105*	22	38	12	77	—	—	174	1½ to 1	3 Pc.
96	112	75	.109*	.105*	24	40	12	77	—	—	174	1½ to 1	3 Pc.

NOTE: ALL SPLICES TO BE LAP RIVETED OR BOLTED.

* EXCEPT CENTER PANEL SEE GENERAL NOTES

REINFORCED CONCRETE PIPE ARCH									
EQUIV. DIA. (Inches)	DIMENSIONS (Inches)								APPROX. SLOPE
	** SPAN	** RISE	T	A	B	C	D	E	
24	29	18	3	8½	39	33	72	48	3 to 1
30	36	22	3½	9½	50	46	96	60	3 to 1
36	44	27	4	11⅛	60	36	96	72	3 to 1
42	51	31	4½	15 13/16	60	36	96	78	3 to 1
48	58	36	5	21	60	36	96	84	3 to 1
54	65	40	5½	25½	60	36	96	90	3 to 1
60	73	45	6	31	60	36	96	96	3 to 1
72	88	54	7	31	60	39	99	120	2 to 1
84	102	62	8	28½	83	19	102	144	2 to 1

REINFORCED CONCRETE ELLIPTICAL PIPE									
EQUIV. DIA. (Inches)	DIMENSIONS (Inches)								APPROX. SLOPE
	** SPAN	** RISE	T	A	B	C	D	E	
24	30	19	3¼	8½	39	33	72	48	3 to 1
30	38	24	3¾	9½	54	18	72	60	3 to 1
36	45	29	4½	11⅛	60	24	84	72	2½ to 1
42	53	34	5	15¾	60	36	96	78	2½ to 1
48	60	38	5½	21	60	36	96	84	2½ to 1
54	68	43	6	25½	60	36	96	90	2½ to 1
60	76	48	6½	30	60	36	96	96	2½ to 1

**NOMINAL SIZE

GENERAL NOTES

DETAILS OF CONSTRUCTION, MATERIALS AND WORKMANSHIP NOT SHOWN ON THIS DRAWING SHALL CONFORM TO THE PERTINENT REQUIREMENTS OF THE STANDARD SPECIFICATIONS AND THE APPLICABLE SPECIAL PROVISIONS.

CONCRETE APRON ENDWALLS MAY NOT BE USED WITH GALVANIZED STEEL OR ALUMINUM CULVERT PIPE OR VISE VERSA. GALVANIZED STEEL OR ALUMINUM APRON ENDWALLS SHALL NORMALLY BE INSTALLED ON CULVERT PIPE OF THE SAME METAL.

ALL THREE PIECE STEEL APRON ENDWALLS FOR 66" X 51" PIPE ARCH AND LARGER SHALL HAVE 0.109" SIDES AND 0.138" CENTER PANELS. ALL THREE PIECE ALUMINUM APRON ENDWALLS FOR 66" X 51" PIPE ARCH AND LARGER SHALL HAVE 0.105" SIDES AND 0.134" CENTER PANELS. THE WIDTH OF CENTER PANELS SHALL BE GREATER THAN 20 PERCENT OF THE PIPE ARCH PERIMETER.

LAP SEAMS SHALL BE TIGHTLY JOINED BY GALVANIZED RIVETS OR BOLTS FOR STEEL UNITS AND ALUMINUM RIVETS AND BOLTS FOR ALUMINUM UNITS. FOR THE 77" X 52" THROUGH 112" X 75" APRON ENDWALL SIZES, THE REINFORCED EDGES AND CENTER PANEL SEAMS SHALL BE FURTHER REINFORCED WITH GALVANIZED STEEL OR ALUMINUM STIFFENER ANGLES. THE ANGLES SHALL BE ATTACHED BY GALVANIZED NUTS AND BOLTS FOR STEEL UNITS AND ALUMINUM NUTS AND BOLTS FOR ALUMINUM UNITS.

WHERE TWO OR MORE PIPES WITH APRON ENDWALLS ARE LAID ADJACENT TO EACH OTHER, THEY SHALL BE SEPARATED BY A DISTANCE SUFFICIENT TO PROVIDE A MINIMUM CLEARANCE OF 6 INCHES BETWEEN APRON ENDWALLS.

① FOR PIPE ARCH SIZES UP TO 73" X 55" A 180° ROLLED EDGE MAY BE USED INSTEAD OF STEEL ROD REINFORCEMENT. SEE SECTION A-A.

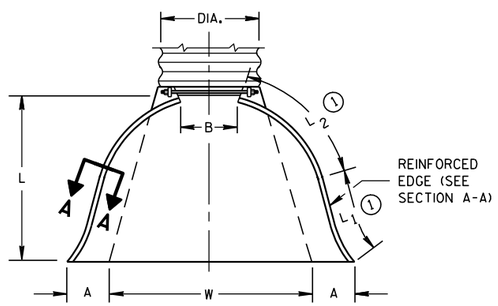

PLAN VIEW

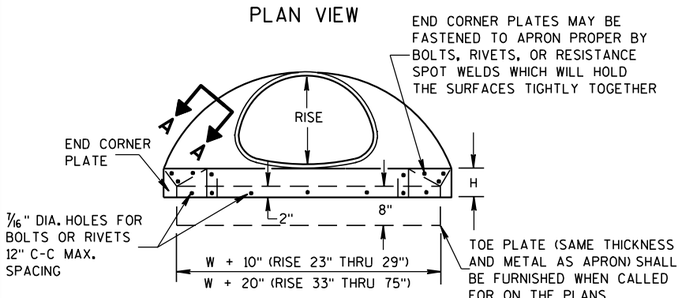

END VIEW

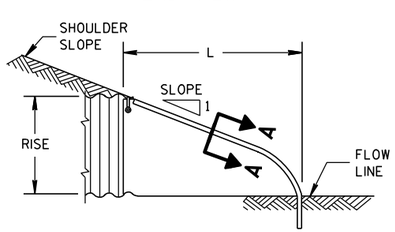

SIDE ELEVATION

METAL ENDWALLS

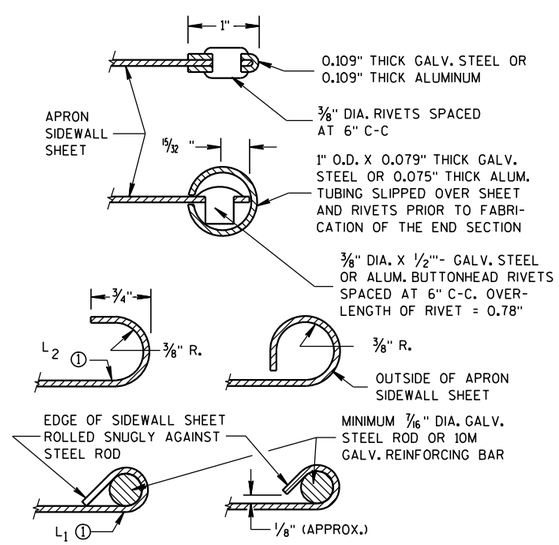

SECTION A-A

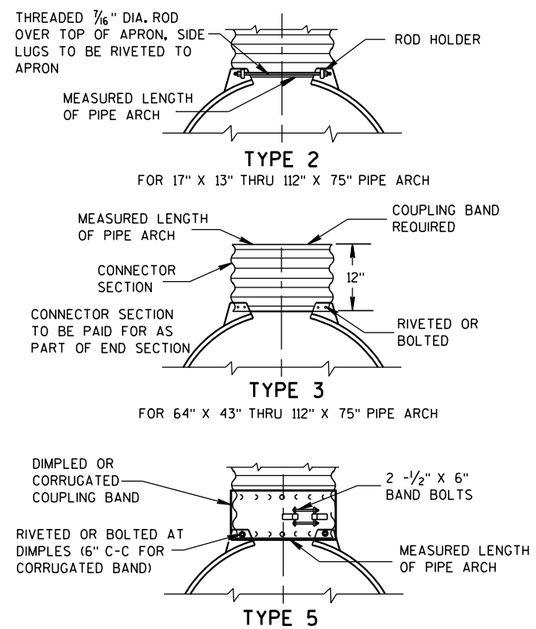

NOTE: DIMPLED BAND FITS OVER OUTSIDE OF ENDWALL, AND CORRUGATED BAND FITS INSIDE ENDWALL.

CONNECTION DETAILS

APRON ENDWALLS FOR PIPE ARCH AND ELLIPTICAL PIPE

STATE OF WISCONSIN
DEPARTMENT OF TRANSPORTATION

APPROVED

11/30/94 — DATE

/S/ Rory L. Rhinesmith — CHIEF ROADWAY DEVELOPMENT ENGINEER

FHWA

6

S.D.D. 8 F 2-1

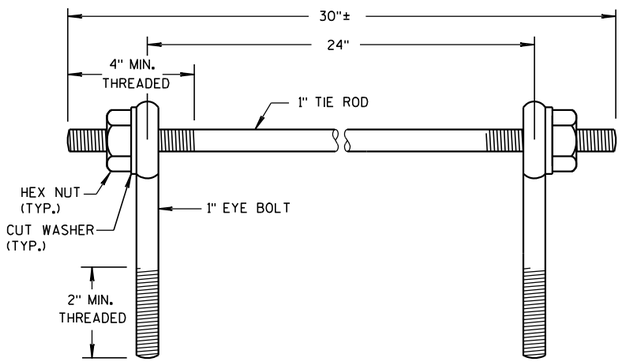

EYE BOLTS AND TIE ROD

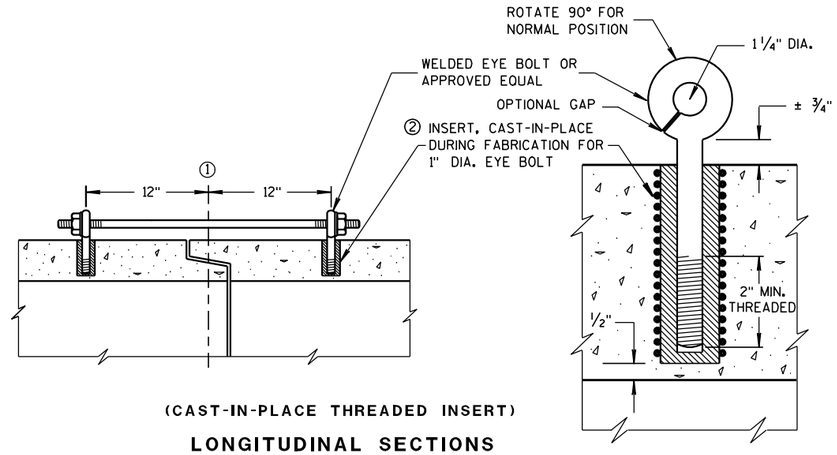

(CAST-IN-PLACE THREADED INSERT)

LONGITUDINAL SECTIONS

EYE BOLT AND TIE ROD ASSEMBLY (ALTERNATE NO. 1)

GENERAL NOTES

DETAILS OF CONSTRUCTION, MATERIALS, AND WORKMANSHIP NOT SHOWN ON THIS DRAWING SHALL CONFORM TO THE PERTINENT REQUIREMENTS OF THE STANDARD SPECIFICATIONS AND APPLICABLE SPECIAL PROVISIONS.

CONCRETE CULVERT AND STORM SEWER PIPE SHALL BE TIED TOGETHER IN THE MANNER ILLUSTRATED BY THIS DETAIL AT LOCATIONS DESIGNATED IN THE STANDARD SPECIFICATIONS AND THE PLAN. THE CONTRACTOR MAY USE EITHER ALTERNATE 1, 2 OR 3 FOR DRAINAGE STRUCTURES. ONLY ALTERNATE 1 AND 3 MAY BE USED FOR CATTLE PASSES, UNLESS OTHERWISE STATED IN THE CONTRACT. THE MATERIALS, FABRICATION AND WORK NECESSARY TO TIE THE PIPE BY THIS DETAIL WILL BE CONSIDERED INCIDENTAL TO THE PIPE AND APRON ENDWALLS IF REQUIRED.

DETAILED DRAWINGS FOR PROPOSED ALTERNATE DESIGNS FOR JOINT TIES SHALL BE SUBMITTED TO THE ENGINEER FOR APPROVAL.

JOINT TIES TO BE HOT-DIP GALVANIZED PER ASTM A 153.

① ℄ OF TONGUE AND GROOVE OR BELL AND SPIGOT JOINTS.

② THE INSIDE OF THE THREADED INSERTS SHALL BE CLEAN TO ALLOW THE INSERTION OF THREADED EYE BOLTS.

③ HOLES SHALL BE CAST-IN-PLACE OR DRILLED 12 INCHES FROM ℄ OF TONGUE AND GROOVE.

④ BOLT PROJECTION INSIDE OF PIPE SHALL NOT EXCEED 2 INCHES.

⑤ OPENING TO BE ROD DIAMETER PLUS 1 INCH.

⑥ LENGTH ADEQUATE TO EXTEND TO WITHIN 1/2 INCH OF THE INNER SURFACE OF THE PIPE.

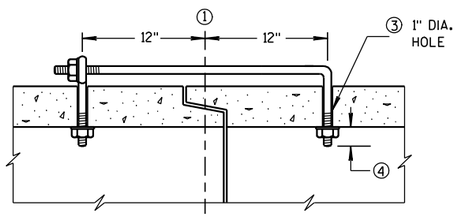

(TONGUE & GROOVE PIPE)

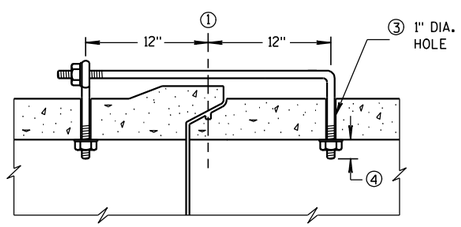

(MODIFIED BELL PIPE)

LONGITUDINAL SECTION

EYE BOLT DIMENSION TABLE

PIPE SIZE	L = LENGTH	
	TONGUE & GROOVE PIPE	MODIFIED BELL PIPE
18" TO 24"	4 1/2"	6 1/4"
30"	5"	7"
36"	5 1/2"	7"
42"	6"	
48"	6 1/2"	
60"	7 1/2"	
66"	8"	

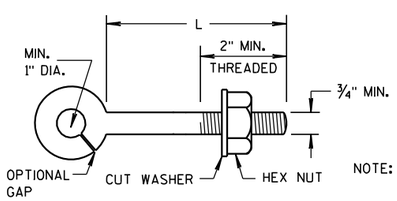

EYE BOLT

NOTE:

NOTE: TWO EYE BOLTS MAY BE USED WITH A 30" LONG THREADED ROD IN LIEU OF THE 90° BENT TIE ROD.

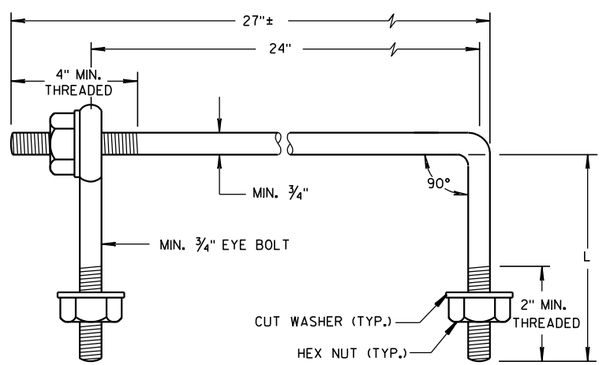

EYE BOLT AND TIE ROD

(JOINT TIES FOR 18" TO 66" DIA. CONCRETE PIPE)

EYE BOLT AND TIE ROD ASSEMBLY (ALTERNATE NO. 2)

ADJUSTABLE TIE ROD TABLE

PIPE DIAMETER	TIE ROD DIAMETER	D	L_1	N
12-60	5/8	5/8	5	1/2
66-84	3/4	3/4	5	1/2
90-108	1	1	7	1 7/16

DIMENSIONS SHOWN ARE IN INCHES

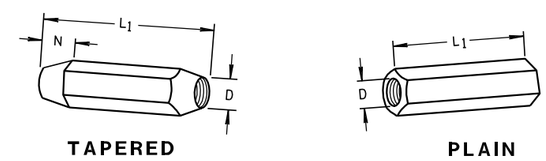

TAPERED PLAIN

RIGHT AND LEFT THREADS

SLEEVE NUTS

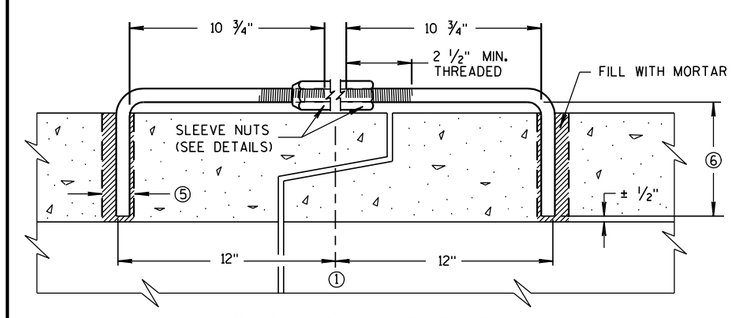

LONGITUDINAL SECTION

(JOINT TIES FOR 12" TO 108" DIA. CONCRETE PIPE)

ADJUSTABLE TIE ROD (ALTERNATE NO. 3)

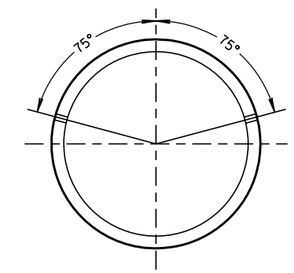

PLACEMENT OF (2) CAST-IN-PLACE INSERTS OR HOLES DURING FABRICATION FOR PIPE SECTIONS REQUIRING TIE RODS

TRANSVERSE SECTION

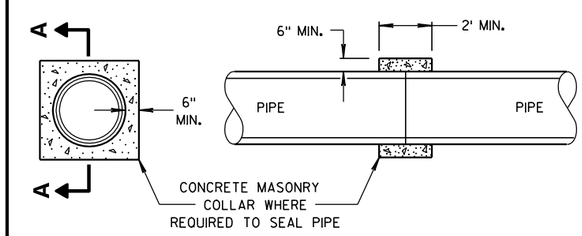

SECTION A-A

CONCRETE COLLAR DETAIL

JOINT TIES FOR CONCRETE PIPE AND CONCRETE COLLAR DETAIL

STATE OF WISCONSIN
DEPARTMENT OF TRANSPORTATION

APPROVED
6/5/2012 /S/ Jerry H. Zogg
DATE ROADWAY STANDARDS DEVELOPMENT ENGINEER
FHWA

6

6

S.D.D. 8 F 4-7

S.D.D. 8 F 4-7

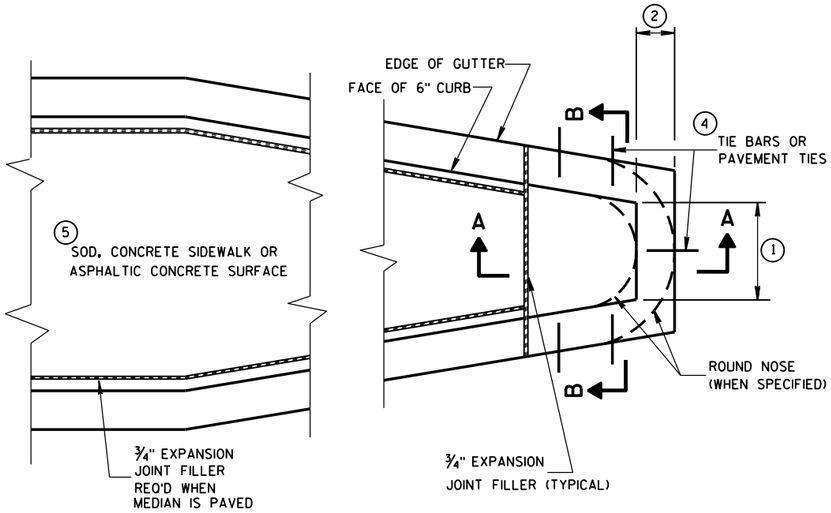

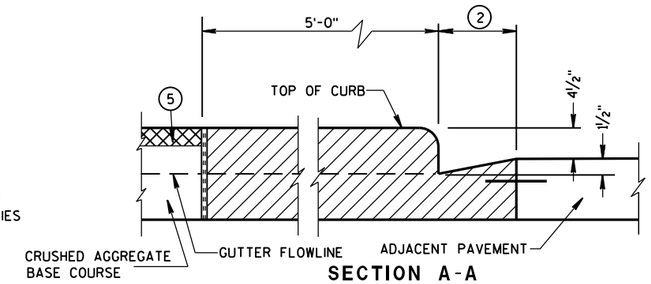

SECTION A-A

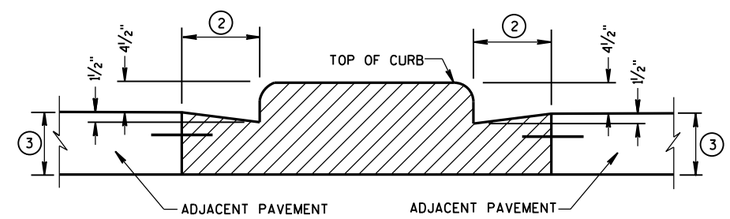

SECTION B-B

CONCRETE MEDIAN BLUNT NOSE DETAIL

GENERAL NOTES

DETAILS OF CONSTRUCTION, MATERIALS AND WORKMANSHIP NOT SHOWN ON THIS DRAWING SHALL CONFORM TO THE PERTINENT REQUIREMENTS OF THE STANDARD SPECIFICATIONS AND THE APPLICABLE SPECIAL PROVISIONS.

1. SEE PLAN FOR MEDIAN NOSE WIDTH AND RADIUS (FOR ROUND NOSE ALTERNATE).
2. WIDTH OF GUTTER TO MATCH EXISTING ADJACENT GUTTER OR AS SPECIFIED ELSEWHERE IN THE PLAN.
3. DEPTH EQUAL TO ADJACENT PAVEMENT. ADJACENT PAVEMENT STRUCTURE DETAILS ARE SHOWN ON THE PLAN. TYPICAL OPTIONS ARE:
   (1) NEW OR EXISTING CONCRETE PAVEMENT.
   (2) ASPHALTIC CONCRETE PAVEMENT OVER NEW OR EXISTING CONCRETE BASE COURSE.
   (3) ASPHALTIC CONCRETE PAVEMENT OVER CRUSHED AGGREGATE BASE COURSE.
4. TIE BARS OR PAVEMENT TIES REQUIRED IN NEW CONCRETE PAVEMENT OR CONCRETE BASE COURSE. TIE BARS SHALL BE NO. 4 X 2'-0" SPACED AT 2'-0" C-C.

   PAVEMENT TIES REQUIRED IN EXISTING CONCRETE BASE COURSE. PAVEMENT TIES SHALL BE NO. 6 X 1'-0" SPACED AT 3'-0" C-C INSTALLED ON A HORIZONTAL SKEW OF 6:1. THE DIRECTION OF SKEW SHALL ALTERNATE AFTER EVERY ONE OR TWO BARS.
5. SURFACE TYPE AND DETAILS ARE SHOWN ELSEWHERE IN THE PLAN.

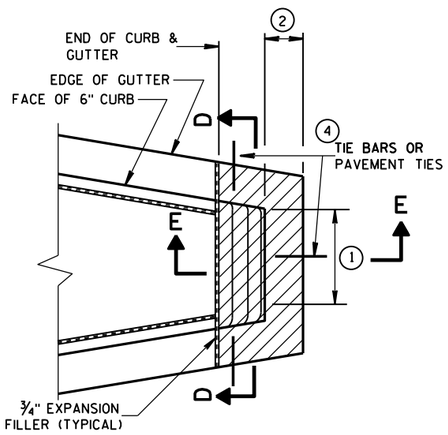

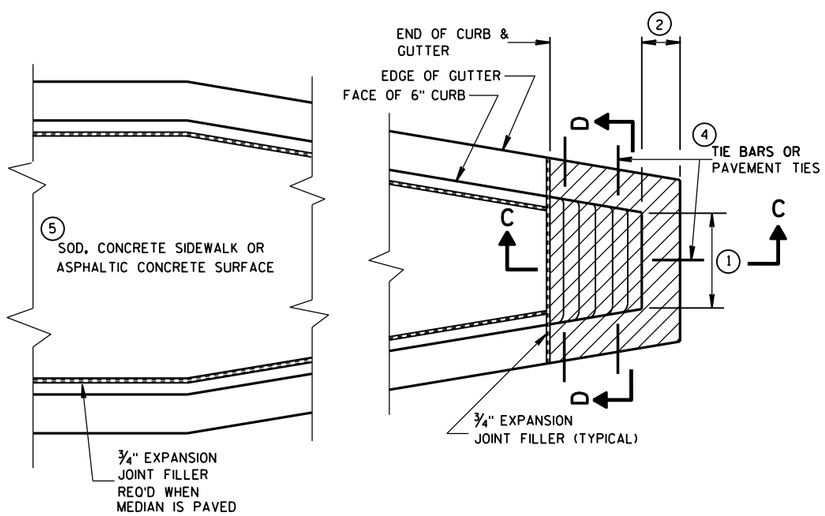

CONCRETE MEDIAN SLOPED NOSE TYPE 1

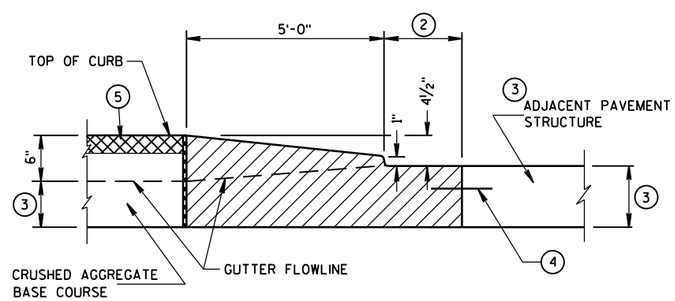

SECTION C-C

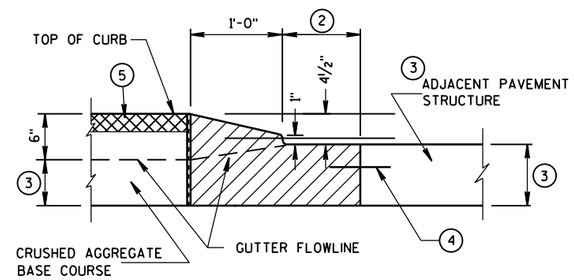

SECTION E-E

CONCRETE MEDIAN SLOPED NOSE TYPE 2

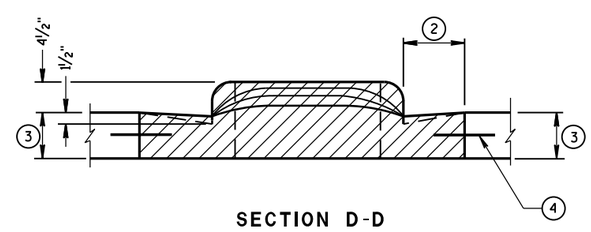

SECTION D-D

CONCRETE MEDIAN NOSE

STATE OF WISCONSIN
DEPARTMENT OF TRANSPORTATION

APPROVED
6/8/2006 — DATE
/S/ Jerry H. Zogg — ROADWAY STANDARDS DEVELOPMENT ENGINEER
FHWA

6

S.D.D. 11 B 2-2

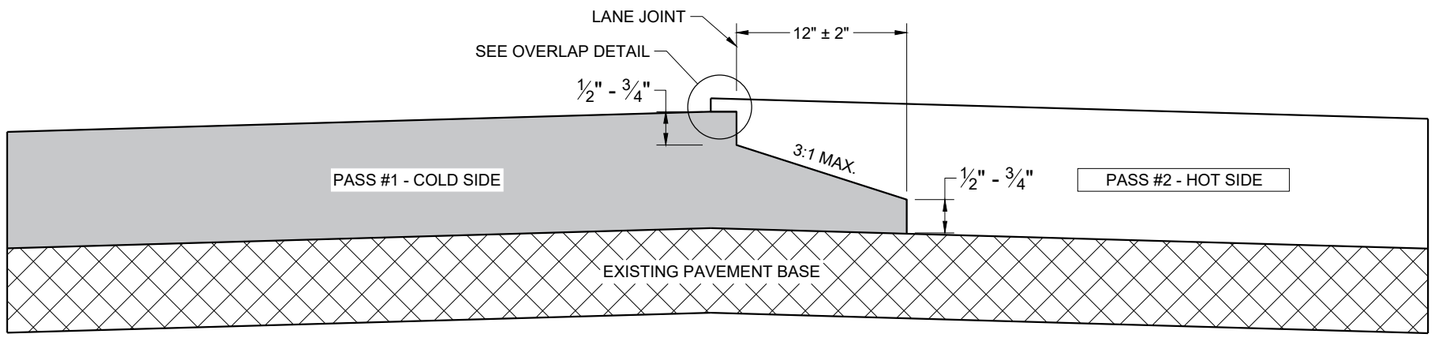

TYPICAL PAVEMENT CROSS SECTION
NOTCHED WEDGE JOINT

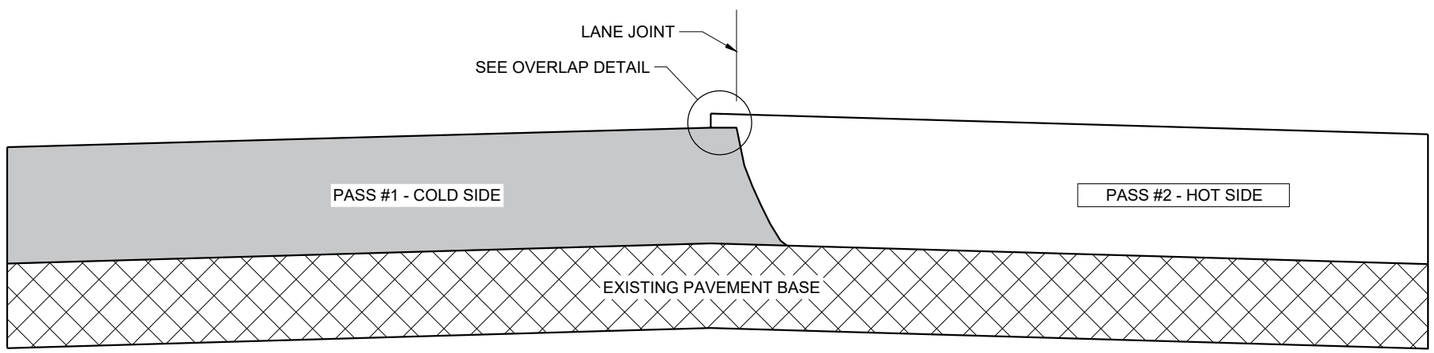

TYPICAL PAVEMENT CROSS SECTION
VERTICAL JOINT

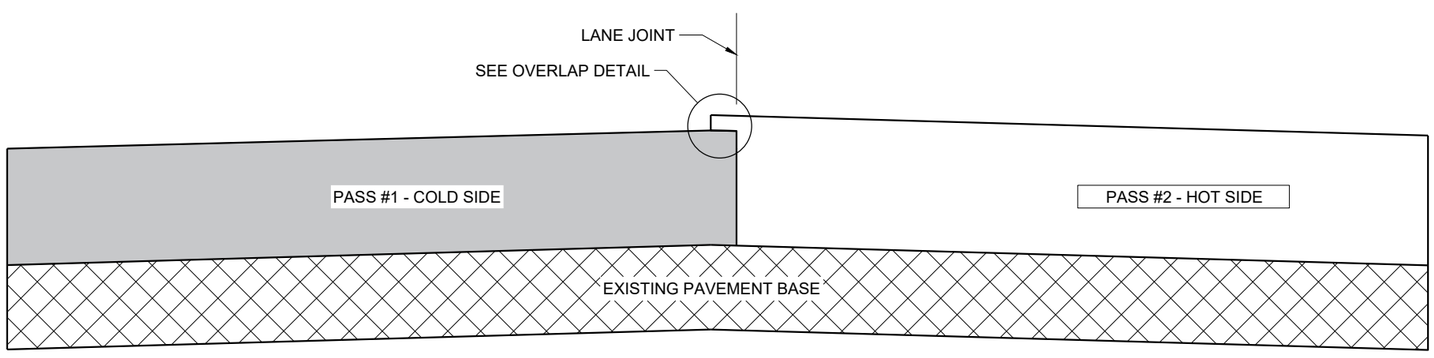

TYPICAL PAVEMENT CROSS SECTION
VERTICAL JOINT (MILLED)

GENERAL NOTES

IN ADDITION TO THE DETAILS PROVIDED IN THIS DRAWING, CONFORM TO STANDARD SPECIFICATION 450.3.2.8 FOR WHEN A NOTCHED WEDGE JOINT IS REQUIRED AND FOR GENERAL JOINT CONSTRUCTION REQUIREMENTS.

FOR ALL LONGITUDINAL JOINTS, ENSURE THE PAVER SCREED OVERLAPS THE PREVIOUSLY PLACED PAVEMENT BY 1" ± 0.5" AND THE HOT SIDE OF THE JOINT REMAINS HIGHER THAN THE COLD SIDE BY APPROXIMATELY 0.1" AFTER FINAL COMPACTION. (IT WILL BE FLUSH WHEN PAVING IN ECHELON.)

ONLY REMOVE THE LONGITUDINAL NOTCHED WEDGE JOINT FOR SMA PAVEMENT OR AS DIRECTED BY THE ENGINEER TO ADDRESS SPECIFIC LENGTHS OF JOINT DAMAGED BY TRAFFIC.

WHEN MILLING BACK OR REMOVING ANY LONGITUDINAL JOINT, LIMIT THE MATERIAL REMOVED TO 2" FROM THE TOP NOTCH OR FROM THE VERTICAL JOINT EDGE ON THE COLD SIDE OF THE JOINT.

USE LONGITUDINAL MILLED JOINT AS PLANS SHOW OR THE AS THE ENGINEER DIRECTS.

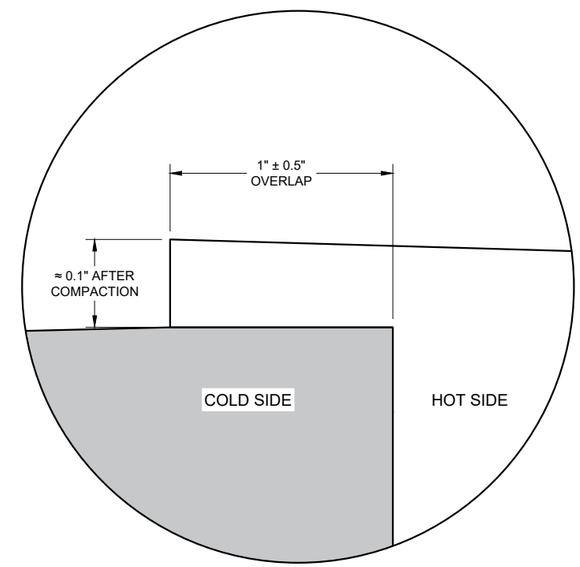

OVERLAP DETAIL (TYPICAL)

6

6

SDD 13C19 - 03

SDD 13C19 - 03

HMA LONGITUDINAL JOINTS

STATE OF WISCONSIN
DEPARTMENT OF TRANSPORTATION

APPROVED
November 2020 /S/ Steven Hefel
DATE HMA PAVEMENT ENGIN
FHWA

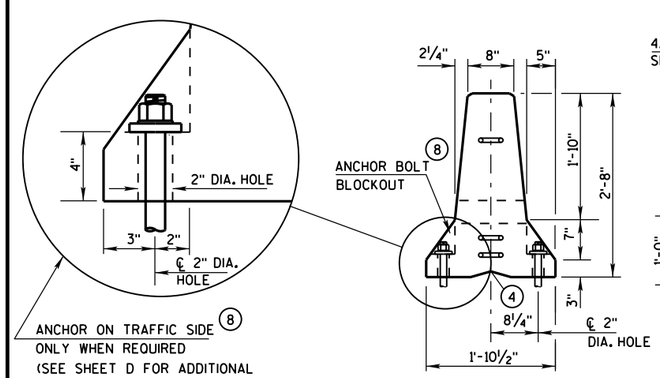

END VIEW

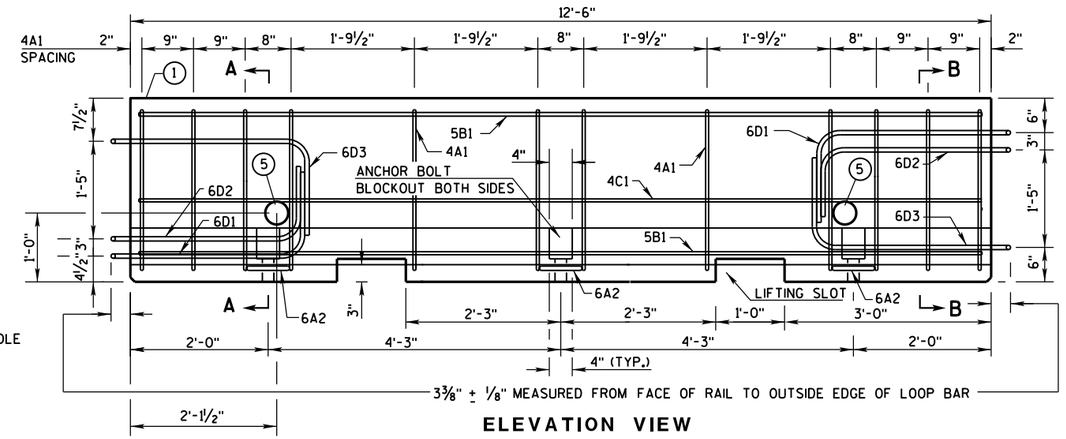

ELEVATION VIEW

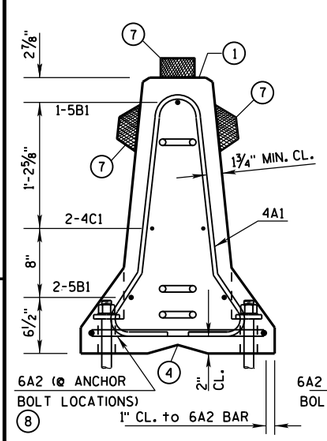

SECTION A-A
(STIRRUP PLACEMENT)

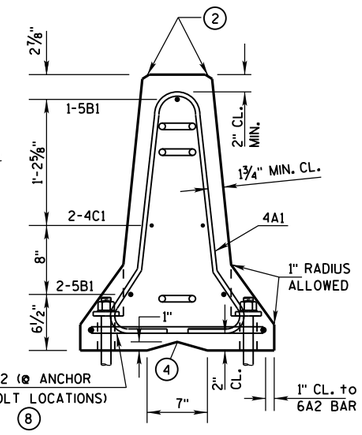

SECTION B-B
(STIRRUP PLACEMENT)

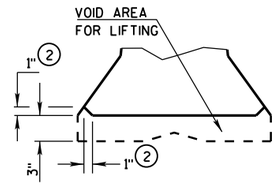

DETAIL "B"
LIFTING SLOT DETAIL

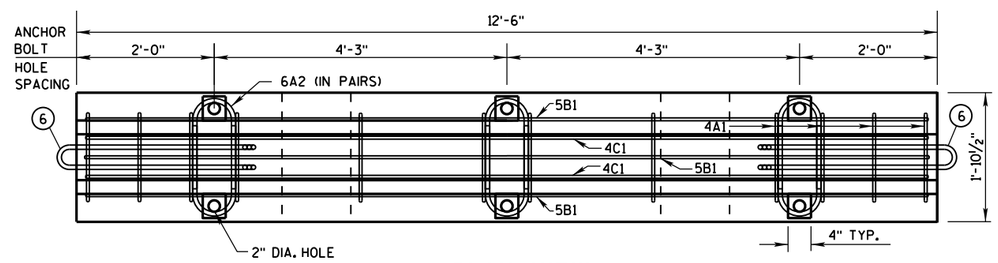

PLAN VIEW

DETAILS OF BARRIER SECTION

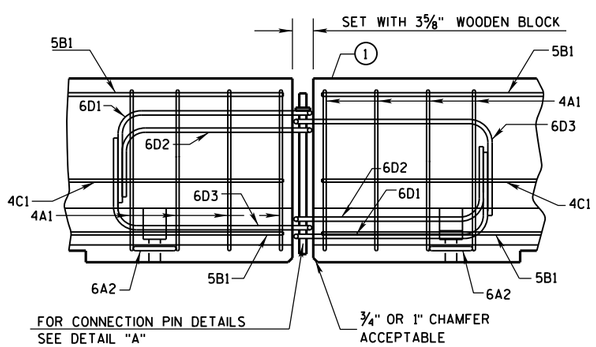

DETAILS OF BARRIER CONNECTION

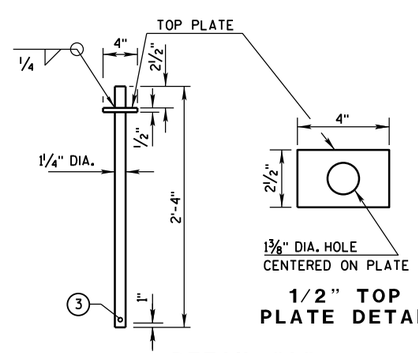

1/2" TOP PLATE DETAIL

DETAIL "A"
CONNECTION PIN
(A36 STEEL (10.9 LB EACH))

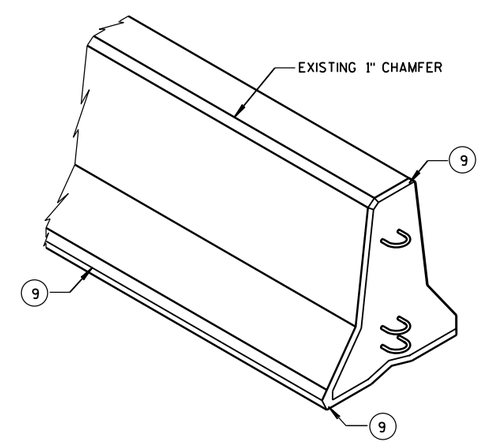

GENERAL NOTES

THESE GENERAL NOTES APPLY TO SHEETS 14B7-15(a) THRU 14B7-15(i).

DO NOT INTERMIX CONCRETE BARRIER TEMPORARY PRCAST, 12'-6" (CBTP12.5) WITH OTHER TEMPORARY CONCRETE BARRIERS.

USE ASTM A-615, GRADE 60, DEFORMED STEEL BARS FOR BARS 4A1, 6A2, 5B1 AND 4C1 IN THE BARRIER SECTION AND FOR 4V1, 4V2, 4V3, 4V4, 4V5, 4V6, 4F1, 4F2 AND 5F3 IN THE BARRIER TAPER SECTION.

LOOP BARS 6D1, 6D2 AND 6D3 SHALL BE ¾" SMOOTH STEEL BARS WITH A MINIMUM YIELD STRENGTH OF 60 KSI, A TENSILE STRENGTH OF NOT LESS THAN 1.25 TIMES THE YIELD STRENGTH BUT A MINIMUM OF 80 KSI, A MINIMUM 14% ELONGATION IN 8 INCHES AND PASSING A 180 DEGREE BEND TEST USING A 3-½" PIN BEND DIAMETER FOR BEND TESTS. THE LOOPS SHALL BE INSTALLED WITHIN ⅛" OF THE PLAN DIMENSION.

CONSTRUCT LIFTING SLOTS AS SPECIFIED ON THE PLANS TO FACILITATE THE DRAINAGE OF WATER AFTER INSTALLATION.

PLACE BARRIER ON A PAVED SURFACE. REMOVE ALL LOOSE DIRT AND SAND FROM THE ROADWAY SURFACE PRIOR TO PLACEMENT OF THE BARRIER.

INSTALL MECHANICAL OR ADHESIVE ANCHORS PER MANUFACTURER'S RECOMMENDATIONS. PROVIDE MANUFACTURER'S INFORMATION TO PROJECT ENGINEER.

1. MARK ONE END OF EACH BARRIER PERMANENTLY BY FORMING INTO THE BARRIER THE FOLLOWING INFORMATION:
   a. TYPE: WI CBTP
   b. MANUFACTURER
   c. DATE MANUFACTURED (MONTH AND YEAR)
2. 1" CHAMFER TO PREVENT SPALLING.
3. A ⅜" HOLE IN THE CONNECTION PIN, AT THE LOCATION SHOWN, IS ACCEPTABLE, BUT NOT REQUIRED..
4. "V" NOTCH IS OPTIONAL.
5. THE 4" DIAMETER, 11 GAUGE STEEL, ROUND MECHANICAL TUBING SLEEVE FOR LIFTING (OPTIONAL).
6. NEVER USE LOOP BARS (6D1, 6D2 OR 6D3) TO LIFT, MOVE OR REPOSITION THE BARRIER.
7. USE DELINEATORS CONFORMING TO SECTION 633 OF THE STANDARD SPECIFICATIONS. CONTRACTOR MAY USE ALTERNATE SHAPES AND HOUSING. INSTALL DELINEATORS ACCORDING TO MANUFACTURES INSTRUCTION. INSTALL YELLOW REFLECTORS WHEN BARRIER IS LOCATED TO THE LEFT OF TRAFFIC AND WHITE REFLECTORS WHEN BARRIER IS LOCATED TO THE RIGHT OF TRAFFIC. SPACE DELINEATORS A MAXIMUM OF 25 FEET APART. PROVIDE TOP MOUNTED DELINEATORS IN ADDITION TO THE SIDE MOUNTED DELINEATORS ON ALL BARRIER INSTALLATIONS LOCATED ON A CURVED ALIGNMENT LONGER THAN 200 FEET AND ON BARRIERS USED TO SEPARATE OPPOSING TRAFFIC.
8. SEE SHEET D FOR HOW TO ANCHOR BARRIER. SEE SHEET E FOR WHEN TO ANCHOR BARRIER.
9. 1" CHAMFER OPTIONAL.

f'c = 4,000 psi

CONCRETE BARRIER
TEMPORARY PRECAST, 12'-6"

STATE OF WISCONSIN
DEPARTMENT OF TRANSPOI

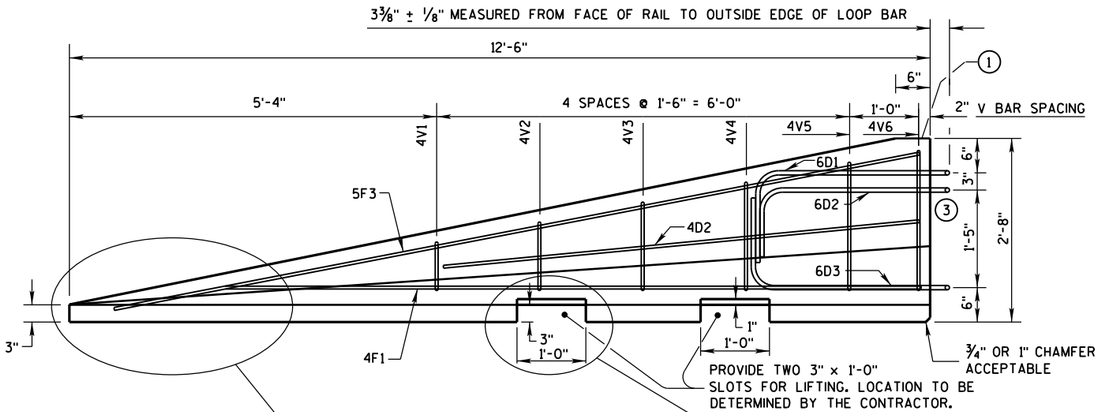

SIDE ELEVATION

(FOR CONNECTION TO LEFT END OF BARRIER)

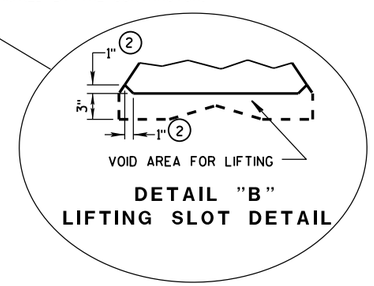

DETAIL "B"
LIFTING SLOT DETAIL

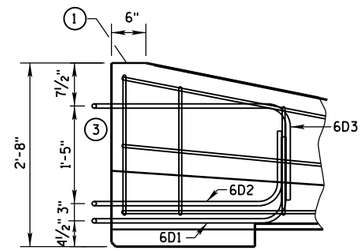

SIDE ELEVATION

LOOP BAR ASSEMBLY INVERTED
FOR OPPOSITE END.
(FOR CONNECTION TO RIGHT END OF BARRIER)

GENERAL NOTES

1. MARK ONE END OF EACH BARRIER PERMANENTLY BY FORMING INTO THE BARRIER THE FOLLOWING INFORMATION:
   a. TYPE WICBTP
   b. MANUFACTURER
   c. DATE MANUFACTURED (MONTH AND YEAR)
2. 1" CHAMFER TO PREVENT SPALLING.
3. NEVER USE LOOP BARS (6D1, 6D2 OR 6D3) TO LIFT, MOVE OR REPOSITION THE BARRIER.

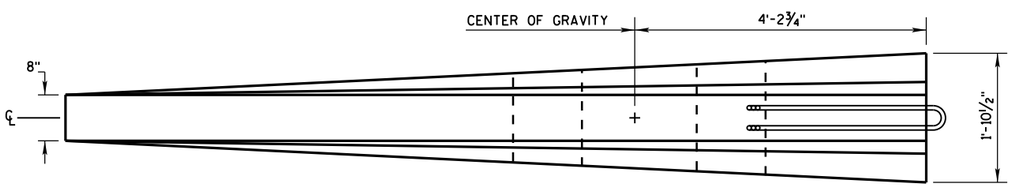

PLAN VIEW

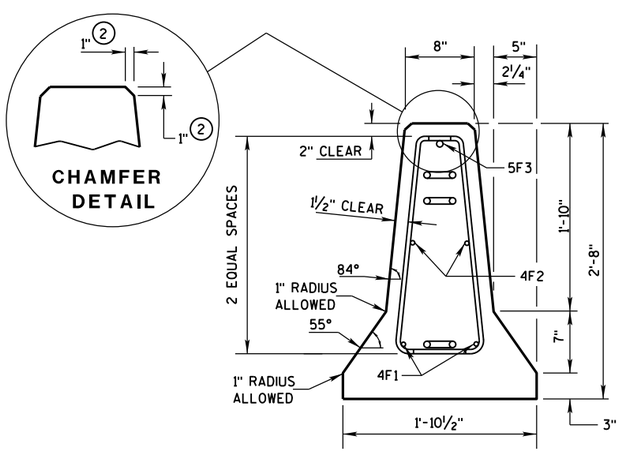

END SECTION

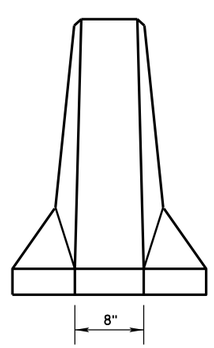

FRONT ELEVATION

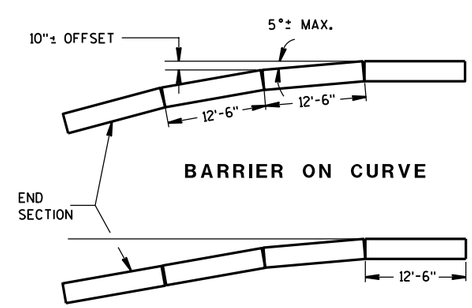

BARRIER ON CURVE

FLARE AT BARRIER END

POSTED SPEED, (MPH)	FLARE RATE
40 OR LESS	6:1
45 OR GREATER	8:1

DETAILS OF BARRIER TAPER SECTION

CONCRETE BARRIER
TEMPORARY PRECAST, 12'-6"

STATE OF WISCONSIN
DEPARTMENT OF TRANSPORTATION

6

S.D.D. 14 B 7-15b

GENERAL NOTES

(1) NEVER USE LOOP BARS (6D1, 6D2 OR 6D3) TO LIFT, MOVE OR REPOSITION THE BARRIER.

BARRIER TAPER SECTION BILL OF MATERIALS

(PER 12'-6" BARRIER TAPER SECTION)

BAR	BAR SIZE	NO. OF BARS	LENGTH FT.
4V1	4	2	1'-11"
4V2	4	2	2'-2"
4V3	4	2	2'-6"
4V4	4	2	2'-9"
4V5	4	2	3'-2"
4V6	4	2	3'-4"
4F1	4	2	12'-0"
4F2	4	2	7'-6"
5F3	5	1	11'-9"
LOOP ASSEMBLY			
6D1	6	1	8'-5"
6D2	6	1	7'-7"
6D3	6	1	8'-6"

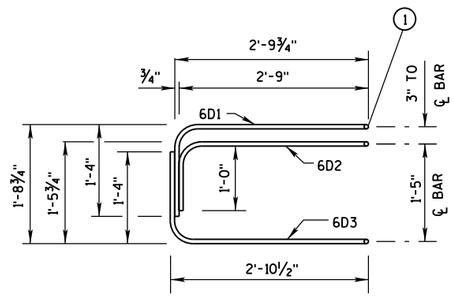

ELEVATION
LOOP BAR ASSEMBLY

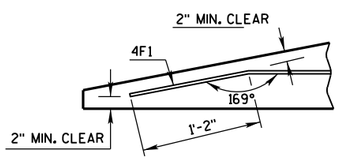

DETAIL "C"
BENT BAR DETAIL

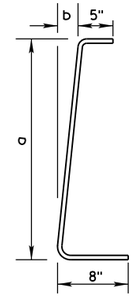

BAR	a	b
V1	10"	1"
V2	1'-1"	1¼"
V3	1'-5"	1⅝"
V4	1'-8"	1⅞"
V5	2'-0½"	2⅜"
V6	2'-3"	2¾"

4V BARS
2 AT EACH SIZE REQUIRED
FOR STIRRUP ASSEMBLY

TAPER BARRIER SECTION

BARRIER SECTION BILL OF MATERIALS

(PER 12'-6" BARRIER SECTION)

BAR	BAR SIZE	NO. OF BARS	LENGTH FT.
4A1	4	12	6'-0"
6A2	6	6	2'-11"
5B1	5	3	12'-2"
4C1	4	2	12'-2"
LOOP ASSEMBLY			
6D1	6	2	8'-5"
6D2	6	2	7'-7"
6D3	6	2	8'-6"

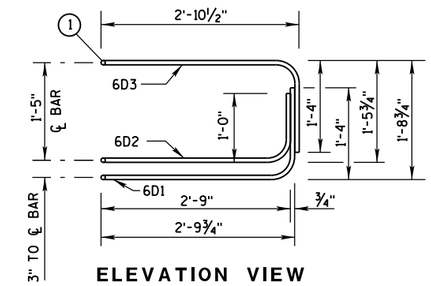

ELEVATION VIEW

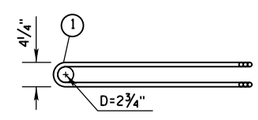

PLAN VIEW
LOOP BAR ASSEMBLY
(MARKED END SHOWN, INVERT FOR OTHER END)

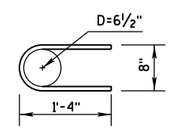

6A2

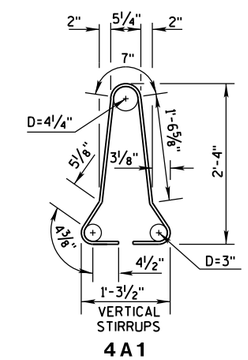

4A1

BARRIER SECTION

6

6

S.D.D. 14 B 7-15c

S.D.D. 14 B 7-15c

CONCRETE BARRIER
TEMPORARY PRECAST, 12'-6"

STATE OF WISCONSIN
DEPARTMENT OF TRANSPOR

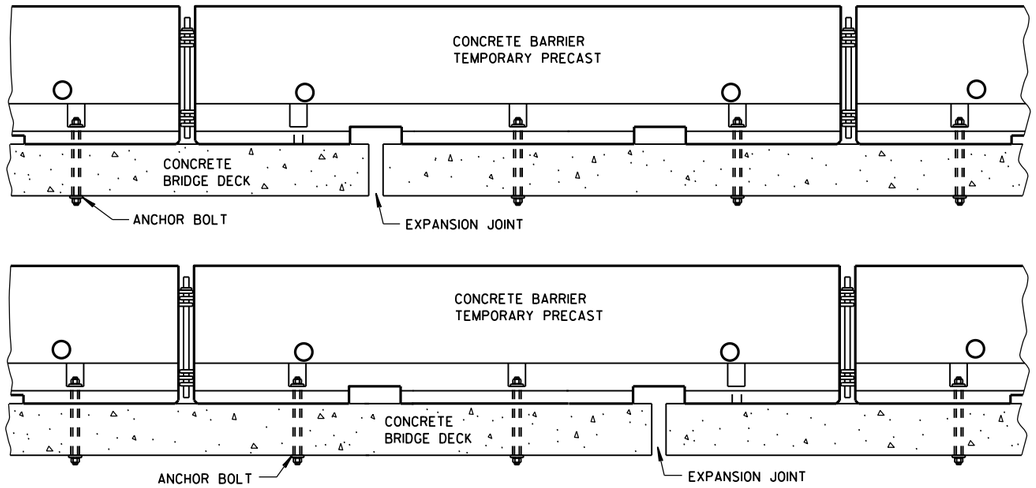

TREATMENT AT BRIDGE DECK EXPANSION JOINTS

(NO SINGLE CONCRETE BARRIER SECTION SHALL BE ANCHORED TO BOTH THE BRIDGE DECK AND THE APPROACH SLAB. ALL ANCHOR BOLT LOCATIONS SHALL BE ANCHORED TO THE DECK IN ACCORDANCE WITH THE DETAIL. NO MORE THAN ONE ANCHOR BOLT SHALL BE ELIMINATED FROM A BARRIER SECTION WHEN SPANNING AN EXPANSION JOINT.)

GENERAL NOTES

SEE SHEET E FOR WHEN TO ANCHOR. OTHER PARTS OF THE PLAN MAY SHOW ADDITIONAL LOCATIONS REQUIRING ANCHORING.

REMOVE ALL ANCHORS WHEN NO LONGER NEEDED. FILL CONCRETE PAVEMENTS, DECKS AND APPROACH SLABS WITH NON-SHRINK COMMERICAL GROUT FROM THE APPROVED PRODUCT LIST. FILL ASPHALT PAVEMENTS WITH ASTM D6690 TYPE II RUBBERIZED CRACK FILLER.

1. 1⅛" DIAMENTER A307 THREADED ROD, ½" X 3" X 3" SQUARE PLATE WASHER WITH ASTM A36 STEEL. ASTM A563A HEAVY HEX NUT.
2. ADHESIVE ANCHORS WITH A MINIMUM BOND STRENGTH OF 1,800 PSI AND 5¼" EMBEDMENT. SEE 603.2 AND 603.3.1.2 OF THE WISCONSIN STANDARD SPECIFICATIONS FOR MORE INFORMATION ON ADHESIVE ANCHORS.
3. ASPHALT SURFACE SHOWN. CONTRACTOR MAY DRILL THROUGH CONCRETE PAVEMENT AND THAN DRIVE ASPHALT ANCHOR PIN.

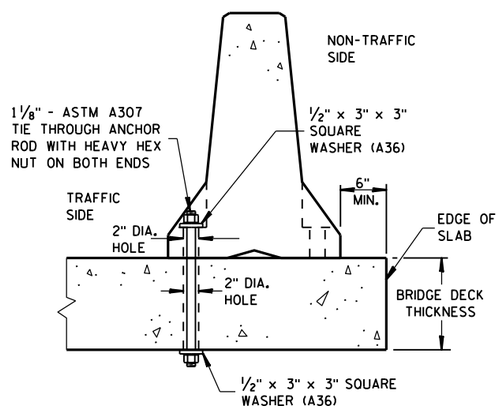

THROUGH BOLTED ANCHOR INSTALLATION ON BRIDGE DECK

(DO NOTUSE ON CONCRETE BRIDGE DECK WITH ASPHALT OVERLAY)

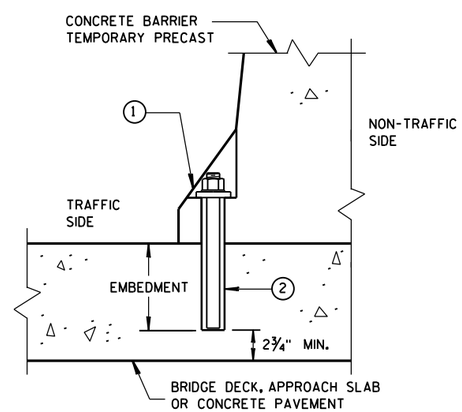

REMOVABLE ADHESIVE ANCHOR INSTALLATION ON CONCRETE BRIDGE DECK, CONCRETE APPROACH SLAB, OR CONCRETE PAVEMENT

(DO NOT USE ON CONCRETE WITH AN ASPHALTIC OVERLAY)

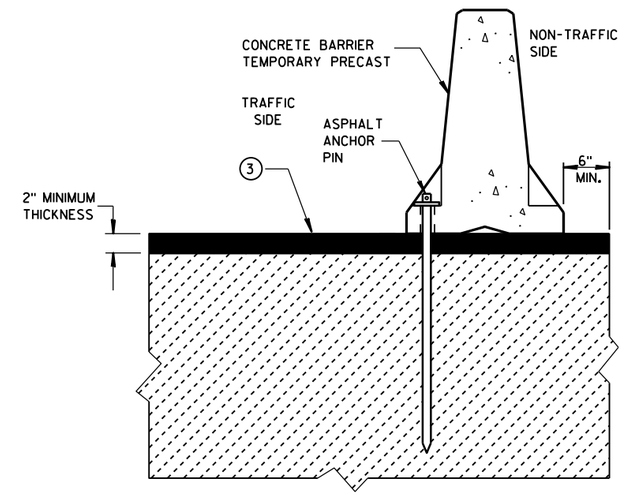

STAKE DOWN INSTALLATION FOR ASPHALTIC SURFACE

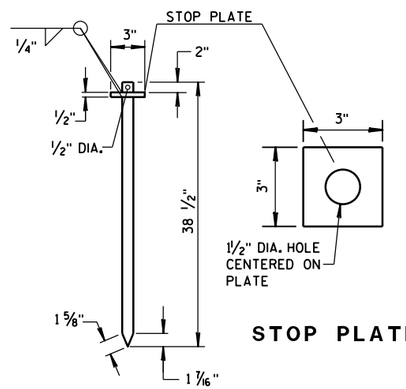

STOP PLATE

ASPHALT ANCHOR PIN

(ASTM A36 STEEL)

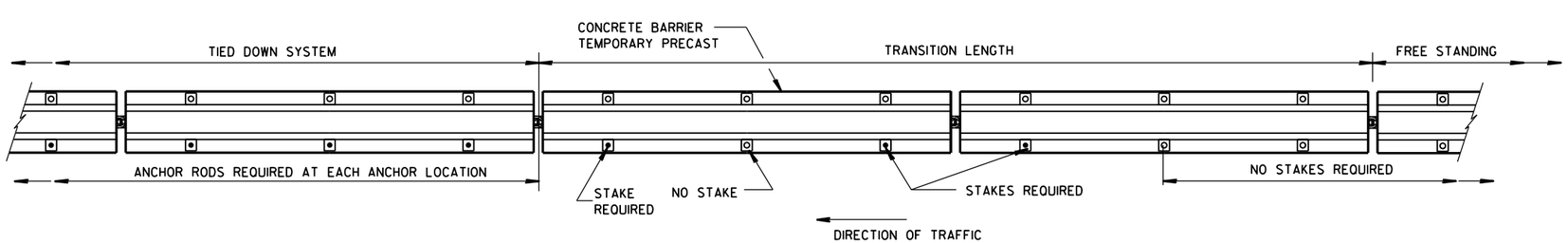

PLAN VIEW

FREE STANDING TRANSITION TO TIED-DOWN SYSTEM

(PLACE TRANSITION IN A TANGENT SECTION OF BARRIER PARALLEL TO THE ROADWAY. IF TRANSITION OCCURS ON STRUCTURAL SLAB, ANCHOR AS SHOWN.)

CONCRETE BARRIER
TEMPORARY PRECAST, 12'-6"

STATE OF WISCONSIN
DEPARTMENT OF TRANSPOI

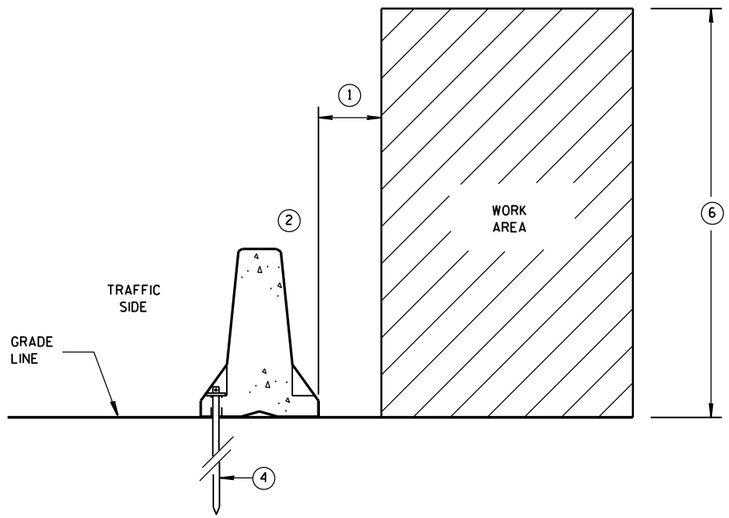

ANCHORED BARRIER SPACE REQUIREMENTS FOR HAZARDS EXTENDED ABOVE THE GRADE LINE

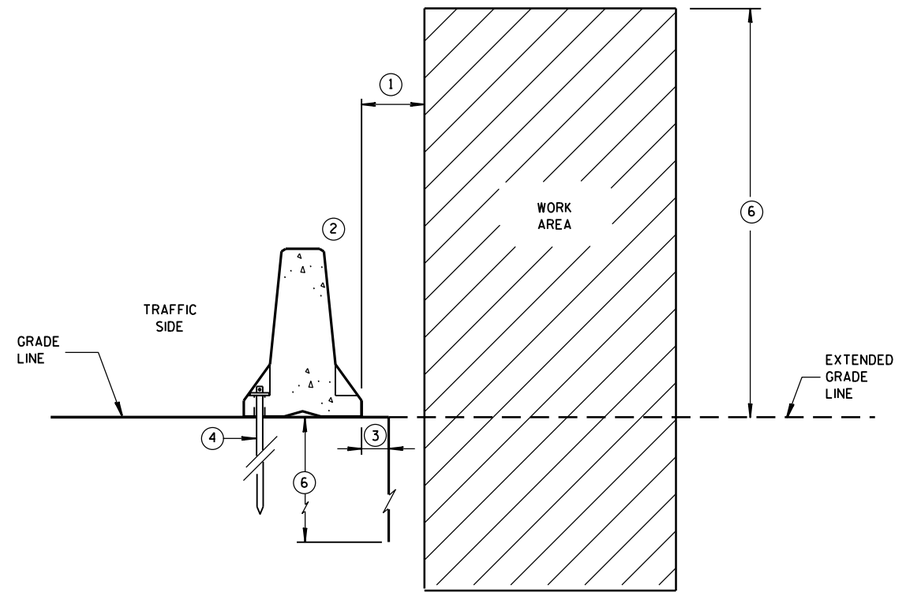

ANCHORED BARRIER SPACE REQUIREMENTS ON VERTICAL DROP OFFS

GENERAL NOTES

1. WHEN OBJECTS EXTEND ABOVE THE GRADE, A MINIMUM OF 1 FOOT IS REQUIRED FROM BACK OF BARRIER TO OBJECT. SEE OTHER DETAILS FOR FOR THE MINIMUM OFFSET FROM BACK OF BARRIER TO SLOPES OR VERTICAL DROPS.
2. OBJECTS ARE NOT TO BE PLACED ON, MOUNTED TO, OR LEANED AGAINST THE BARRIER WITHOUT PERMISSION OF THE PROJECT ENGINEER.
3. SEE OTHER DETAIL ON SHEET "D" FOR SPACE REQUIREMENTS.
4. SEE BOLT THROUGH DECK, REMOVABLE ADHESIVE ANCHOR, OR A STAKE DOWN FOR ASPHALTIC SURFACE TREATMENT DETAILS. ASPHALTIC ANCHOR SHOWN.
5. DEPTH OF 3 FEET OR MORE.
6. Y = 6'-6".

POSTED SPEED MPH	X
45 OR GREATER	4'
40 OR LESS	2'

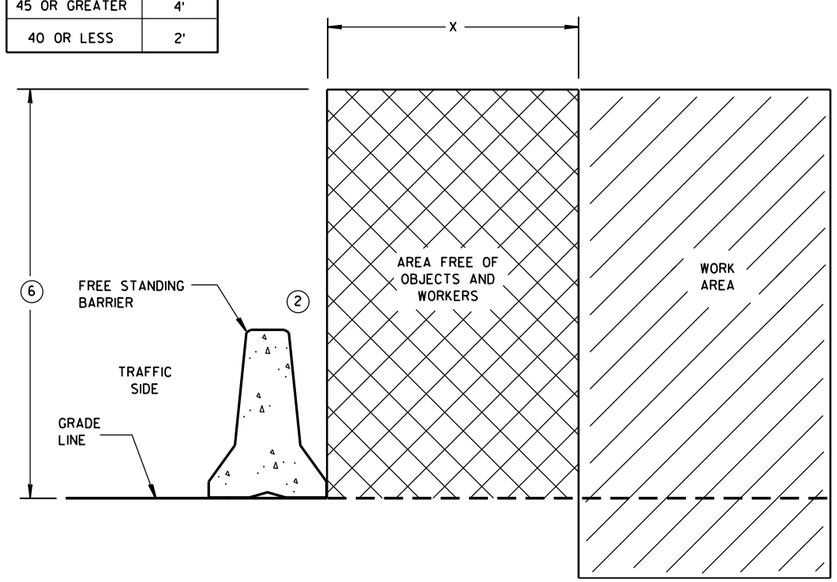

FREE STANDING BARRIER SPACE REQUIREMENTS

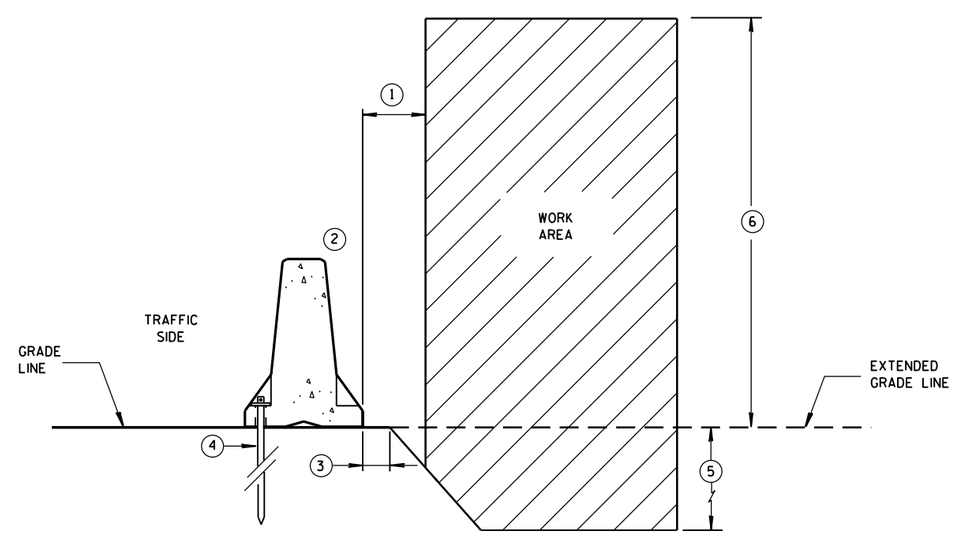

ANCHORED BARRIER SPACE REQUIREMENTS ON SLOPES

CONCRETE BARRIER
TEMPORARY PRECAST, 12'-6"

STATE OF WISCONSIN
DEPARTMENT OF TRANSPOR

6

S.D.D. 14 B 7-15e

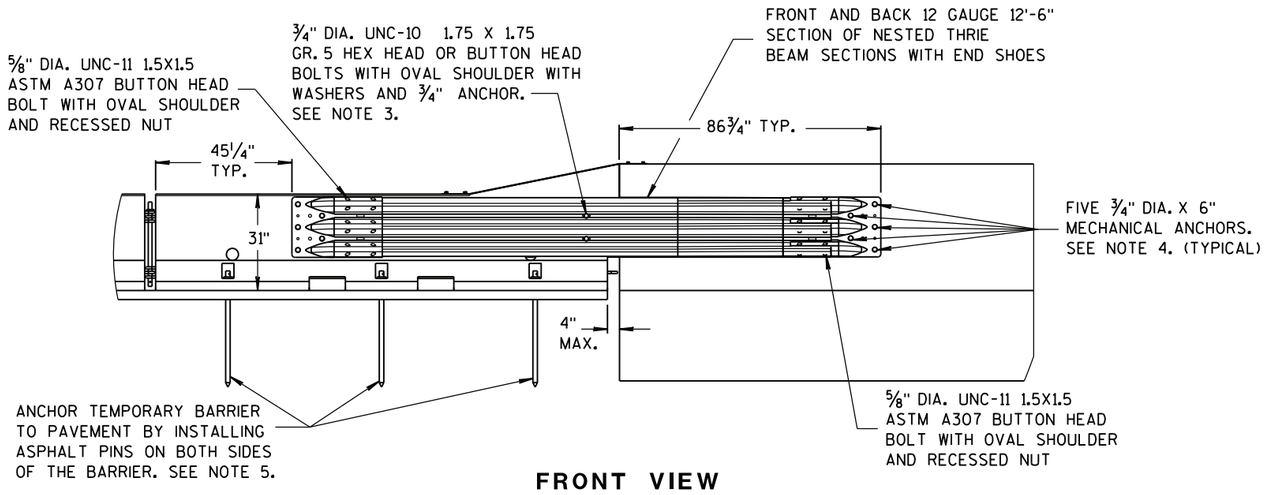

FRONT VIEW

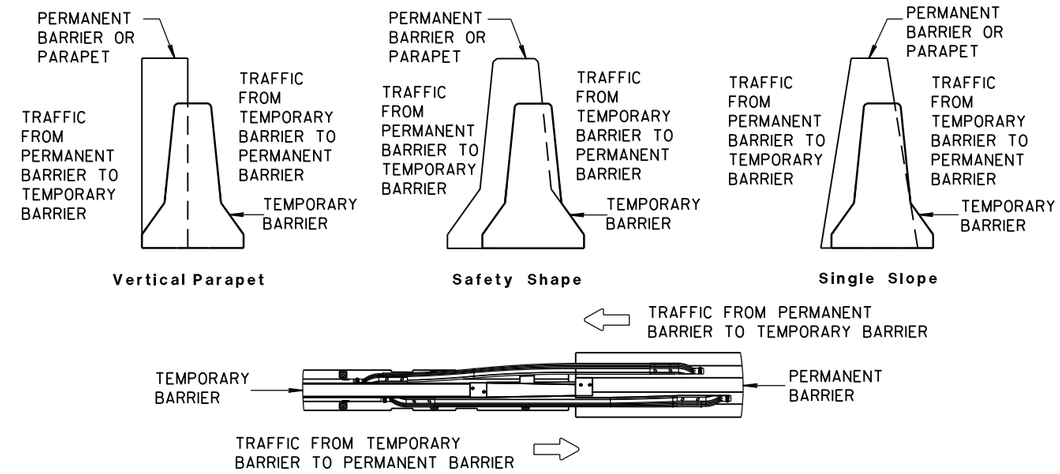

TEMPORARY BARRIER PLACEMENT FOR TRANSITION TO TIED DOWN SYSTEM

NOTES

NESTED THRIE BEAM IS REQUIRED ON BOTH SIDES OF THE TEMPORARY BARRIER FOR ALL INSTALLATIONS REGARDLESS OF TRAFFIC.

1. CAP END PLATE PLACED FLUSH WITH UPSTREAM END OF PERMANENT BARRIER OR PARAPET.
2. THRIE BEAM PIECES ARE OFFSET 15 1/4" TO PREVENT INTERFERENCE FROM THE ANCHORS ON OPPOSING SIDES.
3. MINIMUM MECHANICAL OR ADHESIVE ANCHOR STRENGTH REQUIREMENTS: ULTIMATE TENSILE LOAD 9.48 KIPS AND ULTIMATE SHEAR LOAD 10.48 KIPS.
4. MINIMUM MECHANICAL OR ADHESIVE ANCHOR STRENGTH REQUIREMENTS: ULTIMATE TENSILE LOAD 17.9 KIPS AND ULTIMATE SHEAR LOAD 21.96 KIPS.
5. MAY BE USED ON CONCRETE OR ASPHALT PAVEMENTS. ASPHALT OPTION SHOWN. FOR CONCRETE OPTION SEE OTHER DETAILS.
6. MINIMUM MECHANICAL OR ADHESIVE ANCHOR STRENGTH REQUIREMENTS: ULTIMATE TENSILE LOAD 12.14 KIPS AND ULTIMATE SHEAR LOAD 17.5 KIPS.

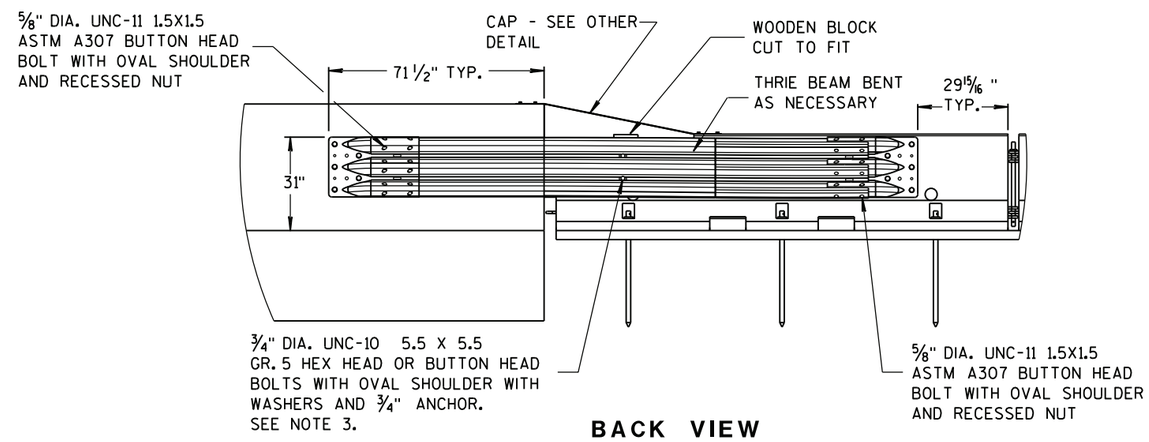

BACK VIEW

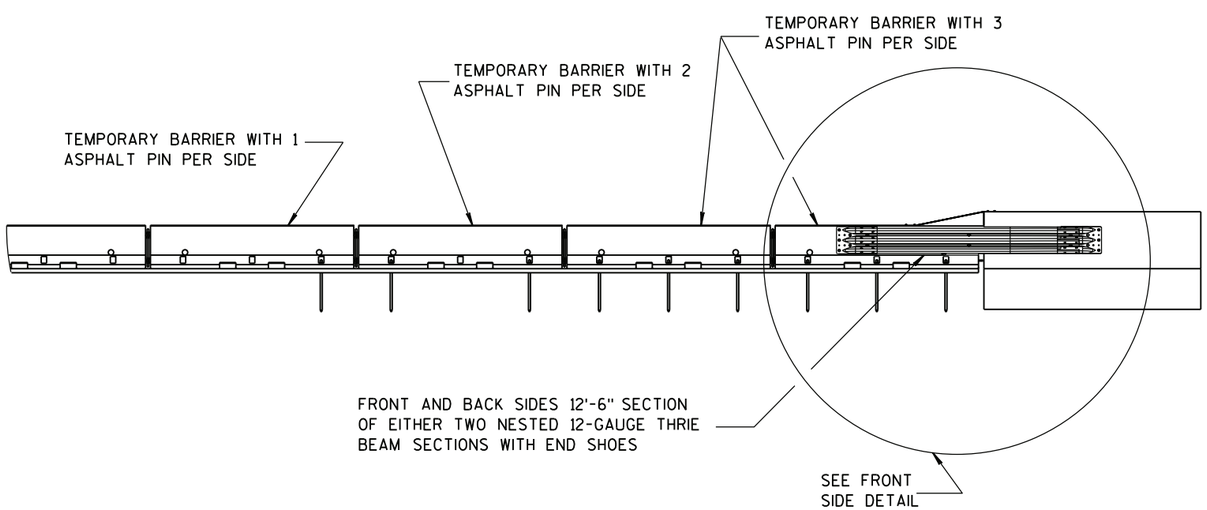

FRONT VIEW

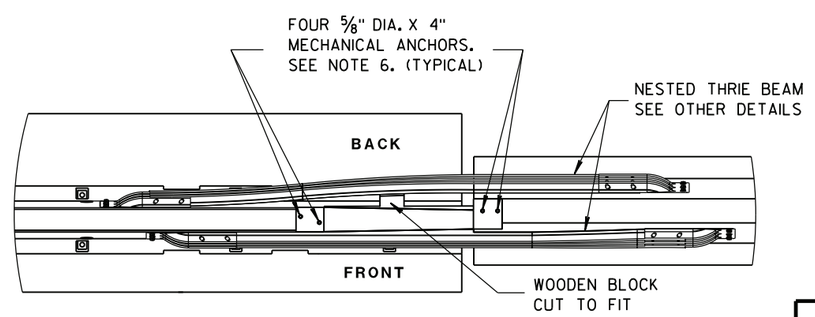

PLAN VIEW

TRANSITION TO TIED DOWN SYSTEM

CONCRETE BARRIER
TEMPORARY PRECAST, 12'-6"

STATE OF WISCONSIN
DEPARTMENT OF TRANSPO

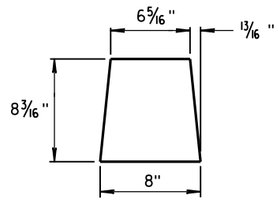

GUSSET 1

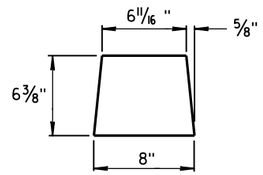

GUSSET 2

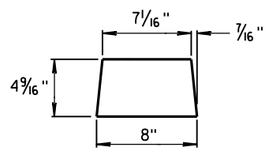

GUSSET 3

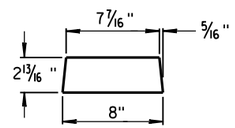

GUSSET 4

GUSSETS

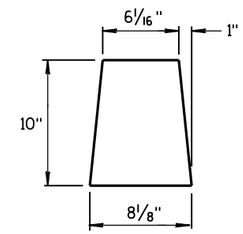

END PLATE

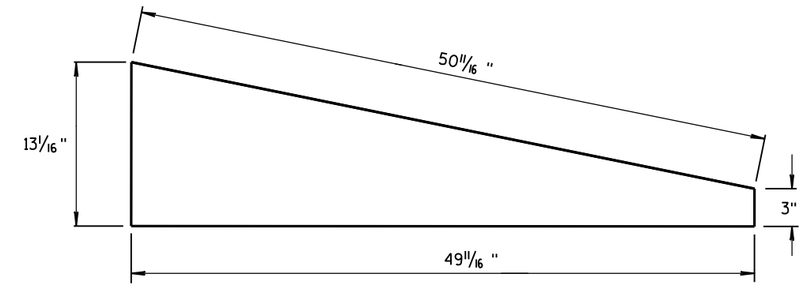

SIDE PLATE

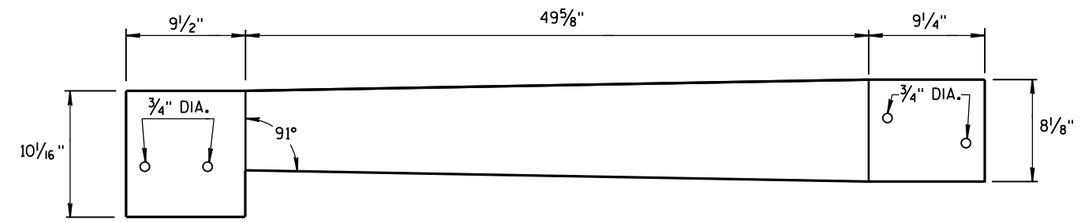

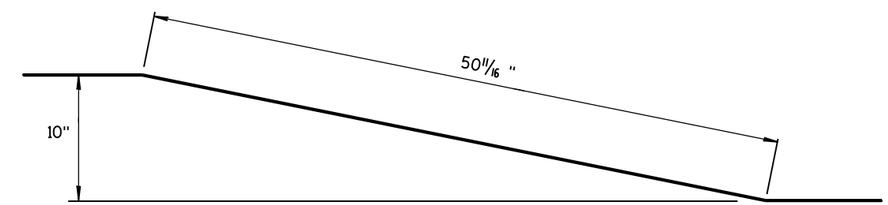

TOP PLATE

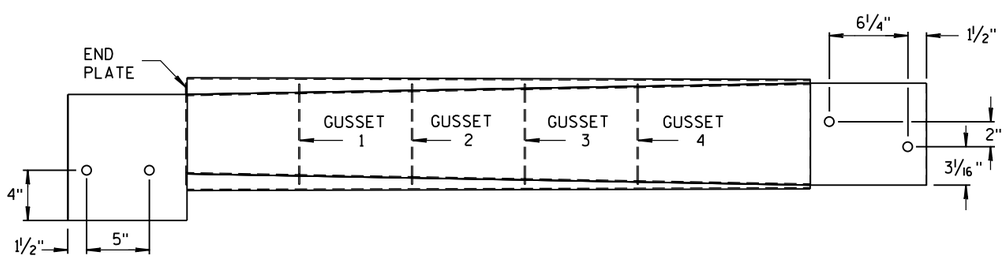

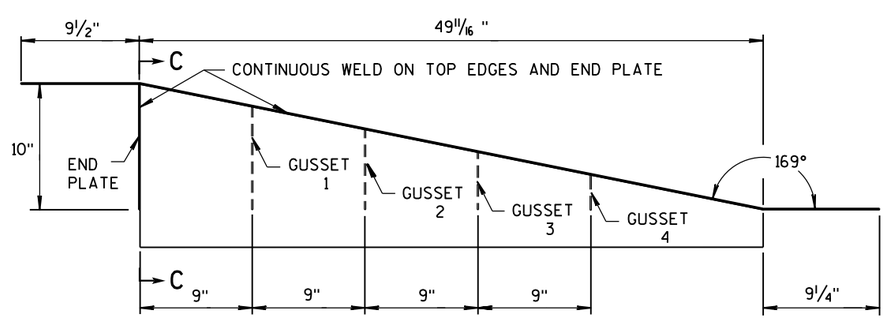

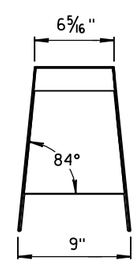

SECTION C-C

SIDE, TOP AND END PLATES FOR CAP FROM TEMPORARY CONCRETE BARRIER TO 42" PERMANENT CONCRETE BARRIER

SIDE PLATES, TOP PLATE, END PLATE AND GUSSETS ARE 12 GAUGE ASTM A36 GALVANIZED STEEL.

NOTES

1. FOUR GUSSETS AND END PLATE ARE STITCH WELDED ON THREE SIDES.
2. TWO TRIANGULAR SIDE PLATES ARE STITCH WELDED TO TOP PLATE, END PLATE, AND GUSSETS.

CAP DETAILS FOR TEMPORARY CONCRETE BARRIER TO 42" PERMANENT CONCRETE BARRIER

CONCRETE BARRIER
TEMPORARY PRECAST, 12'-6"

STATE OF WISCONSIN
DEPARTMENT OF TRANSPOI

6

S.D.D. 14 B 7-15g

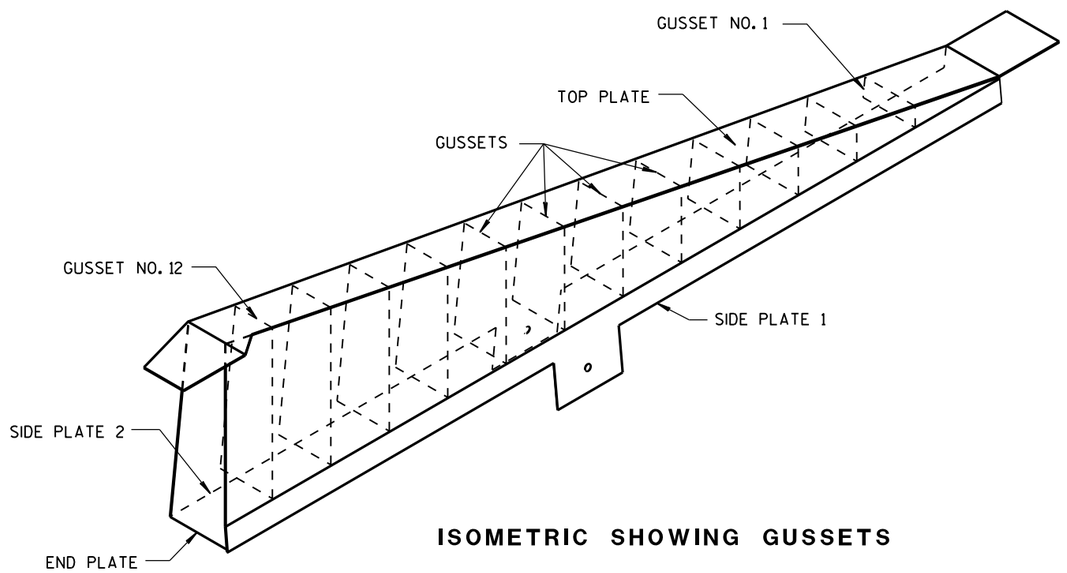

ISOMETRIC SHOWING GUSSETS

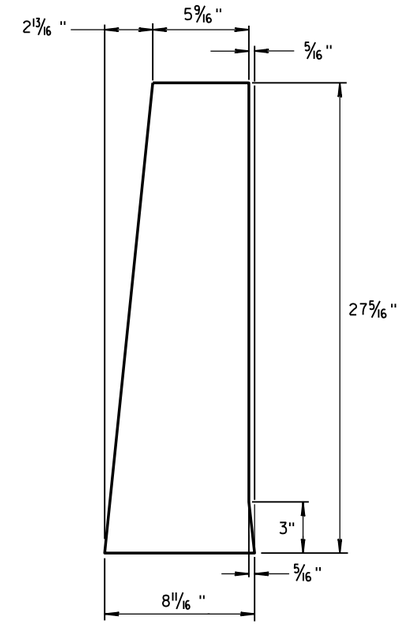

END PLATE

1/8" STEEL PLATE

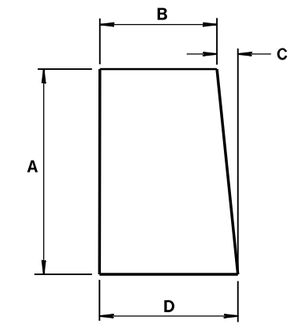

GUSSETS 1 - 12

ALL GUSSETS 1/8" STEEL PLATE

GUSSET DIMENSIONS				
GUSSET NO.	A	B	C	D
1	2 7/8"	7 3/4"	1/4"	8
2	4 11/16 "	7 9/16 "	1/2"	8
3	6 1/2"	7 3/8"	11/16 "	8 1/16 "
4	8 5/16 "	7 3/16 "	7/8"	8 1/16 "
5	10 1/8"	7"	1 1/16 "	8 1/16 "
6	11 15/16 "	6 13/16 "	1 1/4"	8 1/16 "
7	13 3/4"	6 5/8"	1 7/16 "	8 1/16 "
8	15 9/16 "	6 7/16 "	1 9/16 "	8 1/16 "
9	17 3/8"	6 1/4"	1 13/16 "	8 1/16 "
10	19 3/16 "	6 1/16 "	1 15/16 "	8 1/16 "
11	21"	5 7/8"	2 3/16 "	8 1/16 "
12	22 13/16 "	5 11/16 "	2 5/16 "	8 1/16 "

SIDE PLATES, TOP PLATE, END PLATE AND GUSSETS ARE 12 GAUGE ASTM A36 STEEL AND GALVANIZED.

GUSSETS AND END PLATE ARE STITCH WELDED ON 3 SIDES. TWO TRIANGULAR SIDE PLATES ARE STITCH WELDED TO TOP PLATE, END PLATE AND GUSSETS.

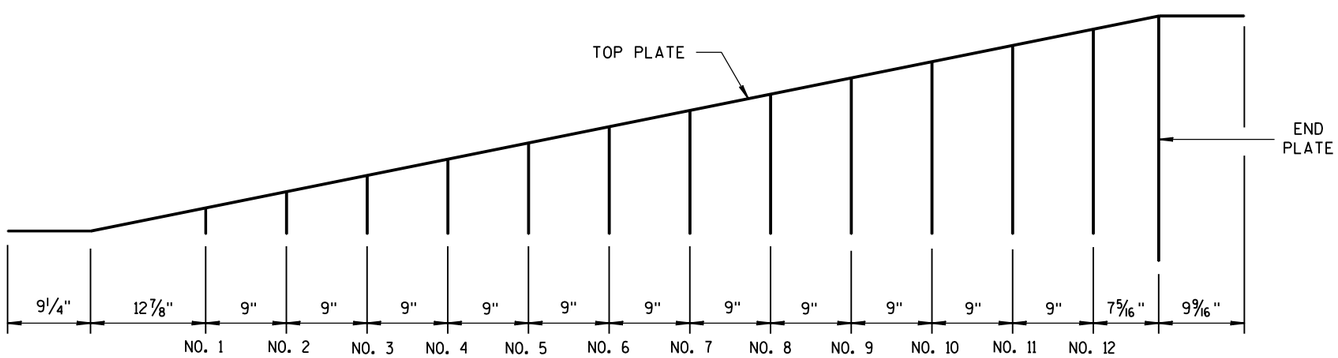

GUSSET LOCATION

CAP DETAILS FOR TEMPORARY CONCRETE BARRIER TO 56" PERMANENT CONCRETE BARRIER

CONCRETE BARRIER
TEMPORARY PRECAST, 12'-6"

STATE OF WISCONSIN
DEPARTMENT OF TRANSPOI

6

S.D.D. 14 B 7-15h

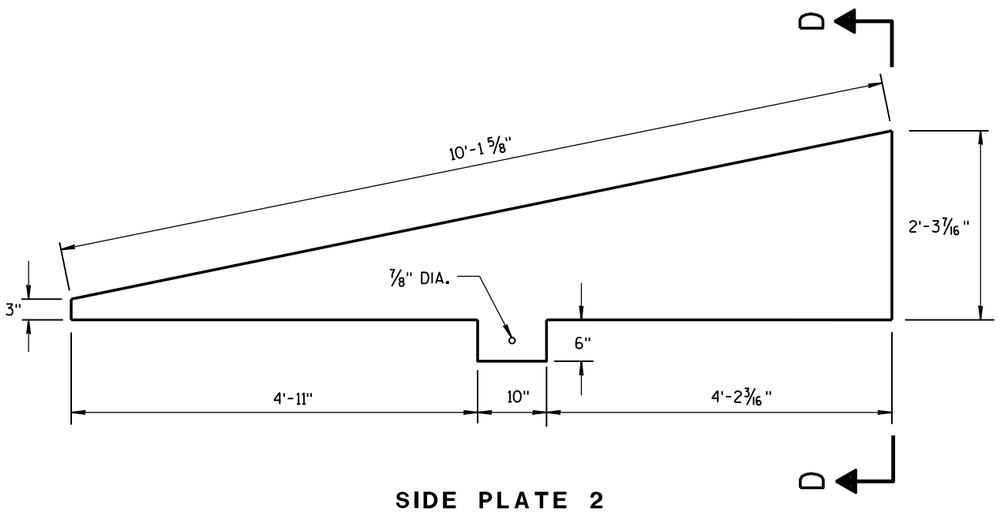

SIDE PLATE 2

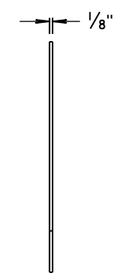

END VIEW

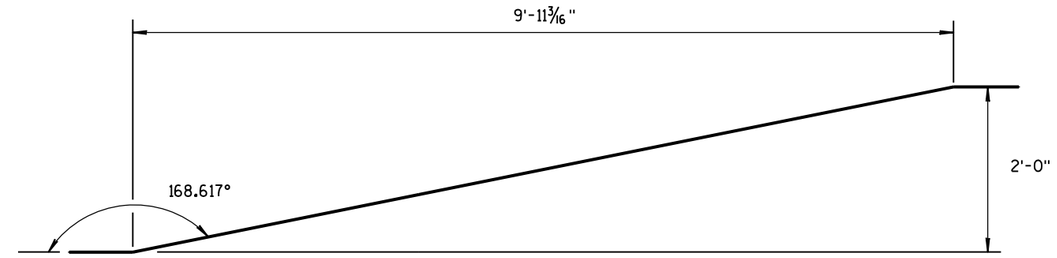

SIDE VIEW

TOP PLATE

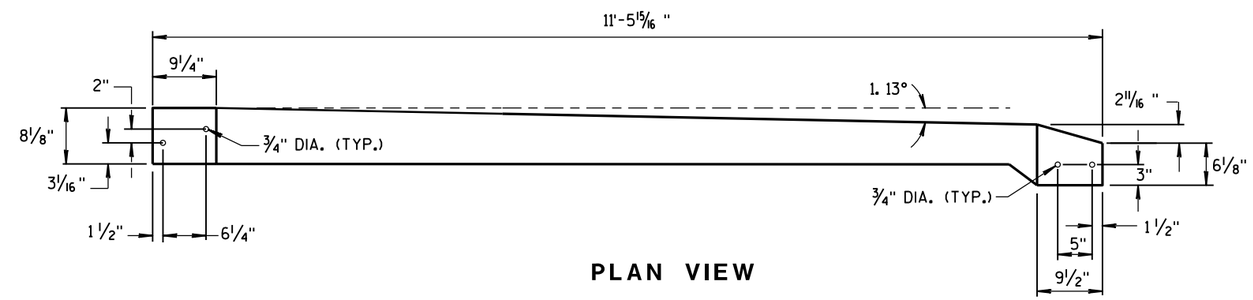

PLAN VIEW

TOP PLATE

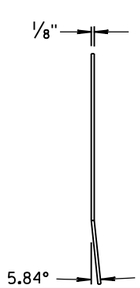

END VIEW

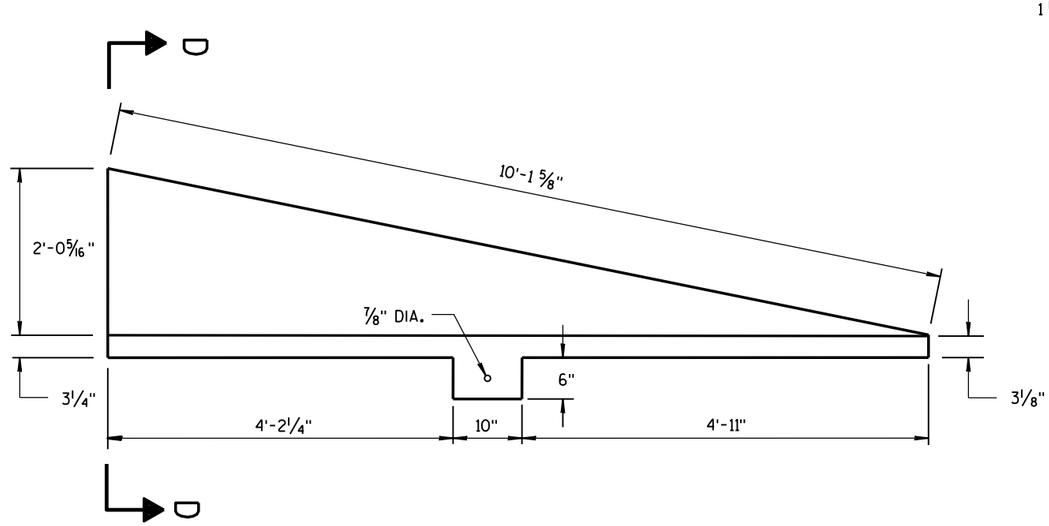

SIDE PLATE 1

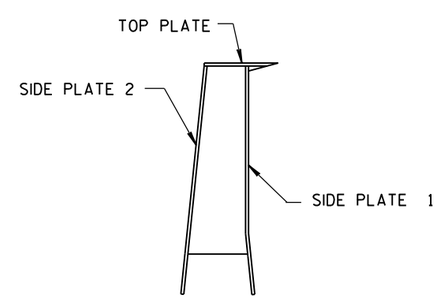

SECTION D-D

CAP DETAILS FOR TEMPORARY CONCRETE BARRIER TO 56" PERMANENT CONCRETE BARRIER

CONCRETE BARRIER
TEMPORARY PRECAST, 12'-6"

STATE OF WISCONSIN
DEPARTMENT OF TRANSPORTATION

APPROVED
June 2017 — DATE
/S/ Rodney Taylor — ROADWAY STANDARD UNIT SUPERV
FHWA

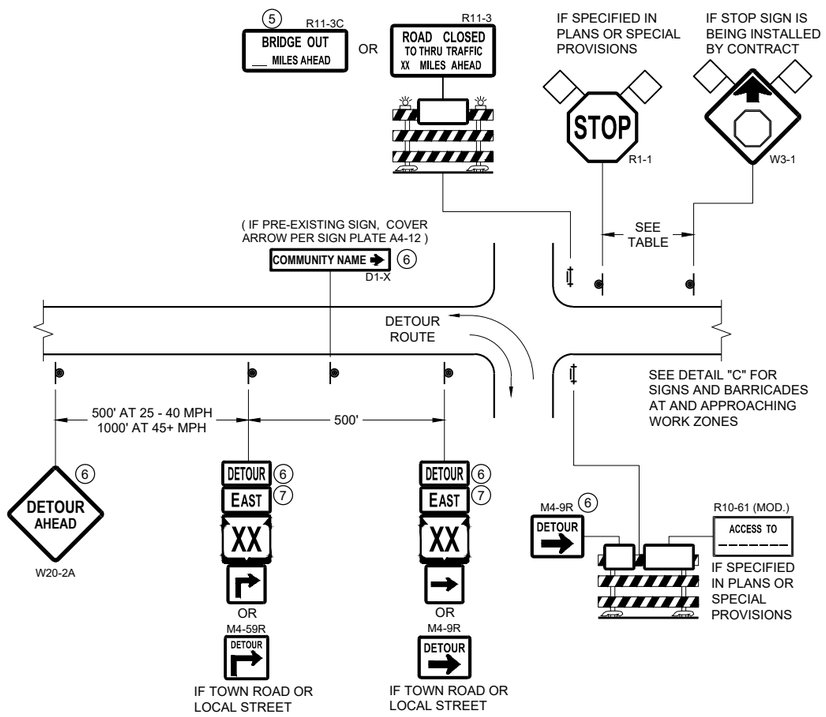

DETAIL A
MAINLINE CLOSURE WITH POSTED DETOUR

WORK ZONE GREATER THAN OR EQUAL TO ½ MILE FROM DETOUR ROUTE (1000 FEET IF URBAN)

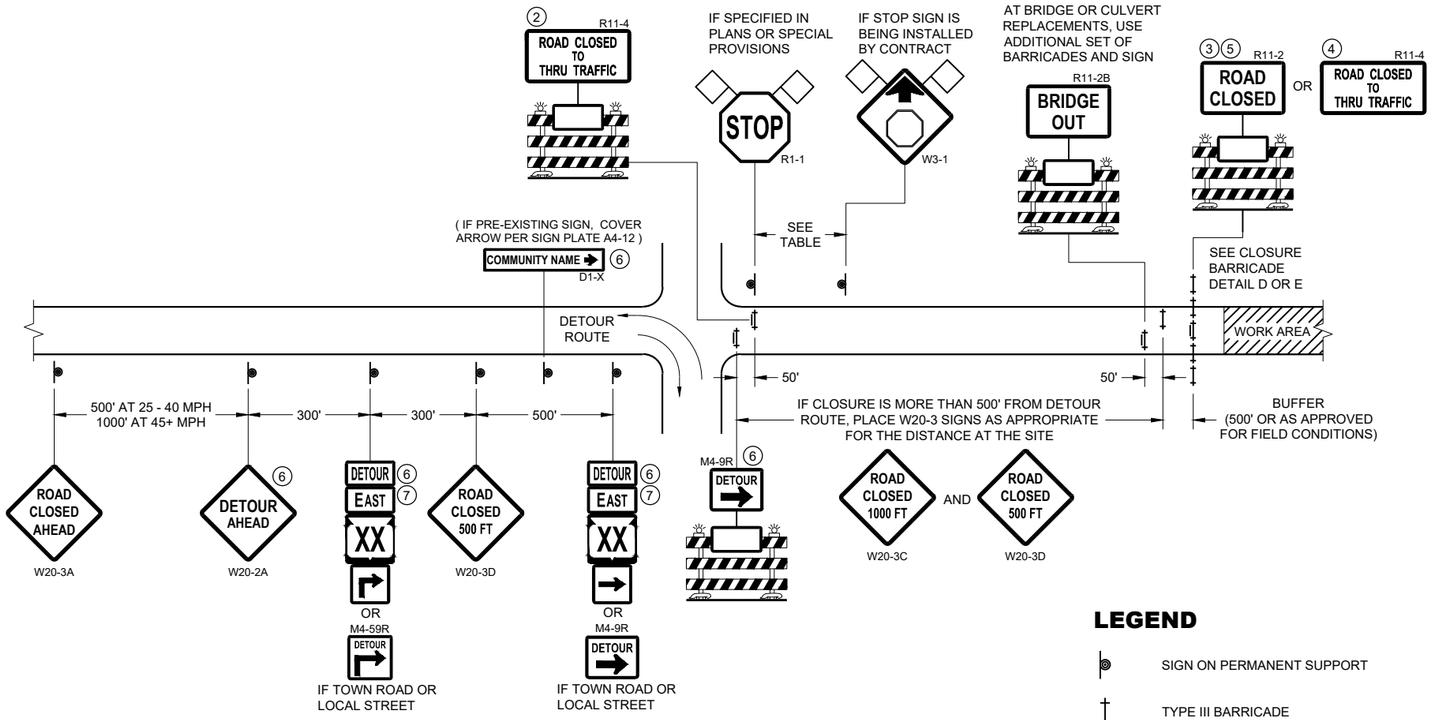

DETAIL B
MAINLINE CLOSURE WITH POSTED DETOUR

WORK ZONE LESS THAN ½ MILE FROM DETOUR ROUTE (1000 FEET IF URBAN)

LEGEND

- SIGN ON PERMANENT SUPPORT
- TYPE III BARRICADE
- TYPE III BARRICADE WITH ATTACHED SIGN
- TYPE "A" WARNING LIGHT (FLASHING)
- WORK AREA
- FLAGS, 16" X 16" MIN. (ORANGE)
- DETOUR — M4 - 8
- EAST — M3 - X
- XX (M1 - 4) OR XX (M1 - 6) OR COUNTY X (M1 - 5A)
- M05 - 1 OR M06 - 1

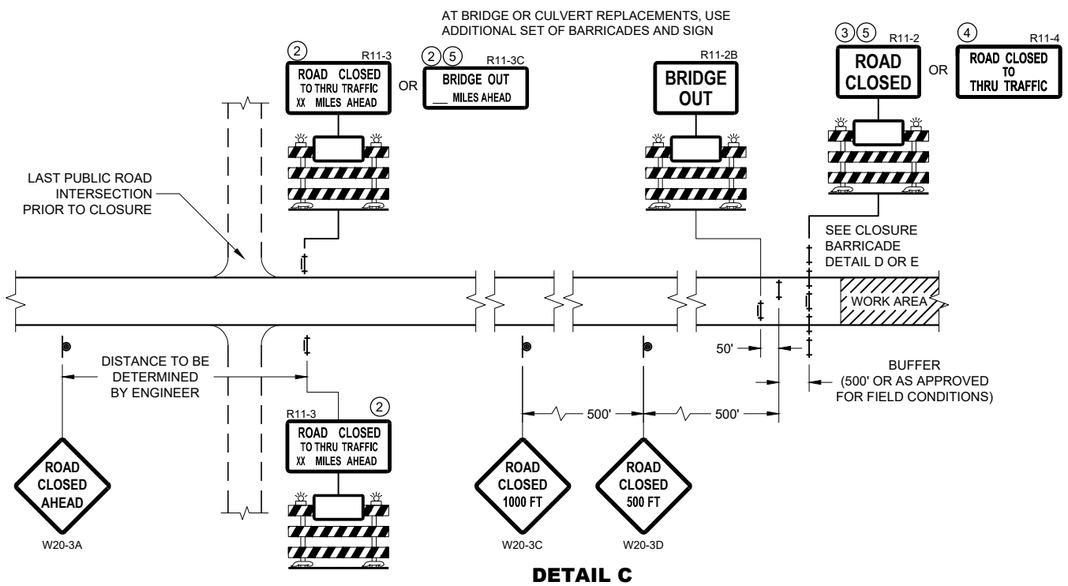

DETAIL C
MAINLINE CLOSURE, NO POSTED DETOUR

SPEED LIMIT (MPH)	"STOP AHEAD" ADVANCE WARNING DISTANCE (FT)
25	200
30	200
35	350
40	350
45	500
50	550
55	750

SEE SDD 15C2-SHEET "b" FOR GENERAL NOTES AND FOOTNOTES 1 THROUGH 7

BARRICADES AND SIGNS FOR MAINLINE CLOSURES

STATE OF WISCONSIN
DEPARTMENT OF TRANSPORTATION

APPROVED
February 2020 — DATE
/S/ Andrew Heidtke — WORK ZONE ENGINEER

FHWA

6

SDD 15C02 - 08a

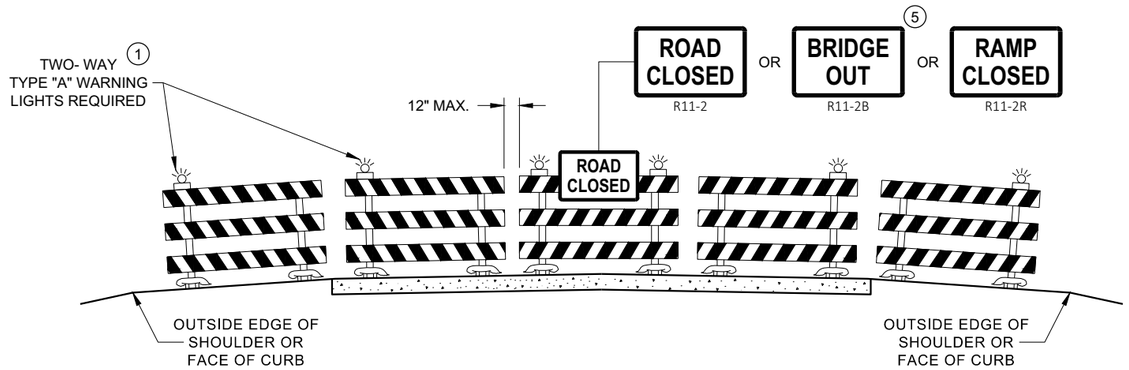

DETAIL D
ROAD CLOSURE BARRICADE DETAIL
APPROACH VIEW

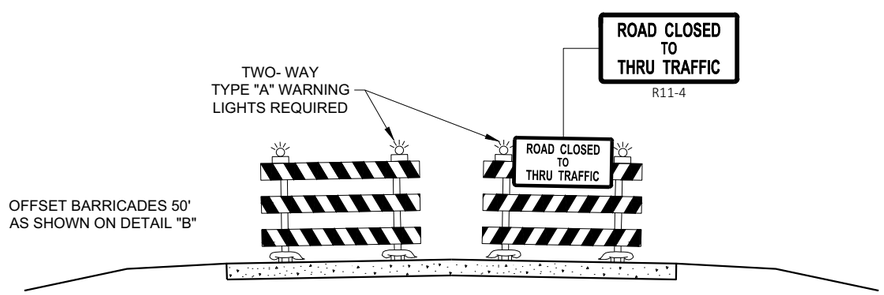

DETAIL E
LANE CLOSURE BARRICADE DETAIL
APPROACH VIEW

SEE SDD 15C2 - SHEET "a" FOR LEGEND

GENERAL NOTES

THE EXACT NUMBER, LOCATION, AND SPACING OF ALL SIGNS AND BARRICADES SHALL BE ADJUSTED TO FIT FIELD CONDITIONS AS APPROVED BY THE ENGINEER.

ANY SIGNS TEMPORARY OR EXISTING, WHICH CONFLICT WITH TRAFFIC CONTROL "IN USE", SHALL BE REMOVED OR COVERED AS NEEDED AND AS APPROVED BY THE ENGINEER.

THE SPACING BETWEEN TRAFFIC CONTROL SIGNS SHOULD BE ADJUSTED TO NOT CONFLICT WITH AND SHOULD PROVIDE A DESIRABLE MINIMUM OF 200 FEET CLEARANCE TO EXISTING SIGNS THAT WILL REMAIN IN PLACE.

BARRICADES THAT MUST BE MOVED FOR A WORK OPERATION SHALL BE IMMEDIATELY RE-ESTABLISHED UPON COMPLETION OF THE OPERATION, OR FOR CONTINUING OPERATIONS, AT THE END OF EACH WORKING DAY.

SIGNS THAT WILL BE IN PLACE LESS THAN 7 CONTINUOUS DAYS AND NIGHTS MAY BE MOUNTED ON PORTABLE SUPPORTS.

ALL TYPE III BARRICADES SHALL HAVE RAILS REFLECTORIZED ON BOTH FACES. STRIPES SHALL BE PROPERLY SLOPED DOWN TOWARD THE TRAFFIC SIDE OR AS SHOWN IN THE ROAD CLOSURE BARRICADE DETAIL "D" FOR FULL ROAD CLOSURES.

TYPE "A" LOW - INTENSITY FLASHING WARNING LIGHTS SHALL BE VISIBLE ON BOTH SIDES OF THE BARRICADE.

THE R11 - 2, R11 - 3, M4 - 9, R11 - 4, AND R10 - 61 SIGNS PLACED ON THE BARRICADES SHALL COVER NO MORE THAN THE TOP RAIL. THE SIGNS SHALL NOT COVER ANY PORTION OF THE MIDDLE RAIL OR BOTTOM RAILS.

"WO" AND "MO" SIGNS ARE THE SAME AS "W" AND "M" SIGNS EXCEPT THE BACKGROUND IS ORANGE.

ALL SIGNS SHALL BE 48" X 48" UNLESS OTHERWISE NOTED BELOW:
- R11 - 2 SHALL BE 48" X 30"
- R11 - 3 SHALL, R11 - 4 AND R10 - 61 SHALL BE 60 " X 30"
- M4 - 9 SHALL BE 30" X 24"
- M3 - X SHALL BE 24" X 12" (36" X 18" IF NEEDED TO MATCH EXISTING SIGNS)
- M4 - 8 SHALL BE 24" X 12" (36" X 18" IF NEEDED TO MATCH EXISTING SIGNS)
- M1 - 4, M1 - 5A AND M1 - 6 SHALL BE 24" X 24" (36" X 36" IF NEEDED TO MATCH EXISTING SIGNS)
- MO5 - 1 AND MO6 - 1 SHALL BE 21" X 21" (30" X 30" IF NEEDED TO MATCH EXISTING SIGNS)
- D1 - X SHALL BE AS SHOWN ON SPECIFIC PROJECT SIGNING DETAIL SHEETS.
- R1 - 1 SHALL BE 36" X 36"

1. TWO WARNING LIGHTS SHALL BE PROVIDED ON THE CENTER BARRICADE AND A MINIMUM OF ONE WARNING LIGHT SHALL BE PROVIDED ON EACH OF THE OTHER BARRICADES WITHIN THE ROADWAY LIMITS. SPACING OF THE WARNING LIGHTS SHALL BE UNIFORM TO THE EDGE OF ROADWAY AS SHOWN (APPROX. 8 FOOT LIGHT SPACING.
2. THESE SIGNS AND BARRICADES ARE NOT REQUIRED IF ROAD CLOSURE BEGINS AT AN INTERSECTION.
3. FOR ROAD CLOSURE WITHOUT LOCAL ACCESS TO PROJECT, SEE ROAD CLOSURE BARRICADE DETAIL "D".
4. FOR ROAD CLOSURE WITH LOCAL ACCESS TO PROJECT, SEE ROAD CLOSURE BARRICADE DETAIL "E".
5. FOR BRIDGE OR CULVERT REPLACEMENTS, SUBSTITUTE "BRIDGE OUT" INSTEAD OF "ROAD CLOSED" ON R11 - 2 AND R11 - 3 SIGNS.
6. INSTALL DETOUR AND COMMUNITY GUIDE SIGNS AND ARROWS ONLY IF SPECIFIED IN THE CONTRACT. IF THERE ARE EXISTING ROUTE MARKER ASSEMBLIES THAT WILL REMAIN IN PLACE, ADJUST THE LOCATION OF THE DETOUR ROUTE SIGNS TO CORRESPOND WITH THE EXISTING ASSEMBLIES. MODIFY EXISTING SIGNS WHERE POSSIBLE. SEE SPECIFIC PROJECT DETOUR SIGNING DETAIL SHEETS. IF DETOUR SIGNS ARE BEING INSTALLED BY OTHERS, PLACE THE CONTRACTED TRAFFIC CONTROL SIGNS TO ALLOW FOR PLACEMENT OF ALL WARNING, DETOUR AND GUIDE SIGNS AS SHOWN.
7. "EAST" CARDINAL DIRECTION MARKERS AND RIGHT TURN ARROWS ARE SHOWN. USE OTHER CARDINAL DIRECTIONS AND ARROWS AS APPROPRIATE.

BARRICADES AND SIGNS FOR VARIOUS CLOSURES

STATE OF WISCONSIN
DEPARTMENT OF TRANSPORTATION

APPROVED
February 2020 — DATE
/S/ Andrew Heidtke — WORK ZONE ENGINEE
FHWA

6

SDD 15C02 - 08b

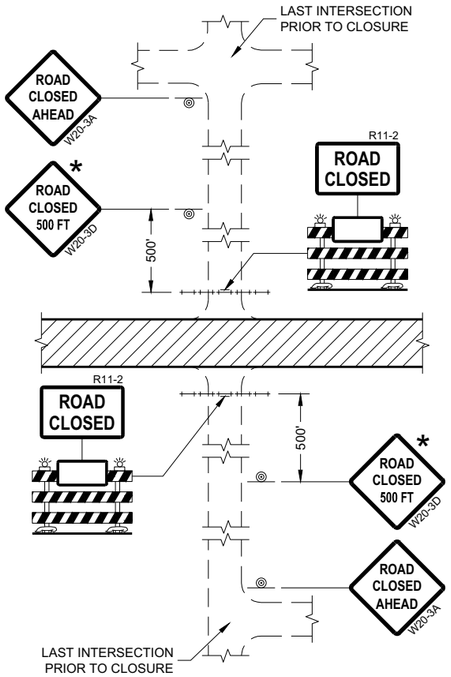

DETAIL 1
(NO ACCESS TO PROJECT)

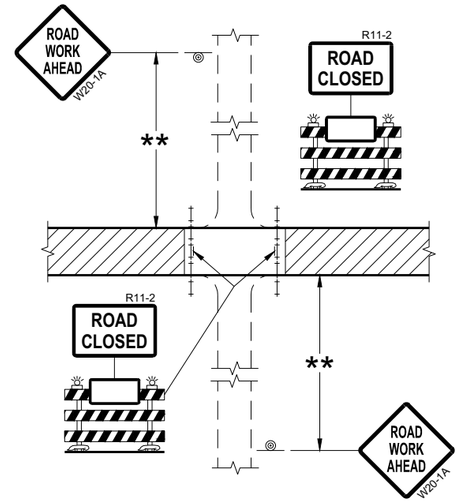

DETAIL 2
(PUBLIC CROSS-TRAFFIC MAINTAINED.
NO ACCESS TO PROJECT)

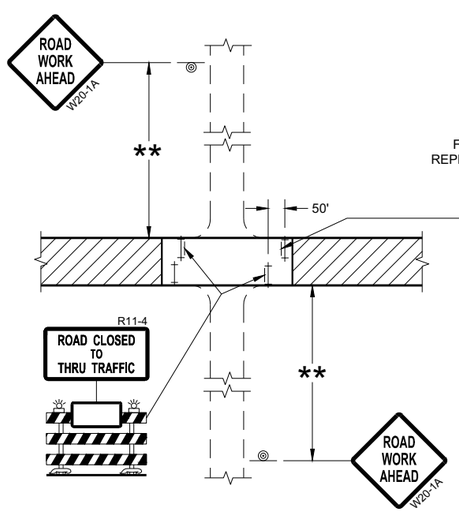

DETAIL 3
(PUBLIC CROSS-TRAFFIC MAINTAINED.
CONTRACTOR, LOCAL BUSINESS AND
RESIDENT ACCESS TO PROJECT)

FOR BRIDGE OR CULVERT
REPLACEMENT, USE ADDITIONAL
SIGN ON BARRICADE

BRIDGE OUT
XX MILES AHEAD
R11-3C

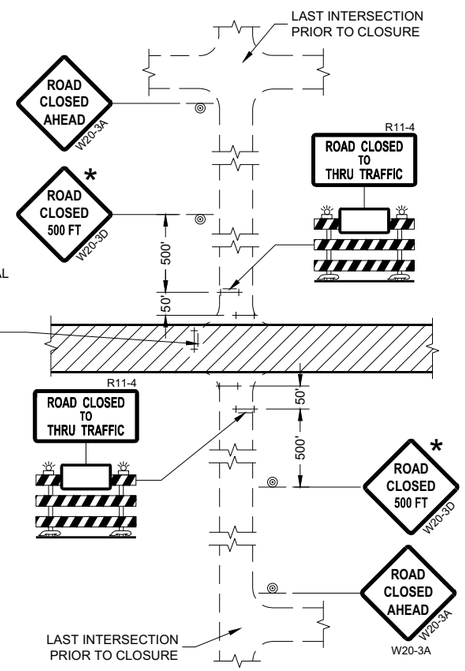

DETAIL 4
(CONTRACTOR, LOCAL BUSINESS AND
RESIDENT ACCESS TO PROJECT)

GENERAL NOTES

THE EXACT NUMBER, LOCATION, AND SPACING OF ALL SIGNS AND BARRICADES SHALL BE ADJUSTED TO FIT FIELD CONDITIONS AS APPROVED BY THE ENGINEER.

ANY SIGNS TEMPORARY OR EXISTING, WHICH CONFLICT WITH TRAFFIC CONTROL "IN USE" SHALL BE REMOVED OR COVERED AS NEEDED AND AS APPROVED BY THE ENGINEER.

THE SPACING BETWEEN TRAFFIC CONTROL SIGNS SHOULD BE ADJUSTED TO NOT CONFLICT WITH AND SHOULD PROVIDE A DESIRABLE MINIMUM OF 200 FEET CLEARANCE (500 FEET DESIRABLE) TO EXISTING SIGNS THAT WILL REMAIN IN PLACE.

IF A "STOP" SIGN MUST BE REMOVED FOR A WORK OPERATION, A TEMPORARY "STOP" SIGN SHALL BE PLACED PRIOR TO THE SIGN REMOVAL, OR A FLAGGER SHALL BE PROVIDED UNTIL THE SIGN IS REESTABLISHED.

BARRICADES THAT MUST BE MOVED FOR A WORK OPERATION SHALL BE IMMEDIATELY REESTABLISHED UPON COMPLETION OF THE OPERATION OR FOR CONTINUING OPERATIONS, AT THE END OF EACH WORKING DAY.

SIGNS THAT WILL BE IN PLACE LESS THAN SEVEN CONTINUOUS DAYS AND NIGHTS MAY BE MOUNTED ON PORTABLE SUPPORTS.

ALL TYPE III BARRICADES SHALL HAVE RAILS REFLECTORIZED ON BOTH FACES. STRIPES SHALL BE PROPERLY SLOPED DOWN TOWARD THE TRAFFIC SIDE OR AS SHOWN IN THE ROAD CLOSURE BARRICADE DETAIL "D" FOR FULL ROAD CLOSURES.

TYPE "A" LOW-INTENSITY FLASHING WARNING LIGHTS SHALL BE VISIBLE ON BOTH SIDES OF THE BARRICADE.

THE R11-2, R11-3, AND R11-4 SIGNS PLACED ON BARRICADES SHALL COVER NO MORE THAN THE TOP RAIL. THE SIGNS SHALL NOT COVER ANY PORTION OF THE MIDDLE OR BOTTOM RAILS.

ALL SIGNS SHALL BE 48" X 48" UNLESS OTHERWISE NOTED BELOW:
R11-2 SHALL BE 48" X 30".
R11-4 AND R11-3 SHALL BE 60" X 30".

* OMIT THE "ROAD CLOSED 500 FT." SIGN IF THE LAST INTERSECTION IS 500 FEET OR LESS FROM THE WORK ZONE.

** 500' MAX. OR AT LAST INTERSECTION, WHICHEVER IS CLOSEST.

LEGEND

- SIGN ON PERMANENT SUPPORT
- TYPE III BARRICADE
- TYPE III BARRICADE WITH ATTACHED SIGN
- TYPE "A" WARNING LIGHT (FLASHING)
- WORK AREA

BARRICADES AND SIGNS FOR SIDEROAD CLOSURES

STATE OF WISCONSIN
DEPARTMENT OF TRANSPORTATION

APPROVED
July 2018 — DATE
/S/ Andrew Heidtke — WORK ZONE ENGINEE
FHWA

6
SDD 15C03 - 05

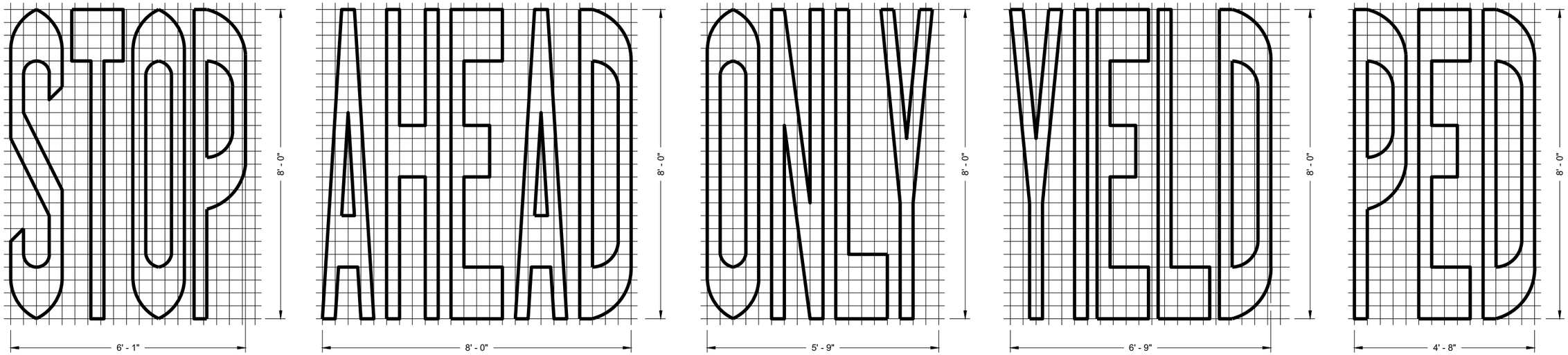

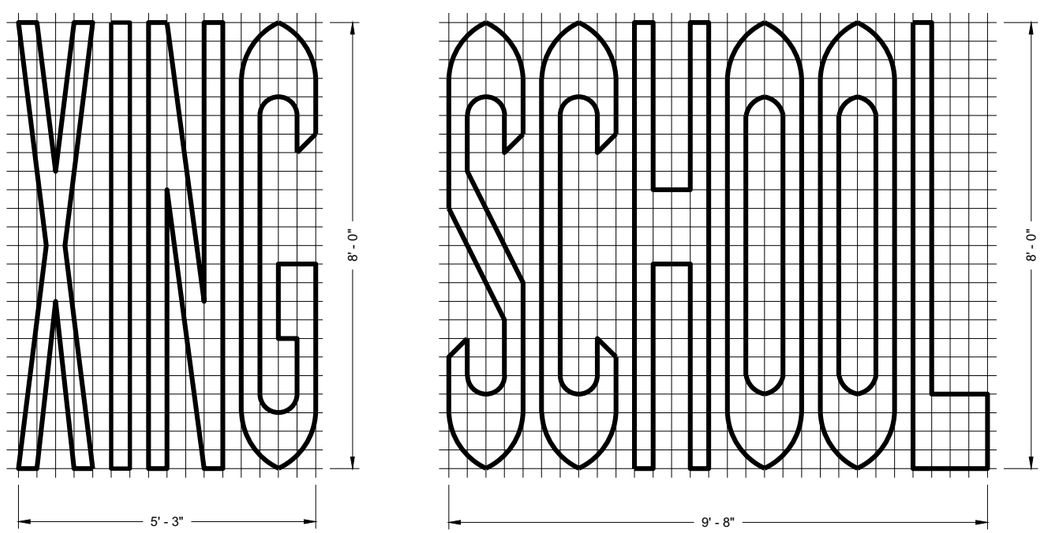

SINGLE LANE

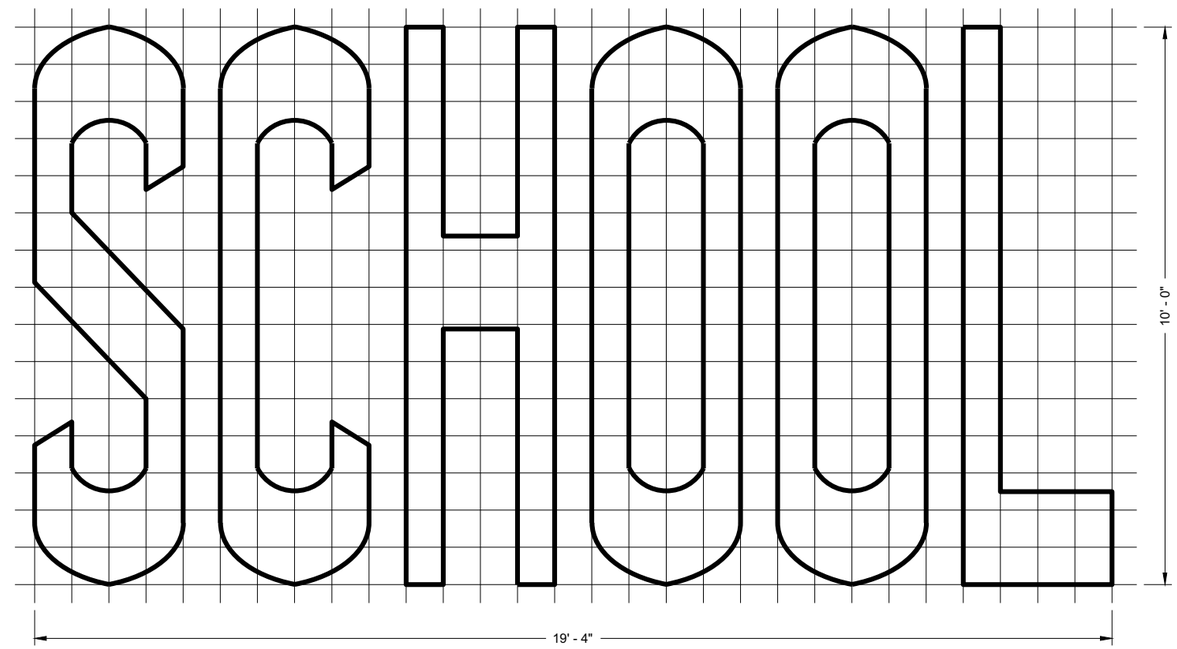

TWO - LANE

6

6

GENERAL NOTES

DETAILS OF INSTALLATION, MATERIALS AND WORKMANSHIP NOT SHOWN ON THIS DRAWING SHALL CONFORM TO THE PERTINENT REQUIREMENTS OF THE STANDARD SPECIFICATIONS AND APPLICABLE SPECIAL PROVISIONS.

PAVEMENT MARKING WORDS

STATE OF WISCONSIN
DEPARTMENT OF TRANSPORTATION

APPROVED

November 2019 — DATE

/S/ Matthew Rauch — STATE SIGNING AND MAR ENGINEER

FHWA

SDD 15C07 - 15b

SDD 15C07 - 15b

GENERAL NOTES

DETAILS OF INSTALLATION, MATERIALS AND WORKMANSHIP NOT SHOWN ON THIS DRAWING SHALL CONFORM TO THE PERTINENT REQUIREMENTS OF THE STANDARD SPECIFICATIONS AND APPLICABLE SPECIAL PROVISIONS.

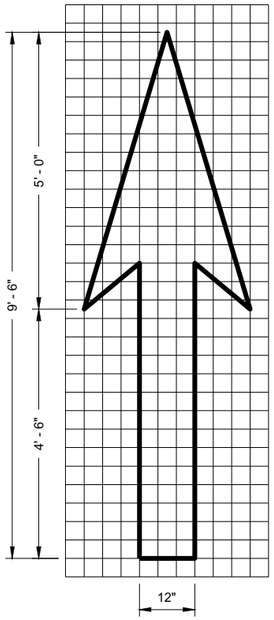

TYPE 1

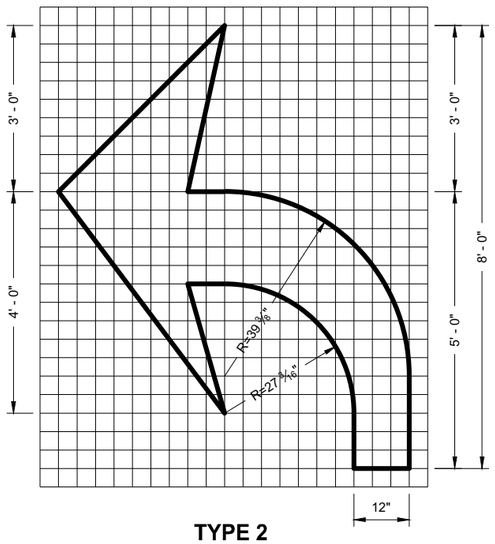

TYPE 2

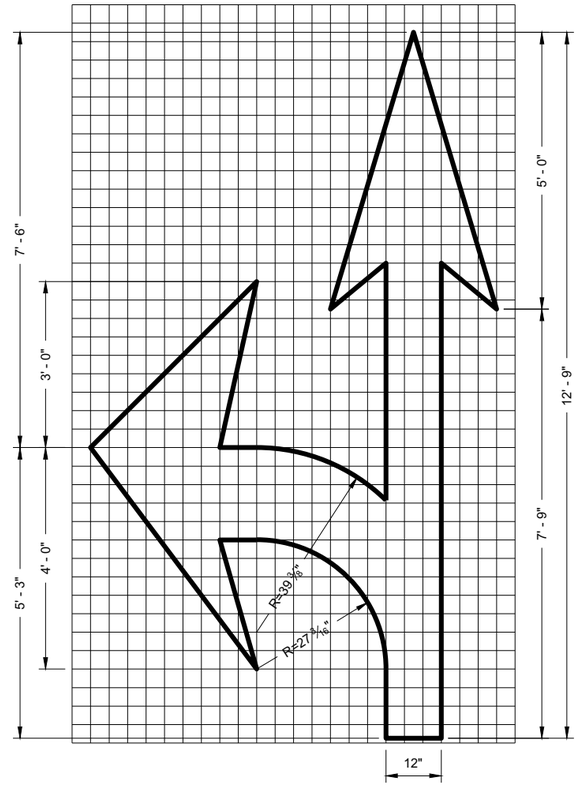

TYPE 3

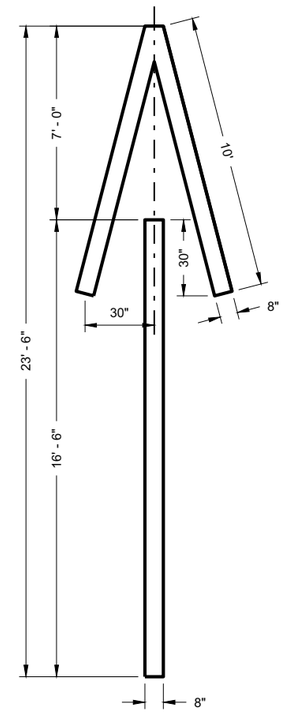

TYPE 4

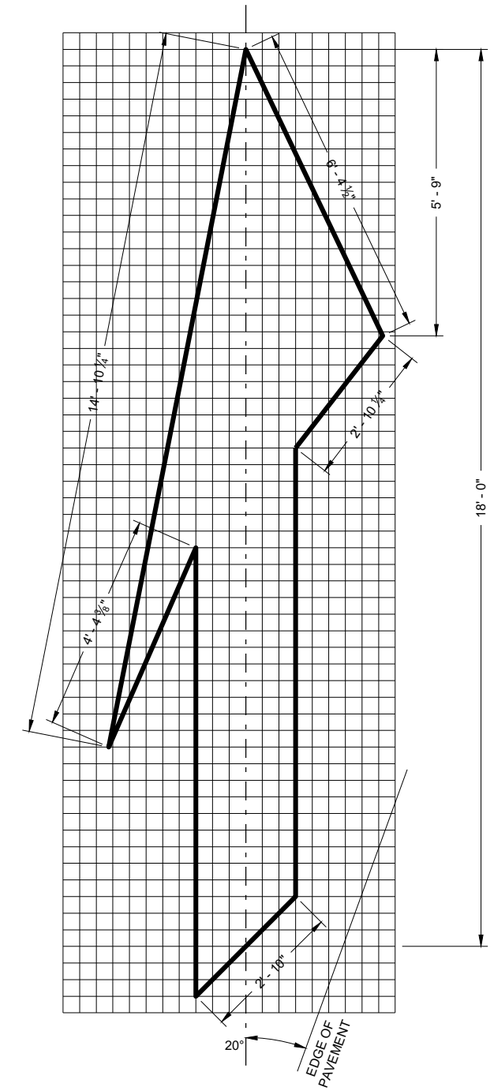

TYPE 5 LANE DROP ARROW

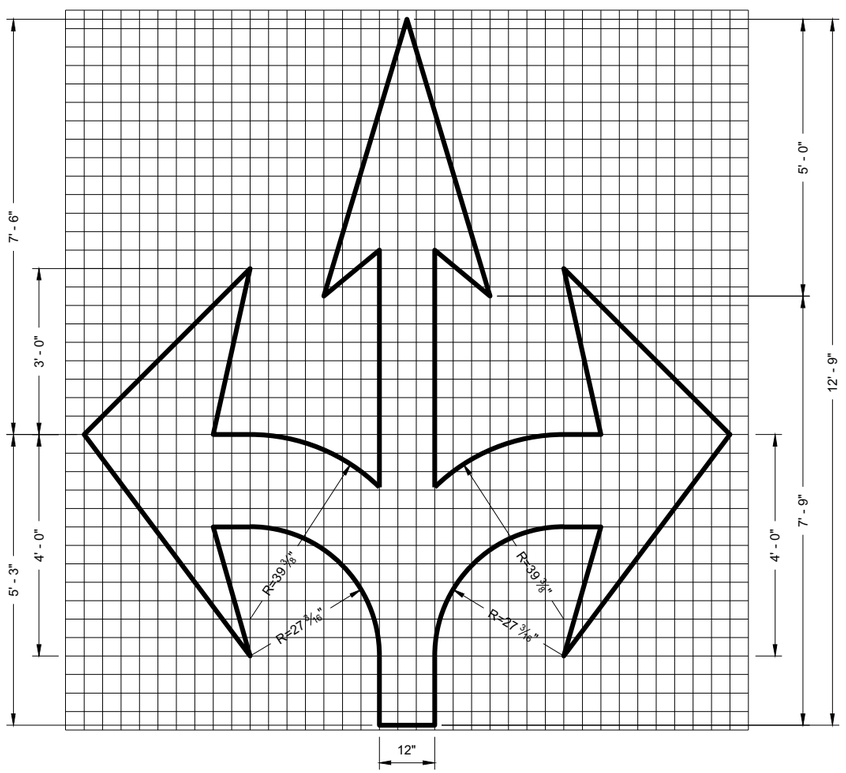

TYPE 6

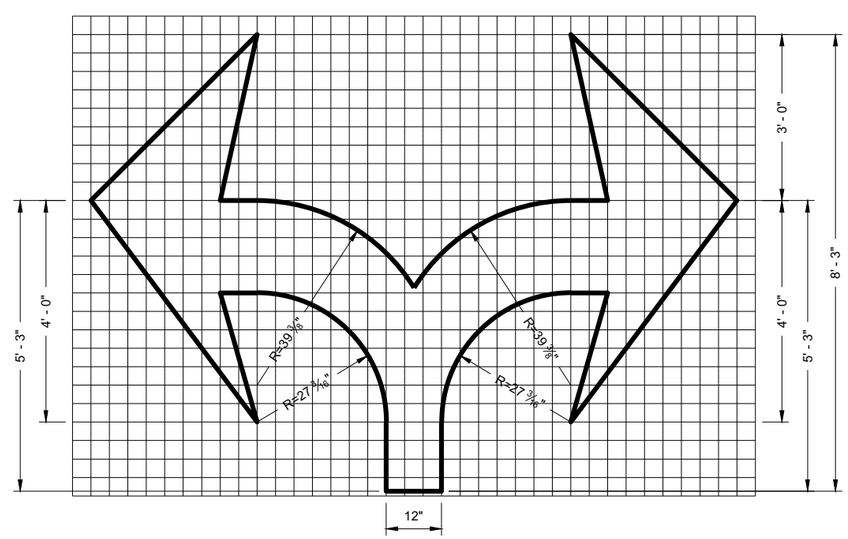

TYPE 7

6

6

PAVEMENT MARKING ARROWS

STATE OF WISCONSIN
DEPARTMENT OF TRANSPORTATION

APPROVED
November 2019 — DATE
/S/ Matthew Rauch — STATE SIGNING AND MAR ENGINEER
FHWA

SDD 15C07 - 15c

SDD 15C07 - 15c

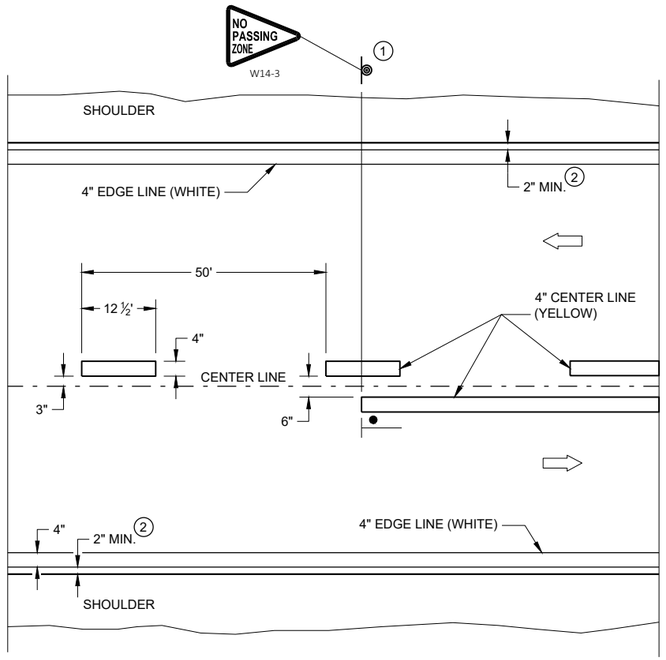

TWO WAY TRAFFIC

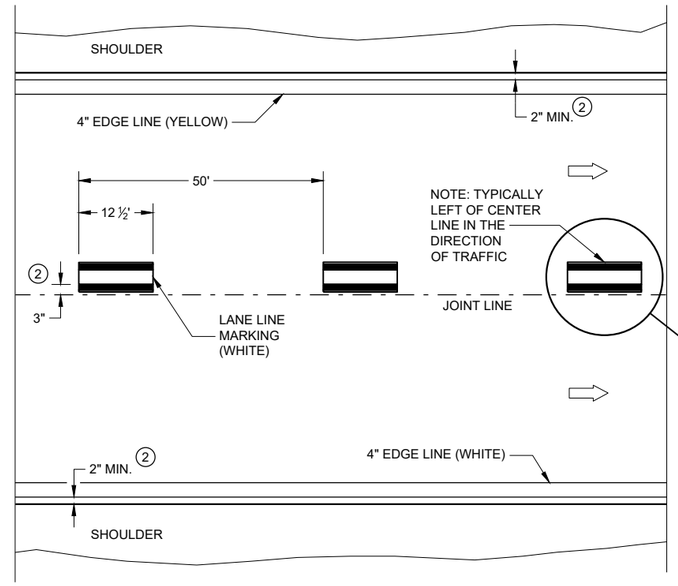

ONE WAY TRAFFIC

PERMANENT PAVEMENT MARKING

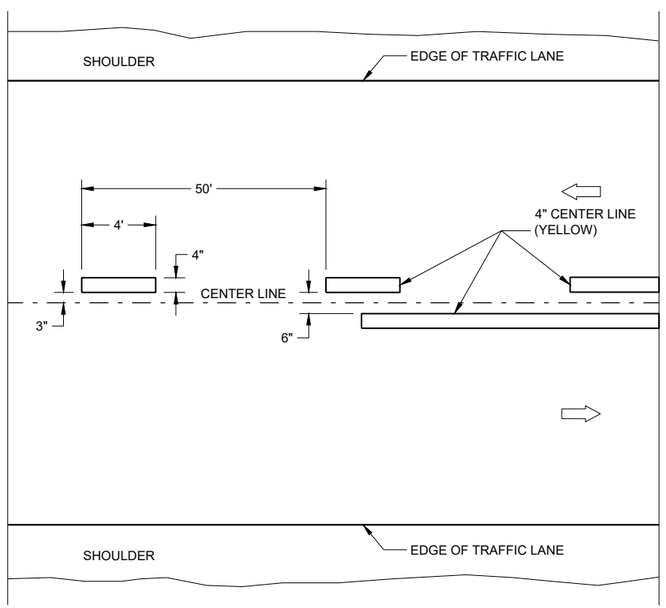

TWO WAY TRAFFIC

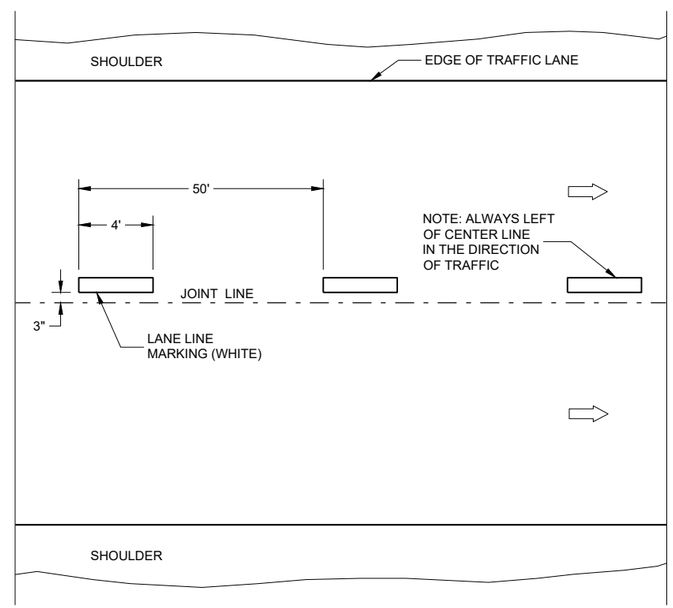

ONE WAY TRAFFIC

TEMPORARY PAVEMENT MARKING

GENERAL NOTES

DETAILS OF CONSTRUCTION NOT SHOWN ON THIS DRAWING SHALL CONFORM TO STANDARD SPECIFICATIONS AND SPECIAL PROVISIONS.

1. LOCATE THE NO PASSING ZONE W14-3 SIGN WITHIN 50 FEET OF THE "T" MARKING
2. MEASURE FROM EDGE OF MARKING TO JOINT LINE. THIS DOES NOT INCLUDE SPACE NEEDED FOR GROOVING OPERATIONS.

LEGEND

"T" MARKING

SIGN ON PERMANENT SUPPORT

DIRECTION OF TRAFFIC

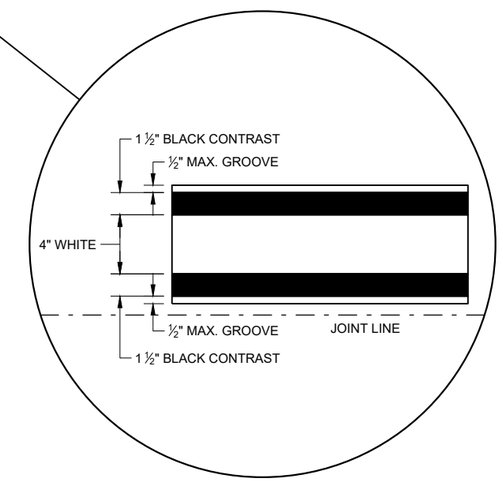

LONGITUDINAL MARKING (MAINLINE)

STATE OF WISCONSIN
DEPARTMENT OF TRANSPORTATION

APPROVED
February 2020 — DATE
/S/ Matthew Rauch — STATEWIDE SIGNING AND M ENGINEER
FHWA

6

SDD 15C08 - 20a

GENERAL NOTES

1. A SET OF ARROWS IS REQUIRED EVERY 400 FEET OR NEAR INTERSECTIONS OR DRIVEWAYS WITH TURNING TRAFFIC.
2. 8" WHITE
3. TURN BAY LENGTH OF LESS THAN 48' DOES NOT REQUIRE PAVEMENT ARROWS OR TEXT.

DIRECTION OF TRAFFIC

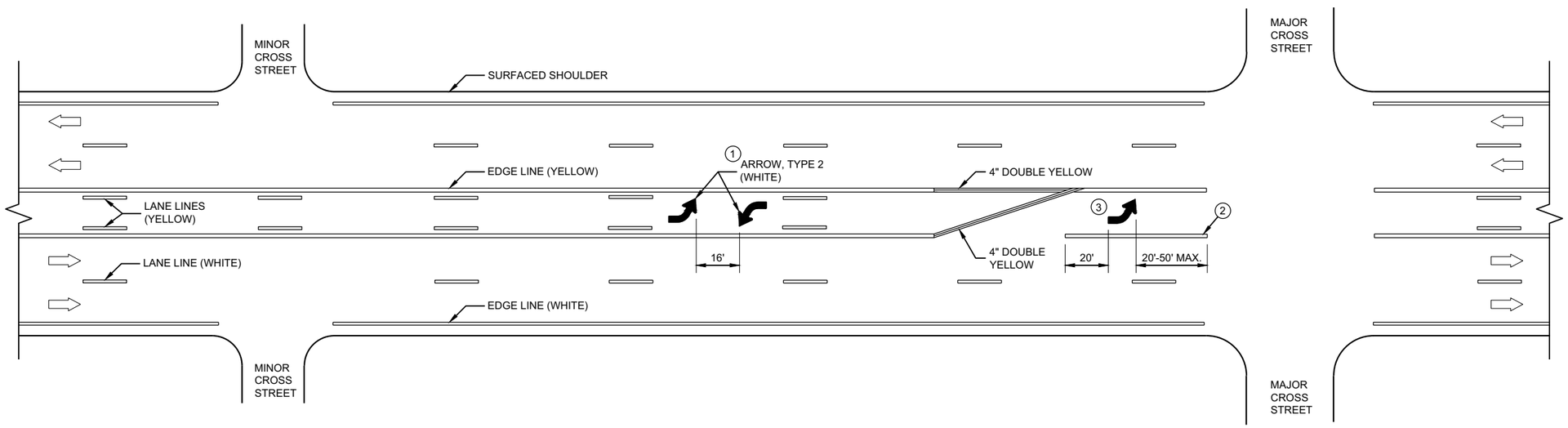

TWO WAY LEFT TURN LANE

6

6

SDD 15C08 - 20b

SDD 15C08 - 20b

PAVEMENT MARKING (TURN LANES)

STATE OF WISCONSIN
DEPARTMENT OF TRANSPORTAT

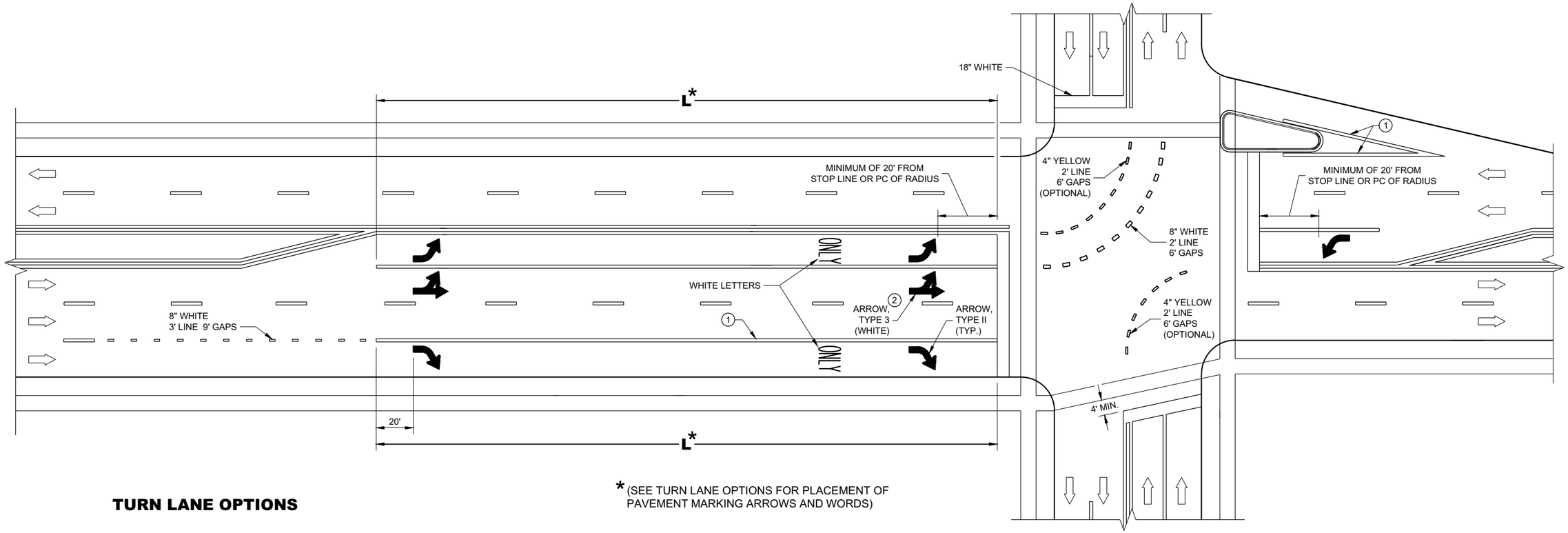

*(SEE TURN LANE OPTIONS FOR PLACEMENT OF PAVEMENT MARKING ARROWS AND WORDS)

TURN LANE OPTIONS

LENGTH OF TURN BAY (L) OF 0 - 47' DOES NOT REQUIRE PAVEMENT MARKING ARROWS OR WORDS

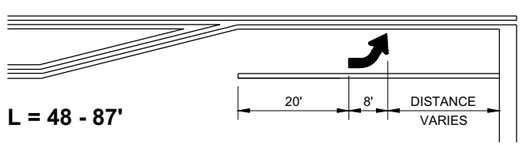

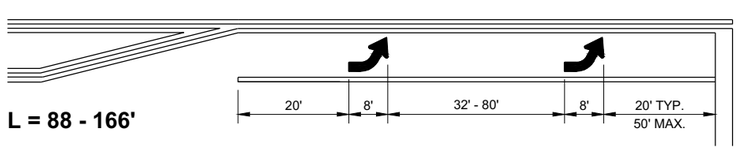

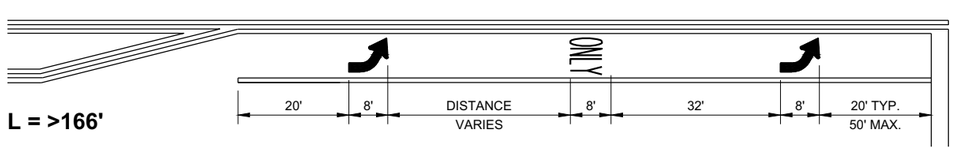

GENERAL NOTES

1. 8" WHITE
2. QUANTITY AND LOCATION OF TYPE 3 ARROWS ARE THE SAME AS THE TYPE II ARROWS IN THE ADJACENT TURN LANE. FOR TURN LANES WITH A PHYSICAL SEPARATION IN THE SAME DIRECTION OF TRAVEL, THE ARROWS AND "ONLY" MARKING MAY BE ELIMINATED.

⇨ DIRECTION OF TRAFFIC

L = LENGTH OF TURN BAY

PAVEMENT MARKING (TURN LANES)

STATE OF WISCONSIN
DEPARTMENT OF TRANSPORTA

6

SDD 15C08 - 20c

GENERAL NOTES

1. REFLECTIVE SHEETING SHALL FOLLOW THE REQUIREMENTS IN THE APPROVED PRODUCTS LISTING FOR SIGN SHEETING.
2. LOCATION OF WARNING LIGHTS WHEN SHOWN ON THE PLAN.

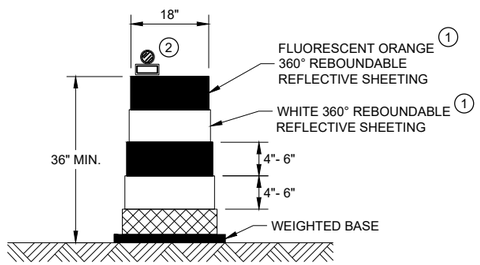

DRUM

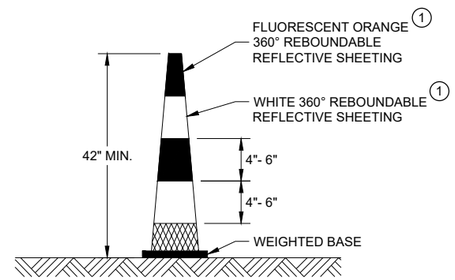

42" CONE

DO NOT USE IN TAPERS
½ SPACING OF DRUMS

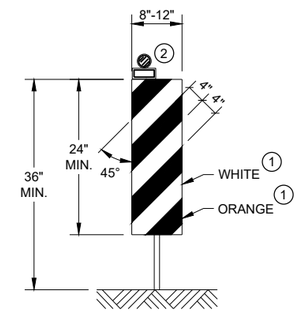

VERTICAL PANEL

THE STRIPES SHALL SLOPE DOWNWARD TO
THE TRAFFIC SIDE FOR CHANNELIZATION.

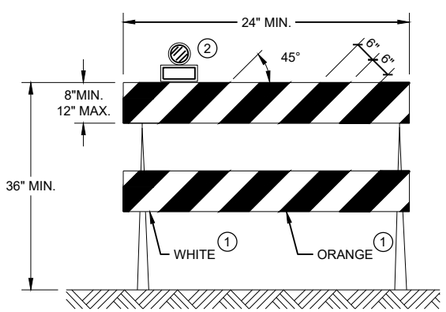

TYPE II BARRICADE

FOR RAILS LESS THAN 36" LONG, 4" WIDE STRIPES
MAY BE USED. ALL STRIPES SHALL SLOPE DOWNWARD
TO THE TRAFFIC SIDE FOR CHANNELIZATION.

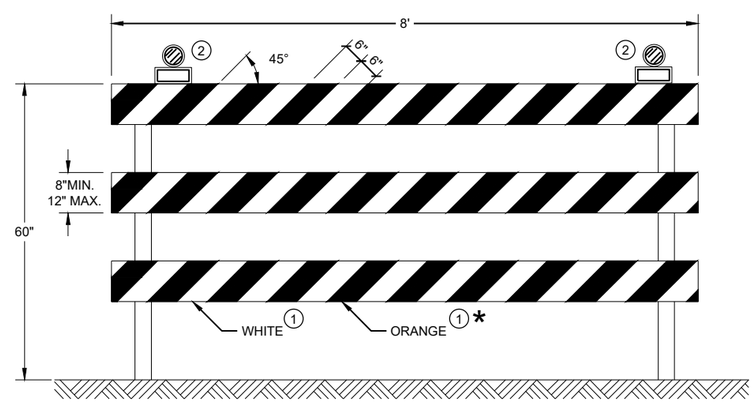

TYPE III BARRICADE

IF SIGN MOUNTED, DO NOT COVER MORE THAN 50% OF THE TOP
TWO RAILS OR 33% OF THE TOTAL AREA OF THE THREE RAILS.

* IF USED FOR A PERMANENT APPLICATION USE RED SHEETING.

CHANNELIZING DEVICES DRUMS, CONES, BARRICADES AND VERTICAL PANELS

STATE OF WISCONSIN
DEPARTMENT OF TRANSPORTATION

APPROVED
May 2021 — DATE
/S/ Andrew Heidtke — WORK ZONE ENGINEE
FHWA

6

SDD 15C11 - 09b

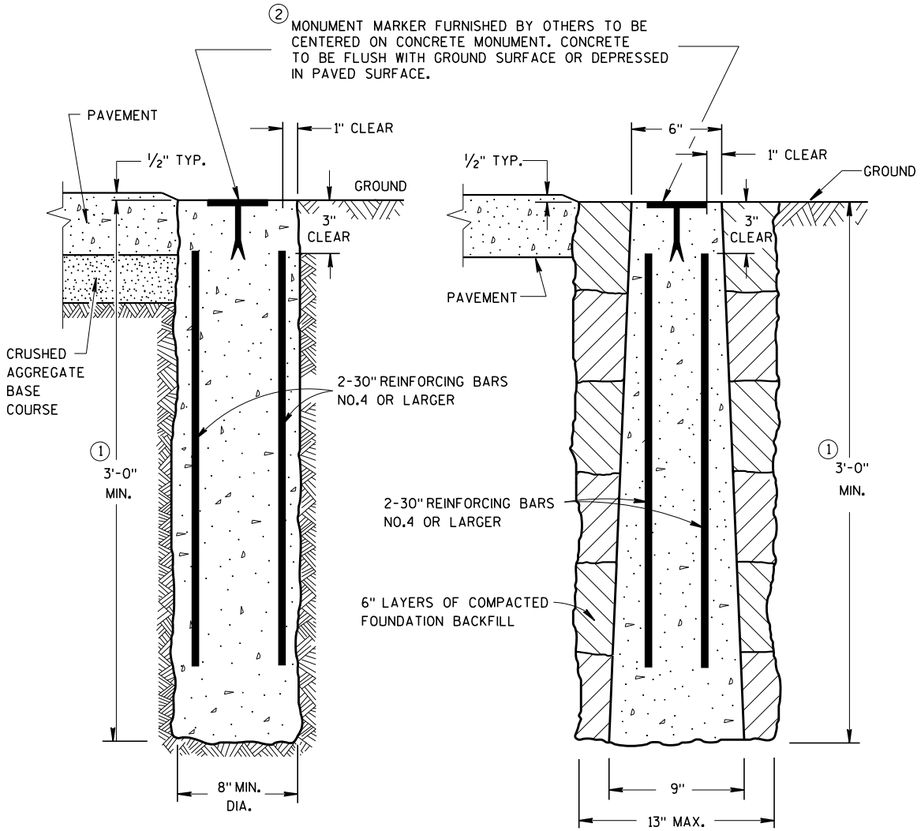

CAST-IN-PLACE

PRECAST

CONCRETE MONUMENTS

TYPE A

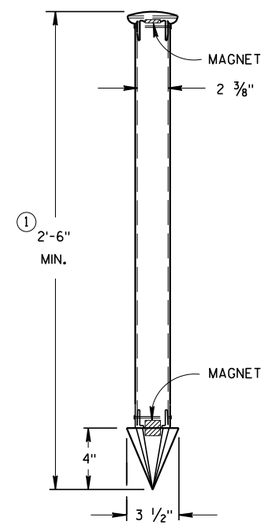

TYPE C

DRIVE-IN MONUMENT

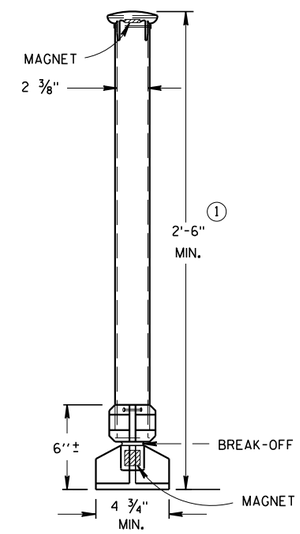

TYPE D
NON-DRIVEN
BREAK-OFF MONUMENT

ALUMINUM MONUMENTS

(INCLUDES MARKER)

GENERAL NOTES

DETAILS OF CONSTRUCTION, MATERIALS AND WORKMANSHIP NOT SHOWN ON THIS DRAWING SHALL CONFORM TO THE PERTINENT REQUIREMENTS OF THE STANDARD SPECIFICATIONS AND THE APPLICABLE SPECIAL PROVISIONS.

DETAILED DRAWINGS OF PROPOSED ALTERNATE DESIGNS FOR METAL MONUMENTS OR MONUMENT COVERS SHALL BE SUBMITTED TO THE ENGINEER FOR APPROVAL.

PERMANENT MAGNETS SHALL BE INSERTED NEAR THE TOP AND BOTTOM OF ALL ALUMINUM MONUMENTS SO THE MONUMENT CAN EASILY BE DETECTED BY A METAL DETECTOR.

THE CAST IRON MONUMENT COVER SHALL BE A "NON-ROCKING" TYPE. ADJUSTMENT OF THE COVER TO GRADE MAY BE ACCOMPLISHED BY THE USE OF MORTAR AND BRICK, OR BY EITHER PRECAST OR CAST-IN-PLACE REINFORCED CONCRETE GRADE RINGS.

MONUMENTS SHALL BE LOCATED AND PLACED AT THE DIRECTION OF THE ENGINEER.

ALUMINUM MONUMENTS AND MONUMENT COVERS SHALL BE MADE FROM AN ALUMINUM AND MAGNESIUM ALLOY AS DETERMINED BY THE MANUFACTURER.

THE MONUMENT COVERS DETAILED ON THIS DRAWING ARE NOT EQUAL ALTERNATES. MONUMENT COVERS SHALL BE CAST IRON UNLESS ALUMINUM IS SPECIFIED ELSEWHERE IN THE CONTRACT.

MONUMENT SHALL BE CAST-IN-PLACE CONCRETE UNLESS PRECAST CONCRETE OR ALUMINUM MONUMENTS ARE SPECIFIED IN THE CONTRACT OR PERMITTED BY THE ENGINEER

① MINIMUM LENGTH SHALL BE 4'-0" FOR MONUMENTS INSTALLED IN PAVED AREAS.

② AN OFFICIAL COUNTY MONUMENT MARKER SUPPLIED BY A COUNTY MAY BE REQUIRED FOR SOME SECTION CORNERS AND WITNESS MONUMENTS INSTEAD OF THIS WIS DOT MARKER.

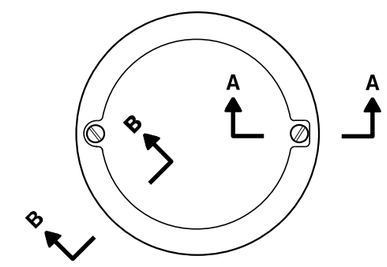

TOP VIEW

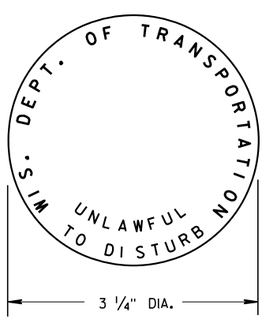

② **WIS DOT MONUMENT MARKER LOGO**

FOR TYPES "A", "C", & "D"

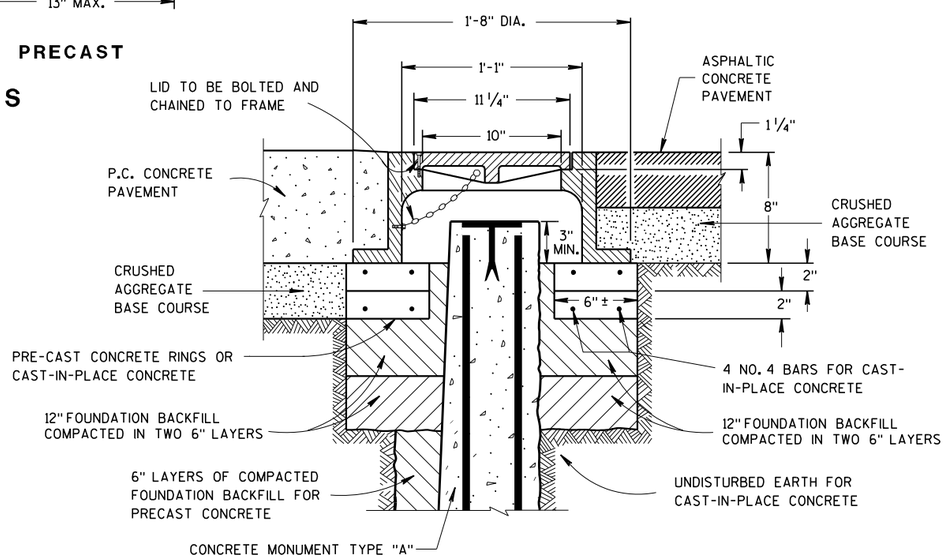

CAST IRON MONUMENT COVER

(APPROXIMATE WEIGHT 95 LBS)

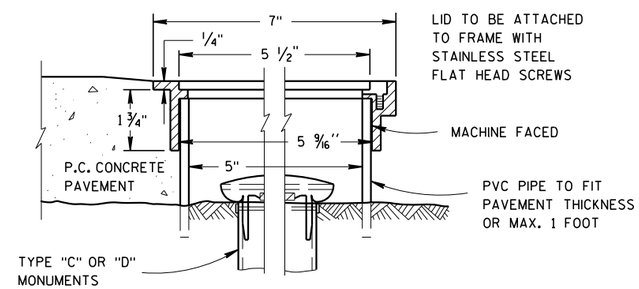

SECTION B-B SECTION A-A

ALUMINUM MONUMENT COVER

(APPROXIMATE WEIGHT 2 LBS)
(FOR CONCRETE PAVEMENT ONLY)

LANDMARK REFERENCE MONUMENTS AND COVERS

STATE OF WISCONSIN
DEPARTMENT OF TRANSPORTATION

APPROVED
March 2018 /S/ Raymond A. Kuzmanovi
DATE CHIEF SURVEYING AND M ENGINEER
FHWA

6

6

S.D.D. 16 A 1-7

S.D.D. 16 A 1-7

URBAN AREA

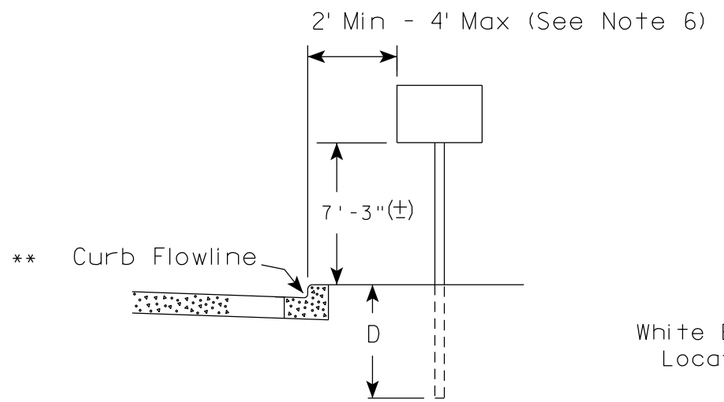

RURAL AREA (See Note 2)

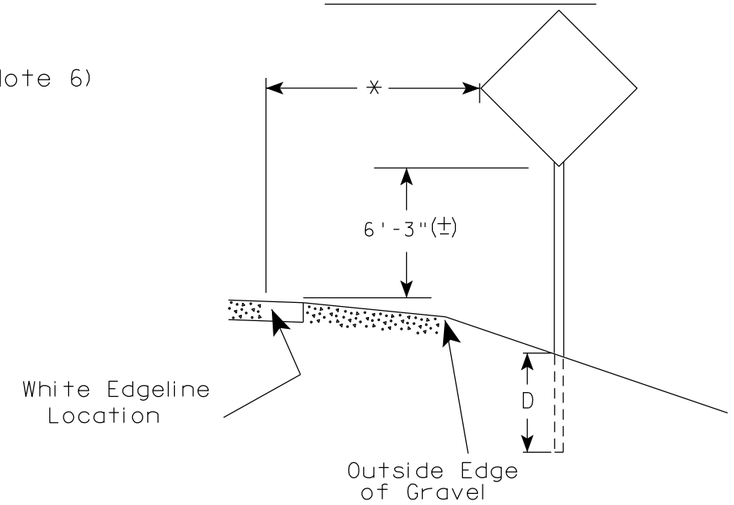

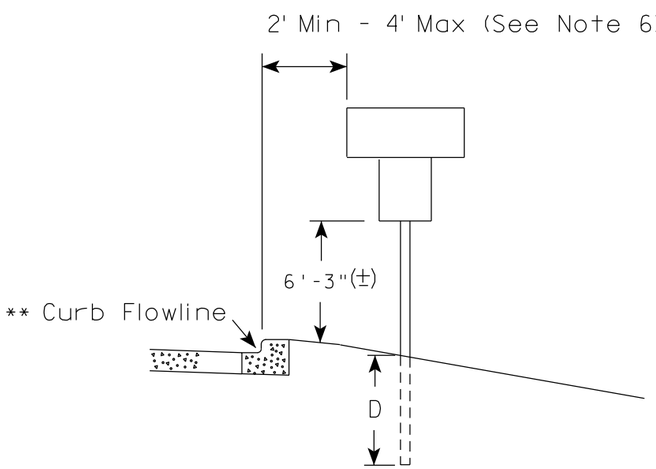

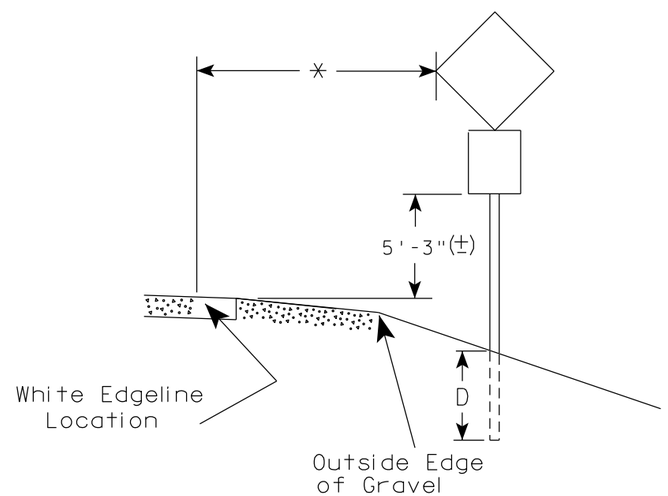

** The existence of curb and gutter does not in itself mandate the vertical clearance illustrated. That height is typically measured where there is sidewalk adjacent to the roadway or parking is permitted. In the absence of sidewalk vertical clearance is measured from the top of the curb. Offset of signs is measured from the flow line.

* 6 feet from edge of a paved shoulder or 12 feet from the edge of pavement (edge line location) or 2 feet from outside edge of gravel, whichever is greater unless directed by project engineer.

GENERAL NOTES

1. Signs wider than 4 feet or 20 sq.ft or larger, shall be mounted on multiple posts. Refer to plate A4-4.
2. If signs are mounted on or behind barrier wall, see A4-10 sign plate.
   The Double Arrow sign (W12-1D) shall be mounted at a height of 2'-3" (±). The Chevron sign (W1-8), Roundabout Chevron panel (R6-4B), Enhanced Reference Markers, Clearance Markers (W5-52), Mile Markers (D10 series), In Road Object Markers (W5-54) & End of Road Markers (W5-56) shall be mounted at a height of 4'-3" (±).
3. For expressways and freeways, mounting height is 7'- 3" (±) or 6'-3" (±) depending upon existence of a sub-sign.
4. Minimum mounting height for signs mounted on traffic signal poles is 5'- 3" (±).
5. Offset distance shall be consistent with existing signs or consistent throughout length of project.
6. The (±) tolerance for mounting height is 3 inches.
7. Folding signs shall be mounted at a height of 5'-3" (±) or as directd by the Engineer.

POST EMBEDMENT DEPTH

Area of Sign Installation (Sq.Ft.)	D (Min)
20 or Less	4'
Greater than 20	5'

TYPICAL INSTALLATION OF PERMANENT TYPE II SIGNS ON SINGLE POSTS

WISCONSIN DEPT OF TRANSPORTATION

APPROVED Matthew R Rauch for State Traffic Engineer

DATE 5/13/2020 PLATE NO. A4-3.22

7

7

PROJECT NO:	HWY:	COUNTY:		SHEET NO: 155	E

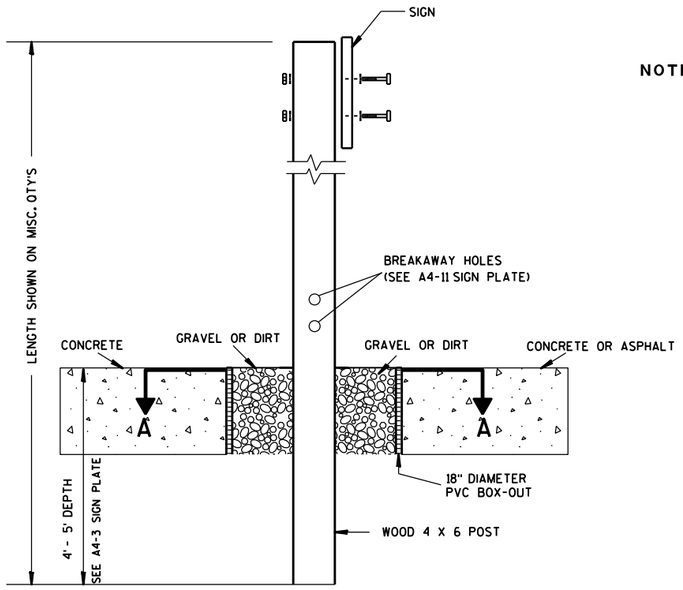

ELEVATION VIEW

DETAIL OF WOOD 4 X 6 SIGN POST IN BOX-OUT

NOTES:
1. ALL MATERIAL TO BE APPROVED BY ENGINEER PRIOR TO INSTALLATION
2. SEE SIGN PLATE A4-8 FOR SIGN HARDWARE REQUIREMENTS
3. 18 INCH X 18 INCH SQUARE BOX-OUTS MAY BE USED FOR INSTALLATIONS IN EXISTING CONCRETE OR ASPHALT LOCATIONS.

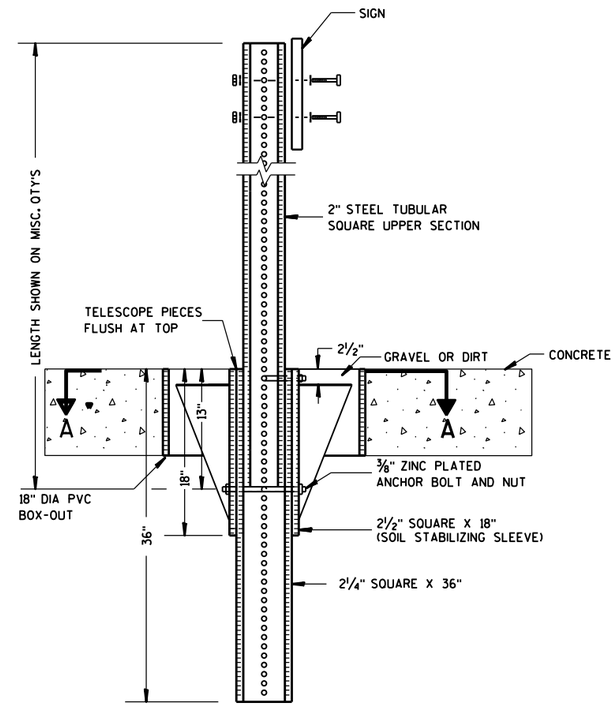

ELEVATION VIEW

DETAIL OF STEEL 2 X 2 SIGN POST IN BOX-OUT

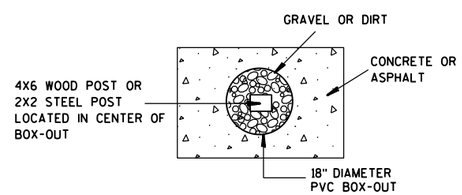

PLAN VIEW

FOR NEW CONCRETE/ASPHALT INSTALLATIONS

SIGN POST
BOX-OUTS
A4-3B

WISCONSIN DEPT OF TRANSPORTATION

APPROVED Matthew R Rauch
for State Traffic Engineer

DATE 1/27/14 PLATE NO. A4-3B.1

PROJECT NO:	HWY:	COUNTY:		SHEET NO:	E

URBAN AREA

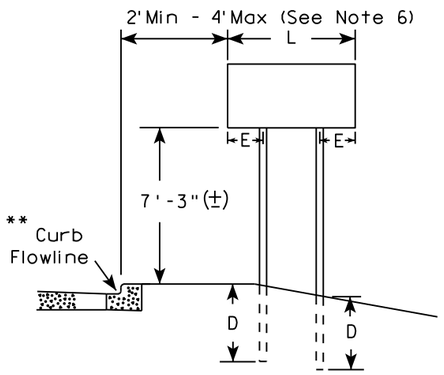

RURAL AREA (See Note 3)

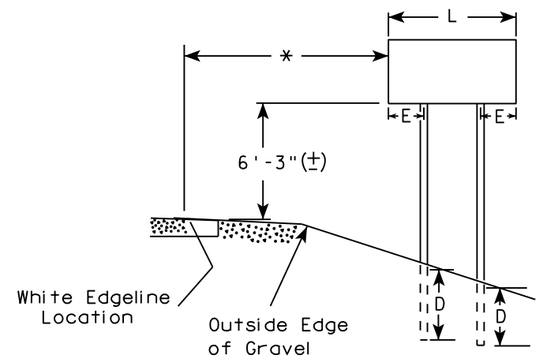

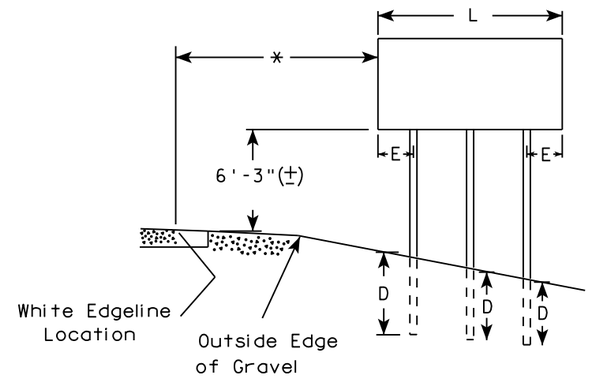

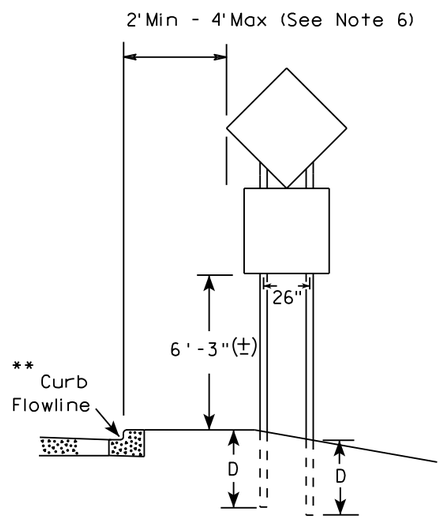

48" DIAMOND WARNING SIGN

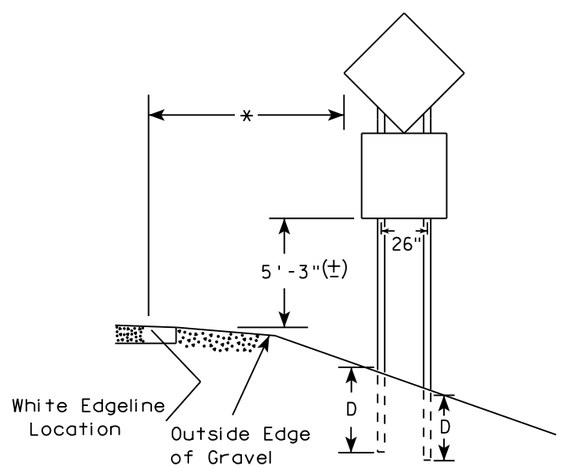

48" DIAMOND WARNING SIGN

SIGN SHAPE OTHER THAN DIAMOND (TWO POSTS REQUIRED)	
L	E
*** Greater than 48" Less than 60"	12"
60" to 108"	L/5

SIGN SHAPE OTHER THAN DIAMOND (THREE POSTS REQUIRED)	
L	E
Greater than 108" to 144"	12"

GENERAL NOTES

1. For 3 or 4 post installations, individual post spacing shall be greater than 3'-6".
2. See tables below for required number of posts.
3. For expressways and freeways, mounting height is 7'-3" (±) or 6'-3" (±) depending upon existence of sub-sign.
4. The (±) tolerance for mounting height is 3 inches.
5. J-Assemblies are considered to be one sign for mounting height.
6. Offset distance shall be consistent with existing signs or consistent throughout length of project.
7. Folding signs shall be mounted at a height of 5'-3" (±) or as directed by the engineer.
8. The Double Arrow sign (W12-1) shall be mounted at a height of 2'-3" (±). The Chevron sign (W1-8), Roundabout Chevron panel (R6-4B), Clearance Markers (W5-52), Mile Markers (D10 series), In Road Object Markers (W5-54) & End of Road Markers (W5-56) shall be mounted at a height of 4"-3" (±).

* 6 feet from edge of a paved shoulder or 12 feet from the edge of pavement (edge line location) or 2 feet from outside edge of gravel, whichever is greater unless directed by project engineer.

** The existence of curb and gutter does not in itself mandate the vertical clearance illustrated. That height is typically measured where there is sidewalk adjacent to the roadway or parking is permitted. In the absence of sidewalk vertical clearance is measured from the top of the curb. Offset of signs is measured from the flow line.

*** See A4-3 sign plate for signs 4' or less in width and less than 20 S.F. in area.

POST EMBEDMENT DEPTH

Area of Sign Installation (Sq. Ft.)	D (Min)
20 or Less	4'
Greater than 20	5'

TYPICAL INSTALLATION OF TYPE II SIGNS ON MULTIPLE POSTS

WISCONSIN DEPT OF TRANSPORTATION

APPROVED Matthew R Rauch
For State Traffic Engineer

DATE 8/21/17 PLATE NO. A4-4.15

7

7

PROJECT NO:	HWY:	COUNTY:		SHEET NO: 157	E

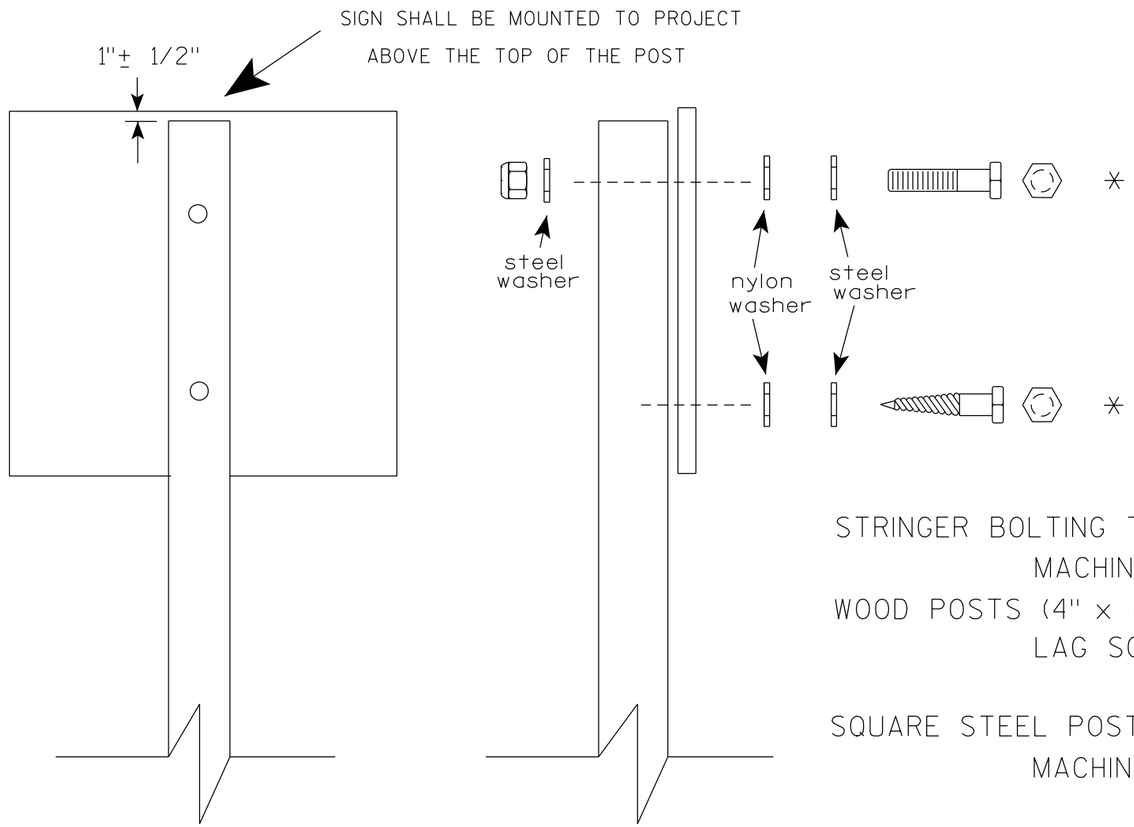

Nuts, bolts and lags used for mounting signs shall have hexagonal heads and shall be either :

a. Hot dip galvanized in accordance with ASTM Designation: A 153, Class D, or SC 3

b. Electro-galvanized in accordance with ASTM Designation : B 633, TYPE III, SC 3.

Threads on bolts and nuts shall be manufactured with sufficient allowance for the cadmium plate or galvanized coating to permit the nuts to run freely on the bolts.

STRINGER BOLTING TO ALUMINUM SIGNS (SEE SIGN PLATE A4-18)

MACHINE BOLTS - 5/16" X 1-3/4" Length w/ lock nuts

WOOD POSTS (4" x 6")

LAG SCREWS - 3/8" X 3" (NO STRINGERS ON BACK OF SIGN)
3/8" X 4" (STRINGERS ON BACK OF SIGN)

SQUARE STEEL POSTS (2" x 2")

MACHINE BOLTS - 3/8" X 3-1/4" Length w/ nuts (NO STRINGER ON BACK OF SIGN)
3/8" X 5" Length w/ nuts (STRINGERS ON BACK OF SIGN)

RIVETS - 9/32 " (6605-9-6) BULB-TITE, TRI-FOLD, ALUMINUM BODY/MANDREL
O.D. FLANGE .720-.765 INCH, GRIP RANGE .042-.375 INCH

WASHERS (ALL POSTS) -

1-1/4" O.D. X 3/8" I.D. X 1/16" STEEL
1-1/4" O.D. X 3/8" I.D. X .080 NYLON

* Two different fastening systems are shown for illustration purposes. On any individual sign, either one or the other system shall be used. Actual number of fasteners per sign varies with the sign area, but normally there are two. For a single post installation, all signs greater than 9 sq. ft. require the use of 3 fasteners.

ATTACHMENT OF SIGNS TO POSTS

WISCONSIN DEPT OF TRANSPORTATION

APPROVED Matthew R Rauch
for State Traffic Engineer

DATE 4/1/2020 PLATE NO. A4-8.9

TELESCOPIC TUBING ANCHORS
TWO PIECE SYSTEM

2 1/4" SQUARE
12 GAUGE
PERFORATED
GALVANIZED FINISH

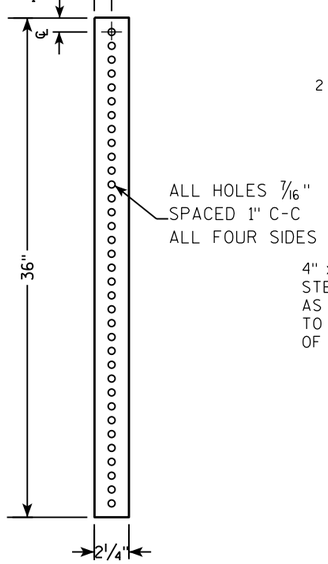

2 1/2" SQUARE
12 GAUGE
OMNI-DIRECTIONAL
PERFORATED
SOIL STABILIZING SLEEVE
GALVANIZED FINISH

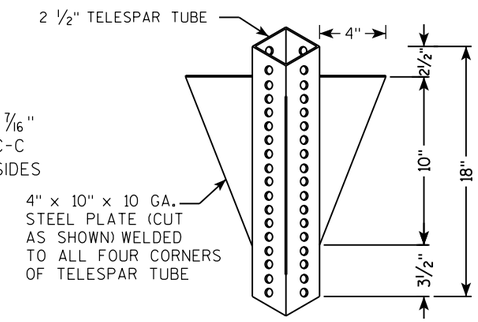

DETAIL OF TUBULAR STEEL SIGN POST
(IN POURED CONCRETE OR ASPHALT)

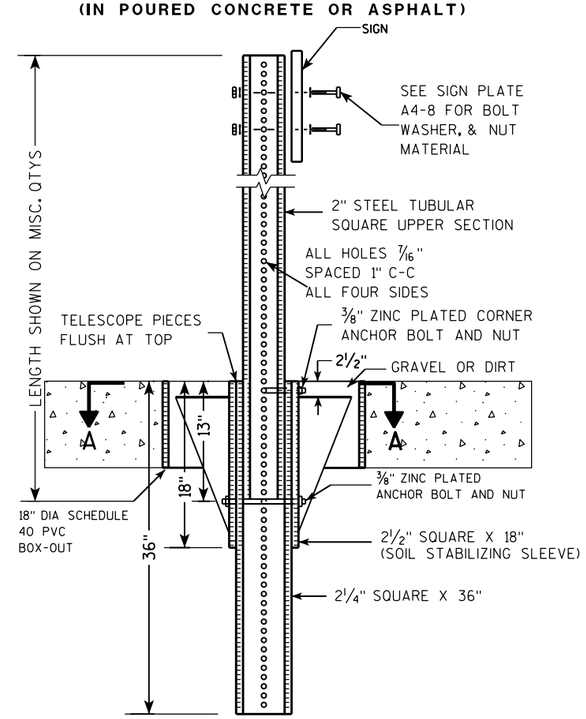

DETAIL OF TUBULAR STEEL SIGN POST
(IN LOCATIONS OTHER THAN POURED CONCRETE OR ASPHALT)

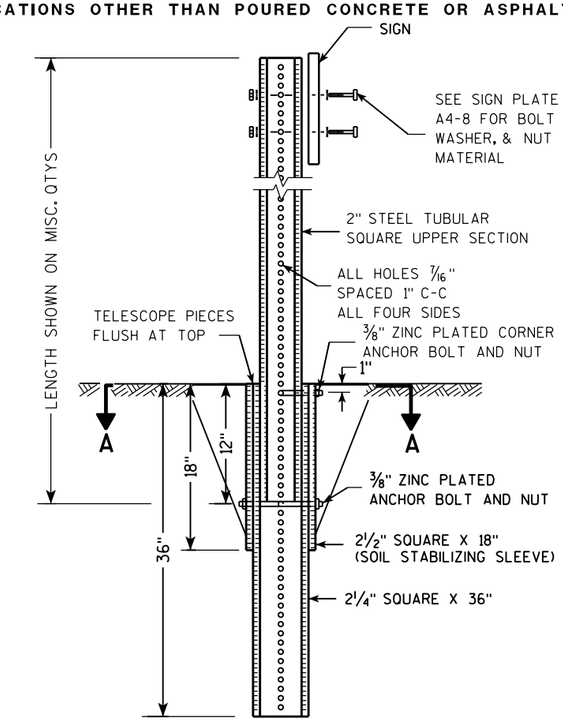

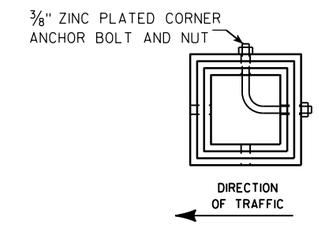

SECTION A-A

Area of Sign Installation (Sq. Ft.)	Number of Required Posts
9 or less	1
Greater than 9 less than or equal to 18	2
Greater than 18 less than or equal to 27	3

Signs wider than 3 feet or larger than 9 sq. ft shall be mounted on multiple posts (see above table).

TUBULAR STEEL
SIGN POST
A4-9

WISCONSIN DEPT OF TRANSPORTATION

APPROVED Matthew R Rauch
for State Traffic Engineer

DATE 2/05/15 PLATE A4-9.9

7 7

PROJECT NO:	HWY:	COUNTY:		SHEET NO:	E

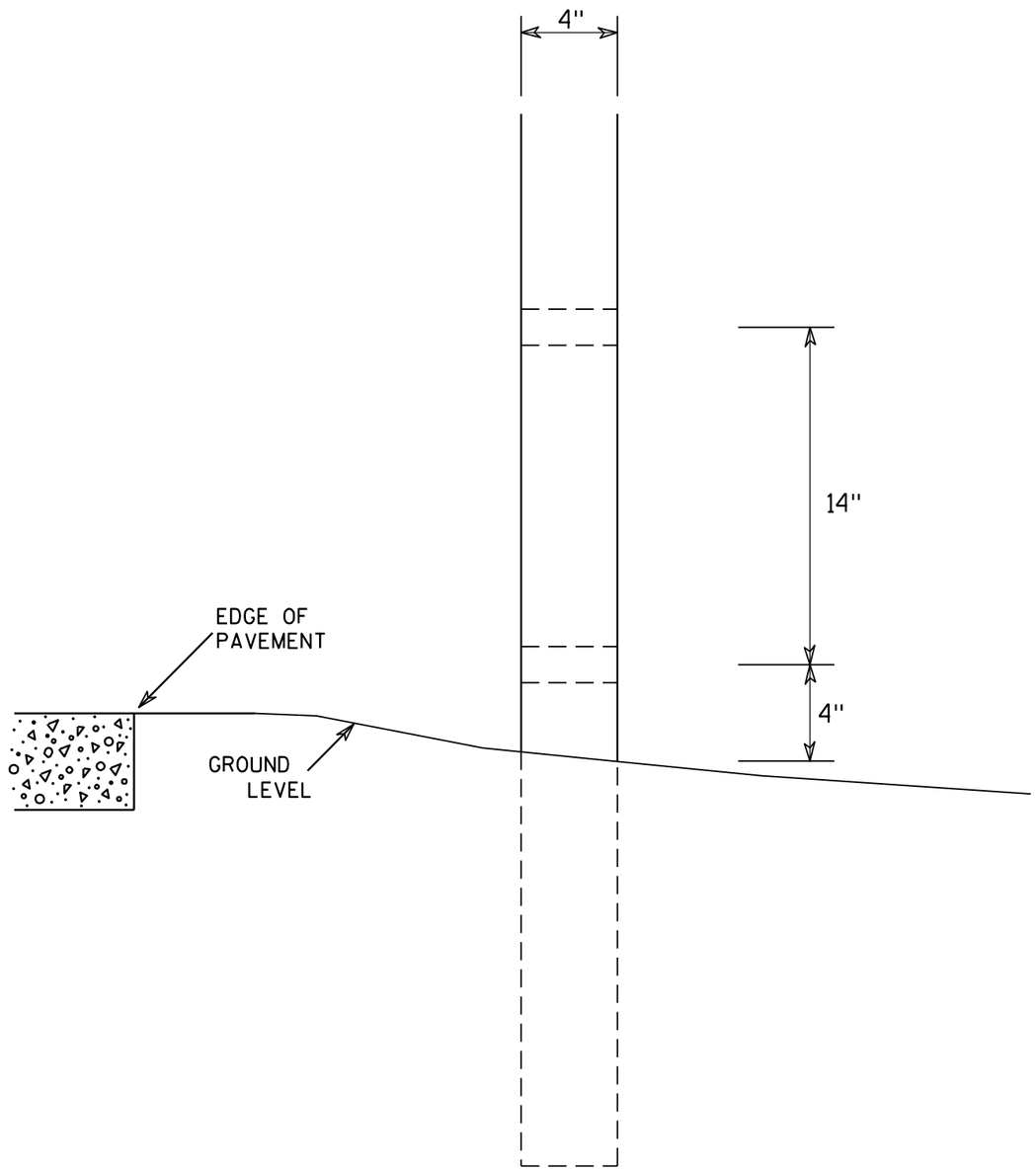

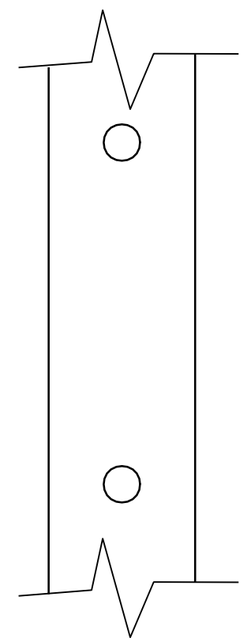

SIDE VIEW

GENERAL NOTES

1. All 4 x 6 Wood Posts shall be modified by having two 1½" diameter holes drilled perpendicular to the roadway centerline.

4 X 6 WOOD POST MODIFICATIONS

WISCONSIN DEPT OF TRANSPORTATION

APPROVED Chester J Spang for State Traffic Engineer

DATE 3/27/97 PLATE NO. A4-11.2

PROJECT NO:	HWY:	COUNTY:		SHEET NO: 160	E

BANDING

SINGLE SIGN

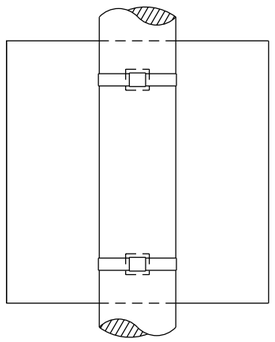

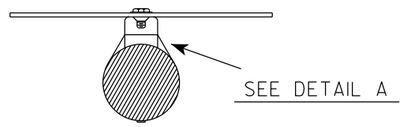

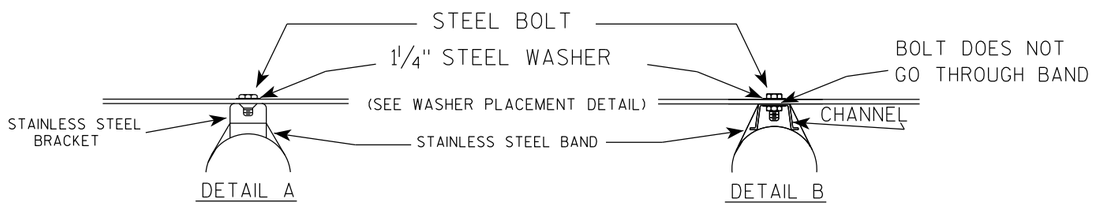

WASHER PLACEMENT

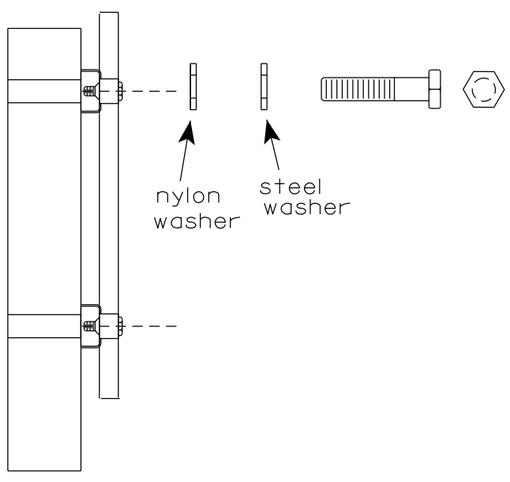

WASHERS (ALL POSTS) -
1-1/4" O.D. X 3/8" I.D. X 1/16" STEEL
1-1/4" O.D. X 3/8" I.D. X .080 NYLON
FOR ALL TYPE H SIGNS

GENERAL NOTES

1. Any sign over 3 feet in width shall use the V-Block banding method. See A5-10 standard plate.
2. Signs 3 feet or greater in height shall have three bracket bands installed. Signs less than 3 feet in height shall have two bracket bands installed.
3. Banding and assembly bracket shall be stainless steel. All bands shall be 3/4" in width and 0.025" thickness.
4. ALL SIGN MOUNTING BOLTS AND WASHERS SHALL BE EITHER:
   a. Hot dip or mechanically galvanized in accordance with ASTM Designation: A 153, Class D
   b. Electro-galvanized in accordance with ASTM designation: B 633, Type III, SC 3

"J" ASSEMBLY

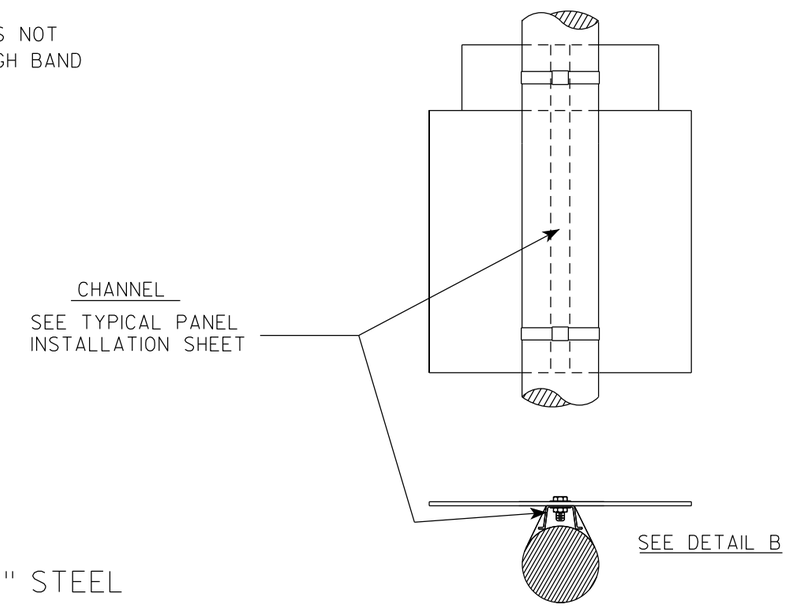

STANDARD SIGN
SIGN BANDING DETAILS

WISCONSIN DEPT OF TRANSPORTATION

APPROVED Matthew R Rauch for State Traffic Engineer

DATE 6/10/19 PLATE NO. A5-9.4

PROJECT NO:	HWY:	COUNTY:		SHEET NO: 161	E

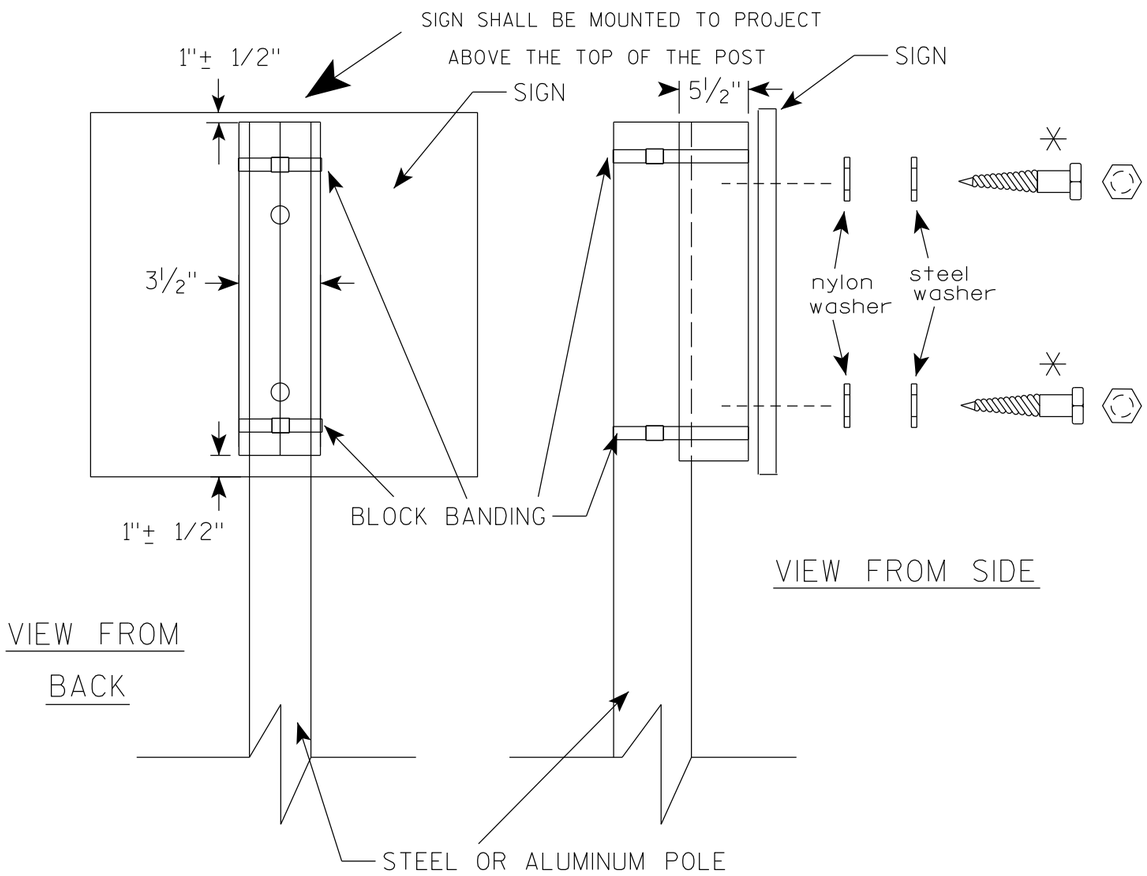

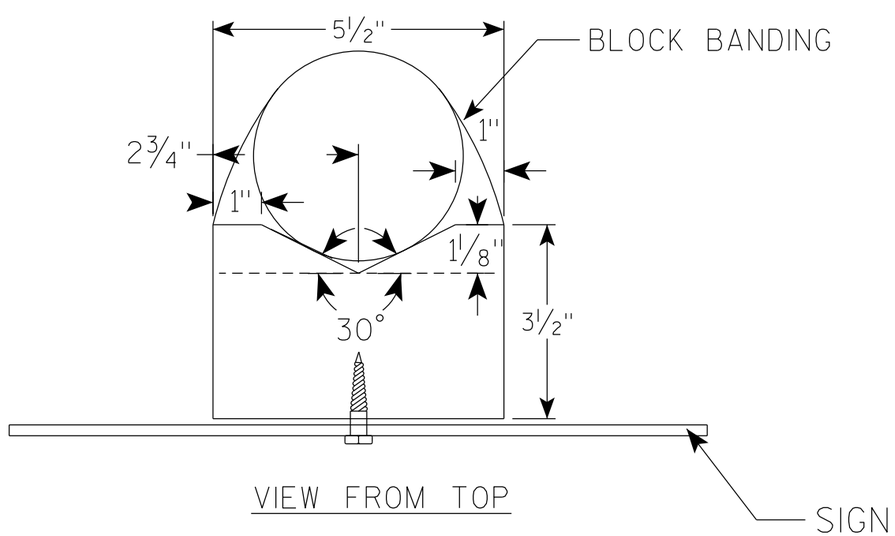

GENERAL NOTES

1. WOOD 4"X6" POST MATERIAL SHALL CONFORM TO 507.2.2 OF THE WisDOT STANDARD SPECIFICATIONS
2. BLOCK BANDING AND CLIPS SHALL BE STAINLESS STEEL, 3/4" WIDTH AND 0.025" THICKNESS
3. SIGNS 3' OR GREATER IN HEIGHT SHALL UTILIZE 3 BLOCK BANDS. SIGNS UNDER 3' IN HEIGHT SHALL UTILIZE 2 BLOCK BANDS
4. ACTUAL NUMBER OF FASTENERS PER SIGN VARIES WITH THE SIGN AREA, BUT NORNALLY THERE ARE TWO. FOR SIGNS GREATER THAN 9 S.F. 3 FASTENERS SHALL BE USED.
5. ALL SIGN MOUNTING BOLTS AND WASHERS SHALL BE EITHER:
   a. Hot dip or mechanically galvanized in accordance with ASTM Designation: A 153, Class D
   b. Electro-galvanized in accordance with ASTM Designation : B 633, TYPE III, SC 3
6. ALL BOLTS SHALL HAVE HEXAGONAL HEADS.
7. STEEL WASHERS SHALL BE 1 1/4" O.D. X 3/8" I.D. X 1/16"
8. NYLON WASHERS SHALL BE 1 1/4" O.D. X 3/8" I.D. X .080 FOR TYPE H OR TYPE F FACE SIGN

✳ LAG BOLTS SHALL BE 3/8" X 2 1/2"

BLOCK BANDING DETAIL
(V-BLOCK OPTION)

WISCONSIN DEPT OF TRANSPORTATION

APPROVED Matthew R Rauch
For State Traffic Engineer

DATE 6/10/19 PLATE NO. A5-10.2

PROJECT NO:				SHEET NO: 162	E

NOTES

1. Sign is Type II - Type F Reflective
2. Color:
   Background - Orange
   Message - Black
3. Message Series - C
4. Corners may be square or rounded when base material is plywood but borders shall be rounded as shown. When base material is metal, the corners and borders shall be rounded.

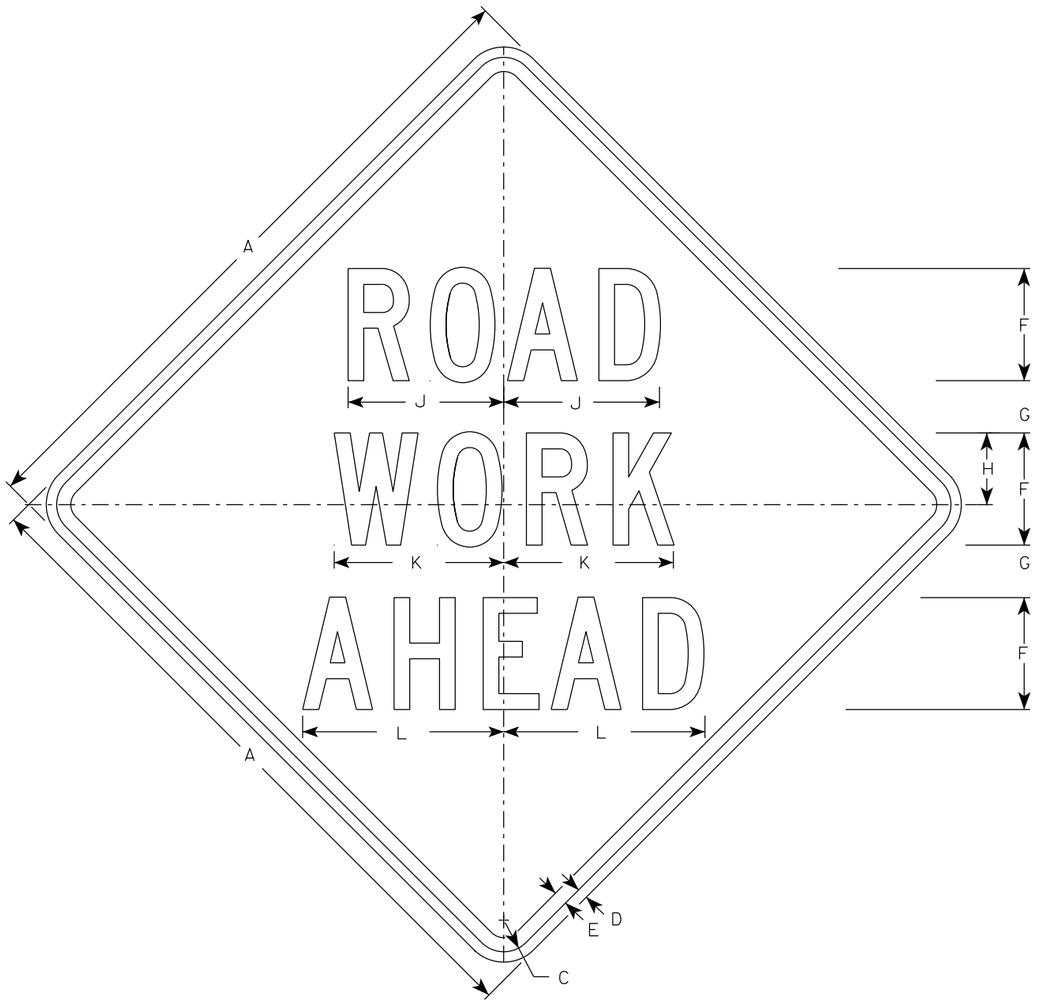

W20-1A

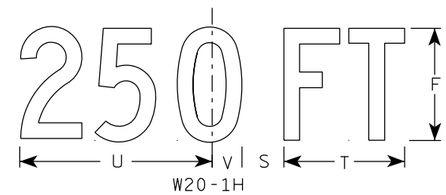

W20-1H

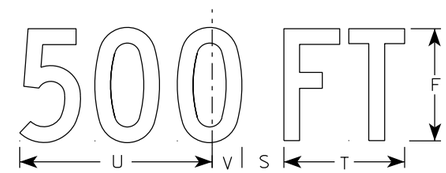

W20-1D

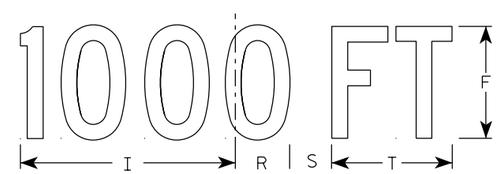

W20-1C

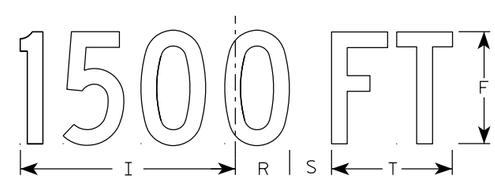

W20-1B

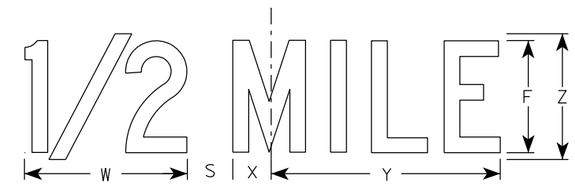

W20-1G

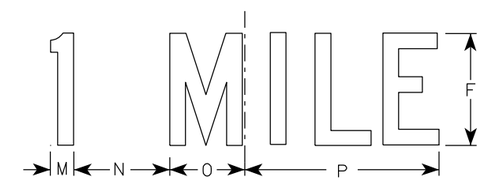

W20-1F

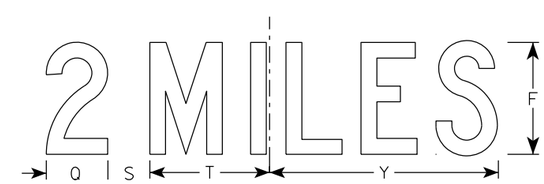

W20-1E

SIZE	A	B	C	D	E	F	G	H	I	J	K	L	M	N	O	P	Q	R	S	T	U	V	W	X	Y	Z	Area sq. ft.
1	36		1 5/8	5/8	3/4	5	2 5/8	3 1/4	10 1/8	7	7 5/8	8 7/8	1 1/8	4 1/2	3 1/2	9	3 1/4	2 1/2	2 1/4	5 5/8	9	1 3/8	8	1 3/4	10 3/4	6	9.0
2S	48		2 1/4	3/4	1	8	3 3/4	5 1/8	15 3/8	11 1/8	12 1/8	14 3/8	1 5/8	6 7/8	5 3/8	13 7/8	4 3/8	3 7/8	3	8 5/8	13 3/4	2 1/8	11 7/8	2 3/4	16 3/8	9	16.0
2M	48		2 1/4	3/4	1	8	3 3/4	5 1/8	15 3/8	11 1/8	12 1/8	14 3/8	1 5/8	6 7/8	5 3/8	13 7/8	4 3/8	3 7/8	3	8 5/8	13 3/4	2 1/8	11 7/8	2 3/4	16 3/8	9	16.0
3	48		2 1/4	3/4	1	8	3 3/4	5 1/8	15 3/8	11 1/8	12 1/8	14 3/8	1 5/8	6 7/8	5 3/8	13 7/8	4 3/8	3 7/8	3	8 5/8	13 3/4	2 1/8	11 7/8	2 3/4	16 3/8	9	16.0
4	48		2 1/4	3/4	1	8	3 3/4	5 1/8	15 3/8	11 1/8	12 1/8	14 3/8	1 5/8	6 7/8	5 3/8	13 7/8	4 3/8	3 7/8	3	8 5/8	13 3/4	2 1/8	11 7/8	2 3/4	16 3/8	9	16.0
5	48		2 1/4	3/4	1	8	3 3/4	5 1/8	15 3/8	11 1/8	12 1/8	14 3/8	1 5/8	6 7/8	5 3/8	13 7/8	4 3/8	3 7/8	3	8 5/8	13 3/4	2 1/8	11 7/8	2 3/4	16 3/8	9	16.0

STANDARD SIGN
W20-1A, B, C, D, E, F, G & H

WISCONSIN DEPT OF TRANSPORTATION

APPROVED Matthew R Rauch
For State Traffic Engineer
DATE 3/25/2020 PLATE NO. W20-1.11

PROJECT NO:

SHEET NO: 163 E

EARTHWORK - MARLEY STREET

STATION	AREA (SF)						Incremental Vol (CY) (Unadjusted)						Cumulative Vol (CY)						Mass Ordinate
	Cut	Unusable Pavement Material	Fill	Select Borrow Fill	Salvaged Topsoil	Marsh Exc	Cut	Unusable Pavement Material	Fill	Select Borrow Fill	Salvaged Topsoil	Marsh Exc	Cut	Expanded Fill	Expanded Select Borrow Backfill	Expanded Salvaged Topsoil Backfill	Expanded Marsh Backfill Select Borrow	Expanded Marsh Backfill Select Crushed	
													1.00	1.43	1.2	1.2	1.5	1.1	
							Note 1	Note 2	Note 3	Note 4	Note 5	Note 6	Note 1	Note 3	Note 4	Note 5	Note 7	Note 7	Note 8
64+25	4.0	0.0	0.2	0.0	0.0	0.0	0	0	0	0	0	0	0	0	0	0	0	0	0
64+50	21.1	0.0	0.0	0.0	0.0	0.0	12	0	0	0	0	0	12	0	0	0	0	0	11
64+75	10.6	0.0	0.0	0.0	0.0	0.0	15	0	0	0	0	0	26	0	0	0	0	0	26
65+00	12.9	0.0	0.0	0.0	0.0	0.0	11	0	0	0	0	0	37	0	0	0	0	0	37
BEGIN PROJECT																			
65+25	157.8	0.0	0.1	5.7	0.0	33.5	79	0	0	3	0	16	37	0	0	0	0	0	116
65+50	169.1	0.0	0.0	0.6	0.0	30.8	151	0	0	3	0	30	188	0	3	0	31	0	267
65+75	156.2	0.0	0.0	2.0	0.0	26.5	151	0	0	1	0	27	339	0	5	0	71	0	418
66+00	132.3	0.0	0.6	7.5	0.0	26.4	134	0	0	4	0	24	472	1	10	0	106	0	551
66+25	129.1	0.0	0.3	7.4	0.0	25.9	121	0	0	7	0	24	593	1	18	0	140	0	671
66+50	123.2	0.0	1.1	8.6	0.0	24.8	117	0	1	7	0	23	710	2	27	0	173	0	787
66+75	114.4	0.0	3.8	15.0	0.0	24.4	110	0	2	11	0	23	820	5	40	0	205	0	894
67+00	111.7	0.0	5.1	18.2	0.0	23.7	105	0	4	15	0	22	925	11	59	0	236	0	993
67+25	140.1	0.0	5.1	10.0	0.0	23.8	117	0	5	13	0	22	1,041	18	75	0	267	0	1,102
67+50	109.7	0.0	6.3	17.4	0.0	23.0	116	0	5	13	0	22	1,157	26	90	0	297	0	1,211
67+75	108.5	0.0	11.1	20.4	0.0	21.6	101	0	8	18	0	21	1,258	37	111	0	327	0	1,300
68+00	104.4	0.0	11.9	22.8	0.0	21.4	99	0	11	20	0	20	1,356	52	135	0	355	0	1,383
68+25	102.6	0.0	10.3	22.2	0.0	21.3	96	0	10	21	0	20	1,452	67	160	0	382	0	1,464
68+50	103.2	0.0	10.5	24.4	0.0	21.1	95	0	10	22	0	20	1,547	81	186	0	410	0	1,546
68+75	131.5	0.0	10.6	24.9	0.0	21.1	109	0	10	23	0	20	1,656	95	213	0	437	0	1,641
69+00	129.8	0.0	11.8	26.4	0.0	21.1	121	0	10	24	0	20	1,777	110	242	0	464	0	1,747
69+25	145.1	0.0	11.4	24.4	0.0	21.8	127	0	11	24	0	20	1,904	125	270	0	492	0	1,859
69+50	189.2	0.0	22.2	0.0	0.0	21.0	155	0	16	11	0	20	2,059	147	283	0	519	0	1,991
69+75	168.6	0.0	7.0	15.9	0.0	24.3	166	0	14	7	0	21	2,225	167	292	0	547	0	2,138
70+00	180.2	0.0	12.6	4.0	0.0	23.6	161	0	9	9	0	22	2,386	179	303	0	577	0	2,286
70+25	207.6	0.0	2.6	2.2	0.0	27.1	180	0	7	3	0	23	2,566	190	307	0	609	0	2,456
70+50	195.3	0.0	1.0	2.7	0.0	30.8	187	0	2	2	0	27	2,752	192	309	0	644	0	2,640
70+75	186.1	0.0	1.1	3.3	0.0	0.0	177	0	1	3	0	14	2,929	193	313	0	672	0	2,815
71+15	182.1	0.0	1.4	3.9	0.0	0.0	271	0	2	5	0	0	3,200	196	319	0	688	0	3,083
71+50	156.8	0.0	3.0	7.5	0.0	0.0	222	0	3	7	0	0	3,421	200	328	0	688	0	3,300
71+75	129.0	0.0	1.1	6.3	0.0	0.0	132	0	2	6	0	0	3,553	203	336	0	688	0	3,430
72+00	132.0	0.0	0.3	5.7	0.0	0.0	121	0	1	6	0	0	3,674	204	342	0	688	0	3,550
72+25	194.2	0.0	0.0	6.4	0.0	0.0	151	0	0	6	0	0	3,825	204	349	0	688	0	3,701
72+50	140.7	0.0	0.0	6.1	0.0	0.0	155	0	0	6	0	0	3,980	204	356	0	688	0	3,856
72+75	143.3	0.0	8.6	0.0	0.0	0.0	131	0	4	3	0	0	4,112	210	359	0	688	0	3,982

Notes:	
1 - Cut	Cut includes Unusable Pavement Material
2 - Unusable Pavement Material	This does not show up in cross sections. Paid for as Item 204.0110 Removing Asphaltic Surface or 204.0100 Removing Concrete Pavement
3 - Fill	Fill areas outside the back of sidewalk only. (See Construction Detail)
4 - Select Borrow Fill	For fill areas behind curb/under terrace and under sidewalk. Will be backfilled with Select Borrow (See Construction Detail)
5 - Salvaged Topsoil	Area used for backfill quantity calculation only. Excavation for Salvaged Topsoil incidental to Item 625.0500 Salvaged Topsoil. Will be backfilled with Select Borrow. (See Construction Detail)
6 - Marsh Excavation	Anticipated marsh excavation areas shown in cross sections.
7 - Expanded Marsh Backfill	Marsh Excavation under proposed roadway backfilled with Item 312.0110 Select Crushed, outside of proposed roadway backfilled with Item 208.1100 Select Borrow. (See Construction Detail)
8 - Mass Ordinate	Cut + EBS - Unsuable Pavement Material - Fill * Fill Factor

EARTHWORK - MARLEY STREET (CONTINUED)

STATION	AREA (SF)						Incremental Vol (CY) (Unadjusted)						Cumulative Vol (CY)						Mass Ordinate
	Cut	Unusable Pavement Material	Fill	Select Borrow Fill	Salvaged Topsoil	Marsh Exc	Cut	Unusable Pavement Material	Fill	Select Borrow Fill	Salvaged Topsoil	Marsh Exc	Cut	Expanded Fill	Expanded Select Borrow Backfill	Expanded Salvaged Topsoil Backfill	Expanded Marsh Backfill Select Borrow	Expanded Marsh Backfill Select Crushed	
													1.00	1.43	1.2	1.2	1.5	1.1	
							Note 1	Note 2	Note 3	Note 4	Note 5	Note 6	Note 1	Note 3	Note 4	Note 5	Note 7	Note 7	Note 8
73+00	89.7	0.0	14.8	29.8	0.0	0.0	108	0	11	14	0	0	4,220	225	376	0	688	0	4,074
73+25	82.4	0.0	17.0	38.9	0.0	0.0	80	0	15	32	0	0	4,299	246	414	0	688	0	4,133
73+50	83.1	0.0	21.3	42.3	0.0	0.0	77	0	18	38	0	0	4,376	271	459	0	688	0	4,184
73+75	85.0	0.0	19.4	36.7	0.0	0.0	78	0	19	37	0	0	4,454	298	503	0	688	0	4,235
74+00	126.2	0.0	11.4	22.2	0.0	0.0	98	0	14	27	0	0	4,552	319	536	0	688	0	4,312
74+25	98.9	0.0	10.6	23.9	0.0	0.0	104	0	10	21	0	0	4,656	333	562	0	688	0	4,402
74+50	159.9	0.0	4.1	4.4	0.0	0.0	120	0	7	13	0	0	4,776	343	577	0	688	0	4,512
74+75	110.3	0.0	25.4	4.3	0.0	0.0	125	0	14	4	0	0	4,901	363	582	0	688	0	4,617
75+00	145.8	0.0	6.8	15.6	0.0	0.0	119	0	15	9	0	0	5,019	384	593	0	688	0	4,715
75+25	151.5	0.0	5.1	16.4	13.8	0.0	138	0	6	15	6	0	5,157	392	611	8	688	0	4,844
75+50	125.8	0.0	7.8	20.1	19.6	0.0	128	0	6	17	15	0	5,285	400	631	26	688	0	4,964
75+75	128.6	0.0	8.9	19.9	19.5	0.0	118	0	8	19	18	0	5,403	411	653	48	688	0	5,071
76+00	118.5	0.0	10.7	23.7	19.9	11.9	114	0	9	20	18	6	5,518	424	678	70	688	2	5,172
76+25	115.2	0.0	11.9	28.3	20.5	18.7	108	0	10	24	19	14	5,626	439	707	92	688	9	5,266
76+50	113.5	0.0	27.5	13.1	20.5	25.7	106	0	18	19	19	21	5,732	465	730	115	688	19	5,345
76+75	113.9	0.0	10.3	27.5	39.5	29.7	105	0	18	19	28	26	5,837	490	752	148	688	32	5,426
77+00	141.7	0.0	24.4	13.3	43.0	23.8	118	0	16	19	38	25	5,955	513	775	194	688	44	5,521
77+44	213.6	0.0	0.0	19.1	0.0	22.1	289	0	20	26	35	37	6,244	542	806	236	688	64	5,781
78+00	143.8	0.0	12.4	27.6	20.6	0.0	371	0	13	49	21	23	6,615	560	865	262	688	77	6,134
78+25	132.3	0.0	7.9	22.1	21.0	0.0	128	0	9	23	19	0	6,743	574	892	285	688	77	6,249
78+50	131.7	0.0	22.5	0.1	21.5	0.0	122	0	14	10	20	0	6,865	594	904	309	688	77	6,351
78+75	114.2	0.0	9.1	19.9	22.1	0.0	114	0	15	9	20	0	6,979	615	916	333	688	77	6,444
79+00	103.5	0.0	10.6	30.8	22.3	0.0	101	0	9	23	21	0	7,080	628	944	357	688	77	6,532
79+25	87.3	0.0	12.7	36.0	22.5	10.7	88	0	11	31	21	5	7,168	643	981	382	688	77	6,604
79+50	91.9	0.0	22.2	28.7	22.0	11.6	83	0	16	30	21	10	7,251	666	1,017	407	688	77	6,664
79+75	94.5	0.0	19.1	26.7	55.5	10.2	86	0	19	26	36	10	7,338	694	1,048	450	688	77	6,723
80+00	94.7	0.0	15.7	35.4	43.0	11.4	88	0	16	29	46	10	7,425	717	1,082	505	688	77	6,788
80+25	97.0	0.0	35.1	10.3	42.0	11.9	89	0	24	21	39	11	7,514	750	1,107	552	688	77	6,843
80+50	117.1	0.0	6.1	10.7	38.5	19.7	99	0	19	10	37	15	7,613	778	1,119	597	688	77	6,915
80+75	101.5	0.0	9.6	24.6	39.5	13.2	101	0	7	16	36	15	7,714	788	1,139	640	688	77	7,006
81+00	105.4	0.0	29.0	5.5	39.3	11.4	96	0	18	14	36	11	7,810	814	1,155	684	688	77	7,076
81+25	95.6	0.0	8.3	21.3	39.0	14.2	93	0	17	12	36	12	7,903	838	1,170	727	688	77	7,144
81+50	98.6	0.0	7.0	18.6	37.8	14.2	90	0	7	18	36	13	7,993	848	1,193	770	688	77	7,224
81+75	93.6	0.0	7.6	21.2	36.8	14.0	89	0	7	18	35	13	8,082	858	1,215	812	688	77	7,303
82+00	89.7	0.0	18.9	14.5	19.3	37.9	85	0	12	17	26	24	8,167	876	1,234	843	688	77	7,371

Notes:	
1 - Cut	Cut includes Unusable Pavement Material
2 - Unusable Pavement Material	This does not show up in cross sections. Paid for as Item 204.0110 Removing Asphaltic Surface or 204.0100 Removing Concrete Pavement
3 - Fill	Fill areas outside the back of sidewalk only. (See Construction Detail)
4 - Select Borrow Fill	For fill areas behind curb/under terrace and under sidewalk. Will be backfilled with Select Borrow (See Construction Detail)
5 - Salvaged Topsoil	Area used for backfill quantity calculation only. Excavation for Salvaged Topsoil incidental to Item 625.0500 Salvaged Topsoil. Will be backfilled with Select Borrow. (See Construction Detail)
6 - Marsh Excavation	Anticipated marsh excavation areas shown in cross sections.
7 - Expanded Marsh Backfill	Marsh Excavation under proposed roadway backfilled with Item 312.0110 Select Crushed, outside of proposed roadway backfilled with Item 208.1100 Select Borrow. (See Construction Detail)
8 - Mass Ordinate	Cut + EBS - Unsuable Pavement Material - Fill * Fill Factor

EARTHWORK - MARLEY STREET (CONTINUED)

STATION	AREA (SF)						Incremental Vol (CY) (Unadjusted)						Cumulative Vol (CY)						
	Cut	Unusable Pavement Material	Fill	Select Borrow Fill	Salvaged Topsoil	Marsh Exc	Cut	Unusable Pavement Material	Fill	Select Borrow Fill	Salvaged Topsoil	Marsh Exc	Cut	Expanded Fill	Expanded Select Borrow Backfill	Expanded Salvaged Topsoil Backfill	Expanded Marsh Backfill Select Borrow	Expanded Marsh Backfill Select Crushed	Mass Ordinate
													1.00	1.43	1.2	1.2	1.5	1.1	
							Note 1	Note 2	Note 3	Note 4	Note 5	Note 6	Note 1	Note 3	Note 4	Note 5	Note 7	Note 7	Note 8
82+25	86.5	0.0	23.6	14.8	19.0	35.5	82	0	20	14	18	34	8,248	904	1,251	864	688	77	7,424
82+50	84.7	0.0	10.6	29.4	19.5	36.0	79	0	16	20	18	33	8,328	926	1,275	885	688	77	7,481
82+75	86.5	0.0	23.3	14.2	19.3	39.7	79	0	16	20	18	35	8,407	949	1,300	907	688	77	7,537
83+00	87.7	0.0	9.3	27.5	19.5	42.5	81	0	15	19	18	38	8,488	970	1,323	928	688	77	7,597
83+25	86.3	0.0	22.8	14.8	36.0	14.8	81	0	15	20	26	27	8,568	992	1,346	959	688	77	7,656
83+50	80.9	0.0	24.0	18.3	36.3	14.1	77	0	22	15	33	13	8,646	1,023	1,365	999	688	77	7,702
83+75	75.1	0.0	32.5	16.4	37.5	13.7	72	0	26	16	34	13	8,718	1,060	1,384	1,040	688	77	7,737
84+00	75.1	0.0	11.9	36.5	36.5	13.5	70	0	21	24	34	13	8,787	1,089	1,413	1,082	688	77	7,777
84+25	75.4	0.0	23.3	22.8	35.8	17.7	70	0	16	27	33	14	8,857	1,113	1,446	1,122	688	77	7,824
84+50	73.9	0.0	10.2	38.1	35.8	17.3	69	0	16	28	33	16	8,926	1,135	1,480	1,162	688	77	7,871
84+75	72.5	0.0	10.3	39.6	36.3	17.2	68	0	9	36	33	16	8,994	1,148	1,523	1,202	688	77	7,925
85+00	68.2	0.0	11.7	42.8	36.3	17.4	65	0	10	38	34	16	9,059	1,163	1,569	1,242	688	77	7,975
85+25	68.3	0.0	11.8	39.2	19.8	39.0	63	0	11	38	26	26	9,122	1,179	1,615	1,273	695	77	8,023
85+50	64.6	0.0	13.5	37.8	19.5	37.5	62	0	12	36	18	35	9,184	1,195	1,657	1,295	714	77	8,068
85+75	64.7	0.0	30.8	19.0	19.0	42.2	60	0	21	26	18	37	9,244	1,225	1,689	1,316	741	77	8,098
86+00	62.9	0.0	32.1	18.8	19.5	38.1	59	0	29	18	18	37	9,303	1,266	1,710	1,338	768	77	8,116
86+25	57.3	0.0	35.9	19.0	19.8	36.2	56	0	31	18	18	34	9,358	1,311	1,731	1,360	794	77	8,126
86+50	56.1	0.0	41.6	18.4	20.5	38.8	53	0	36	17	19	35	9,411	1,363	1,752	1,382	819	77	8,127
86+75	53.9	0.0	20.4	44.2	21.0	38.6	51	0	29	29	19	36	9,462	1,404	1,786	1,405	843	77	8,137
87+00	53.7	0.0	23.7	47.2	21.3	49.3	50	0	20	42	20	41	9,512	1,433	1,837	1,428	869	77	8,158
87+25	48.5	0.0	26.2	51.2	21.5	51.4	47	0	23	46	20	47	9,559	1,466	1,892	1,452	899	77	8,172
87+50	48.3	0.0	46.2	34.4	21.5	46.7	45	0	34	40	20	45	9,604	1,514	1,939	1,476	931	79	8,169
87+75	44.8	0.0	26.3	57.5	21.8	49.5	43	0	34	43	20	45	9,647	1,562	1,990	1,500	963	82	8,164
88+00	41.2	3.7	27.4	59.7	21.5	48.2	40	2	25	54	20	45	9,687	1,597	2,056	1,524	994	87	8,167
88+25	39.4	3.7	28.5	64.0	21.5	73.5	37	3	26	57	20	56	9,724	1,634	2,124	1,548	1,026	119	8,164
88+50	40.2	3.7	31.9	65.3	0.0	69.8	37	3	28	60	10	66	9,761	1,674	2,196	1,560	1,058	176	8,157
88+75	42.6	3.7	31.7	62.8	0.0	73.5	38	3	29	59	0	66	9,799	1,716	2,267	1,560	1,091	234	8,150
89+00	42.0	3.7	30.1	54.8	0.0	80.2	39	3	29	54	0	71	9,838	1,757	2,333	1,560	1,124	295	8,145
89+25	46.5	3.7	25.9	45.3	0.0	82.0	41	3	26	46	0	75	9,879	1,794	2,388	1,560	1,155	355	8,145
89+50	49.9	3.7	21.3	38.8	0.0	82.7	45	3	22	39	0	76	9,924	1,826	2,435	1,560	1,187	412	8,155
89+75	53.6	3.7	19.5	36.0	0.0	82.8	48	3	19	35	0	77	9,972	1,853	2,477	1,560	1,220	467	8,173
90+00	58.1	3.7	19.3	34.9	0.0	78.5	52	3	18	33	0	75	10,024	1,878	2,516	1,560	1,253	519	8,196
90+25	85.6	3.7	16.5	26.7	0.0	73.0	67	3	17	29	0	70	10,090	1,902	2,550	1,560	1,286	565	8,235
90+50	87.4	3.7	12.7	19.3	0.0	74.2	80	3	14	21	0	68	10,170	1,921	2,576	1,560	1,318	604	8,292
90+75	75.9	3.7	13.4	21.4	0.0	75.8	76	3	12	19	0	69	10,246	1,939	2,598	1,560	1,350	645	8,347

Notes:	
1 - Cut	Cut includes Unusable Pavement Material
2 - Unusable Pavement Material	This does not show up in cross sections. Paid for as Item 204.0110 Removing Asphaltic Surface or 204.0100 Removing Concrete Pavement
3 - Fill	Fill areas outside the back of sidewalk only. (See Construction Detail)
4 - Select Borrow Fill	For fill areas behind curb/under terrace and under sidewalk. Will be backfilled with Select Borrow (See Construction Detail)
5 - Salvaged Topsoil	Area used for backfill quantity calculation only. Excavation for Salvaged Topsoil incidental to Item 625.0500 Salvaged Topsoil. Will be backfilled with Select Borrow. (See Construction Detail)
6 - Marsh Excavation	Anticipated marsh excavation areas shown in cross sections.
7 - Expanded Marsh Backfill	Marsh Excavation under proposed roadway backfilled with Item 312.0110 Select Crushed, outside of proposed roadway backfilled with Item 208.1100 Select Borrow. (See Construction Detail)
8 - Mass Ordinate	Cut + EBS - Unsuable Pavement Material - Fill * Fill Factor

EARTHWORK - MARLEY STREET (CONTINUED)

STATION	AREA (SF) Cut	Unusable Pavement Material	Fill	Select Borrow Fill	Salvaged Topsoil	Marsh Exc	Incremental Vol (CY) (Unadjusted) Cut Note 1	Unusable Pavement Material Note 2	Fill Note 3	Select Borrow Fill Note 4	Salvaged Topsoil Note 5	Marsh Exc Note 6	Cumulative Vol (CY) Cut 1.00 Note 1	Expanded Fill 1.43 Note 3	Expanded Select Borrow Backfill 1.2 Note 4	Expanded Salvaged Topsoil Backfill 1.2 Note 5	Expanded Marsh Backfill Select Borrow 1.5 Note 7	Expanded Marsh Backfill Select Crushed 1.1 Note 7	Mass Ordinate Note 8
91+00	79.1	3.7	14.0	22.0	0.0	76.2	72	3	13	20	0	70	10,318	1,957	2,622	1,560	1,382	688	8,397
91+25	79.3	3.7	15.3	23.1	0.0	78.9	73	3	14	21	0	72	10,391	1,976	2,647	1,560	1,415	730	8,448
91+50	78.6	3.7	16.3	24.7	0.0	83.5	73	3	15	22	0	75	10,464	1,997	2,674	1,560	1,447	776	8,497
91+75	77.5	3.7	14.9	26.1	0.0	82.4	72	3	14	24	0	77	10,536	2,018	2,702	1,560	1,480	824	8,545
92+00	84.7	3.7	14.1	23.8	0.0	82.0	75	3	13	23	0	76	10,611	2,037	2,730	1,560	1,512	872	8,598
92+25	84.3	3.7	19.0	18.1	0.0	91.8	78	3	15	19	0	80	10,690	2,059	2,753	1,560	1,545	923	8,650
92+50	79.5	3.7	20.5	33.9	0.0	80.5	76	3	18	24	0	80	10,765	2,085	2,782	1,560	1,579	978	8,697
92+75	75.8	3.7	18.9	33.3	0.0	86.0	72	3	18	31	0	77	10,837	2,111	2,819	1,560	1,612	1,033	8,739
93+00	74.1	3.7	18.8	34.9	0.0	85.6	69	3	17	32	0	79	10,907	2,136	2,857	1,560	1,645	1,087	8,780
93+25	72.3	3.7	17.0	32.0	0.0	85.5	68	3	17	31	0	79	10,974	2,160	2,895	1,560	1,678	1,139	8,821
93+50	70.3	3.7	15.9	30.3	0.0	82.8	66	3	15	29	0	78	11,040	2,182	2,929	1,560	1,711	1,189	8,862
93+75	69.4	3.7	15.3	28.5	0.0	78.9	65	3	14	27	0	75	11,105	2,202	2,962	1,560	1,744	1,235	8,902
94+00	67.2	3.7	14.3	25.7	0.0	82.2	63	3	14	25	0	75	11,168	2,222	2,992	1,560	1,776	1,279	8,943
94+25	67.4	3.7	15.2	23.6	0.0	78.9	62	3	14	23	0	75	11,231	2,241	3,019	1,560	1,808	1,323	8,982
94+50	68.0	3.7	13.2	20.2	0.0	77.0	63	3	13	20	0	72	11,293	2,260	3,044	1,560	1,841	1,365	9,022
94+75	74.7	4.0	9.5	15.5	0.0	83.1	66	4	11	17	0	74	11,359	2,275	3,063	1,560	1,875	1,406	9,070
95+44	421.7	16.0	0.0	0.0	0.0	0.0	632	25	12	20	0	106	11,991	2,293	3,087	1,560	1,993	1,462	9,659
96+28	101.5	7.3	7.9	0.0	0.0	0.0	818	36	12	0	0	0	12,809	2,310	3,087	1,560	2,079	1,462	10,422
96+50	92.2	7.3	10.2	0.0	0.0	0.0	79	6	7	0	0	0	12,887	2,321	3,087	1,560	2,079	1,462	10,484
96+75	79.3	7.3	14.2	0.0	0.0	0.0	79	7	11	0	0	0	12,967	2,337	3,087	1,560	2,079	1,462	10,541
97+00	70.5	7.3	25.1	0.0	0.0	0.0	69	7	18	0	0	0	13,036	2,363	3,087	1,560	2,079	1,462	10,577
97+25	72.3	7.3	13.6	0.0	0.0	0.0	66	7	18	0	0	0	13,102	2,388	3,087	1,560	2,079	1,462	10,611
97+50	64.3	7.3	6.0	2.1	0.0	0.0	63	7	9	1	0	0	13,165	2,401	3,088	1,560	2,079	1,462	10,655
97+75	71.6	7.3	7.3	2.5	0.0	0.0	63	7	6	2	0	0	13,228	2,410	3,091	1,560	2,079	1,462	10,702
98+00	82.2	21.9	8.5	1.4	0.0	0.0	71	14	7	2	0	0	13,300	2,421	3,093	1,560	2,079	1,462	10,749
98+25	96.0	17.8	9.3	0.7	0.0	0.0	83	18	8	1	0	0	13,382	2,433	3,094	1,560	2,079	1,462	10,802
98+50	102.7	14.7	15.6	0.2	0.0	0.0	92	15	12	0	0	0	13,474	2,449	3,095	1,560	2,079	1,462	10,862
98+75	106.6	12.3	32.9	0.0	0.0	0.0	97	13	22	0	0	0	13,571	2,481	3,095	1,560	2,079	1,462	10,914
99+00	108.7	10.7	39.6	0.0	0.0	0.0	100	11	34	0	0	0	13,671	2,529	3,095	1,560	2,079	1,462	10,955
99+25	103.7	10.0	33.3	0.0	0.0	0.0	98	10	34	0	0	0	13,769	2,577	3,095	1,560	2,079	1,462	10,996
99+50	99.9	9.5	31.6	0.0	0.0	0.0	94	9	30	0	0	0	13,863	2,620	3,095	1,560	2,079	1,462	11,038
99+75	101.8	9.5	7.9	0.0	0.0	0.0	93	9	18	0	0	0	13,957	2,646	3,095	1,560	2,079	1,462	11,096
100+00	96.7	10.0	35.8	0.0	0.0	0.0	92	9	20	0	0	0	14,048	2,675	3,095	1,560	2,079	1,462	11,150
100+25	93.7	10.0	38.6	0.0	0.0	0.0	88	9	34	0	0	0	14,137	2,725	3,095	1,560	2,079	1,462	11,180
100+50	88.0	10.0	40.1	0.0	0.0	0.0	84	9	36	0	0	0	14,221	2,777	3,095	1,560	2,079	1,462	11,203
100+75	77.3	10.0	26.1	0.0	0.0	0.0	77	9	31	0	0	0	14,297	2,821	3,095	1,560	2,079	1,462	11,226
101+00	59.4	10.0	0.0	0.0	0.0	0.0	63	9	12	0	0	0	14,361	2,838	3,095	1,560	2,079	1,462	11,263
							Totals: 14,440	339	1,985	2,582	1,300	3,621							

Notes:	
1 - Cut	Cut includes Unusable Pavement Material
2 - Unusable Pavement Material	This does not show up in cross sections. Paid for as Item 204.0110 Removing Asphaltic Surface or 204.0100 Removing Concrete Pavement
3 - Fill	Fill areas outside the back of sidewalk only. (See Construction Detail)
4 - Select Borrow Fill	For fill areas behind curb/under terrace and under sidewalk. Will be backfilled with Select Borrow (See Construction Detail)
5 - Salvaged Topsoil	Area used for backfill quantity calculation only. Excavation for Salvaged Topsoil incidental to Item 625.0500 Salvaged Topsoil. Will be backfilled with Select Borrow. (See Construction Detail)
6 - Marsh Excavation	Anticipated marsh excavation areas shown in cross sections.
7 - Expanded Marsh Backfill	Marsh Excavation under proposed roadway backfilled with Item 312.0110 Select Crushed, outside of proposed roadway backfilled with Item 208.1100 Select Borrow. (See Construction Detail)
8 - Mass Ordinate	Cut + EBS - Unsuable Pavement Material - Fill * Fill Factor

EARTHWORK - GLENDALE AVENUE

STATION	AREA (SF) Cut	Unusable Pavement Material	Fill	Select Borrow Fill	Marsh Excavation	Incremental Vol (CY) (Unadjusted) Cut Note 1	Unusable Pavement Material Note 2	Fill Note 3	Select Borrow Fill Note 4	Marsh Excavation Note 6	Cumulative Vol (CY) Cut 1.00 Note 1	Expanded Fill 1.43 Note 3	Expanded Select Borrow Backfill 1.2 Note 4	Expanded Marsh Backfill 1.5 Note 7	Mass Ordinate Note 8
201+25	47.1	10.0	0.0	0.0	0.0	0	0	0	0	0	0	0	0	0	0
201+50	69.1	10.0	0.0	0.0	0.0	54	9	0	0	0	54	0	0	0	45
201+75	72.4	10.0	3.5	3.0	16.6	66	9	2	1	8	119	2	2	12	98
202+00	75.9	10.0	5.6	6.0	25.2	69	9	4	4	19	188	8	7	41	152
202+25	79.7	10.0	7.8	8.0	27.6	72	9	6	6	24	260	17	14	77	206
202+50	84.9	10.0	8.7	9.0	24.0	76	9	8	8	24	336	28	24	113	262
202+75	88.9	10.0	8.6	9.0	26.4	80	9	8	8	23	417	40	34	148	322
203+00	98.8	10.0	9.9	10.0	29.7	87	9	9	9	26	504	52	44	187	387
203+25	132.4	10.0	10.8	11.0	31.0	107	9	10	10	28	611	66	56	229	471
203+50	110.3	10.0	10.6	11.0	30.6	112	9	10	10	29	723	80	68	272	560
203+75	111.8	10.0	9.1	9.0	29.7	103	9	9	9	28	826	93	79	314	640
204+00	119.8	5.0	10.2	10.0	27.5	107	7	9	9	26	933	106	90	354	728
204+25	131.3	5.0	18.1	18.0	19.2	116	5	13	13	22	1,049	124	106	386	821
MARLEY STREET INTERSECTION															
205+75	148.8	5.0	34.5	23.0	0.0	0	0	0	0	0	1,049	124	106	386	821
206+00	154.7	5.0	28.2	20.0	0.0	141	5	29	20	0	1,190	166	129	386	915
206+25	170.8	5.0	18.8	15.0	0.0	151	5	22	16	0	1,340	197	149	386	1,030
206+50	206.7	5.0	0.0	0.0	0.0	175	5	9	7	0	1,515	209	157	386	1,188
206+75	203.2	5.0	19.1	12.0	0.0	190	5	9	6	0	1,705	222	164	386	1,360
207+00	216.7	5.0	21.9	15.0	0.0	194	5	19	13	0	1,899	249	179	386	1,523
207+25	219.1	5.0	23.1	16.0	0.0	202	5	21	14	0	2,101	279	196	386	1,690
207+50	229.7	10.0	22.1	16.0	0.0	208	7	21	15	0	2,309	309	214	386	1,861
207+75	209.2	10.0	0.3	0.0	0.0	203	9	10	7	0	2,512	324	223	386	2,040
208+00	195.6	10.0	1.2	1.0	0.0	187	9	1	0	0	2,700	325	223	386	2,217
208+25	167.3	10.0	22.4	15.0	0.0	168	9	11	7	0	2,868	340	232	386	2,361
208+50	155.9	10.0	31.5	19.0	0.0	150	9	25	16	0	3,017	376	251	386	2,465
208+75	147.7	10.0	32.4	19.0	0.0	141	9	30	18	0	3,158	418	272	386	2,554
209+00	147.8	10.0	26.8	17.0	0.0	137	9	27	17	0	3,295	457	292	386	2,643
209+25	147.8	10.0	19.4	10.0	0.0	137	9	21	13	0	3,431	488	307	386	2,740
209+50	146.8	10.0	17.3	8.0	0.0	136	9	17	8	0	3,568	512	317	386	2,842
209+75	176.2	10.0	14.8	8.0	0.0	150	9	15	7	0	3,717	534	326	386	2,961
210+00	143.4	10.0	11.0	7.0	0.0	148	9	12	7	0	3,865	551	334	386	3,083
210+25	140.4	10.0	7.8	5.0	0.0	131	9	9	6	0	3,997	563	341	386	3,193
210+50	140.0	10.0	4.8	2.0	0.0	130	9	6	3	0	4,126	571	345	386	3,305

Notes:	
1 - Cut	Cut includes Unusable Pavement Material
2 - Unusable Pavement Material	This does not show up in cross sections. Paid for as Item 204.0110 Removing Asphaltic Surface
3 - Fill	Fill areas outside the back of sidewalk only. (See Construction Detail)
4 - Select Borrow Fill	For fill areas behind curb/under terrace and under sidewalk. Will be backfilled with Select Borrow (See Construction Detail)
5 - Salvaged Topsoil	Area used for backfill quantity calculation only. Excavation for Salvaged Topsoil incidental to Item 625.0500 Salvaged Topsoil. Will be backfilled with Select Borrow. (See Construction Detail)
6 - Marsh Excavation	For marsh areas behind curb/under terrace and under sidewalk. Will be backfilled with Select Borrow. (See Construction Detail)
7 - EBS	Includes marsh areas under the roadway excavation. Will be backfilled with Select Crushed Material. (See Construction Detail)
8 - Mass Ordinate	Cut + EBS - Unsuable Pavement Material - Fill * Fill Factor

EARTHWORK - GLENDALE AVENUE (CONTINUED)

STATION	AREA (SF) Cut	Unusable Pavement Material	Fill	Select Borrow Fill	Marsh Excavation	Incremental Vol (CY) (Unadjusted) Cut Note 1	Unusable Pavement Material Note 2	Fill Note 3	Select Borrow Fill Note 4	Marsh Excavation Note 6	Cumulative Vol (CY) Cut 1.00 Note 1	Expanded Fill 1.43 Note 3	Expanded Select Borrow Backfill 1.2 Note 4	Expanded Marsh Backfill 1.25 Note 7	Mass Ordinate Note 8
210+75	144.0	10.0	2.9	0.0	0.0	131	9	4	1	0	4,258	577	346	386	3,422
211+00	141.9	10.0	3.1	2.0	0.0	132	9	3	1	0	4,390	581	347	386	3,541
211+25	131.4	10.0	2.6	2.0	0.0	127	9	3	2	0	4,517	584	349	386	3,655
211+50	136.5	10.0	0.3	0.0	0.0	124	9	1	1	0	4,641	586	351	386	3,768
211+75	116.8	10.0	1.6	2.0	0.0	117	9	1	1	0	4,758	587	352	386	3,874
211+90	110.7	10.0	7.8	4.0	0.0	63	6	3	2	0	4,821	591	354	386	3,928
212+00	98.8	10.0	0.0	0.0	0.0	39	4	1	1	0	4,860	593	355	386	3,961
212+25	82.7	20.0	0.0	0.0	0.0	84	14	0	0	0	4,944	593	355	386	4,031
212+50	45.7	20.0	0.0	0.0	0.0	59	19	0	0	0	5,004	593	355	386	4,072
					Totals:	5,004	338	415	295	257					

Notes:	
1 - Cut	Cut includes Unusable Pavement Material
2 - Unusable Pavement Material	This does not show up in cross sections. Paid for as Item 204.0110 Removing Asphaltic Surface or 204.0100 Removing Concrete Pavement
3 - Fill	Fill areas outside the back of sidewalk only. (See Construction Detail)
4 - Select Borrow Fill	For fill areas behind curb/under terrace and under sidewalk. Will be backfilled with Select Borrow (See Construction Detail)
5 - Salvaged Topsoil	Area used for backfill quantity calculation only. Excavation for Salvaged Topsoil incidental to Item 625.0500 Salvaged Topsoil. Will be backfilled with Select Borrow. (See Construction Detail)
6 - Marsh Excavation	Anticipated marsh excavation areas shown in cross sections.
7 - Expanded Marsh Backfill	Marsh Excavation under proposed roadway backfilled with Item 312.0110 Select Crushed, outside of proposed roadway backfilled with Item 208.1100 Select Borrow. (See Construction Detail)
8 - Mass Ordinate	Cut + EBS - Unsuable Pavement Material - Fill * Fill Factor

EARTHWORK - EXISTING CTH C

STATION	AREA (SF)			Incremental Vol (CY) (Unadjusted)			Cumulative Vol (CY)		Mass Ordinate
	Cut	Unusable Pavement Material	Fill	Cut	Unusable Pavement Material	Fill	Cut 1.00	Expanded Fill 1.43	
				Note 1	Note 2	Note 3	Note 1	Note 3	Note 8
303+50	51.3	16.0	0.0	0		0	0	0	0
303+75	98.6	16.0	0.0	69	15	0	69	0	55
304+00	149.8	16.0	0.0	115	15	0	184	0	155
304+25	152.6	16.0	0.0	140	15	0	324	0	280
304+50	138.2	16.0	0.0	135	15	0	459	0	400
304+75	228.0	16.0	0.0	136	12	0	595	0	524
305+00	161.0	16.0	0.0	137	11	0	732	0	649
305+25	154.2	16.0	0.0	210	21	0	942	0	838
305+50	148.2	16.0	0.0	140	15	0	1,082	0	963
305+75	112.4	16.0	13.8	121	15	6	1,202	9	1,060
306+00	70.9	16.0	3.1	85	15	8	1,287	20	1,119
306+25	28.1	16.0	0.3	46	15	2	1,333	23	1,147
306+41	7.4	16.0	0.7	11	9	0	1,344	23	1,148
				1,344	172	16			

Notes:	
1 - Cut	Cut includes Unusable Pavement Material
2 - Unusable Pavement Material	This does not show up in cross sections. Paid for as Item 204.0110 Removing Asphaltic Surface or 204.0100 Removing Concrete Pavement
3 - Fill	Fill areas outside the back of sidewalk only. (See Construction Detail)
4 - Select Borrow Fill	For fill areas behind curb/under terrace and under sidewalk. Will be backfilled with Select Borrow (See Construction Detail)
5 - Salvaged Topsoil	Area used for backfill quantity calculation only. Excavation for Salvaged Topsoil incidental to Item 625.0500 Salvaged Topsoil. Will be backfilled with Select Borrow. (See Construction Detail)
6 - Marsh Excavation	Anticipated marsh excavation areas shown in cross sections.
7 - Expanded Marsh Backfill	Marsh Excavation under proposed roadway backfilled with Item 312.0110 Select Crushed, outside of proposed roadway backfilled with Item 208.1100 Select Borrow. (See Construction Detail)
8 - Mass Ordinate	Cut + EBS - Unsuable Pavement Material - Fill * Fill Factor

EARTHWORK - STORM SEWER OUTFALL

STATION	AREA (SF)		Incremental Vol (CY) (Unadjusted)		Cumulative Vol (CY)		Mass Ordinate
	Cut	Fill	Cut	Fill	Cut	Expanded Fill	
					1.00	1.43	
			Note 1	Note 3	Note 1	Note 3	Note 8
400+60	9.1	0.0	0	0	0	0	0
400+75	9.2	0.0	5	0	5	0	5
401+00	8.9	0.0	8	0	13	0	13
401+50	6.6	0.0	14	0	28	0	28
402+00	4.6	0.0	10	0	38	0	38
402+50	5.2	0.0	9	0	47	0	47
403+00	8.4	0.0	13	0	60	0	60
403+50	7.4	0.0	15	0	74	0	74
404+00	6.4	0.0	13	0	87	0	87
404+50	5.7	0.0	11	0	98	0	98
405+00	5.6	0.0	10	0	109	0	109
405+50	5.6	0.0	10	0	119	0	119
406+00	6.7	0.0	11	0	131	0	131
406+50	9.0	0.0	15	0	145	0	145
407+00	11.0	0.0	19	0	164	0	164
407+50	13.8	0.0	23	0	187	0	187
408+00	11.0	0.0	23	0	210	0	210
408+50	8.3	0.0	18	0	228	0	228
409+00	9.1	0.0	16	0	244	0	244
409+50	11.2	0.0	19	0	262	0	262
410+00	15.0	0.0	24	0	287	0	287
410+50	19.5	0.0	32	0	319	0	319
411+00	20.7	0.0	37	0	356	0	356
411+50	23.4	0.0	41	0	397	0	397
412+00	22.2	0.0	42	0	439	0	439
412+50	23.5	0.0	42	0	481	0	481
412+75	22.7	0.0	21	0	503	0	503
412+94	148.4	0.0	60	0	563	0	563
413+07	151.5	0.0	72	0	635	0	635
			635	0			

Notes:	
1 - Cut	Cut includes Unusable Pavement Material
2 - Unusable Pavement Material	This does not show up in cross sections. Paid for as Item 204.0110 Removing Asphaltic Surface or 204.0100 Removing Concrete Pavement
3 - Fill	Fill areas outside the back of sidewalk only. (See Construction Detail)
4 - Select Borrow Fill	For fill areas behind curb/under terrace and under sidewalk. Will be backfilled with Select Borrow (See Construction Detail)
5 - Salvaged Topsoil	Area used for backfill quantity calculation only. Excavation for Salvaged Topsoil incidental to Item 625.0500 Salvaged Topsoil. Will be backfilled with Select Borrow. (See Construction Detail)
6 - Marsh Excavation	Anticipated marsh excavation areas shown in cross sections.
7 - Expanded Marsh Backfill	Marsh Excavation under proposed roadway backfilled with Item 312.0110 Select Crushed, outside of proposed roadway backfilled with Item 208.1100 Select Borrow. (See Construction Detail)
8 - Mass Ordinate	Cut + EBS - Unsuable Pavement Material - Fill * Fill Factor

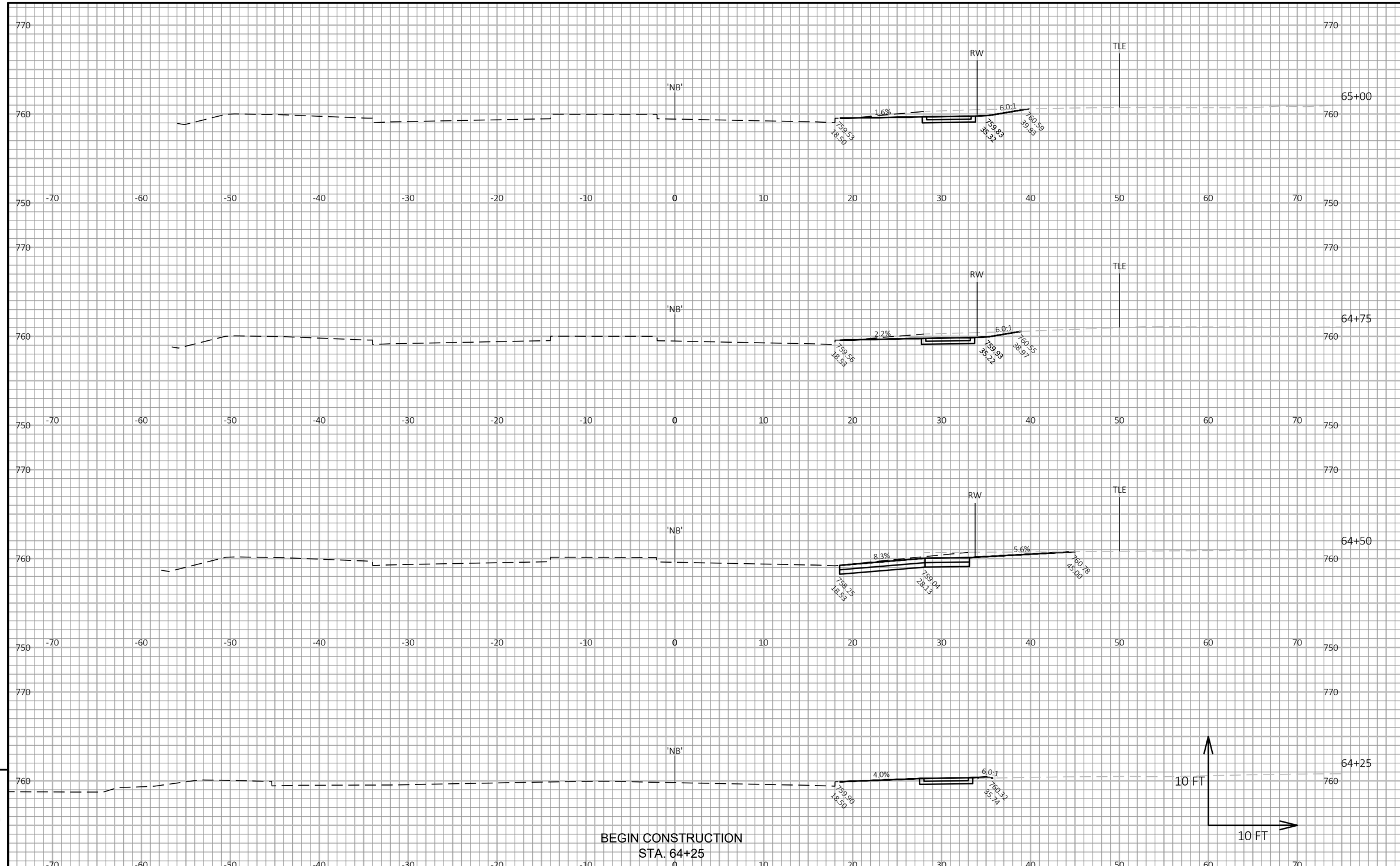

9

9

PROJECT NO: 9269-00-14	HWY: MARLEY STREET	COUNTY: BROWN	CROSS SECTIONS: MARLEY ST	SHEET 172	E

FILE NAME : I:\45\450490 MARLEY STREET\C3D\SHEETSPLAN\090201 XS.DWG
LAYOUT NAME - 090201 xs
PLOT DATE : 11/11/2021 3:31 PM
PLOT BY : SEIBERT, CHELSEA
PLOT NAME :
PLOT SCALE : 1 IN:10 FT HORZ. / 1 IN:10 FT VERT.
WISDOT/CADDS SHEET 49

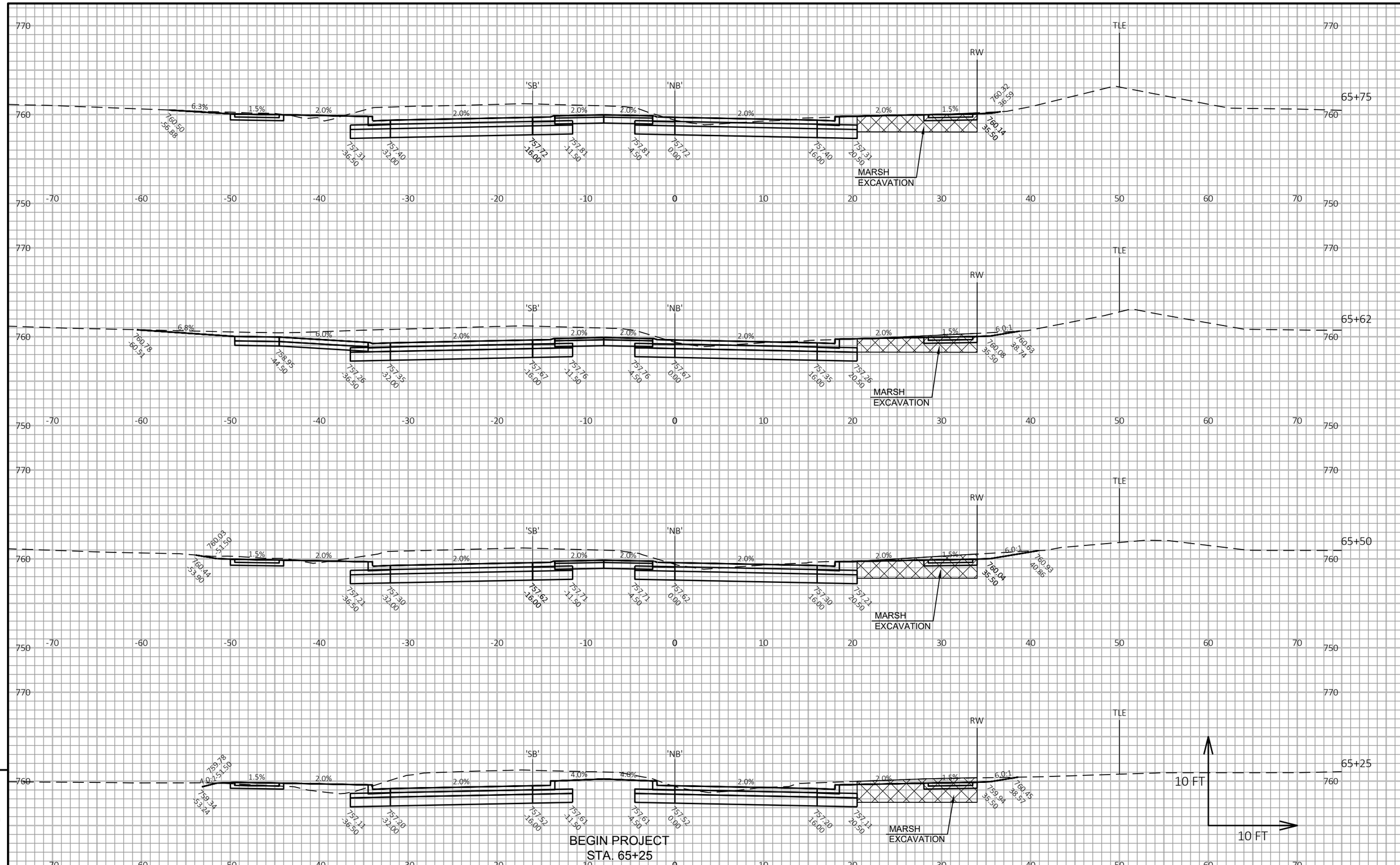

9

9

PROJECT NO: 9269-00-14	HWY: MARLEY STREET	COUNTY: BROWN	CROSS SECTIONS: MARLEY ST	SHEET 173	E

FILE NAME : I:\45\450490 MARLEY STREET\C3D\SHEETSPLAN\090201 XS.DWG
LAYOUT NAME - 090202 xs
PLOT DATE : 11/11/2021 3:31 PM
PLOT BY : SEIBERT, CHELSEA
PLOT NAME :
PLOT SCALE : 1 IN:10 FT HORZ. / 1 IN:10 FT VERT.

WISDOT/CADDS SHEET 49

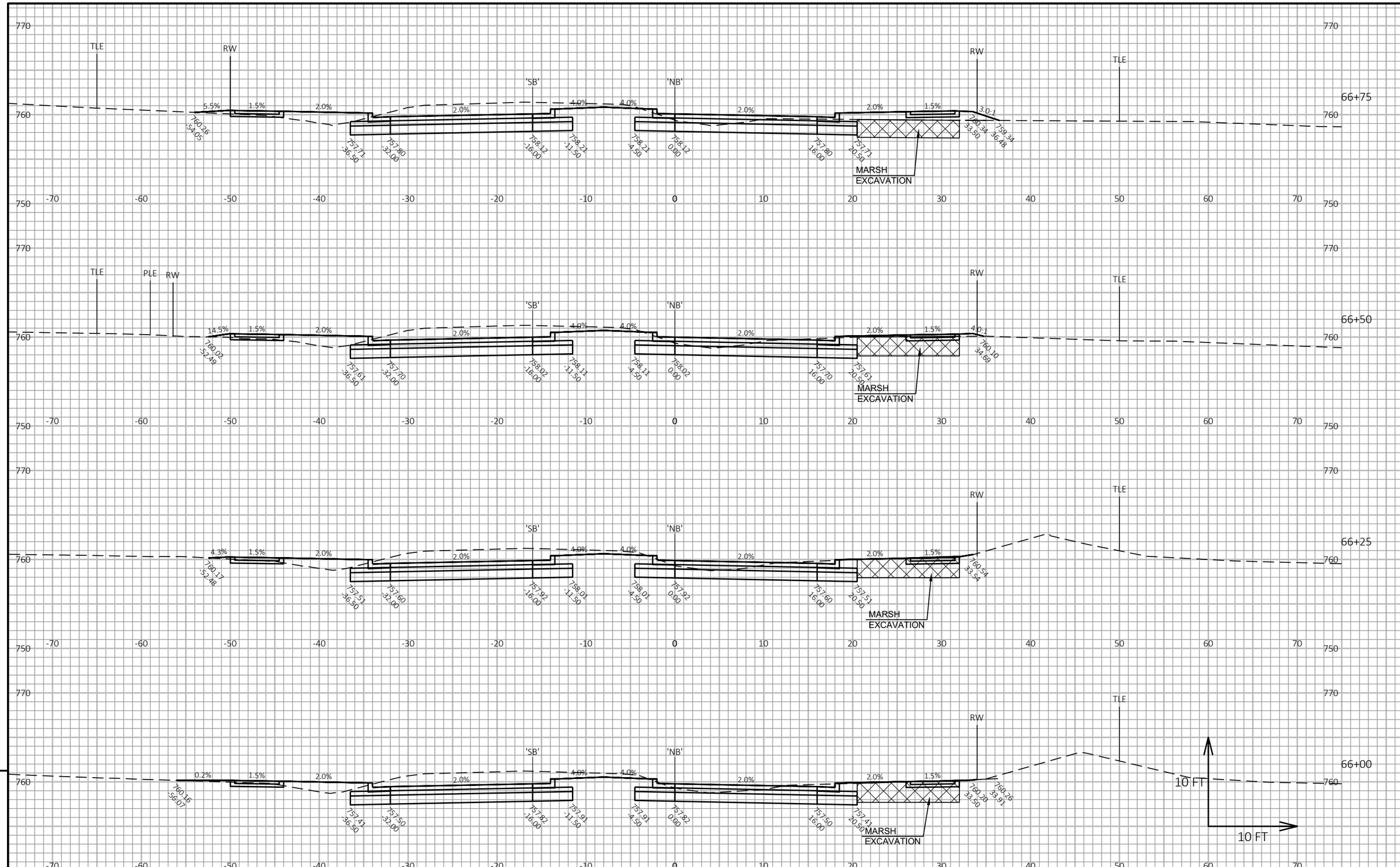

9

9

PROJECT NO: 9269-00-14	HWY: MARLEY STREET	COUNTY: BROWN	CROSS SECTIONS: MARLEY ST	SHEET 174	E

FILE NAME : I:\45\450490 MARLEY STREET\C3D\SHEETSPLAN\090201 XS.DWG
LAYOUT NAME - 090203 xs
PLOT DATE : 11/11/2021 3:31 PM
PLOT BY : SEIBERT, CHELSEA
PLOT NAME :
PLOT SCALE : 1 IN:10 FT HORZ. / 1 IN:10 FT VERT.
WISDOT/CADDS SHEET 49

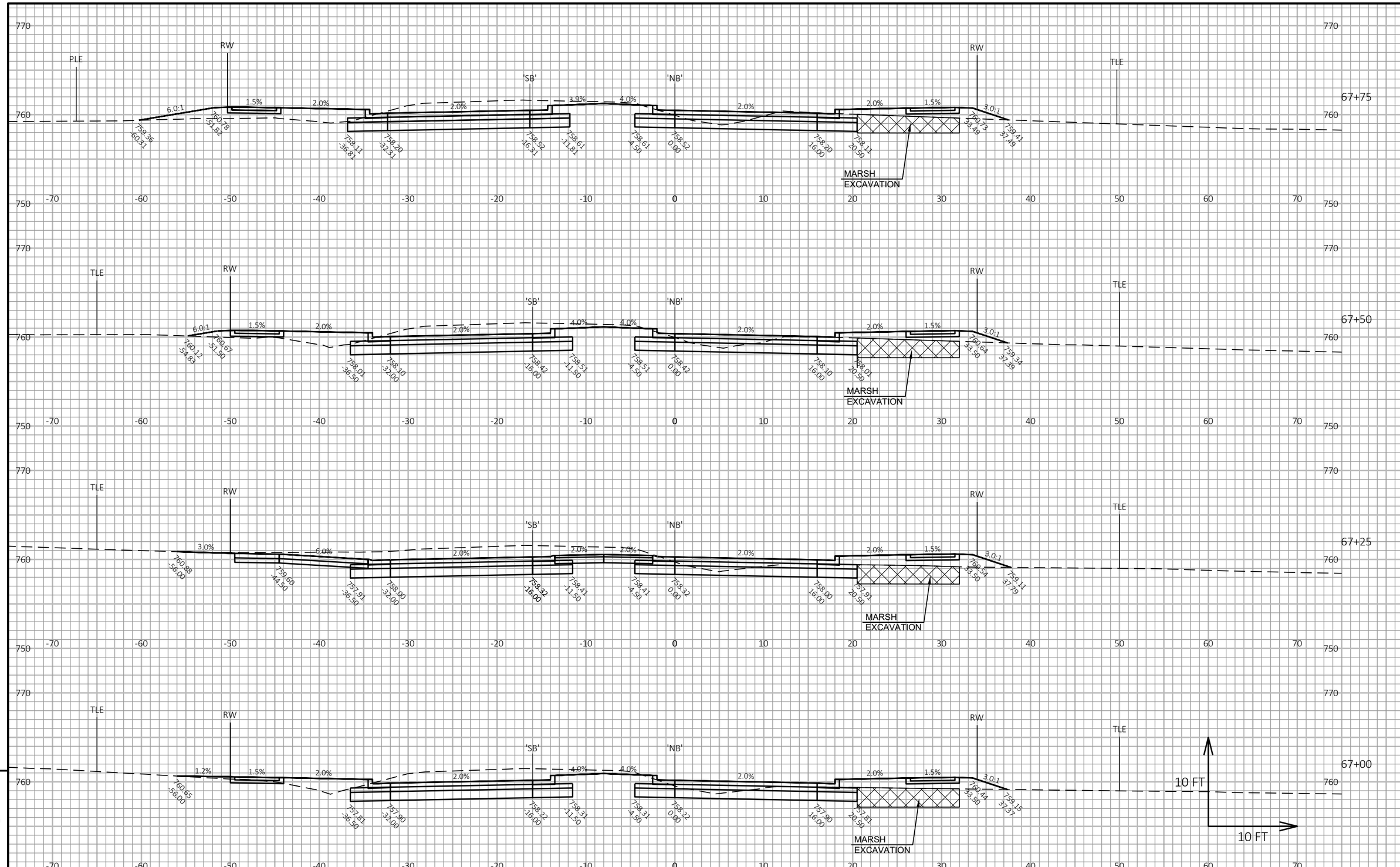

PROJECT NO: 9269-00-14	HWY: MARLEY STREET	COUNTY: BROWN	CROSS SECTIONS: MARLEY ST	SHEET 175	E

FILE NAME : I:\45\450490 MARLEY STREET\C3D\SHEETSPLAN\090201 XS.DWG
LAYOUT NAME - 090204 xs
PLOT DATE : 11/11/2021 3:31 PM
PLOT BY : SEIBERT, CHELSEA
PLOT NAME :
PLOT SCALE : 1 IN:10 FT HORZ. / 1 IN:10 FT VERT.
WISDOT/CADDS SHEET 49

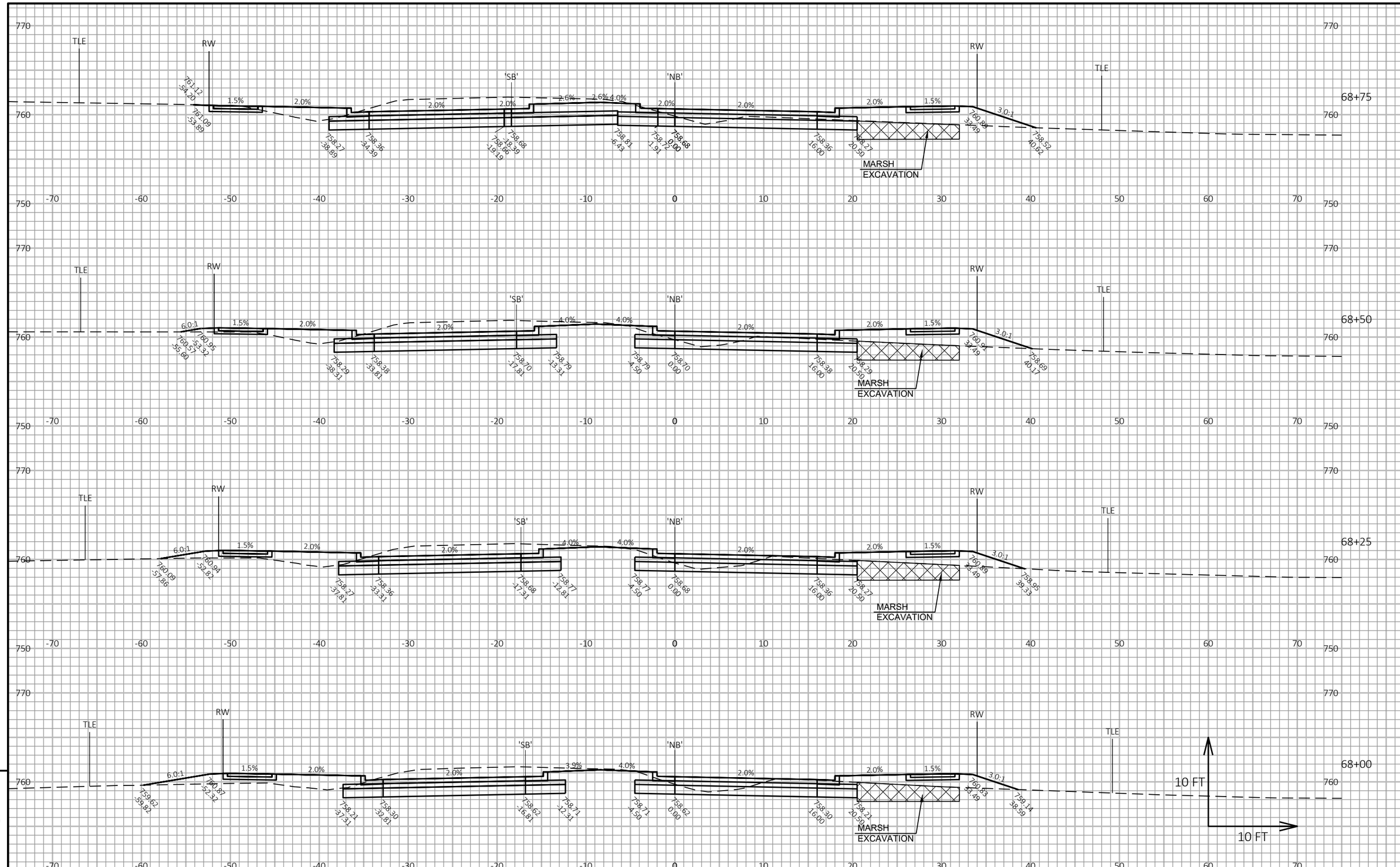

9

9

PROJECT NO: 9269-00-14	HWY: MARLEY STREET	COUNTY: BROWN	CROSS SECTIONS: MARLEY ST	SHEET 176	E

FILE NAME : I:\45\450490 MARLEY STREET\C3D\SHEETSPLAN\090201 XS.DWG
LAYOUT NAME - 090205 xs
PLOT DATE : 11/11/2021 3:32 PM
PLOT BY : SEIBERT, CHELSEA
PLOT NAME :
PLOT SCALE : 1 IN:10 FT HORZ. / 1 IN:10 FT VERT.

WISDOT/CADDS SHEET 49

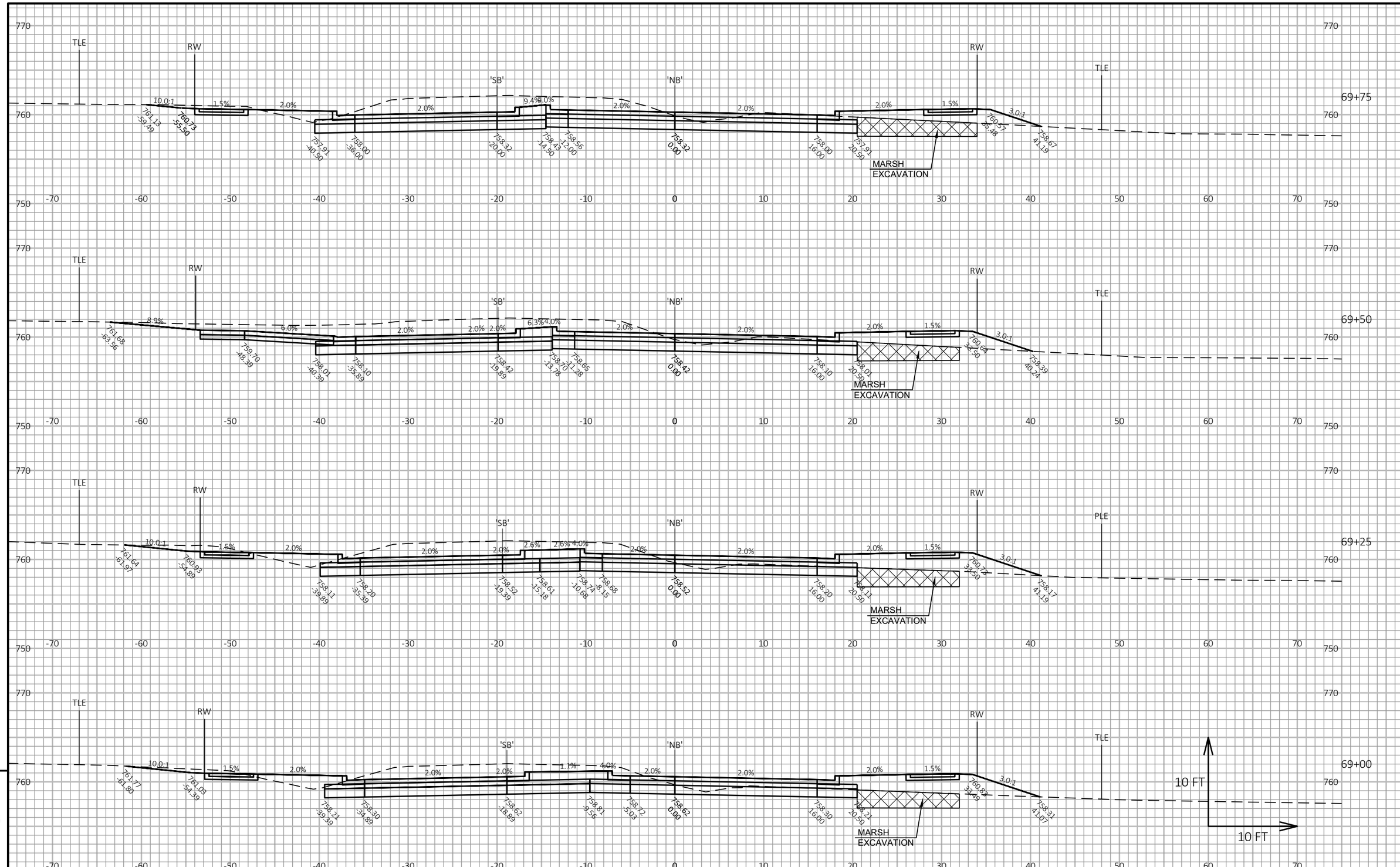

PROJECT NO: 9269-00-14	HWY: MARLEY STREET	COUNTY: BROWN	CROSS SECTIONS: MARLEY ST	SHEET 177	E

FILE NAME : I:\45\450490 MARLEY STREET\C3D\SHEETSPLAN\090201 XS.DWG
LAYOUT NAME - 090206 xs
PLOT DATE : 11/11/2021 3:32 PM
PLOT BY : SEIBERT, CHELSEA
PLOT NAME :
PLOT SCALE : 1 IN:10 FT HORZ. / 1 IN:10 FT VERT.
WISDOT/CADDS SHEET 49

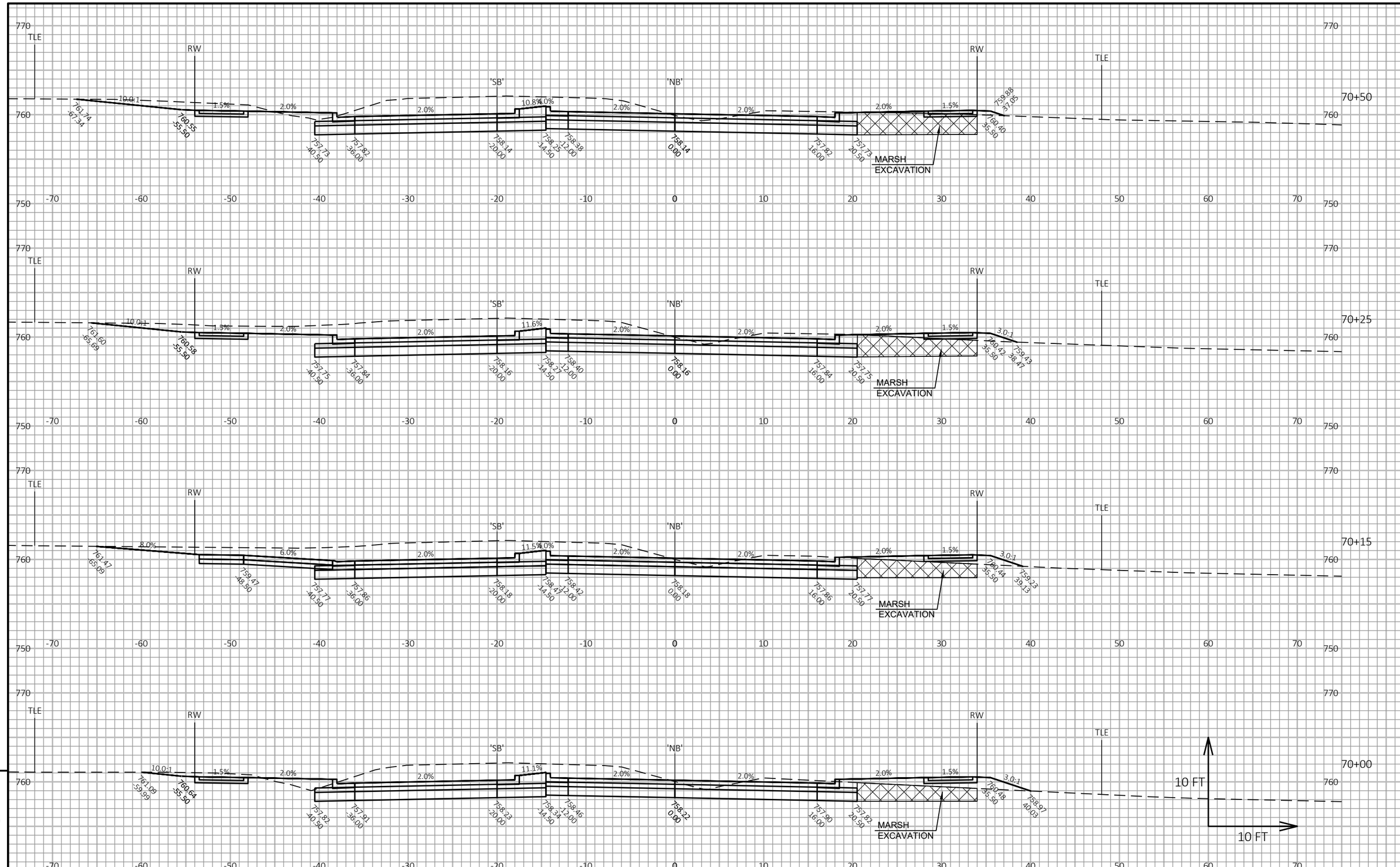

9

9

PROJECT NO: 9269-00-14	HWY: MARLEY STREET	COUNTY: BROWN	CROSS SECTIONS: MARLEY ST	SHEET 178	E

FILE NAME : I:\45\450490 MARLEY STREET\C3D\SHEETSPLAN\090201 XS.DWG
LAYOUT NAME - 090207 xs
PLOT DATE : 11/11/2021 3:32 PM
PLOT BY : SEIBERT, CHELSEA
PLOT NAME :
PLOT SCALE : 1 IN:10 FT HORZ. / 1 IN:10 FT VERT.

WISDOT/CADDS SHEET 49

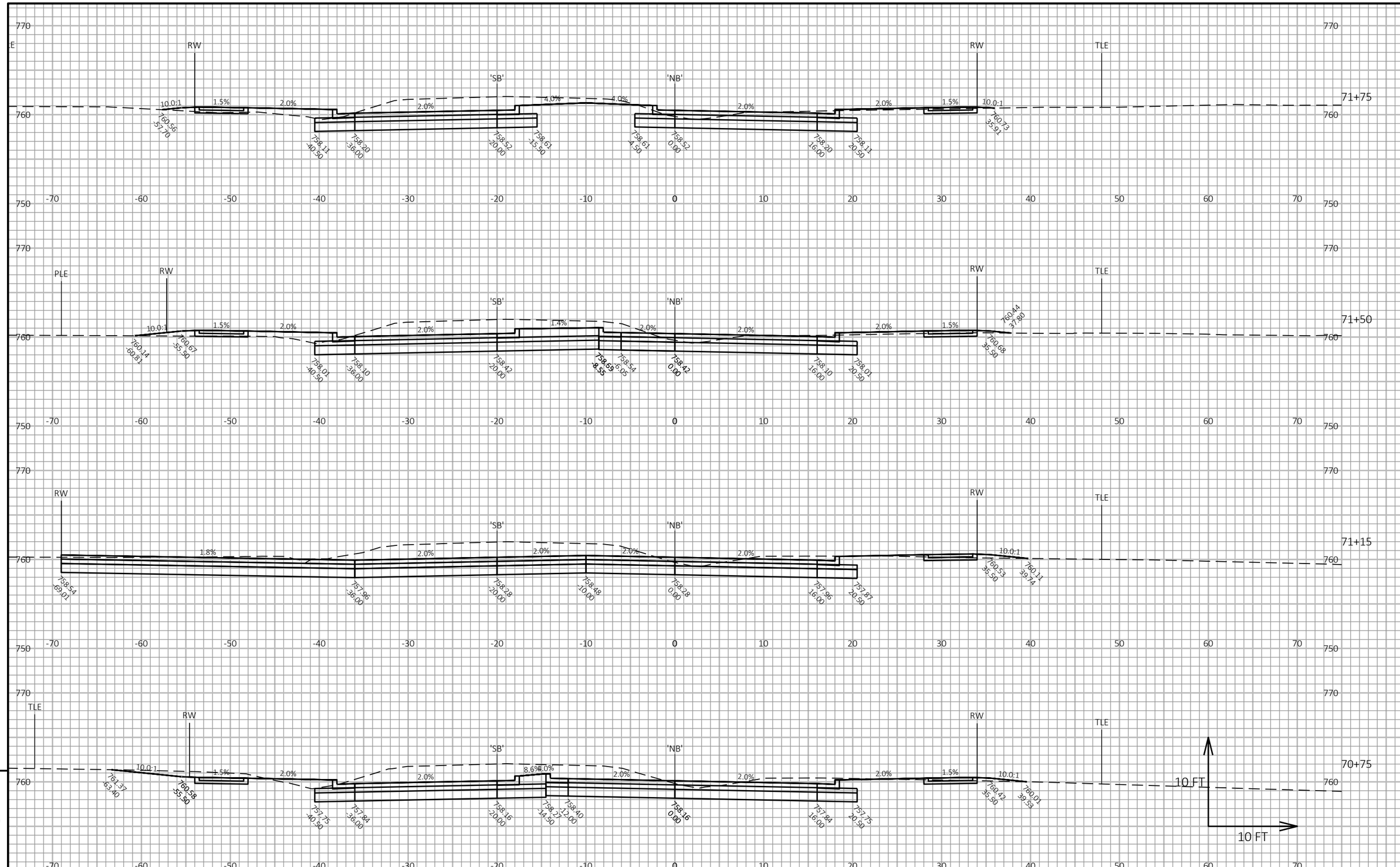

9

9

PROJECT NO: 9269-00-14	HWY: MARLEY STREET	COUNTY: BROWN	CROSS SECTIONS: MARLEY ST	SHEET 179	E

FILE NAME : I:\45\450490 MARLEY STREET\C3D\SHEETSPLAN\090201 XS.DWG
LAYOUT NAME - 090208 xs
PLOT DATE : 11/11/2021 3:33 PM
PLOT BY : SEIBERT, CHELSEA
PLOT NAME :
PLOT SCALE : 1 IN:10 FT HORZ. / 1 IN:10 FT VERT.

WISDOT/CADDS SHEET 49

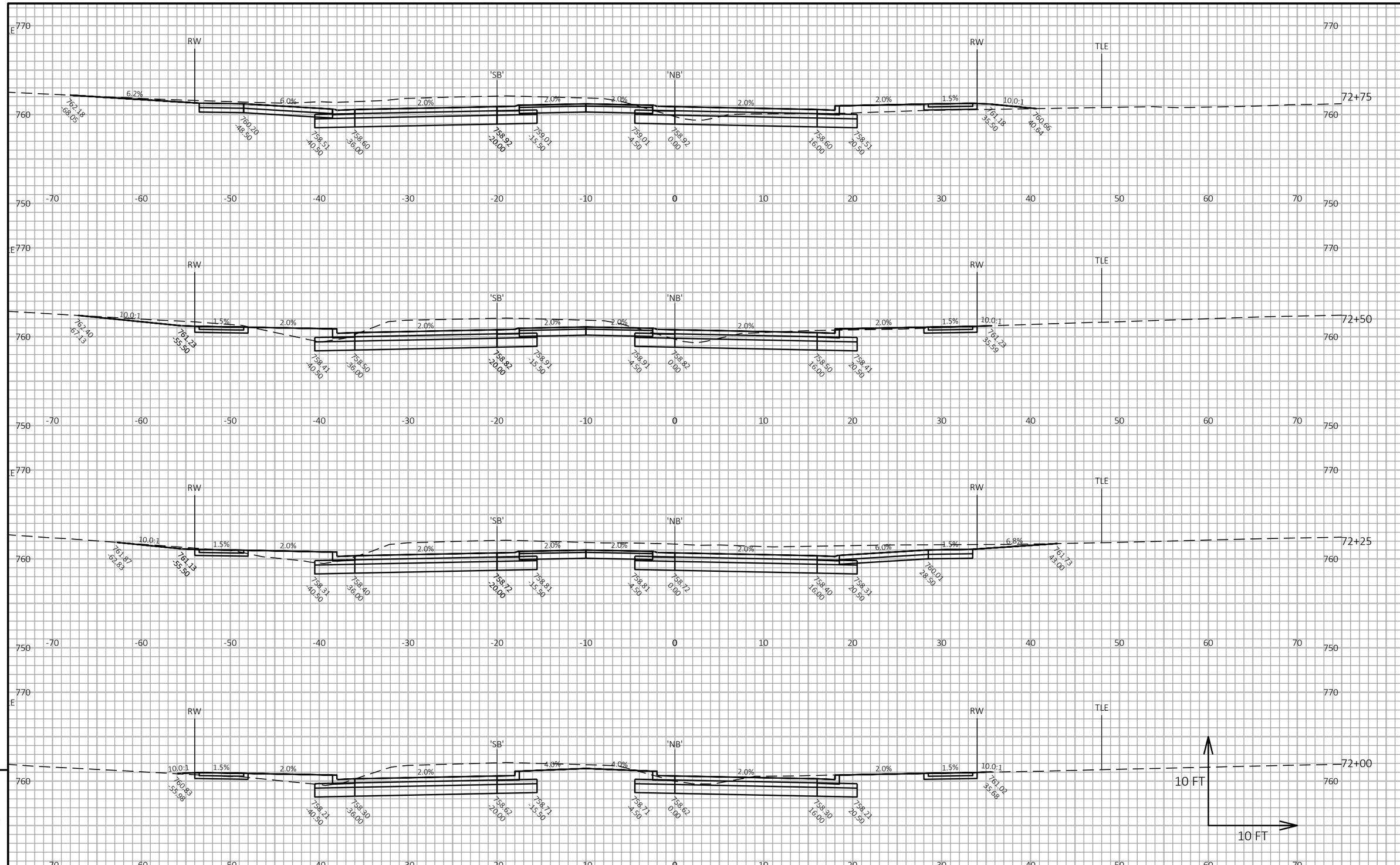

9

9

PROJECT NO: 9269-00-14	HWY: MARLEY STREET	COUNTY: BROWN	CROSS SECTIONS: MARLEY ST	SHEET 180	E

FILE NAME : I:\45\450490 MARLEY STREET\C3D\SHEETSPLAN\090201 XS.DWG
LAYOUT NAME - 090209 xs
PLOT DATE : 11/11/2021 3:33 PM
PLOT BY : SEIBERT, CHELSEA
PLOT NAME :
PLOT SCALE : 1 IN:10 FT HORZ. / 1 IN:10 FT VERT.

WISDOT/CADDS SHEET 49

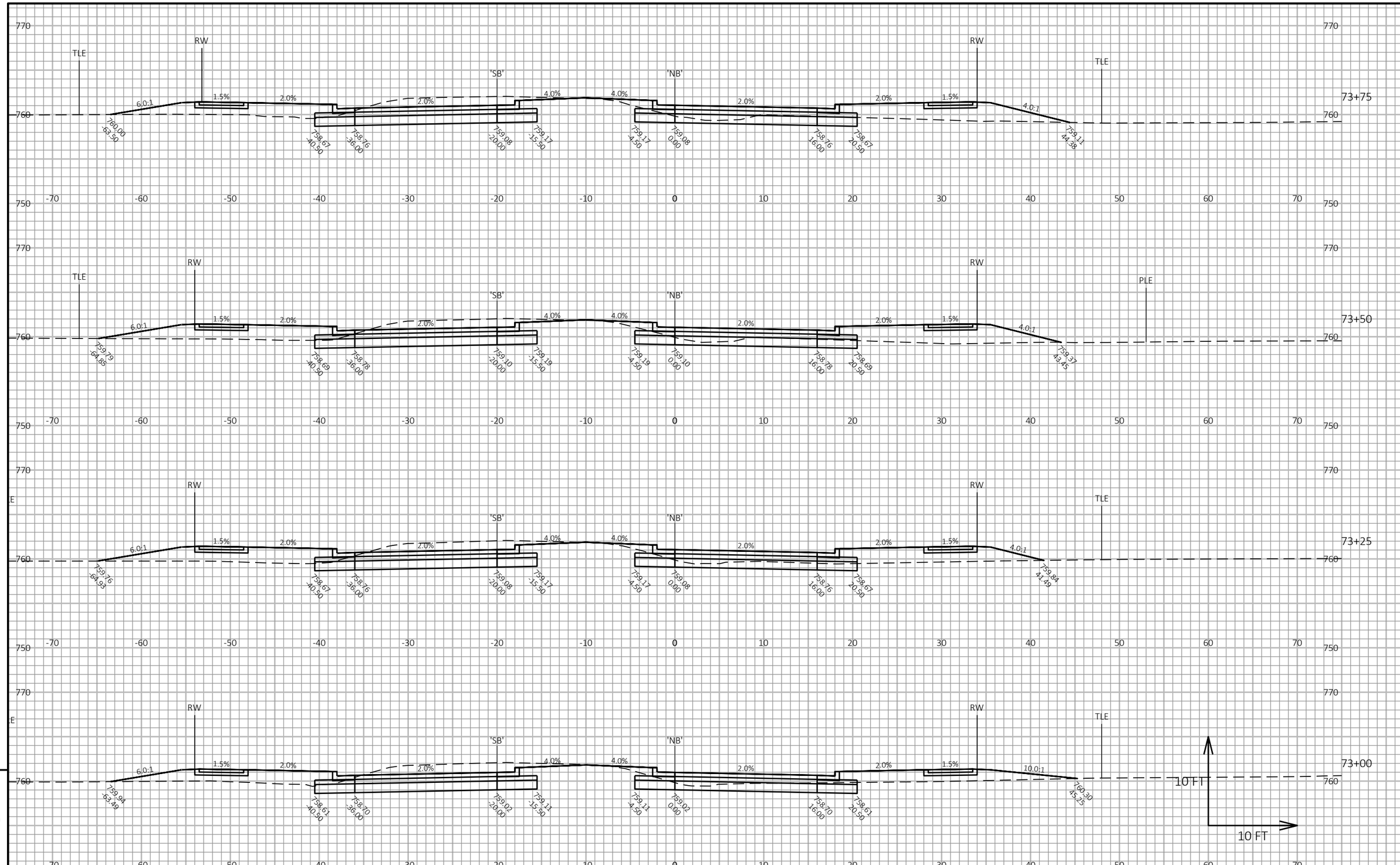

9

9

PROJECT NO: 9269-00-14	HWY: MARLEY STREET	COUNTY: BROWN	CROSS SECTIONS: MARLEY ST	SHEET 181	E

FILE NAME : I:\45\450490 MARLEY STREET\C3D\SHEETSPLAN\090201 XS.DWG
LAYOUT NAME - 090210 xs
PLOT DATE : 11/11/2021 3:33 PM
PLOT BY : SEIBERT, CHELSEA
PLOT NAME :
PLOT SCALE : 1 IN:10 FT HORZ. / 1 IN:10 FT VERT.
WISDOT/CADDS SHEET 49

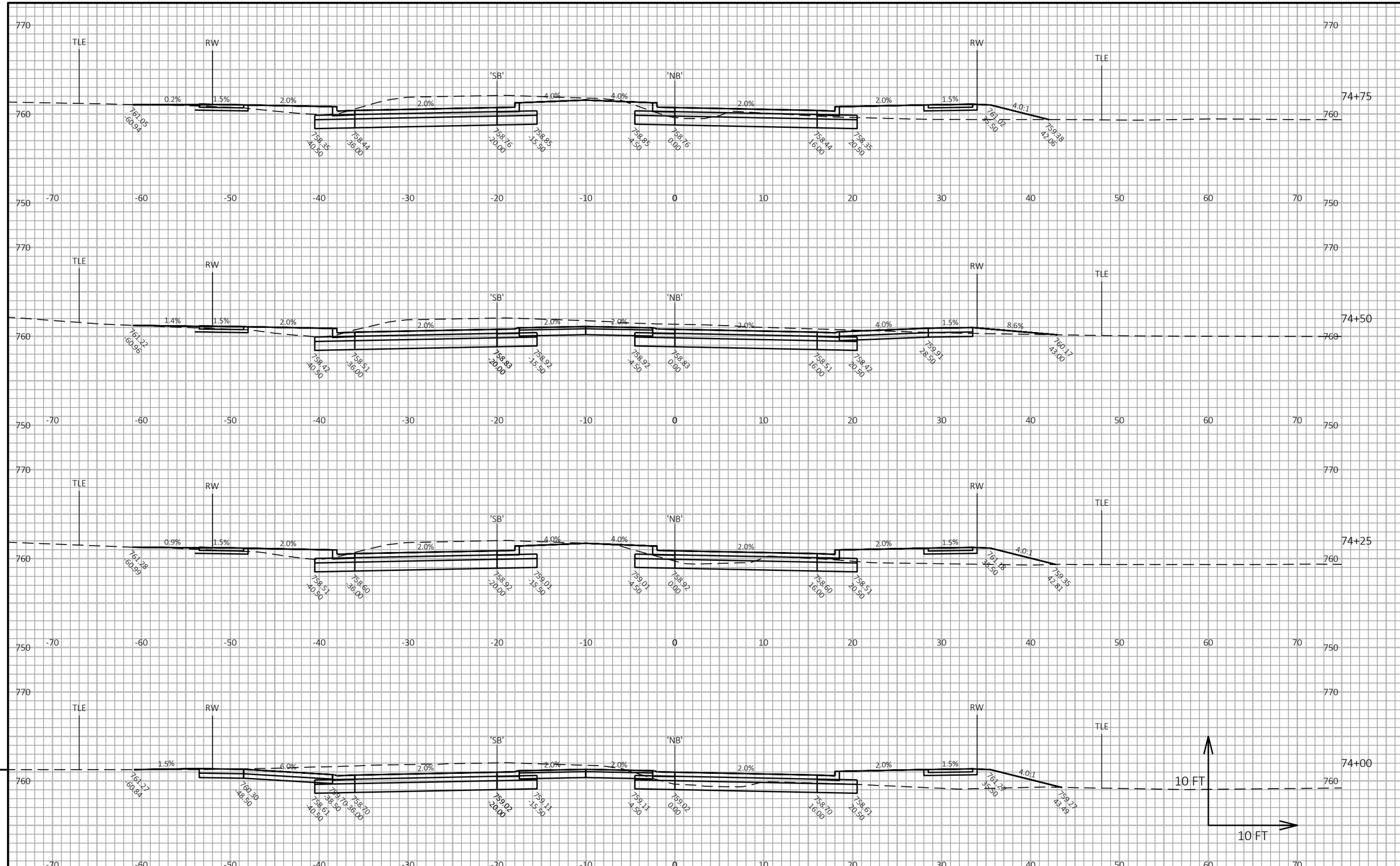

PROJECT NO: 9269-00-14	HWY: MARLEY STREET	COUNTY: BROWN	CROSS SECTIONS: MARLEY ST	SHEET 182	E

FILE NAME : I:\45\450490 MARLEY STREET\C3D\SHEETSPLAN\090201 XS.DWG
LAYOUT NAME - 090211 xs
PLOT DATE : 11/11/2021 3:33 PM
PLOT BY : SEIBERT, CHELSEA
PLOT NAME :
PLOT SCALE : 1 IN:10 FT HORZ. / 1 IN:10 FT VERT.

WISDOT/CADDS SHEET 49

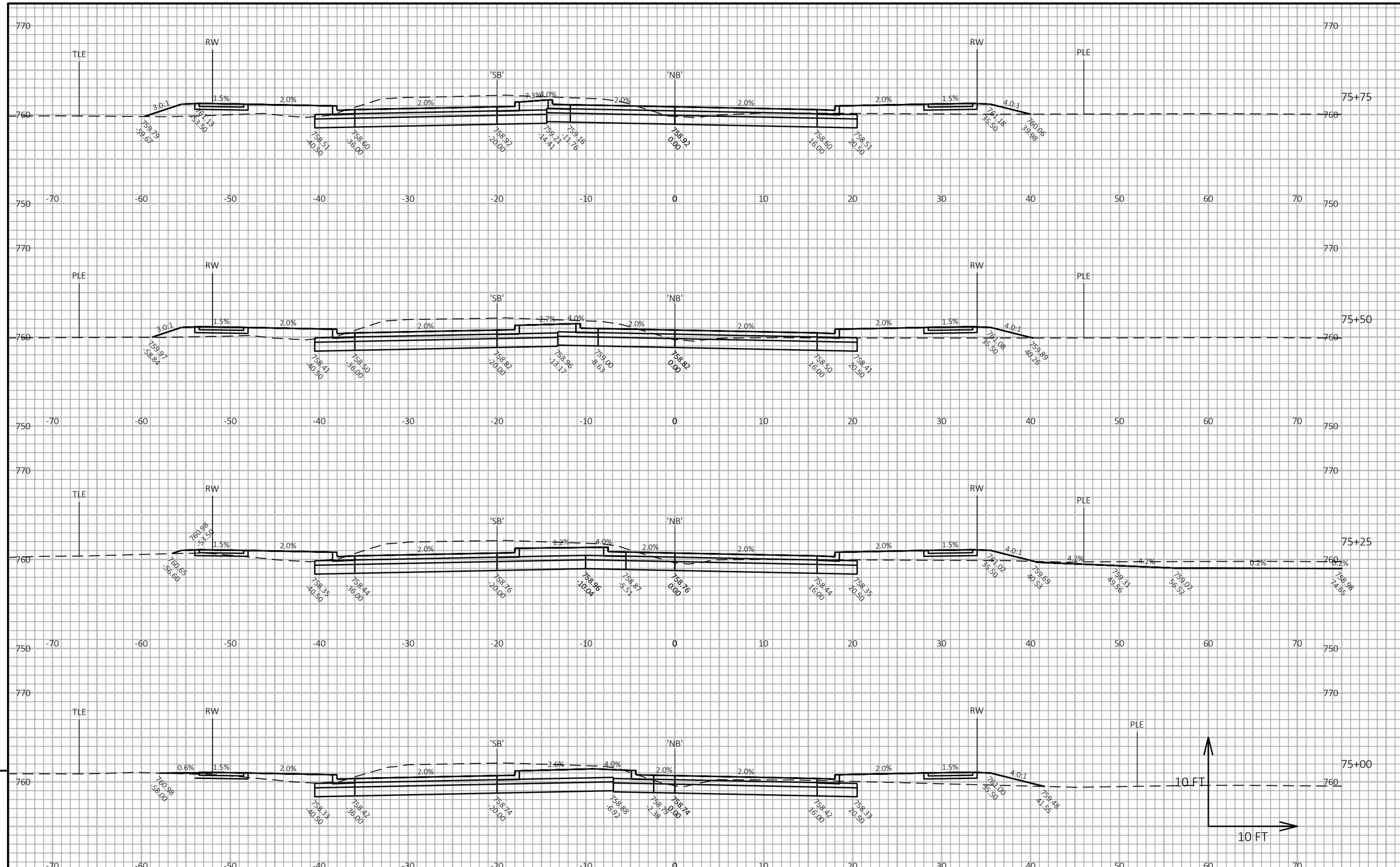

PROJECT NO: 9269-00-14	HWY: MARLEY STREET	COUNTY: BROWN	CROSS SECTIONS: MARLEY ST	SHEET 183	E

FILE NAME : I:\45\450490 MARLEY STREET\C3D\SHEETSPLAN\090201 XS.DWG
LAYOUT NAME - 090212 xs
PLOT DATE : 11/11/2021 3:34 PM
PLOT BY : SEIBERT, CHELSEA
PLOT NAME :
PLOT SCALE : 1 IN:10 FT HORZ. / 1 IN:10 FT VERT.

WISDOT/CADDS SHEET 49

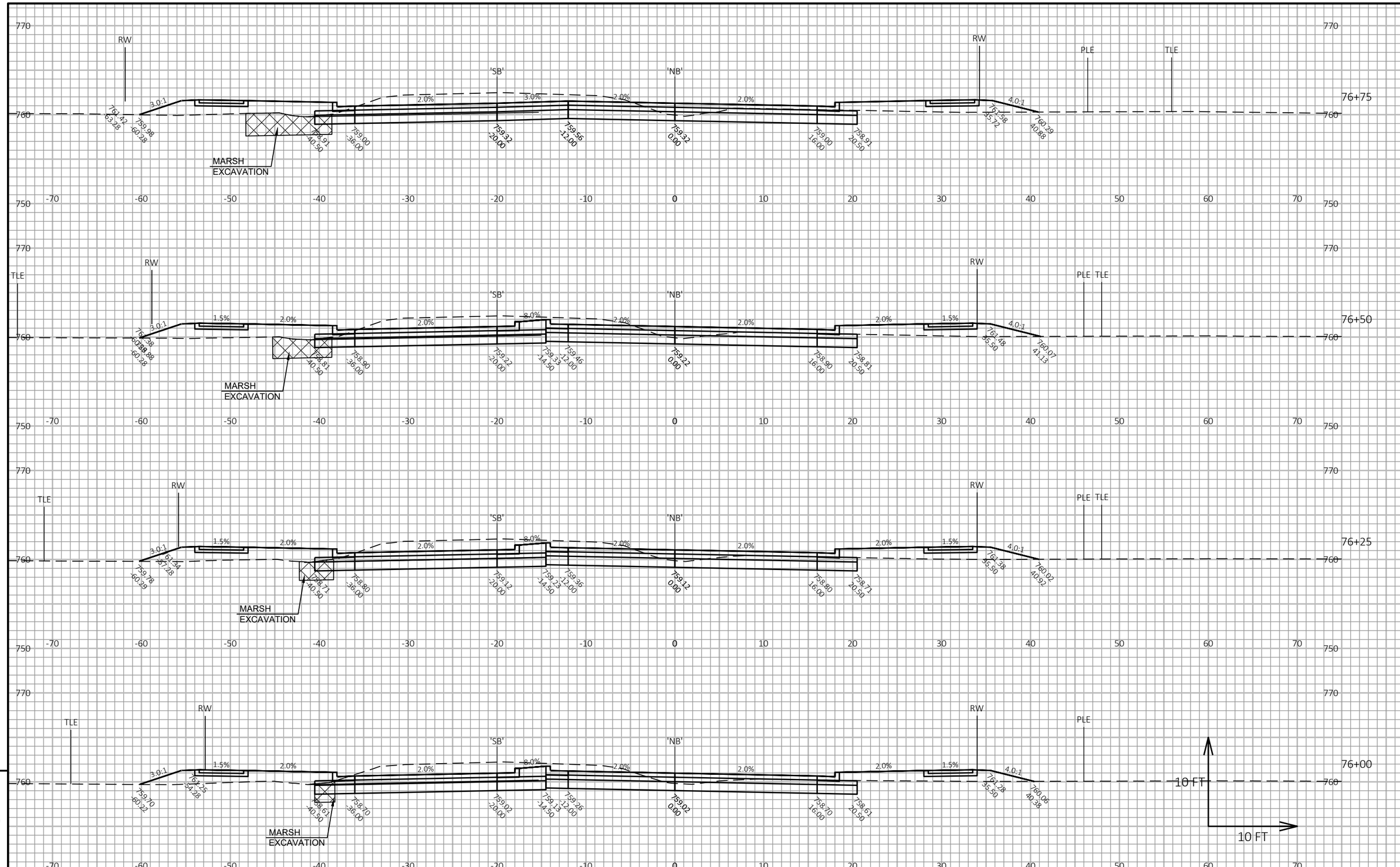

9

9

PROJECT NO: 9269-00-14	HWY: MARLEY STREET	COUNTY: BROWN	CROSS SECTIONS: MARLEY ST	SHEET 184	E

FILE NAME : I:\45\450490 MARLEY STREET\C3D\SHEETSPLAN\090201 XS.DWG
LAYOUT NAME - 090213 xs
PLOT DATE : 11/11/2021 3:34 PM
PLOT BY : SEIBERT, CHELSEA
PLOT NAME :
PLOT SCALE : 1 IN:10 FT HORZ. / 1 IN:10 FT VERT.

WISDOT/CADDS SHEET 49

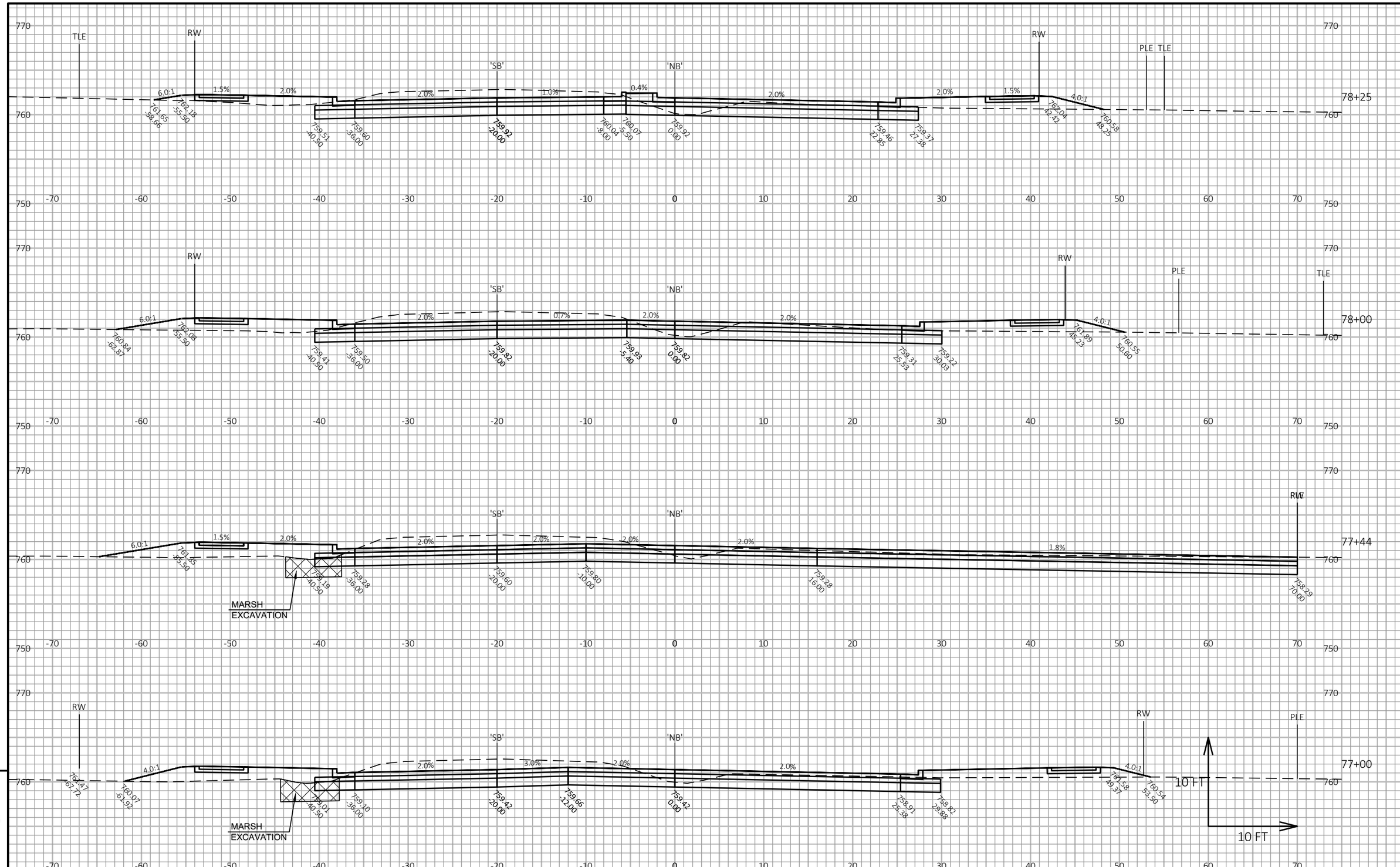

PROJECT NO: 9269-00-14	HWY: MARLEY STREET	COUNTY: BROWN	CROSS SECTIONS: MARLEY ST	SHEET 185	E

FILE NAME : I:\45\450490 MARLEY STREET\C3D\SHEETSPLAN\090201 XS.DWG
LAYOUT NAME - 090214 xs
PLOT DATE : 11/11/2021 3:34 PM
PLOT BY : SEIBERT, CHELSEA
PLOT NAME :
PLOT SCALE : 1 IN:10 FT HORZ. / 1 IN:10 FT VERT.

WISDOT/CADDS SHEET 49

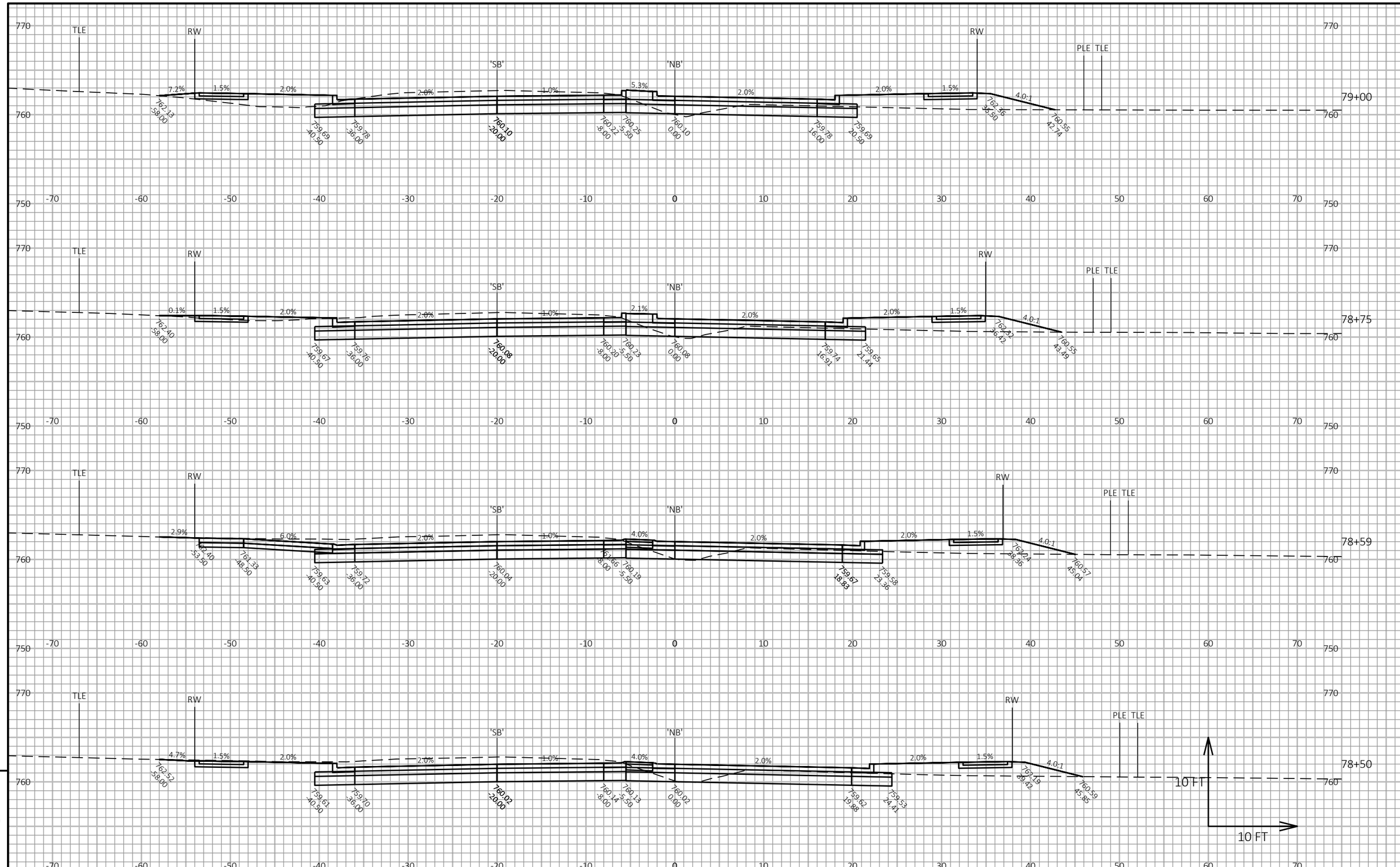

PROJECT NO: 9269-00-14	HWY: MARLEY STREET	COUNTY: BROWN	CROSS SECTIONS: MARLEY ST	SHEET 186	E

FILE NAME : I:\45\450490 MARLEY STREET\C3D\SHEETSPLAN\090201 XS.DWG
LAYOUT NAME - 090215 xs
PLOT DATE : 11/11/2021 3:34 PM
PLOT BY : SEIBERT, CHELSEA
PLOT NAME :
PLOT SCALE : 1 IN:10 FT HORZ. / 1 IN:10 FT VERT.

WISDOT/CADDS SHEET 49

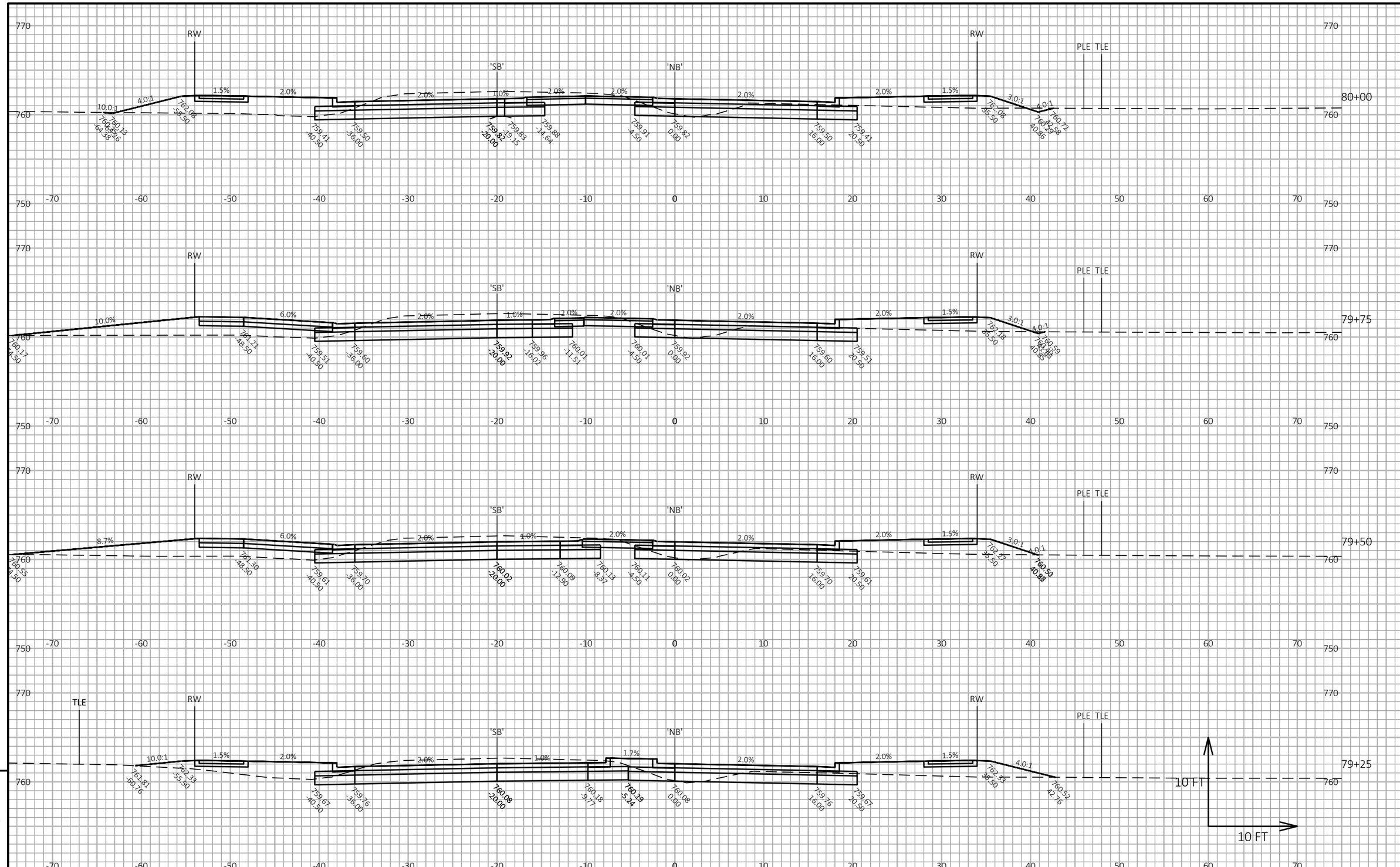

PROJECT NO: 9269-00-14	HWY: MARLEY STREET	COUNTY: BROWN	CROSS SECTIONS: MARLEY ST	SHEET 187	E

FILE NAME : I:\45\450490 MARLEY STREET\C3D\SHEETSPLAN\090201 XS.DWG
LAYOUT NAME - 090216 xs
PLOT DATE : 11/11/2021 3:35 PM
PLOT BY : SEIBERT, CHELSEA
PLOT NAME :
PLOT SCALE : 1 IN:10 FT HORZ. / 1 IN:10 FT VERT.
WISDOT/CADDS SHEET 49

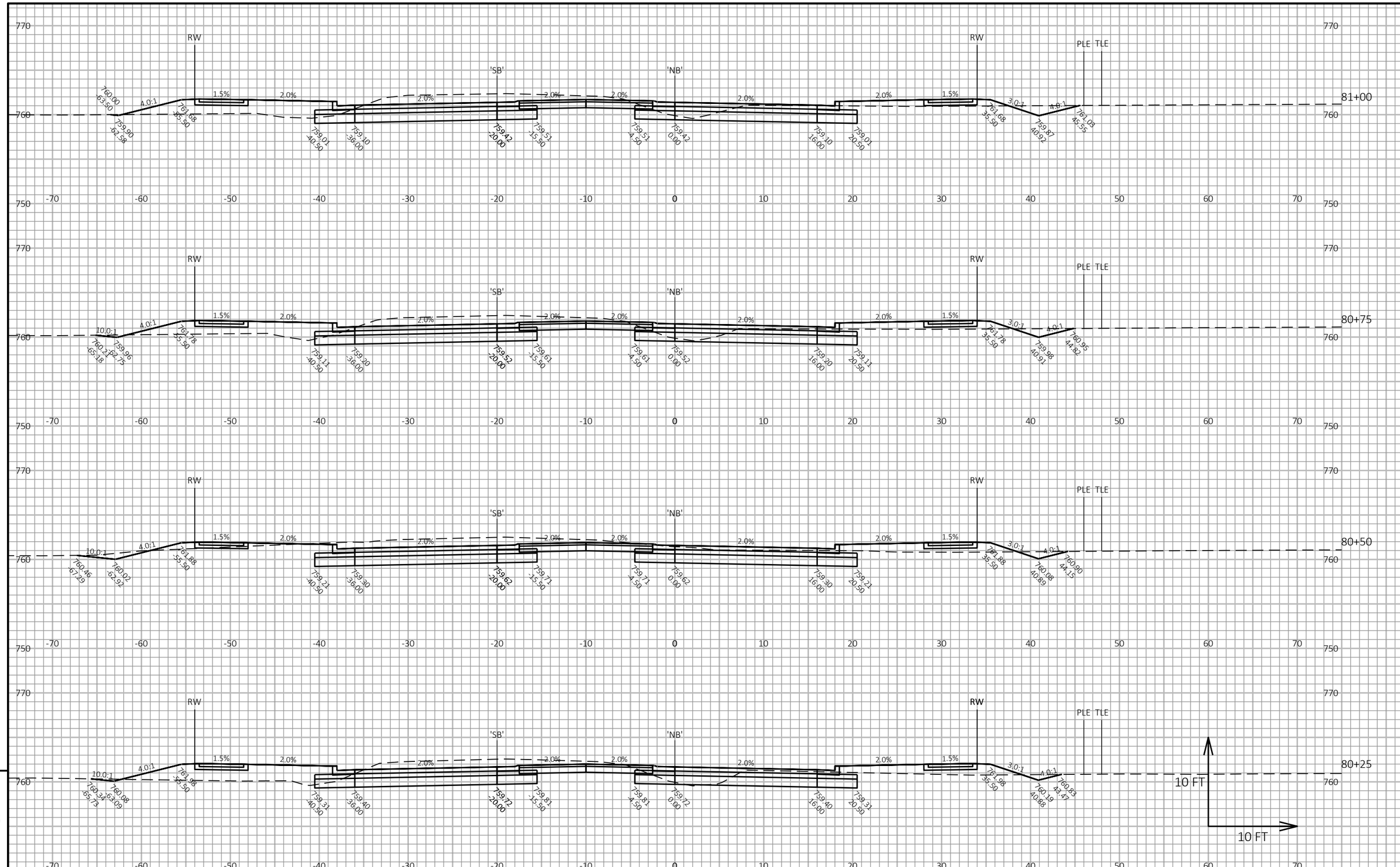

PROJECT NO: 9269-00-14	HWY: MARLEY STREET	COUNTY: BROWN	CROSS SECTIONS: MARLEY ST	SHEET 188	E

FILE NAME : I:\45\450490 MARLEY STREET\C3D\SHEETSPLAN\090201 XS.DWG
LAYOUT NAME - 090217 xs
PLOT DATE : 11/11/2021 3:35 PM
PLOT BY : SEIBERT, CHELSEA
PLOT NAME :
PLOT SCALE : 1 IN:10 FT HORZ. / 1 IN:10 FT VERT.
WISDOT/CADDS SHEET 49

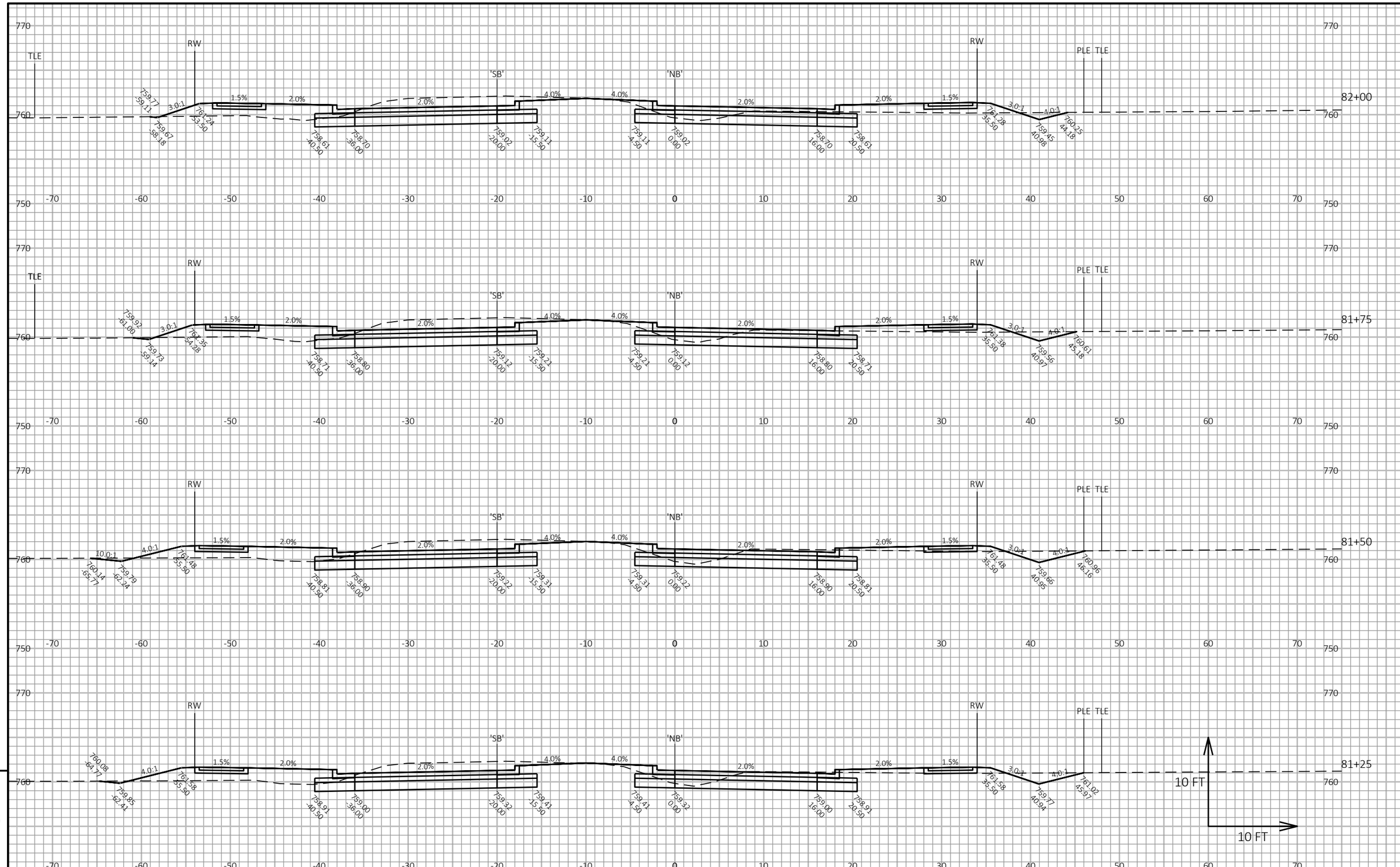

9

9

PROJECT NO: 9269-00-14	HWY: MARLEY STREET	COUNTY: BROWN	CROSS SECTIONS: MARLEY ST	SHEET 189	E

FILE NAME : I:\45\450490 MARLEY STREET\C3D\SHEETSPLAN\090201 XS.DWG
LAYOUT NAME - 090218 xs
PLOT DATE : 11/11/2021 3:35 PM
PLOT BY : SEIBERT, CHELSEA
PLOT NAME :
PLOT SCALE : 1 IN:10 FT HORZ. / 1 IN:10 FT VERT.
WISDOT/CADDS SHEET 49

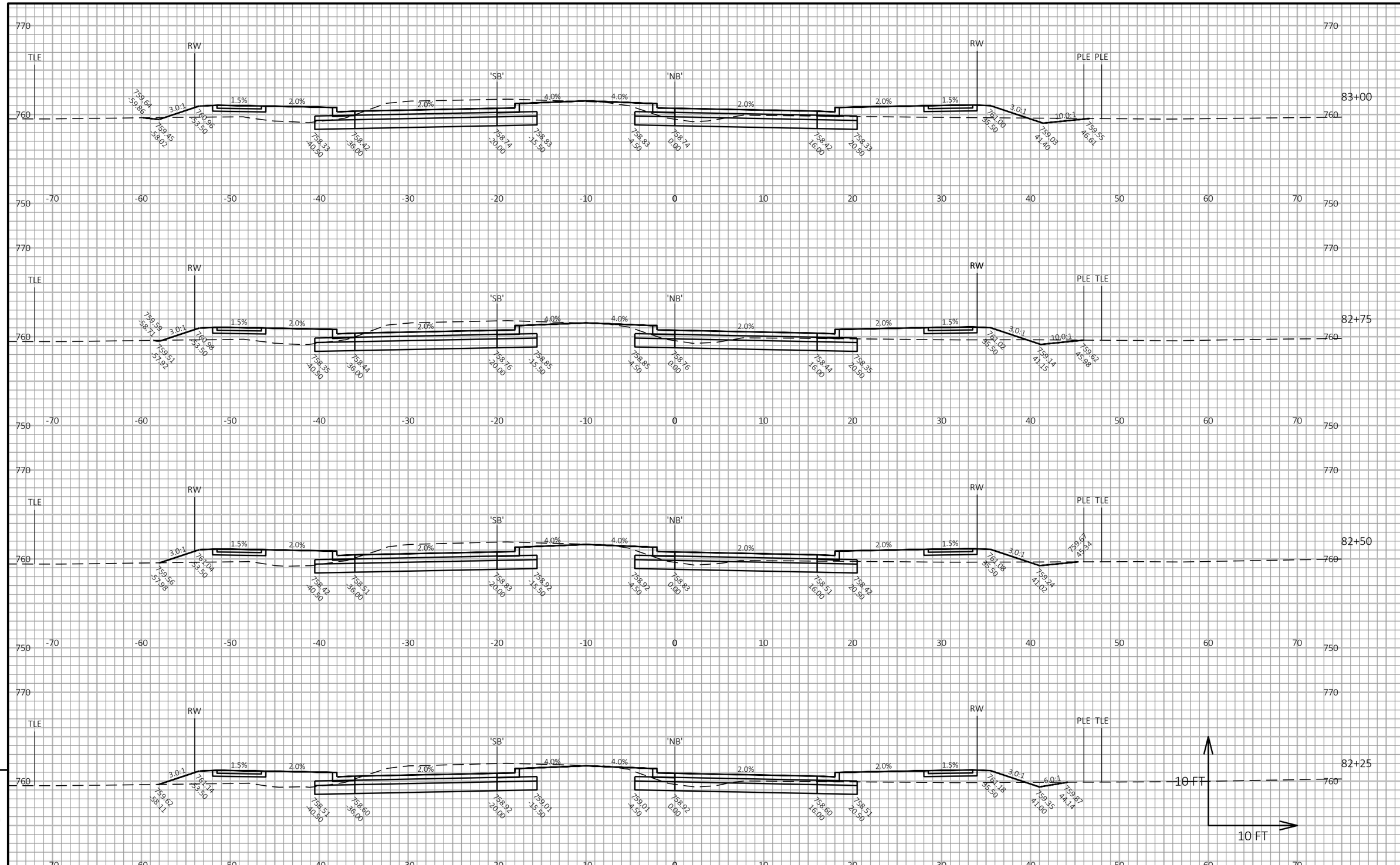

PROJECT NO: 9269-00-14	HWY: MARLEY STREET	COUNTY: BROWN	CROSS SECTIONS: MARLEY ST	SHEET 190	E

FILE NAME : I:\45\450490 MARLEY STREET\C3D\SHEETSPLAN\090201 XS.DWG
LAYOUT NAME - 090219 xs
PLOT DATE : 11/11/2021 3:35 PM
PLOT BY : SEIBERT, CHELSEA
PLOT NAME :
PLOT SCALE : 1 IN:10 FT HORZ. / 1 IN:10 FT VERT.

WISDOT/CADDS SHEET 49

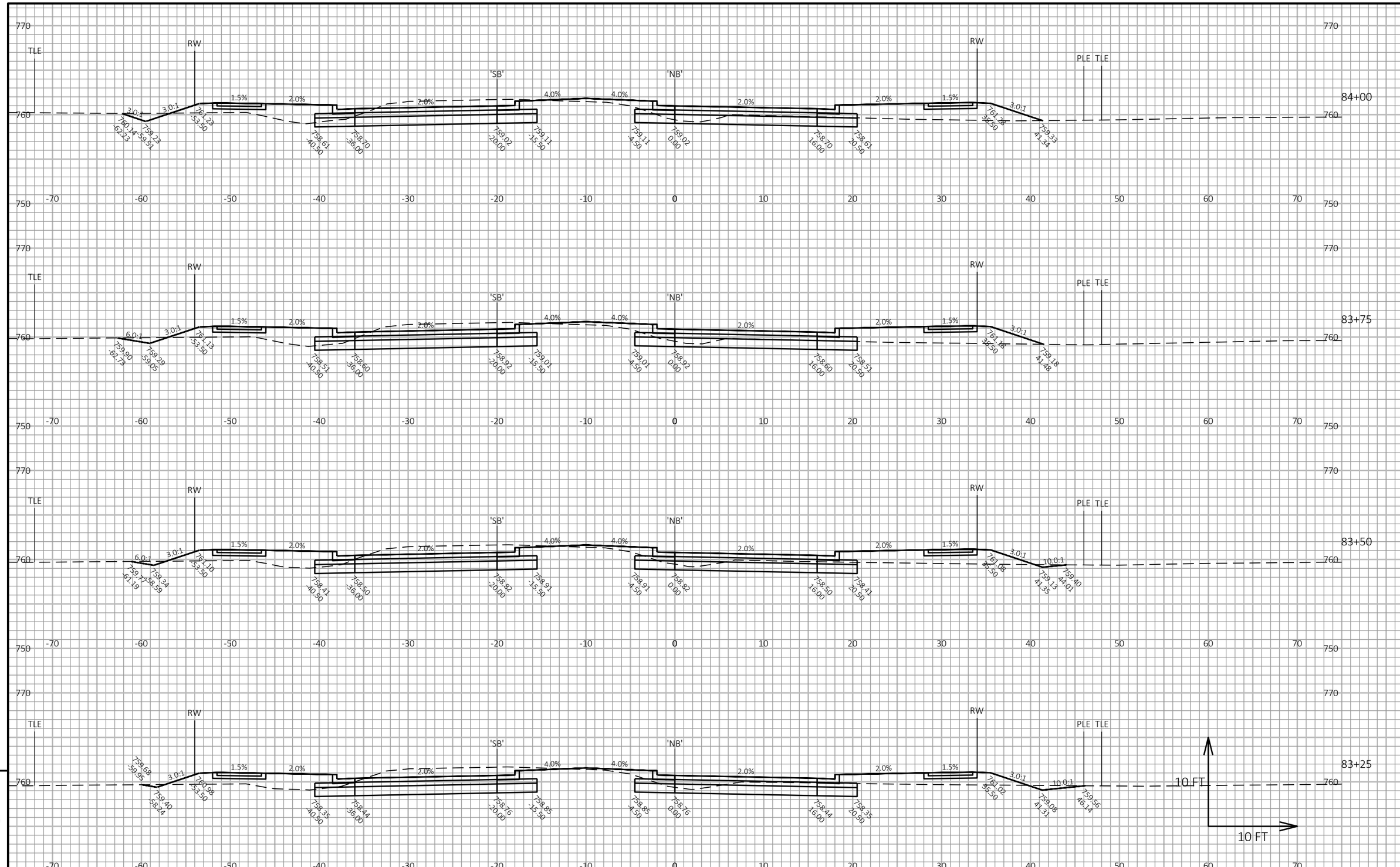

9

9

PROJECT NO: 9269-00-14	HWY: MARLEY STREET	COUNTY: BROWN	CROSS SECTIONS: MARLEY ST	SHEET 191	E

FILE NAME : I:\45\450490 MARLEY STREET\C3D\SHEETSPLAN\090201 XS.DWG
LAYOUT NAME - 090220 xs
PLOT DATE : 11/11/2021 3:35 PM
PLOT BY : SEIBERT, CHELSEA
PLOT NAME :
PLOT SCALE : 1 IN:10 FT HORZ. / 1 IN:10 FT VERT.

WISDOT/CADDS SHEET 49

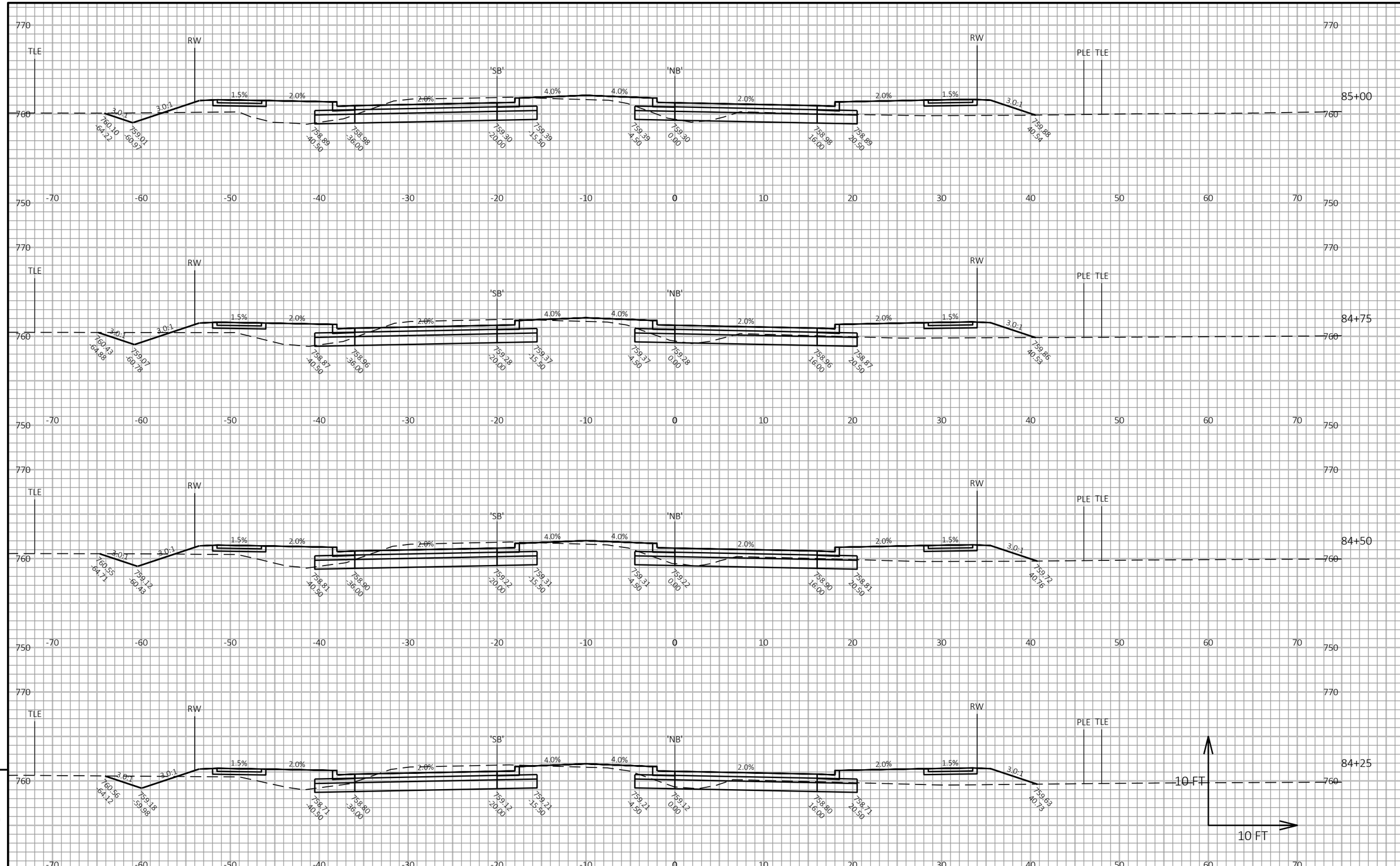

9

9

PROJECT NO: 9269-00-14	HWY: MARLEY STREET	COUNTY: BROWN	CROSS SECTIONS: MARLEY ST	SHEET 192	E

FILE NAME : I:\45\450490 MARLEY STREET\C3D\SHEETSPLAN\090201 XS.DWG
LAYOUT NAME - 090221 xs
PLOT DATE : 11/11/2021 3:36 PM
PLOT BY : SEIBERT, CHELSEA
PLOT NAME :
PLOT SCALE : 1 IN:10 FT HORZ. / 1 IN:10 FT VERT.
WISDOT/CADDS SHEET 49

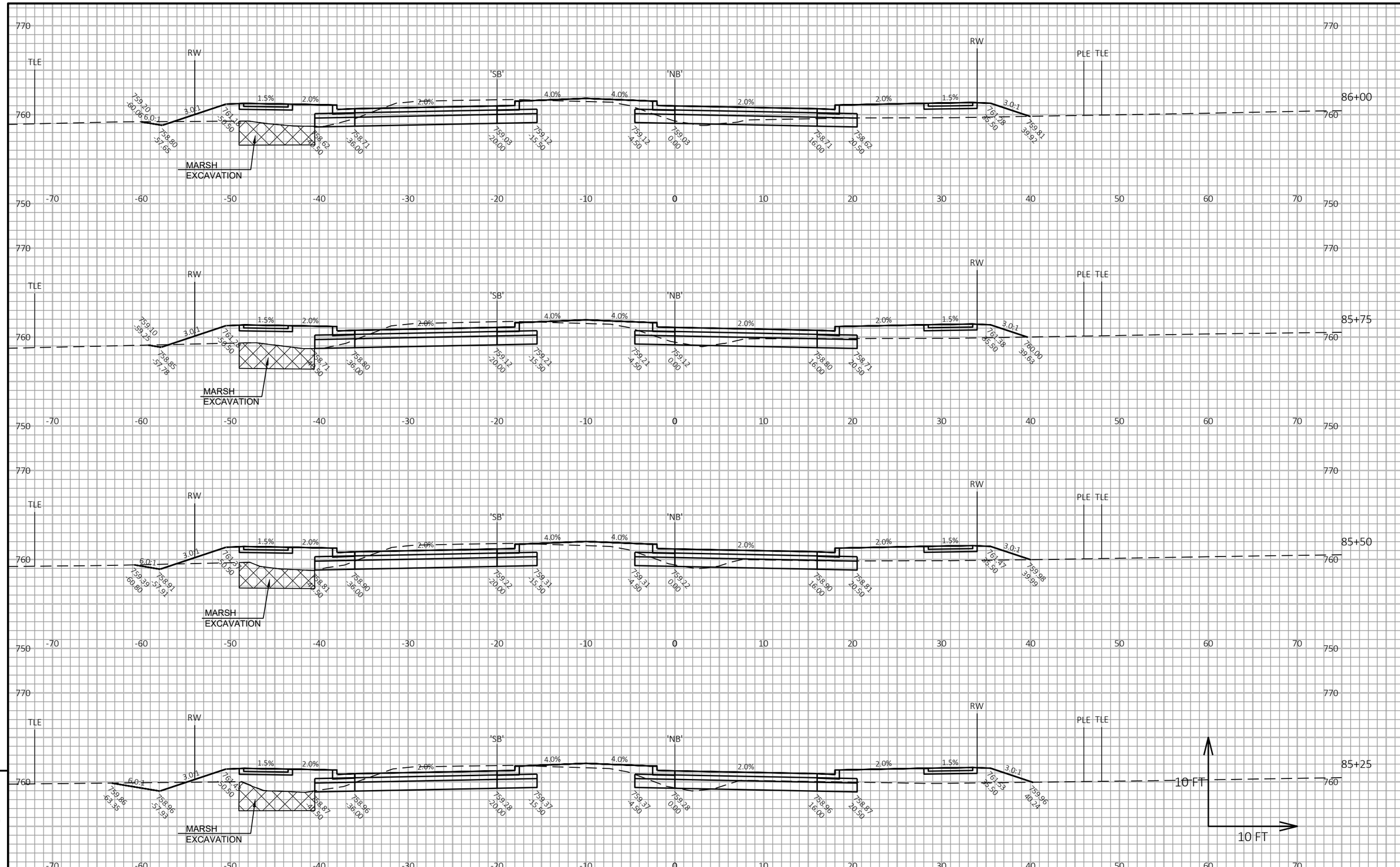

PROJECT NO: 9269-00-14	HWY: MARLEY STREET	COUNTY: BROWN	CROSS SECTIONS: MARLEY ST	SHEET 193	E

FILE NAME : I:\45\450490 MARLEY STREET\C3D\SHEETSPLAN\090201 XS.DWG
LAYOUT NAME - 090222 xs
PLOT DATE : 11/11/2021 3:36 PM
PLOT BY : SEIBERT, CHELSEA
PLOT NAME :
PLOT SCALE : 1 IN:10 FT HORZ. / 1 IN:10 FT VERT.
WISDOT/CADDS SHEET 49

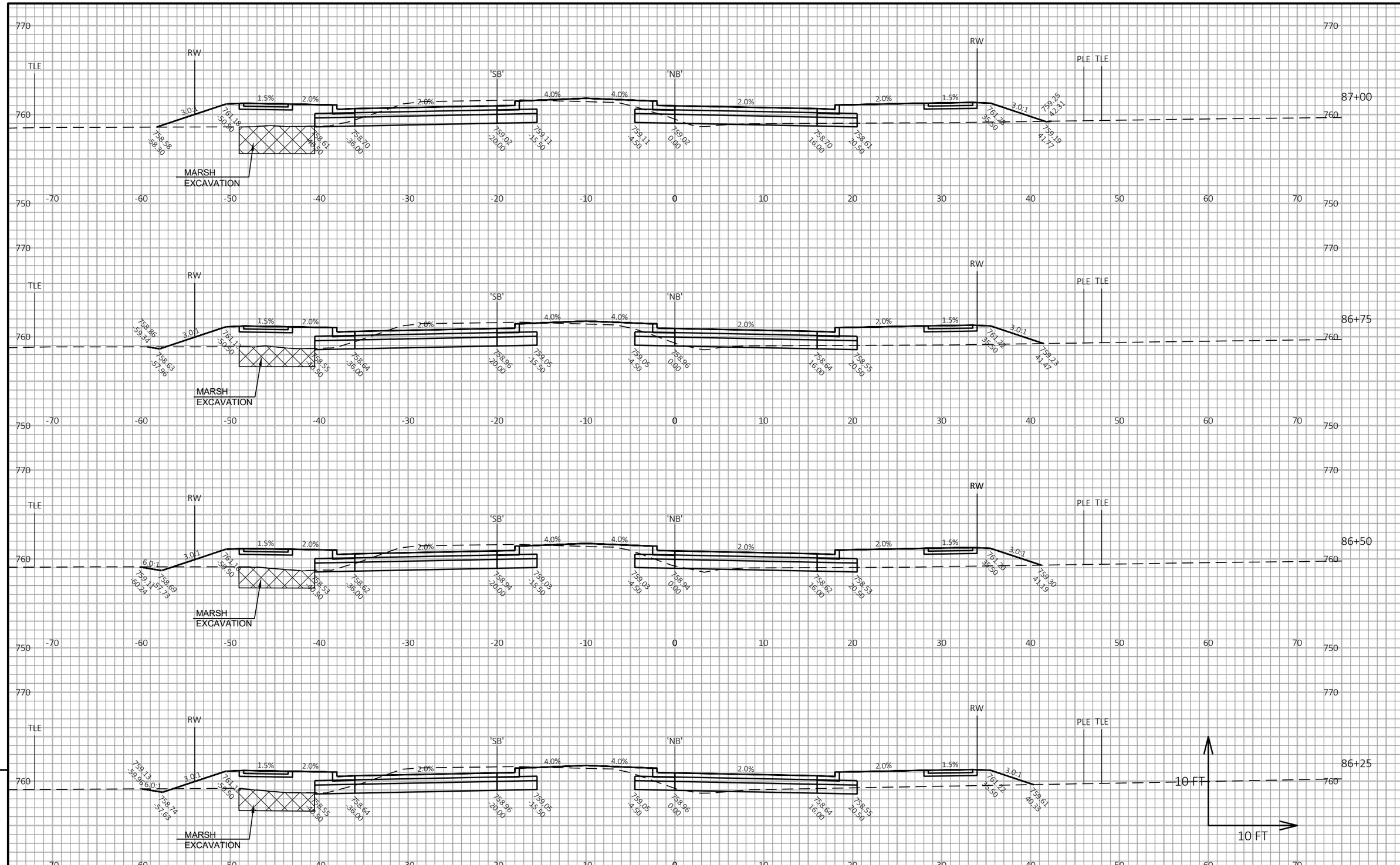

PROJECT NO: 9269-00-14	HWY: MARLEY STREET	COUNTY: BROWN	CROSS SECTIONS: MARLEY ST	SHEET 194	E

FILE NAME : I:\45\450490 MARLEY STREET\C3D\SHEETSPLAN\090201 XS.DWG
LAYOUT NAME - 090223 xs
PLOT DATE : 11/11/2021 3:36 PM
PLOT BY : SEIBERT, CHELSEA
PLOT NAME :
PLOT SCALE : 1 IN:10 FT HORZ. / 1 IN:10 FT VERT.

WISDOT/CADDS SHEET 49

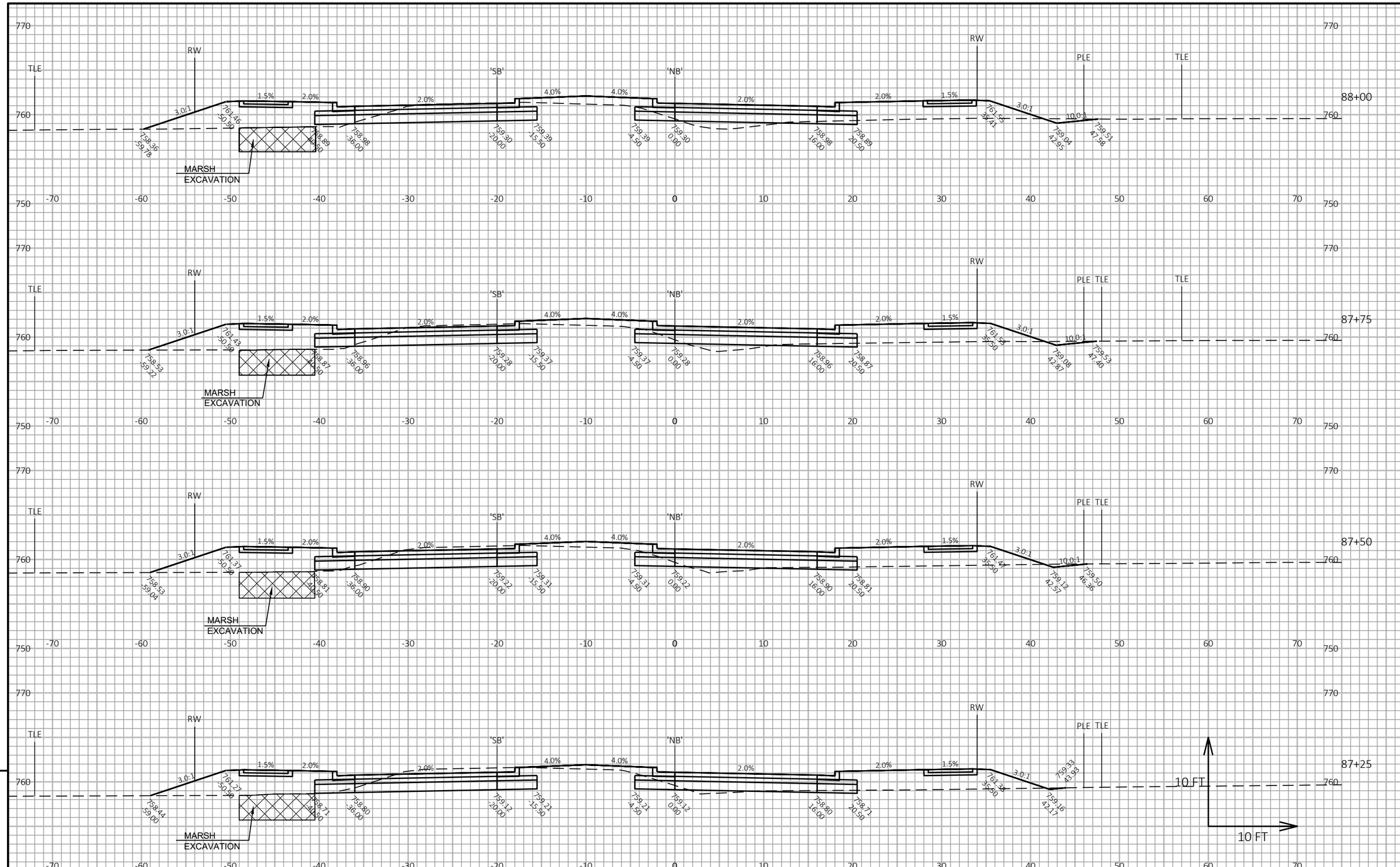

9

9

PROJECT NO: 9269-00-14	HWY: MARLEY STREET	COUNTY: BROWN	CROSS SECTIONS: MARLEY ST	SHEET 195	E

FILE NAME : I:\45\450490 MARLEY STREET\C3D\SHEETSPLAN\090201 XS.DWG
LAYOUT NAME - 090224 xs
PLOT DATE : 11/11/2021 3:36 PM
PLOT BY : SEIBERT, CHELSEA
PLOT NAME :
PLOT SCALE : 1 IN:10 FT HORZ. / 1 IN:10 FT VERT.
WISDOT/CADDS SHEET 49

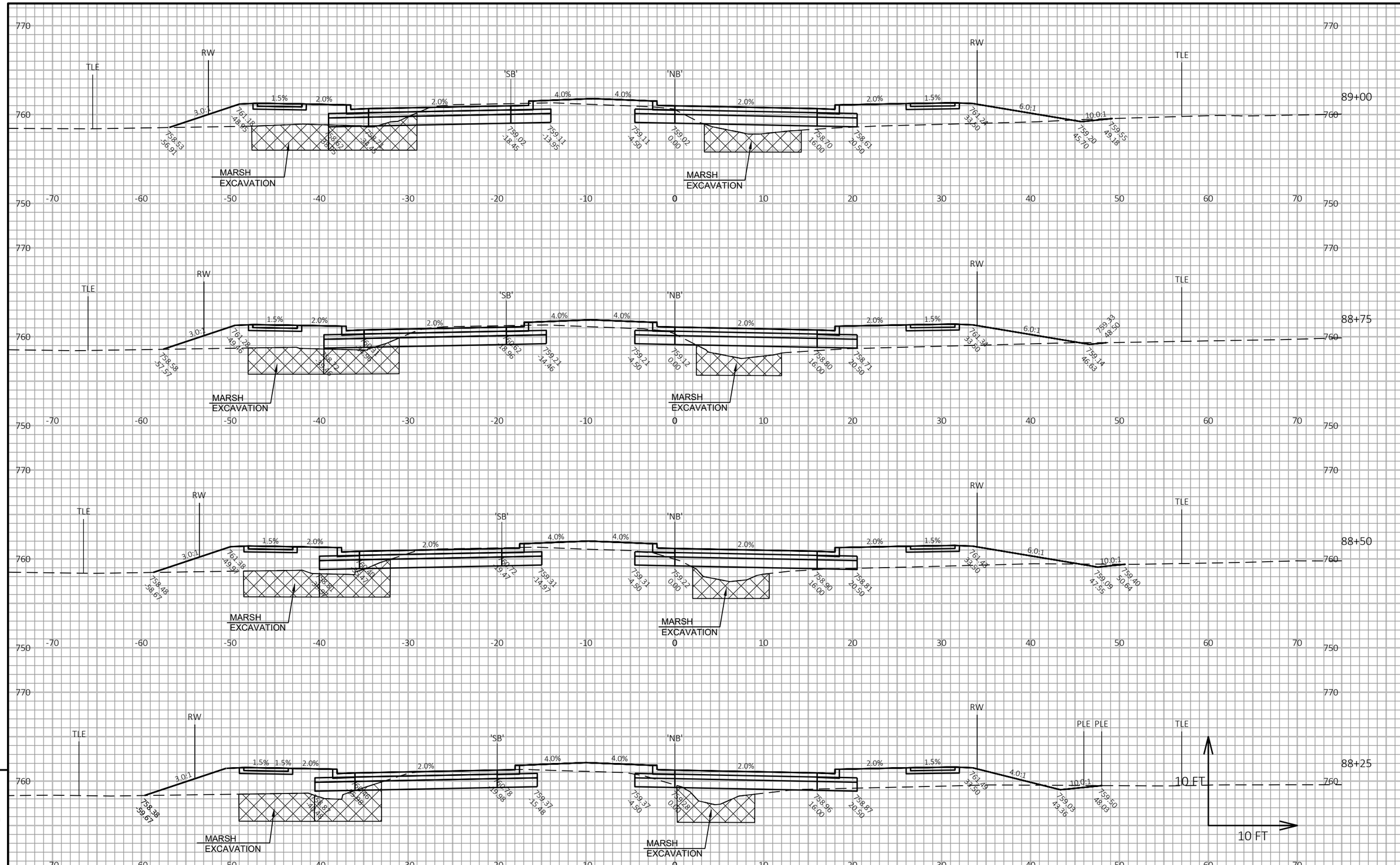

PROJECT NO: 9269-00-14	HWY: MARLEY STREET	COUNTY: BROWN	CROSS SECTIONS: MARLEY ST	SHEET 196	E

FILE NAME : I:\45\450490 MARLEY STREET\C3D\SHEETSPLAN\090201 XS.DWG
LAYOUT NAME - 090225 xs
PLOT DATE : 11/11/2021 3:36 PM
PLOT BY : SEIBERT, CHELSEA
PLOT NAME :
PLOT SCALE : 1 IN:10 FT HORZ. / 1 IN:10 FT VERT.

WISDOT/CADDS SHEET 49

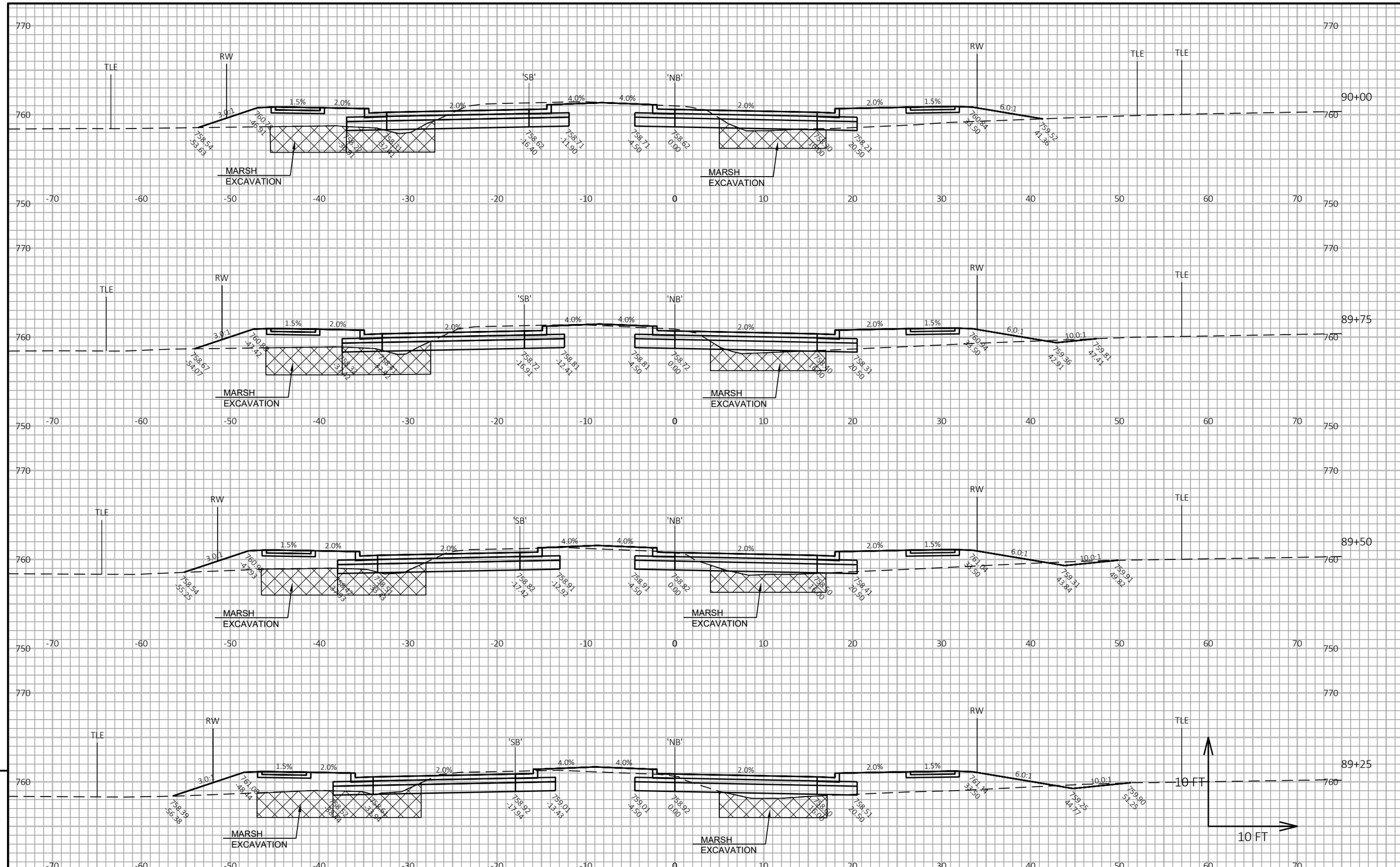

9

9

PROJECT NO: 9269-00-14	HWY: MARLEY STREET	COUNTY: BROWN	CROSS SECTIONS: MARLEY ST	SHEET 197	E

FILE NAME : I:\45\450490 MARLEY STREET\C3D\SHEETSPLAN\090201 XS.DWG
LAYOUT NAME - 090226 xs
PLOT DATE : 11/11/2021 3:37 PM
PLOT BY : SEIBERT, CHELSEA
PLOT NAME :
PLOT SCALE : 1 IN:10 FT HORZ. / 1 IN:10 FT VERT.
WISDOT/CADDS SHEET 49

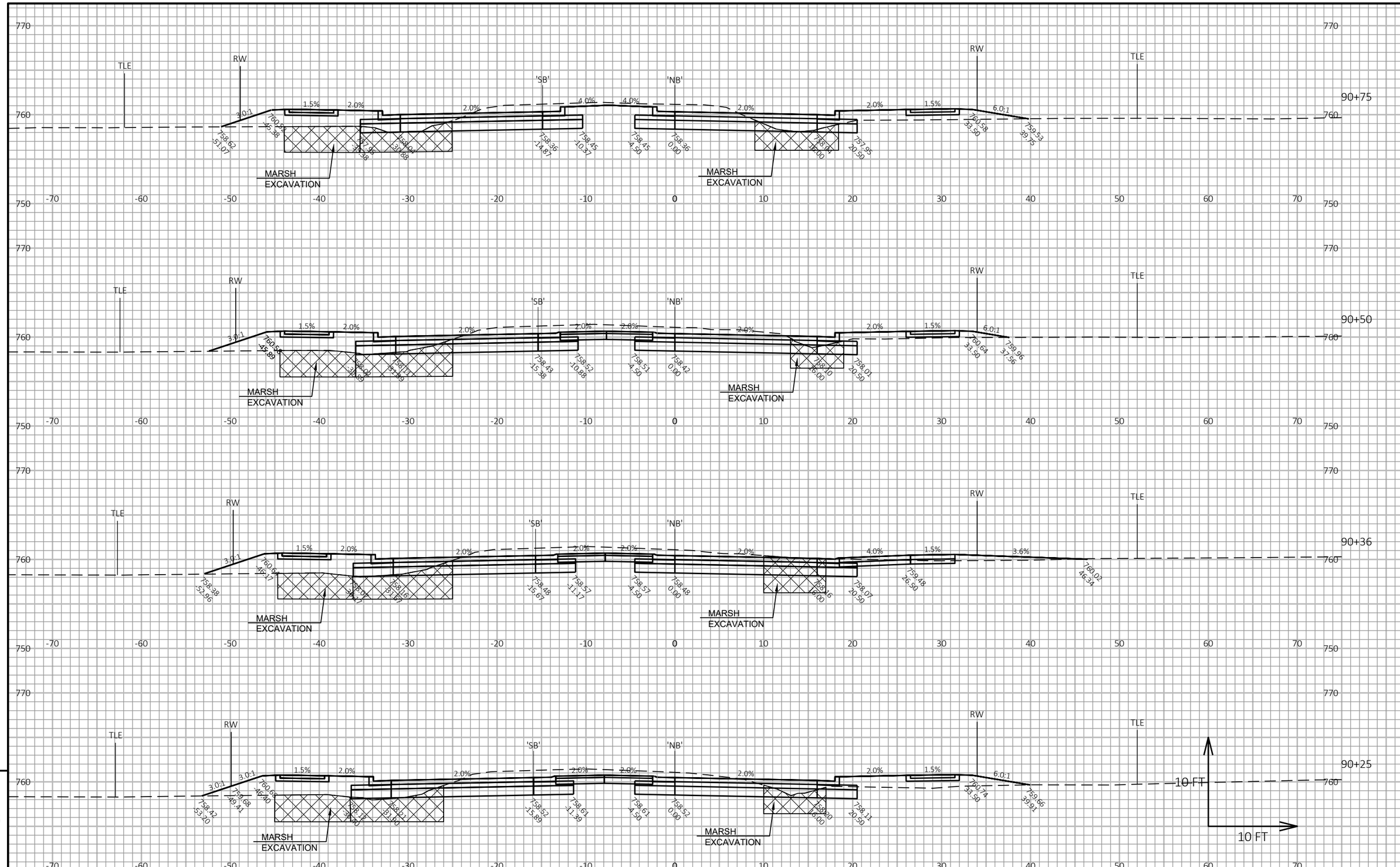

PROJECT NO: 9269-00-14	HWY: MARLEY STREET	COUNTY: BROWN	CROSS SECTIONS: MARLEY ST	SHEET 198	E

FILE NAME : I:\45\450490 MARLEY STREET\C3D\SHEETSPLAN\090201 XS.DWG
LAYOUT NAME - 090227 xs
PLOT DATE : 11/11/2021 3:37 PM
PLOT BY : SEIBERT, CHELSEA
PLOT NAME :
PLOT SCALE : 1 IN:10 FT HORZ. / 1 IN:10 FT VERT.

WISDOT/CADDS SHEET 49

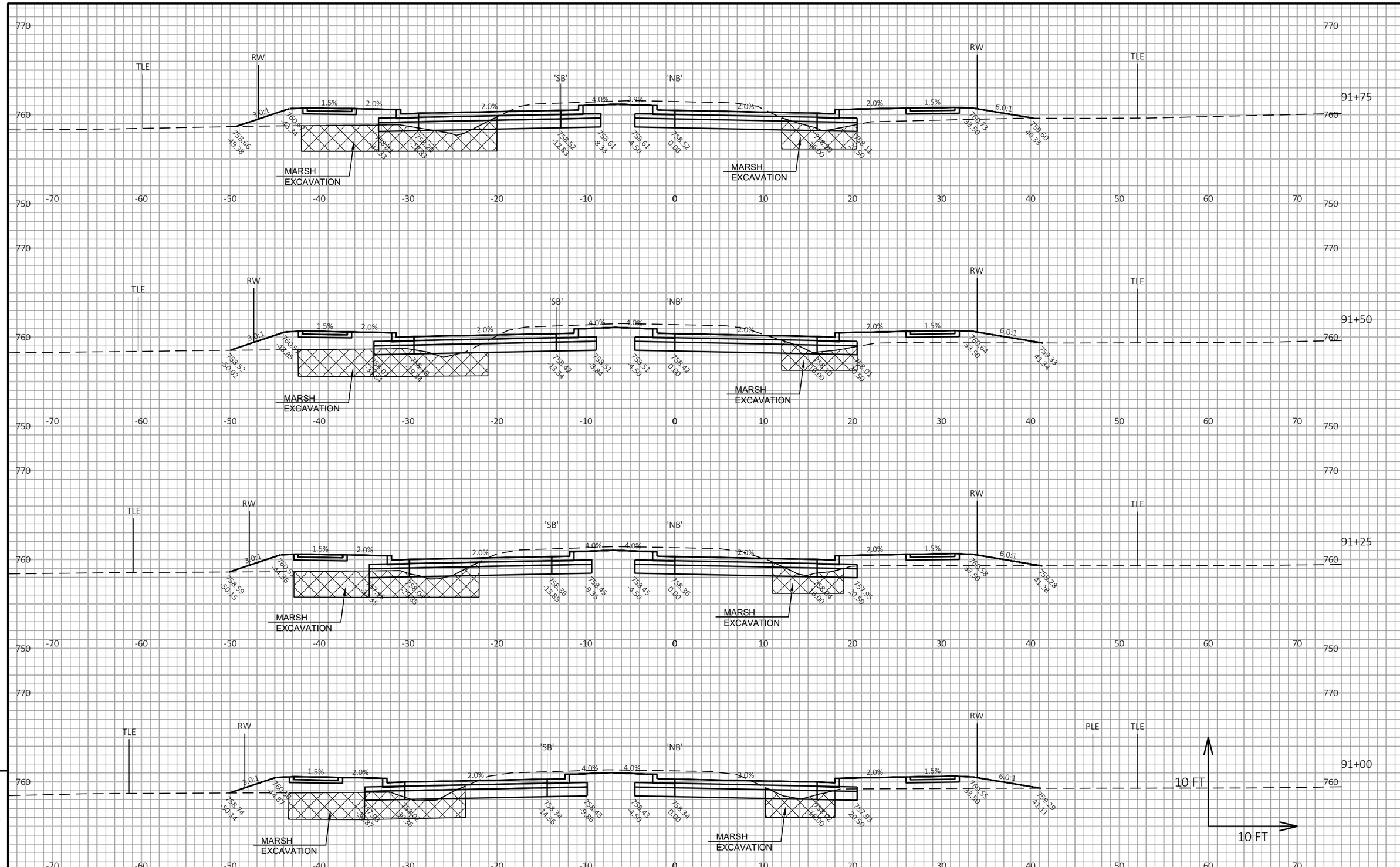

PROJECT NO: 9269-00-14	HWY: MARLEY STREET	COUNTY: BROWN	CROSS SECTIONS: MARLEY ST	SHEET 199	E

FILE NAME : I:\45\450490 MARLEY STREET\C3D\SHEETSPLAN\090201 XS.DWG
LAYOUT NAME - 090228 xs
PLOT DATE : 11/11/2021 3:37 PM
PLOT BY : SEIBERT, CHELSEA
PLOT NAME :
PLOT SCALE : 1 IN:10 FT HORZ. / 1 IN:10 FT VERT.

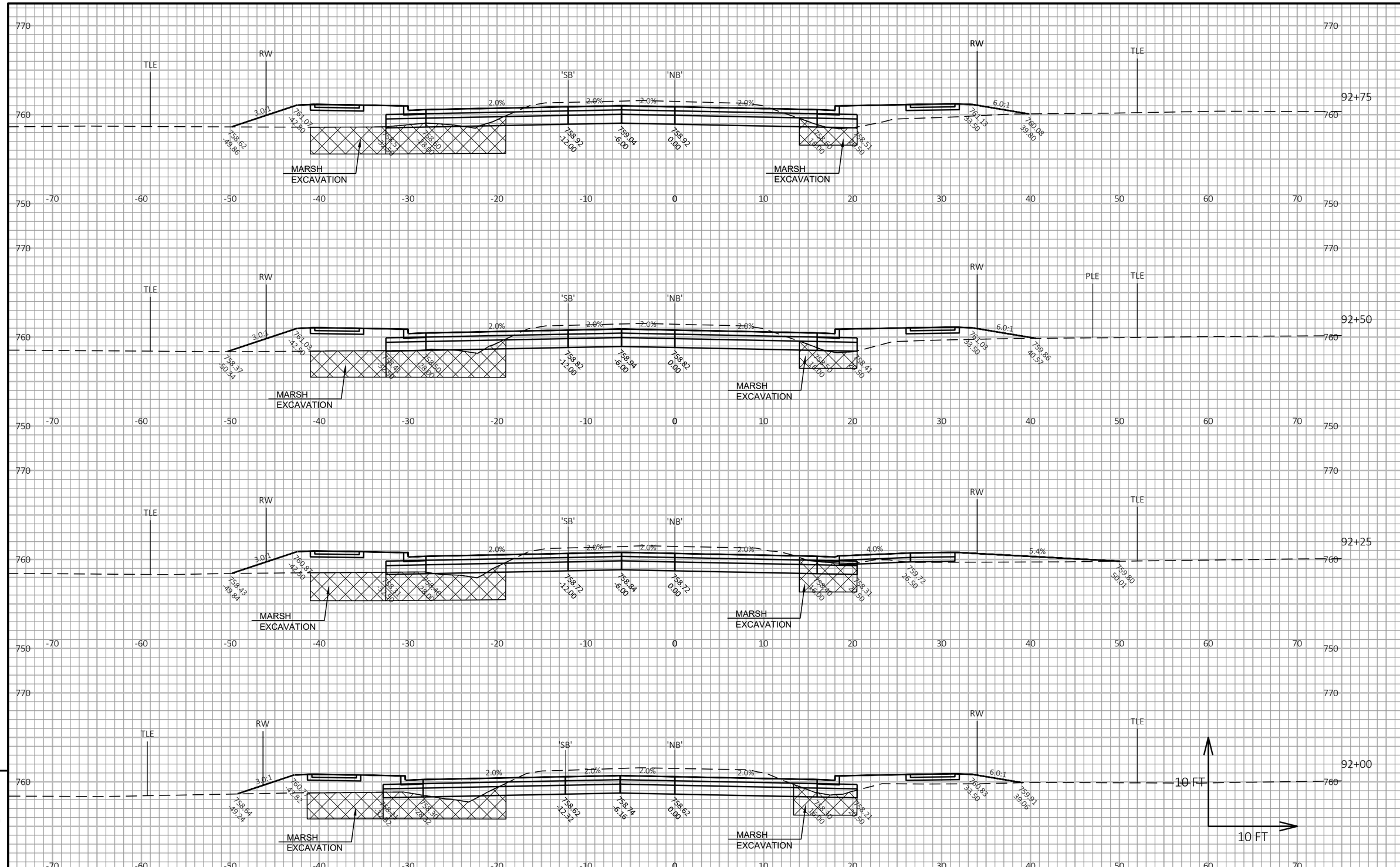

PROJECT NO: 9269-00-14	HWY: MARLEY STREET	COUNTY: BROWN	CROSS SECTIONS: MARLEY ST	SHEET 200	E

FILE NAME : I:\45\450490 MARLEY STREET\C3D\SHEETSPLAN\090201 XS.DWG
LAYOUT NAME - 090229 xs
PLOT DATE : 11/11/2021 3:37 PM
PLOT BY : SEIBERT, CHELSEA
PLOT NAME :
PLOT SCALE : 1 IN:10 FT HORZ. / 1 IN:10 FT VERT.
WISDOT/CADDS SHEET 49

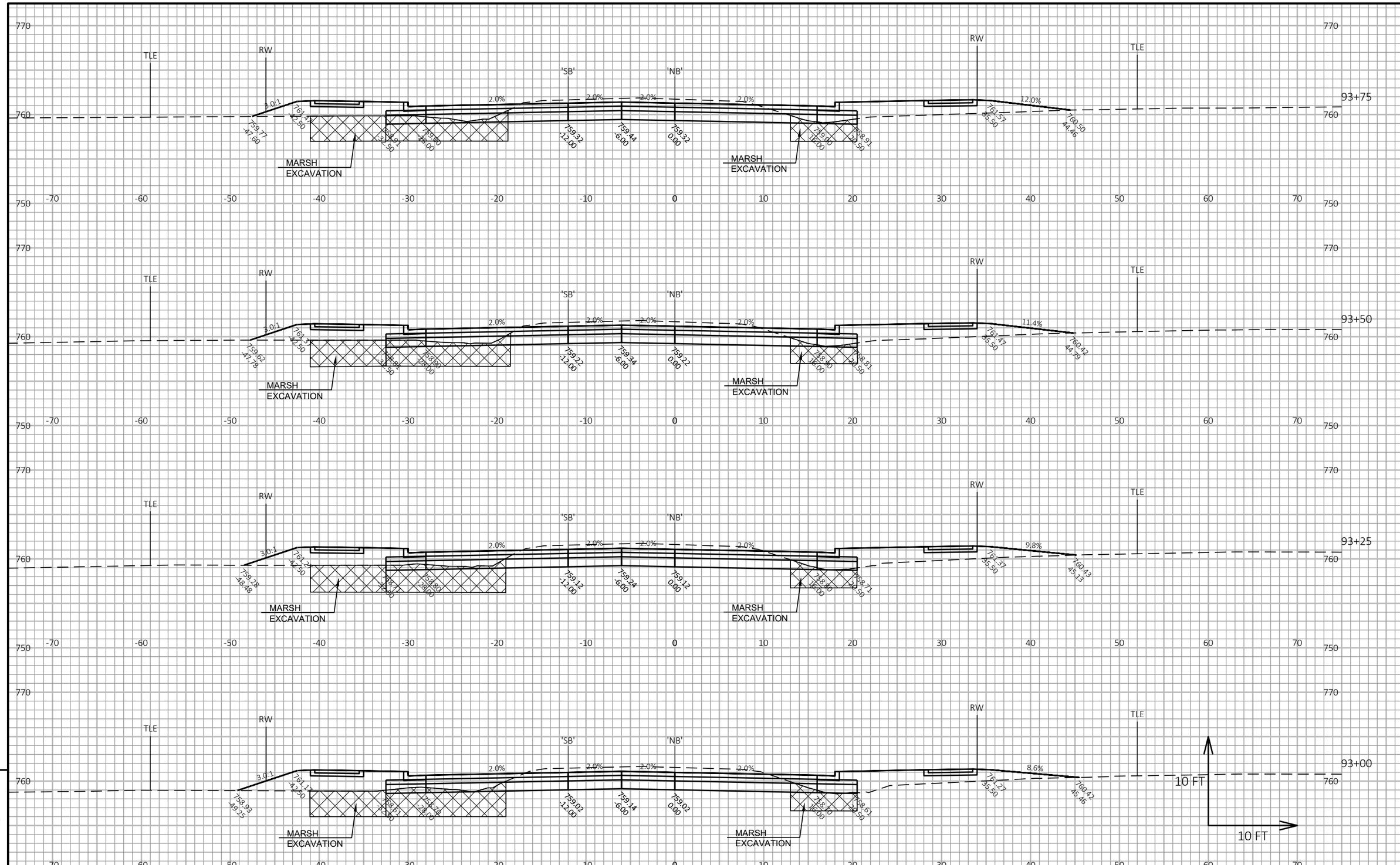

PROJECT NO: 9269-00-14	HWY: MARLEY STREET	COUNTY: BROWN	CROSS SECTIONS: MARLEY ST	SHEET 201	E

FILE NAME : I:\45\450490 MARLEY STREET\C3D\SHEETSPLAN\090201 XS.DWG
LAYOUT NAME - 090230 xs
PLOT DATE : 11/11/2021 3:37 PM
PLOT BY : SEIBERT, CHELSEA
PLOT NAME :
PLOT SCALE : 1 IN:10 FT HORZ. / 1 IN:10 FT VERT.
WISDOT/CADDS SHEET 49

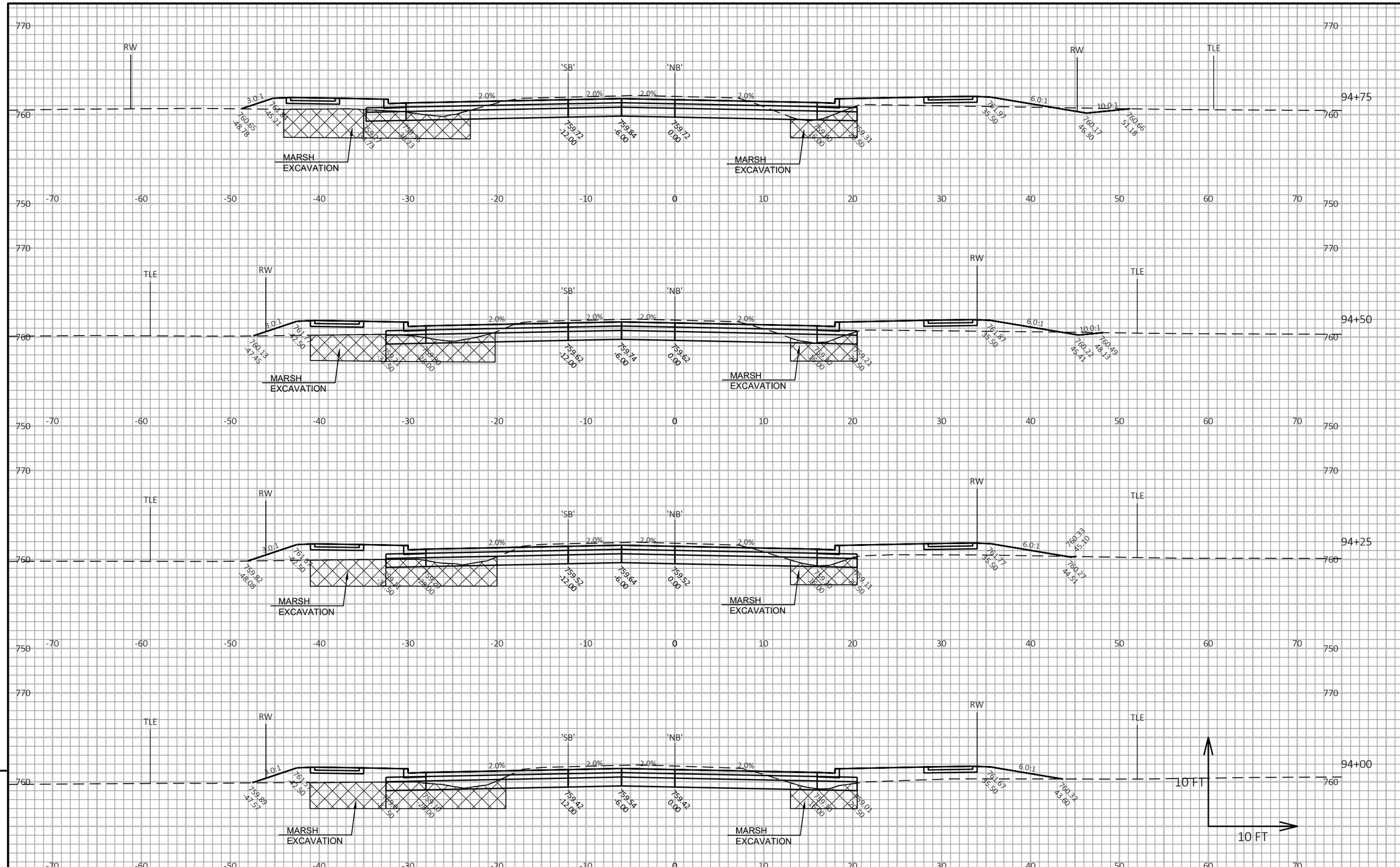

9

9

PROJECT NO: 9269-00-14	HWY: MARLEY STREET	COUNTY: BROWN	CROSS SECTIONS: MARLEY ST	SHEET 202	E

FILE NAME : I:\45\450490 MARLEY STREET\C3D\SHEETSPLAN\090201 XS.DWG
LAYOUT NAME - 090231 xs
PLOT DATE : 11/11/2021 3:37 PM
PLOT BY : SEIBERT, CHELSEA
PLOT NAME :
PLOT SCALE : 1 IN:10 FT HORZ. / 1 IN:10 FT VERT.

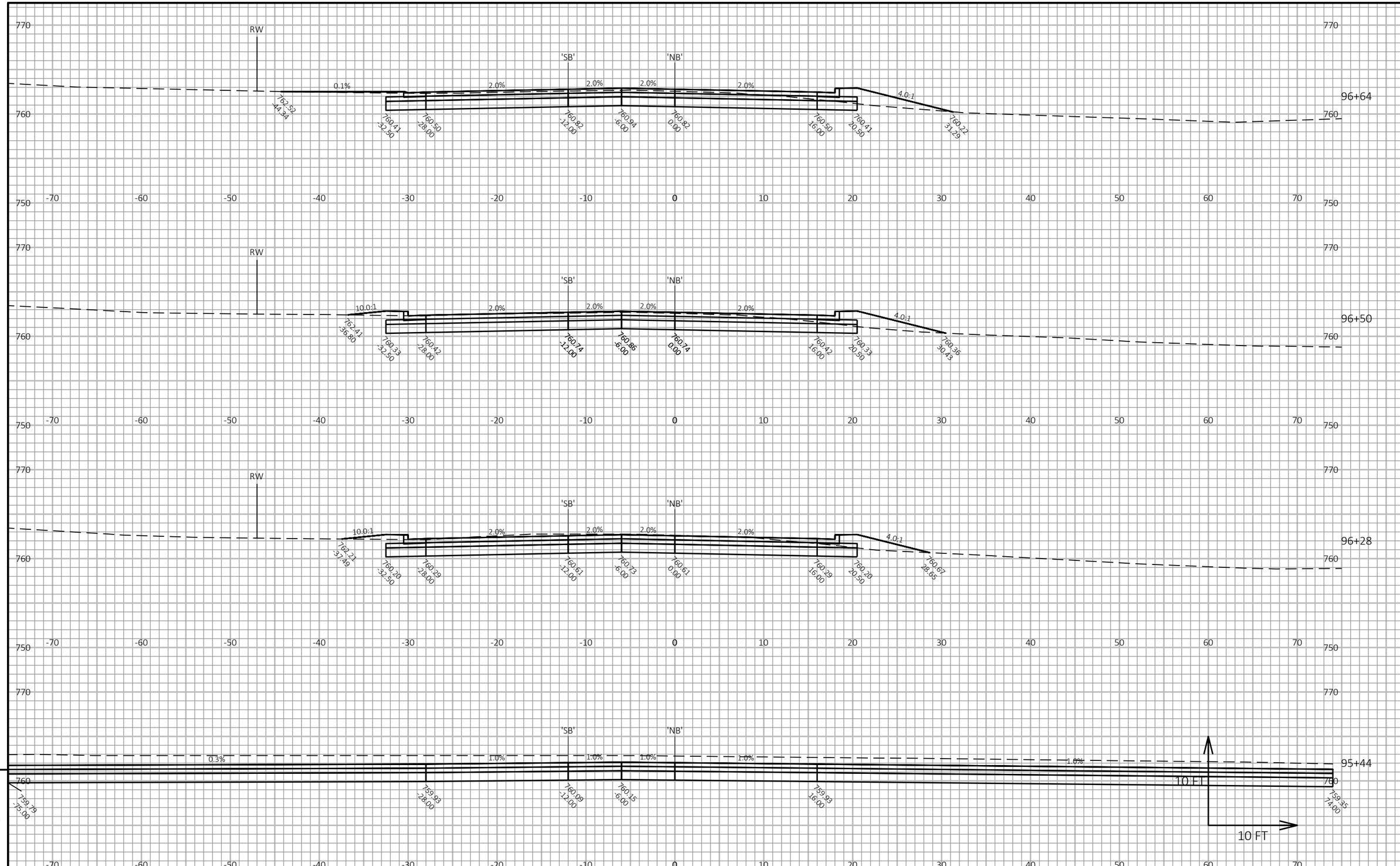

9

9

PROJECT NO: 9269-00-14	HWY: MARLEY STREET	COUNTY: BROWN	CROSS SECTIONS: MARLEY ST	SHEET 203	E

FILE NAME : I:\45\450490 MARLEY STREET\C3D\SHEETSPLAN\090201 XS.DWG
LAYOUT NAME - 090232 xs
PLOT DATE : 11/11/2021 3:38 PM
PLOT BY : SEIBERT, CHELSEA
PLOT NAME :
PLOT SCALE : 1 IN:10 FT HORZ. / 1 IN:10 FT VERT.

WISDOT/CADDS SHEET 49

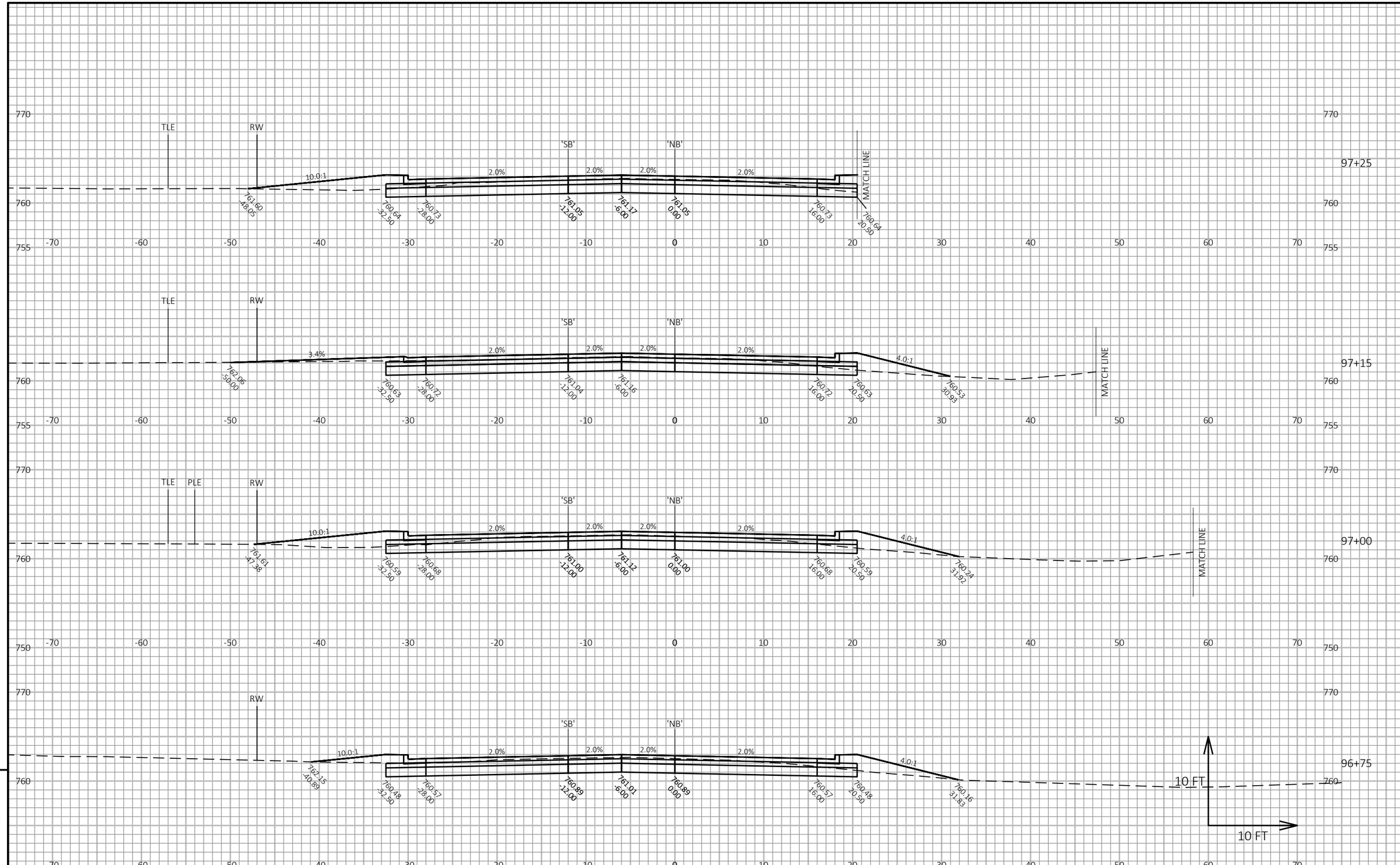

9

9

PROJECT NO: 9269-00-14	HWY: MARLEY STREET	COUNTY: BROWN	CROSS SECTIONS: MARLEY ST	SHEET 204	E

FILE NAME : I:\45\450490 MARLEY STREET\C3D\SHEETSPLAN\090201 XS.DWG
LAYOUT NAME - 090233 xs
PLOT DATE : 11/11/2021 3:38 PM
PLOT BY : SEIBERT, CHELSEA
PLOT NAME :
PLOT SCALE : 1 IN:10 FT HORZ. / 1 IN:10 FT VERT.
WISDOT/CADDS SHEET 49

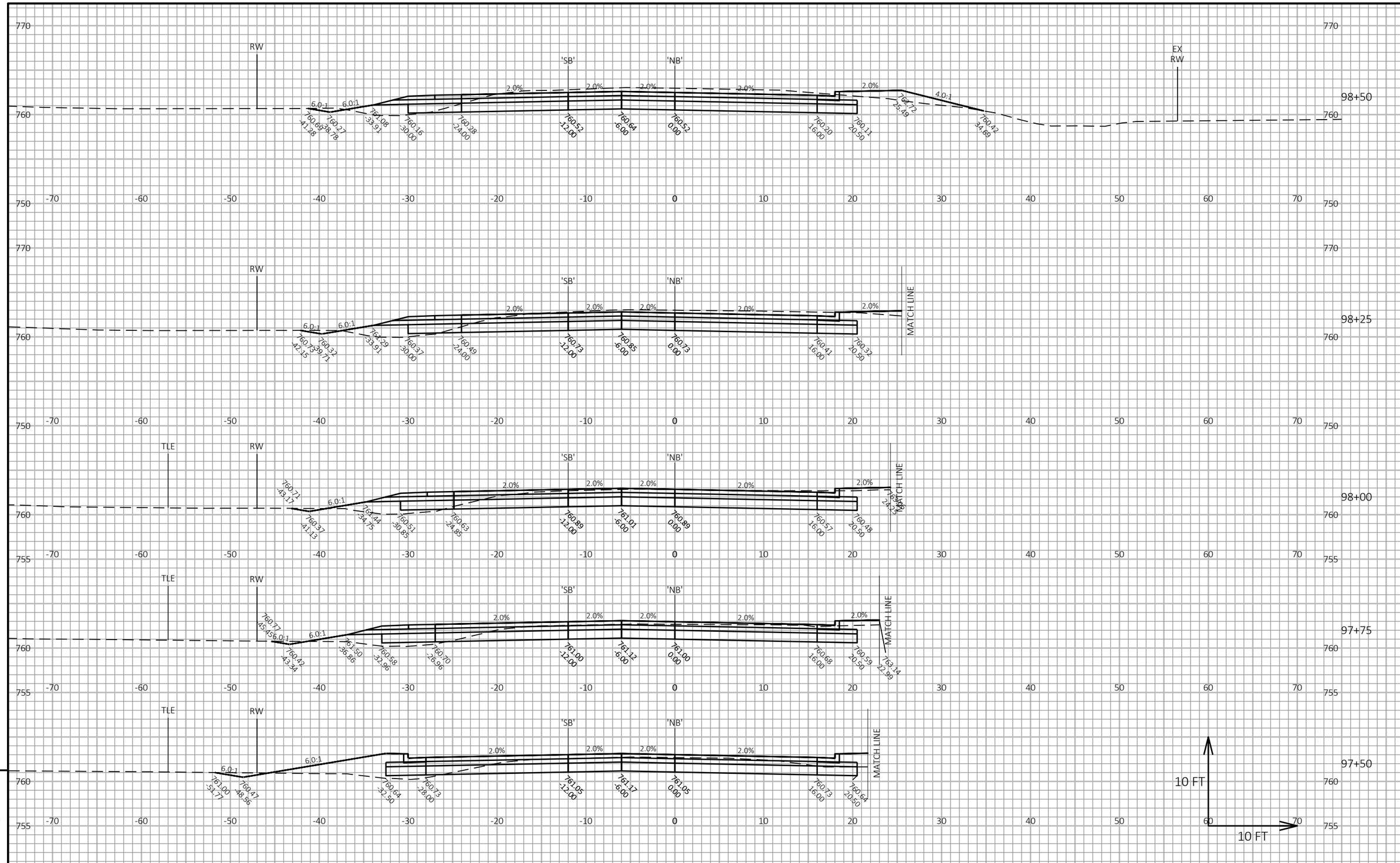

PROJECT NO: 9269-00-14	HWY: MARLEY STREET	COUNTY: BROWN	CROSS SECTIONS: MARLEY ST	SHEET 205	E

FILE NAME : I:\45\450490 MARLEY STREET\C3D\SHEETSPLAN\090201 XS.DWG
LAYOUT NAME - 090234 xs
PLOT DATE : 11/11/2021 3:38 PM
PLOT BY : SEIBERT, CHELSEA
PLOT NAME :
PLOT SCALE : 1 IN:10 FT HORZ. / 1 IN:10 FT VERT.
WISDOT/CADDS SHEET 49

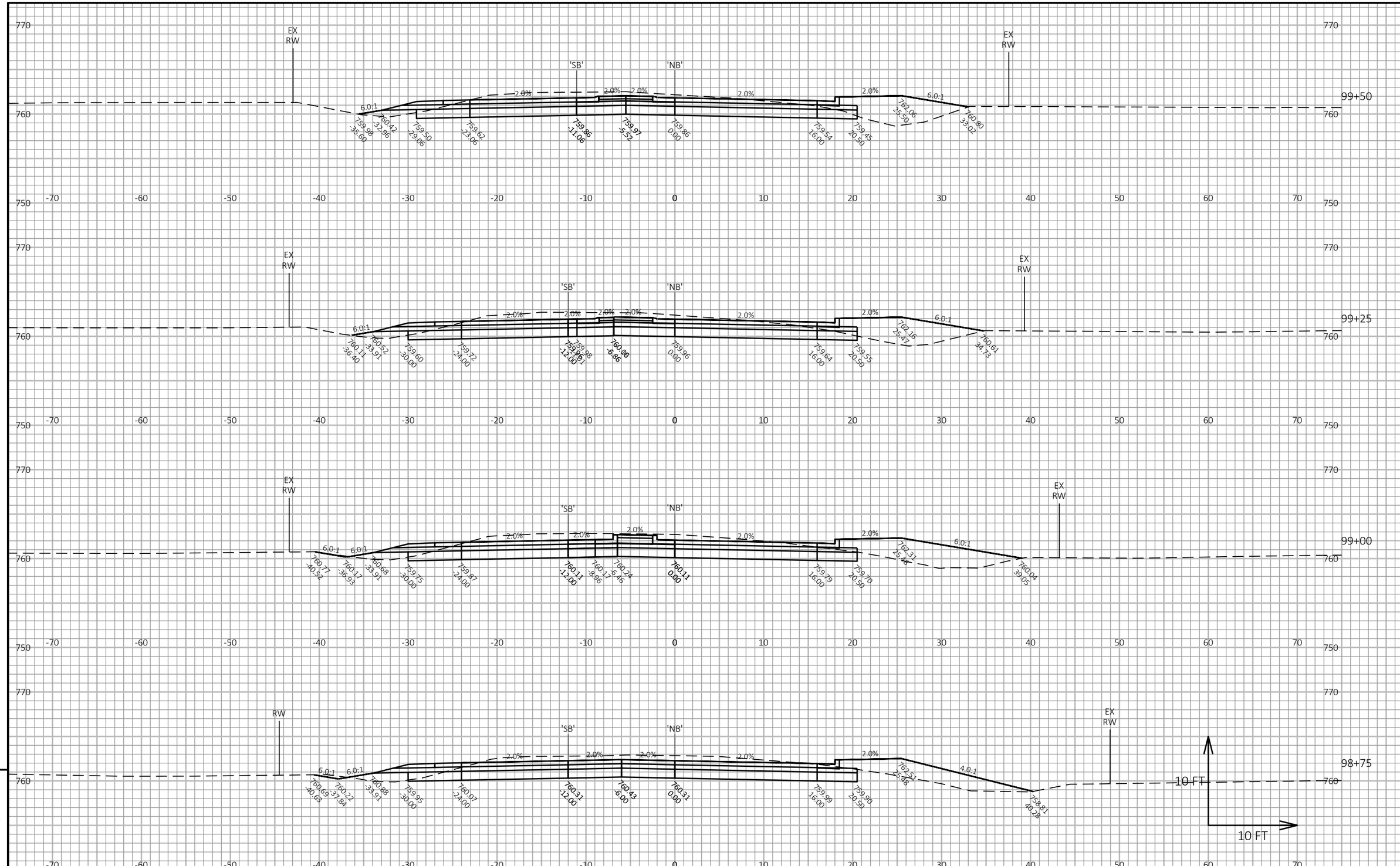

9

9

PROJECT NO: 9269-00-14	HWY: MARLEY STREET	COUNTY: BROWN	CROSS SECTIONS: MARLEY ST	SHEET 206	E

FILE NAME : I:\45\450490 MARLEY STREET\C3D\SHEETSPLAN\090201 XS.DWG
LAYOUT NAME - 090235 xs
PLOT DATE : 11/11/2021 3:38 PM
PLOT BY : SEIBERT, CHELSEA
PLOT NAME :
PLOT SCALE : 1 IN:10 FT HORZ. / 1 IN:10 FT VERT.

WISDOT/CADDS SHEET 49

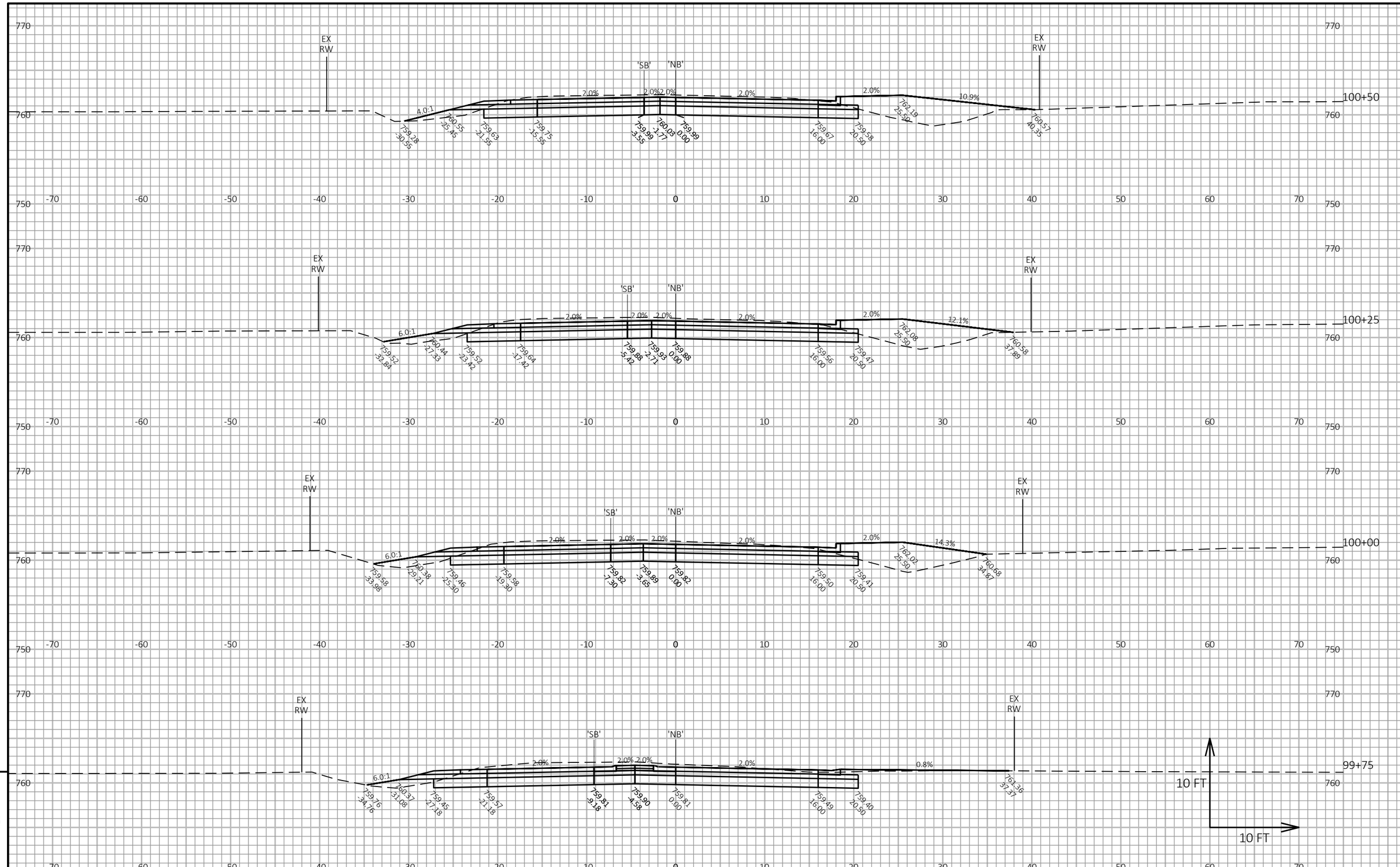

9

9

PROJECT NO: 9269-00-14	HWY: MARLEY STREET	COUNTY: BROWN	CROSS SECTIONS: MARLEY ST	SHEET 207	E

FILE NAME : I:\45\450490 MARLEY STREET\C3D\SHEETSPLAN\090201 XS.DWG
LAYOUT NAME - 090236 xs
PLOT DATE : 11/11/2021 3:38 PM
PLOT BY : SEIBERT, CHELSEA
PLOT NAME :
PLOT SCALE : 1 IN:10 FT HORZ. / 1 IN:10 FT VERT.
WISDOT/CADDS SHEET 49

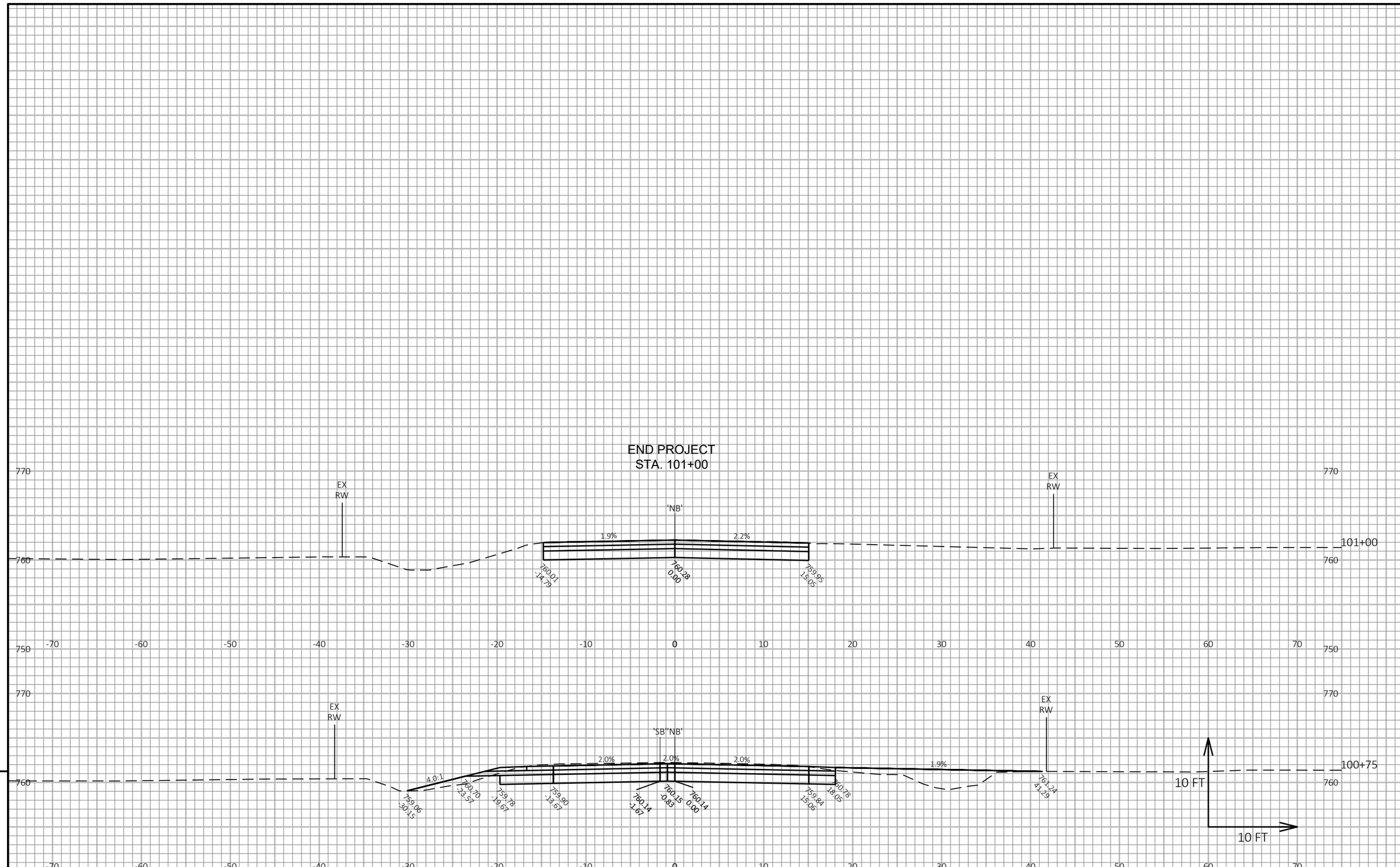

PROJECT NO: 9269-00-14	HWY: MARLEY STREET	COUNTY: BROWN	CROSS SECTIONS: MARLEY ST	SHEET 208	E

FILE NAME : I:\45\450490 MARLEY STREET\C3D\SHEETSPLAN\090201 XS.DWG
LAYOUT NAME - 090237 xs
PLOT DATE : 11/11/2021 3:38 PM
PLOT BY : SEIBERT, CHELSEA
PLOT NAME :
PLOT SCALE : 1 IN:10 FT HORZ. / 1 IN:10 FT VERT.
WISDOT/CADDS SHEET 49

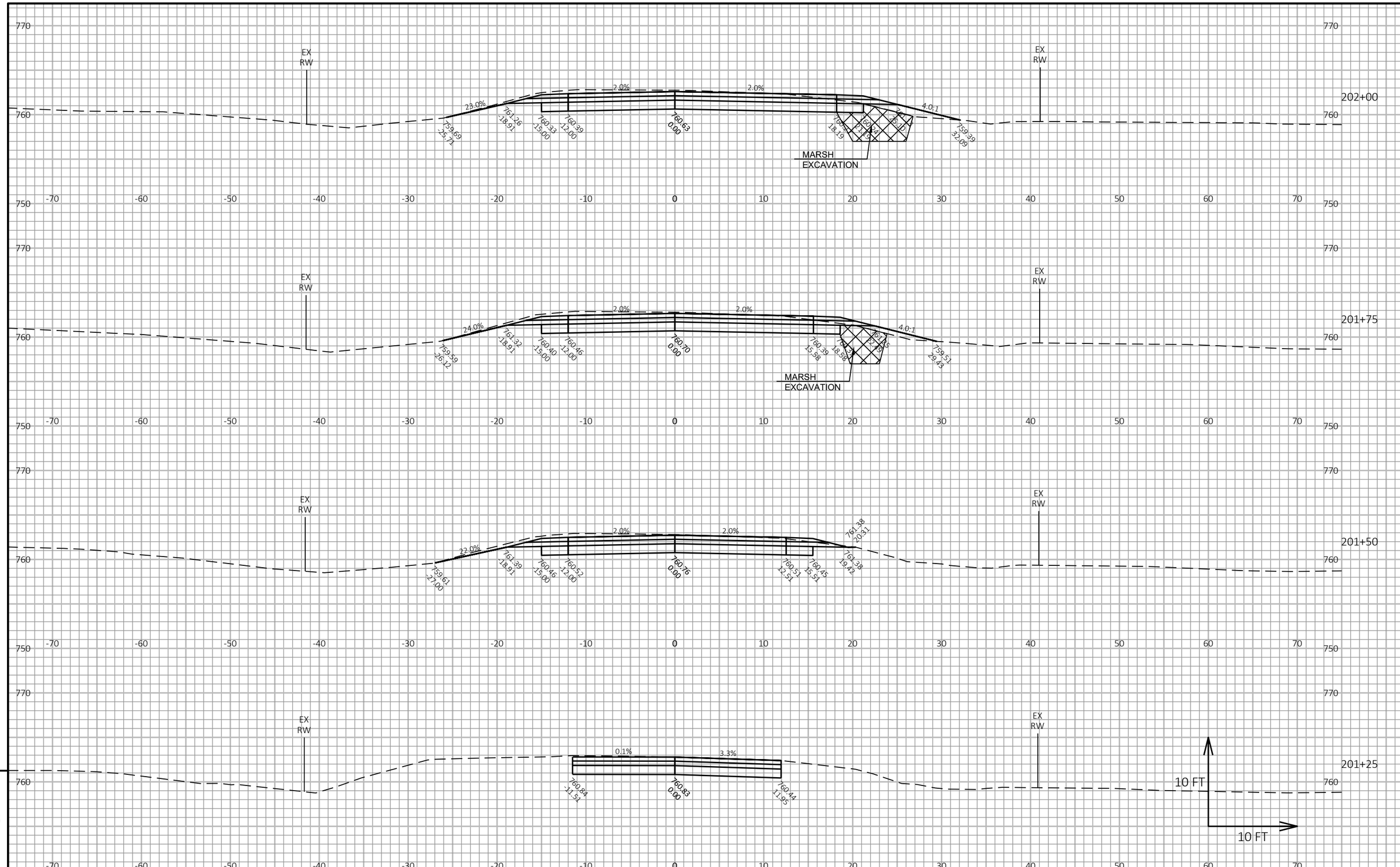

PROJECT NO: 9269-00-14	HWY: MARLEY STREET	COUNTY: BROWN	CROSS SECTIONS: GLENDALE AVE	SHEET 209	E

FILE NAME : I:\45\450490 MARLEY STREET\C3D\SHEETSPLAN\090202 XS.DWG
LAYOUT NAME - 090238 xs
PLOT DATE : 7/29/2021 3:44 PM
PLOT BY : GARNICA, BRANDON
PLOT NAME :
PLOT SCALE : 1 IN:10 FT HORZ. / 1 IN:10 FT VERT.
WISDOT/CADDS SHEET 49

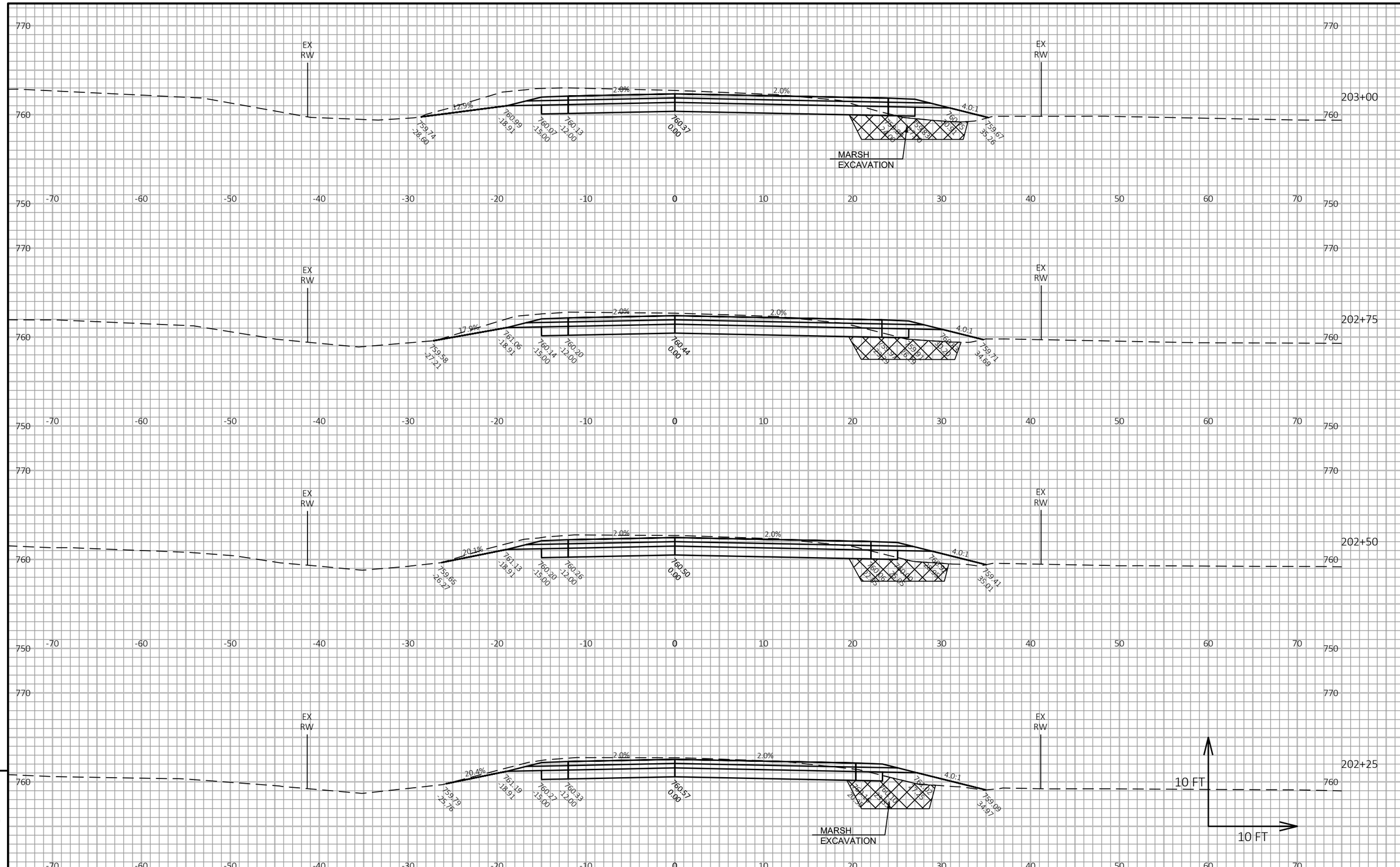

9

9

PROJECT NO: 9269-00-14	HWY: MARLEY STREET	COUNTY: BROWN	CROSS SECTIONS: GLENDALE AVE	SHEET 210	E

FILE NAME : I:\45\450490 MARLEY STREET\C3D\SHEETSPLAN\090202 XS.DWG
LAYOUT NAME - 090239 xs

PLOT DATE : 7/29/2021 3:45 PM

PLOT BY : GARNICA, BRANDON

PLOT NAME :

PLOT SCALE : 1 IN:10 FT HORZ. / 1 IN:10 FT VERT.

WISDOT/CADDS SHEET 49

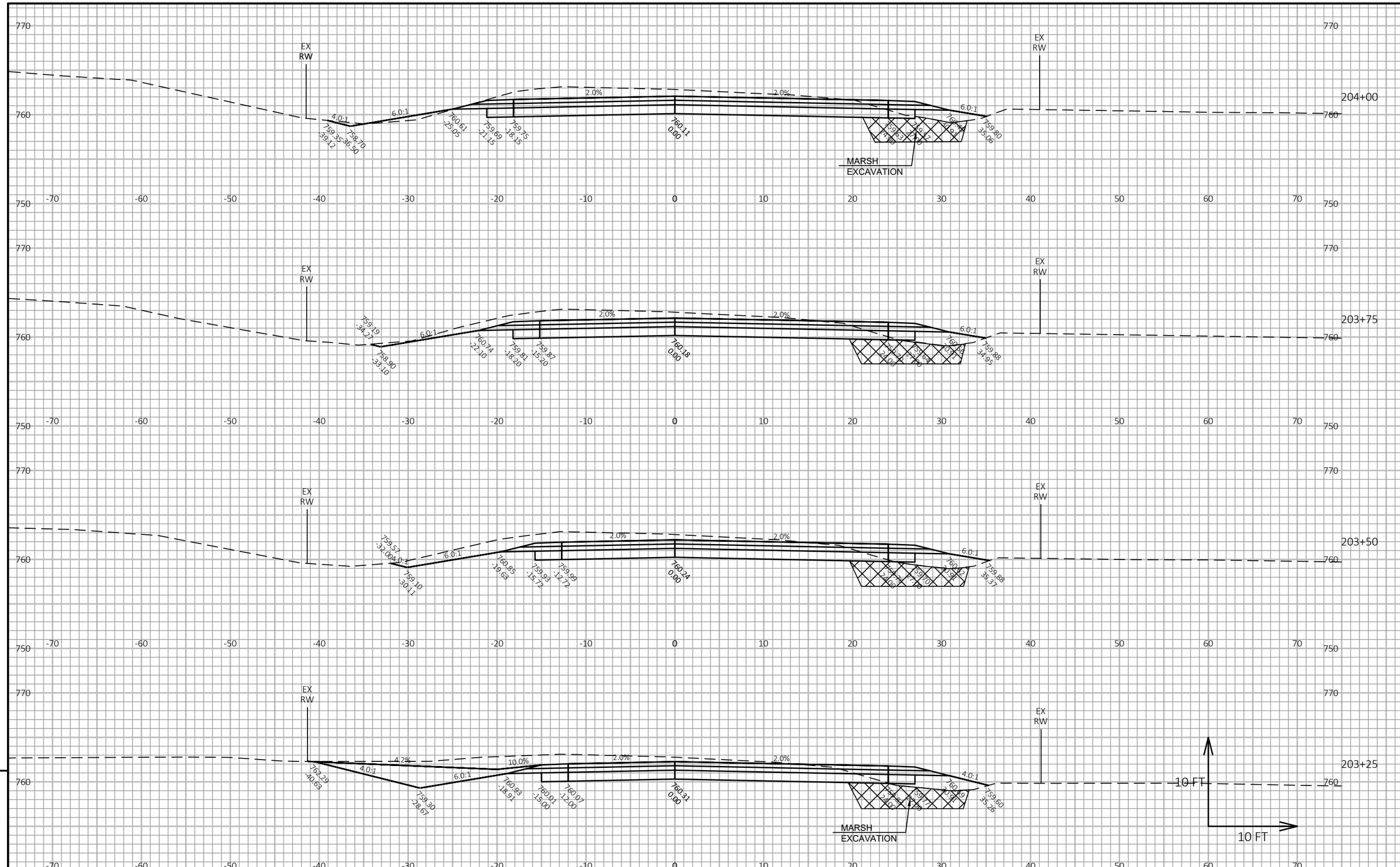

9

9

PROJECT NO: 9269-00-14	HWY: MARLEY STREET	COUNTY: BROWN	CROSS SECTIONS: GLENDALE AVE	SHEET 211	E

FILE NAME : I:\45\450490 MARLEY STREET\C3D\SHEETSPLAN\090202 XS.DWG
LAYOUT NAME - 090240 xs
PLOT DATE : 7/29/2021 3:45 PM
PLOT BY : GARNICA, BRANDON
PLOT NAME :
PLOT SCALE : 1 IN:10 FT HORZ. / 1 IN:10 FT VERT.
WISDOT/CADDS SHEET 49

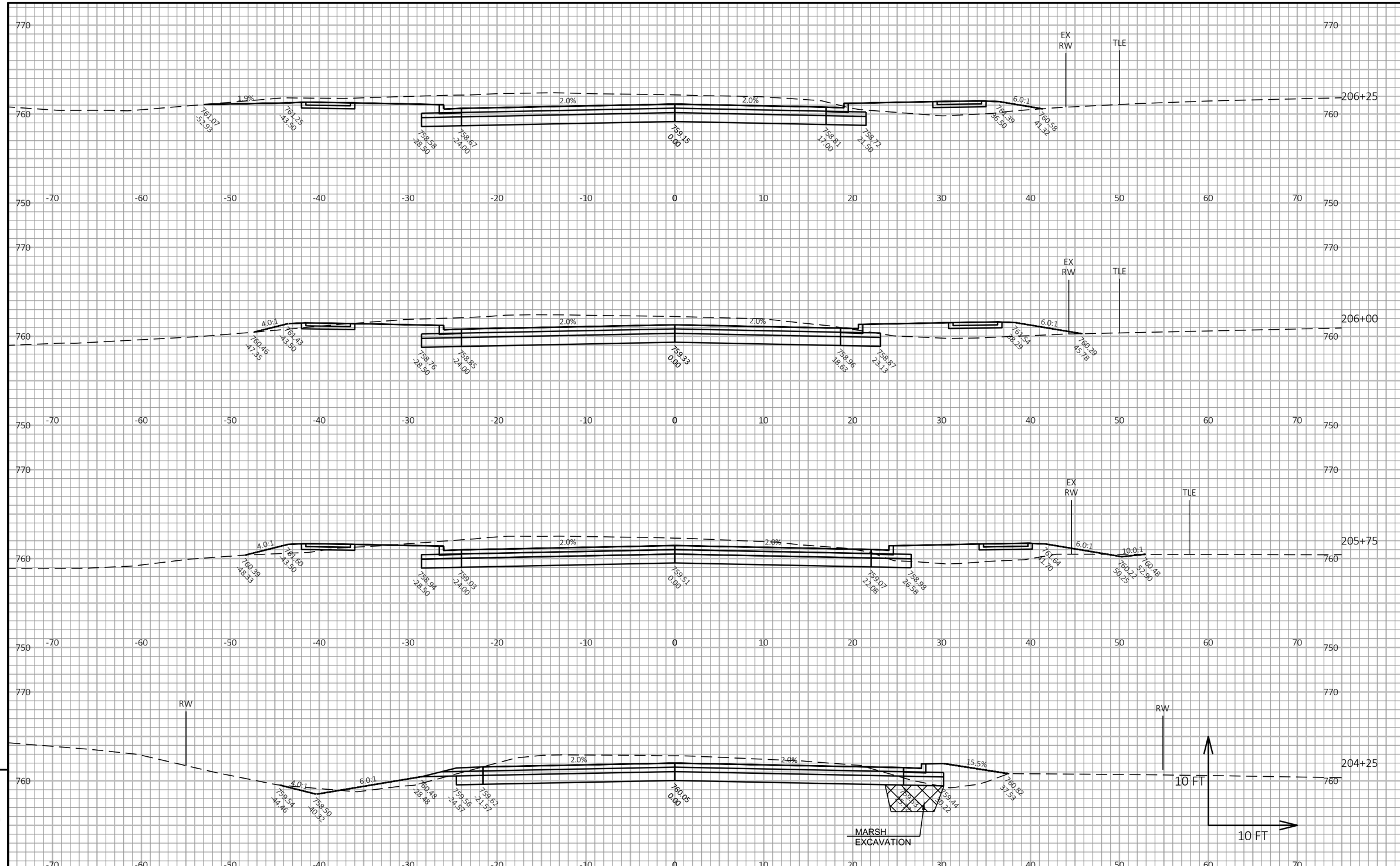

PROJECT NO: 9269-00-14	HWY: MARLEY STREET	COUNTY: BROWN	CROSS SECTIONS: GLENDALE AVE	SHEET 212	E

FILE NAME : I:\45\450490 MARLEY STREET\C3D\SHEETSPLAN\090202 XS.DWG
LAYOUT NAME - 090241 xs
PLOT DATE : 7/29/2021 3:45 PM
PLOT BY : GARNICA, BRANDON
PLOT NAME :
PLOT SCALE : 1 IN:10 FT HORZ. / 1 IN:10 FT VERT.

WISDOT/CADDS SHEET 49

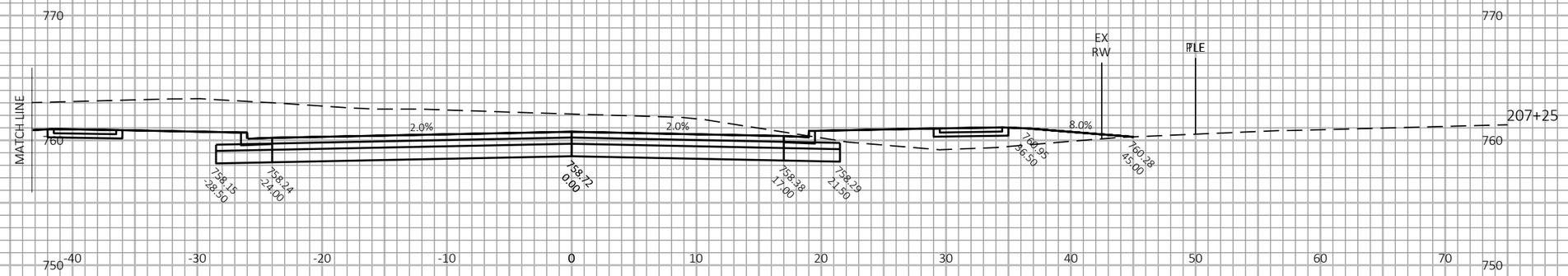

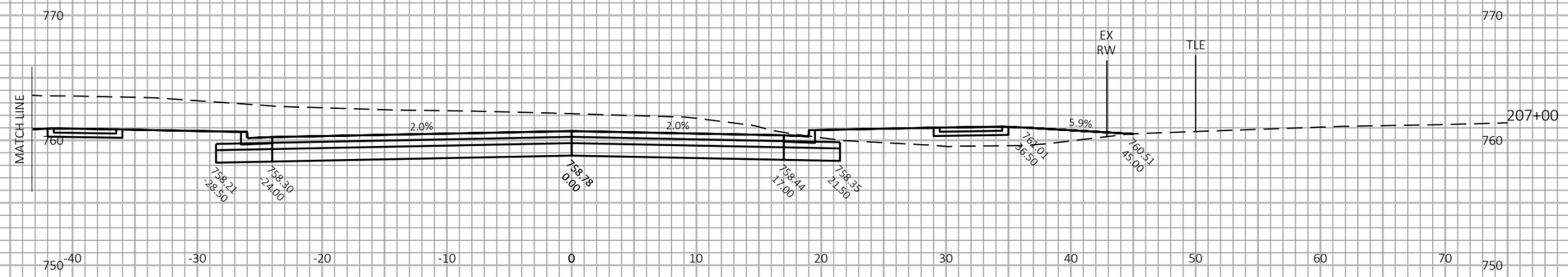

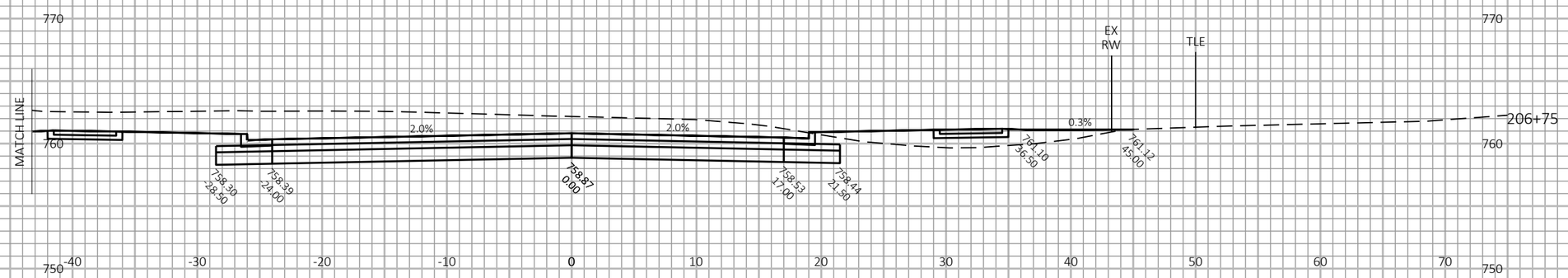

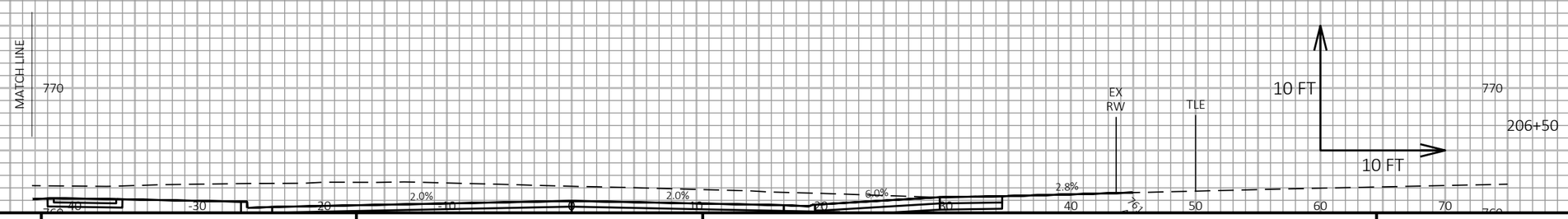

9

9

PROJECT NO: 9269-00-14	HWY: MARLEY STREET	COUNTY: BROWN	CROSS SECTIONS: GLENDALE AVE	SHEET 213	E

FILE NAME : I:\45\450490 MARLEY STREET\C3D\SHEETSPLAN\090202 XS.DWG
LAYOUT NAME - 090242 xs
PLOT DATE : 7/29/2021 3:45 PM
PLOT BY : GARNICA, BRANDON
PLOT NAME :
PLOT SCALE : 1 IN:10 FT HORZ. / 1 IN:10 FT VERT.
WISDOT/CADDS SHEET 49

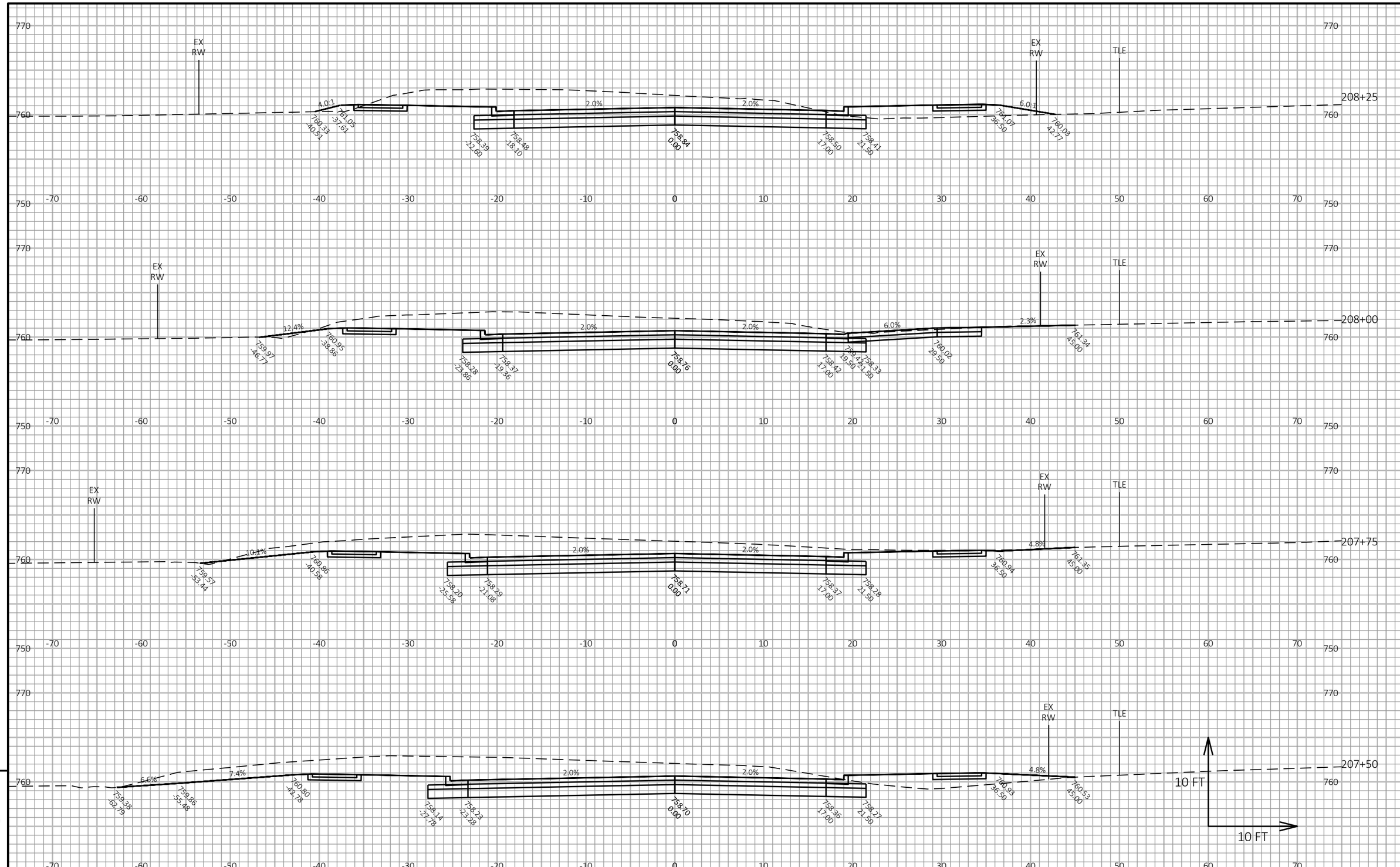

9

9

PROJECT NO: 9269-00-14	HWY: MARLEY STREET	COUNTY: BROWN	CROSS SECTIONS: GLENDALE AVE	SHEET 214	E

FILE NAME : I:\45\450490 MARLEY STREET\C3D\SHEETSPLAN\090202 XS.DWG
LAYOUT NAME - 090243 xs
PLOT DATE : 7/29/2021 3:45 PM
PLOT BY : GARNICA, BRANDON
PLOT NAME :
PLOT SCALE : 1 IN:10 FT HORZ. / 1 IN:10 FT VERT.
WISDOT/CADDS SHEET 49

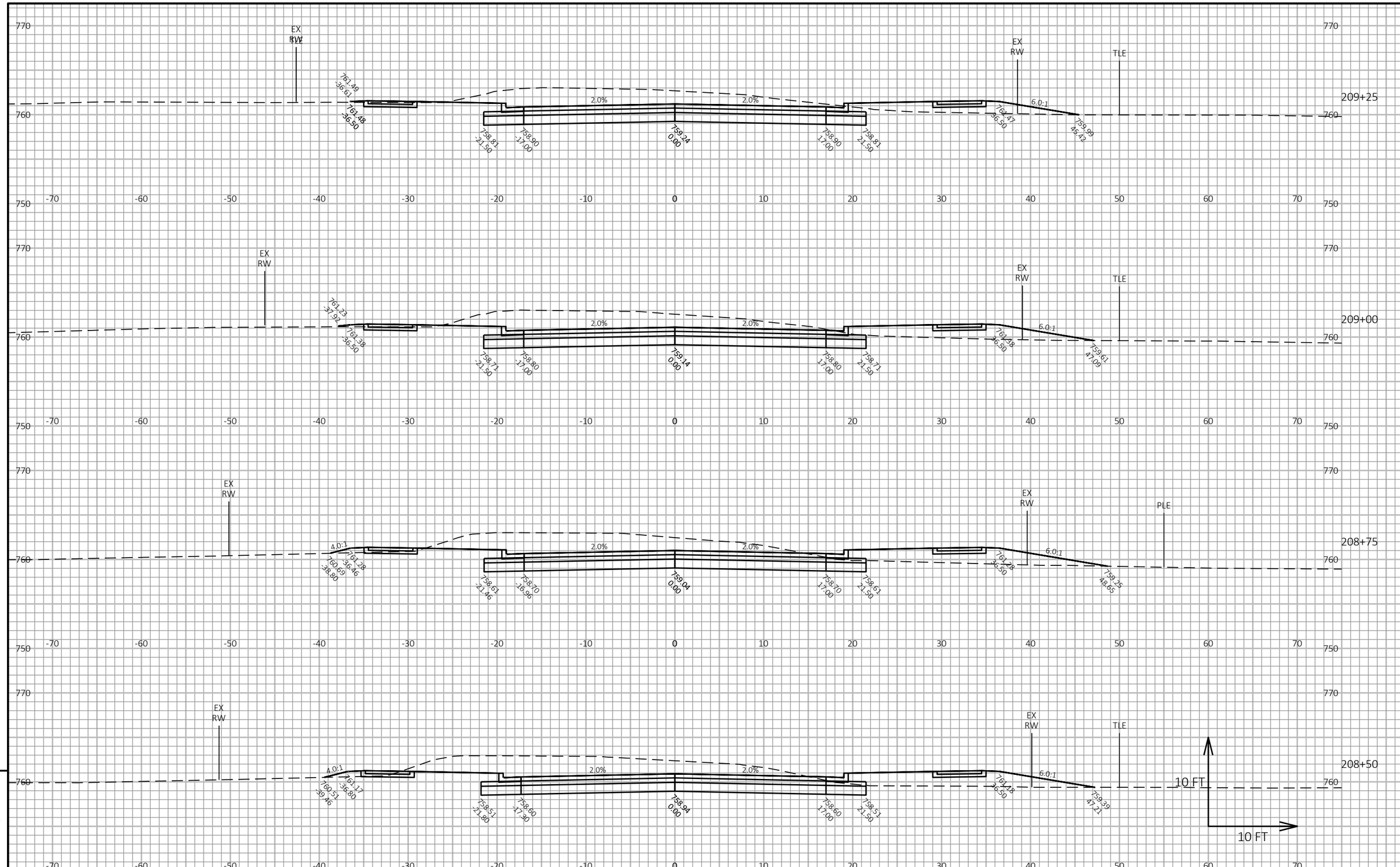

PROJECT NO: 9269-00-14	HWY: MARLEY STREET	COUNTY: BROWN	CROSS SECTIONS: GLENDALE AVE	SHEET 215	E

FILE NAME : I:\45\450490 MARLEY STREET\C3D\SHEETSPLAN\090202 XS.DWG
LAYOUT NAME - 090244 xs
PLOT DATE : 7/29/2021 3:46 PM
PLOT BY : GARNICA, BRANDON
PLOT NAME :
PLOT SCALE : 1 IN:10 FT HORZ. / 1 IN:10 FT VERT.
WISDOT/CADDS SHEET 49

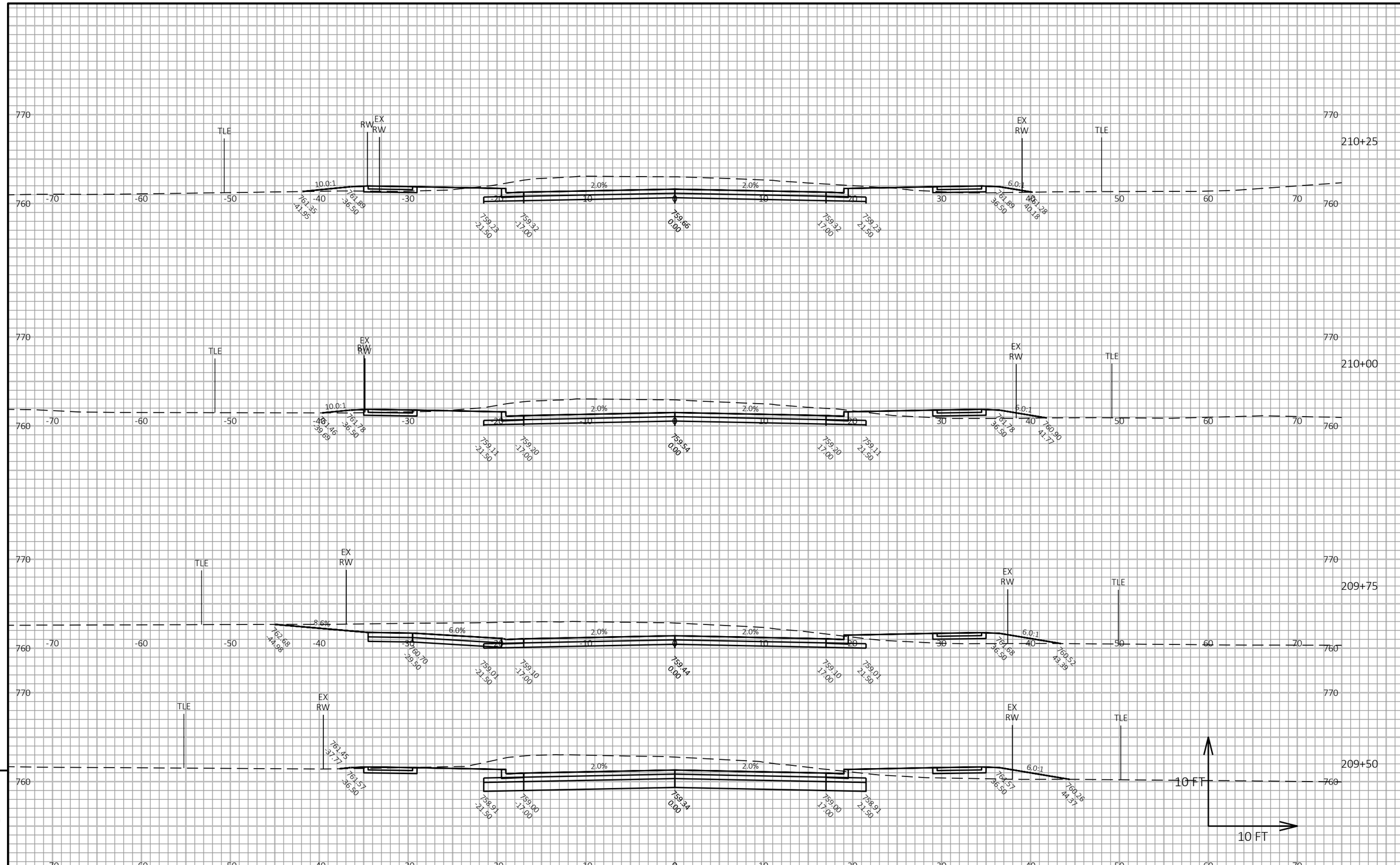

9

9

PROJECT NO: 9269-00-14	HWY: MARLEY STREET	COUNTY: BROWN	CROSS SECTIONS: GLENDALE AVE	SHEET 216	E

FILE NAME : I:\45\450490 MARLEY STREET\C3D\SHEETSPLAN\090202 XS.DWG
LAYOUT NAME - 090245 xs

PLOT DATE : 7/29/2021 3:46 PM

PLOT BY : GARNICA, BRANDON

PLOT NAME :

PLOT SCALE : 1 IN:10 FT HORZ. / 1 IN:10 FT VERT.

WISDOT/CADDS SHEET 49

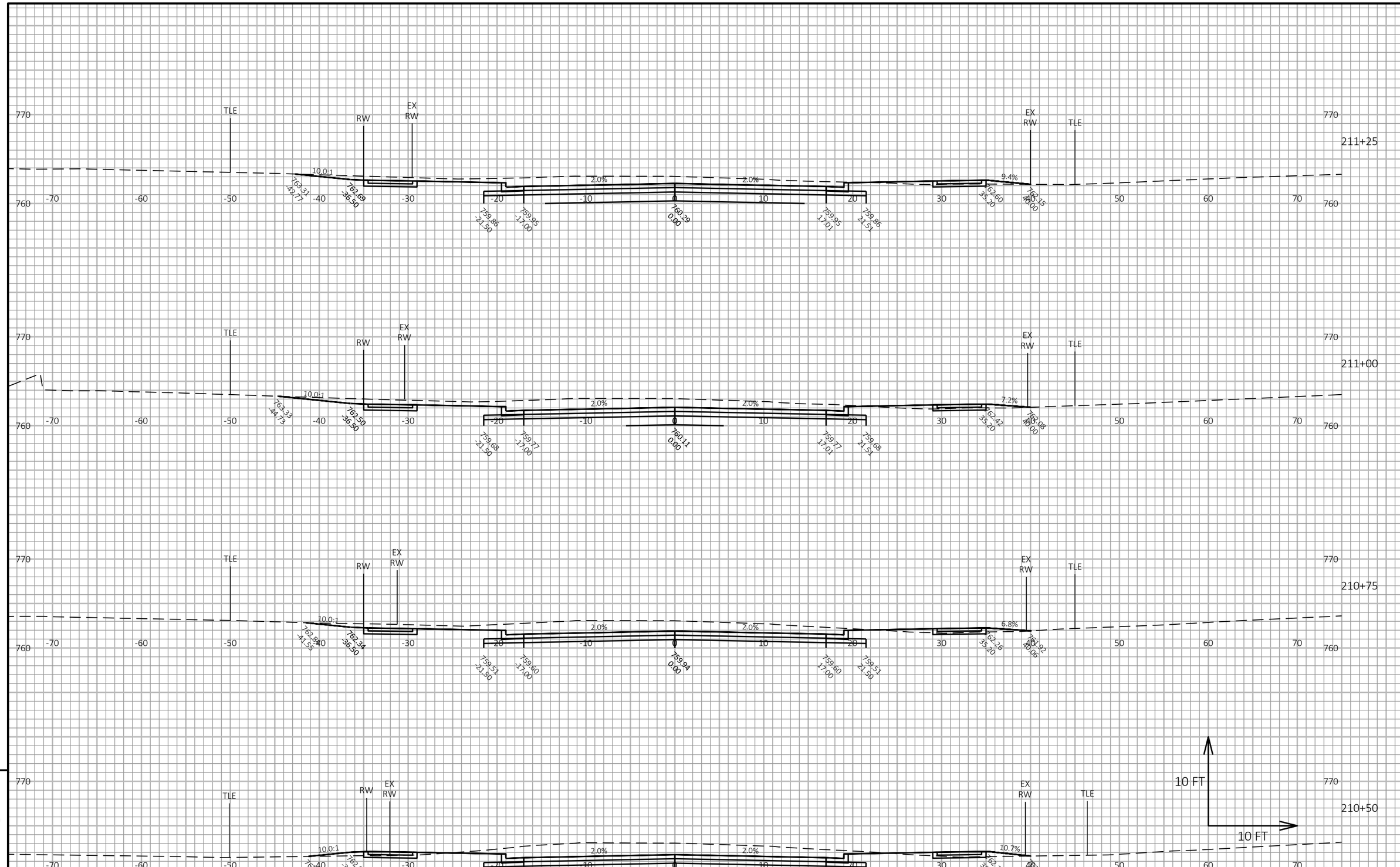

9

9

PROJECT NO: 9269-00-14	HWY: MARLEY STREET	COUNTY: BROWN	CROSS SECTIONS: GLENDALE AVE	SHEET 217	E

FILE NAME : I:\45\450490 MARLEY STREET\C3D\SHEETSPLAN\090202 XS.DWG
LAYOUT NAME - 090246 xs

PLOT DATE : 7/29/2021 3:46 PM PLOT BY : GARNICA, BRANDON PLOT NAME : **PLOT SCALE :** 1 IN:10 FT HORZ. / 1 IN:10 FT VERT.

WISDOT/CADDS SHEET 49

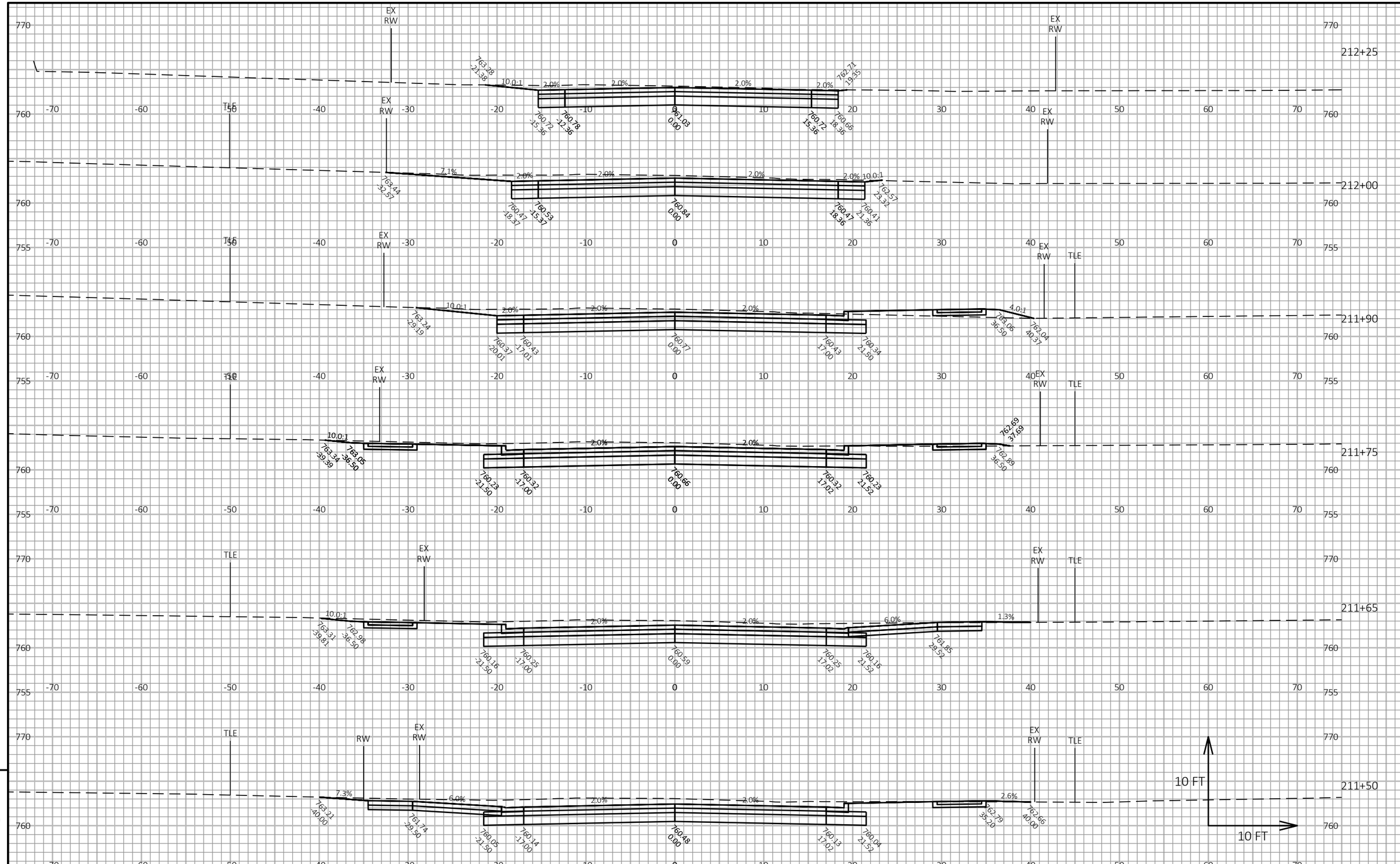

PROJECT NO: 9269-00-14	HWY: MARLEY STREET	COUNTY: BROWN	CROSS SECTIONS: GLENDALE AVE	SHEET 218	E

FILE NAME : I:\45\450490 MARLEY STREET\C3D\SHEETSPLAN\090202 XS.DWG
LAYOUT NAME - 090247 xs
PLOT DATE : 7/29/2021 3:46 PM
PLOT BY : GARNICA, BRANDON
PLOT NAME :
PLOT SCALE : 1 IN:10 FT HORZ. / 1 IN:10 FT VERT.
WISDOT/CADDS SHEET 49

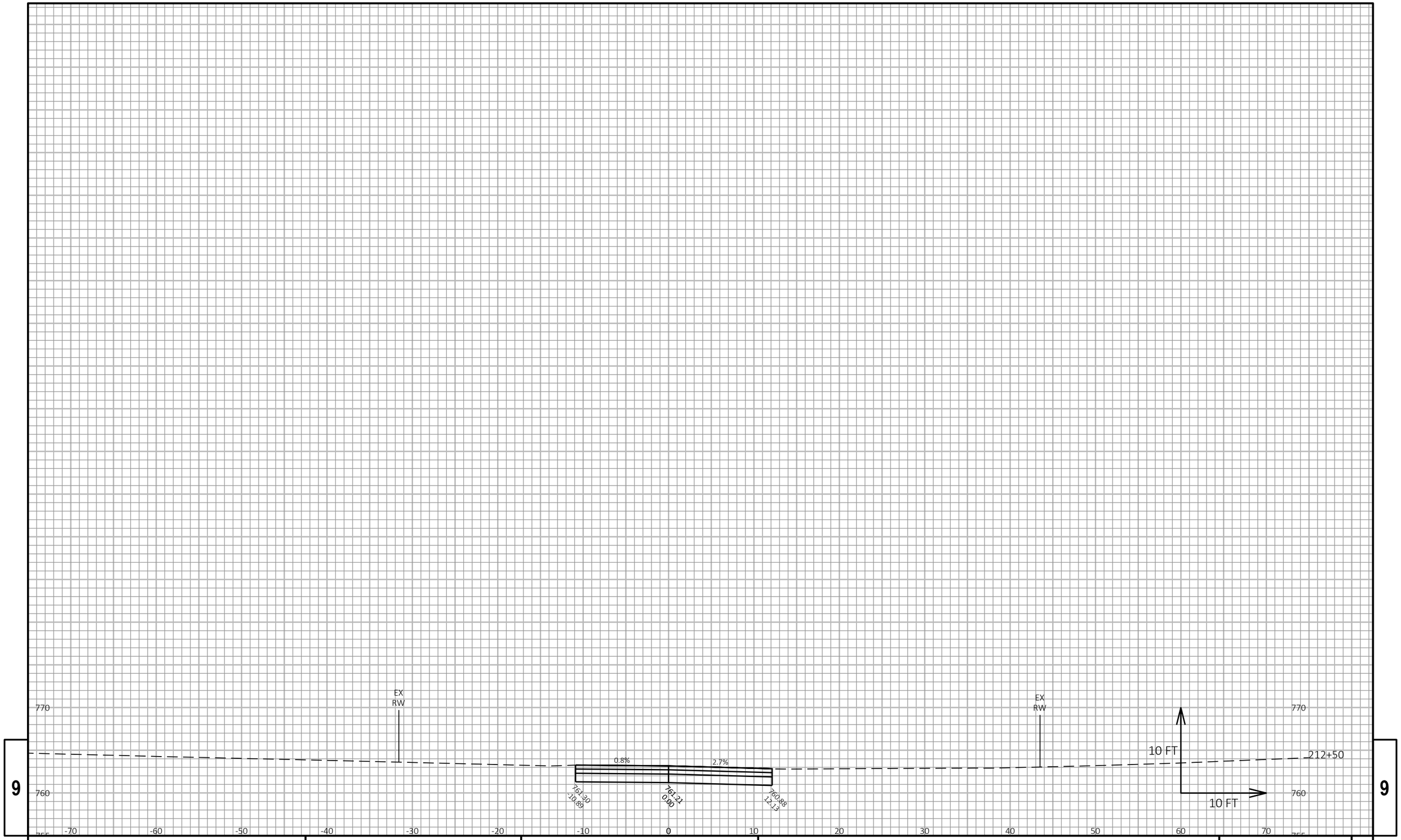

PROJECT NO: 9269-00-14	HWY: MARLEY STREET	COUNTY: BROWN	CROSS SECTIONS: GLENDALE AVE	SHEET 219	E

FILE NAME : I:\45\450490 MARLEY STREET\C3D\SHEETSPLAN\090202 XS.DWG
LAYOUT NAME - 090248 xs

PLOT DATE : 7/29/2021 3:46 PM

PLOT BY : GARNICA, BRANDON

PLOT NAME :

PLOT SCALE : 1 IN:10 FT HORZ. / 1 IN:10 FT VERT.

WISDOT/CADDS SHEET 49

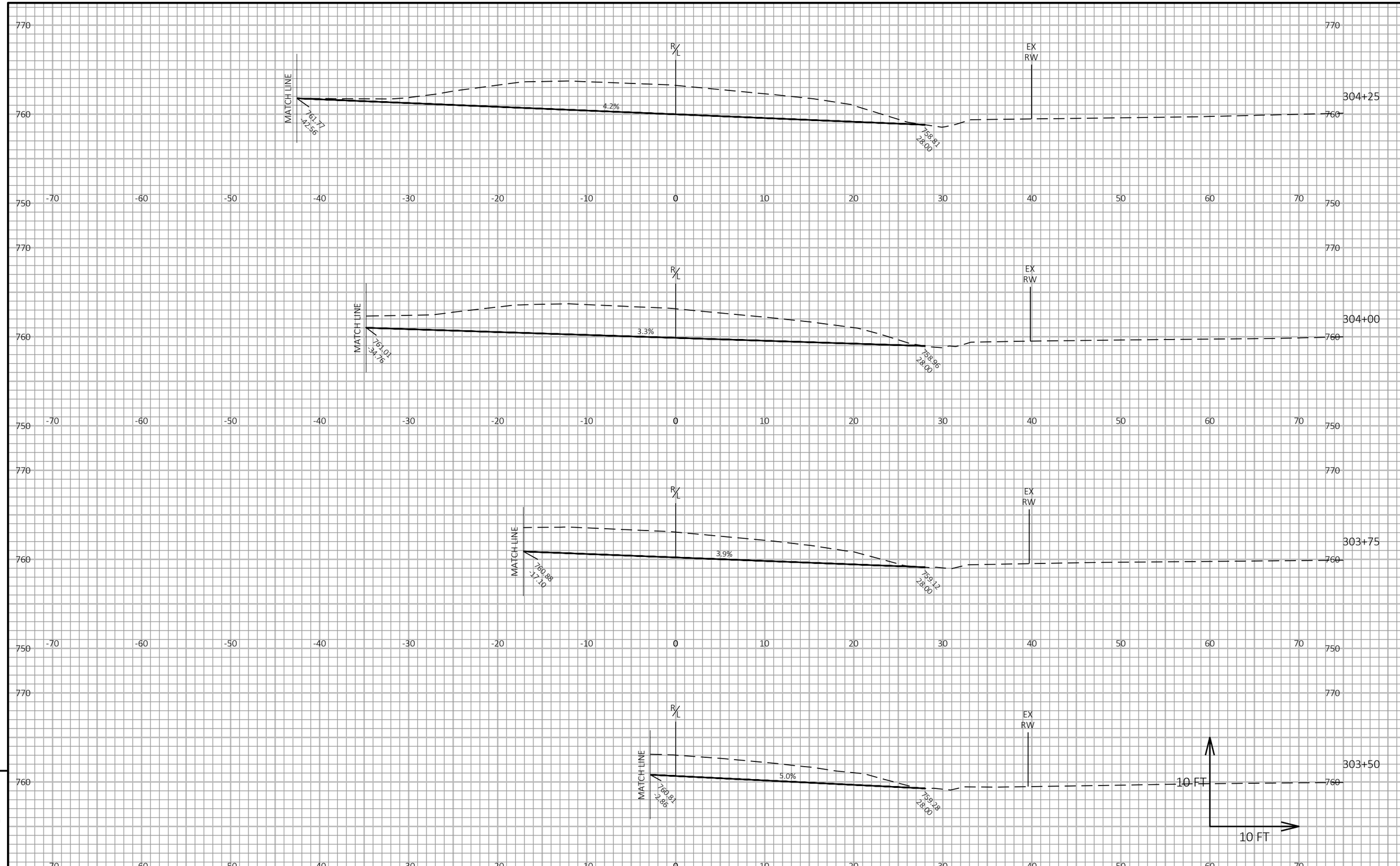

PROJECT NO: 9269-00-14	HWY: MARLEY STREET	COUNTY: BROWN	CROSS SECTIONS: CTH C	SHEET 220	E

FILE NAME : I:\45\450490 MARLEY STREET\C3D\SHEETSPLAN\090202 XS.DWG
LAYOUT NAME - 090249 xs
PLOT DATE : 7/29/2021 3:46 PM
PLOT BY : GARNICA, BRANDON
PLOT NAME :
PLOT SCALE : 1 IN:10 FT HORZ. / 1 IN:10 FT VERT.
WISDOT/CADDS SHEET 49

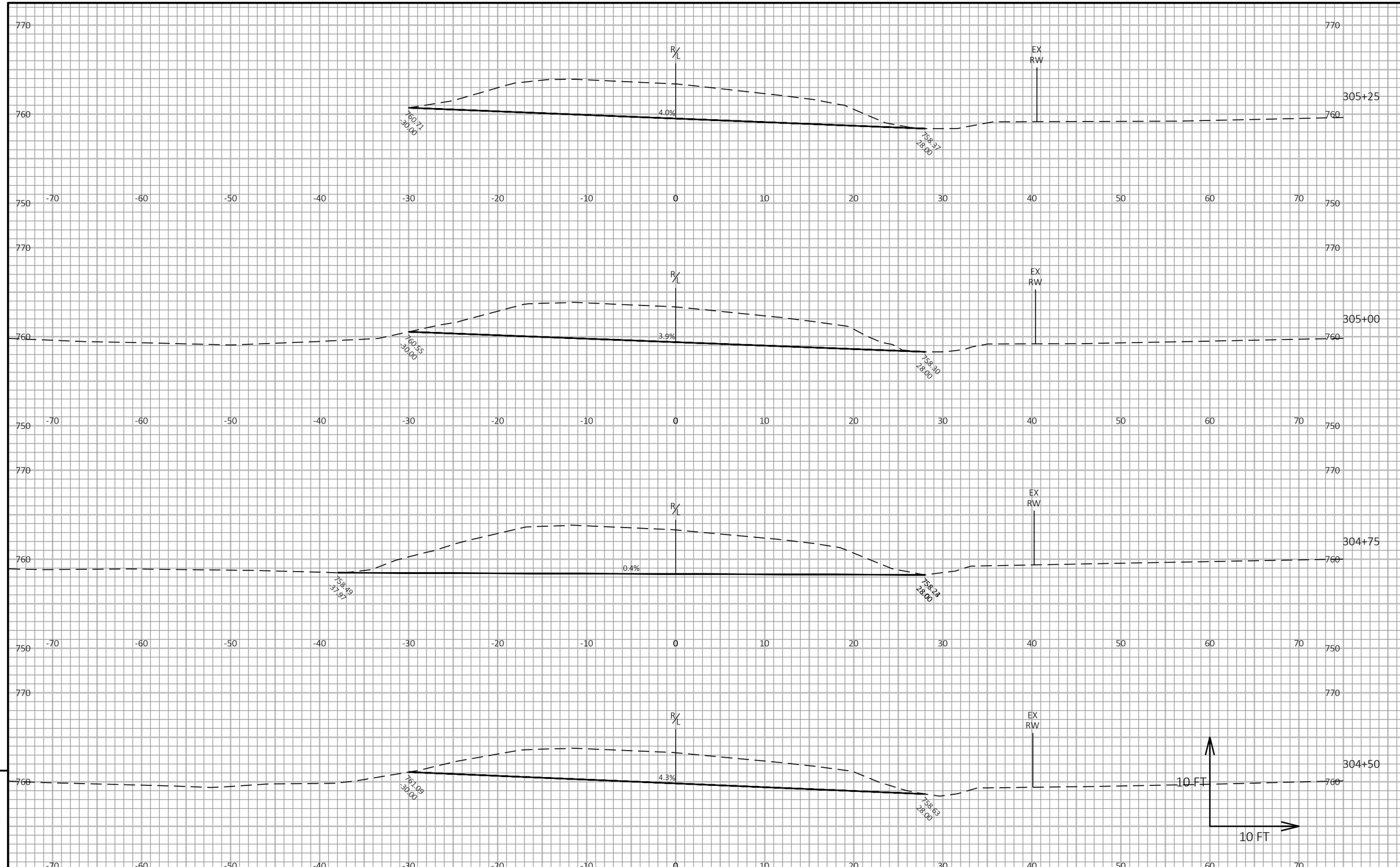

9

9

PROJECT NO: 9269-00-14	HWY: MARLEY STREET	COUNTY: BROWN	CROSS SECTIONS: CTH C	SHEET 221	E

FILE NAME : I:\45\450490 MARLEY STREET\C3D\SHEETSPLAN\090202 XS.DWG
LAYOUT NAME - 090250 xs
PLOT DATE : 7/29/2021 3:46 PM
PLOT BY : GARNICA, BRANDON
PLOT NAME :
PLOT SCALE : 1 IN:10 FT HORZ. / 1 IN:10 FT VERT.
WISDOT/CADDS SHEET 49

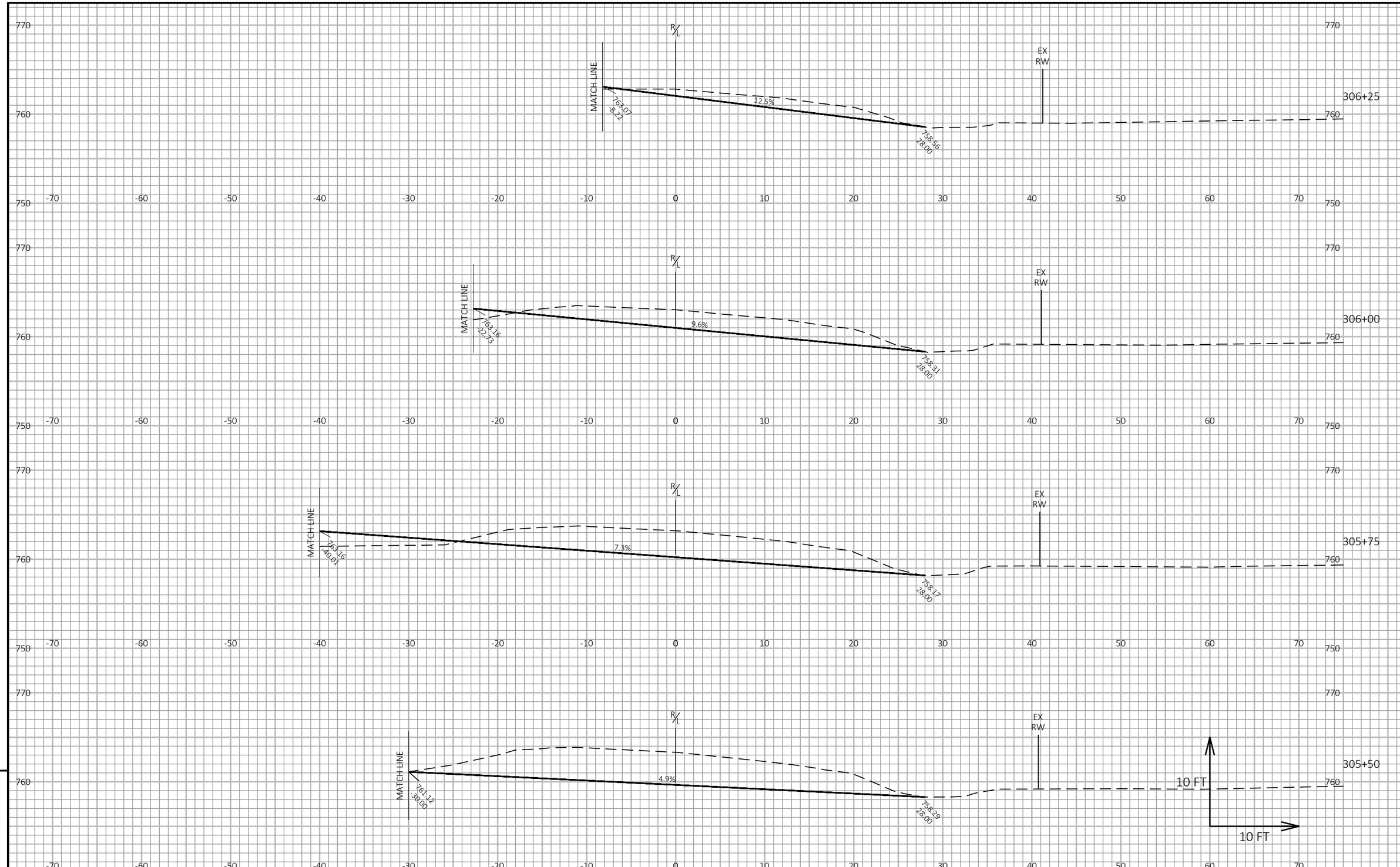

9

9

PROJECT NO: 9269-00-14	HWY: MARLEY STREET	COUNTY: BROWN	CROSS SECTIONS: CTH C	SHEET 222	E

FILE NAME : I:\45\450490 MARLEY STREET\C3D\SHEETSPLAN\090202 XS.DWG
LAYOUT NAME - 090251 xs

PLOT DATE : 7/29/2021 3:47 PM

PLOT BY : GARNICA, BRANDON

PLOT NAME :

PLOT SCALE : 1 IN:10 FT HORZ. / 1 IN:10 FT VERT.

WISDOT/CADDS SHEET 49

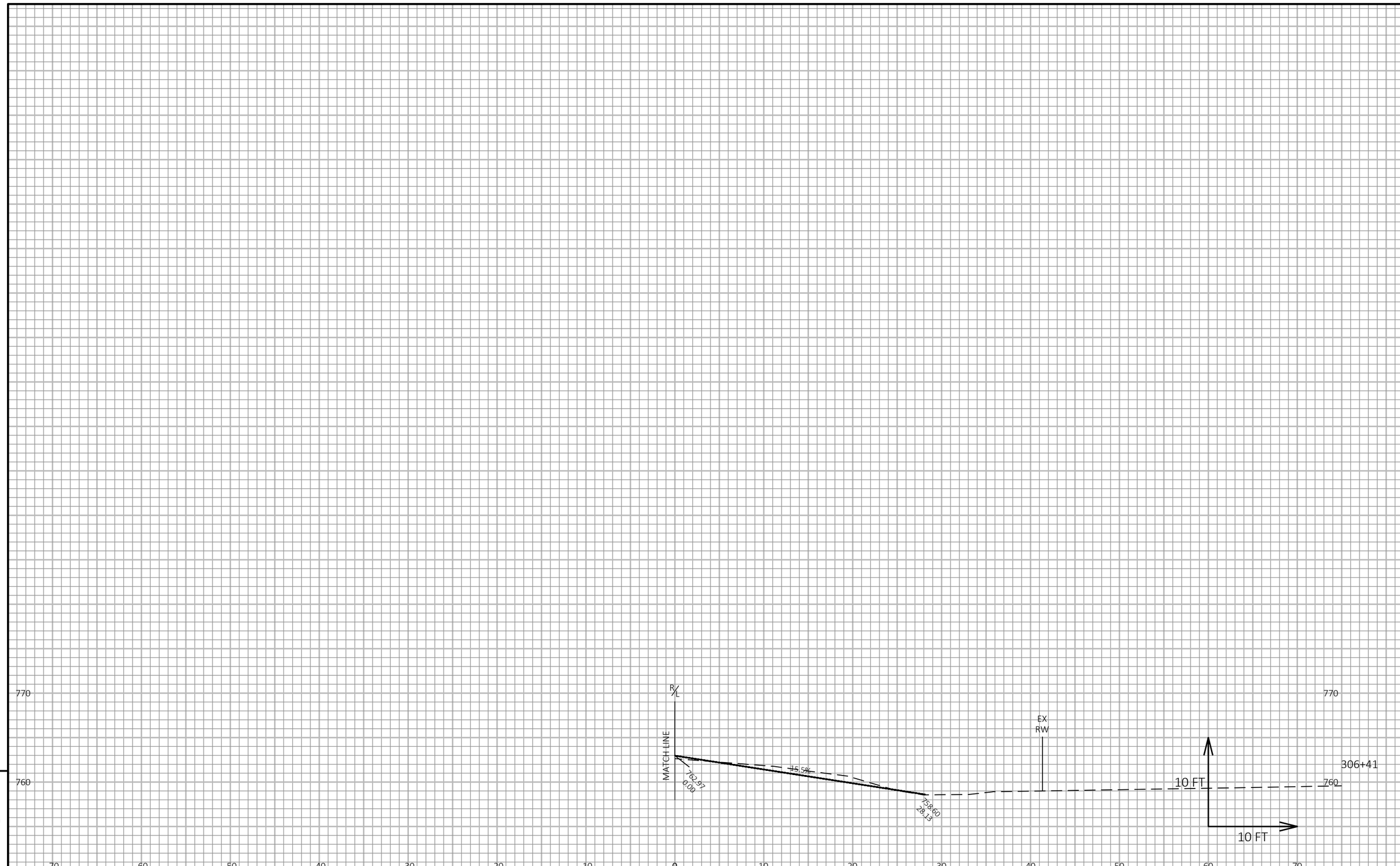

9

9

PROJECT NO: 9269-00-14	HWY: MARLEY STREET	COUNTY: BROWN	CROSS SECTIONS: CTH C	SHEET 223	E

FILE NAME : I:\45\450490 MARLEY STREET\C3D\SHEETSPLAN\090202 XS.DWG
LAYOUT NAME - 090252 xs

PLOT DATE : 7/29/2021 3:47 PM

PLOT BY : GARNICA, BRANDON

PLOT NAME :

PLOT SCALE : 1 IN:10 FT HORZ. / 1 IN:10 FT VERT.

WISDOT/CADDS SHEET 49

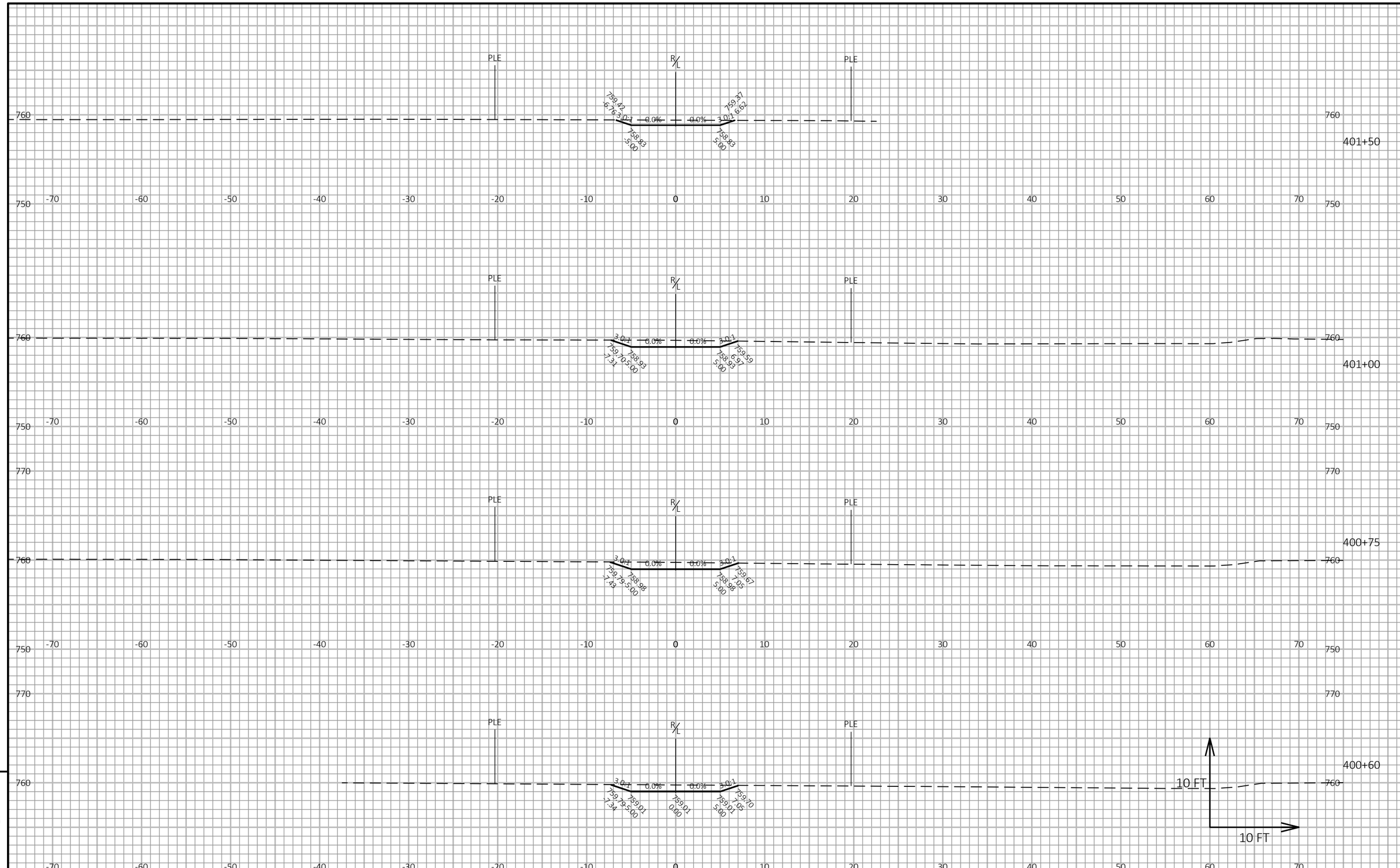

PROJECT NO: 9269-00-14	HWY: MARLEY STREET	COUNTY: BROWN	CROSS SECTIONS: STORM SEWER OUTFALL	SHEET 224	E

FILE NAME : I:\45\450490 MARLEY STREET\C3D\SHEETSPLAN\090202 XS.DWG
LAYOUT NAME - 090253 xs
PLOT DATE : 7/29/2021 3:47 PM
PLOT BY : GARNICA, BRANDON
PLOT NAME :
PLOT SCALE : 1 IN:10 FT HORZ. / 1 IN:10 FT VERT.
WISDOT/CADDS SHEET 49

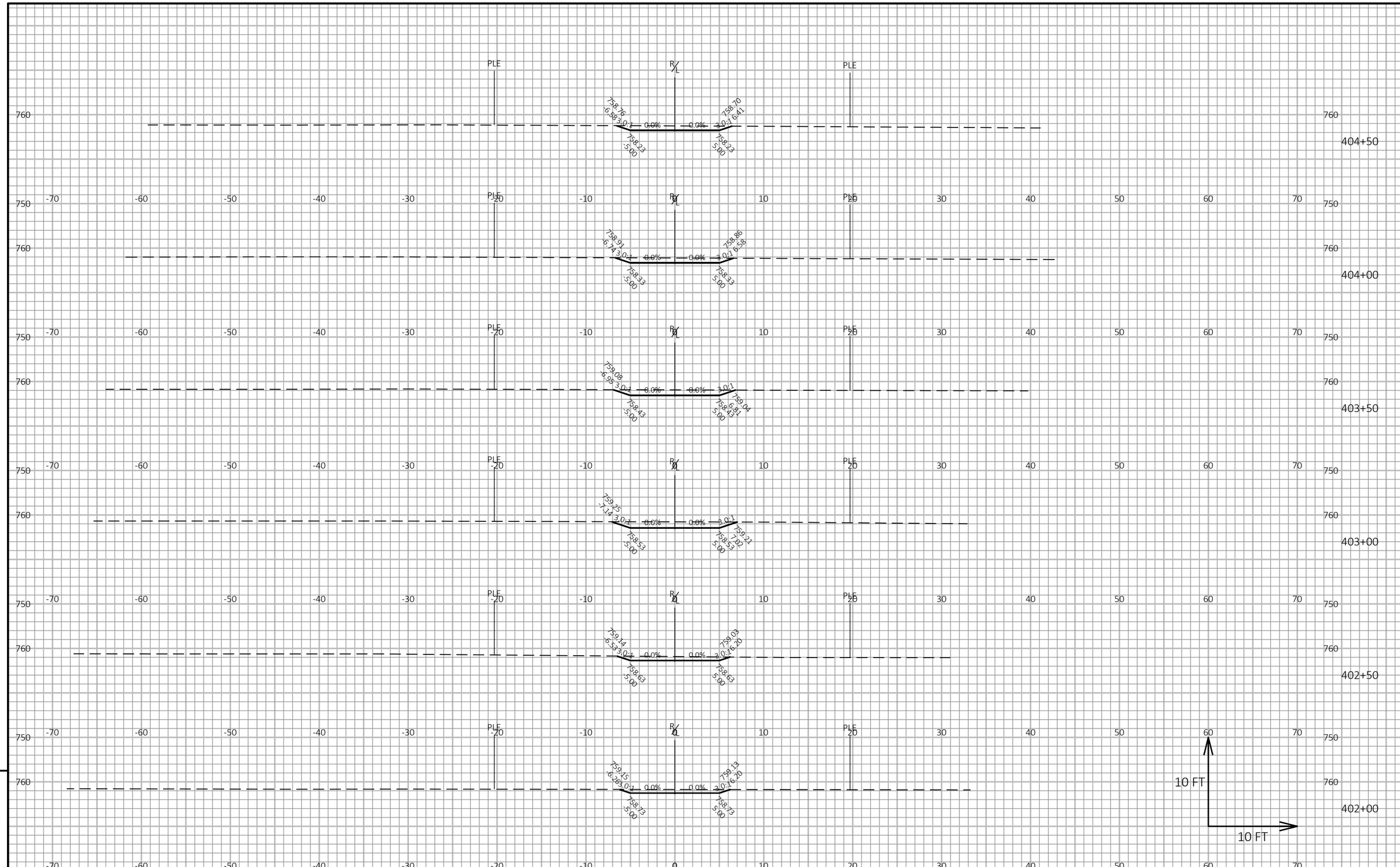

PROJECT NO: 9269-00-14	HWY: MARLEY STREET	COUNTY: BROWN	CROSS SECTIONS: STORM SEWER OUTFALL	SHEET 225	E

FILE NAME : I:\45\450490 MARLEY STREET\C3D\SHEETSPLAN\090202 XS.DWG
LAYOUT NAME - 090254 xs
PLOT DATE : 7/29/2021 3:47 PM
PLOT BY : GARNICA, BRANDON
PLOT NAME :
PLOT SCALE : 1 IN:10 FT HORZ. / 1 IN:10 FT VERT.
WISDOT/CADDS SHEET 49

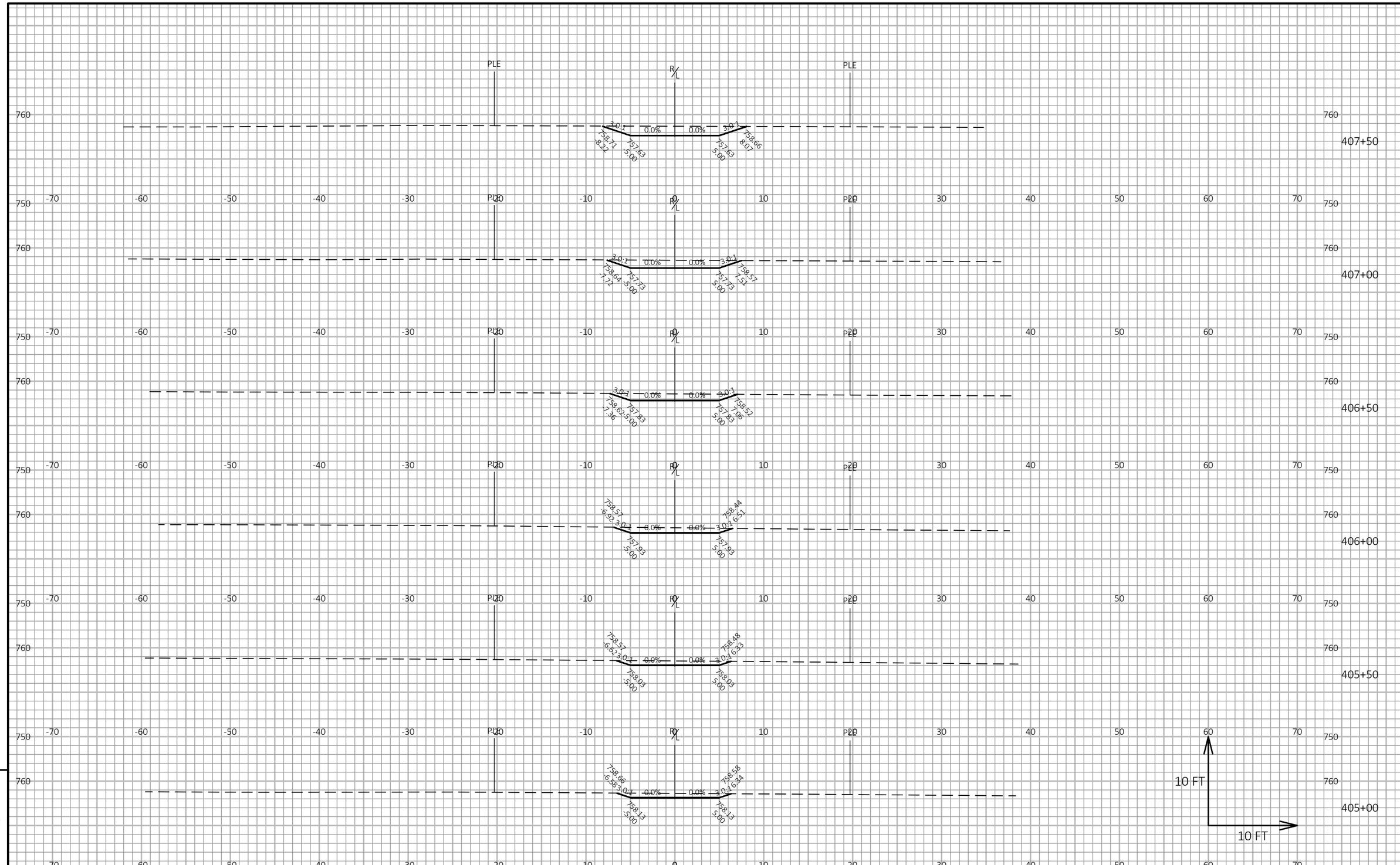

9

9

PROJECT NO: 9269-00-14	HWY: MARLEY STREET	COUNTY: BROWN	CROSS SECTIONS: STORM SEWER OUTFALL	SHEET 226	E

FILE NAME : I:\45\450490 MARLEY STREET\C3D\SHEETSPLAN\090202 XS.DWG
LAYOUT NAME - 090255 xs
PLOT DATE : 7/29/2021 3:47 PM
PLOT BY : GARNICA, BRANDON
PLOT NAME :
PLOT SCALE : 1 IN:10 FT HORZ. / 1 IN:10 FT VERT.
WISDOT/CADDS SHEET 49

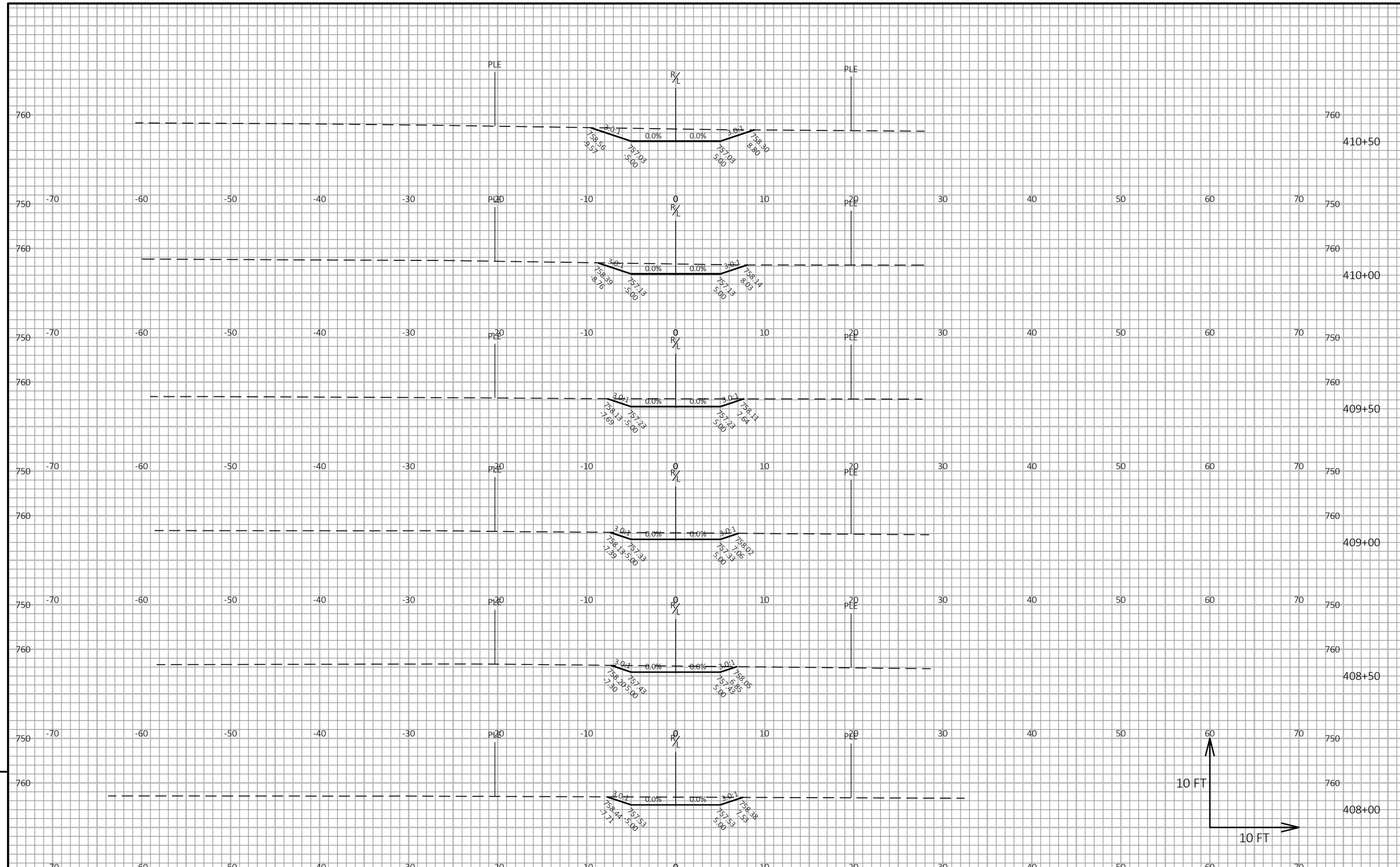

PROJECT NO: 9269-00-14	HWY: MARLEY STREET	COUNTY: BROWN	CROSS SECTIONS: STORM SEWER OUTFALL	SHEET 227	E

FILE NAME : I:\45\450490 MARLEY STREET\C3D\SHEETSPLAN\090202 XS.DWG
LAYOUT NAME - 090256 xs
PLOT DATE : 7/29/2021 3:47 PM
PLOT BY : GARNICA, BRANDON
PLOT NAME :
PLOT SCALE : 1 IN:10 FT HORZ. / 1 IN:10 FT VERT.
WISDOT/CADDS SHEET 49

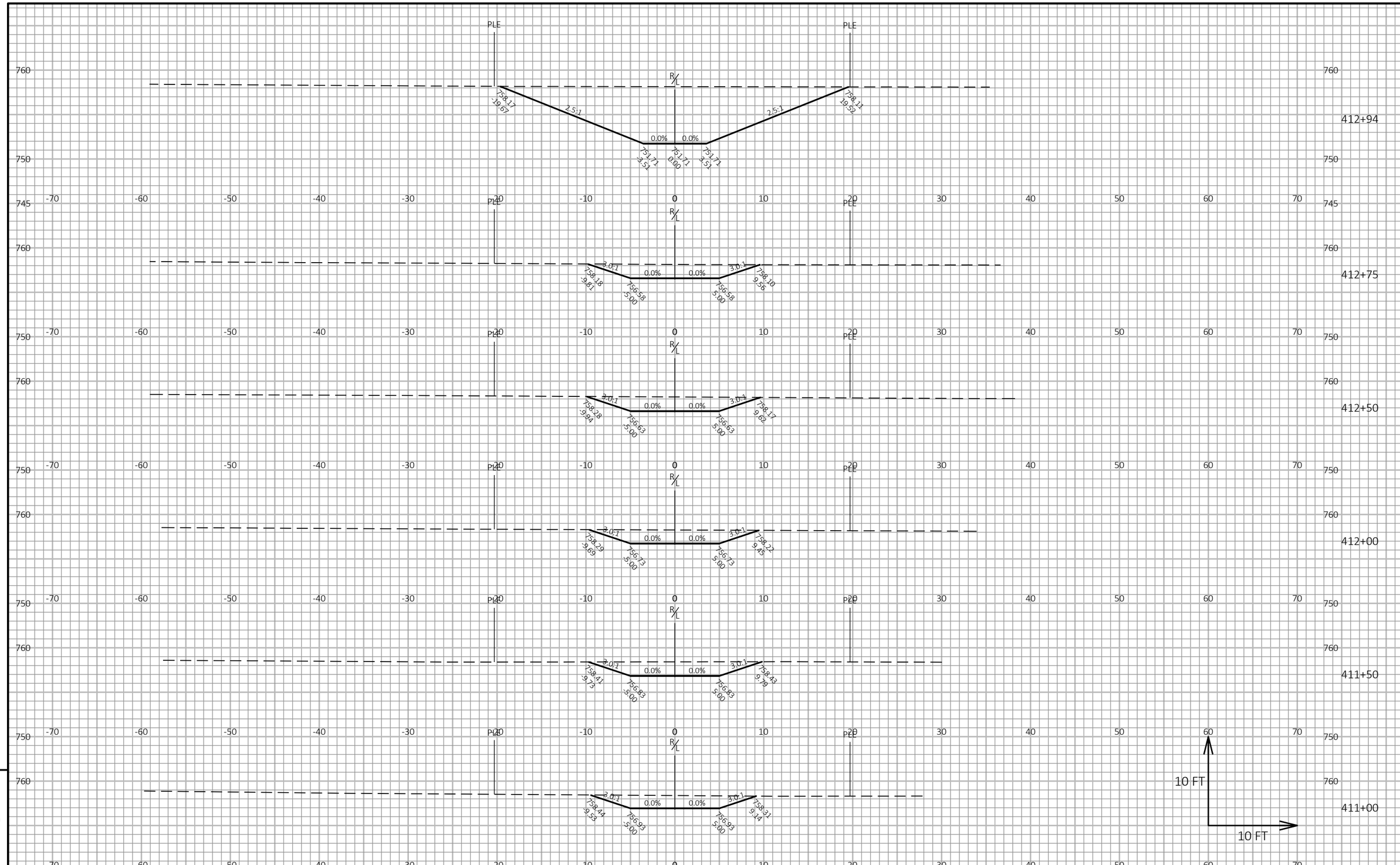

9

9

PROJECT NO: 9269-00-14	HWY: MARLEY STREET	COUNTY: BROWN	CROSS SECTIONS: STORM SEWER OUTFALL	SHEET 228	E

FILE NAME : I:\45\450490 MARLEY STREET\C3D\SHEETSPLAN\090202 XS.DWG
LAYOUT NAME - 090257 xs
PLOT DATE : 7/29/2021 3:48 PM
PLOT BY : GARNICA, BRANDON
PLOT NAME :
PLOT SCALE : 1 IN:10 FT HORZ. / 1 IN:10 FT VERT.
WISDOT/CADDS SHEET 49

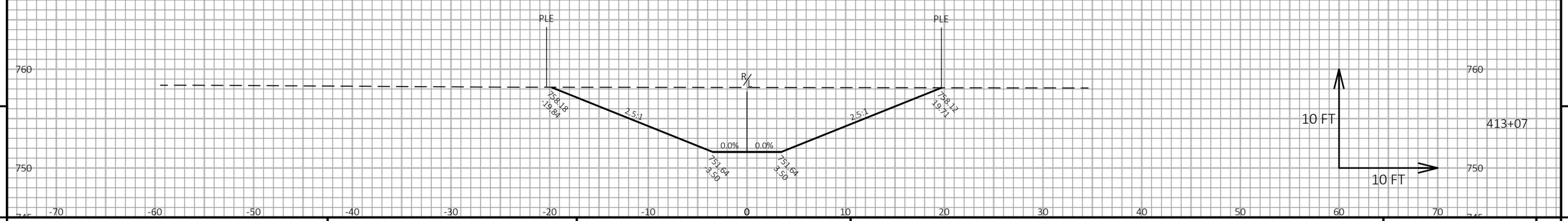

9

9

PROJECT NO: 9269-00-14	HWY: MARLEY STREET	COUNTY: BROWN	CROSS SECTIONS: STORM SEWER OUTFALL	SHEET 229	E

FILE NAME : I:\45\450490 MARLEY STREET\C3D\SHEETSPLAN\090202 XS.DWG
LAYOUT NAME - 090258 xs

PLOT DATE : 7/29/2021 3:48 PM PLOT BY : GARNICA, BRANDON PLOT NAME : **PLOT SCALE :** 1 IN:10 FT HORZ. / 1 IN:10 FT VERT.

WISDOT/CADDS SHEET 49

Wisconsin Department of Transportation

Dedicated people creating transportation solutions through innovation and exceptional service.

http://www.dot.wisconsin.gov